Power Back Door does not Operate

DESCRIPTION

- The power back door operates only when the power back door main switch is ON. The power back door ECU controls the power back door by activating the back door motor (built into the power back door drive unit) to open / close the back door.
- A request signal from the satellite switch for power back door is input to the body ECU, which then sends this signal using a BEAN line to the power back door ECU so that the power back door is opened / closed.
  - When a request signal is output from the satellite switch while the power back door is operating, the power back door reverses operation.
- If the power back door is manually moved in a specified distance when the back door is in the fully closed / opened position, the power back door will be activated and continue to operate to the fully opened / closed position.
- A request signal from the outside handle switch is directly input to the power back door ECU.
  - Pulling the outside handle switch when the back door is in the fully closed position releases the latch of the closer and makes the back door not-fully-closed, which does not activate the power back door to open. (The power back door operation can be switched by customization.)
  - When a request signal is output from the outside handle switch while the power back door is operating, the power back door reverses operation.
  - When a request signal is output from the outside handle switch when the back door is in the fully open position, the power back door is activated to fully close. (Power back door operation can be changed by customization.)
- When the touch sensor has an open / short-circuit, closing of the power back door is disabled.

NOTICE:

When disconnecting the negative (-) terminal cable of the battery or drive unit, initialize the power back door system (See page ED-132).

WIRING DIAGRAM

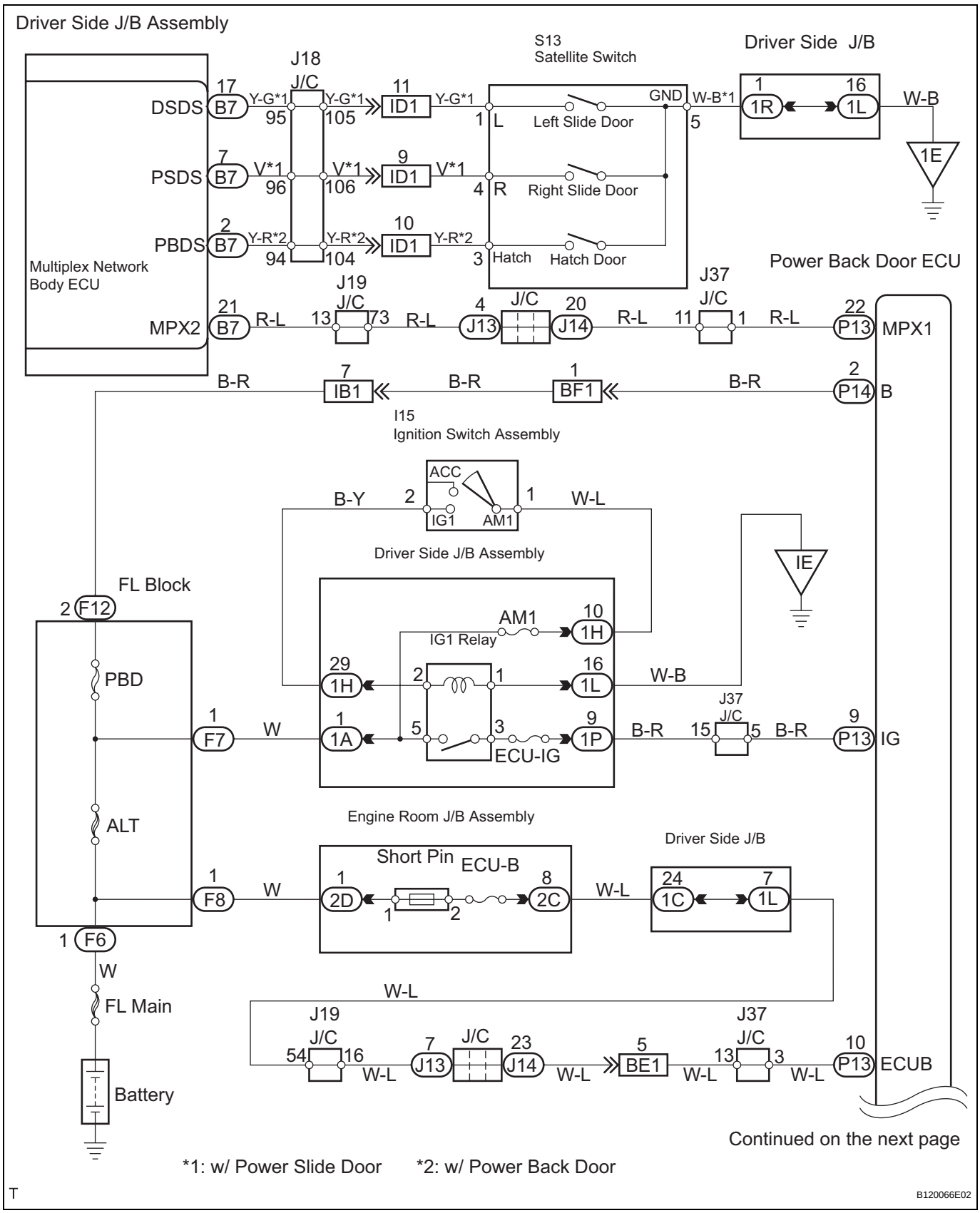

ED

T

Continued from the previous page

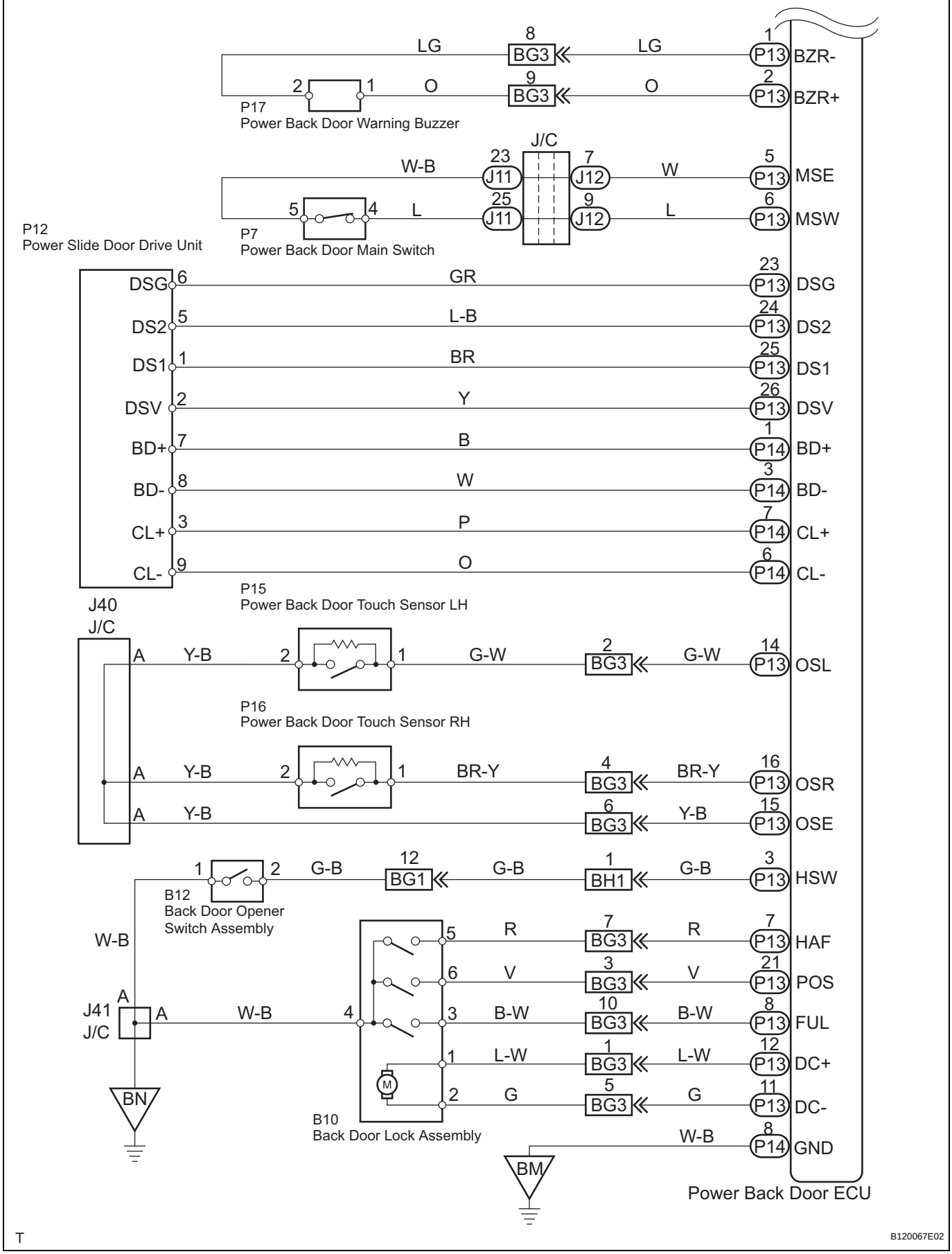

T

B120067E02

ED

INSPECTION PROCEDURE

1	BASIC INSPECTION

(a) Conditions necessary for the power back door to open:
  (1) Power back door main switch is in the ON position (switch free: orange paint on the top of the switch appears).
  (2) Back door is between the fully closed position and approximately around the half-open position.
  (3) Shift lever is in the P position when the ignition switch is ON (When the ignition switch is OFF, the power back door operates in any position of the shift lever.)

(b) Conditions necessary for the power back door to close:
  (1) Power back door main switch is in the ON position (switch free: orange paint on the top of the switch appears).
  (2) Back door is between approximately around the half-open position and the fully open position.
  (3) Back door touch sensor is not damaged and deformed.

OK

2	INSPECT FUSE (ECU-B, ECU IG, AM1)

(a) Inspect the ECU-B, ECU IG and AM1 fuses.

NG → **REPLACE FUSE**

OK

3	CHECK DTC

(a) Check for DTC B2222. DTC B2222 indicates a pulse sensor malfunction.
  (1) Without code outputs, proceed to A.
  (2) With code outputs, proceed to B.

B → **GO TO DTC B2222**

A

4	INSPECT COMMUNICATION FUNCTION OF LARGE-SCALE MULTIPLEX COMMUNICATION SYSTEM (BEAN)

(a) Use the intelligent tester to check for normal function of the multiplex communication system.
  (1) (ECU unconnected, communication line malfunctioning) Without DTC B1214, B1215 or B1287 outputs, proceed to A.

(2) (ECU unconnected, communication line malfunctioning) With DTC B1214, B1215 or B1287 outputs, proceed to B.

B → GO TO MULTIPLEX COMMUNICATION SYSTEM

A

5 READ VALUE OF INTELLIGENT TESTER

(a) Using the intelligent tester, check the DATA LIST for proper functioning of the power back door main switch.

OK (Power back door ECU):

Item	Measurement Item / Display (Range)	Normal Condition	Diagnostic Note
PBD MAIN SW	Power back door main switch signal / ON or OFF	ON: Orange paint on top of the switch appears OFF: Orange paint on top of the switch does not appear	-

OK → Go to step 8

NG

6 INSPECT POWER BACK DOOR MAIN SWITCH

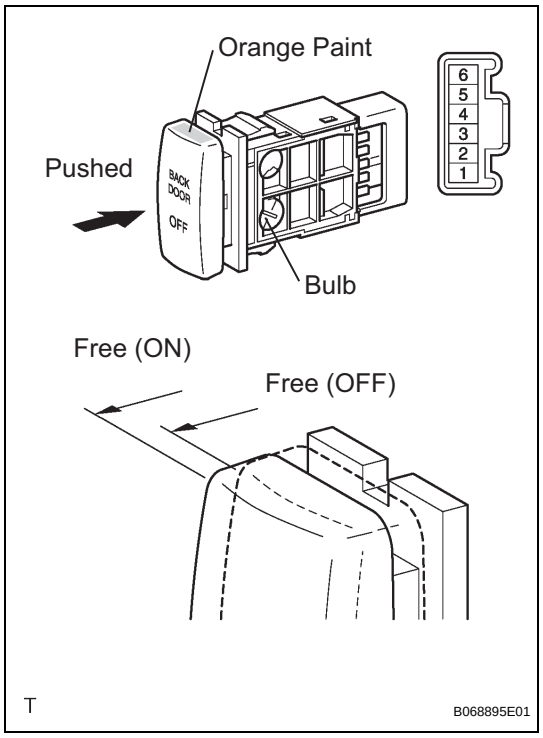

(a) Inspect the resistance of the main switch.

Resistance

Terminal No.	Condition	Specified Condition
4 - 5	Free (ON)	Below 1 Ω
	Pushed (OFF)	10 kΩ or higher

HINT:
If the switch does not illuminate, it will not affect the ON / OFF function of the switch. For the illumination check, refer to INSPECTION (See page ED-225).

NG → REPLACE POWER BACK DOOR MAIN SWITCH

OK

ED

7	CHECK WIRE HARNESS (POWER BACK DOOR MAIN SWITCH - POWER BACK DOOR ECU)

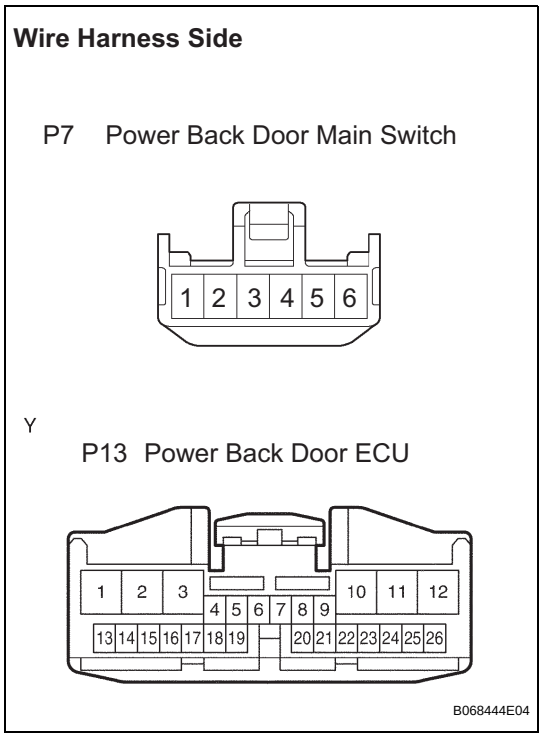

(a) Disconnect the P7 main switch and P13 ECU connectors.
(b) Check the resistance between the wire harness side connectors.
Resistance (Check for open circuit)

Terminal No.	Specified Condition
P7-4 - P13-6 (MSW)	Below 1 Ω
P7-5 - P13-5 (MSE)	

NG → **REPAIR OR REPLACE HARNESS AND CONNECTOR**

OK

REPLACE POWER BACK DOOR ECU

8	CHECK SWITCH OPERATION

(a) If the power back door does not respond to using the satellite switch, proceed to A.
(b) If the power back door does not respond to using the back door opener switch outside, proceed to B.

B → **Go to step 11**

A

9 INSPECT SATELLITE SWITCH

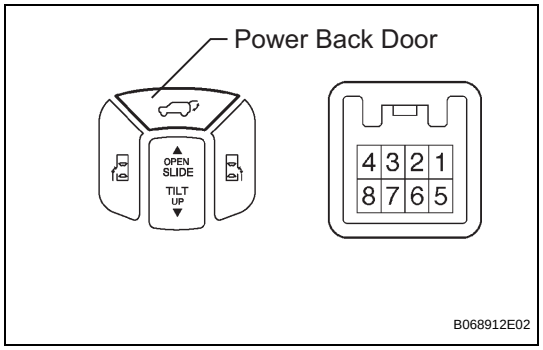

(a) Inspect the resistance of the back door switch.
Resistance

Terminal No.	Condition	Specified Condition
3 - 5	Free	10 kΩ or higher
	Pushed	Below 1 Ω

HINT:
If the switch does not illuminate, it will not affect the ON / OFF function of the switch. For the illumination check, refer to INSPECTION (See page ED-125).

NG → **REPLACE SATELLITE SWITCH**

OK

10 CHECK WIRE HARNESS (SATELLITE SWITCH - DRIVER SIDE J/B, BODY GROUND)

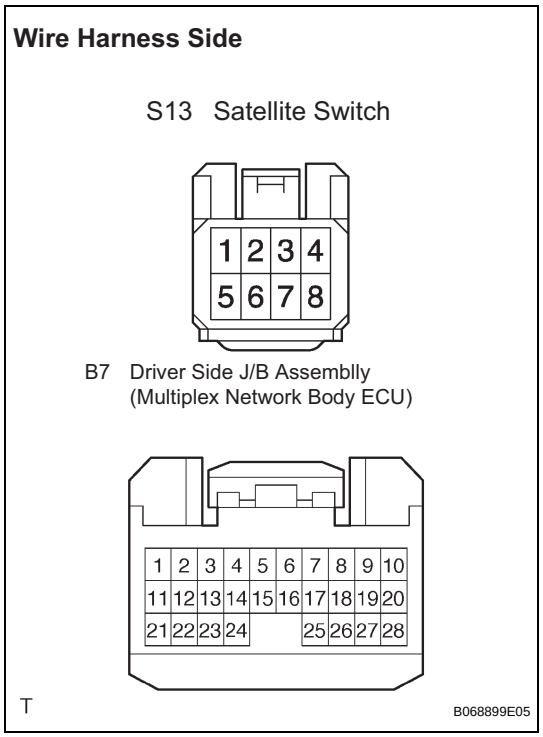

(a) Disconnect the S13 switch and the B7 ECU connectors.
(b) Check the resistance between the wire harness side connectors.
Resistance (Check for open circuit)

Terminal No.	Specified Condition
S13-3 (HATCH) - B7-2 (PBDS)	Below 1 Ω

(c) Check the resistance between the S13 switch connector and body ground.
Resistance (Check for open circuit)

Terminal No.	Specified Condition
S13-5 (GND) - Body ground	Below 1 Ω

OK → **Go to step 14**

NG

REPAIR OR REPLACE HARNESS AND CONNECTOR

ED

11	READ VALUE OF INTELLIGENT TESTER

(a) Using the intelligent tester, check the DATA LIST for proper functioning of the back door opener switch (Outside handle switch).

OK (Power back door ECU):

Item	Measurement Item / Display (Range)	Normal Condition	Diagnostic Note
DOOR HANDLE SW	Back door opener switch signal / ON or OFF	ON: Back door opener switch is pushed OFF: Back door opener switch is not pushed	-

OK → **Go to step 14**

NG

12	INSPECT BACK DOOR OPENER SWITCH ASSEMBLY (OUTSIDE HANDLE SWITCH)

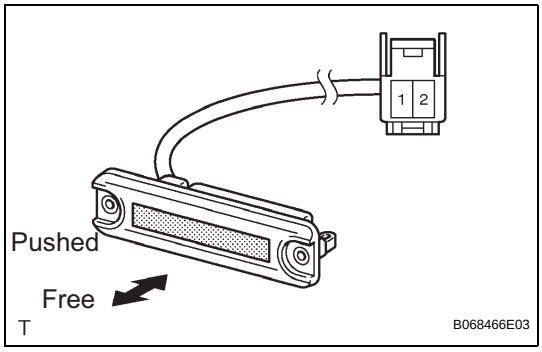

(a) Inspect the resistance of the switch.
Resistance

Terminal No.	Condition	Specified Condition
1 - 2	Free	10 kΩ or higher
	Pushed	Below 1 Ω

NG → **REPLACE BACK DOOR OPENER SWITCH ASSEMBLY**

OK

13	CHECK WIRE HARNESS (BACK DOOR OPENER SWITCH - POWER BACK DOOR ECU AND GROUND)

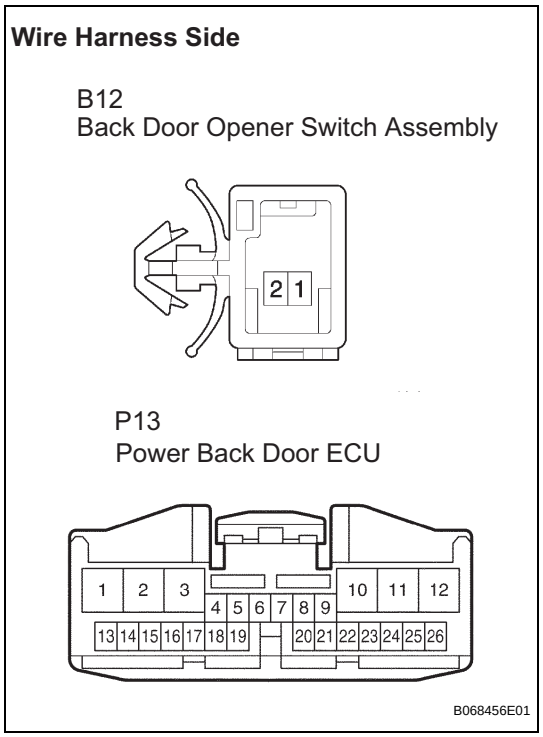

(a) Disconnect the B12 switch and P13 ECU connectors.
(b) Check the resistance between the wire harness side connectors.
Resistance (Check for open circuit)

Terminal No.	Specified Condition
B12-1 - P13-3 (HSW)	Below 1 Ω

(c) Check the resistance between the B12 switch connector and body ground.
Resistance (Check for open circuit)

Terminal No.	Specified Condition
B12-2 - Body ground	Below 1 Ω

NG → **REPAIR OR REPLACE HARNESS AND CONNECTOR**

OK

REPLACE POWER BACK DOOR ECU

14	READ VALUE OF INTELLIGENT TESTER

(a) Using the intelligent tester, check the DATA LIST for proper functioning of the power back door touch sensor LH.

OK (Power back door ECU):

Item	Measurement Item / Display (Range)	Normal Condition	Diagnostic Note
PBD TOUCH SEN L	Power back door touch sensor LH signal / OFF, ON or OPEN	OFF: Power back door touch sensor LH is free ON: Power back door touch sensor LH is pressed OPEN: Power back door touch sensor LH is opened	-

OK → **Go to step 17**

NG

15	INSPECT POWER BACK DOOR TOUCH SENSOR LH

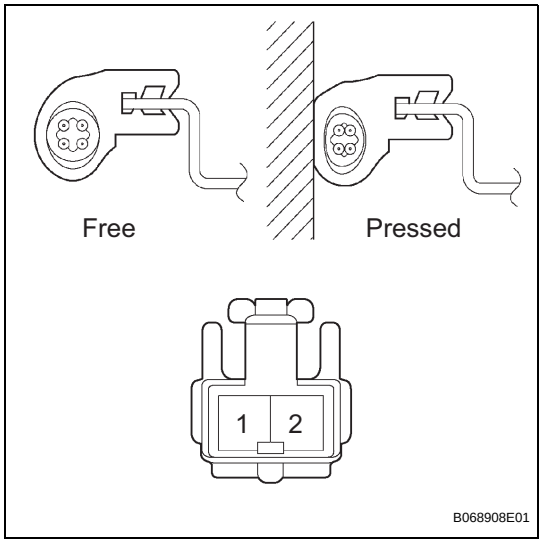

(a) Check the resistance of the sensor.
Resistance

Terminal No.	Condition	Specified Condition
1 - 2	Free	Approx. 1 kΩ
	Pressed	Less than 100 Ω

NG → **REPLACE POWER BACK DOOR TOUCH SENSOR LH**

OK

16	CHECK WIRE HARNESS (POWER BACK DOOR TOUCH SENSOR LH - POWER BACK DOOR ECU)

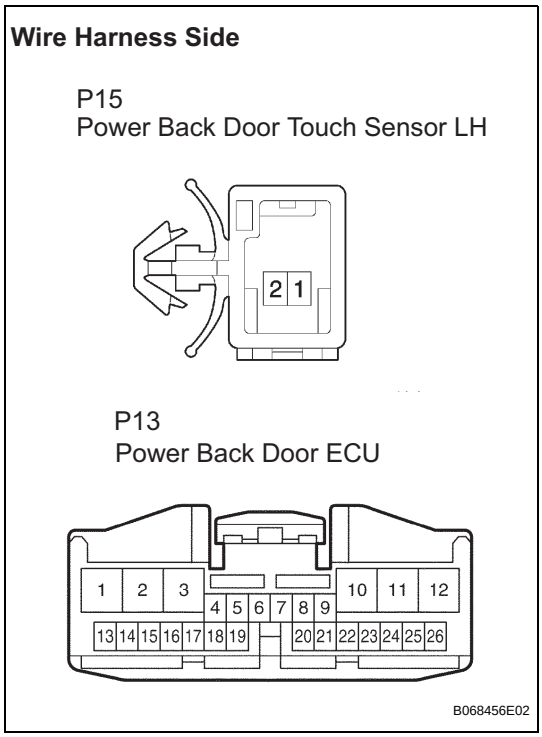

(a) Disconnect the P15 sensor and P13 ECU connectors.
(b) Check the resistance between the wire harness side connectors.
Resistance (Check for open circuit)

Terminal No.	Specified Condition
P15-1 - P13-14 (OSL)	Below 1 Ω
P15-2 - P13-15 (OSE)	

NG → **REPAIR OR REPLACE HARNESS AND CONNECTOR**

OK

REPLACE POWER BACK DOOR ECU

17	READ VALUE OF INTELLIGENT TESTER

(a) Using the intelligent tester, check the DATA LIST for proper functioning of the power back door touch sensor RH.

OK (Power back door ECU):

Item	Measurement Item / Display (Range)	Normal Condition	Diagnostic Note
PBD TOUCH SEN R	Power back door touch sensor RH signal / OFF, ON or OPEN	OFF: Power back door touch sensor RH is free ON: Power back door touch sensor RH is pressed OPEN: Power back door touch sensor RH is opened	-

OK → **Go to step 20**

NG

18	INSPECT POWER SLIDE DOOR WARNING BUZZER RH

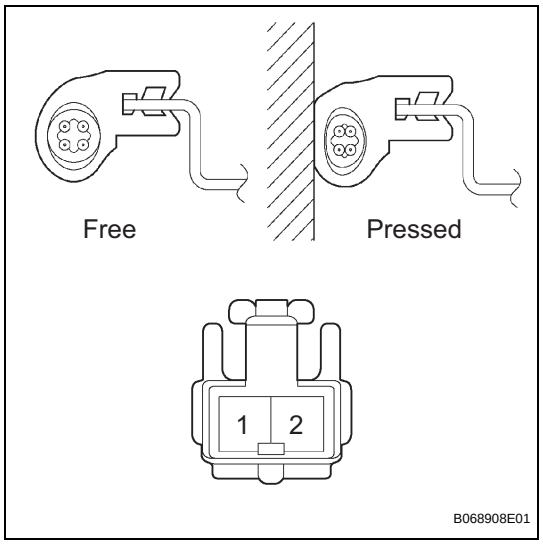

(a) Check the resistance of the sensor.
Resistance

Terminal No.	Condition	Specified Condition
1 - 2	Free	Approx. 1 kΩ
	Pressed	Less than 100 Ω

NG → **REPLACE POWER SLIDE DOOR WARNING BUZZER RH**

OK

19	CHECK WIRE HARNESS (POWER BACK DOOR TOUCH SENSOR RH - POWER BACK DOOR ECU)

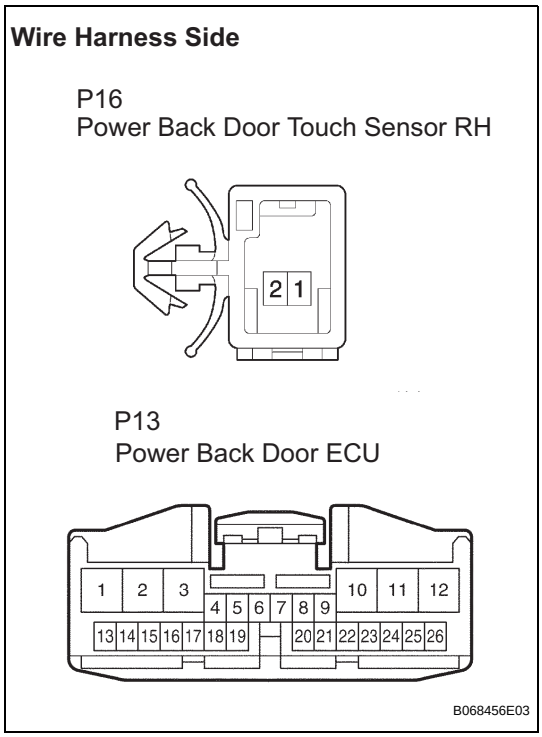

(a) Disconnect the P16 sensor and P13 ECU connectors.
(b) Check the resistance between the wire harness side connectors.

Resistance (Check for open circuit)

Terminal No.	Specified Condition
P16-1 - P13-16 (OSR)	Below 1 Ω
P16-2 - P13-15 (OSE)	

NG → **REPAIR OR REPLACE HARNESS AND CONNECTOR**

OK

REPLACE POWER BACK DOOR ECU

20	PERFORM ACTIVE TEST BY INTELLIGENT TESTER

(a) Select the ACTIVE TEST and then check that the power back door drive unit operates.
HINT:
During the ACTIVE TEST, the intelligent tester sends a signal to the power back door ECU to drive the power back door drive unit. If the power back door drive unit operates, the power back door drive unit itself and the wire harness between the power back door drive unit and power back door ECU are considered to be functionary normally.

ED

OK (Power back door ECU):

Item	Test Details	Diagnostic Note
PBD MOTOR	Power back door motor is operate OFF / FORWARD / REVERSE	Clutch is OFF while power slide door motor is operating
PBD CLUTCH	Power back door clutch is operate OFF / ON	Power slide door motor is OFF when clutch is ON

OK → **Go to step 23**

NG

21 INSPECT POWER BACK DOOR DRIVE UNIT

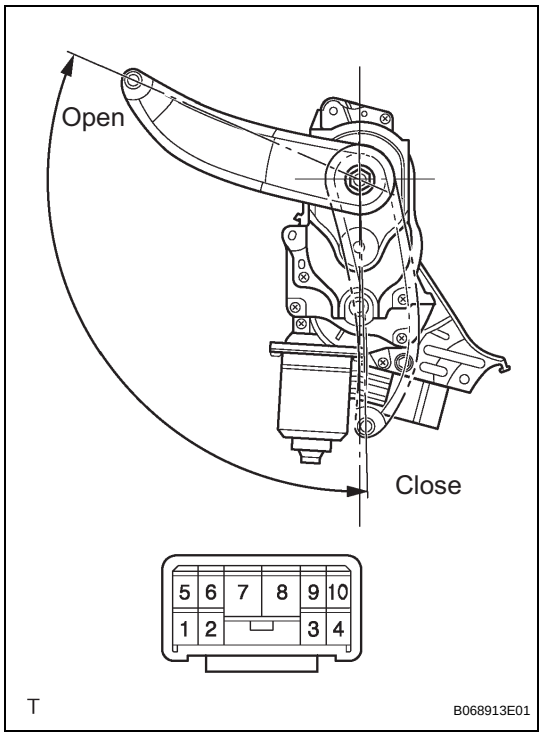

(a) Remove the unit.
(b) Connect the battery positive (+) lead to terminal 3 and battery negative (-) terminal lead to terminal 9.
(c) Apply battery voltage to the terminals and check the motor operation.
OK

Measurement Condition	Specified Condition
Battery positive (+) → Terminal 8 Battery negative (-) → Terminal 7	Open
Battery positive (+) → Terminal 7 Battery negative (-) → Terminal 8	Close

(d) Check the resistance of the clutch terminals.
Resistance

Terminal No.	Specified Condition
3 - 9	4.0 Ω

(e) Reinstall the unit with the connector connected.

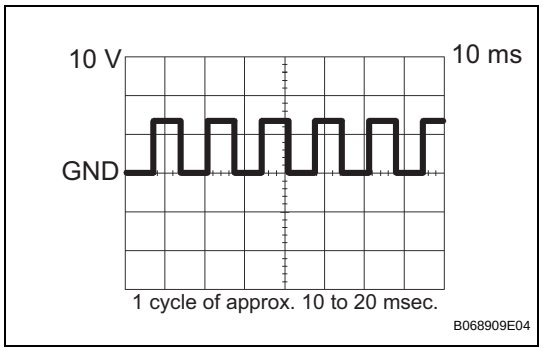

(f) Check the pulse of the pulse sensor.
(1) Using an oscilloscope, check the pulse generated when the door is manually opened and closed.
Reference

Terminal	Tool setting	Vehicle condition
1 - 6, 5 - 6	10 V/DIV., 10 ms/DIV.	Door moving

HINT:
A cycle of the pulse changes between approx. 10 to 20 msec. according to the speeds that the slide door is moving.
NOTICE:
When disconnecting the drive unit, initialize the power back door system (See page ED-132).

NG → **REPLACE POWER BACK DOOR DRIVE UNIT**

OK

22	CHECK WIRE HARNESS (POWER BACK DOOR DRIVE UNIT - POWER BACK DOOR ECU)

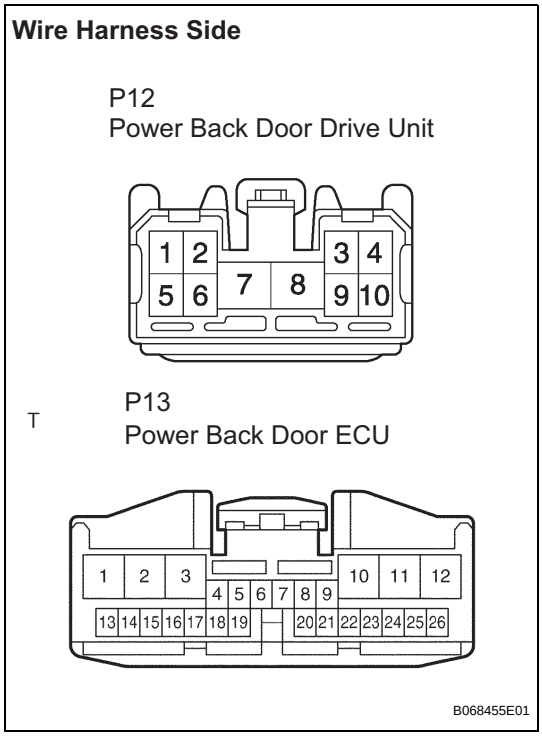

(a) Disconnect the P12 unit and P13 ECU connectors.
(b) Check the resistance between the wire harness side connectors.

Resistance (Check for open circuit)

Terminal No.	Specified Condition
P12-6 (DSG) - P13-23 (DSG)	Below 1 Ω
P12-5 (DS2) - P13-24 (DS2)	
P12-1 (DS1) - P13-25 (DS1)	
P12-2 (DSV) - P13-26 (DSV)	

NG → **REPAIR OR REPLACE HARNESS AND CONNECTOR**

OK

REPLACE POWER BACK DOOR ECU

23	READ VALUE OF INTELLIGENT TESTER

(a) Using the intelligent tester, check the DATA LIST for proper functioning of the switches listed below.

OK (Power back door ECU):

Item	Measurement Item / Display (Range)	Normal Condition	Diagnostic Note
HALF LATCH SW	Back door lock half latch switch signal / ON or OFF	ON: Back door is not completely closed OFF: Back door is closed	-
FULL LATCH SW	Back door lock full latch switch signal / ON or OFF	ON: Back door is opened OFF: Back door is closed	-

OK → **Go to step 26**

NG

24	INSPECT BACK DOOR LOCK ASSEMBLY

NG → **REPLACE BACK DOOR LOCK ASSEMBLY**

OK

25	**CHECK WIRE HARNESS (BACK DOOR LOCK ASSEMBLY - POWER BACK DOOR ECU)**

NG → **REPAIR OR REPLACE HARNESS AND CONNECTOR**

OK

26	**REPLACE POWER BACK DOOR ECU**

(a) Check the power back door for normal OPEN / CLOSE operation.

NG → **REPLACE DRIVER SIDE JUNCTION BLOCK ASSEMBLY (MULTIPLEX NETWORK BODY ECU)**

OK

SYSTEM NORMAL