Jam Protection Function Activates During Power Back Door Operation

DESCRIPTION

- It may be caused by ill-fitting back door, faulty touch sensor or faulty pulse sensor.
- The power back door ECU activates the back motor to open / close the power back door, thus controlling the power back door operation. For jam and foreign object detection, the power back door system uses the pulse sensor built into the power back door drive unit and the 2 touch sensors installed in both sides of the back door respectively.
- When either of the touch sensors comes in contact with an object while the back door is closing, the resistance of the touch sensor changes, which is monitored by the power back door ECU. If a change in resistance is detected, the ECU will judge it to be a jam and foreign object detection in the direction that the power back door is moving and reverse back motor rotation. The touch sensors operate only while the back door is closing. They do not operate while the back door is opening.
- The pulse sensor detects changes in the operating speed of the back door while the back door is operating. When the sensor detects a change in the operating speed, the pulse from the sensor also changes, which is monitored by the power back door ECU. If there is a pulse change detected, the ECU will judge it to be a jam and foreign object detection in the direction that the power back door is moving and reverse back motor rotation.
- If a jam and foreign object detection by the touch sensors and the pulse sensor has occurred 2 or more consecutive times and if the 2nd or most recent detection has occurred during closing, then the power back door ECU will cancel automated back door operation and switch the back door to manual operation mode (not electrically controlled). In order to restore the power back door system to normal operation mode, perform either of the following: manually close the back door fully or press the satellite switch for the power back door or the power back door control switch again (reset operation).

WIRING DIAGRAM

See page ED-143.

INSPECTION PROCEDURE

1	CHECK DTC

(a) Check for DTC B2222. DTC B2222 indicates a pulse sensor malfunction.
  (1) Without code outputs, proceed to A.
  (2) With code outputs, proceed to B.

B → GO TO DTC B2222

A

2	VISUALLY CHECK

(a) Check for foreign objects on the operating area.

NG → REMOVE OBSTACLES AND RE-CHECK DOOR OPERATION

OK

3	MANUAL OPERATION

(a) Turn off* the power door main switch in order to locate the area where reverse operation has been triggered.

* OFF is the condition when the orange paint on the top of the switch does not appear

(b) Move the back door manually, and then check to make sure no obstacles are present (no extra resistance) around the reverse operation area and that the back door smoothly operates.

NG → **ADJUST FITTING CONDITION OF BACK DOOR**

OK

4	READ VALUE OF INTELLIGENT TESTER

(a) Using the intelligent tester, check the DATA LIST for proper functioning of the power back door touch sensor LH.

OK (Power back door ECU):

Item	Measurement Item / Display (Range)	Normal Condition	Diagnostic Note
PBD TOUCH SEN L	Power back door touch sensor LH signal / OFF, ON or OPEN	OFF: Power back door touch sensor LH is free ON: Power back door touch sensor LH is pressed OPEN: Power back door touch sensor LH is opened	-

OK → **Go to step 10**

NG

5	INSPECT POWER BACK DOOR TOUCH SENSOR LH

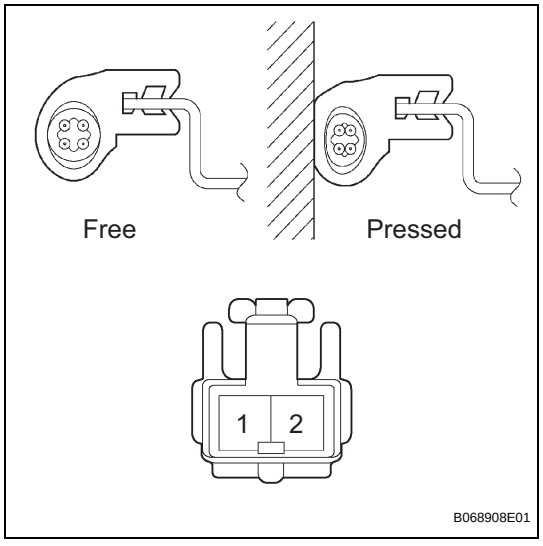

Resistance

Terminal No.	Condition	Specified Condition
1 - 2	Free	Approx. 1 kΩ
	Pressed	Less than 100 Ω

NG → **REPLACE POWER BACK DOOR TOUCH SENSOR LH**

ED

OK

6	CHECK WIRE HARNESS (POWER BACK DOOR TOUCH SENSOR LH - POWER BACK DOOR ECU)

Wire Harness Side

P15
Power Back Door Touch Sensor LH

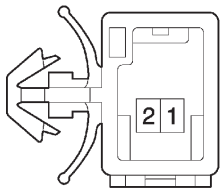

P13
Power Back Door ECU

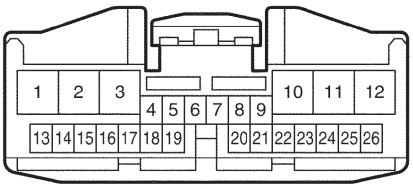

B068456E02

(a) Disconnect the P15 switch and P13 ECU connectors.
(b) Check the resistance between the wire harness side connectors.

Resistance (Check for open circuit)

Terminal No.	Specified Condition
P15-1 - P13-14 (OSL)	Below 1 Ω
P15-2 - P13-15 (OSE)	

NG → **REPAIR OR REPLACE HARNESS AND CONNECTOR**

OK

REPLACE POWER BACK DOOR ECU

7	READ VALUE OF INTELLIGENT TESTER

(a) Using the intelligent tester, check the DATA LIST for proper functioning of the power back door touch sensor RH.

OK (Power back door ECU):

Item	Measurement Item / Display (Range)	Normal Condition	Diagnostic Note
PBD TOUCH SEN R	Power back door touch sensor RH signal / OFF, ON or OPEN	OFF: Power back door touch sensor RH is free ON: Power back door touch sensor RH is pressed OPEN: Power back door touch sensor RH is opened	-

OK → **Go to step 10**

NG

8	CHECK POWER BACK DOOR TOUCH SENSOR RH

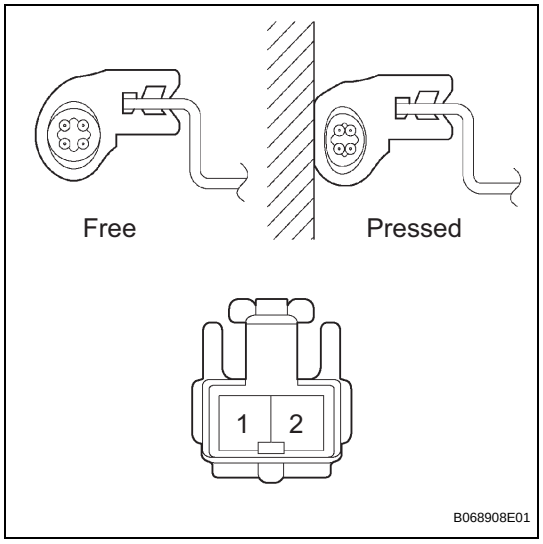

Resistance

Terminal No.	Condition	Specified Condition
1 - 2	Free	Approx. 1 kΩ
	Pressed	Less than 100 Ω

NG → **REPLACE POWER BACK DOOR TOUCH SENSOR RH**

OK

9	CHECK WIRE HARNESS (POWER BACK DOOR TOUCH SENSOR RH - POWER BACK DOOR ECU)

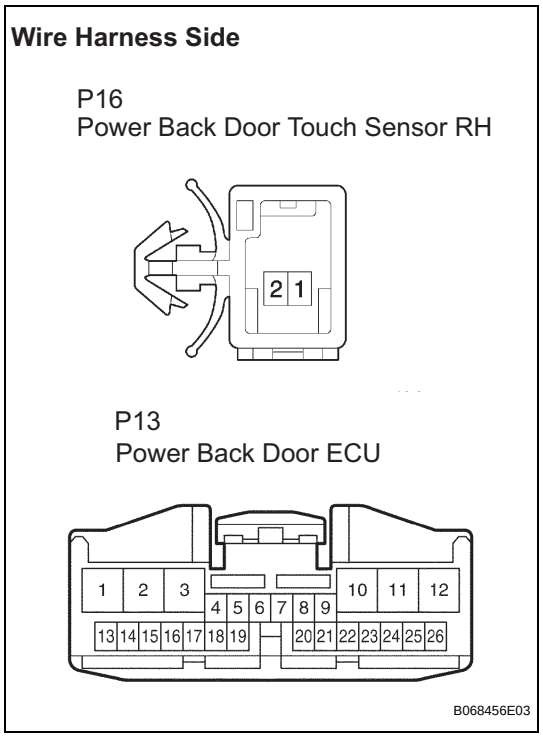

(a) Disconnect the P16 switch and P13 ECU connectors.
(b) Check the resistance between the wire harness side connectors.

Resistance (Check for open circuit)

Terminal No.	Specified Condition
P16-1 - P13-16 (OSR)	Below 1 Ω
P16-2 - P13-15 (OSE)	

NG → **REPAIR OR REPLACE HARNESS AND CONNECTOR**

OK

REPLACE POWER BACK DOOR ECU

10	PERFORM ACTIVE TEST BY INTELLIGENT TESTER

(a) Select the ACTIVE TEST and then check that the power back door drive unit operates.
HINT:
During the ACTIVE TEST, the intelligent tester sends a signal to the power back door ECU to drive the drive unit. If the drive unit operates, the drive unit itself and the wire harness between the drive unit and power back door ECU are considered to be functioning normally.

OK (Power back door ECU):

Item	Test Details	Diagnostic Note
PBD MOTOR	Power back door motor is operate OFF / FORWARD / REVERSE	Clutch is OFF while power slide door motor is operating
PBD CLUTCH	Power back door clutch is operate OFF / ON	Power slide door motor is OFF when clutch is ON

OK → **REPLACE POWER BACK DOOR ECU AND RE-CHECK DOOR OPERATION**

NG

11	INSPECT POWER BACK DOOR DRIVE UNIT

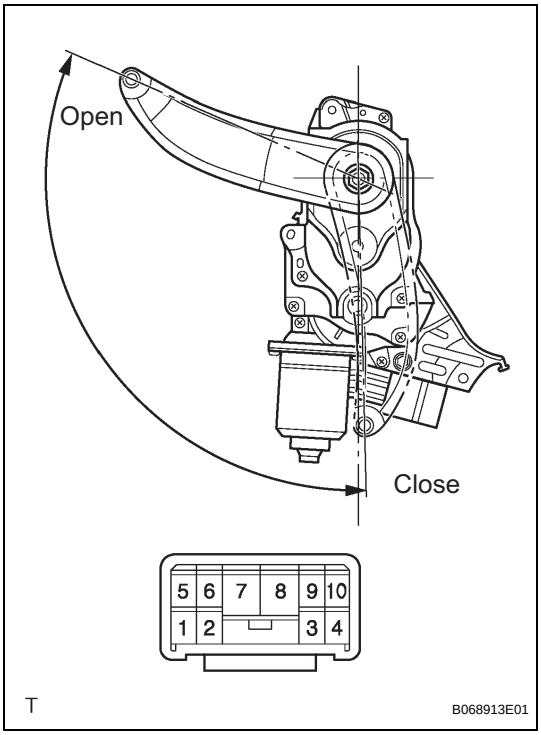

(a) Remove the unit.
(b) Connect the battery positive (+) lead to terminal 3 and battery negative (-) terminal lead to terminal 9.
(c) Apply battery voltage to the terminals and check the motor operation.
OK

Measurement Condition	Specified Condition
Battery positive (+) → Terminal 8 Battery negative (-) → Terminal 7	**Open**
Battery positive (+) → Terminal 7 Battery negative (-) → Terminal 8	**Close**

(d) Check the resistance of the clutch terminals.
Resistance

Terminal No.	Specified Condition
3 - 9	**4.0 Ω**

(e) Reinstall the unit with the connector connected.

ED

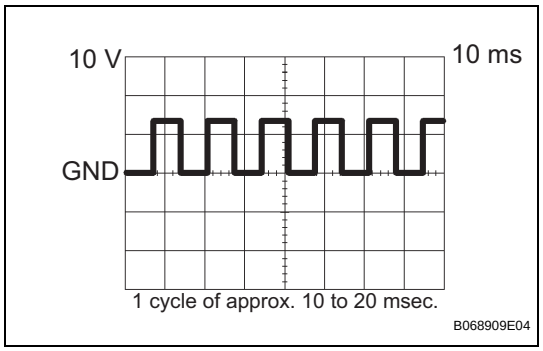

(f) Check the pulse of the pulse sensor.
(1) Using an oscilloscope, check the pulse generated when the door is manually opened and closed.
Reference

Terminal	Tool setting	Vehicle condition
1 - 6, 5 - 6	10 V/DIV., 10 ms/DIV.	Door moving

HINT:
A cycle of the pulse changes between approx. 10 to 20 msec. according to the speeds that the slide door is moving.
NOTICE:
When disconnecting the drive unit, initialize the power back door system (See page ED-132).

NG → **REPLACE POWER BACK DOOR DRIVE UNIT**

OK

12 CHECK WIRE HARNESS (POWER BACK DOOR DRIVE UNIT - POWER BACK DOOR ECU)

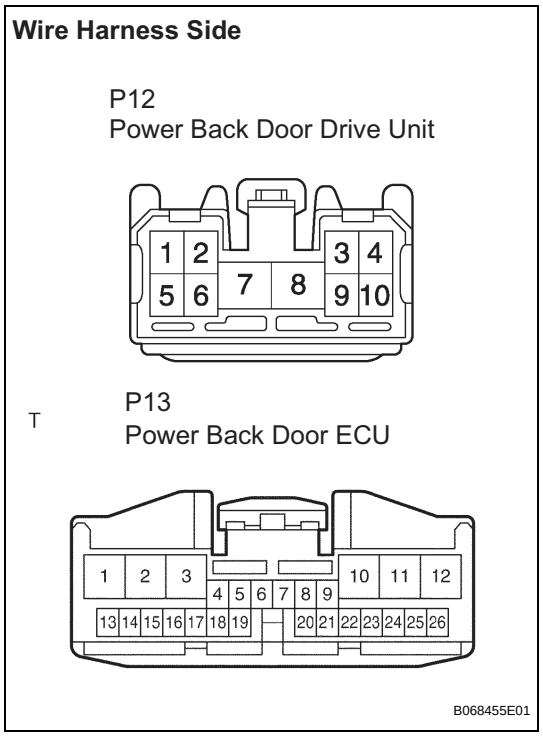

(a) Disconnect the P12 unit and P13 ECU connectors.
(b) Check the resistance between the wire harness side connectors.
Resistance (Check for open circuit)

Terminal No.	Specified Condition
P12-6 (DSG) - P13-23 (DSG)	Below 1 Ω
P12-5 (DS2) - P13-24 (DS2)	
P12-1 (DS1) - P13-25 (DS1)	
P12-2 (DSV) - P13-26 (DSV)	

NG → **REPAIR OR REPLACE HARNESS AND CONNECTOR**

OK

REPLACE POWER BACK DOOR ECU

ED