HOOD

COMPONENTS

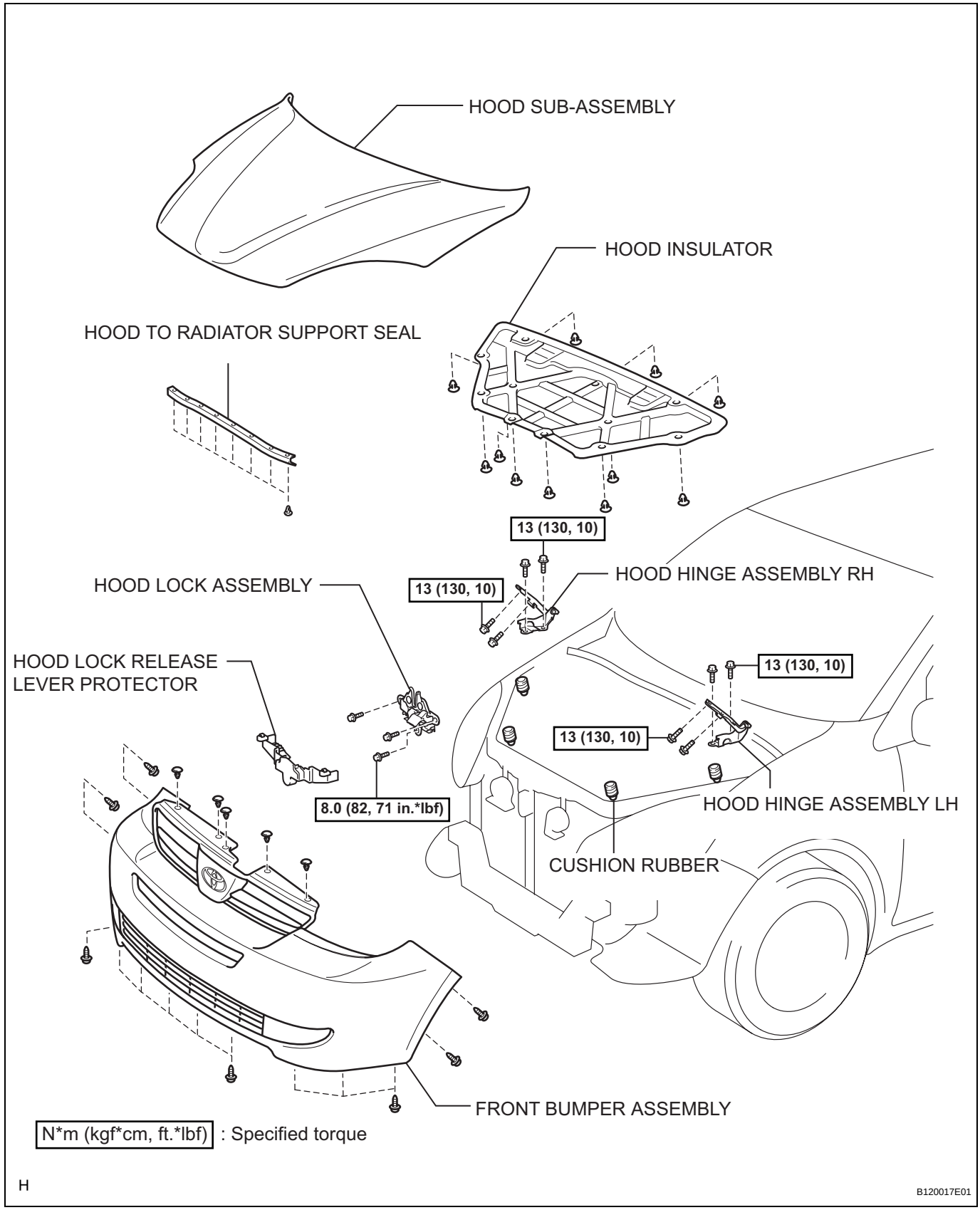

ED

ADJUSTMENT

HINT:
Since a centering bolt is used as a hood hinge mounting bolt and hood lock mounting bolt, the hood and hood lock can not be adjusted with them on. Substitute a bolt with a washer for the centering bolt.

1. INSPECT HOOD SUB-ASSEMBLY

(a) Check that the clearance is within the standard range.

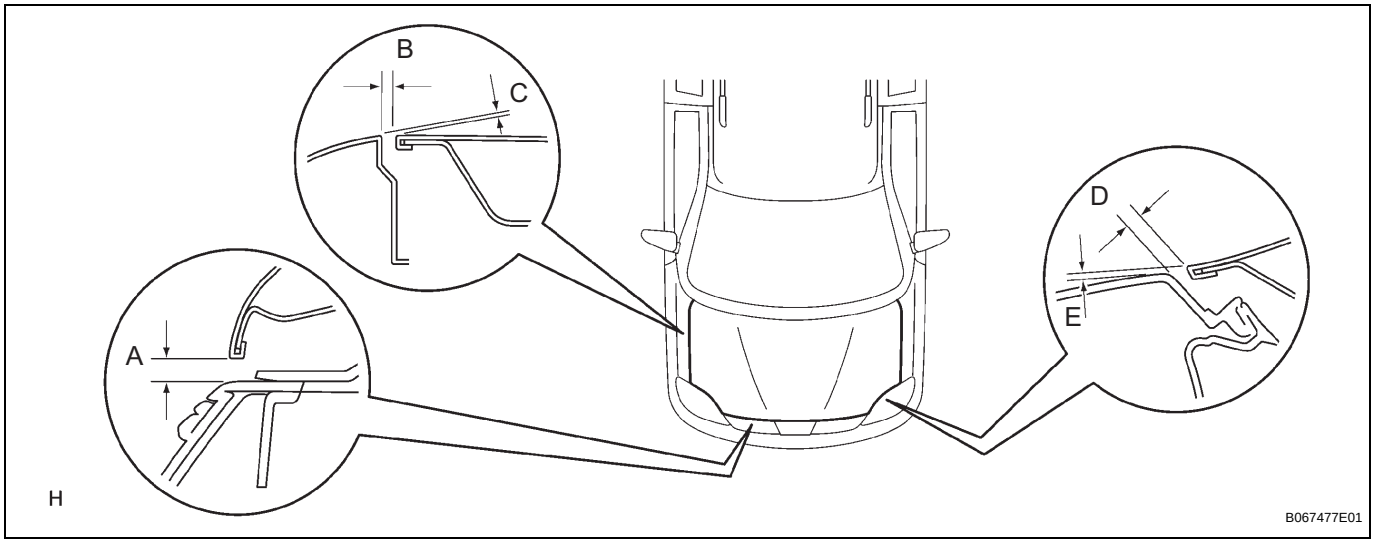

Standard

A	B	C	D	E
8.0 +- 1.5 mm (0.315 +- 0.059 in.)	4.0 +- 1.5 mm (0.157 +- 0.059 in.)	0.4 +- 1.5 mm (0.015 +- 0.059 in.)	5.0 +- 1.5 mm (0.197 +- 0.059 in.)	1.1 +- 1.5 mm (0.043 +- 0.059 in.)

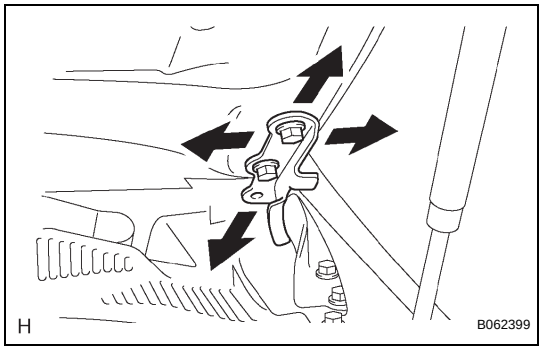

2. ADJUST HOOD SUB-ASSEMBLY

(a) Horizontally adjust the hood.

(1) Loosen the 4 hood hinge mounting bolts on the hood side.

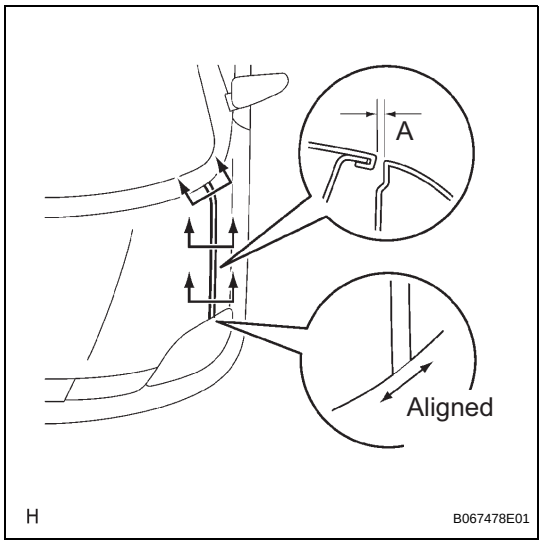

(2) Adjust the clearance by moving the hood, so that it will be in the standard range.
Standard (A):
4.0 +- 1.5 mm (0.157 +- 0.059 in.)
(3) Tighten the hood side hinge bolts after the adjustment.
Torque: 13 N*m (130 kgf*cm, 10 ft.*lbf)

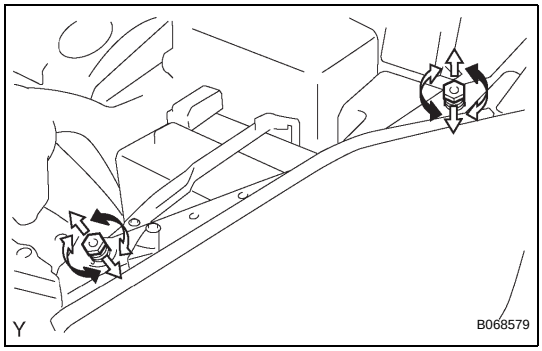

(b) Adjust the height of the hood front end using the cushion rubber.
(1) Adjust the cushion rubber so that the hood and the fender will be aligned.
HINT:
The cushion rubber goes up and down when turned.

(c) Adjust the hood lock.
(1) Remove the front bumper cover (See page ET-3).

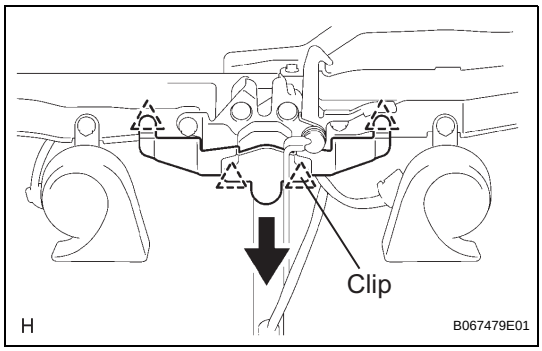

(2) Using a screwdriver, disengage the 4 claws and remove the hood lock release lever protector.
HINT:
Tape the screwdriver tip before use.
NOTICE:
Removing the protector damages the clips inside the protector. Therefore, the use of a new protector is necessary for installation.

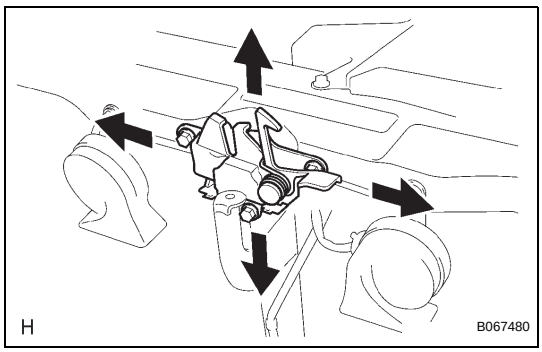

(3) Loosen the 3 hood lock mounting bolts.
(4) Adjust the striker position by moving the hood lock, so that the striker can enter smoothly.
(5) Tighten the hood lock bolts after the adjustment.
Torque: 8.0 N*m (82 kgf*cm, 71 in.*lbf)