# FRONT DOOR

## COMPONENTS

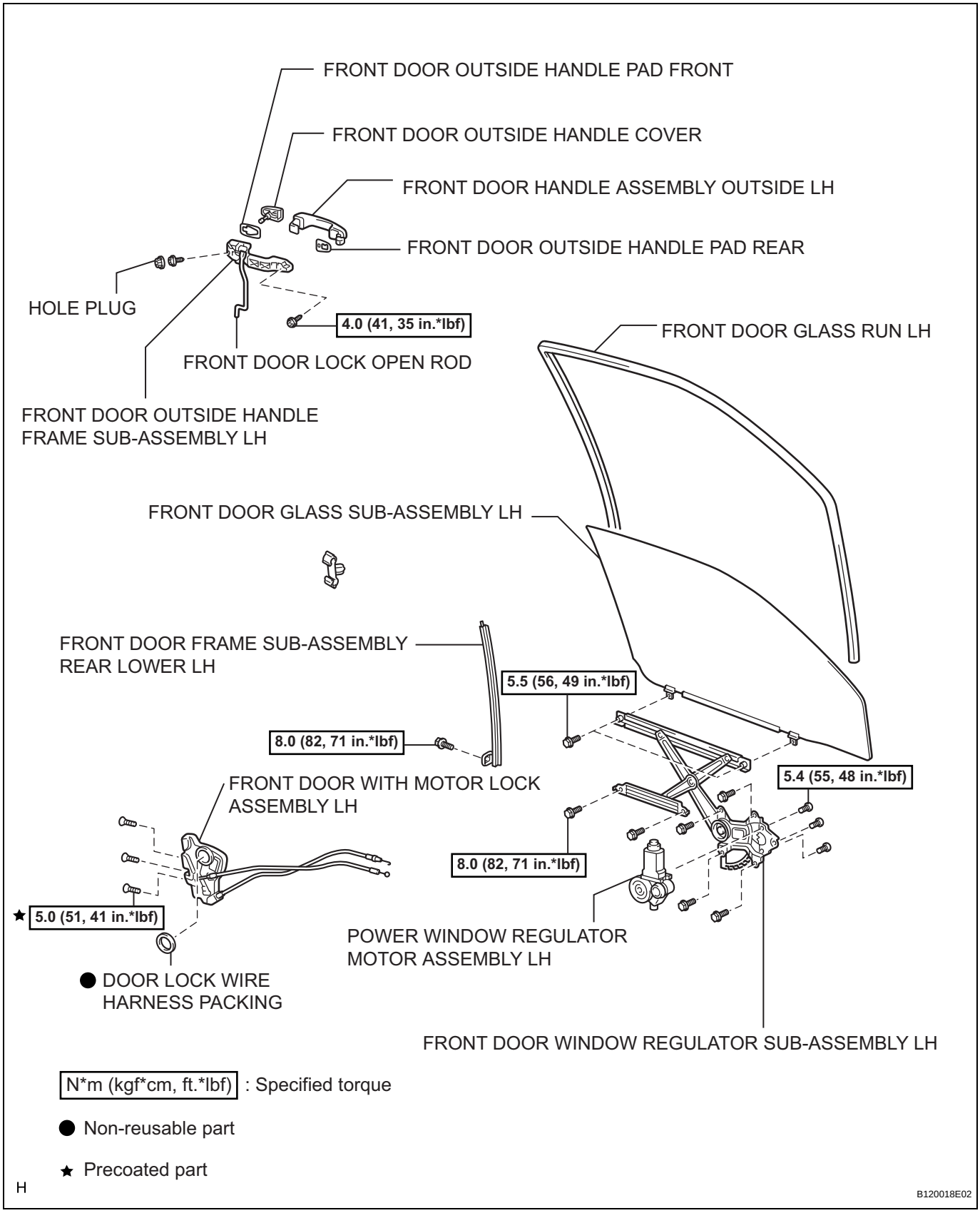


ED

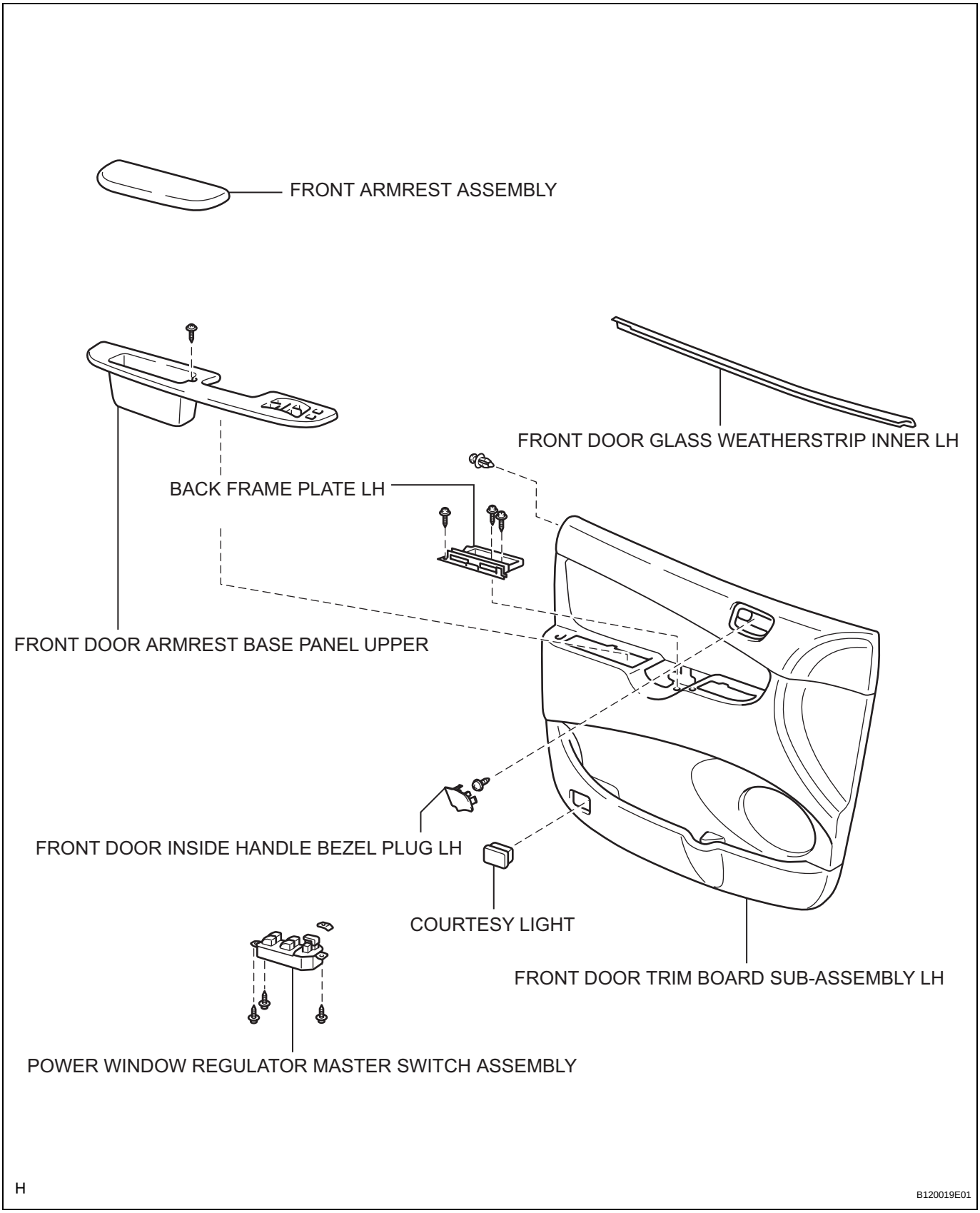
FRONT ARMREST ASSEMBLY
FRONT DOOR GLASS WEATHERSTRIP INNER LH
BACK FRAME PLATE LH
FRONT DOOR ARMREST BASE PANEL UPPER
FRONT DOOR INSIDE HANDLE BEZEL PLUG LH
COURTESY LIGHT
FRONT DOOR TRIM BOARD SUB-ASSEMBLY LH
POWER WINDOW REGULATOR MASTER SWITCH ASSEMBLY
H
B120019E01

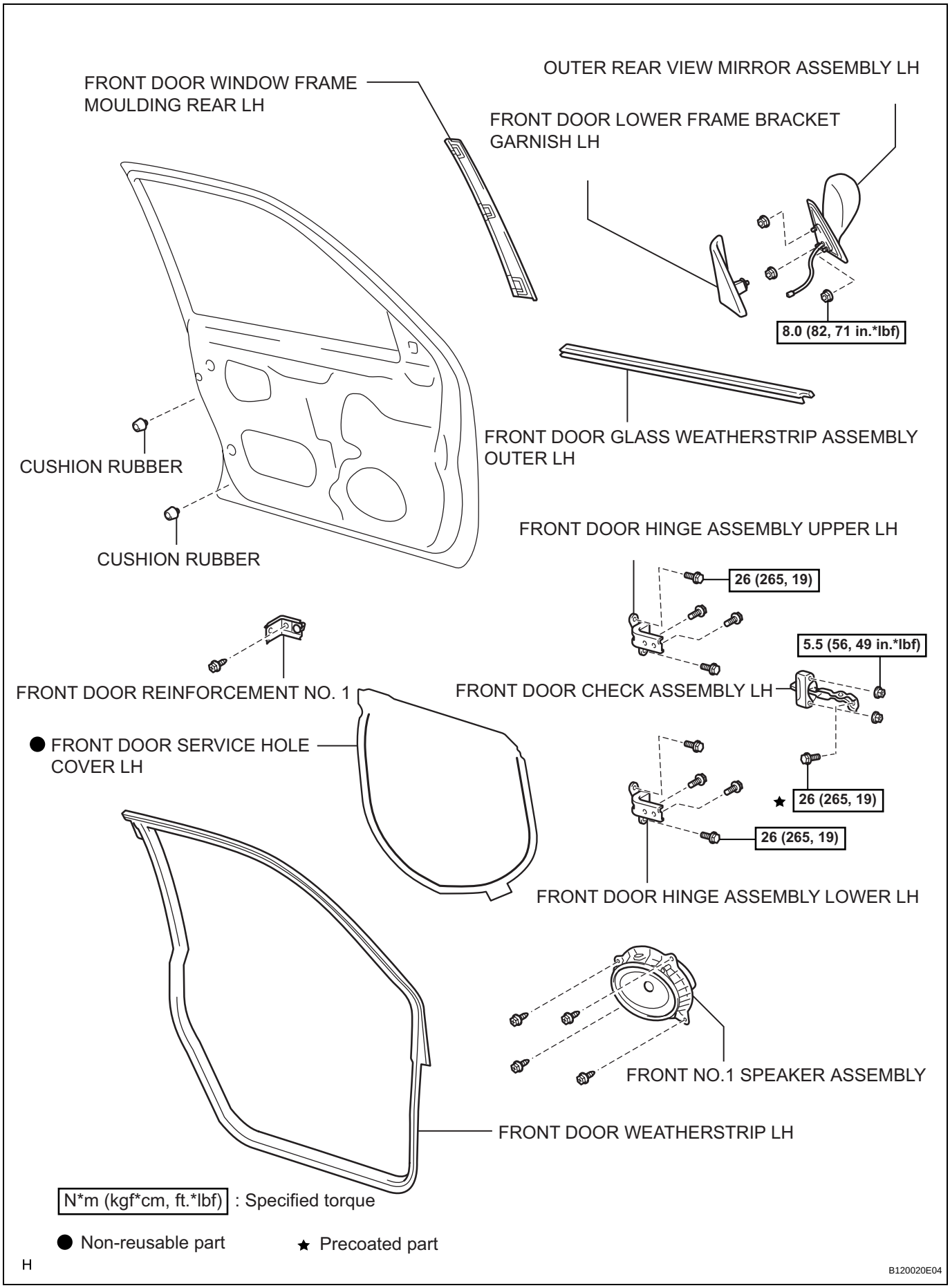
FRONT DOOR WINDOW FRAME MOULDING REAR LH
OUTER REAR VIEW MIRROR ASSEMBLY LH
FRONT DOOR LOWER FRAME BRACKET GARNISH LH
8.0 (82, 71 in.*lbf)
FRONT DOOR GLASS WEATHERSTRIP ASSEMBLY OUTER LH
CUSHION RUBBER
CUSHION RUBBER
FRONT DOOR HINGE ASSEMBLY UPPER LH
26 (265, 19)
5.5 (56, 49 in.*lbf)
FRONT DOOR REINFORCEMENT NO. 1
FRONT DOOR CHECK ASSEMBLY LH
● FRONT DOOR SERVICE HOLE COVER LH
★ 26 (265, 19)
26 (265, 19)
FRONT DOOR HINGE ASSEMBLY LOWER LH
FRONT NO.1 SPEAKER ASSEMBLY
FRONT DOOR WEATHERSTRIP LH
N*m (kgf*cm, ft.*lbf) : Specified torque
● Non-reusable part
★ Precoated part
H
B120020E04

ED