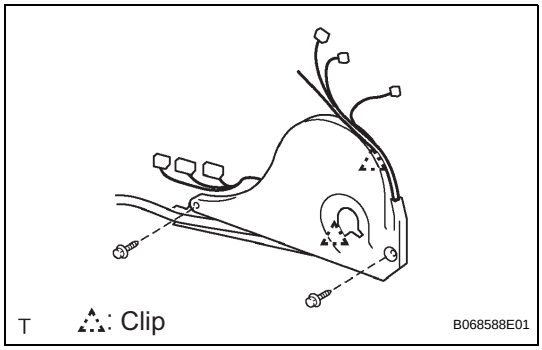

REASSEMBLY

1. INSTALL REAR DOOR WIRE SUB-ASSEMBLY LH

(a) Install the wire.

NOTICE:

When installing the wire, push the areas where the clips are installed in order to prevent damage and deformation.

(b) Install the 2 screws.

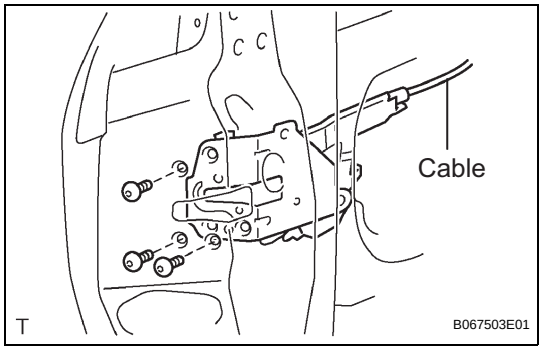

2. INSTALL REAR DOOR LOCK ASSEMBLY LH

(a) Apply MP grease to the sliding and rotating areas of the lock.

(b) Apply adhesive to the threads of the screws.

Adhesive:

Part No. 08833-00070, THREE BOND 1324 or equivalent

(c) Install the lock to the door panel with the 3 screws.

Torque: 5.0 N*m (51 kgf*cm, 44 in.*lbf)

(d) Connect the cable.

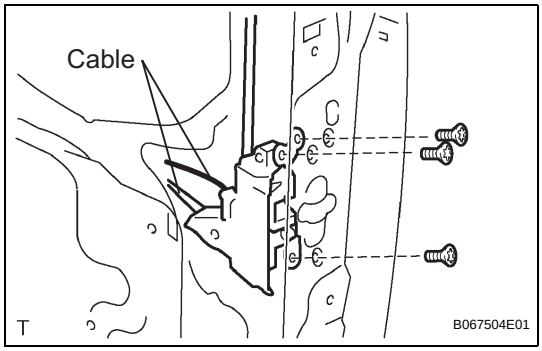

3. INSTALL SLIDE DOOR LOCK ASSEMBLY FRONT LH

(a) Apply MP grease to the sliding and rotating areas of the lock.

(b) Apply adhesive to the threads of the screws.

Adhesive:

Part No. 08833-00070, THREE BOND 1324 or equivalent

(c) Install the lock front to the door panel with the 3 screws.

Torque: 5.0 N*m (51 kgf*cm, 44 in.*lbf)

(d) Connect the 2 cables.

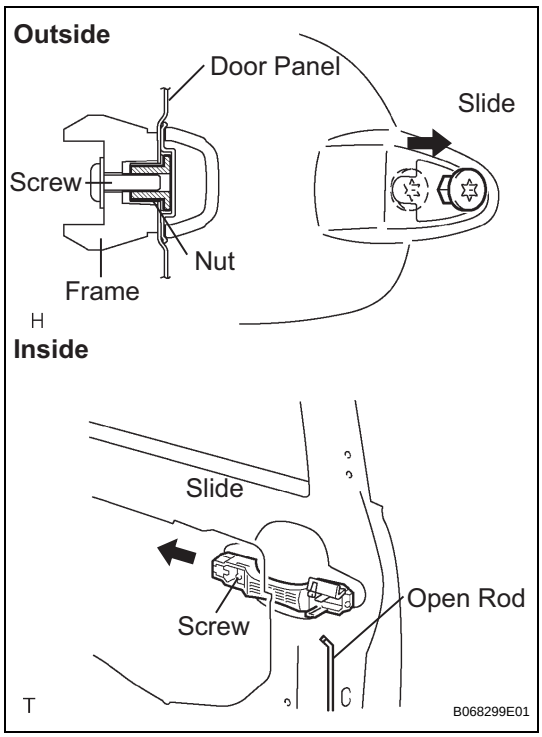

4. INSTALL REAR DOOR OUTSIDE HANDLE FRAME SUB-ASSEMBLY LH

(a) Apply MP grease to the sliding and rotating parts of the outside handle frame.

(b) Slide the outside handle frame in the direction indicated by the arrow mark in the illustration.

(c) Using a torx socket wrench (T30), install the outside handle frame with the screw.

Torque: 7.0 N*m (71 kgf*cm, 62 in.*lbf)

NOTICE:

Insert a cover between the nut and the door panel.

(d) Install the open rod.

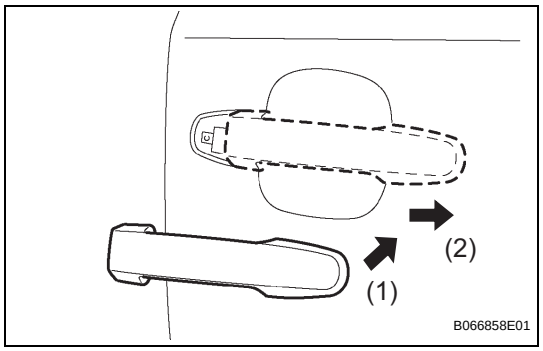

5. INSTALL REAR DOOR OUTSIDE HANDLE ASSEMBLY LH

(a) Install the outside handle pads front and rear.

(b) Pushing the outside handle in the direction indicated by the arrow mark in the illustration, install the outside handle.

NOTICE:

If the release plate is not pulled and held when installing the outside handle, it will strike against with the outside handle and become damaged.

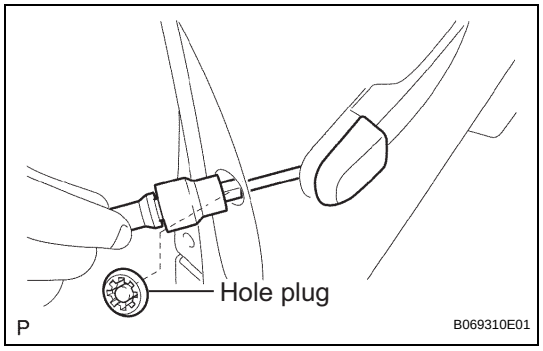

6. INSTALL REAR DOOR OUTSIDE HANDLE COVER LH

(a) Using a torx socket wrench (T30), install the outside handle cover with the screw.

Torque: 7.0 N*m (71 kgf*cm, 62 in.*lbf)

(b) Install the hole plug.

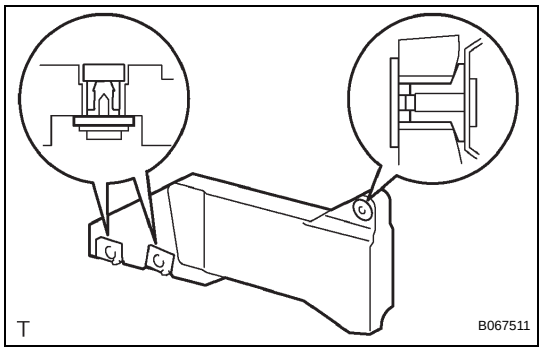

7. INSTALL REAR DOOR STIFFENER CUSHION LH

(a) Install the 2 grommets and 2 clips.

(b) Install the stiffener cushion with the clip and 2 screws.

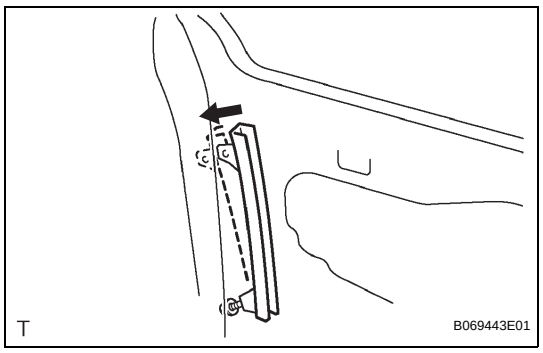

8. INSTALL SLIDE DOOR ATTACHMENT CONTROL LH

(a) Temporarily install the window frame rear lower with the nut.

(b) Move the window frame rear lower in the direction indicated by the arrow mark in the illustration.

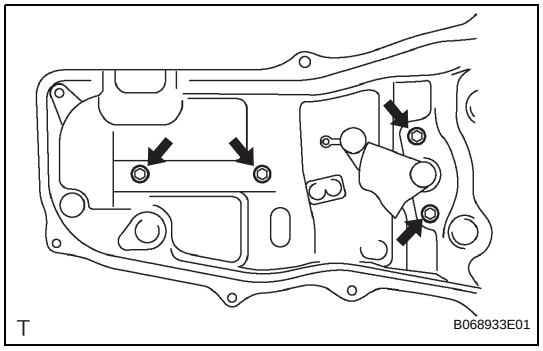

(c) Apply MP grease to the sliding and rotating areas of the window regulator.

(d) Install the window regulator with the 4 bolts.

Torque: 7.0 N*m (71 kgf*cm, 62 in.*lbf)

(e) Install the half stop control lever and door lock control bellcrank.

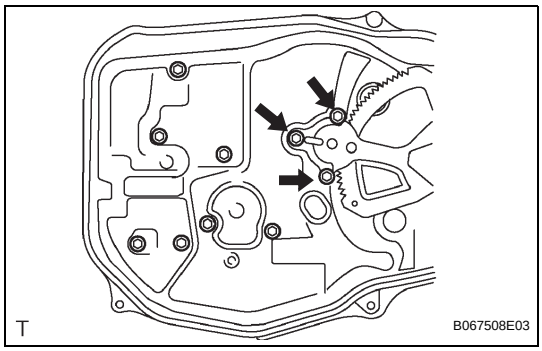

(f) Install the power window regulator motor with the 3 screws.
Torque: 5.5 N*m (58 kgf*cm, 49 in.*lbf)

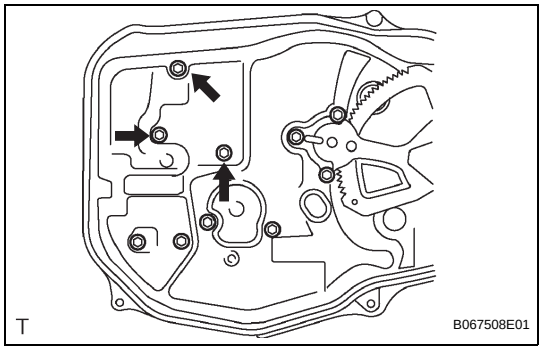

(g) Apply MP grease to the sliding and rotating areas of the lock remote control.
(h) Install the lock remote control with the 3 bolts.
Torque: 5.5 N*m (58 kgf*cm, 49 in.*lbf)

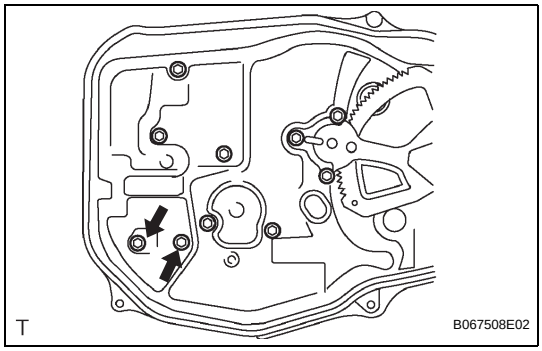

(i) Apply MP grease to the sliding and rotating areas of the lock actuator.
(j) Install the lock actuator with 2 screws.
Torque: 5.5 N*m (58 kgf*cm, 49 in.*lbf)

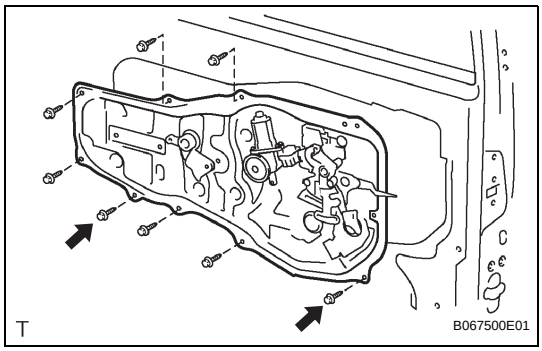

(k) Install the attachment control with the 8 bolts.
Torque: 8.0 N*m (82 kgf*cm, 71 in.*lbf)

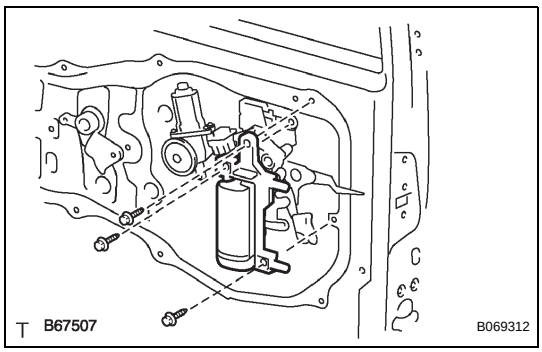

(l) Install the inside handle with the 2 screws and bolt.
Torque: 7.0 N*m (71 kgf*cm, 62 in.*lbf)

ED

(m) Install the control cables and the wires.

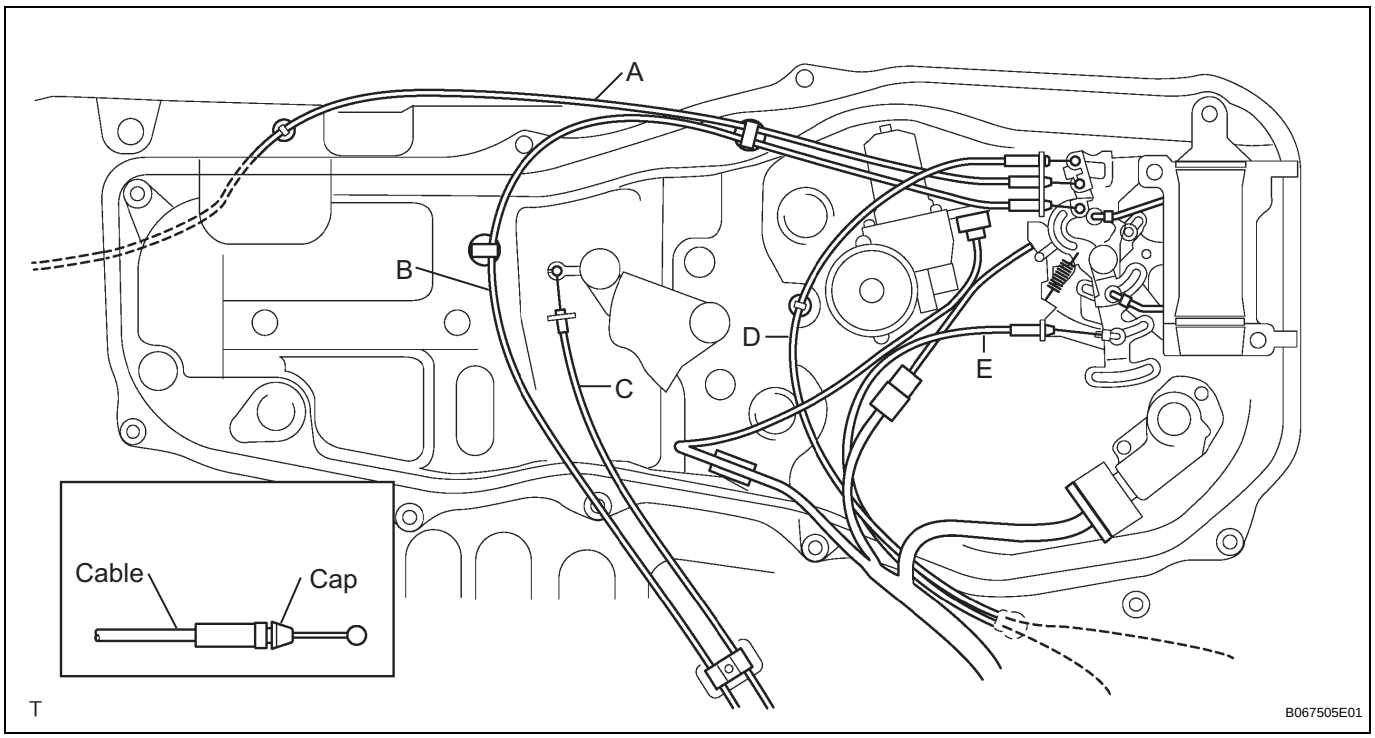

No.	Cap Color	Control
A	Gray	Rear Lock Cable
B	Black	Full Open Lock Cable
C	-	Half Open Stopper Cable
D	Green	Front Lock Cable
E	Yellow	Outside Handle Cable

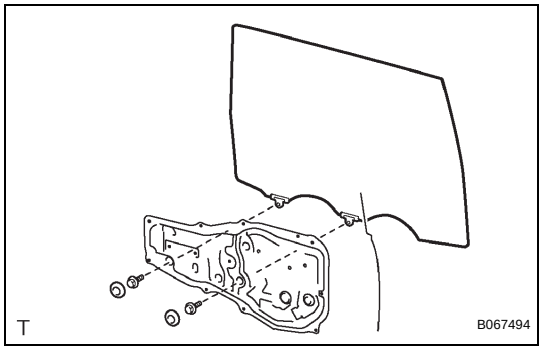

9. INSTALL SLIDE DOOR WINDOW ASSEMBLY LH

(a) Open the door glass until the bolts appear in the service holes.

(b) Install the window with the 2 bolts.
Torque: 8.0 N*m (82 kgf*cm, 71 in.*lbf)

(c) Install the hole plug.

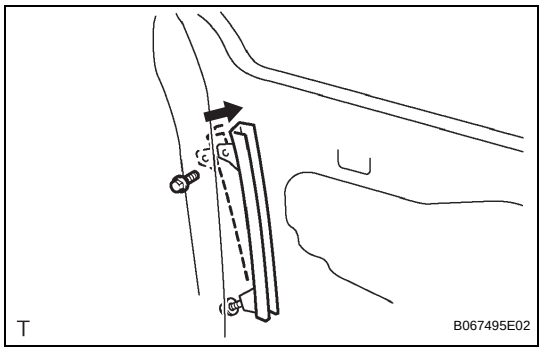

(d) Put the window frame rear lower in the original position and tighten the nut.
Torque: 8.0 N*m (82 kgf*cm, 71 in.*lbf)

(e) Install the bolt.
Torque: 8.0 N*m (82 kgf*cm, 71 in.*lbf)

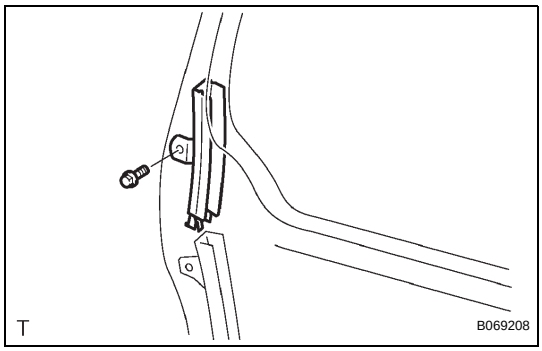

(f) Install the window frame with the bolt.
Torque: 8.0 N*m (82 kgf*cm, 71 in.*lbf)
(g) Install the glass run.

INSTALLATION

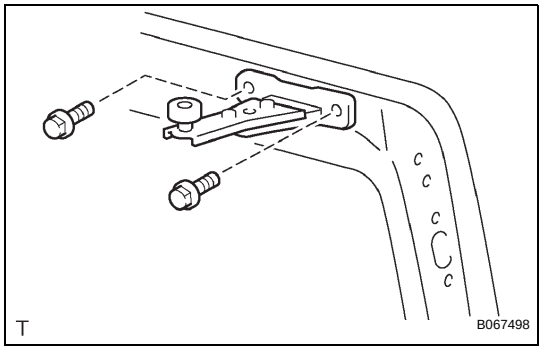

1. INSTALL SLIDE DOOR ROLLER ASSEMBLY UPPER
(a) Apply MP grease to the rotating areas of the roller.
(b) Install the roller with the 2 bolts.
Torque: 13 N*m (130 kgf*cm, 10 ft.*lbf)

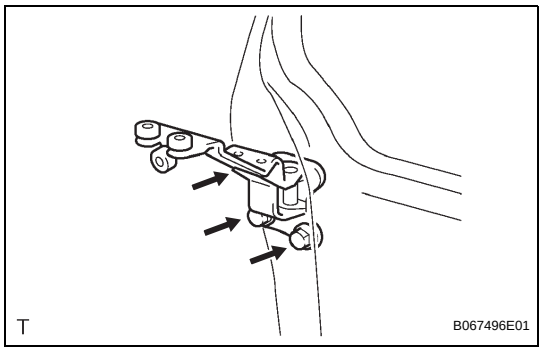

2. INSTALL SLIDE DOOR HINGE ASSEMBLY CENTER LH
(a) Apply MP grease to the rotating areas of the hinge.
(b) Install the hinge with the 3 bolts.
Torque: 31 N*m (316 kgf*cm, 23 ft.*lbf)

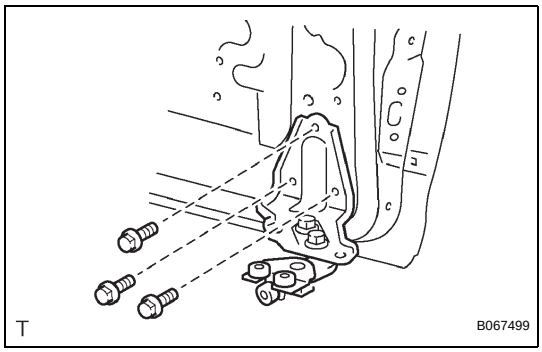

3. INSTALL SLIDE DOOR ROLLER ASSEMBLY LOWER LH
(a) Apply MP grease to the rotating areas of the roller.
(b) Install the roller lower with the 3 bolts.
Torque: 31 N*m (316 kgf*cm, 23 ft.*lbf)

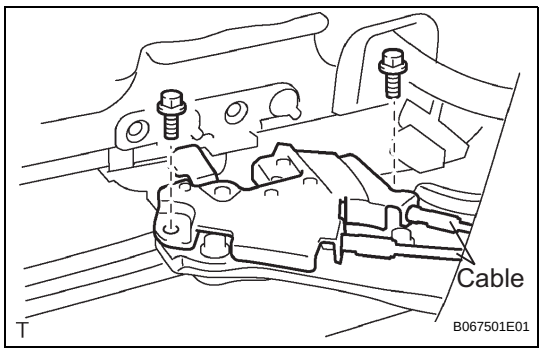

4. INSTALL SLIDE DOOR FULL OPEN STOP LOCK ASSEMBLY LH
(a) Apply MP grease to the sliding and rotating areas of the lock.
(b) Install the lock with the 2 bolts.
Torque: 8.0 N*m (82 kgf*cm, 71 in.*lbf)
(c) Connect the 2 cables.

5. INSTALL SLIDE DOOR RAILS
(a) Install the rail center with the 3 screws.
Torque: 26 N*m (265 kgf*cm, 19 ft.*lbf)

(b) Install the rear side rail with the 2 screws.
Torque: 19.5 N*m (200 kgf*cm, 14 ft.*lbf)
(c) Install the rail upper with the 2 bolts and 2 nuts.
Torque: 10 N*m (102 kgf*cm, 8 ft.*lbf)
(d) Install the roof headlining (See page IR-14).

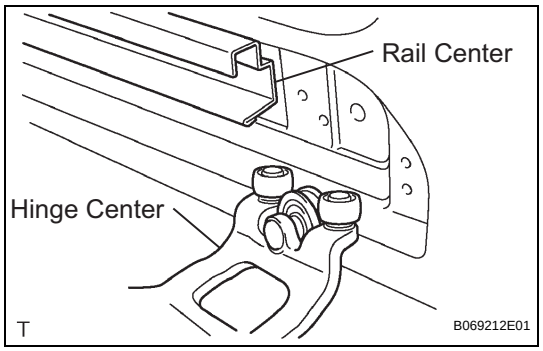

6. INSTALL SLIDE DOOR

(a) Put in the slide door hinge center from the rear part of the slide door rail center.

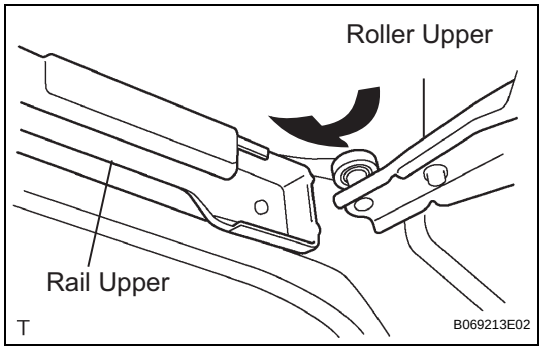

(b) Move the slide door forward and then put in the slide door roller upper into the cut area of the slide door rail upper.

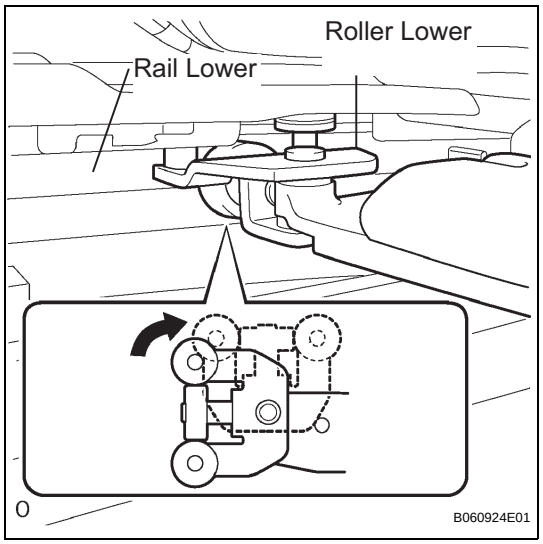

(c) Rotate the base of the slide door roller lower in the direction indicated by arrow in the illustration and then put in the roller lower into the cut area of the rail lower of the body.

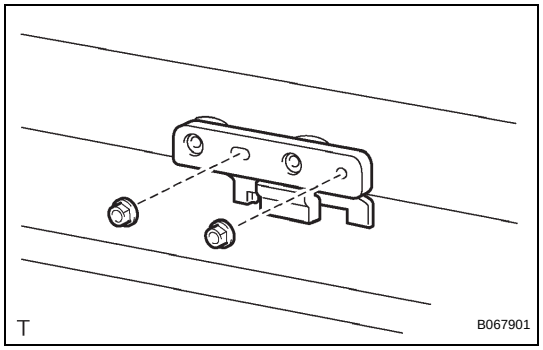

(d) Install the open stop with the 2 nuts.
Torque: 7.0 N*m (71 kgf*cm, 62 in.*lbf)

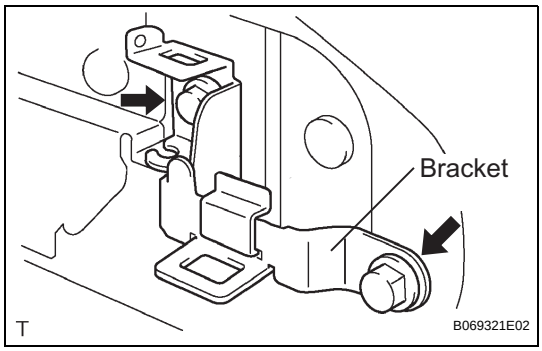

(e) Install the bracket center No. 2 with the 2 bolts.
Torque: 7.0 N*m (71 kgf*cm, 62 in.*lbf)

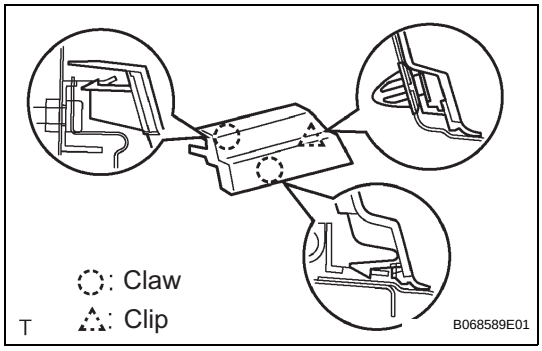

(f) Install the rail end moulding.
(g) Install the upper rail cushion to the rail upper.

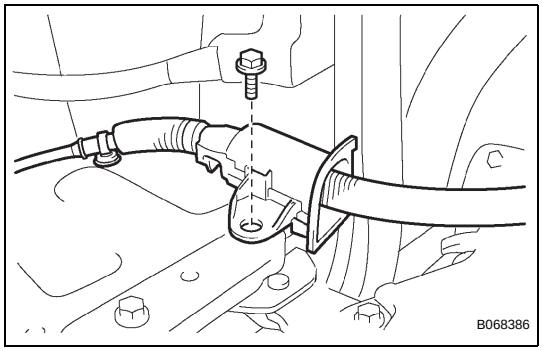

(h) Install the wire with the bolt.
Torque: 7.0 N*m (71 kgf*cm, 62 in.*lbf)
(i) Connect the 2 connectors.

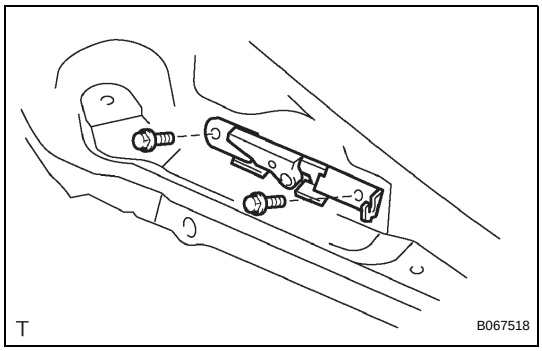

7. REPLACE SLIDE DOOR HALF OPEN STOPPER SUB-ASSEMBLY

(a) Install the half open stopper with the 2 bolts.
Torque: 7.0 N*m (71 kgf*cm, 62 in.*lbf)
(b) Connect the control cable to the half open stopper.

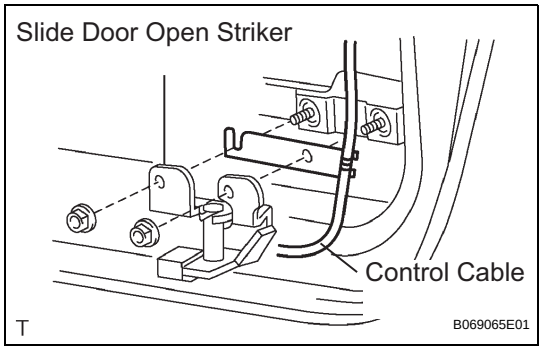

(c) Connect the control cable to the open striker with the 2 nuts.
Torque: 7.0 N*m (71 kgf*cm, 62 in.*lbf)

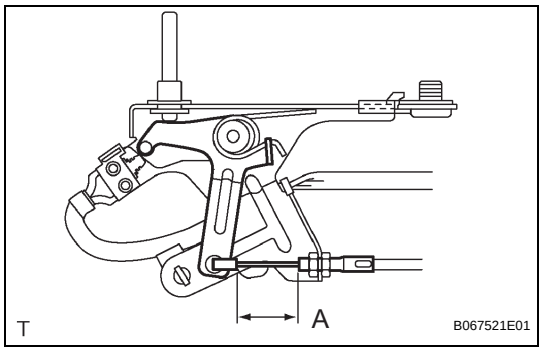

8. REPLACE SLIDE DOOR HALF OPEN STOPPER CONTROL ASSEMBLY

(a) Install the control cable, as shown in the illustration.
Dimension (A):
3.9 +- 1.5 mm (0.154 +- 0.059 in.)

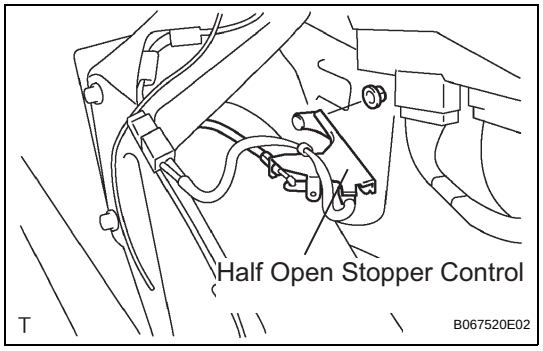

(b) Install the half open stopper control with the 2 nuts.
Torque: 7.0 N*m (71 kgf*cm, 62 in.*lbf)

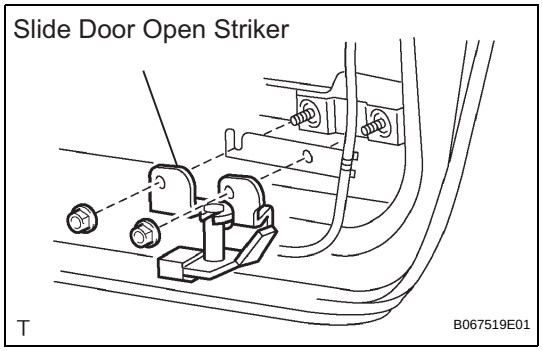

9. REPLACE SLIDE DOOR OPEN STRIKER LH

(a) Install the open striker with the 2 nuts.
Torque: 7.0 N*m (71 kgf*cm, 62 in.*lbf)

10. REPLACE SLIDE DOOR OPEN STRIKER RH

HINT:
Use the same procedures for the LH side.

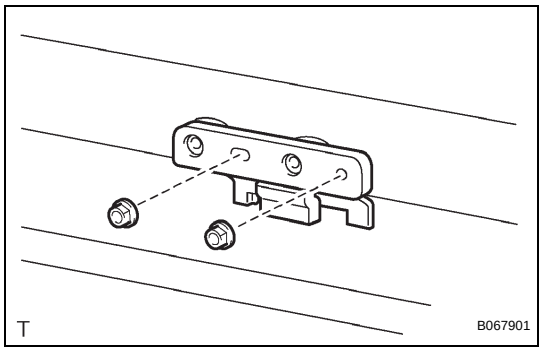

11. REPLACE SLIDE DOOR OPEN STOP LH

(a) Install the open stop with the 2 nuts.
Torque: 7.0 N*m (71 kgf*cm, 62 in.*lbf)

12. REPLACE SLIDE DOOR OPEN STOP RH

HINT:
Use the same procedures for the LH side.