DTC	B2224	Power Slide Door Pulse Sensor Malfunction on Rear Left Door

DESCRIPTION

- A pulse sensor is built into slide door LH for jam and foreign object detection and for slide door position detection. The jam and foreign object detection feature of the pulse sensor monitors the operating speed of the slide door while the power slide door is in operation. The slide door position detection feature of the pulse sensor monitors where the slide door is. If the slide door position detection feature outputs a pulse signal that is out of the normal range, the power slide door ECU LH will set DTC B2224.
- If DTC B2224 is set, the power slide door system will be turned off. Thus, the slide door can be moved freely and will be switched to manual operation mode (not electrically controlled).
- In order to restore the power slide door system to normal operation mode, first solve the problem indicated by DTC B2224 and then manually close the slide door fully (reset operation).

DTC No.	DTC Detection Condition	Trouble Area
B2224	Power slide door LH does not operate	• Wire harness • Power slide door control motor and clutch LH • Power slide door ECU LH

WIRING DIAGRAM

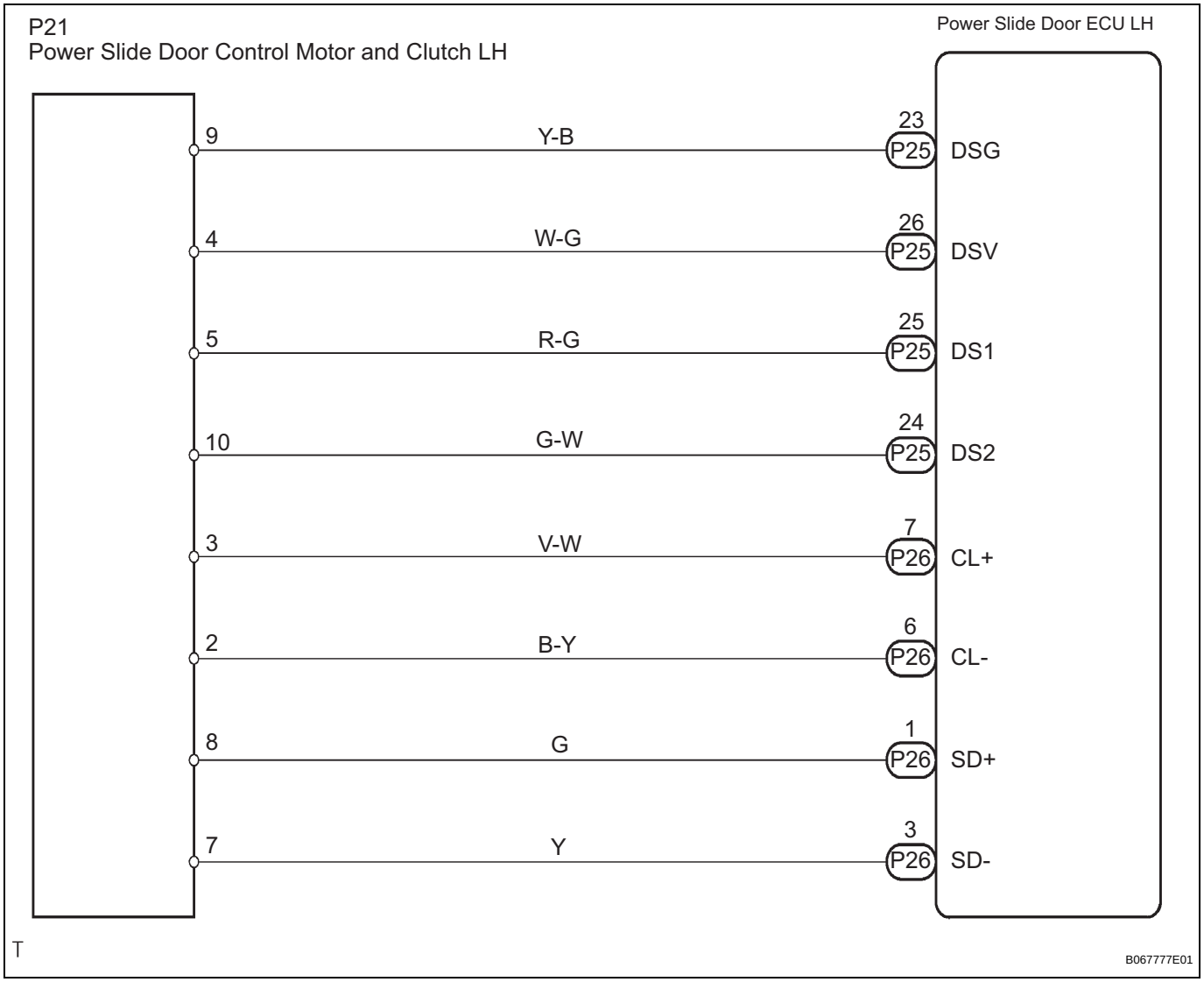

ED

INSPECTION PROCEDURE

1 CHECK WIRE HARNESS (MOTOR AND CLUTCH LH - POWER SLIDE DOOR ECU LH)

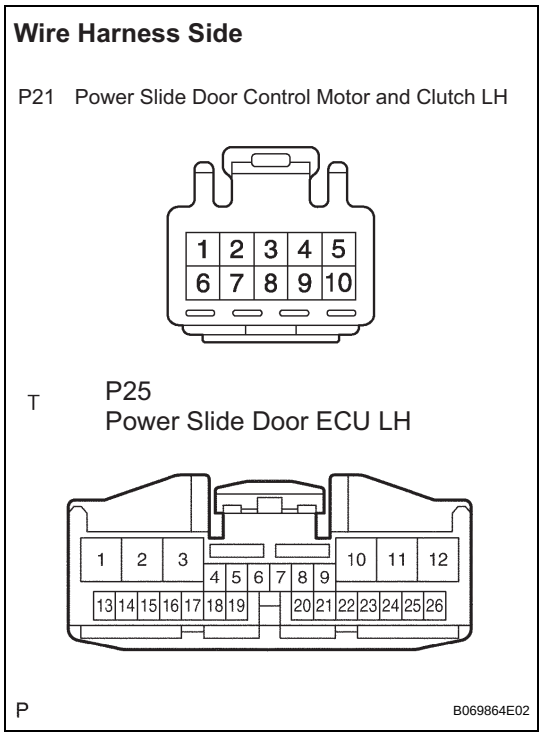

(a) Disconnect the P21 motor and clutch, and the P25 ECU connectors.
(b) Check the continuity between the wire harness side connectors.
Resistance (Check for open circuit)

Terminal No.	Specified Condition
P21-9 - P25-23 (DSG)	Below 1 Ω
P21-4 - P25-26 (DSV)	
P21-5 - P25-25 (DS1)	
P21-10 - P25-24 (DS2)	

NG → **REPAIR OR REPLACE HARNESS AND CONNECTOR**

OK

2 INSPECT SLIDE DOOR CONTROL MOTOR AND CLUTCH ASSEMBLY LH

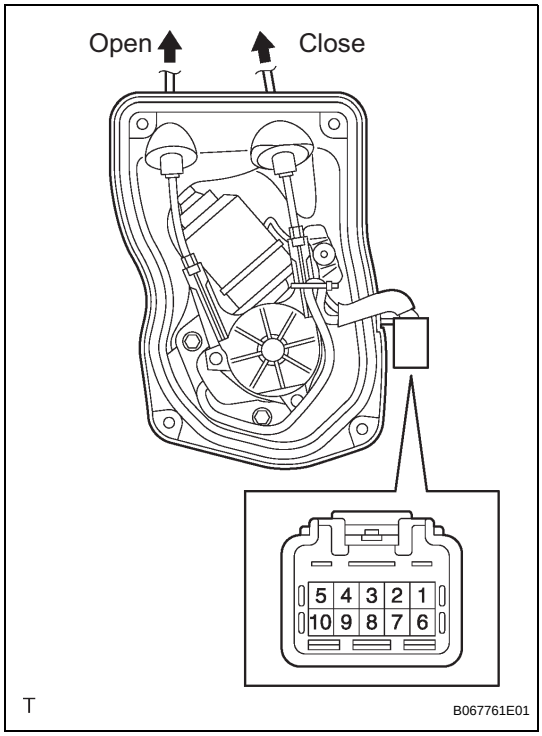

(a) Remove the motor and clutch.
(b) Connect the battery positive (+) lead to terminal 3 and battery negative (-) terminal lead to terminal 2.
(c) Apply battery voltage to the terminals and check the motor operation.
OK

Measurement Condition	Specified Condition
Battery positive (+) → Terminal 8 Battery negative (-) → Terminal 7	Open
Battery positive (+) → Terminal 7 Battery negative (-) → Terminal 8	Close

(d) Check the resistance of the clutch terminals.
Resistance

Terminal No.	Specified Condition
2 - 3	4.0 Ω

(e) Reinstall the motor and clutch with the connector connected.

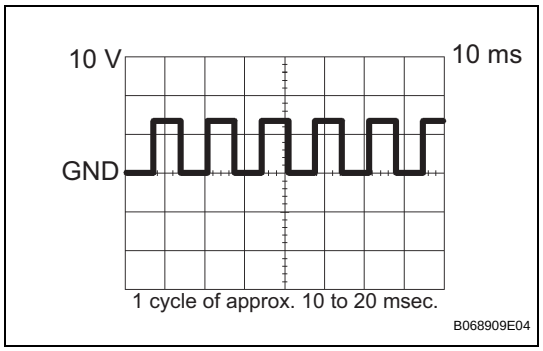

(f) Check the pulse of the pulse sensor.

(1) Using an oscilloscope, check the pulse generated when the door is manually opened and closed.

Reference

Terminal	Tool setting	Vehicle condition
5 - 9, 9 - 10	10 V/DIV., 10 ms/DIV.	Door moving

HINT:

A cycle of the pulse changes between approx. 10 to 20 msec. according to the speeds that the slide door is moving.

NOTICE:

When disconnecting the control motor and clutch, initialize the power slide door system (See page ED-15).

NG → **REPLACE SLIDE DOOR CONTROL MOTOR AND CLUTCH ASSEMBLY LH**

OK

REPLACE POWER SLIDE DOOR ECU LH