SLIDE DOOR

COMPONENTS

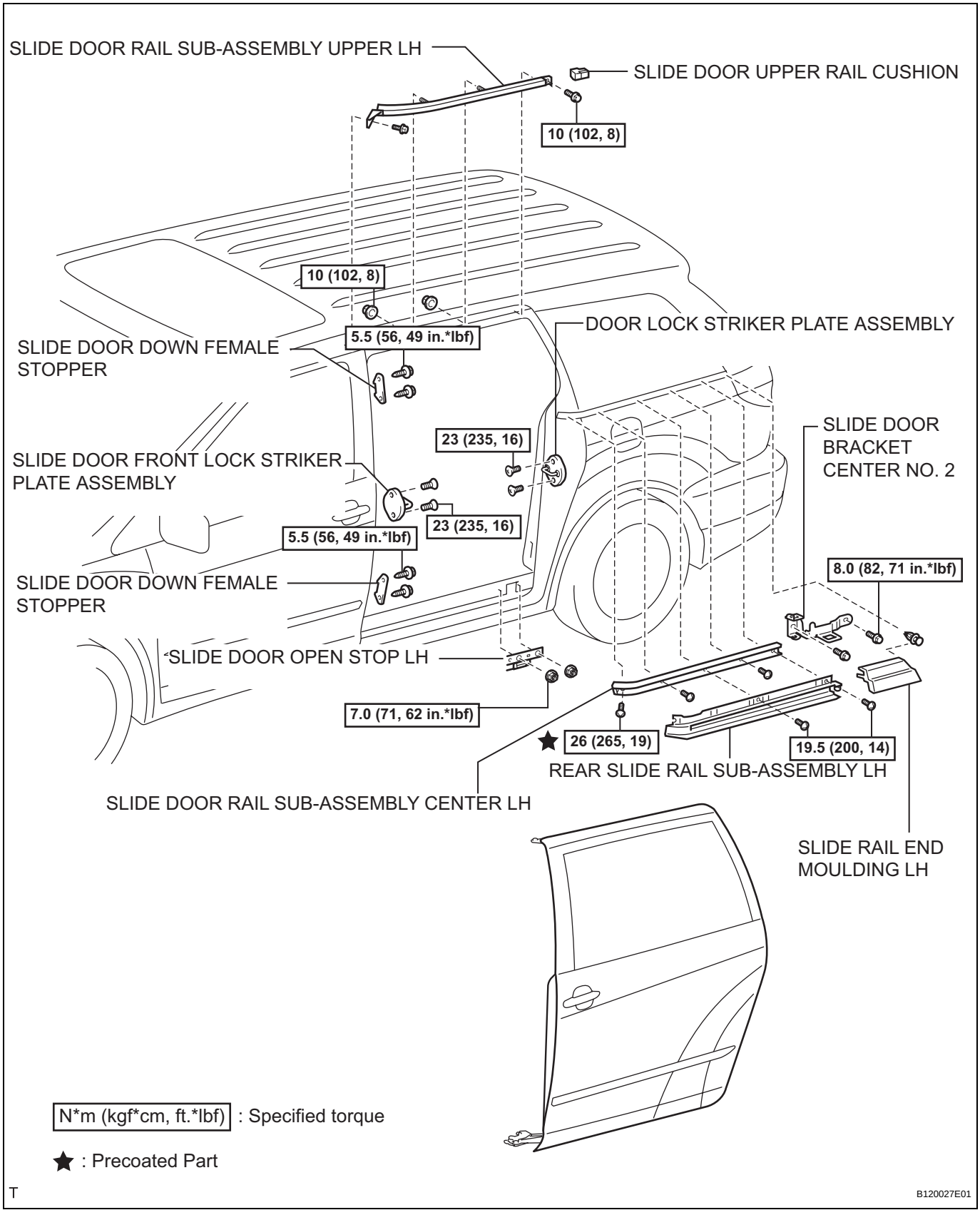

ED

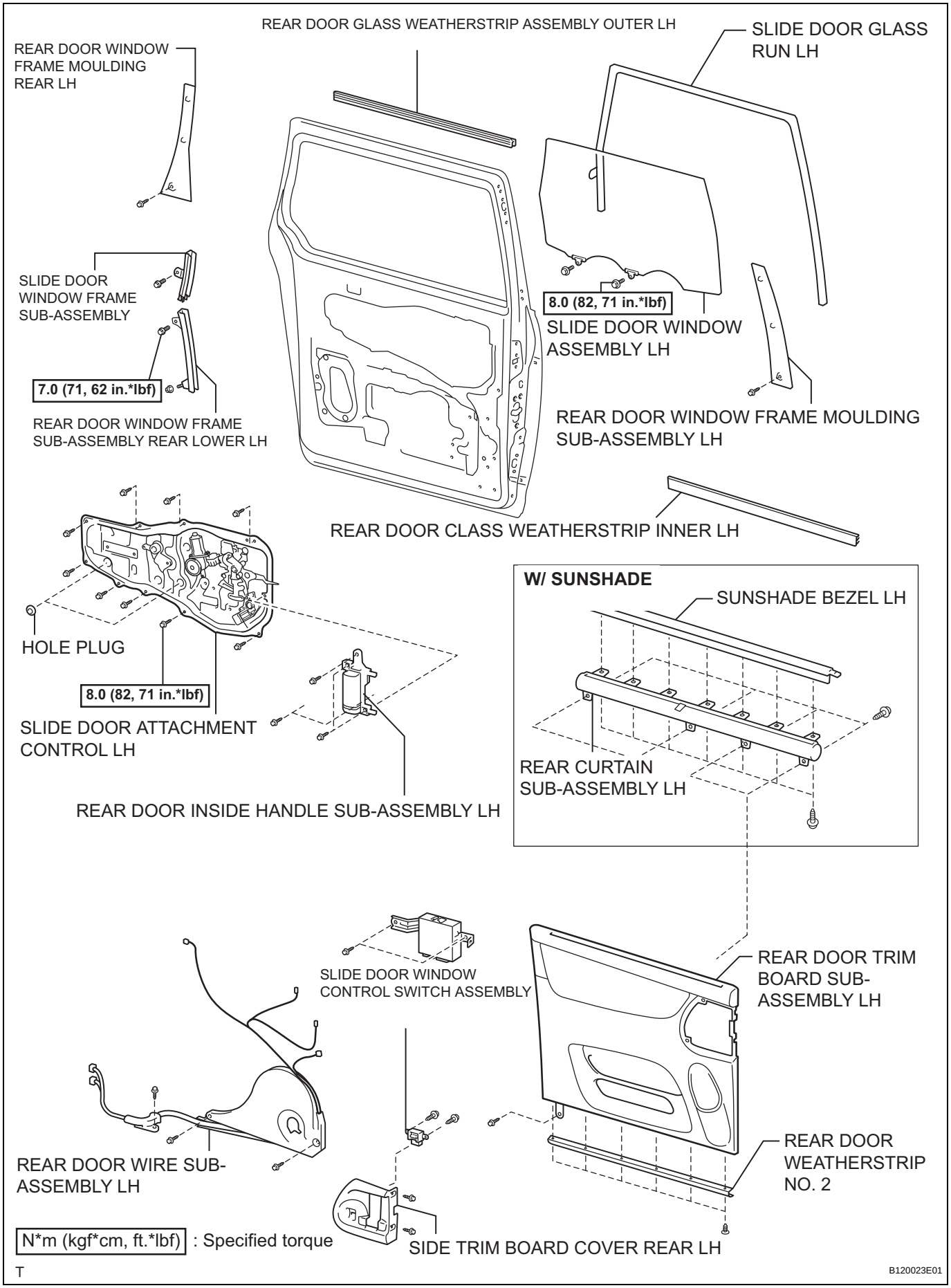
REAR DOOR GLASS WEATHERSTRIP ASSEMBLY OUTER LH
SLIDE DOOR GLASS RUN LH
REAR DOOR WINDOW FRAME MOULDING REAR LH
SLIDE DOOR WINDOW FRAME SUB-ASSEMBLY
7.0 (71, 62 in.*lbf)
REAR DOOR WINDOW FRAME SUB-ASSEMBLY REAR LOWER LH
8.0 (82, 71 in.*lbf)
SLIDE DOOR WINDOW ASSEMBLY LH
REAR DOOR WINDOW FRAME MOULDING SUB-ASSEMBLY LH
REAR DOOR CLASS WEATHERSTRIP INNER LH
W/ SUNSHADE
SUNSHADE BEZEL LH
REAR CURTAIN SUB-ASSEMBLY LH
HOLE PLUG
8.0 (82, 71 in.*lbf)
SLIDE DOOR ATTACHMENT CONTROL LH
REAR DOOR INSIDE HANDLE SUB-ASSEMBLY LH
SLIDE DOOR WINDOW CONTROL SWITCH ASSEMBLY
REAR DOOR TRIM BOARD SUB-ASSEMBLY LH
REAR DOOR WIRE SUB-ASSEMBLY LH
REAR DOOR WEATHERSTRIP NO. 2
SIDE TRIM BOARD COVER REAR LH
N*m (kgf*cm, ft.*lbf) : Specified torque
T
B120023E01

ED

SLIDE DOOR ATTACHMENT CONTROL LH

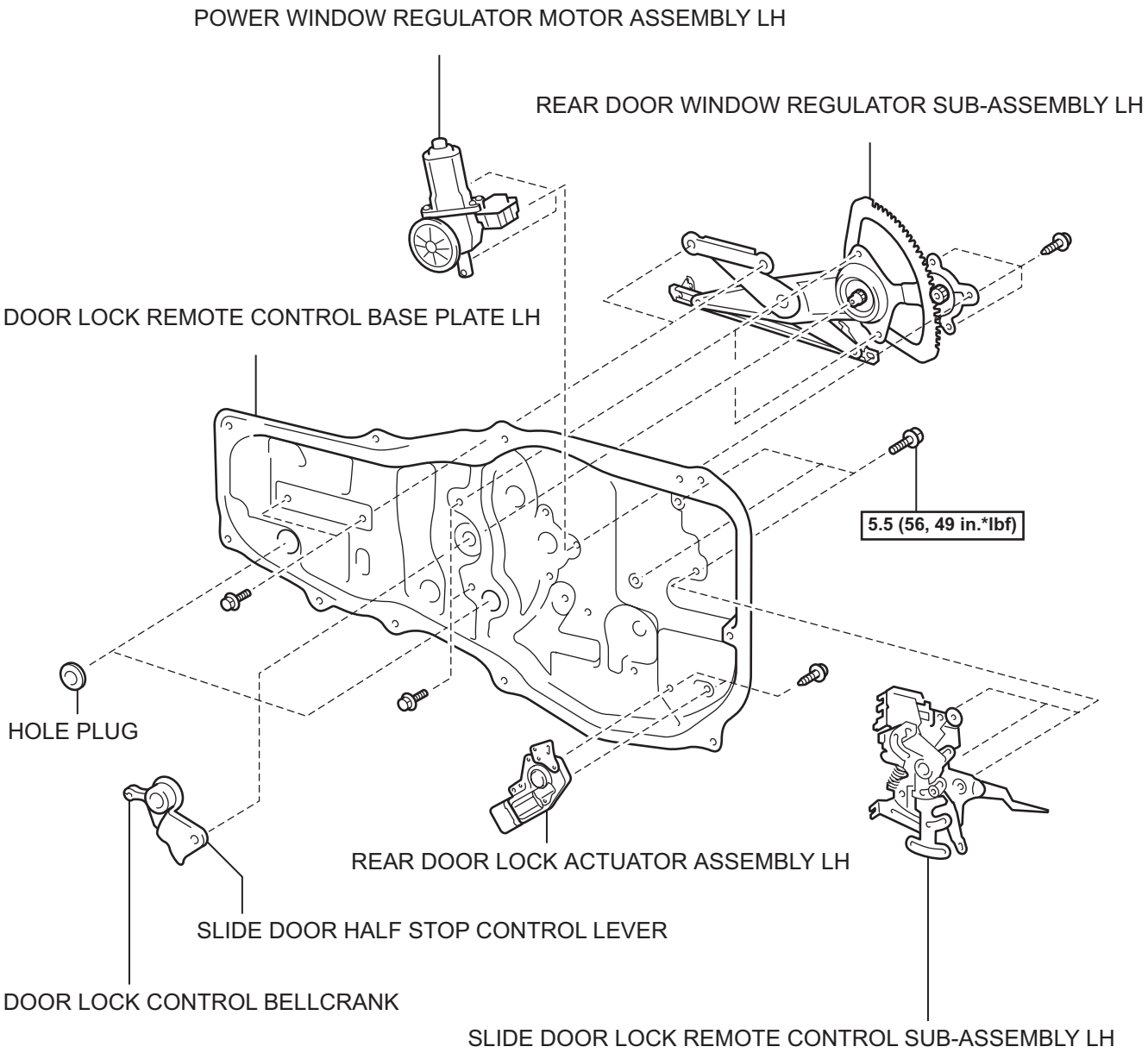

ED

N*m (kgf*cm, ft.*lbf) : Specified torque

T

B120025E01

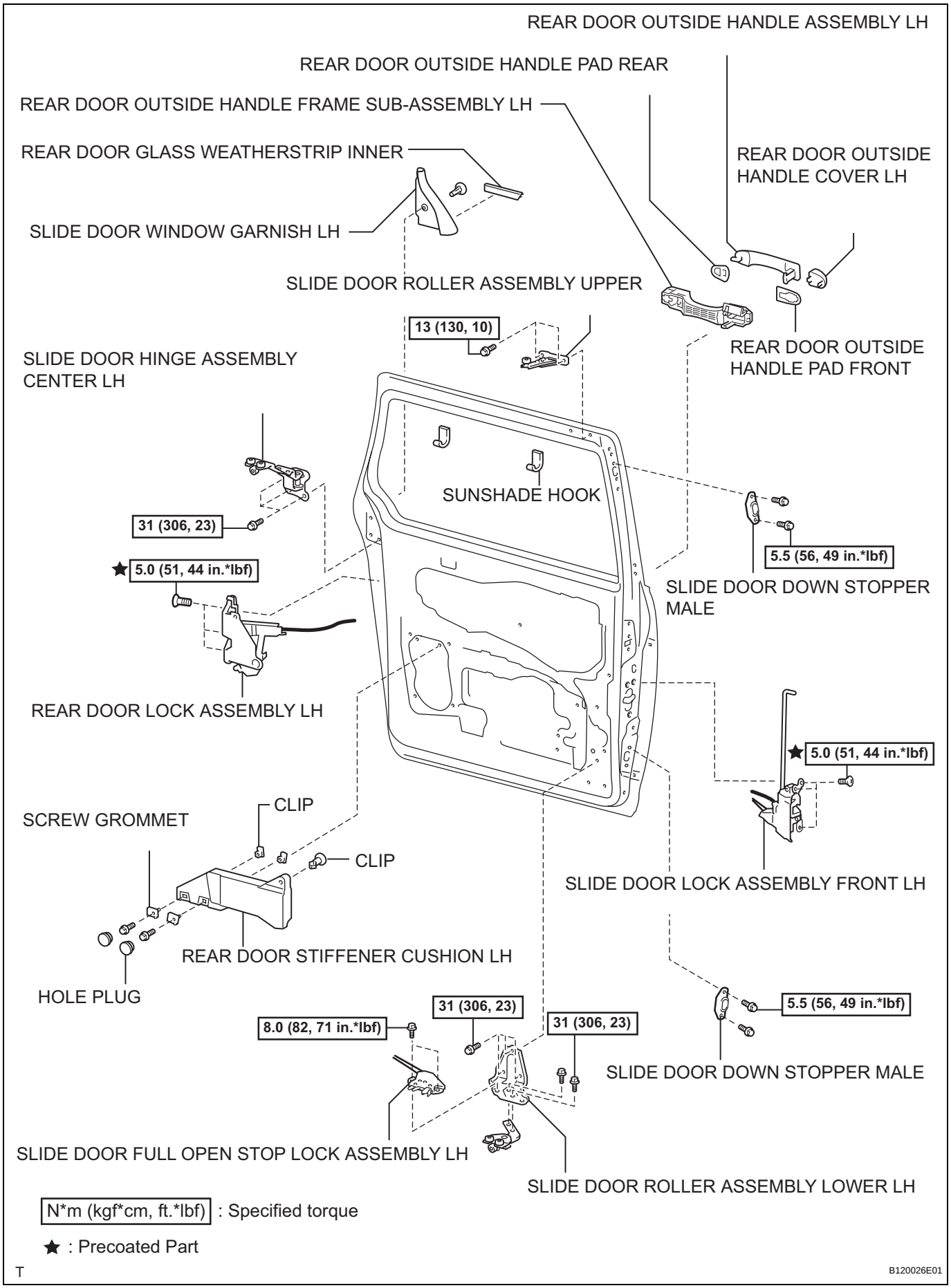
REAR DOOR OUTSIDE HANDLE ASSEMBLY LH
REAR DOOR OUTSIDE HANDLE PAD REAR
REAR DOOR OUTSIDE HANDLE FRAME SUB-ASSEMBLY LH
REAR DOOR GLASS WEATHERSTRIP INNER
REAR DOOR OUTSIDE HANDLE COVER LH
SLIDE DOOR WINDOW GARNISH LH
SLIDE DOOR ROLLER ASSEMBLY UPPER
13 (130, 10)
REAR DOOR OUTSIDE HANDLE PAD FRONT
SLIDE DOOR HINGE ASSEMBLY CENTER LH
SUNSHADE HOOK
31 (306, 23)
5.5 (56, 49 in.*lbf)
★5.0 (51, 44 in.*lbf)
SLIDE DOOR DOWN STOPPER MALE
REAR DOOR LOCK ASSEMBLY LH
★5.0 (51, 44 in.*lbf)
CLIP
SCREW GROMMET
CLIP
SLIDE DOOR LOCK ASSEMBLY FRONT LH
REAR DOOR STIFFENER CUSHION LH
HOLE PLUG
31 (306, 23)
8.0 (82, 71 in.*lbf)
31 (306, 23)
5.5 (56, 49 in.*lbf)
SLIDE DOOR DOWN STOPPER MALE
SLIDE DOOR FULL OPEN STOP LOCK ASSEMBLY LH
SLIDE DOOR ROLLER ASSEMBLY LOWER LH
N*m (kgf*cm, ft.*lbf) : Specified torque
★ : Precoated Part
T
B120026E01

ED