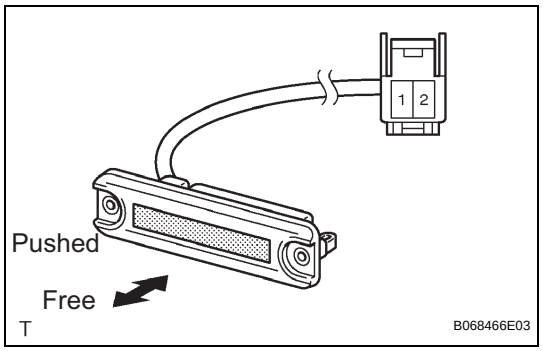

BACK DOOR OPENER SWITCH

INSPECTION

1. INSPECT BACK DOOR OPENER SWITCH

(a) Inspect the resistance of the switch.

Resistance

Terminal No.	Condition	Specified Condition
1 - 2	Free	Below 1 Ω
	Pushed	10 kΩ or higher

If the result is not as specified, replace the switch.