REASSEMBLY

1. INSTALL BACK DOOR STOPPER LOWER

(a) Install the 2 stoppers with the 4 bolts.
Torque: 7.0 N*m (71 kgf*cm, 62 in.*lbf)

2. INSTALL BACK DOOR BASE STOPPER BRACKET

(a) Install the 2 brackets with the 4 bolts.
Torque: 7.0 N*m (71 kgf*cm, 62 in.*lbf)

3. INSTALL BACK DOOR WITH MOTOR LOCK ASSEMBLY

(a) Install the lock with the 4 bolts.
Torque: 12.5 N*m (112 kgf*cm, 9 ft.*lbf)
(b) Reset the lock (See page ED-132).

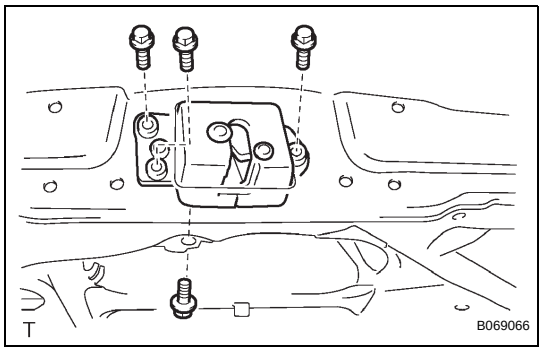

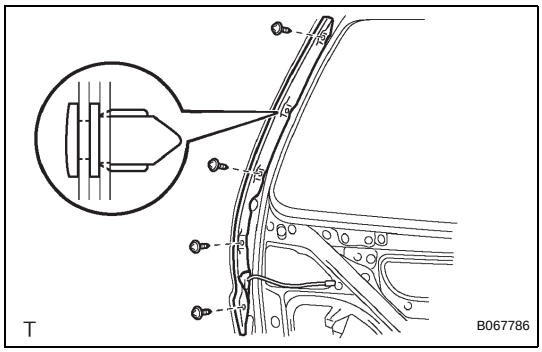

4. INSTALL POWER BACK DOOR TOUCH SENSOR LH

(a) Install the touch sensor with the clip.
(b) Using a torx driver (T25), tighten the 4 screws.

5. INSTALL POWER BACK DOOR TOUCH SENSOR RH

(a) Install the touch sensor with the clip.
(b) Using a torx driver (T25), tighten the 4 screws.

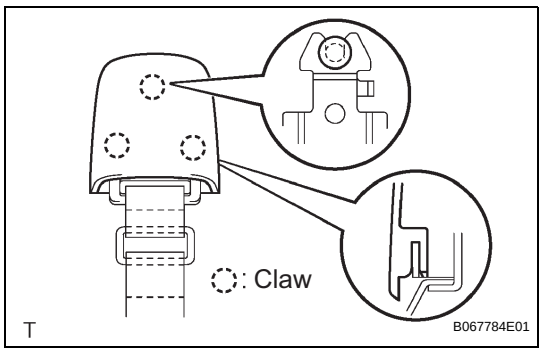

6. INSTALL BACK DOOR PULL STRAP

(a) Install the pull strap with the bolt.
Torque: 5.0 N*m (51 kgf*cm, 42 in.*lbf)
(b) Install the cover.

7. INSTALL BACK DOOR STAY BRACKET UPPER LH

(a) Install the bracket upper with the 2 bolts.
Torque: 12.5 N*m (112 kgf*cm, 9 ft.*lbf)

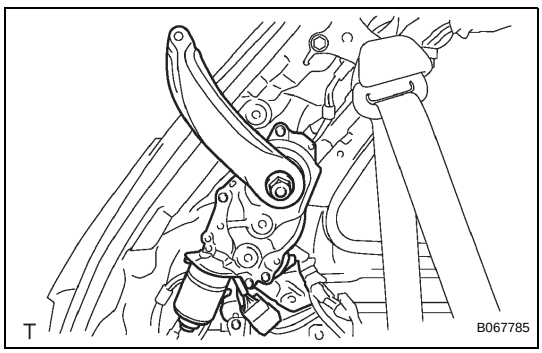

8. INSTALL POWER BACK DOOR DRIVE UNIT

(a) Install the drive unit with the 3 bolt.
Torque: 12.5 N*m (112 kgf*cm, 9 ft.*lbf)
(b) Reset the drive unit (See page ED-132).