# POWER BACK DOOR

## COMPONENTS

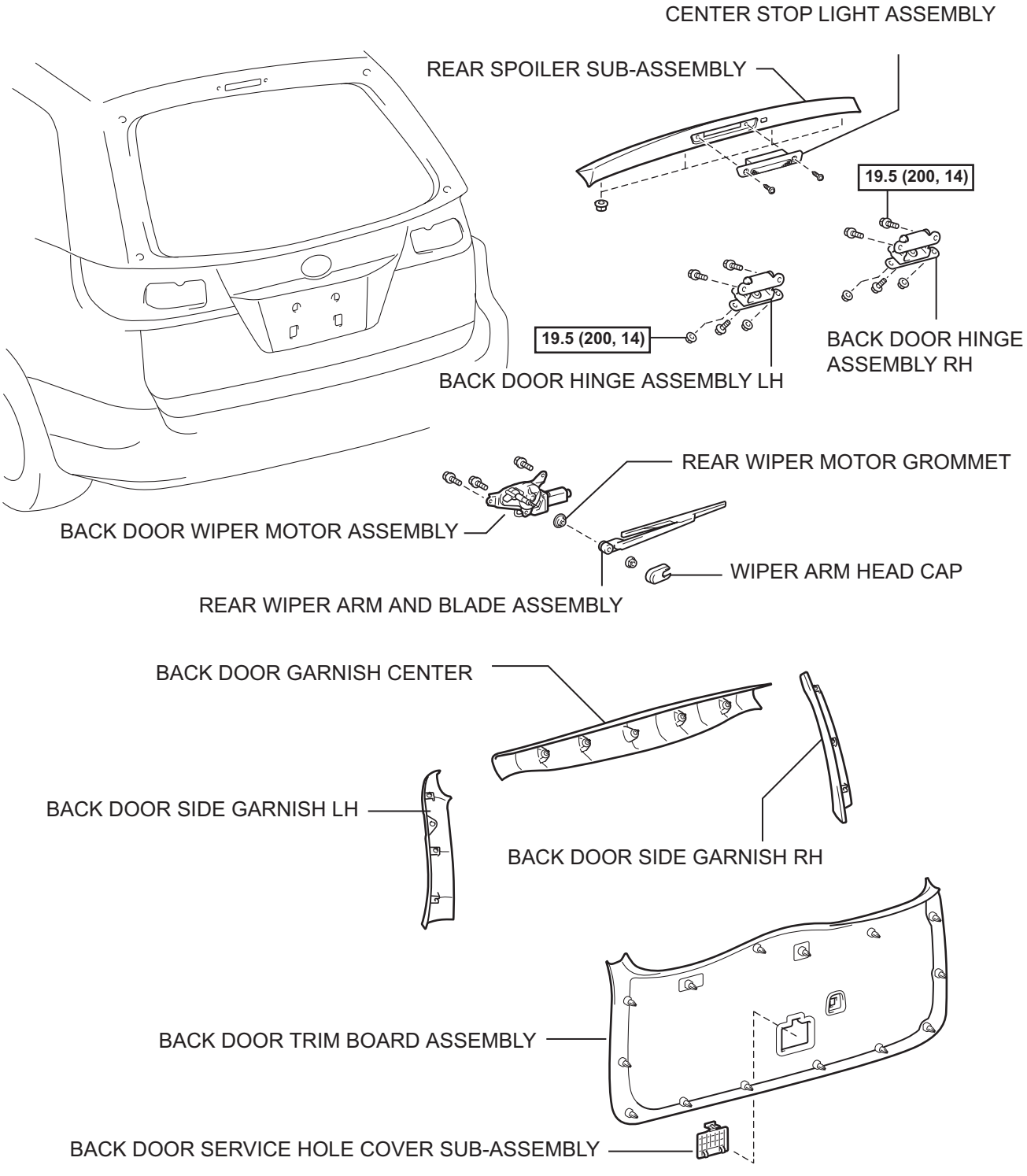


N*m (kgf*cm, ft.*lbf) : Specified torque

T

B120035E02

ED

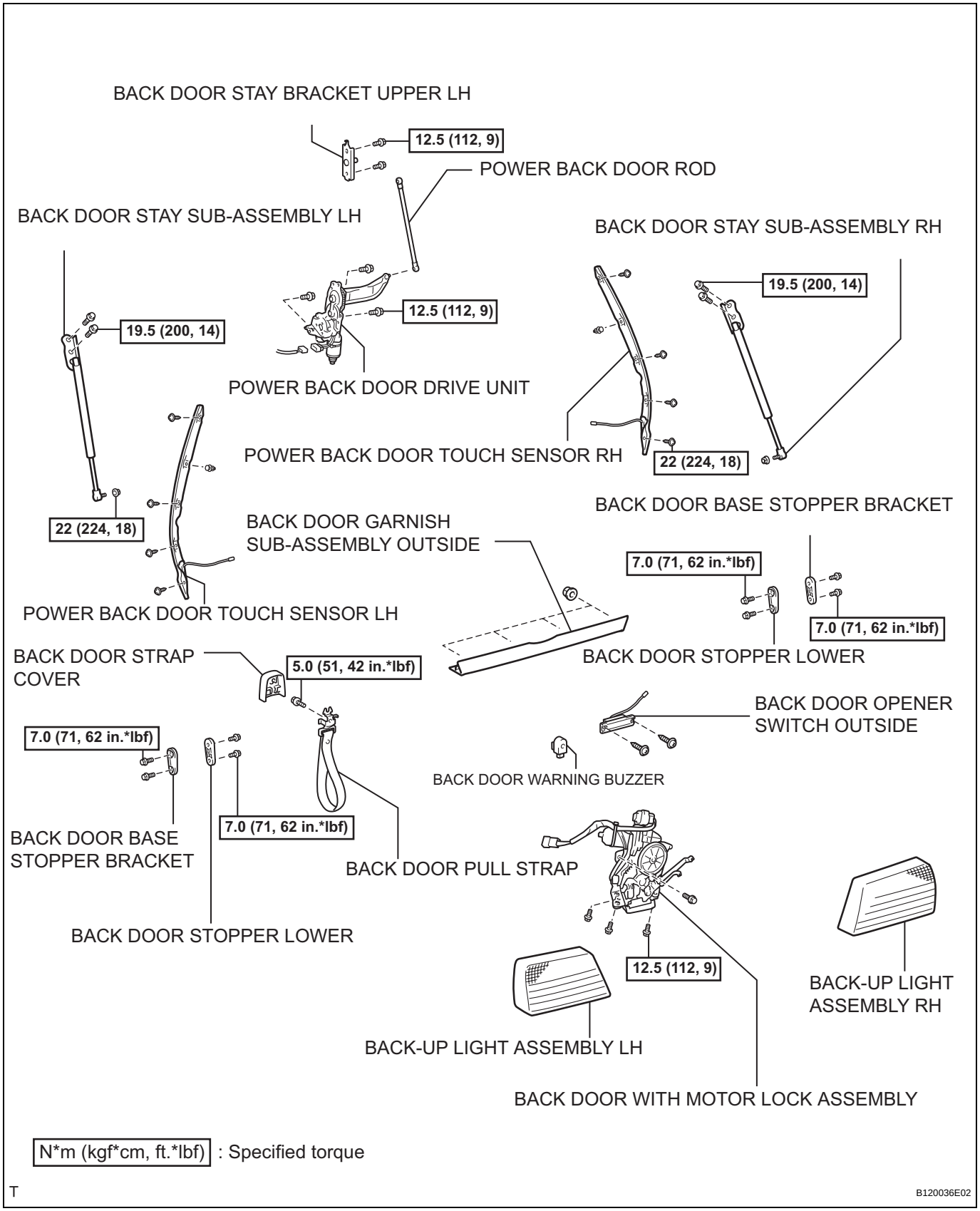


N*m (kgf*cm, ft.*lbf) : Specified torque

T

B120036E02

ED