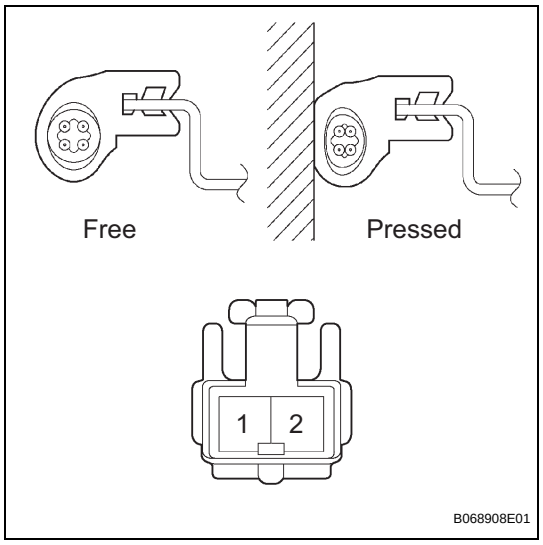

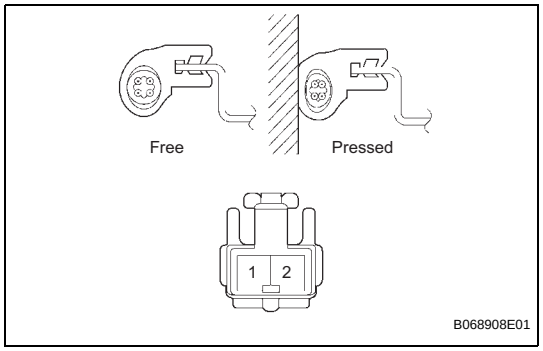

POWER BACK DOOR TOUCH SENSOR

INSPECTION

1. INSPECT POWER BACK DOOR TOUCH SENSOR LH

(a) Check the resistance of the sensor.

Resistance

Terminal No.	Condition	Specified Condition
1 - 2	Free	Approx. 1 kΩ
	Pressed	Below 100 Ω

If the result is not as specified, replace the sensor.

2. INSPECT POWER BACK DOOR TOUCH SENSOR RH

(a) Check the resistance of the sensor.

Resistance

Terminal No.	Condition	Specified Condition
1 - 2	Free	Approx. 1 kΩ
	Pressed	Below 100 Ω

If the result is not as specified, replace the sensor.