BACK DOOR SUPPORT

COMPONENTS

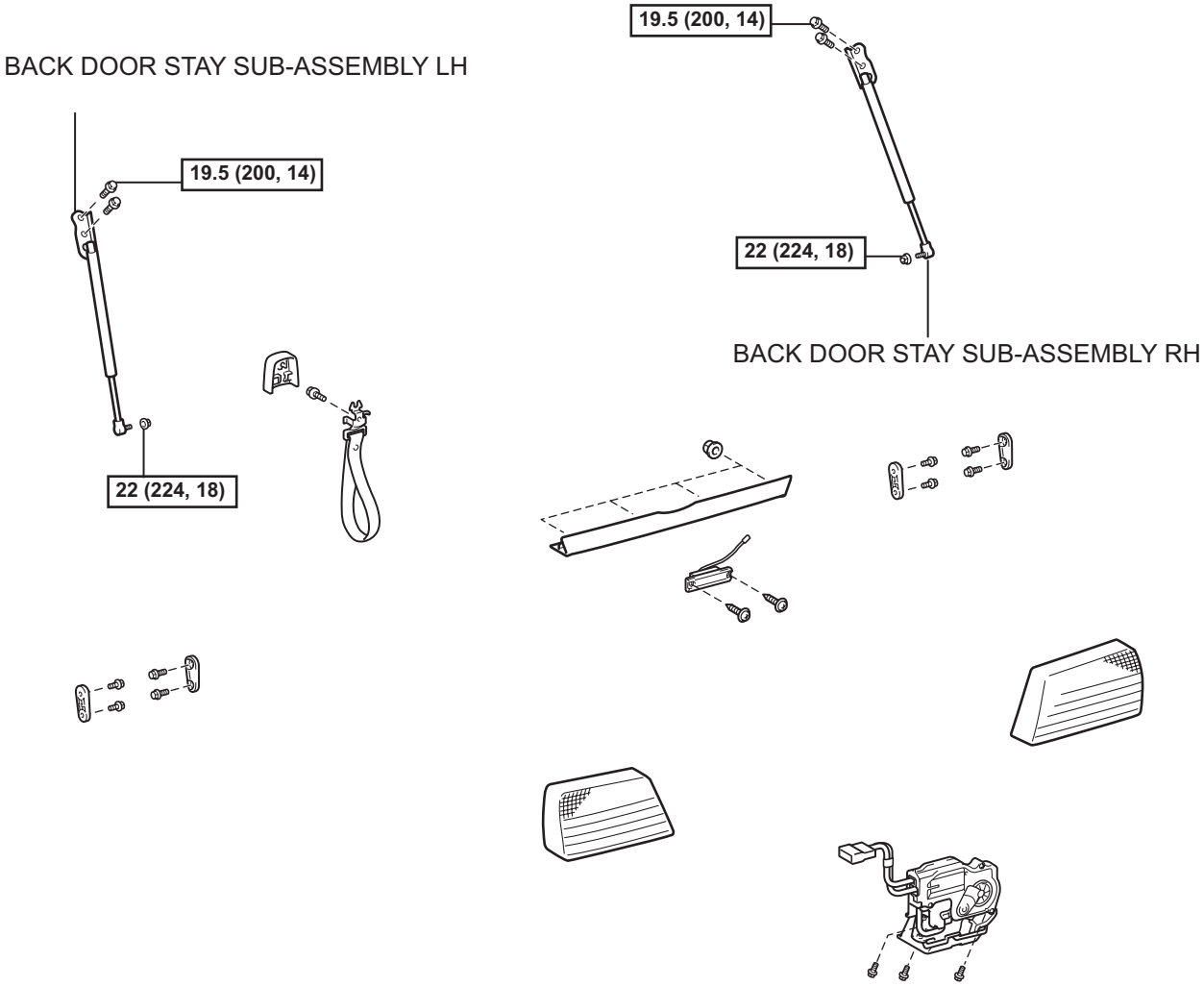

N*m (kgf*cm, ft.*lbf) : Specified torque

T

B120033E03

ED

REMOVAL

HINT:
On the RH side, use the same procedures as on the LH side.

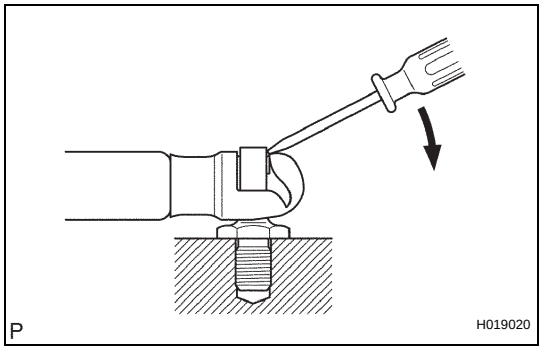

1. REMOVE BACK DOOR STAY SUB-ASSEMBLY LH

(a) Remove the 2 bolts and disconnect the stay from the body panel.
(b) Using the screwdriver, disengage the clips and remove the stay from the door panel.
(c) Remove the bolt from door panel.