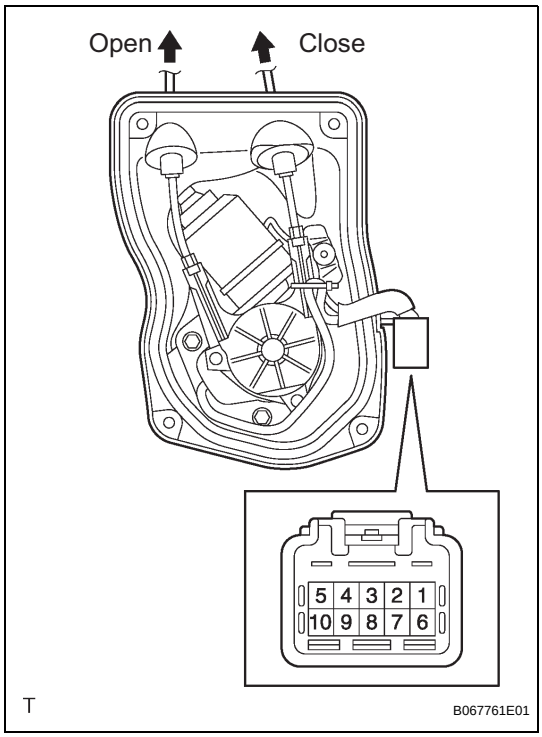

POWER SLIDE DOOR CONTROL MOTOR AND CLUTCH

INSPECTION

1. INSPECT SLIDE DOOR CONTROL MOTOR AND CLUTCH ASSEMBLY LH

(a) Remove the motor and clutch.

(b) Connect the battery positive (+) lead to terminal 3 and the battery negative (-) lead to terminal 2.

(c) Apply battery voltage to the terminals and check the motor operation.

OK

Measurement Condition	Specified Condition
Battery positive (+) → Terminal 8 Battery negative (-) → Terminal 7	Open
Battery positive (+) → Terminal 7 Battery negative (-) → Terminal 8	Closed

If the result is not as specified, replace the motor and clutch.

(d) Check the resistance of the terminals.

Resistance

Terminal No.	Specified Condition
2 - 3	4.0 Ω

If the result is not as specified, replace the motor and clutch.

(e) Reinstall the motor and clutch with the connector connected.

(f) Check the pulse of the pulse sensor.

(1) Using an oscilloscope, check the pulse generated when the door is manually opened and closed.

Reference

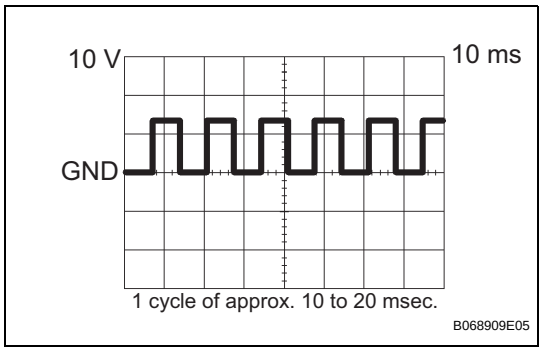

Terminal	Tool setting	Vehicle condition
5 - 9, 9 - 10	10 V/DIV., 10 ms/DIV.	Door moving

If the result is not as specified, replace the motor and clutch.

HINT:

The cycle of the pulse changes between approx. 10 to 20 msec. according to the speeds that the slide door is moving.

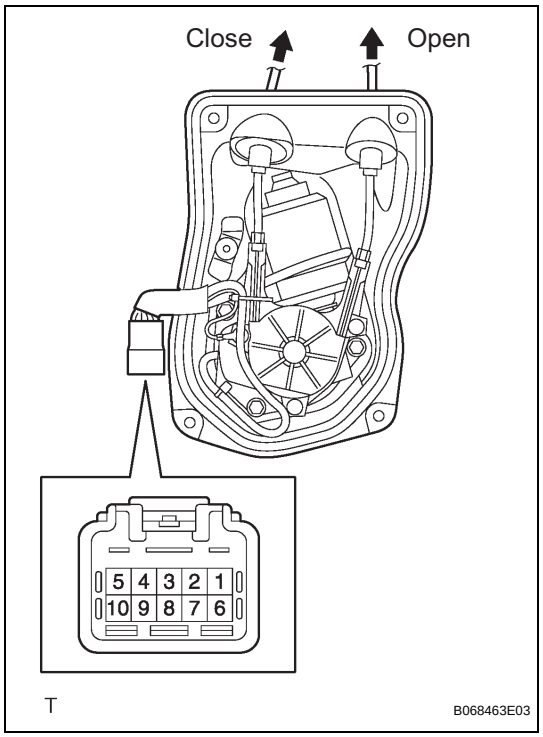

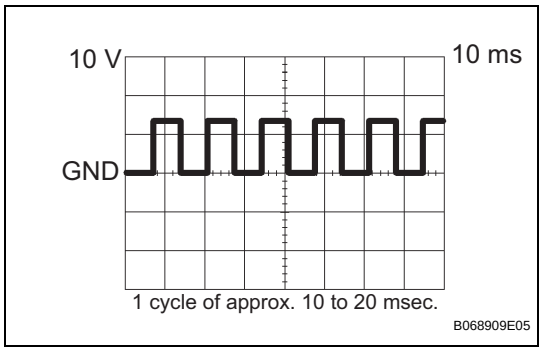

2. REMOVE SLIDE DOOR CONTROL MOTOR AND CLUTCH ASSEMBLY RH

(a) Remove the motor and clutch.

(b) Connect the battery positive (+) lead to terminal 3 and the battery negative (-) lead to terminal 2.

(c) Apply battery voltage to the terminals and check the motor operation.

OK

Measurement Condition	Specified Condition
Battery positive (+) → Terminal 8 Battery negative (-) → Terminal 7	Open
Battery positive (+) → Terminal 7 Battery negative (-) → Terminal 8	Closed

If the result is not as specified, replace the motor and clutch.

(d) Check the resistance of the terminals.

Resistance

Terminal No.	Specified Condition
2 - 3	4.0 Ω
6 - Body ground	10 kΩ or higher

If the result is not as specified, replace the motor and clutch.

(e) Reinstall the motor and clutch with the connector connected.

(f) Check the pulse of the pulse sensor.

(1) Using an oscilloscope, check the pulse generated when the door is manually opened and closed.

Reference

Terminal	Tool setting	Vehicle condition
5 - 9, 9 - 10	10 V/DIV., 10 ms/DIV.	Door moving

If the result is not as specified, replace the motor and clutch.

HINT:

The cycle of the pulse changes between approx. 10 to 20 msec. according to the speeds that the slide door is moving.