DISASSEMBLY

1. **REMOVE FRONT BUMPER ENERGY ABSORBER**

2. **REMOVE FRONT BUMPER REINFORCEMENT SUB-ASSEMBLY**
   (a) Remove the 6 bolts and the front bumper reinforcement sub-assembly.

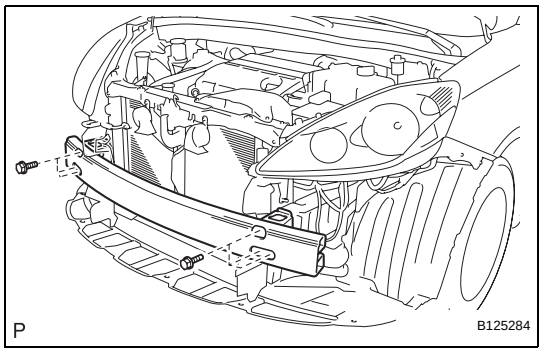

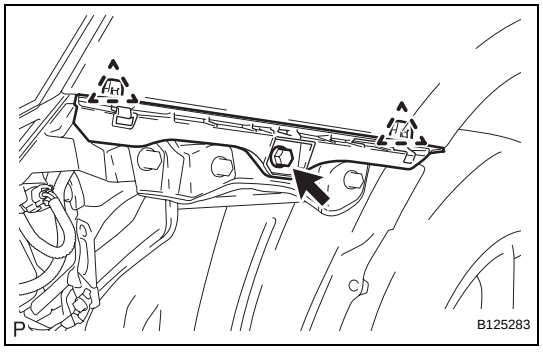

3. **REMOVE FRONT BUMPER SIDE SUPPORT LH**
   (a) Remove the screw.
   (b) Disengage the 2 clips and remove the front bumper side support LH.

4. **REMOVE FRONT BUMPER SIDE SUPPORT RH**
   HINT:
   Perform the same procedure as for the LH side.

5. **REMOVE NO. 1 ULTRASONIC SENSOR RETAINER (See page PM-19)**

6. **REMOVE NO. 1 ULTRASONIC SENSOR (LH side) (w/ Clearance Sonar System) (See page PM-19)**

7. **REMOVE NO. 1 ULTRASONIC SENSOR (RH side) (w/ Clearance Sonar System)**
   HINT:
   Perform the same procedure as for the LH side.

8. **REMOVE RADIATOR GRILLE**
   (a) Remove the 2 bolts and the 2 screws.
   (b) Disengage the 4 claws and remove the radiator grille from the front bumper cover.

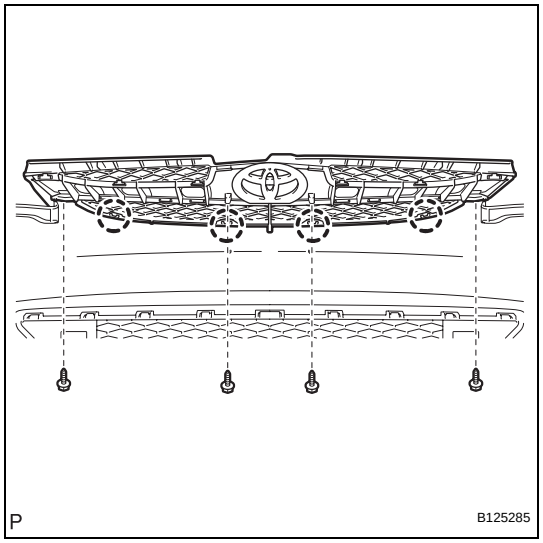

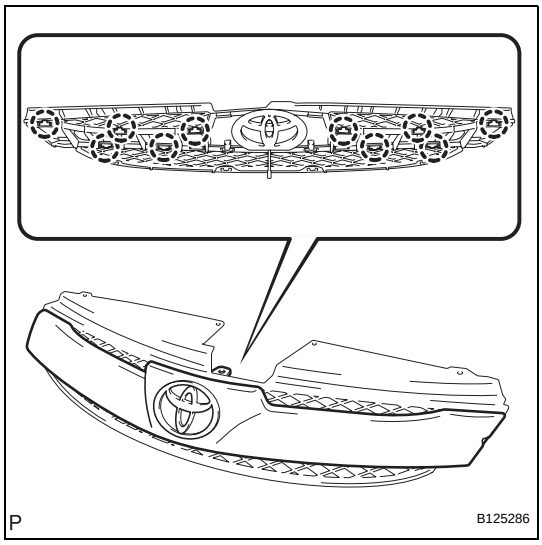

9. REMOVE UPPER RADIATOR GRILLE

(a) Disengage the 10 claws and remove the upper radiator grille from the radiator grille.

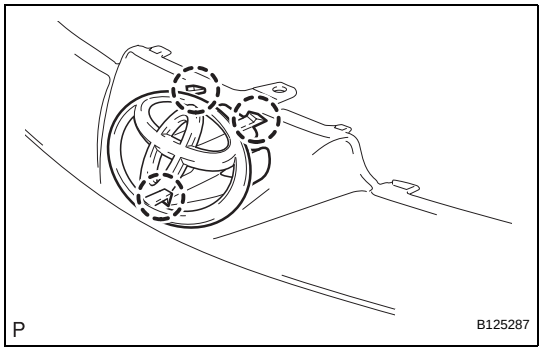

10. REMOVE FRONT BUMPER EMBLEM

(a) Disengage the 3 claws and remove the front bumper emblem from the upper radiator grille.

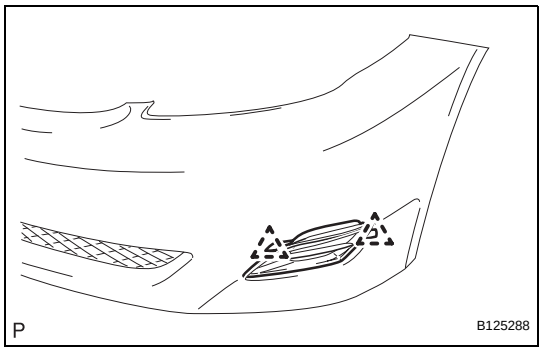

11. REMOVE FRONT BUMPER HOLE COVER LH (w/o Fog Light)

(a) Disengage the 2 pins and remove the front bumper hole cover LH from the front bumper cover.

12. REMOVE FRONT BUMPER HOLE COVER RH (w/o Fog Light)

HINT:

Perform the same procedure as for the LH side.

13. REMOVE FOG LIGHT ASSEMBLY LH (w/ Fog Light) (See page LI-82)

14. REMOVE FOG LIGHT ASSEMBLY RH (w/ Fog Light)

HINT:

Perform the same procedure as for the LH side.

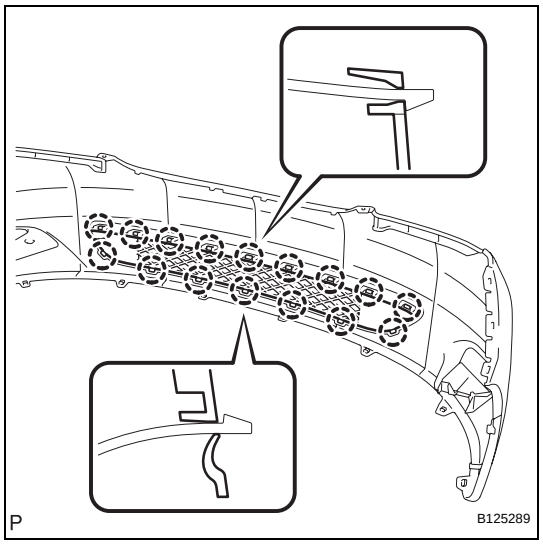

15. REMOVE LOWER RADIATOR GRILLE

(a) Disengage the 16 claws and remove the lower radiator grille from the front bumper cover.

REASSEMBLY

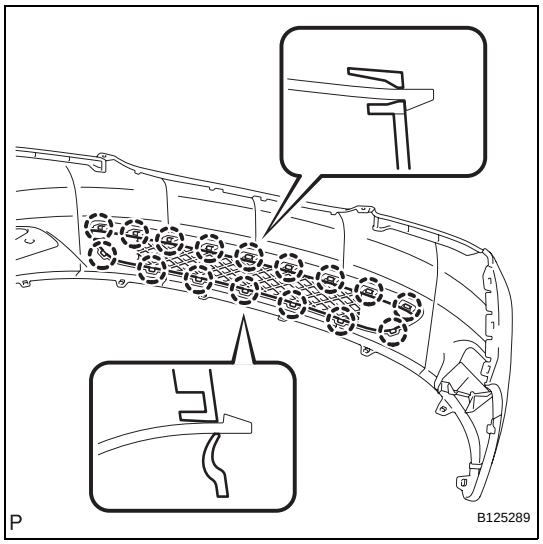

1. INSTALL LOWER RADIATOR GRILLE

(a) Engage the 16 claws to install the lower radiator grille to the front bumper cover.

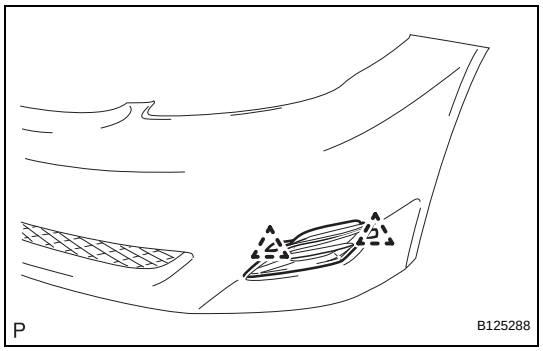

2. INSTALL FRONT BUMPER HOLE COVER LH (w/o Fog Light)

(a) Engage the 2 pins to install the front bumper hole cover LH to the front bumper cover.

3. INSTALL FRONT BUMPER HOLE COVER RH (w/o Fog Light)

HINT:
Perform the same procedure as for the LH side.

4. INSTALL FOG LIGHT ASSEMBLY LH (w/ Fog Light) (See page LI-85)

5. INSTALL FOG LIGHT ASSEMBLY RH (w/ Fog Light)

HINT:
Perform the same procedure as for the LH side.

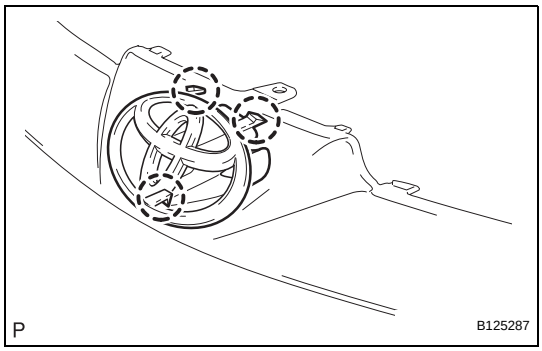

6. INSTALL FRONT BUMPER EMBLEM

(a) Engage the 3 claws to install the front bumper emblem to the upper radiator grille.

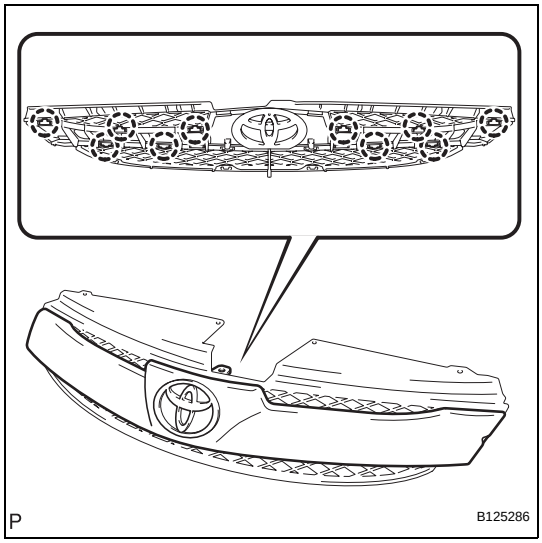

7. INSTALL UPPER RADIATOR GRILLE

(a) Engage the 10 claws to install the upper radiator grille to the radiator grille.

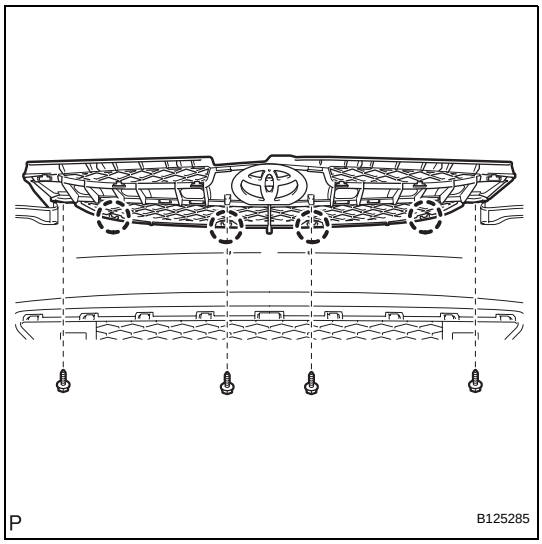

8. INSTALL RADIATOR GRILLE

(a) Engage the 4 claws to install the radiator grille to the front bumper cover.

(b) Install the 2 bolts and the 2 screws.

Torque: Bolt
5.4 N*m (54 kgf*cm, 48 in.*lbf)
Screw
5.0 N*m (51 kgf*cm, 44.3 in.*lbf)

9. INSTALL NO. 1 ULTRASONIC SENSOR (LH side) (w/ Clearance Sonar System) (See page PM-20)

10. INSTALL NO. 1 ULTRASONIC SENSOR (RH side) (w/ Clearance Sonar System)

HINT:
Perform the same procedure as for the LH side.

11. INSTALL NO. 1 ULTRASONIC SENSOR RETAINER (See page PM-20)

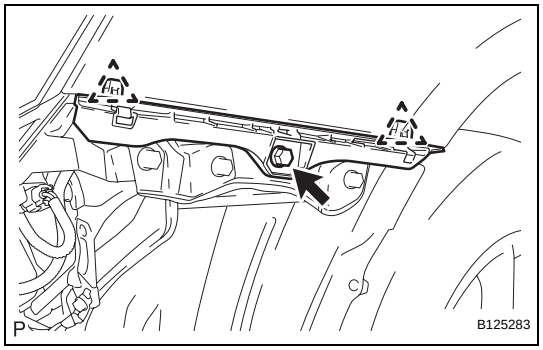

12. INSTALL FRONT BUMPER SIDE SUPPORT LH

(a) Engage the 2 clips to install the front bumper side support LH.

(b) Install the screw.
Torque: 7.0 N*m (71 kgf*cm, 62.0 in.*lbf)

13. INSTALL FRONT BUMPER SIDE SUPPORT RH

HINT:
Perform the same procedure as for the LH side.

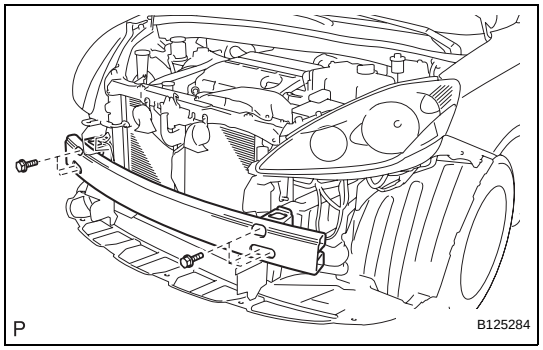

14. INSTALL FRONT BUMPER REINFORCEMENT SUB-ASSEMBLY

(a) Install the front bumper reinforcement sub-assembly with the 6 bolts.
Torque: 50 N*m (510 kgf*cm, 37 ft.*lbf)

15. INSTALL FRONT BUMPER ENERGY ABSORBER

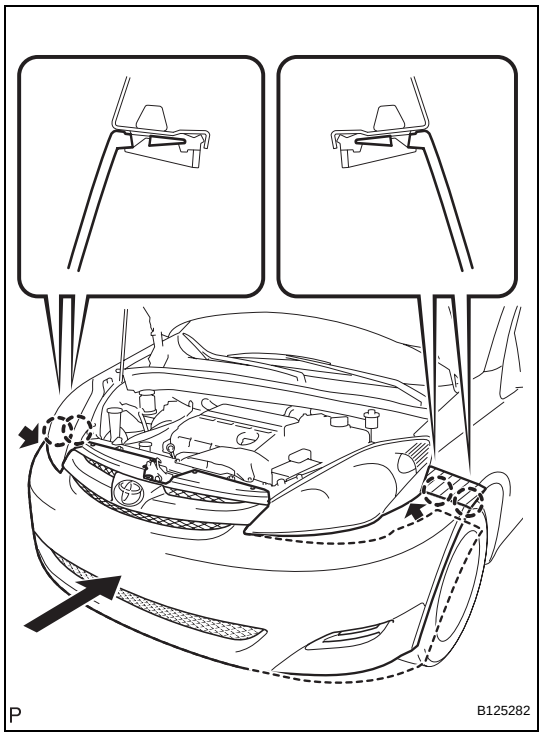

INSTALLATION

1. INSTALL FRONT BUMPER ASSEMBLY

(a) Push the front bumper onto the front of the vehicle and engage the claws on the left and right sides of the front bumper to install it as shown in the illustration.
HINT:
- Apply protective tape to the bottom part of the front fender to prevent it from being damaged.
- Connect the connectors if necessary.

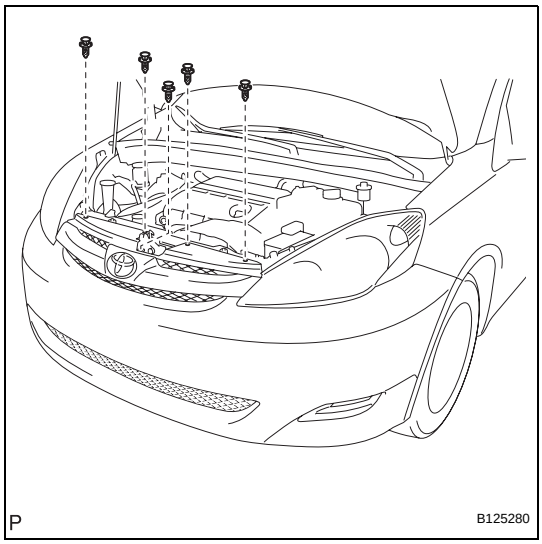

(b) Install the 5 clips.

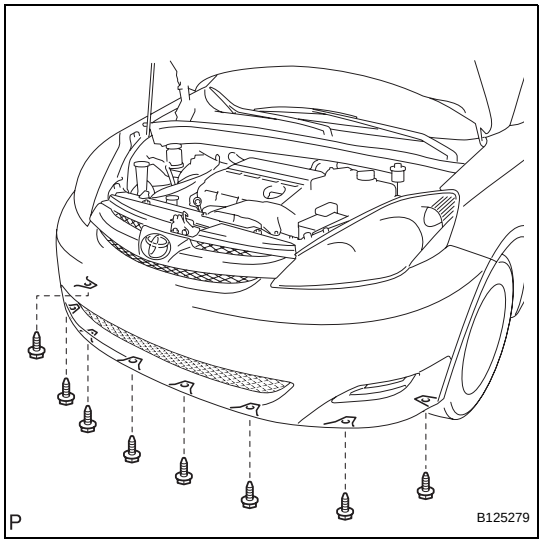

(c) Connect the engine under cover to the front bumper assembly with the 8 screws.
Torque: 7.0 N*m (71 kgf*cm, 62.0 in.*lbf)

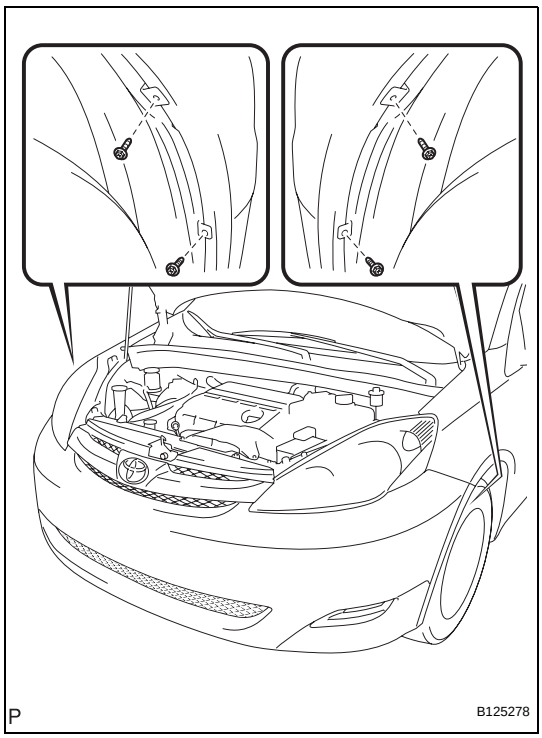

(d) Connect the fender liner to the front bumper assembly with the 4 screws.

2. **CONNECT CABLE TO NEGATIVE BATTERY TERMINAL**
3. **VEHICLE PREPARATION FOR FOG LIGHT AIMING (w/ Fog Light) (See page LI-82)**
4. **PREPARATION FOR FOG LIGHT AIMING (w/ Fog Light) (See page LI-83)**
5. **FOG LIGHT AIMING INSPECTION (w/ Fog Light) (See page LI-84)**
6. **FOG LIGHT AIMING ADJUSTMENT (w/ Fog Light) (See page LI-85)**