REAR SPOILER

COMPONENTS

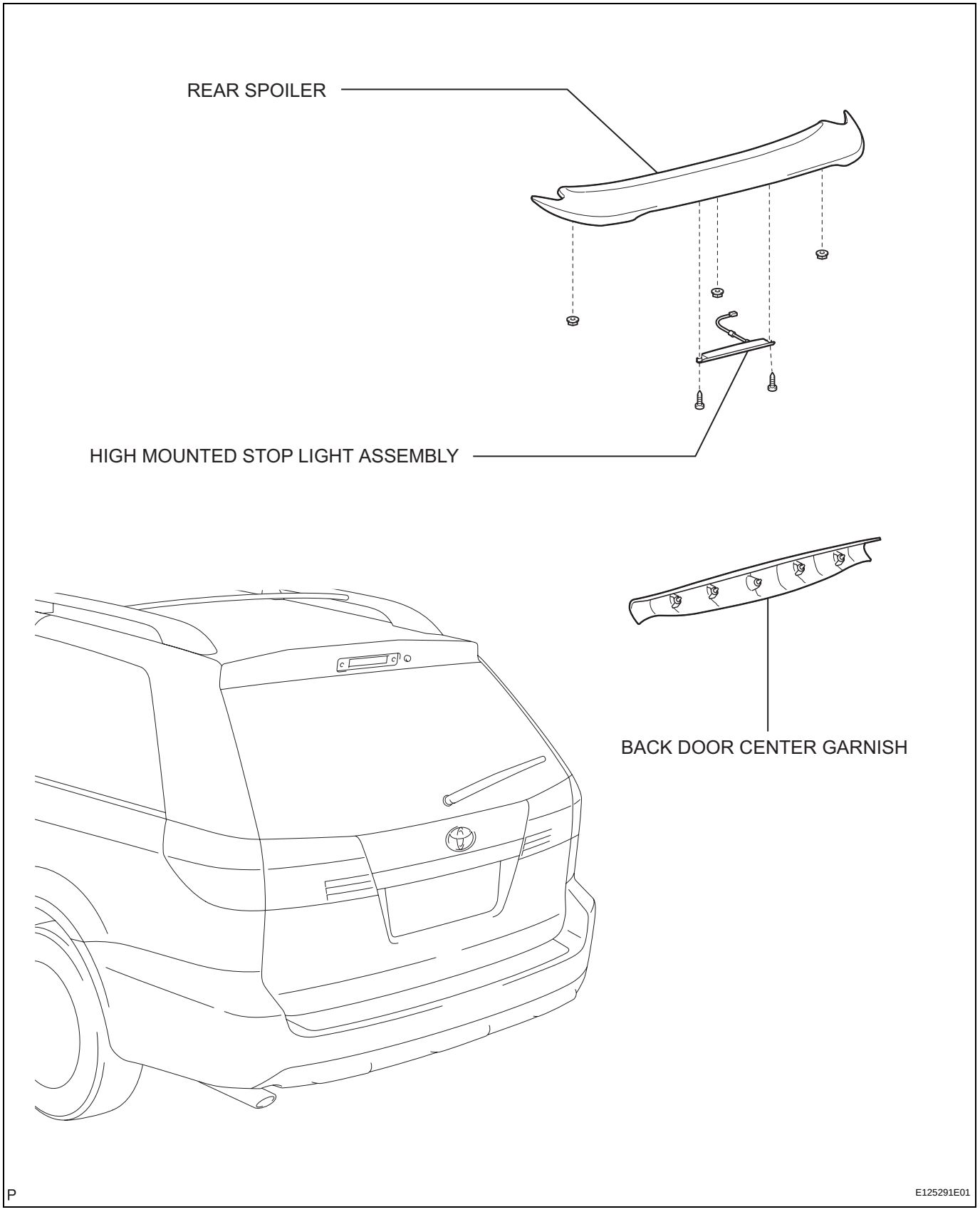

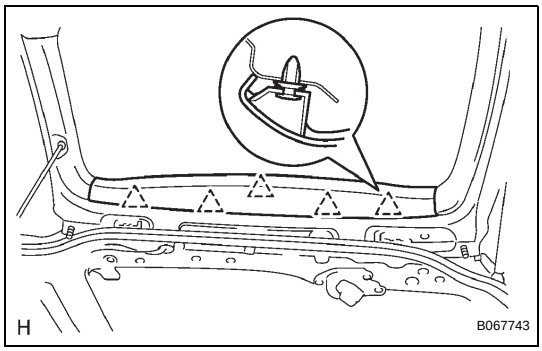

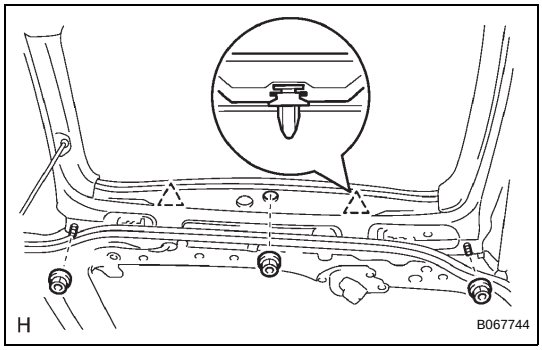

REMOVAL

1. REMOVE BACK DOOR CENTER GARNISH

(a) Using a clip remover, disengage the 5 clips to remove the back door center garnish.

2. REMOVE REAR SPOILER

(a) Disconnect the center stop light connector.

(b) Remove the 3 nuts.

(c) Using a clip remover, disengage the 2 clips to remove the rear spoiler.

3. REMOVE HIGH MOUNTED STOP LIGHT ASSEMBLY (See page LI-95)