# FRONT DOOR GLASS WEATHERSTRIP

## COMPONENTS

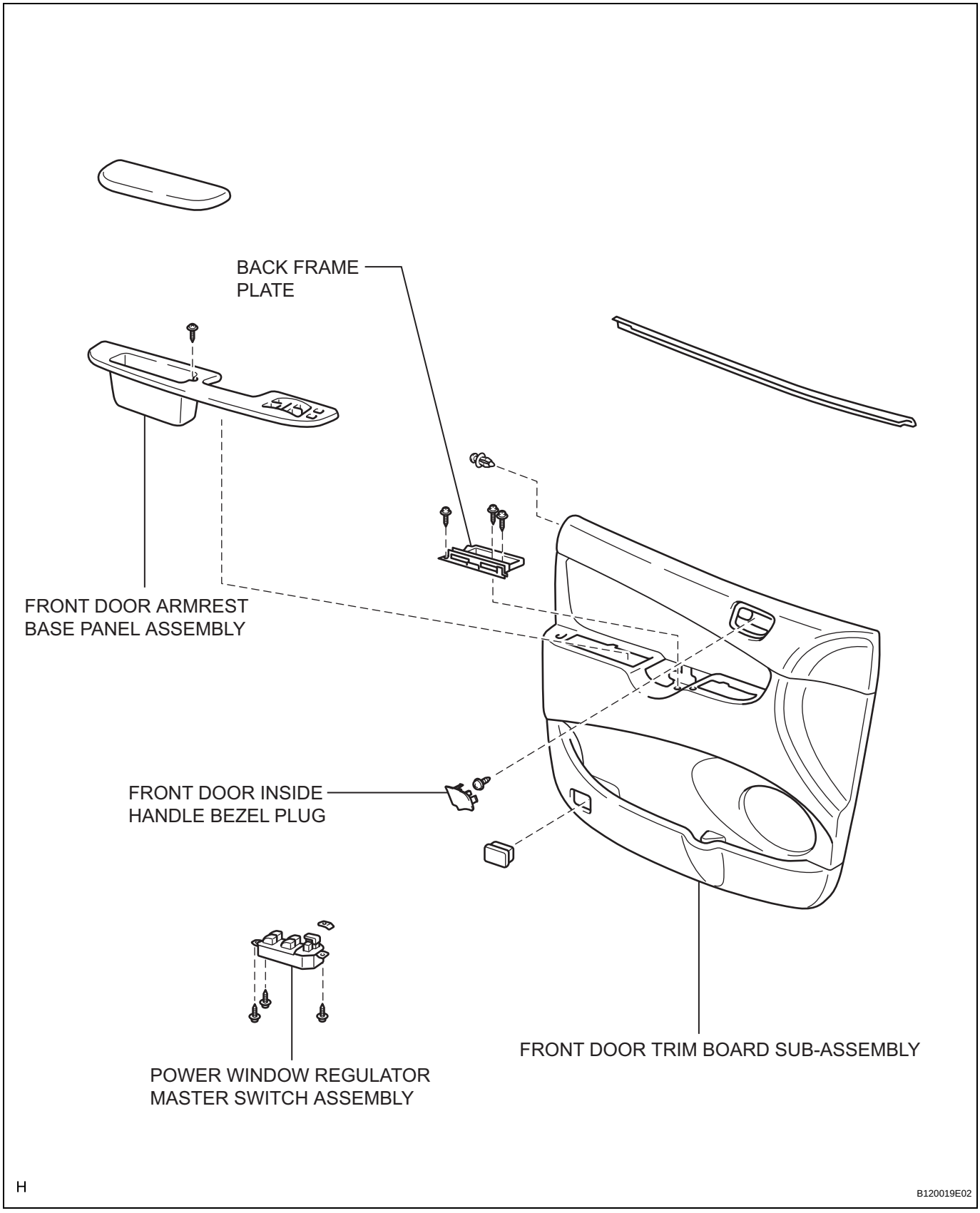

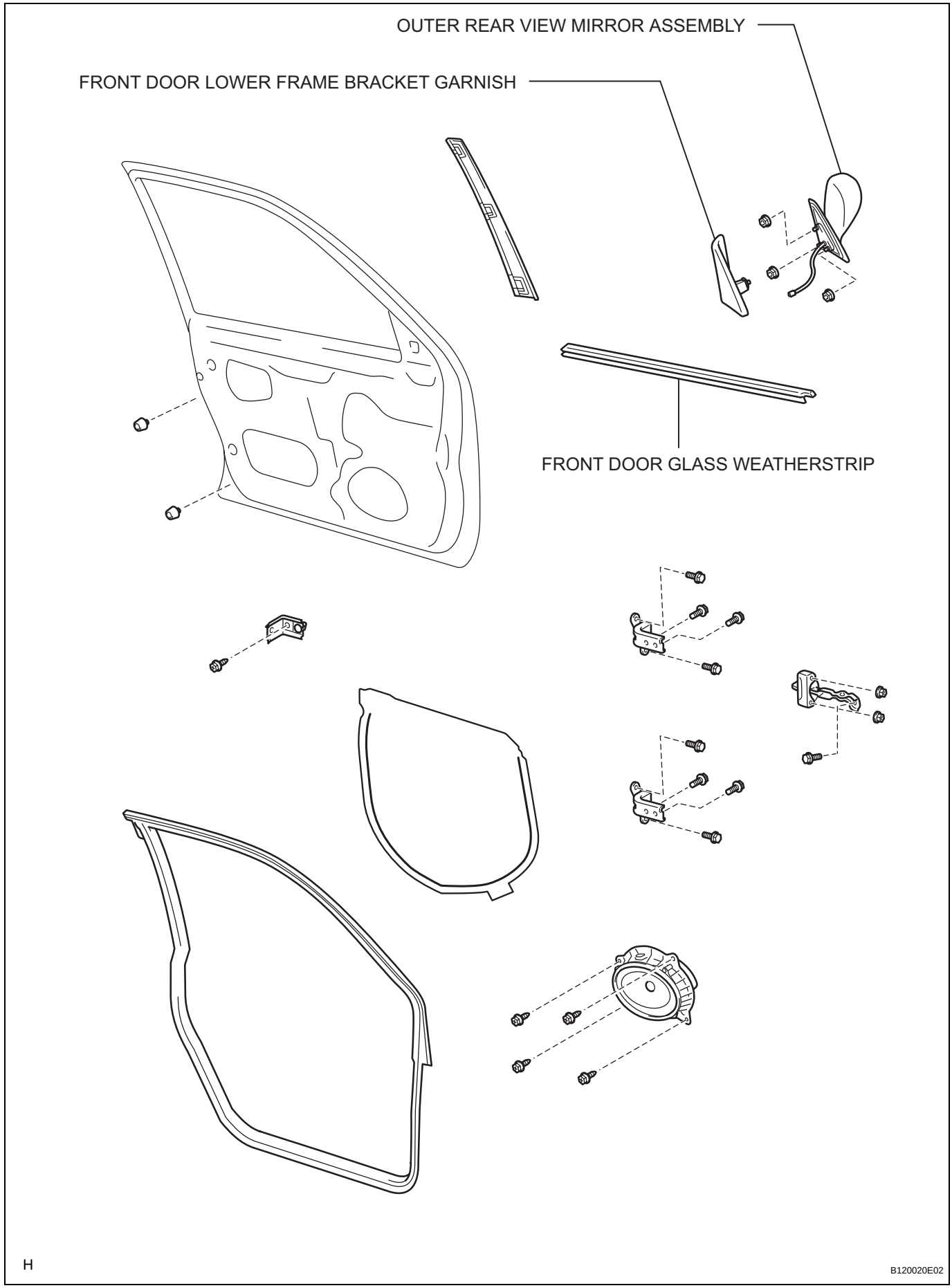
OUTER REAR VIEW MIRROR ASSEMBLY
FRONT DOOR LOWER FRAME BRACKET GARNISH
FRONT DOOR GLASS WEATHERSTRIP
H
B120020E02