REMOVAL

1. REMOVE ROOF HEADLINING ASSEMBLY
HINT:
See page IR-6

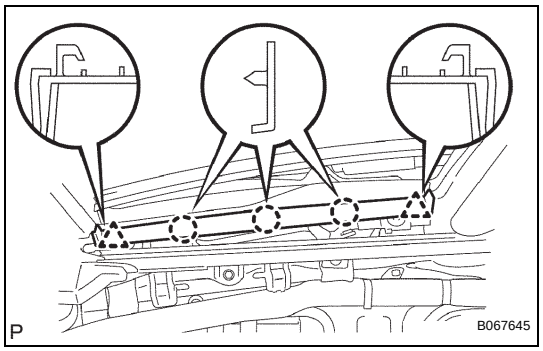

2. REMOVE SLIDING ROOF SIDE GARNISH LH
(a) Disengage the 3 claws.
(b) Disengage the rear clip.
(c) Disengage the front clip.
(d) Remove the slide garnish by pulling it rearward.

3. REMOVE SLIDING ROOF SIDE GARNISH RH
HINT:
Use the same procedures described above for the LH side.

4. REMOVE SLIDING ROOF GLASS SUB-ASSEMBLY
(a) Using a torx wrench (T25), remove the 4 screws and sliding roof glass.

5. REMOVE SLIDING ROOF HOUSING ASSEMBLY
(a) Disconnect the 4 hoses and drive gear wire harness connector.
(b) Remove the 8 bolts and 4 brackets.
(c) Remove the 6 nuts and housing.

6. REMOVE SLIDING ROOF DRIVE GEAR SUB-ASSEMBLY
(a) Remove the 2 bolts and drive gear.

7. REMOVE SUNSHADE TRIM SUB-ASSEMBLY

8. REMOVE ROOF DRIP CHANNEL REAR

9. REMOVE SLIDING ROOF DRIVE CABLE LH
(a) Remove the 4 guide clips.
(b) Using a screwdriver, separate the link rod from the link holder, as shown in the illustration.
HINT:
Tape the screwdriver tip before use.

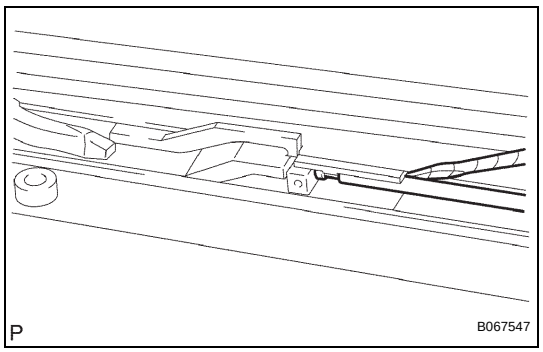

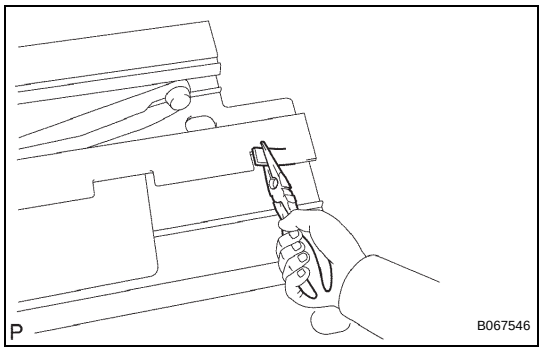

(c) Using long nose pliers, level the part indicated in the illustration.
(d) Pull out the deflector lifter link and drive cable together.

10. REMOVE SLIDING ROOF DRIVE CABLE RH
HINT:
Use the same procedures described above for the LH side.

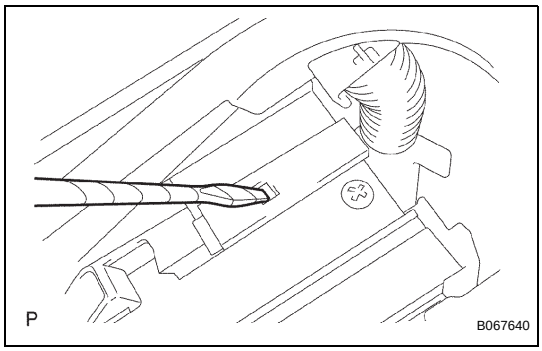

11. REMOVE ROOF WIND DEFLECTOR PANEL SUB-ASSEMBLY

(a) Using a screwdriver, disengage the claw of the panel, as shown in the illustration.
HINT:
Tape the screwdriver tip before use.

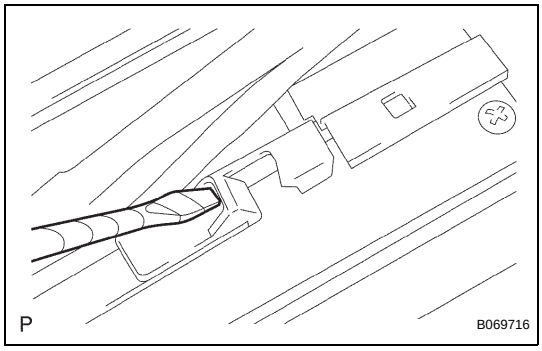

(b) Using a screwdriver, push hard the part indicated in the illustration to remove the panel.
HINT:
Tape the screwdriver tip before use.

12. REMOVE SLIDING ROOF HOUSING PANEL

(a) Remove the 2 screws and housing panel.

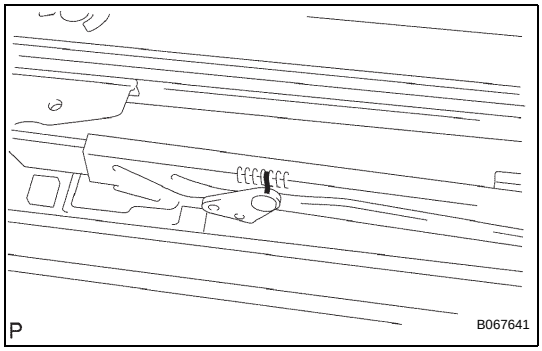

13. ADJUST FULLY CLOSE POSITION

(a) Using a screwdriver, slide the drive cable of the sliding roof to align the matchmarks.
HINT:
Tape the screwdriver tip before use.