SLIDING ROOF SYSTEM

PARTS LOCATION

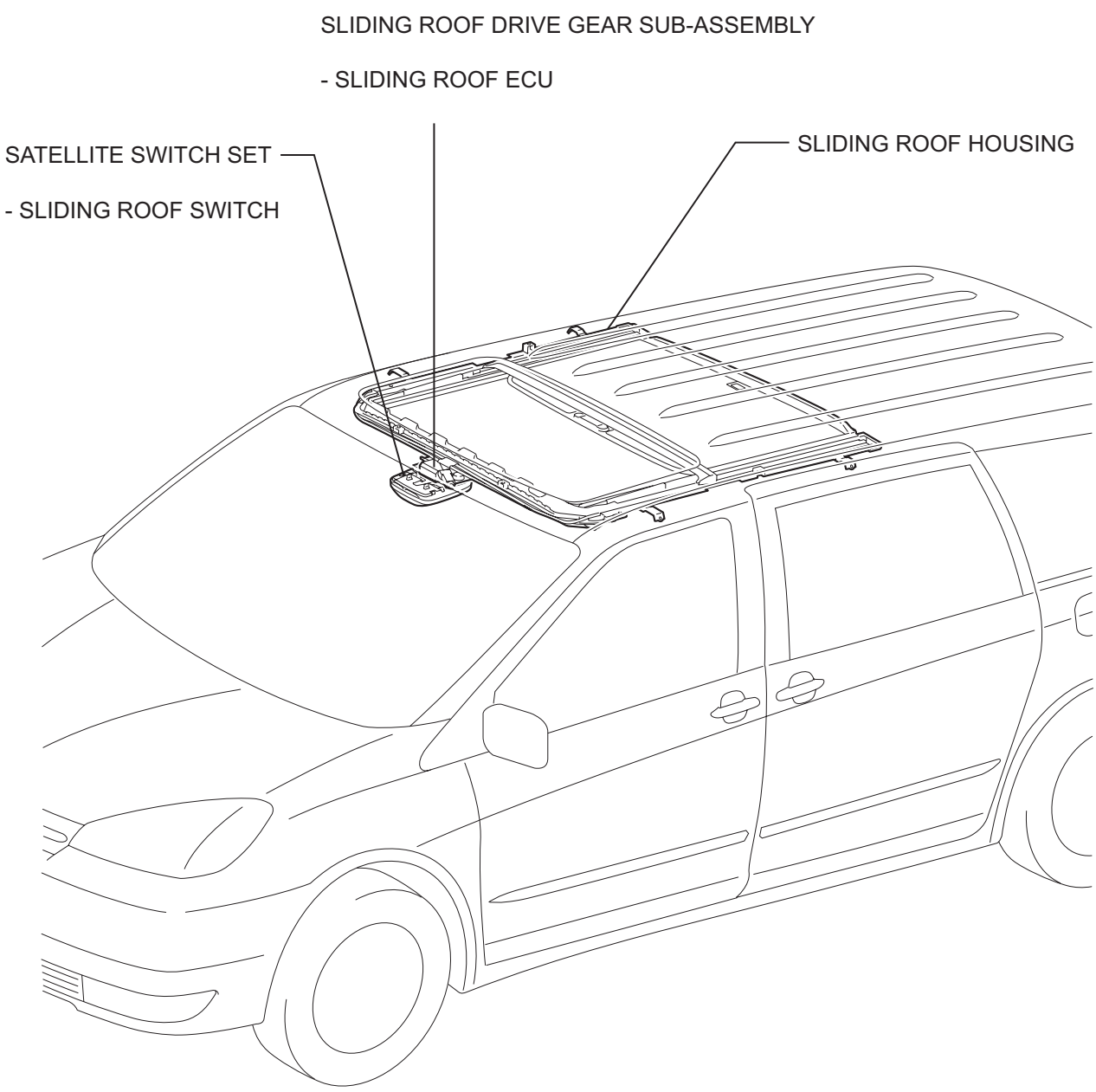

T

B120054E02

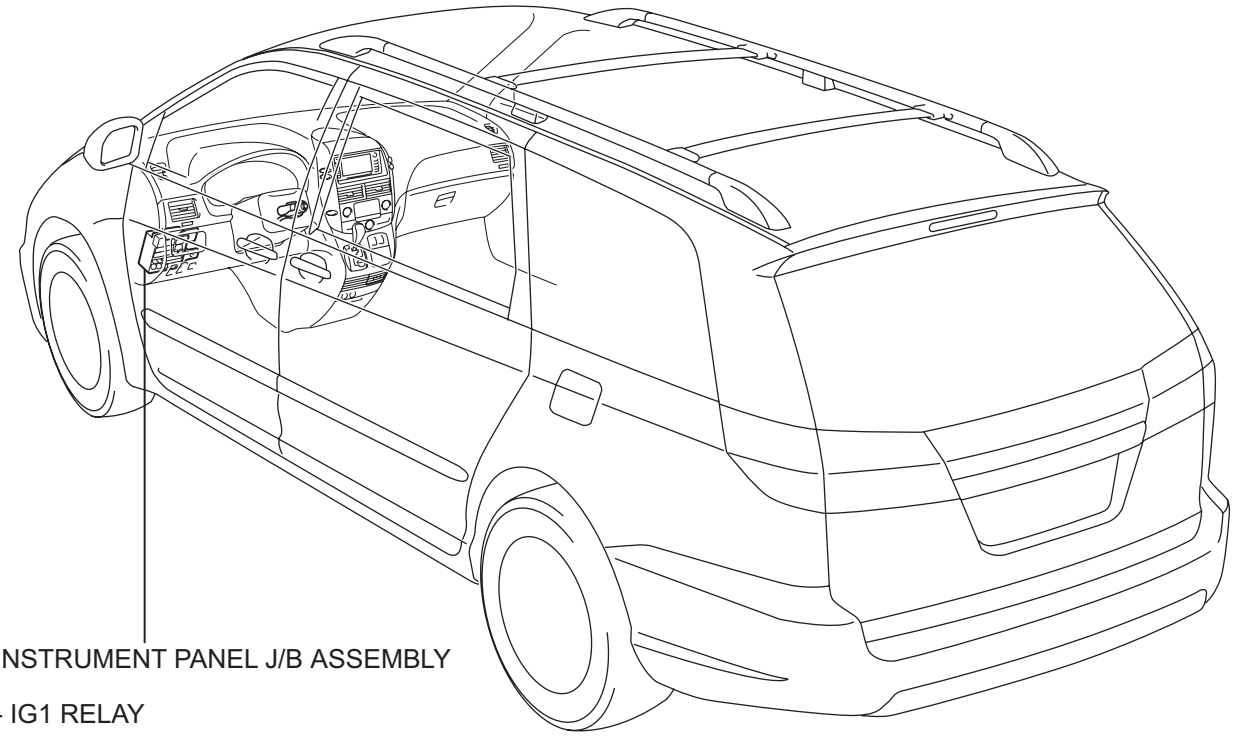

INSTRUMENT PANEL J/B ASSEMBLY

- IG1 RELAY
- ECU-IG FUSE
- S/ ROOF FUSE

Y

B120029E01