SLIDING ROOF HOUSING

COMPONENTS

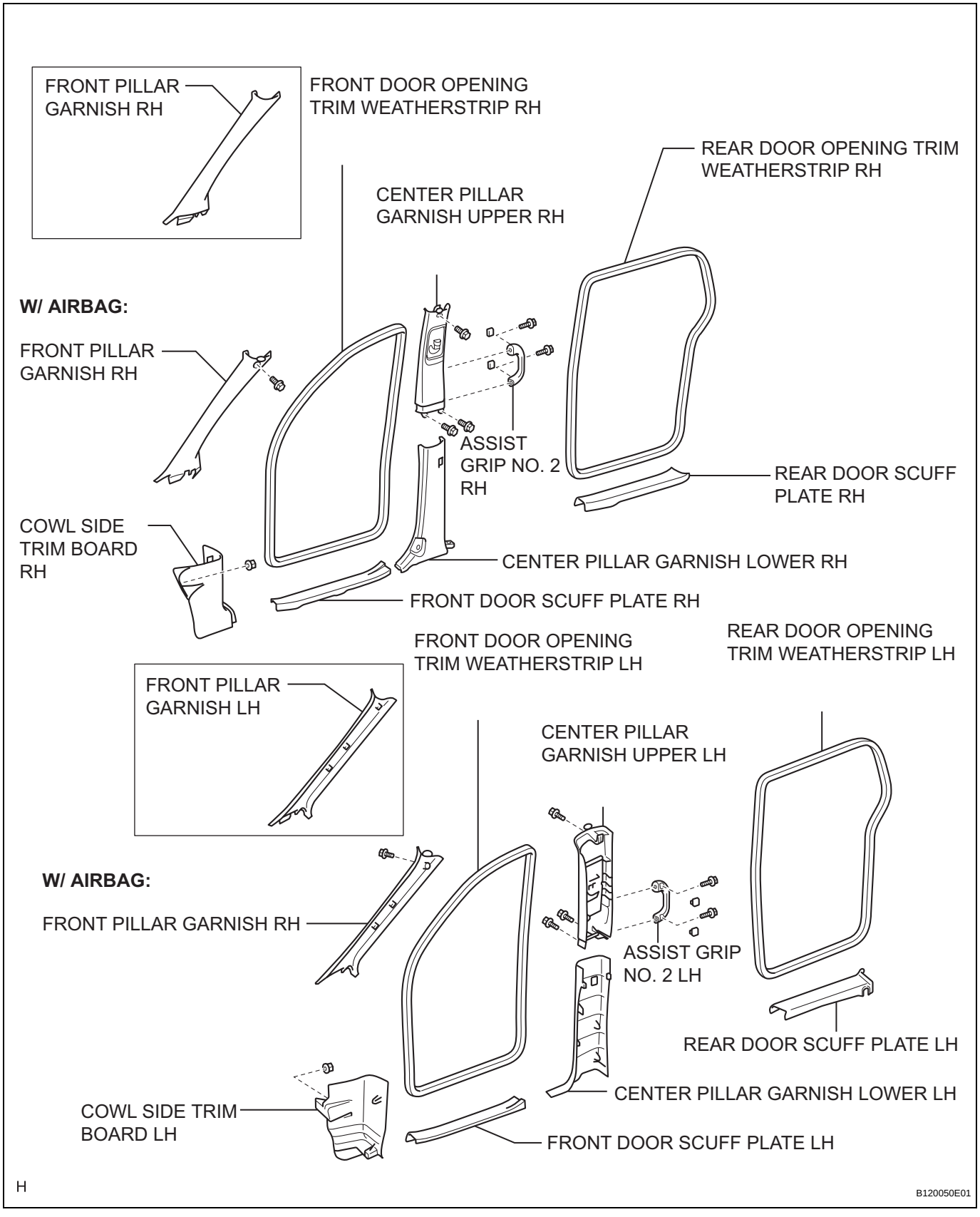

RF

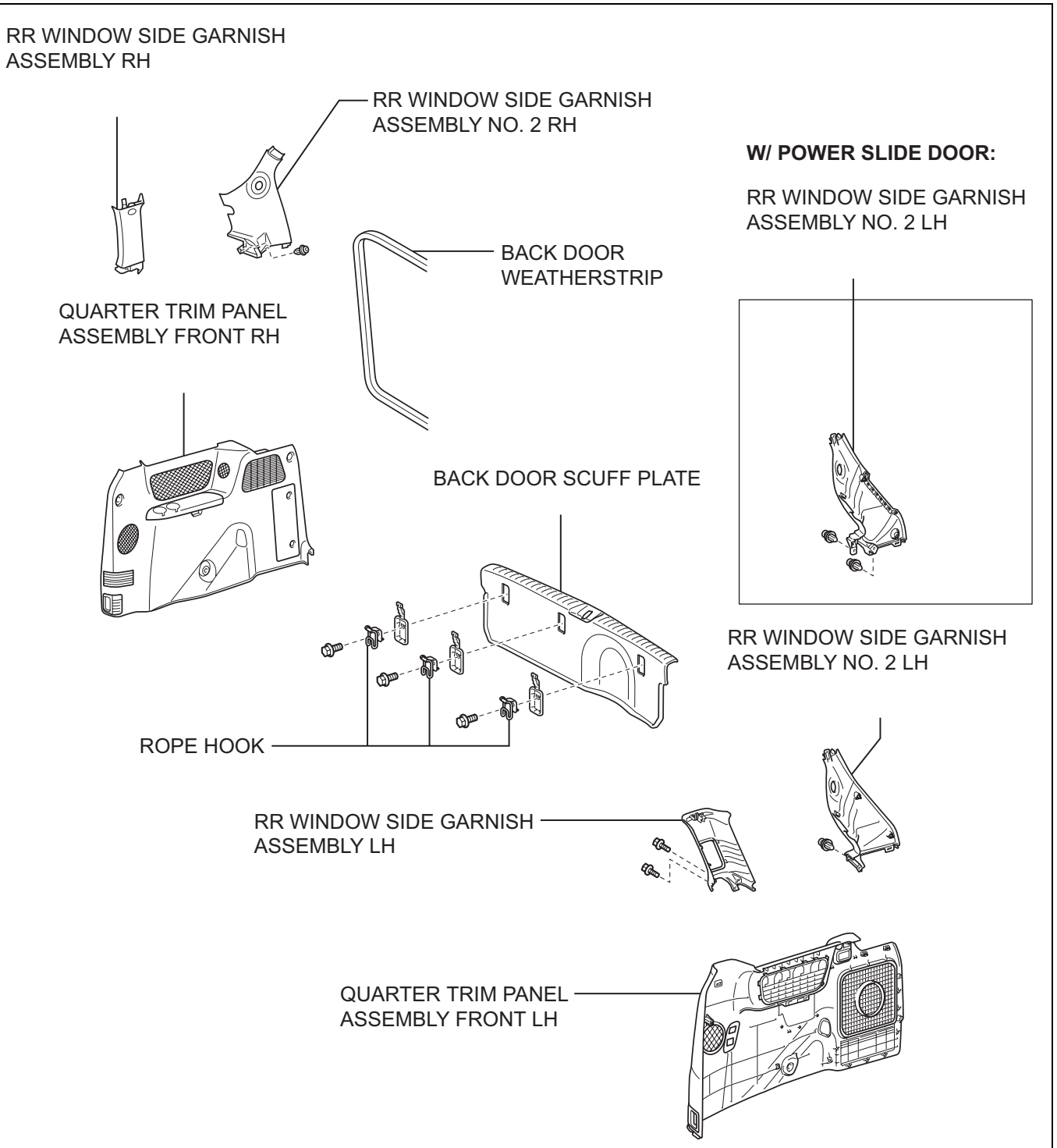
RR WINDOW SIDE GARNISH ASSEMBLY RH
RR WINDOW SIDE GARNISH ASSEMBLY NO. 2 RH
W/ POWER SLIDE DOOR:
RR WINDOW SIDE GARNISH ASSEMBLY NO. 2 LH
BACK DOOR WEATHERSTRIP
QUARTER TRIM PANEL ASSEMBLY FRONT RH
BACK DOOR SCUFF PLATE
RR WINDOW SIDE GARNISH ASSEMBLY NO. 2 LH
ROPE HOOK
RR WINDOW SIDE GARNISH ASSEMBLY LH
QUARTER TRIM PANEL ASSEMBLY FRONT LH
H
B120051E01

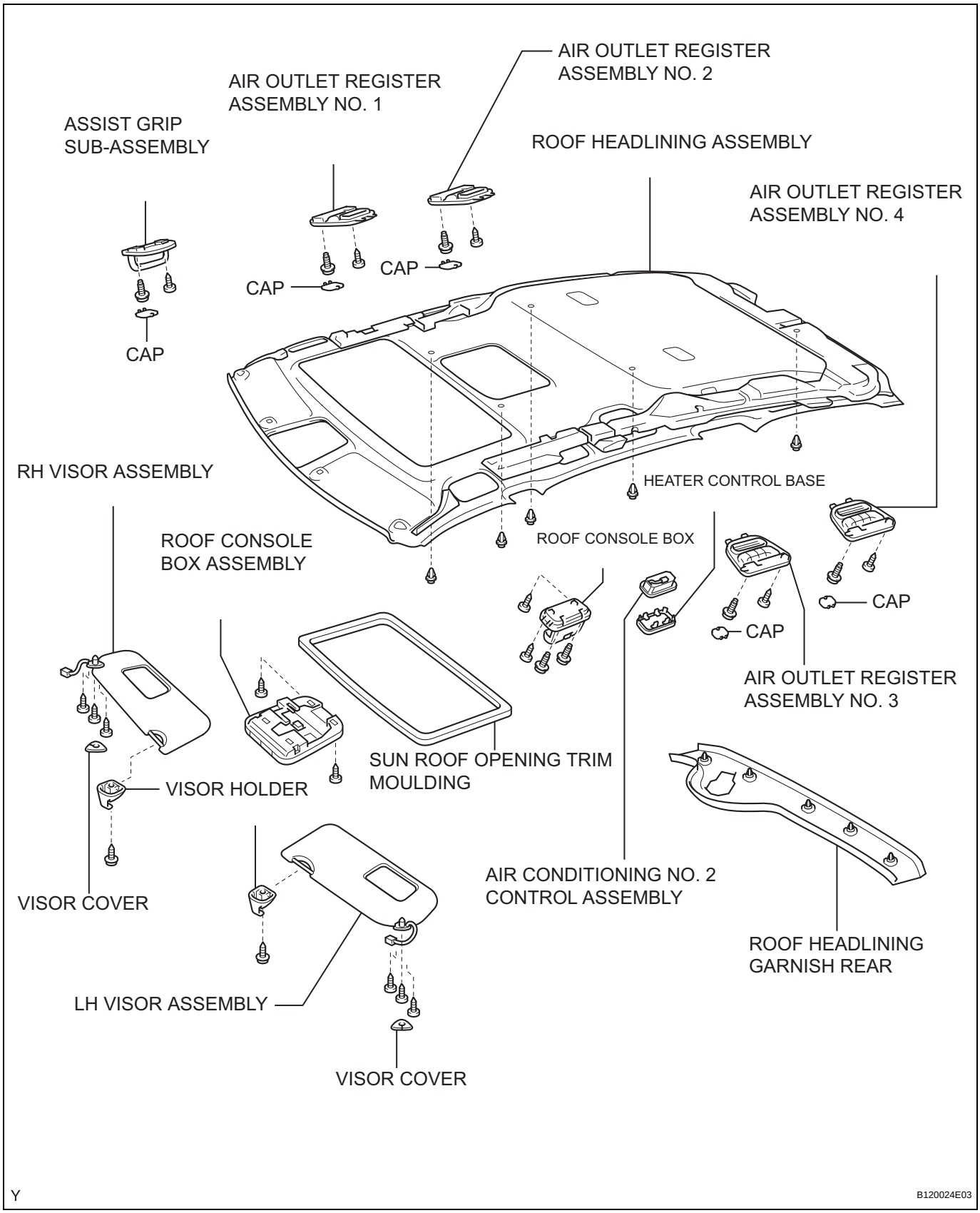
AIR OUTLET REGISTER ASSEMBLY NO. 2
AIR OUTLET REGISTER ASSEMBLY NO. 1
ASSIST GRIP SUB-ASSEMBLY
ROOF HEADLINING ASSEMBLY
AIR OUTLET REGISTER ASSEMBLY NO. 4
CAP
CAP
CAP
CAP
RH VISOR ASSEMBLY
HEATER CONTROL BASE
ROOF CONSOLE BOX ASSEMBLY
ROOF CONSOLE BOX
CAP
CAP
AIR OUTLET REGISTER ASSEMBLY NO. 3
VISOR HOLDER
SUN ROOF OPENING TRIM MOULDING
VISOR COVER
AIR CONDITIONING NO. 2 CONTROL ASSEMBLY
ROOF HEADLINING GARNISH REAR
LH VISOR ASSEMBLY
VISOR COVER
Y
B120024E03

RF

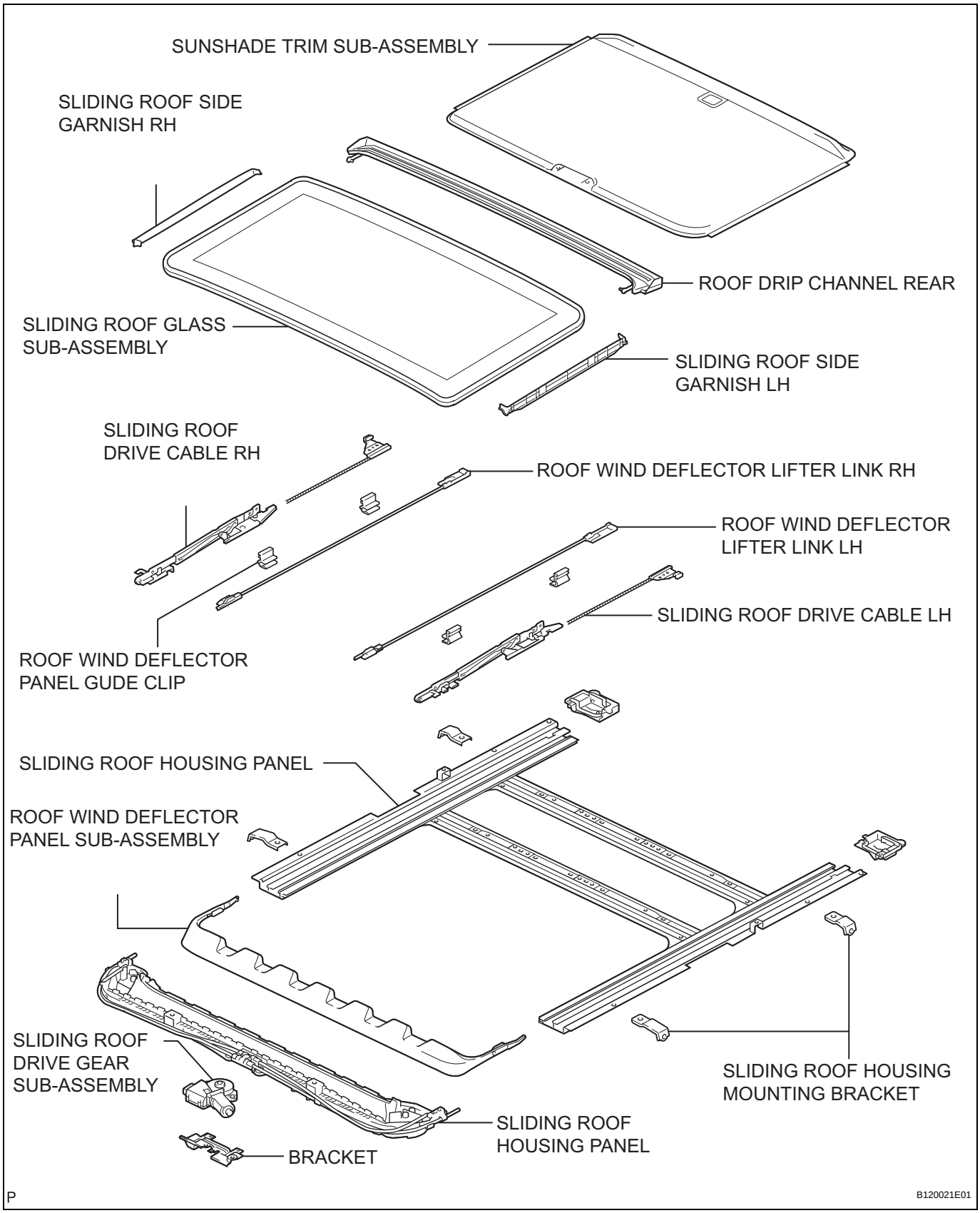
SUNSHADE TRIM SUB-ASSEMBLY
SLIDING ROOF SIDE GARNISH RH
ROOF DRIP CHANNEL REAR
SLIDING ROOF GLASS SUB-ASSEMBLY
SLIDING ROOF SIDE GARNISH LH
SLIDING ROOF DRIVE CABLE RH
ROOF WIND DEFLECTOR LIFTER LINK RH
ROOF WIND DEFLECTOR LIFTER LINK LH
SLIDING ROOF DRIVE CABLE LH
ROOF WIND DEFLECTOR PANEL GUDE CLIP
SLIDING ROOF HOUSING PANEL
ROOF WIND DEFLECTOR PANEL SUB-ASSEMBLY
SLIDING ROOF DRIVE GEAR SUB-ASSEMBLY
SLIDING ROOF HOUSING MOUNTING BRACKET
SLIDING ROOF HOUSING PANEL
BRACKET
P
B120021E01