DTC	B1208	Passenger Side Outer Mirror ECU

DESCRIPTION

This DTC is detected when communication between the outer mirror control ECU RH and multiplex network gateway ECU stops for more than 10 seconds.

DTC No.	DTC Detecting Condition	Trouble Area
B1208	Passenger side outer mirror ECU communication stops	• Outer mirror control ECU RH • Wire harness

WIRING DIAGRAM

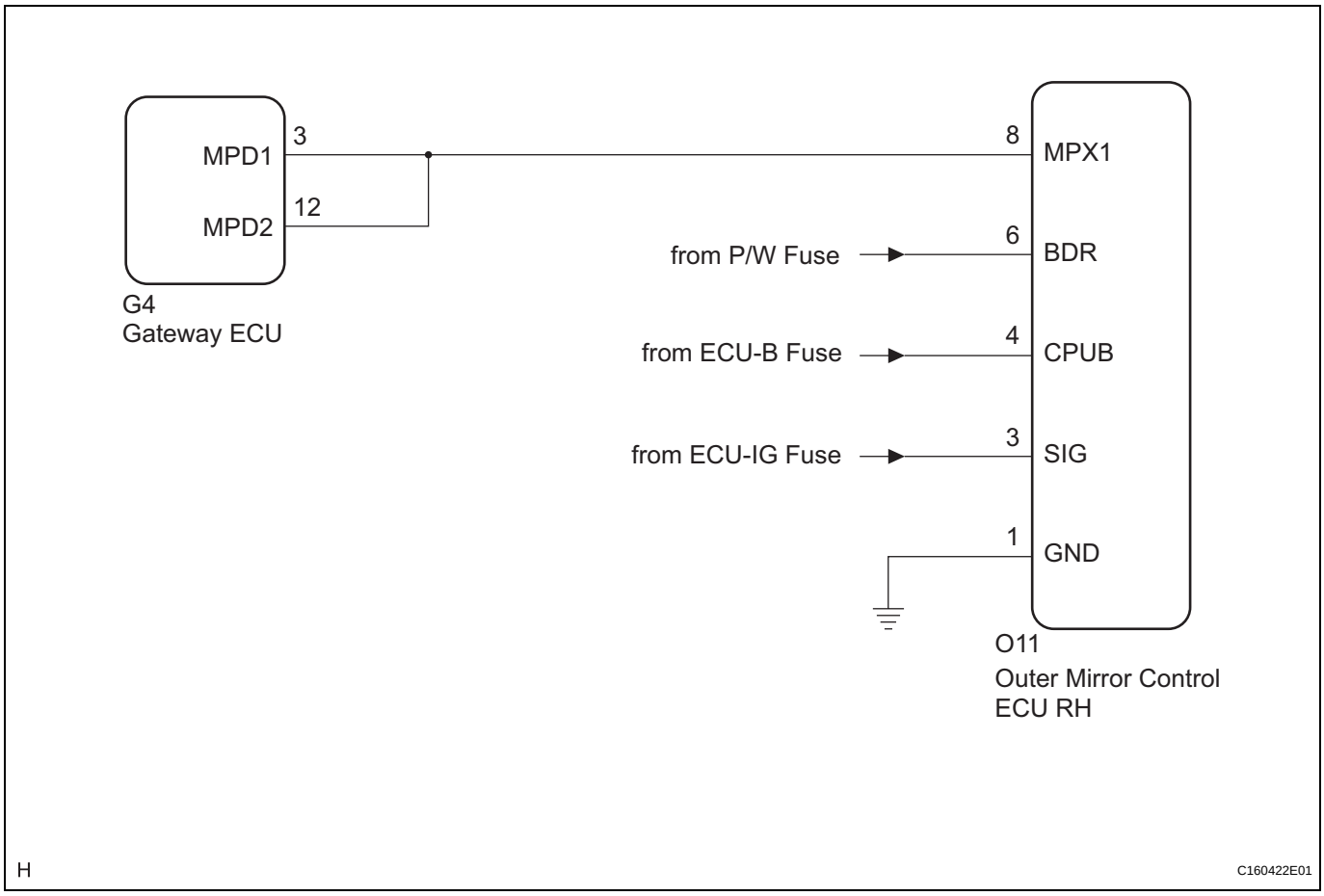

INSPECTION PROCEDURE

1 CHECK HARNESS AND CONNECTOR (OUTER MIRROR CONTROL ECU RH - BATTERY)

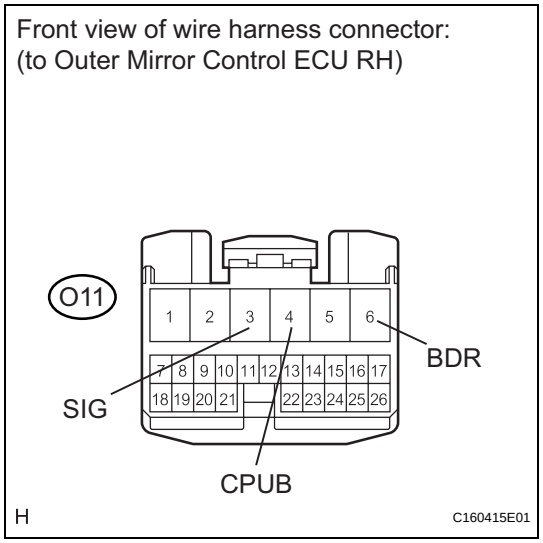

(a) Disconnect the O11 ECU connector.
(b) Measure the voltage according to the value(s) in the table below.

Standard voltage

Tester Connection	Connection	Specified Connection
O11-3 (SIG) - Body ground	Ignition switch: ON	11 to 14 V
O11-4 (CPUB) - Body ground	Always	11 to 14 V
O11-6 (BDR) - Body ground	Always	11 to 14 V

NG → **REPAIR OR REPLACE HARNESS OR CONNECTOR**

OK

2 CHECK HARNESS AND CONNECTOR (OUTER MIRROR CONTROL ECU RH - GROUND)

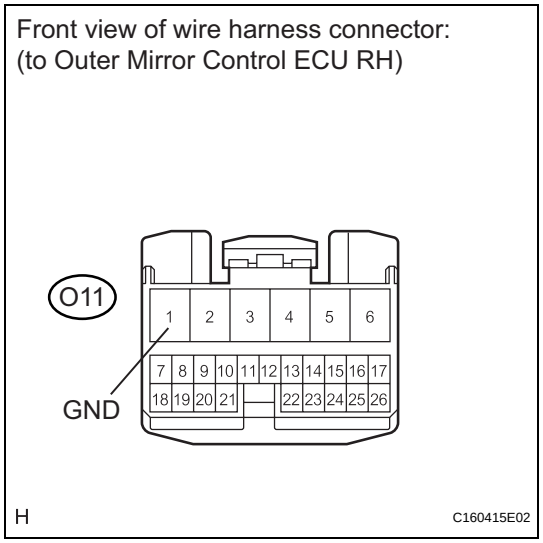

(a) Measure the resistance according to the value(s) in the table below.

Standard resistance

Tester Connection	Connection	Specified Connection
O11-1 (GND) - Body ground	Always	Below 1 Ω

NG → **REPAIR OR REPLACE HARNESS OR CONNECTOR**

OK

3	CHECK COMMUNICATION LINE

Front view of wire harness connector:
(to Outer Mirror Control ECU RH)

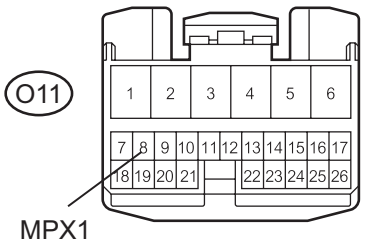

(to Gateway ECU)

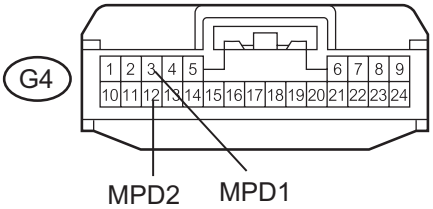

C160702E01

(a) Disconnect the G4 ECU connector.
(b) Measure the resistance according to the value(s) in the table below.

Standard resistance

Tester Connection	Connection	Specified Connection
O11-8 (MPX1) - G4-3 (MPD1)	Always	Below 1 Ω
O11-8 (MPX1) - G4-12 (MPD2)	Always	Below 1 Ω

Result

Result	Proceed to
Both are OK	A
One is OK	B
Both are NG	C

B → **REPAIR OR REPLACE HARNESS OR CONNECTOR AND OUTER MIRROR CONTROL ECU RH**

C → **REPAIR OR REPLACE HARNESS OR CONNECTOR**

A

REPLACE OUTER MIRROR CONTROL ECU RH