DTC	B1216	Rear Door ECU RH Communication Stop

DESCRIPTION

DTC B1216 is output when communication between the power slide door ECU RH and the multiplex network gateway ECU stops for more than 10 seconds.

DTC No.	DTC Detection Condition	Trouble Area
B1216	RR-DOOR ECU communication stops	• Power slide door ECU RH • Wire harness

WIRING DIAGRAM

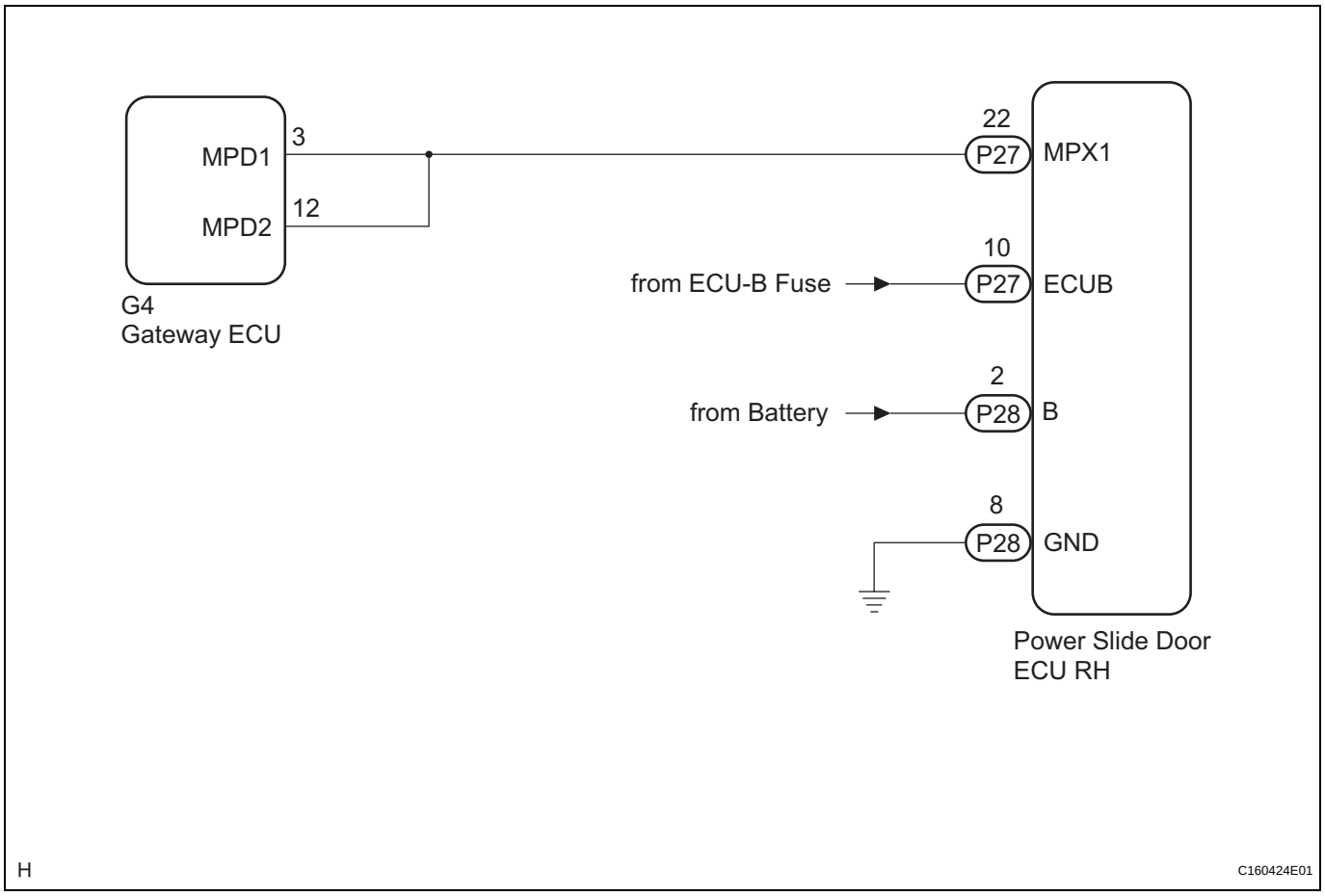

INSPECTION PROCEDURE

1 CHECK HARNESS AND CONNECTOR (POWER SLIDE DOOR ECU RH - BATTERY)

Front view of wire harness connector:
(to Power Slide Door ECU RH)

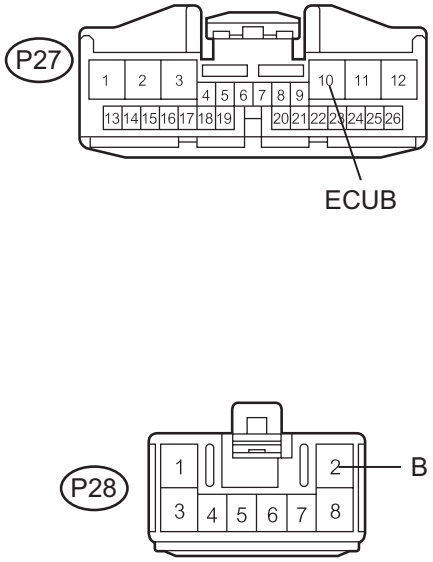

C160730E01

(a) Disconnect the P28 and P27 ECU connectors.
(b) Measure the voltage according to the value(s) in the table below.

Standard voltage

Tester Connection	Condition	Specified Condition
P27-10 (ECUB) - Body ground	Always	11 to 14 V
P28-2 (B) - Body ground	Always	11 to 14 V

NG → **REPAIR OR REPLACE HARNESS OR CONNECTOR**

OK

2 CHECK HARNESS AND CONNECTOR (POWER SLIDE DOOR ECU RH - GROUND)

Front view of wire harness connector:
(to Power Slide Door ECU RH)

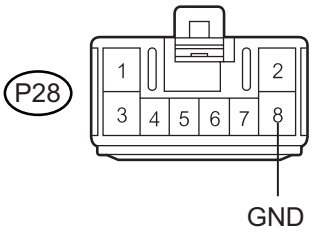

H

C160411E01

(a) Measure the resistance according to the value(s) in the table below.

Standard resistance

Tester Connection	Condition	Specified Condition
P28-8 (GND) - Body ground	Always	Below 1 Ω

NG → **REPAIR OR REPLACE HARNESS OR CONNECTOR**

MP

OK

3	CHECK COMMUNICATION LINE

Front view of wire harness connector:
(to Power Slide Door ECU RH)

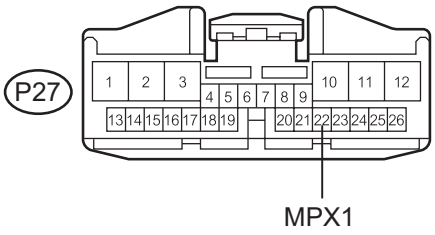

(to Gateway ECU)

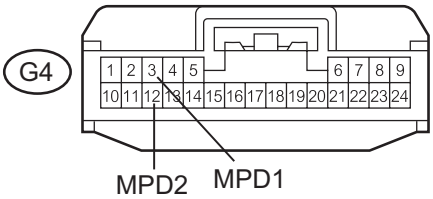

C160731E01

(a) Disconnect the G4 ECU connector.
(b) Measure the resistance according to the value(s) in the table below.

Standard resistance

Tester Connection	Condition	Specified Condition
P27-22 (MPX1) - G4-3 (MPD1)	Always	Below 1 Ω
P27-22 (MPX1) - G4-12 (MPD2)	Always	Below 1 Ω

Result

Result	Proceed to
Both are OK	A
One is OK	B
Both are NG	C

B → **REPAIR OR REPLACE HARNESS OR CONNECTOR AND POWER SLIDE DOOR ECU RH**

C → **REPAIR OR REPLACE HARNESS OR CONNECTOR**

A

REPLACE POWER SLIDE DOOR ECU RH