Gateway ECU Communication Stop Mode

DESCRIPTION

Detection Item	Symptom	Trouble Area
Gateway ECU Communication Stop Mode	• "Gateway" is not displayed on the "Communication Bus Check" screen of the intelligent tester • Applies to "Gateway ECU Communication Stop Mode" in the "DTC COMBINATION TABLE"	• Power source circuit of gateway ECU • Gateway ECU branch wire or connector • Network Gateway ECU

CA

WIRING DIAGRAM

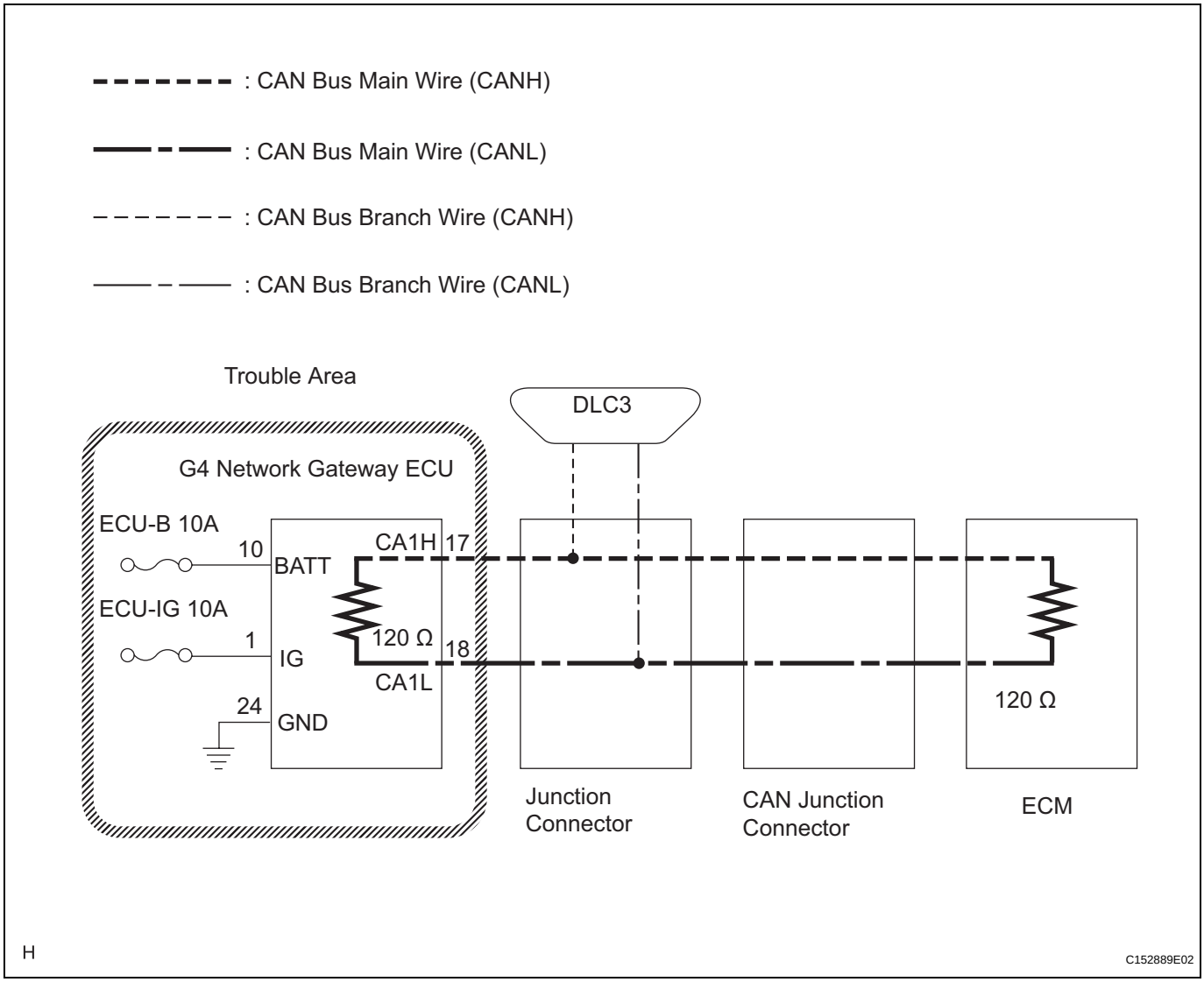

INSPECTION PROCEDURE

NOTICE:

- **Turn the ignition switch off before measuring the resistances of CAN bus main wires and CAN bus branch wires.**
- **After the ignition switch is turned off, check that the key reminder warning system and light reminder warning system are not in operation.**
- **Before measuring the resistance, leave the vehicle as is for at least 1 minute and do not operate the ignition switch, any other switches, or the doors. If any doors need to be opened in order to check connectors, open the doors and leave them open.**

HINT:
Operating the ignition switch, any switches, or any doors triggers related ECU and sensor communication with the CAN. This communication will cause the resistance value to change.

CA

1 CHECK OPEN IN CAN BUS WIRE (ECU MAIN BUS WIRE)

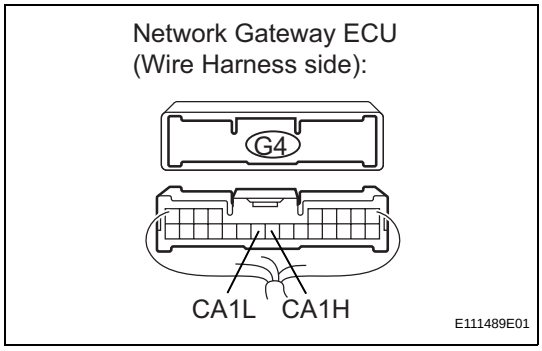

(a) Turn the ignition switch off.
(b) Disconnect the network gateway ECU connector.
(c) Measure the resistance according to the value(s) in the table below.
Standard resistance

Tester Connection	Condition	Specified Condition
G4-17 (CA1H) - G4-18 (CA1L)	Ignition Switch off	108 to 132 Ω

NG → **REPAIR OR REPLACE CAN BUS MAIN WIRE OR CONNECTOR**

OK

2 CHECK WIRE HARNESS (IG, BATT, GND)

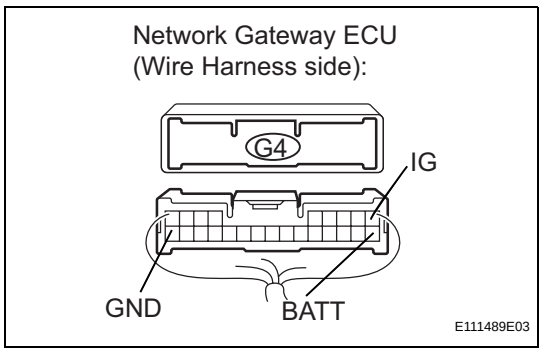

(a) Measure the resistance according to the value(s) in the table below.
Standard resistance

Tester Connection	Condition	Specified Condition
G4-24 (GND) - Body ground	Always	Below 1 Ω

(b) Measure the voltage according to the value(s) in the table below.
Standard voltage

Tester Connection	Condition	Specified Condition
G4-10 (BATT) - Body ground	Always	10 to 14 V
G4-1 (IG) - Body ground	Ignition Switch on	10 to 14 V

NG → **REPAIR OR REPLACE HARNESS OR CONNECTOR**

OK

REPLACE NETWORK GATEWAY ECU (See page CA-95)