Steering Angle Sensor Communication Stop Mode

DESCRIPTION

Detection Item	Symptom	Trouble Area
Steering Angle Sensor Communication Stop Mode	• "Steering angle sensor" is not displayed on the "Communication Bus Check" screen of the intelligent tester • Applies to "Steering Angle Sensor Communication Stop Mode" in the "DTC COMBINATION TABLE"	• Power source circuit of steering angle sensor • Steering angle sensor branch wire or connector • Steering angle sensor

CA

WIRING DIAGRAM

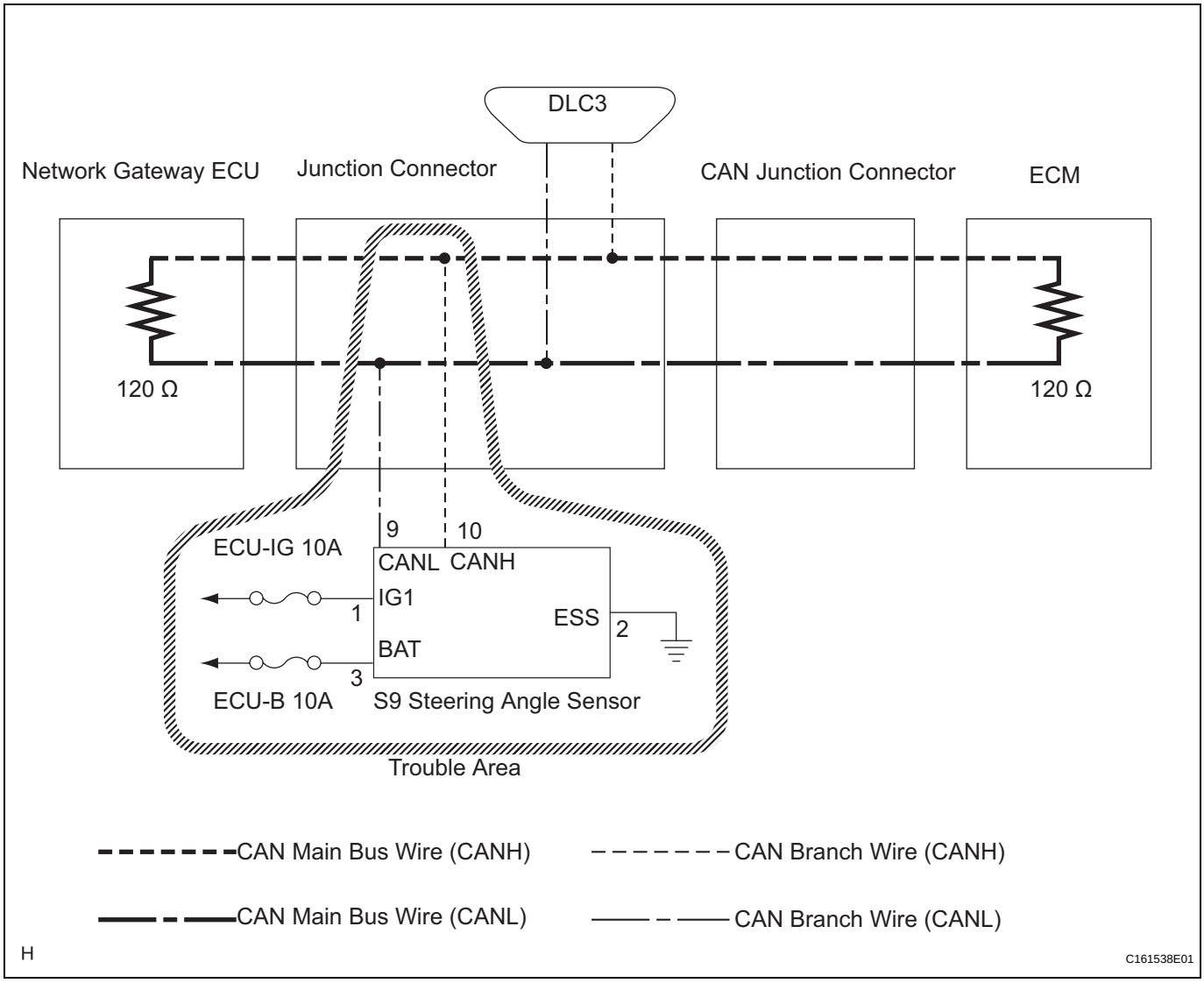

INSPECTION PROCEDURE

NOTICE:

- **Turn the ignition switch off before measuring the resistances of CAN bus main wires and CAN bus branch wires.**
- **After the ignition switch is turned off, check that the key reminder warning system and light reminder warning system are not in operation.**

- **Before measuring the resistance, leave the vehicle as is for at least 1 minute and do not operate the ignition switch, any other switches, or the doors. If any doors need to be opened in order to check connectors, open the doors and leave them open.**

HINT:
Operating the ignition switch, any switches, or any doors triggers related ECU and sensor communication with the CAN. This communication will cause the resistance value to change.

CA

1	CHECK OPEN IN CAN BUS WIRE (STEERING ANGLE SENSOR BRANCH WIRE)

Steering Angle Sensor Connector (Wire Harness Side):

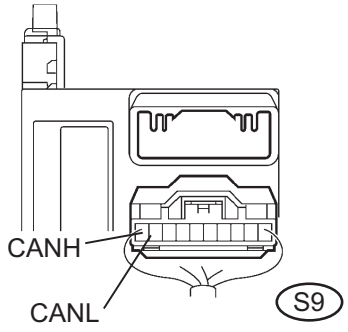

G030155E48

(a) Turn the ignition switch off.
(b) Disconnect the steering angle sensor connector.
(c) Measure the resistance according to the value(s) in the table below.

Standard resistance

Tester Connection	Condition	Specified Condition
S9-10 (CANH) - S9-9 (CANL)	Ignition Switch off	54 to 69 Ω

NG → **REPAIR OR REPLACE STEERING ANGLE SENSOR BRANCH WIRE OR CONNECTOR**

OK

2	CHECK WIRE HARNESS (BAT, IG1, ESS)

Steering Angle Sensor Connector (Wire Harness Side):

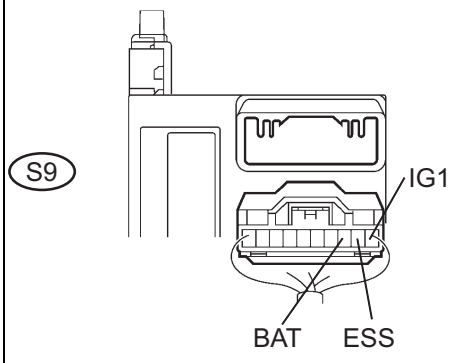

G030155E49

(a) Measure the resistance according to the value(s) in the table below.

Standard resistance

Tester Connection	Condition	Specified Condition
S9-2 (ESS) - Body ground	Always	Below 1 Ω

(b) Measure the voltage according to the value(s) in the table below.

Standard voltage

Tester Connection	Condition	Specified Condition
S9-3 (BAT) - Body ground	Always	10 to 14 V
S9-1 (IG1) - Body ground	Ignition Switch on	10 to 14 V

NG → **REPAIR OR REPLACE HARNESS OR CONNECTOR**

OK

REPLACE STEERING ANGLE SENSOR (See page BC-199)