Short in CAN Bus Lines

DESCRIPTION

The CAN bus wires are considered to be shorted when the resistance between terminals 6 (CANH) and 14 (CANL) of the DLC3 is below 54 Ω.

Symptom	Trouble Area
Resistance between terminals 6 (CANH) and 14 (CANL) of the DLC3 is below 54 Ω.	• Short in CAN bus wires • ECM • Network gateway ECU • Skid control ECU with Actuator • Steering angle sensor • Yaw rate sensor • Distance control ECU • Junction connector • CAN junction connector

WIRING DIAGRAM

with VSC:

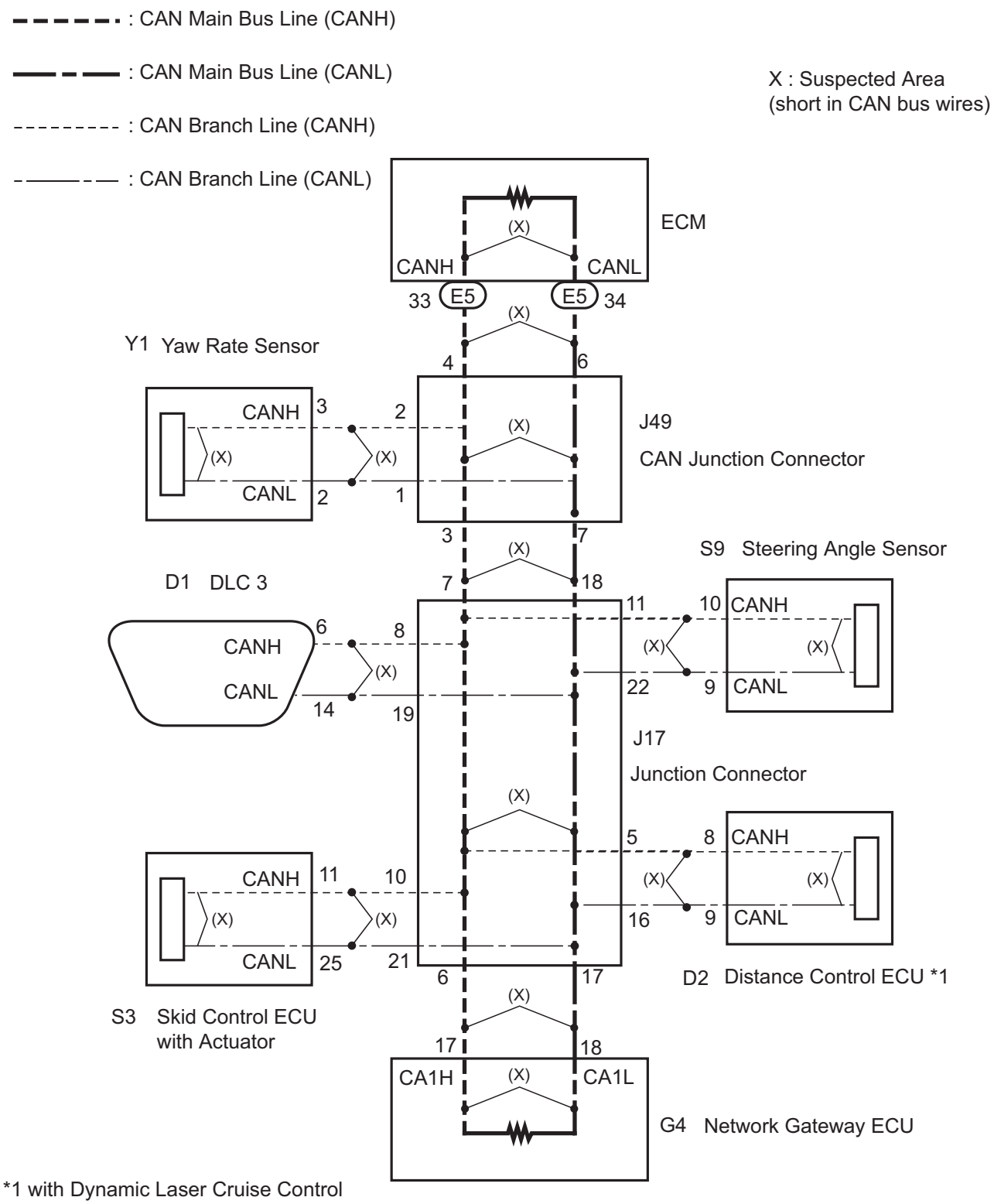

*1 with Dynamic Laser Cruise Control

C161560E01

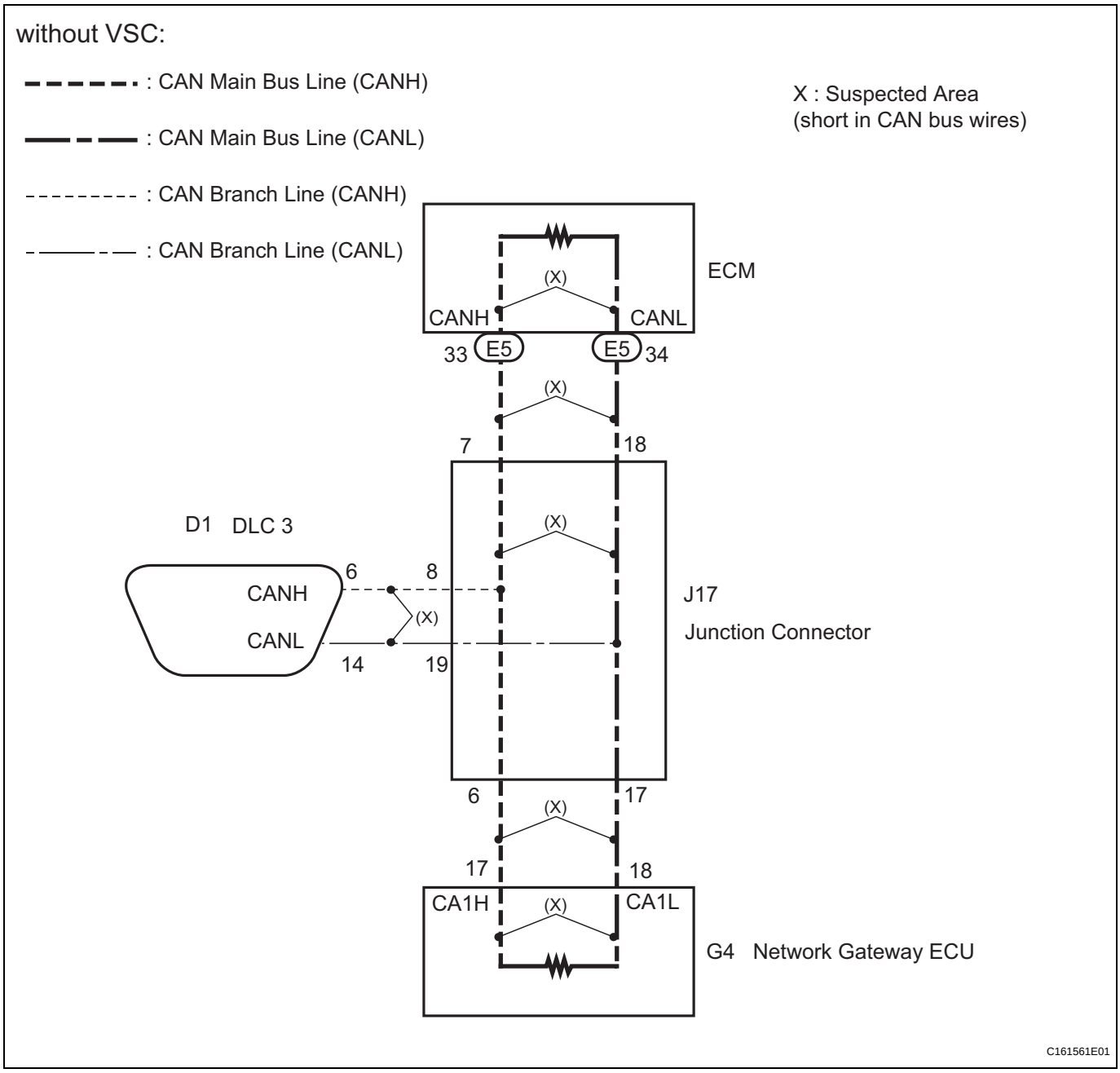

INSPECTION PROCEDURE

NOTICE:

- **Turn the ignition switch off before measuring the resistances of CAN bus main wires and CAN bus branch wires.**
- **After the ignition switch is turned off, check that the key reminder warning system and light reminder warning system are not in operation.**
- **Before measuring the resistance, leave the vehicle as is for at least 1 minute and do not operate the ignition switch, any other switches, or the doors. If any doors need to be opened in order to check connectors, open the doors and leave them open.**

HINT:

Operating the ignition switch, any switches, or any doors triggers related ECU and sensor communication with the CAN. This communication will cause the resistance value to change.

1	CHECK FOR SHORT IN CAN BUS WIRES (ECM MAIN BUS WIRE)

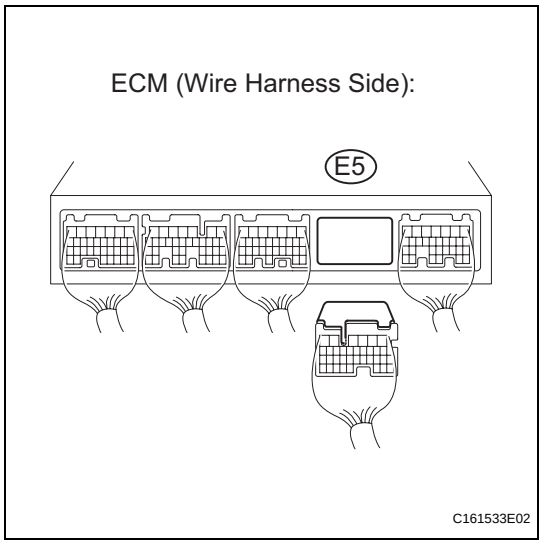

(a) Turn the ignition switch off.
(b) Disconnect the ECM connector.

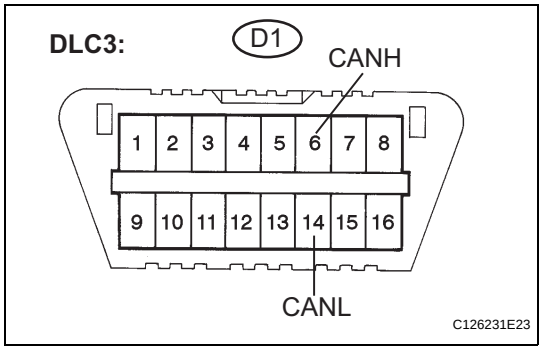

(c) Measure the resistance according to the value(s) in the table below.

Standard resistance

Tester Connection	Condition	Specified Condition
D1-6 (CANH) - D1-14 (CANL)	Ignition switch off	108 to 132 Ω

NG → **Go to step 2**

OK

REPLACE ECM (See page ES-498)

2	CHECK FOR SHORT IN CAN BUS WIRES (NETWORK GATEWAY ECU MAIN BUS WIRE)

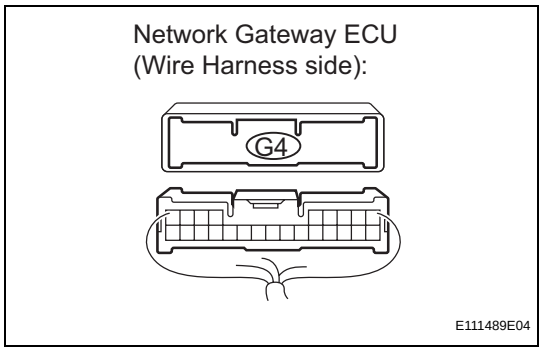

(a) Disconnect the network gateway ECU connector.

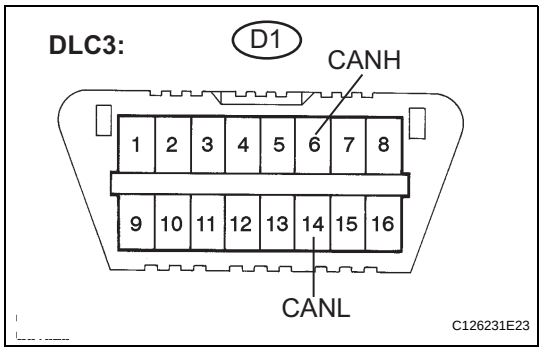

(b) Measure the resistance according to the value(s) in the table below.

Standard resistance

Tester Connection	Condition	Specified Condition
D1-6 (CANH) - D1-14 (CANL)	Ignition switch off	108 to 132 Ω

NG → **Go to step 3**

OK

REPLACE NETWORK GATEWAY ECU (See page CA-95)

3 CHECK FOR SHORT IN CAN BUS WIRES (DLC3 BRANCH WIRE)

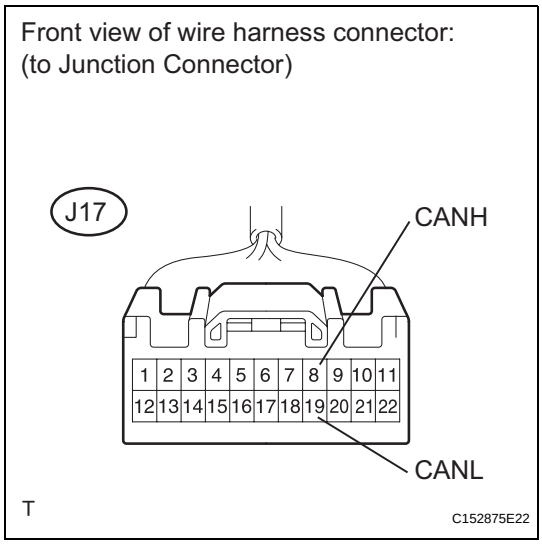

(a) Disconnect the junction connector (J17).

(b) Measure the resistance according to the value(s) in the table below.

Standard resistance

Tester Connection	Condition	Specified Condition
J17-8 (CANH) - J17-19 (CANL)	Ignition switch off	1 MΩ or higher

NG → **REPAIR OR REPLACE DLC3 BRANCH WIRE OR CONNECTOR**

OK

4	CHECK FOR SHORT IN CAN BUS WIRES (JUNCTION CONNECTOR - NETWORK GATEWAY ECU MAIN BUS WIRE)

Front view of wire harness connector:
(to Junction Connector)

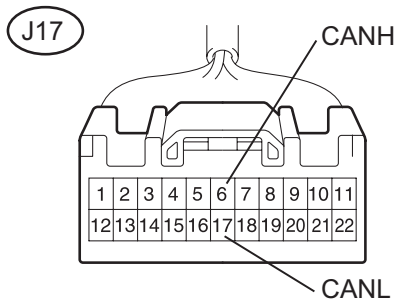

(a) Measure the resistance according to the value(s) in the table below.

Standard resistance

Tester Connection	Condition	Specified Condition
J17-6 (CANH) - J17-17 (CANL)	Ignition switch off	1 MΩ or higher

Result

Result	Proceed to
OK (without VSC)	A
OK (with VSC)	B
NG	C

B → **Go to step 6**

C → **REPAIR OR REPLACE CAN BUS MAIN WIRE OR CONNECTOR (JUNCTION CONNECTOR - NETWORK GATEWAY ECU)**

A

5	CHECK FOR SHORT IN CAN BUS WIRES (JUNCTION CONNECTOR - ECM MAIN BUS WIRE)

Front view of wire harness connector:
(to Junction Connector)

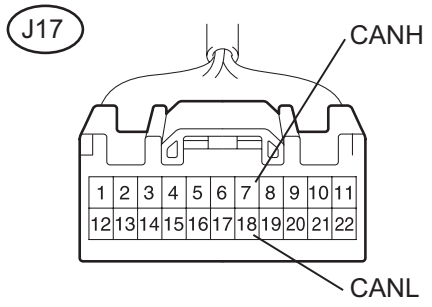

(a) Measure the resistance according to the value(s) in the table below.

Standard resistance

Tester Connection	Condition	Specified Condition
J17-7 (CANH) - J17-18 (CANL)	Ignition switch off	1 MΩ or higher

NG → **REPAIR OR REPLACE CAN BUS MAIN WIRE OR CONNECTOR (JUNCTION CONNECTOR - ECM)**

OK

REPLACE WIRING HARNESS CONNECTOR (JUNCTION CONNECTOR)

6	CHECK FOR SHORT IN CAN BUS WIRES (JUNCTION CONNECTOR - CAN JUNCTION CONNECTOR MAIN BUS WIRE)

CA

Front view of wire harness connector:
(to Junction Connector)

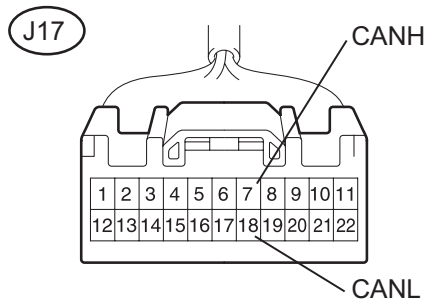

T

C152875E21

(a) Measure the resistance according to the value(s) in the table below.

Standard resistance

Tester Connection	Condition	Specified Condition
J17-7 (CANH) - J17-18 (CANL)	Ignition switch off	1 MΩ or higher

NG → **Go to step 10**

OK

7	CHECK FOR SHORT IN CAN BUS WIRES (SKID CONTROL ECU BRANCH WIRE)

Front view of wire harness connector:
(to Junction Connector)

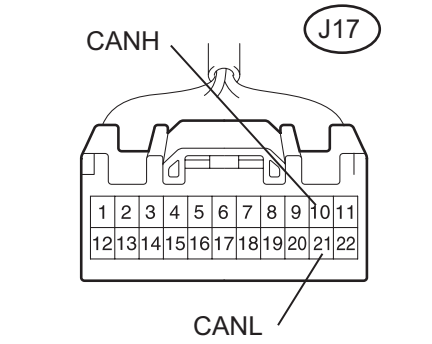

T

C152875E23

(a) Measure the resistance according to the value(s) in the table below.

Standard resistance

Tester Connection	Condition	Specified Condition
J17-10 (CANH) - J17-21 (CANL)	Ignition switch off	1 MΩ or higher

NG → **Go to step 13**

OK

8 CHECK FOR SHORT IN CAN BUS WIRES (STEERING ANGLE SENSOR BRANCH WIRE)

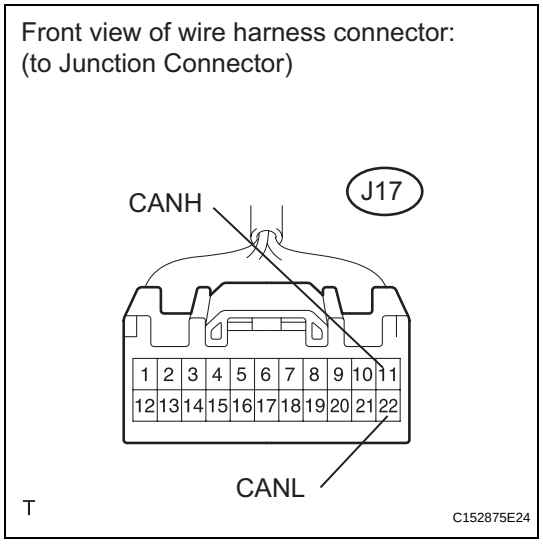

(a) Measure the resistance according to the value(s) in the table below.

Standard resistance

Tester Connection	Condition	Specified Condition
J17-11 (CANH) - J17-22 (CANL)	Ignition switch off	1 MΩ or higher

Result

Result	Proceed to
OK (without Dynamic radar cruise control)	A
OK (with Dynamic radar cruise control)	B
NG	C

B → Go to step 9

C → Go to step 14

A

REPLACE WIRING HARNESS CONNECTOR (JUNCTION CONNECTOR)

9 CHECK FOR SHORT IN CAN BUS WIRES (DISTANCE CONTROL ECU BRANCH WIRE)

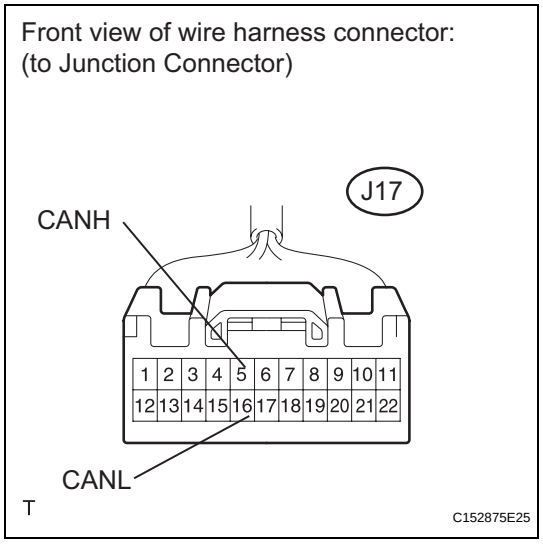

(a) Measure the resistance according to the value(s) in the table below.

Standard resistance

Tester Connection	Condition	Specified Condition
J17-5 (CANH) - J17-16 (CANL)	Ignition switch off	1 MΩ or higher

NG → Go to step 15

OK

REPLACE WIRING HARNESS CONNECTOR (JUNCTION CONNECTOR)

10	CHECK FOR SHORT IN CAN BUS WIRES (CAN JUNCTION CONNECTOR - JUNCTION CONNECTOR MAIN BUS WIRE)

CA

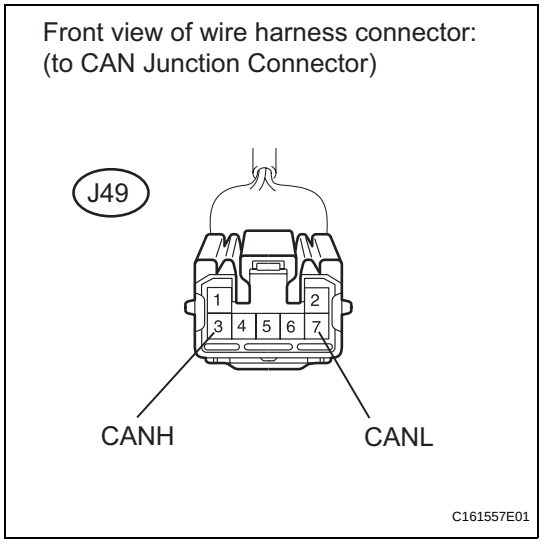

(a) Disconnect the junction connector (J49).
(b) Measure the resistance according to the value(s) in the table below.

Standard resistance

Tester Connection	Condition	Specified Condition
J49-3 (CANH) - J49-7 (CANL)	Ignition switch off	1 MΩ or higher

NG → **REPAIR OR REPLACE CAN BUS MAIN WIRE (JUNCTION CONNECTOR - CAN JUNCTION CONNECTOR)**

OK

11	CHECK FOR SHORT IN CAN BUS WIRES (CAN JUNCTION CONNECTOR - ECM MAIN BUS WIRE)

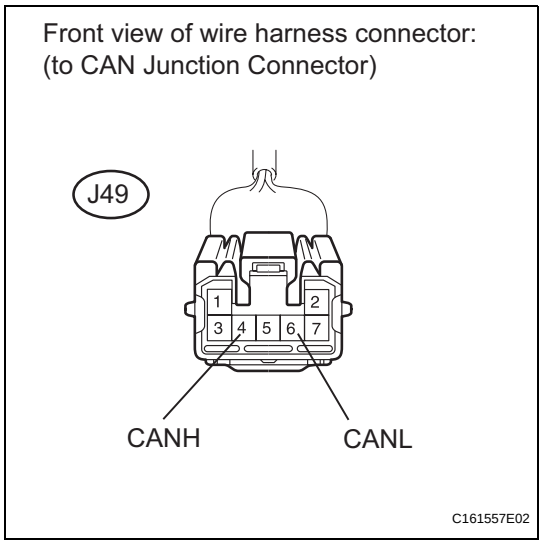

(a) Measure the resistance according to the value(s) in the table below.

Standard resistance

Tester Connection	Condition	Specified Condition
J49-4 (CANH) - J49-6 (CANL)	Ignition switch off	1 MΩ or higher

NG → **REPAIR OR REPLACE CAN BUS MAIN WIRE OR CONNECTOR (CAN JUNCTION CONNECTOR - ECM)**

OK

12 CHECK FOR SHORT IN CAN BUS WIRES (YAW RATE SENSOR BRANCH WIRE)

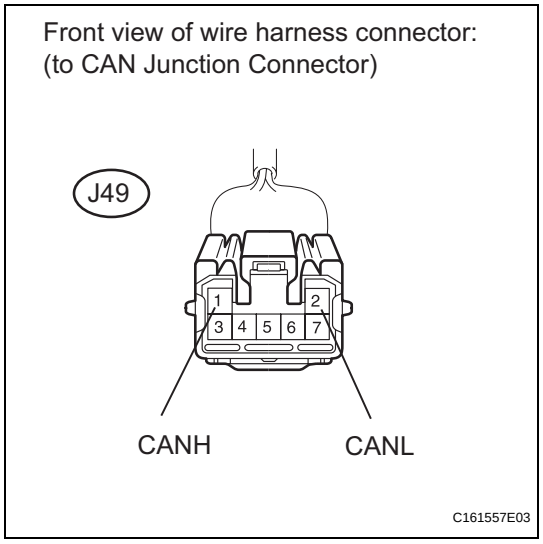

(a) Measure the resistance according to the value(s) in the table below.

Standard resistance

Tester Connection	Condition	Specified Condition
J49-1 (CANH) - J49-2 (CANL)	Ignition switch off	1 MΩ or higher

NG → **Go to step 16**

OK

REPLACE WIRING HARNESS CONNECTOR (CAN JUNCTION CONNECTOR)

13 CHECK FOR SHORT IN CAN BUS WIRES (SKID CONTROL ECU BRANCH WIRE)

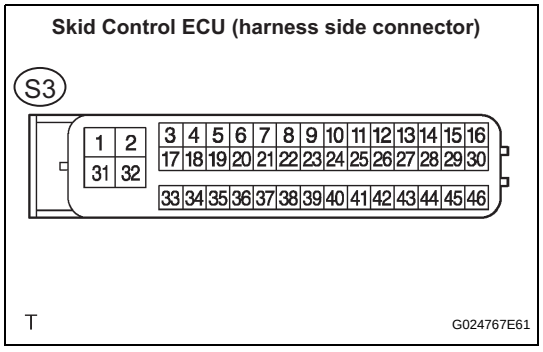

(a) Disconnect the skid control ECU connector.

Front view of wire harness connector:
(to Junction Connector)

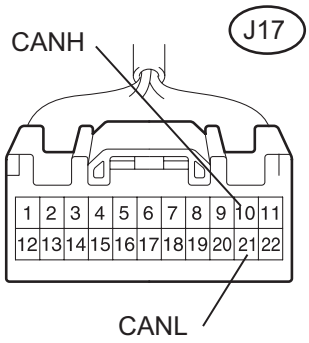

T

C152875E23

(b) Measure the resistance according to the value(s) in the table below.

Standard resistance

Tester Connection	Condition	Specified Condition
J17-10 (CANH) - J17-21 (CANL)	Ignition switch off	1 MΩ or higher

NG → **REPAIR OR REPLACE SKID CONTROL ECU BRANCH WIRE OR CONNECTOR**

OK

REPLACE ABS & TRACTION ACTUATOR ASSEMBLY (See page BC-179)

14 CHECK FOR SHORT IN CAN BUS WIRES (STEERING ANGLE SENSOR BRANCH WIRE)

Steering Angle Sensor Connector (Wire Harness Side):

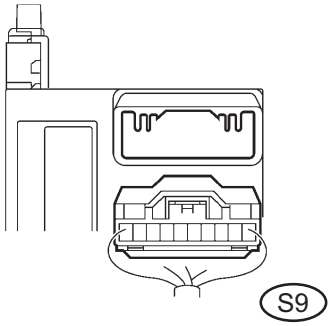

G030155E50

(a) Disconnect the steering angle sensor connector.

Front view of wire harness connector:
(to Junction Connector)

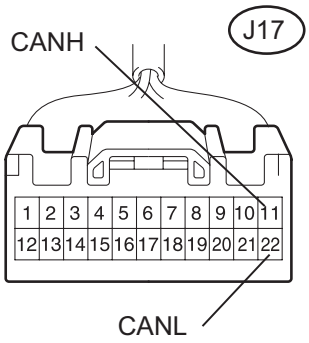

(b) Measure the resistance according to the value(s) in the table below.

Standard resistance

Tester Connection	Condition	Specified Condition
J17-11 (CANH) - J17-22 (CANL)	Ignition switch off	1 MΩ or higher

CA

NG → **REPAIR OR REPLACE STEERING ANGLE SENSOR BRANCH WIRE OR CONNECTOR**

OK

REPLACE STEERING ANGLE SENSOR (See page BC-199)

15 CHECK FOR SHORT IN CAN BUS WIRES (DISTANCE CONTROL ECU BRANCH WIRE)

Distance Control ECU
(Wire Harness side):

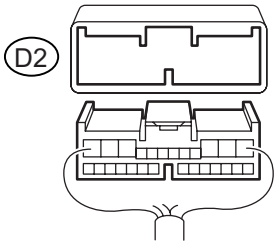

(a) Disconnect the distance control ECU connector.

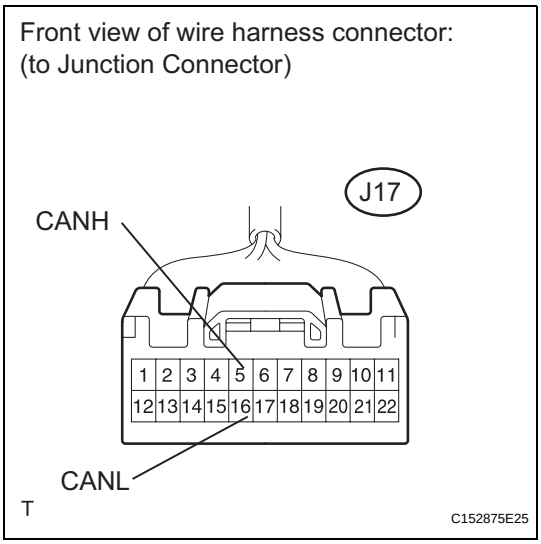

(b) Measure the resistance according to the value(s) in the table below.

Standard resistance

Tester Connection	Condition	Specified Condition
J17-5 (CANH) - J17-16 (CANL)	Ignition switch off	1 MΩ or higher

NG → **REPAIR OR REPLACE DISTANCE CONTROL ECU BRANCH WIRE OR CONNECTOR**

OK

REPLACE DISTANCE CONTROL ECU ASSEMBLY (See page CC-124)

16 CHECK FOR SHORT IN CAN BUS WIRES (YAW RATE SENSOR BRANCH WIRE)

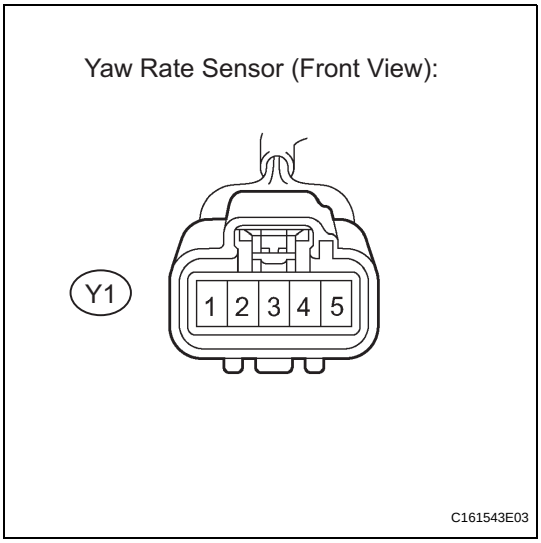

(a) Disconnect the yaw rate sensor connector.

Front view of wire harness connector:
(to CAN Junction Connector)

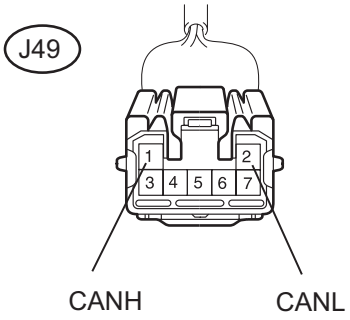

C161557E03

(b) Measure the resistance according to the value(s) in the table below.

Standard resistance

Tester Connection	Condition	Specified Condition
J49-1 (CANH) - J49-2 (CANL)	Ignition switch off	1 MΩ or higher

CA

NG → **REPAIR OR REPLACE YAW RATE SENSOR BRANCH WIRE OR CONNECTOR**

OK

REPLACE YAW RATE SENSOR (See page BC-197)