[Instrument Panel J/B Assembly Inner Circuit]

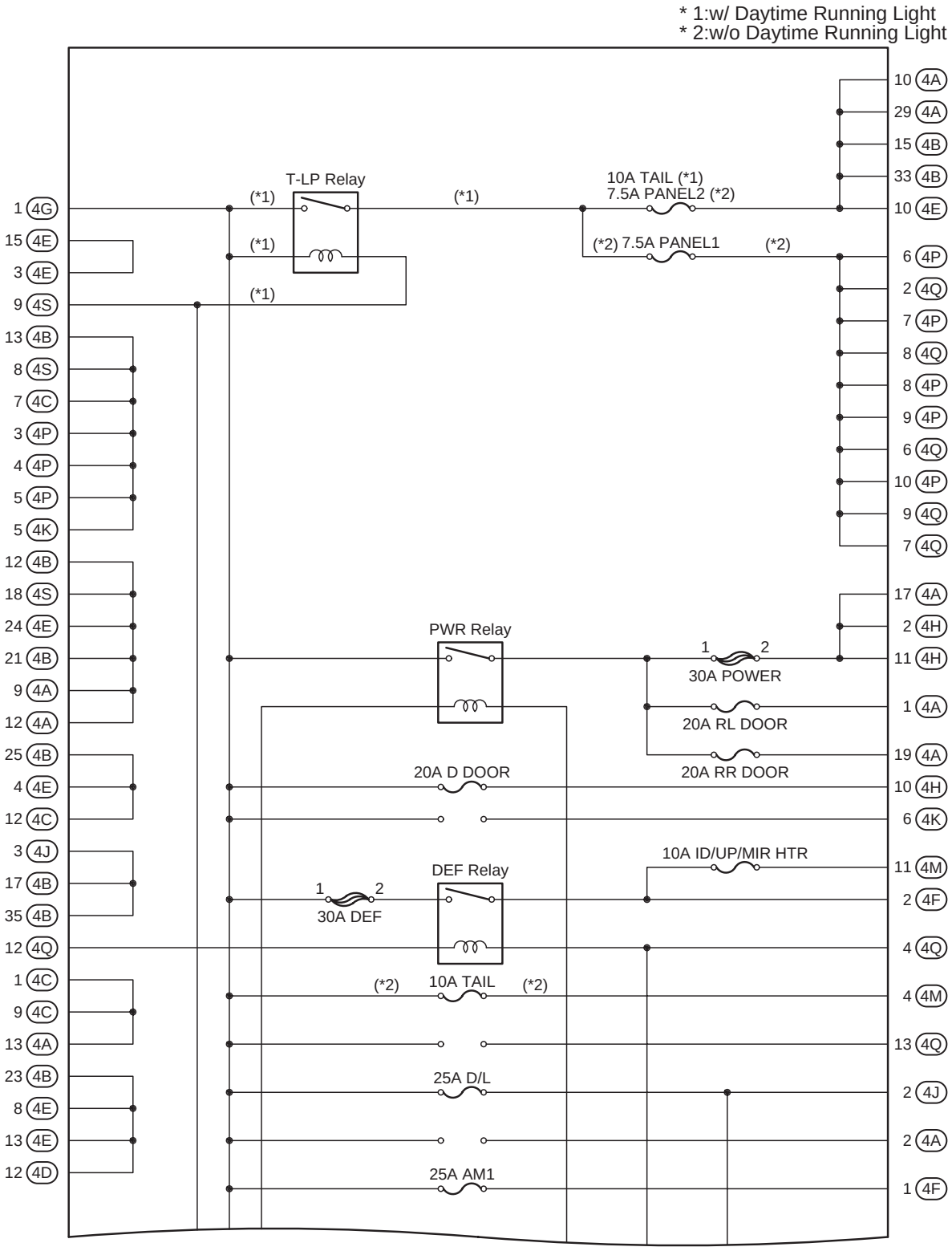

(Cont. Next Page)

(Cont'd)

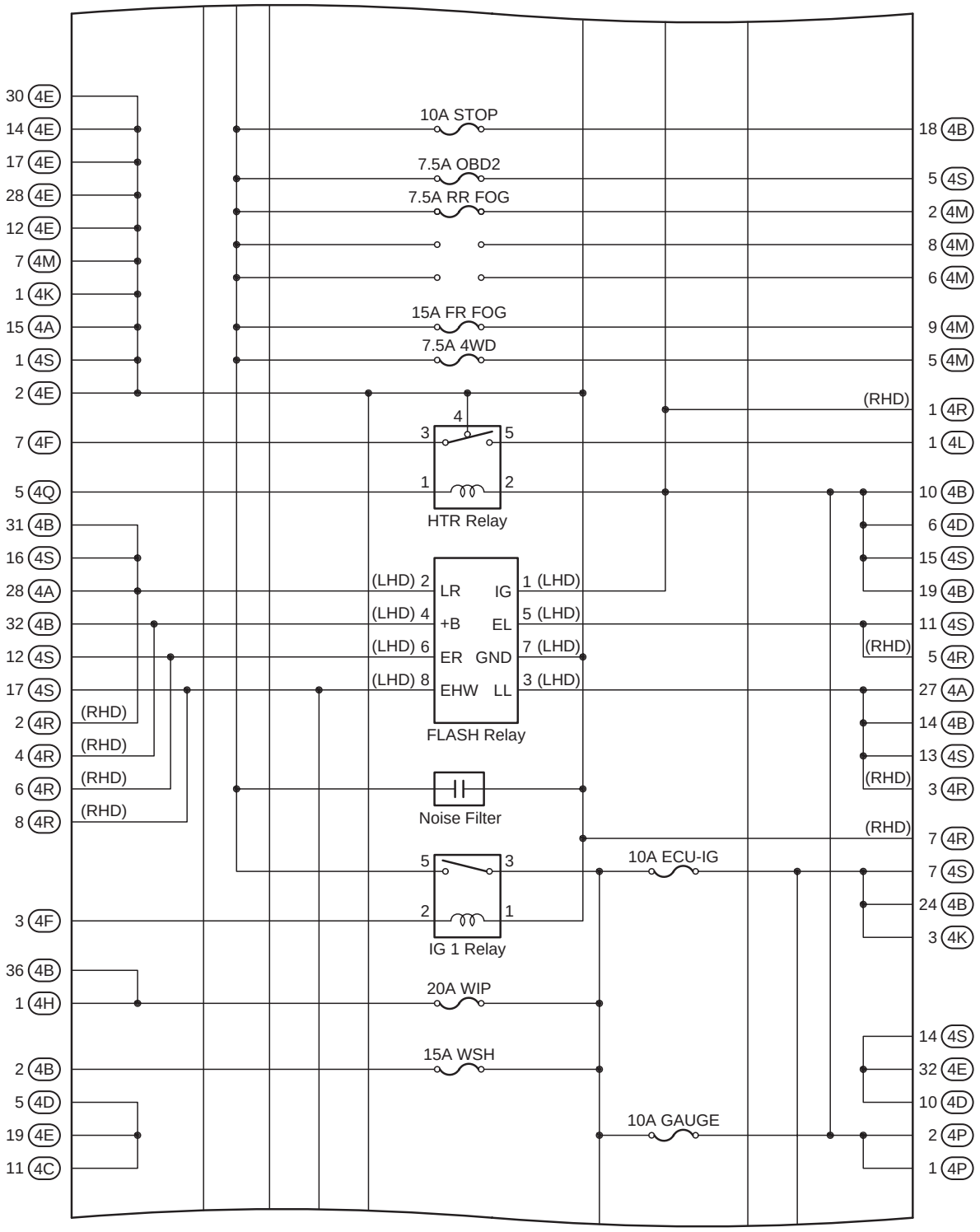

(Cont. Next Page)

[Instrument Panel J/B Assembly Inner Circuit]

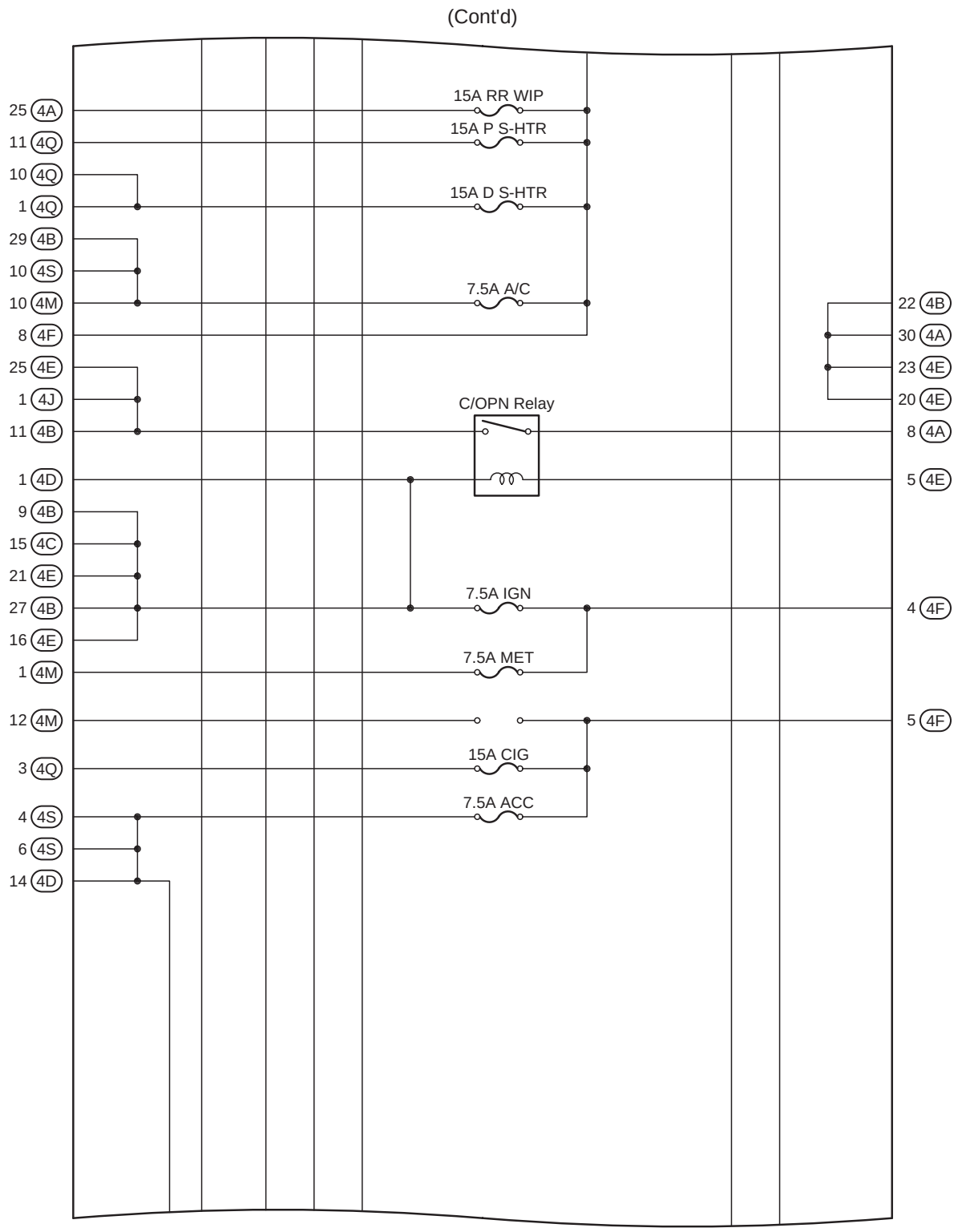

(Cont'd)
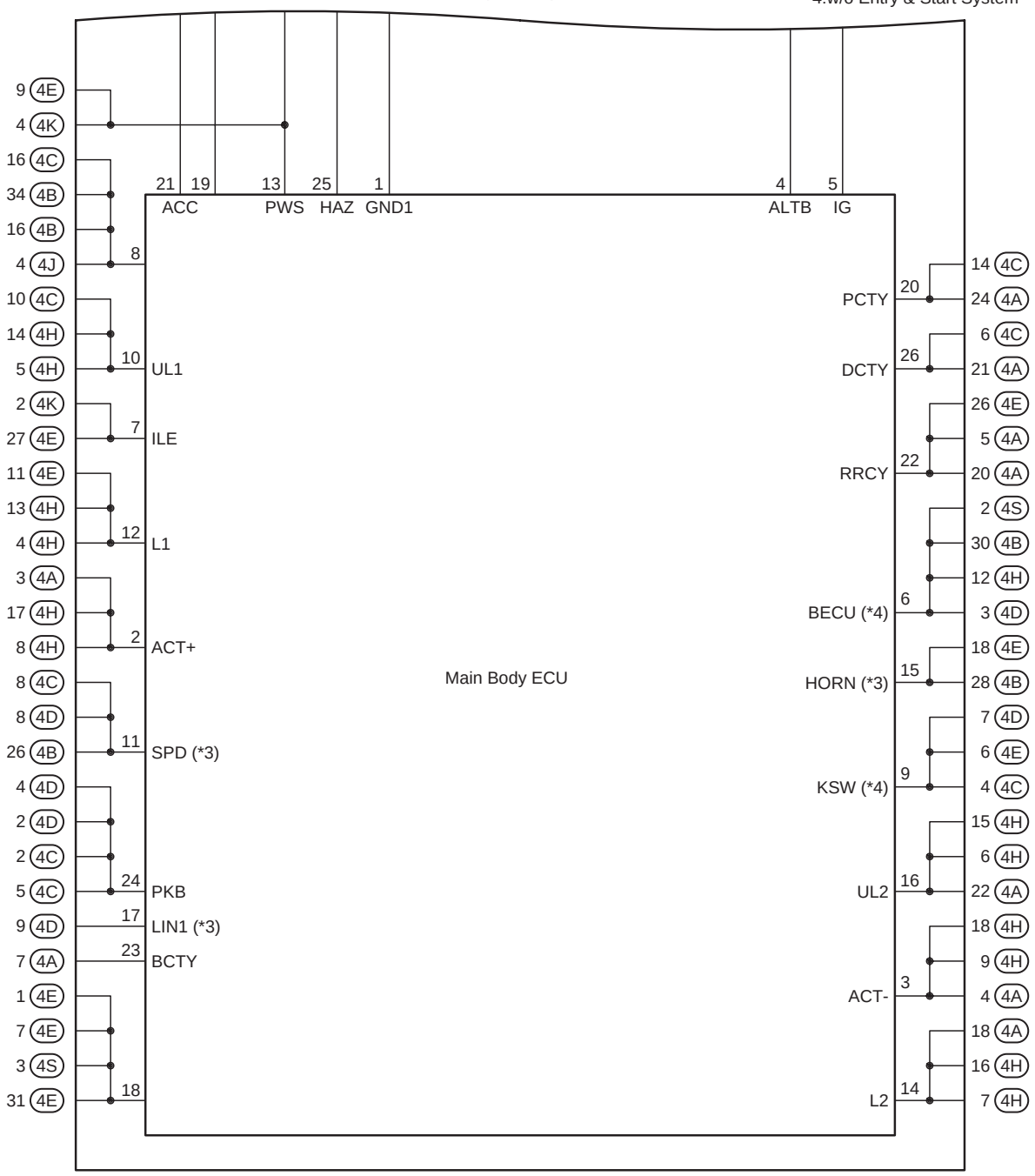
* 3:w/ Entry & Start System
* 4:w/o Entry & Start System