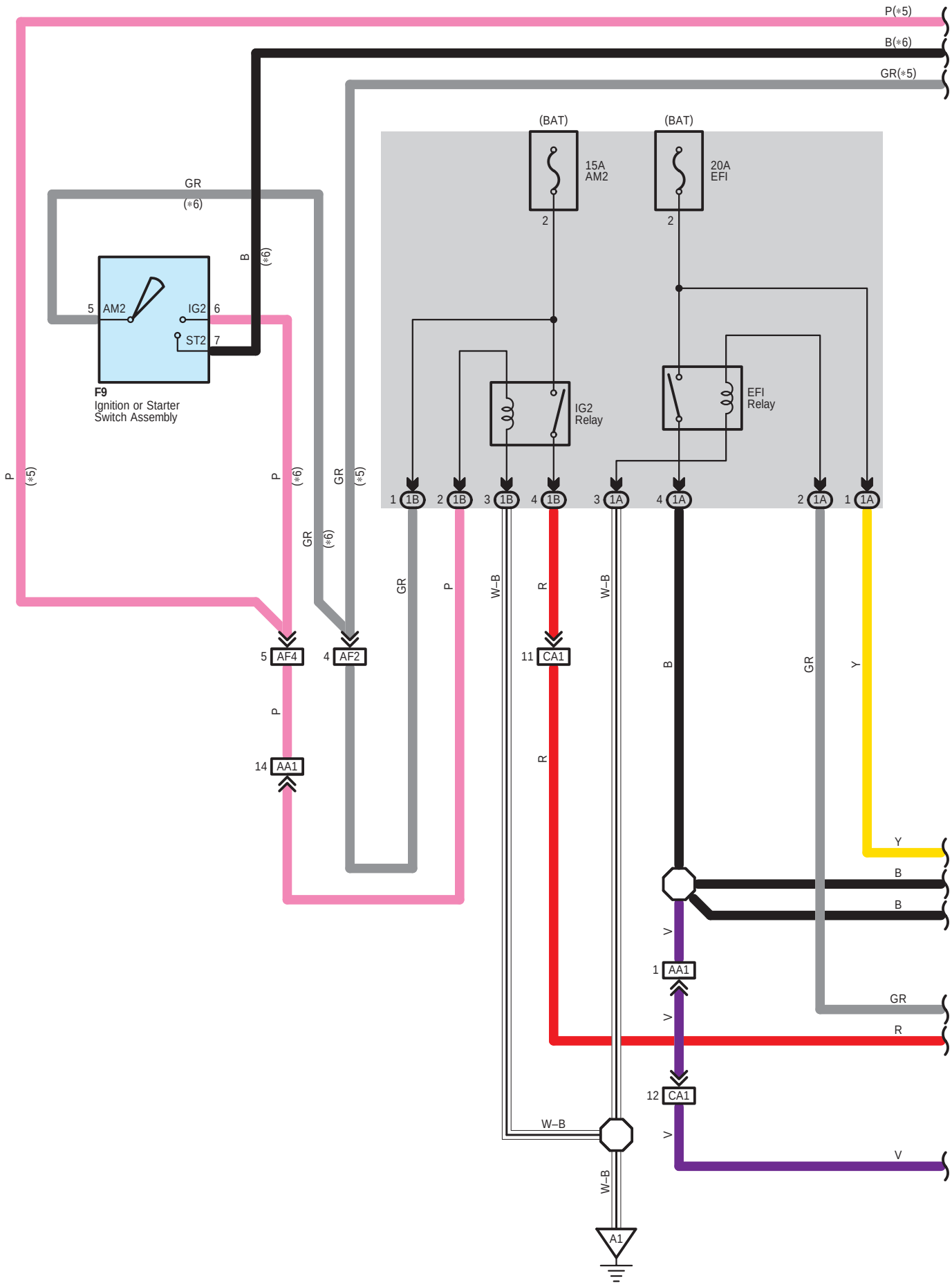
P(*5)
B(*6)
GR(*5)
(BAT)
(BAT)
15A
AM2
20A
EFI
2
2
GR
(*6)
B
(*6)
5
AM2
IG2
6
ST2
7
F9
Ignition or Starter
Switch Assembly
IG2
Relay
EFI
Relay
P
(*5)
P
(*6)
GR
(*5)
GR
(*6)
1 1B
2 1B
3 1B
4 1B
3 1A
4 1A
2 1A
1 1A
GR
P
W–B
R
W–B
5 AF4
4 AF2
11 CA1
B
GR
Y
P
14 AA1
R
Y
B
B
V
1 AA1
GR
V
R
12 CA1
W–B
V
V
W–B
A1

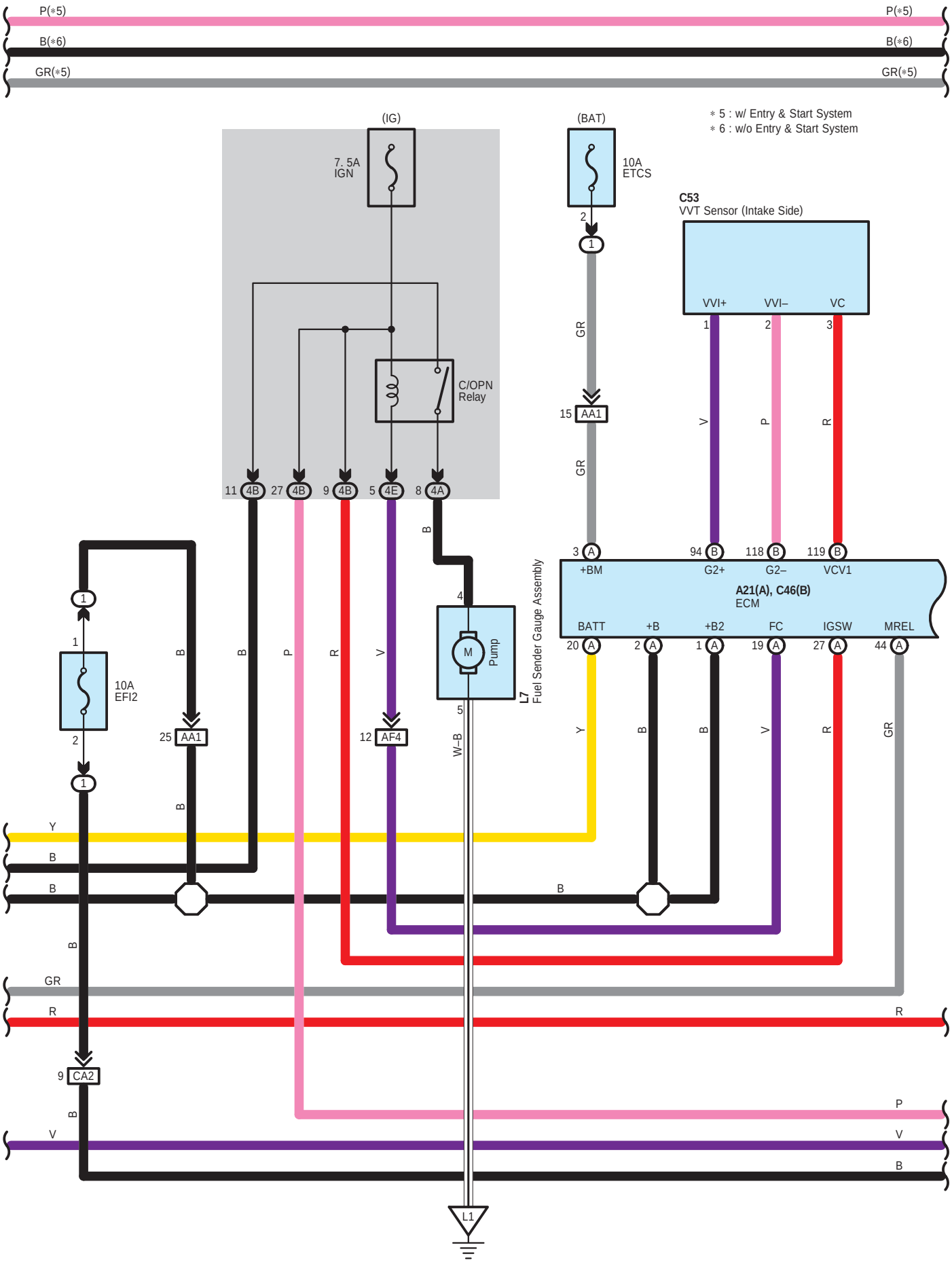
P(*5)
B(*6)
GR(*5)
(IG)
7. 5A
IGN
C/OPN
Relay
11 4B
27 4B
9 4B
5 4E
8 4A
(BAT)
10A
ETCS
* 5 : w/ Entry & Start System
* 6 : w/o Entry & Start System
C53
VVT Sensor (Intake Side)
VVI+
VVI–
VC
15 AA1
3 A
+BM
94 B
G2+
118 B
G2–
119 B
VCV1
A21(A), C46(B)
ECM
BATT
+B
+B2
FC
IGSW
MREL
20 A
2 A
1 A
19 A
27 A
44 A
L7
Fuel Sender Gauge Assembly
M
Pump
10A
EFI2
25 AA1
12 AF4
W–B
9 CA2
L1

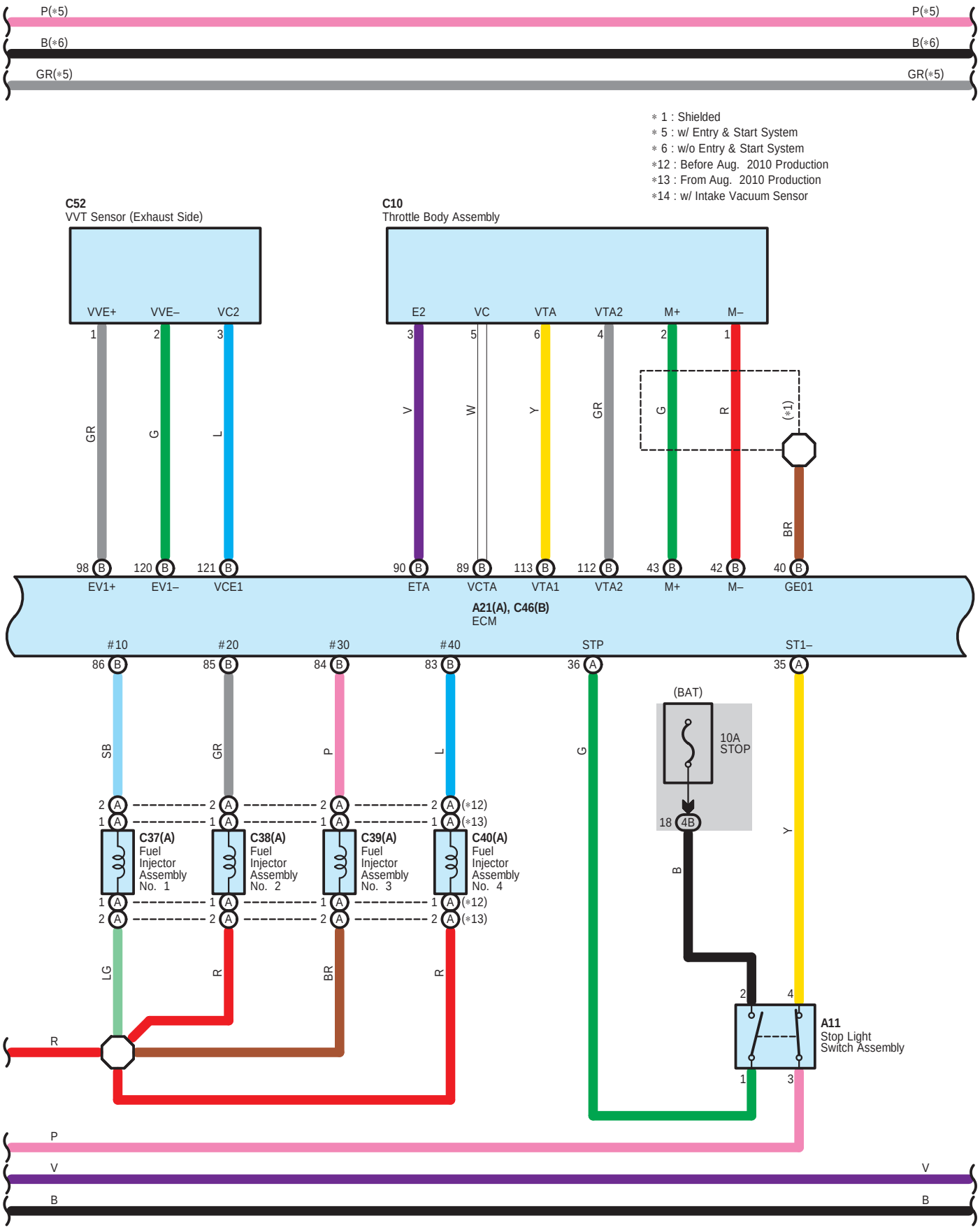
P(*5)
B(*6)
GR(*5)
* 1 : Shielded
* 5 : w/ Entry & Start System
* 6 : w/o Entry & Start System
*12 : Before Aug. 2010 Production
*13 : From Aug. 2010 Production
*14 : w/ Intake Vacuum Sensor
C52
VVT Sensor (Exhaust Side)
VVE+
VVE–
VC2
C10
Throttle Body Assembly
E2
VC
VTA
VTA2
M+
M–
(*1)
EV1+
EV1–
VCE1
ETA
VCTA
VTA1
VTA2
M+
M–
GE01
A21(A), C46(B)
ECM
#10
#20
#30
#40
STP
ST1–
(BAT)
10A
STOP
C37(A)
Fuel
Injector
Assembly
No. 1
C38(A)
Fuel
Injector
Assembly
No. 2
C39(A)
Fuel
Injector
Assembly
No. 3
C40(A)
Fuel
Injector
Assembly
No. 4
A11
Stop Light
Switch Assembly

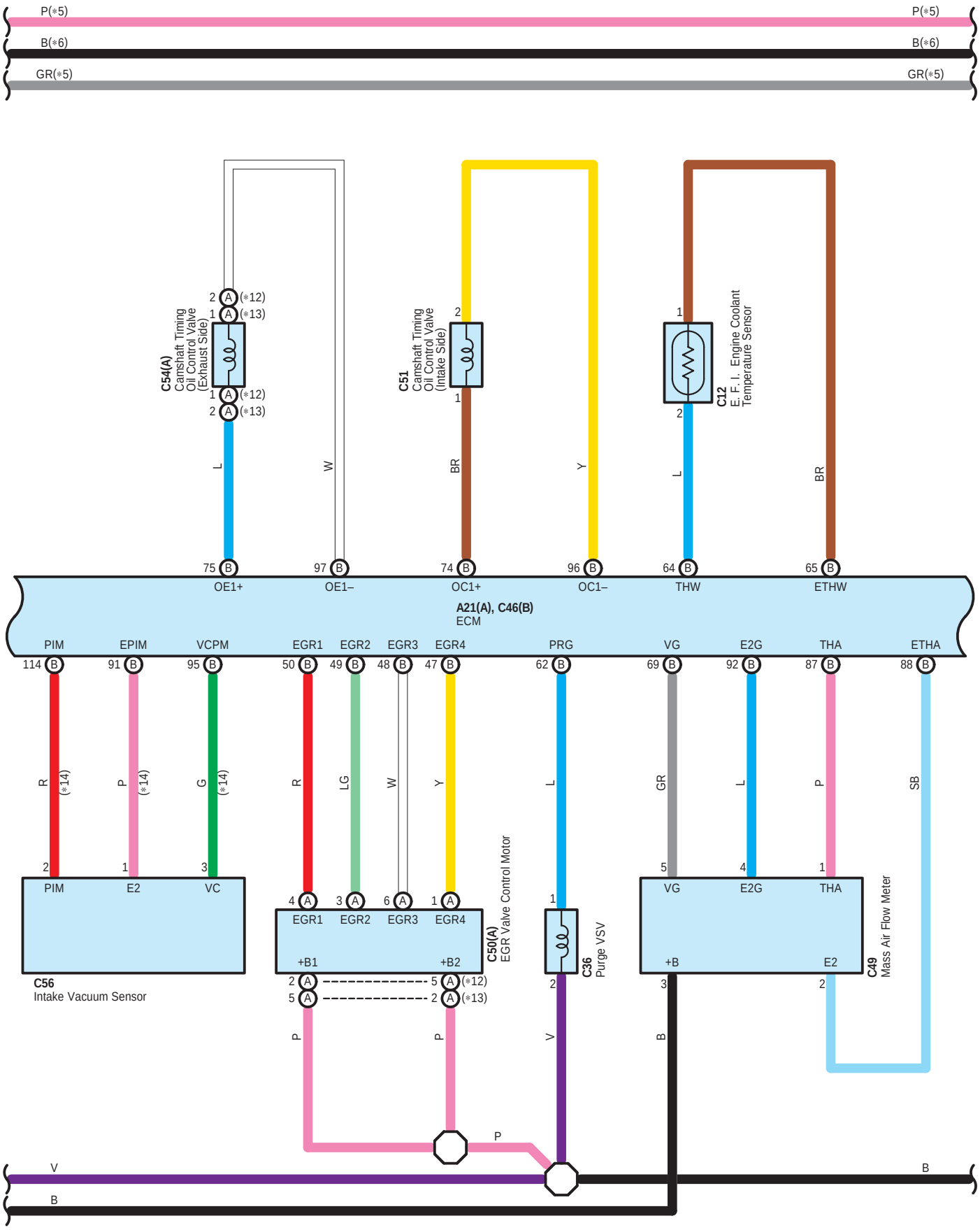
P(*5)
B(*6)
GR(*5)
C54(A)
Camshaft Timing Oil Control Valve (Exhaust Side)
C51
Camshaft Timing Oil Control Valve (Intake Side)
C12
E. F. I. Engine Coolant Temperature Sensor
OE1+
OE1–
OC1+
OC1–
THW
ETHW
A21(A), C46(B)
ECM
PIM
EPIM
VCPM
EGR1
EGR2
EGR3
EGR4
PRG
VG
E2G
THA
ETHA
C56
Intake Vacuum Sensor
C50(A)
EGR Valve Control Motor
+B1
+B2
C36
Purge VSV
C49
Mass Air Flow Meter
+B
E2

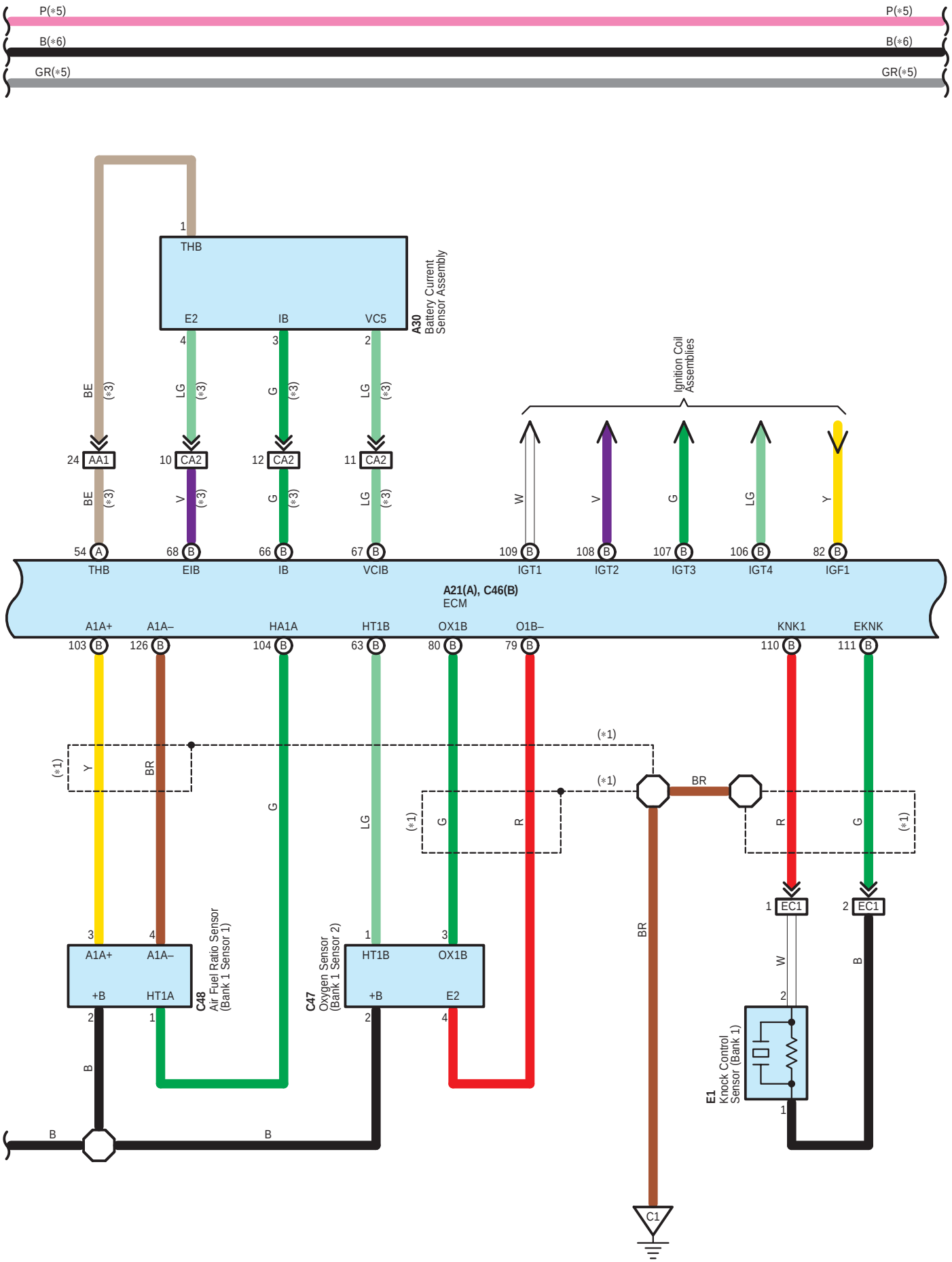
P(*5)
B(*6)
GR(*5)
A30
Battery Current Sensor Assembly
THB
E2
IB
VC5
Ignition Coil Assemblies
AA1
CA2
A21(A), C46(B)
ECM
THB
EIB
IB
VCIB
IGT1
IGT2
IGT3
IGT4
IGF1
A1A+
A1A–
HA1A
HT1B
OX1B
O1B–
KNK1
EKNK
C48
Air Fuel Ratio Sensor (Bank 1 Sensor 1)
C47
Oxygen Sensor (Bank 1 Sensor 2)
+B
HT1A
E2
EC1
E1
Knock Control Sensor (Bank 1)
C1

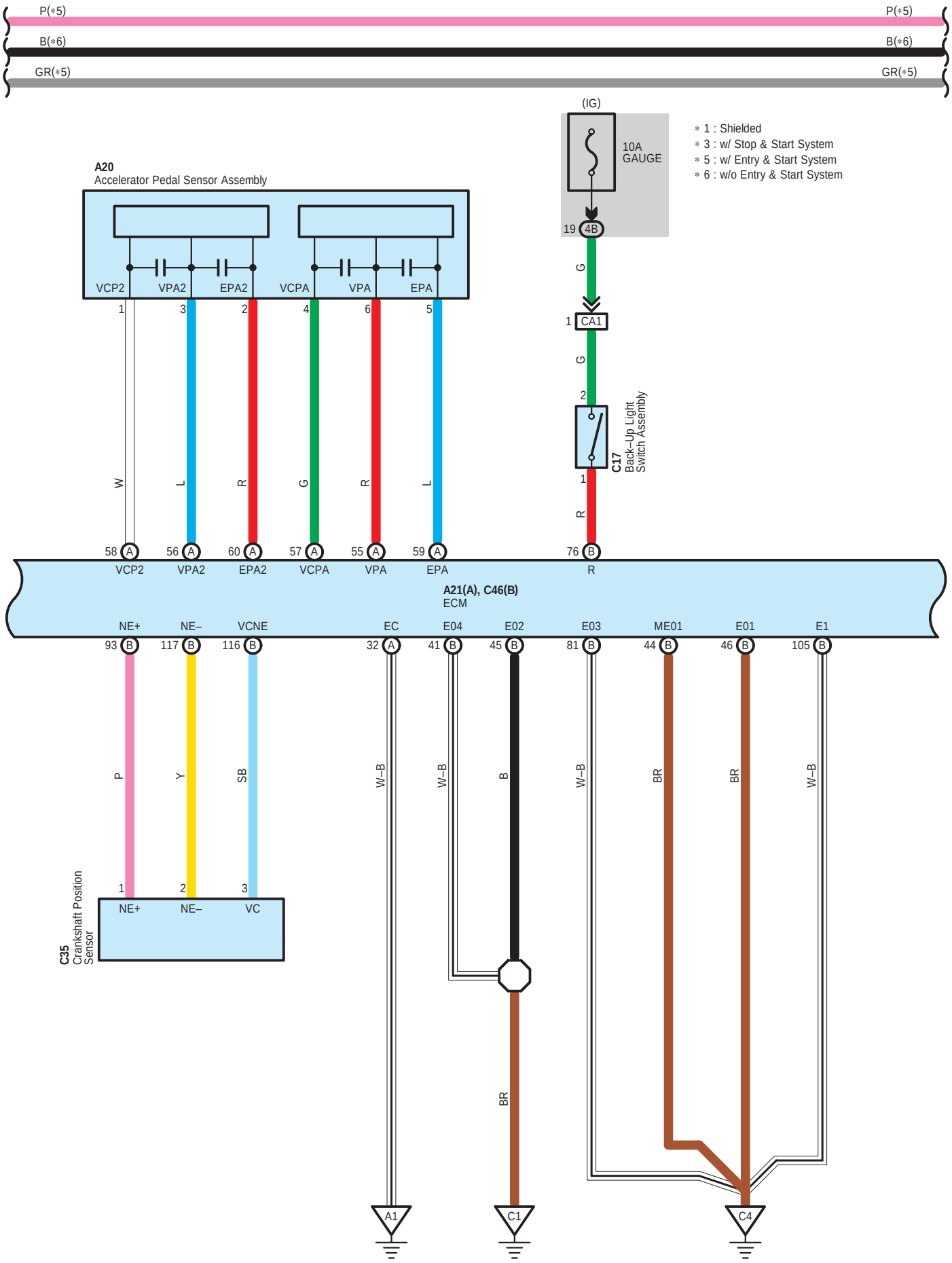
P(*5)
B(*6)
GR(*5)
(IG)
10A
GAUGE
19 4B
* 1 : Shielded
* 3 : w/ Stop & Start System
* 5 : w/ Entry & Start System
* 6 : w/o Entry & Start System
A20
Accelerator Pedal Sensor Assembly
VCP2
VPA2
EPA2
VCPA
VPA
EPA
1
3
2
4
6
5
W
L
R
G
R
L
G
1 CA1
G
2
C17
Back–Up Light
Switch Assembly
1
R
58 A
56 A
60 A
57 A
55 A
59 A
76 B
VCP2
VPA2
EPA2
VCPA
VPA
EPA
R
A21(A), C46(B)
ECM
NE+
NE–
VCNE
EC
E04
E02
E03
ME01
E01
E1
93 B
117 B
116 B
32 A
41 B
45 B
81 B
44 B
46 B
105 B
P
Y
SB
W–B
W–B
B
W–B
BR
BR
W–B
BR
1
2
3
NE+
NE–
VC
C35
Crankshaft Position
Sensor
A1
C1
C4

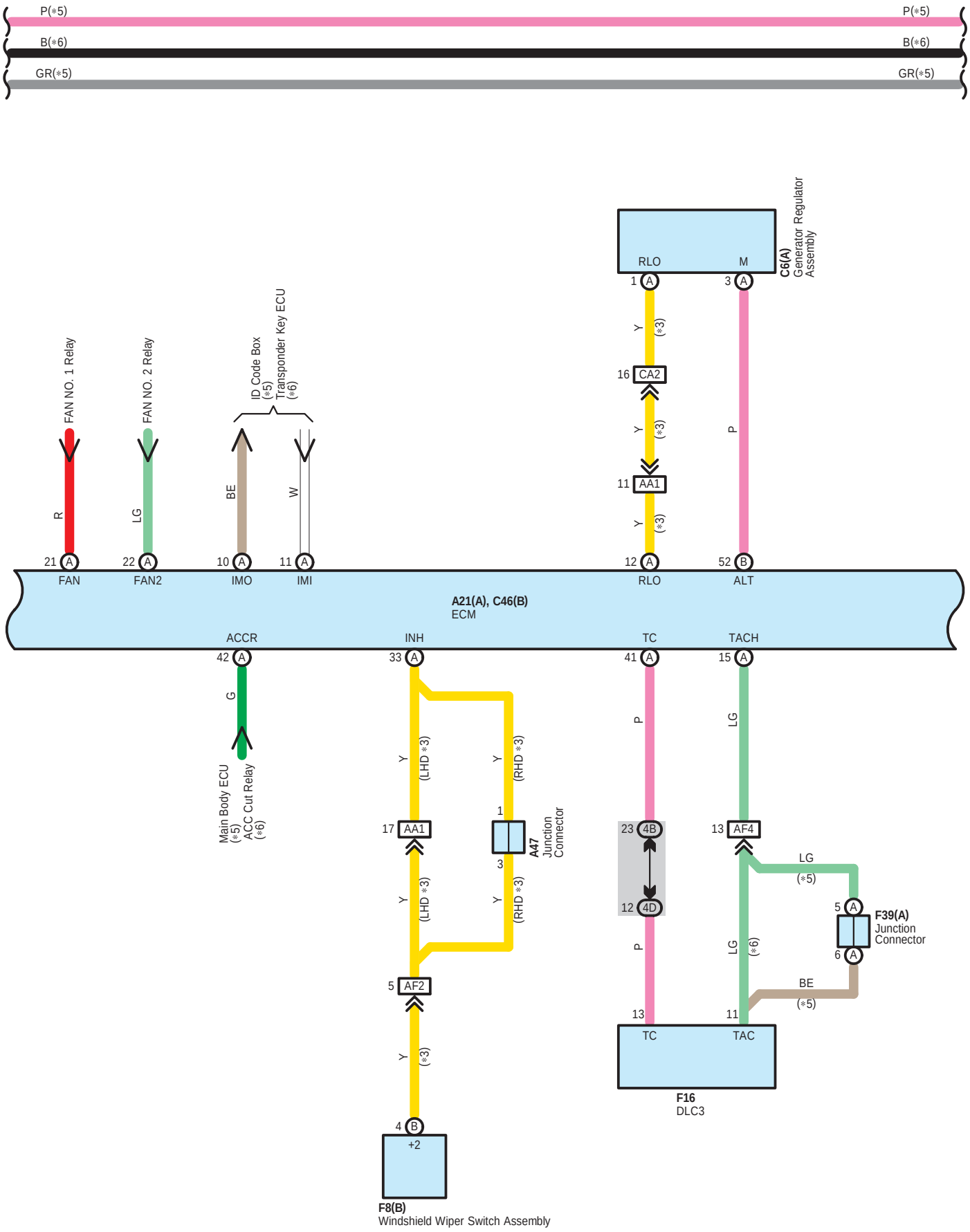
P(*5)
B(*6)
GR(*5)
FAN NO. 1 Relay
FAN NO. 2 Relay
ID Code Box (*5)
Transponder Key ECU (*6)
R
LG
BE
W
21 A FAN
22 A FAN2
10 A IMO
11 A IMI
RLO
M
1 A
3 A
C6(A) Generator Regulator Assembly
Y (*3)
16 CA2
11 AA1
P
12 A RLO
52 B ALT
A21(A), C46(B) ECM
ACCR
INH
TC
TACH
42 A
33 A
41 A
15 A
G
Main Body ECU (*5)
ACC Cut Relay (*6)
(LHD *3)
(RHD *3)
17 AA1
1
3
A47 Junction Connector
23 4B
12 4D
13 AF4
LG (*5)
5 A
6 A
F39(A) Junction Connector
LG (*6)
BE (*5)
5 AF2
13
11
TC
TAC
F16 DLC3
4 B
+2
F8(B) Windshield Wiper Switch Assembly

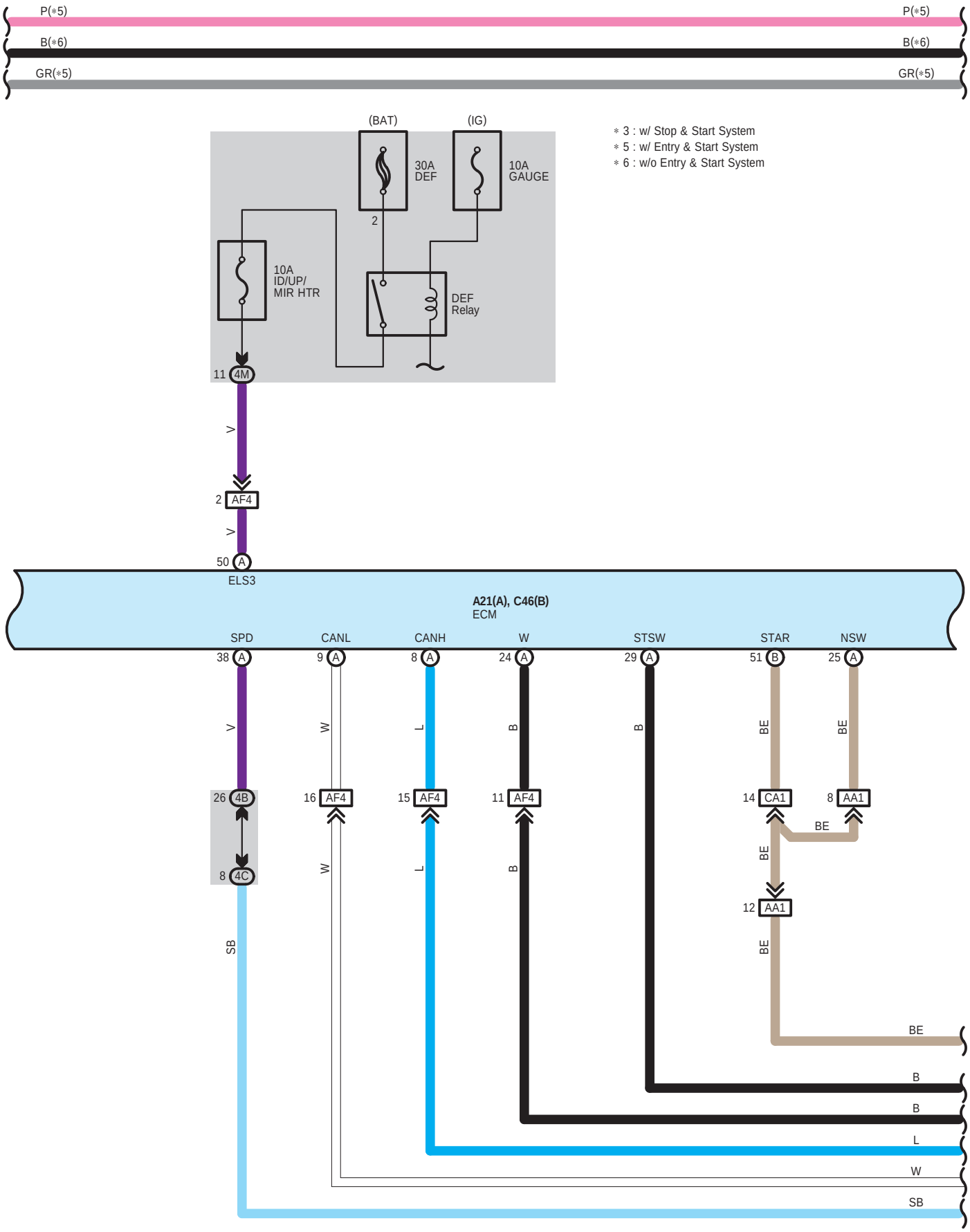
P(*5)
B(*6)
GR(*5)
(BAT)
(IG)
30A
DEF
10A
GAUGE
2
10A
ID/UP/
MIR HTR
DEF
Relay
11 4M
V
2 AF4
V
50 A
ELS3
* 3 : w/ Stop & Start System
* 5 : w/ Entry & Start System
* 6 : w/o Entry & Start System
A21(A), C46(B)
ECM
SPD
CANL
CANH
W
STSW
STAR
NSW
38 A
9 A
8 A
24 A
29 A
51 B
25 A
V
W
L
B
B
BE
BE
26 4B
16 AF4
15 AF4
11 AF4
14 CA1
8 AA1
BE
BE
8 4C
W
L
B
12 AA1
SB
BE
BE
B
B
L
W
SB

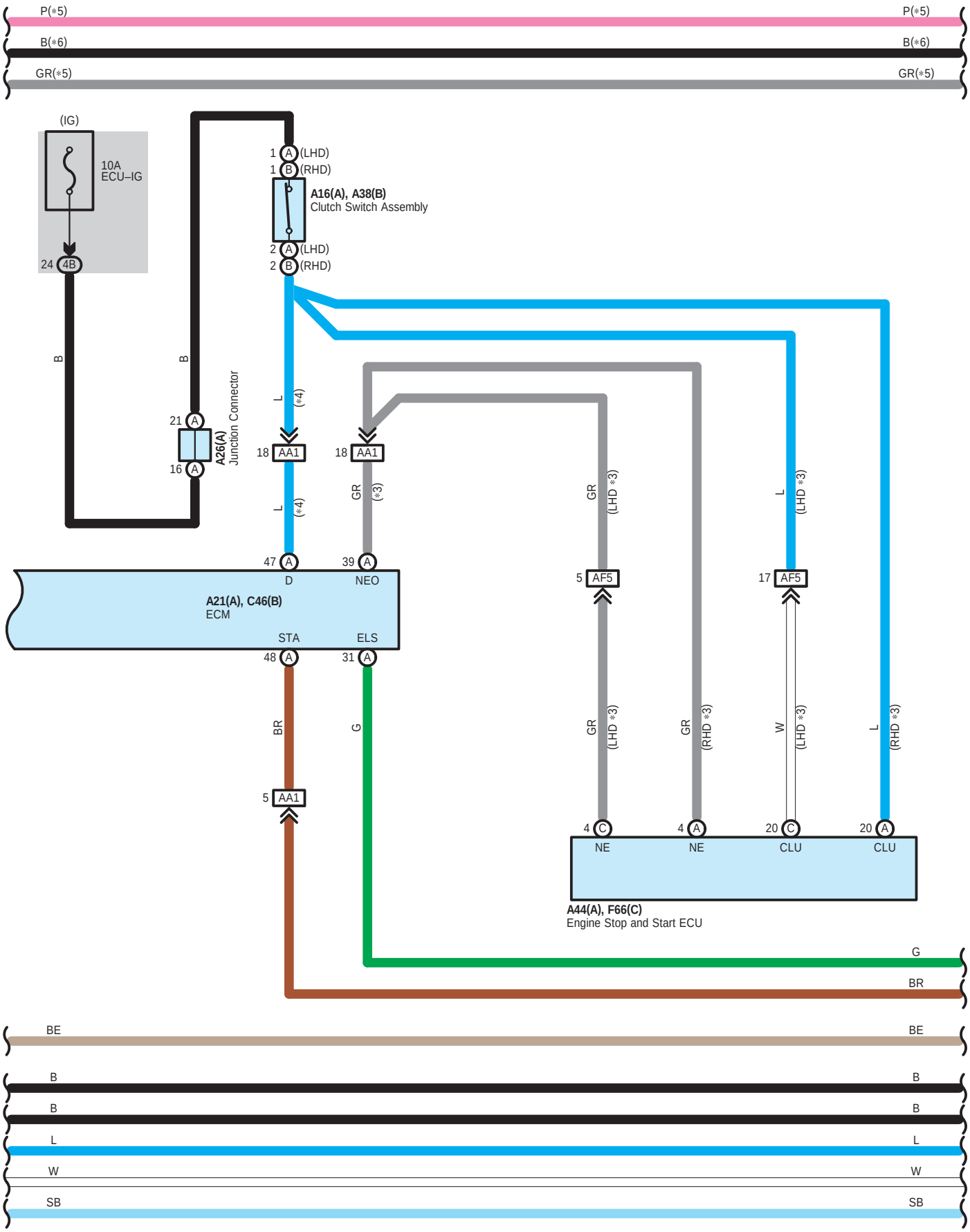
P(*5)
B(*6)
GR(*5)
(IG)
10A
ECU–IG
24 4B
1 A (LHD)
1 B (RHD)
A16(A), A38(B)
Clutch Switch Assembly
2 A (LHD)
2 B (RHD)
B
B
21 A
16 A
A26(A)
Junction Connector
L (*4)
18 AA1
L (*4)
18 AA1
GR (*3)
GR (LHD *3)
L (LHD *3)
47 A
D
39 A
NEO
A21(A), C46(B)
ECM
STA
ELS
48 A
31 A
5 AF5
17 AF5
BR
G
GR (LHD *3)
GR (RHD *3)
W (LHD *3)
L (RHD *3)
5 AA1
4 C
NE
4 A
NE
20 C
CLU
20 A
CLU
A44(A), F66(C)
Engine Stop and Start ECU
G
BR
BE
B
B
L
W
SB

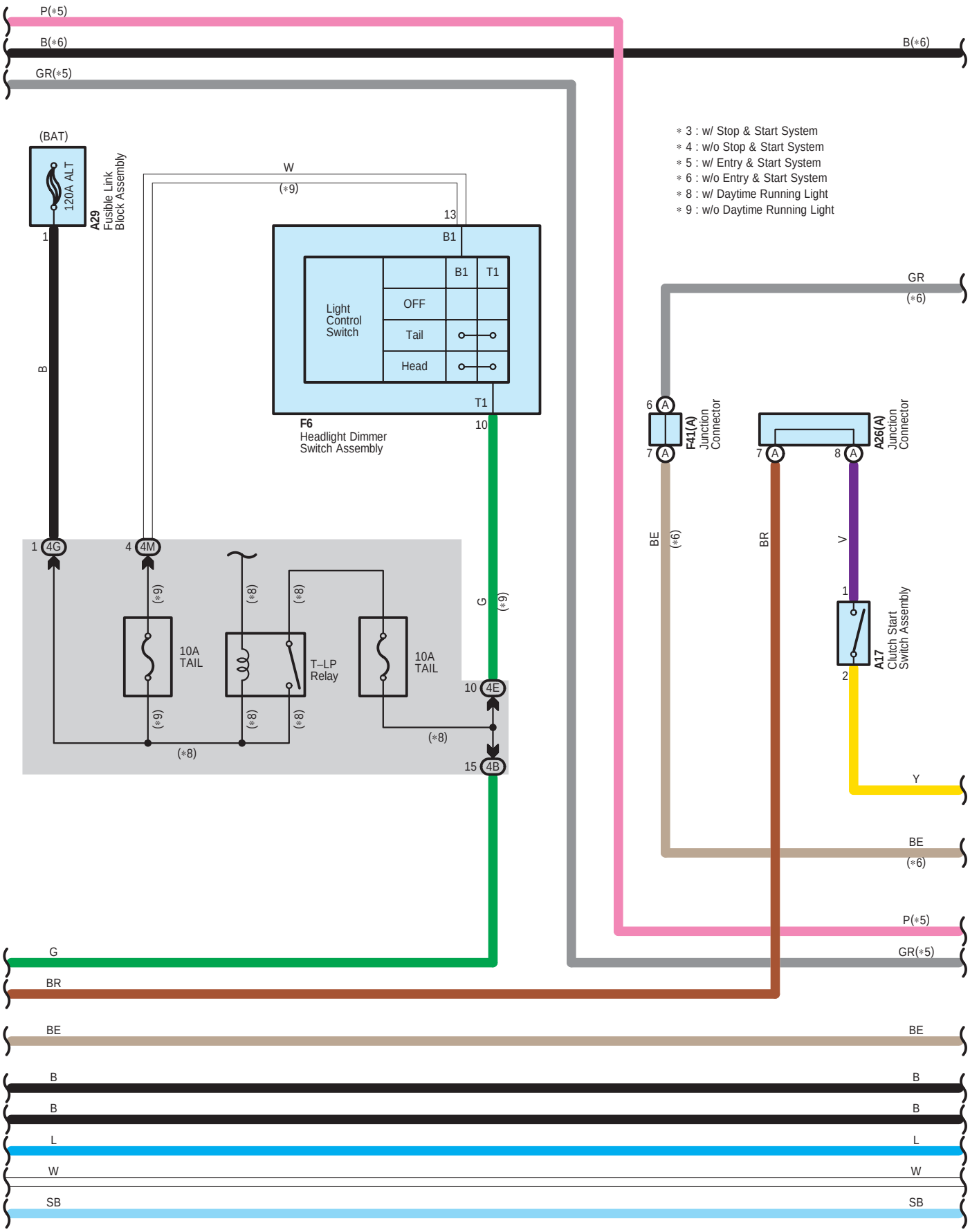
P(*5)
B(*6)
B(*6)
GR(*5)
(BAT)
120A ALT
A29
Fusible Link
Block Assembly
1
B
W
(*9)
13
B1
Light
Control
Switch
B1
T1
OFF
Tail
Head
T1
10
F6
Headlight Dimmer
Switch Assembly
* 3 : w/ Stop & Start System
* 4 : w/o Stop & Start System
* 5 : w/ Entry & Start System
* 6 : w/o Entry & Start System
* 8 : w/ Daytime Running Light
* 9 : w/o Daytime Running Light
GR
(*6)
6 A
7 A
F41(A)
Junction
Connector
7 A
8 A
A26(A)
Junction
Connector
BE
(*6)
BR
V
1
2
A17
Clutch Start
Switch Assembly
Y
BE
(*6)
1 4G
4 4M
(*9)
(*8)
(*8)
10A
TAIL
T–LP
Relay
10A
TAIL
G
(*9)
10 4E
15 4B
(*8)
(*8)
(*8)
(*8)
(*8)
P(*5)
GR(*5)
G
BR
BE
BE
B
B
B
B
L
L
W
W
SB
SB

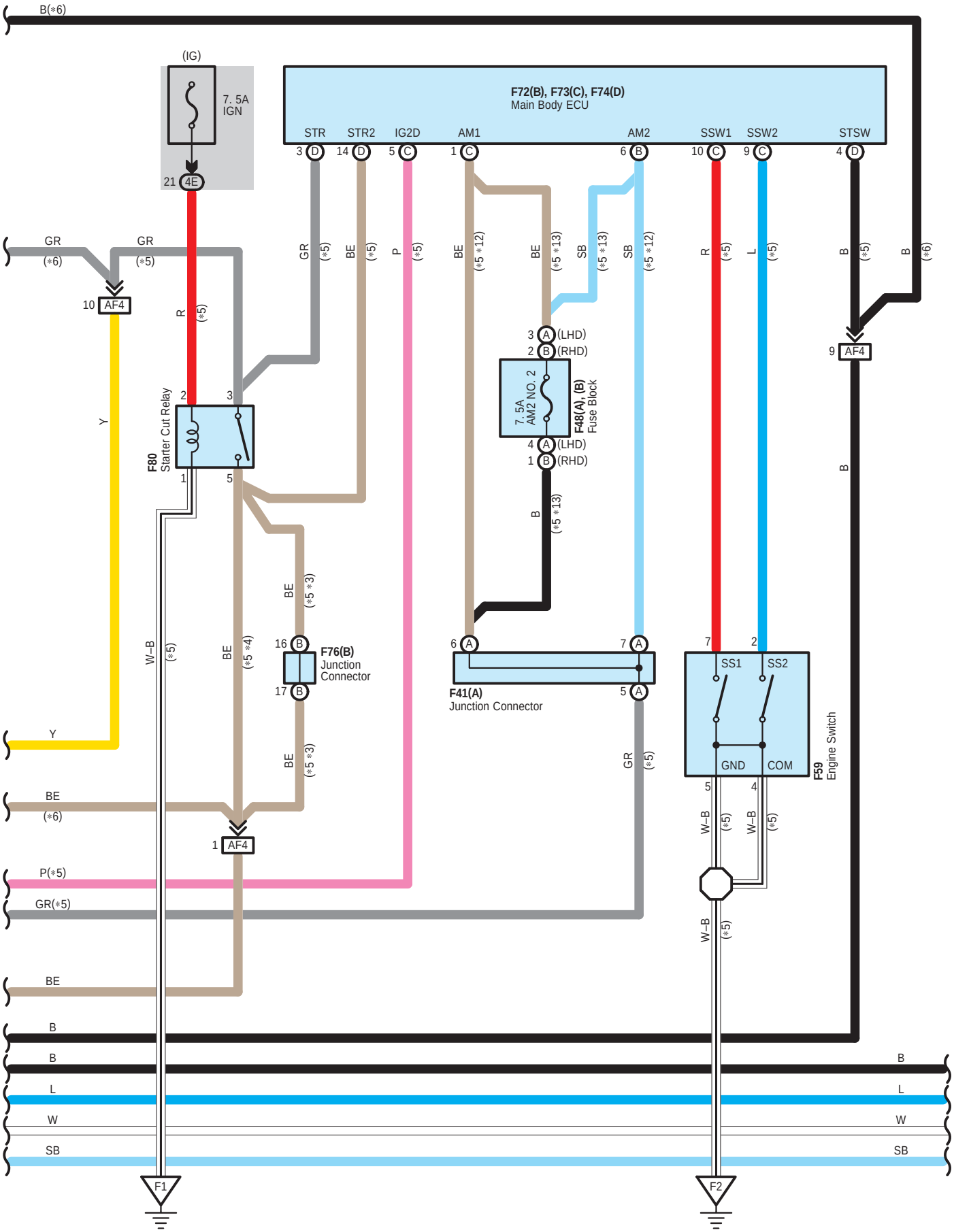
B(*6)
(IG)
7. 5A
IGN
21 4E
F72(B), F73(C), F74(D)
Main Body ECU
STR
STR2
IG2D
AM1
AM2
SSW1
SSW2
STSW
3 D
14 D
5 C
1 C
6 B
10 C
9 C
4 D
GR
(*6)
GR
(*5)
10 AF4
R
(*5)
GR
(*5)
BE
(*5)
P
(*5)
BE
(*5 *12)
BE
(*5 *13)
SB
(*5 *13)
SB
(*5 *12)
R
(*5)
L
(*5)
B
(*5)
B
(*6)
9 AF4
3 A (LHD)
2 B (RHD)
7. 5A
AM2 NO. 2
F48(A), (B)
Fuse Block
4 A (LHD)
1 B (RHD)
B
(*5 *13)
B
Y
F80
Starter Cut Relay
2
3
1
5
BE
(*5 *3)
16 B
F76(B)
Junction
Connector
17 B
BE
(*5 *3)
W–B
(*5)
BE
(*5 *4)
6 A
7 A
F41(A)
Junction Connector
5 A
GR
(*5)
7
2
SS1
SS2
GND
COM
F59
Engine Switch
5
4
W–B
(*5)
W–B
(*5)
W–B
(*5)
Y
BE
(*6)
1 AF4
P(*5)
GR(*5)
BE
B
B
L
W
SB
B
L
W
SB
F1
F2

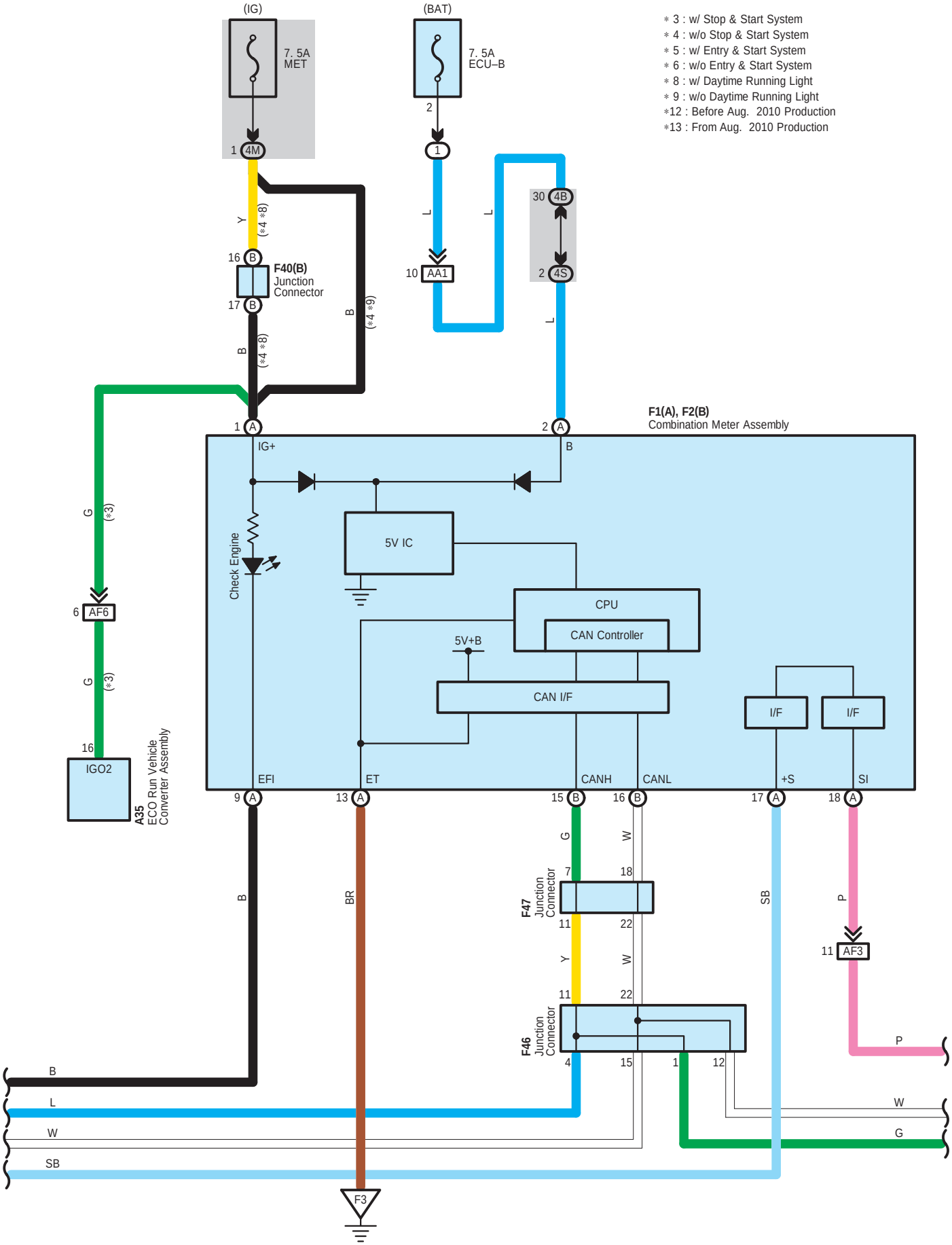
(IG)
7. 5A
MET
1 4M
(BAT)
7. 5A
ECU–B
2
1
∗ 3 : w/ Stop & Start System
∗ 4 : w/o Stop & Start System
∗ 5 : w/ Entry & Start System
∗ 6 : w/o Entry & Start System
∗ 8 : w/ Daytime Running Light
∗ 9 : w/o Daytime Running Light
∗12 : Before Aug. 2010 Production
∗13 : From Aug. 2010 Production
Y
(∗4 ∗8)
16 B
F40(B)
Junction
Connector
17 B
B
(∗4 ∗8)
B
(∗4 ∗9)
L
L
10 AA1
30 4B
2 4S
L
1 A
2 A
F1(A), F2(B)
Combination Meter Assembly
IG+
B
G
(∗3)
6 AF6
G
(∗3)
16
IGO2
A35
ECO Run Vehicle
Converter Assembly
Check Engine
5V IC
CPU
CAN Controller
5V+B
CAN I/F
I/F
I/F
EFI
ET
CANH
CANL
+S
SI
9 A
13 A
15 B
16 B
17 A
18 A
B
BR
G
W
7
18
F47
Junction
Connector
11
22
Y
W
11
22
F46
Junction
Connector
4
15
1
12
SB
P
11 AF3
P
B
L
W
SB
W
G
F3

∗10 : w/ VSC
∗11 : w/o VSC

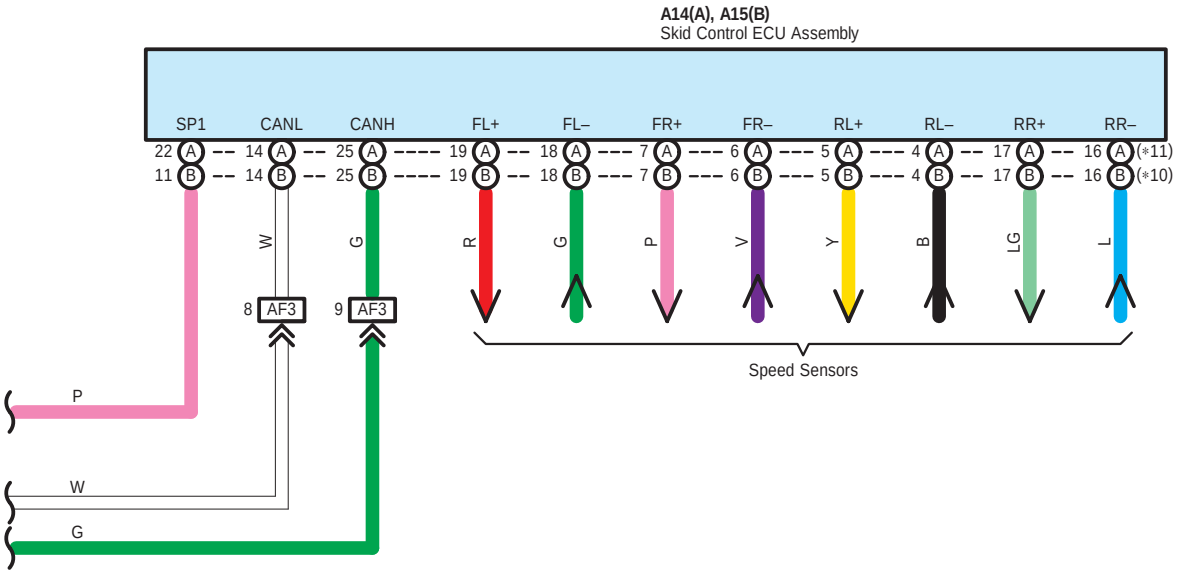

A 11
White

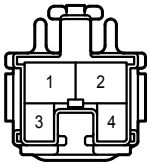

A 14
Gray

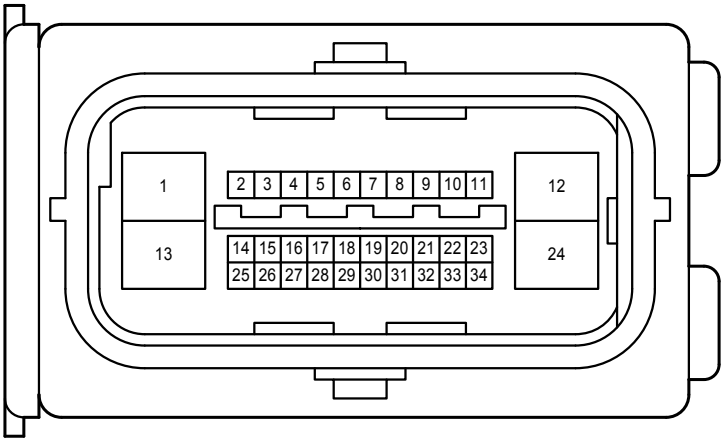

A 15
Black

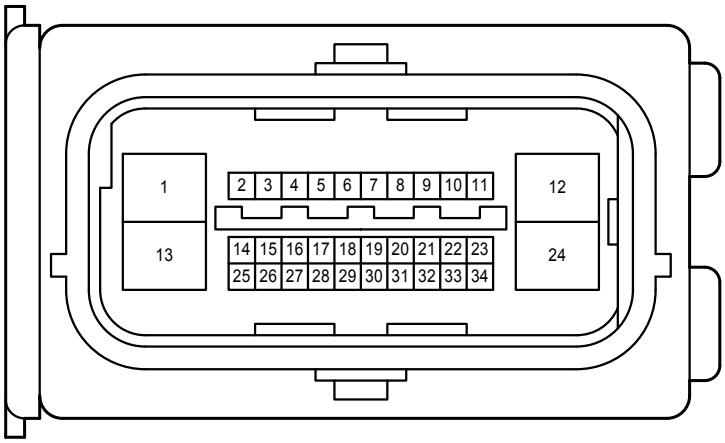

A 16
White

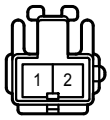

A 17
Black

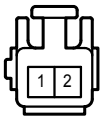

A 20
Black

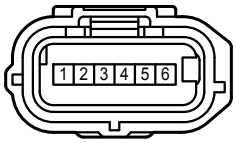

A 21
Black

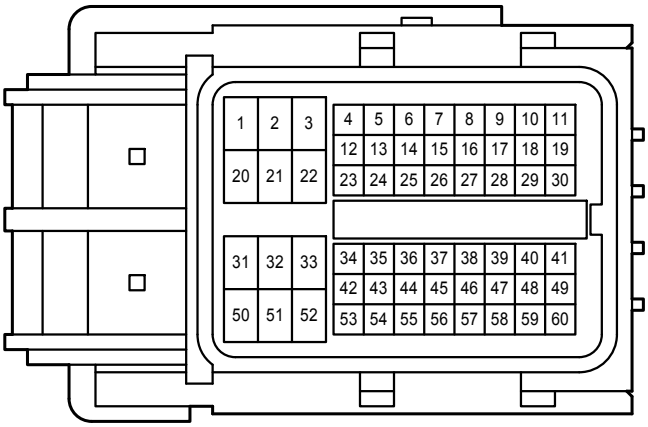

A 26
White

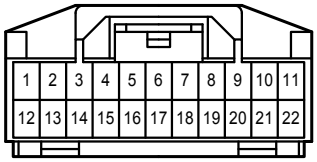

(1NR-FE)

A 29
White

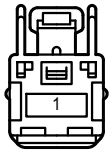

A 30
Gray

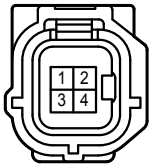

A 35
Black

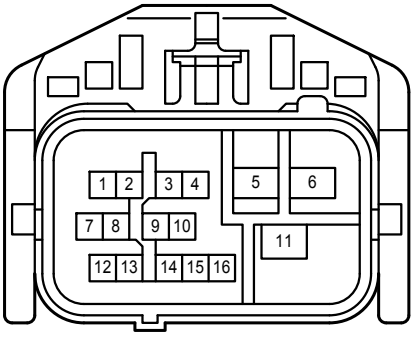

A 38
White

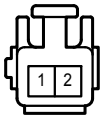

A 44
White

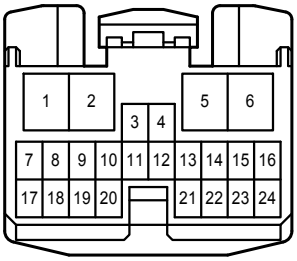

A 47
White

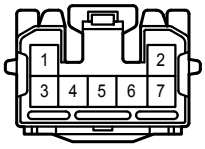

C 6
Black

C 10
Black

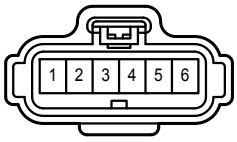

C 12
Black

C 17
Gray

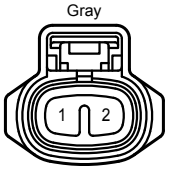

C 35
Black

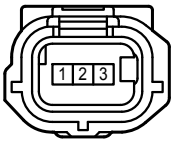

C 36
Black

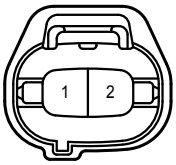

C 37
Black

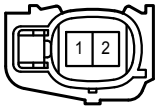

C 38
Gray

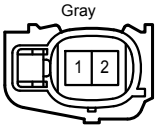

C 39
Black

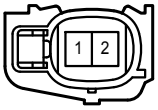

C 40
Gray

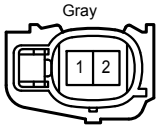

C 46
Black

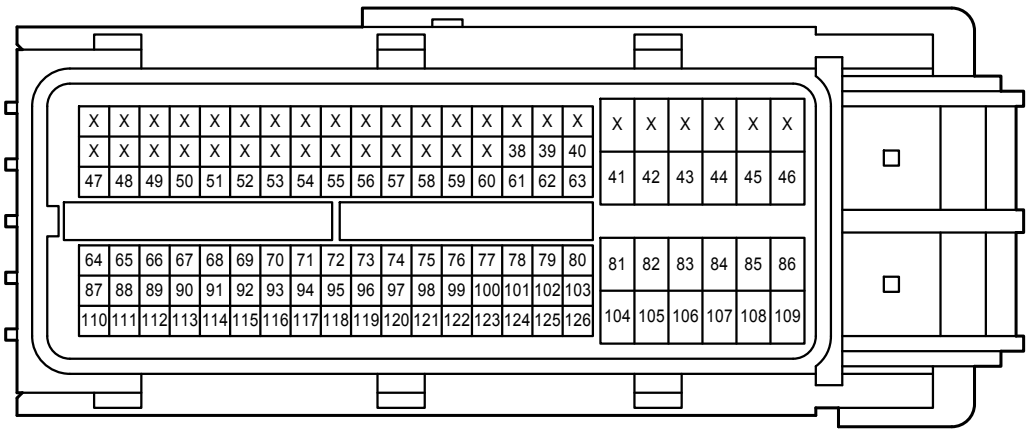

C 47
Dark Gray

C 48
Dark Gray

C 49
Black

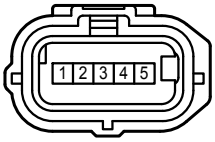

C 50
Black

C 51
Black

C 52
Gray

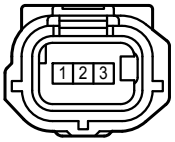

C 53
Black

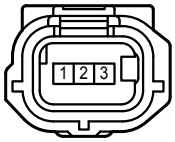

C 54
Gray

C 56
Black

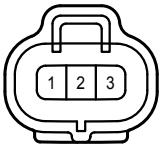

E 1
Black

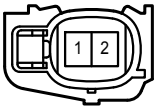

F 1
White

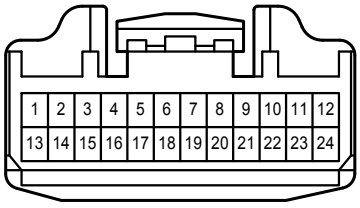

F 2
White

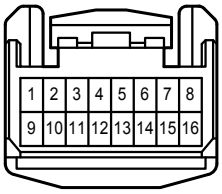

F 6
White

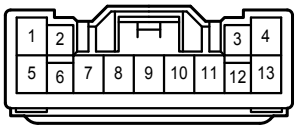

F 8
White

F 9
White

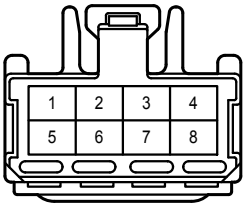

F 16
White

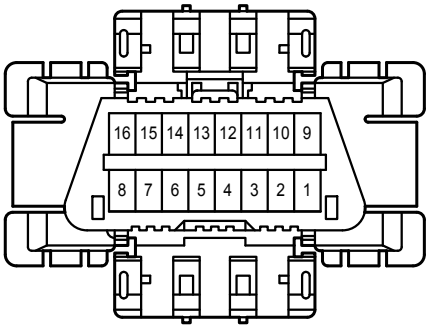

F 39
White

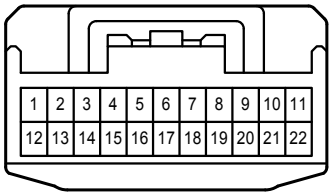

F 40
White

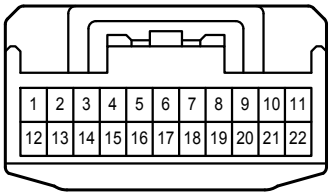

F 41
White

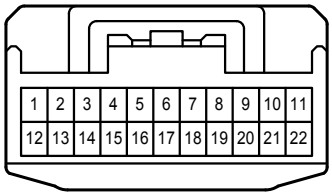

F 46
White

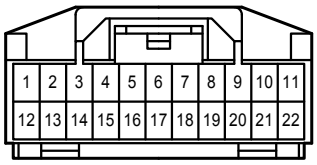

F 47
White

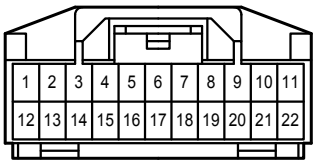

F 48
White

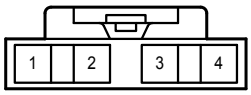

F 59
Black

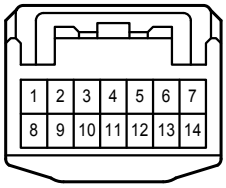

F 66
White

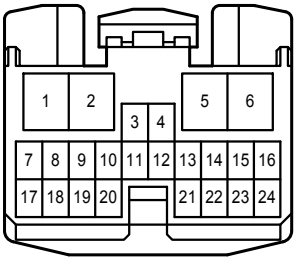

F 72
White

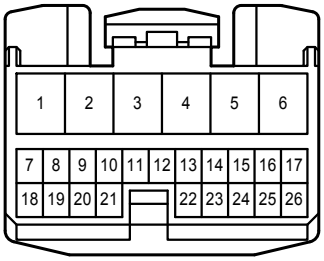

F 73
White

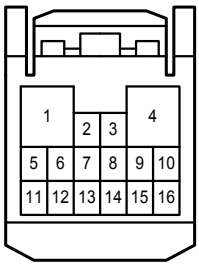

F 74
White

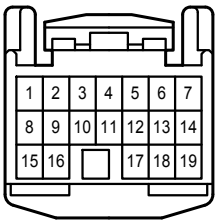

F 76
White

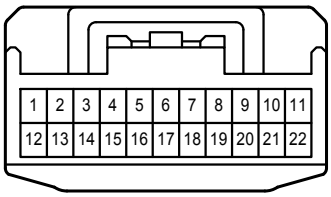

F 80
White

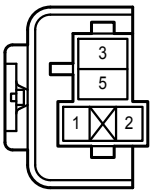

L 7
White

1A
White

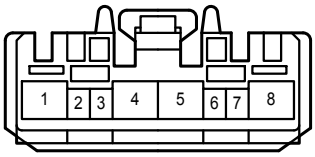

1B
White

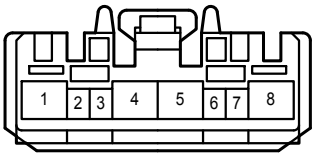

4A
White

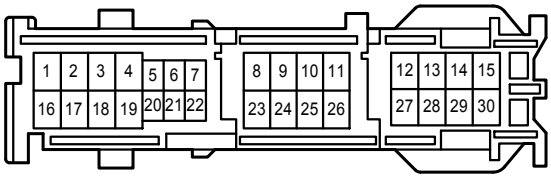

4B
White

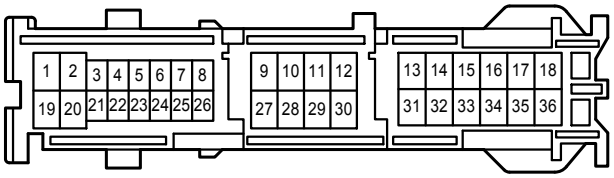

4C
White

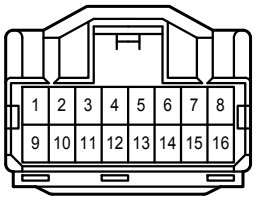

4D
White

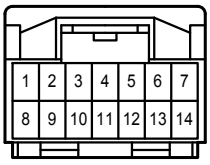

4E
White

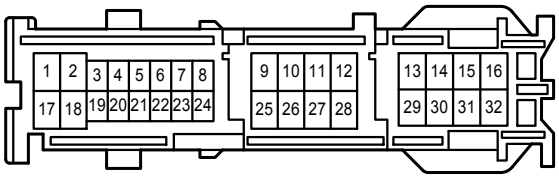

4G
White

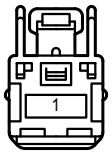

4M
White

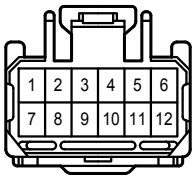

4S
White

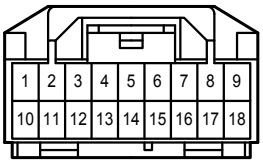

AA1
White

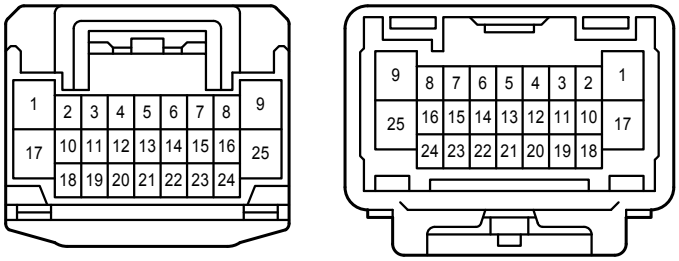

AF2
White

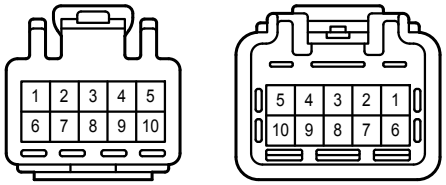

AF3
Black

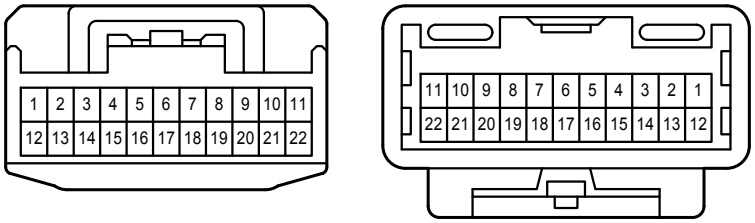

AF4
Gray

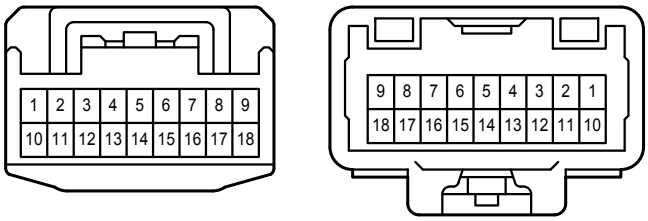

AF5
Blue

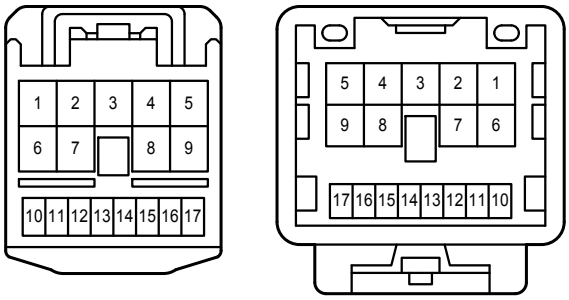

AF6
White

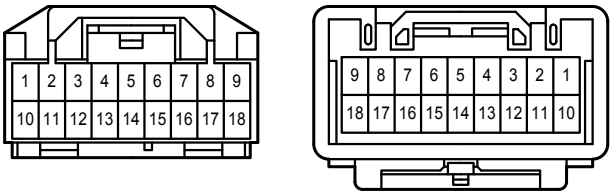

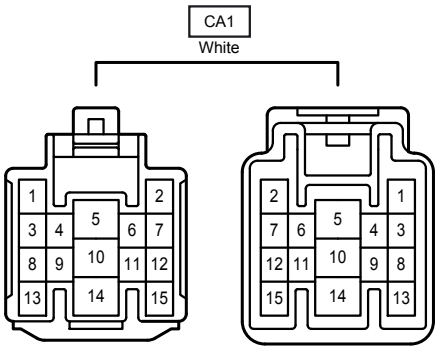
CA1
White
1
2
3
4
5
6
7
8
9
10
11
12
13
14
15

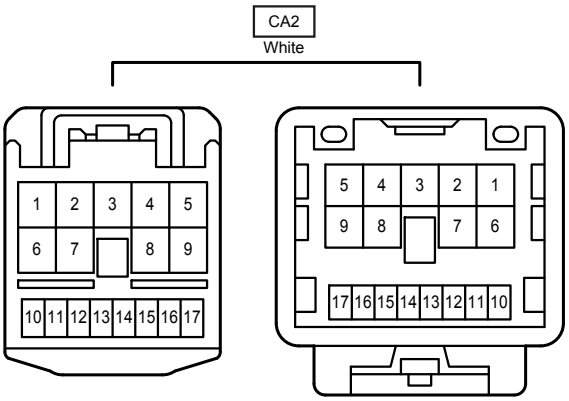
CA2
White
1
2
3
4
5
6
7
8
9
10
11
12
13
14
15
16
17

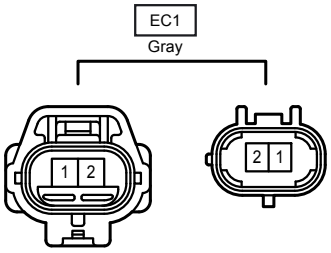
EC1
Gray
1
2