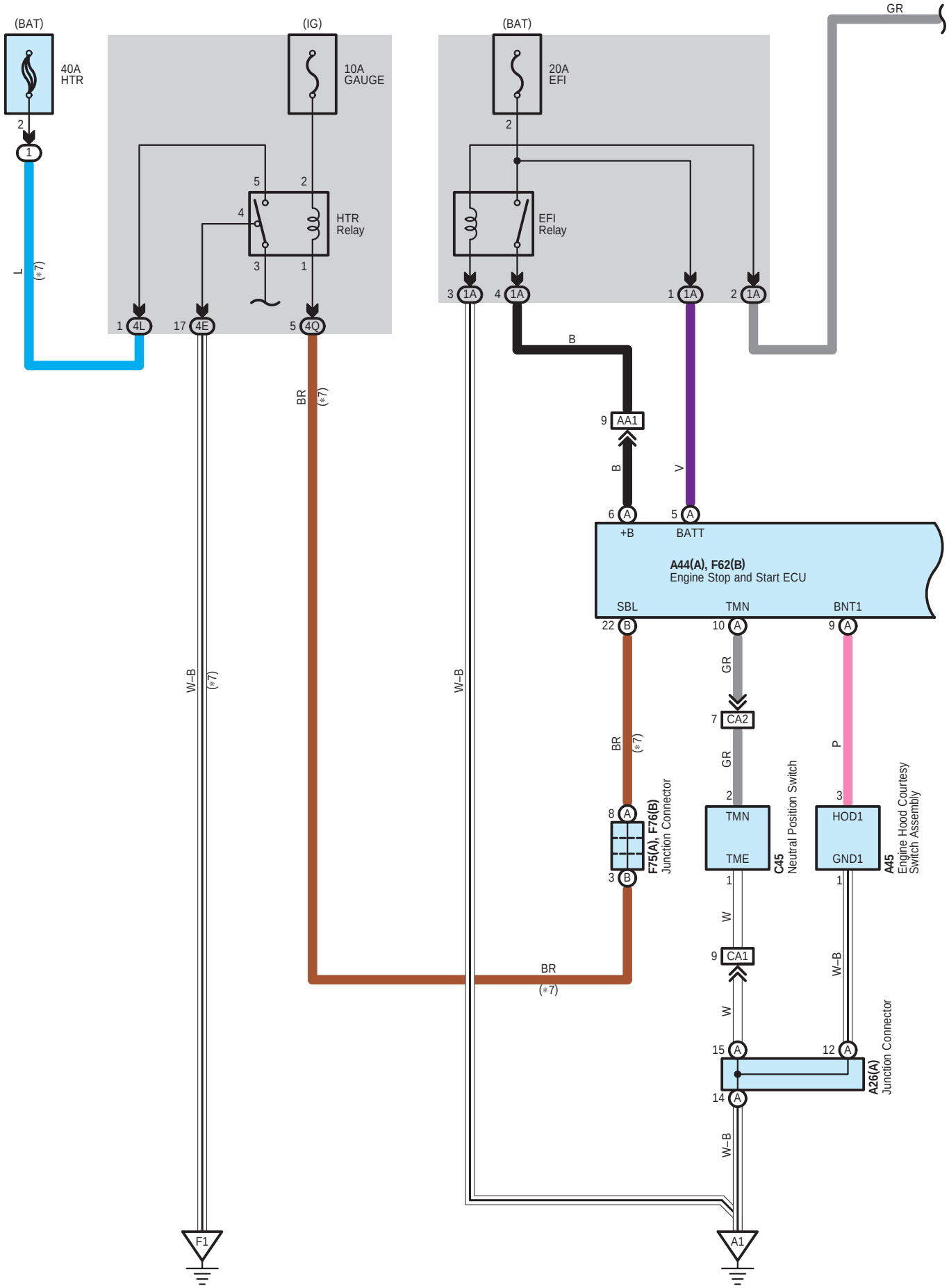
(BAT)
40A
HTR
(IG)
10A
GAUGE
(BAT)
20A
EFI
GR
HTR
Relay
EFI
Relay
L
(*7)
BR
(*7)
B
AA1
B
V
+B
BATT
A44(A), F62(B)
Engine Stop and Start ECU
SBL
TMN
BNT1
W–B
(*7)
W–B
GR
CA2
BR
(*7)
GR
P
F75(A), F76(B)
Junction Connector
TMN
TME
C45
Neutral Position Switch
HOD1
GND1
A45
Engine Hood Courtesy
Switch Assembly
W
CA1
W–B
BR
(*7)
W
A26(A)
Junction Connector
W–B
F1
A1

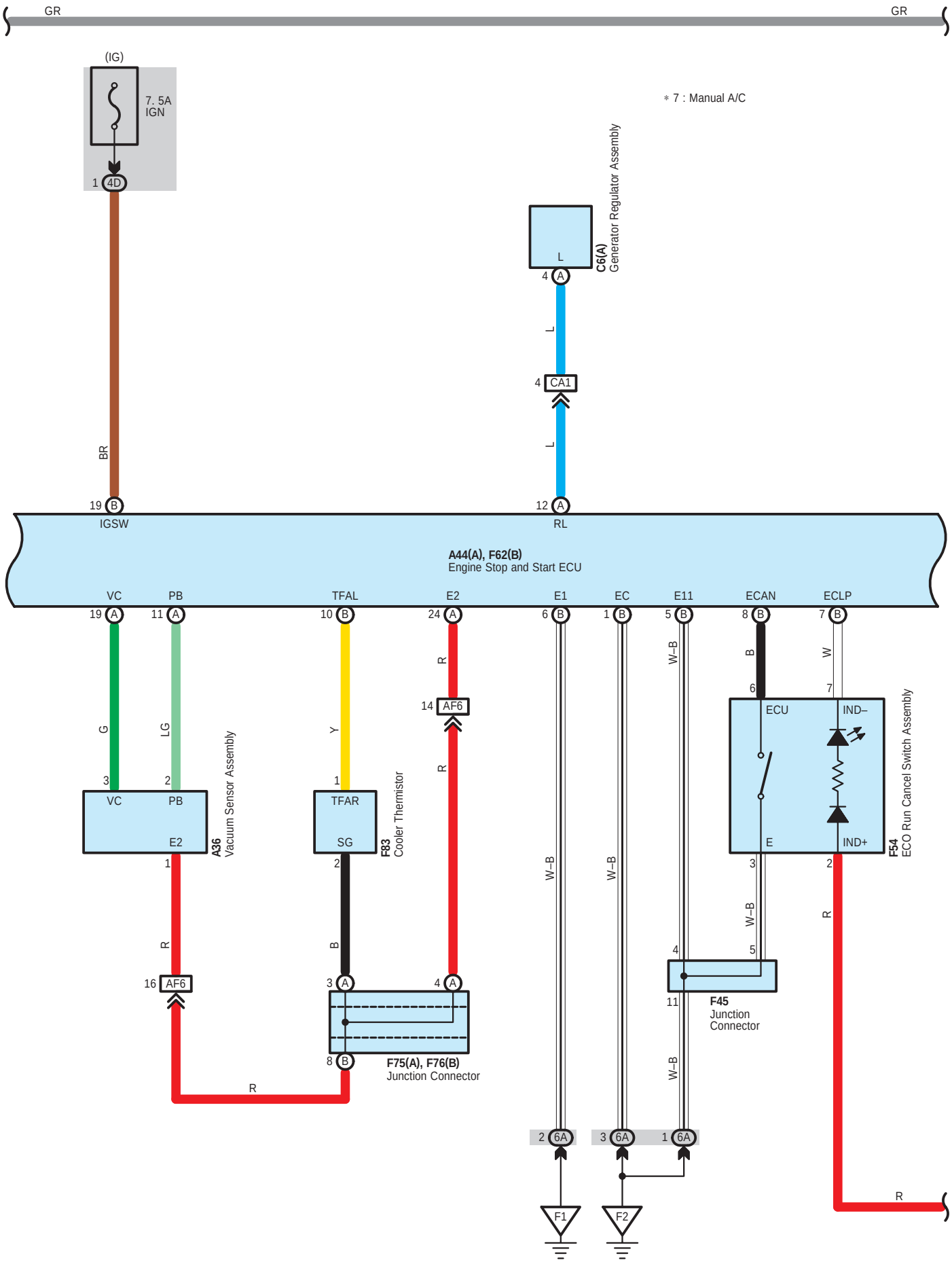
GR
GR
(IG)
7. 5A
IGN
1 4D
BR
19 B
IGSW
∗ 7 : Manual A/C
C6(A)
Generator Regulator Assembly
L
4 A
L
4 CA1
L
12 A
RL
A44(A), F62(B)
Engine Stop and Start ECU
VC
PB
TFAL
E2
E1
EC
E11
ECAN
ECLP
19 A
11 A
10 B
24 A
6 B
1 B
5 B
8 B
7 B
G
LG
Y
R
W–B
W–B
W–B
B
W
14 AF6
3 VC
2 PB
E2
1
A36
Vacuum Sensor Assembly
1 TFAR
SG
2
F83
Cooler Thermistor
R
B
16 AF6
3 A
4 A
8 B
F75(A), F76(B)
Junction Connector
R
6 ECU
IND–
E
IND+
3
2
F54
ECO Run Cancel Switch Assembly
W–B
R
4
5
11
F45
Junction
Connector
W–B
2 6A
3 6A
1 6A
F1
F2
R

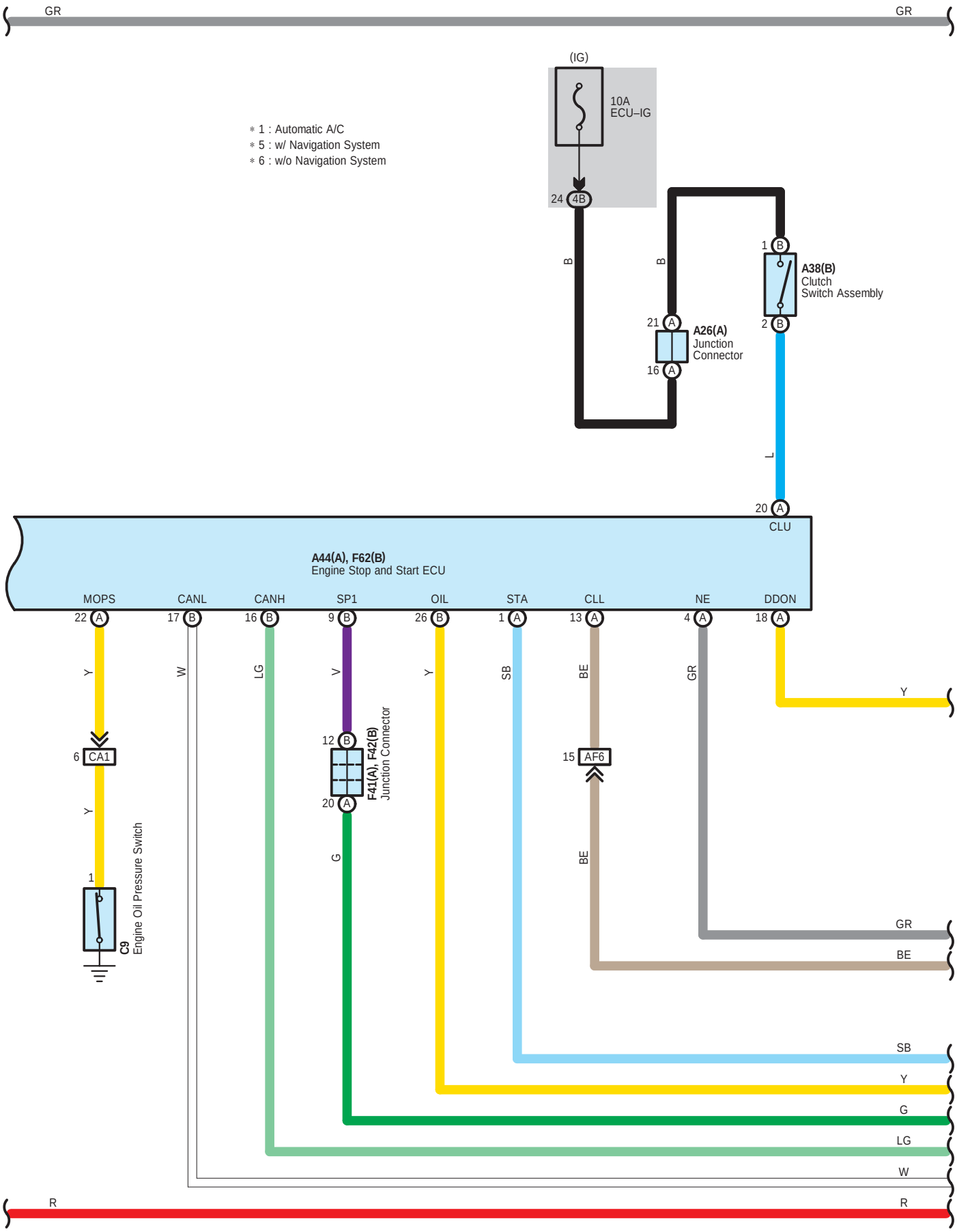
GR
GR
(IG)
10A
ECU–IG
24 4B
∗ 1 : Automatic A/C
∗ 5 : w/ Navigation System
∗ 6 : w/o Navigation System
B
B
1 B
A38(B)
Clutch
Switch Assembly
2 B
21 A
A26(A)
Junction
Connector
16 A
L
20 A
CLU
A44(A), F62(B)
Engine Stop and Start ECU
MOPS
CANL
CANH
SP1
OIL
STA
CLL
NE
DDON
22 A
17 B
16 B
9 B
26 B
1 A
13 A
4 A
18 A
Y
W
LG
V
Y
SB
BE
GR
Y
12 B
F41(A), F42(B)
Junction Connector
20 A
6 CA1
15 AF6
Y
G
BE
1
C9
Engine Oil Pressure Switch
GR
BE
SB
Y
G
LG
W
R
R

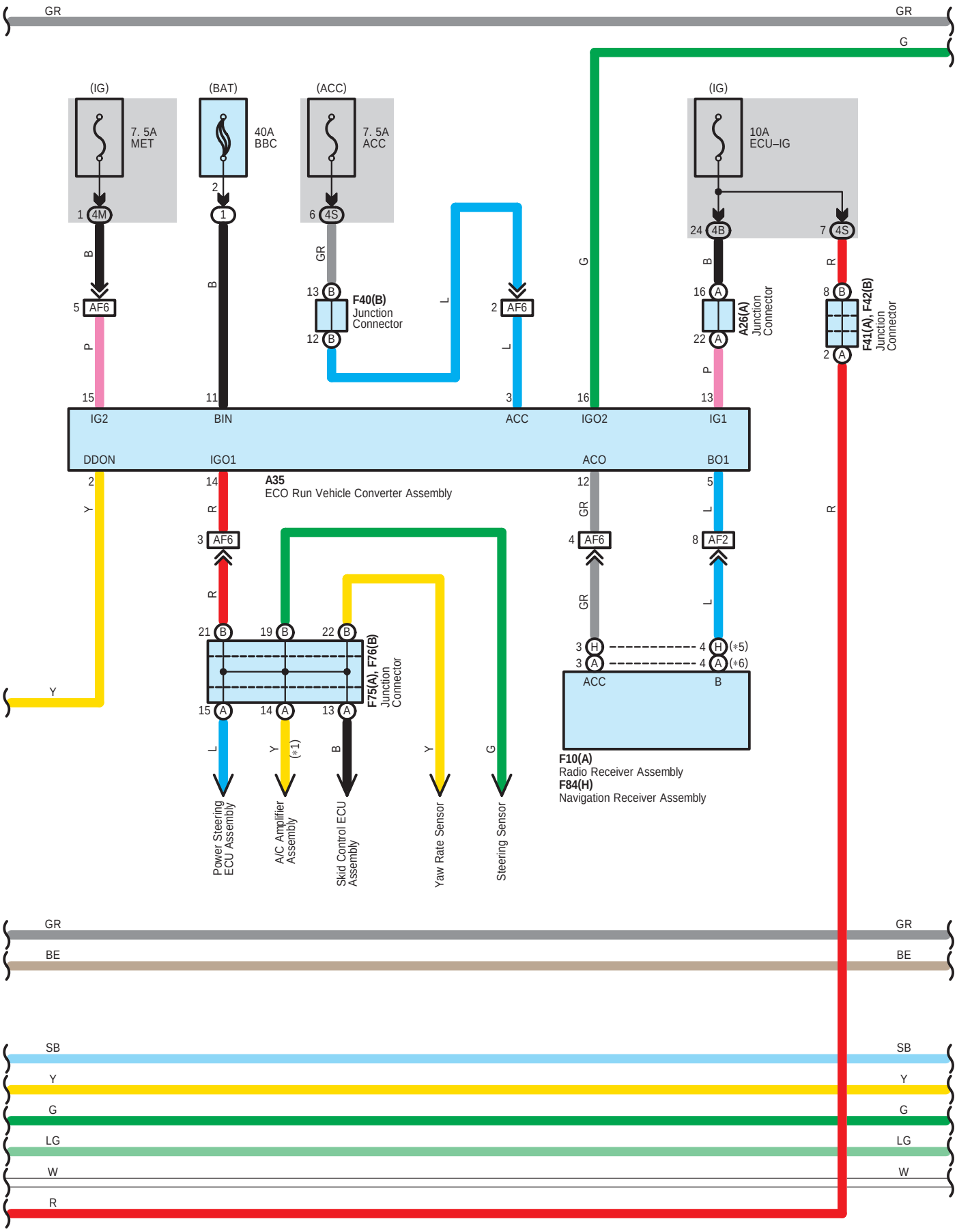
GR
GR
G
(IG)
7. 5A
MET
(BAT)
40A
BBC
(ACC)
7. 5A
ACC
(IG)
10A
ECU–IG
1 4M
2
1
6 4S
24 4B
7 4S
B
B
GR
G
B
R
5 AF6
13 B
F40(B)
Junction
Connector
12 B
L
2 AF6
16 A
A26(A)
Junction
Connector
22 A
8 B
F41(A), F42(B)
Junction
Connector
2 A
P
L
P
15
11
3
16
13
IG2
BIN
ACC
IGO2
IG1
DDON
IGO1
ACO
BO1
2
14
A35
ECO Run Vehicle Converter Assembly
12
5
Y
R
GR
L
R
3 AF6
4 AF6
8 AF2
R
GR
L
21 B
19 B
22 B
F75(A), F76(B)
Junction
Connector
3 H
4 H (*5)
3 A
4 A (*6)
Y
15 A
14 A
13 A
ACC
B
L
Y (*1)
B
Y
G
F10(A)
Radio Receiver Assembly
F84(H)
Navigation Receiver Assembly
Power Steering
ECU Assembly
A/C Amplifier
Assembly
Skid Control ECU
Assembly
Yaw Rate Sensor
Steering Sensor
GR
GR
BE
BE
SB
SB
Y
Y
G
G
LG
LG
W
W
R

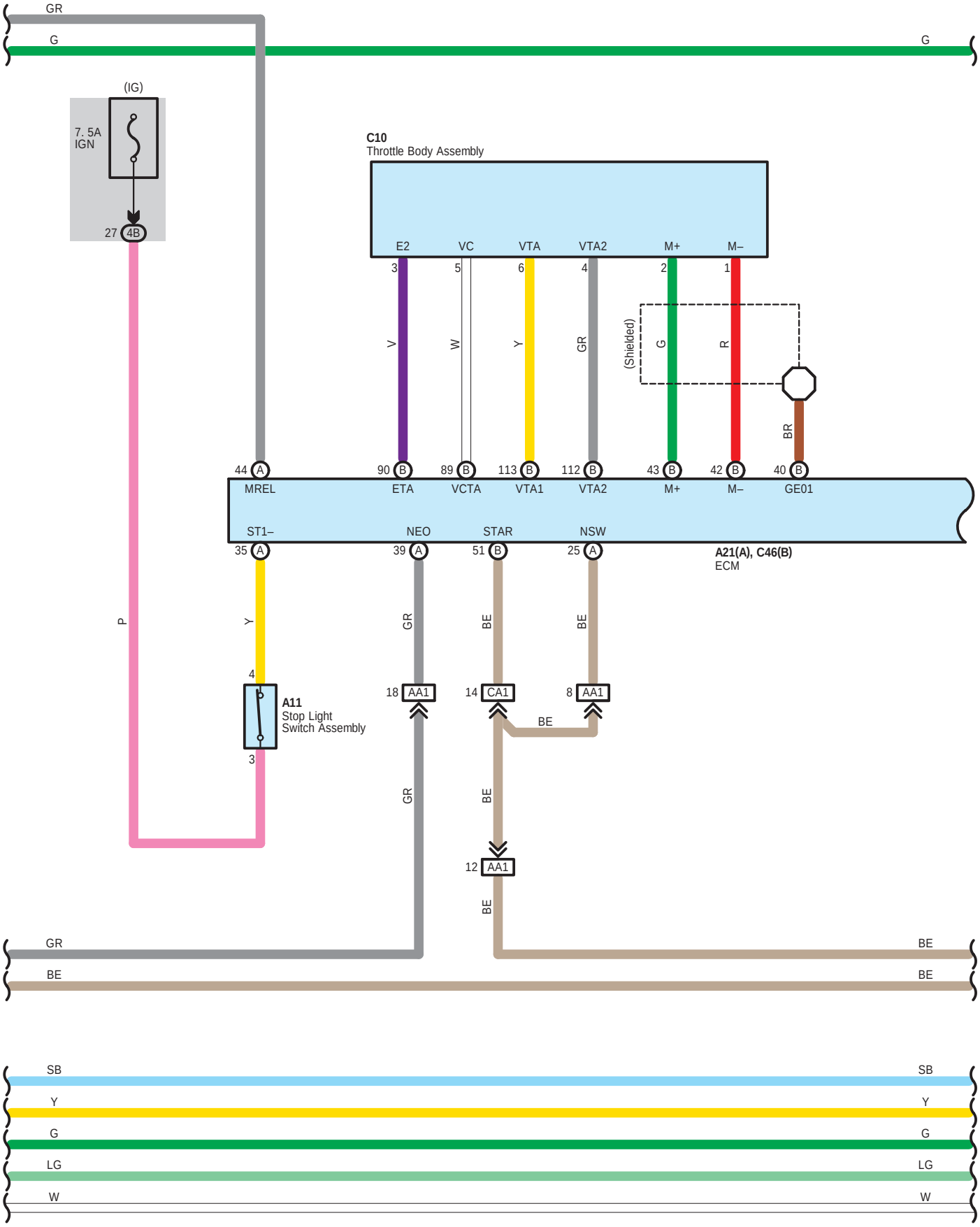
GR
G
G
(IG)
7. 5A
IGN
27 4B
C10
Throttle Body Assembly
E2
VC
VTA
VTA2
M+
M–
3
5
6
4
2
1
V
W
Y
GR
(Shielded)
G
R
BR
44 A
90 B
89 B
113 B
112 B
43 B
42 B
40 B
MREL
ETA
VCTA
VTA1
VTA2
M+
M–
GE01
ST1–
NEO
STAR
NSW
35 A
39 A
51 B
25 A
A21(A), C46(B)
ECM
P
Y
GR
BE
BE
4
18 AA1
14 CA1
8 AA1
A11
Stop Light
Switch Assembly
3
BE
GR
BE
12 AA1
BE
GR
BE
BE
BE
SB
SB
Y
Y
G
G
LG
LG
W
W

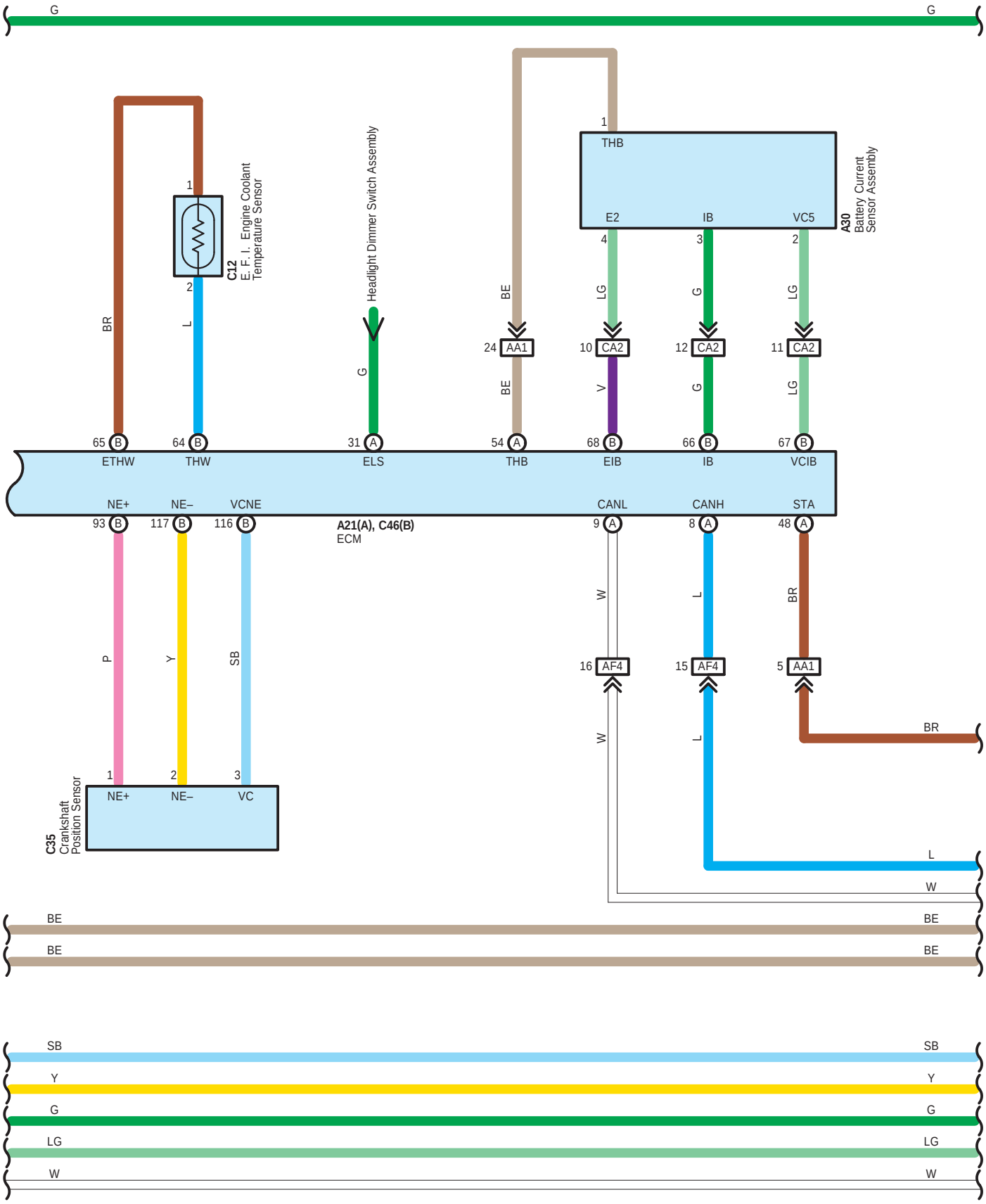
G
G
C12
E. F. I. Engine Coolant Temperature Sensor
1
2
BR
L
Headlight Dimmer Switch Assembly
G
BE
1
THB
E2
IB
VC5
A30
Battery Current Sensor Assembly
4
3
2
LG
G
LG
24 AA1
10 CA2
12 CA2
11 CA2
BE
V
G
LG
65 B
64 B
31 A
54 A
68 B
66 B
67 B
ETHW
THW
ELS
THB
EIB
IB
VCIB
NE+
NE–
VCNE
CANL
CANH
STA
93 B
117 B
116 B
A21(A), C46(B)
ECM
9 A
8 A
48 A
P
Y
SB
W
L
BR
16 AF4
15 AF4
5 AA1
W
L
BR
1
2
3
NE+
NE–
VC
C35
Crankshaft Position Sensor
L
W
BE
BE
BE
BE
SB
SB
Y
Y
G
G
LG
LG
W
W

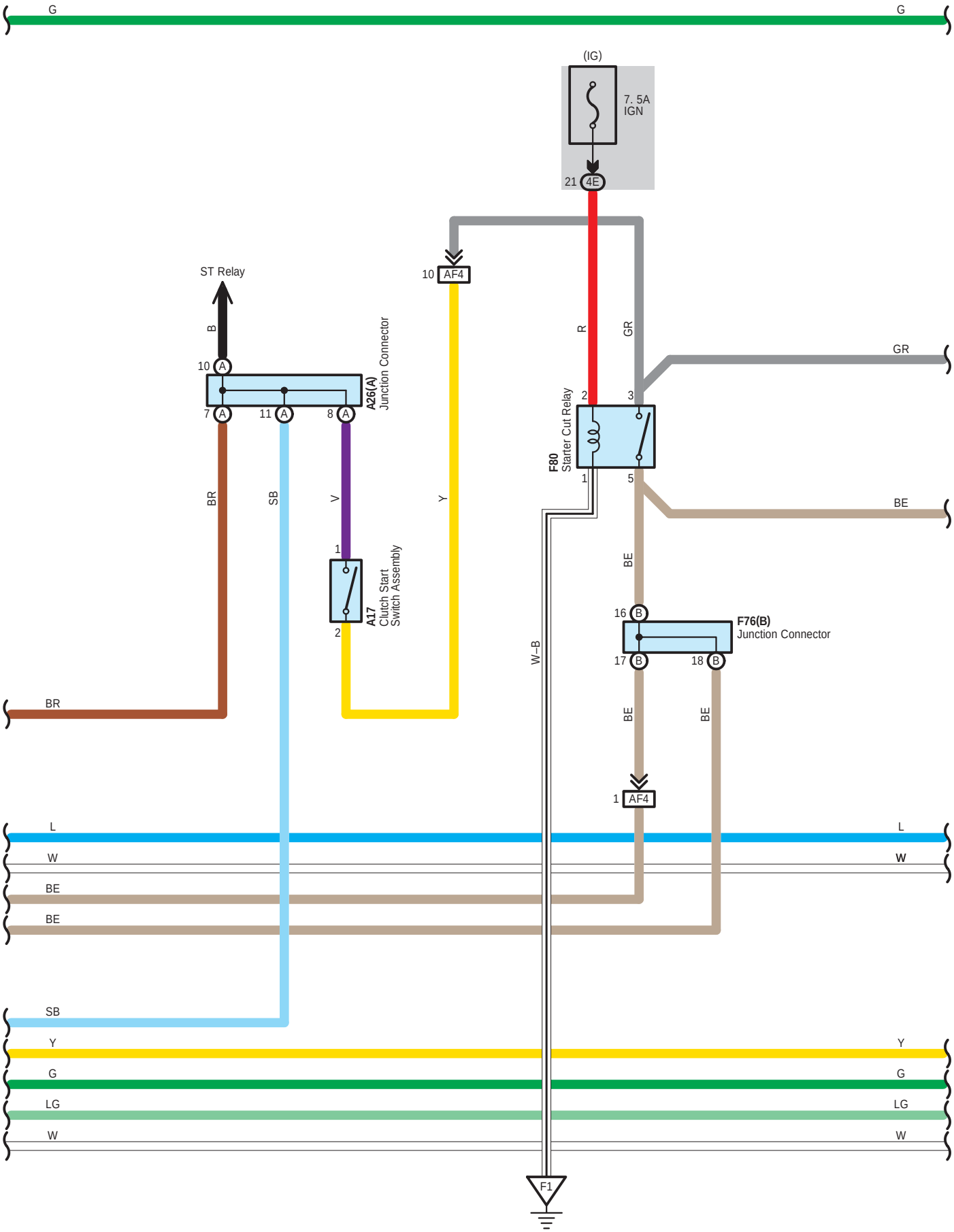
G
G
(IG)
7. 5A
IGN
21 4E
10 AF4
ST Relay
B
10 A
7 A
11 A
8 A
A26(A)
Junction Connector
R
GR
GR
2
3
F80
Starter Cut Relay
1
5
BR
SB
V
Y
BE
1
2
A17
Clutch Start
Switch Assembly
BE
16 B
F76(B)
Junction Connector
17 B
18 B
W–B
BR
BE
BE
1 AF4
L
L
W
W
BE
BE
SB
Y
Y
G
G
LG
LG
W
W
F1

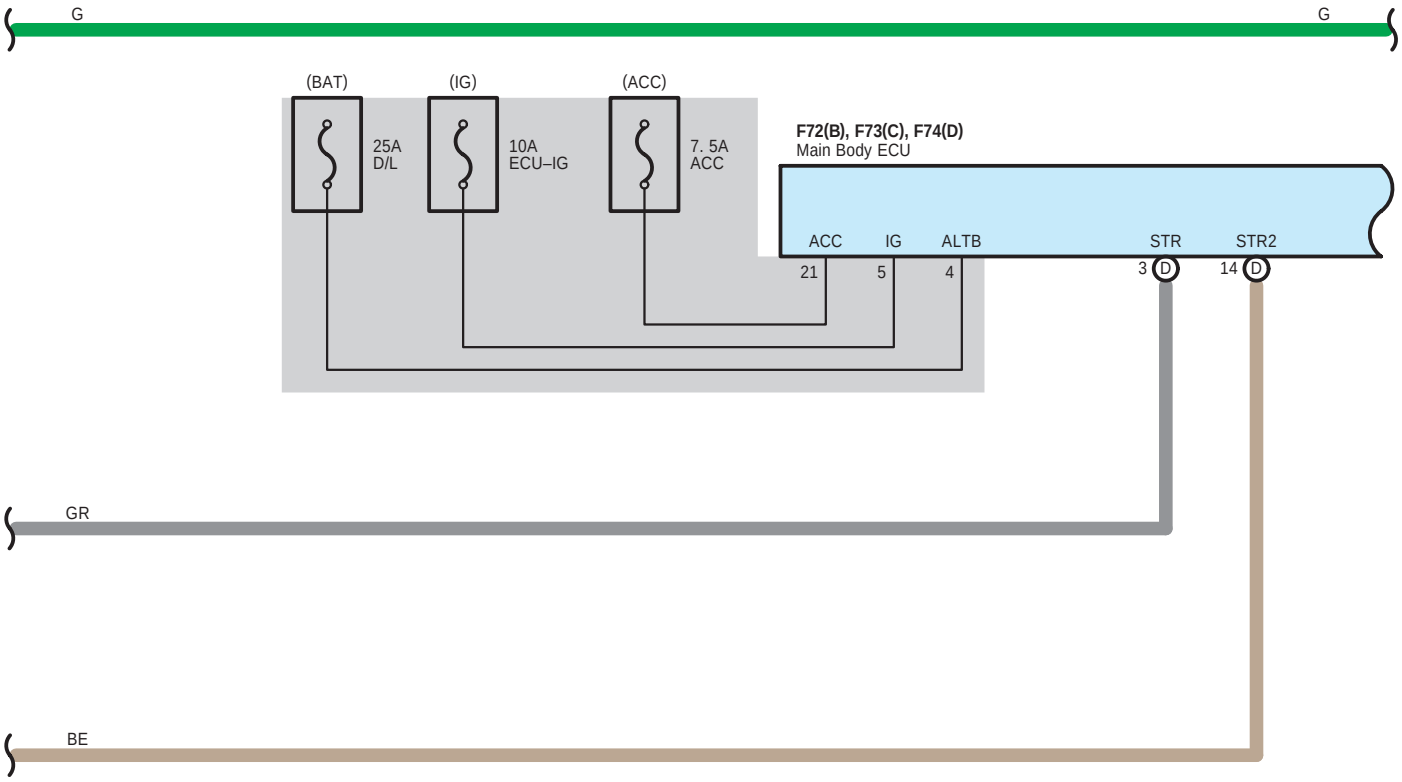
G
G
(BAT)
(IG)
(ACC)
25A
D/L
10A
ECU–IG
7. 5A
ACC
F72(B), F73(C), F74(D)
Main Body ECU
ACC
IG
ALTB
STR
STR2
21
5
4
3
D
14
D
GR
BE

L
L
W
W

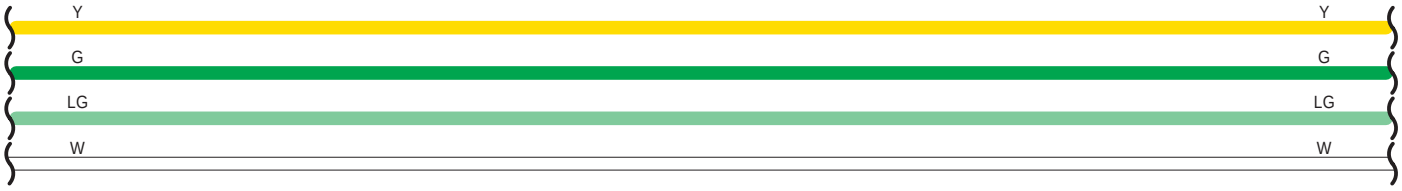
Y
Y
G
G
LG
LG
W
W

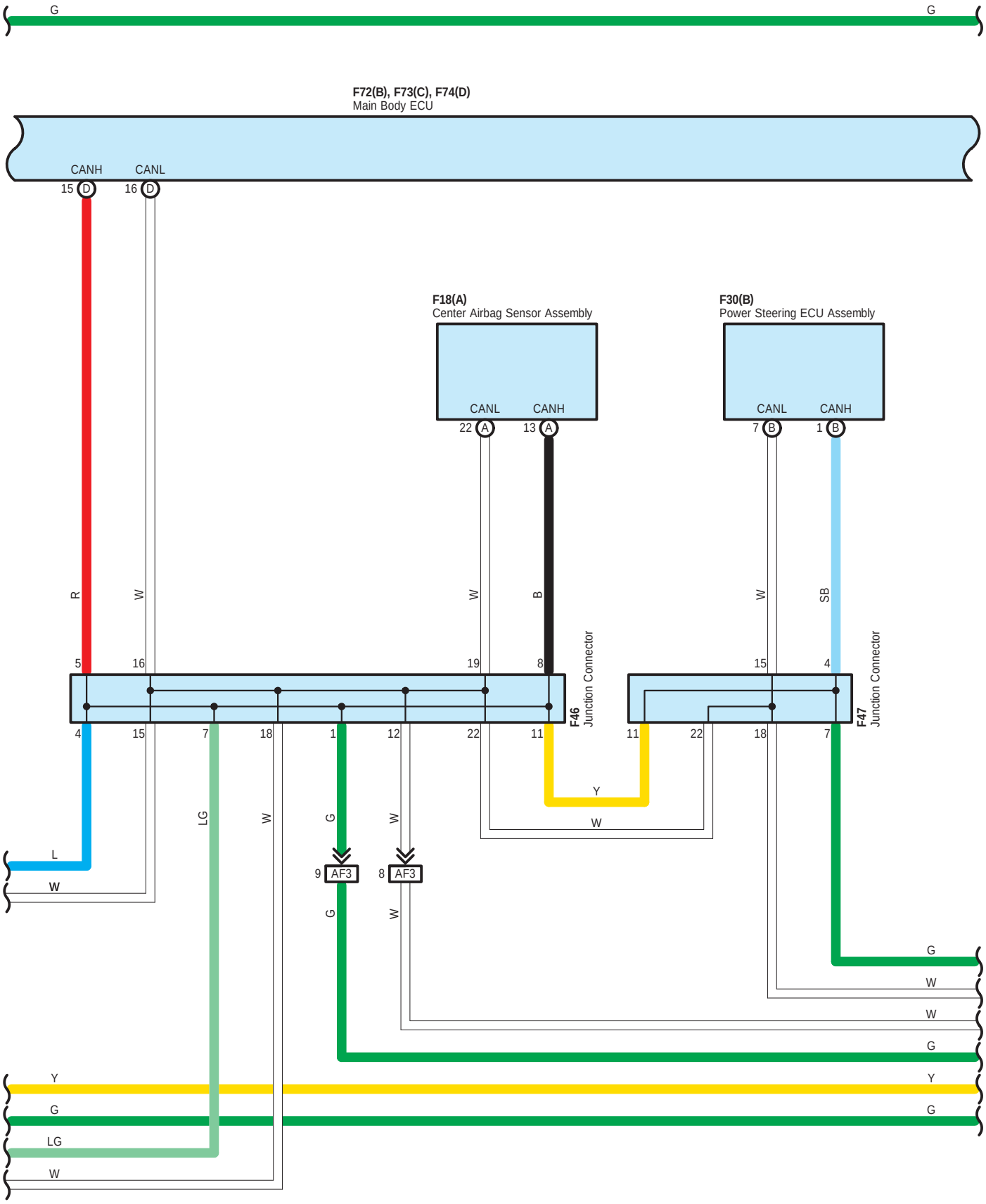
G
G
F72(B), F73(C), F74(D)
Main Body ECU
CANH
CANL
15 D
16 D
F18(A)
Center Airbag Sensor Assembly
CANL
CANH
22 A
13 A
F30(B)
Power Steering ECU Assembly
CANL
CANH
7 B
1 B
R
W
W
B
W
SB
5
16
19
8
15
4
F46
Junction Connector
F47
Junction Connector
4
15
7
18
1
12
22
11
11
22
18
7
Y
W
L
W
LG
W
G
W
9 AF3
8 AF3
G
W
G
W
W
G
Y
Y
G
G
LG
W

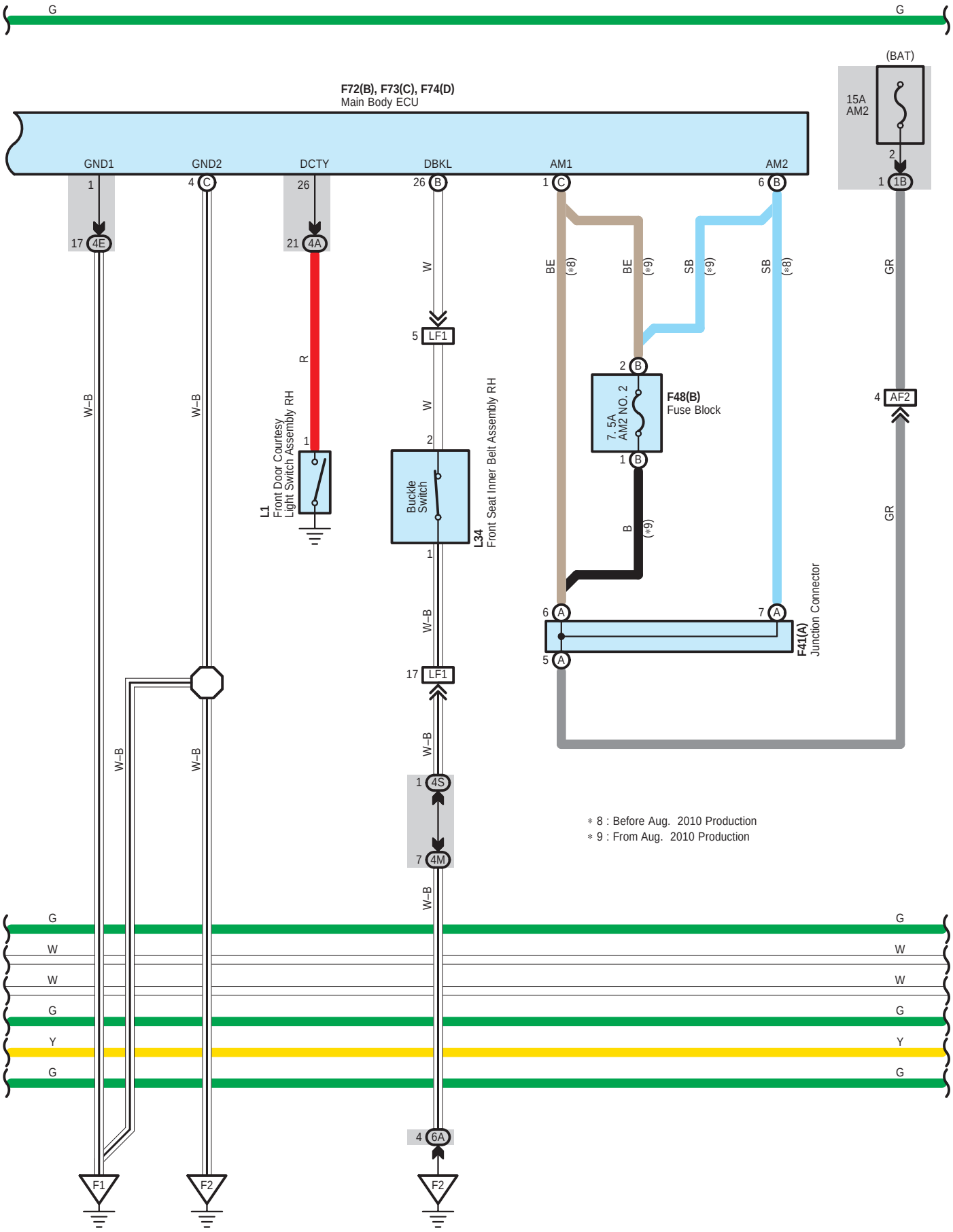
G
G
(BAT)
15A
AM2
F72(B), F73(C), F74(D)
Main Body ECU
GND1
GND2
DCTY
DBKL
AM1
AM2
1
4 C
26
26 B
1 C
6 B
2
1 1B
17 4E
21 4A
W
BE (*8)
BE (*9)
SB (*9)
SB (*8)
GR
5 LF1
R
W
2 B
7. 5A
AM2 NO. 2
F48(B)
Fuse Block
4 AF2
W–B
W–B
1
2
L1
Front Door Courtesy
Light Switch Assembly RH
Buckle
Switch
L34
Front Seat Inner Belt Assembly RH
1 B
B (*9)
GR
1
6 A
7 A
F41(A)
Junction Connector
5 A
W–B
17 LF1
W–B
W–B
W–B
1 4S
7 4M
W–B
* 8 : Before Aug. 2010 Production
* 9 : From Aug. 2010 Production
G
G
W
W
W
W
G
G
Y
Y
G
G
4 6A
F1
F2
F2

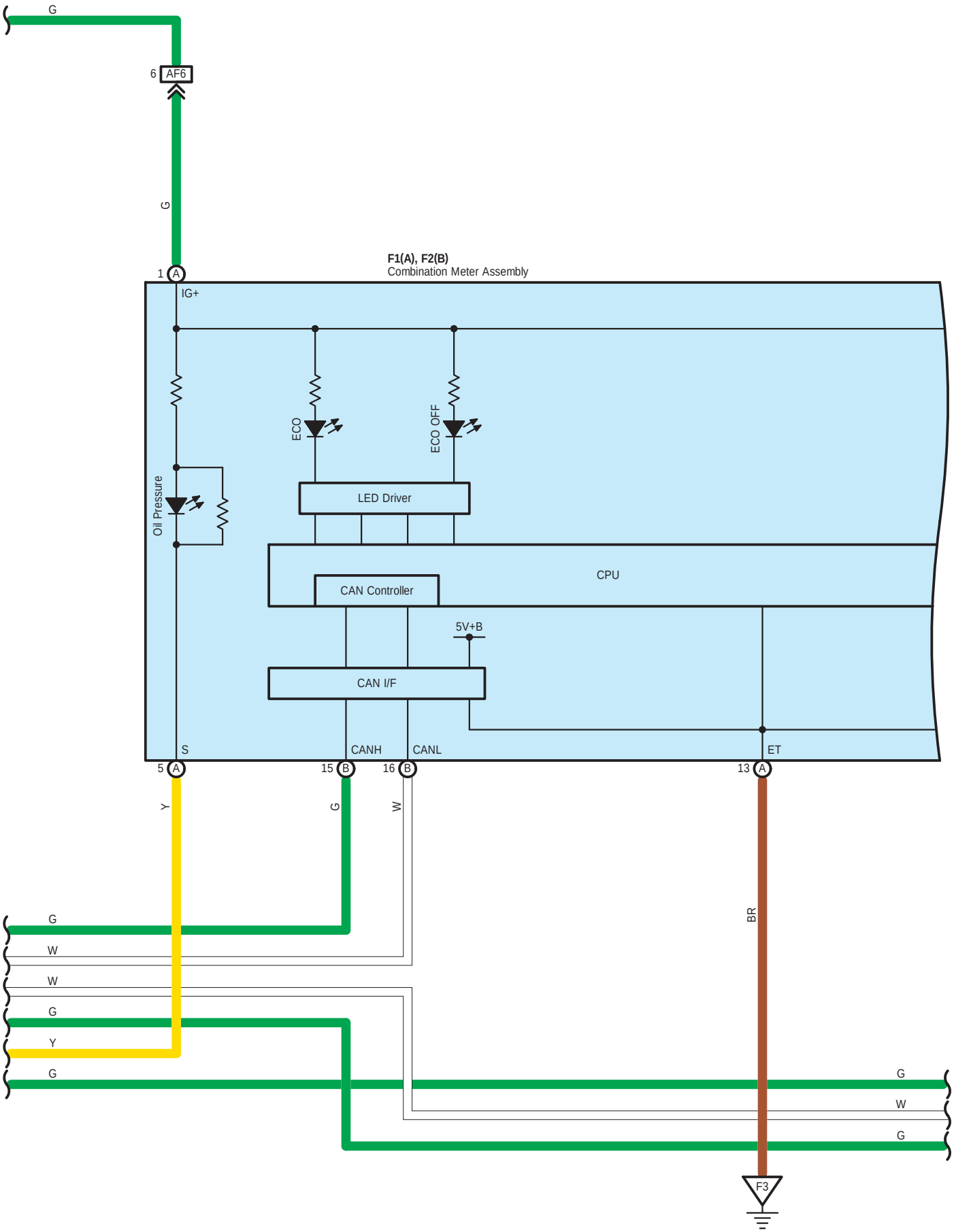
G
6 AF6
G
1 A
F1(A), F2(B)
Combination Meter Assembly
IG+
ECO
ECO OFF
Oil Pressure
LED Driver
CPU
CAN Controller
5V+B
CAN I/F
S
CANH
CANL
ET
5 A
15 B
16 B
13 A
Y
G
W
BR
G
W
W
G
Y
G
G
W
G
F3

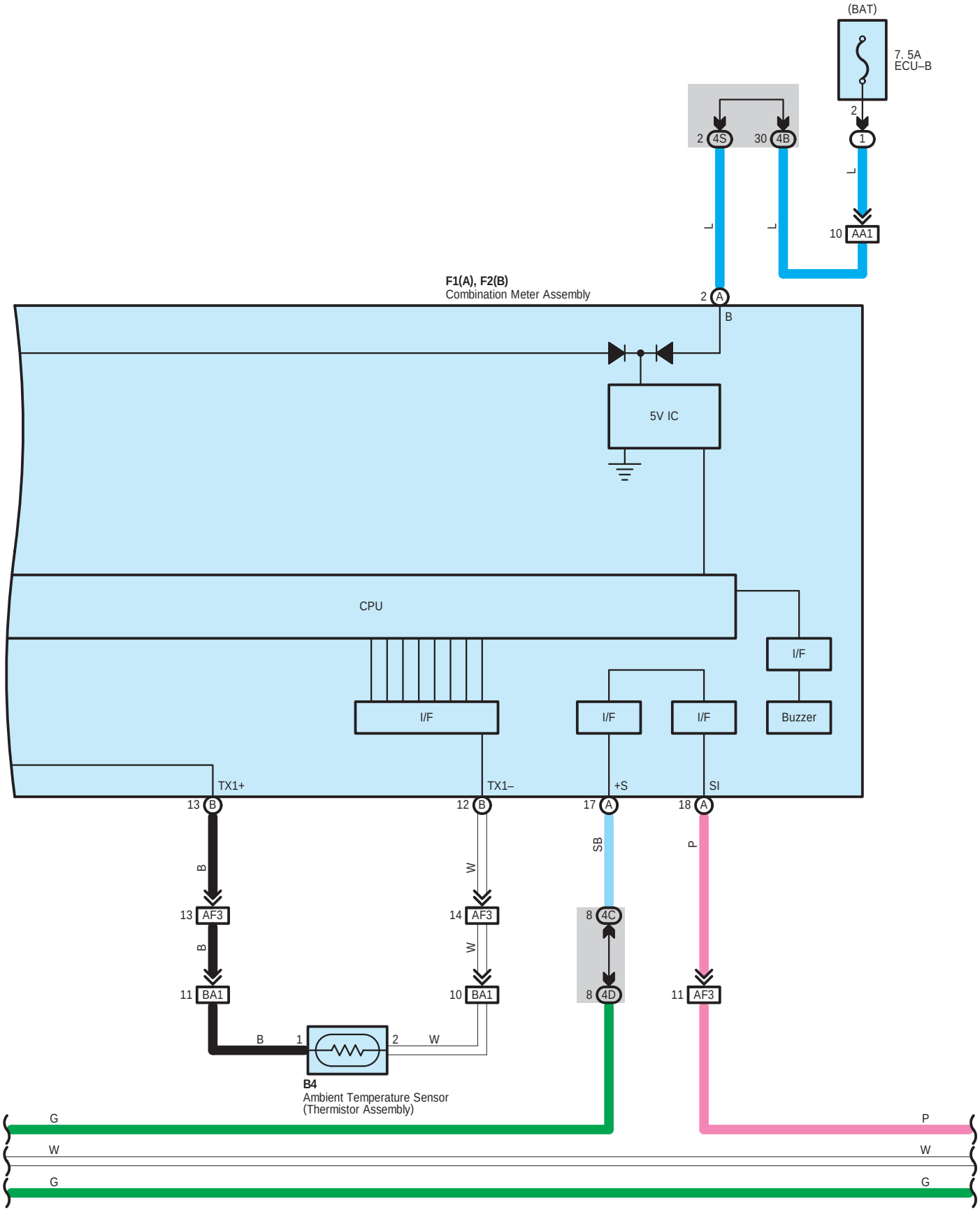
(BAT)
7. 5A
ECU–B
2
1
L
10 AA1
2 4S
30 4B
L
L
F1(A), F2(B)
Combination Meter Assembly
2 A
B
5V IC
CPU
I/F
I/F
I/F
I/F
Buzzer
TX1+
TX1–
+S
SI
13 B
12 B
17 A
18 A
B
W
SB
P
13 AF3
14 AF3
8 4C
B
W
11 BA1
10 BA1
8 4D
11 AF3
B
1
2
W
B4
Ambient Temperature Sensor
(Thermistor Assembly)
G
W
G
P
W
G

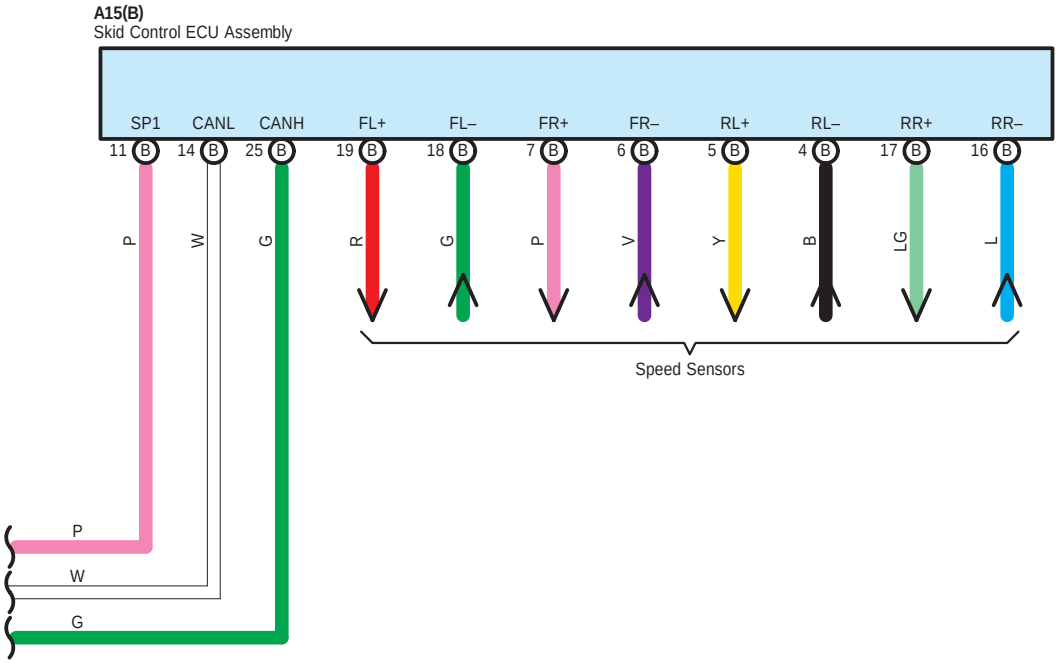
A15(B)
Skid Control ECU Assembly
SP1
CANL
CANH
FL+
FL–
FR+
FR–
RL+
RL–
RR+
RR–
11 B
14 B
25 B
19 B
18 B
7 B
6 B
5 B
4 B
17 B
16 B
P
W
G
R
G
P
V
Y
B
LG
L
Speed Sensors
P
W
G

A 11
White

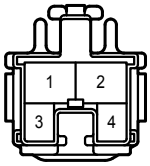

A 15
Black

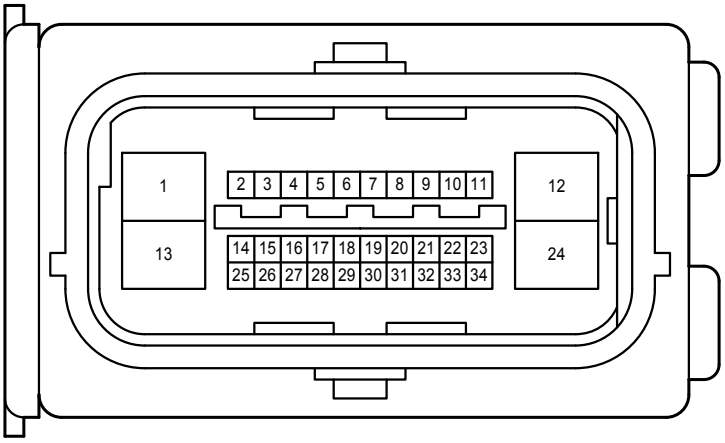

A 17
Black

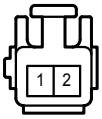

A 21
Black

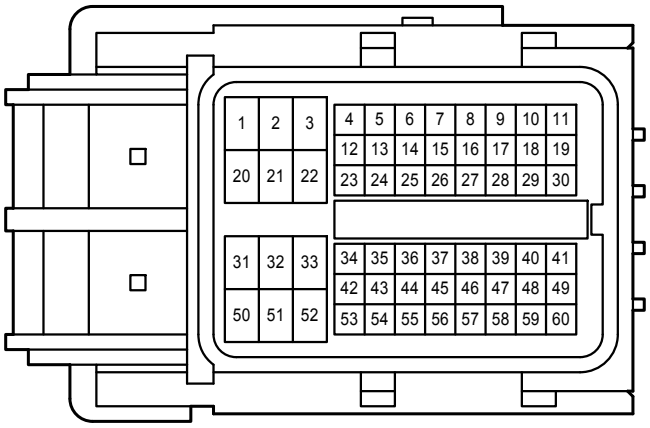

A 26
White

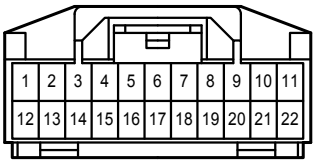

(1NR-FE)

A 30
Gray

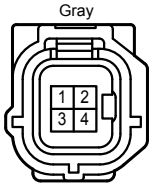

A 35
Black

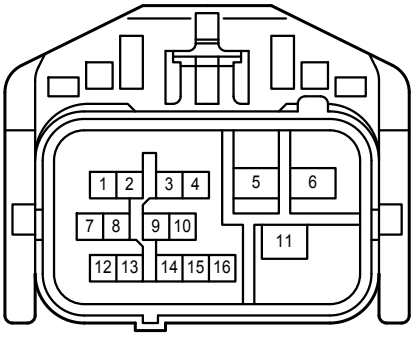

A 36
Black

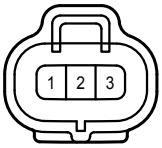

A 38
White

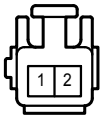

A 44
White

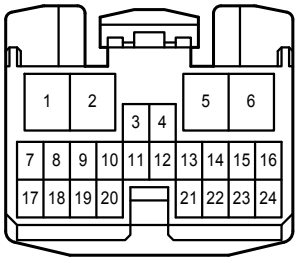

A 45
Gray

B 4
Black

C 6
Black

C 9
Gray

C 10
Black

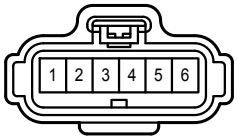

C 12
Black

C 35
Black

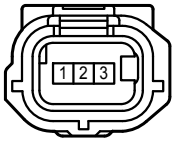

C 45
Black

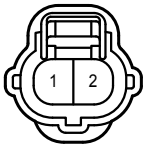

C 46
Black

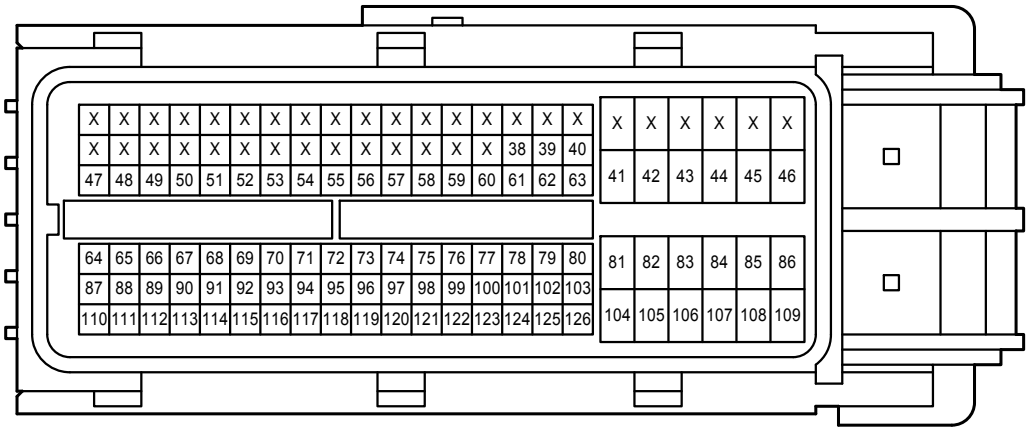

F 1
White

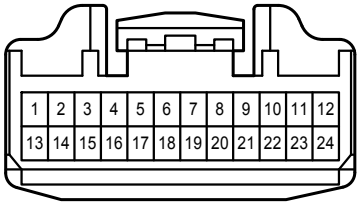

F 2
White

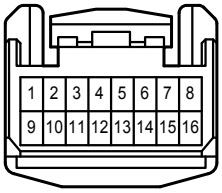

F 10
Blue

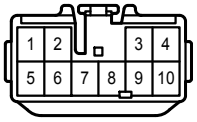

F 18
Yellow

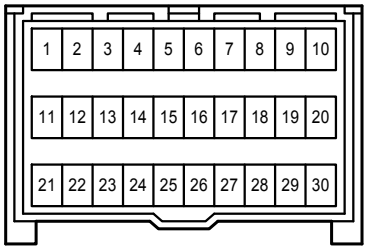

F 30
White

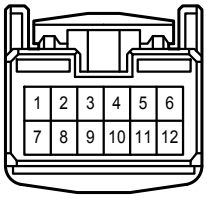

F 40
White

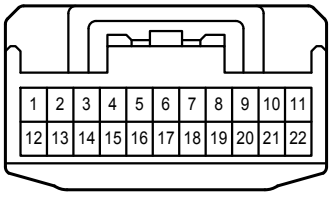

F 41
White

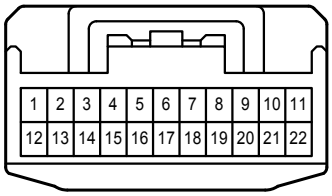

F 42
White

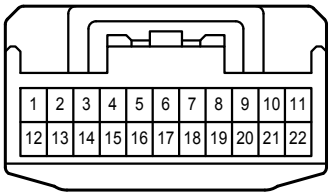

F 45
White

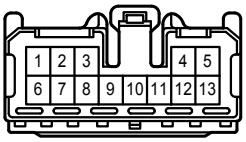

F 46
White

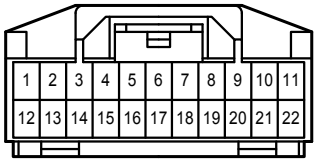

F 47
White

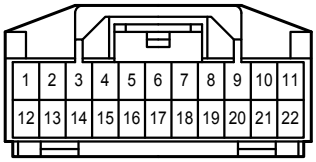

F 48
White

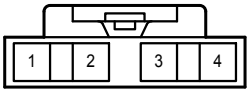

F 54
Black

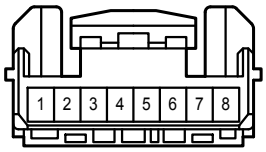

F 62
White

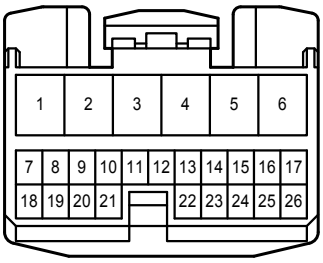

F 72
White

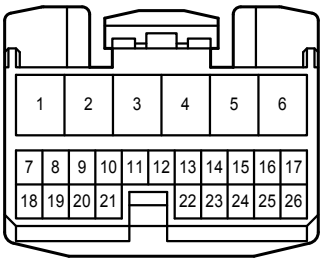

F 73
White

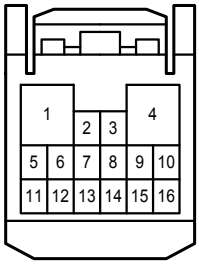

F 74
White

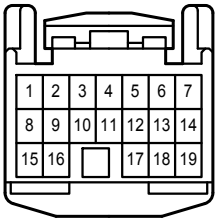

F 75
White

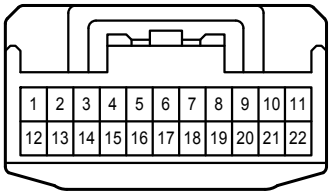

F 76
White

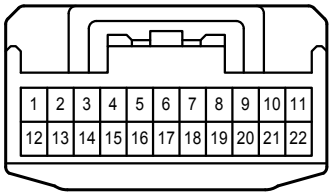

F 80
White

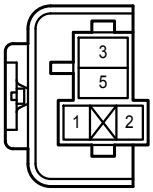

F 83
Black

F 84
Blue

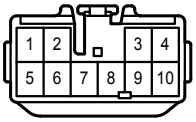

L 1
White

L 34
White

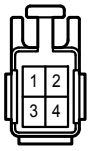

1A
White

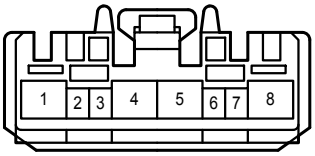

1B
White

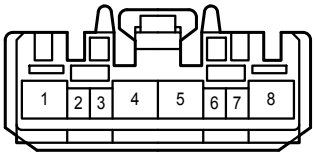

4A
White

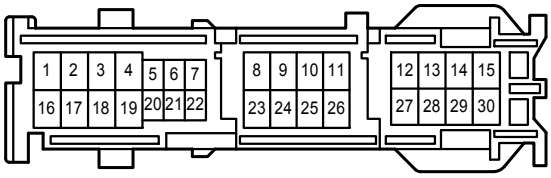

4B
White

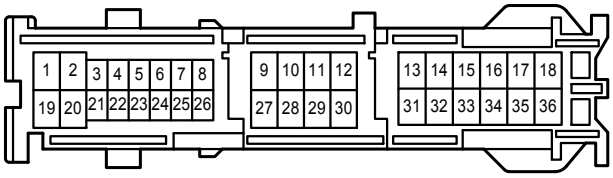

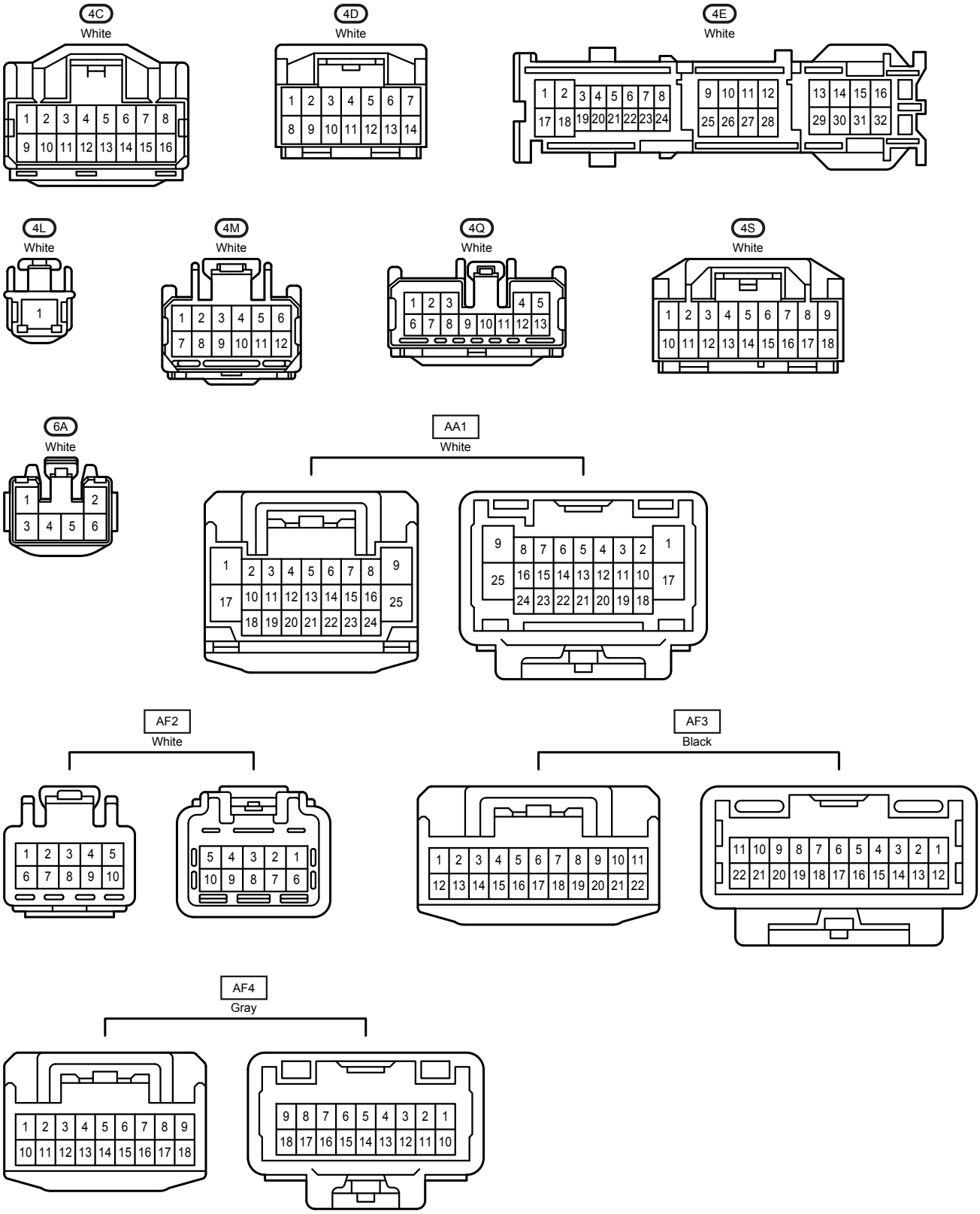
4C
White
4D
White
4E
White
4L
White
4M
White
4Q
White
4S
White
6A
White
AA1
White
AF2
White
AF3
Black
AF4
Gray

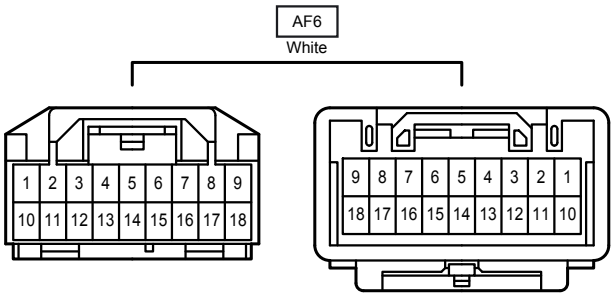
AF6
White
1 2 3 4 5 6 7 8 9
10 11 12 13 14 15 16 17 18
9 8 7 6 5 4 3 2 1
18 17 16 15 14 13 12 11 10

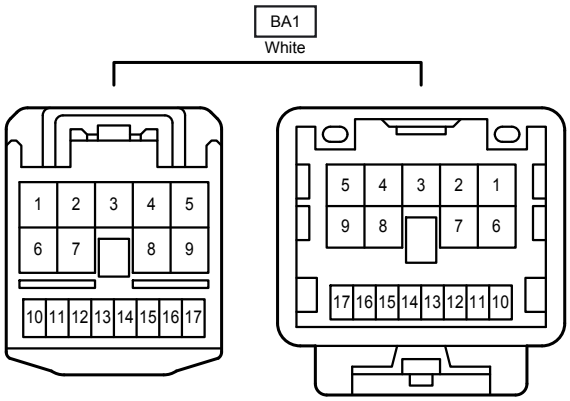
BA1
White
1 2 3 4 5
6 7 8 9
10 11 12 13 14 15 16 17
5 4 3 2 1
9 8 7 6
17 16 15 14 13 12 11 10

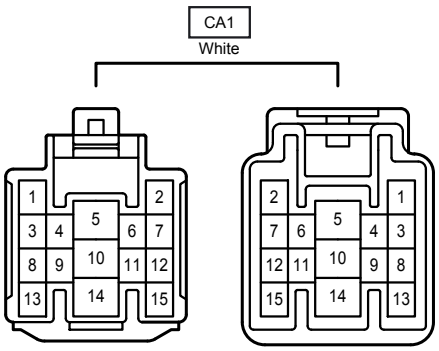
CA1
White
1 2
3 4 5 6 7
8 9 10 11 12
13 14 15
2 1
7 6 5 4 3
12 11 10 9 8
15 14 13

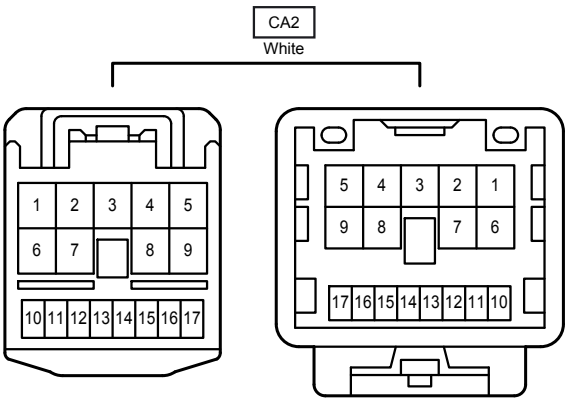
CA2
White
1 2 3 4 5
6 7 8 9
10 11 12 13 14 15 16 17
5 4 3 2 1
9 8 7 6
17 16 15 14 13 12 11 10

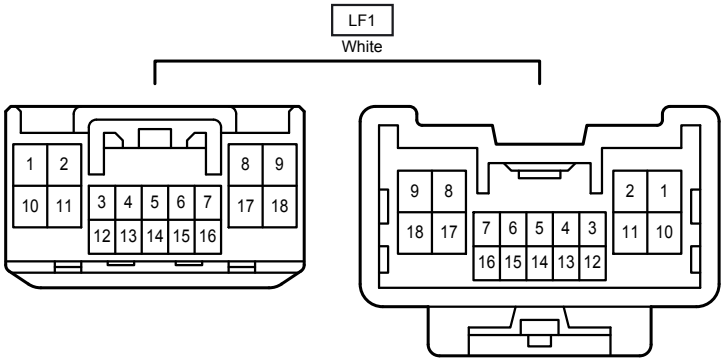
LF1
White
1 2 8 9
10 11 3 4 5 6 7 17 18
12 13 14 15 16
9 8 2 1
18 17 7 6 5 4 3 11 10
16 15 14 13 12