[Instrument Panel J/B Assembly Inner Circuit]

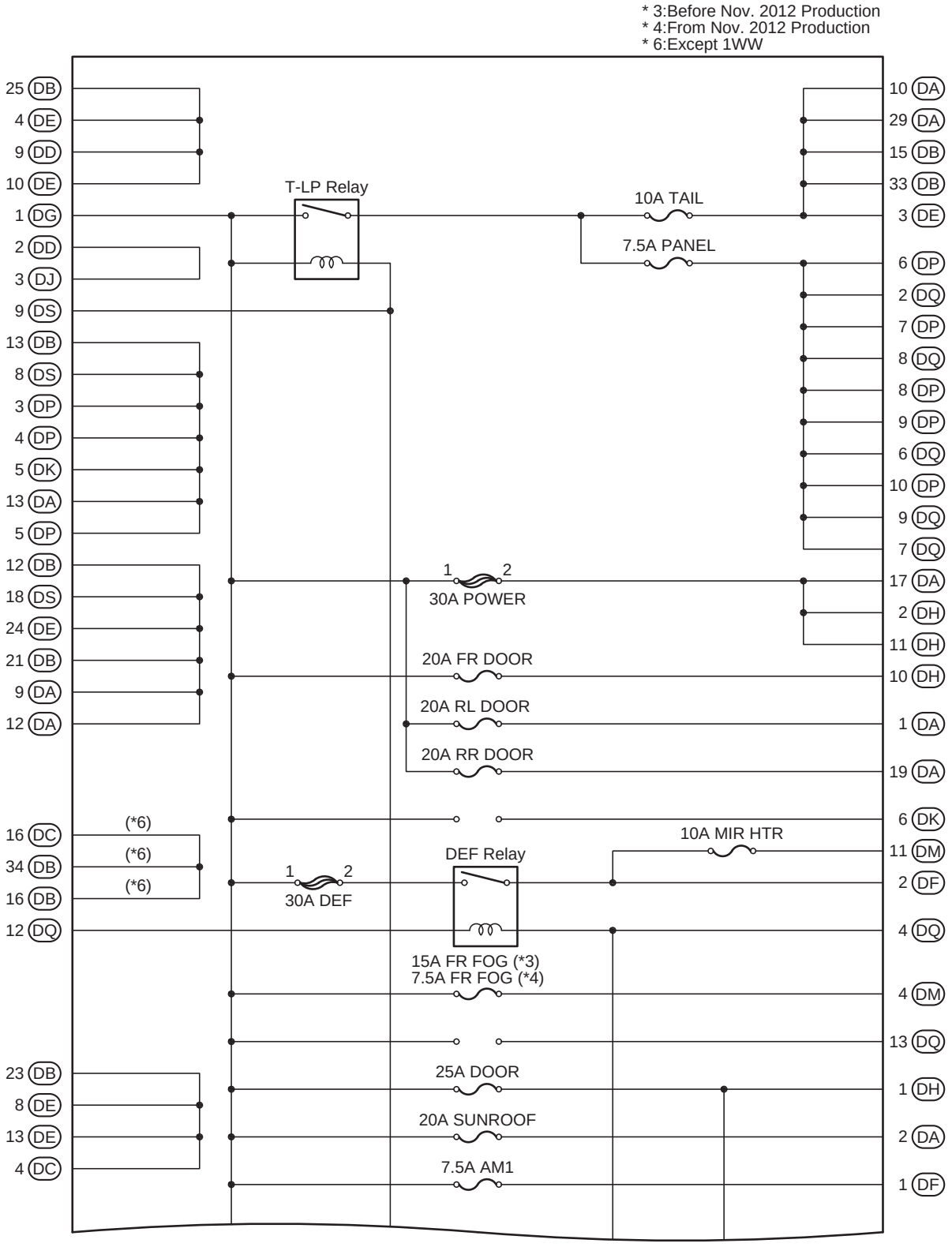

(Cont. Next Page)

(Cont'd)

* 1:Automatic A/C
* 2:Except Automatic A/C
* 5:1WW

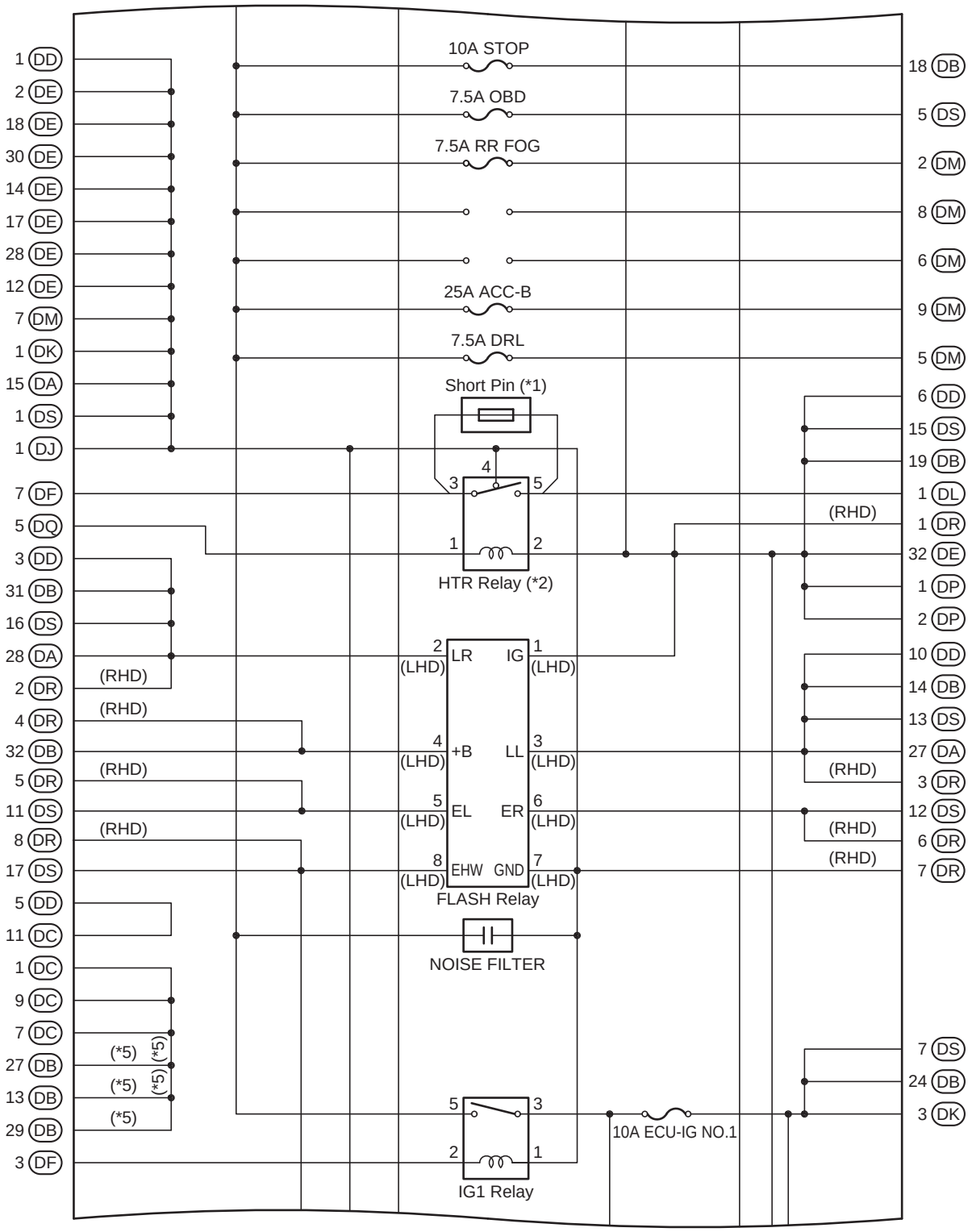

(Cont. Next Page)

[Instrument Panel J/B Assembly Inner Circuit]

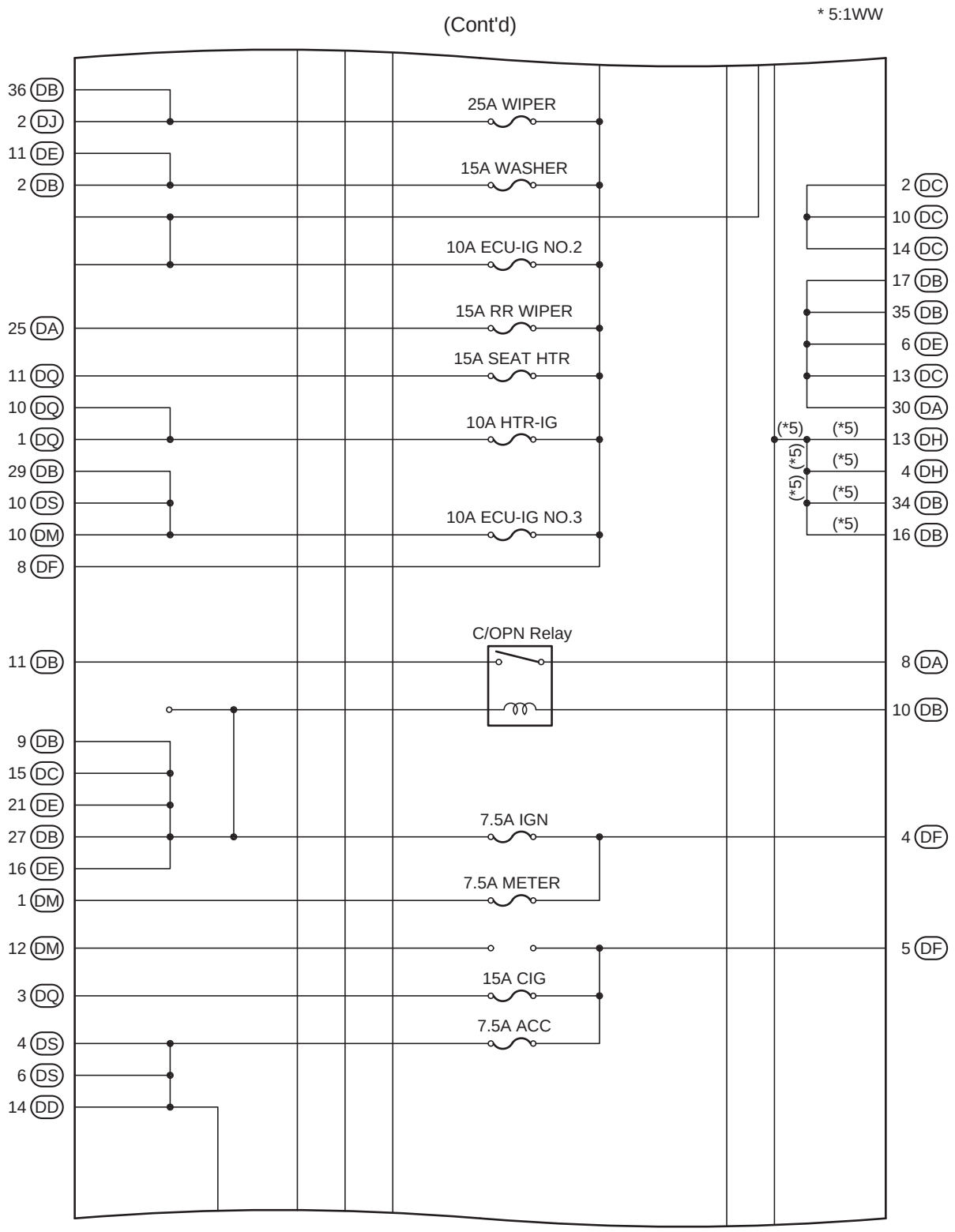

* 6:Except 1WW
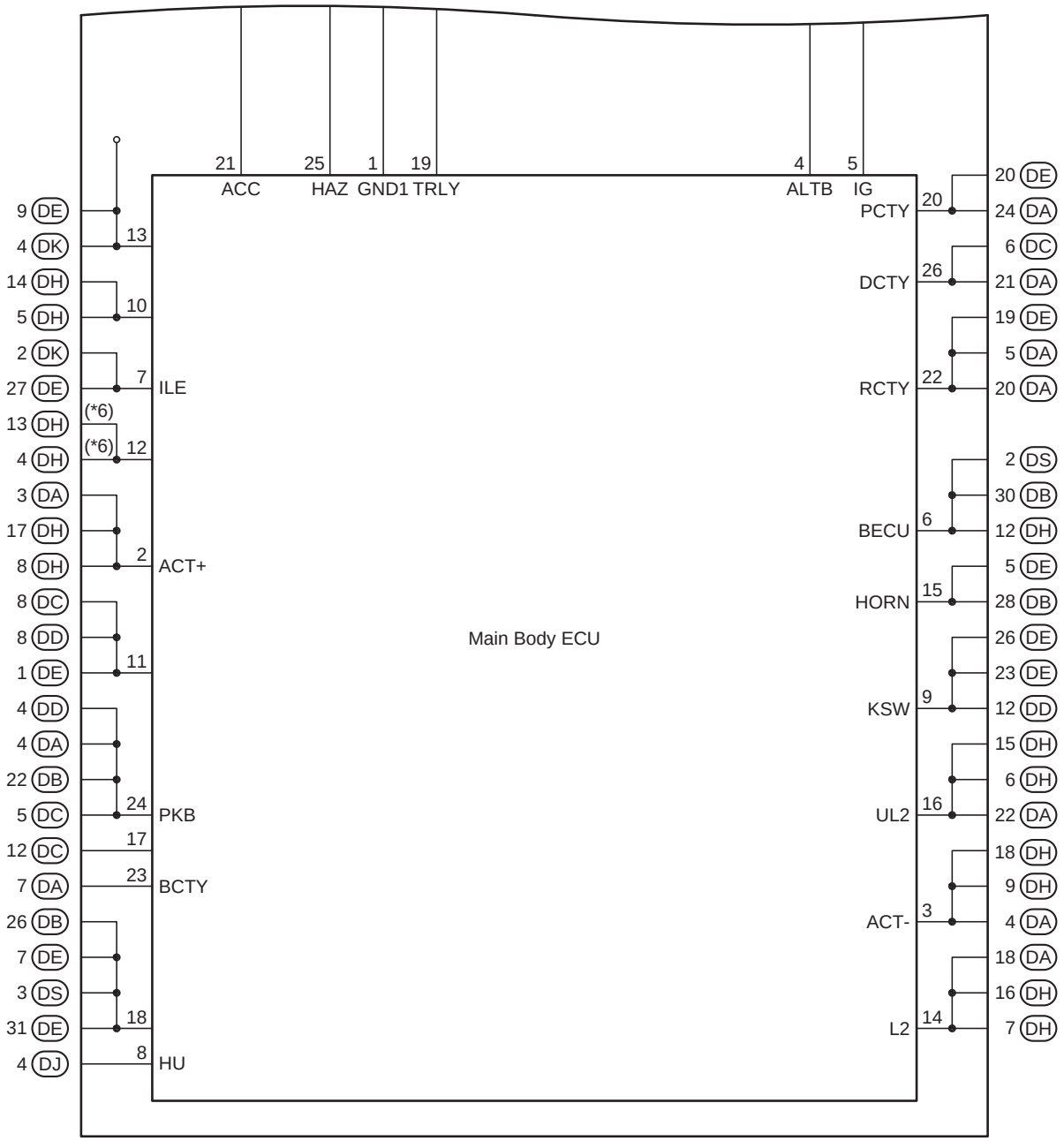
(Cont'd)