(Cont. next page)

Power Source (From May 2014 Production)

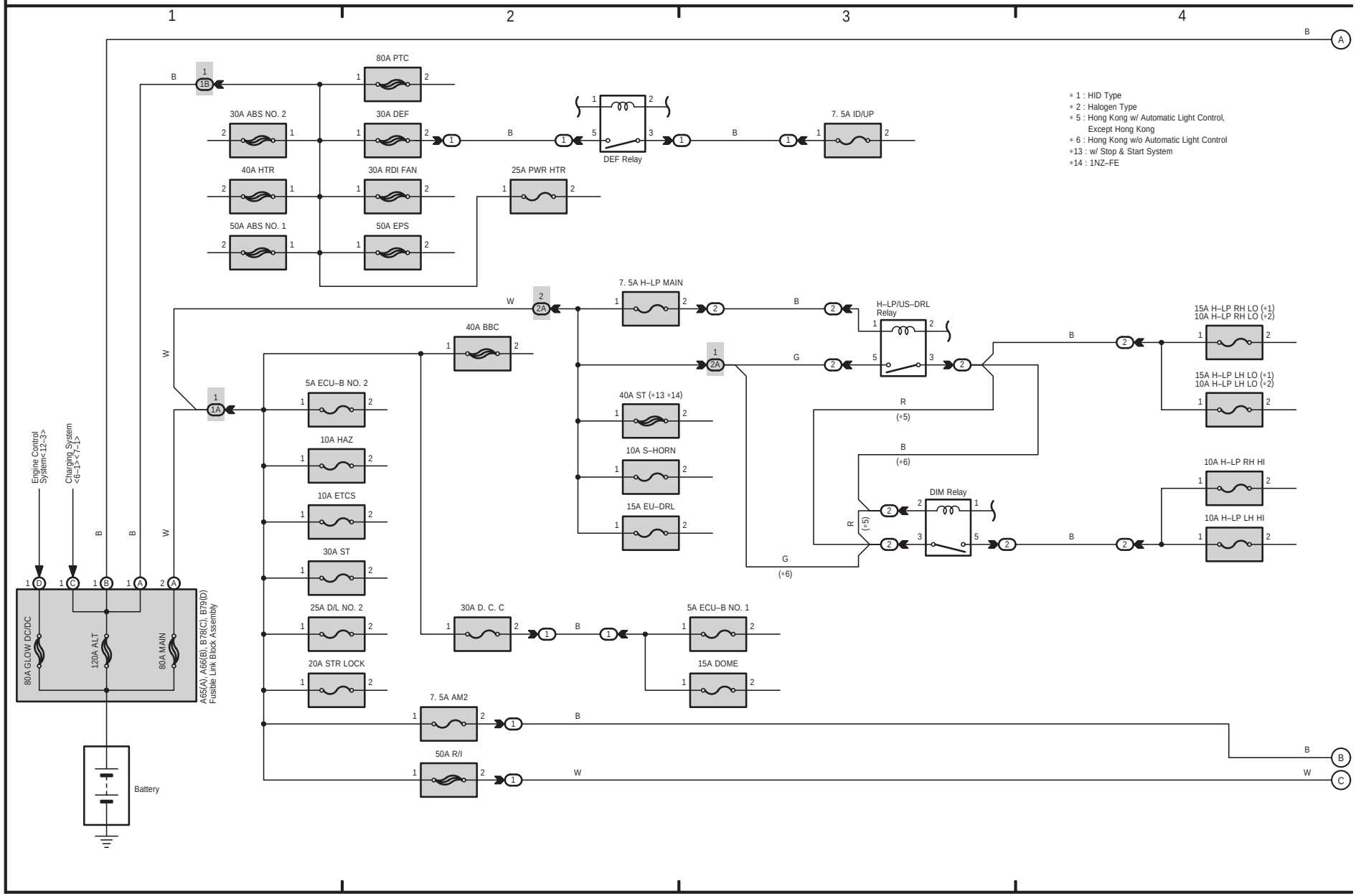

(Cont. next page)

Power Source (From May 2014 Production)

* 3 : w/ Entry & Start System
* 4 : w/o Entry & Start System

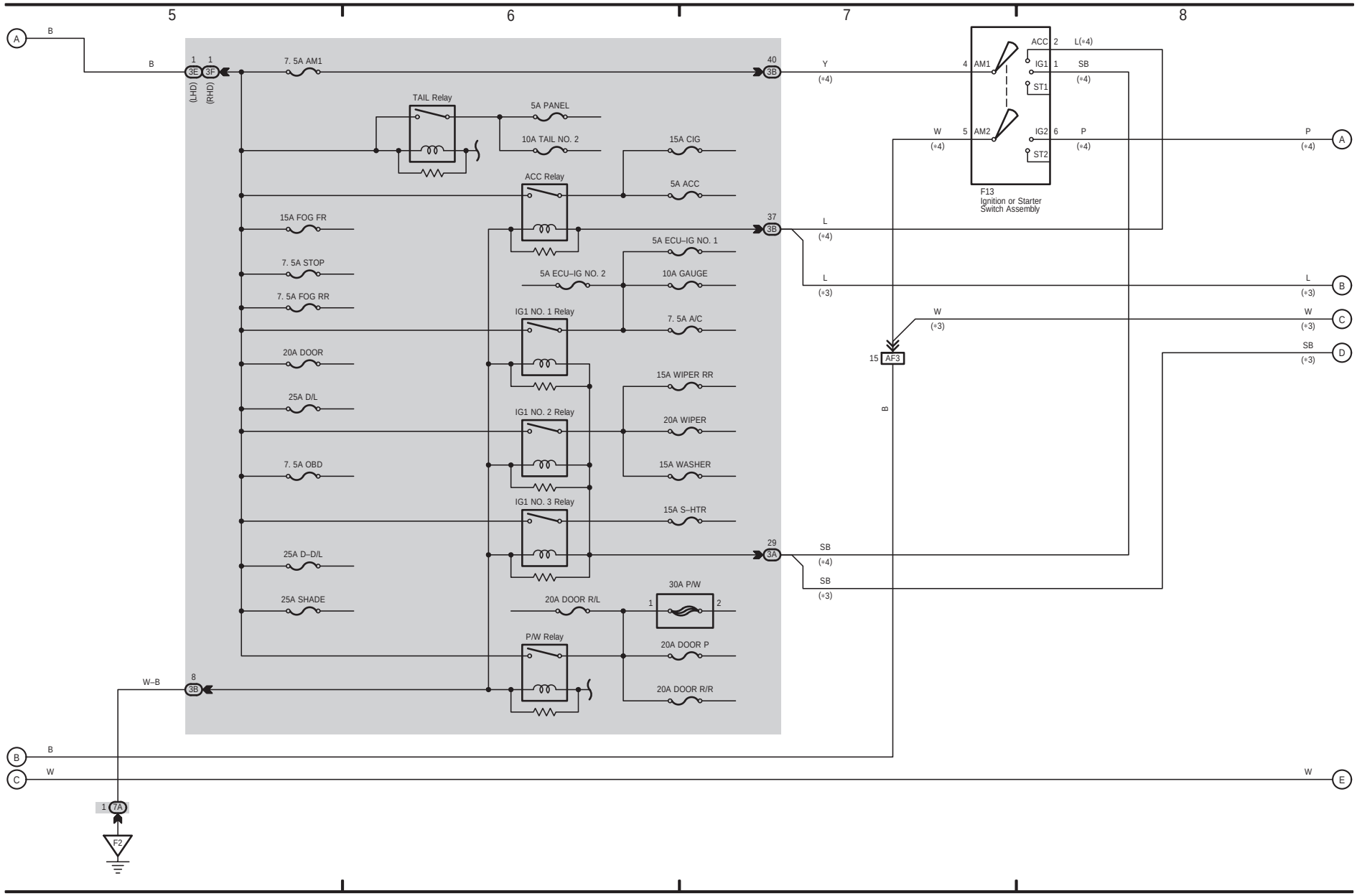
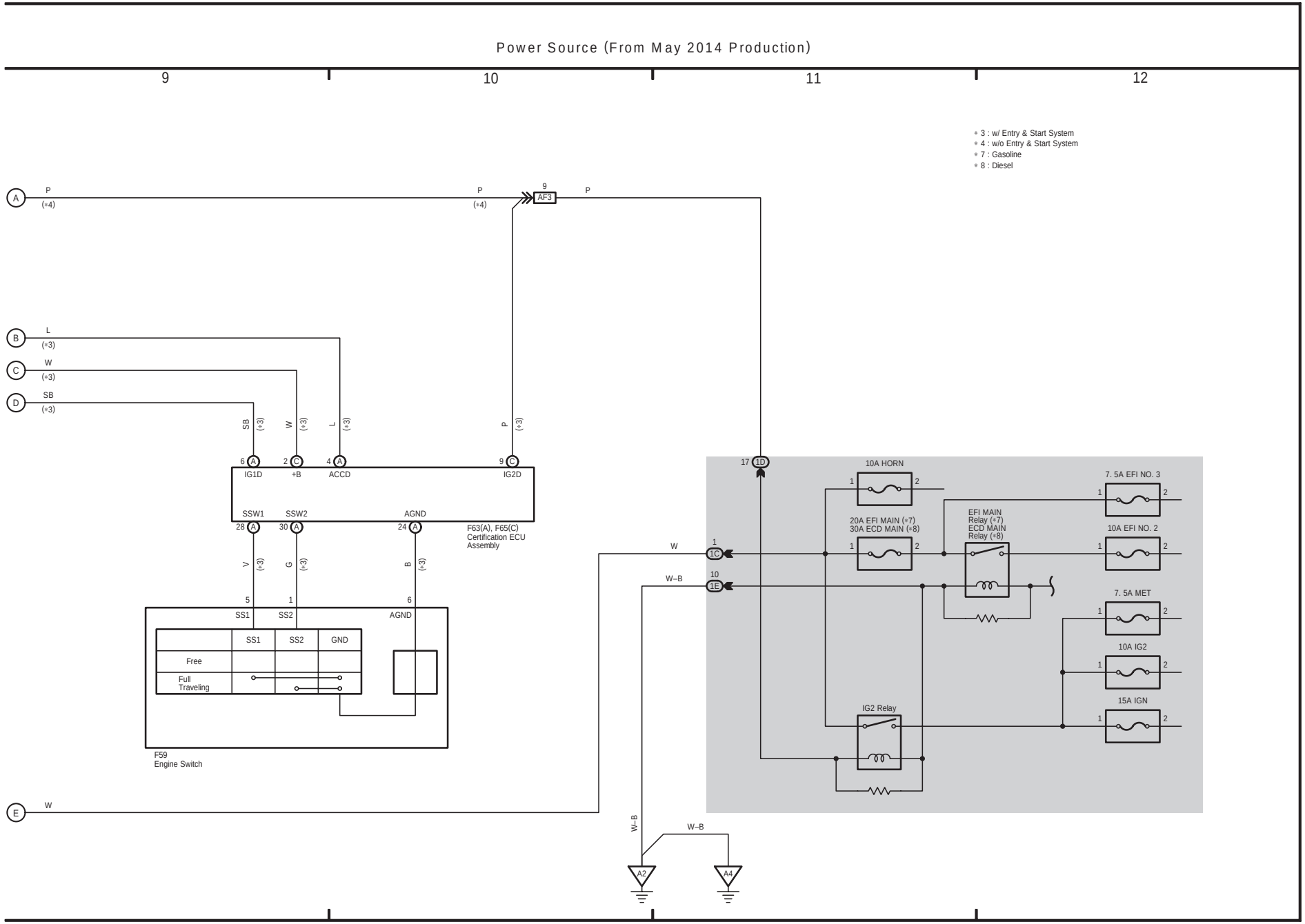
55 VERSO–S / RACTIS (Cont' d)