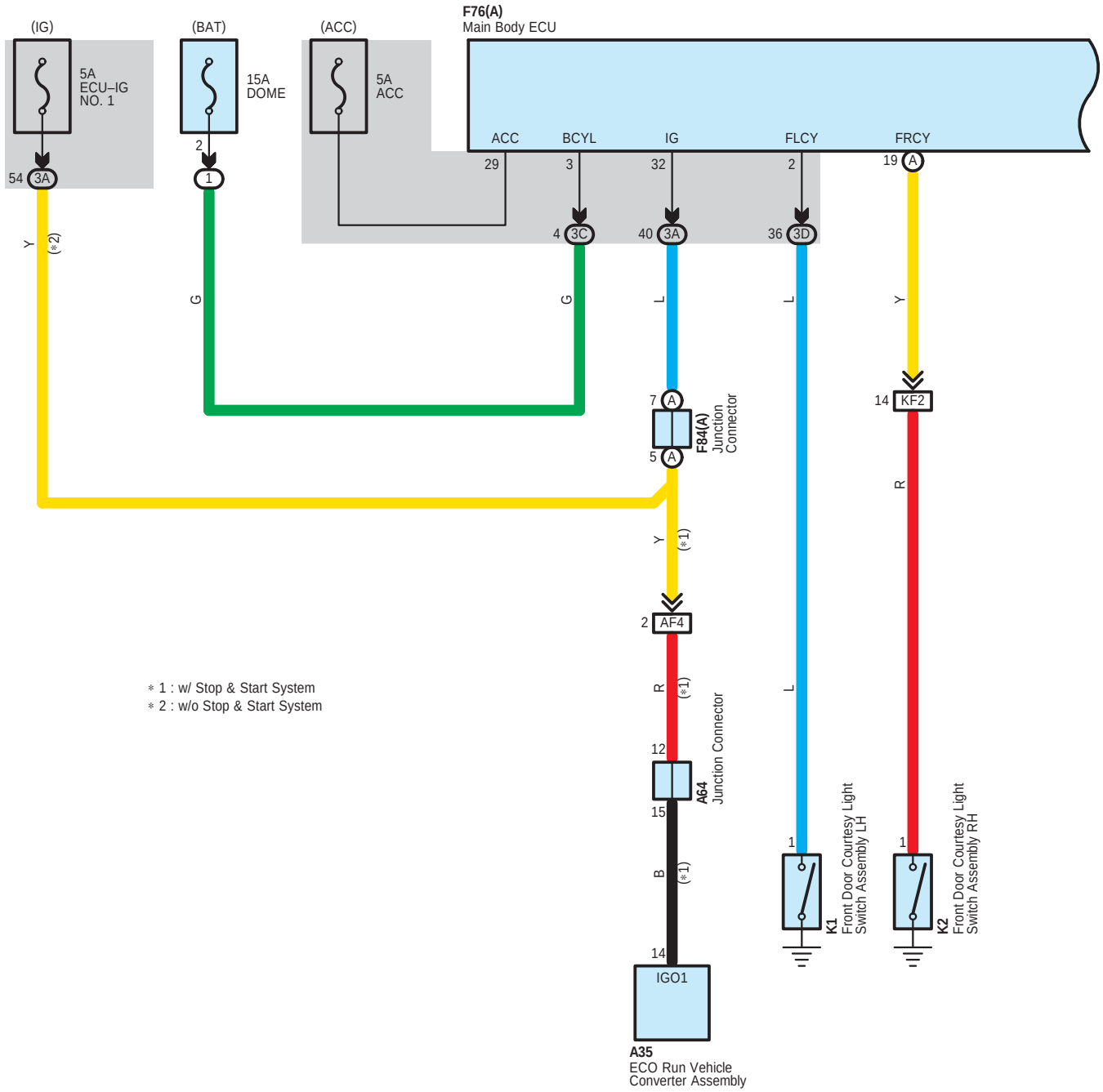
(IG)
5A
ECU–IG
NO. 1
54 3A
(BAT)
15A
DOME
2
1
(ACC)
5A
ACC
F76(A)
Main Body ECU
ACC
BCYL
IG
FLCY
FRCY
29
3
32
2
19 A
4 3C
40 3A
36 3D
Y
(*2)
G
G
L
L
Y
7 A
5 A
F84(A)
Junction
Connector
14 KF2
R
Y
(*1)
2 AF4
R
(*1)
12
15
A64
Junction Connector
B
(*1)
14
IGO1
A35
ECO Run Vehicle
Converter Assembly
L
1
K1
Front Door Courtesy Light
Switch Assembly LH
1
K2
Front Door Courtesy Light
Switch Assembly RH
* 1 : w/ Stop & Start System
* 2 : w/o Stop & Start System

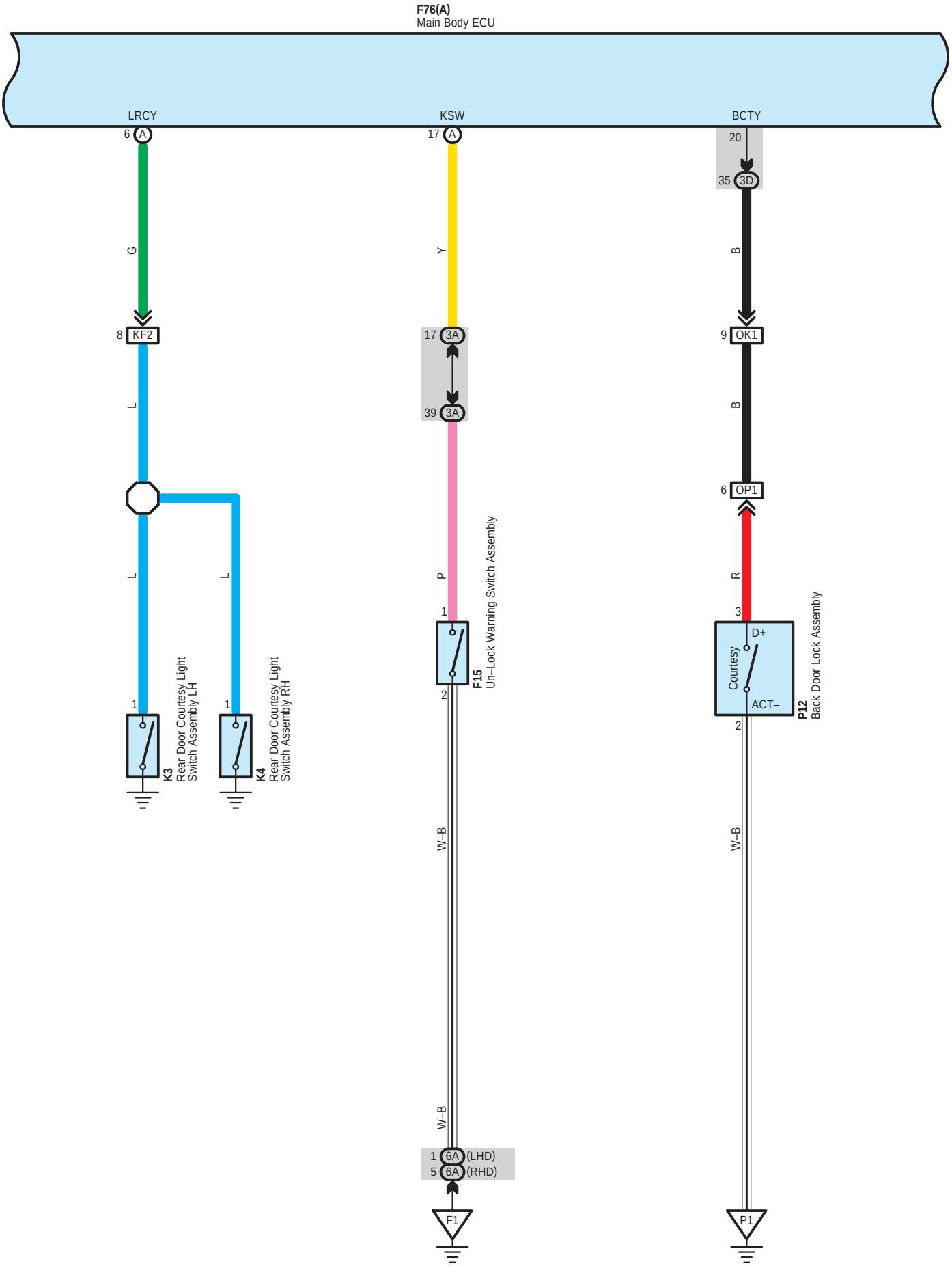
F76(A)
Main Body ECU
LRCY
KSW
BCTY
6 A
17 A
20
35 3D
G
Y
B
8 KF2
17 3A
39 3A
9 OK1
L
B
6 OP1
L
L
P
R
1
3
D+
Courtesy
ACT–
2
K3
Rear Door Courtesy Light Switch Assembly LH
K4
Rear Door Courtesy Light Switch Assembly RH
F15
Un–Lock Warning Switch Assembly
P12
Back Door Lock Assembly
W–B
W–B
W–B
1 6A (LHD)
5 6A (RHD)
F1
P1

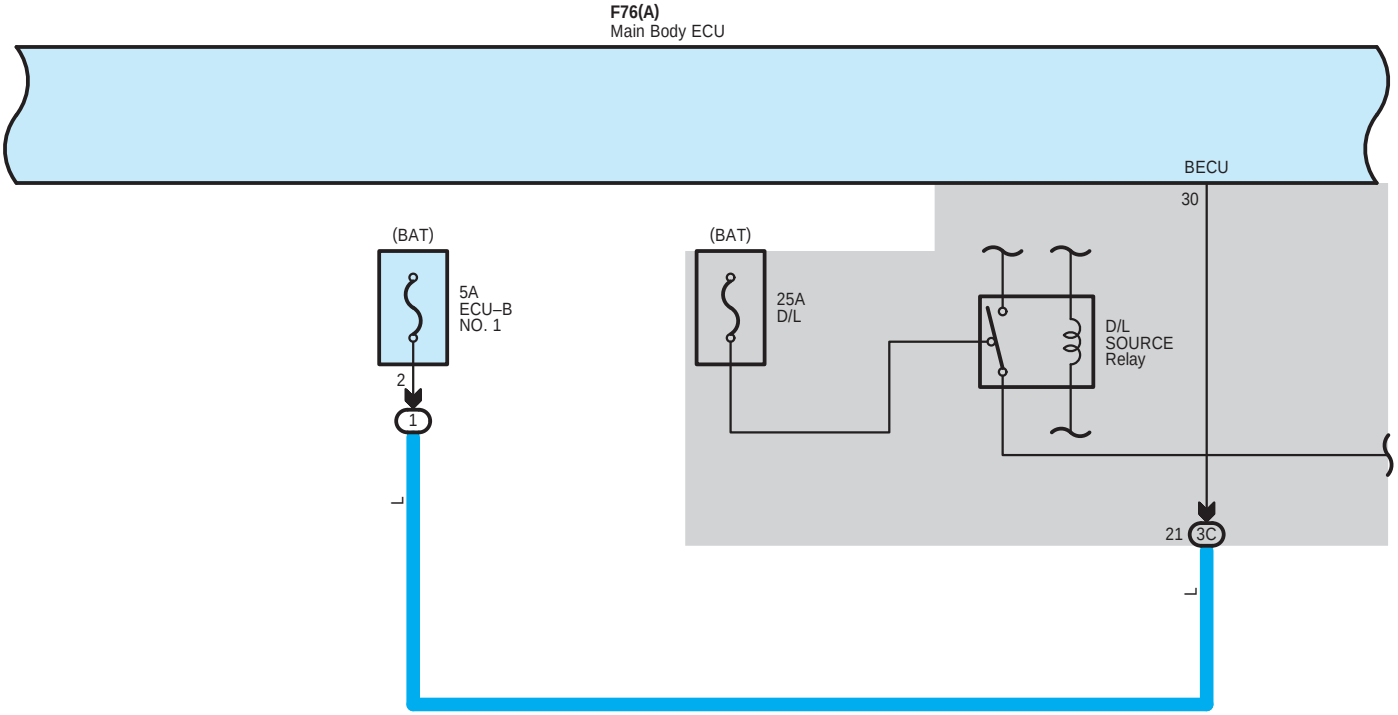

＊ 3 : w/ Double Locking
＊ 4 : w/o Double Locking

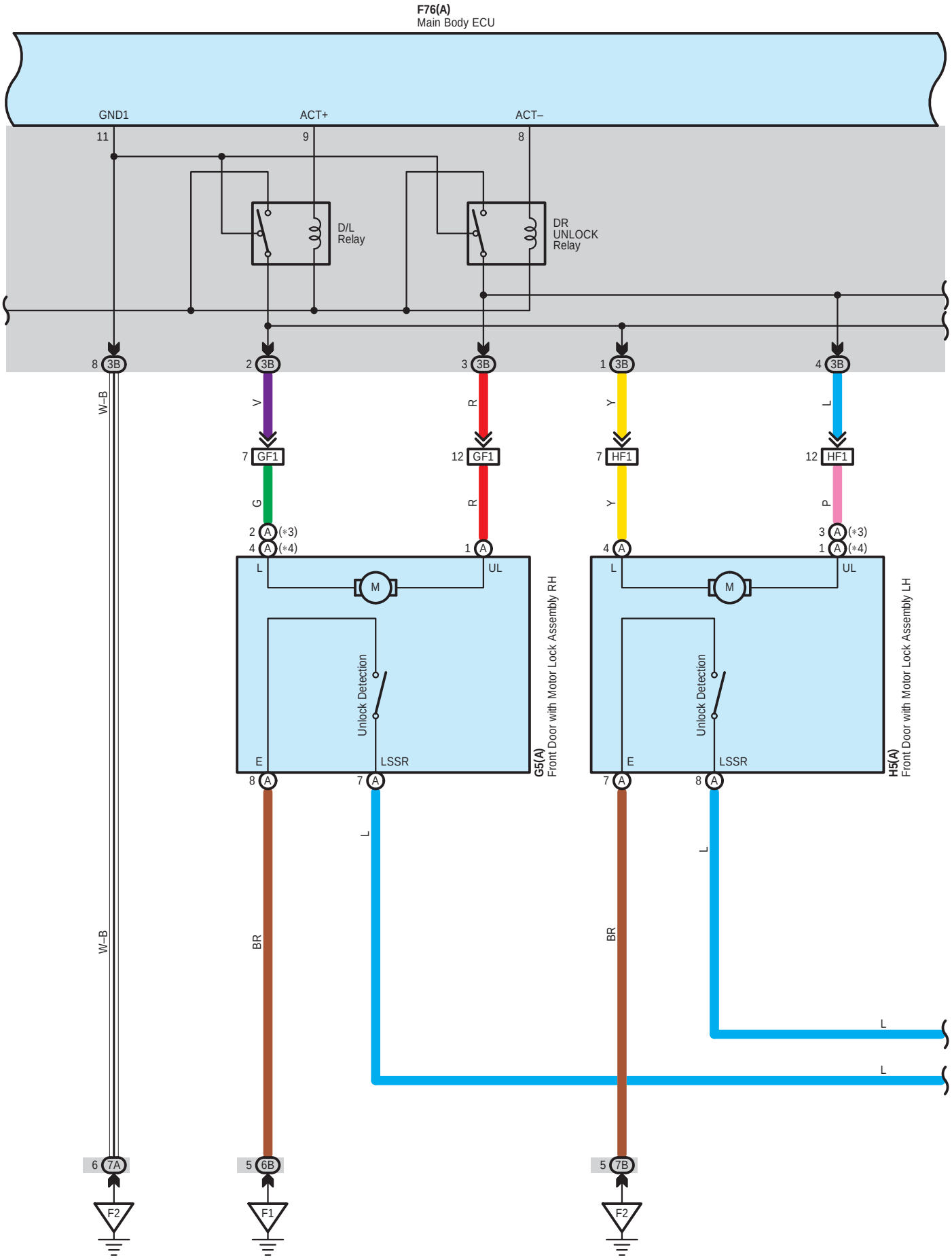
F76(A)
Main Body ECU
GND1
ACT+
ACT–
11
9
8
D/L
Relay
DR
UNLOCK
Relay
8 3B
2 3B
3 3B
1 3B
4 3B
W–B
V
R
Y
L
7 GF1
12 GF1
7 HF1
12 HF1
G
R
Y
P
2 A (*3)
4 A (*4)
1 A
4 A
3 A (*3)
1 A (*4)
L
UL
M
Unlock Detection
E
LSSR
8 A
7 A
G5(A)
Front Door with Motor Lock Assembly RH
H5(A)
Front Door with Motor Lock Assembly LH
BR
L
6 7A
5 6B
5 7B
F2
F1

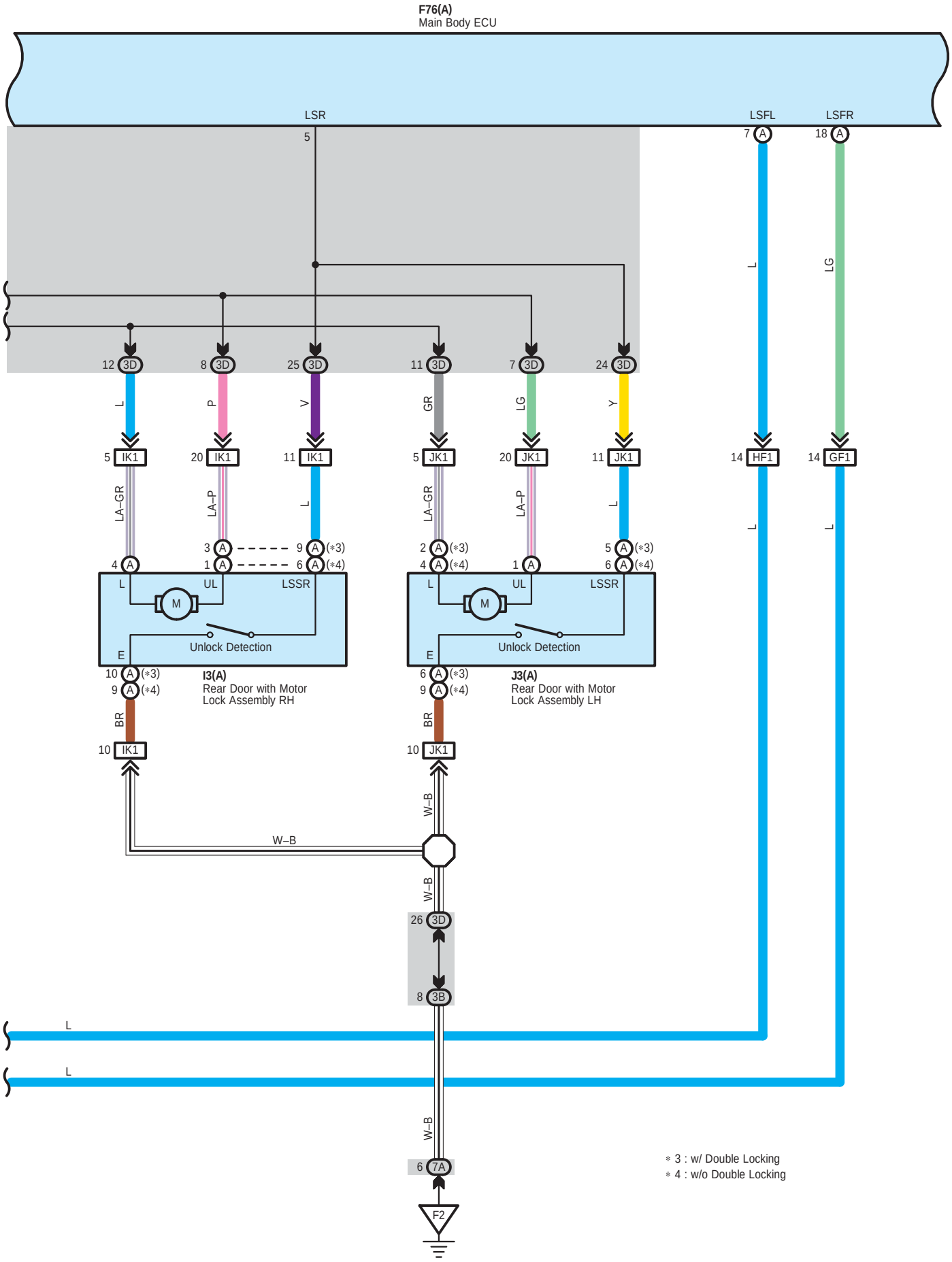
F76(A)
Main Body ECU
LSR
5
LSFL
7 A
LSFR
18 A
L
LG
12 3D
8 3D
25 3D
11 3D
7 3D
24 3D
L
P
V
GR
LG
Y
5 IK1
20 IK1
11 IK1
5 JK1
20 JK1
11 JK1
14 HF1
14 GF1
LA–GR
LA–P
L
LA–GR
LA–P
L
L
L
3 A
1 A
9 A (*3)
6 A (*4)
2 A (*3)
4 A (*4)
1 A
5 A (*3)
6 A (*4)
4 A
L
UL
LSSR
M
Unlock Detection
E
10 A (*3)
9 A (*4)
I3(A)
Rear Door with Motor
Lock Assembly RH
6 A (*3)
9 A (*4)
J3(A)
Rear Door with Motor
Lock Assembly LH
BR
10 IK1
BR
10 JK1
W–B
W–B
W–B
26 3D
8 3B
L
L
W–B
6 7A
F2
* 3 : w/ Double Locking
* 4 : w/o Double Locking

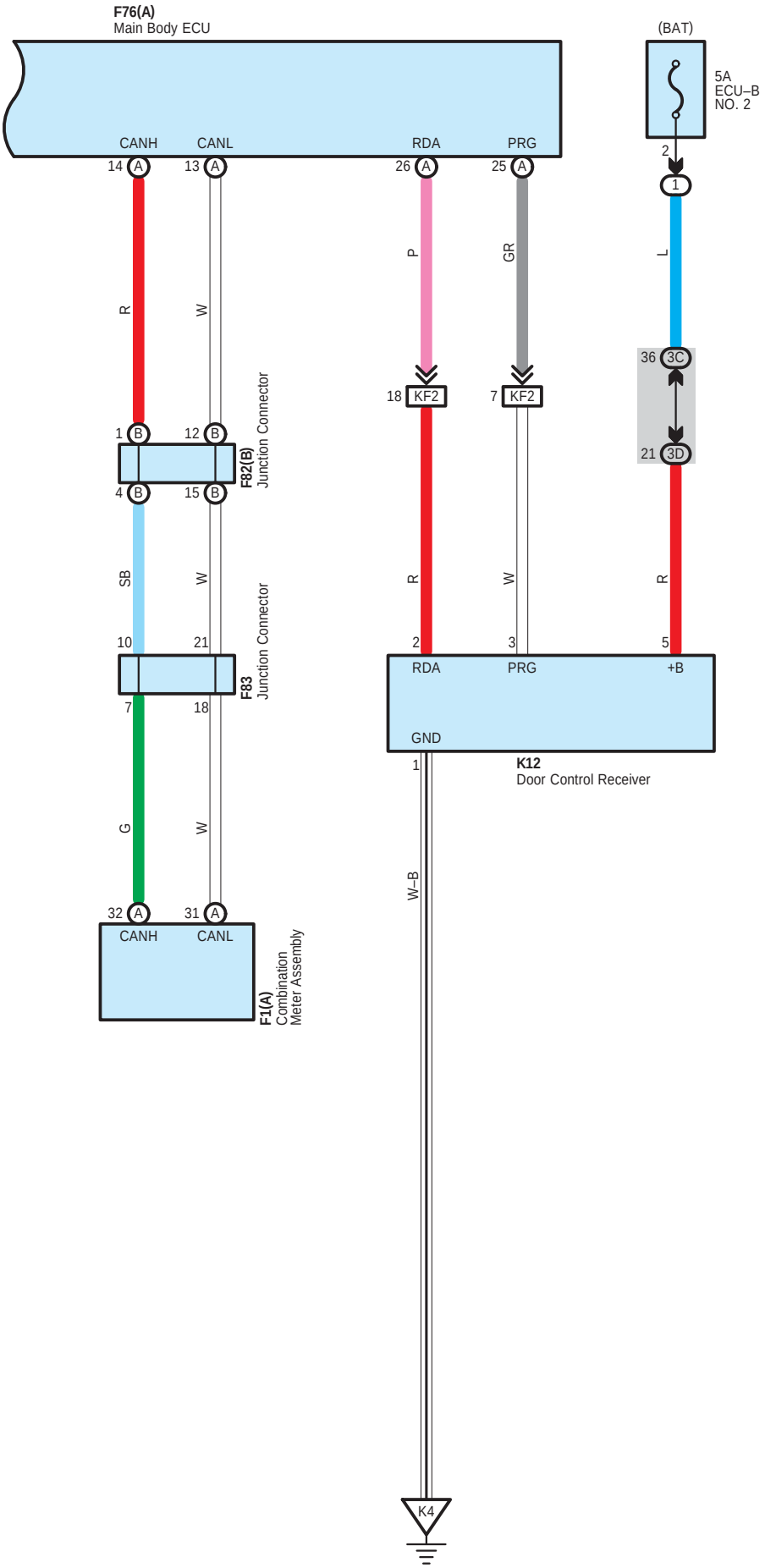
F76(A)
Main Body ECU
CANH
CANL
RDA
PRG
14 A
13 A
26 A
25 A
(BAT)
5A
ECU–B
NO. 2
2
1
R
W
P
GR
L
36 3C
21 3D
18 KF2
7 KF2
1 B
12 B
4 B
15 B
F82(B)
Junction Connector
SB
W
R
W
R
10
21
2
3
5
F83
Junction Connector
7
18
RDA
PRG
+B
GND
1
K12
Door Control Receiver
G
W
W–B
32 A
31 A
CANH
CANL
F1(A)
Combination
Meter Assembly
K4

A 35
Black

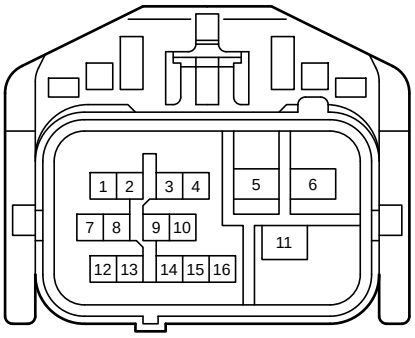

A 64
White

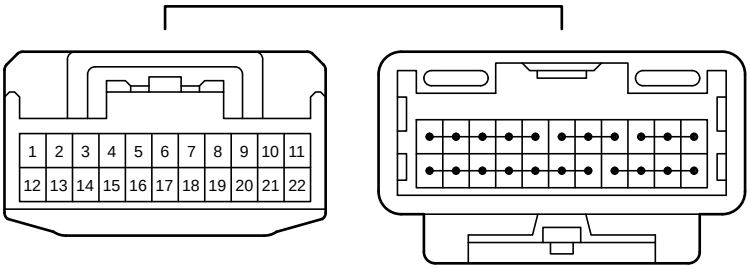

F 1
Black

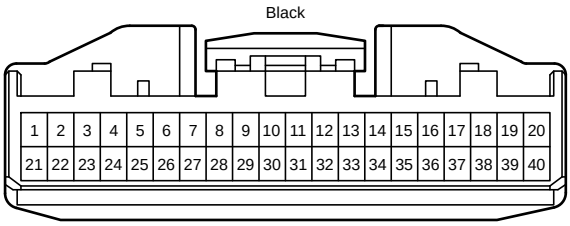

F 15
White

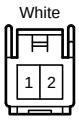

F 76
White

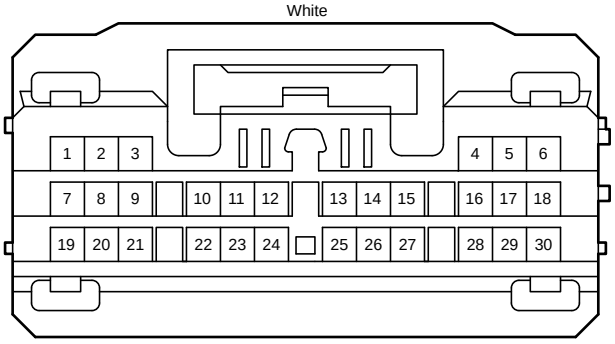

F 82
Blue

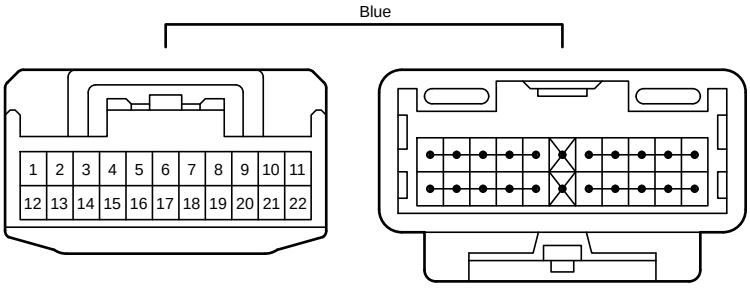

F 83
Gray

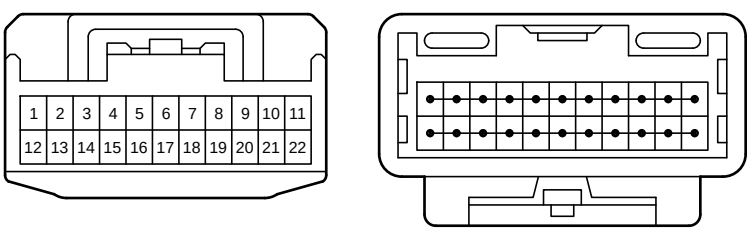

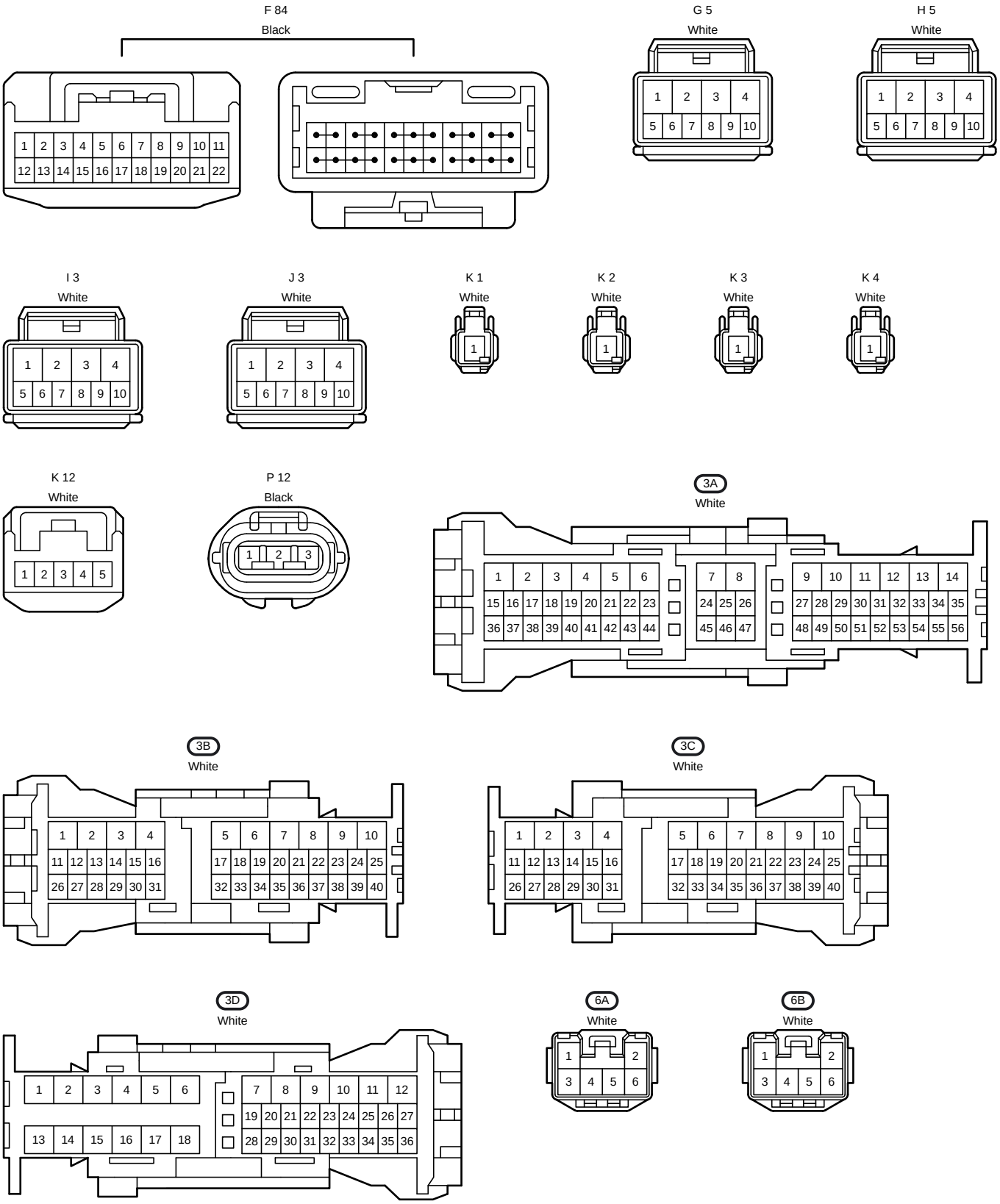
F 84
Black
G 5
White
H 5
White
I 3
White
J 3
White
K 1
White
K 2
White
K 3
White
K 4
White
K 12
White
P 12
Black
3A
White
3B
White
3C
White
3D
White
6A
White
6B
White

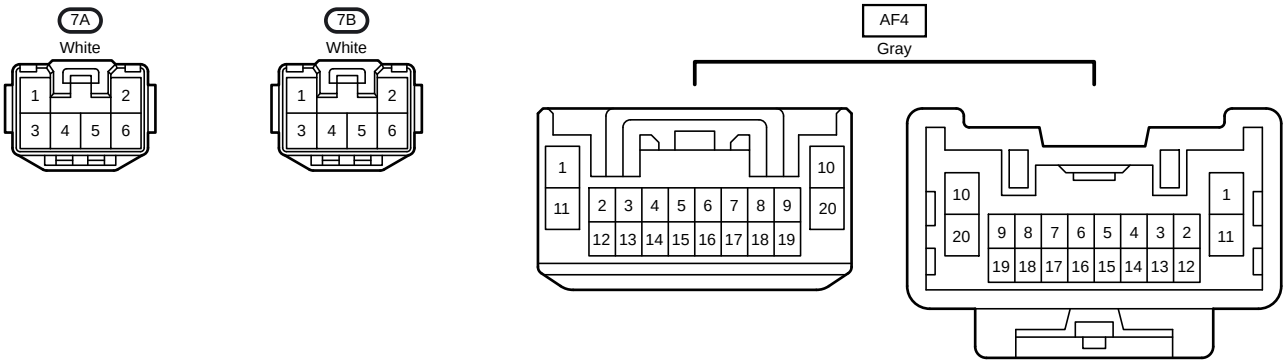
7A
White
1 2 3 4 5 6
7B
White
1 2 3 4 5 6
AF4
Gray
1 10 11 20
2 3 4 5 6 7 8 9
12 13 14 15 16 17 18 19
10 1 20 11
9 8 7 6 5 4 3 2
19 18 17 16 15 14 13 12

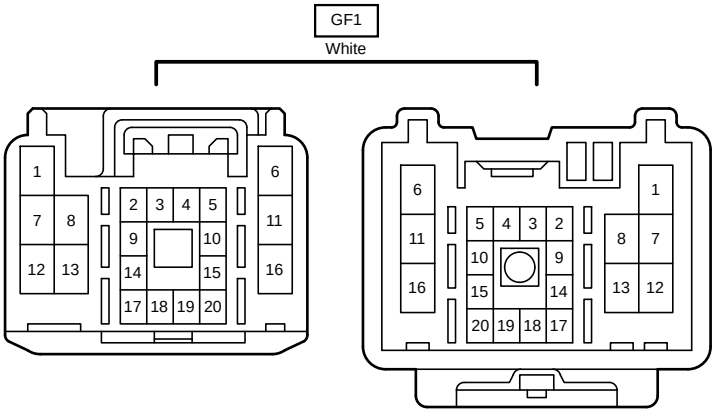
GF1
White
1 6 7 8 11 12 13 16
2 3 4 5 9 10 14 15 17 18 19 20
6 1 11 8 7 16 13 12
5 4 3 2 10 9 15 14 20 19 18 17

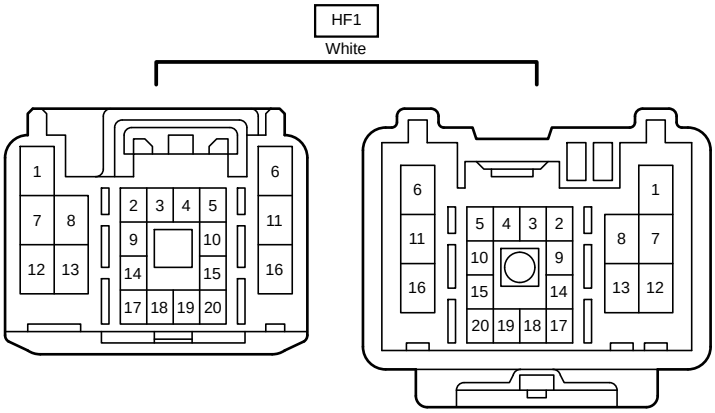
HF1
White
1 6 7 8 11 12 13 16
2 3 4 5 9 10 14 15 17 18 19 20
6 1 11 8 7 16 13 12
5 4 3 2 10 9 15 14 20 19 18 17

IK1
White

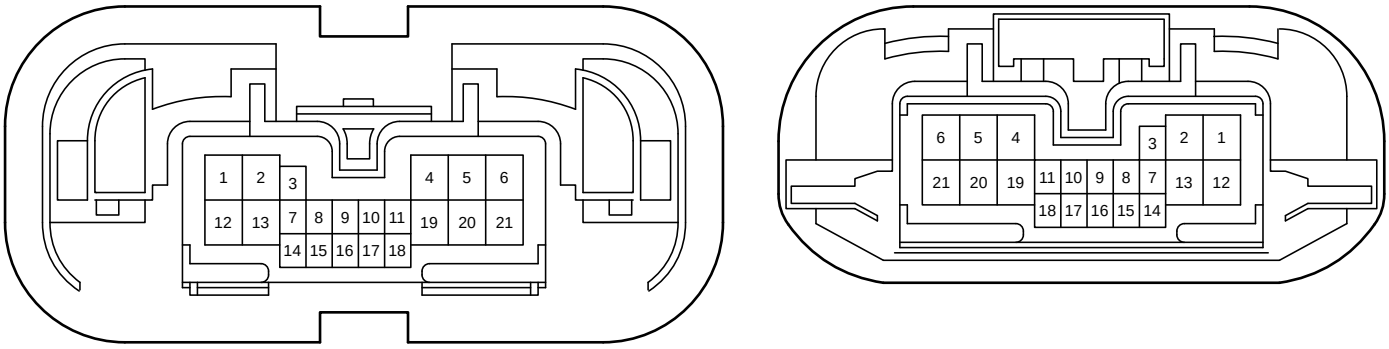

JK1
White

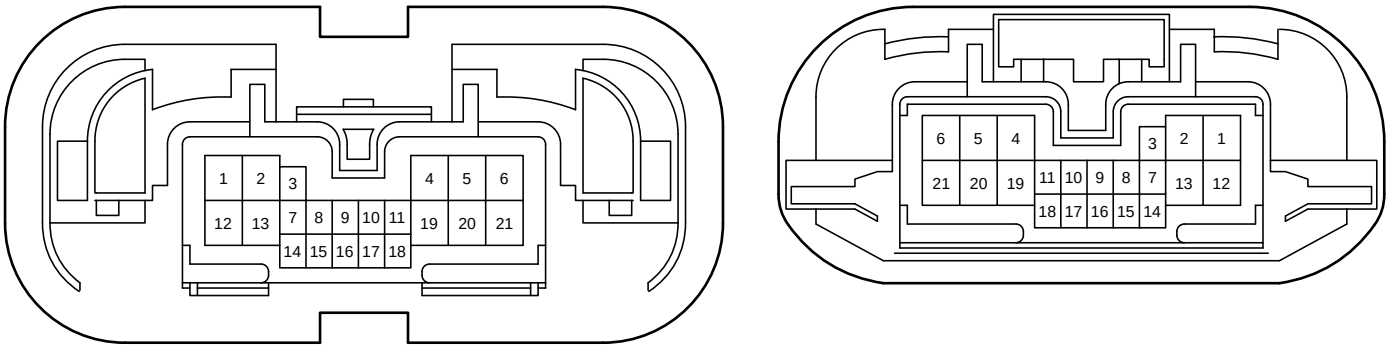

KF2
White

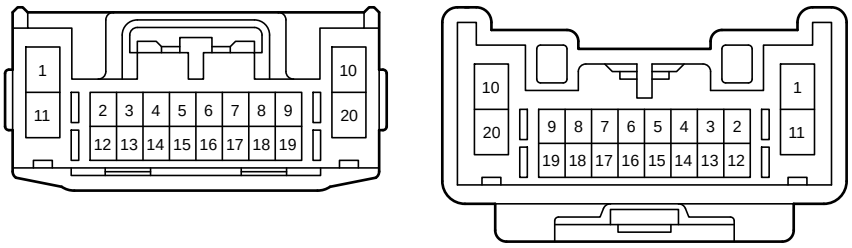

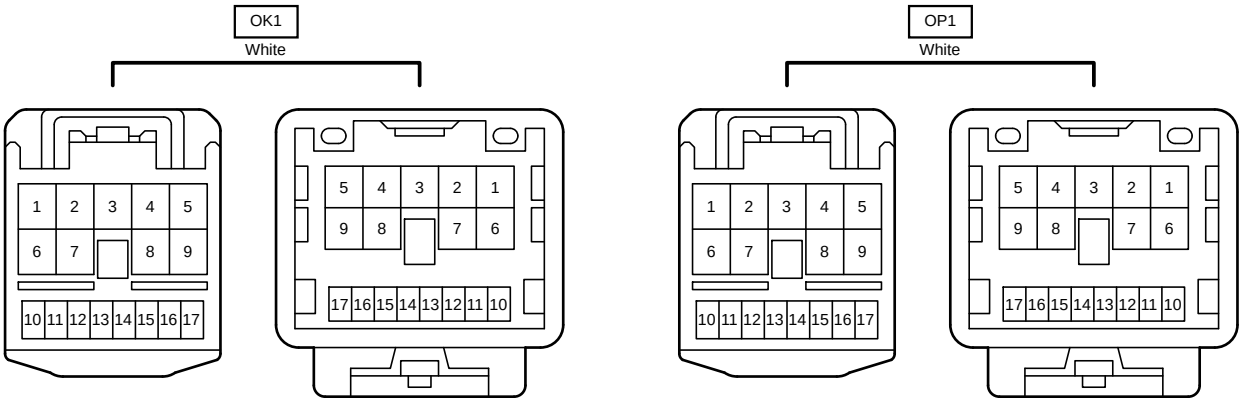
OK1
White
1 2 3 4 5
6 7 8 9
10 11 12 13 14 15 16 17
5 4 3 2 1
9 8 7 6
17 16 15 14 13 12 11 10
OP1
White
1 2 3 4 5
6 7 8 9
10 11 12 13 14 15 16 17
5 4 3 2 1
9 8 7 6
17 16 15 14 13 12 11 10