[Instrument Panel J/B Assembly Inner Circuit]

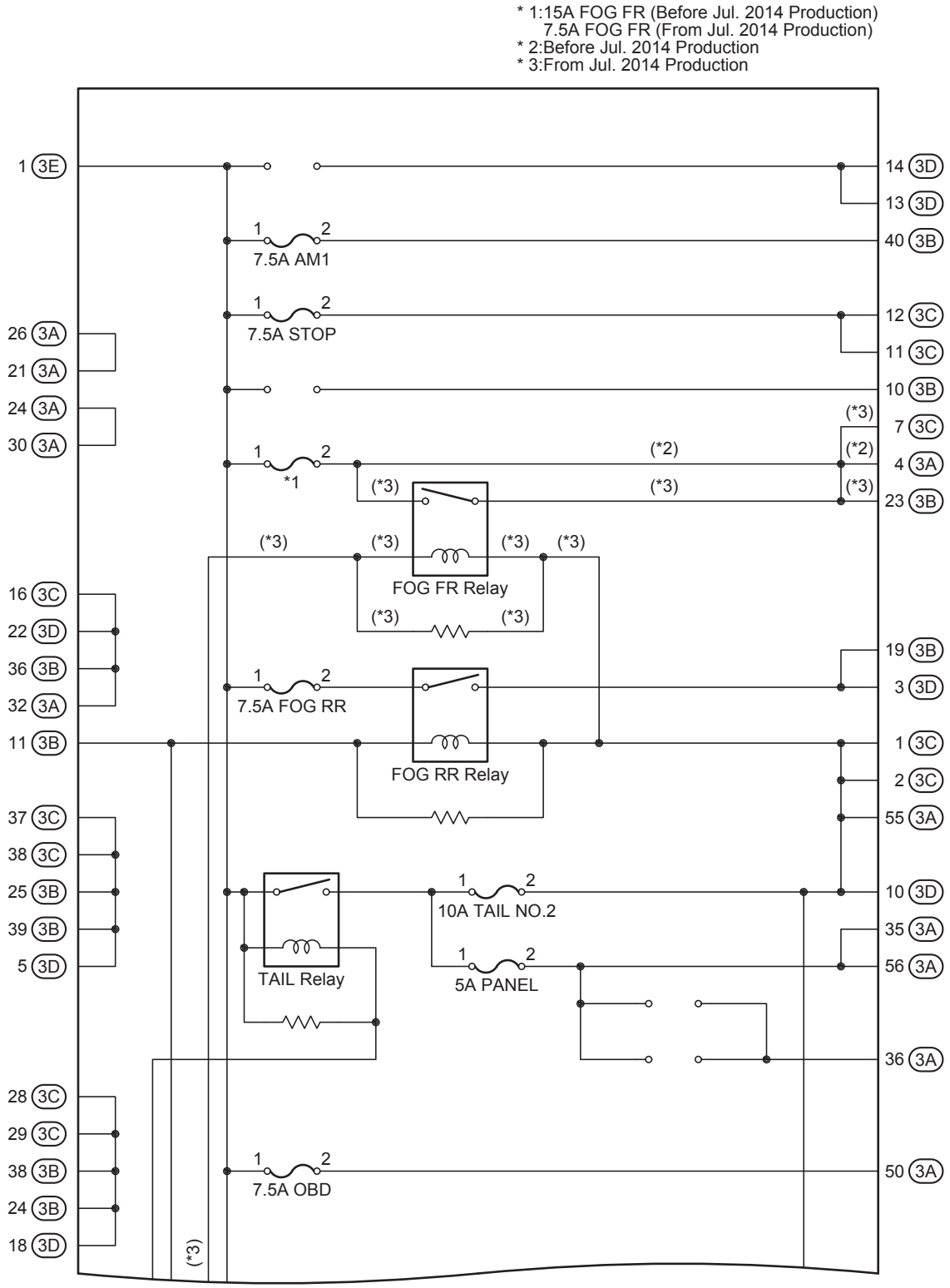

(Cont. Next Page)

* 2:Before Jul. 2014 Production
* 3:From Jul. 2014 Production

(Cont'd)

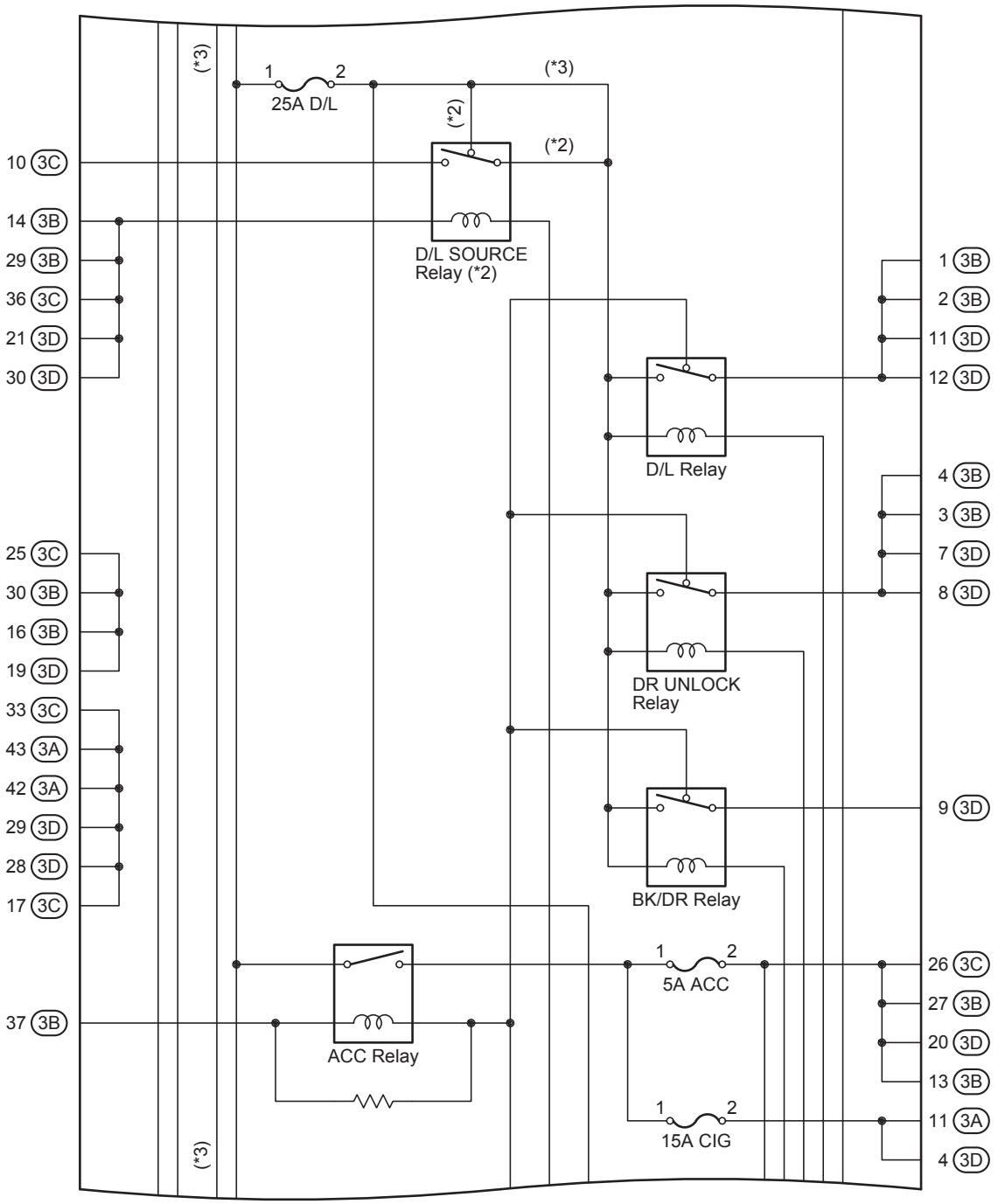

(Cont. Next Page)

[Instrument Panel J/B Assembly Inner Circuit]

* 3:From Jul. 2014 Production

(Cont'd)

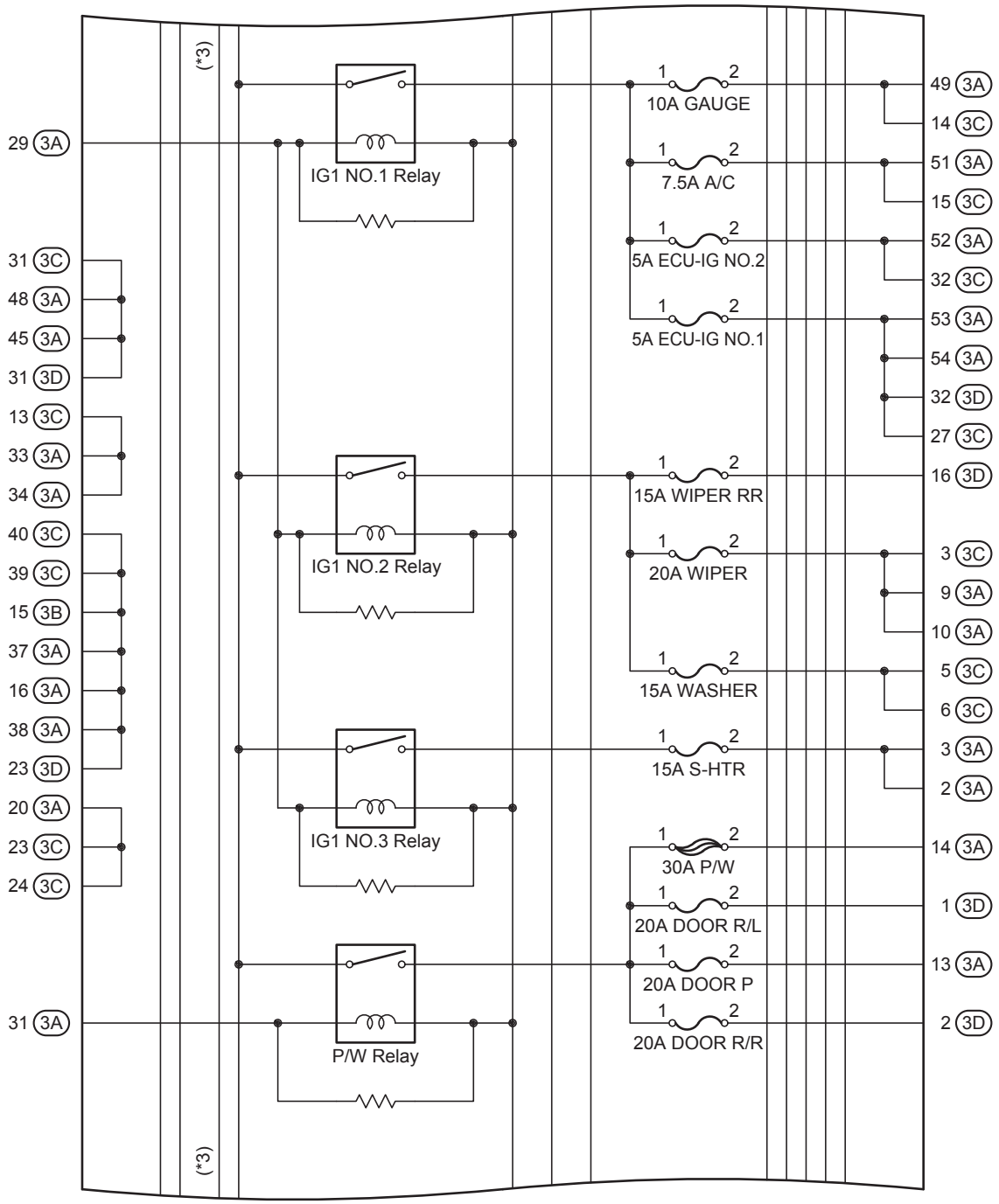

(Cont. Next Page)

* 3:From Jul. 2014 Production
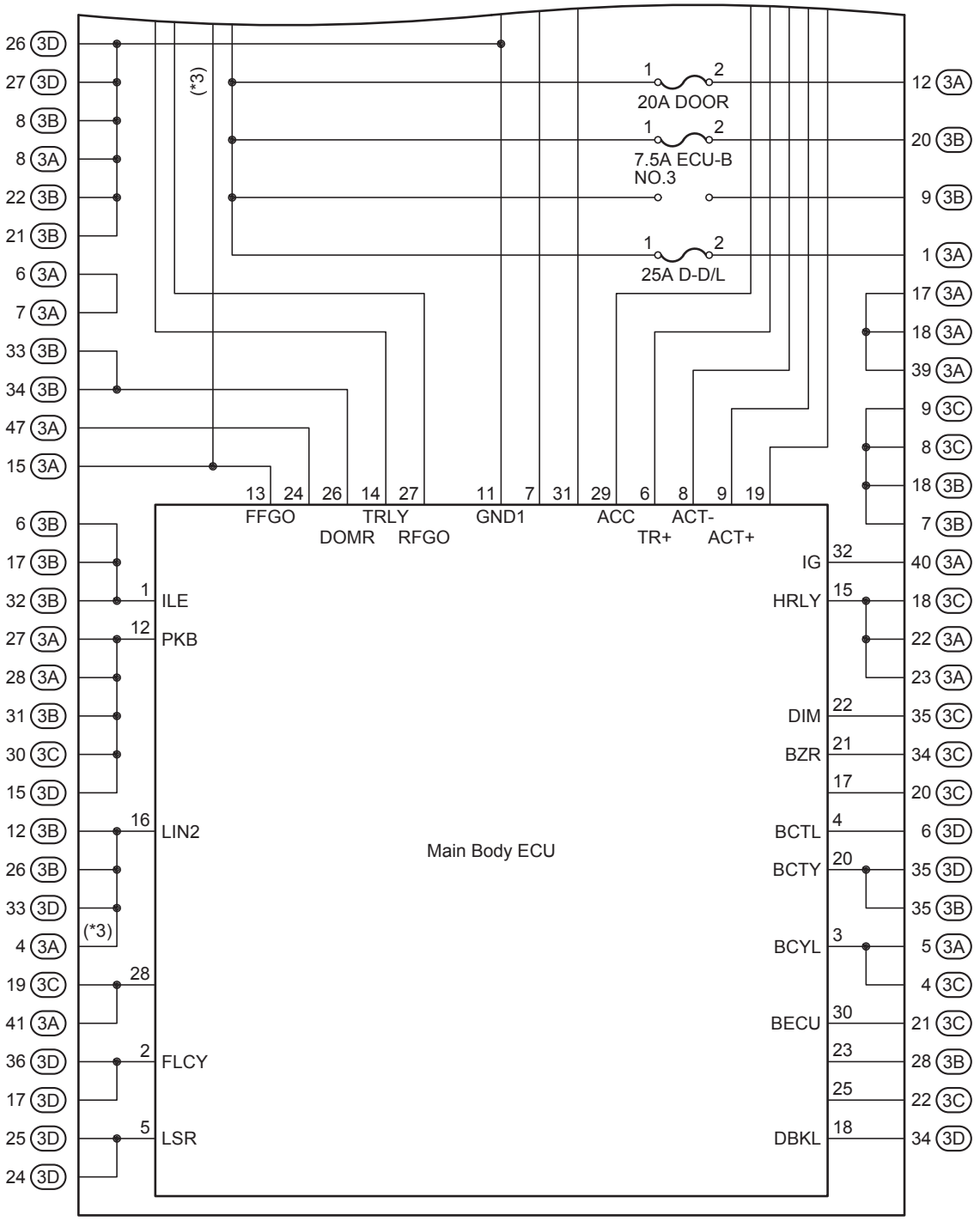
(Cont'd)