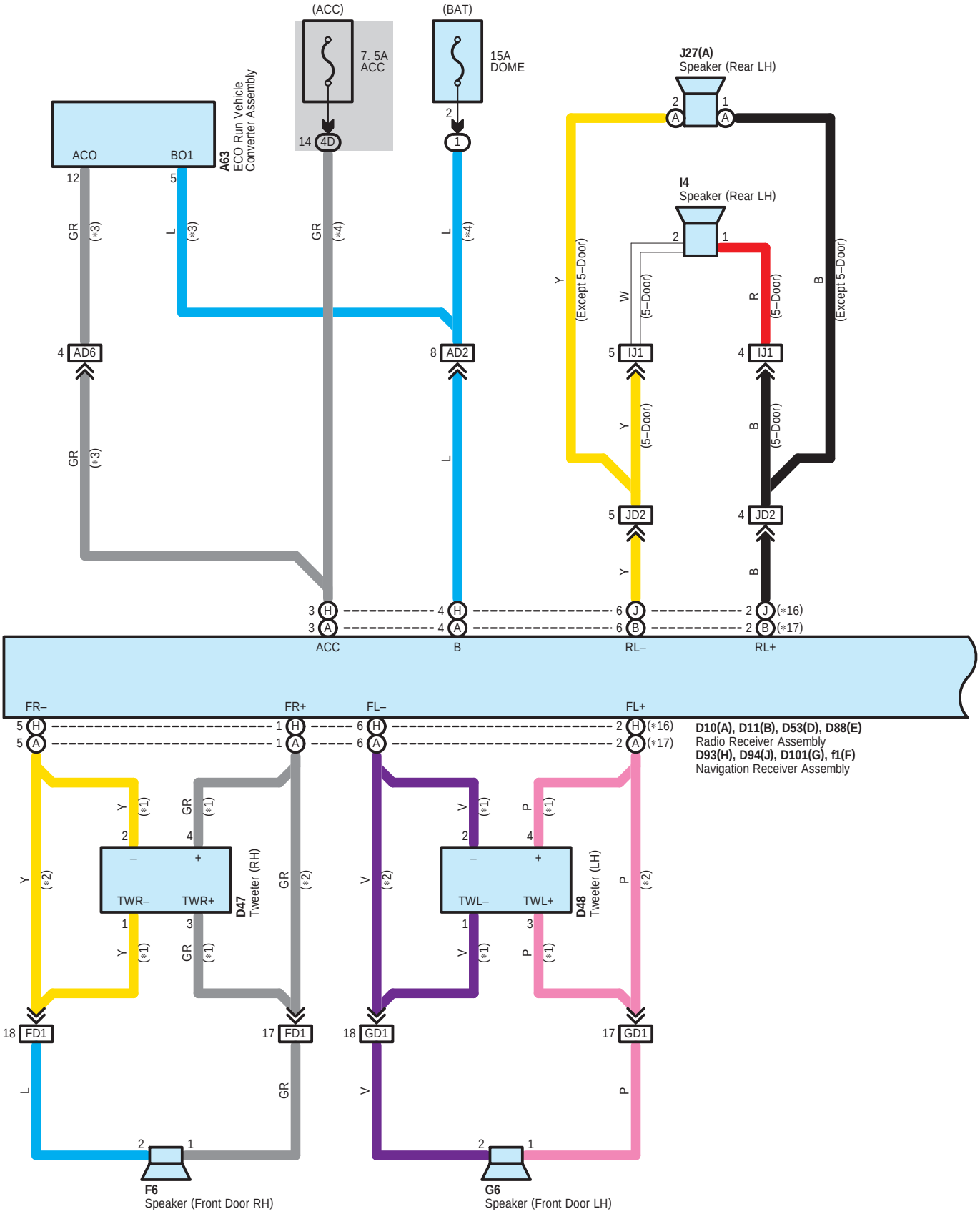
(ACC)
7. 5A
ACC
(BAT)
15A
DOME
A63
ECO Run Vehicle
Converter Assembly
ACO
BO1
J27(A)
Speaker (Rear LH)
I4
Speaker (Rear LH)
(Except 5–Door)
(5–Door)
AD6
AD2
IJ1
JD2
ACC
B
RL–
RL+
FR–
FR+
FL–
FL+
D10(A), D11(B), D53(D), D88(E)
Radio Receiver Assembly
D93(H), D94(J), D101(G), f1(F)
Navigation Receiver Assembly
D47
Tweeter (RH)
TWR–
TWR+
D48
Tweeter (LH)
TWL–
TWL+
FD1
GD1
F6
Speaker (Front Door RH)
G6
Speaker (Front Door LH)

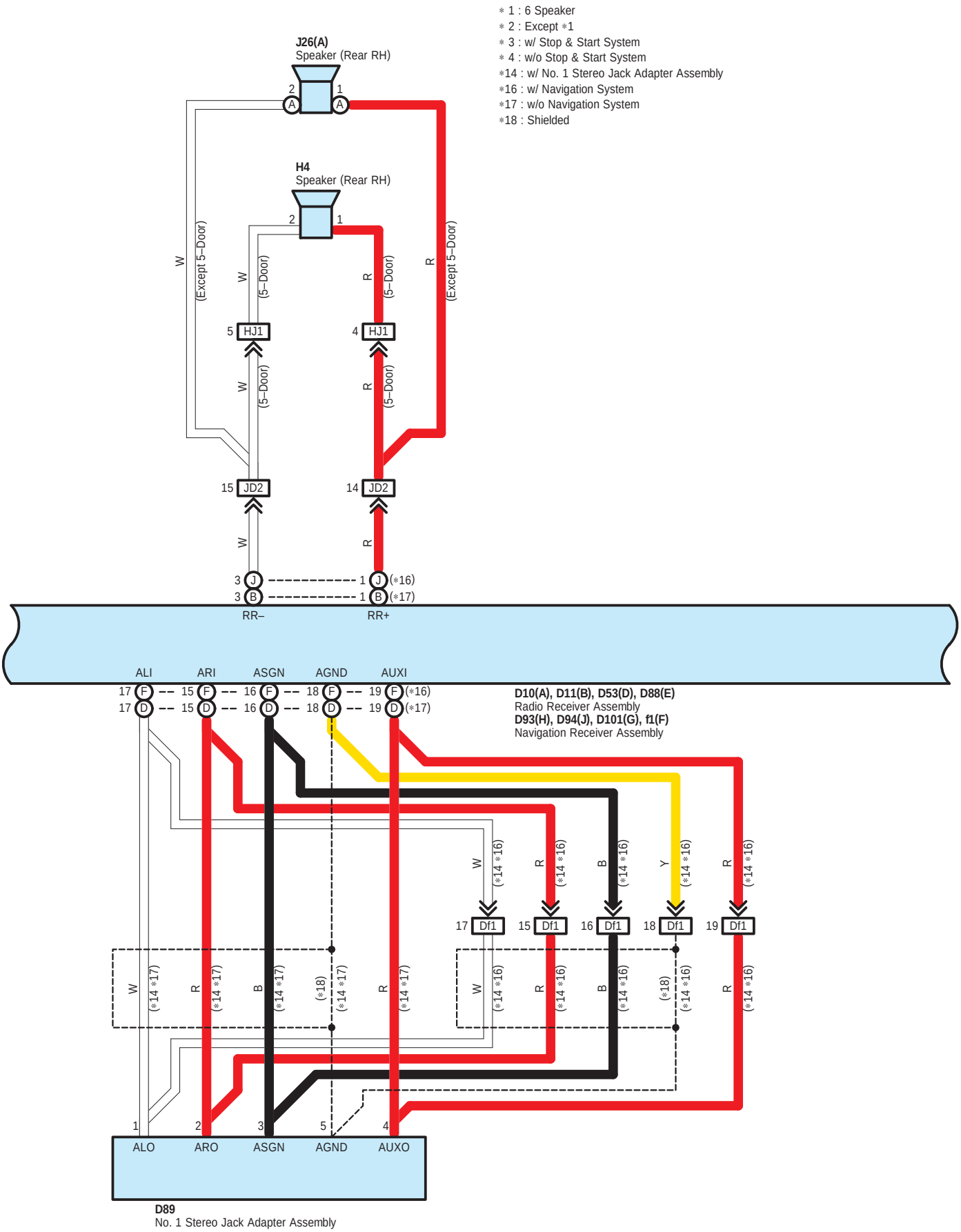
∗ 1 : 6 Speaker
∗ 2 : Except ∗1
∗ 3 : w/ Stop & Start System
∗ 4 : w/o Stop & Start System
∗14 : w/ No. 1 Stereo Jack Adapter Assembly
∗16 : w/ Navigation System
∗17 : w/o Navigation System
∗18 : Shielded
J26(A)
Speaker (Rear RH)
H4
Speaker (Rear RH)
HJ1
JD2
(Except 5–Door)
(5–Door)
RR–
RR+
(∗16)
(∗17)
ALI
ARI
ASGN
AGND
AUXI
D10(A), D11(B), D53(D), D88(E)
Radio Receiver Assembly
D93(H), D94(J), D101(G), f1(F)
Navigation Receiver Assembly
Df1
(∗14 ∗16)
(∗14 ∗17)
(∗18)
ALO
ARO
ASGN
AGND
AUXO
D89
No. 1 Stereo Jack Adapter Assembly

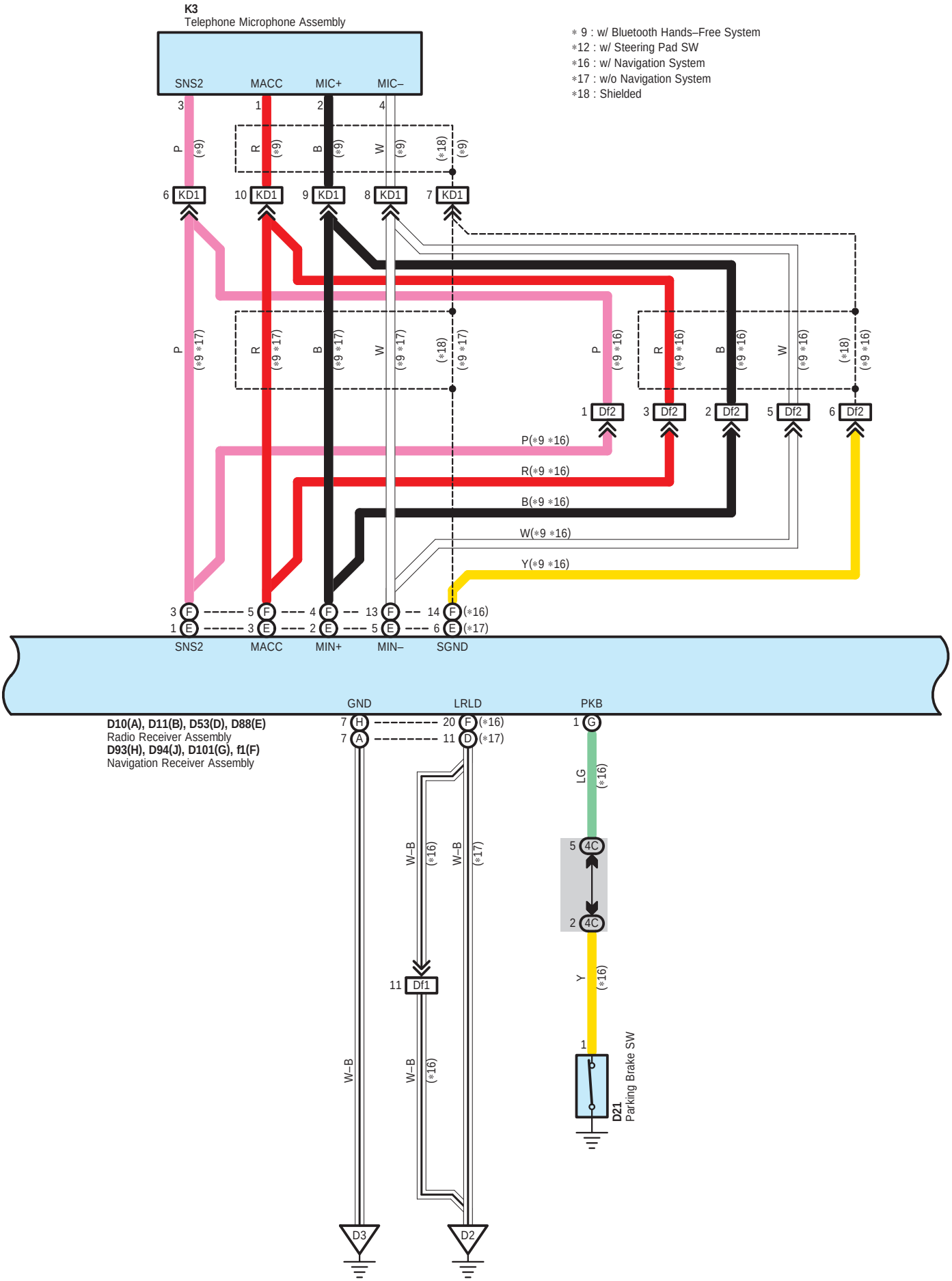
K3
Telephone Microphone Assembly
SNS2
MACC
MIC+
MIC–
∗ 9 : w/ Bluetooth Hands–Free System
∗12 : w/ Steering Pad SW
∗16 : w/ Navigation System
∗17 : w/o Navigation System
∗18 : Shielded
KD1
Df2
P(∗9 ∗16)
R(∗9 ∗16)
B(∗9 ∗16)
W(∗9 ∗16)
Y(∗9 ∗16)
SNS2
MACC
MIN+
MIN–
SGND
GND
LRLD
PKB
D10(A), D11(B), D53(D), D88(E)
Radio Receiver Assembly
D93(H), D94(J), D101(G), f1(F)
Navigation Receiver Assembly
Df1
D21
Parking Brake SW
D3
D2

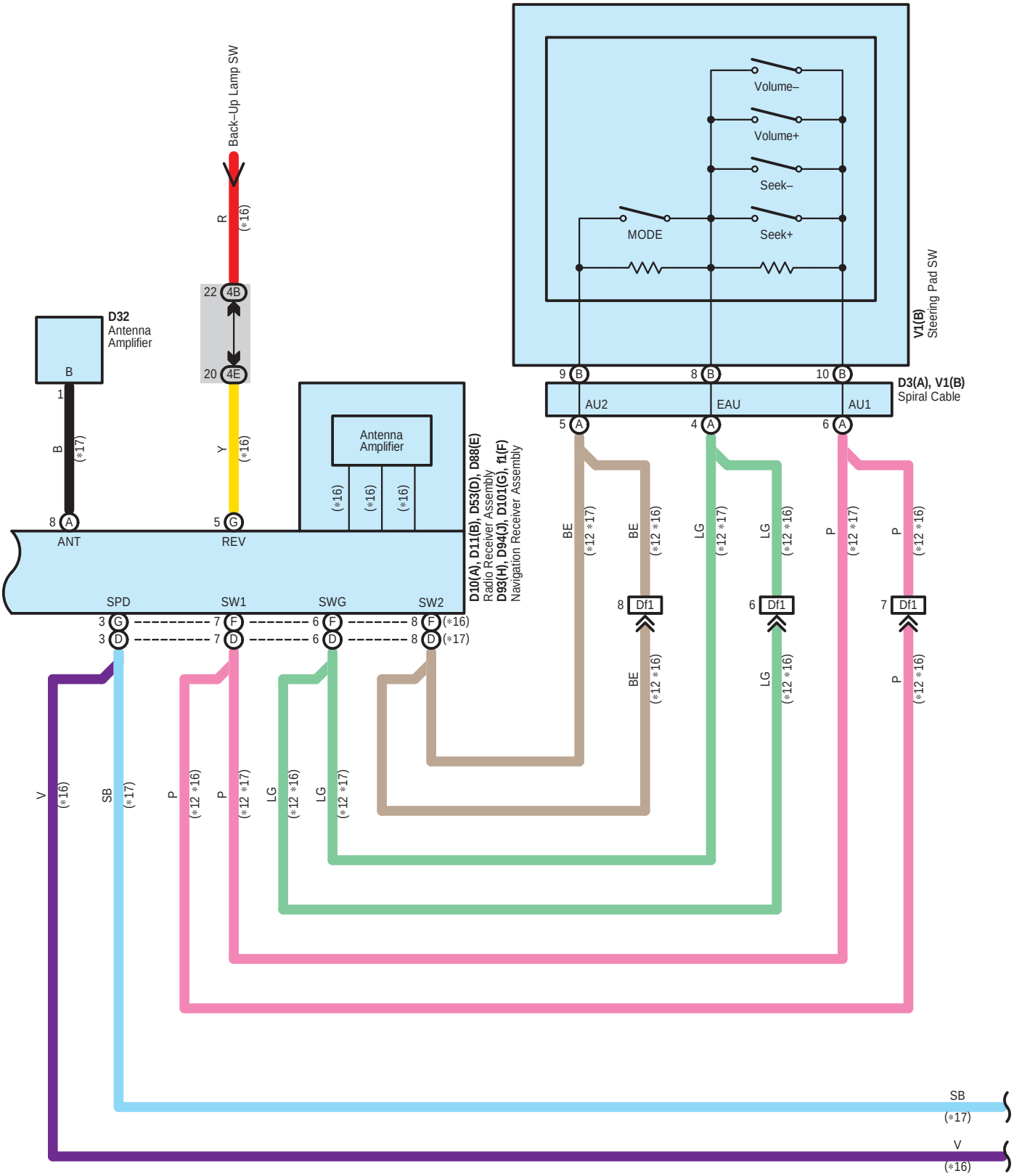
Back–Up Lamp SW
R
(*16)
22 4B
20 4E
D32
Antenna
Amplifier
B
1
B
(*17)
8 A
ANT
Y
(*16)
5 G
REV
Antenna
Amplifier
(*16)
(*16)
(*16)
D10(A), D11(B), D53(D), D88(E)
Radio Receiver Assembly
D93(H), D94(J), D101(G), f1(F)
Navigation Receiver Assembly
SPD
SW1
SWG
SW2
3 G
3 D
7 F
7 D
6 F
6 D
8 F (*16)
8 D (*17)
Volume–
Volume+
Seek–
MODE
Seek+
V1(B)
Steering Pad SW
9 B
8 B
10 B
AU2
EAU
AU1
5 A
4 A
6 A
D3(A), V1(B)
Spiral Cable
BE
(*12 *17)
BE
(*12 *16)
LG
(*12 *17)
LG
(*12 *16)
P
(*12 *17)
P
(*12 *16)
8 Df1
6 Df1
7 Df1
BE
(*12 *16)
LG
(*12 *16)
P
(*12 *16)
V
(*16)
SB
(*17)
P
(*12 *16)
P
(*12 *17)
LG
(*12 *16)
LG
(*12 *17)
SB
(*17)
V
(*16)

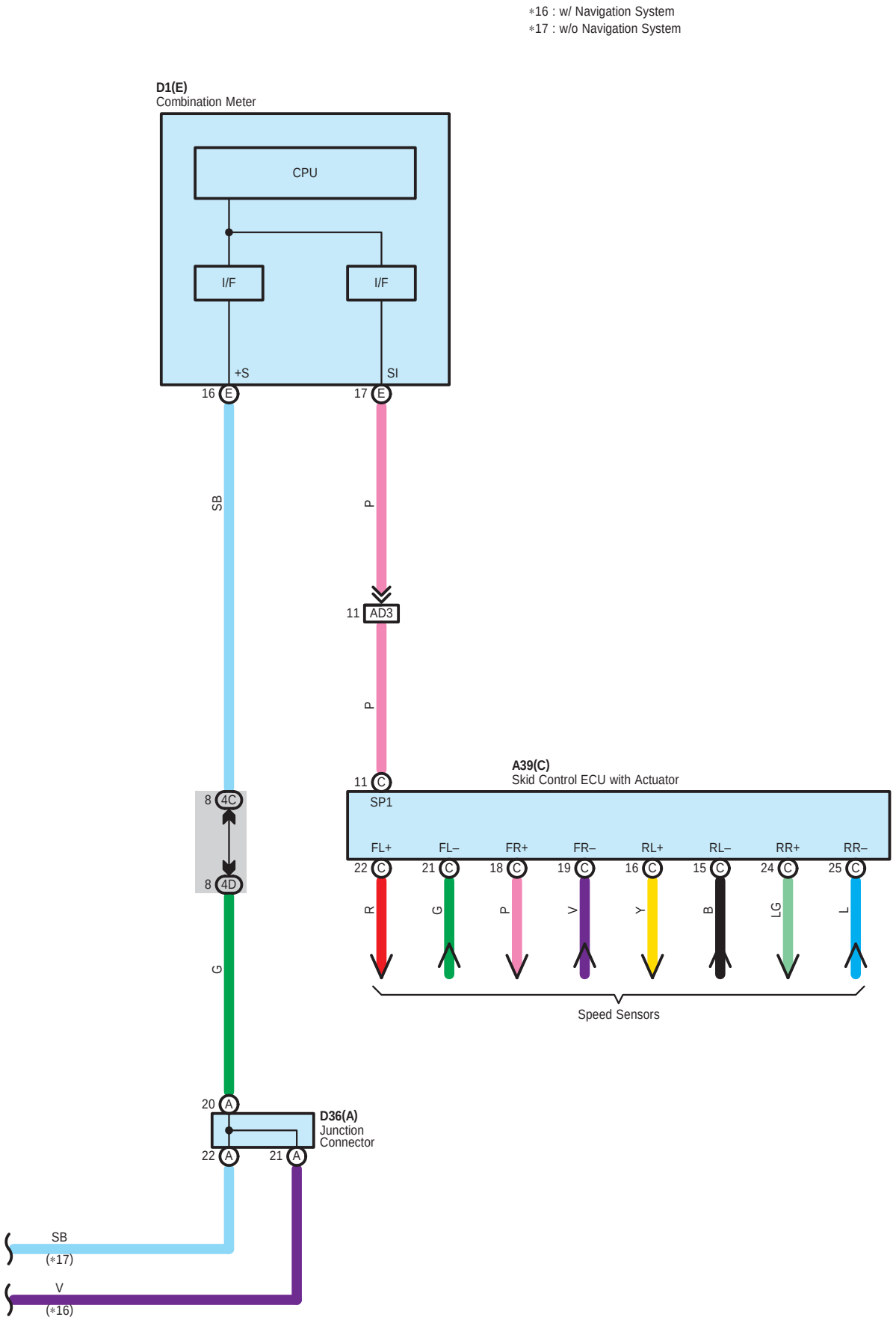
∗16 : w/ Navigation System
∗17 : w/o Navigation System
D1(E)
Combination Meter
CPU
I/F
I/F
+S
SI
16 E
17 E
SB
P
11 AD3
P
A39(C)
Skid Control ECU with Actuator
11 C
SP1
8 4C
8 4D
FL+
FL–
FR+
FR–
RL+
RL–
RR+
RR–
22 C
21 C
18 C
19 C
16 C
15 C
24 C
25 C
R
G
P
V
Y
B
LG
L
Speed Sensors
G
20 A
D36(A)
Junction
Connector
22 A
21 A
SB
(∗17)
V
(∗16)

A 39
Black

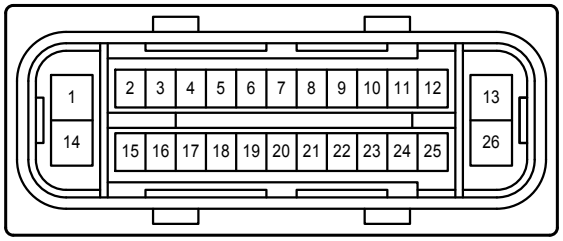

A 63
Black

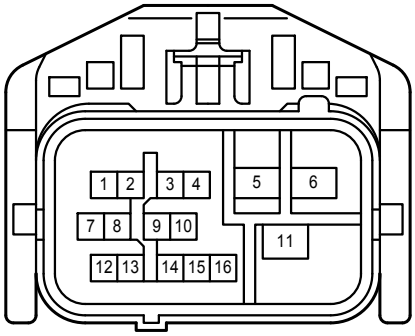

D 1
White

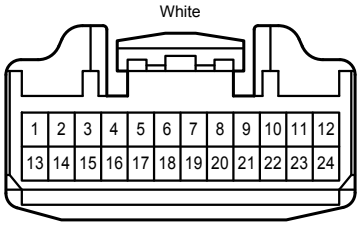

(TMMF Made From Nov. 2008 Production, TMC Made H/B From Aug. 2008 Production, S/D From Aug. 2007 Production)

D 3
White

(TMMF Made Before Nov. 2008 Production, TMC Made H/B Before Aug. 2008 Production, S/D Before Aug. 2007 Production)

D 3
White

D 10
Blue

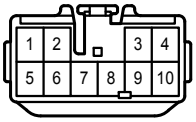

(TMMF Made Before Nov. 2008 Production, TMC Made H/B From Aug. 2008 Production, S/D From Aug. 2007 Production)

D 11
White

D 21
White

D 32
White

D 36
White

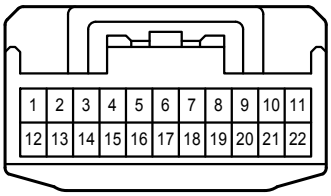

D 47
White

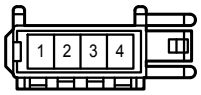

D 48
White

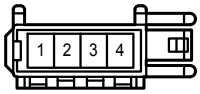

D 53
White

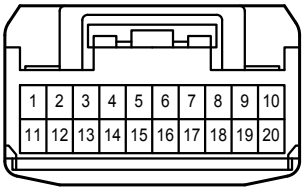

D 88
Black

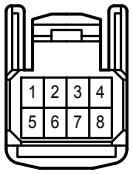

(TMMF Made From Nov. 2008 Production, TMC Made From Aug. 2008 Production Europe)

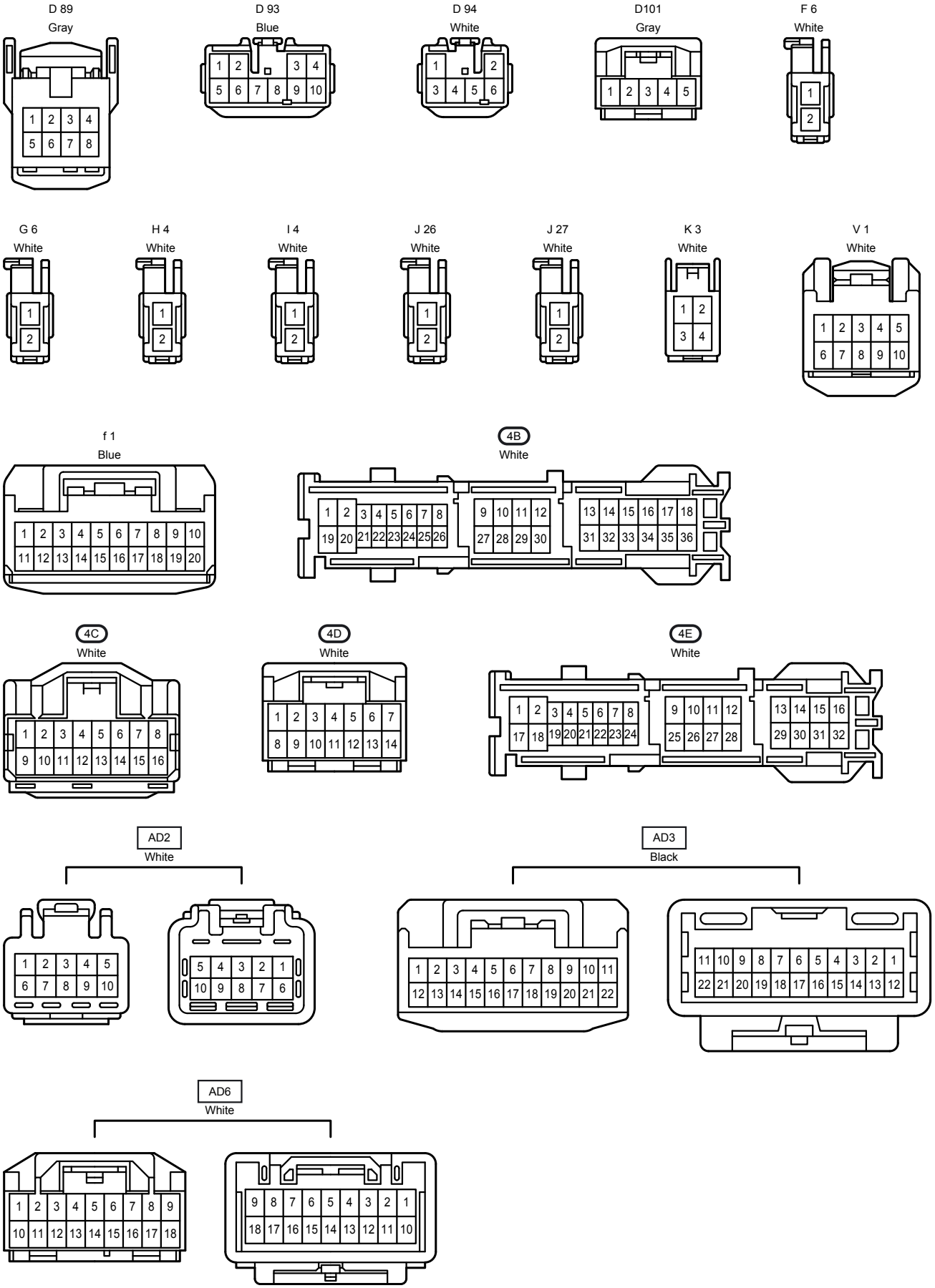
D 89
Gray
D 93
Blue
D 94
White
D101
Gray
F 6
White
G 6
White
H 4
White
I 4
White
J 26
White
J 27
White
K 3
White
V 1
White
f 1
Blue
4B
White
4C
White
4D
White
4E
White
AD2
White
AD3
Black
AD6
White

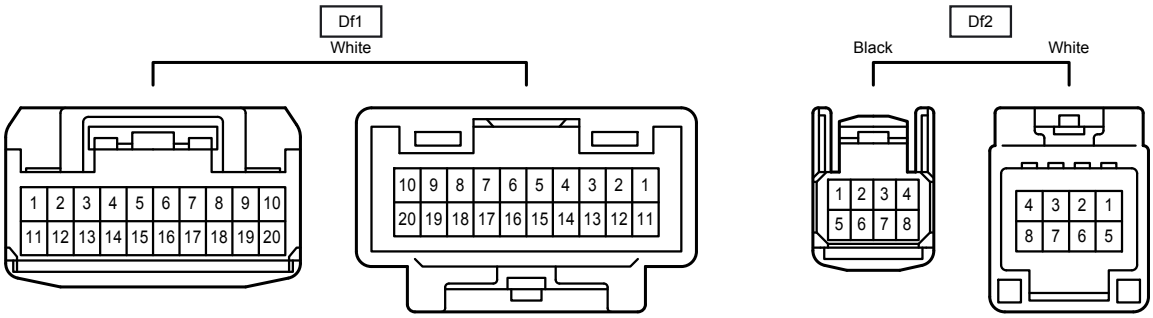
Df1
White
1 2 3 4 5 6 7 8 9 10
11 12 13 14 15 16 17 18 19 20
10 9 8 7 6 5 4 3 2 1
20 19 18 17 16 15 14 13 12 11
Df2
Black
White
1 2 3 4
5 6 7 8
4 3 2 1
8 7 6 5

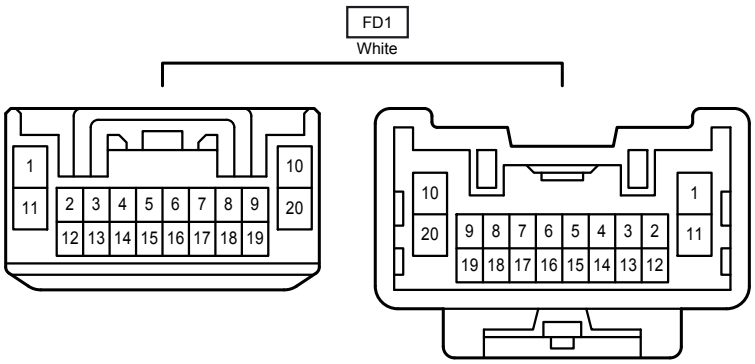
FD1
White
1
11
2 3 4 5 6 7 8 9
12 13 14 15 16 17 18 19
10
20
10
20
9 8 7 6 5 4 3 2
19 18 17 16 15 14 13 12
1
11

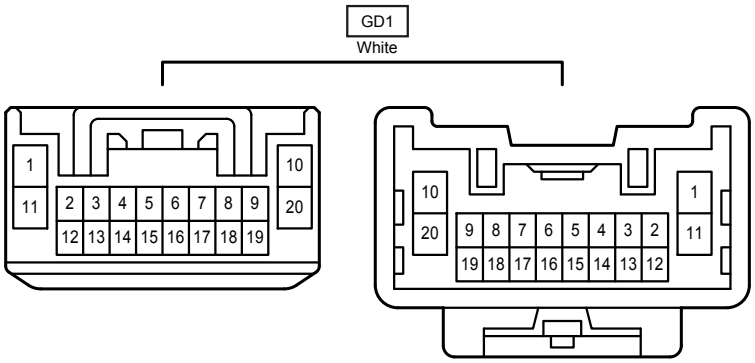
GD1
White
1
11
2 3 4 5 6 7 8 9
12 13 14 15 16 17 18 19
10
20
10
20
9 8 7 6 5 4 3 2
19 18 17 16 15 14 13 12
1
11

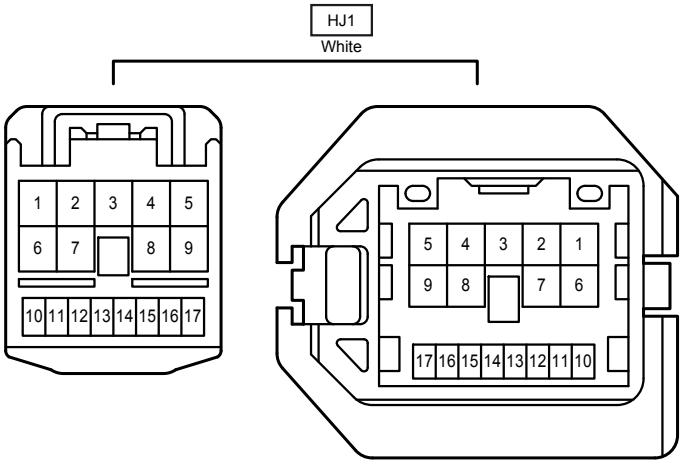
HJ1
White
1 2 3 4 5
6 7 8 9
10 11 12 13 14 15 16 17
5 4 3 2 1
9 8 7 6
17 16 15 14 13 12 11 10

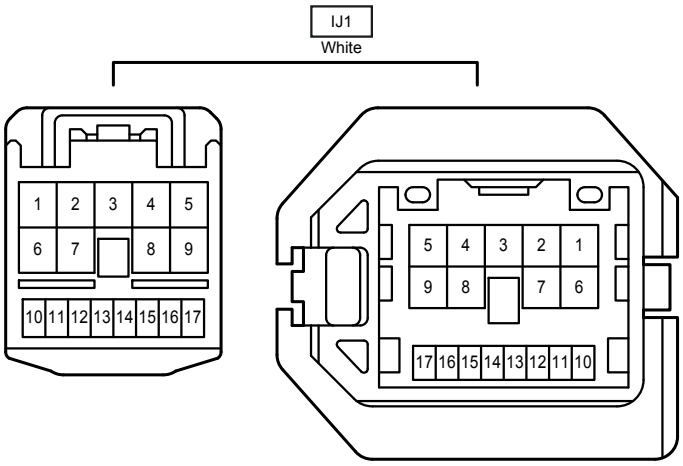
IJ1
White
1 2 3 4 5
6 7 8 9
10 11 12 13 14 15 16 17
5 4 3 2 1
9 8 7 6
17 16 15 14 13 12 11 10

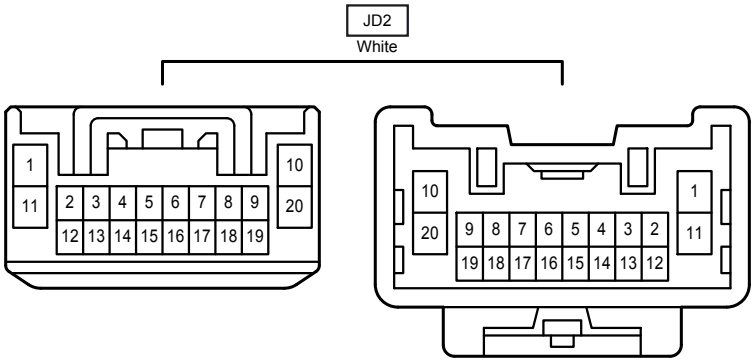
JD2
White
1
11
2 3 4 5 6 7 8 9
12 13 14 15 16 17 18 19
10
20
10
20
9 8 7 6 5 4 3 2
19 18 17 16 15 14 13 12
1
11

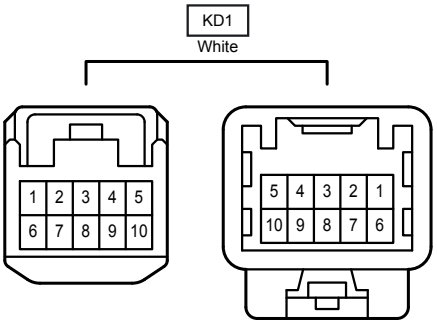
KD1
White
1 2 3 4 5
6 7 8 9 10
5 4 3 2 1
10 9 8 7 6