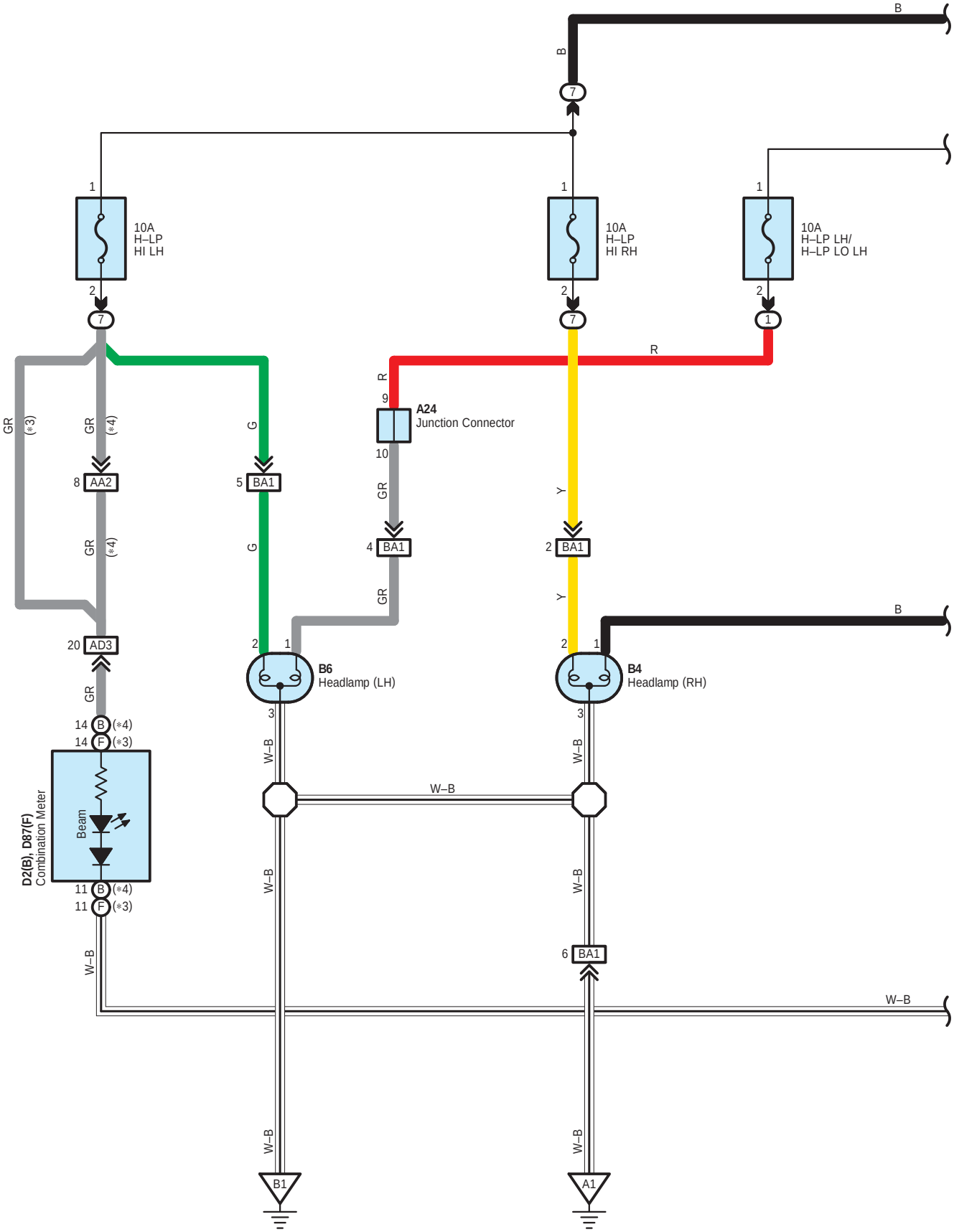
B
B
7
1
10A
H–LP
HI LH
2
7
1
10A
H–LP
HI RH
2
7
1
10A
H–LP LH/
H–LP LO LH
2
1
R
R
9
A24
Junction Connector
10
GR
(*3)
GR
(*4)
G
8
AA2
5
BA1
GR
(*4)
G
4
BA1
GR
Y
2
BA1
Y
B
20
AD3
2
1
B6
Headlamp (LH)
2
1
B4
Headlamp (RH)
GR
14
B
(*4)
14
F
(*3)
3
W–B
3
W–B
W–B
D2(B), D87(F)
Combination Meter
Beam
11
B
(*4)
11
F
(*3)
W–B
W–B
W–B
6
BA1
W–B
W–B
W–B
B1
A1

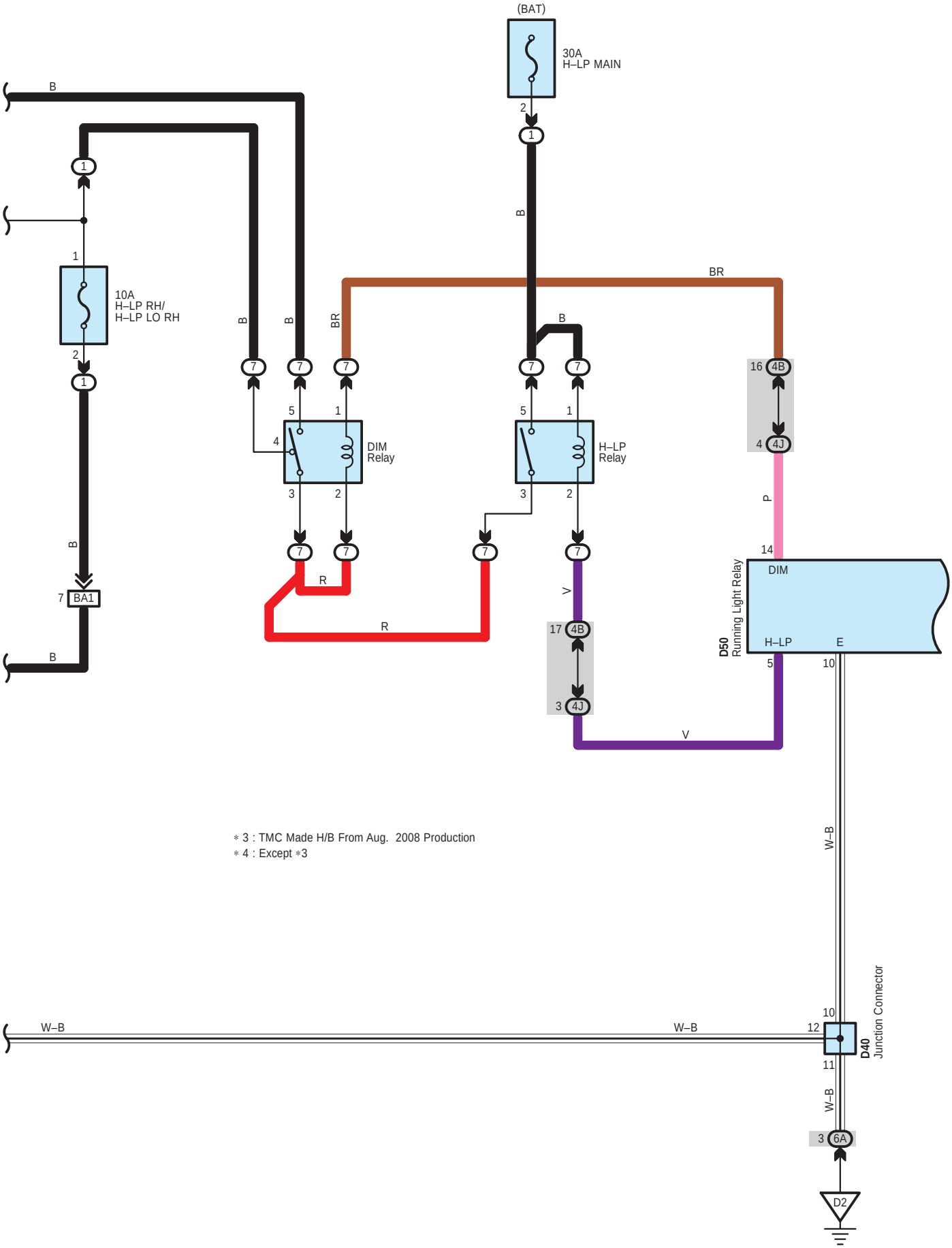
(BAT)
30A
H–LP MAIN
10A
H–LP RH/
H–LP LO RH
DIM
Relay
H–LP
Relay
BA1
DIM
H–LP
E
D50
Running Light Relay
D40
Junction Connector
D2
B
BR
R
V
P
W–B
＊3 : TMC Made H/B From Aug. 2008 Production
＊4 : Except ＊3

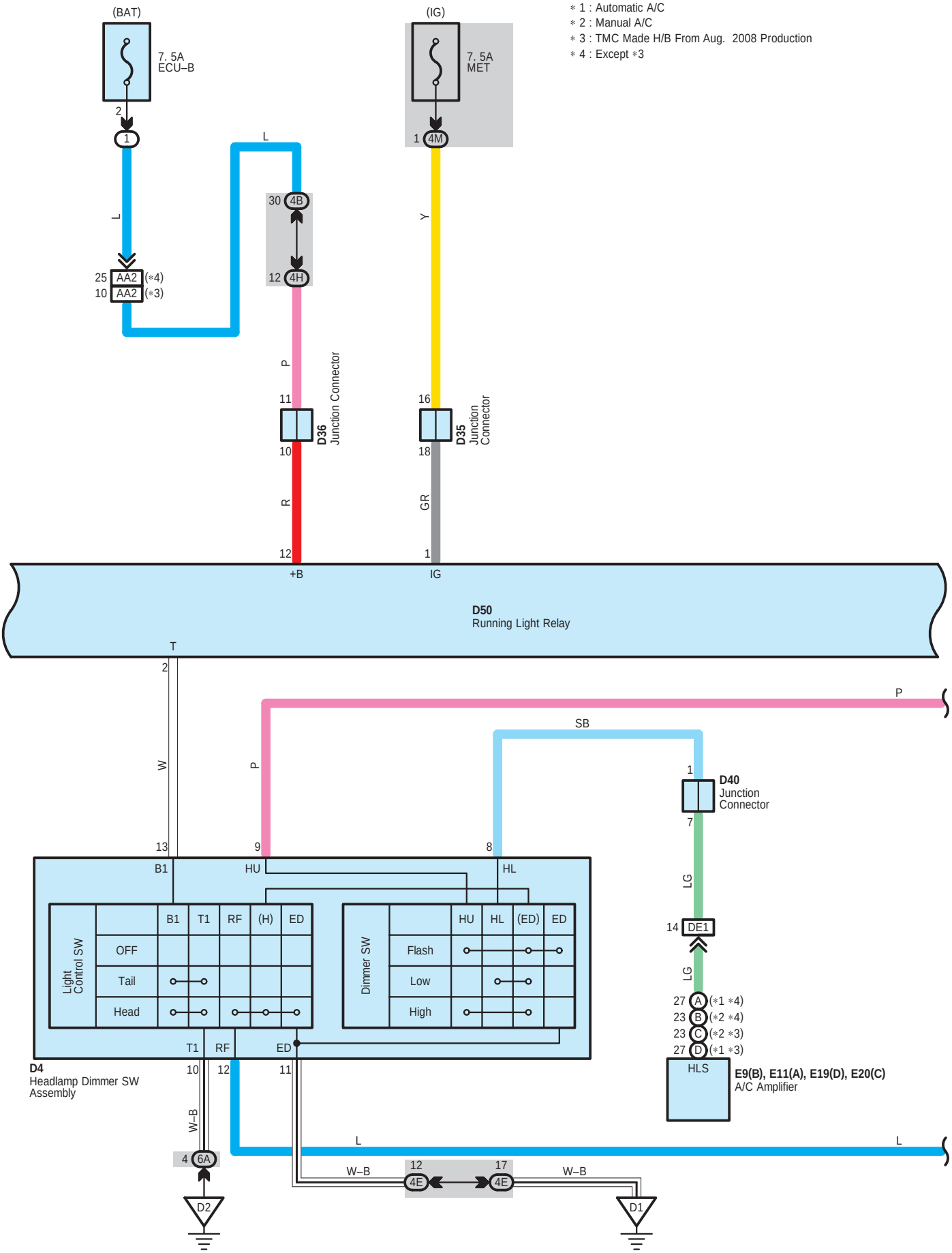
(BAT)
7. 5A
ECU–B
(IG)
7. 5A
MET
∗ 1 : Automatic A/C
∗ 2 : Manual A/C
∗ 3 : TMC Made H/B From Aug. 2008 Production
∗ 4 : Except ∗3
2
1
L
L
30 4B
12 4H
1 4M
Y
25 AA2 (∗4)
10 AA2 (∗3)
P
11
10
D36
Junction Connector
16
18
D35
Junction
Connector
R
GR
12
1
+B
IG
D50
Running Light Relay
T
2
W
P
P
SB
1
D40
Junction
Connector
7
13
9
8
B1
HU
HL
LG
Light
Control SW
B1
T1
RF
(H)
ED
OFF
Tail
Head
Dimmer SW
HU
HL
(ED)
ED
Flash
Low
High
14 DE1
LG
27 A (∗1 ∗4)
23 B (∗2 ∗4)
23 C (∗2 ∗3)
27 D (∗1 ∗3)
T1
RF
ED
D4
Headlamp Dimmer SW
Assembly
10
12
11
HLS
E9(B), E11(A), E19(D), E20(C)
A/C Amplifier
W–B
L
L
4 6A
W–B
12
4E
17
4E
W–B
D2
D1

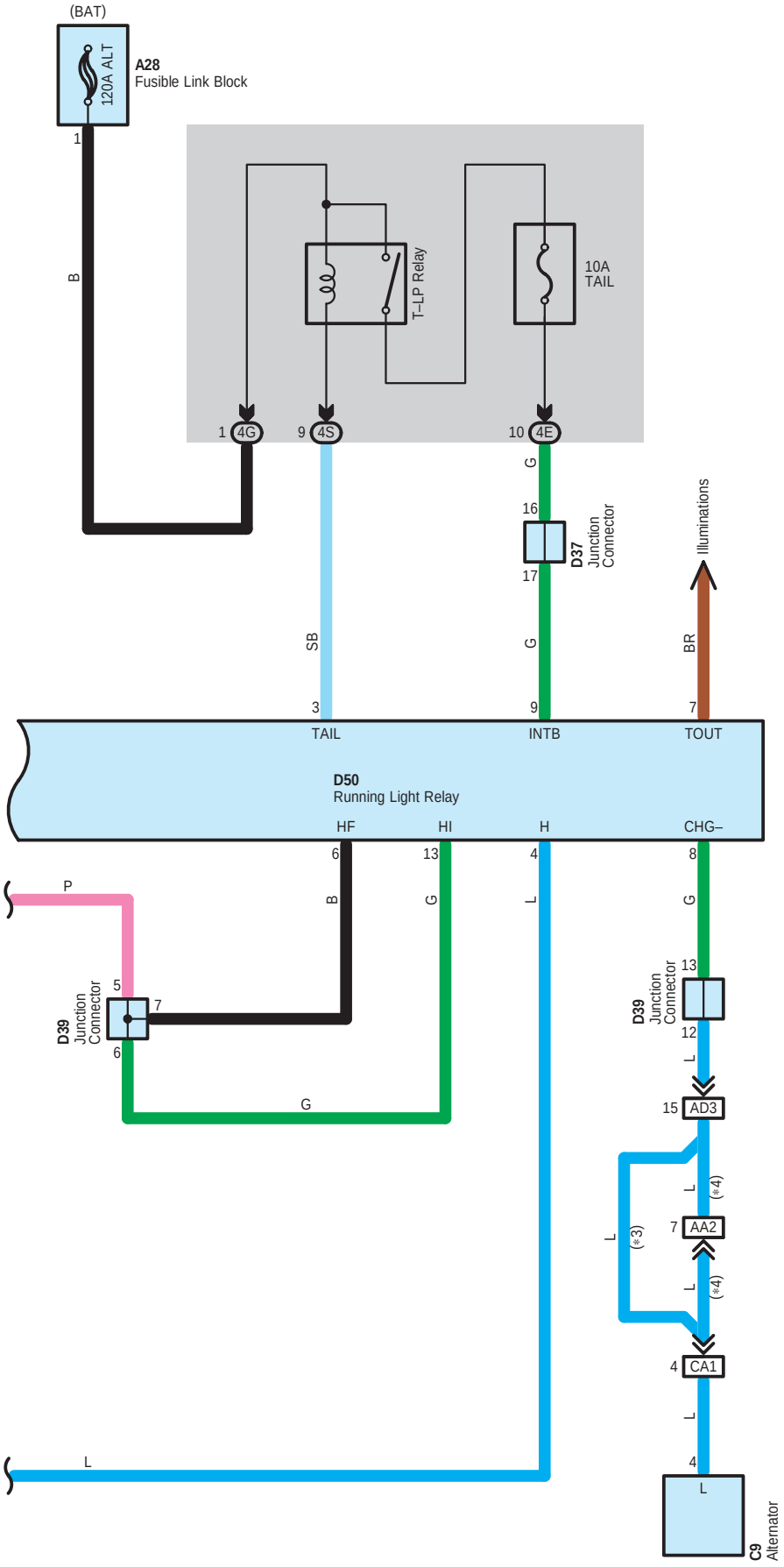
(BAT)
A28
Fusible Link Block
120A ALT
1
B
T–LP Relay
10A
TAIL
1 4G
9 4S
10 4E
G
16
D37
Junction
Connector
17
Illuminations
SB
G
BR
3
9
7
TAIL
INTB
TOUT
D50
Running Light Relay
HF
HI
H
CHG–
6
13
4
8
P
B
G
L
G
5
7
D39
Junction
Connector
6
G
13
D39
Junction
Connector
12
L
15 AD3
L
(*4)
7 AA2
L
(*3)
L
(*4)
4 CA1
L
4
L
L
C9
Alternator

A 24
White

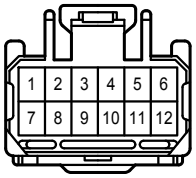

A 28
White

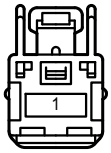

B 4
White

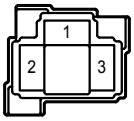

B 6
White

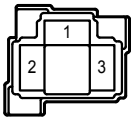

C 9
Black

D 2
White

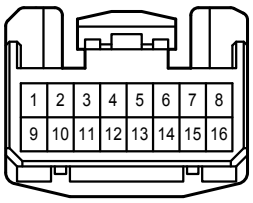

D 4
White

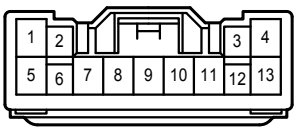

D 35
White

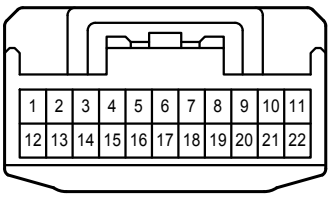

D 36
White

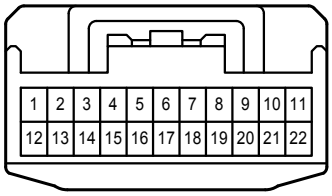

D 37
White

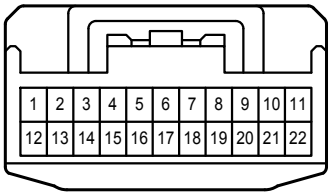

D 39
White

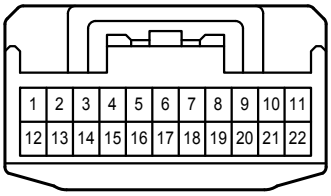

D 40
White

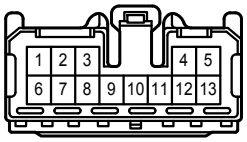

D 50
Blue

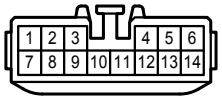

D 87
White

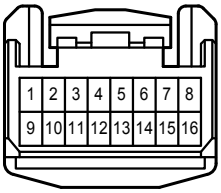

E 9
White

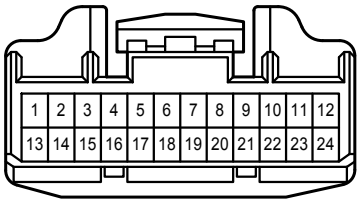

E 11
White

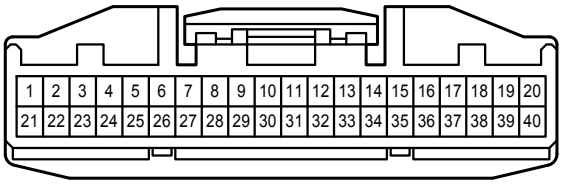

E 19
White

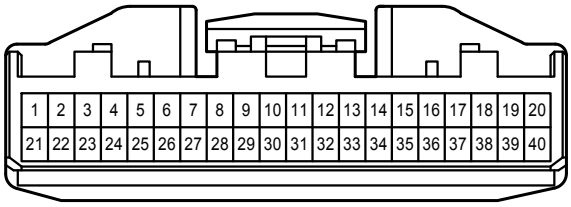

E 20
White

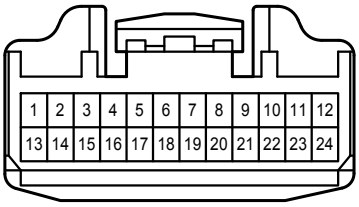

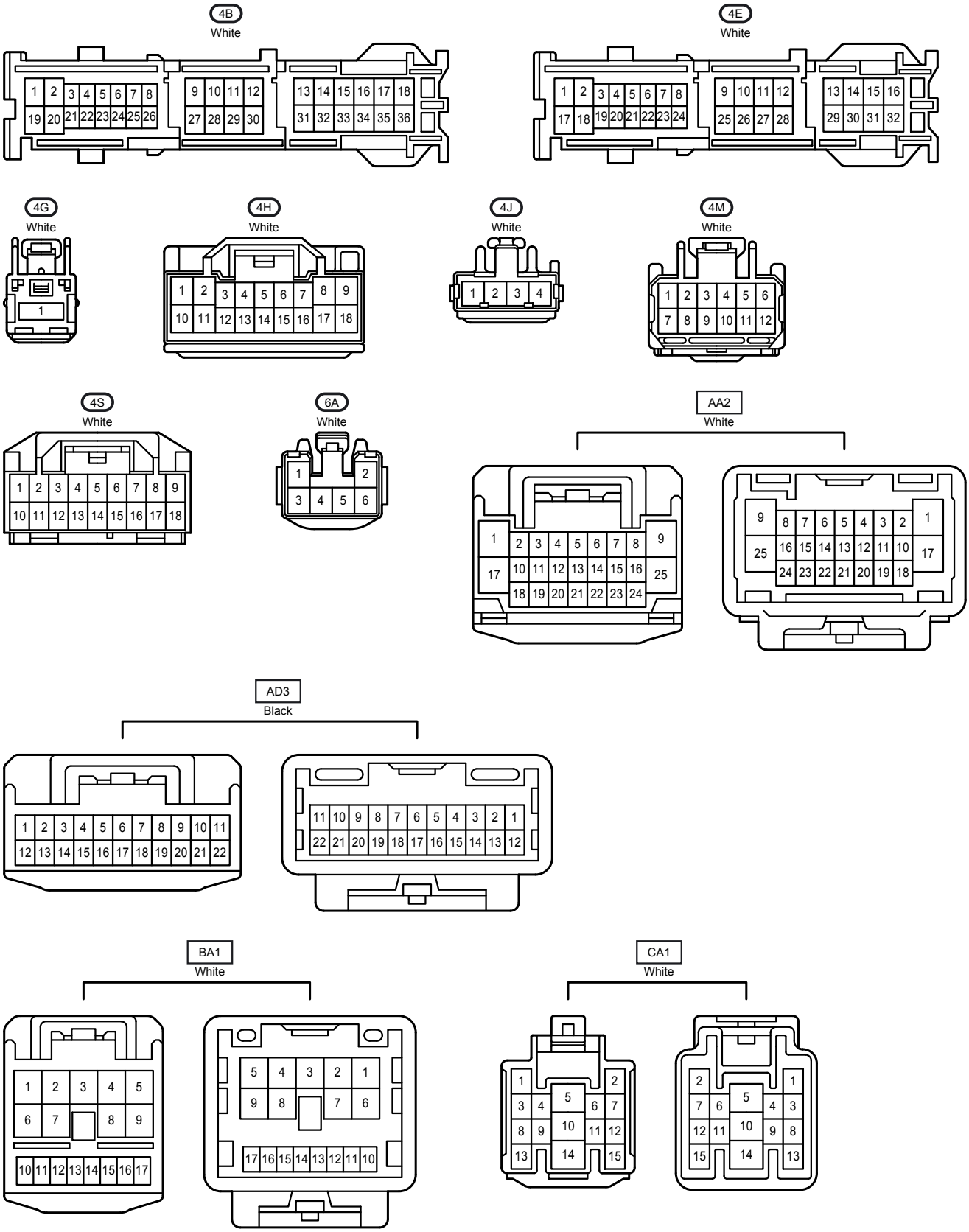
4B
White
4E
White
4G
White
4H
White
4J
White
4M
White
4S
White
6A
White
AA2
White
AD3
Black
BA1
White
CA1
White

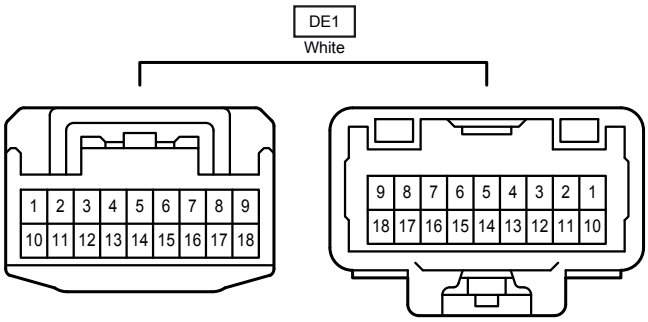
DE1
White
1 2 3 4 5 6 7 8 9
10 11 12 13 14 15 16 17 18
9 8 7 6 5 4 3 2 1
18 17 16 15 14 13 12 11 10