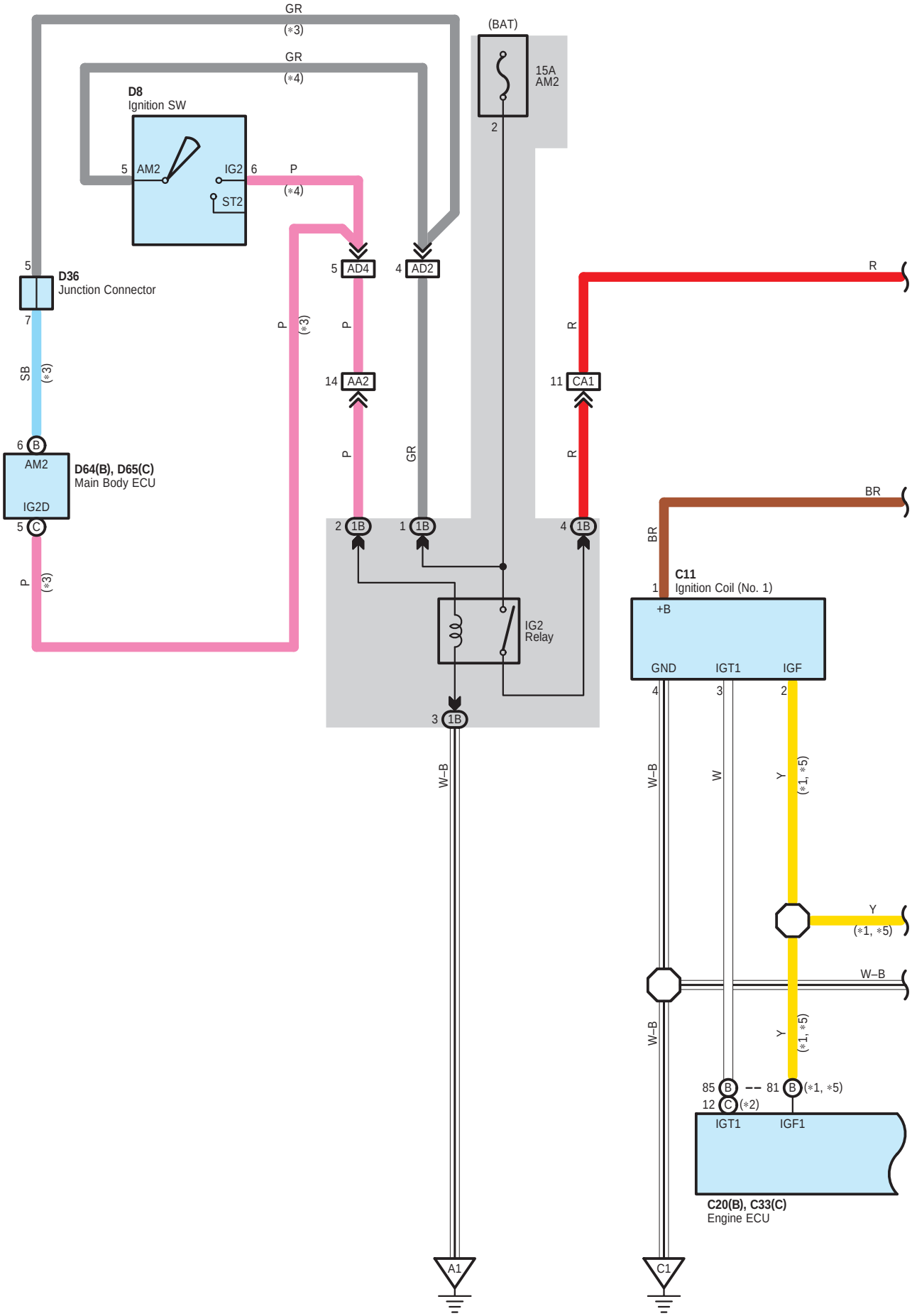
GR
(*3)
GR
(*4)
D8
Ignition SW
5
AM2
IG2
6
P
(*4)
ST2
(BAT)
15A
AM2
2
5
D36
Junction Connector
7
SB
(*3)
6
B
AM2
D64(B), D65(C)
Main Body ECU
IG2D
5
C
P
(*3)
P
(*3)
5
AD4
4
AD2
P
14
AA2
P
GR
2
1B
1
1B
4
1B
3
1B
IG2
Relay
W–B
A1
R
R
11
CA1
R
BR
BR
1
C11
Ignition Coil (No. 1)
+B
GND
IGT1
IGF
4
3
2
W–B
W
Y
(*1, *5)
Y
(*1, *5)
W–B
W–B
Y
(*1, *5)
85
B
81
B
(*1, *5)
12
C
(*2)
IGT1
IGF1
C20(B), C33(C)
Engine ECU
C1

∗ 1 : 1NZ–FE, 2NZ–FE, 2SZ–FE
∗ 2 : 1KR–FE
∗ 3 : w/ Entry & Start System
∗ 4 : w/o Entry & Start System
∗ 5 : 2ZR–FE
∗ 6 : Except 2ZR–FE

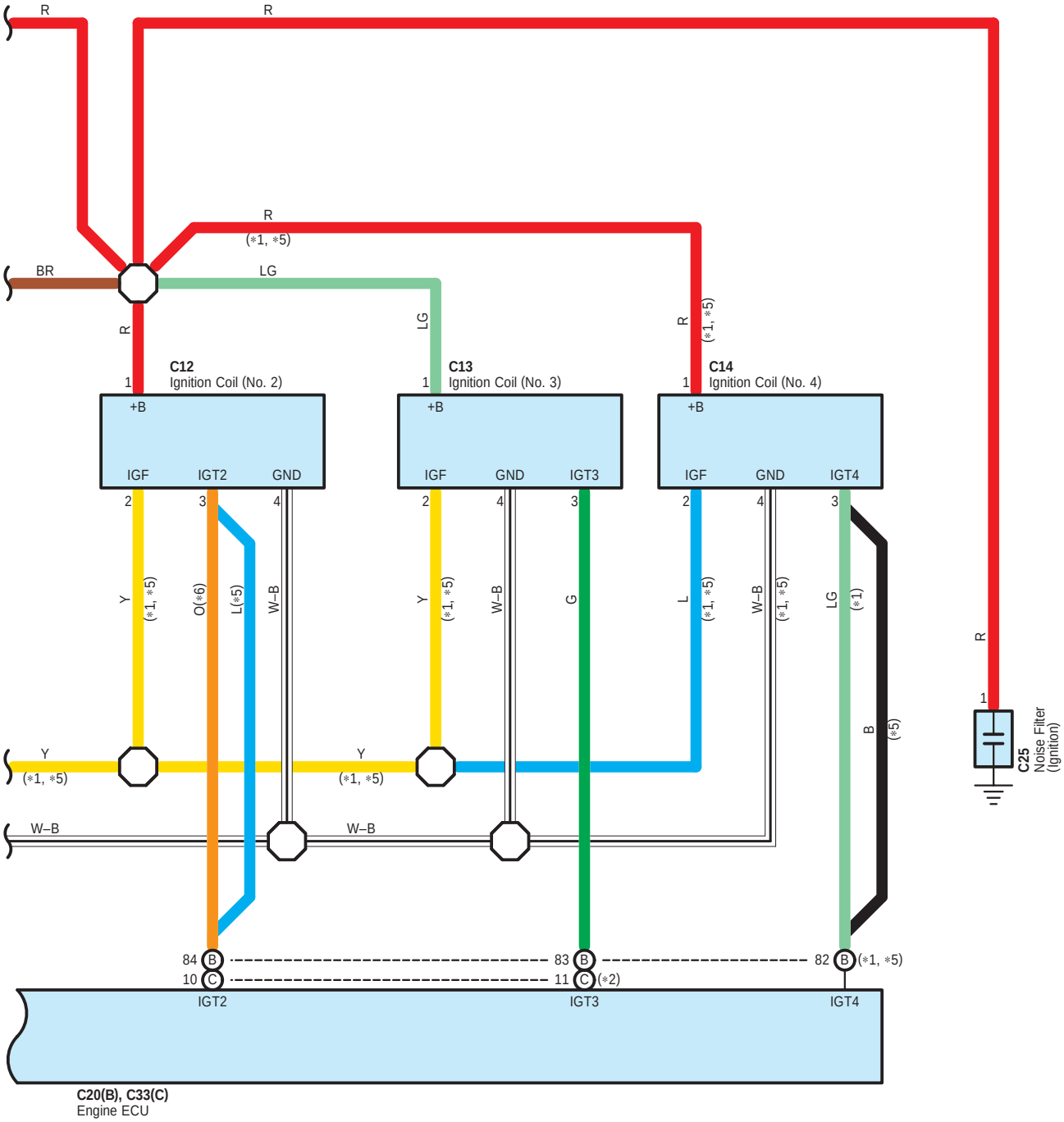

C 11
Black

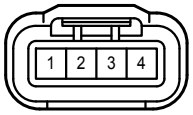

C 12
Gray

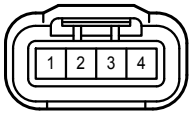

C 13
Black

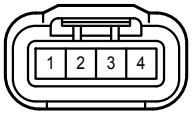

C 14
Gray

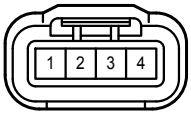

C 20
Black

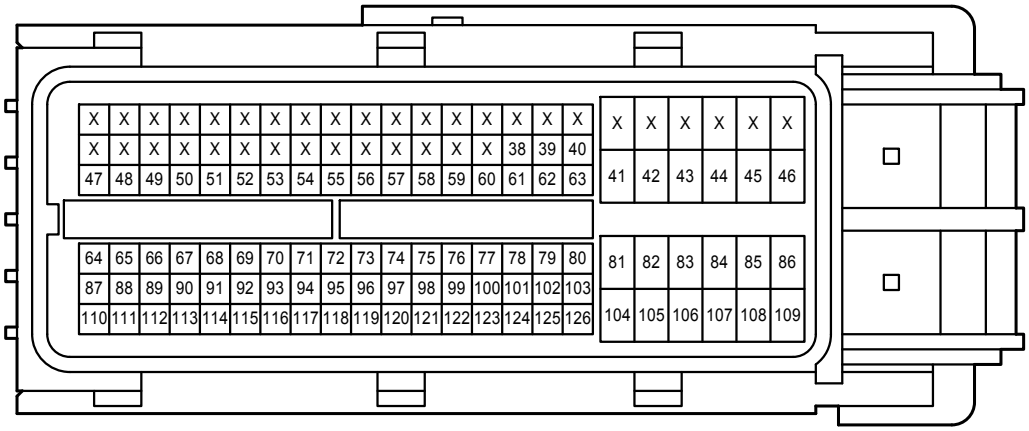

C 25
Gray

C 33
Black

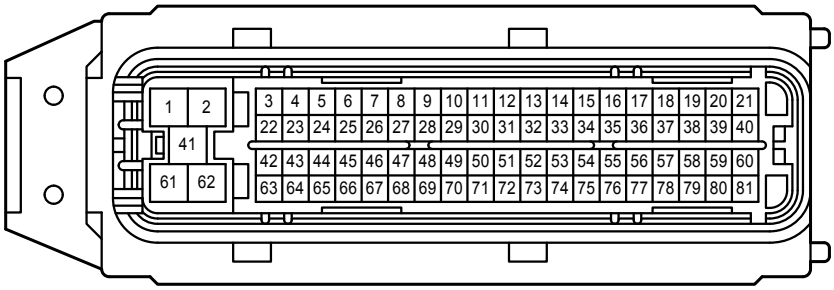

D 8
White

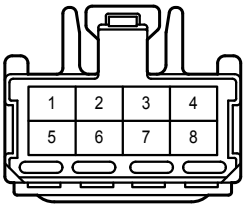

D 36
White

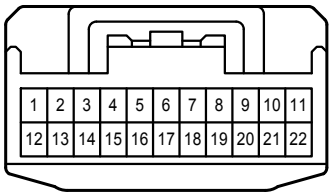

D 64
White

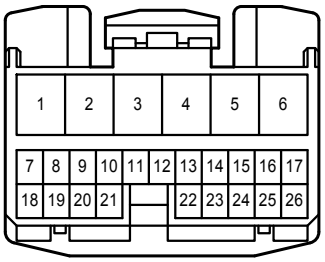

(TMMF Made Before Nov. 2008 Production, TMC Made H/B Before Aug. 2008 Production)

D 65
White

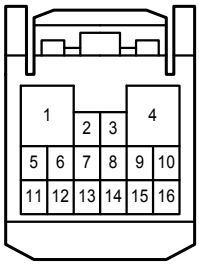

1B
White

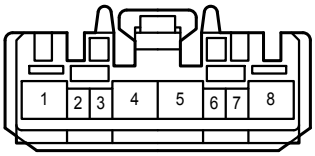

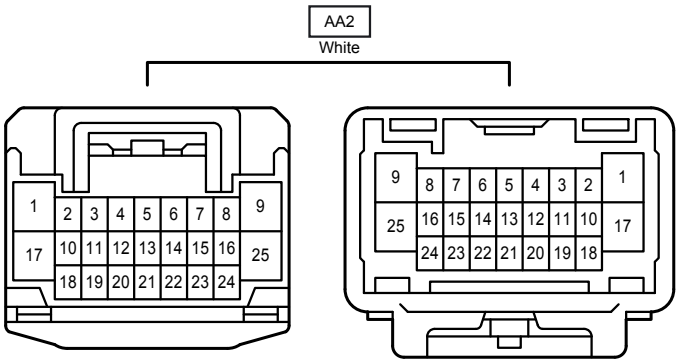
AA2
White
1 2 3 4 5 6 7 8 9
17 10 11 12 13 14 15 16 25
18 19 20 21 22 23 24
9 8 7 6 5 4 3 2 1
25 16 15 14 13 12 11 10 17
24 23 22 21 20 19 18

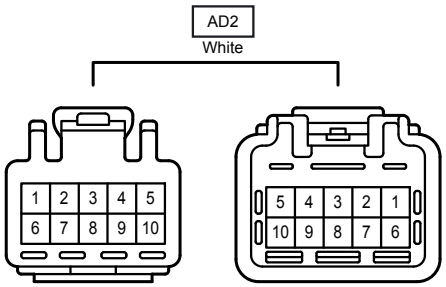
AD2
White
1 2 3 4 5
6 7 8 9 10
5 4 3 2 1
10 9 8 7 6

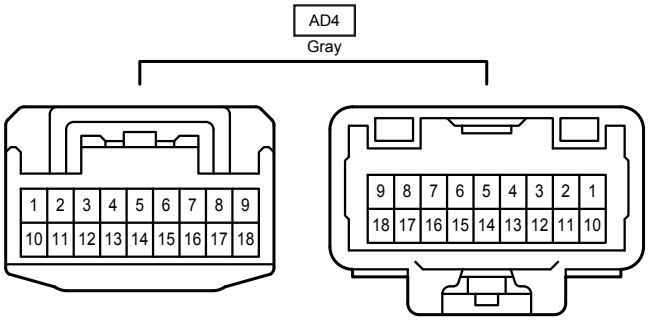
AD4
Gray
1 2 3 4 5 6 7 8 9
10 11 12 13 14 15 16 17 18
9 8 7 6 5 4 3 2 1
18 17 16 15 14 13 12 11 10

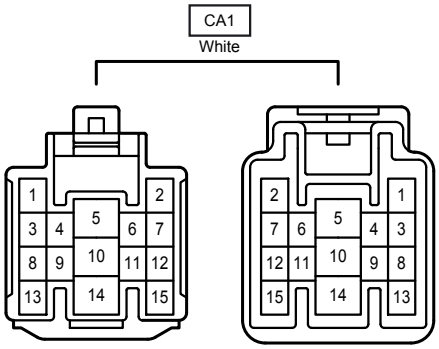
CA1
White
1 2
3 4 5 6 7
8 9 10 11 12
13 14 15
2 1
7 6 5 4 3
12 11 10 9 8
15 14 13