I. GENERAL VIEW

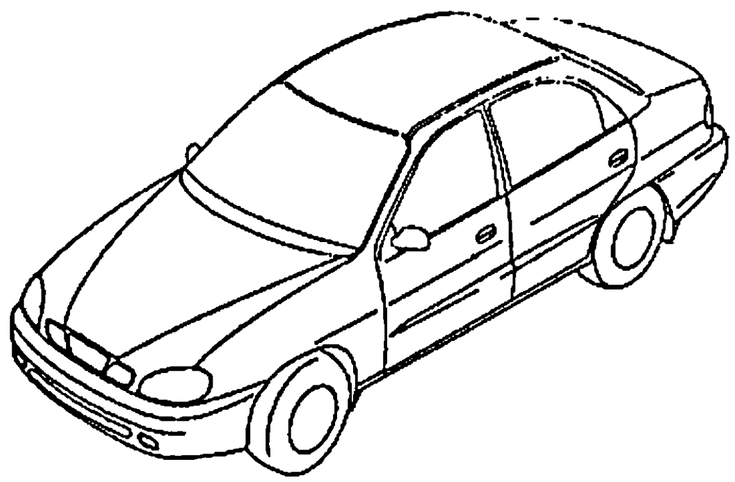

4-DOOR NOTCH BACK

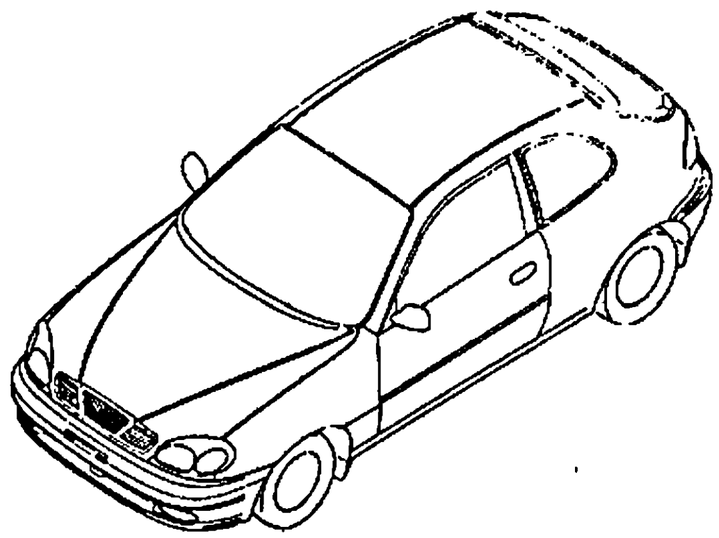

3-DOOR HATCH BACK

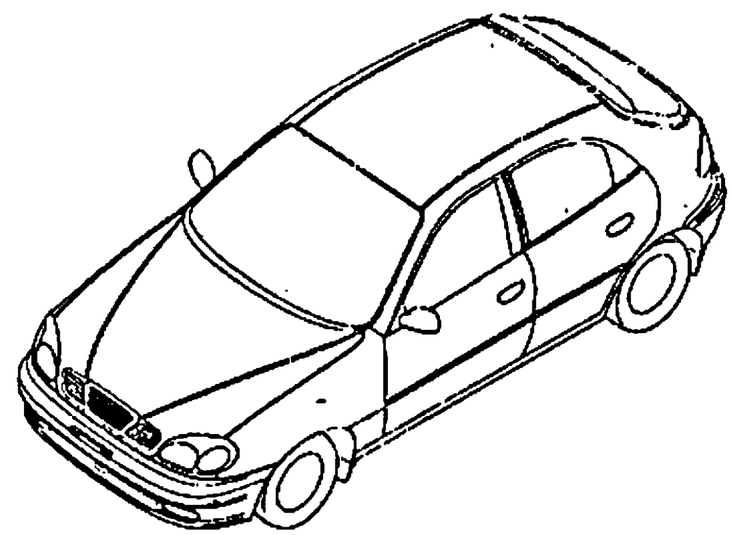

5-DOOR HATCH BACK

II. MODEL & OPTION

1. MODEL

ENGINE	T/A	BODY	LEVEL
Y / 6	M / A	4N / 3H / 5H	S / SE / SX

■ ENGINE TYPE

- Y : 1.5L SOHC
- 6 : 1.6L DOHC
- . : Common

■ T/A(TRANSAXLE)TYPE

- M : Manual T/A
- A : Automatic T/A
- . : Common

■ BODY TYPE

- 4N : 4 Door Notchback
- 3H : 3 Door Hatchback
- 5H : 5 Door Hatchback

NOTE : Please be sure to read "the EXPLANATION OF CATALOG COMPOSITION" to find out the details on "the MODEL COLUMN".

2. OPTION

CODE	DESCRIPTION	BODY			LEVEL		
		4 N	3 H	5 H	S	S E	S X
A31	Window-power,front&rear	B	.	B	.	O	O
A32	Window-power,front	B	B	B	O	O	B
ABF	Air bag-dual	B	B	B	.	O	O
AJ3	Air bag-driver side only	B	B	B	.	O	O
AU3	Central door lock	B	B	B	O	O	B
C59	Uncompleted Air conditioner	B	B	B	O	O	O
C60	Air conditioner	B	B	B	O	O	O
CF6	Sun roof,power	B	B	B	O	O	O
JL9	Antilock brake system	B	B	B	.	O	O
ML4	4 speed automatic T/A	B	B	B	O	O	O
N40	Power steering	B	B	B	O	O	B
PG4	Alloy wheel,5.5JX14	B	B	B	.	.	O
T45	Rear spoiler	.	B	B	.	.	O
U83	Speaker-coaxial 2 way	B	B	B	.	O	O
UNA	Cassette(mech), 7wX2ch(AKF-4331)	B	B	B	O	O	O
UN1	Cassette(mech),25wX2ch(AKF-4036)	B	B	B	O	O	O
UN6	Cassette(logic) ,25wX4ch(AKF-0816)	B	B	B	.	O	O
W8V	CD player	B	B	B	.	O	O

- O : OPTION
- B : BASE
- . : NOT APPLICABLE

III. COLOR CODE TABLE

When order the color parts, the color code should be quoted.

EXTERIOR COLOR		INTERIOR COLOR
CODE	DESCRIPTION	
11U	GALAXY WHITE	GREY
21U	AZURITE BLUE	GREY
27U	VIOLET BLUE	GREY
42U	DEEP BLUISH GREEN	GREY
43U	LIGHT EVERGREEN	GREY
73L	SUPER RED	GREY
74U	SPINEL RED	GREY
81U	STREAMLINE GREY	GREY
83L	GRANADA BLACK	GREY
92U	POLY SILVER	GREY

⑧ MODEL

This column indicates Engine type, Transaxle type, Body type, Trim level.

■ ENG(ENGINE) TYPE

- Y : 1.5L SOHC
- 6 : 1.6L DOHC
- . : COMMON

■ T/A(TRANSAXLE)TYPE

- M : Manual T/A
- A : Automatic T/A
- . : Common

■ BODY TYPE

- 4N : 4 Door Notchback
- 3H : 3 Door Hatchback
- 5H : 5 Door Hatchback

"BODY" column indicates the expression of applicable body type.
B : Applicable
. : Not applicable

■ TRIM LEVEL

- S
- SE
- SX

"LEVEL" column indicates the expression of applicable trim level.
S : Standard equipment.
O : Option equipment.
A : Available equipment for the special package according to the area regulation

⑨ OPTION

This column indicates option code.
Refer to "VI.OPTION CODE TABLE"

ex) O O O O

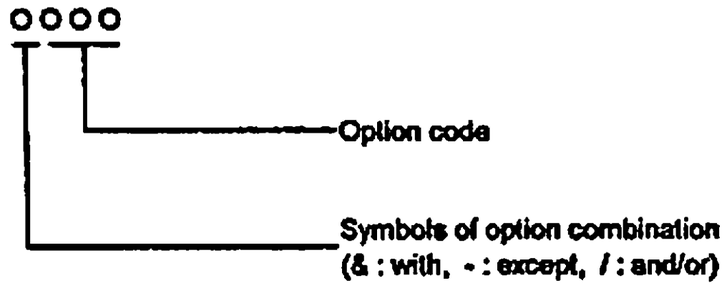

⑩ L/R

This column indicates the mounting position of a part.
LH : Left hand side
RH : Right hand side

⑪ Q'TY

This column indicates the quantity required per sub-group.
The quantity is normally shown by number or symbol as below.
A : As required quantity.

⑫ EFFECTIVE DATE

This column indicates effective " date in production".
It is shown by the year,month and date or start of production(S.O.P).

⑬ REMARKS

Supplementary or reference information is given in this column.
(examples)
Specification,Use,Type,Applicable country etc.

⑭ PART IDENTIFICATION CODE

This column indicates part identification code that is marked with two characters.
Part identification code will help you in discriminating a part easily.
But, all parts will not always carry the part identification code.

V. CONSTRUCTION OF VEHICLE IDENTIFICATION NUMBER

K L A T F 69 Y E V B 123456

- K: Nation of Origin — K:Korea
- L: Manufacturer — L:Daewoo motor co.,Ltd.
- A: Vehicle Type — A:Passenger Car
- T: Car Line — T:Lanos
- F: Drive System&T/M Type — F:Front Wheel Drive Manual T/M; A:Front Wheel Drive Automatic T/M
- 69: Body Type — 08: 3 Door Hatchback, 4 windows; 48: 5 Door Hatchback, 4 windows; 69: 4 Door Notchback, 4 windows
- Y: Engine Type — C:1.4L SOHC Mpfi Fam I; Y:1.5L SOHC Mpfi Fam I; 6: 1.6L DOHC Mpfi Fam I
- E: Vehicle Use — E:Export
- V: Model Year — V:1997 W:1998
- B: Assembly Plant — B:Bupyeong plant; K:Kunsan plant
- 123456: Serial No.

LOCATION OF VEHICLE INDENTIFICATION NUMBER

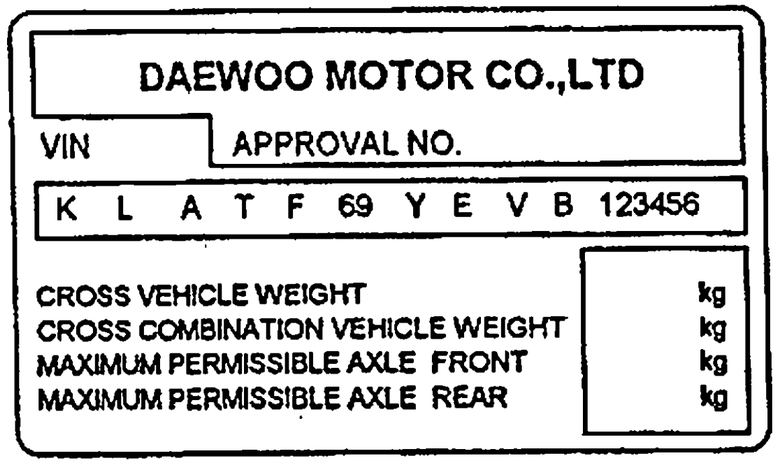

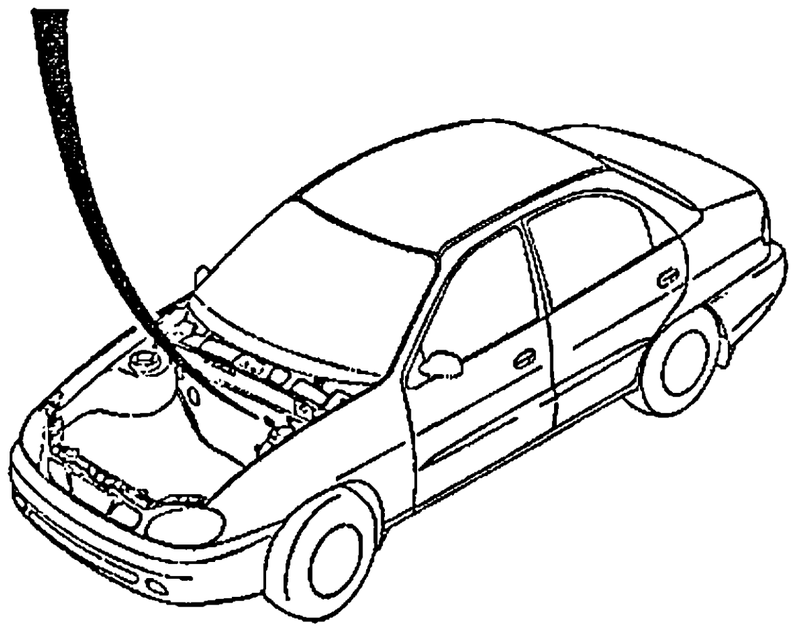

1 ENGINE

1110 ENGINE UNIT(SOHC)
1111 ENGINE UNIT(DOHC)
1120 SHORT ENGINE
1130 BELT SYSTEM
1140 REPAIR KIT(SOHC)
1141 REPAIR KIT(DOHC)
1210 ENGINE BLOCK
1220 CRANKSHAFT&PISTON
1230 OIL PAN&PUMP
1240 ENGINE OIL VENTILATION
1310 CYLINDER HEAD(SOHC)
1311 CYLINDER HEAD(DOHC)
1320 CAM SUPPORT&SHAFT(SOHC)
1321 CAM SUPPORT&SHAFT(DOHC)
1330 TIMING COVER(SOHC)
1331 TIMING COVER(DOHC)
1610 RADIATOR
1630 COOLING FAN
1650 RADIATOR HOSE&PIPE(SOHC)
1651 RADIATOR HOSE&PIPE(DOHC)
1680 THERMOSTAT(SOHC)
1681 THERMOSTAT(DOHC)
1690 OIL COOLER PIPE(A/T)
1710 IGNITION CABLE(SOHC)
1711 IGNITION CABLE(DOHC)
1740 ALTERNATOR UNIT(12V,85A)
1741 ALTERNATOR UNIT(12V,95A)
1750 ALTERNATOR MOUNT(SOHC)
1751 ALTERNATOR MOUNT(DOHC)
1760 STARTER(0.8KW)
1761 STARTER(1.4KW)
1910 ENGINE MOUNT

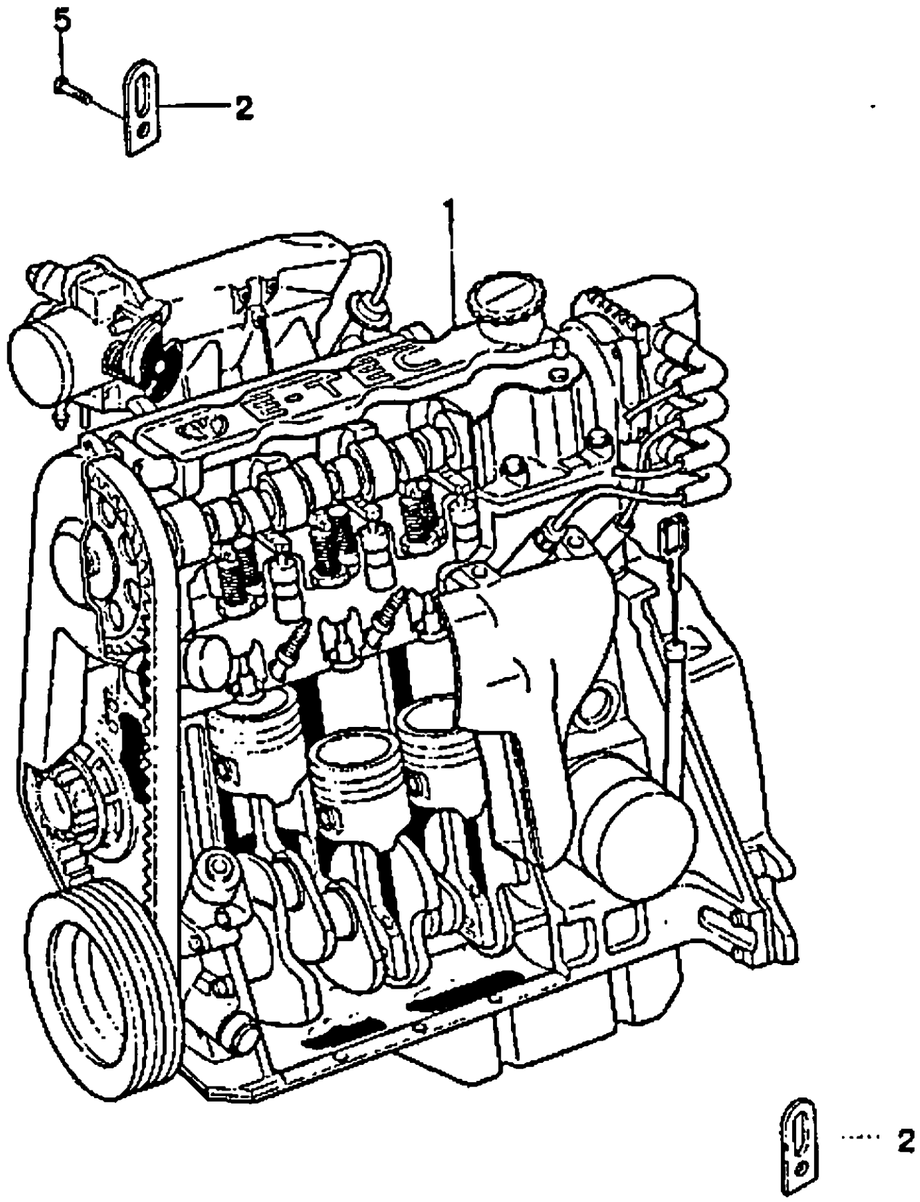

KEY NO. ITC	PART NO	MODEL ENG	T/A	BODY 4N	3H	5H	LEVEL S	SE	SX	OPTION	L/R	QTY	EFFECTIVE DATE FROM	TO	REMARKS	P/CODE
		PART NAME														
[01]		(E)ENGINE A (D)MOTOR									(F)MOTEUR (S)MOTOR					
	96184293	Y	M	B	B	B	S	S	S	&NN4-XCA		1				HF
	96352333	Y	M	B	B	B	A	A	A	&NN4&XCA		1				H2
	96184301	Y	M	B	B	B	A	A	A	&NN6-XCA		1				HB
	96352331	Y	M	B	B	B	A	A	A	&NN6&XCA		1				H8
	96350294	Y	M	B	B	B	A	A	A	&NN7-XCA		1				HJ
	96352335	Y	M	B	B	B	A	A	A	&NN7&XCA		1				H6
	96184297	Y	A	B	B	B	O	O	O	&NN4-XCA		1				HH
	96352334	Y	A	B	B	B	A	A	A	&NN4&XCA		1				H3
	96184305	Y	A	B	B	B	A	A	A	&NN6-XCA		1				HD
	96352332	Y	A	B	B	B	A	A	A	&NN6&XCA		1				H9
	96350292	Y	A	B	B	B	A	A	A	&NN7-XCA		1				HL
	96352336	Y	A	B	B	B	A	A	A	&NN7&XCA		1				H7
[02]		(E)SHACKLE-ENGINE TRANSPORT (D)HALTER,MOTOR TRANSPORT									(F)BRIDES-TRANSPORT (S)GRILLETE-TRANSPORTE					
	90076951	Y	.	B	B	B	S	S	S			2				
[05]		(E)BOLT (D)SCHRAUBE									(F)BOULON (S)PERNO					
	02865535	Y	.	B	B	B	S	S	S			1			M8X22	

ENG(ENGINE)	T/A(TRANSAXLE)	BODY TYPE
Y = 1.5SOHC 6 = 1.6DOHC . = COMMON	M = MANUAL T/A A = AUTOMATIC T/A . = COMMON	4 N = 4 DOOR NOTCHBACK 3 H = 3 DOOR HATCHBACK 5 H = 5 DOOR HATCHBACK

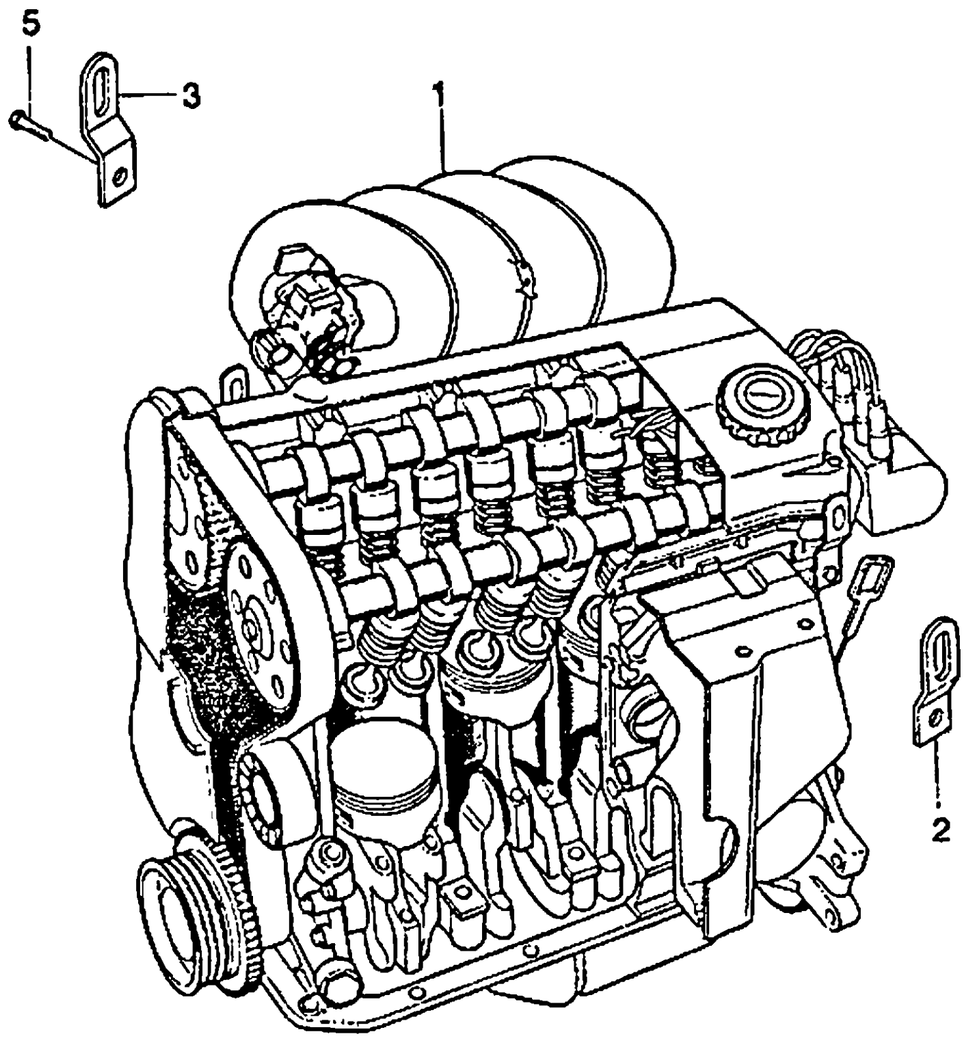

KEY NO. ITC	PART NO	MODEL ENG	T/A	BODY 4N	3H	5H	LEVEL S	SE	SX	OPTION	L/R	QTY	EFFECTIVE DATE FROM	TO	REMARKS	P/CODE
[01]		(E)ENGINE A (D)MOTOR									(F)MOTEUR (S)MOTOR					
	96350534	6	M	B	B	B	.	.	O	&NN4-XHA		1				UB
	96352343	6	M	B	B	B	.	.	A	&NN4&XHA		1				U2
	96352351														NOT APPLIED	
	96352339														NOT APPLIED	
	96184154	6	M	B	B	B	.	.	A	&NN7-XHA		1				UJ
	96352347	6	M	B	B	B	.	.	A	&NN7&XHA		1				U6
	96352477														NOT APPLIED	
	96352761	6	M	B	B	B	.	.	A	&KL9		1			FOR BRAZIL	G2
	96350538	6	A	B	B	B	.	.	O	&NN4-XHA		1				UF
	96352345	6	A	B	B	B	.	.	A	&NN4&XHA		1				U3
	96352353														NOT APPLIED	
	96352341														NOT APPLIED	
	96184157	6	A	B	B	B	.	.	A	&NN7-XHA		1				UN
	96352349	6	A	B	B	B	.	.	A	&NN7&XHA		1				U7
	96352479														NOT APPLIED	
	96352763	6	A	B	B	B	.	.	A	&KL9		1			FOR BRAZIL	G3
[02]		(E)SHACKLE-ENGINE TRANSPORT (D)HALTER,MOTOR TRANSPORT									(F)BRIDES-TRANSPORT (S)GRILLETE-TRANSPORTE					
	5094021004	6	.	B	B	B	.	.	O			1				
[03]		(E)SHACKLE-ENGINE TRANSPORT (D)HALTER,MOTOR TRANSPORT									(F)BRIDES-TRANSPORT (S)GRILLETE-TRANSPORTE					
	96130851	6	.	B	B	B	.	.	O			1				
[05]		(E)BOLT (D)SCHRAUBE									(F)BOULON (S)PERNO					

ENG(ENGINE)	T/A(TRANSAXLE)	BODY TYPE
Y = 1.5SOHC	M = MANUAL T/A	4 N = 4 DOOR NOTCHBACK
6 = 1.6DOHC	A = AUTOMATIC T/A	3 H = 3 DOOR HATCHBACK
. = COMMON	. = COMMON	5 H = 5 DOOR HATCHBACK

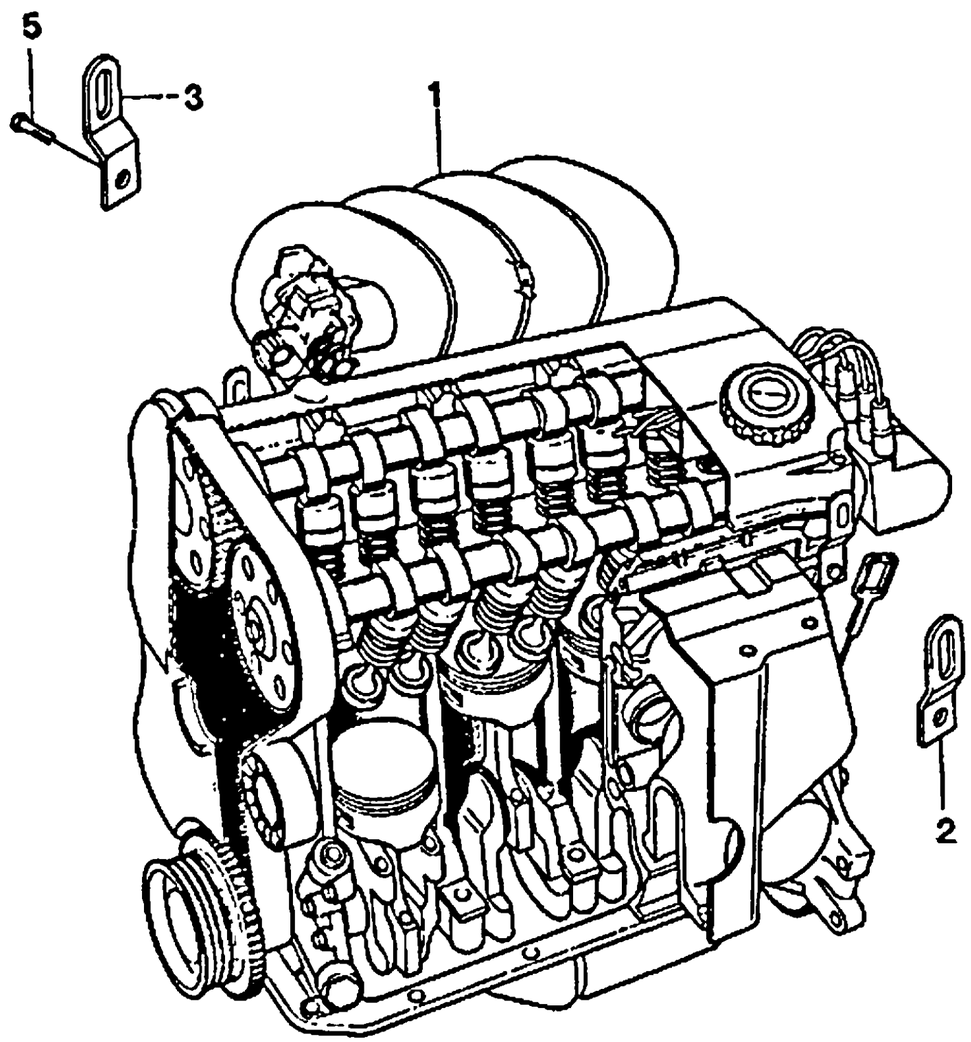

KEY NO.		PART NAME															
ITC	PART NO	MODEL								OPTION	L/R	QTY	EFFECTIVE DATE		REMARKS	P/CODE
		ENG	T/A	BODY			LEVEL						FROM	TO		
				4N	3H	5H	S	SE	SX							
	09117-08011	6	.	B	B	B	.	.	O			1				

ENG(ENGINE)	T/A(TRANSAXLE)	BODY TYPE
Y = 1.5SOHC 6 = 1.6DOHC . = COMMON	M = MANUAL T/A A = AUTOMATIC T/A . = COMMON	4 N = 4 DOOR NOTCHBACK 3 H = 3 DOOR HATCHBACK 5 H = 5 DOOR HATCHBACK

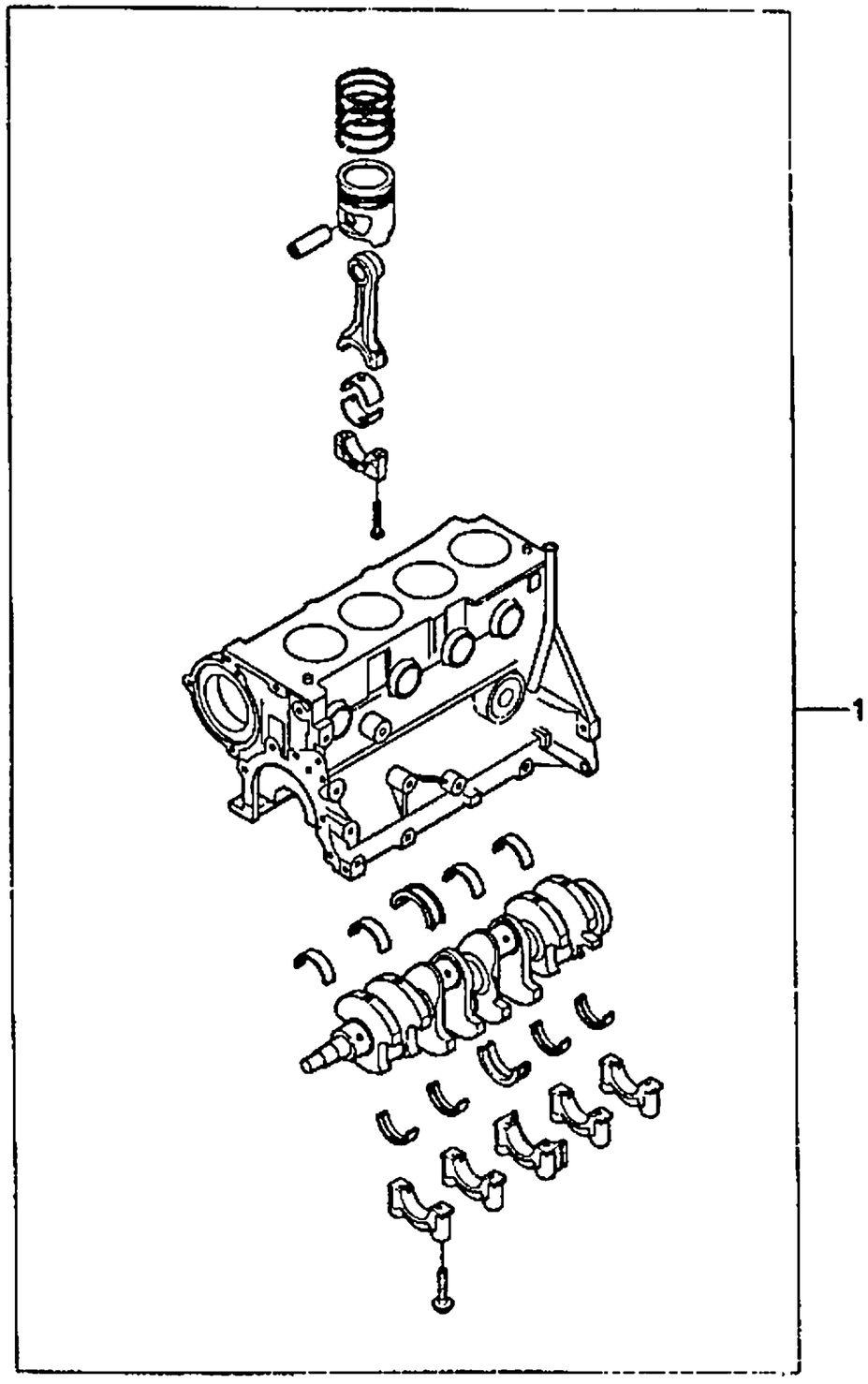

KEY NO.		PART NAME															
ITC	PART NO	MODEL								OPTION	L/R	QTY	EFFECTIVE DATE		REMARKS	P/CODE
		ENG	T/A	BODY			LEVEL						FROM	TO		
				4N	3H	5H	S	SE	SX							
[01]		(E)SHORT BLOCK A (D)KURZ BLOCK									(F)BLOC COURT (S)BLOQUE CORTO					
	A96184803Y	Y	M	B	B	B	S	S	S			1				
	A96184804Y	Y	A	B	B	B	O	O	O			1				
	A96184805W	6	M	B	B	B	.	.	O			1				
	A96184806W	6	A	B	B	B	.	.	O			1				

ENG(ENGINE)	T/A(TRANSAXLE)	BODY TYPE
Y = 1.5SOHC 6 = 1.6DOHC . = COMMON	M = MANUAL T/A A = AUTOMATIC T/A . = COMMON	4 N = 4 DOOR NOTCHBACK 3 H = 3 DOOR HATCHBACK 5 H = 5 DOOR HATCHBACK

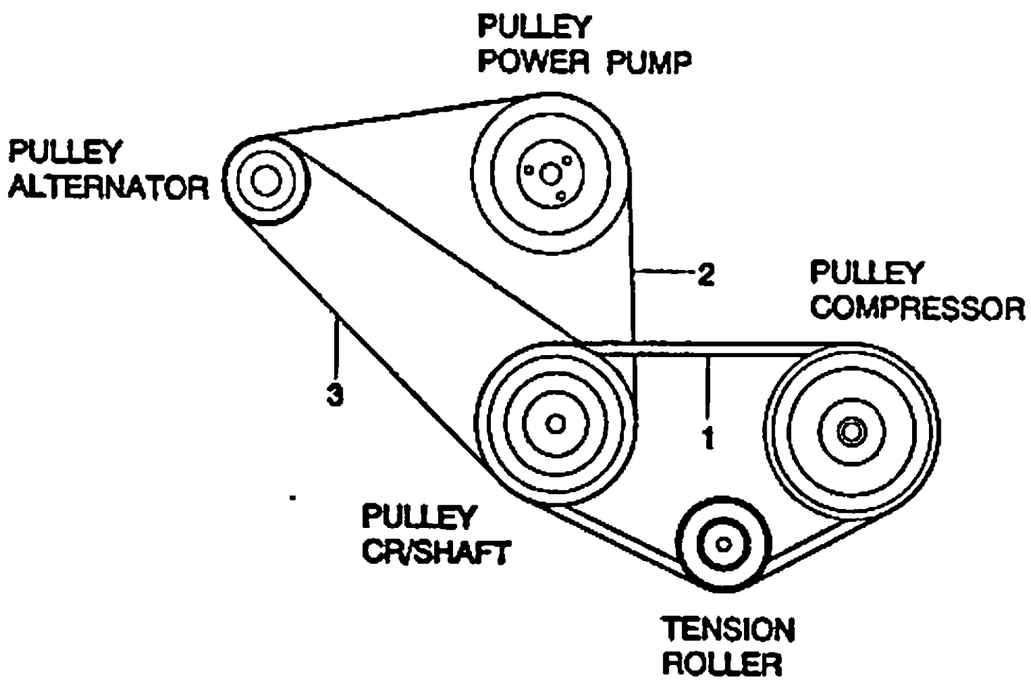

KEY NO.		PART NAME															
ITC	PART NO	MODEL								OPTION	L/R	QTY	EFFECTIVE DATE		REMARKS	P/CODE
		ENG	T/A	BODY			LEVEL						FROM	TO		
				4N	3H	5H	S	SE	SX							
	[01]	(E)V BELT (D)V GURT									(F)COURROIE EN V (S)CORREA V					
	96350467	.	.	B	B	B	O	O	O	&C60		1			840mm	
	[02]	(E)V BELT (D)V GURT									(F)COURROIE EN V (S)CORREA V					
	96144933	Y	.	B	B	B	O	O	S	&N40-XHA		1			970mm	
	96352454	Y	.	B	B	B	A	A	A	&N40&XHA		1				
	96144934	6	.	B	B	B	.	.	O	&N40-XHA		1			1008mm	
	96352455	6	.	B	B	B	.	.	A	&N40&XHA		1				
	[03]	(E)V BELT (D)V GURT									(F)COURROIE EN V (S)CORREA V					
	96144932	.	.	B	B	B	S	S	.	&N51-XHA		1			925mm	
	96352456	.	.	B	B	B	A	A	.	&N51&XHA		1				

ENG(ENGINE)	T/A(TRANSAXLE)	BODY TYPE
Y = 1.5SOHC 6 = 1.6DOHC . = COMMON	M = MANUAL T/A A = AUTOMATIC T/A . = COMMON	4 N = 4 DOOR NOTCHBACK 3 H = 3 DOOR HATCHBACK 5 H = 5 DOOR HATCHBACK

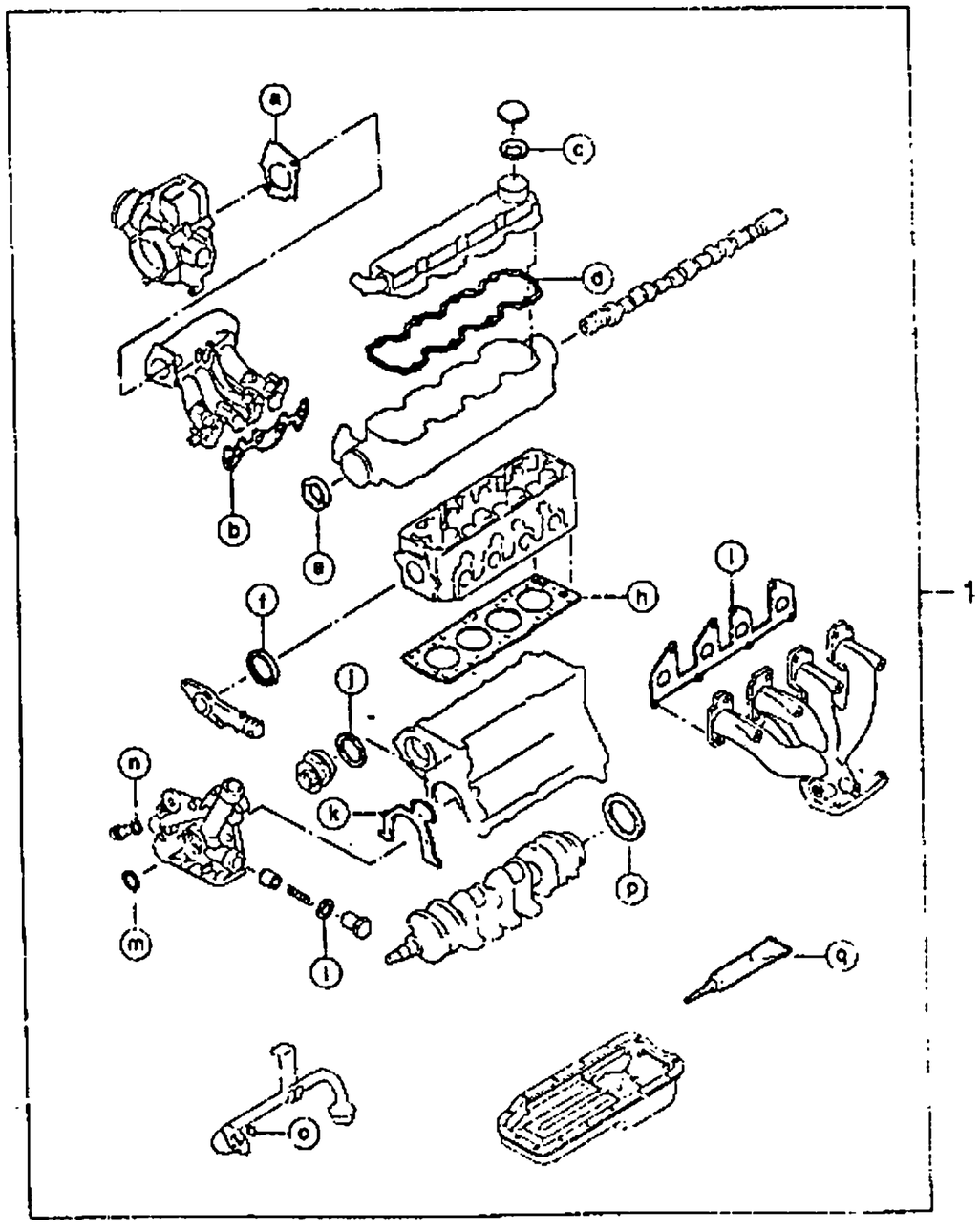

KEY NO. ITC	PART NO	MODEL ENG	T/A	BODY 4N	3H	5H	LEVEL S	SE	SX	OPTION	L/R	QTY	EFFECTIVE DATE FROM	TO	REMARKS	PICODE
[01]		(E)GASKET KIT-ENG OVERHAUL (D)DICHTUNGS-SATZ,ÜBERHOLUNG									(F)JEU DE JOINTS (S)JUEGO DE JUNTA					
	S1140005	Y .		B	B	B	S	S	S			1				
												1			REFER TO BELOW	
		- CONSIST OF -														
		ⓐ : GASKET-THROTTLE BODY										1			2210-02	
		ⓑ : GASKET-INTAKE MANIFOLD										1			2430-02	
		ⓒ : SEAL-BAYONET CAP										1			1320-02	
		ⓓ : GASKET-CAMSHAFT SUPT CVR										1			1320-05	
		ⓔ : RING-CAMSHAFT SEAL										1			1320-11	
		ⓕ : RING-THER. HOUSING SEAL										1			1680-02	
		ⓖ : GASKET-CYLINDER HEAD										1			1310-22	
		ⓗ : GASKET-EXH. MANIFOLD										1			2440-02	
		ⓘ : RING-CYL. BLOCK SEAL										1			1330-02	
		ⓙ : GASKET-OIL PUMP BODY										1			1230-11	
		ⓚ : RING-OIL PUMP SEAL										1			1230-05	
		ⓛ : RING-CRANKSHAFT SEAL										1			1230-02	
		ⓜ : WASHER-PLAIN										1			1230-15	
		ⓝ : RING-SEAL										1			1230-20	
		ⓞ : RING-CRANKSHAFT SEAL										1			1220-09	
		ⓟ : GASKET-OIL PAN										1			9120-13	
															GROUP NO / KEY NO	

ENG(ENGINE)	T/A(TRANSAXLE)	BODY TYPE
Y = 1.5SOHC	M = MANUAL T/A	4 N = 4 DOOR NOTCHBACK
6 = 1.6DOHC	A = AUTOMATIC T/A	3 H = 3 DOOR HATCHBACK
. = COMMON	. = COMMON	5 H = 5 DOOR HATCHBACK

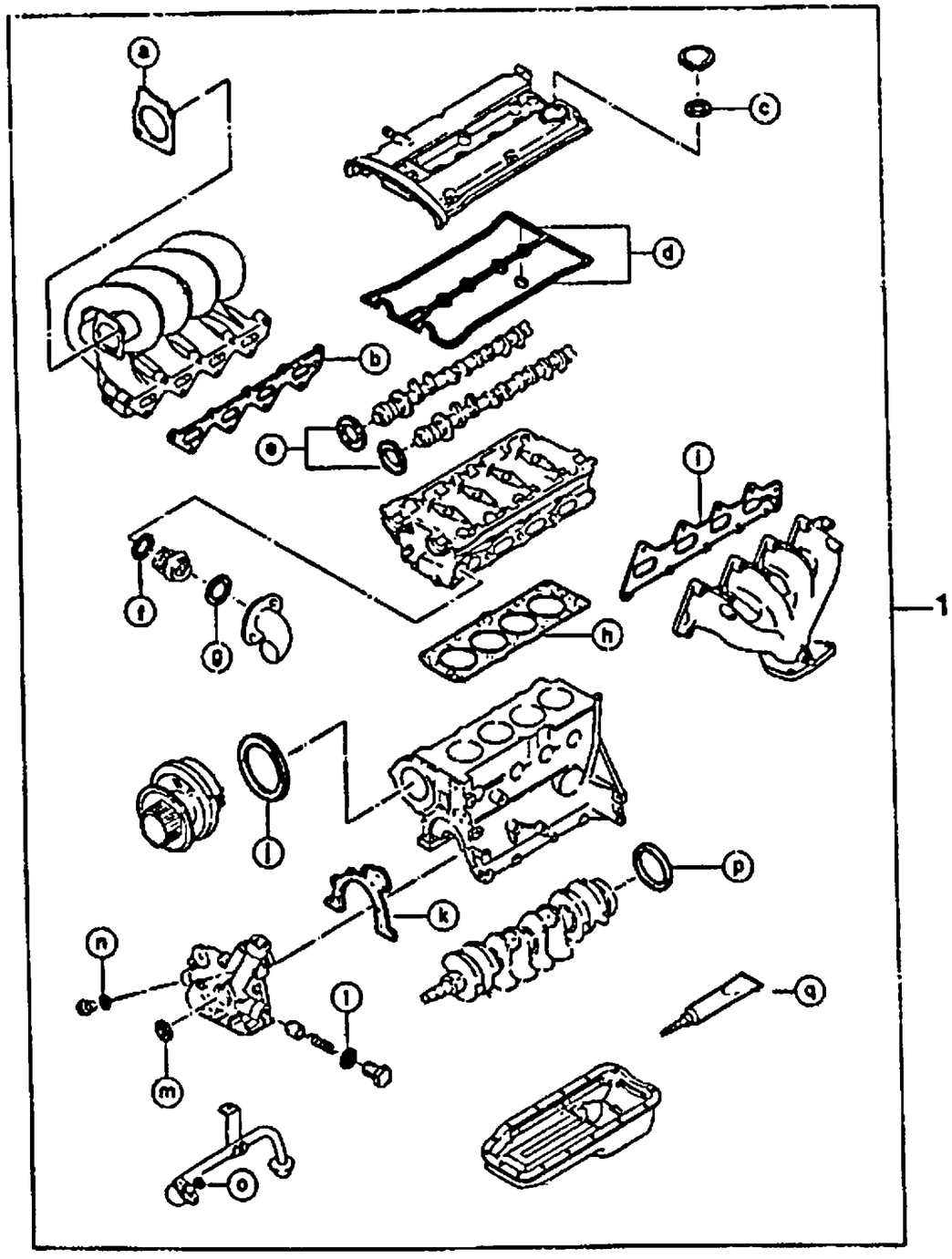

KEY NO. ITC	PART NO	MODEL ENG	T/A	BODY 4N	3H	5H	LEVEL S	SE	SX	OPTION	L/R	QTY	EFFECTIVE DATE FROM	TO	REMARKS	P/CODE
[01]		(E)GASKET KIT-ENG OVERHAUL (D)DICHTUNGS-SATZ,ÜBERHOLUNG									(F)JEU DE JOINTS (S)JUEGO DE JUNTA					
S1141024		6	.	B	B	B	.	.	O			1				
												1			REFER TO BELOW	
		- CONSIST OF -														
		ⓐ : GASKET-THROTTLE BODY										1			2211-02	
		ⓑ : GASKET-INTAKE MANIFOLD										1			2431-02	
		ⓒ : SEAL-BAYONET CAP										1			1321-02	
		ⓓ : GASKET-CAMSHAFT SUPT CVR										1			1321-09	
		ⓔ : RING-CAMSHAFT SEAL										2			1321-11	
		ⓕ : RING-THER. COVER SEAL										1			1681-01	
		ⓖ : RING-THER. HOUSING SEAL										1			1681-04	
		ⓗ : GASKET-CYLINDER HEAD										1			1311-25	
		ⓘ : GASKET-EXH. MANIFOLD										1			2441-02	
		ⓙ : RING-CYL. BLOCK SEAL										1			1331-02	
		ⓚ : GASKET-OIL PUMP BODY										1			1230-11	
		ⓛ : RING-OIL PUMP SEAL										1			1230-05	
		ⓜ : RING-CRANKSHAFT SEAL										1			1230-02	
		ⓝ : WASHER-PLAIN										1			1230-15	
		ⓞ : RING-SEAL										1			1230-20	
		ⓟ : RING-CRANKSHAFT SEAL										1			1220-09	
		ⓠ : GASKET-OIL PAN										1			9120-13 GROUP NO / KEY NO	

ENG(ENGINE)	T/A(TRANSAXLE)	BODY TYPE
Y = 1.5SOHC 6 = 1.6DOHC . = COMMON	M = MANUAL T/A A = AUTOMATIC T/A . = COMMON	4 N = 4 DOOR NOTCHBACK 3 H = 3 DOOR HATCHBACK 5 H = 5 DOOR HATCHBACK

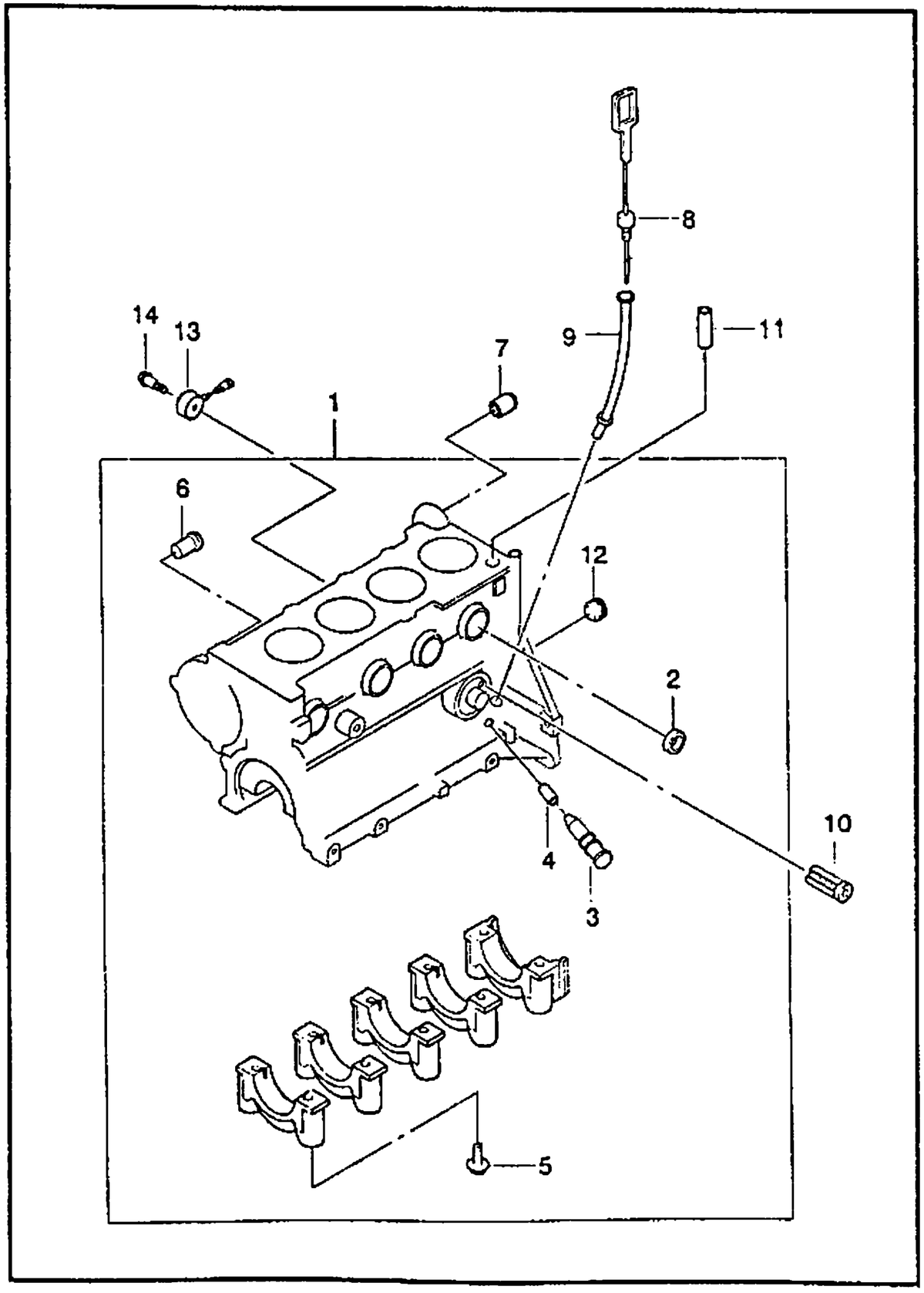

KEY NO. ITC	PART NO	MODEL ENG	T/A	BODY 4N	3H	5H	LEVEL S	SE	SX	OPTION	L/R	QTY	EFFECTIVE DATE FROM	TO	REMARKS	P/CODE
[01]		(E)BLOCK A-CYLINDER (D)BLOCK,ZYLINDER									(F)BLOC-CYLINDRE (S)BLOQUE-CILINDRO					
A96184803		Y	M	B	B	B	S	S	S			1				
A96184804		Y	A	B	B	B	O	O	O			1				
A96184805		6	M	B	B	B	.	.	O			1				
A96184806		6	A	B	B	B	.	.	O			1				
[02]		(E)CAP (D)DECKEL									(F)CHAPEAU (S)TAPA					
96180730		.	.	B	B	B	S	S	S			6			34-STD	
11070803		.	.	B	B	B	S	S	S			6			36-OIS	
[03]		(E)PLUG-IGNITION TIMING (D)STÖPSEL									(F)BOUCHON (S)TAPON-TIEMPO DE IGNICION					
90091048		.	.	B	B	B	S	S	S			1		971001		
[04]		(E)BUSHING-IGNITION TIMING (D)LAGERFUTTER									(F)MANCHON (S)BUJE-TIEMPO DE IGNICION					
90091049		.	.	B	B	B	S	S	S			1				
[05]		(E)BOLT-HEXAGON (D)SCHRAUBE									(F)BOULON (S)PERNO					
09100-10008		.	.	B	B	B	S	S	S			10				
[06]		(E)NECK-WATER INLET (D)HALS,WASSERLEITUNG									(F)COU-ENTREE EAU (S)CUELLO-ENTRADA DE AGUA					
96351207		.	.	B	B	B	S	S	S			1				
[07]		(E)SLEEVE (D)HÜLSE,KUPPLUNG GEHÄUSE									(F)CHEMISE (S)MANGA-CARTER DE EMBRAGUE					
90108591		.	.	B	B	B	S	S	S			2				
[08]		(E)STICK A-OIL LEVEL GAUGE (D)MEßSTAB,ÖL PEGEL									(F)JAUGE (S)VARILLA-MEDIDOR					
96352131		.	M	B	B	B	S	S	S			1				

ENG(ENGINE)	T/A(TRANSAXLE)	BODY TYPE
Y = 1.5SOHC 6 = 1.6DOHC . = COMMON	M = MANUAL T/A A = AUTOMATIC T/A . = COMMON	4 N = 4 DOOR NOTCHBACK 3 H = 3 DOOR HATCHBACK 5 H = 5 DOOR HATCHBACK

3K05

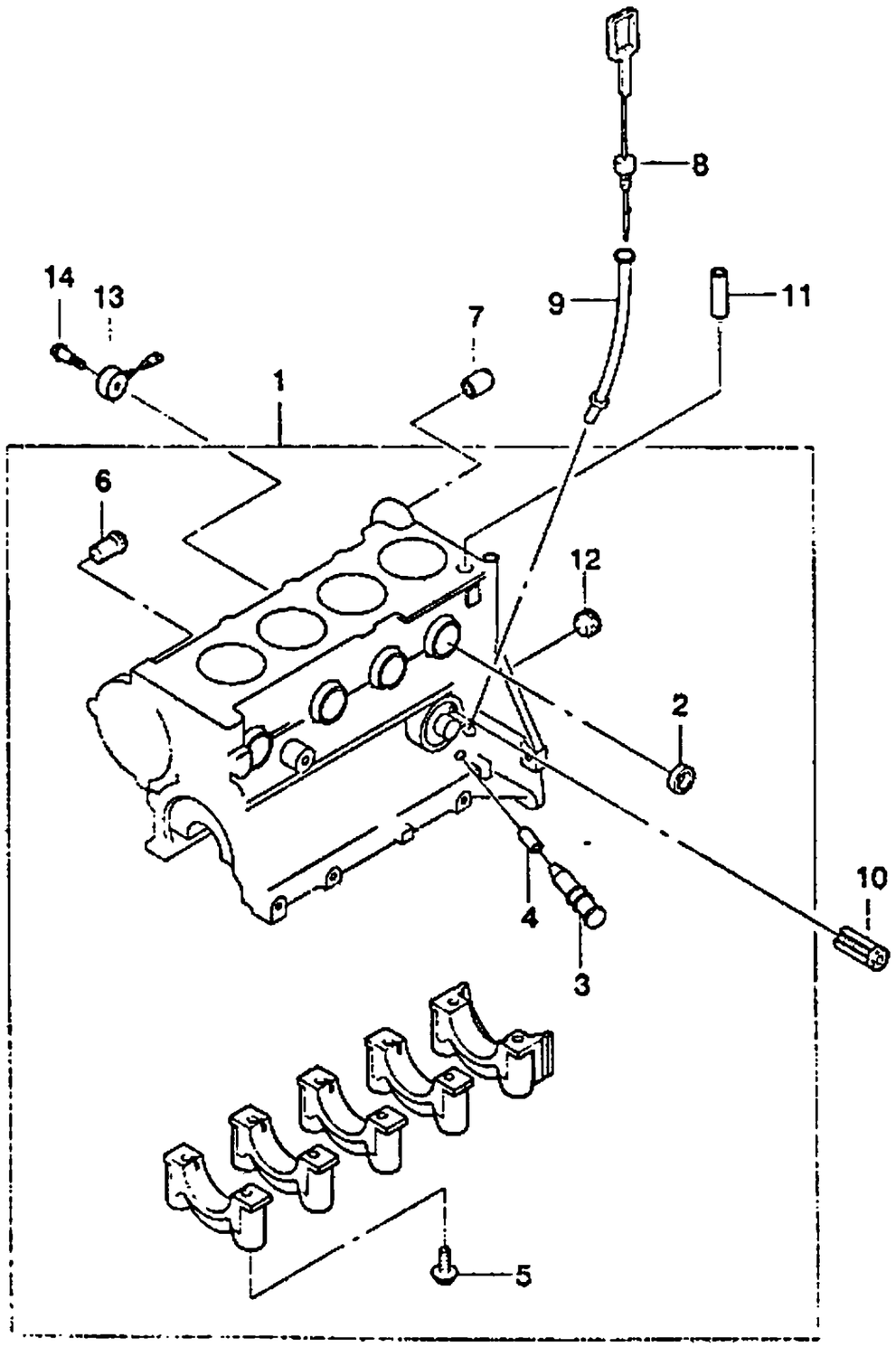

KEY NO.		PART NAME															
ITC	PART NO	MODEL								OPTION	L/R	QTY	EFFECTIVE DATE		REMARKS	P/CODE
		ENG	T/A	BODY			LEVEL						FROM	TO		
				4N	3H	5H	S	SE	SX							
	96352132	.	A	B	B	B	O	O	O			1				
	[09]	(E)TUBE-GAUGE STICK (D)ROHRLEITUNG,MEßSTAB										(F)TUYAU-JAUGE EN BATON (S)TUBO-VARILLA DE MEDIDOR				
	96352134	.	.	B	B	B	S	S	S			1				
	[10]	(E)VALVE A-BYPASS (D)VENTIL,ÜBERGANG										(F)SOUPAPE-DERIVATION (S)VALVULA-BY PASS				
	90136113	.	.	B	B	B	S	S	S			1				
	[11]	(E)SLEEVE (D)HÜLSE										(F)CHEMISE (S)MANGA				
	90091779	.	.	B	B	B	S	S	S			2				
	[12]	(E)PLUG (D)STÖPSEL										(F)BOUCHON (S)TAPON				
	09246-14001	.	.	B	B	B	S	S	S			2				
	[13]	(E)SENSOR-KNOCK (D)SENSOR										(F)DETECTEUR (S)SENSOR				
	10456240	6	.	B	B	B	.	.	O			1				
	[14]	(E)BOLT (D)SCHRAUBE										(F)BOULON (S)PERNO				
	09111-08002	6	.	B	B	B	.	.	O			1				

ENG(ENGINE)	T/A(TRANSAXLE)	BODY TYPE
Y = 1.5SOHC 6 = 1.6DOHC . = COMMON	M = MANUAL T/A A = AUTOMATIC T/A . = COMMON	4 N = 4 DOOR NOTCHBACK 3 H = 3 DOOR HATCHBACK 5 H = 5 DOOR HATCHBACK

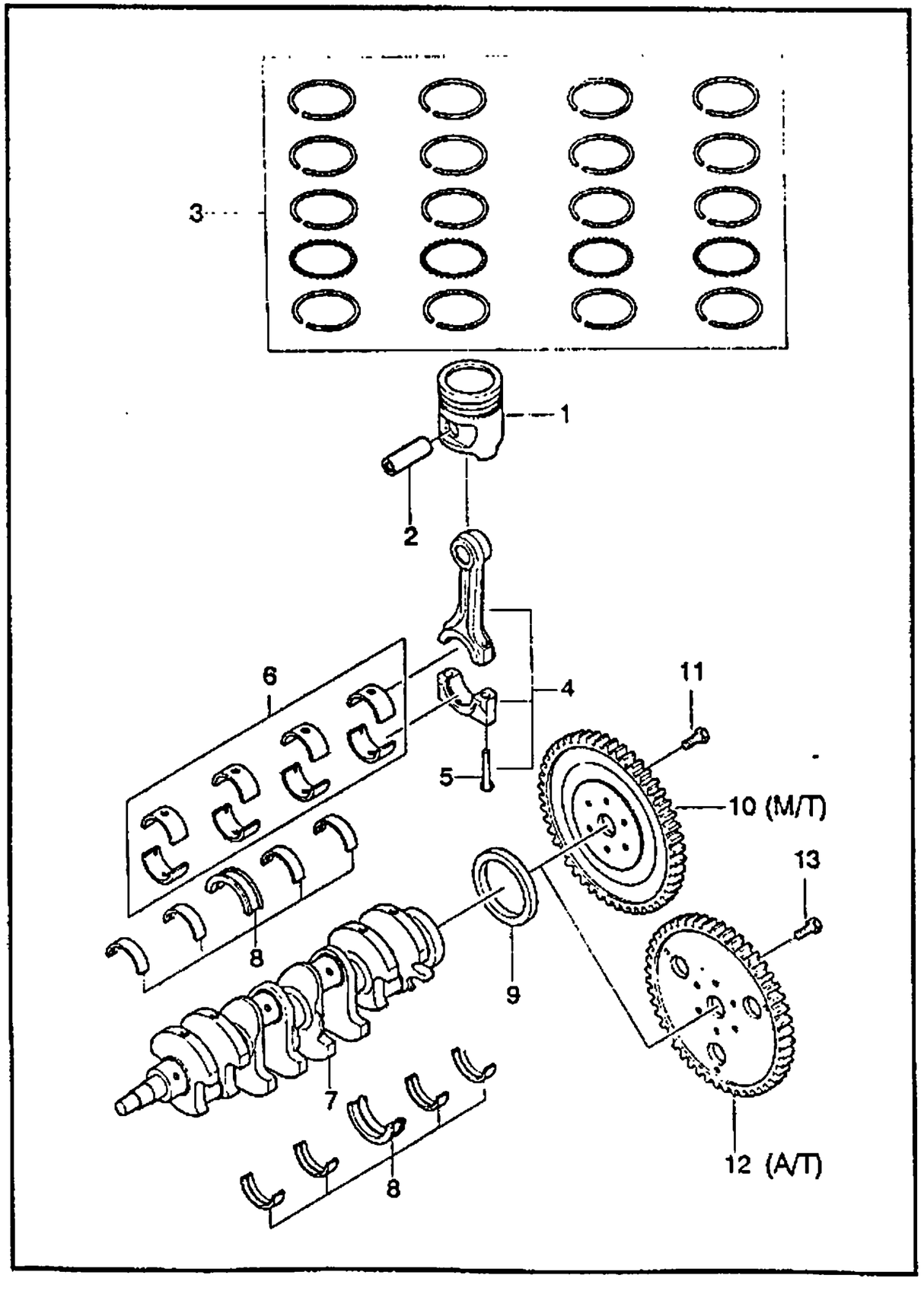

KEY NO. ITC	PART NO	MODEL ENG	MODEL T/A	BODY 4N	BODY 3H	BODY 5H	LEVEL S	LEVEL SE	LEVEL SX	OPTION	L/R	QTY	EFFECTIVE DATE FROM	EFFECTIVE DATE TO	REMARKS	PICODE
[01]	(E)PISTON (D)KOLBEN										(F)PISTON (S)PISTON					
	96350120	Y	.	B	B	B	S	S	S			4			STD	
	S1220008	Y	.	B	B	B	S	S	S			4			O/S 0.25	
	S1220009	Y	.	B	B	B	S	S	S			4			O/S 0.5	
	96182846	6	.	B	B	B	.	.	O			4			STD	
	S1220019	6	.	B	B	B	.	.	O			4			O/S 0.25	
	S1220020	6	.	B	B	B	.	.	O			4			O/S 0.5	
[02]	(E)PIN-PISTON (D)STIFT,KOLBEN										(F)BROCHE-PISTON (S)PASADOR-PISTON					
	96110730	Y	.	B	B	B	S	S	S			4				
	96350355	6	.	B	B	B	.	.	O			4				
[03]	(E)RING SET-PISTON (D)RING SATZ,KOLBEN										(F)JEU DE SEGMENTS-PISTON (S)JUEGO DE ANILLOS-PISTON					
	NP960	Y	.	B	B	B	S	S	S			1			STD	
	NP1015	Y	.	B	B	B	S	S	S			1			O/S 0.25	
	NP1016	Y	.	B	B	B	S	S	S			1			O/S 0.5	
	S1220014	6	.	B	B	B	.	.	O			1			STD	
	S1220015	6	.	B	B	B	.	.	O			1			O/S 0.25	
	S1220016	6	.	B	B	B	.	.	O			1			O/S 0.5	
[04]	(E)ROD A- CONNECTING (D)STAB,VERBINDUNGS										(F)BIELLE-BIELLE (S)VARILLA-CONECTANDO					
	A90281724	.	.	B	B	B	S	S	S			4				
[05]	(E)BOLT-HEXAGON (D)SCHRAUBE										(F)BOULON (S)PERNO					
	09100-08004	.	.	B	B	B	S	S	S			8				

ENG(ENGINE)	T/A(TRANSAXLE)	BODY TYPE
Y = 1.5SOHC 6 = 1.6DOHC . = COMMON	M = MANUAL T/A A = AUTOMATIC T/A . = COMMON	4 N = 4 DOOR NOTCHBACK 3 H = 3 DOOR HATCHBACK 5 H = 5 DOOR HATCHBACK

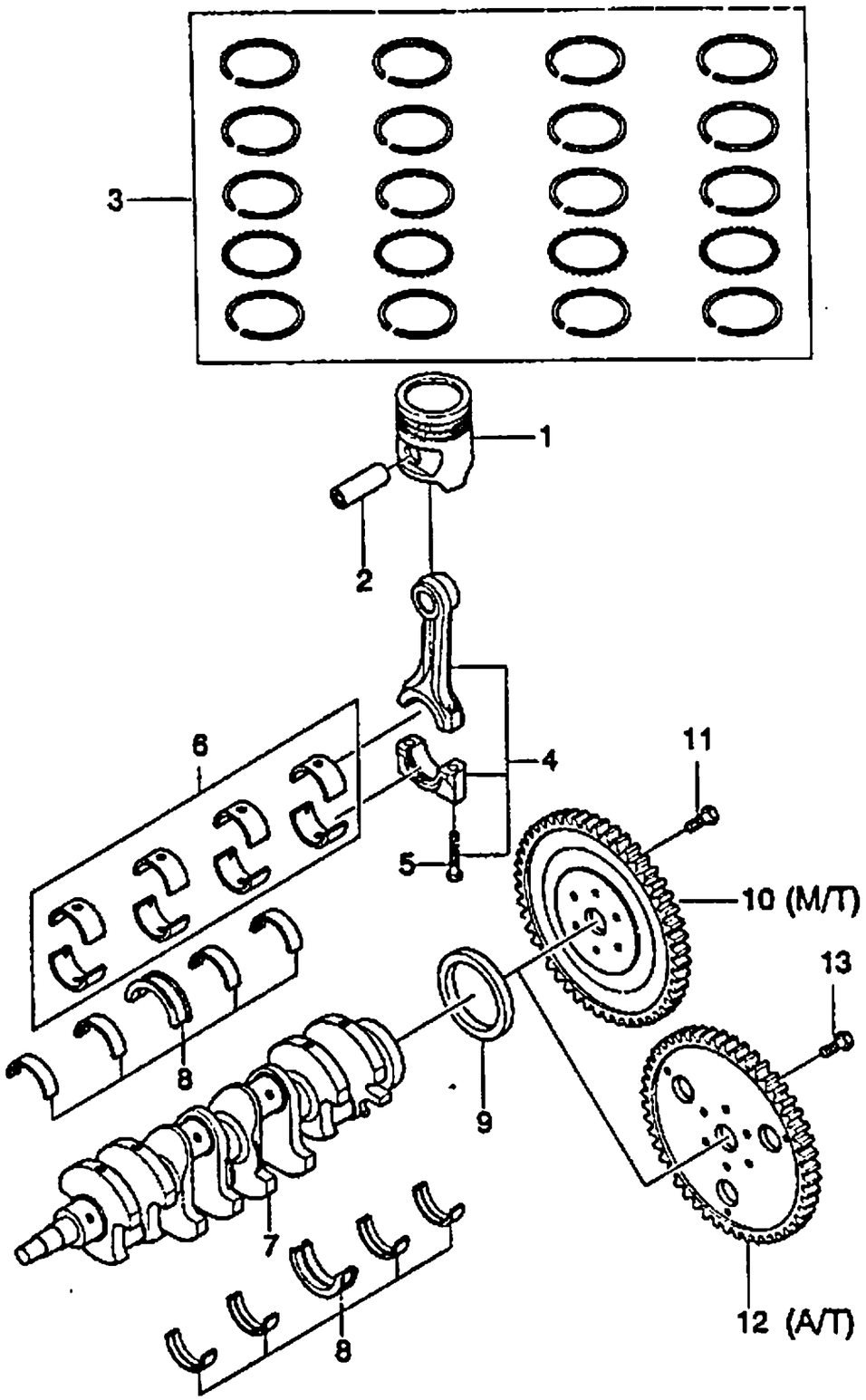

KEY NO.	PART NAME															
ITC	PART NO	MODEL							OPTION	L/R	QTY	EFFECTIVE DATE		REMARKS	P/CODE
		ENG	T/A	BODY			LEVEL					FROM	TO		
				4N	3H	5H	S	SE	SX						
[06]	(E)BEARING SET-CONNECTING ROD (D)KUGELLAGER									(F)ROULEMENT-BIELLE (S)COJINETE-VARA DE CONEXION					
96351662S		.	.	B	B	B	S	S	S		1				
96351663S		.	.	B	B	B	S	S	S		1				
[07]	(E)CRANKSHAFT A (D)KURBELWELLE									(F)VILEBREQUIN (S)CIGUEÑAL					
A96350171		.	.	B	B	B	S	S	S		1				
[08]	(E)BEARING SET-CRANKSHAFT (D)KUGELLAGER STELLUNG									(F)JEU DE ROULEMENT (S)JUEGO DE COJINETE					
S1220012		.	.	B	B	B	S	S	S		1			STD	
S1220013		.	.	B	B	B	S	S	S		1			U/S 0.25	
[09]	(E)RING-SHAFT SEAL (D)RING,STAB DICHTUNG									(F)ANNEAU-JOINT D'ARBRE (S)ANILLO-BROCHE DE EJE					
96101489		.	.	B	B	B	S	S	S		1			80X98X10	
[10]	(E)FLYWHEEL A (D)SCHWUNGRAD									(F)VOLANT D'ENTRAINEMENT (S)VOLANTE					
96184979		Y	M	B	B	B	S	S	S		1				
96184353		6	M	B	B	B	.	.	O		1			POT	
[11]	(E)BOLT-HEXAGON (D)SCHRAUBE									(F)BOULON (S)PERNO					
09100-09001		Y	M	B	B	B	S	S	S		6				
09100-09003		6	M	B	B	B	.	.	O		6				
[12]	(E)PLATE A-FLEXIBLE (D)PLATTE,FLEXIBEL									(F)PLAQUE-FLEXIBLE (S)PLACA-FLEXIBLE					
90236309		.	A	B	B	B	O	O	O		1				
[13]	(E)BOLT-HEXAGON (D)SCHRAUBE									(F)BOULON (S)PERNO					
09100-09004		.	A	B	B	B	O	O	O		6				

ENG(ENGINE)	T/A(TRANSAXLE)	BODY TYPE
Y = 1.5SOHC 6 = 1.6DOHC . = COMMON	M = MANUAL T/A A = AUTOMATIC T/A . = COMMON	4 N = 4 DOOR NOTCHBACK 3 H = 3 DOOR HATCHBACK 5 H = 5 DOOR HATCHBACK

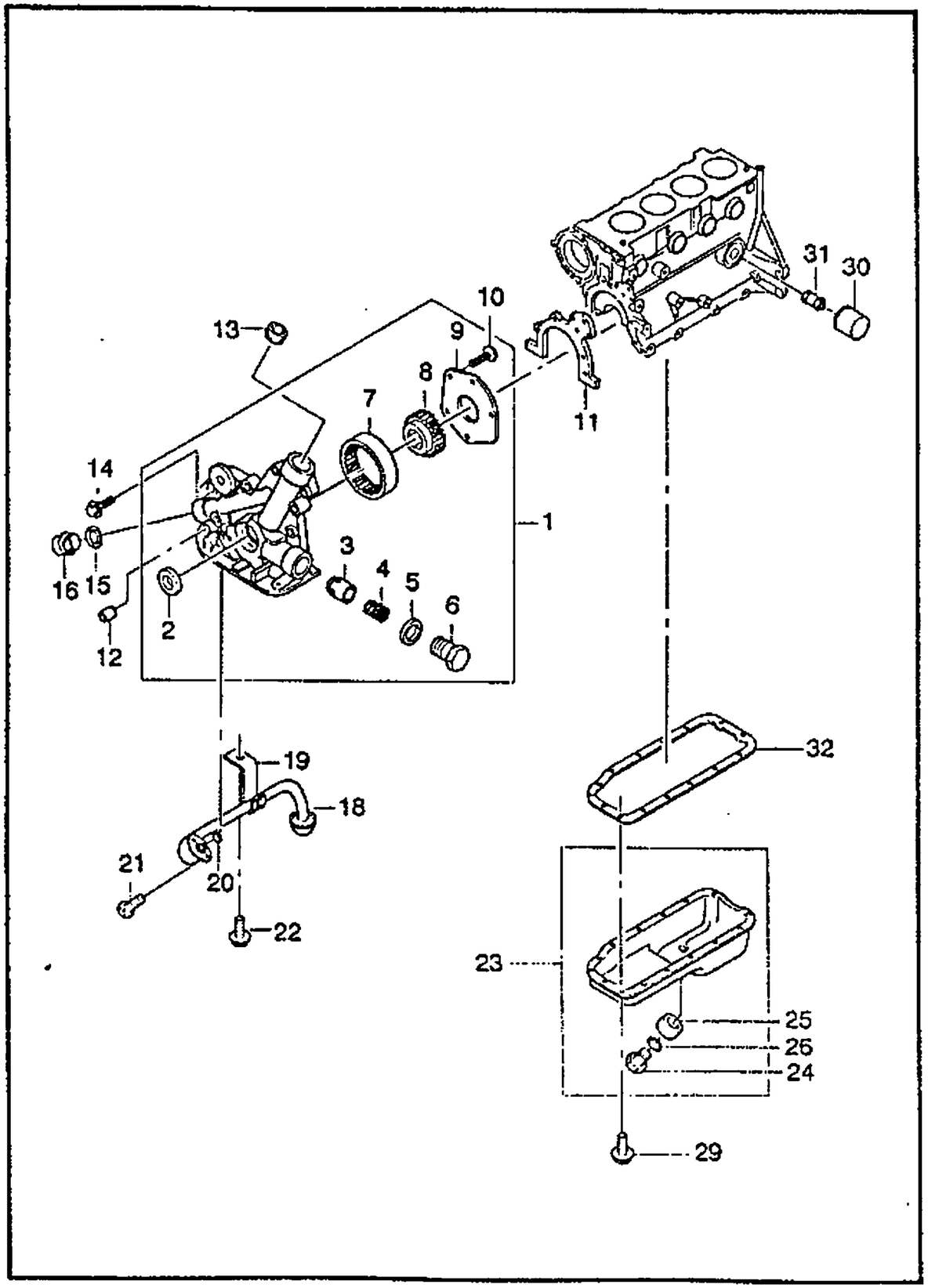

KEY NO. ITC	PART NO	MODEL ENG	T/A	BODY 4N	3H	5H	LEVEL S	SE	SX	OPTION	L/R	QTY	EFFECTIVE DATE FROM	TO	REMARKS	PICODE
[01]		(E)PUMP A-OIL (D)PUMPE,ÖL									(F)POMPE-HUILE (S)BOMBA-ACEITE					
	96350159	.	.	B	B	B	S	S	S			1				
[02]		(E)RING-SHAFT SEAL (D)RING,KURBELWELLE DICHTUNG									(F)ANNEAU-JOINT VILEBREQUIN (S)ANILLO-SELLO DE CIGUEÑAL					
	96350161	.	.	B	B	B	S	S	S			1			30X42X8	
[03]		(E)PLUNGER-PRESS VALVE (D)TAUCHER									(F)PISTON PLONGEUR (S)EMBOLO					
	03448846	.	.	B	B	B	S	S	S			1				
[04]		(E)SPRING (D)FEDERUNG									(F)RESSORT (S)RESORTE					
	03448847	.	.	B	B	B	S	S	S			1				
[05]		(E)RING-SEAL (D)RING,ÖLPUMPE DICHTUNG									(F)ANNEAU (S)ANILLO-SELLO					
	11093042	.	.	B	B	B	S	S	S			1				
[06]		(E)PLUG-SCREW (D)STÖPSEL,SCHRAUBEN									(F)BOUCHON-VIS (S)TAPON-TORNILLO					
	03448834	.	.	B	B	B	S	S	S			1			M20X1.5	
[07]		(E)ROTOR-OIL PUMP OUTER (D)DREHTEIL									(F)ROTOR (S)ROTOR					
	96350165	.	.	B	B	B	S	S	S			1				
[08]		(E)ROTOR-OIL PUMP INNER (D)DREHTEIL									(F)ROTOR (S)ROTOR					
	96350164	.	.	B	B	B	S	S	S			1				
[09]		(E)COVER-OIL PUMP (D)DECKEL,ÖLPUMPE									(F)CARTER-POMPE A HUILE (S)CUBIERTA-BOMBA DE ACEITE					
	96350166	.	.	B	B	B	S	S	S			1				
[10]		(E)SCREW (D)SCHRAUBE									(F)VIS (S)TORNILLO					

ENG(ENGINE)	T/A(TRANSAXLE)	BODY TYPE
Y = 1.5SOHC 6 = 1.6DOHC . = COMMON	M = MANUAL T/A A = AUTOMATIC T/A . = COMMON	4 N = 4 DOOR NOTCHBACK 3 H = 3 DOOR HATCHBACK 5 H = 5 DOOR HATCHBACK

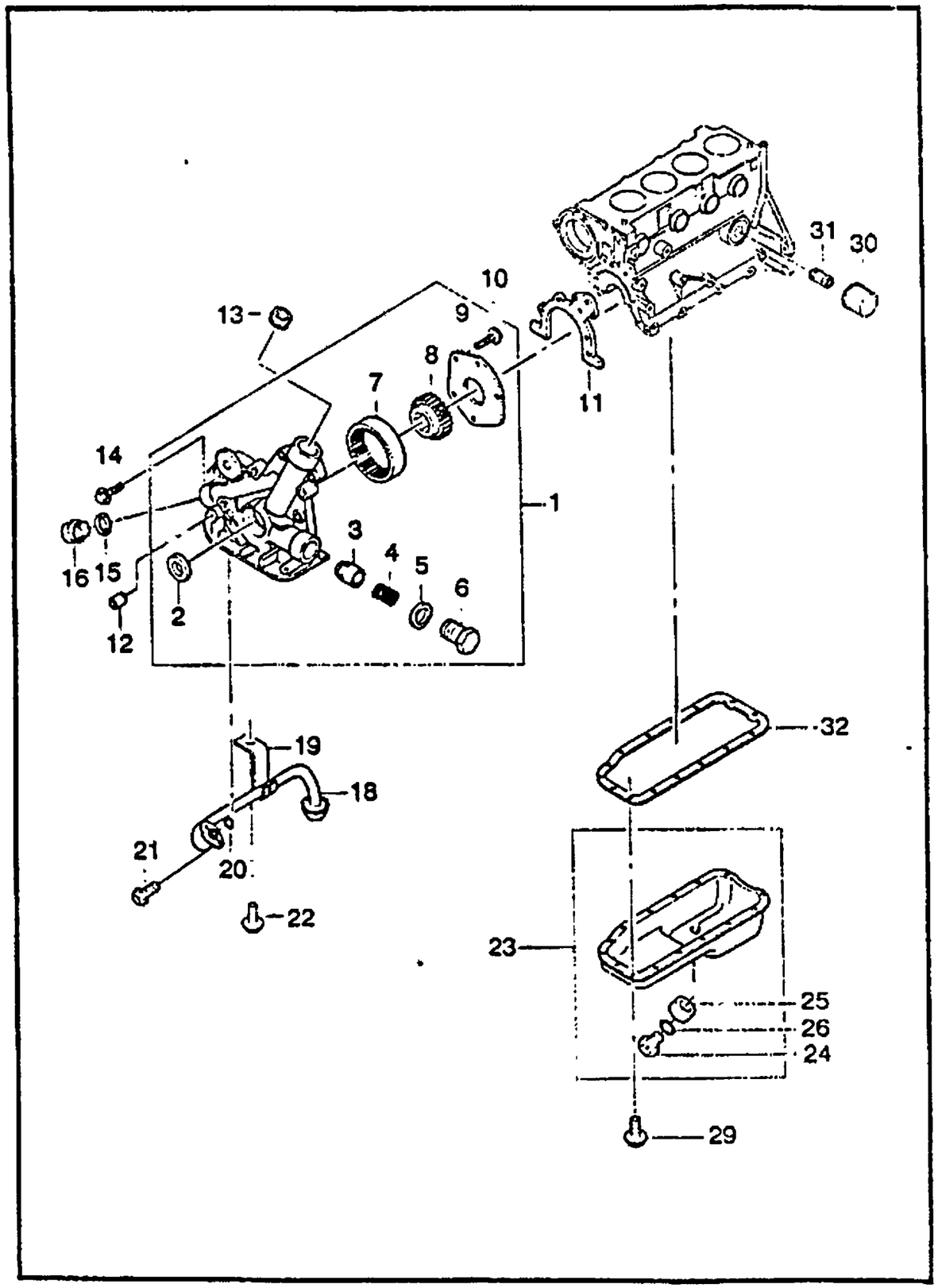

KEY NO. ITC	PART NO	MODEL ENG	MODEL T/A	BODY 4N	BODY 3H	BODY 5H	LEVEL S	LEVEL SE	LEVEL SX	OPTION	L/R	QTY	EFFECTIVE DATE FROM	EFFECTIVE DATE TO	REMARKS	P/CODE
	11085861	.	.	B	B	B	S	S	S			5			M6X14	
[11]	(E)GASKET-OIL PUMP BODY (D)DICHTUNG,ÖL-PUMPE-KÖRPER														(F)JOINT-CORPS POMPE A HUILE (S)JUNTA-CUERPO DE BOMBA	
	96181208	.	.	B	B	B	S	S	S	&NN4		1				
	96100599	.	.	B	B	B	A	A	A	&NN5		1				
	90353564	.	.	B	B	B	A	A	A	&NN7		1		970608		
	Y 96181208	.	.	B	B	B	A	A	A	&NN7		1	970608			
[12]	(E)SLEEVE-OIL PUMP (D)HÜLSE,ÖLPUMPE														(F)CHEMISE-POMPE A HUILE (S)MANGA-BOMBA DE ACEITE	
	90096047	.	.	B	B	B	S	S	S			2				
[13]	(E)PLUG-SCREW (D)STÖPSEL,SCHRAUBEN														(F)BOUCHON-VIS (S)TAPON-TORNILLO	
	09246-18002	.	.	B	B	B	S	S	S			1				
[14]	(E)BOLT-HEXAGON (D)SCHRAUBE														(F)BOULON (S)PERNO	
	01130-06253															NOT APPLIED
	09117-06008	.	.	B	B	B	S	S	S			6				
[15]	(E)WASHER-PLAIN (D)DICHTUNGSRING														(F)RONDELLE (S)ARANDELA	
	09160-14003	.	.	B	B	B	S	S	S			1				
[16]	(E)SWITCH A-OIL PRESSURE (D)SCHALTER,ÖL DRUCK														(F)COMMUTATEUR (S)INTERRUPTOR	
	90336039	.	.	B	B	B	S	S	S			1				
[18]	(E)PIPE A-OIL SUCTION (D)ROHR,ÖL SAUG														(F)TUYAU-ASPIRATION HUILE (S)TUBERIA-SUCCION DE ACEITE	
	90410981	.	.	B	B	B	S	S	S			1				
[19]	(E)BRACKET-OIL SUCTION PIPE (D)TRÄGER,ÖLLEITUNGSROHR														(F)SUPPORT (S)SOPORTE	

ENG(ENGINE)	T/A(TRANSAXLE)	BODY TYPE
Y = 1.5SOHC 6 = 1.6DOHC . = COMMON	M = MANUAL T/A A = AUTOMATIC T/A . = COMMON	4 N = 4 DOOR NOTCHBACK 3 H = 3 DOOR HATCHBACK 5 H = 5 DOOR HATCHBACK

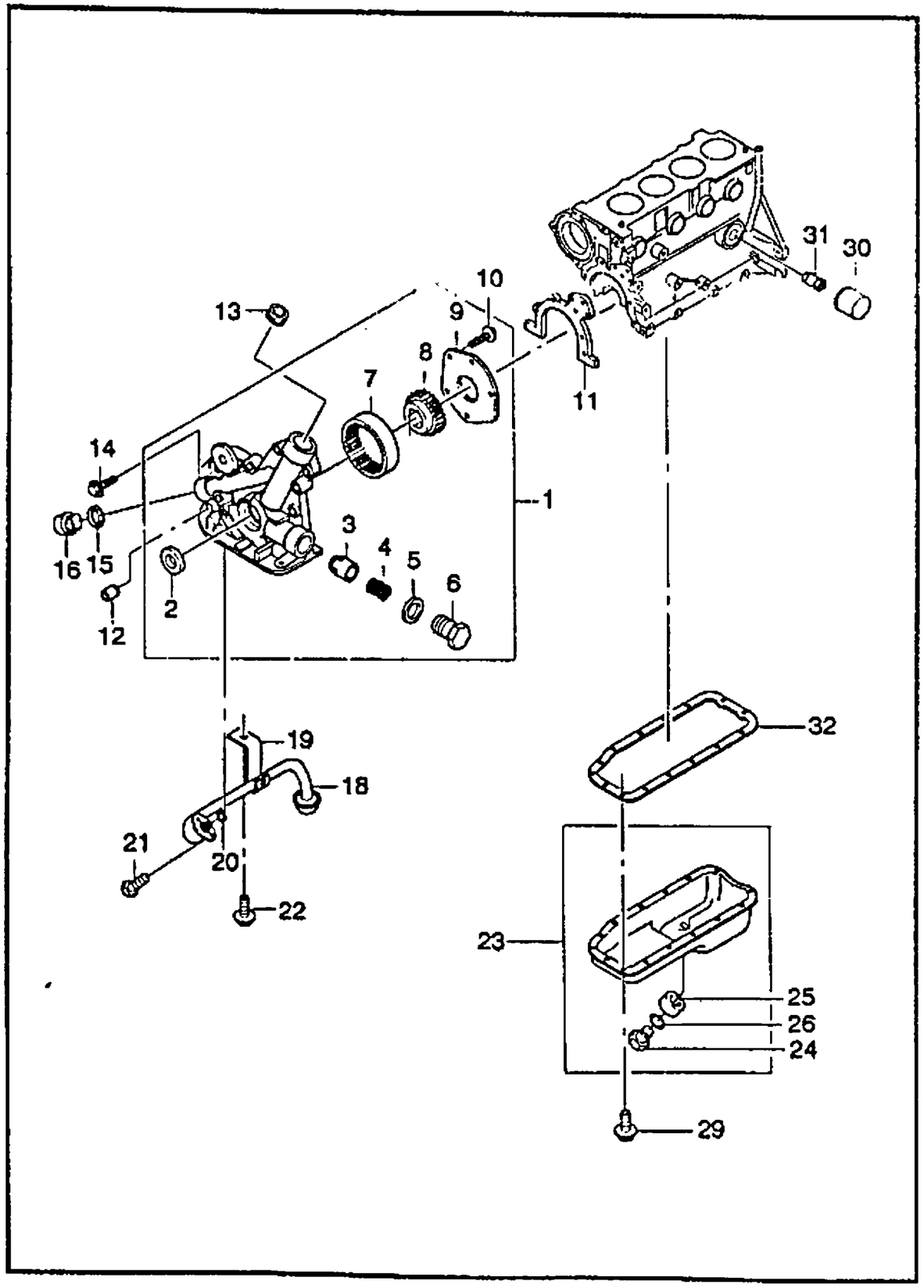

KEY NO. ITC	PART NO	MODEL ENG	T/A	BODY 4N	3H	5H	LEVEL S	SE	SX	OPTION	L/R	QTY	EFFECTIVE DATE FROM	TO	REMARKS	P/CODE
	90076916	.	.	B	B	B	S	S	S			1				
[20]	(E)RING-SEAL (D)RING,DICHTUNG										(F)ANNEAU-JOINT (S)ANILLO-SELLO					
	90190637	.	.	B	B	B	S	S	S			1				
[21]	(E)BOLT (D)SCHRAUBE										(F)BOULON (S)PERNO					
	09117-06001	.	.	B	B	B	S	S	S			2				
[22]	(E)BOLT (D)SCHRAUBE										(F)BOULON (S)PERNO					
	01130-06129	.	.	B	B	B	S	S	S			1				
[23]	(E)PAN A-OIL (D)PFANNE,ÖL										(F)CARTER-HUILE (S)RECIPIENTE-ACEITE					
	96351480	.	.	B	B	B	S	S	S	-NN7		1		971001	STEEL	
	96350495	.	M	B	B	B	A	A	A	&NN7		1		970617	ALUMINUM	
O	96351600	.	M	B	B	B	A	A	A	&NN7		1	970617	971001	ALUMINUM	
	96351480	.	A	B	B	B	A	A	A	&NN7		1		971001	STEEL	
	96351480	Y	M	B	B	B	S	S	S	-NN4&XCA		1	971001		STEEL	
	96351480	Y	M	B	B	B	S	S	S	-NN7		1	971001		STEEL	
	96351600	Y	M	B	B	B	A	A	A	&NN4&XCA		1	971001		ALUMINUM	
	96351600	Y	M	B	B	B	A	A	A	&NN7		1	971001		ALUMINUM	
	96351480	Y	A	B	B	B	O	O	O			1	971001		STEEL	
	96351480	6	.	B	B	B	.	.	O	-NN7		1	971001		STEEL	
	96351600	6	M	B	B	B	.	.	A	&NN7		1	971001		ALUMINUM	
	96351480	6	A	B	B	B	.	.	A	&NN7		1	971001		STEEL	
[24]	(E)BOLT (D)SCHRAUBE										(F)BOULON (S)PERNO					

ENG(ENGINE)	T/A(TRANSAXLE)	BODY TYPE
Y = 1.5SOHC 6 = 1.6DOHC . = COMMON	M = MANUAL T/A A = AUTOMATIC T/A . = COMMON	4 N = 4 DOOR NOTCHBACK 3 H = 3 DOOR HATCHBACK 5 H = 5 DOOR HATCHBACK

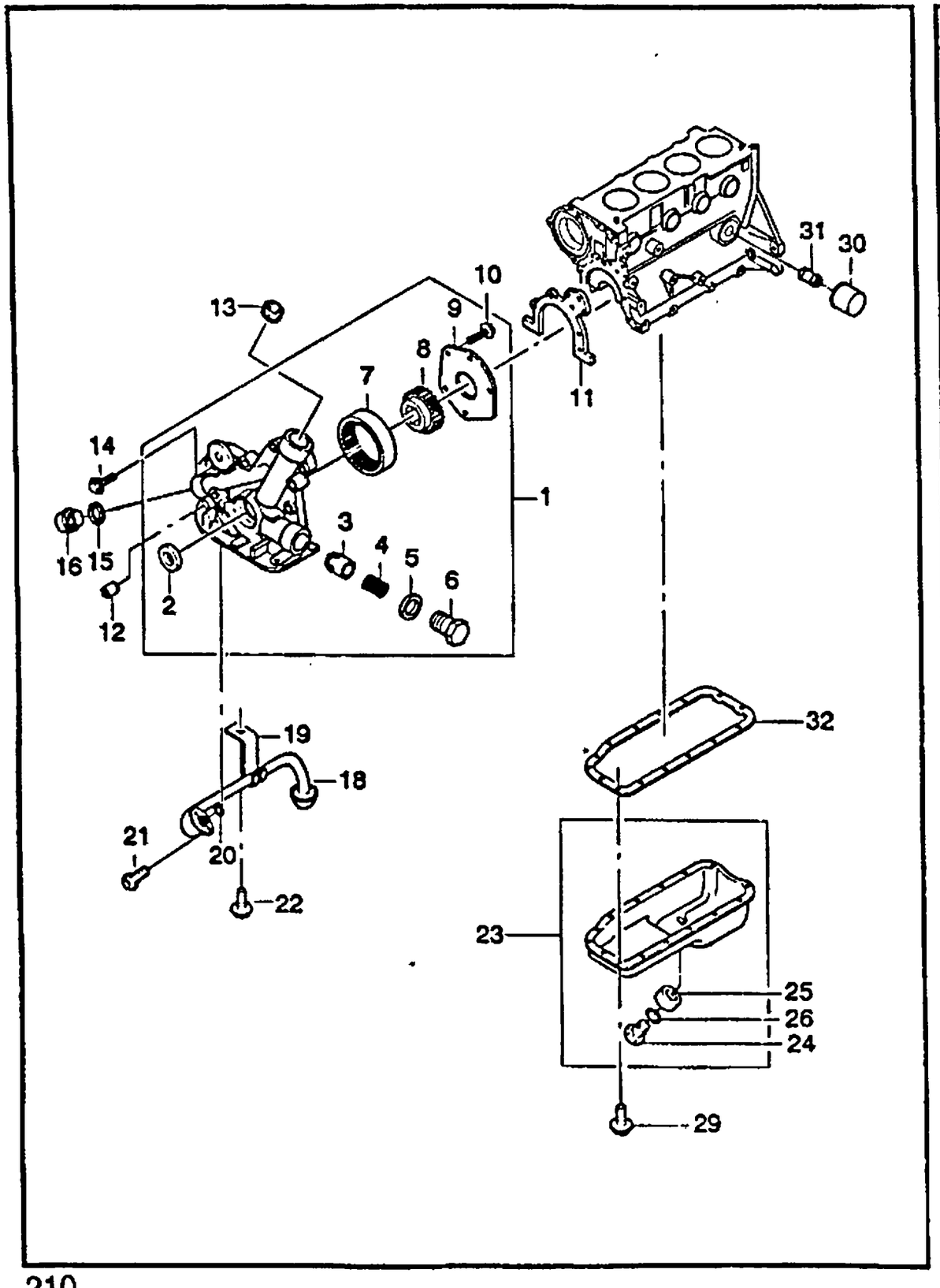

KEY NO. ITC	PART NO	MODEL ENG	T/A	BODY 4N	3H	5H	LEVEL S	SE	SX	OPTION	L/R	QTY	EFFECTIVE DATE FROM	TO	REMARKS	P/CODE
	09100-14005	.	.	B	B	B	S	S	S			1				
[25]	(E)RING-THREADED (D)RING,SCHRAUBENGEWINDE										(F)ANNEAU-FILETE (S)ANILLO-CON ROSCA					
	96351497	.	.	B	B	B	S	S	S			1				
[26]	(E)WASHER-PLAIN (D)DICHTUNGSRING										(F)RONDELLE (S)ARANDELA					
	09160-14003	.	.	B	B	B	S	S	S			1				
[29]	(E)BOLT (D)SCHRAUBE										(F)BOULON (S)PERNO					
	09117-06005	.	.	B	B	B	S	S	S	-NN7		15		970701		
	Y 09103-06007	.	.	B	B	B	S	S	S	-NN7		15	970701	971001		
	09117-06006	.	M	B	B	B	A	A	A	&NN7		15		970701		
	Y 09103-06006	.	M	B	B	B	A	A	A	&NN7		15	970701	971001		
	09117-06005	.	A	B	B	B	A	A	A	&NN7		15		970701		
	Y 09103-06007	.	A	B	B	B	A	A	A	&NN7		15	970701	971001		
	09103-06007	.	.	B	B	B	S	S	S			15	971001		FOR STEEL OIL PAN	
	09103-06006	.	.	B	B	B	S	S	S			15	971001		FOR ALUMINUM OIL PAN	
[30]	(E)FILTER A-OIL (D)FILTER,ÖL										(F)FILTRE-HUILE (S)FILTRO-ACEITE					
	94797406	.	.	B	B	B	S	S	S			1				
[31]	(E)PIECE-CONNECTING (D)TEIL,VERBINDUNGS										(F)PIECE-DE CONNEXION (S)PIEZA-CONEXION					
	90144360	.	.	B	B	B	S	S	S			1				
[32]	(E)GASKET-OIL PAN (D)DICHTUNG,ÖL-PFANNE										(F)JOINT-CARTER D'HUILE (S)JUNTA					

ENG(ENGINE)	T/A(TRANSAXLE)	BODY TYPE
Y = 1.5SOHC 6 = 1.6DOHC . = COMMON	M = MANUAL T/A A = AUTOMATIC T/A . = COMMON	4 N = 4 DOOR NOTCHBACK 3 H = 3 DOOR HATCHBACK 5 H = 5 DOOR HATCHBACK

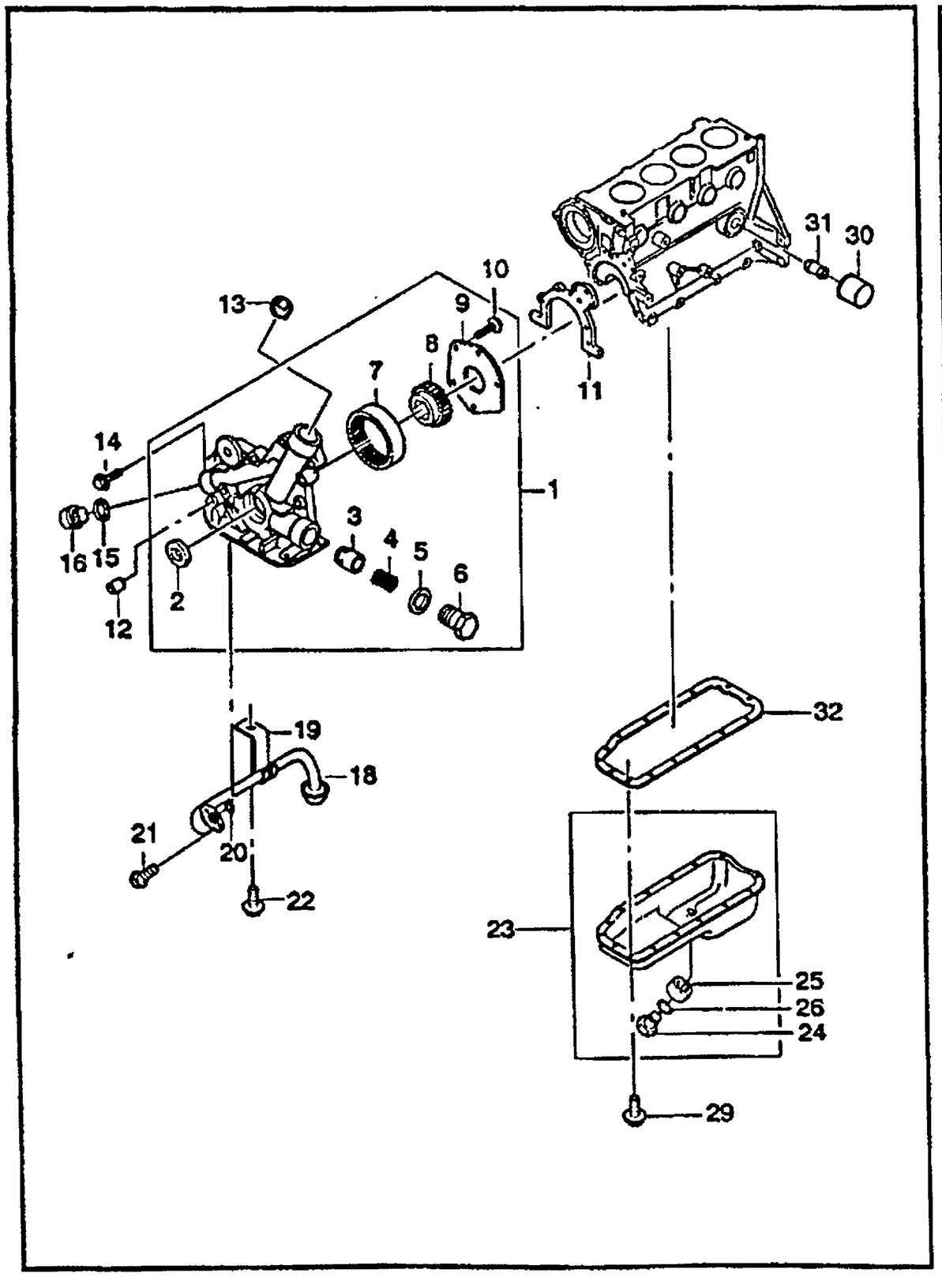

KEY NO.	PART NAME															
ITC	PART NO	MODEL								OPTION	L/R	QTY	EFFECTIVE DATE		REMARKS	P/CODE
		ENG	T/A	BODY			LEVEL						FROM	TO		
				4N	3H	5H	S	SE	SX							
	REFER GROUP 9120 KEY NO. 13											1			SEALING	

ENG(ENGINE)	T/A(TRANSAXLE)	BODY TYPE
Y = 1.5SOHC 6 = 1.6DOHC . = COMMON	M = MANUAL T/A A = AUTOMATIC T/A . = COMMON	4 N = 4 DOOR NOTCHBACK 3 H = 3 DOOR HATCHBACK 5 H = 5 DOOR HATCHBACK

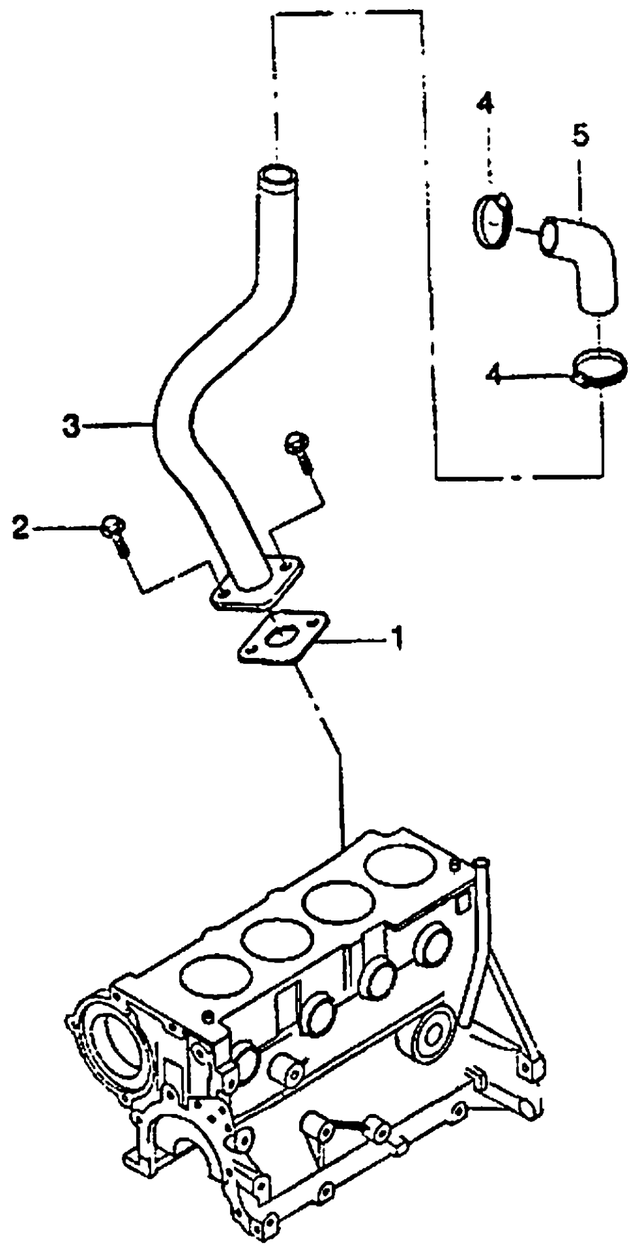

KEY NO.	PART NAME																
ITC	PART NO	MODEL								OPTION	L/R	QTY	EFFECTIVE DATE		REMARKS	P/CODE
		ENG	T/A	BODY			LEVEL						FROM	TO		
				4N	3H	5H	S	SE	SX							
[01]	(E)GASKET-OIL SEPARATOR (D)DICHTUNG,ÖL TRENNUNG										(F)JOINT-SEPARATEUR D'HUILE (S)JUNTA-SEPARADOR DE ACEITE					
96181209		.	.	B	B	B	S	S	S		1					
[02]	(E)BOLT-HEX PILOT (D)SCHRAUBE										(F)BOULON (S)PERNO					
02647-06165		.	.	B	B	B	S	S	S		2					
[03]	(E)PIPE A-ENGINE VENTILATION (D)ROHR,MOTOR BELÜFTUNG										(F)TUYAU-VENTILATION MOTEUR (S)TUBERIA-VENTILACION					
96143870		Y	.	B	B	B	S	S	S		1					
96130215		6	.	B	B	B	.	.	O		1					
[04]	(E)CLAMP-SPRING (D)KLAMMER										(F)PINCE (S)ABRAZADERA					
09401-27403		Y	.	B	B	B	S	S	S		2					
11085952		6	.	B	B	B	.	.	O		2				20-32	
[05]	(E)HOSE-ENGINE VENTILATION (D)SCHLAUCH,MOTOR BELÜFTUNG										(F)TUYAU-VENTILATION MOTEUR (S)MANGUERA-VENTILACION					
90409191		Y	.	B	B	B	S	S	S		1					
6094405002		6	.	B	B	B	.	.	O		1					

ENG(ENGINE)	T/A(TRANSAXLE)	BODY TYPE
Y = 1.5SOHC 6 = 1.6DOHC . = COMMON	M = MANUAL T/A A = AUTOMATIC T/A . = COMMON	4 N = 4 DOOR NOTCHBACK 3 H = 3 DOOR HATCHBACK 5 H = 5 DOOR HATCHBACK

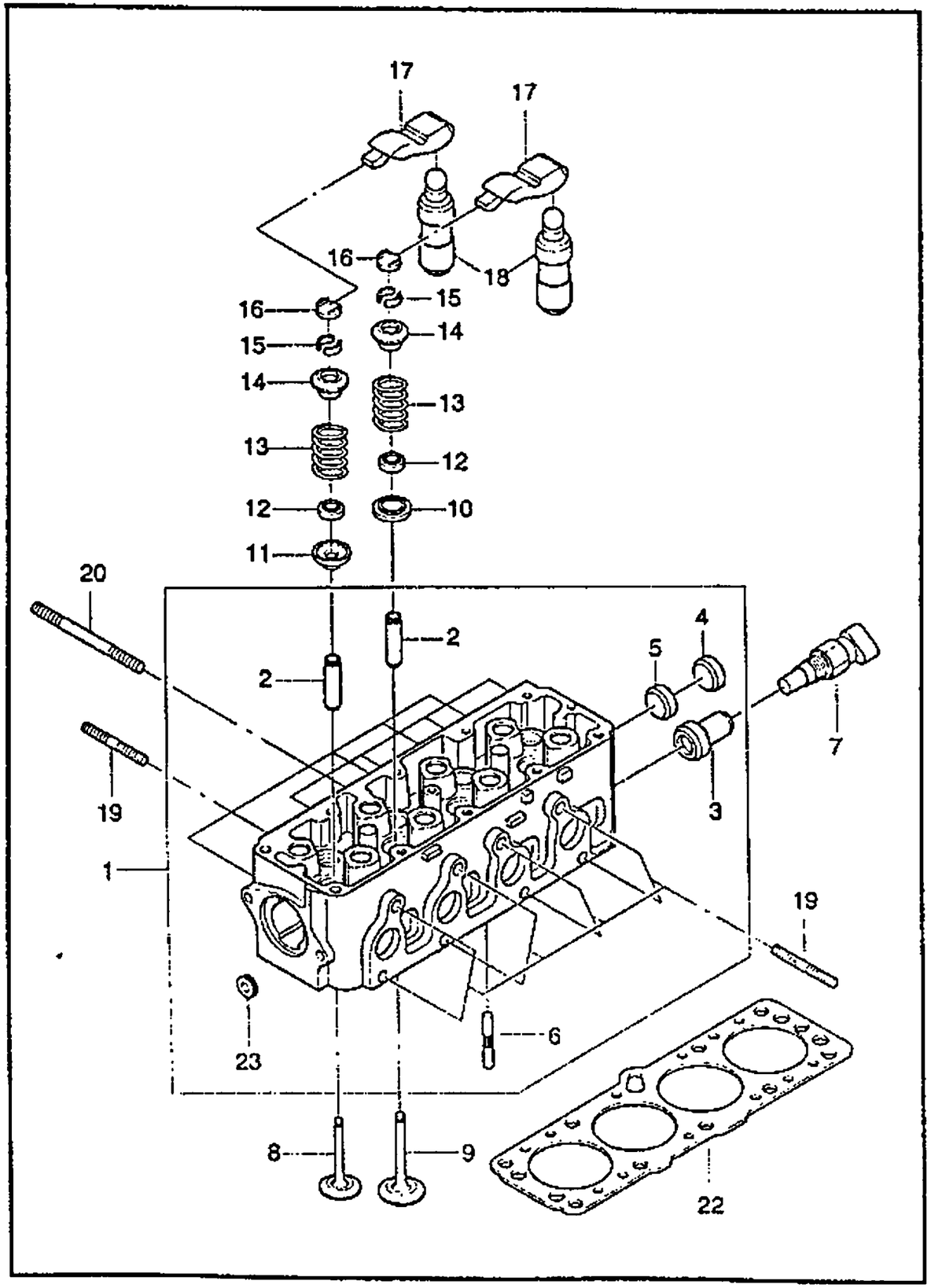

KEY NO.		PART NAME															
ITC	PART NO	MODEL								OPTION	L/R	QTY	EFFECTIVE DATE		REMARKS	P/CODE
		ENG	T/A	BODY			LEVEL						FROM	TO		
				4N	3H	5H	S	SE	SX							
[01]		(E)HEAD A-CYLINDER (D)ZYLINDERKOPF									(F)CULASSE-CYLINDRE (S)CABEZA-CILINDRO					
	A96182931	Y	.	B	B	B	S	S	S			1				
[02]		(E)GUIDE-VALVE (D)FÜHRING,VENTIL									(F)GUIDE-SOUPAPE (S)GUIA-VALVULA					
	90108699	Y	.	B	B	B	S	S	S			4		970819	INTAKE,STD	
	90108700	Y	.	B	B	B	S	S	S			4		970819	INTAKE,O/S	
	96350912	Y	.	B	B	B	S	S	S			4		970819	EXHAUST,STD	
	96350913	Y	.	B	B	B	S	S	S			4		970819	EXHAUST,O/S	
	96350912	Y	.	B	B	B	S	S	S			8	970819		STD	
	96350913	Y	.	B	B	B	S	S	S			8	970819		O/S	
[03]		(E)ADAPTER (D)ADAPTER									(F)ADAPTATEUR (S)ADAPTADOR					
	90299068	Y	.	B	B	B	S	S	S			1				
[04]		(E)CAP-OIL DUCT (D)DECKEL,ÖL-LEITUNG									(F)CHAPEAU-CONDUIT HUILE (S)TAPA-CONDUCTO DE ACEITE					
	96180732	Y	.	B	B	B	S	S	S			1			φ20	
[05]		(E)CAP-OIL DUCT (D)DECKEL,ÖL-LEITUNG									(F)CHAPEAU-CONDUIT HUILE (S)TAPA-CONDUCTO DE ACEITE					
	11062401	Y	.	B	B	B	S	S	S			1			φ18	
[06]		(E)SLEEVE (D)HÜLSE									(F)CHEMISE (S)MANGA					
	90108642	Y	.	B	B	B	S	S	S			1				
[07]		(E)SENSOR-TEMPERATURE (D)SENSOR,TEMPERATUR									(F)DETECTEUR-TEMPERATURE (S)SENSOR-TEMPERATURA					
	96181508	Y	.	B	B	B	S	S	S			1				
[08]		(E)VALVE-EXHAUST (D)VENTIL,ABGAS									(F)SOUPAPE-ECHAPPEMENT (S)VALVULA-ESCAPE					

ENG(ENGINE)	T/A(TRANSAXLE)	BODY TYPE
Y = 1.5SOHC 6 = 1.6DOHC . = COMMON	M = MANUAL T/A A = AUTOMATIC T/A . = COMMON	4 N = 4 DOOR NOTCHBACK 3 H = 3 DOOR HATCHBACK 5 H = 5 DOOR HATCHBACK

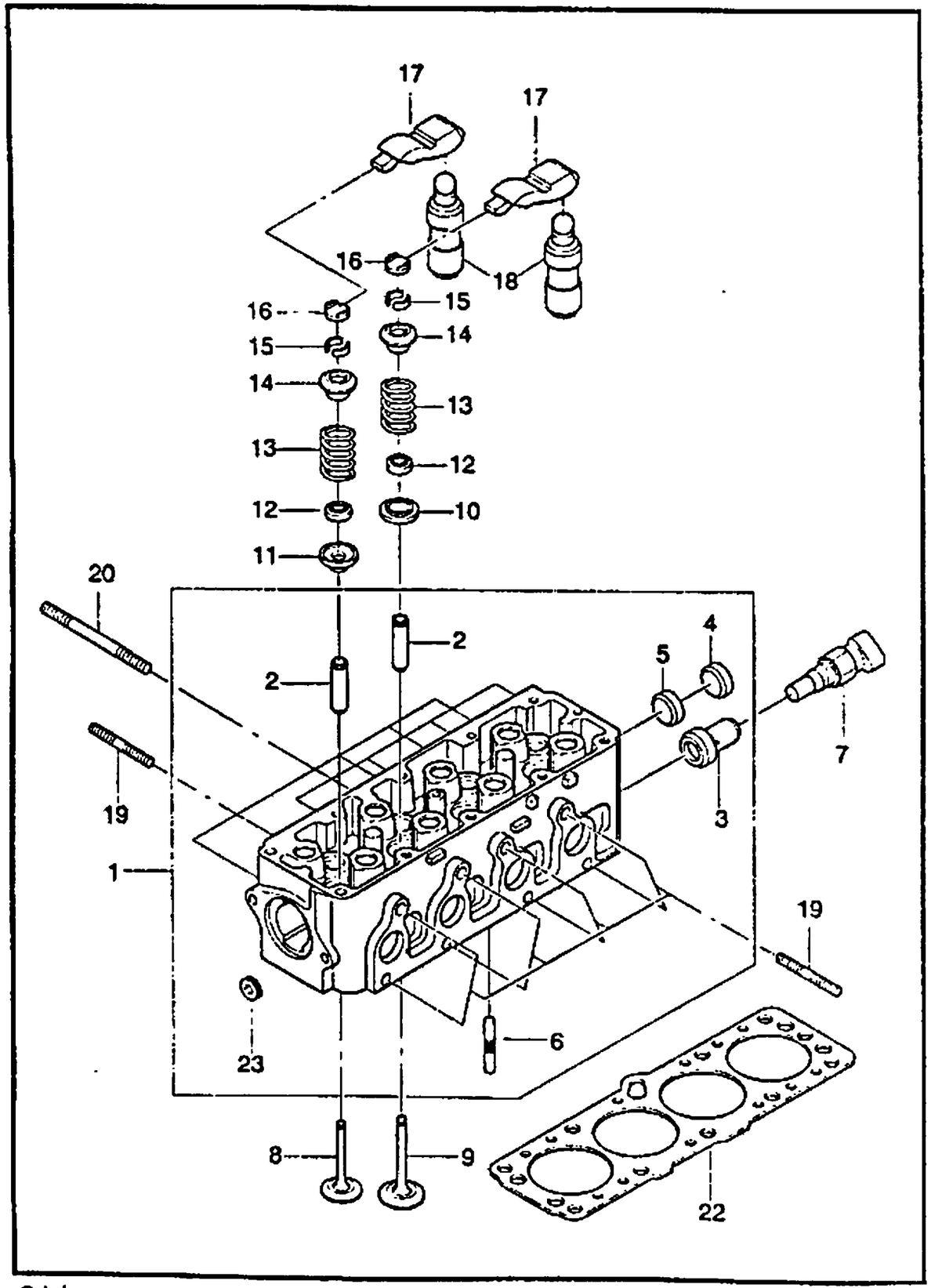

KEY NO. ITC	PART NO	MODEL ENG	T/A	BODY 4N	3H	5H	LEVEL S	SE	SX	OPTION	L/R	QTY	EFFECTIVE DATE FROM	TO	REMARKS	P/CODE
[09]	96182933	Y	.	B	B	B	S	S	S			4			(E)VALVE-INTAKE (D)VENTIL,EINLAß (F)SOUPAPE-ADMISSION (S)VALVULA-ENTRADA	
[10]	96182934	Y	.	B	B	B	S	S	S			4			(E)SEAT-INTAKE VALVE SPRING (D)SITZ,EINLAßVENTIL (F)SIEGE (S)ASIENTO-RESORTE	
[11]	90128720	Y	.	B	B	B	S	S	S			4			(E)CAP-EXHAUST VALVE ROTARY (D)DECKEL,ABGASVENTIL DREHTE (F)CHAPEAU (S)TAPA-ROTATORIO	
[12]	90106266	Y	.	B	B	B	S	S	S			4			(E)SEAL-VALVE STEM (D)DICHTUNG,VENTIL STIEL (F)JOINT-TIGE DE SOUPAPE (S)SELLO-TALLO DE VALVULA	
[13]	90215296	Y	.	B	B	B	S	S	S			8			(E)SPRING-VALVE (D)FEDERUNG,VENTIL (F)RESSORT-SOUPAPE (S)RESORTE-VALVULA	
[14]	90180310	Y	.	B	B	B	S	S	S			8			(E)PLATE-VALVE SPRING (D)PLATTE (F)PLAQUE- RESSORT DE SOUPAP (S)PLACA-RESORTE DE VALVUL	
[15]	90280894	Y	.	B	B	B	S	S	S			8			(E)KEY-VALVE (D)SCHLOßEL,VENTIL (F)CLE-SOUPAPE (S)LLAVE-VALVULA	
[16]	90076732	Y	.	B	B	B	S	S	S			16			(E)PIECE-VALVE THRUST (D)TEIL,SCHUB (F)PIECE-BUTEE DE SOUPAPE (S)PIEZA-EMPUJE VALVULA	
[17]	96144735	Y	.	B	B	B	S	S	S			8			(E)FOLLOWER-CAM (D)ANHÄNGER,NOCKE (F)SATELLITE-CAME (S)SEGUIDOR-LEVA	
	96351051	Y	.	B	B	B	S	S	S			8				

ENG(ENGINE)	T/A(TRANSAXLE)	BODY TYPE
Y = 1.5SOHC 6 = 1.6DOHC . = COMMON	M = MANUAL T/A A = AUTOMATIC T/A . = COMMON	4 N = 4 DOOR NOTCHBACK 3 H = 3 DOOR HATCHBACK 5 H = 5 DOOR HATCHBACK

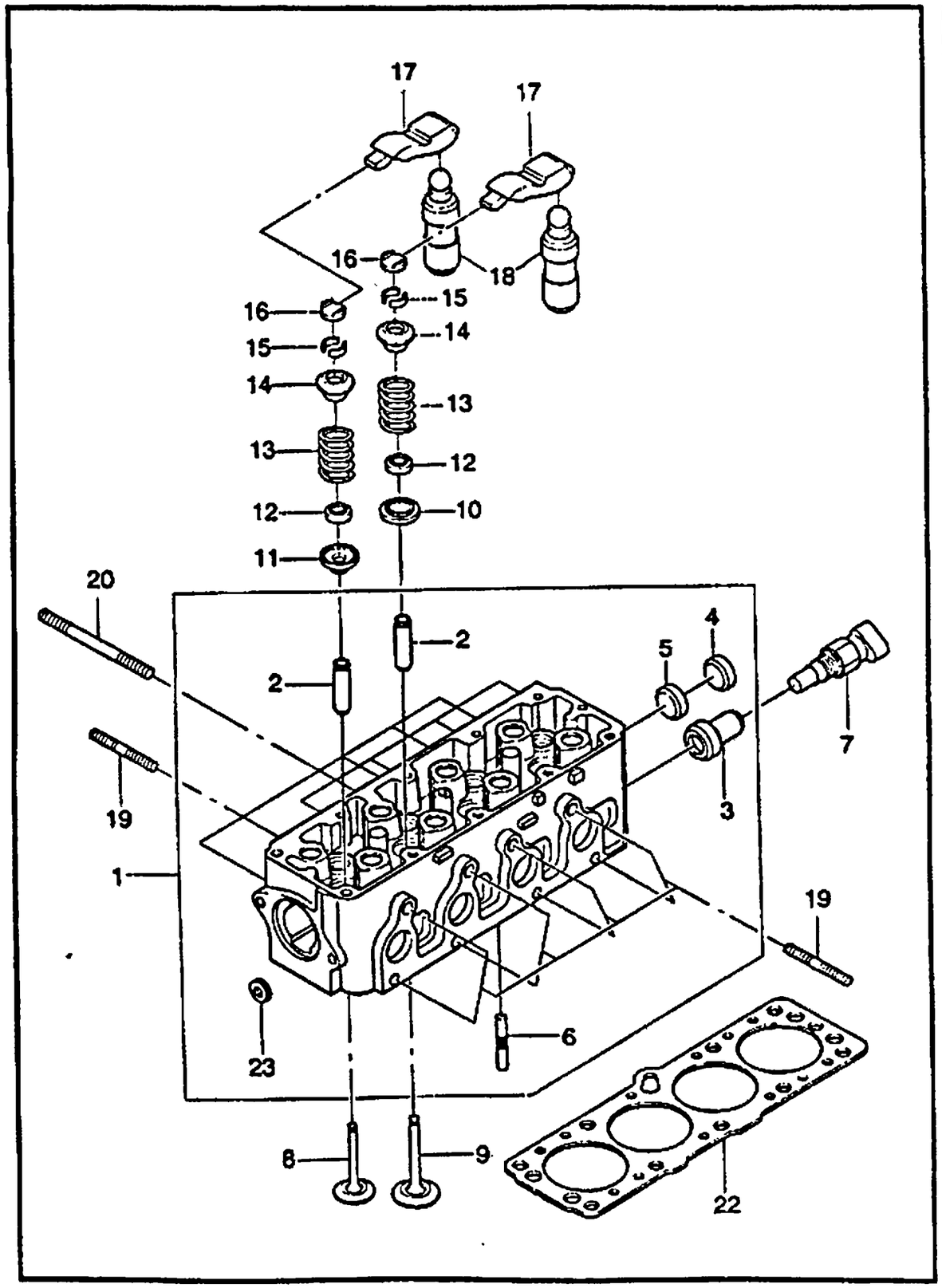

KEY NO.		PART NAME														
ITC	PART NO	MODEL								OPTION	L/R	QTY	EFFECTIVE DATE		REMARKS	P/CODE
		ENG	T/A	BODY			LEVEL						FROM	TO		
				4N	3H	5H	S	SE	SX							
[18]	05233315	(E)LIFTER A-CAM FOLLOWER (D)HEBER,NOCKEN ANHÄNGER	Y	.	B	B	B	S	S	S		(F)LEVIER-SATELLITE DE CAME (S)LEVANTADOR	8			
[19]	09108-08002	(E)BOLT-STUD (D)STIFTSCHRAUBE	Y	.	B	B	B	S	S	S		(F)BOULON-TETON (S)PERNO-ESPIGA	13			
[20]	09108-08003	(E)BOLT-STUD (D)STIFTSCHRAUBE	Y	.	B	B	B	S	S	S		(F)BOULON-TETON (S)PERNO-ESPIGA	4			
[22]	96181216	(E)GASKET-CYLINDER HEAD (D)DICHTUNG,ZYLINERKOPF	Y	.	B	B	B	S	S	S		(F)JOINT-CULASSE CYLINDRE (S)JUNTA	1			
[23]	09246-10001	(E)PLUG-SCREW (D)STÖPSEL,SCHRAUBEN	Y	.	B	B	B	S	S	S		(F)BOUCHON-VIS (S)TAPON-TORNILLO	1			

ENG(ENGINE)	T/A(TRANSAXLE)	BODY TYPE
Y = 1.5SOHC 6 = 1.6DOHC . = COMMON	M = MANUAL T/A A = AUTOMATIC T/A . = COMMON	4 N = 4 DOOR NOTCHBACK 3 H = 3 DOOR HATCHBACK 5 H = 5 DOOR HATCHBACK

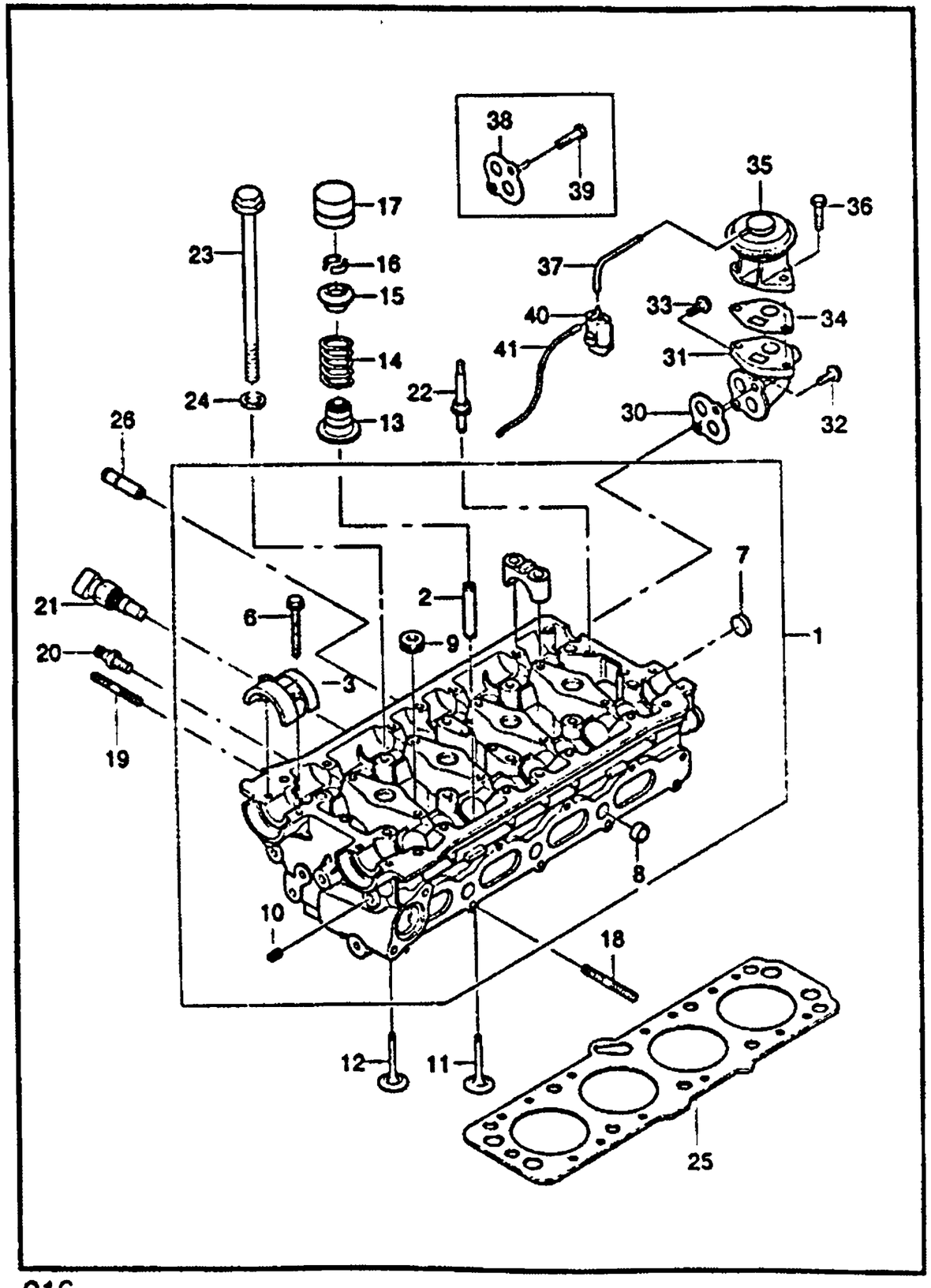

KEY NO.	PART NAME																
ITC	PART NO	MODEL								OPTION	L/R	QTY	EFFECTIVE DATE		REMARKS	P/CODE
		ENG	T/A	BODY			LEVEL						FROM	TO		
				4N	3H	5H	S	SE	SX							
[01]		(E)HEAD A-CYLINDER (D)ZYLINDERKOPF									(F)CULASSE-CYLINDRE (S)CABEZA-CILINDRO					
A96350007		6	.	B	B	B	.	.	O		1					
[02]		(E)GUIDE-VALVE (D)FÜHRING,VENTIL									(F)GUIDE-SOUPAPE (S)GUIA-VALVULA					
96103034		6	.	B	B	B	.	.	O		16				STD	
96103035		6	.	B	B	B	.	.	O		16				O/S	
[03]		(E)CAP-CAMSHAFT, FRONT (D)DECKEL,NOCKENWELLE,VORNE									(F)CHAPEAU (S)TAPA-CIGUEÑAL,DELANTERO					
96143123		6	.	B	B	B	.	.	O		2					
[06]		(E)SCREW (D)SCHRAUBE									(F)VIS (S)TORNILLO					
09103-06004		6	.	B	B	B	.	.	O		20					
[07]		(E)CAP-WATER CHAMBER (D)DECKEL,WASSER-KAMMER									(F)CHAPEAU-CHAMBRE A EAU (S)TAPA-CAMARA DE AGUA					
11044142		6	.	B	B	B	.	.	O		1				26	
[08]		(E)CAP-OIL DUCT (D)DECKEL,ÖL-LEITUNG									(F)CHAPEAU-CONDUIT HUILE (S)TAPA-CONDUCTO DE ACEITE					
96180732		6	.	B	B	B	.	.	O		3				20	
[09]		(E)PLUG-SCREW (D)STÖPSEL,SCHRAUBEN									(F)BOUCHON-VIS (S)TAPON-TORNILLO					
09246-24001		6	.	B	B	B	.	.	O		2					
[10]		(E)PLUG-SCREW (D)STÖPSEL,SCHRAUBEN									(F)BOUCHON-VIS (S)TAPON-TORNILLO					
09246-12001		6	.	B	B	B	.	.	O		5					
[11]		(E)VALVE-INTAKE (D)VENTIL,EINLAß									(F)SOUPAPE-ADMISSION (S)VALVULA-ENTRADA					
96182806		6	.	B	B	B	.	.	O		8					

ENG(ENGINE)	T/A(TRANSAXLE)	BODY TYPE
Y = 1.5SOHC 6 = 1.6DOHC . = COMMON	M = MANUAL T/A A = AUTOMATIC T/A . = COMMON	4 N = 4 DOOR NOTCHBACK 3 H = 3 DOOR HATCHBACK 5 H = 5 DOOR HATCHBACK

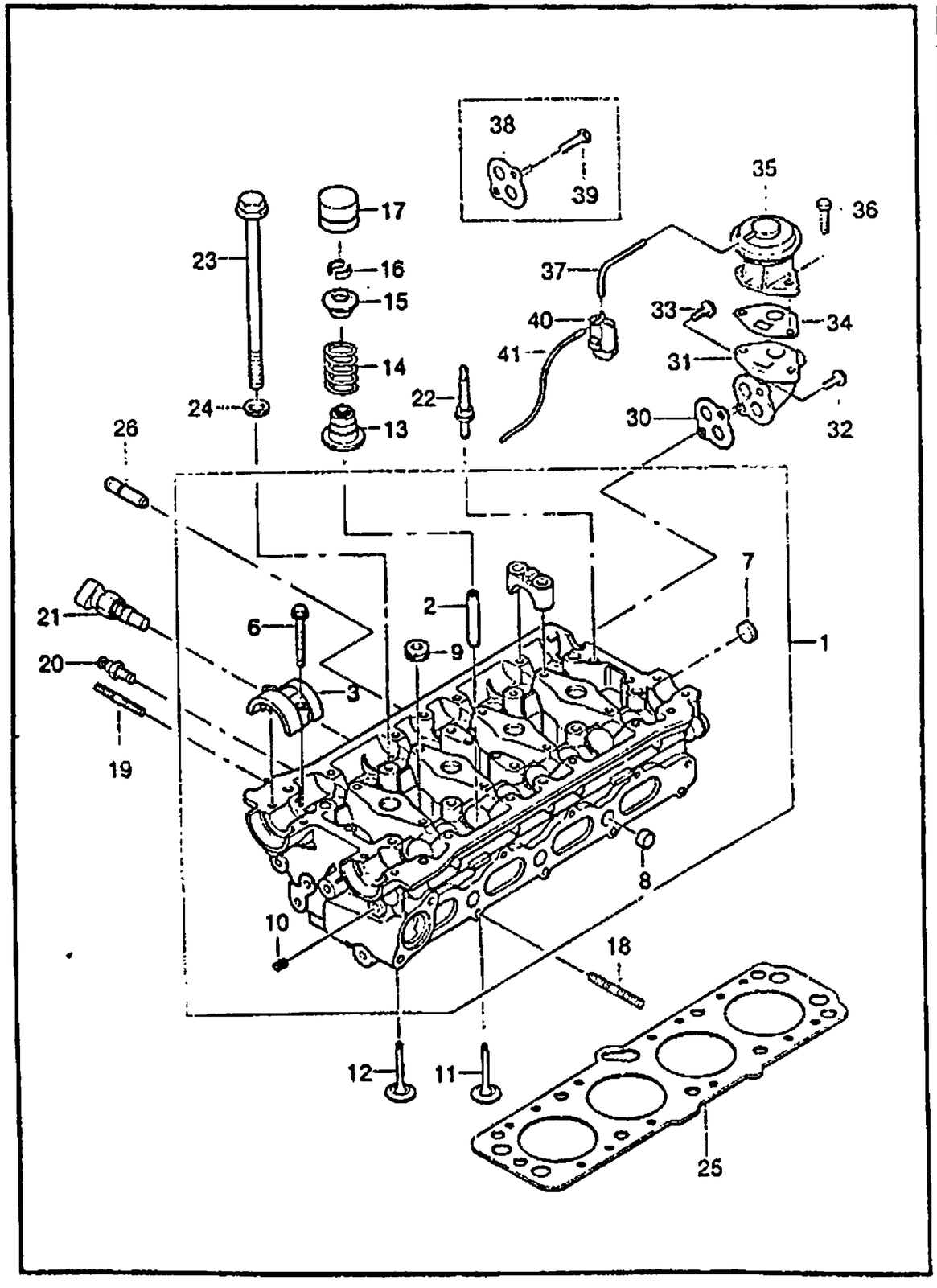

KEY NO. ITC	PART NO	MODEL ENG	T/A	BODY 4N	3H	5H	LEVEL S	SE	SX	OPTION	L/R	QTY	EFFECTIVE DATE FROM	TO	REMARKS	P/CODE	PART NAME
[12]	96182805	6	.	B	B	B	.	.	O			8					(E)VALVE-EXHAUST (D)VENTIL,ABGAS (F)SOUPAPE-ECHAPPEMENT (S)VALVULA-ESCAPE
[13]	96103095	6	.	B	B	B	.	.	O			16					(E)SEAL-VALVE STEM (D)DICHTUNG,VENTIL STIEL (F)JOINT-TIGE DE SOUPAPE (S)SELLO-TALLO DE VALVULA
[14]	96352140														NOT APPLIED		(E)SPRING-VALVE (D)FEDERUNG,VENTIL (F)RESSORT-SOUPAPE (S)RESORTE-VALVULA
[15]	96352139	6	.	B	B	B	.	.	O			16					(E)RETAINER-VALVE SPRING (D)HALTER,VENTIL FEDERUNG (F)ARRETOIR (S)RETENEDOR
[16]	5094005026	6	.	B	B	B	.	.	O			16					(E)KEY-VALVE (D)SCHLÜßEL,VENTIL (F)CLE-SOUPAPE (S)LLAVE--VLVULA
[17]	5094005601	6	.	B	B	B	.	.	O			32					(E)TAPPET-HYDRAULIC (D)NOCKE,HYDRAULIK (F)POUSSOIR-HYDRAULIQUE (S)GRIFO-HIDRAULICO
[18]	96134997	6	.	B	B	B	.	.	O			16					(E)BOLT-STUD (D)STIFTSCHRAUBE (F)BOULON-TETON (S)PERNO-ESPIGA
[19]	09108-08005	6	.	B	B	B	.	.	O			10					(E)BOLT-STUD (D)STIFTSCHRAUBE (F)BOULON-TETON (S)PERNO-ESPIGA
[20]	09108-08004	6	.	B	B	B	.	.	O			2					(E)SENSOR A-TEMPERATURE (D)SENSOR,TEMPERATUR (F)DETECTEUR-TEMPERATURE (S)SENSOR-TEMPERATURA
	96177604	6	.	B	B	B	.	.	O			1					

ENG(ENGINE)	T/A(TRANSAXLE)	BODY TYPE
Y = 1.5SOHC 6 = 1.6DOHC . = COMMON	M = MANUAL T/A A = AUTOMATIC T/A . = COMMON	4 N = 4 DOOR NOTCHBACK 3 H = 3 DOOR HATCHBACK 5 H = 5 DOOR HATCHBACK

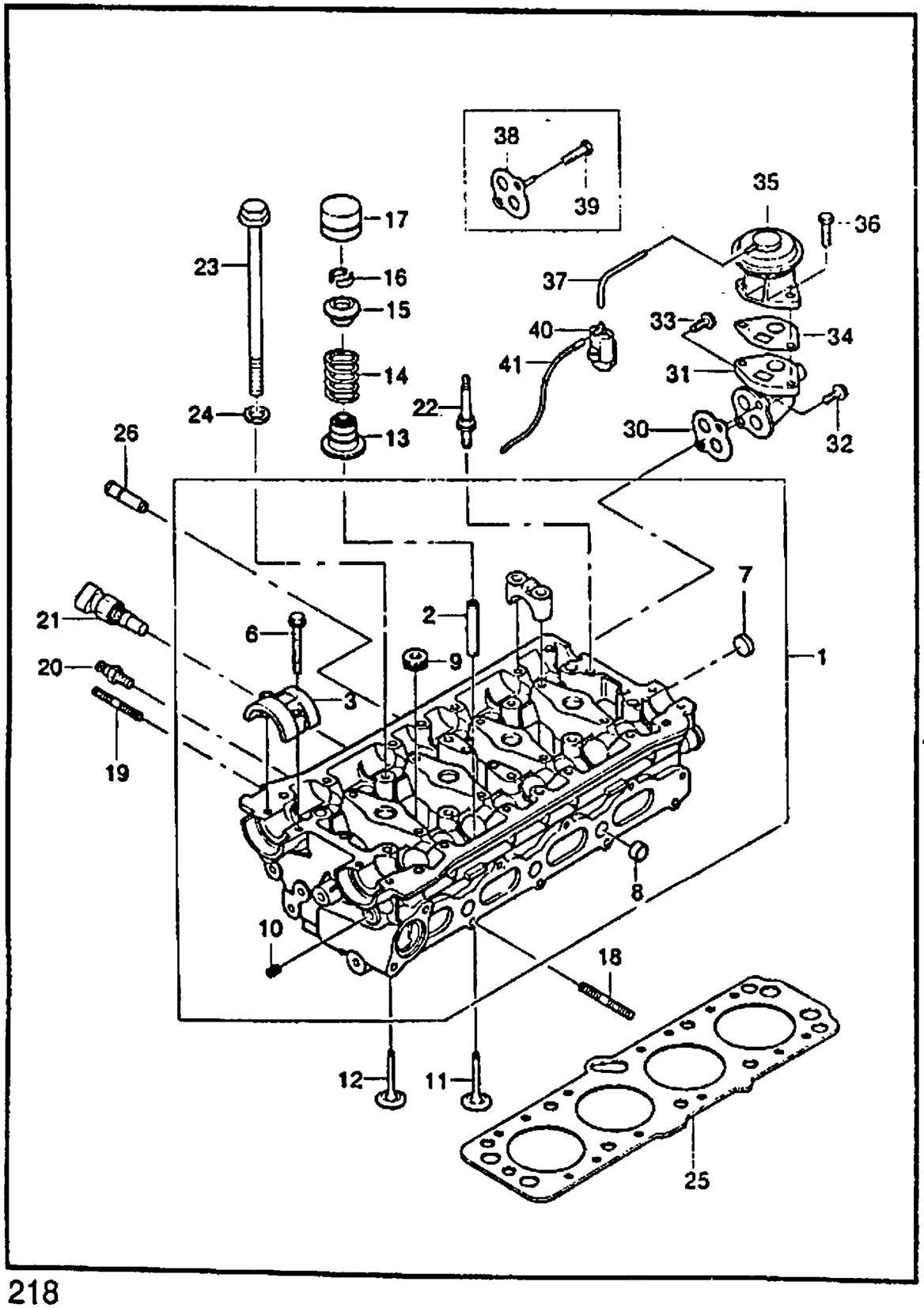

KEY NO. ITC	PART NO	MODEL ENG	T/A	BODY 4N	3H	5H	LEVEL S	SE	SX	OPTION	L/R	QTY	EFFECTIVE DATE FROM	TO	REMARKS	P/CODE
[21]	96181508	6	.	B	B	B	.	.	O	(E)SENSOR A-TEMPERATURE (D)SENSOR,TEMPERATUR	(F)DETECTEUR-TEMPERATURE (S)SENSOR-TEMPERATURA	1				
[22]	96144431	6	.	B	B	B	.	.	O	(E)BOLT-STUD (D)STIFTSCHRAUBE	(F)BOULON-TETON (S)PERNO-ESPIGA	11				
[23]	09103-10056	6	.	B	B	B	.	.	O	(E)BOLT-CYLINDER HEAD (D)SCHRAUBE,ZYLINDERKOPF	(F)BOULON-CULASSE (S)PERNO-TAPA DE CILINDRO	10				
[24]	09160-10007	6	.	B	B	B	.	.	O	(E)WASHER-CYLINDER HEAD (D)DICHTUNGSRING,ZYLINERKOPF	(F)RONDELLE-CULASSE CYLINDRE (S)ARANDELA	10				
[25]	96103003	6	.	B	B	B	.	.	O	(E)GASKET-CYLINDER HEAD (D)DICHTUNG,ZYLINERKOPF	(F)JOINT-CULASSE CYLINDRE (S)JUNTA	1				
[26]	96182808	6	.	B	B	B	.	.	O	(E)PIPE-HEATER TAKE OFF (D)ROHR	(F)TUYAU (S)TUBERIA	1				
[30]	96103076	6	.	B	B	B	.	.	O	(E)GASKET-EGR ADAPTER (D)DICHTUNG	(F)JOINT (S)JUNTA	1				
[31]	96103111	6	.	B	B	B	.	.	O	(E)ADAPTER-EGR VALVE (D)ADAPTER	(F)ADAPTATEUR (S)ADAPTADOR	1				
[32]	09103-08020	6	.	B	B	B	.	.	O	(E)BOLT-HEXAGON FLANGE (D)SCHRAUBE	(F)BOULON (S)PERNO	1				
[33]										(E)BOLT-HEXAGON FLANGE (D)SCHRAUBE	(F)BOULON (S)PERNO					

ENG(ENGINE)	T/A(TRANSAXLE)	BODY TYPE
Y = 1.5SOHC 6 = 1.6DOHC . = COMMON	M = MANUAL T/A A = AUTOMATIC T/A . = COMMON	4 N = 4 DOOR NOTCHBACK 3 H = 3 DOOR HATCHBACK 5 H = 5 DOOR HATCHBACK

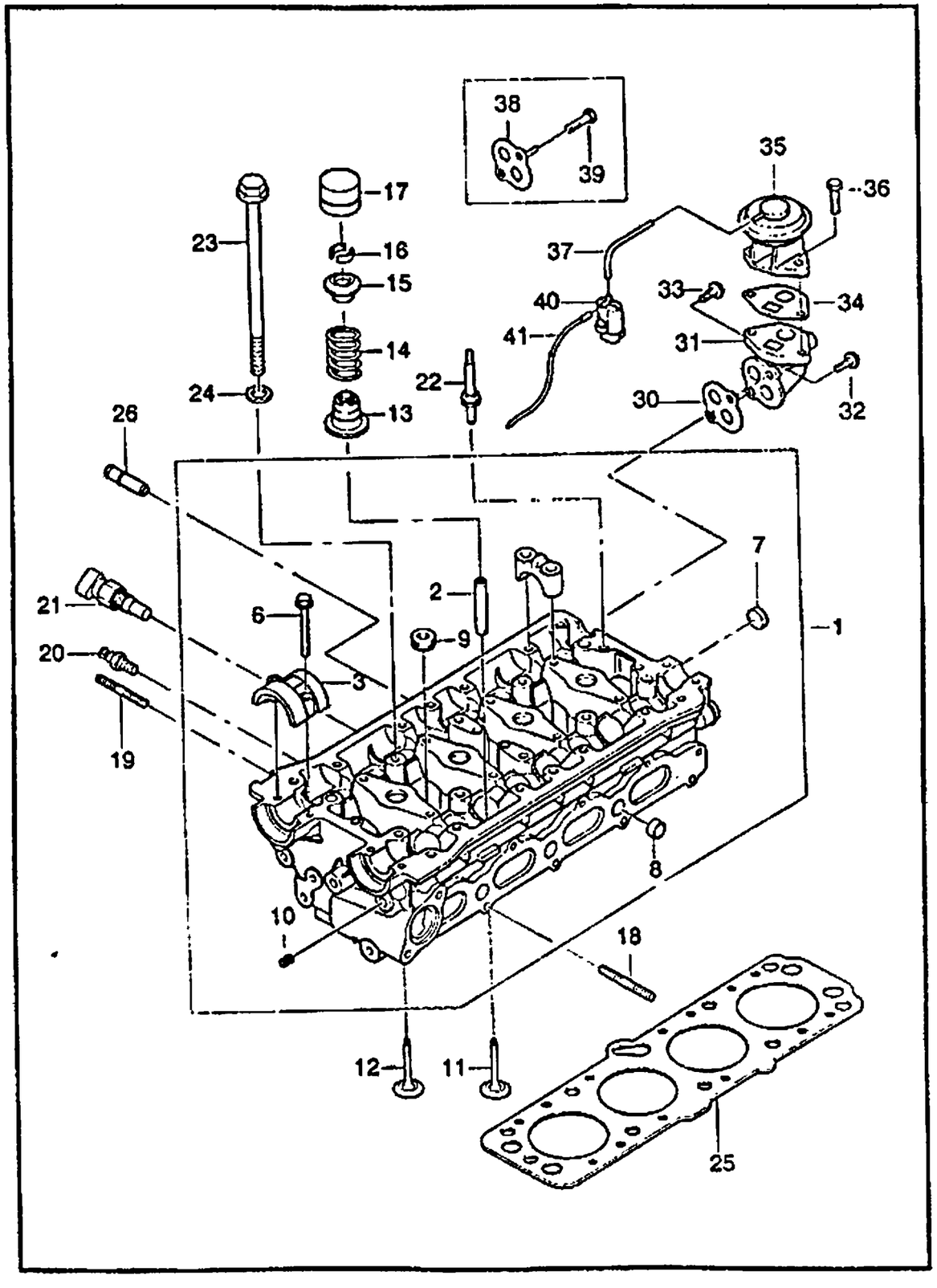

KEY NO. ITC	PART NO	MODEL ENG	MODEL T/A	MODEL BODY 4N	MODEL BODY 3H	MODEL BODY 5H	MODEL LEVEL S	MODEL LEVEL SE	MODEL LEVEL SX	OPTION	L/R	QTY	EFFECTIVE DATE FROM	EFFECTIVE DATE TO	REMARKS	P/CODE
[34]	09103-08021	6	.	B	B	B	.	.	O			1				
	(E)GASKET-EGR VALVE (D)DICHTUNG											(F)JOINT (S)JUNTA				
[35]	96103075	6	.	B	B	B	.	.	O			1				
	(E)VALVE A-EGR (D)VENTIL											(F)SOUPAPE (S)VALVULA				
[36]	17092164	6	.	B	B	B	.	.	O			1				
	(E)BOLT-HEXAGON (D)SCHRAUBE											(F)BOULON (S)PERNO				
[37]	11048333	6	.	B	B	B	.	.	O			2				
	(E)PIPE A-VACUUM (D)ROHR,VAKUUM											(F)TUYAU-DEPRESSION (S)TUBERIA-VACIO				
	96248445	6	.	B	B	B	.	.	O	-KL9		1				
[38]	96239364	6	.	B	B	B	.	.	A	&KL9		1				
	(E)PLATE-EGR CLOSING (D)PLATTE											(F)PLAQUE (S)PLACA				
[39]	96181530														NOT APPLIED	
	(E)BOLT-HEXAGON FLANGE (D)SCHRAUBE											(F)BOULON (S)PERNO				
[40]	09103-08019														NOT APPLIED	
	(E)VALVE-SOLENOID (D)VENTIL											(F)SOUPAPE (S)VALVULA				
[41]	96350594	6	.	B	B	B	.	.	O	-KL9		1				
	(E)PIPE A-VACUUM (D)ROHR,VAKUUM											(F)TUYAU-DEPRESSION (S)TUBERIA-VACIO				
	96242230	6	.	B	B	B	.	.	O	-KL9		1				

ENG(ENGINE)	T/A(TRANSAXLE)	BODY TYPE
Y = 1.5SOHC 6 = 1.6DOHC . = COMMON	M = MANUAL T/A A = AUTOMATIC T/A . = COMMON	4 N = 4 DOOR NOTCHBACK 3 H = 3 DOOR HATCHBACK 5 H = 5 DOOR HATCHBACK

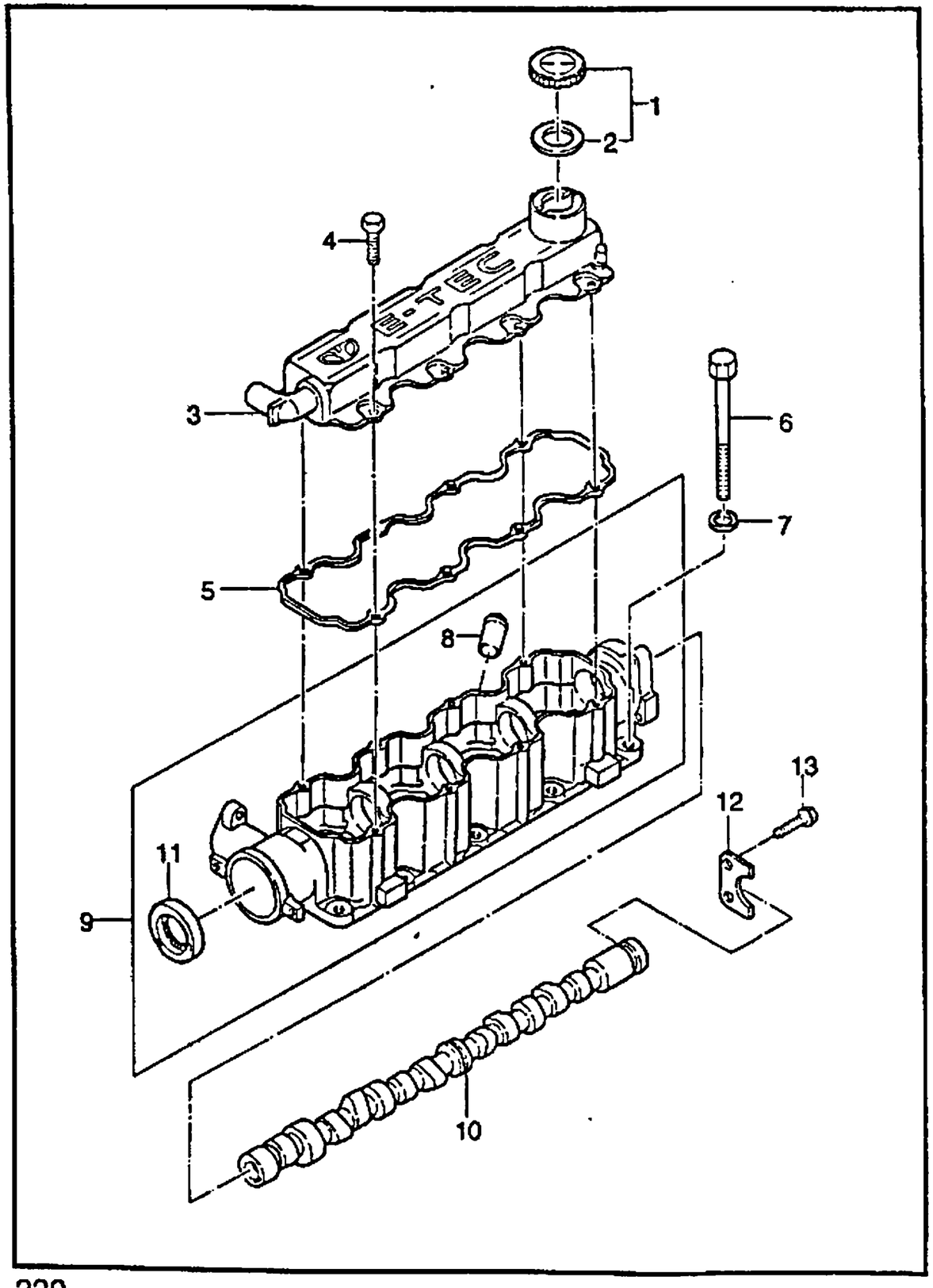

KEY NO.	PART NAME															
ITC	PART NO	MODEL								OPTION	L/R	QTY	EFFECTIVE DATE		REMARKS	P/CODE
		ENG	T/A	BODY			LEVEL						FROM	TO		
				4N	3H	5H	S	SE	SX							
[01]		(E)CAP A-BAYONET JOINT (D)DECKEL,BAYONETTEN-GLIED									(F)CHAPEAU-JOINT BAYONETTE (S)TAPA-UNION DE BAYONETA					
	96351602	Y	.	B	B	B	S	S	S			1				
[02]		(E)SEAL-BAYONET CAP (D)DICHTUNG,BAYONNETTE KAPPE									(F)JOINT-CHAPEAU BAYONETTE (S)SELLO-TAPA DE BAYONETA					
	N/S(1)											1				
[03]		(E)COVER A-CAMSHAFT SUPPORT (D)DECKEL,NOCKENWELLE-TRÄGER									(F)CARTER (S)CUBIERTA					
	96181319	Y	.	B	B	B	S	S	S			1			INCL #1,2,5	
[04]		(E)BOLT-HEXAGON (D)SCHRAUBE									(F)BOULON (S)PERNO					
	09117-06007	Y	.	B	B	B	S	S	S			8		971001	W/WASHER TYPE	
	O 09103-06008	Y	.	B	B	B	S	S	S			8	971001		FLANGE TYPE	
[05]		(E)GASKET-CAMSHAFT SUPT CVR (D)DICHTUNG									(F)JOINT-CARTER SUPPORT (S)JUNTA					
	96181318	Y	.	B	B	B	S	S	S			1				
[06]		(E)BOLT-HEXAGON FLANGE (D)SCHRAUBE									(F)BOULON (S)PERNO					
	09103-10024	Y	.	B	B	B	S	S	S			10				
[07]		(E)WASHER (D)DICHTUNGSRING									(F)RONDELLE (S)ARANDELA					
	96180642	Y	.	B	B	B	S	S	S			10				
[08]		(E)TUBE (D)ROHRLEITUNG									(F)TUYAU OU TUBE (S)TUBO					
	90220615	Y	.	B	B	B	S	S	S			1				
[09]		(E)SUPPORT A-CAMSHAFT (D)TRÄGER,NOCKENWELLE									(F)SUPPORT-ARBRE A CAMES (S)SOPORTE-ARBOL DE LEVA					
	A96182962	Y	.	B	B	B	S	S	S			1				

ENG(ENGINE)	T/A(TRANSAXLE)	BODY TYPE
Y = 1.5SOHC 6 = 1.6DOHC . = COMMON	M = MANUAL T/A A = AUTOMATIC T/A . = COMMON	4 N = 4 DOOR NOTCHBACK 3 H = 3 DOOR HATCHBACK 5 H = 5 DOOR HATCHBACK

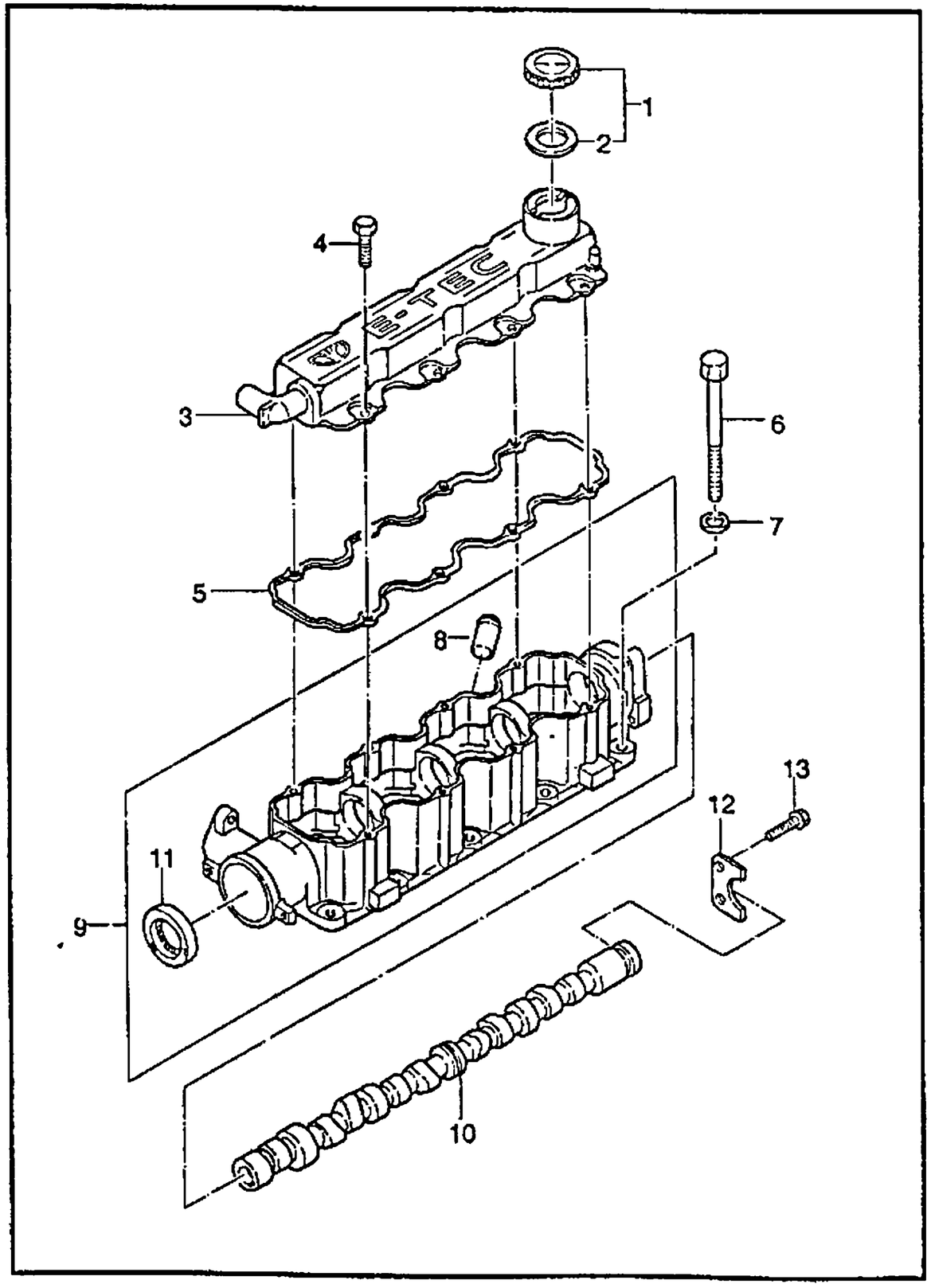

KEY NO.		PART NAME														
		MODEL										EFFECTIVE DATE				
ITC	PART NO	ENG	T/A	BODY 4N	BODY 3H	BODY 5H	LEVEL S	LEVEL SE	LEVEL SX	OPTION	L/R	QTY	FROM	TO	REMARKS	P/CODE
[10]		(E)CAMSHAFT A (D)NOCKENWELLE									(F)ARBRE A CAMES (S)CIGUEÑAL					
	A96182964	Y	.	B	B	B	S	S	S			1				
[11]		(E)RING-SHAFT SEAL (D)RING,STAB DICHTUNG									(F)ANNEAU-JOINT D'ARBRE (S)ANILLO-BROCHE DE EJE					
	90122609	Y	.	B	B	B	S	S	S			1		971001	35X48X 7	
	Y 90280463	Y	.	B	B	B	S	S	S			1	971001		35X48X 7	
[12]		(E)PLATE-CAMSHAFT PRESSURE (D)PLATTE,KURBELWELLE DRUCK									(F)PLAQUE (S)PLACA					
	90233647	Y	.	B	B	B	S	S	S			1				
[13]		(E)BOLT-HEXAGON SOCKET TYPE (D)SCHRAUBE									(F)BOULON (S)PERNO					
	07130-06169	Y	.	B	B	B	S	S	S			2				

ENG(ENGINE)	T/A(TRANSAXLE)	BODY TYPE
Y = 1.5SOHC 6 = 1.6DOHC . = COMMON	M = MANUAL T/A A = AUTOMATIC T/A . = COMMON	4 N = 4 DOOR NOTCHBACK 3 H = 3 DOOR HATCHBACK 5 H = 5 DOOR HATCHBACK

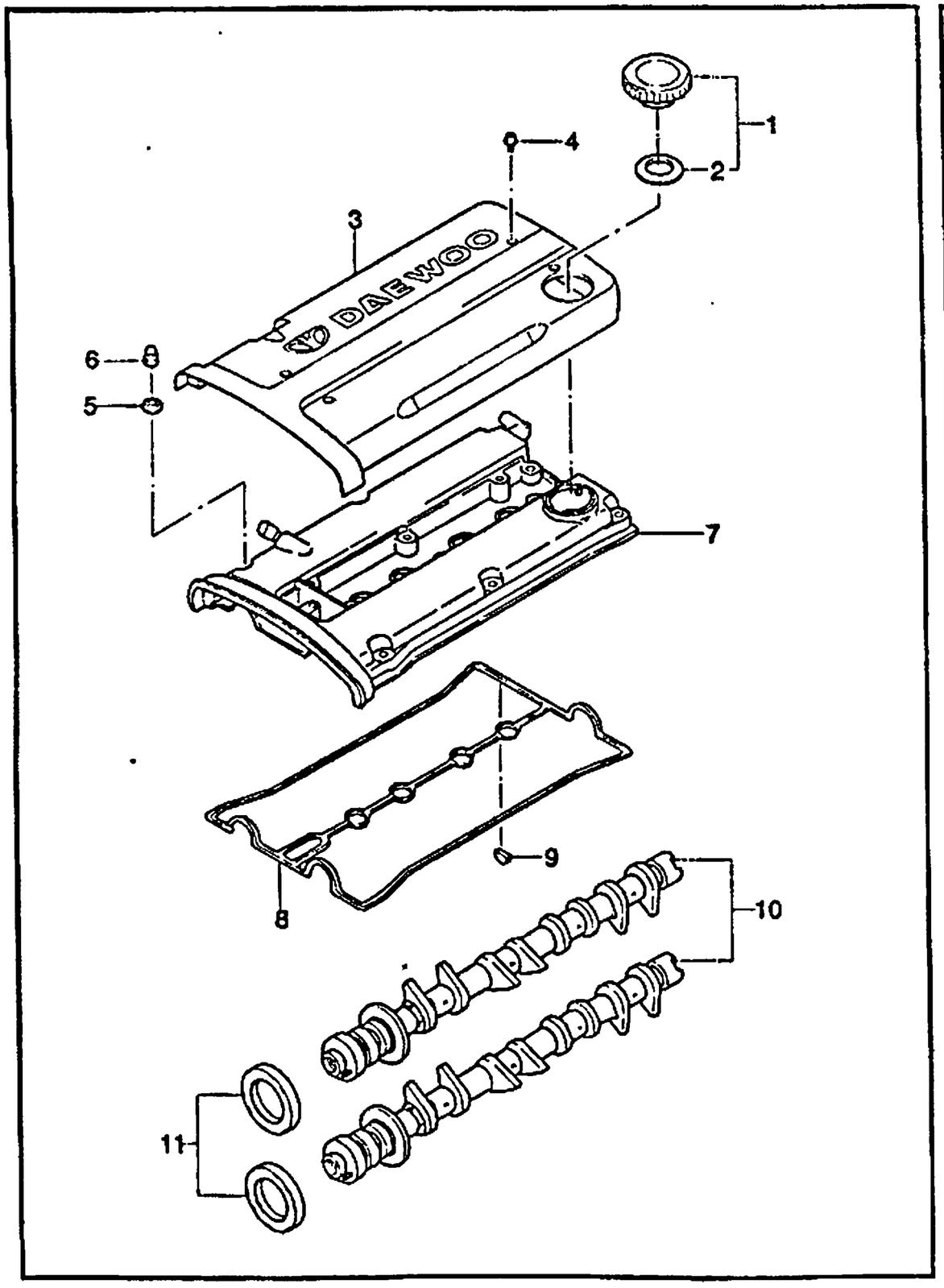

KEY NO. ITC	PART NO	MODEL ENG	T/A	BODY 4N	3H	5H	LEVEL S	SE	SX	OPTION	L/R	QTY	EFFECTIVE DATE FROM	TO	REMARKS	P/CODE
[01]		(E)CAP A-BAYONET JOINT (D)DECKEL,BAYONETTEN-GLIED									(F)CHAPEAU-JOINT BAYONETTE (S)TAPA-UNION DE BAYONETA					
	96351472	6	.	B	B	B	.	.	O			1				
[02]		(E)SEAL-BAYONET CAP (D)DICHTUNG,BAYONNETTE KAPPE									(F)JOINT-CHAPEAU BAYONETTE (S)SELLO-TAPA DE BAYONETA					
	96181851	6	.	B	B	B	.	.	O			1				
[03]		(E)COVER A-CAMSHAFT,UPPER (D)DECKEL									(F)CARTER (S)CUBIERTA					
	96351473	6	.	B	B	B	.	.	O			1				
[04]		(E)BOLT-HEXAGON SOCKET TYPE (D)SCHRAUBE									(F)BOULON (S)PERNO					
	07130-06125	6	.	B	B	B	.	.	O			4				
[05]		(E)WASHER-SEALING (D)RING,DICHTUNG									(F)RONDELLE-ETANCHEITE (S)ARANDELA-SELLANTE					
	96144569	6	.	B	B	B	.	.	O			11		970625		
O	96352732	6	.	B	B	B	.	.	O			11	970625			
[06]		(E)NUT-FLANGE CAP (D)MUTTER,GEFLANSCHTE KAPPE									(F)ECROU-CHAPEAU A FLASQUES (S)TUERCA-TAPO CON PESTAÑA					
	09145-06004	6	.	B	B	B	.	.	O			11				
[07]		(E)COVER A-CAMSHAFT (D)DECKEL,NOCKENWELLE									(F)CARTER-ARBRE A CAMES (S)CUBIERTA-CIGUEÑAL					
	96351548	6	.	B	B	B	.	.	O			1				
[08]		(E)GASKET-CAMSHAFT COVER (D)DICHTUNG									(F)JOINT-CARTER (S)JUNTA					
	96351213	6	.	B	B	B	.	.	O			1				
[09]		(E)SEAL-'D' (D)DICHTUNG									(F)JOINT D'ETANCHEITE (S)SELLO					
	96144621	6	.	B	B	B	.	.	O			2				

ENG(ENGINE)	T/A(TRANSAXLE)	BODY TYPE
Y = 1.5SOHC	M = MANUAL T/A	4 N = 4 DOOR NOTCHBACK
6 = 1.6DOHC	A = AUTOMATIC T/A	3 H = 3 DOOR HATCHBACK
. = COMMON	. = COMMON	5 H = 5 DOOR HATCHBACK

1321 CAM SUPPORT&SHAFT(DOHC)

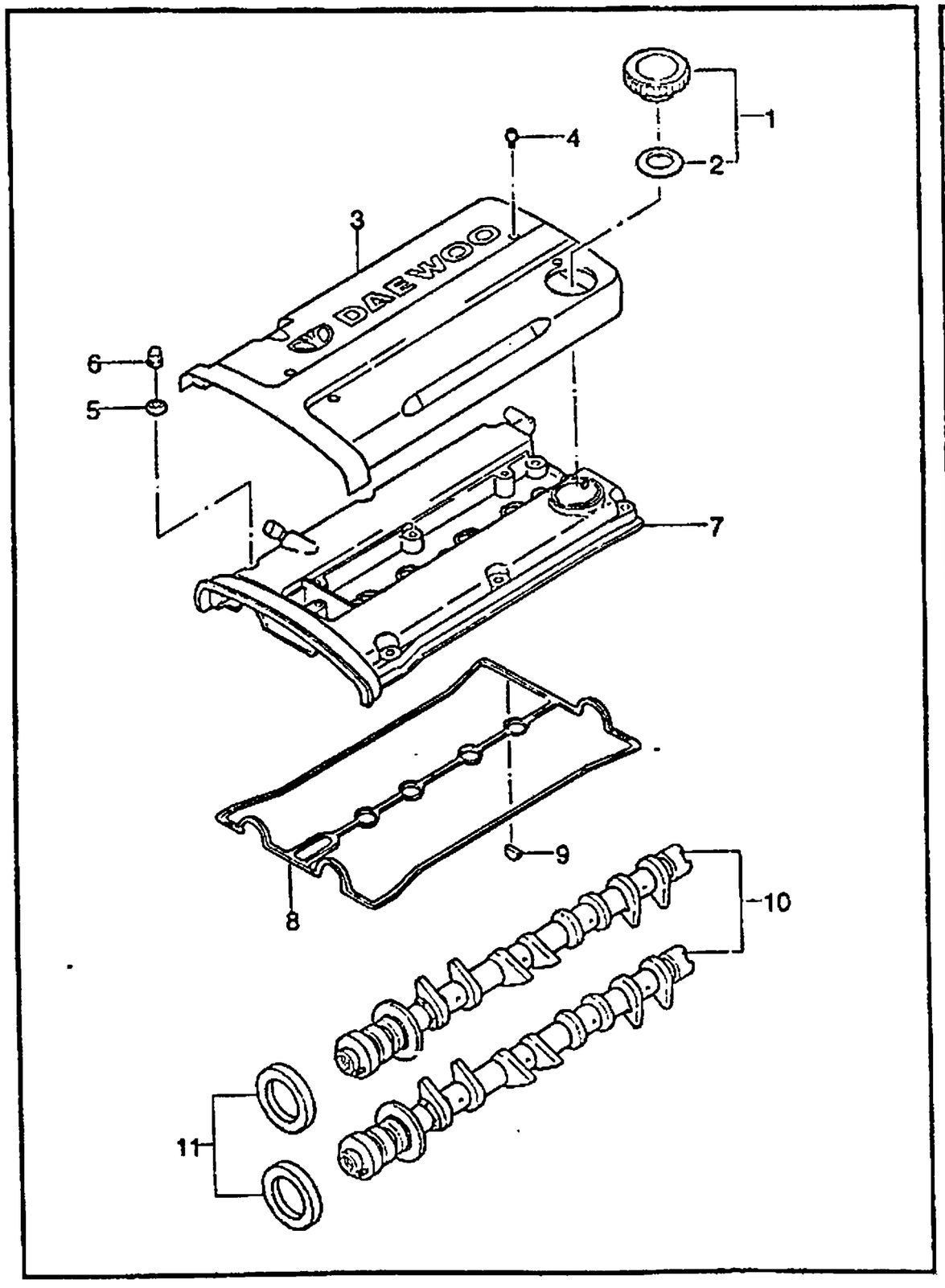

KEY NO.	PART NAME														
ITC	PART NO	MODEL								OPTION	L/R	QTY	EFFECTIVE DATE		REMARKS	P/CODE
		ENG	T/A	BODY 4N	BODY 3H	BODY 5H	LEVEL S	LEVEL SE	LEVEL SX				FROM	TO		
[10]		(E)CAMSHAFT A (D)NOCKENWELLE									(F)ARBRE A CAMES (S)CIGUEÑAL					
A96182606		6	.	B	B	B	.	.	O			2				
[11]		(E)SEAL-CAMSHAFT,FRONT (D)DICHTUNG,NOCKENWELLE									(F)JOINT-ARBRE A CAMES,AVANT (S)SELLO-ARBOL DE LEVA					
5094005604		6	.	B	B	B	.	.	O			2				

ENG(ENGINE)	T/A(TRANSAXLE)	BODY TYPE
Y = 1.5SOHC	M = MANUAL T/A	4 N = 4 DOOR NOTCHBACK
6 = 1.6DOHC	A = AUTOMATIC T/A	3 H = 3 DOOR HATCHBACK
. = COMMON	. = COMMON	5 H = 5 DOOR HATCHBACK

1330 TIMING COVER(SOHC)

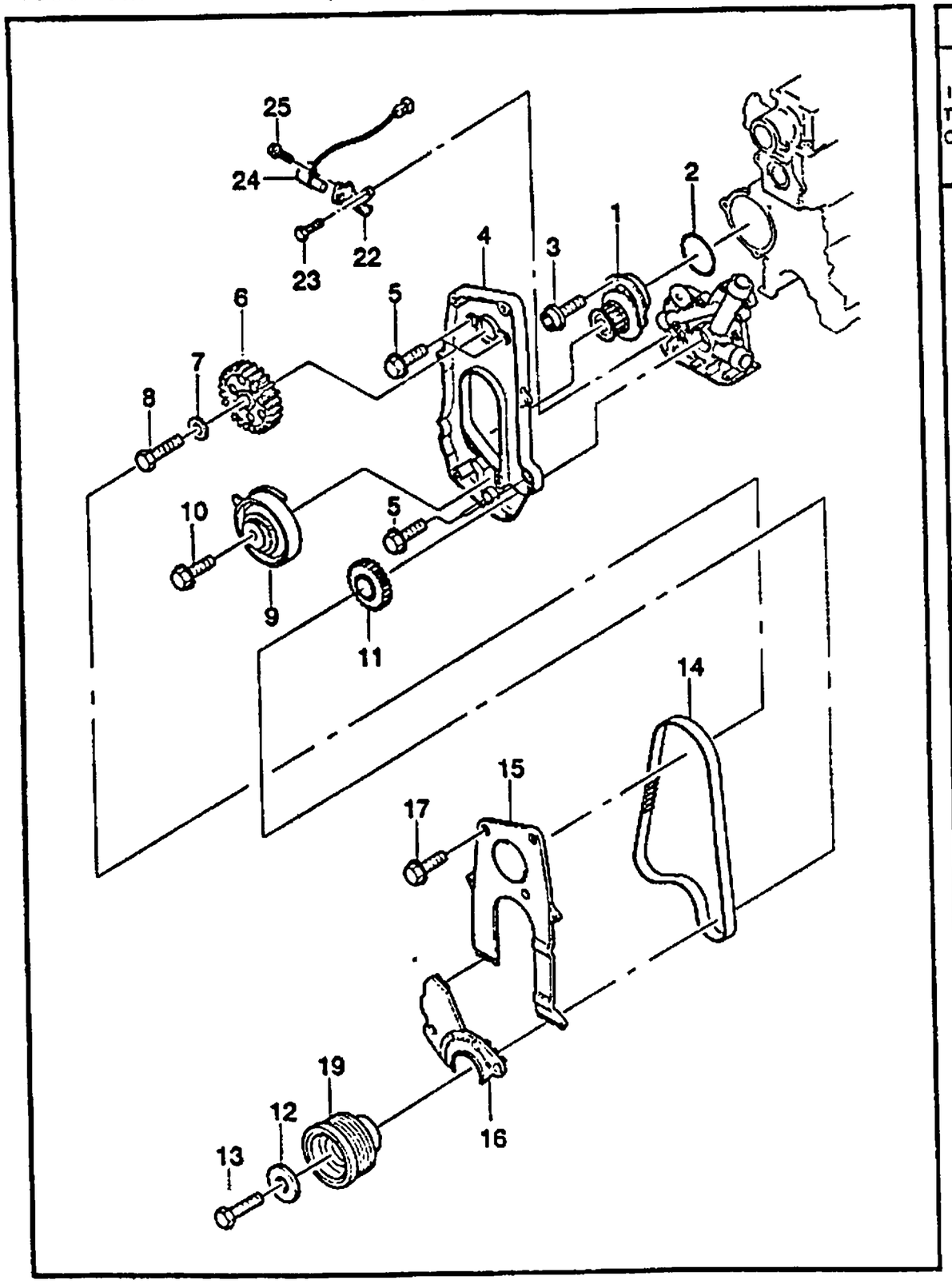

KEY NO. ITC	PART NO	PART NAME	MODEL ENG	T/A	BODY 4N	3H	5H	LEVEL S	SE	SX	OPTION	L/R	QTY	EFFECTIVE DATE FROM	TO	REMARKS	P/CODE
[01]	96350799	(E)PUMP A-WATER (D)PUMPE,WASSER	Y	.	B	B	B	S	S	S			1			(F)POMPE-EAU (S)BOMBA-AGUA	
[02]	90076127	(E)RING-SEAL (D)RING,DICHTUNG	Y	.	B	B	B	S	S	S			1			(F)ANNEAU (S)ANILLO-SELLO	
[03]	09106-06001	(E)BOLT (D)SCHRAUBE	Y	.	B	B	B	S	S	S			3			(F)BOULON (S)PERNO	
[04]	96182950	(E)HOOD-TIMING BELT,REAR (D)HAUBE,ZÜNDFOLGEGURT	Y	.	B	B	B	S	S	S			1			(F)CAPOT (S)TAPA-CORREA DISTRIBUCION	
[05]	09116-06016	(E)BOLT (D)SCHRAUBE	Y	.	B	B	B	S	S	S			4			(F)BOULON (S)PERNO	
[06]	90231882	(E)GEAR-CAMSHAFT (D)GETRIEBE,NOCKENWELLE	Y	.	B	B	B	S	S	S			1			(F)ENGRENAGE-ARBRE A CAMES (S)ENGRANAJE-ARBOL DE LEVAS	
[07]	96180642	(E)WASHER (D)DICHTUNGSRING	Y	.	B	B	B	S	S	S			1			(F)RONDELLE (S)ARANDELA	
[08]	09100-10007	(E)BOLT-HEXAGON (D)SCHRAUBE	Y	.	B	B	B	S	S	S			1			(F)BOULON (S)PERNO	
[09]	90499401	(E)TENSIONER A-TIMING BELT (D)SPANNUNG	Y	.	B	B	B	S	S	S			1			(F)TENDEUR (S)TENSOR	
[10]		(E)BOLT-HEXAGON (D)SCHRAUBE														(F)BOULON (S)PERNO	

ENG(ENGINE)	T/A(TRANSAXLE)	BODY TYPE
Y = 1.5SOHC 6 = 1.6DOHC . = COMMON	M = MANUAL T/A A = AUTOMATIC T/A . = COMMON	4 N = 4 DOOR NOTCHBACK 3 H = 3 DOOR HATCHBACK 5 H = 5 DOOR HATCHBACK

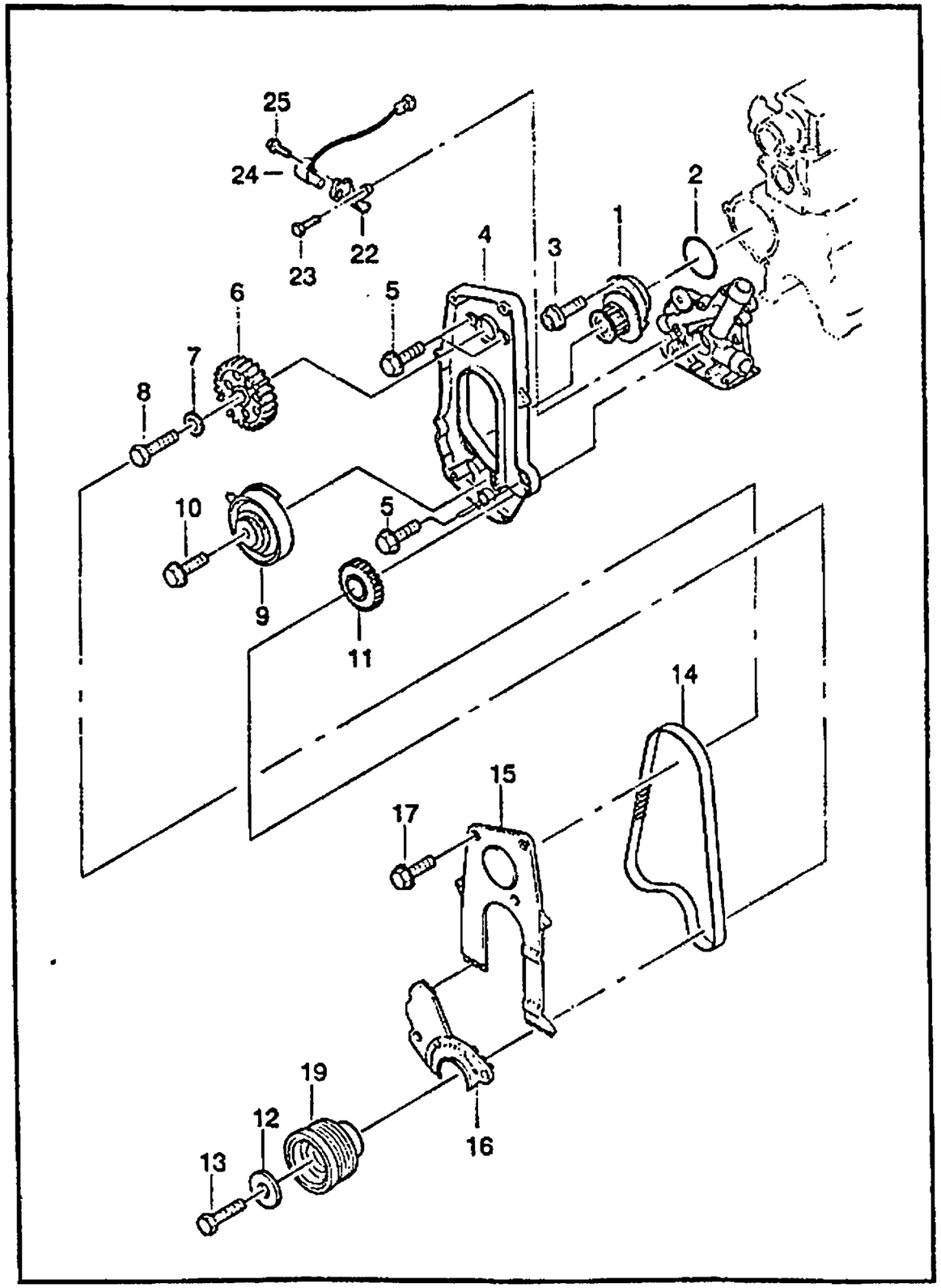

KEY NO. ITC	PART NO	MODEL ENG	T/A	BODY 4N	3H	5H	LEVEL S	SE	SX	OPTION	L/R	QTY	EFFECTIVE DATE FROM	TO	REMARKS	P/CODE
[11]	09100-08007	Y	.	B	B	B	S	S	S	(E)GEAR A-CRANKSHAFT (D)GETRIEBE,KURBELWELLE		1			(F)ENGRENAGE-VILEBREQUIN (S)ENGRANAJE-CIGUEÑAL	
[12]	96144520	Y	.	B	B	B	S	S	S	(E)PLATE-PRESSURE (D)PLATTE,DRUCK		1			(F)PLAQUE-PRESSION (S)PLACA-PRESION	
[13]	90409703	Y	.	B	B	B	S	S	S	(E)BOLT-HEXAGON FLANGE (D)SCHRAUBE		1			(F)BOULON (S)PERNO	
[14]	09103-12032	Y	.	B	B	B	S	S	S	(E)BELT-TIMING (D)GURT,ZÜNDFOLGESTEUERUNG		1			(F)COURROIE (S)CORREA-DISTRIBUCION	
	96183353														NOT APPLIED	
[15]	96352407	Y	.	B	B	B	S	S	S	(E)HOOD-FRONT,UPPER (D)HAUBE,VORNE,OBEN		1			(F)CAPOT-AVANT,HAUT (S)TAPA-FRENTE SUPERIOR	
[16]	96182952	Y	.	B	B	B	S	S	S	(E)HOOD-FRONT,LOWER (D)HAUBE,VORNE,UNTEN		1			(F)CAPOT-AVANT, BAS (S)TAPA-FRENTE,BAJO	
[17]	96182951	Y	.	B	B	B	S	S	S	(E)BOLT-HEXAGON FLANGE (D)SCHRAUBE		1			(F)BOULON (S)PERNO	
[19]	01517-06123	Y	.	B	B	B	S	S	S	(E)PULLEY-CRANKSHAFT (D)ROLLE,KURBELWELLE		7			(F)POULIE-VILEBREQUIN (S)POLEA-CIGUEÑAL	
[22]	96351111	Y	.	B	B	B	S	S	S	(E)BRACKET A-CPS (D)TRÄGER		1			(F)SUPPORT (S)SOPORTE	

ENG(ENGINE)	T/A(TRANSAXLE)	BODY TYPE
Y = 1.5SOHC 6 = 1.6DOHC . = COMMON	M = MANUAL T/A A = AUTOMATIC T/A . = COMMON	4 N = 4 DOOR NOTCHBACK 3 H = 3 DOOR HATCHBACK 5 H = 5 DOOR HATCHBACK

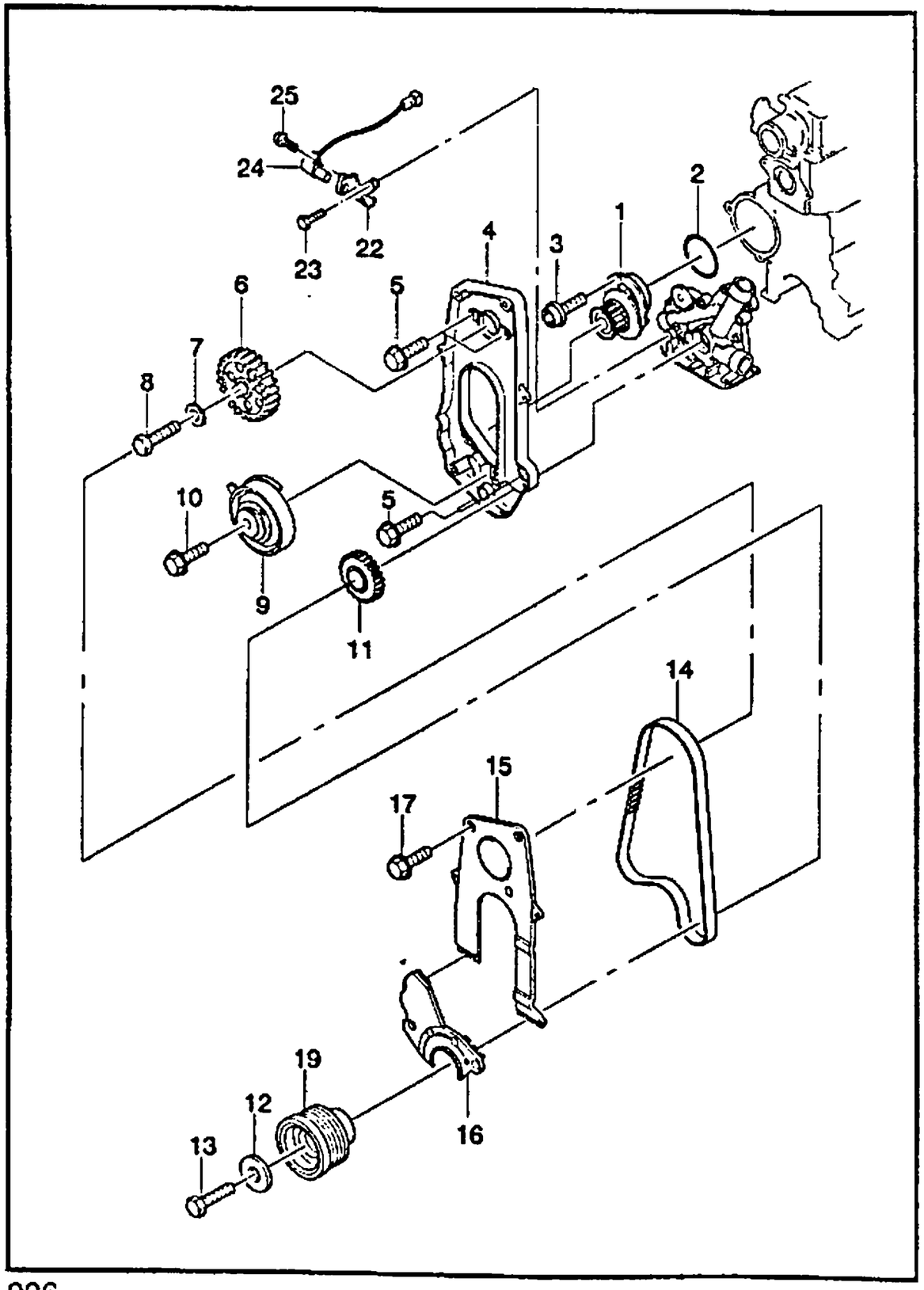

KEY NO.	PART NAME															
ITC	PART NO	MODEL								OPTION	L/R	QTY	EFFECTIVE DATE		REMARKS	P/CODE
		ENG	T/A	BODY			LEVEL						FROM	TO		
				4N	3H	5H	S	SE	SX							
	96351257	Y	.	B	B	B	S	S	S			1				
[23]	(E)BOLT-HEXAGON FLANGE (D)SCHRAUBE											(F)BOULON (S)PERNO				
	01517-06353	Y	.	B	B	B	S	S	S			1				
[24]	(E)SENSOR-CRANKSHAFT POSITION (D)SENSOR											(F)DETECTEUR (S)SENSOR				
	96183235	Y	.	B	B	B	S	S	S			1				
[25]	(E)BOLT-HEXAGON SOCKET TYPE (D)SCHRAUBE											(F)BOULON (S)PERNO				
	07130-06165	Y	.	B	B	B	S	S	S			1				

ENG(ENGINE)	T/A(TRANSAXLE)	BODY TYPE
Y = 1.5SOHC 6 = 1.6DOHC . = COMMON	M = MANUAL T/A A = AUTOMATIC T/A . = COMMON	4 N = 4 DOOR NOTCHBACK 3 H = 3 DOOR HATCHBACK 5 H = 5 DOOR HATCHBACK

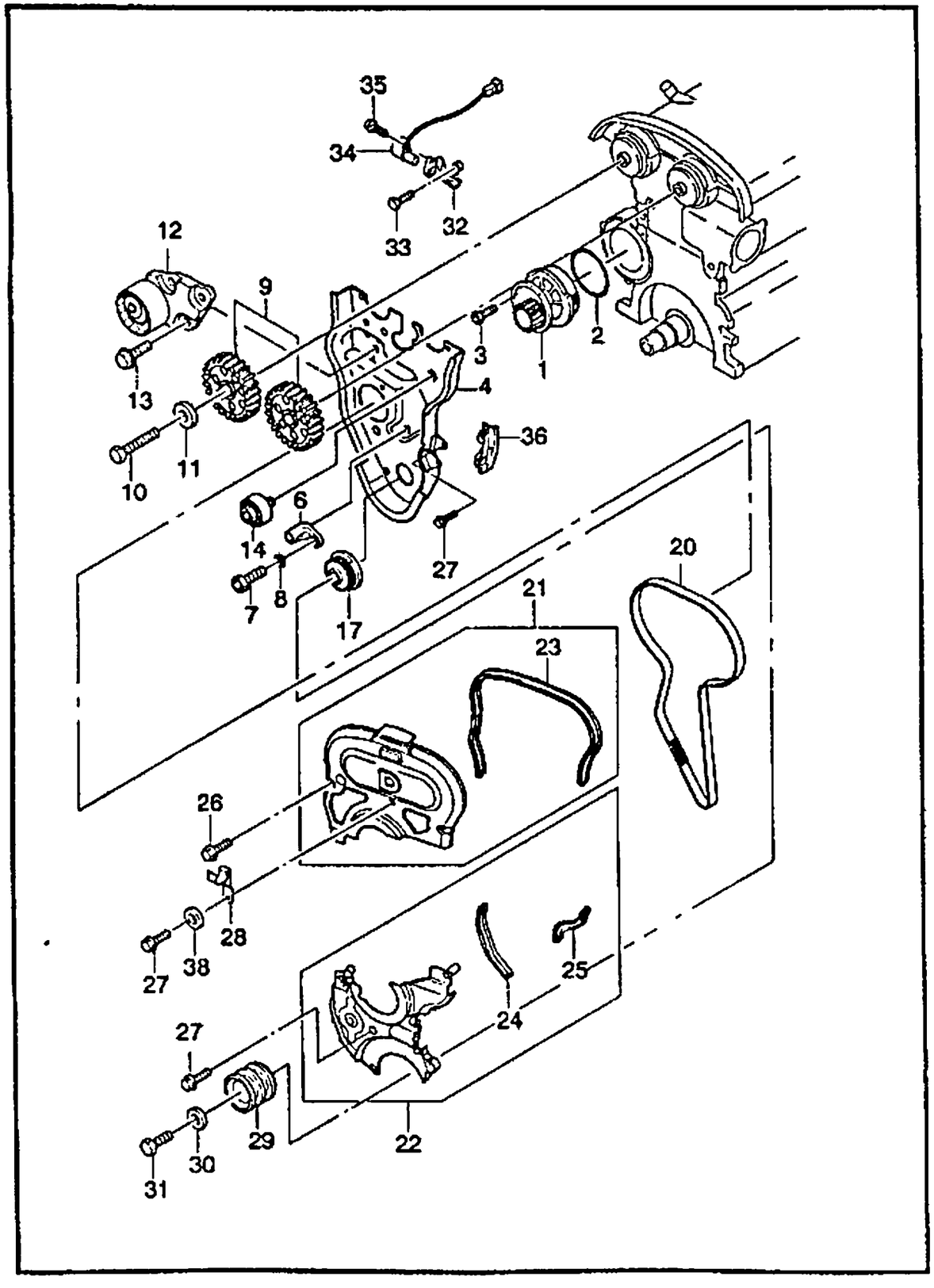

KEY NO. ITC	PART NO	MODEL ENG	T/A	BODY 4N	3H	5H	LEVEL S	SE	SX	OPTION	L/R	QTY	EFFECTIVE DATE FROM	TO	REMARKS	P/CODE
[01]		(E)PUMP A-WATER (D)PUMPE,WASSER									(F)POMPE-EAU (S)BOMBA-AGUA					
	96351284	6	.	B	B	B	.	.	O			1				
[02]		(E)RING-SEAL (D)RING,DICHTUNG									(F)ANNEAU (S)ANILLO-SELLO					
	90076127	6	.	B	B	B	.	.	O			1				
[03]		(E)BOLT (D)SCHRAUBE									(F)BOULON (S)PERNO					
	09106-06001	6	.	B	B	B	.	.	O			3				
[04]		(E)PLATE A-TIMING BELT BACK (D)HINTERE TAFEL									(F)CONTRE-PLAQUE (S)PLACA TRASERA					
	96184800	6	.	B	B	B	.	.	O			1				
[06]		(E)BRACKET-STEPPED MOUNTING (D)TRÄGER,STUFEN-MONTAGE									(F)SUPPORT-MONTAGE ETAGE (S)SOPORTE					
	96184861	6	.	B	B	B	.	.	O			1				
[07]		(E)BOLT-HEXAGON (D)SCHRAUBE									(F)BOULON (S)PERNO					
	09100-08019	6	.	B	B	B	.	.	O			1				
[08]		(E)WASHER (D)DICHTUNGSRING									(F)RONDELLE (S)ARANDELA					
	09160-08011	6	.	B	B	B	.	.	O			1				
[09]		(E)GEAR-CAMSHAFT (D)GETRIEBE,NOCKENWELLE									(F)ENGRENAGE-ARBRE A CAMES (S)ENGRANAJE-ARBOL DE LEVAS					
	96182888	6	.	B	B	B	.	.	O			1			INTAKE	
	96184322	6	.	B	B	B	.	.	O			1			EXHAUST	
[10]		(E)BOLT-CAMSHAFT GEAR (D)SCHRAUBE									(F)BOULON (S)PERNO					
	09100-10018	6	.	B	B	B	.	.	O			2				

ENG(ENGINE)	T/A(TRANSAXLE)	BODY TYPE
Y = 1.5SOHC 6 = 1.6DOHC . = COMMON	M = MANUAL T/A A = AUTOMATIC T/A . = COMMON	4 N = 4 DOOR NOTCHBACK 3 H = 3 DOOR HATCHBACK 5 H = 5 DOOR HATCHBACK

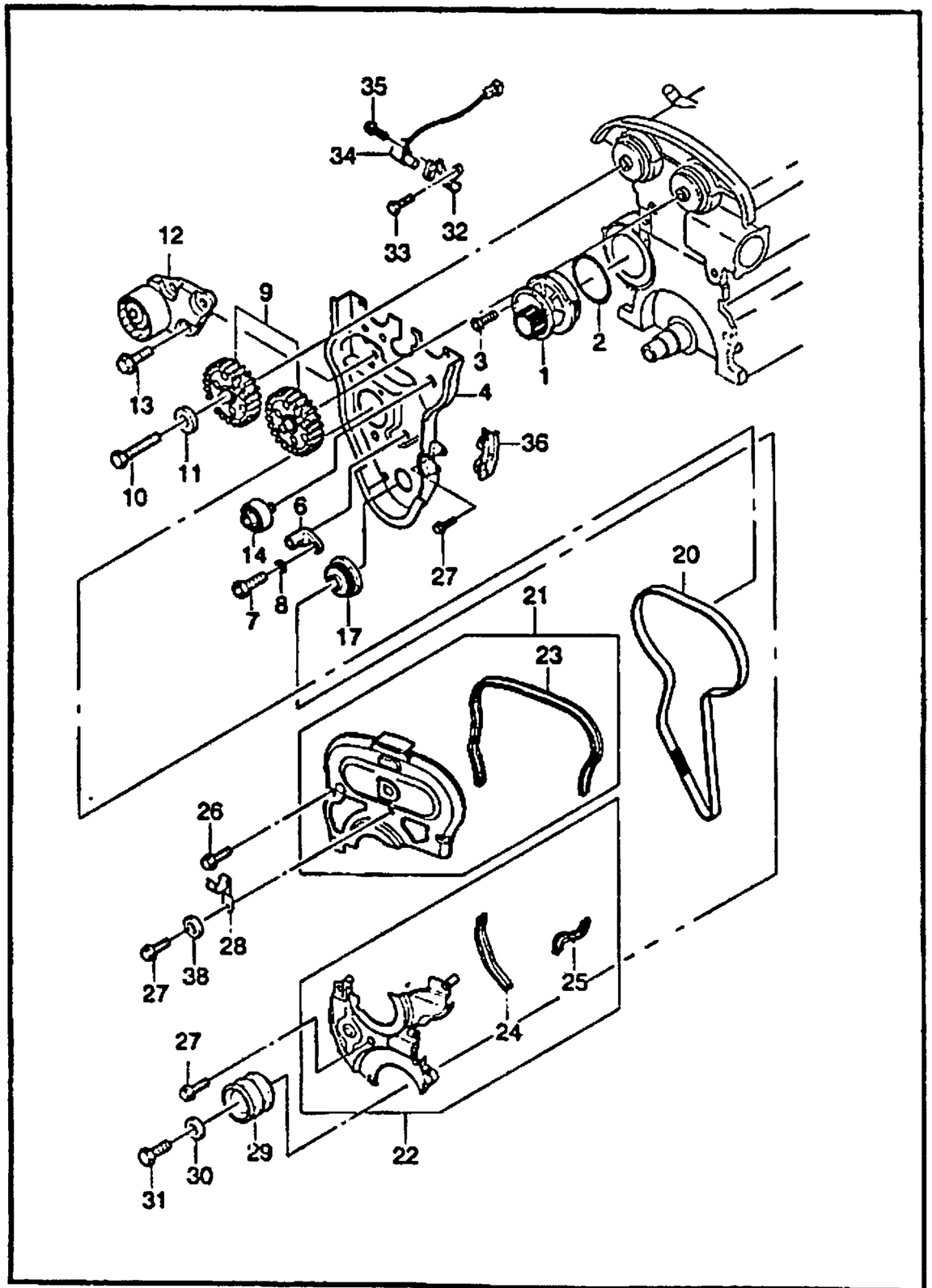

KEY NO.	PART NAME															
ITC	PART NO	MODEL								OPTION	L/R	QTY	EFFECTIVE DATE		REMARKS	P/CODE
		ENG	T/A	BODY			LEVEL						FROM	TO		
				4N	3H	5H	S	SE	SX							
[11]	5094008002	(E)WASHER-CAMSHAFT GEAR (D)DICHTUNGSRING									(F)RONDELLE (S)ARANDELA	2				
		6	.	B	B	B	.	.	O							
[12]	96350550	(E)TENSIONER A-TIMING BELT (D)SPANNUNG									(F)TENDEUR (S)TENSOR	1				
		6	.	B	B	B	.	.	O							
[13]	09117-08010	(E)BOLT-HEXAGON FLANGE (D)SCHRAUBE									(F)BOULON (S)PERNO	3				
		6	.	B	B	B	.	.	O							
[14]	96350526	(E)PULLEY-IDLER (D)ROLLE,LEERLAUF									(F)POULIE-LIBRE (S)POLEA-OCIOSA	1				
		6	.	B	B	B	.	.	O							
[17]	96143232	(E)GEAR A-CRANKSHAFT (D)GETRIEBE,KURBELWELLE									(F)ENGRENAGE-VILEBREQUIN (S)ENGRANAJE-CIGUEÑAL	1				
		6	.	B	B	B	.	.	O							
[20]	96183352	(E)BELT-TIMING (D)GURT,ZÜNDFOLGESTEUERUNG									(F)COURROIE (S)CORREA-DISTRIBUCION	1				
		6	.	B	B	B	.	.	O							
[21]	96351626	(E)COVER A-TIMING BELT,UPPER (D)DECKEL,ZÜNDFOLGE-GURT									(F)CARTER (S)CUBIERTA-CORREA DISTRIBUC	1				
		6	.	B	B	B	.	.	O							
[22]	96351627	(E)COVER A-TIMING BELT,LOWER (D)DECKEL,ZÜNDFOLGE-GURT									(F)CARTER (S)CUBIERTA-CORREA DISTRIBUC	1				
		6	.	B	B	B	.	.	O							
[23]	96351628	(E)SEAL-TIMING COVER,UPPER (D)DICHTUNG,VORDER-DECKEL									(F)JOINT-CARTER AVANT (S)SELLO-CUBIERTA DEL FRENTE	1				
		6	.	B	B	B	.	.	O							
[24]		(E)SEAL-TIMING COVER,LOWER (D)DICHTUNG,VORDER-DECKEL									(F)JOINT-CARTER AVANT (S)SELLO-CUBIERTA DEL FRENTE					

ENG(ENGINE)	T/A(TRANSAXLE)	BODY TYPE
Y = 1.5SOHC 6 = 1.6DOHC . = COMMON	M = MANUAL T/A A = AUTOMATIC T/A . = COMMON	4 N = 4 DOOR NOTCHBACK 3 H = 3 DOOR HATCHBACK 5 H = 5 DOOR HATCHBACK

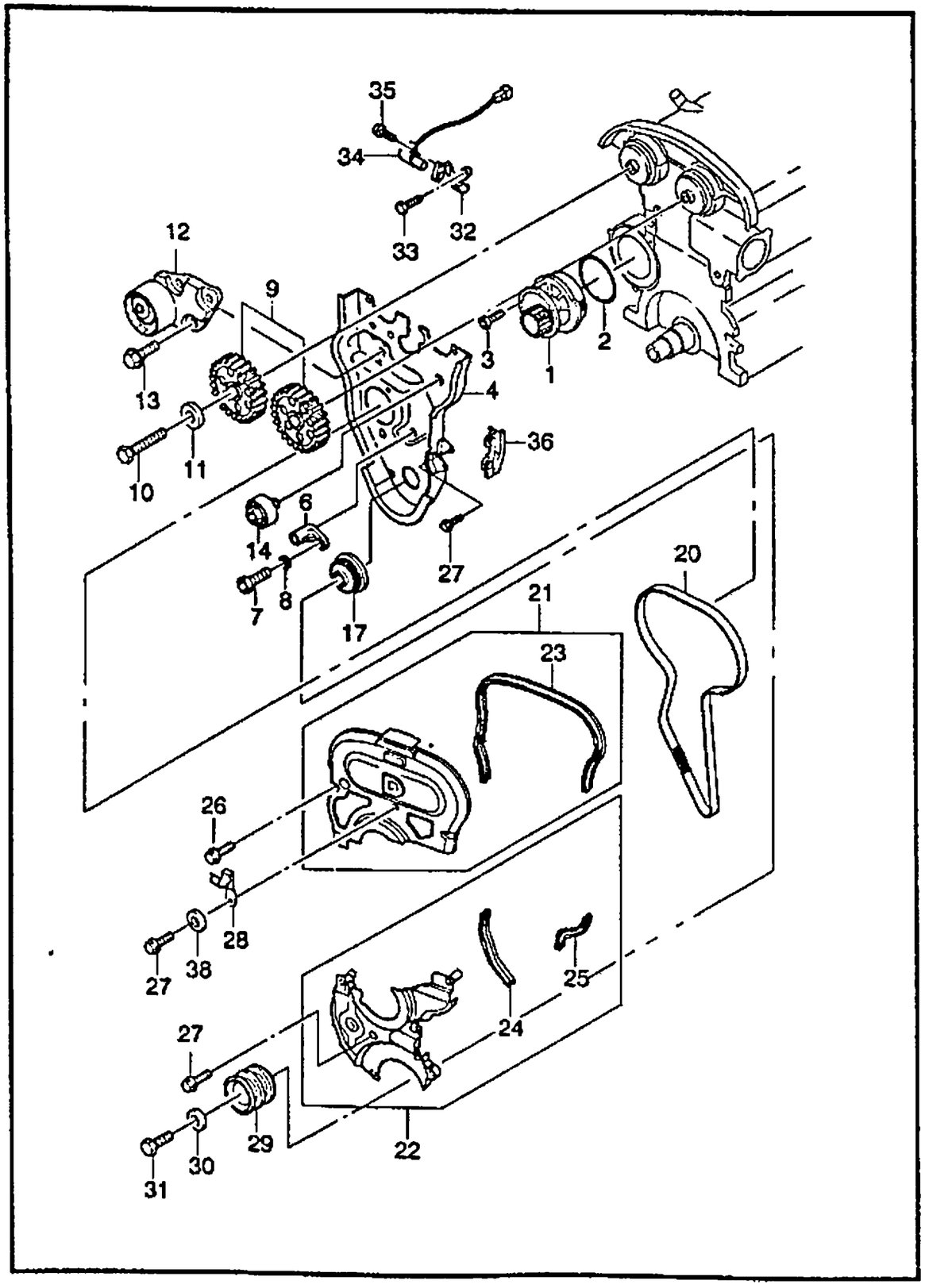

KEY NO.		PART NAME															
ITC	PART NO	MODEL								OPTION	L/R	QTY	EFFECTIVE DATE		REMARKS	P/CODE
		ENG	T/A	BODY			LEVEL						FROM	TO		
				4N	3H	5H	S	SE	SX							
	96351629	6	.	B	B	B	.	.	O			1				
	[25]	(E)SEAL-TIMING COVER,LOWER (D)DICHTUNG,VORDER-DECKEL										(F)JOINT-CARTER AVANT (S)SELLO-CUBIERTA DEL FRENTE				
	96351630	6	.	B	B	B	.	.	O			1				
	[26]	(E)BOLT-HEXAGON FLANGE (D)SCHRAUBE										(F)BOULON (S)PERNO				
	01517-06453	6	.	B	B	B	.	.	O			3				
	[27]	(E)BOLT-HEXAGON FLANGE (D)SCHRAUBE										(F)BOULON (S)PERNO				
	01517-06103	6	.	B	B	B	.	.	O			6				
	[28]	(E)BRACKET-HOSE (D)TRÄGER,SCHLAUCH										(F)SUPPORT-TUYAU (S)SOPORTE-MANGUERA				
	96180354	6	.	B	B	B	.	.	O			1				
	[29]	(E)PULLEY-CRANKSHAFT (D)ROLLE,KURBELWELLE										(F)POULIE-VILEBREQUIN (S)POLEA-CIGUEÑAL				
	96351111	6	.	B	B	B	.	.	O			1				
	[30]	(E)PLATE-PRESSURE (D)PLATTE,DRUCK										(F)PLAQUE-PRESSION (S)PLACA-PRESION				
	90409703	6	.	B	B	B	.	.	O			1				
	[31]	(E)BOLT-HEXAGON FLANGE (D)SCHRAUBE										(F)BOULON (S)PERNO				
	09103-12031	6	.	B	B	B	.	.	O			1	970804			
	Q 09103-12045	6	.	B	B	B	.	.	O			1	970804			
	[32]	(E)BRACKET A-CPS (D)TRÄGER										(F)SUPPORT (S)SOPORTE				
	96351255	6	.	B	B	B	.	.	O			1				
	[33]	(E)BOLT-HEXAGON FLANGE (D)SCHRAUBE										(F)BOULON (S)PERNO				

ENG(ENGINE)	T/A(TRANSAXLE)	BODY TYPE
Y = 1.5SOHC 6 = 1.6DOHC . = COMMON	M = MANUAL T/A A = AUTOMATIC T/A . = COMMON	4 N = 4 DOOR NOTCHBACK 3 H = 3 DOOR HATCHBACK 5 H = 5 DOOR HATCHBACK

1331 TIMING COVER(DOHC)

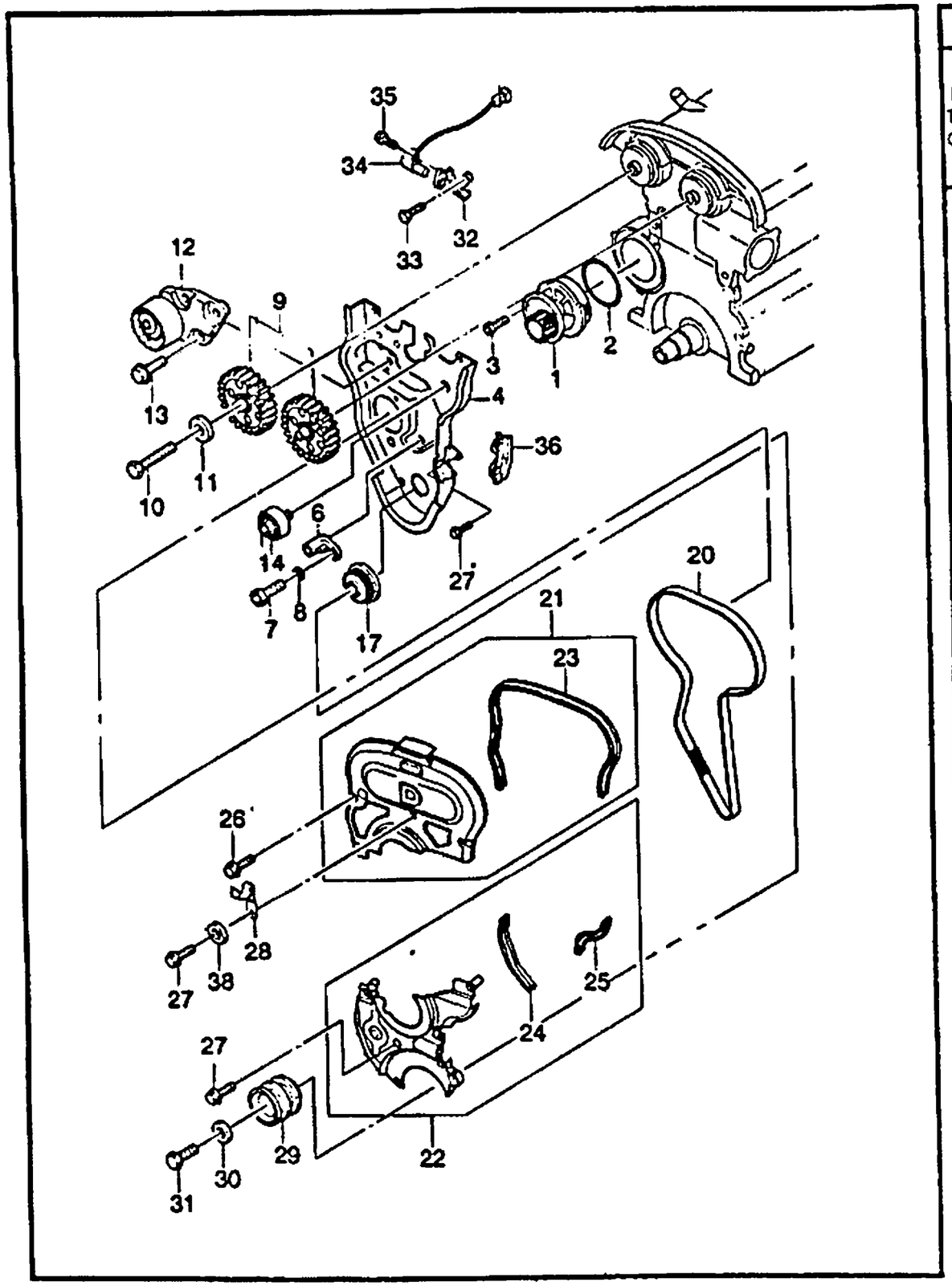

KEY NO. ITC	PART NO	MODEL ENG	MODEL T/A	MODEL BODY 4N	MODEL BODY 3H	MODEL BODY 5H	MODEL LEVEL S	MODEL LEVEL SE	MODEL LEVEL SX	OPTION	L/R	QTY	EFFECTIVE DATE FROM	EFFECTIVE DATE TO	REMARKS	P/CODE
[34]	01517-06353	6	.	B	B	B	.	.	O	(E)SENSOR-CR/SHAFT POSITION (D)SENSOR	(F)DETECTEUR (S)SENSOR	1				
[35]	96183235	6	.	B	B	B	.	.	O	(E)BOLT-HEXAGON SOCKET TYPE (D)SCHRAUBE	(F)BOULON (S)PERNO	1				
[36]	07130-06165	6	.	B	B	B	.	.	O	(E)SEAL (D)DICHTUNG	(F)JOINT (S)SELLO	1				
[38]	96350088	6	.	B	B	B	.	.	O	(E)WASHER (D)DICHTUNGSRING	(F)RONDELLE (S)ARANDELA	1				
	9091607060	6	.	B	B	B	.	.	O			2				

ENG(ENGINE)	T/A(TRANSAXLE)	BODY TYPE
Y = 1.5SOHC 6 = 1.6DOHC . = COMMON	M = MANUAL T/A A = AUTOMATIC T/A . = COMMON	4 N = 4 DOOR NOTCHBACK 3 H = 3 DOOR HATCHBACK 5 H = 5 DOOR HATCHBACK

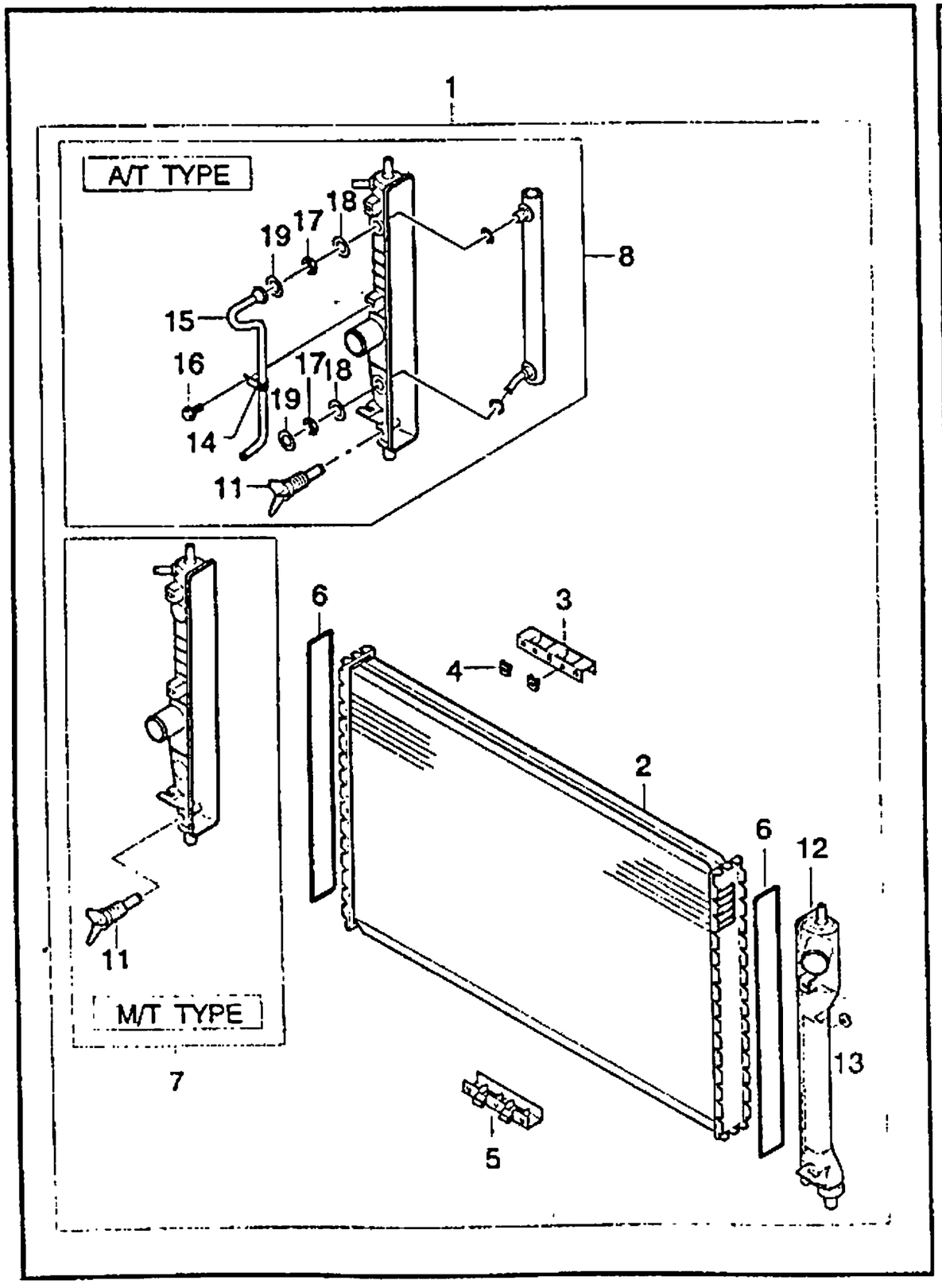

KEY NO. ITC	PART NO	MODEL ENG	T/A	BODY 4N	3H	5H	LEVEL S	SE	SX	OPTION	L/R	QTY	EFFECTIVE DATE FROM	TO	REMARKS	P/CODE
[01]		(E)RADIATOR A (D)KÜHLER									(F)RADIATEUR (S)RADIADOR					
	96351263	.	M	B	B	B	S	S	S	&C46		1				RF
	96182261	.	M	B	B	B	O	O	O	&C59/C60		1				RB
	96182281														NOT APPLIED	
	96351262	.	A	B	B	B	O	O	O	&C46		1				RE
	96182260	.	A	B	B	B	O	O	O	&C59/C60		1				RA
	96182280														NOT APPLIED	
[02]		(E)CORE (D)GEHÄUSE KÜHLER									(F)NOYAU-RADIATEUR (S)NUCLEO-RADIADOR					
	620730	.	.	B	B	B	S	S	S	&C46		1			500X382.4X16	
	620741	.	.	B	B	B	O	O	O	&C59/C60		1			635X382.4X16	
	620742														NOT APPLIED	
[03]		(E)BRACKET-SHROUD MOUNT,UPPER (D)TRÄGER,HÜLLE-MONTAGE,OBEN									(F)SUPPORT (S)SOPORTE-MONTAJE DE TAPADO					
	620580	.	.	B	B	B	S	S	S			1				
[04]		(E)CLIP-SHROUD MOUNT (D)KLEMME									(F)ATTACHE (S)GRAPA					
	620579	.	.	B	B	B	S	S	S			1				
[05]		(E)BRACKET-SHROUD MOUNT,LOWER (D)TRÄGER,HÜLLE-MONTAGE									(F)SUPPORT (S)SOPORTE-MONTAJE DE TAPADO					
	620581	.	.	B	B	B	S	S	S			1				
[06]		(E)SEAL-GASKET (D)DICHTUNG									(F)JOINT (S)SELLO					
	620586	.	.	B	B	B	S	S	S			2				
[07]		(E)TANK A-OUTLET (D)GEHÄUSE AUSFUHR TANK									(F)ENVELOPPE (S)CAPARAZON-TANQUE					

ENG(ENGINE)	T/A(TRANSAXLE)	BODY TYPE
Y = 1.5SOHC 6 = 1.6DOHC . = COMMON	M = MANUAL T/A A = AUTOMATIC T/A . = COMMON	4 N = 4 DOOR NOTCHBACK 3 H = 3 DOOR HATCHBACK 5 H = 5 DOOR HATCHBACK

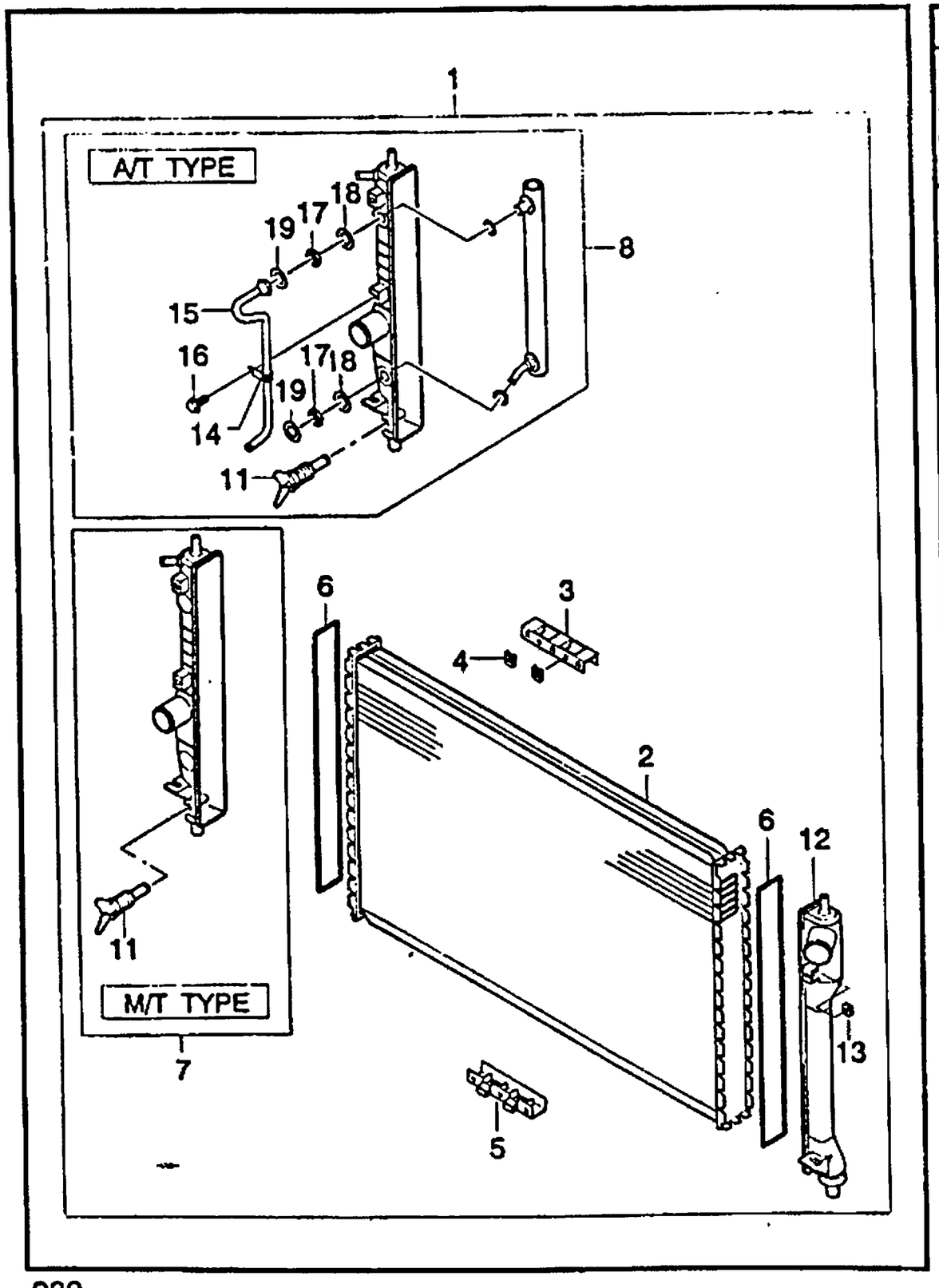

KEY NO. ITC	PART NO	MODEL ENG	T/A	BODY 4N	3H	5H	LEVEL S	SE	SX	OPTION	L/R	QTY	EFFECTIVE DATE FROM	TO	REMARKS	P/CODE
	620834	.	M	B	B	B	S	S	S			1				
[08]	(E)TANK A-OUTLET (D)GEHÄUSE AUSFUHR TANK											(F)ENVELOPPE (S)CAPARAZON-TANQUE				
	620832	.	A	B	B	B	O	O	O			1				
[11]	(E)COCK -DRAIN (D)ABFLUßHAHN											(F)ROBINET-VIDANGE (S)GRIFO-DRENAJE				
	620728	.	.	B	B	B	S	S	S			2				
[12]	(E)TANK A-INLET (D)GEHÄUSE EINFUHR TANK											(F)ENVELOPPE (S)CAPARAZON-TANQUE				
	620827	.	.	B	B	B	S	S	S			4				
[13]	(E)NUT-FAN MOUNTING (D)MUTTER											(F)ECROU (S)TUERCA				
	620006	.	.	B	B	B	S	S	S			3				
[14]	(E)HOLDER-PIPE OUTLET (D)BEHÄLTER											(F)MONTURE (S)RETNEDOR				
	620584	.	A	B	B	B	O	O	O			1				
[15]	(E)PIPE A-OUTLET (D)ROHR											(F)TUYAU (S)TUBERIA				
	620727	.	A	B	B	B	O	O	O			1				
[16]	(E)BOLT (D)SCHRAUBE											(F)BOULON (S)PERNO				
	620585	.	A	B	B	B	O	O	O			1				
[17]	(E)NUT-OUTLET (D)MUTTER											(F)ECROU (S)TUERCA				
	620589	.	A	B	B	B	O	O	O			2				
[18]	(E)WASHER (D)DICHTUNGSRING											(F)RONDELLE (S)ARANDELA				
	620588	.	A	B	B	B	O	O	O			2				

ENG(ENGINE)	T/A(TRANSAXLE)	BODY TYPE
Y = 1.5SOHC	M = MANUAL T/A	4 N = 4 DOOR NOTCHBACK
6 = 1.6DOHC	A = AUTOMATIC T/A	3 H = 3 DOOR HATCHBACK
. = COMMON	. = COMMON	5 H = 5 DOOR HATCHBACK

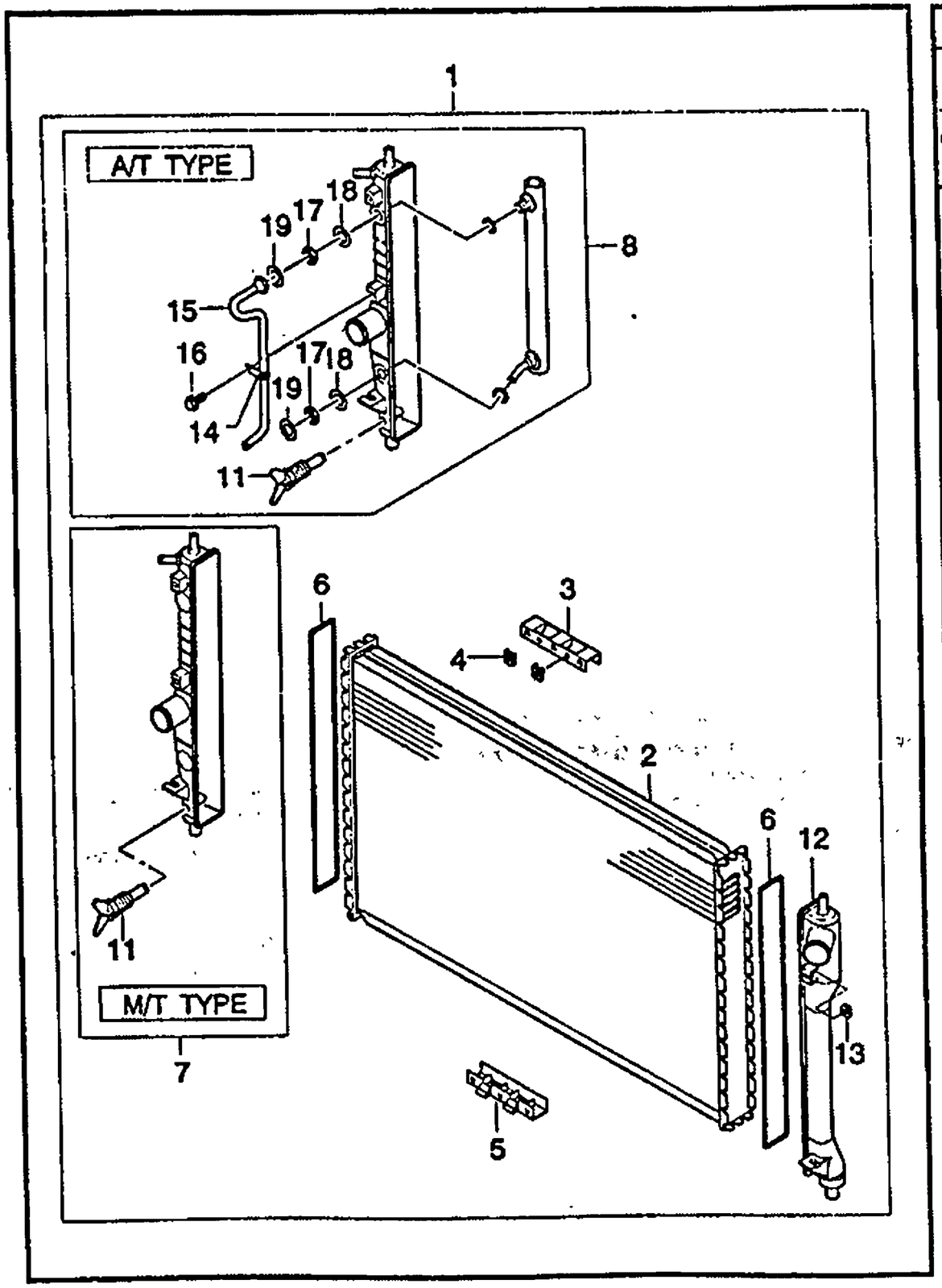

KEY NO.		PART NAME															
ITC	PART NO	MODEL								OPTION	L/R	QTY	EFFECTIVE DATE		REMARKS	P/CODE
		ENG	T/A	BODY			LEVEL						FROM	TO		
				4N	3H	5H	S	SE	SX							
[19]		(E)WASHER									(F)RONDELLE					
		(D)DICHTUNGSRING									(S)ARANDELA					
620590		.	A	B	B	B	O	O	O			2				

ENG(ENGINE)	T/A(TRANSAXLE)	BODY TYPE
Y = 1.5SOHC	M = MANUAL T/A	4 N = 4 DOOR NOTCHBACK
6 = 1.6DOHC	A = AUTOMATIC T/A	3 H = 3 DOOR HATCHBACK
. = COMMON	. = COMMON	5 H = 5 DOOR HATCHBACK

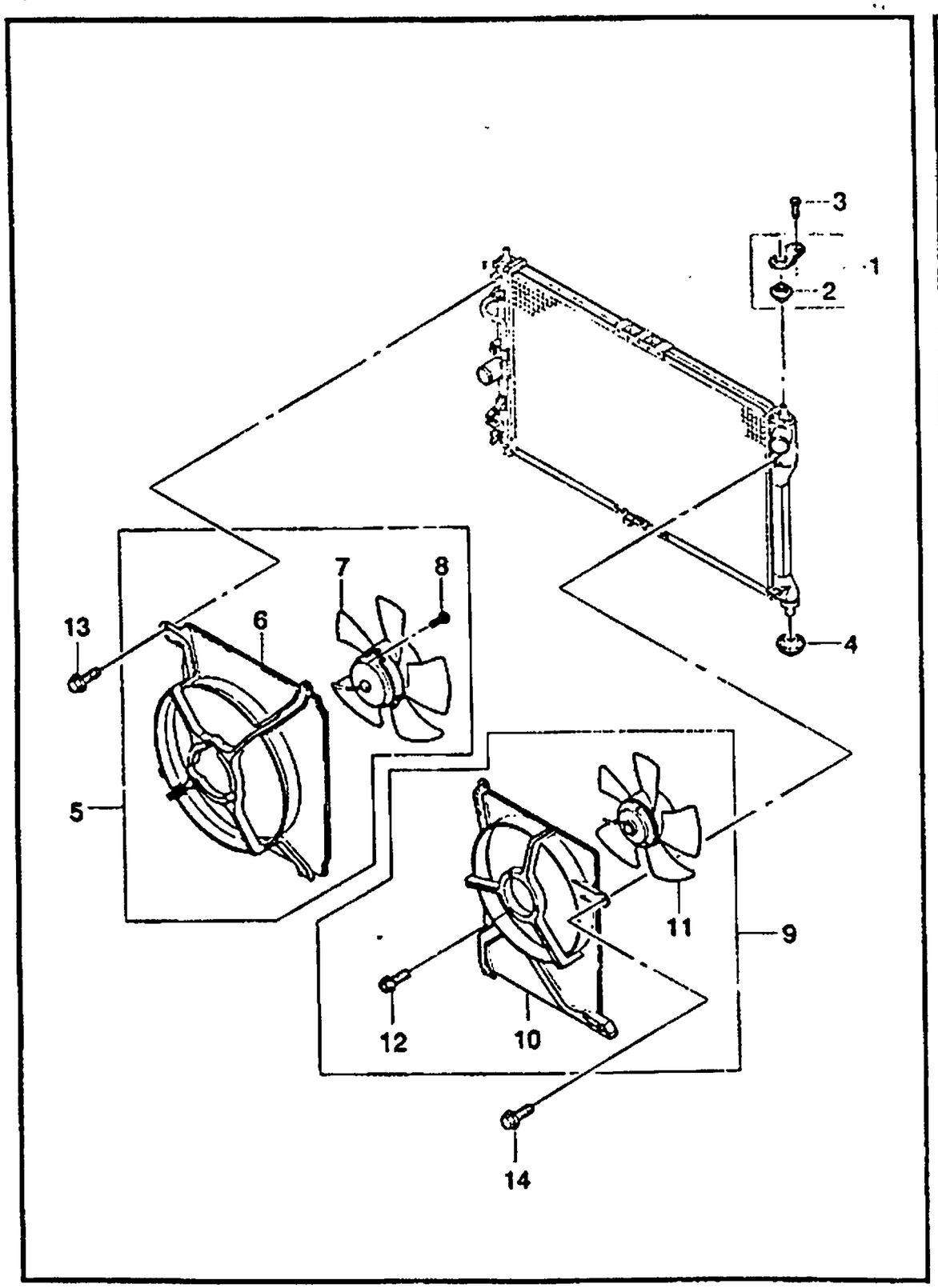

KEY NO.	PART NAME															
ITC	PART NO	MODEL								OPTION	L/R	QTY	EFFECTIVE DATE		REMARKS	P/CODE
		ENG	T/A	BODY			LEVEL						FROM	TO		
				4N	3H	5H	S	SE	SX							
[01]	(E)BRACKET A-RADIATOR (D)TRÄGER,KÜHLER										(F)SUPPORT-RADIATEUR (S)SOPORTE-RADIADOR					
96351477		.	.	B	B	B	S	S	S			2				
[02]	(E)BUMPER-RADIATOR,UPPER (D)STOßSTANGE										(F)PARE-CHOC (S)PARACHOQUES					
96351101		.	.	B	B	B	S	S	S			2				
[03]	(E)BOLT-HEX FLANGE PILOT (D)SCHRAUBE										(F)BOULON (S)PERNO					
02647-06165		.	.	B	B	B	S	S	S			2				
[04]	(E)BUMPER-RADIATOR,LOWER (D)STOßSTANGE										(F)PARE-CHOC (S)PARACHOQUES					
96184140		.	.	B	B	B	S	S	S			2				
[05]	(E)BLOWER A-RADIATOR (D)BLÄSER,KÜHLER										(F)VENTILATEUR-RADIATEUR (S)VENTILADOR-RADIADOR					
96183756		.	.	B	B	B	S	S	S	-XHA		1				
96183756		.	.	B	B	B	S	S	S	&C46&XHA		1				
96352580		.	.	B	B	B	O	O	O	&C59/C60&XHA		1				
[06]	(E)SHROUD (D)MANTEL,KÜHLER										(F)BOUCLIER-RADIATEUR (S)CUBIERTA-RADIADOR					
EU03050															NOT APPLIED	
EU03005		.	.	B	B	B	S	S	S			1				
[07]	(E)BLOWER (D)BLÄSER,KÜHLER										(F)VENTILATEUR-RADIATEUR (S)VENTILADOR-RADIADOR					
EU50002															NOT APPLIED	
EU50001		.	.	B	B	B	S	S	S	-XHA		1				
EU50001		.	.	B	B	B	S	S	S	&C46&XHA		1				
GI50001		.	.	B	B	B	O	O	O	&C59/C60&XHA		1				

ENG(ENGINE)	T/A(TRANSAXLE)	BODY TYPE
Y = 1.5SOHC 6 = 1.6DOHC . = COMMON	M = MANUAL T/A A = AUTOMATIC T/A . = COMMON	4 N = 4 DOOR NOTCHBACK 3 H = 3 DOOR HATCHBACK 5 H = 5 DOOR HATCHBACK

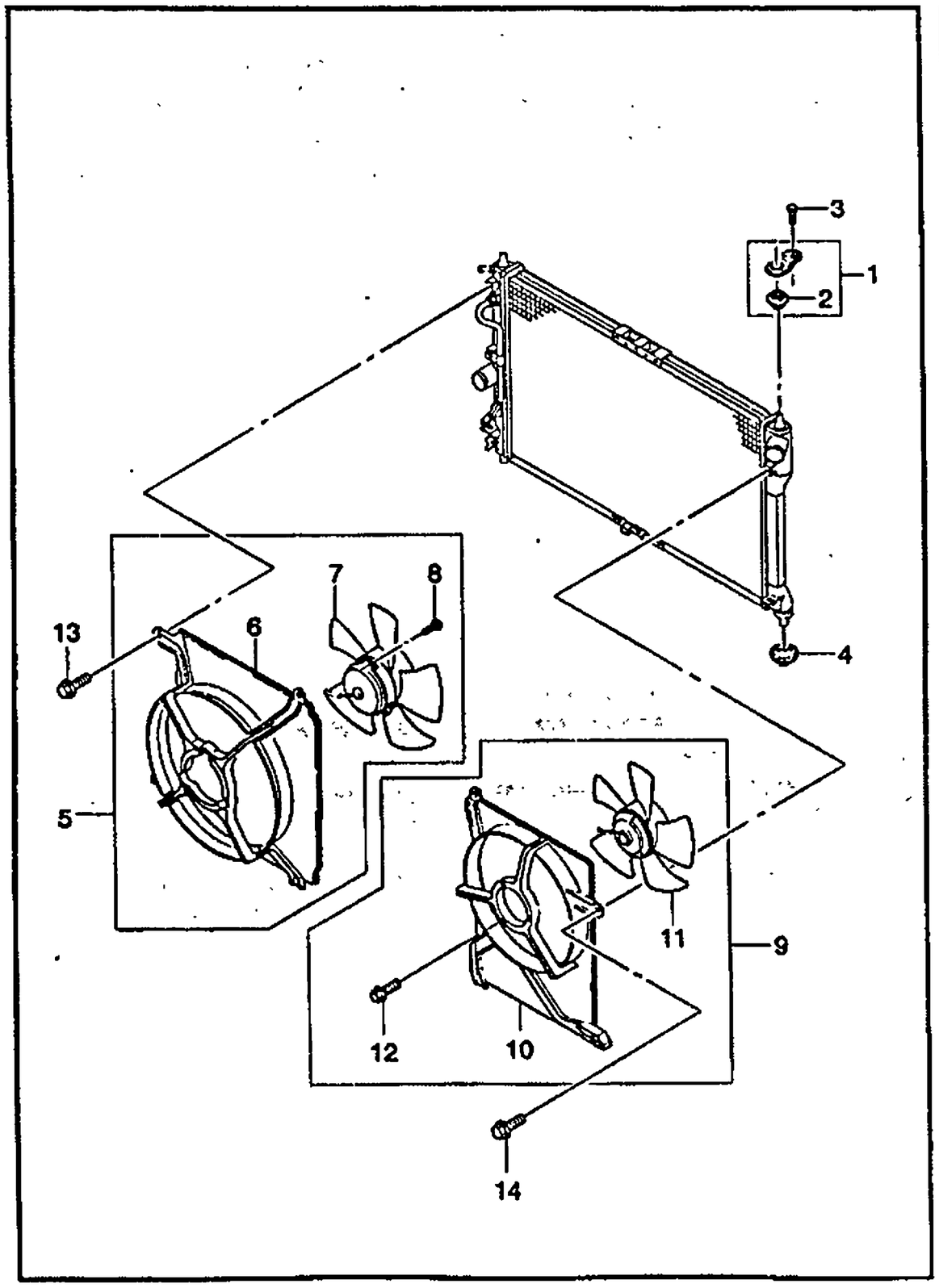

KEY NO. ITC	PART NO	MODEL ENG	T/A	BODY 4N	3H	5H	LEVEL S	SE	SX	OPTION	L/R	QTY	EFFECTIVE DATE FROM	TO	REMARKS	P/CODE
[08]		(E)SCREW (D)SCHRAUBE									(F)VIS (S)TORNILLO					
	EU01036														NOT APPLIED	
	EU10036	.	.	B	B	B	S	S	S			3				
[09]		(E)BLOWER A-AUXILIARY (D)BLÄSER,ZUSATZ									(F)VENTILATEUR-AUXILIAIRE (S)VENTILADOR-AUXILIAR					
	96182264	.	.	B	B	B	O	O	O	&C60		1				
[10]		(E)SHROUD (D)MANTEL									(F)BOUCLIER (S)CUBIERTA					
	DA03050	.	.	B	B	B	O	O	O	&C60		1				
[11]		(E)BLOWER-AUXILIARY (D)BLÄSER,ZUSATZ									(F)VENTILATEUR-AUXILIAIRE (S)VENTILADOR-AUXILIAR					
	DA50002	.	.	B	B	B	O	O	O	&C60		1				
[12]		(E)BOLT (D)SCHRAUBE									(F)BOULON (S)PERNO					
	MC01017	.	.	B	B	B	O	O	O	&C60		3				
[13]		(E)BOLT (D)SCHRAUBE									(F)BOULON (S)PERNO					
	09116-06025	.	.	B	B	B	S	S	S			3				
[14]		(E)BOLT (D)SCHRAUBE									(F)BOULON (S)PERNO					
	09116-06025	.	.	B	B	B	O	O	O	&C60		3				

ENG(ENGINE)	T/A(TRANSAXLE)	BODY TYPE
Y = 1.5SOHC 6 = 1.6DOHC . = COMMON	M = MANUAL T/A A = AUTOMATIC T/A . = COMMON	4 N = 4 DOOR NOTCHBACK 3 H = 3 DOOR HATCHBACK 5 H = 5 DOOR HATCHBACK

1650 RADIATOR HOSE&PIPE(SOHC)

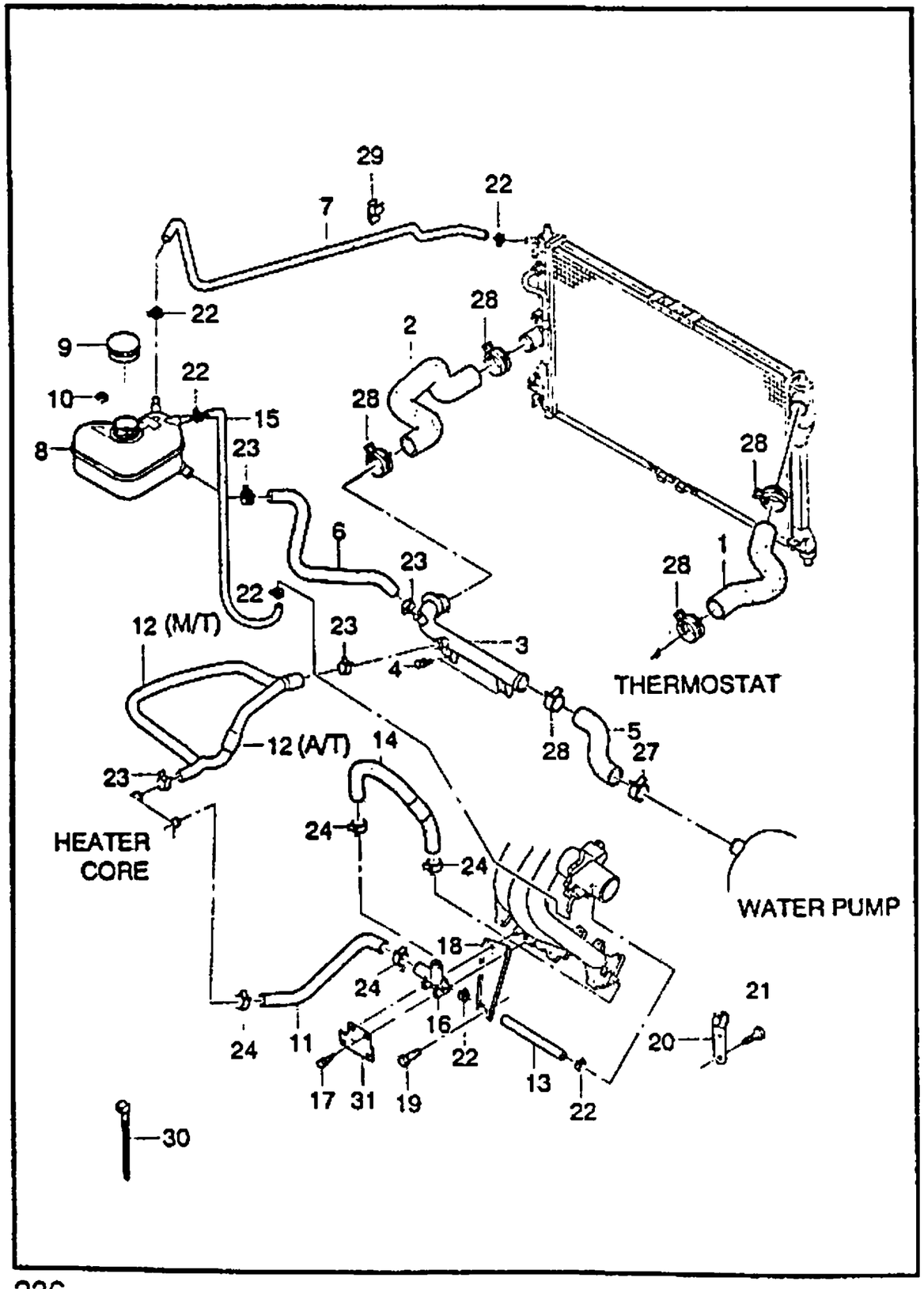

KEY NO. ITC	PART NO	MODEL ENG	T/A	BODY 4N	3H	5H	LEVEL S	SE	SX	OPTION	L/R	QTY	EFFECTIVE DATE FROM	TO	REMARKS	P/CODE
[01]		(E)HOSE-RADIATOR,UPPER (D)SCHLAUCH,BOGEN,OBEN									(F)TUYAU-COUDE,HAUT (S)MANGUERA-CODO,SUPERIOR					
96351259		Y	.	B	B	B	S	S	S	&C46		1				UC
96182268		Y	.	B	B	B	O	O	O	&C59/C60		1				UA
[02]		(E)HOSE-RADIATOR,LOWER (D)SCHLAUCH,BOGEN,UNTEN									(F)TUYAU-COUDE,BAS (S)MANGUERA-CODO,INFERIOR					
96350692		Y	.	B	B	B	S	S	S			1				
[03]		(E)PIPE-RADIATOR & ENGINE (D)ROHR,KÜHLER&MOTOR									(F)TUYAU-RADIATEUR&MOTEUR (S)TUBERIA-RADIADOR Y MOTOR					
96180035		Y	.	B	B	B	S	S	S			1				
[04]		(E)BOLT-HEXAGON (D)SCHRAUBE									(F)BOULON (S)PERNO					
01137-08165		Y	.	B	B	B	S	S	S			2				
[05]		(E)HOSE-PIPE & WATER PUMP (D)SCHLAUCH,ROHR&WASSERPUMPE									(F)TUYAU-TUYAU&POMPE A EAU (S)MANGUERA					
96180071		Y	.	B	B	B	S	S	S			1				
[06]		(E)HOSE-SURGE TANK & PIPE (D)SCHLAUCH,ÜBERFLUßTANK									(F)TUYAU (S)MANGUERA					
96351748		Y	.	B	B	B	S	S	S			1				
[07]		(E)HOSE-RADIATOR &SURGE TANK (D)SCHLAUCH									(F)TUYAU (S)MANGUERA					
96351848		Y	.	B	B	B	S	S	S			1				
[08]		(E)TANK-SURGE (D)TANK,ÜBERFLUß									(F)RESERVOIR-TROP-PLEIN (S)TANQUE-SOBRE CARGA					
96182279		Y	.	B	B	B	S	S	S			1				
[09]		(E)CAP-SURGE TANK (D)DECKEL,ÜBERFLUßTANK									(F)CHAPEAU (S)TAPA-TANQUE DE ARRANQUE					
96351578		Y	.	B	B	B	S	S	S			1				

ENG(ENGINE)	T/A(TRANSAXLE)	BODY TYPE
Y = 1.5SOHC 6 = 1.6DOHC . = COMMON	M = MANUAL T/A A = AUTOMATIC T/A . = COMMON	4 N = 4 DOOR NOTCHBACK 3 H = 3 DOOR HATCHBACK 5 H = 5 DOOR HATCHBACK

1650 RADIATOR HOSE&PIPE(SOHC)

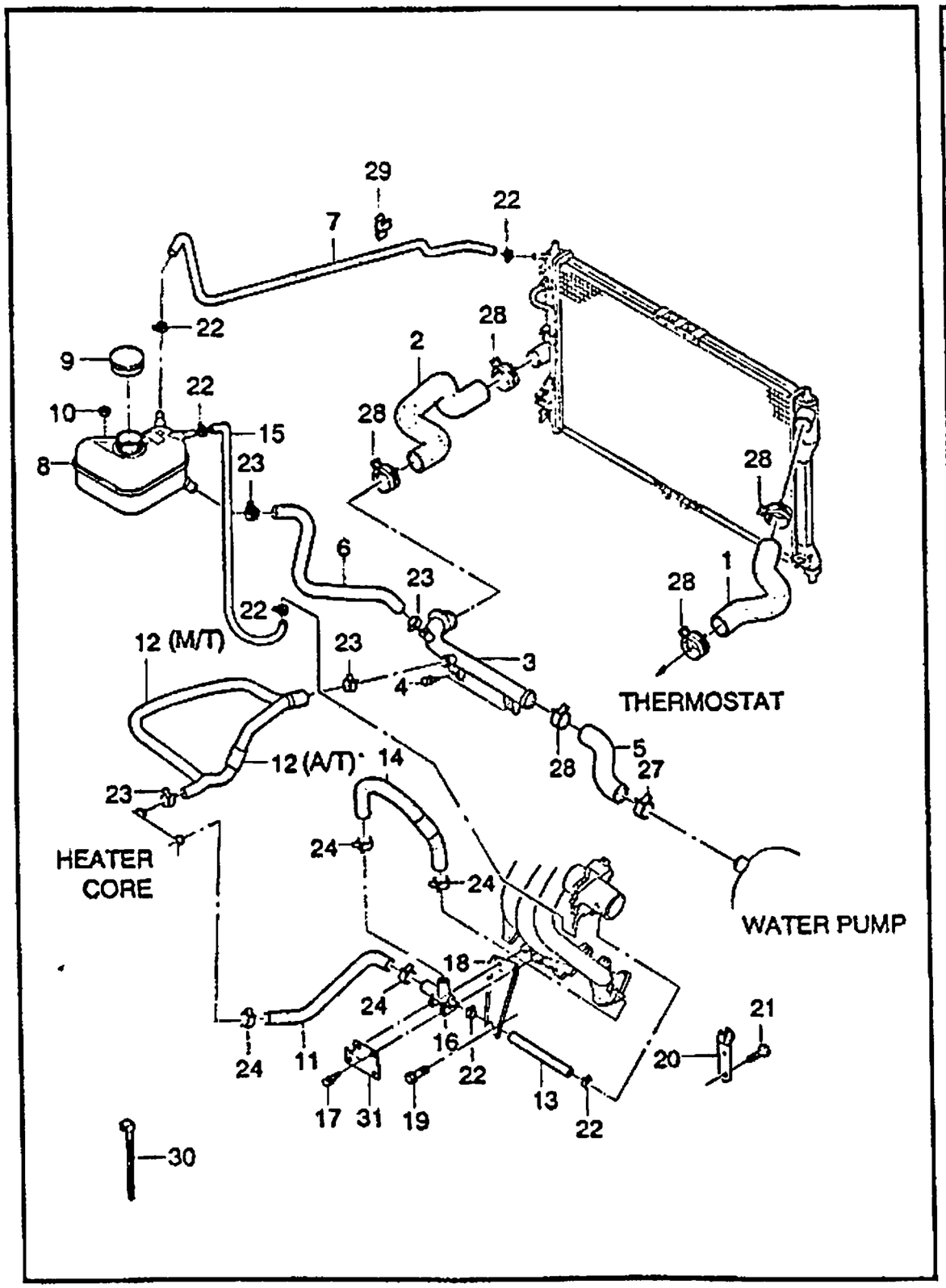

KEY NO.		PART NAME															
		MODEL															
				BODY			LEVEL						EFFECTIVE DATE				
ITC	PART NO	ENG	T/A	4N	3H	5H	S	SE	SX	OPTION	L/R	QTY	FROM	TO	REMARKS	P/CODE
[10]		(E)NUT (D)MUTTER									(F)ECROU (S)TUERCA					
	09159-06011	Y	.	B	B	B	S	S	S			2				
[11]		(E)HOSE-HEATER FEEDING (D)SCHLAUCH,HEIZUNG ZUFUHR									(F)TUYAU (S)MANGUERA-CALENTADOR					
	96304312	Y	.	B	B	B	S	S	S			1				
[12]		(E)HOSE-HEATER RETURN (D)RÜCK-SCHLAUCH HEIZUNG									(F)TUYAU-RETOUR CHAUFFAGE (S)MANGUERA-CALENTADOR					
	96304316	Y	M	B	B	B	S	S	S			1				
	96304475	Y	A	B	B	B	O	O	O			1				
[13]		(E)HOSE-THROTTLE BODY FEED'G (D)SCHLAUCH,DROSSEL KÖRPER									(F)TUYAU (S)MANGUERA					
	96351770	Y	.	B	B	B	S	S	S			1				
[14]		(E)HOSE-MANIFOLD & DISTRIBUTOR (D)SCHLAUCH									(F)TUYAU (S)MANGUERA					
	96351772	Y	.	B	B	B	S	S	S			1				
[15]		(E)HOSE-THROTTLE BODY RETURN (D)SCHLAUCH,DROSSEL KÖRPER									(F)TUYAU (S)MANGUERA					
	96351822	Y	.	B	B	B	S	S	S			1				SH
[16]		(E)DISTRIBUTOR-WATER (D)VERTEILER,WASSER									(F)DISTRIBUTEUR-EAU (S)DISTRIBUIDOR-AGUA					
	96143583	Y	.	B	B	B	S	S	S			1				
[17]		(E)BOLT-HEXAGON (D)SCHRAUBE									(F)BOULON (S)PERNO					
	01510-08503	Y	.	B	B	B	S	S	S			2				
[18]		(E)SUPPORT-INTAKE MANIFOLD (D)TRÄGER,SAMMELLEITUNG									(F)SUPPORT (S)SOPORTE					
	96143951	Y	.	B	B	B	S	S	S			1				

ENG(ENGINE)	T/A(TRANSAXLE)	BODY TYPE
Y = 1.5SOHC 6 = 1.6DOHC . = COMMON	M = MANUAL T/A A = AUTOMATIC T/A . = COMMON	4 N = 4 DOOR NOTCHBACK 3 H = 3 DOOR HATCHBACK 5 H = 5 DOOR HATCHBACK

1650 RADIATOR HOSE&PIPE(SOHC)

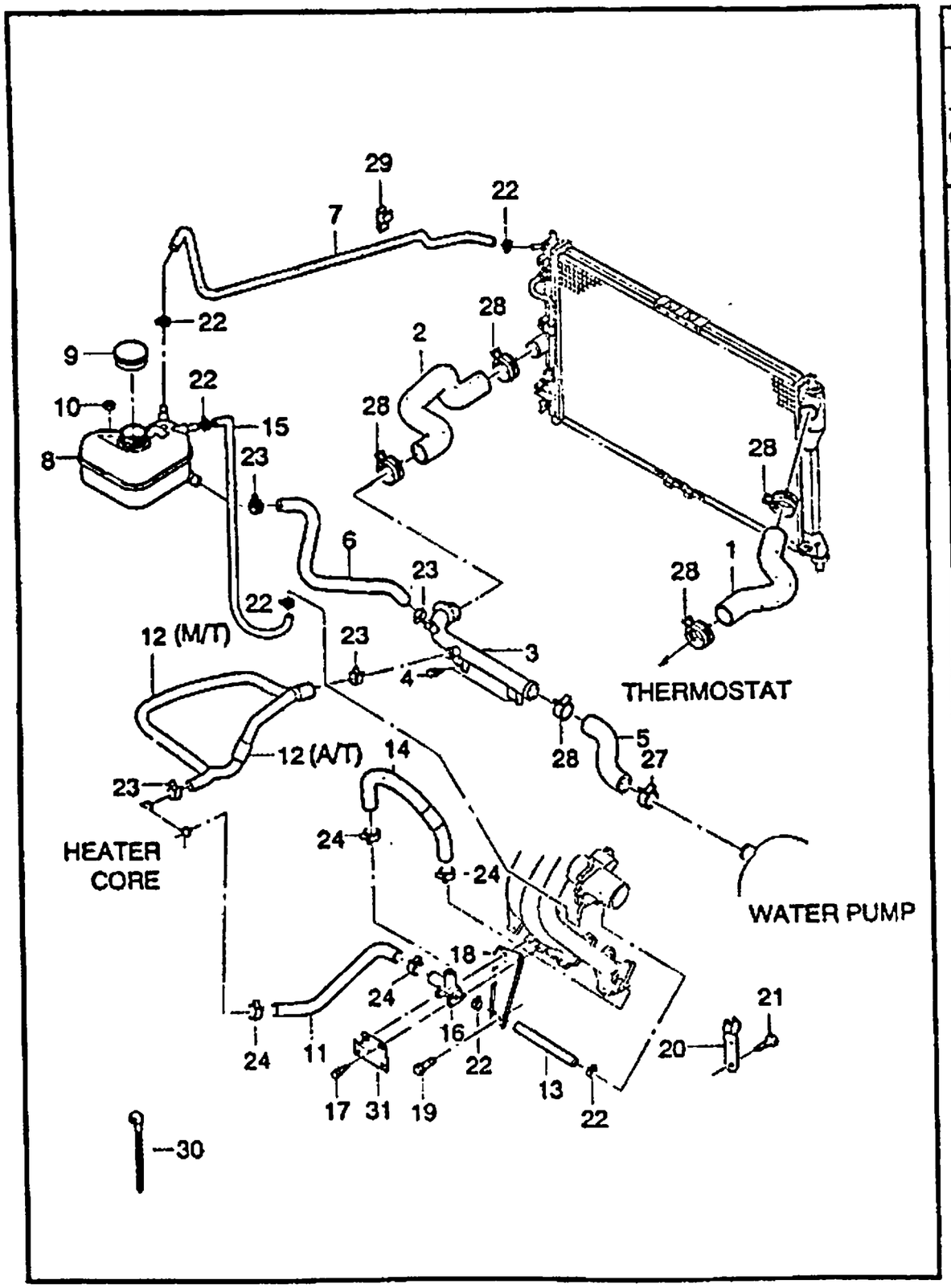

KEY NO. ITC	PART NO	MODEL ENG	T/A	BODY 4N	3H	5H	LEVEL S	SE	SX	OPTION	L/R	QTY	EFFECTIVE DATE FROM	TO	REMARKS	P/CODE
[19]	09116-10001	(E)BOLT (D)SCHRAUBE Y .	.	B	B	B	S	S	S		(F)BOULON (S)PERNO 1					
[20]	96304320	(E)SUPPORT-HEATER HOSE (D)TRÄGER Y	M	B	B	B	S	S	S		(F)SUPPORT (S)SOPORTE 1					
[21]	09100-10004	(E)BOLT-HEXAGON (D)SCHRAUBE Y	M	B	B	B	S	S	S		(F)BOULON (S)PERNO 1					
[22]	09401-15401	(E)CLIP (D)KLEMME Y .	.	B	B	B	S	S	S		(F)ATTACHE (S)GRAPA 6					
[23]	09401-22401	(E)CLIP (D)KLEMME Y .	.	B	B	B	S	S	S		(F)ATTACHE (S)GRAPA 4					
[24]	09401-23402	(E)CLIP (D)KLEMME Y .	.	B	B	B	S	S	S		(F)ATTACHE (S)GRAPA 4					
[27]	09401-35401	(E)CLIP (D)KLEMME Y .	.	B	B	B	S	S	S		(F)ATTACHE (S)GRAPA 1					
[28]	09401-38401	(E)CLIP (D)KLEMME Y .	.	B	B	B	S	S	S		(F)ATTACHE (S)GRAPA 5					
[29]	09408-00074	(E)CLIP (D)KLEMME Y .	.	B	B	B	S	S	S		(F)ATTACHE (S)GRAPA 1					
[30]		(E)STRAP-MOUNTING (D)BAND,MONTAGE									(F)BRETELLE-MONTAGE (S)BRIDA-MONTAJE					

ENG(ENGINE)	T/A(TRANSAXLE)	BODY TYPE
Y = 1.5SOHC 6 = 1.6DOHC . = COMMON	M = MANUAL T/A A = AUTOMATIC T/A . = COMMON	4 N = 4 DOOR NOTCHBACK 3 H = 3 DOOR HATCHBACK 5 H = 5 DOOR HATCHBACK

1650 RADIATOR HOSE&PIPE(SOHC)

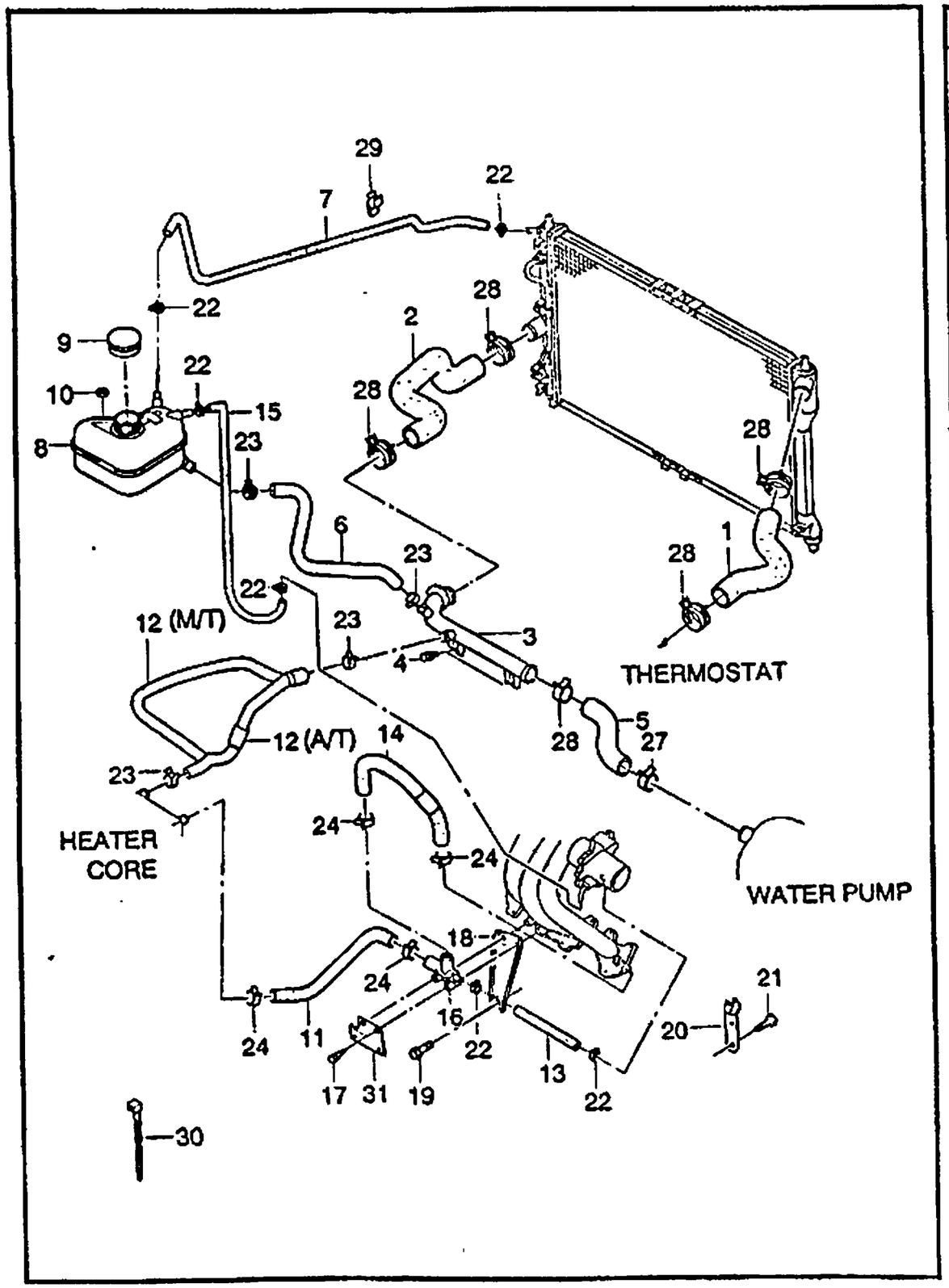

KEY NO.		PART NAME														
ITC	PART NO	MODEL								OPTION	L/R	QTY	EFFECTIVE DATE		REMARKS	PICODE
		ENG	T/A	BODY			LEVEL						FROM	TO		
				4N	3H	5H	S	SE	SX							
	09286974	Y	.	B	B	B	S	S	S			2				
		(E)BRACKET-ENG. CONTROL										(F)SUPPORT				
	[31]	(D)TRÄGER										(S)SOPORTE				
	96234615	Y	.	B	B	B	S	S	S			1				

ENG(ENGINE)	T/A(TRANSAXLE)	BODY TYPE
Y = 1.5SOHC	M = MANUAL T/A	4 N = 4 DOOR NOTCHBACK
6 = 1.6DOHC	A = AUTOMATIC T/A	3 H = 3 DOOR HATCHBACK
. = COMMON	. = COMMON	5 H = 5 DOOR HATCHBACK

1651 RADIATOR HOSE&PIPE(DOHC)

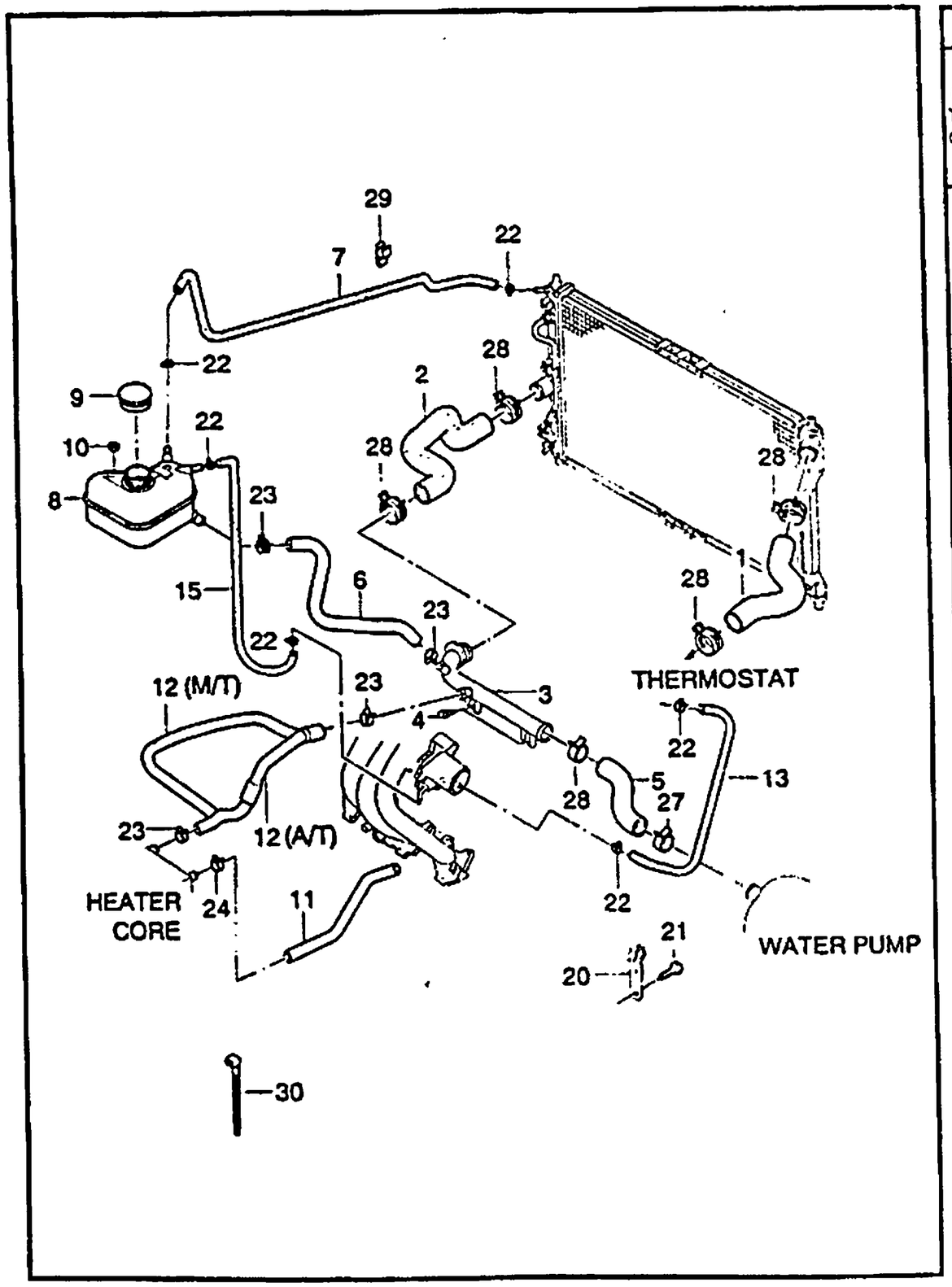

KEY NO. ITC	PART NO	MODEL ENG	MODEL T/A	MODEL BODY 4N	MODEL BODY 3H	MODEL BODY 5H	MODEL LEVEL S	MODEL LEVEL SE	MODEL LEVEL SX	OPTION	L/R	QTY	EFFECTIVE DATE FROM	EFFECTIVE DATE TO	REMARKS	PICODE
[01]		(E)HOSE-RADIATOR,UPPER (D)SCHLAUCH,BOGEN,OBEN										(F)TUYAU-COUDE,HAUT (S)MANGUERA-CODO,SUPERIOR				
96184393		6	.	B	B	B	.	.	O	&C46		1				UD
96182269		6	.	B	B	B	.	.	O	&C59/C60		1				UB
[02]		(E)HOSE-RADIATOR,LOWER (D)SCHLAUCH,BOGEN,UNTEN										(F)TUYAU-COUDE,BAS (S)MANGUERA-CODO,INFERIOR				
96350692		6	.	B	B	B	.	.	O			1				
[03]		(E)PIPE-RADIATOR & ENGINE (D)ROHR,KÜHLER&MOTOR										(F)TUYAU-RADIATEUR&MOTEUR (S)TUBERIA-RADIADOR Y MOTOR				
96180035		6	.	B	B	B	.	.	O			1				
[04]		(E)BOLT-HEXAGON (D)SCHRAUBE										(F)BOULON (S)PERNO				
01137-08165		6	.	B	B	B	.	.	O			2				
[05]		(E)HOSE-PIPE & WATER PUMP (D)SCHLAUCH,ROHR&WASSERPUMPE										(F)TUYAU-TUYAU&POMPE A EAU (S)MANGUERA				
96180071		6	.	B	B	B	.	.	O			1				
[06]		(E)HOSE-SURGE TANK & PIPE (D)SCHLAUCH,ÜBERFLUßTANK										(F)TUYAU (S)MANGUERA				
96351748		6	.	B	B	B	.	.	O			1				
[07]		(E)HOSE-RADIATOR & SURGE TANK (D)SCHLAUCH										(F)TUYAU (S)MANGUERA				
96351848		6	.	B	B	B	.	.	O			1				
[08]		(E)TANK-SURGE (D)TANK,ÜBERFLUß										(F)RESERVOIR-TROP-PLEIN (S)TANQUE-SOBRE CARGA				
96182279		6	.	B	B	B	.	.	O			1				
[09]		(E)CAP-SURGE TANK (D)DECKEL,ÜBERFLUßTANK										(F)CHAPEAU (S)TAPA-TANQUE DE ARRANQUE				
96351578		6	.	B	B	B	.	.	O			1				

ENG(ENGINE)	T/A(TRANSAXLE)	BODY TYPE
Y = 1.5SOHC 6 = 1.6DOHC . = COMMON	M = MANUAL T/A A = AUTOMATIC T/A . = COMMON	4 N = 4 DOOR NOTCHBACK 3 H = 3 DOOR HATCHBACK 5 H = 5 DOOR HATCHBACK

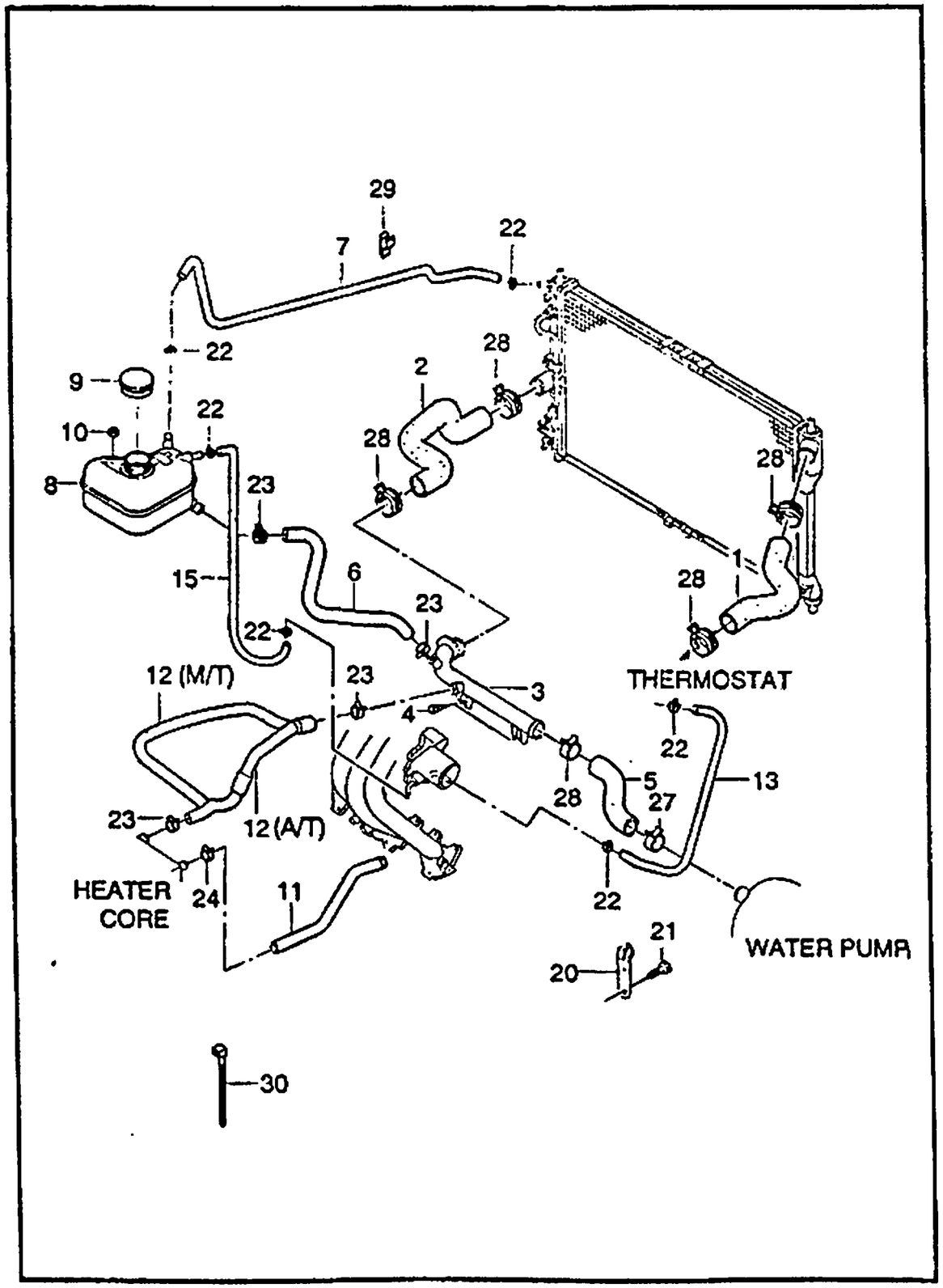

KEY NO. ITC	PART NO	MODEL ENG	T/A	BODY 4N	3H	5H	LEVEL S	SE	SX	OPTION	L/R	QTY	EFFECTIVE DATE FROM	TO	REMARKS	P/CODE
[10]		(E)NUT (D)MUTTER									(F)ECROU (S)TUERCA					
	09159-06011	6	.	B	B	B	.	.	O			2				
[11]		(E)HOSE-HEATER FEEDING (D)SCHLAUCH,HEIZUNG ZUFUHR									(F)TUYAU (S)MANGUERA-CALENTADOR					
	96214619	6	.	B	B	B	.	.	O			1				
[12]		(E)HOSE-HEATER RETURN (D)RÜCK-SCHLAUCH HEIZUNG									(F)TUYAU-RETOUR CHAUFFAGE (S)MANGUERA-CALENTADOR					
	96304316	6	M	B	B	B	.	.	O			1				
	96304475	6	A	B	B	B	.	.	O			1				
[13]		(E)HOSE-THROTTLE BODY FEED'G (D)SCHLAUCH,DROSSEL KÖRPER									(F)TUYAU (S)MANGUERA					
	96184864	6	.	B	B	B	.	.	O			1				
[15]		(E)HOSE-THROTTLE BODY RETURN (D)SCHLAUCH,DROSSEL KÖRPER									(F)TUYAU (S)MANGUERA					
	96351823	6	.	B	B	B	.	.	O			1				DH
[20]		(E)SUPPORT-HEATER HOSE (D)TRÄGER									(F)SUPPORT (S)SOPORTE					
	96304320	6	M	B	B	B	.	.	O			1				
[21]		(E)BOLT-HEXAGON (D)SCHRAUBE									(F)BOULON (S)PERNO					
	09100-10004	6	M	B	B	B	.	.	O			1				
[22]		(E)CLIP (D)KLEMME									(F)ATTACHE (S)GRAPA					
	09401-15401	6	.	B	B	B	.	.	O			6				
[23]		(E)CLIP (D)KLEMME									(F)ATTACHE (S)GRAPA					
	09401-22401	6	.	B	B	B	.	.	O			4				

ENG(ENGINE)	T/A(TRANSAXLE)	BODY TYPE
Y = 1.5SOHC 6 = 1.6DOHC . = COMMON	M = MANUAL T/A A = AUTOMATIC T/A . = COMMON	4 N = 4 DOOR NOTCHBACK 3 H = 3 DOOR HATCHBACK 5 H = 5 DOOR HATCHBACK

1651 RADIATOR HOSE&PIPE(DOHC)

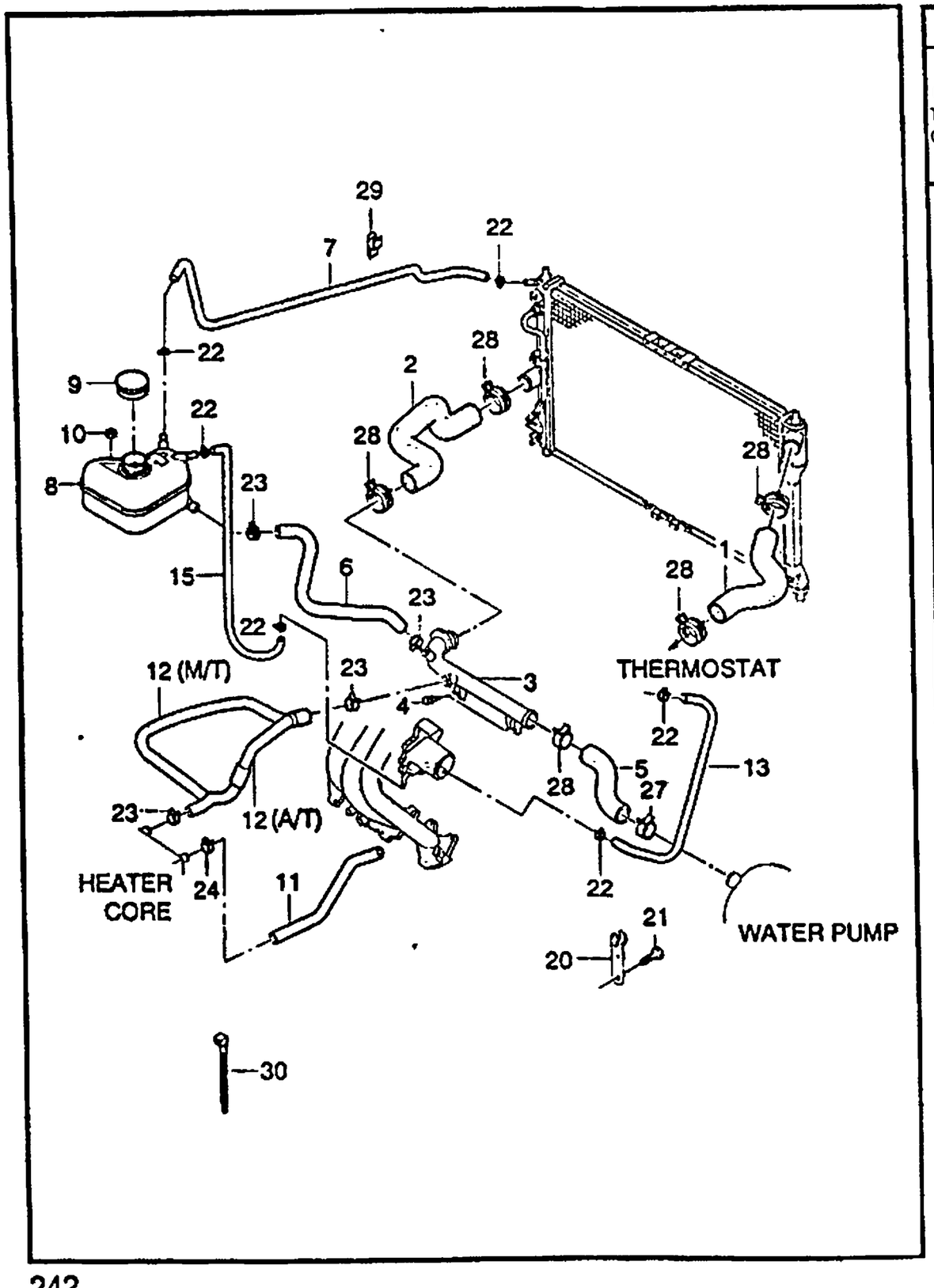

KEY NO. ITC	PART NO	MODEL ENG	MODEL T/A	BODY 4N	BODY 3H	BODY 5H	LEVEL S	LEVEL SE	LEVEL SX	OPTION	L/R	QTY	EFFECTIVE DATE FROM	EFFECTIVE DATE TO	REMARKS	P/CODE
	[24] 09401-23402	(E)CLIP (D)KLEMME		B	B	B	.	.	O			(F)ATTACHE (S)GRAPA 2				
	[27] 09401-35401	(E)CLIP (D)KLEMME		B	B	B	.	.	O			(F)ATTACHE (S)GRAPA 1				
	[28] 09401-38401	(E)CLIP (D)KLEMME		B	B	B	.	.	O			(F)ATTACHE (S)GRAPA 5				
	[29] 09408-00074	(E)CLIP (D)KLEMME		B	B	B	.	.	O			(F)ATTACHE (S)GRAPA 1				
	[30] 09286974	(E)STRAP-MOUNTING (D)BAND,MONTAGE		B	B	B	.	.	O			(F)BRETELLE-MONTAGE (S)BRIDA-MONTAJE 1				

ENG(ENGINE)	T/A(TRANSAXLE)	BODY TYPE
Y = 1.5SOHC 6 = 1.6DOHC . = COMMON	M = MANUAL T/A A = AUTOMATIC T/A . = COMMON	4 N = 4 DOOR NOTCHBACK 3 H = 3 DOOR HATCHBACK 5 H = 5 DOOR HATCHBACK

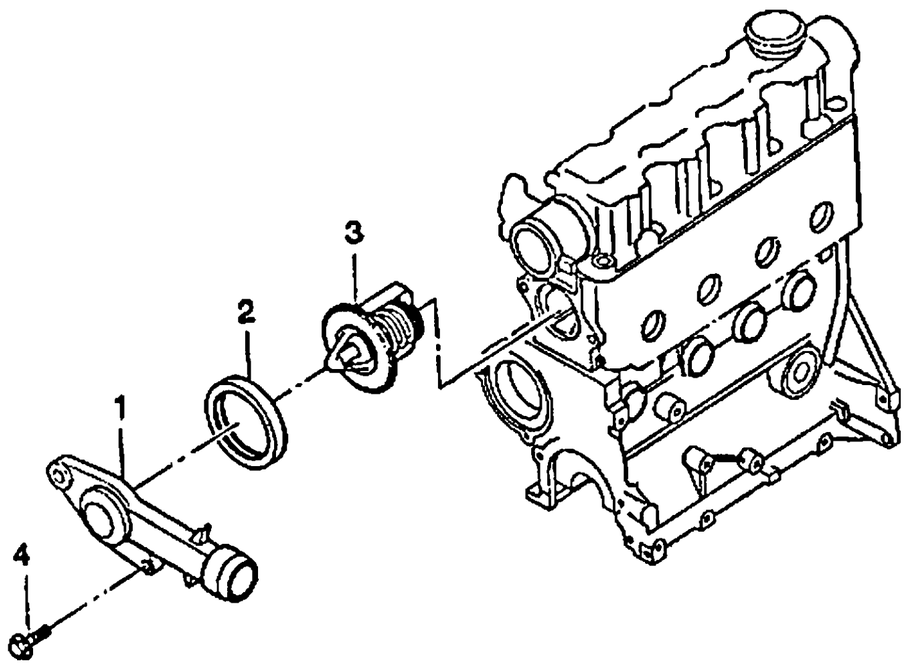

KEY NO.		PART NAME														
ITC	PART NO	MODEL								OPTION	L/R	QTY	EFFECTIVE DATE		REMARKS	P/CODE
		ENG	T/A	BODY			LEVEL						FROM	TO		
				4N	3H	5H	S	SE	SX							
[01]	96180324	(E)HOUSING-THERMOSTAT (D)GEHÄUSE THERMOSTAT									(F)LOGEMENT-THERMOSTAT (S)CARCASA-TERMOSTATO	1				
		Y	.	B	B	B	S	S	S							
[02]	90096383	(E)RING-THERMO.HOUSING SEAL (D)RING,DICHTUNG									(F)ANNEAU (S)ANILLO-SELLO	1				
		Y	.	B	B	B	S	S	S							
[03]	96143939	(E)THERMOSTAT A (D)THERMOSTAT									(F)THERMOSTAT (S)TERMOSTATO	1				
		Y	.	B	B	B	S	S	S							
[04]	09117-08009	(E)BOLT (D)SCHRAUBE									(F)BOULON (S)PERNO	2				
		Y	.	B	B	B	S	S	S							

ENG(ENGINE)	T/A(TRANSAXLE)	BODY TYPE
Y = 1.5SOHC 6 = 1.6DOHC . = COMMON	M = MANUAL T/A A = AUTOMATIC T/A . = COMMON	4 N = 4 DOOR NOTCHBACK 3 H = 3 DOOR HATCHBACK 5 H = 5 DOOR HATCHBACK

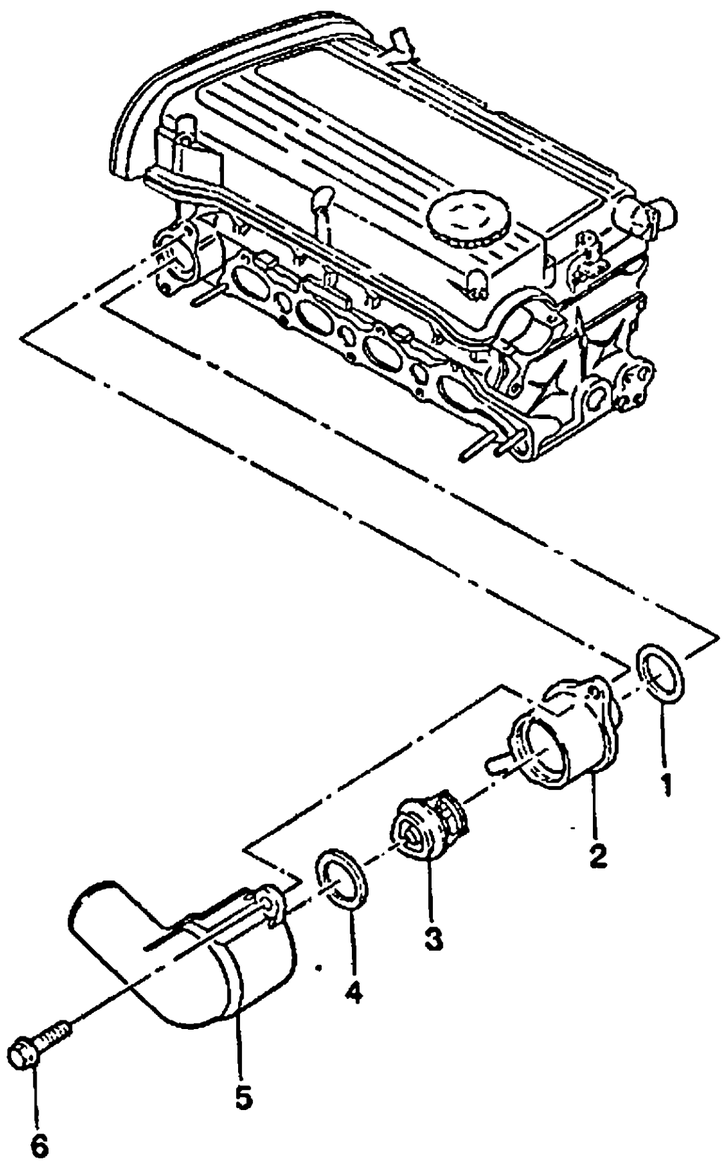

KEY NO. ITC	PART NO	MODEL ENG	T/A	BODY 4N	3H	5H	LEVEL S	SE	SX	OPTION	L/R	QTY	EFFECTIVE DATE FROM	TO	REMARKS	P/CODE
[01]	96143112	(E)RING-THERMO COVER SEAL (D)RING,DICHTUNG	6	.	B	B	B	.	.	O	(F)ANNEAU (S)ANILLO-SELLO	1				
[02]	96180615	(E)ADAPTER-THERMOSTAT (D)ADAPTER,THERMOSTAT	6	.	B	B	B	.	.	O	(F)ADAPTATEUR-THERMOSTAT (S)ADAPTADOR-TERMOSTATO	1				
[03]	96143939	(E)THERMOSTAT A (D)THERMOSTAT	6	.	B	B	B	.	.	O	(F)THERMOSTAT (S)TERMOSTATO	1				
[04]	90096383	(E)RING-THERMO HOUSING SEAL (D)RING,DICHTUNG	6	.	B	B	B	.	.	O	(F)ANNEAU (S)ANILLO-SELLO	1				
[05]	96130992	(E)COVER-THERMOSTAT (D)DECKEL,THERMOSTAT	6	.	B	B	B	.	.	O	(F)COUVERCLE-THERMOSTAT (S)CUBIERTA-TERMOSTATO	1				
[06]	09117-08009	(E)BOLT (D)SCHRAUBE	6	.	B	B	B	.	.	O	(F)BOULON (S)PERNO	2				

ENG(ENGINE)	T/A(TRANSAXLE)	BODY TYPE
Y = 1.5SOHC 6 = 1.6DOHC . = COMMON	M = MANUAL T/A A = AUTOMATIC T/A . = COMMON	4 N = 4 DOOR NOTCHBACK 3 H = 3 DOOR HATCHBACK 5 H = 5 DOOR HATCHBACK

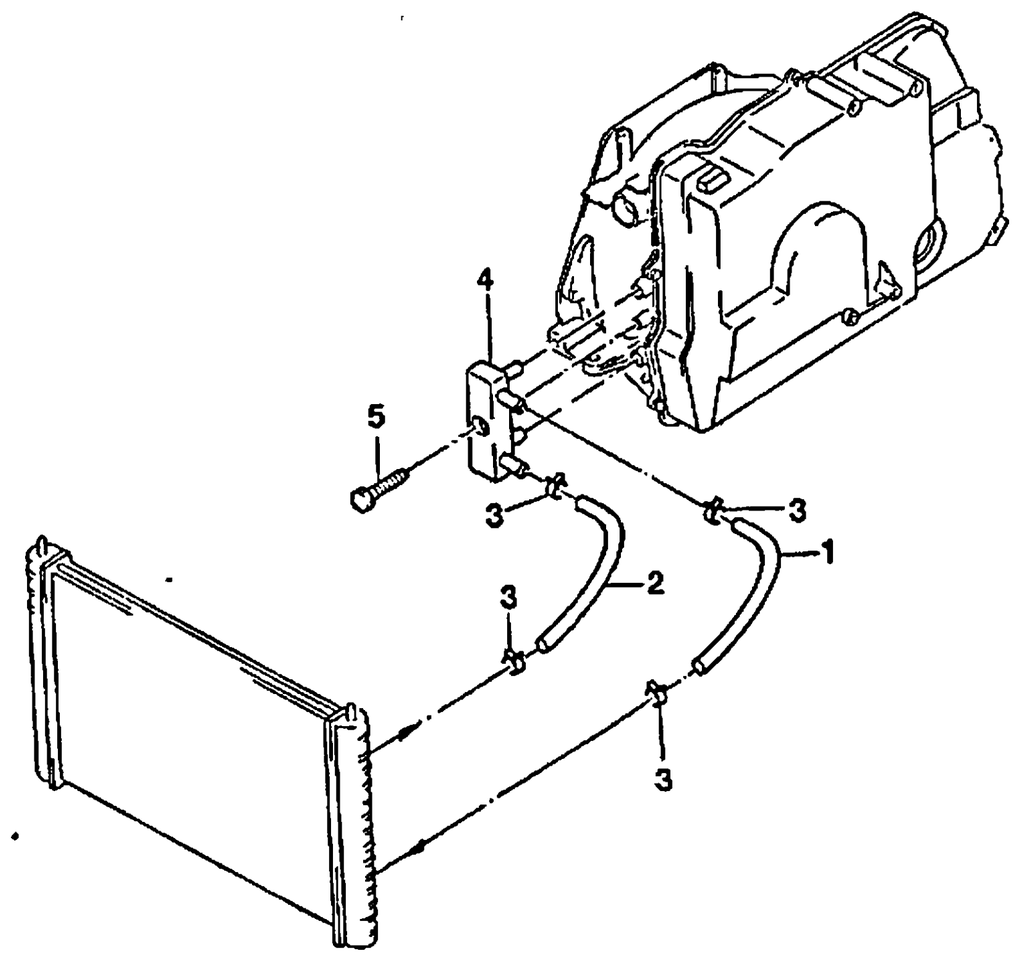

KEY NO. ITC	PART NO	MODEL ENG	MODEL T/A	MODEL BODY 4N	MODEL BODY 3H	MODEL BODY 5H	MODEL LEVEL S	MODEL LEVEL SE	MODEL LEVEL SX	OPTION	PART NAME	L/R	QTY	EFFECTIVE DATE FROM	EFFECTIVE DATE TO	REMARKS	P/CODE
	[01]										(E)HOSE-OIL COOLER,OUTLET (D)SCHLAUCH		(F)TUYAU (S)MANGUERA				
	96246287	.	A	B	B	B	O	O	O				1			260mm	
	[02]										(E)HOSE-OIL COOLER,INLET (D)SCHLAUCH		(F)TUYAU (S)MANGUERA				
	96246293	.	A	B	B	B	O	O	O				1			200mm	
	[03]										(E)CLAMP (D)KLAMMER		(F)PINCE (S)ABRAZADERA				
	09402-16503															NOT APPLIED	
	09402-16502	.	A	B	B	B	O	O	O				4				
	[04]										(E)BLOCK-OIL COOLER,REAR (D)BLOCK		(F)BLOC (S)BLOQUE				
	96245950	.	A	B	B	B	O	O	O				1				
	[05]										(E)BOLT-HEXAGON (D)SCHRAUBE		(F)BOULON (S)PERNO				
	01117-06203	.	A	B	B	B	O	O	O				1				

ENG(ENGINE)	T/A(TRANSAXLE)	BODY TYPE
Y = 1.5SOHC 6 = 1.6DOHC . = COMMON	M = MANUAL T/A A = AUTOMATIC T/A . = COMMON	4 N = 4 DOOR NOTCHBACK 3 H = 3 DOOR HATCHBACK 5 H = 5 DOOR HATCHBACK

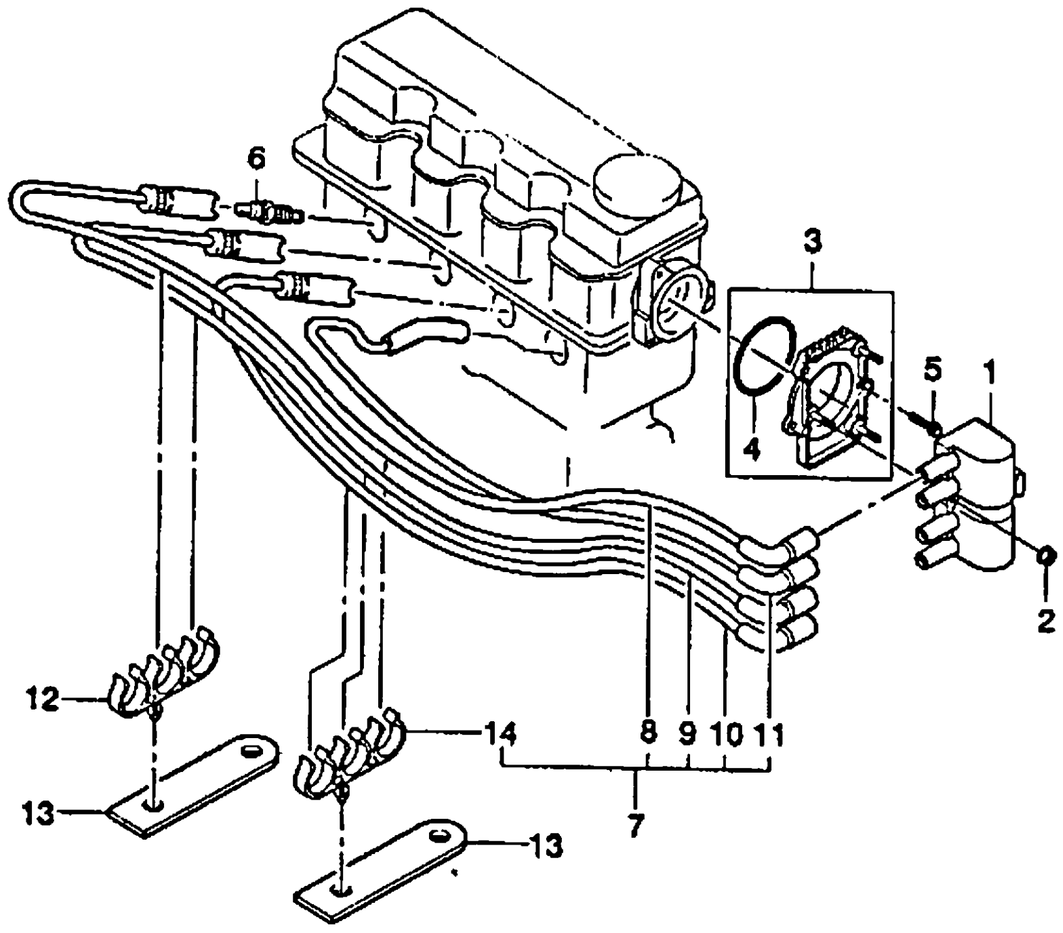

KEY NO. ITC	PART NO	MODEL ENG	T/A	BODY 4N	3H	5H	LEVEL S	SE	SX	OPTION	L/R	QTY	EFFECTIVE DATE FROM	TO	REMARKS	P/CODE
[01]		(E)COIL-DIS (D)WICKLUNG,ZÜNDUNG									(F)BOBINE-ALLUMAGE (S)BOBINA-ARRANQUE					
	96350585	Y	.	B	B	B	S	S	S			1				
[02]		(E)NUT-HEXAGON FLANGE (D)MUTTER									(F)ECROU (S)TUERCA					
	08316-25063	Y	.	B	B	B	S	S	S			3				
[03]		(E)BRACKET A-DIS (D)TRÄGER									(F)SUPPORT (S)SOPORTE					
	96351644	Y	.	B	B	B	S	S	S			1				
[04]		(E)O RING (D)O RING									(F)JOINT TORIQUE (S)ANILLO EN O					
	96351738	Y	.	B	B	B	S	S	S			1				
[05]		(E)BOLT-HEXAGON FLANGE (D)SCHRAUBE									(F)BOULON (S)PERNO					
	01517-06203	Y	.	B	B	B	S	S	S			3		970804		
	O 01517-06163	Y	.	B	B	B	S	S	S			3	970804			
[06]		(E)PLUG-SPARK (D)ZÜNDKERZE									(F)BOUGIE (S)TAPON-BUJIA					
	96110493	Y	.	B	B	B	S	S	S			4				
[07]		(E)CABLE SET- HIGH TENSION (D)VERDRAHTUNG,HOCHSPANNUNG									(F)TROUSSE CABLES (S)JUEGO DE ALAMBRE					
	96305387	Y	.	B	B	B	S	S	S			1				SW
[08]		(E)CABLE- HIGH TENSION,#1 (D)VERDRAHTUNG									(F)CABLES (S)ALAMBRE					
	96233409	Y	.	B	B	B	S	S	S			1			NO. 1	
[09]		(E)CABLE- HIGH TENSION,#2 (D)VERDRAHTUNG									(F)CABLES (S)ALAMBRE					
	96233410	Y	.	B	B	B	S	S	S			1			NO. 2	

ENG(ENGINE)	T/A(TRANSAXLE)	BODY TYPE
Y = 1.5SOHC 6 = 1.6DOHC . = COMMON	M = MANUAL T/A A = AUTOMATIC T/A . = COMMON	4 N = 4 DOOR NOTCHBACK 3 H = 3 DOOR HATCHBACK 5 H = 5 DOOR HATCHBACK

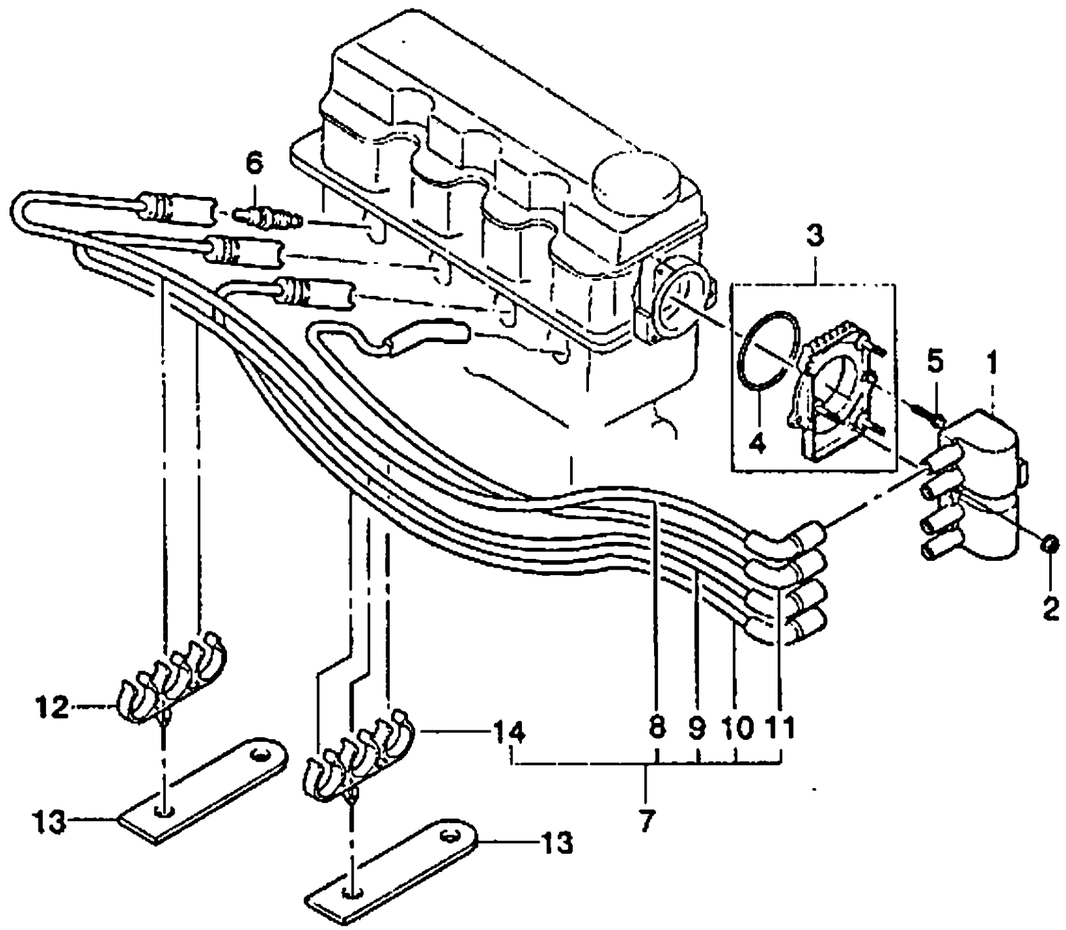

KEY NO. ITC	PART NO	MODEL ENG	T/A	BODY 4N	3H	5H	LEVEL S	SE	SX	OPTION	L/R	QTY	EFFECTIVE DATE FROM	TO	REMARKS	PICODE
[10]	96233411	(E)CABLE- HIGH TENSION,#3 (D)VERDRAHTUNG Y . B B B S S S									(F)CABLES (S)ALAMBRE 1				NO. 3	
[11]	96233412	(E)CABLE- HIGH TENSION,#4 (D)VERDRAHTUNG Y . B B B S S S									(F)CABLES (S)ALAMBRE 1				NO. 4	
[12]	90320345	(E)CLIP-CABLE (D)KLEMME Y . B B B S S S									(F)ATTACHE (S)GRAPA 1					
[13]	90320342	(E)BRACKET-CABLE (D)TRÄGER Y . B B B S S S									(F)SUPPORT-CABLE (S)SOPORTE-ALAMBRE 2					
[14]	09408-00076	(E)CLIP-CABLE (D)KLEMME,ANLASSER-KBEL Y . B B B S S S									(F)ATTACHE-CABLE D'ALLUMAGE (S)GRAPA 1					

ENG(ENGINE)	T/A(TRANSAXLE)	BODY TYPE
Y = 1.5SOHC 6 = 1.6DOHC . = COMMON	M = MANUAL T/A A = AUTOMATIC T/A . = COMMON	4 N = 4 DOOR NOTCHBACK 3 H = 3 DOOR HATCHBACK 5 H = 5 DOOR HATCHBACK

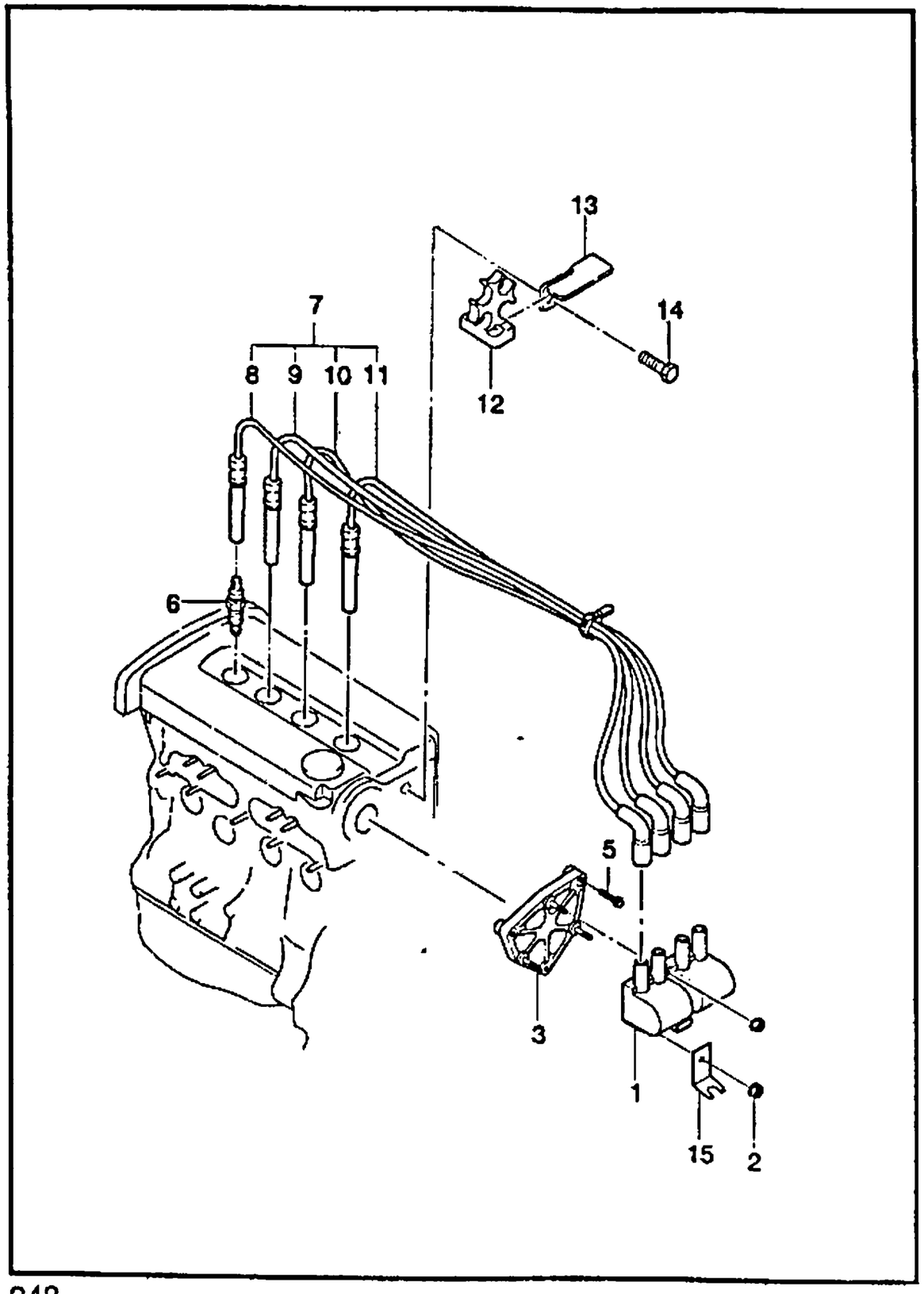

KEY NO.		PART NAME															
ITC	PART NO	MODEL								OPTION	L/R	QTY	EFFECTIVE DATE		REMARKS	P/CODE
		ENG	T/A	BODY			LEVEL						FROM	TO		
				4N	3H	5H	S	SE	SX							
[01]	96350585	(E)COIL-DIS (D)WICKLUNG,ZÜNDUNG									(F)BOBINE-ALLUMAGE (S)BOBINA-ARRANQUE	1				
[02]	08316-25063	(E)NUT-HEXAGON FLANGE (D)MUTTER									(F)ECROU (S)TUERCA	3				
[03]	96351676	(E)BRACKET A-DIS (D)TRÄGER									(F)SUPPORT (S)SOPORTE	1				
[05]	01517-06303	(E)BOLT-HEXAGON FLANGE (D)SCHRAUBE									(F)BOULON (S)PERNO	3				
[06]	96130723	(E)PLUG-SPARK (D)ZÜNDKERZE									(F)BOUGIE (S)TAPON-BUJIA	4				
[07]	96211948	(E)CABLE SET- HIGH TENSION (D)VERDRAHTUNG,HOCHSPANNUNG									(F)TROUSSE CABLES (S)JUEGO DE ALAMBRE	1				DW
[08]	96242624	(E)CABLE- HIGH TENSION,#1 (D)VERDRAHTUNG									(F)CABLES (S)ALAMBRE	1			NO. 1	
[09]	96233414	(E)CABLE- HIGH TENSION,#2 (D)VERDRAHTUNG									(F)CABLES (S)ALAMBRE	1			NO. 2	
[10]	96233415	(E)CABLE- HIGH TENSION,#3 (D)VERDRAHTUNG									(F)CABLES (S)ALAMBRE	1			NO. 3	
[11]		(E)CABLE- HIGH TENSION,#4 (D)VERDRAHTUNG									(F)CABLES (S)ALAMBRE					

ENG(ENGINE)	T/A(TRANSAXLE)	BODY TYPE
Y = 1.5SOHC 6 = 1.6DOHC . = COMMON	M = MANUAL T/A A = AUTOMATIC T/A . = COMMON	4 N = 4 DOOR NOTCHBACK 3 H = 3 DOOR HATCHBACK 5 H = 5 DOOR HATCHBACK

1711 IGNITION CABLE(DOHC)

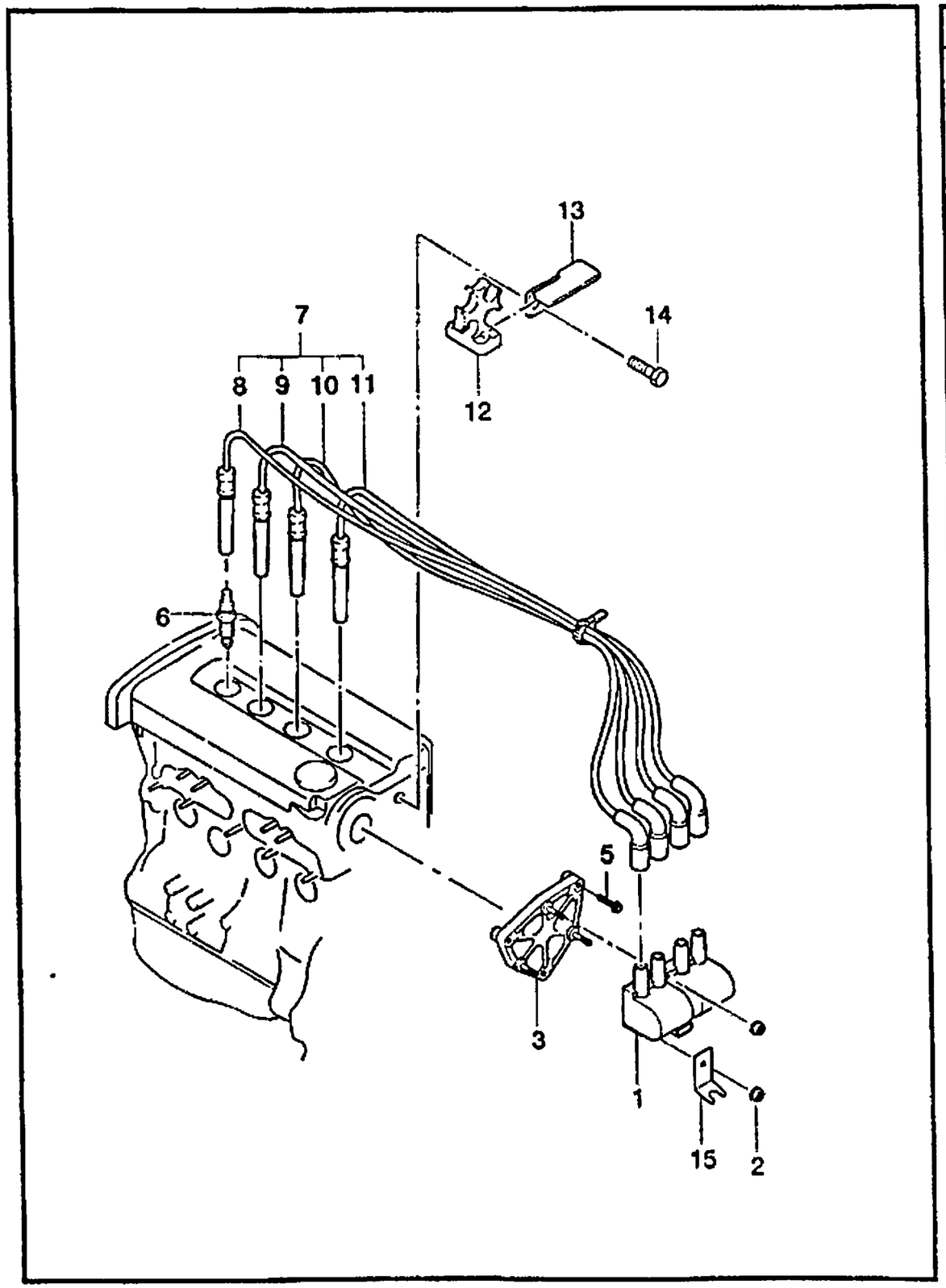

KEY NO. ITC	PART NO	MODEL ENG	T/A	BODY 4N	3H	5H	LEVEL S	SE	SX	OPTION	L/R	QTY	EFFECTIVE DATE FROM	TO	REMARKS	P/CODE
[12]	96233416	6	.	B	B	B	.	.	O			1			NO. 4	
		(E)CLIP-STAR (D)KLEMME										(F)ATTACHE (S)GRAPA				
[13]	12065767	6	.	B	B	B	.	.	O			1				
		(E)BRACKET-CABLE (D)TRÄGER										(F)SUPPORT-CABLE (S)SOPORTE-ALAMBRE				
[14]	96132971	6	.	B	B	B	.	.	O			1				
		(E)BOLT-HEXAGON (D)SCHRAUBE										(F)BOULON (S)PERNO				
[15]	01107-06803	6	.	B	B	B	.	.	O			1				
		(E)BRACKET-OXYGEN SENSOR (D)TRÄGER										(F)SUPPORT (S)SOPORTE				
	96239380	6	.	B	B	B	.	.	A	&NN6/NN7		1				

ENG(ENGINE)	T/A(TRANSAXLE)	BODY TYPE
Y = 1.5SOHC 6 = 1.6DOHC . = COMMON	M = MANUAL T/A A = AUTOMATIC T/A . = COMMON	4 N = 4 DOOR NOTCHBACK 3 H = 3 DOOR HATCHBACK 5 H = 5 DOOR HATCHBACK

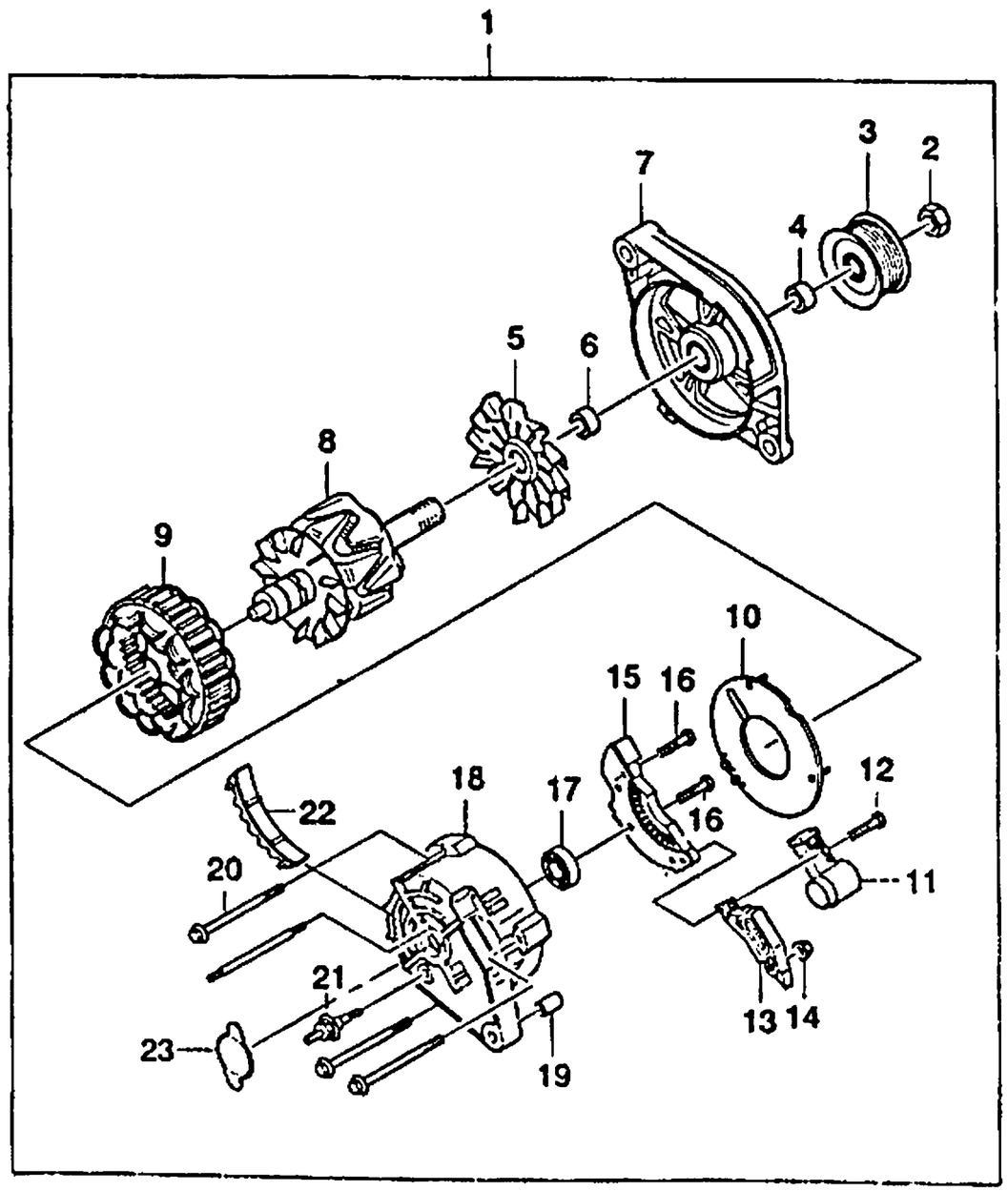

KEY NO. ITC	PART NO	MODEL ENG	MODEL T/A	MODEL BODY 4N	MODEL BODY 3H	MODEL BODY 5H	MODEL LEVEL S	MODEL LEVEL SE	MODEL LEVEL SX	OPTION	L/R	QTY	EFFECTIVE DATE FROM	EFFECTIVE DATE TO	REMARKS	P/CODE
[01]		(E)ALTERNATOR A (D)WECHSELSTROMGENERATOR									(F)ALTERNATEUR (S)ALTERNADOR					
	96303556	.	.	B	B	B	S	S	S	-XHA		1			12V,85A	AW
[02]		(E)NUT (D)MUTTER									(F)ECROU (S)TUERCA					
	01911324	.	.	B	B	B	S	S	S	-XHA		1				
[03]		(E)PULLEY (D)ROLLE									(F)POULIE (S)POLEA					
	210811	.	.	B	B	B	S	S	S	-XHA		1				
[04]		(E)COLLAR (D)KRAGEN(GROß)									(F)COLLIER (GRAND) (S)CASQUILLO(GRANDE)					
	210629	.	.	B	B	B	S	S	S	-XHA		1				
[05]		(E)FAN (D)BLÄSER									(F)VENTILATEUR (S)VENTILADOR					
	210020	.	.	B	B	B	S	S	S	-XHA		1				
[06]		(E)COLLAR (D)KRAGEN(KLEIN)									(F)COLLIER (PETIT) (S)CASQUILLO(PEQUEÑA)					
	210629	.	.	B	B	B	S	S	S	-XHA		1				
[07]		(E)FRAME&BEARING (D)RAHMEN&LAGER,ANTRIEB ENDE									(F)CADRE&ROULEMENT (S)ARMADURA Y COJINETE					
	210667	.	.	B	B	B	S	S	S	-XHA		1				
[08]		(E)ROTOR (D)DREHTEIL									(F)ROTOR (S)ROTOR					
	210933	.	.	B	B	B	S	S	S	-XHA		1				
[09]		(E)STATOR (D)STATOR									(F)STATOR (S)ESTATOR					
	210934	.	.	B	B	B	S	S	S	-XHA		1				
[10]		(E)BAFFLE (D)DÄMPFER									(F)DEFLECTEUR (S)DEFLECTOR					

ENG(ENGINE)	T/A(TRANSAXLE)	BODY TYPE
Y = 1.5SOHC 6 = 1.6DOHC . = COMMON	M = MANUAL T/A A = AUTOMATIC T/A . = COMMON	4 N = 4 DOOR NOTCHBACK 3 H = 3 DOOR HATCHBACK 5 H = 5 DOOR HATCHBACK

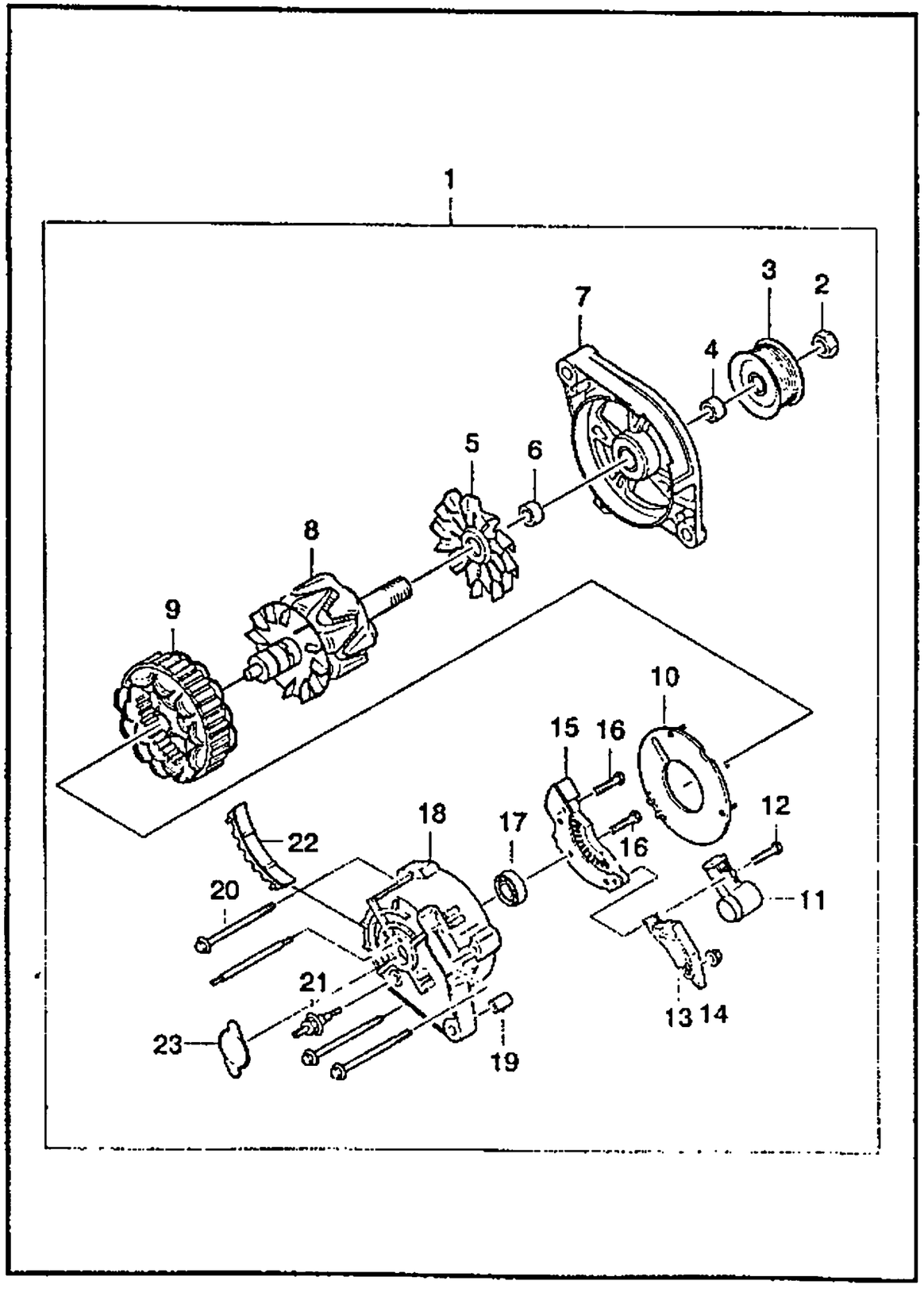

KEY NO. ITC	PART NO	MODEL ENG	T/A	BODY 4N	3H	5H	LEVEL S	SE	SX	OPTION	L/R	QTY	EFFECTIVE DATE FROM	TO	REMARKS	P/CODE
	210931	.	.	B	B	B	S	S	S	-XHA		1				
[11]	(E)BRUSH SET (D)BÜRSTE										(F)BALAI (S)ESCOBILLA					
	210679	.	.	B	B	B	S	S	S	-XHA		1				
[12]	(E)SCREW (D)SCHRAUBE										(F)VIS (S)TORNILLO					
	01989650	.	.	B	B	B	S	S	S	-XHA		1				
[13]	(E)REGULATOR (D)REGULATOR										(F)REGULATEUR (S)REGULADOR					
	276010	.	.	B	B	B	S	S	S	-XHA		1				
[14]	(E)NUT (D)MUTTER										(F)ECROU (S)TUERCA					
	01989649	.	.	B	B	B	S	S	S	-XHA		1				
[15]	(E)RECTIFIER (D)RICHTER										(F)RECTIFICATEUR (S)RECTIFICADOR					
	267100	.	.	B	B	B	S	S	S	-XHA		1		970813		
O	267300	.	.	B	B	B	S	S	S	-XHA		1	970813			
[16]	(E)SCREW (D)SCHRAUBE										(F)VIS (S)TORNILLO					
	01981681	.	.	B	B	B	S	S	S	-XHA		3				
[17]	(E)BEARING-BALL (D)KUGELLAGER										(F)ROULEMENT-BILLE (S)COJINETE DE BOLAS					
	01989646	.	.	B	B	B	S	S	S	-XHA		2				
[18]	(E)FRAME-SLIP RING END (D)RAHMEN,SCHLEIFRAD-ENDE										(F)CADRE (S)ARMADURA					
	210930	.	.	B	B	B	S	S	S	-XHA		1				
[19]	(E)BUSHING (D)LAGERFUTTER										(F)MANCHON (S)BUJE DE BOQUILLA					

ENG(ENGINE)	T/A(TRANSAXLE)	BODY TYPE
Y = 1.5SOHC 6 = 1.6DOHC . = COMMON	M = MANUAL T/A A = AUTOMATIC T/A . = COMMON	4 N = 4 DOOR NOTCHBACK 3 H = 3 DOOR HATCHBACK 5 H = 5 DOOR HATCHBACK

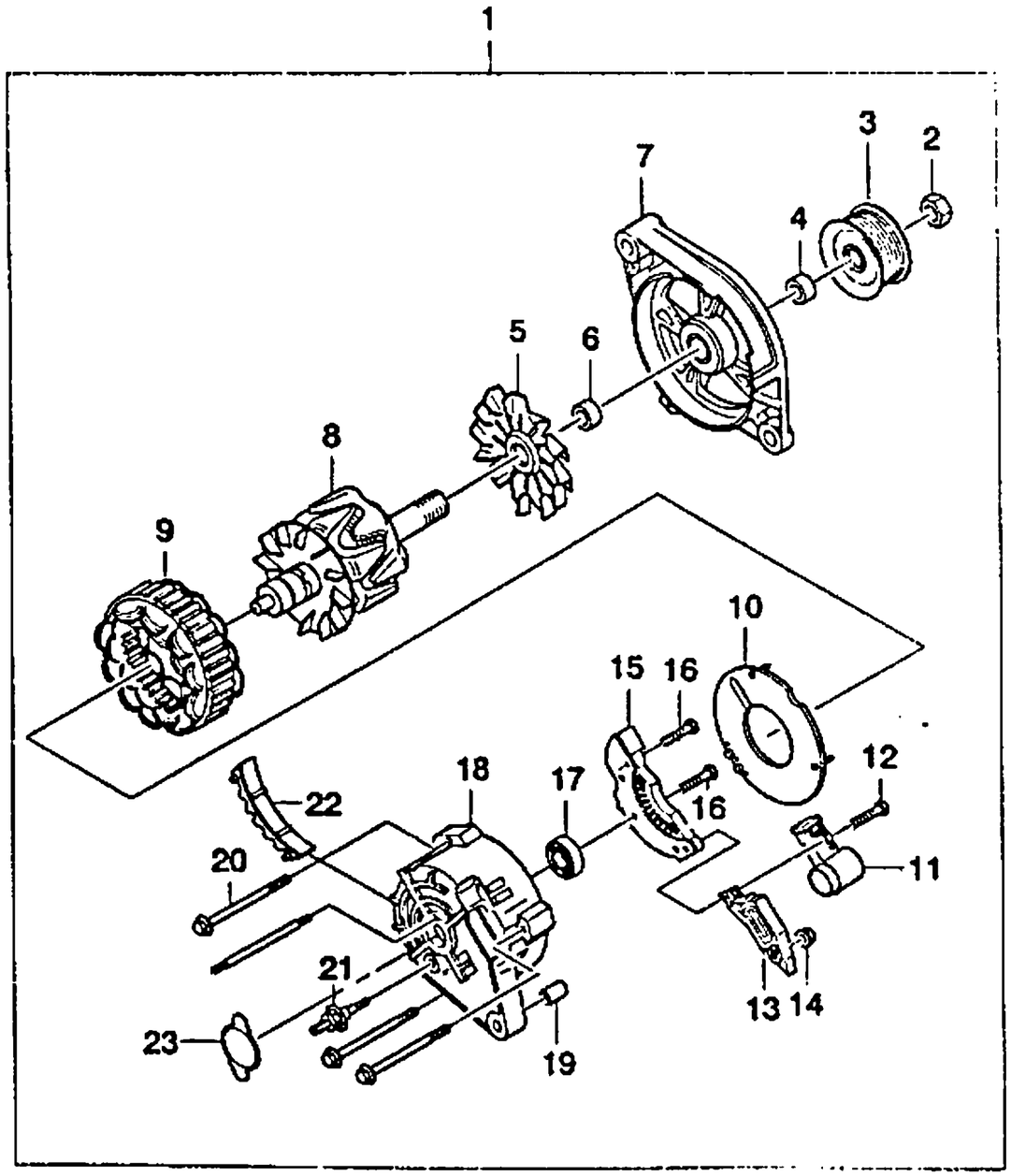

KEY NO. ITC	PART NO	MODEL ENG	MODEL T/A	MODEL BODY 4N	MODEL BODY 3H	MODEL BODY 5H	MODEL LEVEL S	MODEL LEVEL SE	MODEL LEVEL SX	OPTION	L/R	QTY	EFFECTIVE DATE FROM	EFFECTIVE DATE TO	REMARKS	P/CODE
	10495216	.	.	B	B	B	S	S	S	-XHA		1				
[20]	(E)BOLT (D)SCHRAUBE (F)BOULON (S)PERNO															
	10473999	.	.	B	B	B	S	S	S	-XHA		3				
[21]	(E)STUD (D)STEG (F)TOURILLON (S)TRAVESAÑO															
	211075	.	.	B	B	B	S	S	S	-XHA		1				
[22]	(E)COVER (D)DECKEL (F)CARTER (S)CUBIERTA															
	210932	.	.	B	B	B	S	S	S	-XHA		1				
[23]	(E)COVER (D)DECKEL (F)CARTER (S)CUBIERTA															
	10476121	.	.	B	B	B	S	S	S	-XHA		1				

ENG(ENGINE)	T/A(TRANSAXLE)	BODY TYPE
Y = 1.5SOHC	M = MANUAL T/A	4 N = 4 DOOR NOTCHBACK
6 = 1.6DOHC	A = AUTOMATIC T/A	3 H = 3 DOOR HATCHBACK
. = COMMON	. = COMMON	5 H = 5 DOOR HATCHBACK

1741 ALTERNATOR UNIT(12V,95A)

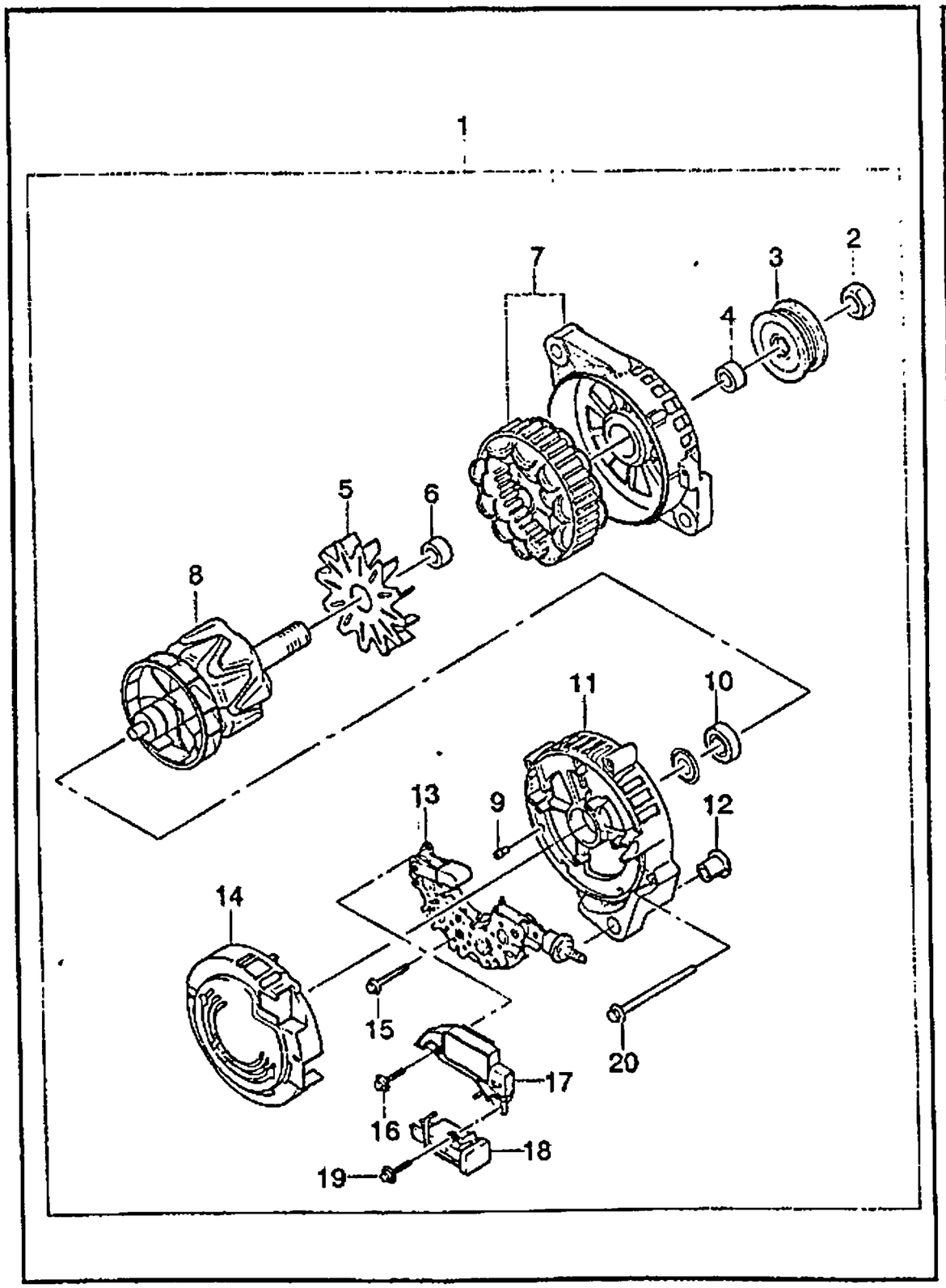

KEY NO. ITC	PART NO	MODEL ENG	MODEL T/A	MODEL BODY 4N	MODEL BODY 3H	MODEL BODY 5H	MODEL LEVEL S	MODEL LEVEL SE	MODEL LEVEL SX	OPTION	PART NAME	L/R	QTY	EFFECTIVE DATE FROM	EFFECTIVE DATE TO	REMARKS	P/CODE
[01]	96239894	.	.	B	B	B	A	A	A	&XHA	(E)ALTERNATOR A (D)WECHSELSTROMGENERATOR	(F)ALTERNATEUR (S)ALTERNADOR	1			12V,95A	AH
[02]	01911324	.	.	B	B	B	A	A	A	&XHA	(E)NUT (D)MUTTER	(F)ECROU (S)TUERCA	1				
[03]	211081	.	.	B	B	B	A	A	A	&XHA	(E)PULLEY (D)ROLLE	(F)POULIE (S)POLEA	1				
[04]	210937	.	.	B	B	B	A	A	A	&XHA	(E)COLLAR (D)KRAGEN(GROß)	(F)COLLIER (GRAND) (S)CASQUILLO(GRANDE)	1			LARGE	
[05]	211103	.	.	B	B	B	A	A	A	&XHA	(E)FAN (D)BLÄSER	(F)VENTILATEUR (S)VENTILADOR	1				
[06]	210768	.	.	B	B	B	A	A	A	&XHA	(E)COLLAR (D)KRAGEN(KLEIN)	(F)COLLIER (PETIT) (S)CASQUILLO(PEQUEÑA)	1			SMALL	
[07]	211147	.	.	B	B	B	A	A	A	&XHA	(E)FRAME&STATOR A (D)RAHMEN & STATOR	(F)CADRE&STATOR (S)ARMADURA Y ESTATOR	1				
[08]	210755	.	.	B	B	B	A	A	A	&XHA	(E)ROTOR (D)DREHTEIL	(F)ROTOR (S)ROTOR	1				
[09]	210921	.	.	B	B	B	A	A	A	&XHA	(E)INSULATOR (D)ISOLATOR	(F)ISOLATEUR (S)AISLADOR	3				
[10]											(E)BEARING-BALL (D)KUGELLAGER	(F)ROULEMENT-BILLE (S)COJINETE DE BOLAS					

ENG(ENGINE)	T/A(TRANSAXLE)	BODY TYPE
Y = 1.5SOHC 6 = 1.6DOHC . = COMMON	M = MANUAL T/A A = AUTOMATIC T/A . = COMMON	4 N = 4 DOOR NOTCHBACK 3 H = 3 DOOR HATCHBACK 5 H = 5 DOOR HATCHBACK

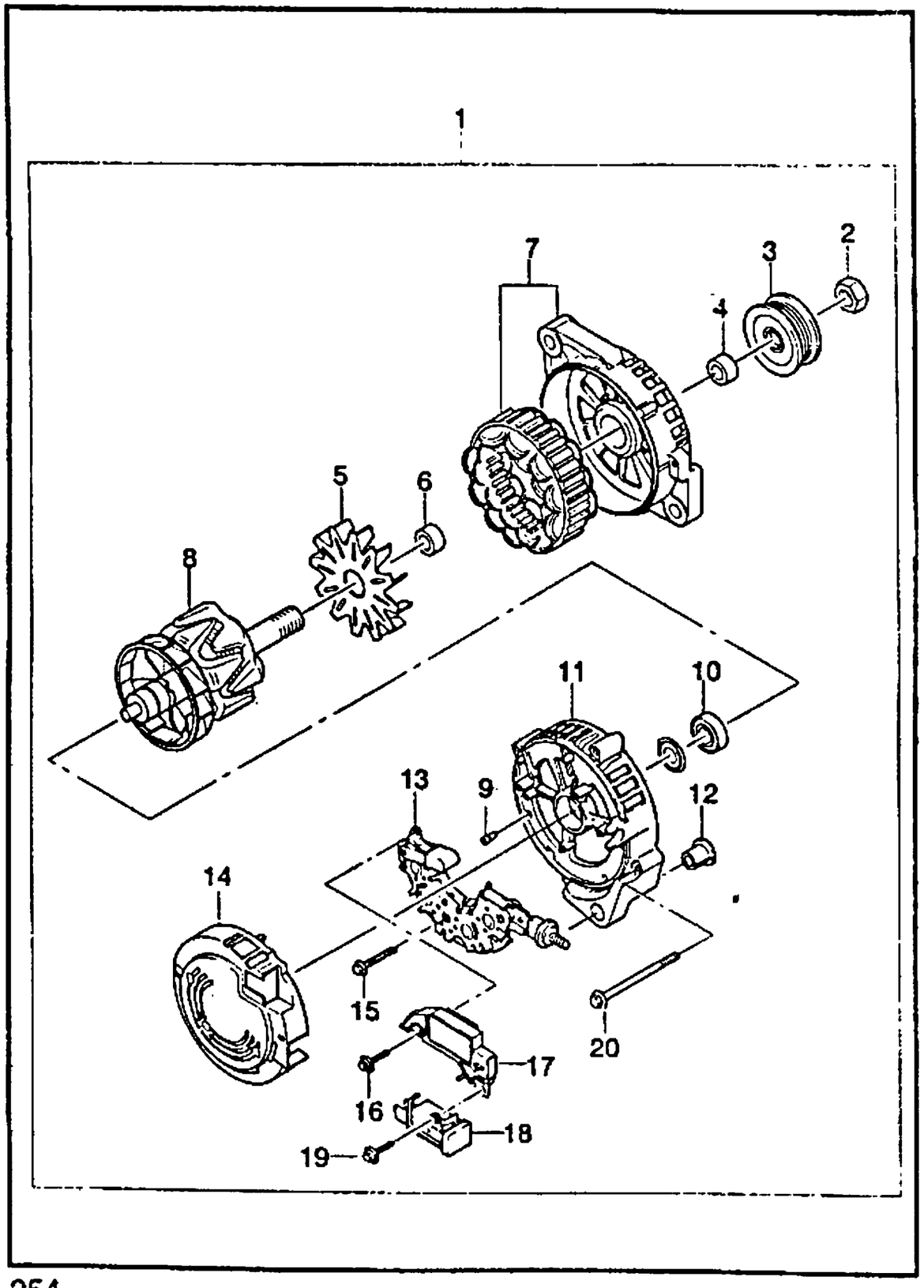

KEY NO. ITC	PART NO	MODEL ENG	T/A	BODY 4N	3H	5H	LEVEL S	SE	SX	OPTION	L/R	QTY	EFFECTIVE DATE FROM	TO	REMARKS	P/CODE
[11]	210938	.	.	B	B	B	A	A	A	&XHA		1			(E)FRAME A (D)RAHMEN (F)CADRE (S)ARMADURA	
[12]	211083	.	.	B	B	B	A	A	A	&XHA		1			(E)BUSHING (D)LAGERFUTTER (F)MANCHON (S)BUJE DE BOQUILLA	
[13]	10495216	.	.	B	B	B	A	A	A	&XHA		1			(E)RECTIFIER (D)RICHTER (F)RECTIFICATEUR (S)RECTIFICADOR	
[14]	268500	.	.	B	B	B	A	A	A	&XHA		1			(E)COVER (D)DECKEL (F)CARTER (S)CUBIERTA	
[15]	210990	.	.	B	B	B	A	A	A	&XHA		1			(E)SCREW (D)SCHRAUBE (F)VIS (S)TORNILLO	
[16]	210788	.	.	B	B	B	A	A	A	&XHA		3			(E)SCREW (D)SCHRAUBE (F)VIS (S)TORNILLO	
[17]	01989650	.	.	B	B	B	A	A	A	&XHA		1			(E)REGULATOR (D)REGULATOR (F)REGULATEUR (S)REGULADOR	
[18]	271520	.	.	B	B	B	A	A	A	&XHA		1			(E)BRUSH A (D)BURSTE (F)BALAI (S)ESCOBILLA	
[19]	210748	.	.	B	B	B	A	A	A	&XHA		1			(E)SCREW (D)SCHRAUBE (F)VIS (S)TORNILLO	
	01989681	.	.	B	B	B	A	A	A	&XHA		1				

ENG(ENGINE)	T/A(TRANSAXLE)	BODY TYPE
Y = 1.5SOHC 6 = 1.6DOHC . = COMMON	M = MANUAL T/A A = AUTOMATIC T/A . = COMMON	4 N = 4 DOOR NOTCHBACK 3 H = 3 DOOR HATCHBACK 5 H = 5 DOOR HATCHBACK

1741 ALTERNATOR UNIT(12V,95A)

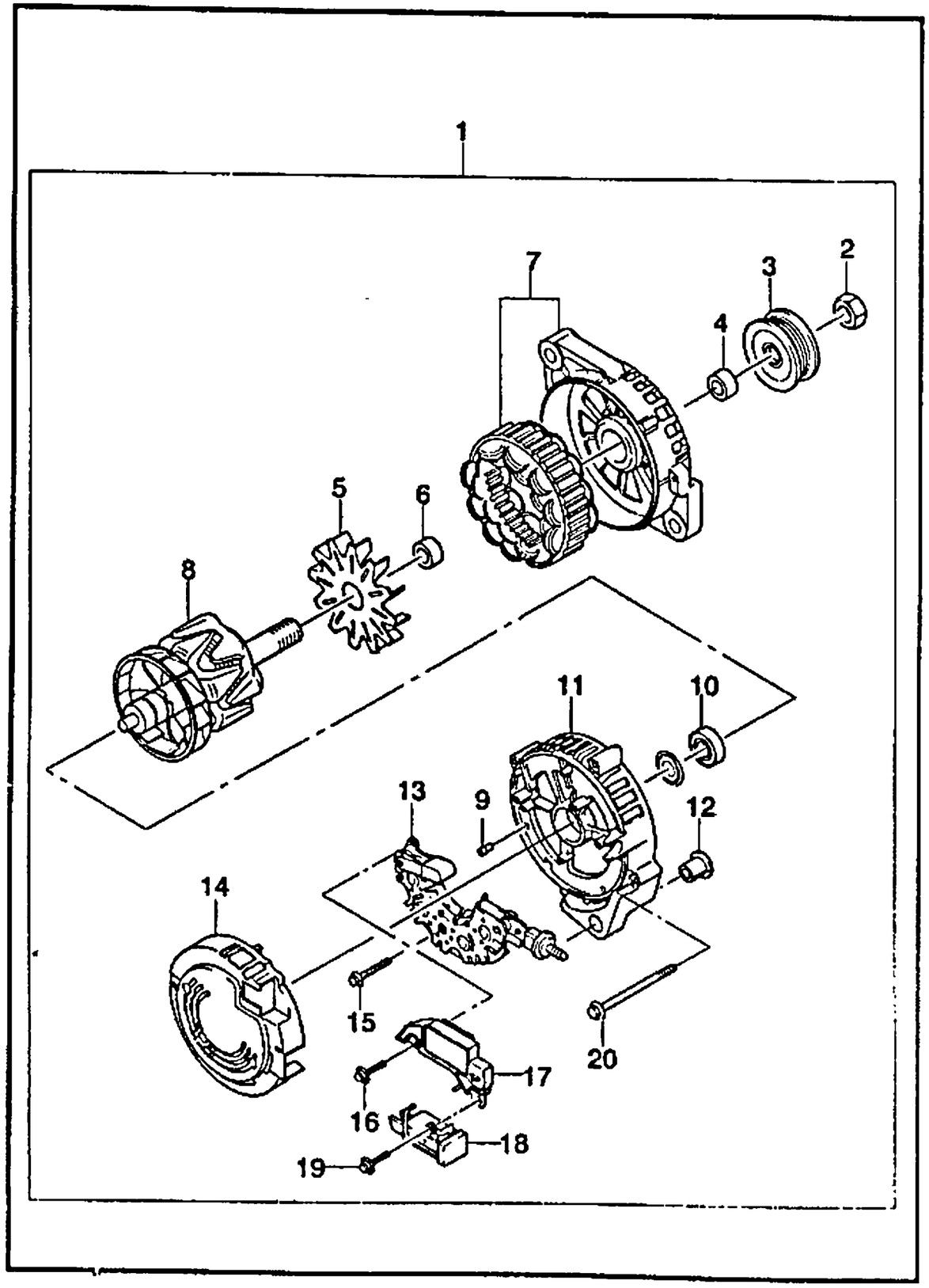

KEY NO.		PART NAME															
ITC	PART NO	MODEL								OPTION	L/R	QTY	EFFECTIVE DATE		REMARKS	P/CODE
		ENG	T/A	BODY			LEVEL						FROM	TO		
				4N	3H	5H	S	SE	SX							
[20]	(E)BOLT (D)SCHRAUBE										(F)BOULON (S)PERNO					
10473999		.	.	B	B	B	A	A	A	&XHA		4				

ENG(ENGINE)	T/A(TRANSAXLE)	BODY TYPE
Y = 1.5SOHC 6 = 1.6DOHC . = COMMON	M = MANUAL T/A A = AUTOMATIC T/A . = COMMON	4 N = 4 DOOR NOTCHBACK 3 H = 3 DOOR HATCHBACK 5 H = 5 DOOR HATCHBACK

1750 ALTERNATOR MOUNT(SOHC)

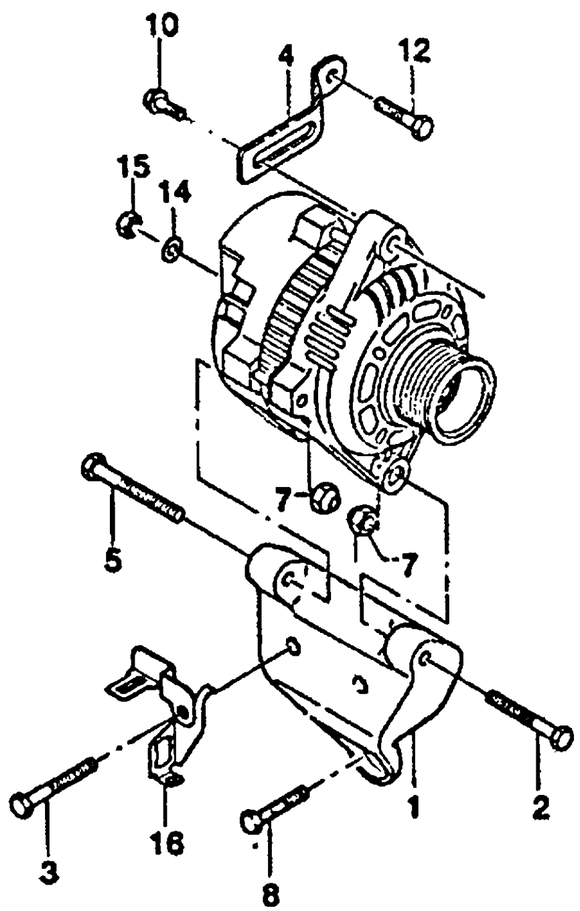

KEY NO. ITC	PART NO	MODEL ENG	T/A	BODY 4N	3H	5H	LEVEL S	SE	SX	OPTION	L/R	QTY	EFFECTIVE DATE FROM	TO	REMARKS	P/CODE
[01]		(E)BRACKET-ALTERNATOR (D)TRÄGER									(F)SUPPORT-ALTERNATEUR (S)SOPORTE-ALTERNADOR					
	96184726	Y	M	B	B	B	S	S	S			1		970423		
O	96352550	Y	M	B	B	B	S	S	S			1	970423			
	96184817	Y	A	B	B	B	O	O	O			1		970510		
O	96352551	Y	A	B	B	B	O	O	O			1	970510			
[02]		(E)BOLT-HEXAGON FLANGE (D)SCHRAUBE									(F)BOULON (S)PERNO					
	01513-08453	Y	.	B	B	B	S	S	S			1				
[03]		(E)BOLT-HEXAGON FLANGE (D)SCHRAUBE									(F)BOULON (S)PERNO					
	09103-10041	Y	.	B	B	B	S	S	S			2				
[04]		(E)SHACKLE-ALTERNATOR (D)SCHIENE									(F)SUPPORT-ALTERNATEUR (S)REFUERZO-ALTERNADOR					
	96350678	Y	.	B	B	B	S	S	S			1		970610		
O	96352146	Y	.	B	B	B	S	S	S			1	970510			
[05]	-	(E)BOLT-HEXAGON FLANGE (D)SCHRAUBE									(F)BOULON (S)PERNO					
	01513-08553	Y	.	B	B	B	S	S	S			1				
[07]		(E)NUT-HEXAGON LOCK (D)MUTTER									(F)ECROU (S)TUERCA					
	08311-38083	Y	.	B	B	B	S	S	S			2				
[08]		(E)BOLT-HEXAGON FLANGE (D)SCHRAUBE									(F)BOULON (S)PERNO					
	09103-10054	Y	M	B	B	B	S	S	S			1				
	09103-10042	Y	A	B	B	B	O	O	O			1				
[10]		(E)BOLT-HEXAGON FLANGE (D)SCHRAUBE									(F)BOULON (S)PERNO					

ENG(ENGINE)	T/A(TRANSAXLE)	BODY TYPE
Y = 1.5SOHC	M = MANUAL T/A	4 N = 4 DOOR NOTCHBACK
6 = 1.6DOHC	A = AUTOMATIC T/A	3 H = 3 DOOR HATCHBACK
. = COMMON	. = COMMON	5 H = 5 DOOR HATCHBACK

1750 ALTERNATOR MOUNT(SOHC)

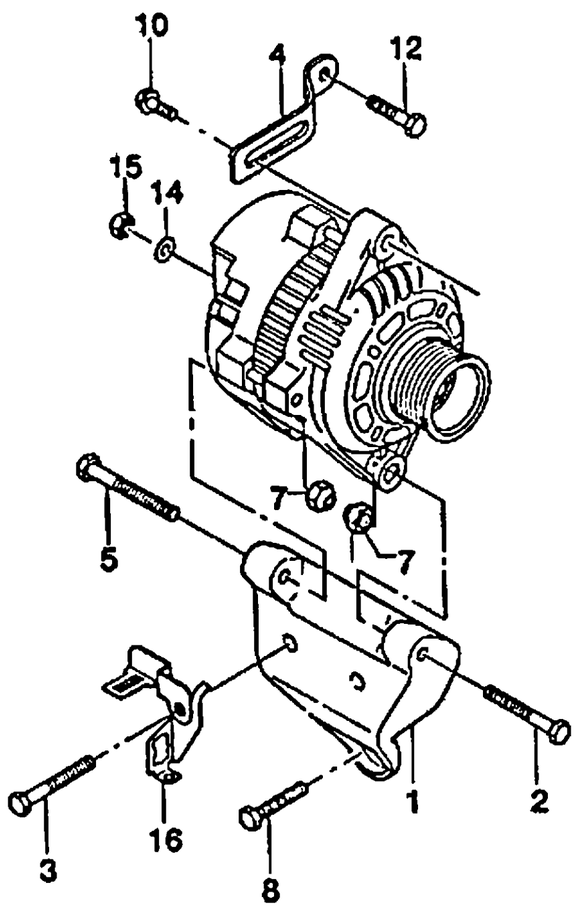

KEY NO. ITC	PART NO	MODEL ENG	T/A	BODY 4N	3H	5H	LEVEL S	SE	SX	OPTION	L/R	QTY	EFFECTIVE DATE FROM	TO	REMARKS	P/CODE
[12]	01517-08253	Y	.	B	B	B	S	S	S	(E)BOLT-HEXAGON FLANGE (D)SCHRAUBE		1			(F)BOULON (S)PERNO	
[14]	09103-08019	Y	.	B	B	B	S	S	S	(E)WASHER-SPRING (D)DICHTUNGSRING		1			(F)RONDELLE (S)ARANDELA	
[15]	08321-21083	Y	.	B	B	B	S	S	S	(E)NUT-HEXAGON (D)MUTTER		1			(F)ECROU (S)TUERCA	
[16]	08310-11083	Y	.	B	B	B	S	S	S	(E)BRACKET-PWM & WIRING (D)TRÄGER		1			(F)SUPPORT (S)SOPORTE	
	96242506	Y	.	B	B	B	S	S	S			1				

ENG(ENGINE)	T/A(TRANSAXLE)	BODY TYPE
Y = 1.5SOHC 6 = 1.6DOHC . = COMMON	M = MANUAL T/A A = AUTOMATIC T/A . = COMMON	4 N = 4 DOOR NOTCHBACK 3 H = 3 DOOR HATCHBACK 5 H = 5 DOOR HATCHBACK

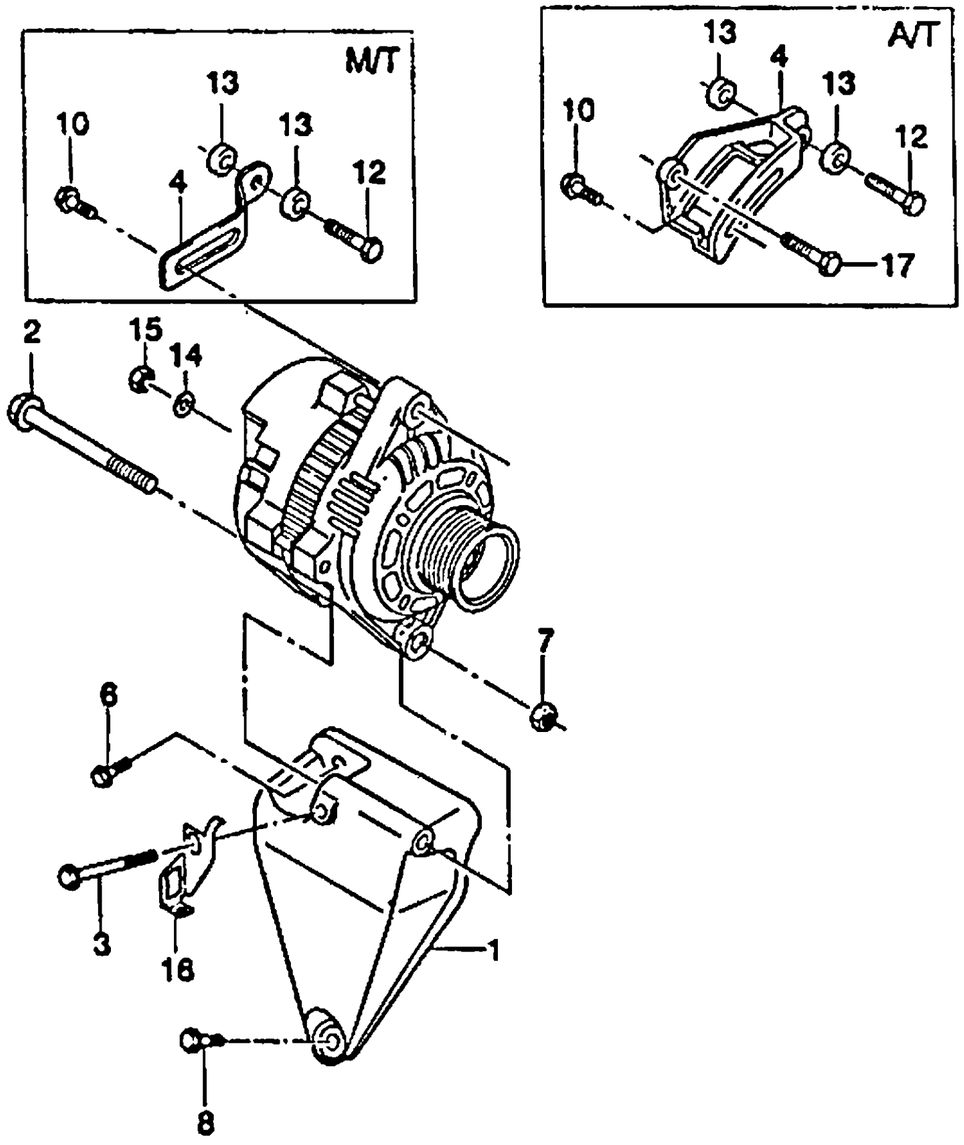

KEY NO. ITC	PART NO	MODEL ENG	T/A	BODY 4N	3H	5H	LEVEL S	SE	SX	OPTION	L/R	QTY	EFFECTIVE DATE FROM	TO	REMARKS	P/CODE
[01]		(E)BRACKET-ALTERNATOR (D)TRÄGER									(F)SUPPORT-ALTERNATEUR (S)SOPORTE-ALTERNADOR					
	96184740	6	M	B	B	B	.	.	O			1		970324		
O	96352142	6	M	B	B	B	.	.	O			1	970324			
	96184741	6	A	B	B	B	.	.	O			1		970510		
O	96352143	6	A	B	B	B	.	.	O			1	970510			
[02]		(E)BOLT-HEXAGON FLANGE (D)SCHRAUBE									(F)BOULON (S)PERNO					
	09103-08023	6	.	B	B	B	.	.	O			1				
[03]		(E)BOLT-HEXAGON FLANGE (D)SCHRAUBE									(F)BOULON (S)PERNO					
	09103-10053	6	.	B	B	B	.	.	O			1				
[04]		(E)SHACKLE-ALTERNATOR (D)SCHIENE									(F)SUPPORT-ALTERNATEUR (S)REFUERZO-ALTERNADOR					
	96350018	6	M	B	B	B	.	.	O			1		970509		
O	96352144	6	M	B	B	B	.	.	O			1	970509			
	96351643	6	A	B	B	B	.	.	O			1				
[06]		(E)BOLT-HEXAGON FLANGE (D)SCHRAUBE									(F)BOULON (S)PERNO					
	09103-10054	6	.	B	B	B	.	.	O			1				
[07]		(E)NUT-HEXAGON FLANGE (D)MUTTER									(F)ECROU (S)TUERCA					
	08311-38083	6	.	B	B	B	.	.	O			1				
[08]		(E)BOLT-HEXAGON FLANGE (D)SCHRAUBE									(F)BOULON (S)PERNO					
	09103-10054	6	M	B	B	B	.	.	O			1				
	09103-10008	6	A	B	B	B	.	.	O			1				

ENG(ENGINE)	T/A(TRANSAXLE)	BODY TYPE
Y = 1.5SOHC 6 = 1.6DOHC . = COMMON	M = MANUAL T/A A = AUTOMATIC T/A . = COMMON	4 N = 4 DOOR NOTCHBACK 3 H = 3 DOOR HATCHBACK 5 H = 5 DOOR HATCHBACK

1751 ALTERNATOR MOUNT(DOHC)

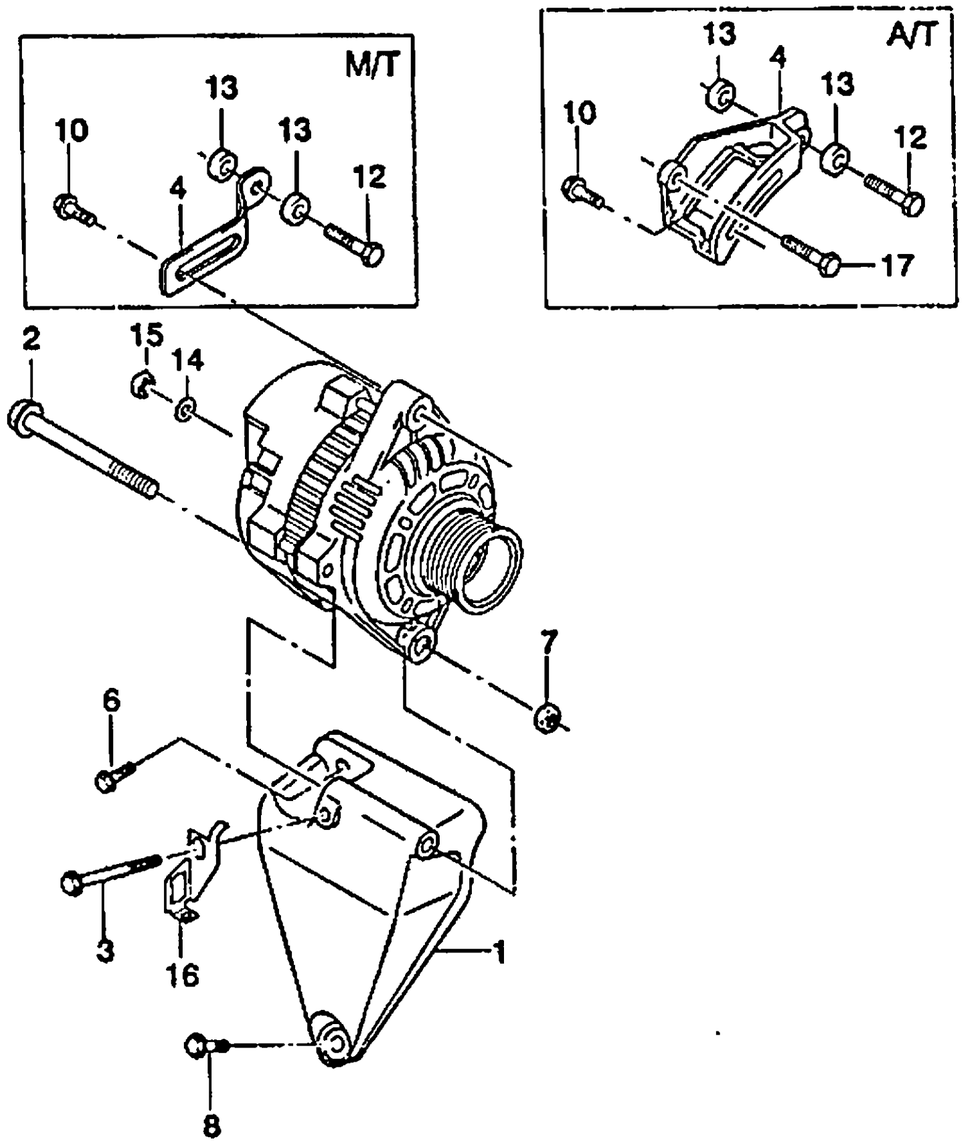

KEY NO.	PART NAME														
ITC	PART NO	MODEL								OPTION	L/R	QTY	EFFECTIVE DATE		REMARKS	P/CODE
		ENG	T/A	BODY 4N	BODY 3H	BODY 5H	LEVEL S	LEVEL SE	LEVEL SX				FROM	TO		
[10]	(E)BOLT-HEXAGON FLANGE (D)SCHRAUBE										(F)BOULON (S)PERNO					
01517-08253		6	.	B	B	B	.	.	O		1					
[12]	(E)BOLT-HEXAGON FLANGE (D)SCHRAUBE										(F)BOULON (S)PERNO					
01517-08353		6	.	B	B	B	.	.	O		1					
[13]	(E)BUSHING (D)LAGERFUTTER										(F)MANCHON (S)BUJE DE BOQUILLA					
90280842		6	.	B	B	B	.	.	O		2					
[14]	(E)WASHER-SPRING (D)DICHTUNGSRING										(F)RONDELLE (S)ARANDELA					
08321-21083		6	.	B	B	B	.	.	O		1					
[15]	(E)NUT-HEXAGON (D)MUTTER										(F)ECROU (S)TUERCA					
08310-11083		6	.	B	B	B	.	.	O		1					
[16]	(E)BRACKET-C.P.S CONNECTOR (D)TRÄGER										(F)SUPPORT (S)SOPORTE					
96242507		6	.	B	B	B	.	.	O		1					
[17]	(E)BOLT-HEXAGON FLANGE (D)SCHRAUBE										(F)BOULON (S)PERNO					
01517-08303		6	A	B	B	B	.	.	O		1					

ENG(ENGINE)	T/A(TRANSAXLE)	BODY TYPE
Y = 1.5SOHC 6 = 1.6DOHC . = COMMON	M = MANUAL T/A A = AUTOMATIC T/A . = COMMON	4 N = 4 DOOR NOTCHBACK 3 H = 3 DOOR HATCHBACK 5 H = 5 DOOR HATCHBACK

1760 STARTER(0.8KW)

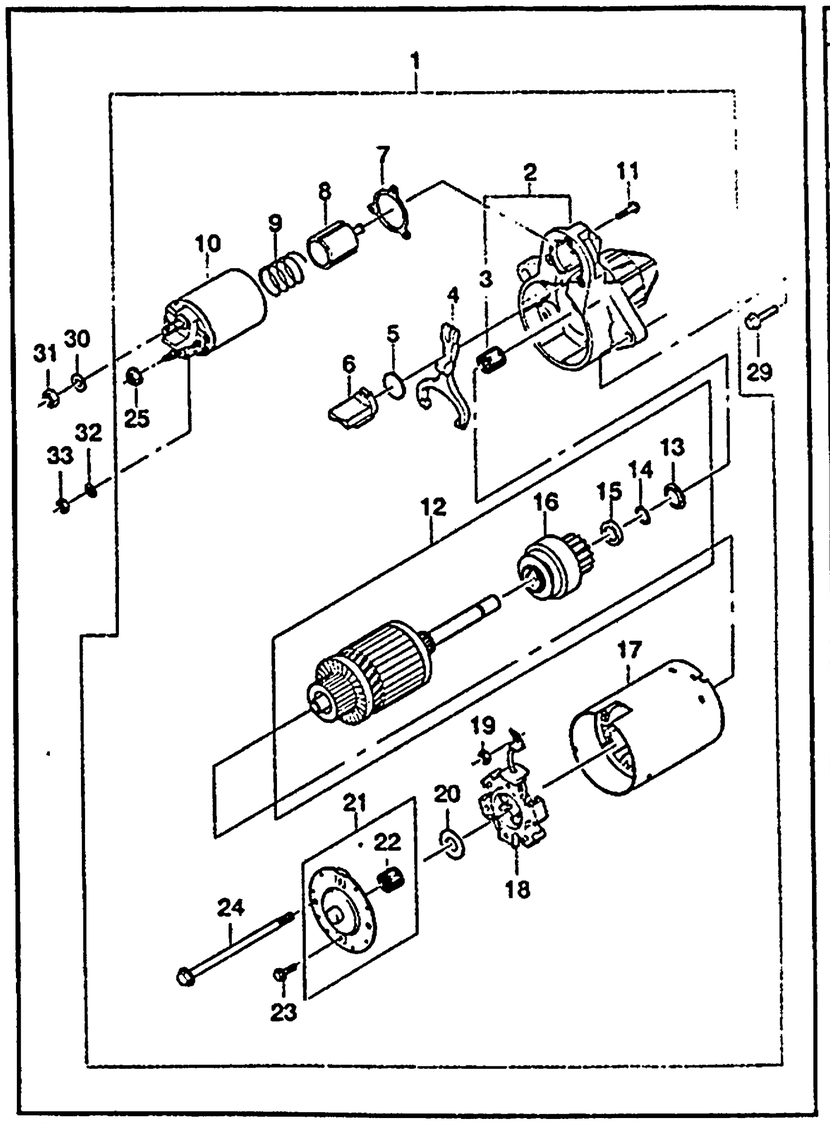

KEY NO. ITC	PART NO	MODEL ENG	T/A	BODY 4N	3H	5H	LEVEL S	SE	SX	OPTION	L/R	QTY	EFFECTIVE DATE FROM	TO	REMARKS	P/CODE
[01]		(E)STATER A (D)ANLASSER									(F)DEMARREUR (S)ARRANQUE					
	96208781	Y	M	B	B	B	S	S	S	&NN4/NN6		1			0.8KW	SQ
[02]		(E)HOUSING (D)GEHÄUSE									(F)LOGEMENT (S)CARCASA					
	10476114	Y	M	B	B	B	S	S	S			1				
[03]		(E)BUSHING (D)LAGERFUTTER									(F)MANCHON (S)BUJE DE BOQUILLA					
	110526	Y	M	B	B	B	S	S	S			1				
[04]		(E)LEVER (D)HEBEL									(F)LEVIER (S)PALANCA					
	10475062	Y	M	B	B	B	S	S	S			1				
[05]		(E)PLATE (D)PLATTE									(F)PLAQUE (S)PLACA					
	10475061	Y	M	B	B	B	S	S	S			1				
[06]		(E)PLUG (D)STÖPSEL									(F)BOUCHON (S)TAPON					
	110725	Y	M	B	B	B	S	S	S			1				
[07]		(E)GASKET (D)DICHTUNG									(F)JOINT (S)JUNTA					
	110645	Y	M	B	B	B	S	S	S			1				
[08]		(E)PLUNGER (D)TAUCHER									(F)PISTON PLONGEUR (S)EMBOLO					
	110974	Y	M	B	B	B	S	S	S			1				
[09]		(E)SPRING (D)FEDERUNG									(F)RESSORT (S)RESORTE					
	100976	Y	M	B	B	B	S	S	S			1				
[10]		(E)SOLENOID (D)SOLENOID									(F)SOLENOIDE (S)SELENOIDE					

ENG(ENGINE)	T/A(TRANSAXLE)	BODY TYPE
Y = 1.5SOHC	M = MANUAL T/A	4 N = 4 DOOR NOTCHBACK
6 = 1.6DOHC	A = AUTOMATIC T/A	3 H = 3 DOOR HATCHBACK
. = COMMON	. = COMMON	5 H = 5 DOOR HATCHBACK

1760 STARTER(0.8KW)

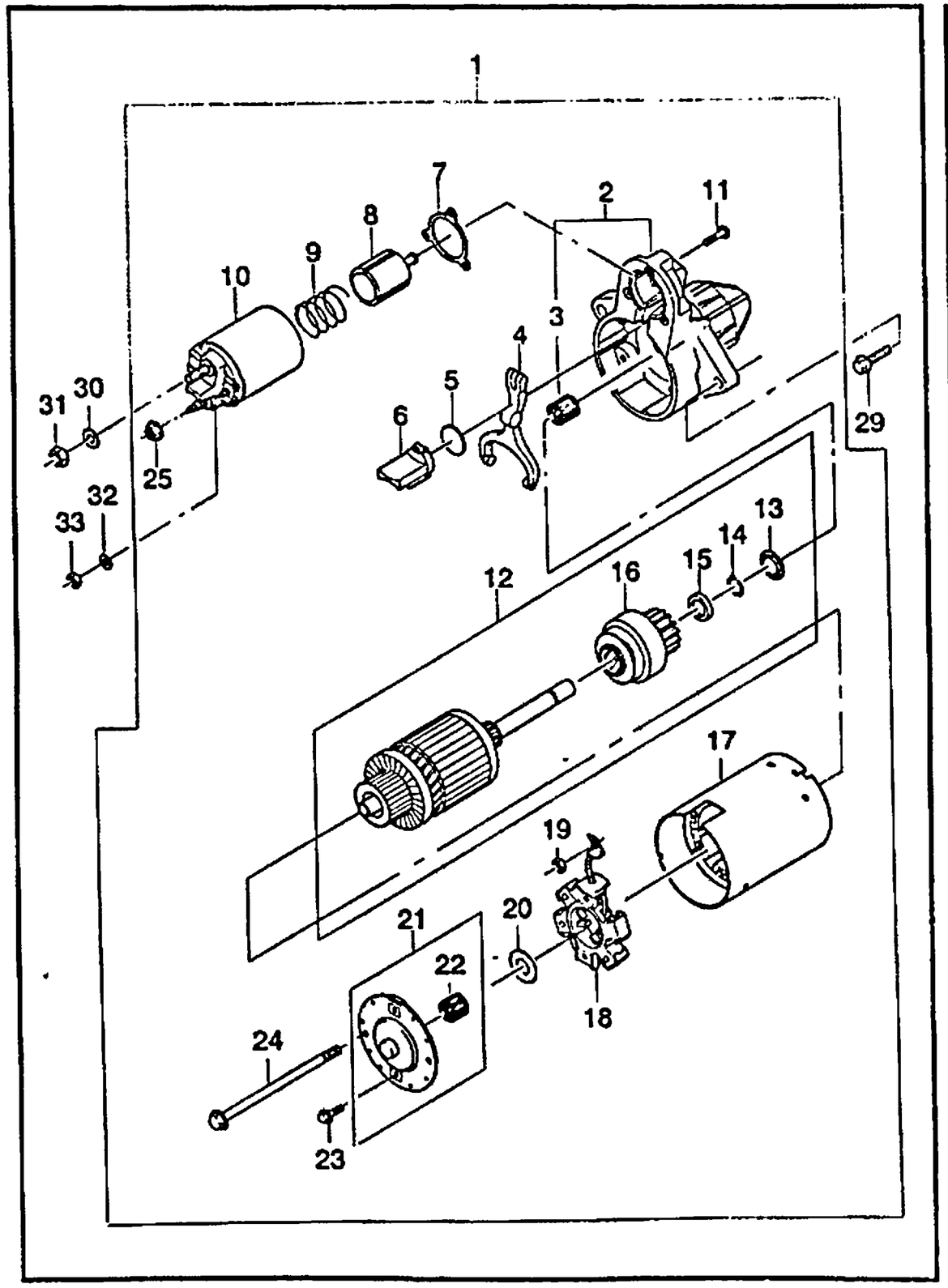

KEY NO. ITC	PART NO	MODEL ENG	T/A	BODY 4N	3H	5H	LEVEL S	SE	SX	OPTION	L/R	QTY	EFFECTIVE DATE FROM	TO	REMARKS	P/CODE
[11]	111350	Y	M	B	B	B	S	S	S			1			(E)SCREW (D)SCHRAUBE (F)VIS (S)TORNILLO	
[12]	10475056	Y	M	B	B	B	S	S	S			3			(E)ARMATURE (D)ARMATUR (F)ARMATURE (S)ARMADURA	
[13]	10475100	Y	M	B	B	B	S	S	S			1			(E)COLLAR (D)KRAGEN (F)COLLIER (S)CASQUILLO	
[14]	10477310	Y	M	B	B	B	S	S	S			1			(E)RING (D)RING (F)ANNEAU (S)ANILLO	
[15]	01927848	Y	M	B	B	B	S	S	S			1			(E)PINION STOP (D)RITZEL,STOPP (F)PIGNON-ARRET (S)PIÑON-TOPE	
[16]	01927849	Y	M	B	B	B	S	S	S			1			(E)DRIVE (D)ANTRIEB (F)ENTRAINEMENT (S)IMPULSADOR	
[17]	10475074	Y	M	B	B	B	S	S	S			1			(E)FRAME-FIELD (D)RAHMEN,FELD (F)CADRE-CHAMP (S)ARMADURA-CAMPO	
[18]	10475094	Y	M	B	B	B	S	S	S			1			(E)HOLDER-BRUSH (D)BEHÄLTER,BÜRSTE (F)MONTURE-BALAI (S)RETENEDOR-CEPILLO	
[19]	10475107	Y	M	B	B	B	S	S	S			1			(E)NUT (D)MUTTER (F)ECROU (S)TUERCA	
	110720	Y	M	B	B	B	S	S	S			1				

ENG(ENGINE)	T/A(TRANSAXLE)	BODY TYPE
Y = 1.5SOHC 6 = 1.6DOHC . = COMMON	M = MANUAL T/A A = AUTOMATIC T/A . = COMMON	4 N = 4 DOOR NOTCHBACK 3 H = 3 DOOR HATCHBACK 5 H = 5 DOOR HATCHBACK

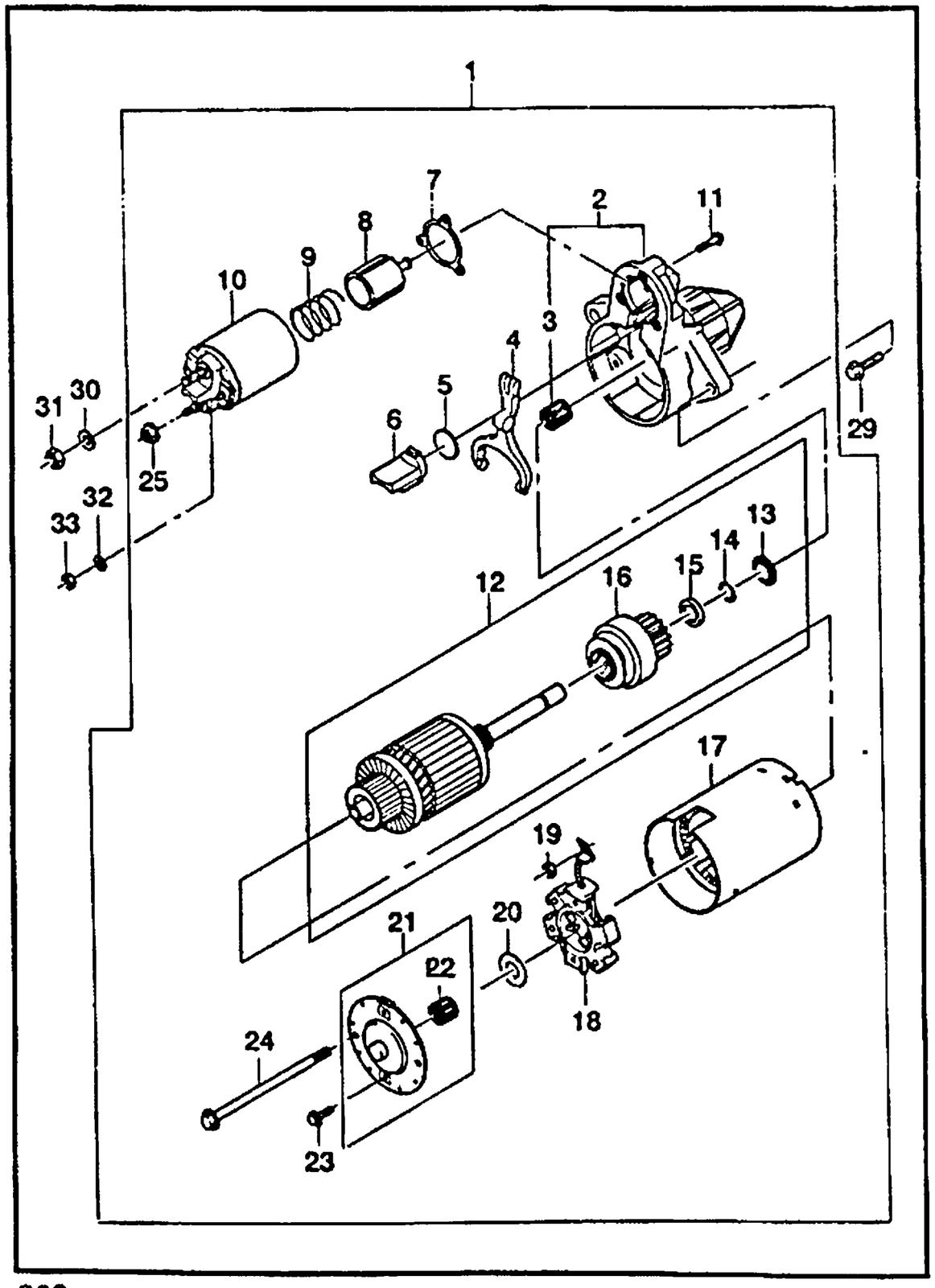

KEY NO.	PART NO	MODEL ENG	MODEL T/A	MODEL BODY 4N	MODEL BODY 3H	MODEL BODY 5H	MODEL LEVEL S	MODEL LEVEL SE	MODEL LEVEL SX	OPTION	L/R	QTY	EFFECTIVE DATE FROM	EFFECTIVE DATE TO	REMARKS	P/CODE
[20]		(E)WASHER (D)DICHTUNGSRING									(F)RONDELLE (S)ARANDELA					
	10475058	Y	M	B	B	B	S	S	S			1				
[21]		(E)FRAME-COMMUTATOR (D)RAHMEN,KOMMUTATOR ENDE									(F)CADRE (S)ARMADURA					
	111361	Y	M	B	B	B	S	S	S			1				
[22]		(E)BUSHING (D)LAGERFUTTER									(F)MANCHON (S)BUJE DE BOQUILLA					
	110295	Y	M	B	B	B	S	S	S			1				
[23]		(E)SCREW (D)SCHRAUBE									(F)VIS (S)TORNILLO					
	10497256	Y	M	B	B	B	S	S	S			2				
[24]		(E)BOLT (D)SCHRAUBE									(F)BOULON (S)PERNO					
	10475057	Y	M	B	B	B	S	S	S			2				
[25]		(E)NUT (D)MUTTER									(F)ECROU (S)TUERCA					
	110720	Y	M	B	B	B	S	S	S			1				
[29]		(E)SCREW (D)SCHRAUBE									(F)VIS (S)TORNILLO					
	08956812	Y	M	B	B	B	S	S	S			2			M8X1.25X25	
[30]		(E)WASHER (D)DICHTUNGSRING									(F)RONDELLE (S)ARANDELA					
	08321-21083	Y	M	B	B	B	S	S	S			1				
[31]		(E)NUT (D)MUTTER									(F)ECROU (S)TUERCA					
	08310-11083	Y	M	B	B	B	S	S	S			1				
[32]		(E)WASHER (D)DICHTUNGSRING									(F)RONDELLE (S)ARANDELA					

ENG(ENGINE)	T/A(TRANSAXLE)	BODY TYPE
Y = 1.5SOHC 6 = 1.6DOHC . = COMMON	M = MANUAL T/A A = AUTOMATIC T/A . = COMMON	4 N = 4 DOOR NOTCHBACK 3 H = 3 DOOR HATCHBACK 5 H = 5 DOOR HATCHBACK

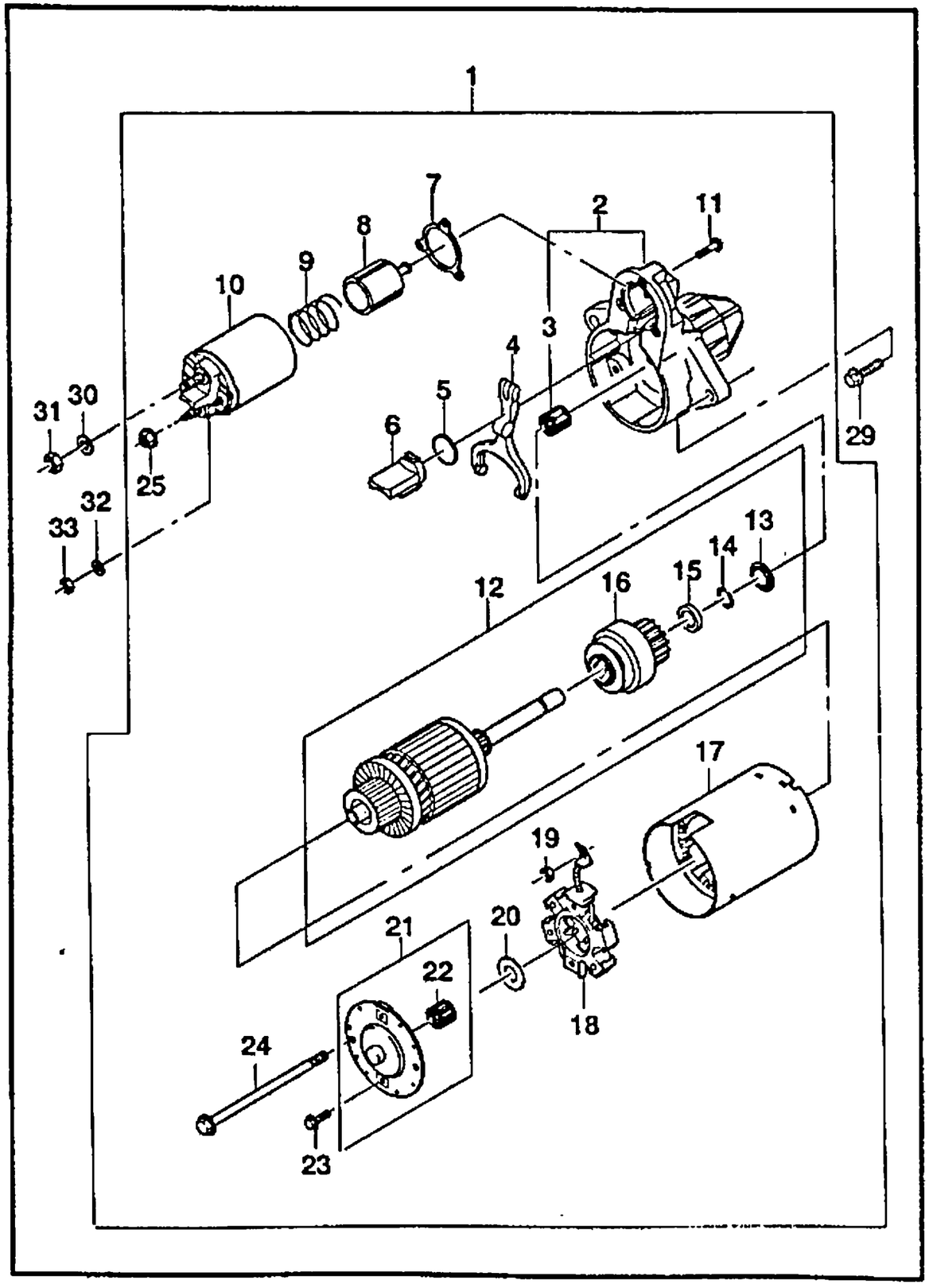

KEY NO. ITC	PART NO	MODEL ENG	T/A	BODY 4N	3H	5H	LEVEL S	SE	SX	OPTION	L/R	QTY	EFFECTIVE DATE FROM	TO	REMARKS	P/CODE
	08321-21063	Y	M	B	B	B	S	S	S			1				
	[33]	(E)NUT (D)MUTTER										(F)ECROU (S)TUERCA				
	08310-21063	Y	M	B	B	B	S	S	S			1				

ENG(ENGINE)	T/A(TRANSAXLE)	BODY TYPE
Y = 1.5SOHC	M = MANUAL T/A	4 N = 4 DOOR NOTCHBACK
6 = 1.6DOHC	A = AUTOMATIC T/A	3 H = 3 DOOR HATCHBACK
. = COMMON	. = COMMON	5 H = 5 DOOR HATCHBACK

1761 STARTER(1.4KW)

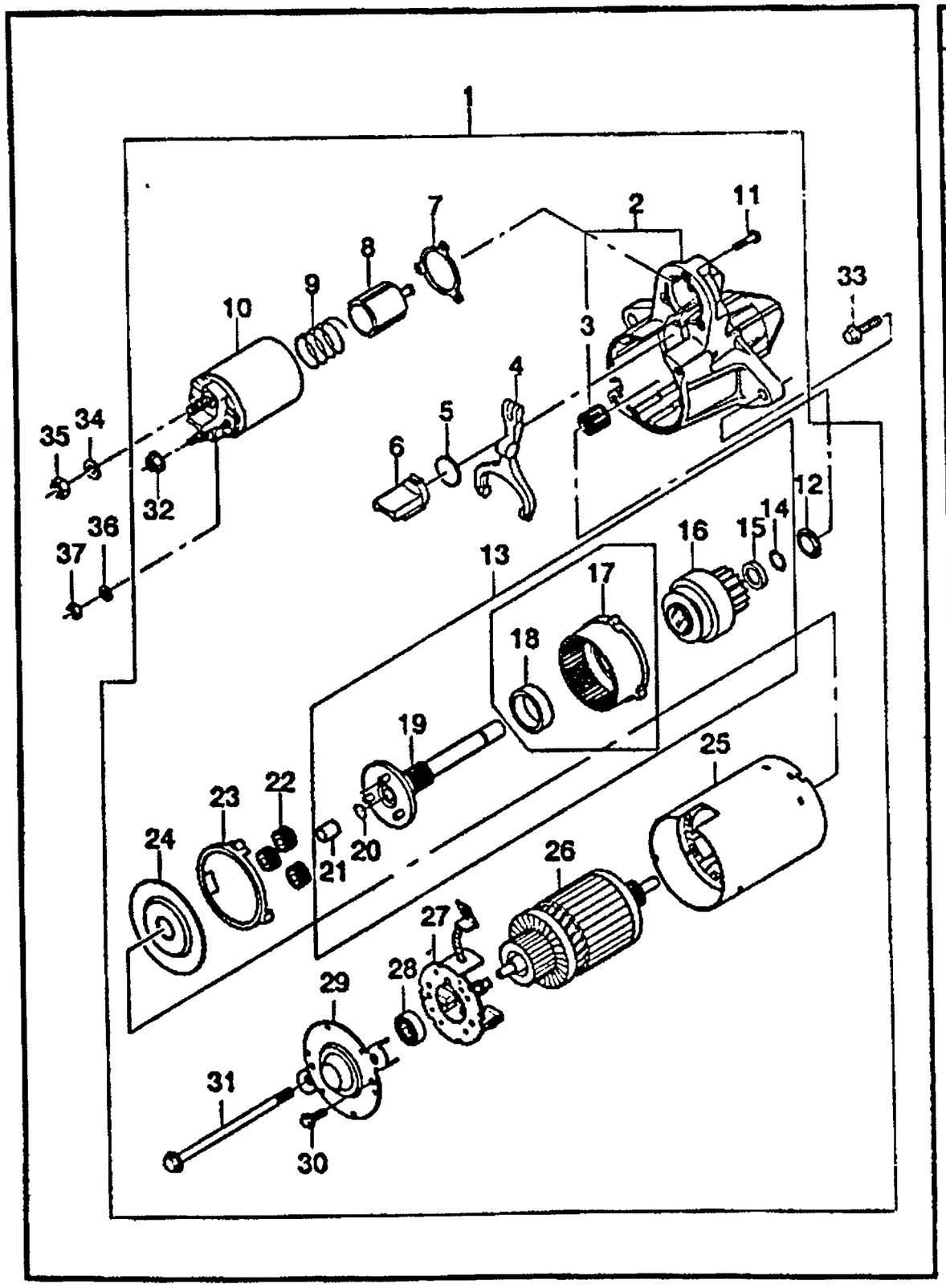

KEY NO. ITC	PART NO	MODEL ENG	MODEL T/A	MODEL BODY 4N	MODEL BODY 3H	MODEL BODY 5H	MODEL LEVEL S	MODEL LEVEL SE	MODEL LEVEL SX	OPTION	L/R	QTY	EFFECTIVE DATE FROM	EFFECTIVE DATE TO	REMARKS	P/CODE
[01]		(E)STATER A (D)ANLASSER									(F)DEMARREUR (S)ARRANQUE					
	96208782	Y	A	B	B	B	O	O	O	&NN6/NN4		1			1.4KW	SU
	96208782	Y	.	B	B	B	A	A	A	&NN7/XCA		1			1.4KW	SU
	96208782	6	.	B	B	B	.	.	O			1			1.4KW	SU
[02]		(E)HOUSING (D)GEHÄUSE									(F)LOGEMENT (S)CARCASA					
	10476430	.	.	B	B	B	O	O	O			1				
[03]		(E)BUSHING (D)LAGERFUTTER									(F)MANCHON (S)BUJE DE BOQUILLA					
	110526	.	.	B	B	B	O	O	O			1				
[04]		(E)LEVER (D)HEBEL									(F)LEVIER (S)PALANCA					
	10476003	.	.	B	B	B	O	O	O			1				
[05]		(E)PLATE (D)PLATTE									(F)PLAQUE (S)PLACA					
	10475061	.	.	B	B	B	O	O	O			1				
[06]		(E)PLUG (D)STOPSEL									(F)BOUCHON (S)TAPON					
	10475995	.	.	B	B	B	O	O	O			1				
[07]		(E)GASKET (D)DICHTUNG									(F)JOINT (S)JUNTA					
	110645	.	.	B	B	B	O	O	O			1				
[08]		(E)PLUNGER (D)TAUCHER									(F)PISTON PLONGEUR (S)EMBOLO					
	110974	.	.	B	B	B	O	O	O			1				
[09]		(E)SPRING (D)FEDERUNG									(F)RESSORT (S)RESORTE					

ENG(ENGINE)	T/A(TRANSAXLE)	BODY TYPE
Y = 1.5SOHC	M = MANUAL T/A	4 N = 4 DOOR NOTCHBACK
6 = 1.6DOHC	A = AUTOMATIC T/A	3 H = 3 DOOR HATCHBACK
. = COMMON	. = COMMON	5 H = 5 DOOR HATCHBACK

1761 STARTER(1.4KW)

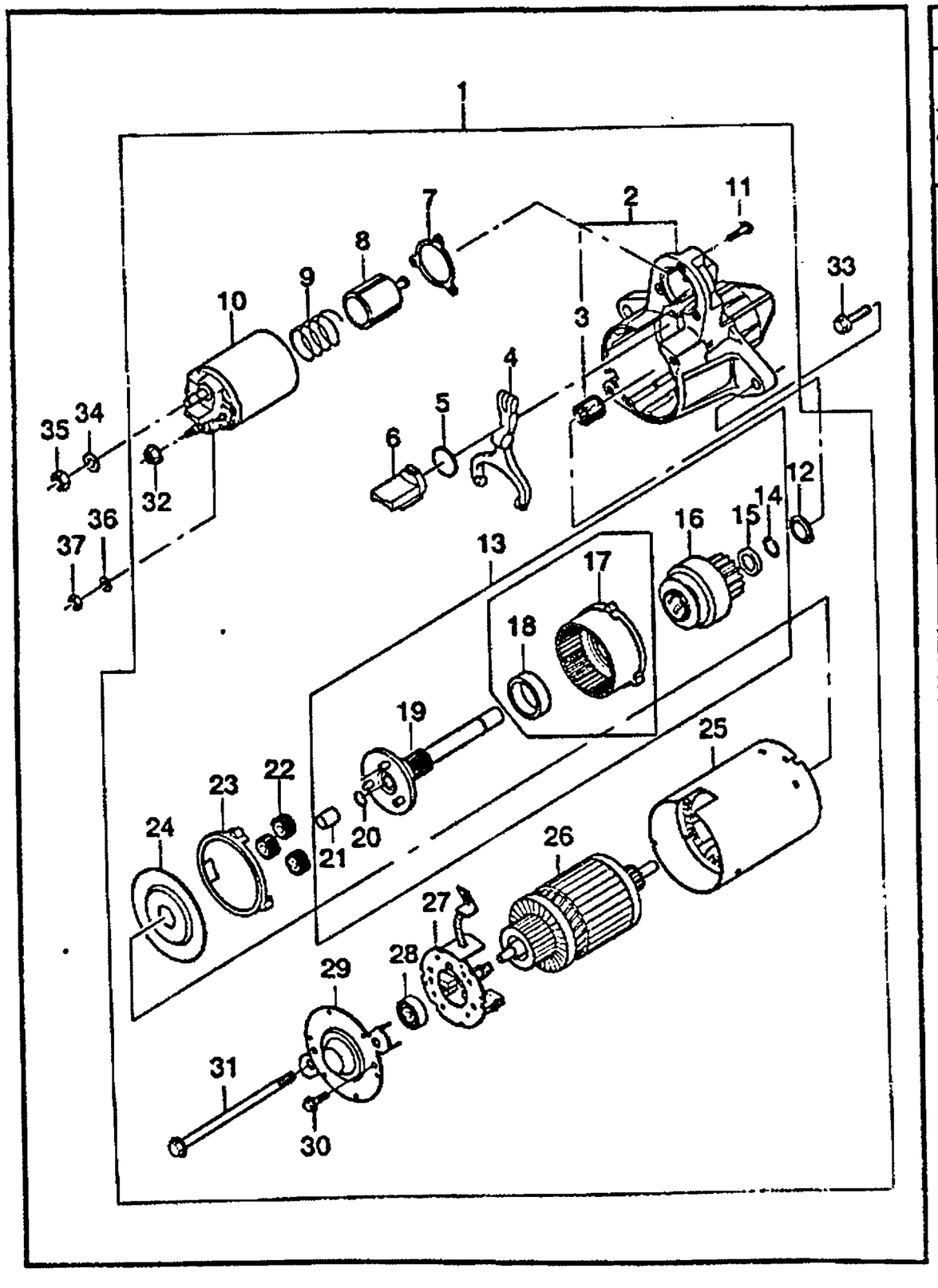

KEY NO. ITC	PART NO	MODEL ENG	MODEL T/A	BODY 4N	BODY 3H	BODY 5H	LEVEL S	LEVEL SE	LEVEL SX	OPTION	L/R	QTY	EFFECTIVE DATE FROM	EFFECTIVE DATE TO	REMARKS	PICODE
	110976	.	.	B	B	B	O	O	O			1				
[10]	(E)SOLENOID (D)SOLENOID											(F)SOLENOIDE (S)SELENOIDE				
	110977	.	.	B	B	B	O	O	O			1				
[11]	(E)SCREW (D)SCHRAUBE											(F)VIS (S)TORNILLO				
	10475056	.	.	B	B	B	O	O	O			3				
[12]	(E)COLLAR (D)KRAGEN											(F)COLLIER (S)CASQUILLO				
	10477310	.	.	B	B	B	O	O	O			1				
[13]	(E)DRIVE&SHAFT A (D)ANTRIEB&SPINDEL											(F)ENTRAINEMENT&ARBRE (S)IMPULSADOR&EJE				
	10475969	.	.	B	B	B	O	O	O			1				
[14]	(E)RING (D)RING											(F)ANNEAU (S)ANILLO				
	01927848	.	.	B	B	B	O	O	O			1				
[15]	(E)PINION-STOP (D)RITZEL,STOPP											(F)PIGNON-ARRET (S)PIÑON-TOPE				
	111058	.	.	B	B	B	O	O	O			1				
[16]	(E)DRIVE (D)ANTRIEB											(F)ENTRAINEMENT (S)IMPULSADOR				
	10475974	.	.	B	B	B	O	O	O			1				
[17]	(E)GEAR (D)GETRIEBE											(F)ENGRENAGE (S)ENGRANAJE				
	10475976	.	.	B	B	B	O	O	O			1				
[18]	(E)BUSHING (D)LAGERFUTTER											(F)MANCHON (S)BUJE DE BOQUILLA				
	10475977	.	.	B	B	B	O	O	O			1				

ENG(ENGINE)	T/A(TRANSAXLE)	BODY TYPE
Y = 1.5SOHC 6 = 1.6DOHC . = COMMON	M = MANUAL T/A A = AUTOMATIC T/A . = COMMON	4 N = 4 DOOR NOTCHBACK 3 H = 3 DOOR HATCHBACK 5 H = 5 DOOR HATCHBACK

1761 STARTER(1.4KW)

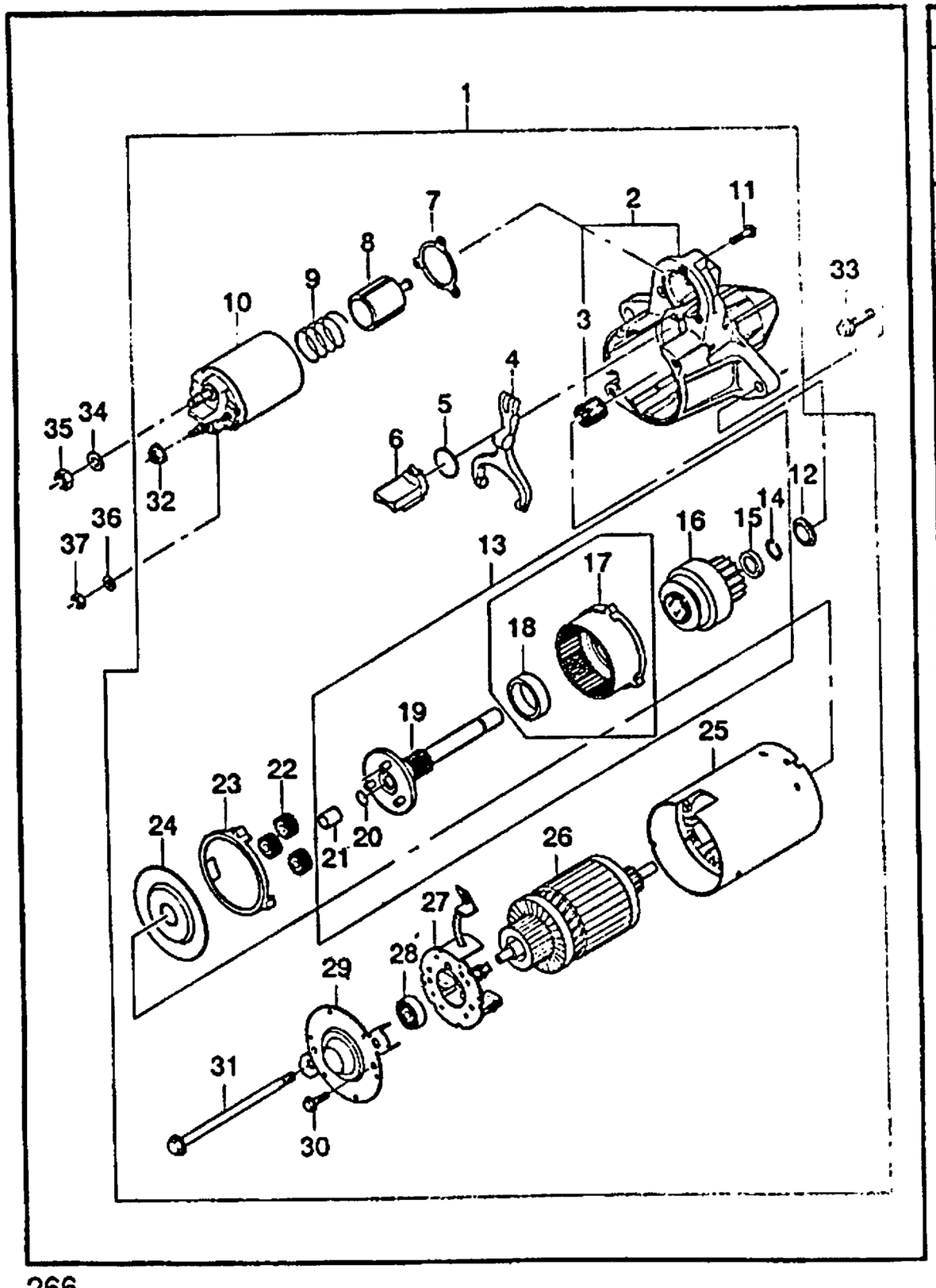

KEY NO. ITC	PART NO	PART NAME (MODEL: ENG / T/A / BODY 4N 3H 5H / LEVEL S SE SX)	OPTION	L/R	QTY	EFFECTIVE DATE FROM	EFFECTIVE DATE TO	REMARKS	P/CODE
[19]	10475970	(E)SHAFT (D)SPINDEL . . B B B O O O			1			(F)ARBRE (S)EJE	
[20]	01989917	(E)WASHER (D)DICHTUNGSRING . . B B B O O O			1			(F)RONDELLE (S)ARANDELA	
[21]	10475972	(E)BUSHING (D)LAGERFUTTER . . B B B O O O			1			(F)MANCHON (S)BUJE DE BOQUILLA	
[22]	10475979	(E)GEAR (D)GETRIEBE . . B B B O O O			3			(F)ENGRENAGE (S)ENGRANAJE	
[23]	10476005	(E)CUSHION (D)POLSTER . . B B B O O O			1			(F)COUSSIN (S)COJIN	
[24]	10476001	(E)SHIELD (D)KUGELLAGER . . B B B O O O			1			(F)ROULEMENT-BILLE (S)COJINETE DE BOLAS	
[25]	10476433	(E)FRAME-FIELD (D)RAHMEN,FELD . . B B B O O O			1			(F)CADRE-CHAMP (S)ARMADURA-CAMPO	
[26]	10475990	(E)ARMATURE (D)ARMATUR . . B B B O O O			1			(F)ARMATURE (S)ARMADURA	
[27]	10476006	(E)HOLDER BRUSH (D)BEHÄLTER,BÜRSTE . . B B B O O O			1			(F)MONTURE-BALAI (S)RETENEDOR-CEPILLO	
[28]		(E)BEARING-BALL (D)KUGELLAGER						(F)ROULEMENT-BILLE (S)COJINETE DE BOLAS	

ENG(ENGINE)	T/A(TRANSAXLE)	BODY TYPE
Y = 1.5SOHC 6 = 1.6DOHC . = COMMON	M = MANUAL T/A A = AUTOMATIC T/A . = COMMON	4 N = 4 DOOR NOTCHBACK 3 H = 3 DOOR HATCHBACK 5 H = 5 DOOR HATCHBACK

1761 STARTER(1.4KW)

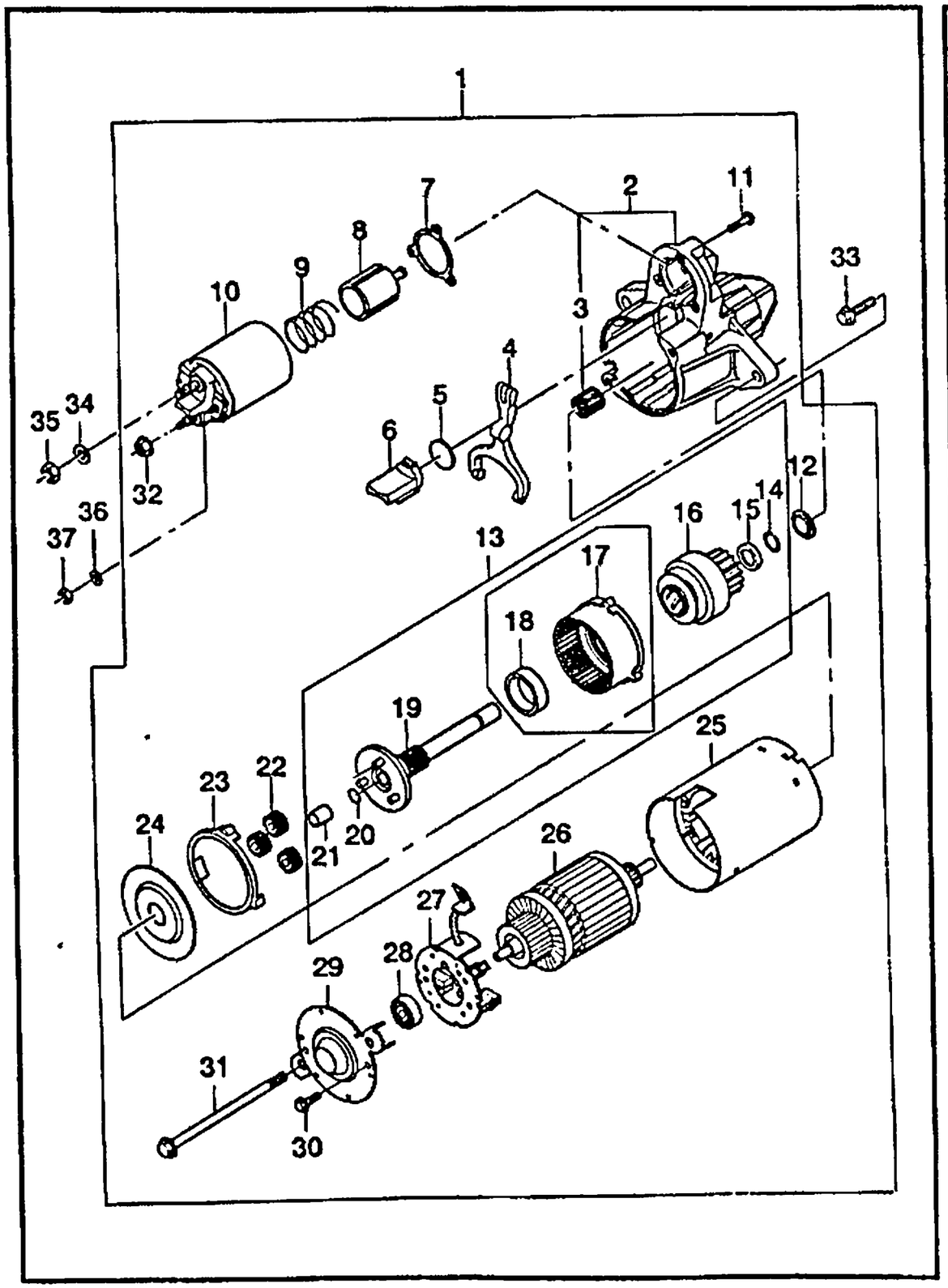

KEY NO. ITC	PART NO	MODEL ENG	T/A	BODY 4N	3H	5H	LEVEL S	SE	SX	OPTION	L/R	QTY	EFFECTIVE DATE FROM	TO	REMARKS	P/CODE
[29]	09440924	.	.	B	B	B	O	O	O			1				
		(E)FRAME-COMMUTATOR END														
		(D)RAHMEN,KOMMUTATOR ENDE														
											(F)CADRE					
											(S)ARMADURA					
[30]	10468555	.	.	B	B	B	O	O	O			1				
		(E)SCREW														
		(D)SCHRAUBE														
											(F)VIS					
											(S)TORNILLO					
[31]	10497256	.	.	B	B	B	O	O	O			2				
		(E)BOLT														
		(D)SCHRAUBE														
											(F)BOULON					
											(S)PERNO					
[32]	10476002	.	.	B	B	B	O	O	O			1				
		(E)NUT														
		(D)MUTTER														
											(F)ECROU					
											(S)TUERCA					
[33]	110720	.	.	B	B	B	O	O	O			1				
		(E)SCREW														
		(D)SCHRAUBE														
											(F)VIS					
											(S)TORNILLO					
[34]	08956812	.	.	B	B	B	O	O	O			2			M8X1.25X25	
		(E)WASHER-SPRING														
		(D)DICHTUNGSRING														
											(F)RONDELLE					
											(S)ARANDELA					
[35]	08321-21083	.	.	B	B	B	O	O	O			1				
		(E)NUT-HEXAGON														
		(D)MUTTER														
											(F)ECROU					
											(S)TUERCA					
[36]	08310-11083	.	.	B	B	B	O	O	O			1				
		(E)WASHER-SPRING														
		(D)DICHTUNGSRING														
											(F)RONDELLE					
											(S)ARANDELA					
[37]	08321-21063	.	.	B	B	B	O	O	O			1				
		(E)NUT-HEXAGON														
		(D)MUTTER														
											(F)ECROU					
											(S)TUERCA					
	08310-21063	.	.	B	B	B	O	O	O			1				

ENG(ENGINE)	T/A(TRANSAXLE)	BODY TYPE
Y = 1.5SOHC	M = MANUAL T/A	4 N = 4 DOOR NOTCHBACK
6 = 1.6DOHC	A = AUTOMATIC T/A	3 H = 3 DOOR HATCHBACK
. = COMMON	. = COMMON	5 H = 5 DOOR HATCHBACK

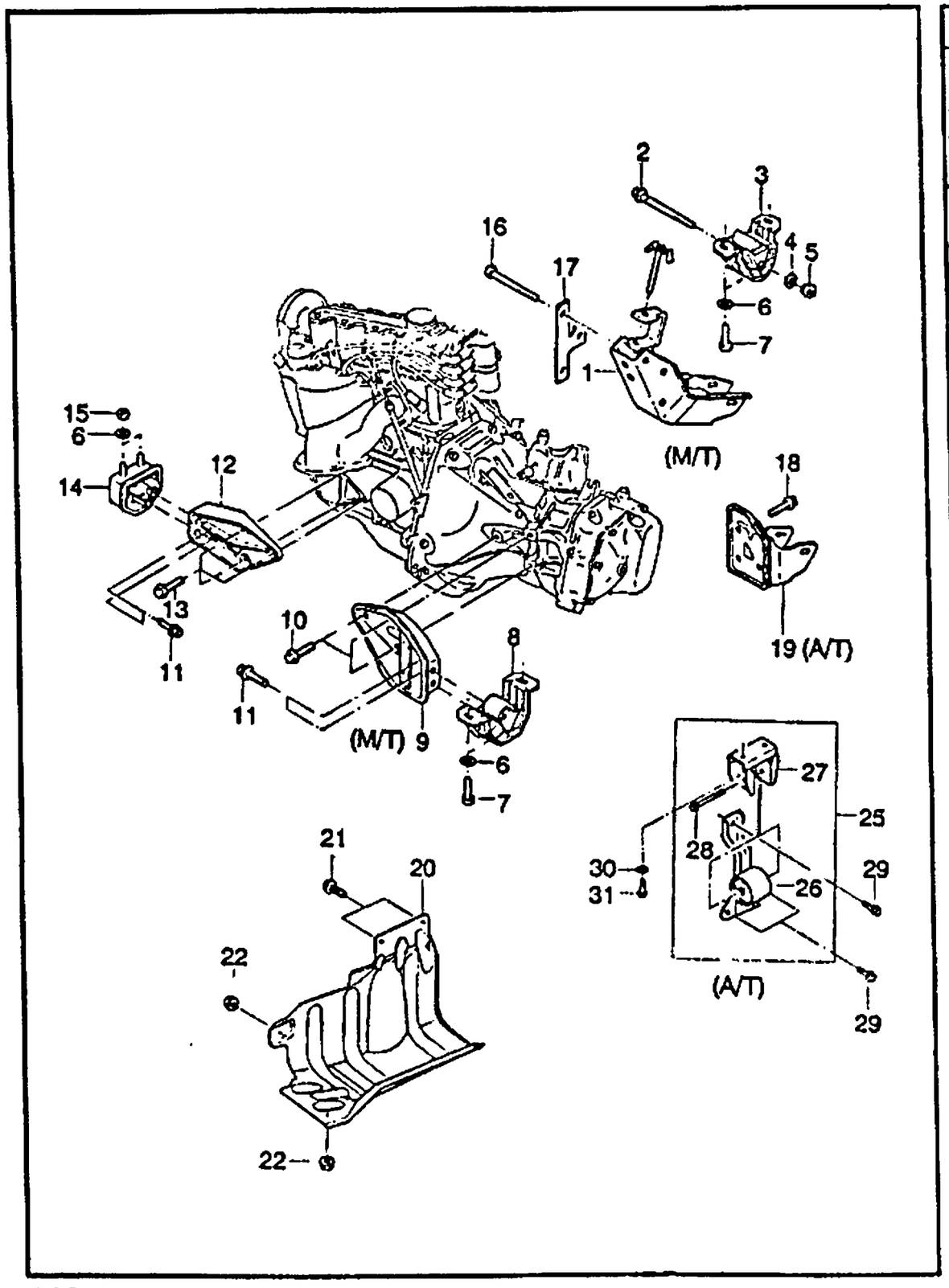

KEY NO. ITC	PART NO	MODEL ENG	T/A	BODY 4N	3H	5H	LEVEL S	SE	SX	OPTION	L/R	QTY	EFFECTIVE DATE FROM	TO	REMARKS	P/CODE
[01]		(E)BRACKET A-POWER UNIT MT,RR (D)TRÄGER									(F)SUPPORT (S)SOPORTE-MONTAJE					
96221086		.	M	B	B	B	S	S	S			1				MR
[02]		(E)BOLT-HEXAGON FLANGE (D)SCHRAUBE									(F)BOULON (S)PERNO					
09103-10033		.	.	B	B	B	S	S	S			1				
[03]		(E)BLOCK-PWR UNIT DAMPING,RR (D)BLOCK-DÄMPFUNG									(F)BLOC-AMORTISSEUR (S)BLOQUE					
90372462		.	M	B	B	B	S	S	S			1				TE
96227422		.	A	B	B	B	O	O	O			1				XA
[04]		(E)WASHER-PLAIN (D)DICHTUNGSRING									(F)RONDELLE (S)ARANDELA					
09160-10001		.	.	B	B	B	S	S	S			1				
[05]		(E)NUT (D)MUTTER									(F)ECROU (S)TUERCA					
09159-10004		.	.	B	B	B	S	S	S			1				
[06]		(E)WASHER-PLAIN (D)DICHTUNGSRING									(F)RONDELLE (S)ARANDELA					
09160-10004		Y	.	B	B	B	S	S	S			6				
09160-10004		6	.	B	B	B	.	.	O			4				
[07]		(E)BOLT-HEXAGON (D)SCHRAUBE									(F)BOULON (S)PERNO					
09100-10012		.	.	B	B	B	S	S	S			4				
[08]		(E)BLOCK-PWR UNIT DAMPING,FRT (D)BLOCK-DÄMPFUNG									(F)BLOC-AMORTISSEUR (S)BLOQUE					
90250437		.	M	B	B	B	S	S	S			LH 1				
[09]		(E)BRACKET A-POWER UNIT MT,FRT (D)TRÄGER									(F)SUPPORT (S)SOPORTE-MONTAJE					

ENG(ENGINE)	T/A(TRANSAXLE)	BODY TYPE
Y = 1.5SOHC 6 = 1.6DOHC . = COMMON	M = MANUAL T/A A = AUTOMATIC T/A . = COMMON	4 N = 4 DOOR NOTCHBACK 3 H = 3 DOOR HATCHBACK 5 H = 5 DOOR HATCHBACK

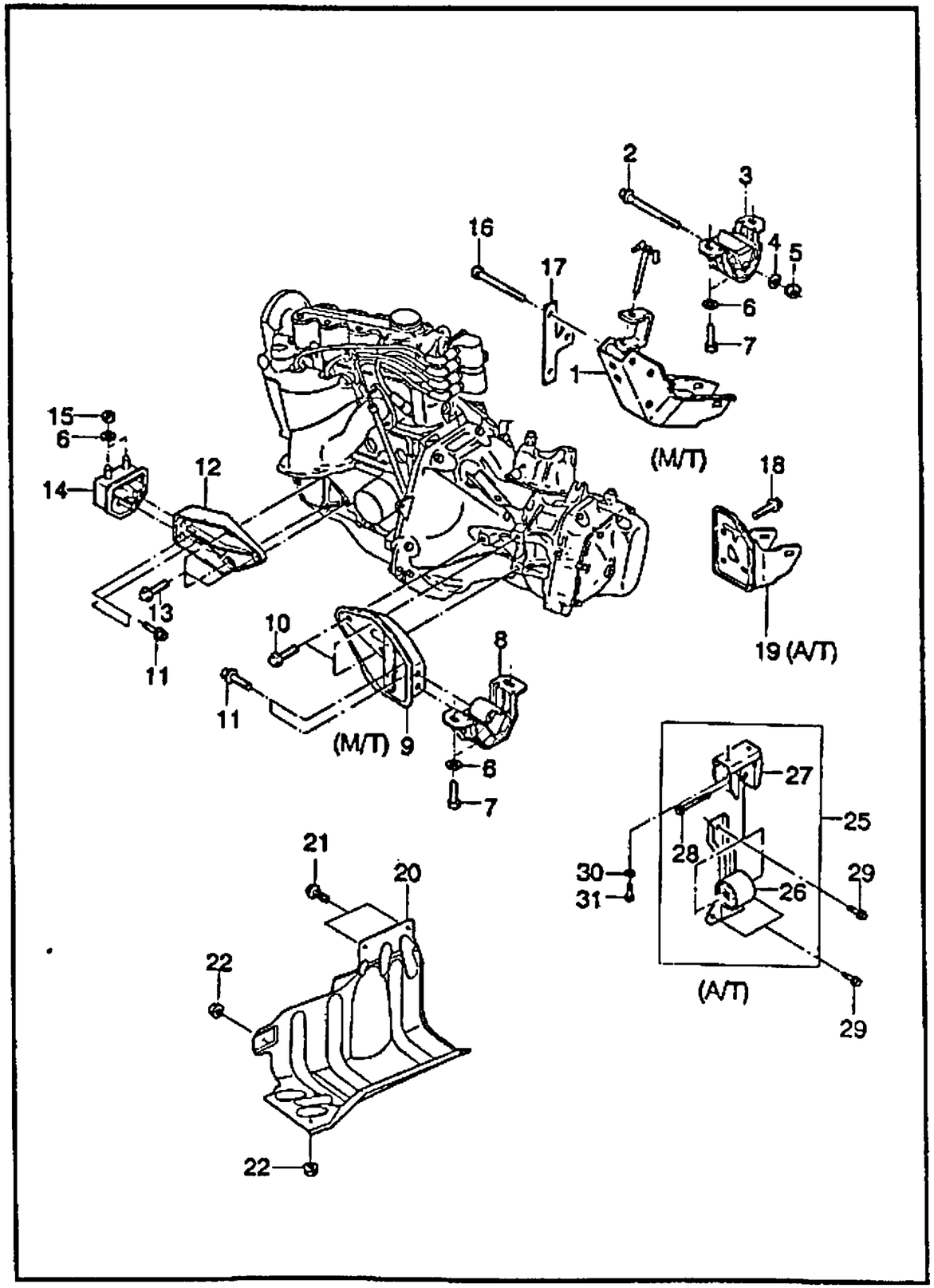

KEY NO.		PART NAME													
		MODEL										EFFECTIVE DATE			
				BODY			LEVEL								
ITC	PART NO	ENG	T/A	4N	3H	5H	S	SE	SX	OPTION	L/R	QTY	FROM	TO	REMARKS	P/CODE
	96181254	.	M	B	B	B	S	S	S		LH	1				M5
[10]		(E)BOLT-HEXAGON FLANGE (D)SCHRAUBE									(F)BOULON (S)PERNO					
	09103-10032	.	M	B	B	B	S	S	S		LH	3				
[11]		(E)BOLT-HEXAGON FLANGE (D)SCHRAUBE									(F)BOULON (S)PERNO					
	09103-10009	.	.	B	B	B	S	S	S			3				
[12]		(E)BRACKET-POWER UNIT MOUNT, (D)TRÄGER									(F)SUPPORT (S)SOPORTE-MONTAJE					
	96078088	.	M	B	B	B	S	S	S		RH	1				FC
	96181134	.	A	B	B	B	O	O	O		RH	1				A4
[13]		(E)BOLT-HEXAGON FLANGE (D)SCHRAUBE									(F)BOULON (S)PERNO					
	09103-10011	.	.	B	B	B	S	S	S		RH	3				
[14]		(E)BLOCK-PWR UNIT DAMPING,FRT (D)BLOCK-DÄMPFUNG									(F)BLOC-AMORTISSEUR (S)BLOQUE					
	90250348	.	M	B	B	B	S	S	S		RH	1				
	96227425	.	A	B	B	B	O	O	O		RH	1				X8
[15]		(E)NUT (D)MUTTER									(F)ECROU (S)TUERCA					
	09140-10001	Y	.	B	B	B	S	S	S			2				
	09159-10006	6	.	B	B	B	.	.	O			2				
[16]		(E)BOLT-HEXAGON (D)SCHRAUBE									(F)BOULON (S)PERNO					
	09100-12004	.	M	B	B	B	S	S	S			3				
[17]		(E)PLATE-LOCKING (D)PLATTE,VERRIEGELUNG									(F)PLAQUE-VERROUILLAGE (S)PLACA-CIERRE					
	96243426	.	M	B	B	B	S	S	S			1				

ENG(ENGINE)	T/A(TRANSAXLE)	BODY TYPE
Y = 1.5SOHC 6 = 1.6DOHC . = COMMON	M = MANUAL T/A A = AUTOMATIC T/A . = COMMON	4 N = 4 DOOR NOTCHBACK 3 H = 3 DOOR HATCHBACK 5 H = 5 DOOR HATCHBACK

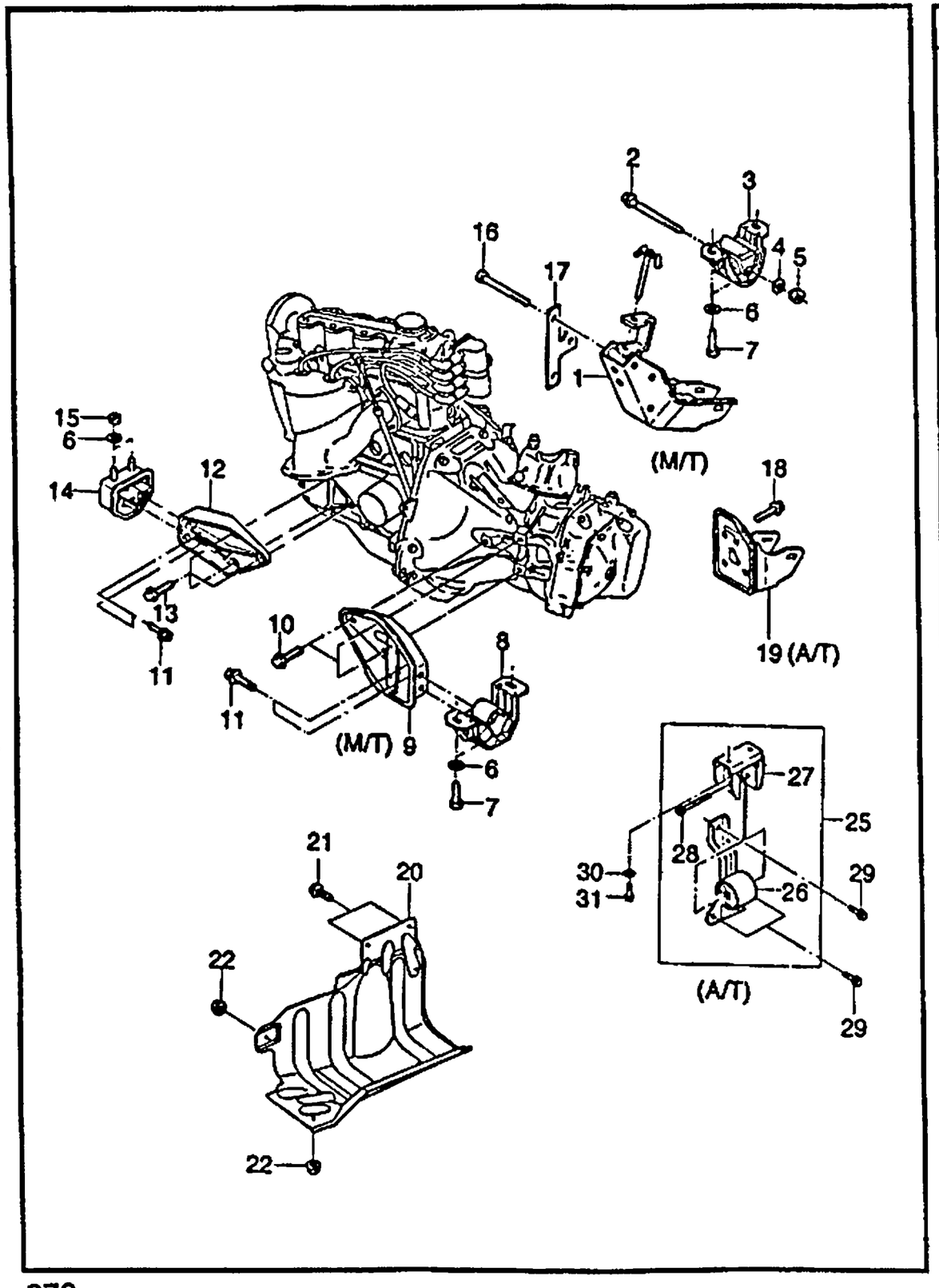

KEY NO. ITC	PART NO	MODEL ENG	T/A	BODY 4N	3H	5H	LEVEL S	SE	SX	OPTION	L/R	QTY	EFFECTIVE DATE FROM	TO	REMARKS	PICODE
[18]	09103-10011	.	A	B	B	B	O	O	O	(E)BOLT-HEXAGON FLANGE (D)SCHRAUBE	(F)BOULON (S)PERNO	3				
[19]	96181137	.	A	B	B	B	O	O	O	(E)BRACKET A-POWER UNIT MT,RR (D)TRÄGER	(F)SUPPORT (S)SOPORTE-MONTAJE	1				L4
[20]	96251681	.	.	B	B	B	S	S	S	(E)DEFLECTOR-WATER (D)WASSERSCHUTZ-FLÜGEL	(F)DEFLECTEUR-EAU (S)DEFLECTOR-AGUA	1				
[21]	09116-06011	.	.	B	B	B	S	S	S	(E)BOLT (D)SCHRAUBE	(F)BOULON (S)PERNO	2				
[22]	08361-25063	.	.	B	B	B	S	S	S	(E)NUT-HEXAGON (D)MUTTER	(F)ECROU (S)TUERCA	2				
[25]	96214804	.	A	B	B	B	O	O	O	(E)BRACKET A-POWER UNIT MOUNT (D)TRÄGER	(F)SUPPORT (S)SOPORTE	LH 1				G4
[26]	96181132	.	A	B	B	B	O	O	O	(E)BRACKET-POWER UNIT MT,FRT (D)TRÄGER	(F)SUPPORT (S)SOPORTE	LH 1				
[27]	96181129	.	A	B	B	B	O	O	O	(E)SUPPORT A-POWER UNIT MT,FRT (D)TRÄGER	(F)SUPPORT (S)SOPORTE	LH 1				
[28]	09103-10034	.	A	B	B	B	O	O	O	(E)BOLT-HEXAGON FLANGE (D)SCHRAUBE	(F)BOULON (S)PERNO	LH 1				
[29]										(E)BOLT-HEXAGON FLANGE (D)SCHRAUBE	(F)BOULON (S)PERNO					

ENG(ENGINE)	T/A(TRANSAXLE)	BODY TYPE
Y = 1.5SOHC	M = MANUAL T/A	4 N = 4 DOOR NOTCHBACK
6 = 1.6DOHC	A = AUTOMATIC T/A	3 H = 3 DOOR HATCHBACK
. = COMMON	. = COMMON	5 H = 5 DOOR HATCHBACK

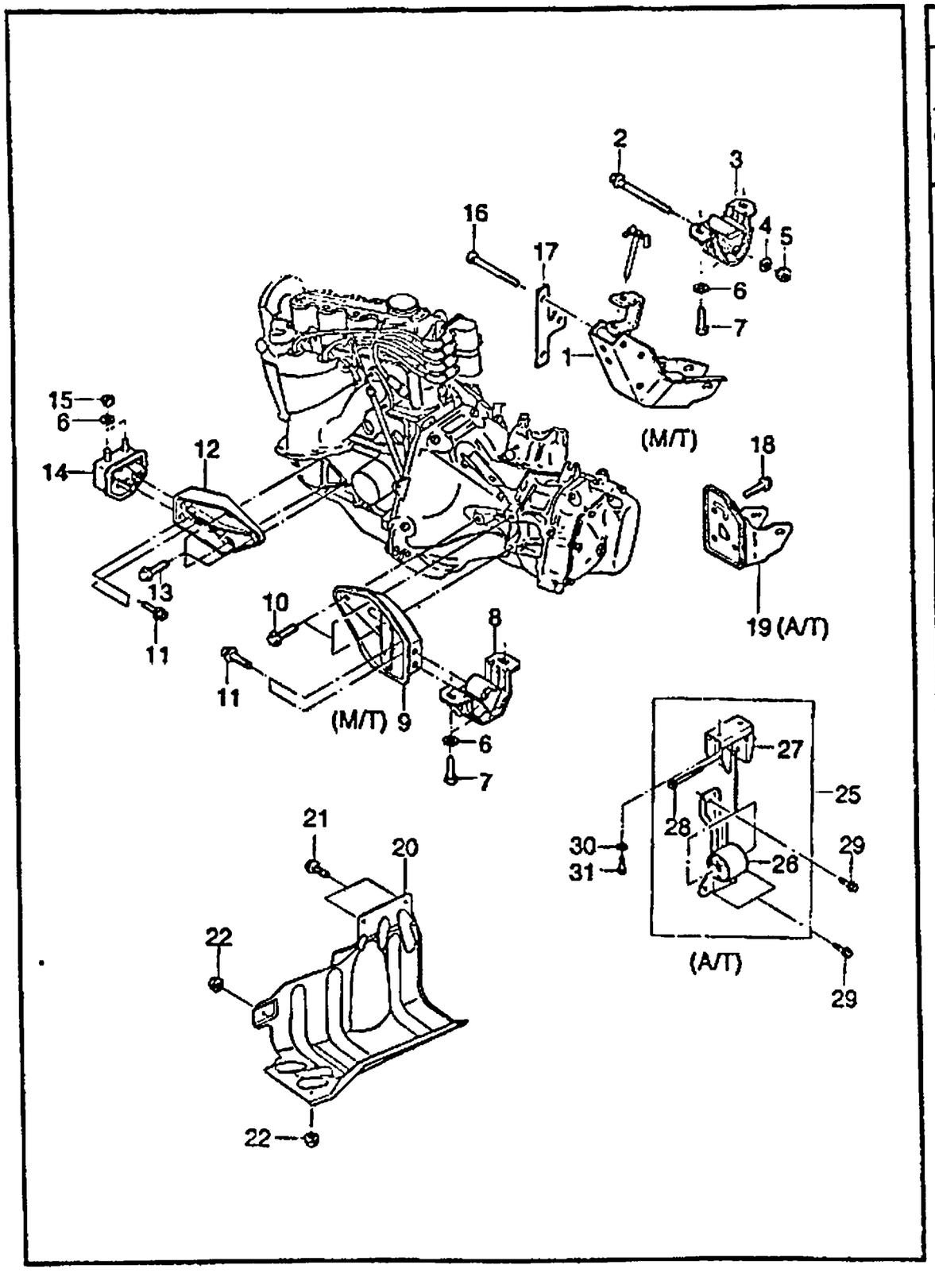

KEY NO.		PART NAME															
ITC	PART NO	MODEL								OPTION	L/R	QTY	EFFECTIVE DATE		REMARKS	P/CODE
		ENG	T/A	BODY			LEVEL						FROM	TO		
				4N	3H	5H	S	SE	SX							
	09103-12018	.	A	B	B	B	O	O	O		LH	3				
		(E)WASHER-PLAIN									(F)RONDELLE					
	[30]	(D)DICHTUNGSRING									(S)ARANDELA					
	09160-10004	.	A	B	B	B	O	O	O		LH	2				
		(E)BOLT-HEXAGON									(F)BOULON					
	[31]	(D)SCHRAUBE									(S)PERNO					
	09100-10012	.	A	B	B	B	O	O	O		LH	2				

ENG(ENGINE)	T/A(TRANSAXLE)	BODY TYPE
Y = 1.5SOHC	M = MANUAL T/A	4 N = 4 DOOR NOTCHBACK
6 = 1.6DOHC	A = AUTOMATIC T/A	3 H = 3 DOOR HATCHBACK
. = COMMON	. = COMMON	5 H = 5 DOOR HATCHBACK

2 FUEL&ENGINE CONTROL

2110 FUEL TANK

2120 FUEL LINE

2130 CANISTER&FUEL VACUUM

2210 FUEL INJECTION(SOHC)

2211 FUEL INJECTION(DOHC)

2212 FUEL INJECTION(ALCOHOL)

2220 ACCELERATOR CONTROL

2410 AIR INTAKE SYSTEM

2430 INTAKE MANIFOLD(SOHC)

2431 INTAKE MANIFOLD(DOHC)

2440 EXHAUST MANIFOLD(SOHC)

2441 EXHAUST MANIFOLD(DOHC)

2450 VACUUM HOSE(SOHC)

2451 VACUUM HOSE(DOHC)

2460 EXHAUST PIPE LINE

2510 EMISSION CONTROL

2520 EMISSION MODULE MOUNT

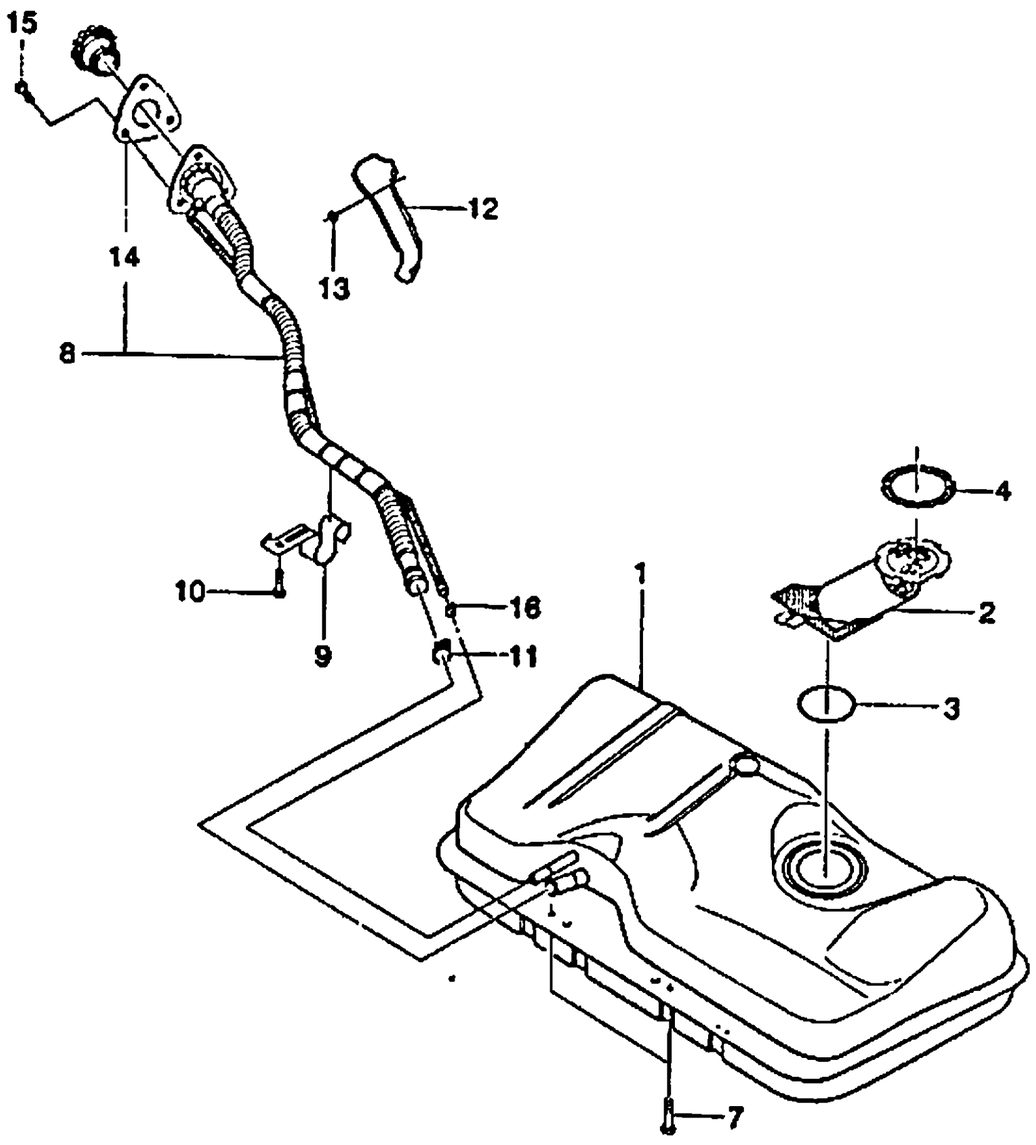

KEY NO.	PART NO	MODEL: ENG	T/A	BODY: 4N	3H	5H	LEVEL: S	SE	SX	OPTION	L/R	QTY	EFFECTIVE DATE: FROM	TO	REMARKS	P/CODE
[01]		(E)TANK A-FUEL (D)TANK,BENZIN									(F)RESERVOIR-CARBURANT (S)TANQUE-COMBUSTIBLE					
	S2110003	.	.	B	B	B	S	S	S	-KL9		1				
	S2110006	6	.	B	B	B	.	.	A	&KL9		1				
[02]		(E)MODULE A-FUEL PUMP (D)PUMPE,BENZIN									(F)POMPE-CARBURANT (S)BOMBA-COMBUSTIBLE					
	96350588	.	.	B	B	B	S	S	S	-KL9		1				TA
	96352018	6	.	B	B	B	.	.	A	&KL9		1				TC
[03]		(E)O RING-FUEL PUMP (D)O RING									(F)JOINT TORIQUE (S)ANILLO EN O					
	96183170	.	.	B	B	B	S	S	S			1				
[04]		(E)RING-FUEL PUMP LOCKING (D)RING,DICHTUNG									(F)ANNEAU-JOINT (S)ANILLO-SELLO					
	96183169	.	.	B	B	B	S	S	S			1				
[07]		(E)BOLT-W/WASHER (D)SCHRAUBE									(F)BOULON (S)PERNO					
	09116-08001	.	.	B	B	B	S	S	S			4				
[08]		(E)TUBE A-FUEL FILLER (D)ROHRLEITUNG,BENZIN TANKEN									(F)TUYAU (S)TUBO-LLENAR COMBUSTIBLE					
	96351641	.	.	B	B	B	S	S	S	&NN4		1				
	96351342	.	.	B	B	B	A	A	A	&NN6/NN7		1				
[09]		(E)BRACKET-FUEL FILLER (D)TRÄGER									(F)SUPPORT (S)SOPORTE					
	96351522	.	.	B	B	B	S	S	S			1				
[10]		(E)BOLT-HEXAGON (D)SCHRAUBE									(F)BOULON (S)PERNO					
	01127-08163	.	.	B	B	B	S	S	S			1				

ENG(ENGINE)	T/A(TRANSAXLE)	BODY TYPE
Y = 1.5SOHC 6 = 1.6DOHC . = COMMON	M = MANUAL T/A A = AUTOMATIC T/A . = COMMON	4 N = 4 DOOR NOTCHBACK 3 H = 3 DOOR HATCHBACK 5 H = 5 DOOR HATCHBACK

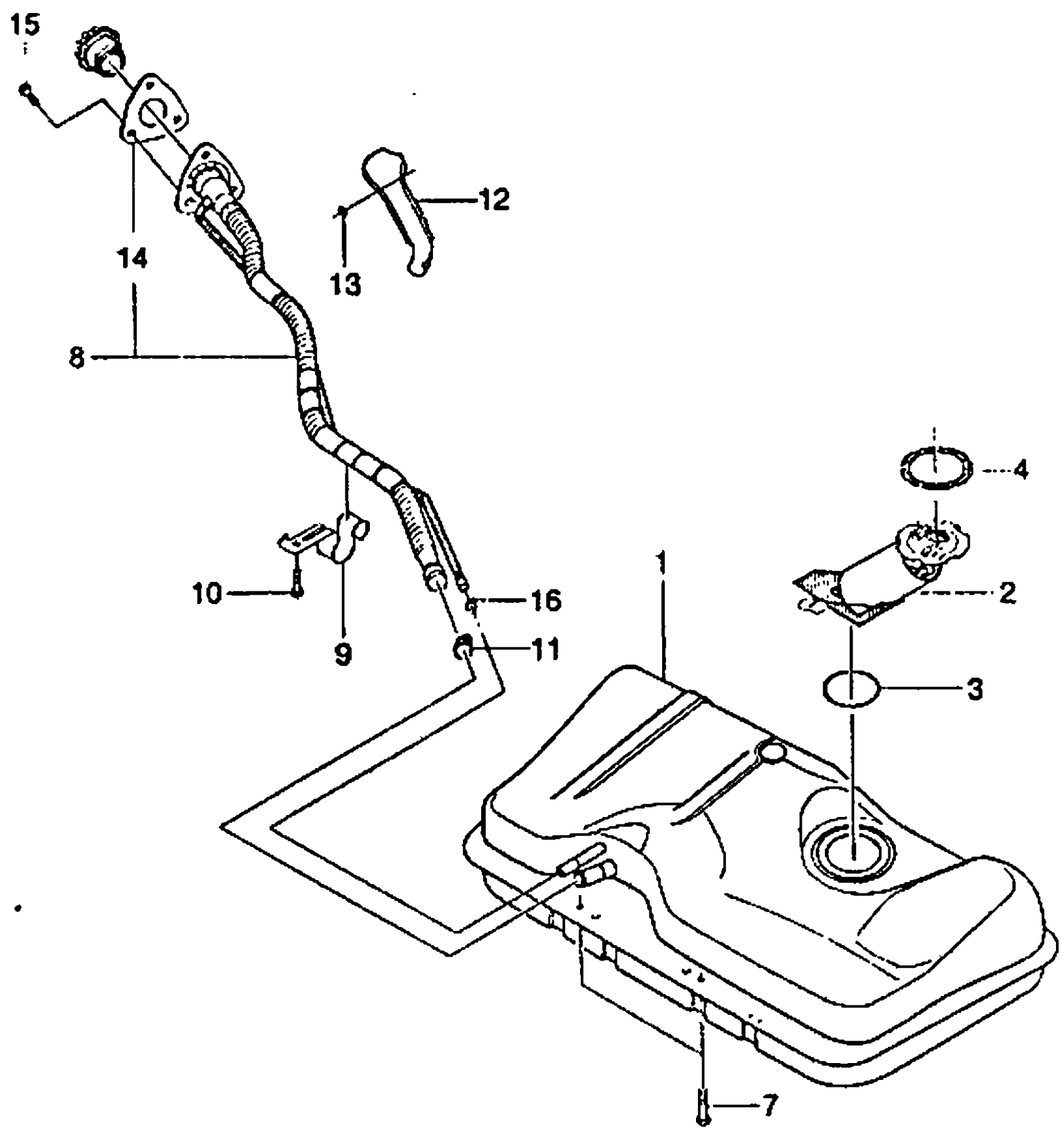

KEY NO. ITC	PART NO	MODEL ENG	T/A	BODY 4N	3H	5H	LEVEL S	SE	SX	OPTION	L/R	QTY	EFFECTIVE DATE FROM	TO	REMARKS	P/CODE
[11]	96313240	(E)CLAMP-FUEL FILLER (D)KLAMMER	. .	B	B	B	S	S	S		(F)PINCE (S)ABRAZADERA	1				
[12]	96351534	(E)SHIELD-FUEL FILLER (D)SCHILD	. .	B	B	B	S	S	S		(F)BOUCLIER (S)ESCUDO	1				
[13]	09159-06003	(E)NUT (D)MUTTER	. .	B	B	B	S	S	S		(F)ECROU (S)TUERCA	4				
[14]	96184683	(E)SEAL-FUEL FILLER TUBE (D)DICHTUNG,BENZIN TANK ROHR	. .	B	B	B	S	S	S		(F)JOINT (S)SELLO	1				
[15]	03152-48192	(E)SCREW-TAPPING (D)SCHRAUBE	. .	B	B	B	S	S	S		(F)VIS (S)TORNILLO	3				
[16]	09402-25501	(E)CLAMP (D)KLAMMER	. .	B	B	B	S	S	S		(F)PINCE (S)ABRAZADERA	1				

ENG(ENGINE)	T/A(TRANSAXLE)	BODY TYPE
Y = 1.5SOHC 6 = 1.6DOHC . = COMMON	M = MANUAL T/A A = AUTOMATIC T/A . = COMMON	4 N = 4 DOOR NOTCHBACK 3 H = 3 DOOR HATCHBACK 5 H = 5 DOOR HATCHBACK

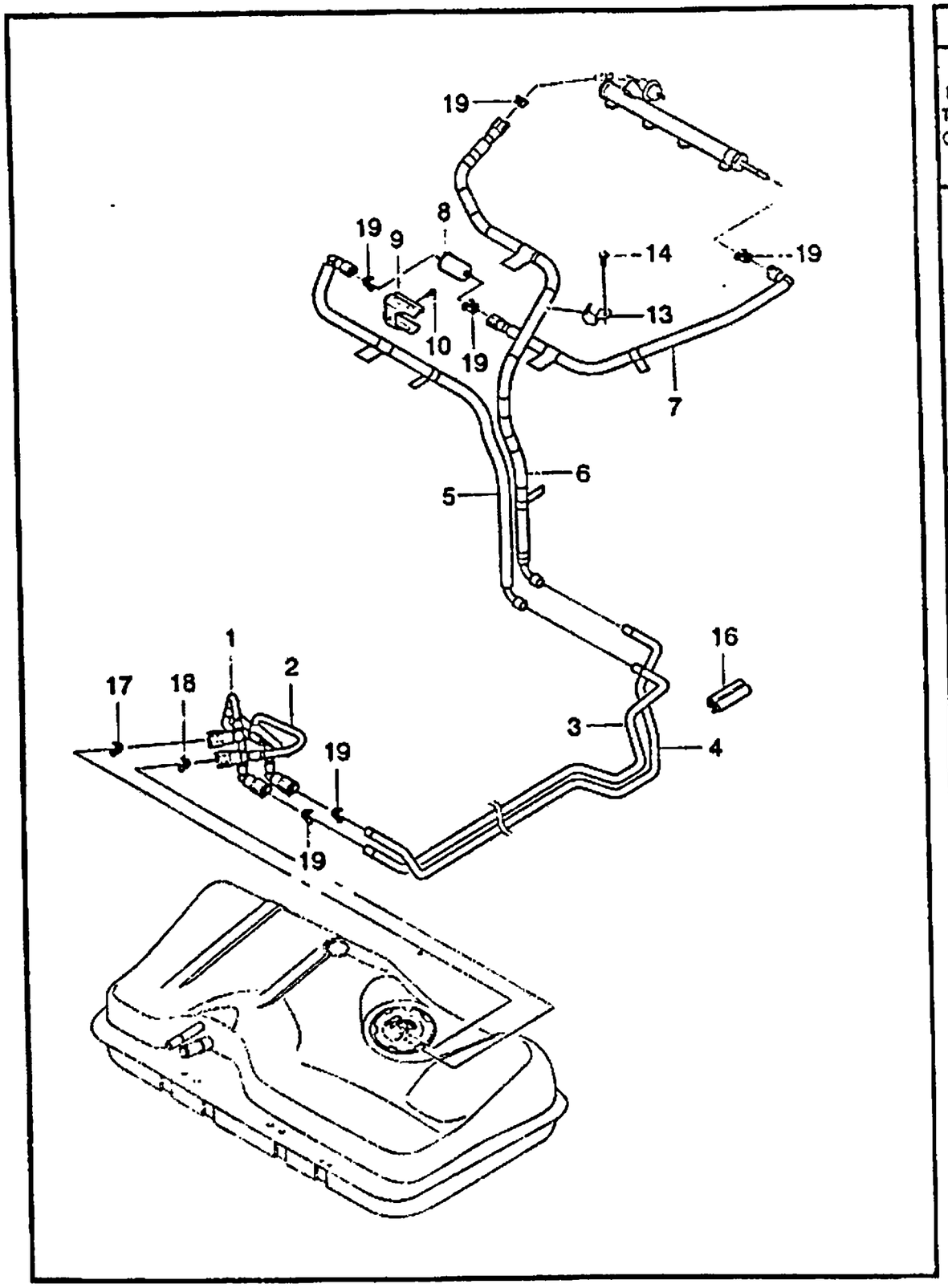

KEY NO. ITC	PART NO	MODEL ENG	T/A	BODY 4N	3H	5H	LEVEL S	SE	SX	OPTION	L/R	QTY	EFFECTIVE DATE FROM	TO	REMARKS	P/CODE
[01]		(E)TUBE A-FUEL FEEDING,REAR (D)ROHRLEITUNG									(F)TUYAU OU TUBE (S)TUBO					
	96352095														NOT APPLIED	
	96184396	.	.	B	B	B	S	S	S			1			INCL. #17,19	
[02]		(E)TUBE A-FUEL RETURN,REAR (D)ROHRLEITUNG									(F)TUYAU OU TUBE (S)TUBO					
	96352096														NOT APPLIED	
	96184397	.	.	B	B	B	S	S	S			1			INCL. #18,19	
[03]		(E)PIPE-FUEL FEEDING,CENTER (D)ROHR									(F)TUYAU (S)TUBERIA					
	96250326	.	.	B	B	B	S	S	S	-KL9		1				
	96352019	6	.	B	B	B	.	.	A	&KL9		1				
[04]		(E)PIPE-FUEL RETURN,CENTER (D)ROHR									(F)TUYAU (S)TUBERIA					
	96182304	.	.	B	B	B	S	S	S	-KL9		1				
	96352020	6	.	B	B	B	.	.	A	&KL9		1				
[05]		(E)TUBE A-FUEL FILTER,REAR (D)ROHRLEITUNG									(F)TUYAU OU TUBE (S)TUBO					
	96352099	.	.	B	B	B	S	S	S			1			INCL. #19	
[06]		(E)TUBE A-FUEL RETURN,FRONT (D)ROHRLEITUNG									(F)TUYAU OU TUBE (S)TUBO					
	96352100	Y	.	B	B	B	S	S	S			1			INCL. #19	
	96352101	6	.	B	B	B	.	.	O	-KL9		1			INCL. #19	
	96352022	6	.	B	B	B	.	.	A	&KL9		1			HOSE TYPE	
[07]		(E)TUBE A-FUEL FILTER,FRT (D)ROHRLEITUNG									(F)TUYAU OU TUBE (S)TUBO					
	96352102	Y	.	B	B	B	S	S	S			1			INCL. #19	

ENG(ENGINE)	T/A(TRANSAXLE)	BODY TYPE
Y = 1.5SOHC	M = MANUAL T/A	4 N = 4 DOOR NOTCHBACK
6 = 1.6DOHC	A = AUTOMATIC T/A	3 H = 3 DOOR HATCHBACK
. = COMMON	. = COMMON	5 H = 5 DOOR HATCHBACK

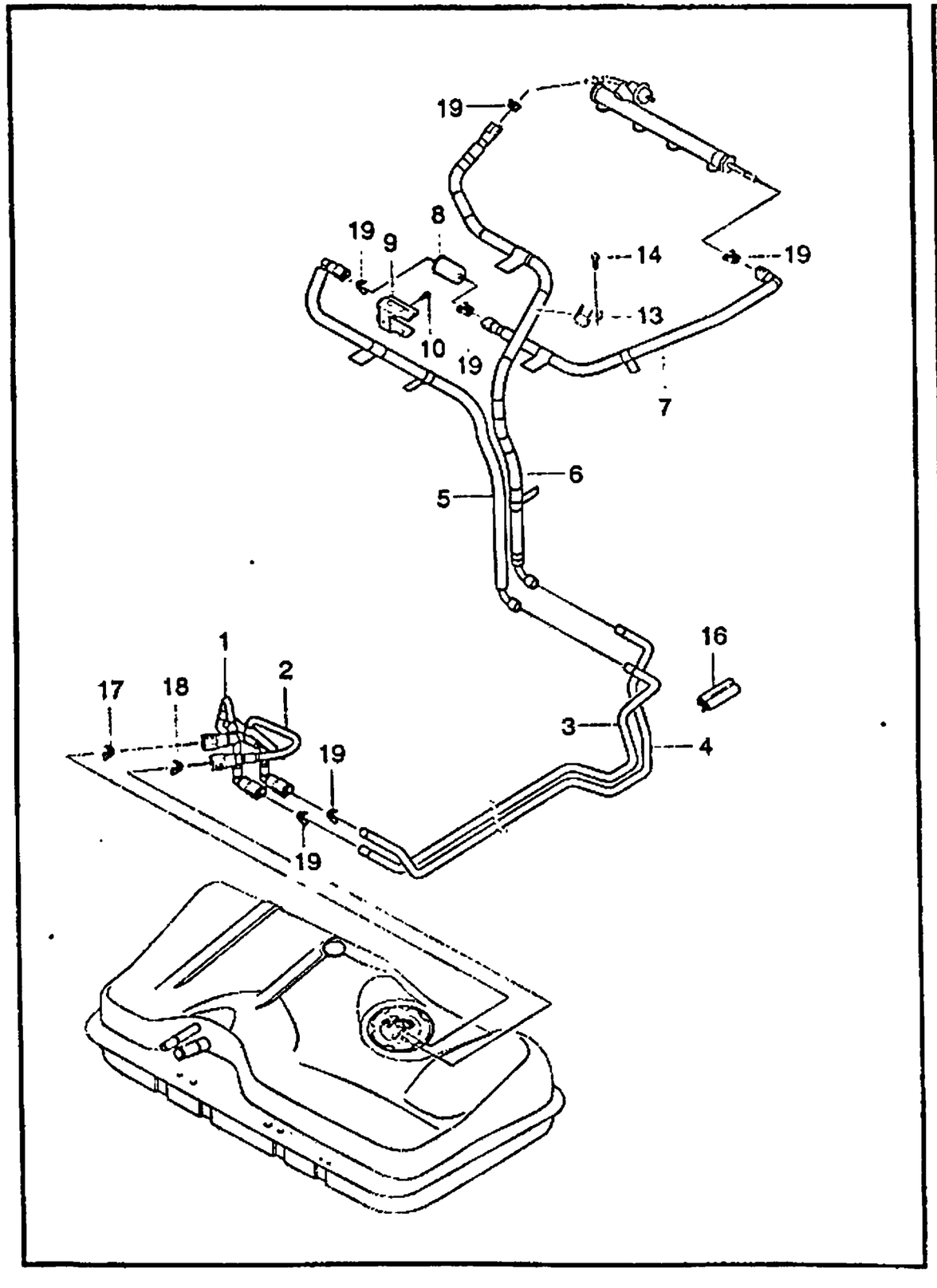

KEY NO.		PART NAME															
ITC	PART NO	MODEL								OPTION	L/R	QTY	EFFECTIVE DATE		REMARKS	P/CODE
		ENG	T/A	BODY			LEVEL						FROM	TO		
				4N	3H	5H	S	SE	SX							
[08]	96350574	6	.	B	B	B	.	.	O		1				INCL. #19	
	(E)FILTER-FUEL (D)FILTER,BENZIN										(F)FILTRE-CARBURANT (S)FILTRO-COMBUSTIBLE					
[09]	25121074	.	.	B	B	B	S	S	S		1					
	(E)BRACKET-FUEL FILTER (D)TRÄGER,BENZINFILTER										(F)SUPPORT (S)SOPORTE					
[10]	96351817	.	.	B	B	B	S	S	S		1					
	(E)BOLT-HEXAGON (D)SCHRAUBE										(F)BOULON (S)PERNO					
[13]	01114-06125	.	.	B	B	B	S	S	S		1					
	(E)CLIP-FUEL RETURN TUBE (D)KLEMME										(F)ATTACHE (S)GRAPA					
[14]	96352125	Y	.	B	B	B	S	S	S		1					
	(E)BOLT-HEXAGON (D)SCHRAUBE										(F)BOULON (S)PERNO					
[16]	03151-63163	Y	.	B	B	B	S	S	S		1					
	(E)COVER A-FLANGE (D)DECKEL										(F)COUVERTURE (S)CUBIERTA					
[17]	96352078	.	.	B	B	B	S	S	S		1					
	(E)RETAINER (D)HALTER										(F)ARRETOIR (S)RETENEDOR					
[18]	HP-9P-86019	.	.	B	B	B	S	S	S		1				Φ9.5mm	
	(E)RETAINER (D)HALTER										(F)ARRETOIR (S)RETENEDOR					
[19]	HP-9P-87012	.	.	B	B	B	S	S	S		1				Φ6.5mm	
	(E)RETAINER (D)HALTER										(F)ARRETOIR (S)RETENEDOR					
	HP-9P-86020	Y	.	B	B	B	S	S	S		6				Φ8mm	

ENG(ENGINE)	T/A(TRANSAXLE)	BODY TYPE
Y = 1.5SOHC 6 = 1.6DOHC . = COMMON	M = MANUAL T/A A = AUTOMATIC T/A . = COMMON	4 N = 4 DOOR NOTCHBACK 3 H = 3 DOOR HATCHBACK 5 H = 5 DOOR HATCHBACK

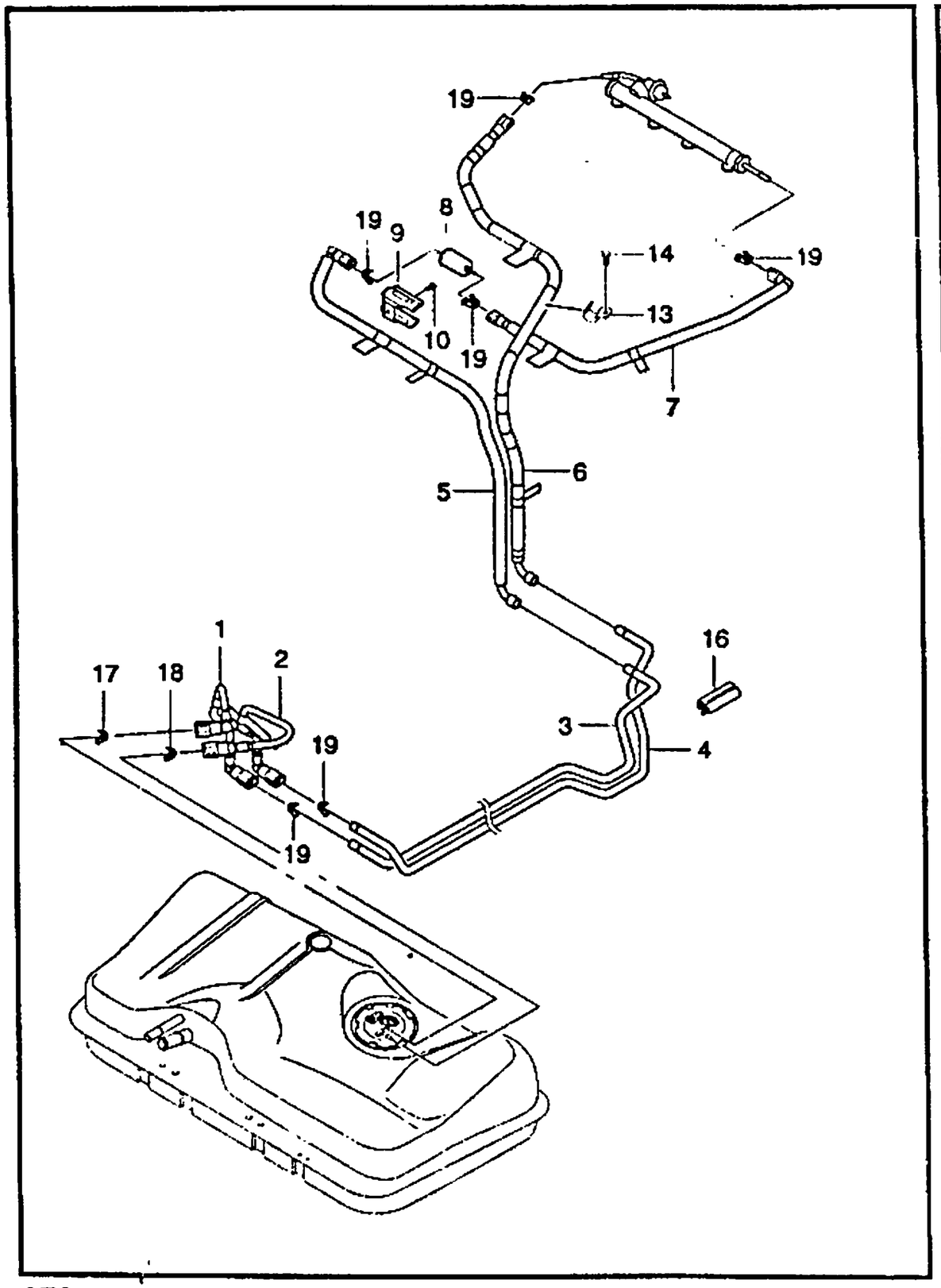

KEY NO.		PART NAME														
		MODEL														
				BODY			LEVEL						EFFECTIVE DATE			
ITC	PART NO	ENG	T/A	4N	3H	5H	S	SE	SX	OPTION	L/R	QTY	FROM	TO	REMARKS	P/CODE
	HP-9P-86020	6	.	B	B	B	.	.	O			5			ϕ 8mm	

ENG(ENGINE)	T/A(TRANSAXLE)	BODY TYPE
Y = 1.5SOHC	M = MANUAL T/A	4 N = 4 DOOR NOTCHBACK
6 = 1.6DOHC	A = AUTOMATIC T/A	3 H = 3 DOOR HATCHBACK
. = COMMON	. = COMMON	5 H = 5 DOOR HATCHBACK

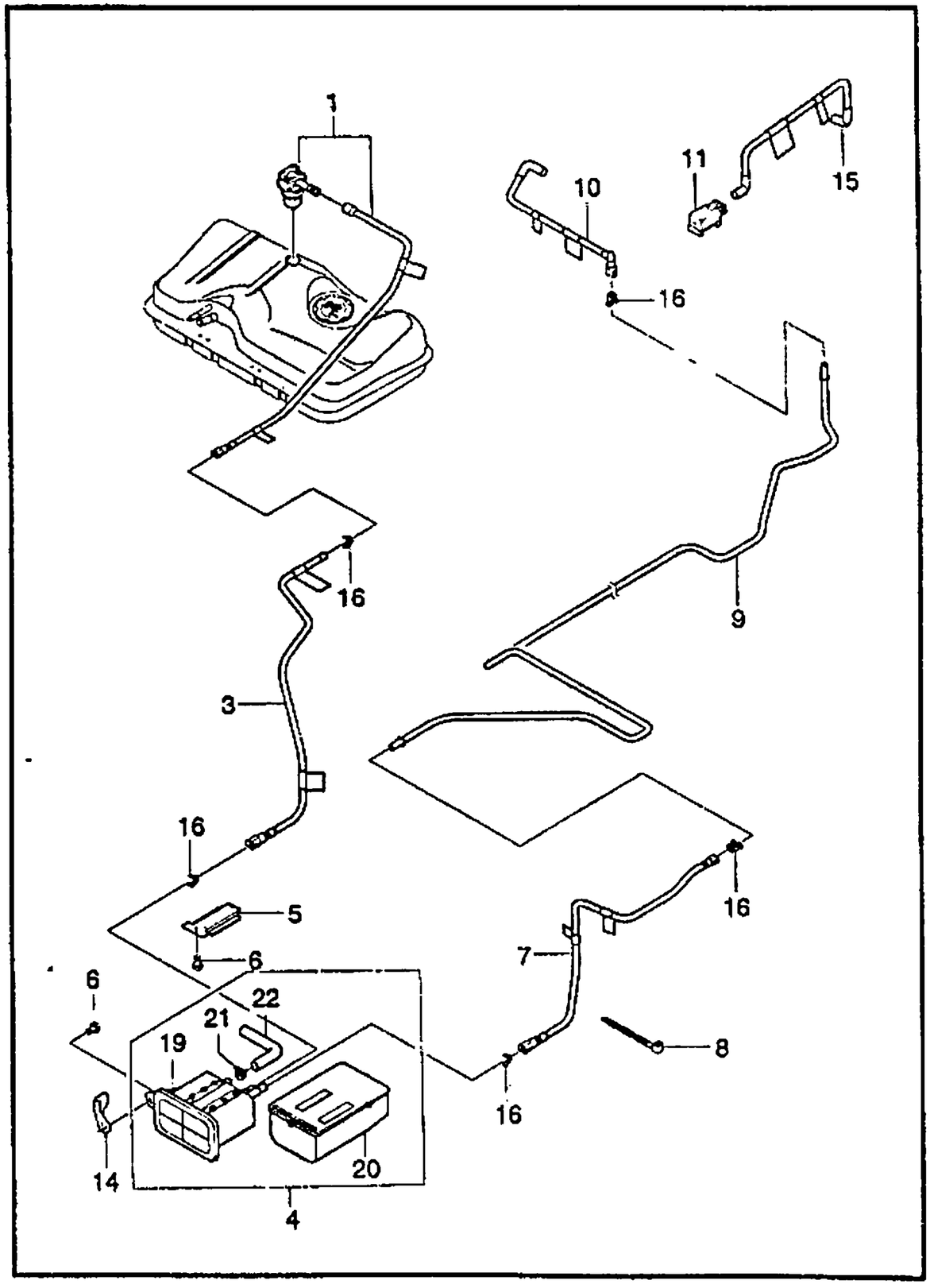

KEY NO.	PART NAME															
ITC	PART NO	MODEL								OPTION	L/R	QTY	EFFECTIVE DATE		REMARKS	P/CODE
		ENG	T/A	BODY			LEVEL						FROM	TO		
				4N	3H	5H	S	SE	SX							
[01]	(E)TUBE A-FUEL VAPOR ROLLOVER (D)ROHRLEITUNG										(F)TUYAU OU TUBE (S)TUBO					
96182328		.	.	B	B	B	S	S	S		1					
96352264		6	.	B	B	B	.	.	A	&KL9	1					
[03]	(E)TUBE A-CANISTER VAPOR (D)ROHRLEITUNG										(F)TUYAU OU TUBE (S)TUBO					
96184843		.	.	B	B	B	A	A	A	&NN4&VB4	1				INCL. #16	
96184843		.	.	B	B	B	A	A	A	&NN6/NN7	1				INCL. #16	
96352265		6	.	B	B	B	.	.	A	&KL9	1				INCL. #16	
[04]	(E)CANISTER A (D)KANISTER BENZIN-DAMPF										(F)BOITE-VAPEURS CARBURANT (S)BOTE-COMBUSTIBLE Y VAPOR					
96351827		.	.	B	B	B	A	A	A	&NN4&VB4	1				0.85L	
96351827		.	.	B	B	B	A	A	A	&NN6/NN7	1				0.85L	
96351827		6	.	B	B	B	.	.	A	&KL9	1				0.85L	
[05]	(E)BRACKET-CANISTER GUIDE (D)TRÄGER,KANISTER										(F)SUPPORT-BOITE METALLIQUE (S)SOPORTE-BOTE					
96184721		.	.	B	B	B	A	A	A	&NN4&VB4	1					
96184721		.	.	B	B	B	A	A	A	&NN6/NN7	1					
96184721		6	.	B	B	B	.	.	A	&KL9	1					
[06]	(E)BOLT (D)SCHRAUBE										(F)BOULON (S)PERNO					
09116-06024		.	.	B	B	B	A	A	A	&NN4&VB4	3					
09116-06024		.	.	B	B	B	A	A	A	&NN6/NN7	3					
09116-06024		6	.	B	B	B	.	.	A	&KL9	3					
[07]	(E)TUBE A-PURGE,REAR (D)ROHRLEITUNG										(F)TUYAU OU TUBE (S)TUBO					
96184842		.	.	B	B	B	A	A	A	&NN4&VB4	1				INCL. #16	

ENG(ENGINE)	T/A(TRANSAXLE)	BODY TYPE
Y = 1.5SOHC 6 = 1.6DOHC . = COMMON	M = MANUAL T/A A = AUTOMATIC T/A . = COMMON	4 N = 4 DOOR NOTCHBACK 3 H = 3 DOOR HATCHBACK 5 H = 5 DOOR HATCHBACK

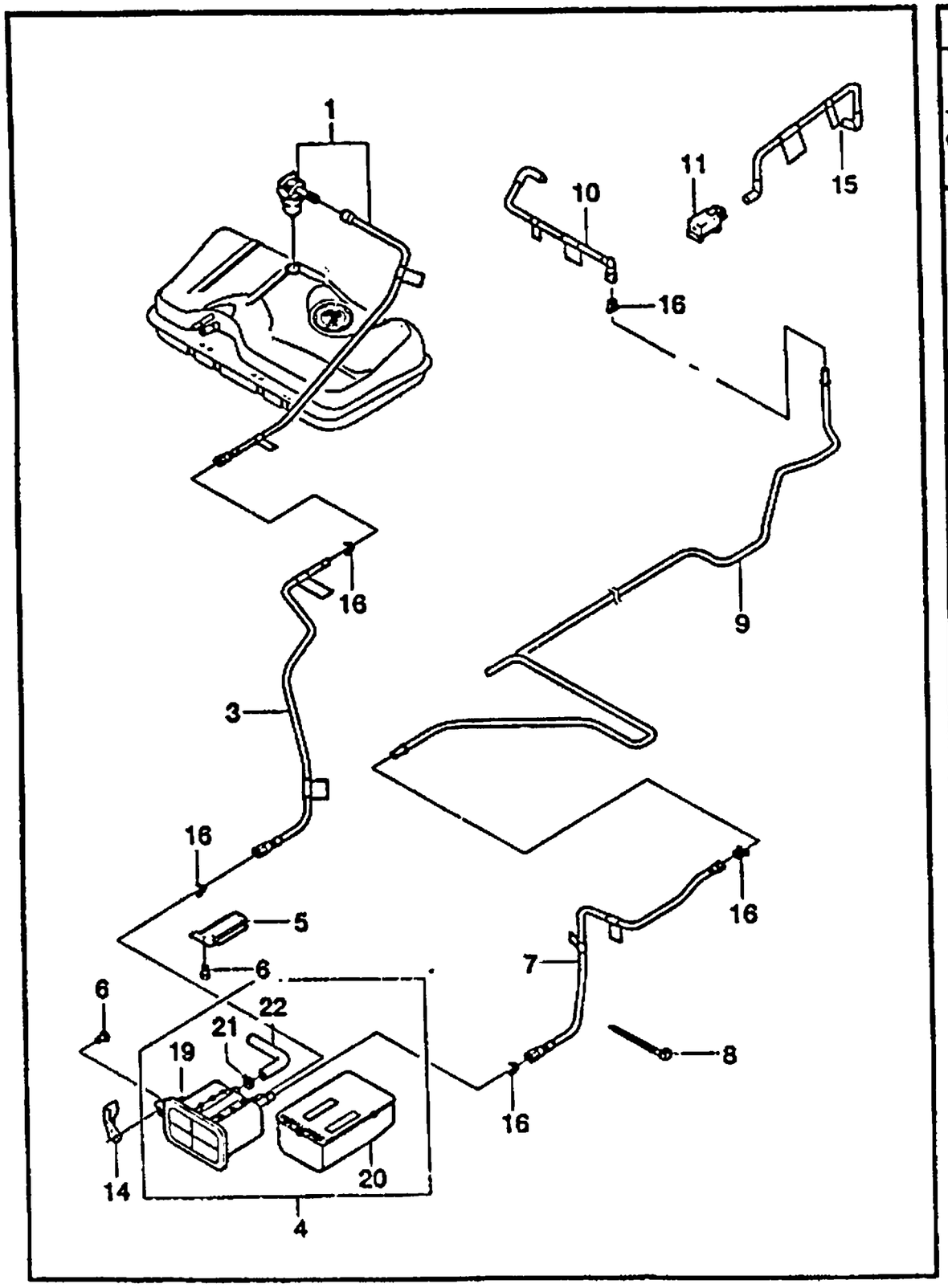

KEY NO. ITC	PART NO	MODEL ENG	T/A	BODY 4N	3H	5H	LEVEL S	SE	SX	OPTION	L/R	QTY	EFFECTIVE DATE FROM	TO	REMARKS	P/CODE
	96184842	.	.	B	B	B	A	A	A	&NN6/NN7		1			INCL. #16	
	96184842	6	.	B	B	B	.	.	A	&KL9		1			INCL. #16	
[08]	(E)CLAMP (D)KLAMMER											(F)PINCE (S)ABRAZADERA				
	09407-25401	.	.	B	B	B	A	A	A	&NN4&VB4		1				
	09407-25401	.	.	B	B	B	A	A	A	&NN6/NN7		1				
	09407-25401	6	.	B	B	B	.	.	A	&KL9		1				
[09]	(E)PIPE-PURGE,CENTER (D)ROHR											(F)TUYAU (S)TUBERIA				
	96182327	.	.	B	B	B	A	A	A	&NN4&VB4		1				
	96182327	.	.	B	B	B	A	A	A	&NN6/NN7		1				
	96182327	6	.	B	B	B	.	.	A	&KL9		1				
[10]	(E)TUBE A-PURGE,FRONT (D)ROHRLEITUNG											(F)TUYAU OU TUBE (S)TUBO				
	96351536	Y	.	B	B	B	A	A	A	&NN4&VB4		1			INCL. #16	
	96351536	Y	.	B	B	B	A	A	A	&NN6/NN7		1			INCL. #16	
	96351537	6	.	B	B	B	.	.	A	&NN4&VB4		1			INCL. #16	
	96351537	6	.	B	B	B	.	.	A	&NN6/NN7		1			INCL. #16	
	96351537	6	.	B	B	B	.	.	A	&KL9		1			INCL. #16	
[11]	(E)VALVE-PCV (D)VENTIL											(F)SOUPAPE (S)VALVULA				
	96311368	Y	.	B	B	B	A	A	A	&NN4&VB4		1				
	96311368	Y	.	B	B	B	A	A	A	&NN6/NN7		1				
	1997210	6	.	B	B	B	.	.	A	&NN4&VB4		1				
	1997210	6	.	B	B	B	.	.	A	&NN6/NN7		1				
	96311368	6	.	B	B	B	.	.	A	&KL9		1				

ENG(ENGINE)	T/A(TRANSAXLE)	BODY TYPE
Y = 1.5SOHC 6 = 1.6DOHC . = COMMON	M = MANUAL T/A A = AUTOMATIC T/A . = COMMON	4 N = 4 DOOR NOTCHBACK 3 H = 3 DOOR HATCHBACK 5 H = 5 DOOR HATCHBACK

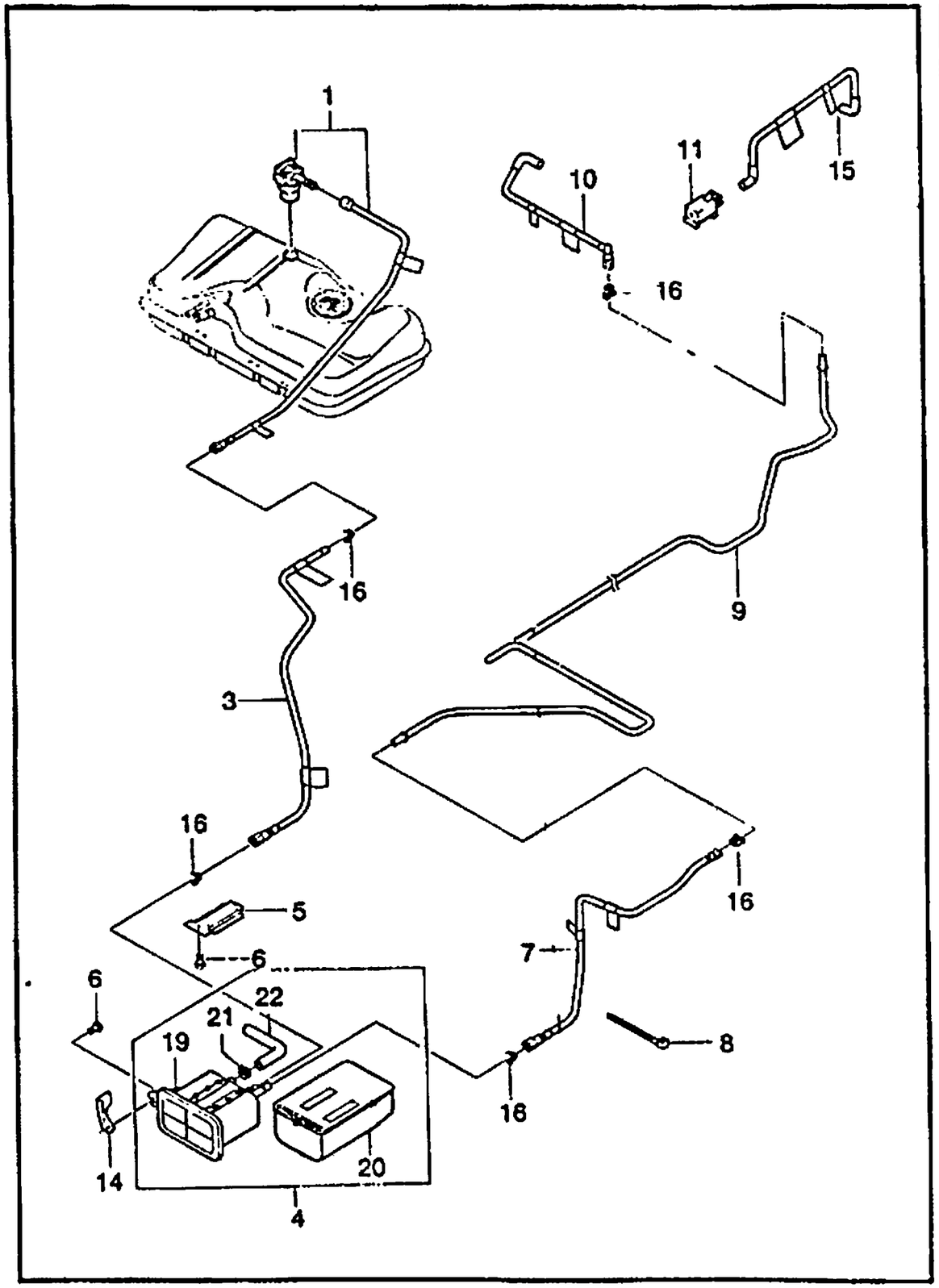

KEY NO. ITC	PART NO	MODEL ENG	T/A	BODY 4N	3H	5H	LEVEL S	SE	SX	OPTION	L/R	QTY	EFFECTIVE DATE FROM	TO	REMARKS	P/CODE
[14]		(E)BRACKET A-CANISTER (D)TRÄGER,KANISTER									(F)SUPPORT-BOITE METALLIQUE (S)SOPORTE-BOTE					
96216728		.	.	B	B	B	S	S	S		1					
[15]		(E)TUBE A-PURGE,ENGINE (D)ROHRLEITUNG									(F)TUYAU OU TUBE (S)TUBO					
96351540		Y	.	B	B	B	A	A	A	&NN4&VB4	1					
96351540		Y	.	B	B	B	A	A	A	&NN6/NN7	1					
96351889		6	.	B	B	B	.	.	A	&NN4&VB4	1					
96351889		6	.	B	B	B	.	.	A	&NN6/NN7	1					
96351889		6	.	B	B	B	.	.	A	&KL9	1					
[16]		(E)RETAINER (D)HALTER									(F)ARRETOIR (S)RETENEDOR					
HP-9P-86020		.	.	B	B	B	A	A	A	&NN4&VB4	5				Φ 8mm	
HP-9P-86020		.	.	B	B	B	A	A	A	&NN6/NN7	5				Φ 8mm	
HP-9P-86020		6	.	B	B	B	.	.	A	&KL9	5				Φ 8mm	
[19]		(E)CANISTER (D)KANISTER,BENZIN-DAMPF									(F)BOITE-VAPEURS CARBURANT (S)BOTE-COMBUSTIBLE Y VAPOR					
96181415		.	.	B	B	B	A	A	A	&NN4&VB4	1					
96181415		.	.	B	B	B	A	A	A	&NN6/NN7	1					
96181415		6	.	B	B	B	.	.	A	&KL9	1					
[20]		(E)SHIELD-CANISTER (D)SCHILD									(F)BOUCLIER (S)ESCUDO					
96351820		.	.	B	B	B	A	A	A	&NN4&VB4	1					
96351820		.	.	B	B	B	A	A	A	&NN6/NN7	1					
96351820		6	.	B	B	B	.	.	A	&KL9	1					
[21]		(E)CLIP (D)KLEMME									(F)ATTACHE (S)GRAPA					

ENG(ENGINE)	T/A(TRANSAXLE)	BODY TYPE
Y = 1.5SOHC 6 = 1.6DOHC . = COMMON	M = MANUAL T/A A = AUTOMATIC T/A . = COMMON	4 N = 4 DOOR NOTCHBACK 3 H = 3 DOOR HATCHBACK 5 H = 5 DOOR HATCHBACK

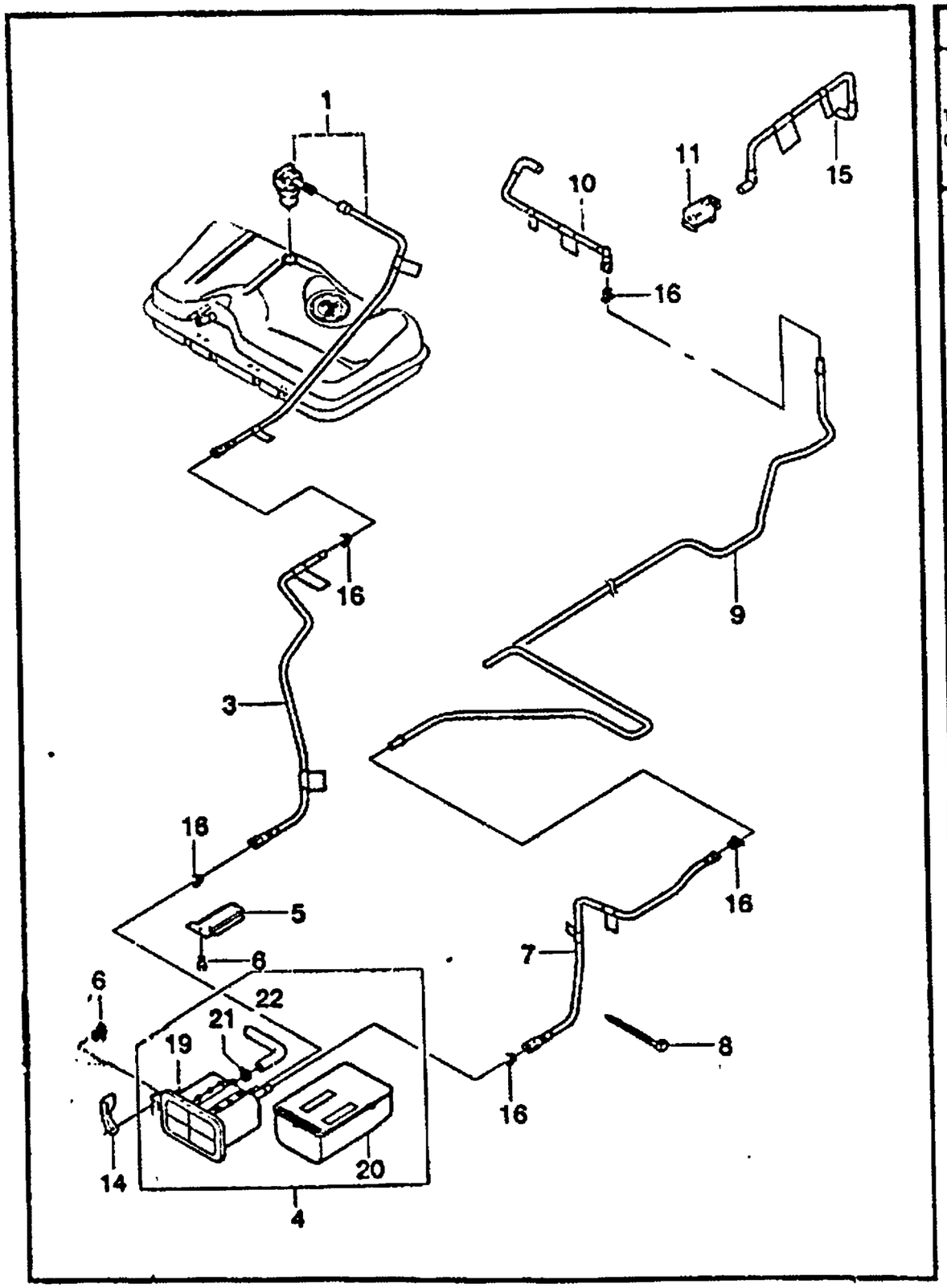

KEY NO.		PART NAME															
ITC	PART NO	MODEL								OPTION	L/R	QTY	EFFECTIVE DATE		REMARKS	PICODE
		ENG	T/A	BODY			LEVEL						FROM	TO		
				4N	3H	5H	S	SE	SX							
	09401-15403	.	.	B	B	B	A	A	A	&NN4&VB4		1				
	09401-15403	.	.	B	B	B	A	A	A	&NN6/NN7		1				
	09401-15403	6	.	B	B	B	.	.	A	&KL9		1				
[22]		(E)HOSE-AIR VENT,CANISTER (D)SCHLAUCH									(F)TUYAU (S)MANGUERA					
	96351958	.	.	B	B	B	A	A	A	&NN4&VB4		1				
	96351958	.	.	B	B	B	A	A	A	&NN6/NN7		1				
	96351958	6	.	B	B	B	.	.	A	&KL9		1				

ENG(ENGINE)	T/A(TRANSAXLE)	BODY TYPE
Y = 1.5SOHC 6 = 1.6DOHC . = COMMON	M = MANUAL T/A A = AUTOMATIC T/A . = COMMON	4 N = 4 DOOR NOTCHBACK 3 H = 3 DOOR HATCHBACK 5 H = 5 DOOR HATCHBACK

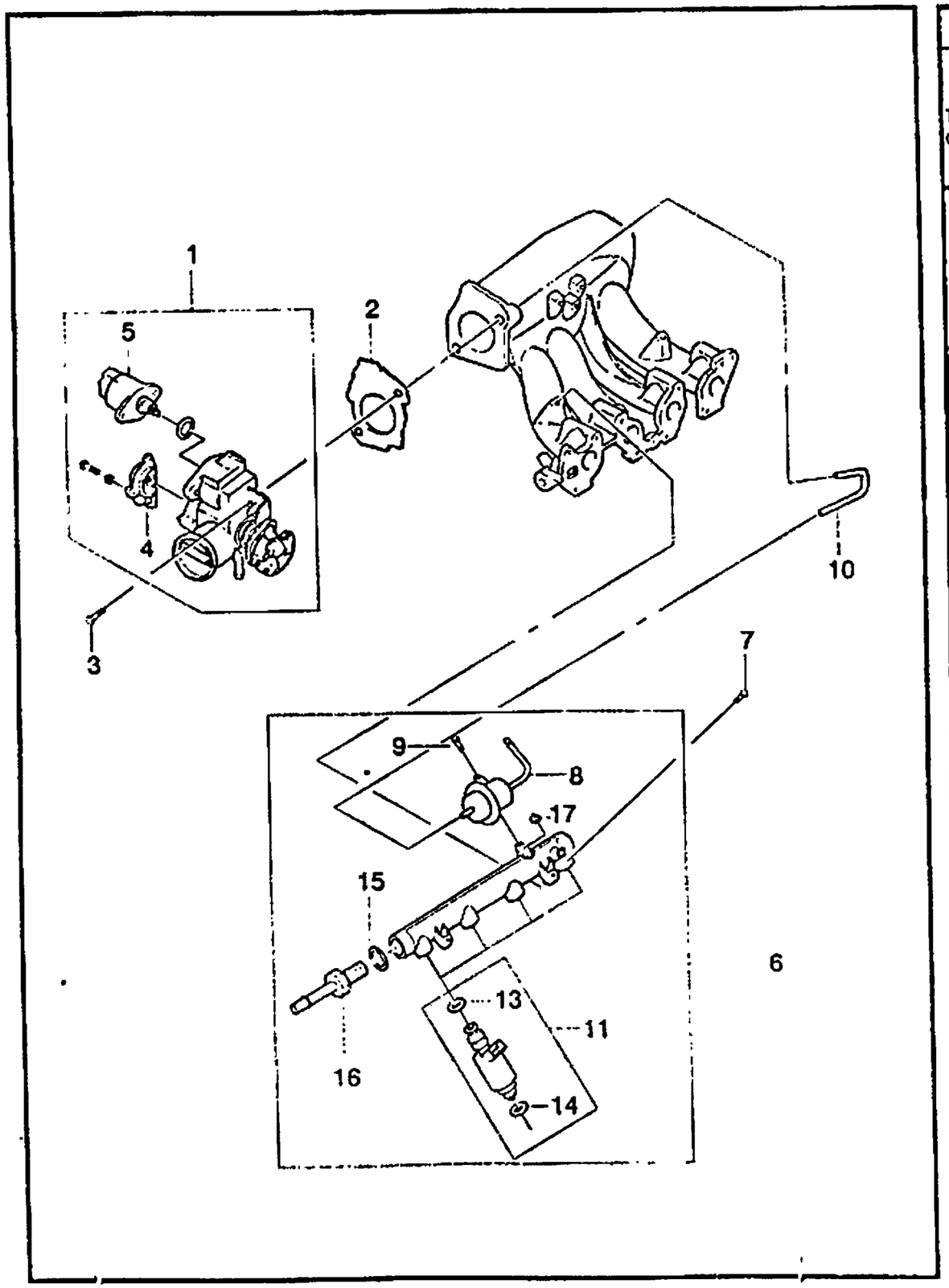

KEY NO.	PART NAME															
ITC	PART NO	MODEL								OPTION	L/R	QTY	EFFECTIVE DATE		REMARKS	P/CODE
		ENG	T/A	BODY			LEVEL						FROM	TO		
				4N	3H	5H	S	SE	SX							
[01] 96184569	(E)BODY A-THROTTLE (D)KAROSSERIE,GASHEBEL	Y	.	B	B	B	S	S	S		(F)CORPS-COMMANDE DES GAZ (S)CARROCERIA-ESTRANGULADOR	1				
[02] 96352111	(E)GASKET-THROTTLE BODY (D)DICHTUNG,DROSSEL KÖRPER	Y	.	B	B	B	S	S	S		(F)JOINT (S)JUNTA	1				
[03] 09117-08010	(E)BOLT (D)SCHRAUBE	Y	.	B	B	B	S	S	S		(F)BOULON (S)PERNO	2				
[04] 17106681	(E)SENSOR A-THROTTLE PSTN (D)SENSOR,DROSSEL STELLUNG	Y	.	B	B	B	S	S	S		(F)DETECTEUR (S)SENSOR	1				
[05] 17059602	(E)VALVE-IDLING CONTROL (D)VENTIL	Y	.	B	B	B	S	S	S		(F)SOUPAPE (S)VALVULA	1				
[06] 96184729	(E)RAIL A-FUEL (D)SCHIENE,BENZIN	Y	.	B	B	B	S	S	S		(F)RAIL-CARBURANT (S)RIEL-COMBUSTIBLE	1				
[07] 01127-08353	(E)BOLT-HEXAGON (D)SCHRAUBE	Y	.	B	B	B	S	S	S		(F)BOULON (S)PERNO	2				
[08] 96184228	(E)REGULATOR A-FUEL PRESSURE (D)REGULATOR,BENZIN DRUCK	Y	.	B	B	B	S	S	S		(F)REGULATEUR (S)REGULADOR	1				
[09] 9034906100	(E)SCREW-PAN (D)SCHRAUBE	Y	.	B	B	B	S	S	S		(F)VIS (S)TORNILLO	1				
[10]	(E)HOSE-VACUUM (D)SCHLAUCH,VAKUUM										(F)TUYAU-DEPRESSION (S)MANGUERA-VACIO					

ENG(ENGINE)	T/A(TRANSAXLE)	BODY TYPE
Y = 1.5SOHC 6 = 1.6DOHC . = COMMON	M = MANUAL T/A A = AUTOMATIC T/A . = COMMON	4 N = 4 DOOR NOTCHBACK 3 H = 3 DOOR HATCHBACK 5 H = 5 DOOR HATCHBACK

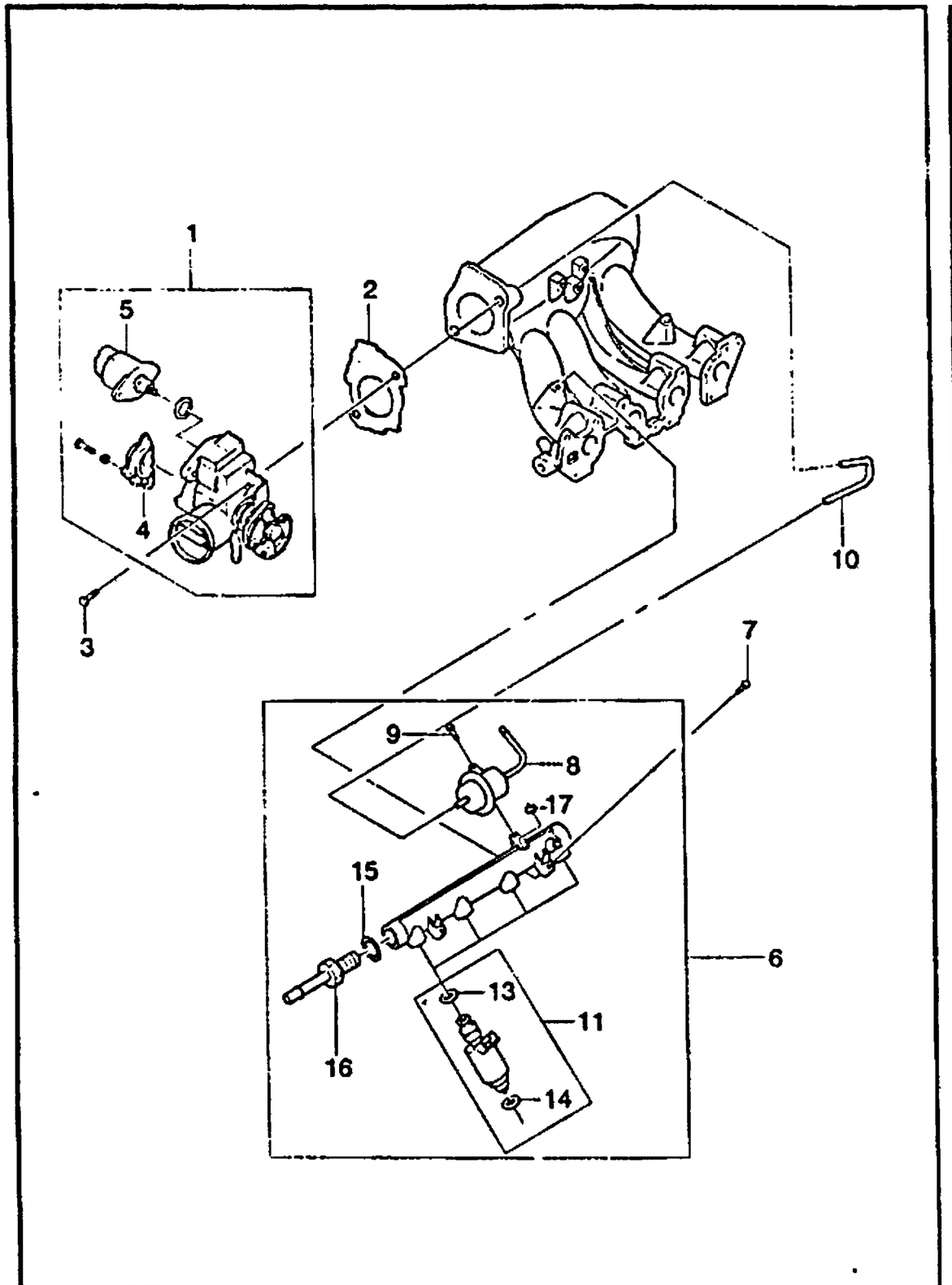

KEY NO. ITC	PART NO	MODEL ENG	T/A	BODY 4N	3H	5H	LEVEL S	SE	SX	OPTION	L/R	QTY	EFFECTIVE DATE FROM	TO	REMARKS	P/CODE
[11]	96351089	Y	.	B	B	B	S	S	S	(E)INJECTOR A-FUEL (D)EINSPRITZE,BENZIN		1			195mm (F)INJECTEUR-CARBURANT (S)INYECTOR-COMBUSTIBLE	
[13]	25171743	Y	.	B	B	B	S	S	S	(E)RING-INJECTOR,UPPER (D)O RING,EINSPRITZER		4			(F)JOINT TORIQUE-INJECTEUR (S)ANILLO EN O-INYECTOR	
[14]	05235032	Y	.	B	B	B	S	S	S	(E)RING-INJECTOR,LOWER (D)O RING,EINSPRITZER		4			(F)JOINT TORIQUE-INJECTEUR (S)ANILLO EN O-INYECTOR	
[15]	17108225	Y	.	B	B	B	S	S	S	(E)WASHER-SEAL (D)DICHTUNGSRING		4			(F)RONDELLE (S)ARANDELA	
[16]	96143641	Y	.	B	B	B	S	S	S	(E)CONNECTOR-FUEL RAIL (D)VERBINDUNG		1			(F)CONNECTEUR (S)CONECTOR	
[17]	96184471	Y	.	B	B	B	S	S	S	(E)RING-SEAL (D)RING,DICHTUNG		1			(F)ANNEAU-JOINT (S)ANILLO-SELLO	
	17081434	Y	.	B	B	B	S	S	S			1				

ENG(ENGINE)	T/A(TRANSAXLE)	BODY TYPE
Y = 1.5SOHC 6 = 1.6DOHC . = COMMON	M = MANUAL T/A A = AUTOMATIC T/A . = COMMON	4 N = 4 DOOR NOTCHBACK 3 H = 3 DOOR HATCHBACK 5 H = 5 DOOR HATCHBACK

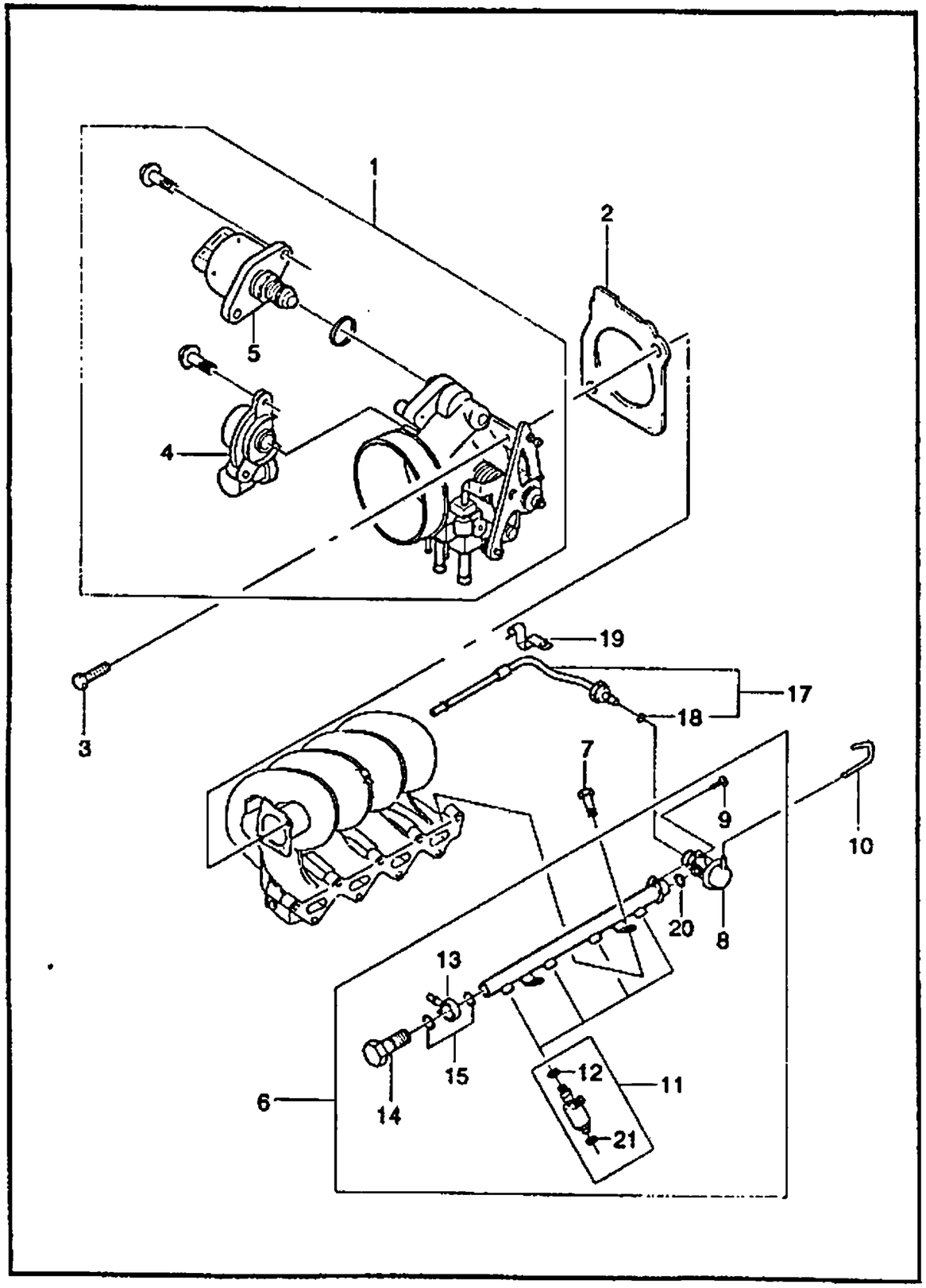

KEY NO. ITC	PART NO	MODEL ENG	T/A	BODY 4N	3H	5H	LEVEL S	SE	SX	OPTION	L/R	QTY	EFFECTIVE DATE FROM	TO	REMARKS	PICODE
[01]	96184572	(E)BODY A -THROTTLE (D)KAROSSERIE,GASHEBEL									(F)CORPS-COMMANDE DES GAZ (S)CARROCERIA-ESTRANGULADOR	1				
[02]	96352111	(E)GASKET-THROTTLE BODY (D)DICHTUNG,DROSSEL KÖRPER	6	.	B	B	B	.	.	O	(F)JOINT (S)JUNTA	1				
[03]	09117-08010	(E)BOLT (D)SCHRAUBE	6	.	B	B	B	.	.	O	(F)BOULON (S)PERNO	2				
[04]	17106681	(E)SENSOR A-THROTTLE PSTN (D)SENSOR,DROSSEL STELLUNG	6	.	B	B	B	.	.	O	(F)DETECTEUR (S)SENSOR	1				
[05]	17059602	(E)VALVE-IDLING CONTROL (D)VENTIL	6	.	B	B	B	.	.	O	(F)SOUPAPE (S)VALVULA	1				
[06]	96183232	(E)RAIL A-FUEL (D)SCHIENE,BENZIN	6	.	B	B	B	.	.	O	(F)RAIL-CARBURANT (S)RIEL-COMBUSTIBLE	1				
[07]	01137-08163	(E)BOLT-HEXAGON (D)SCHRAUBE	6	.	B	B	B	.	.	O	(F)BOULON (S)PERNO	2				
[08]	96184759	(E)REGULATOR A-FUEL PRESSURE (D)REGULATOR,BENZIN DRUCK	6	.	B	B	B	.	.	O	(F)REGULATEUR (S)REGULADOR	1				
[09]	09360-16001	(E)SCREW (D)SCHRAUBE									(F)VIS (S)TORNILLO				NOT APPLIED	
	96143390		6	.	B	B	B	.	.	O		1				

ENG(ENGINE)	T/A(TRANSAXLE)	BODY TYPE
Y = 1.5SOHC 6 = 1.6DOHC . = COMMON	M = MANUAL T/A A = AUTOMATIC T/A . = COMMON	4 N = 4 DOOR NOTCHBACK 3 H = 3 DOOR HATCHBACK 5 H = 5 DOOR HATCHBACK

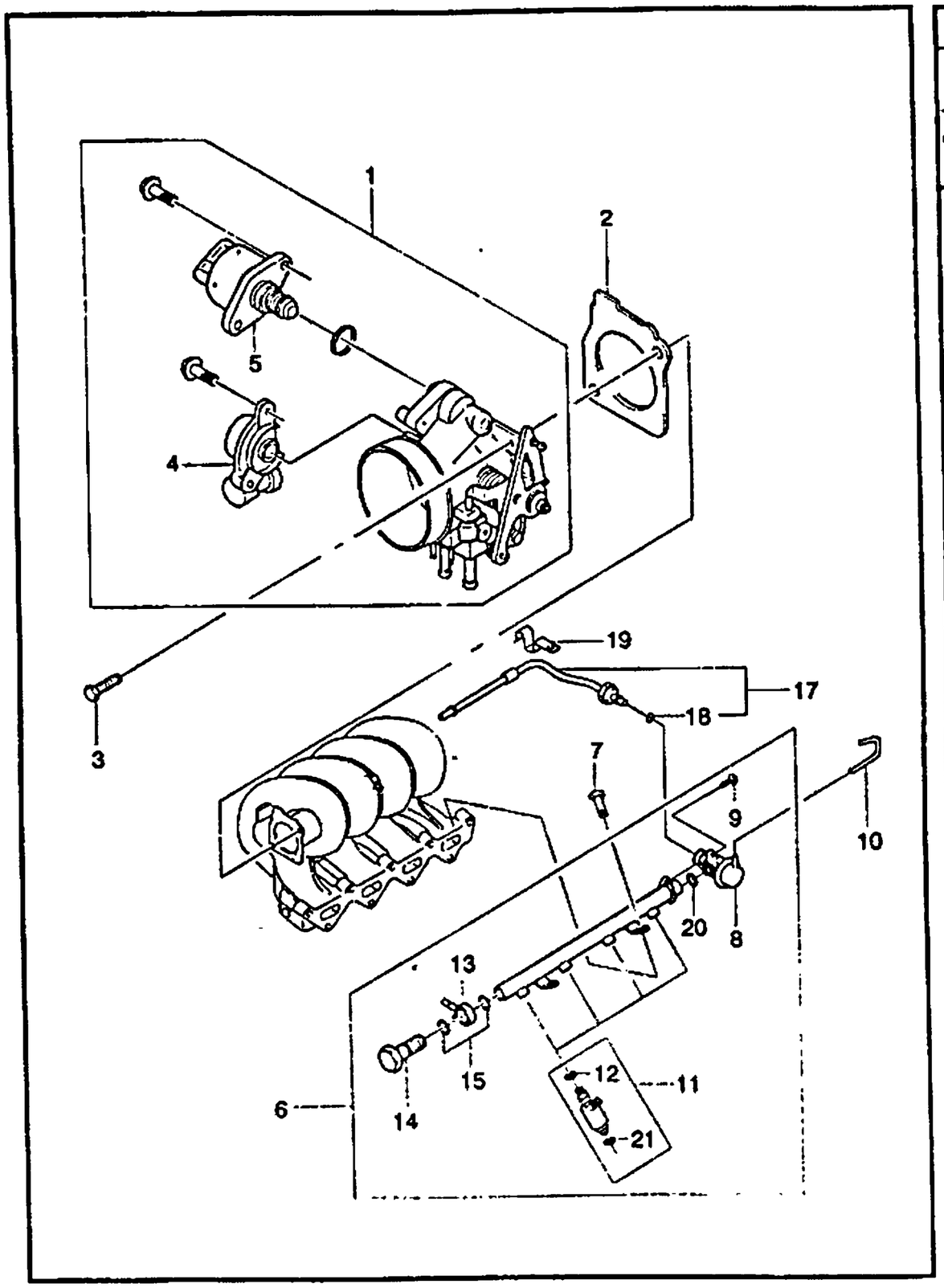

KEY NO. ITC	PART NO	MODEL ENG	MODEL T/A	MODEL BODY 4N	MODEL BODY 3H	MODEL BODY 5H	MODEL LEVEL S	MODEL LEVEL SE	MODEL LEVEL SX	OPTION	L/R	QTY	EFFECTIVE DATE FROM	EFFECTIVE DATE TO	REMARKS	P/CODE
	[10]	(E)HOSE-VACUUM (D)SCHLAUCH,VAKUUM									(F)TUYAU-DEPRESSION (S)MANGUERA-VACIO					
	96351089	6	.	B	B	B	.	.	O			1		970401	195mm	
Y	96248446	6	.	B	B	B	.	.	O			1	970401		165mm	
	[11]	(E)INJECTOR A-FUEL (D)EINSPRITZE,BENZIN									(F)INJECTEUR-CARBURANT (S)INYECTOR-COMBUSTIBLE					
	25174024	6	.	B	B	B	.	.	O			4				
	[12]	(E)RING-INJECTOR,UPPER (D)O RING,EINSPRITZER									(F)JOINT TORIQUE-INJECTEUR (S)ANILLO EN O-INYECTOR					
	05235032	6	.	B	B	B	.	.	O			4				
	[13]	(E)CONNECTOR-FUEL RAIL (D)VERBINDUNG									(F)CONNECTEUR (S)CONECTOR					
	96183364	6	.	B	B	B	.	.	O			1				
	[14]	(E)BOLT-UNION (D)SCHRAUBE									(F)BOULON (S)PERNO					
	09360-16001	6	.	B	B	B	.	.	O			1				
	[15]	(E)GASKET-CONNECTOR (D)DICHTUNG									(F)JOINT (S)JUNTA					
	96183365	6	.	B	B	B	.	.	O			2				
	[17]	(E)PIPE A-ADAPTOR RETURN (D)ROHR									(F)TUYAU (S)TUBERIA					
	96183068	6	.	B	B	B	.	.	O			1				
	[18]	(E)O RING (D)O RING									(F)JOINT TORIQUE (S)ANILLO EN O					
	96114707	6	.	B	B	B	.	.	O			1				
	[19]	(E)BRACKET-PIPE ADAPTOR RTN (D)TRÄGER									(F)SUPPORT (S)SOPORTE					
	96183070	6	.	B	B	B	.	.	O			1				

ENG(ENGINE)	T/A(TRANSAXLE)	BODY TYPE
Y = 1.5SOHC 6 = 1.6DOHC . = COMMON	M = MANUAL T/A A = AUTOMATIC T/A . = COMMON	4 N = 4 DOOR NOTCHBACK 3 H = 3 DOOR HATCHBACK 5 H = 5 DOOR HATCHBACK

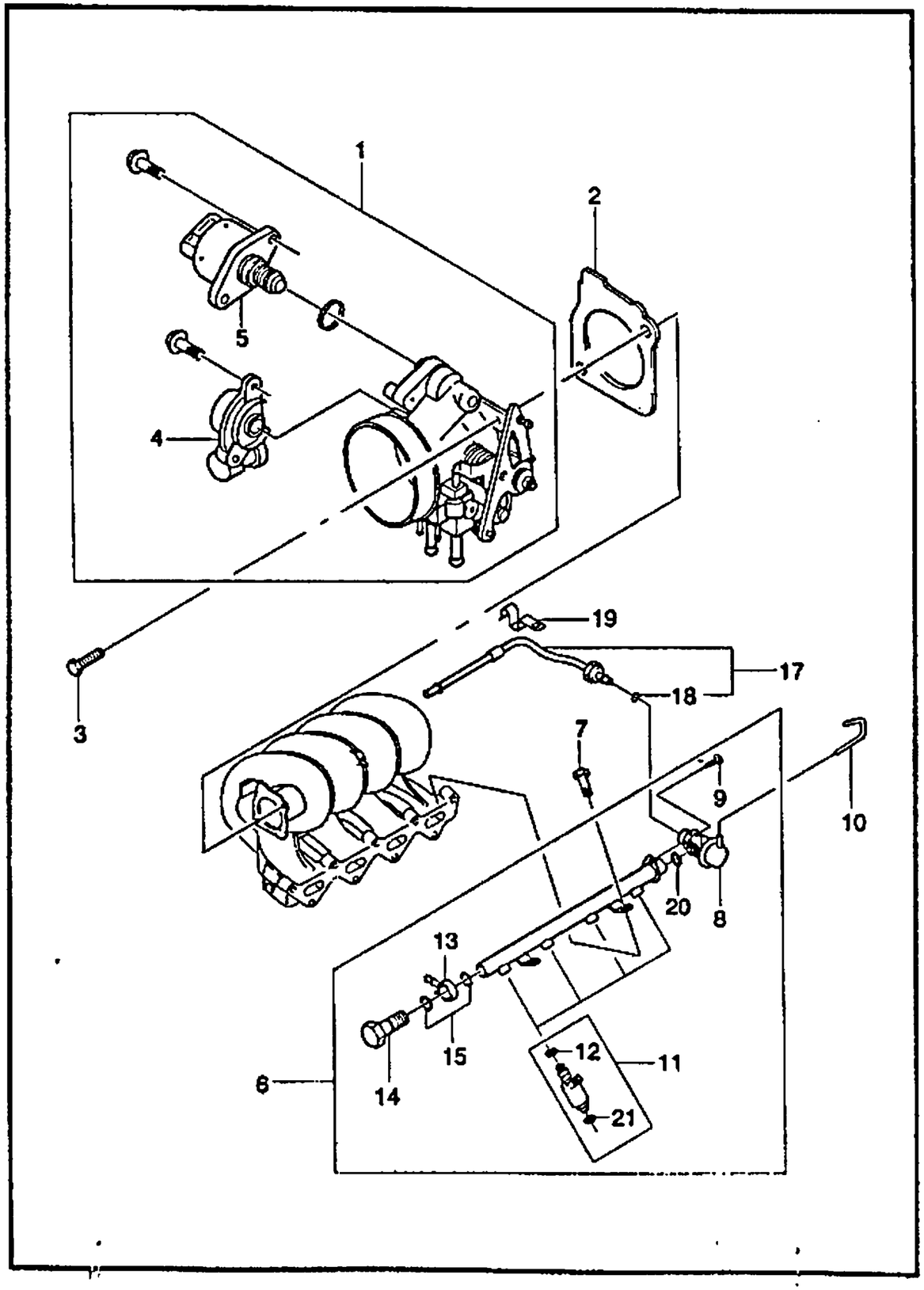

KEY NO.		PART NAME														
		MODEL														
				BODY			LEVEL						EFFECTIVE DATE			
ITC	PART NO	ENG	T/A	4N	3H	5H	S	SE	SX	OPTION	L/R	QTY	FROM	TO	REMARKS	PICODE
[20]		(E)RING-SEAL (D)RING,DICHTUNG									(F)ANNEAU-JOINT (S)ANILLO-SELLO					
	17081434	6	.	B	B	B	.	.	O			1				
[21]		(E)RING-INJECTOR,LOWER (D)O RING,EINSPRITZER									(F)JOINT TORIQUE-INJECTEUR (S)ANILLO EN O-INYECTOR					
	17108225	6	.	B	B	B	.	.	O			4				

ENG(ENGINE)	T/A(TRANSAXLE)	BODY TYPE
Y = 1.5SOHC 6 = 1.6DOHC . = COMMON	M = MANUAL T/A A = AUTOMATIC T/A . = COMMON	4 N = 4 DOOR NOTCHBACK 3 H = 3 DOOR HATCHBACK 5 H = 5 DOOR HATCHBACK

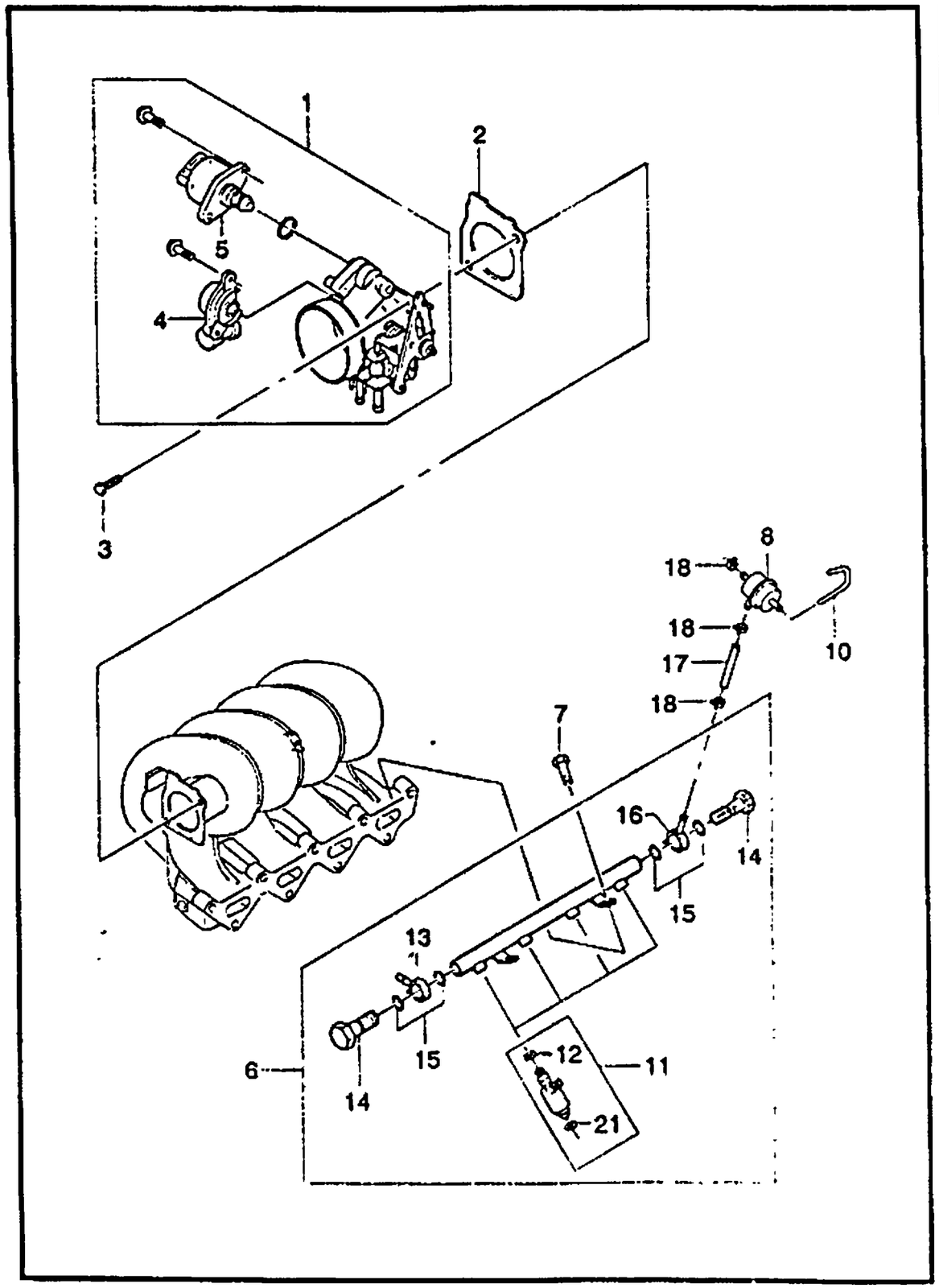

KEY NO.	PART NAME															
ITC	PART NO	MODEL								OPTION	L/R	QTY	EFFECTIVE DATE		REMARKS	P/CODE
		ENG	T/A	BODY			LEVEL						FROM	TO		
				4N	3H	5H	S	SE	SX							
[01]	96184572	6	.	B	B	B	.	.	A	&KL9		1			(E)BODY A-THROTTLE (D)KAROSSERIE,GASHEBEL (F)CORPS-COMMANDE DES GAZ (S)CARROCERIA-ESTRANGULADOR	
[02]	96352111	6	.	B	B	B	.	.	A	&KL9		1			(E)GASKET-THROTTLE BODY (D)DICHTUNG,DROSSEL KÖRPER (F)JOINT (S)JUNTA	
[03]	09117-08010	6	.	B	B	B	.	.	A	&KL9		2			(E)BOLT (D)SCHRAUBE (F)BOULON (S)PERNO	
[04]	17106681	6	.	B	B	B	.	.	A	&KL9		1			(E)SENSOR A-THROTTLE PSTN (D)SENSOR,DROSSEL STELLUNG (F)DETECTEUR (S)SENSOR	
[05]	17059602	6	.	B	B	B	.	.	A	&KL9		1			(E)VALVE-IDLING CONTROL (D)VENTIL (F)SOUPAPE (S)VALVULA	
[06]	96242764	6	.	B	B	B	.	.	A	&KL9		1			(E)RAIL A-FUEL (D)SCHIENE,BENZIN (F)RAIL-CARBURANT (S)RIEL-COMBUSTIBLE	
[07]	01137-08163	6	.	B	B	B	.	.	A	&KL9		2			(E)BOLT-HEXAGON (D)SCHRAUBE (F)BOULON (S)PERNO	
[08]	0280150716	6	.	B	B	B	.	.	A	&KL9		1			(E)REGULATOR A-FUEL PRESSURE (D)REGULATOR,BENZIN DRUCK (F)REGULATEUR (S)REGULADOR	
[10]	96242772	6	.	B	B	B	.	.	A	&KL9		1			(E)HOSE-VACUUM (D)SCHLAUCH,VAKUUM (F)TUYAU-DEPRESSION (S)MANGUERA-VACIO	
[11]															(E)INJECTOR A-FUEL (D)EINSPRITZE,BENZIN (F)INJECTEUR-CARBURANT (S)INYECTOR-COMBUSTIBLE	

ENG(ENGINE)	T/A(TRANSAXLE)	BODY TYPE
Y = 1.5SOHC	M = MANUAL T/A	4 N = 4 DOOR NOTCHBACK
6 = 1.6DOHC	A = AUTOMATIC T/A	3 H = 3 DOOR HATCHBACK
. = COMMON	. = COMMON	5 H = 5 DOOR HATCHBACK

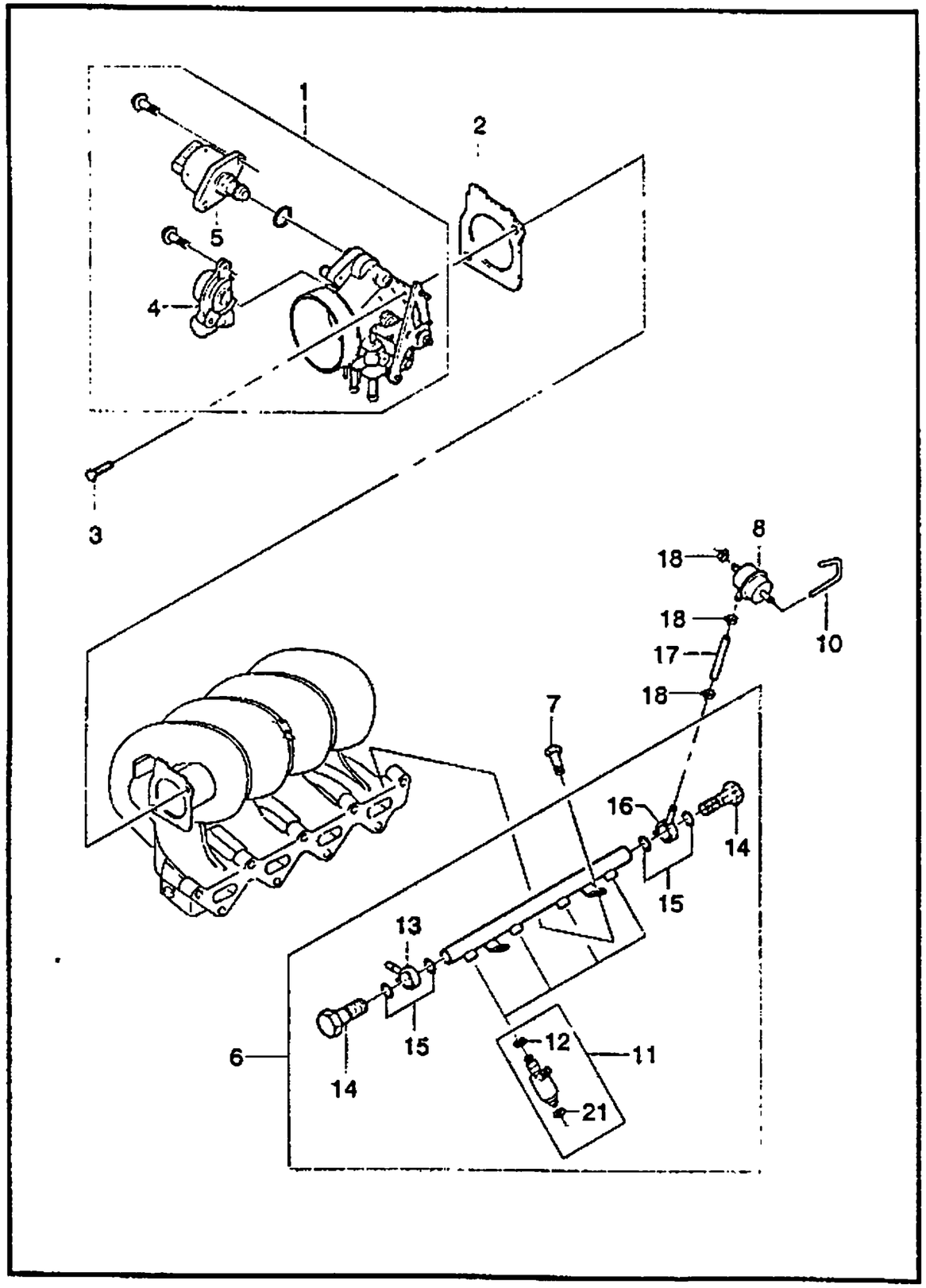

KEY NO. ITC	PART NO	MODEL ENG	T/A	BODY 4N	3H	5H	LEVEL S	SE	SX	OPTION	L/R	QTY	EFFECTIVE DATE FROM	TO	REMARKS	P/CODE
[13]	0280150983	6	.	B	B	B	.	.	A	&KL9		4			(E)CONNECTOR-FUEL FEEDING (D)VERBINDUNG (F)CONNECTEUR (S)CONECTOR	
[14]	96242769	6	.	B	B	B	.	.	A	&KL9		1			(E)BOLT-UNION (D)SCHRAUBE (F)BOULON (S)PERNO	
[15]	09360-16002	6	.	B	B	B	.	.	A	&KL9		2			(E)GASKET-CONNECTOR (D)DICHTUNG (F)JOINT (S)JUNTA	
[16]	96183365	6	.	B	B	B	.	.	A	&KL9		4			(E)CONNECTOR-FUEL RETURN (D)VERBINDUNG (F)CONNECTEUR (S)CONECTOR	
[17]	96242767	6	.	B	B	B	.	.	A	&KL9		1			(E)HOSE-FUEL RETURN (D)SCHLAUCH (F)TUYAU (S)MANGUERA	
[18]	96242771	6	.	B	B	B	.	.	A	&KL9		1			(E)CLAMP (D)KLAMMER (F)PINCE (S)ABRAZADERA	
	09402-16503	6	.	B	B	B	.	.	A	&KL9		3				

ENG(ENGINE)	T/A(TRANSAXLE)	BODY TYPE
Y = 1.5SOHC 6 = 1.6DOHC . = COMMON	M = MANUAL T/A A = AUTOMATIC T/A . = COMMON	4 N = 4 DOOR NOTCHBACK 3 H = 3 DOOR HATCHBACK 5 H = 5 DOOR HATCHBACK

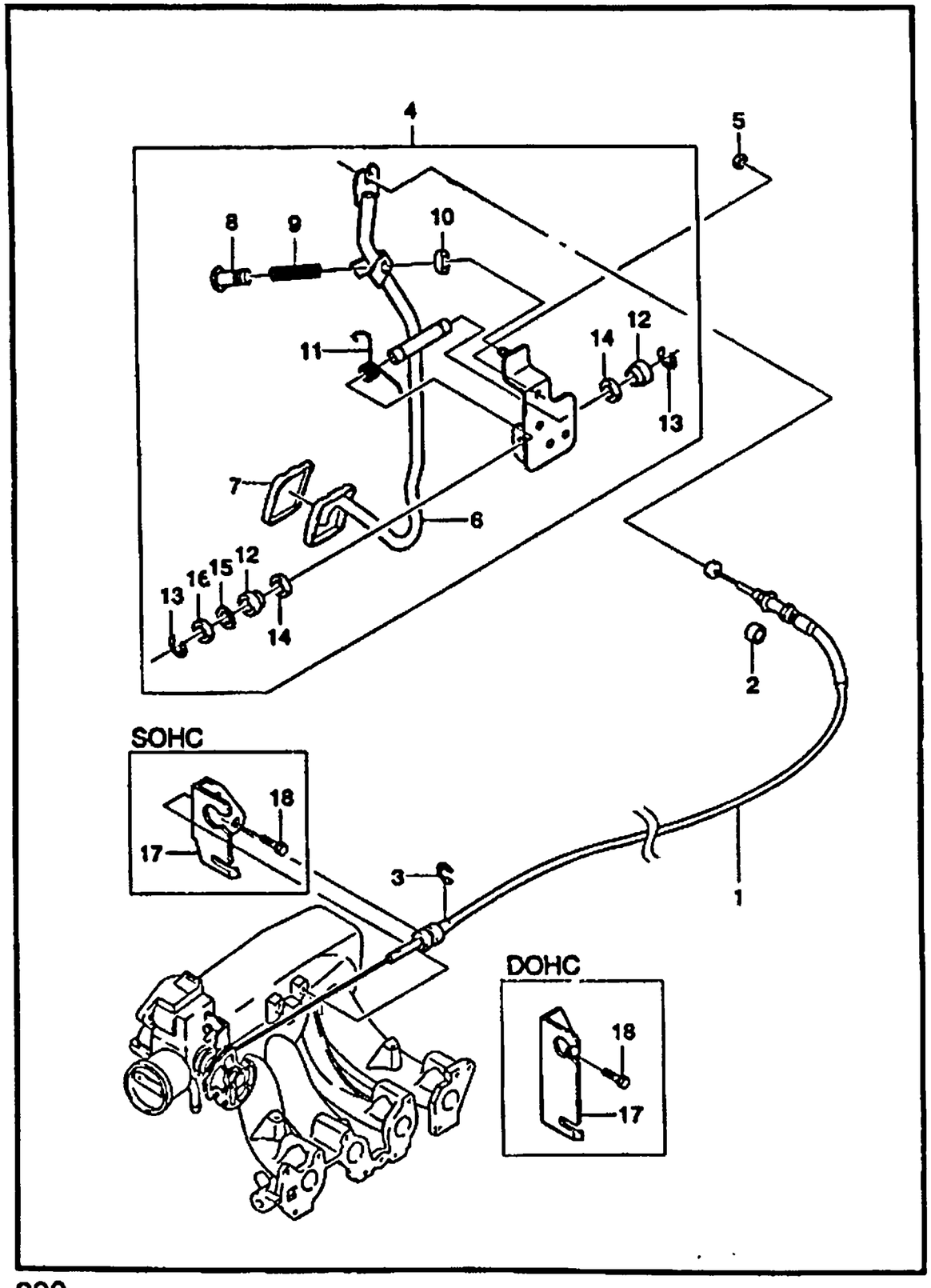

KEY NO. ITC	PART NO	MODEL ENG	T/A	BODY 4N	3H	5H	LEVEL S	SE	SX	OPTION	L/R	QTY	EFFECTIVE DATE FROM	TO	REMARKS	P/CODE
[01]		(E)CABLE A-ACCEL. CONT. BOWDEN (D)KABEL,GAS-STEUERUNG									(F)CABLE- ACCELERATEUR (S)CABLE					
96351836		Y	.	B	B	B	S	S	S			1				ML
96182338		6	.	B	B	B	.	.	O			1				DL
[02]		(E)GROMMET (D)ÖSE									(F)VIROLE (S)AISLANTE					
09308-17002		.	.	B	B	B	S	S	S			1				
[03]		(E)RING-RETAINING E TYPE (D)RING,HALTER									(F)ANNEAU-DE RETENTION (S)ANILLO-RETENEDOR					
08332-21089		.	.	B	B	B	S	S	S			1				
[04]		(E)LEVER A-ACCELERATOR PEDAL (D)HEBEL,GASPEDAL									(F)LEVIER (S)PALANCA					
96182335		.	.	B	B	B	S	S	S			1				AL
[05]		(E)NUT (D)MUTTER									(F)ECROU (S)TUERCA					
09159-08003		.	.	B	B	B	S	S	S			2				
[06]		(E)LEVER-ACCELERATOR PEDAL (D)HEBEL,GASPEDAL									(F)LEVIER (S)PALANCA					
96184217		.	.	B	B	B	S	S	S			1				
[07]		(E)PAD-ACCELERATOR PEDAL (D)UNTERLAGE,GASPEDAL									(F)PATIN (S)COJIN-PEDAL					
96184690		.	.	B	B	B	S	S	S			1				
[08]		(E)SCREW (D)SCHRAUBE									(F)VIS (S)TORNILLO					
02116-06309		.	.	B	B	B	S	S	S			1				
[09]		(E)SPRING (D)FEDERUNG									(F)RESSORT (S)RESORTE					
09440-09003		.	.	B	B	B	S	S	S			1				

ENG(ENGINE)	T/A(TRANSAXLE)	BODY TYPE
Y = 1.5SOHC 6 = 1.6DOHC . = COMMON	M = MANUAL T/A A = AUTOMATIC T/A . = COMMON	4 N = 4 DOOR NOTCHBACK 3 H = 3 DOOR HATCHBACK 5 H = 5 DOOR HATCHBACK

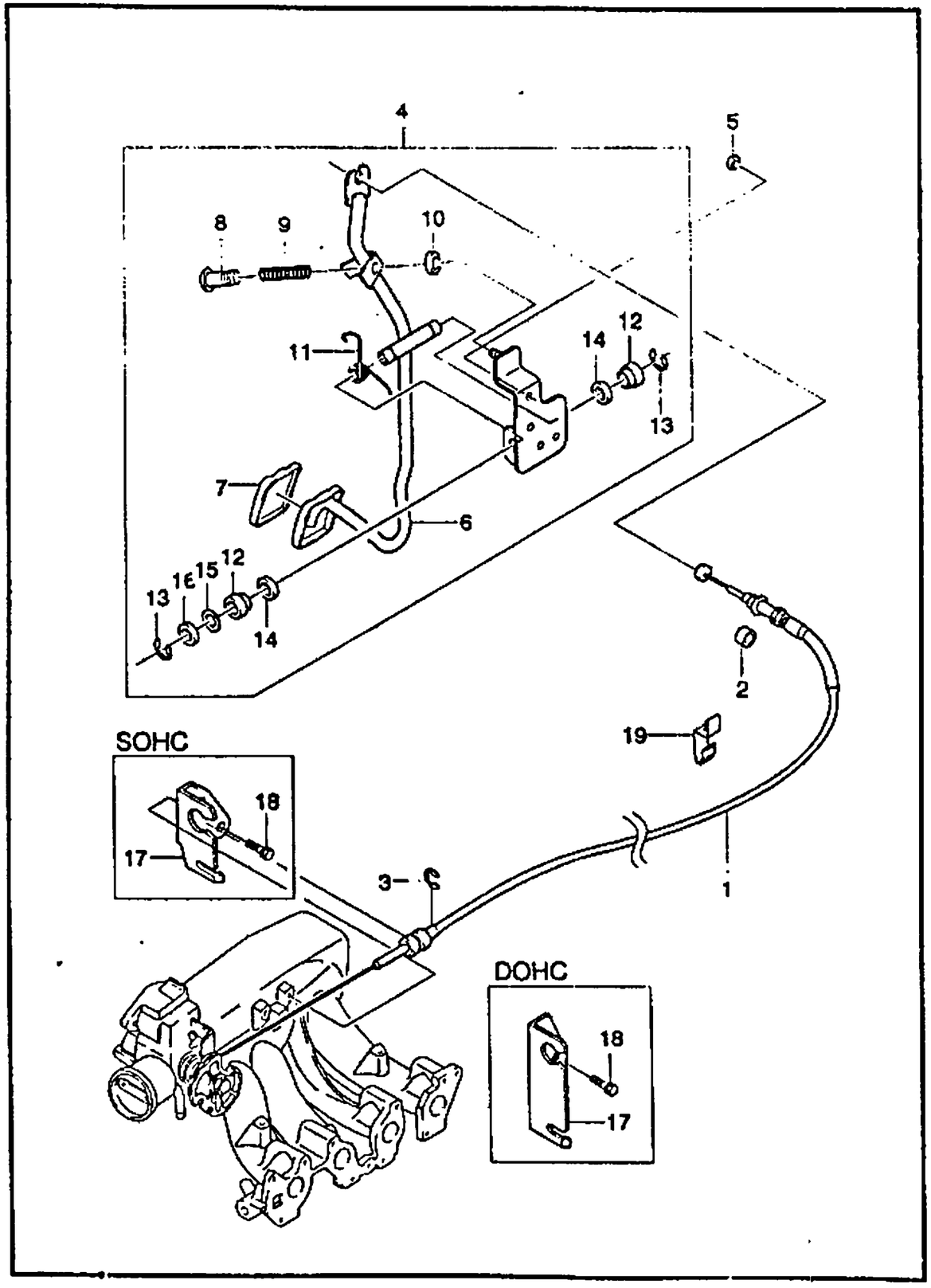

KEY NO.		PART NAME															
		MODEL															
				BODY			LEVEL										
ITC	PART NO	ENG	T/A	4N	3H	5H	S	SE	SX	OPTION	L/R	QTY	EFFECTIVE DATE FROM	EFFECTIVE DATE TO	REMARKS	P/CODE
[10]		(E)BUMPER-ADJUSTING SCREW (D)STOßSCHEIBE									(F)PARE-CHOC-VIS DE REGLAGE (S)PARACHOQUES-TORNILLO					
	09292075	.	.	B	B	B	S	S	S			1				
[11]		(E)SPRING-LEG (D)FEDERUNG,BEIN									(F)RESSORT-JAMBE (S)RESORTE-PIERNA					
	90183525	.	.	B	B	B	S	S	S			1				
[12]		(E)BUSHING (D)LAGERFUTTER									(F)MANCHON (S)BUJE DE BOQUILLA					
	09306-10005	.	.	B	B	B	S	S	S			2				
[13]		(E)RING-RETAINING E TYPE (D)RING,HALTER									(F)ANNEAU-DE RETENTION (S)ANILLO-RETENEDOR					
	08332-11089	.	.	B	B	B	S	S	S			2				
[14]		(E)WASHER-PLAIN (D)DICHTUNGSRING									(F)RONDELLE (S)ARANDELA					
	09160-18003	.	.	B	B	B	S	S	S			2				
[15]		(E)WASHER-SPRING (D)DICHTUNGSRING									(F)RONDELLE (S)ARANDELA					
	09162-10001	.	.	B	B	B	S	S	S			1				
[16]		(E)WASHER-PLAIN (D)DICHTUNGSRING									(F)RONDELLE (S)ARANDELA					
	09160-10003	.	.	B	B	B	S	S	S			1				
[17]		(E)BRACKET-ACCEL.CONTROL (D)TRÄGER,GASPEDAL									(F)SUPPORT-ACCELERATEUR (S)SOPORTE					
	96184602	Y	.	B	B	B	S	S	S			1				
	96351517	6	.	B	B	B	.	.	O			1				
[18]		(E)BOLT-HEXAGON (D)SCHRAUBE									(F)BOULON (S)PERNO					
	01107-06123	.	.	B	B	B	S	S	S			2				

ENG(ENGINE)	T/A(TRANSAXLE)	BODY TYPE
Y = 1.5SOHC 6 = 1.6DOHC . = COMMON	M = MANUAL T/A A = AUTOMATIC T/A . = COMMON	4 N = 4 DOOR NOTCHBACK 3 H = 3 DOOR HATCHBACK 5 H = 5 DOOR HATCHBACK

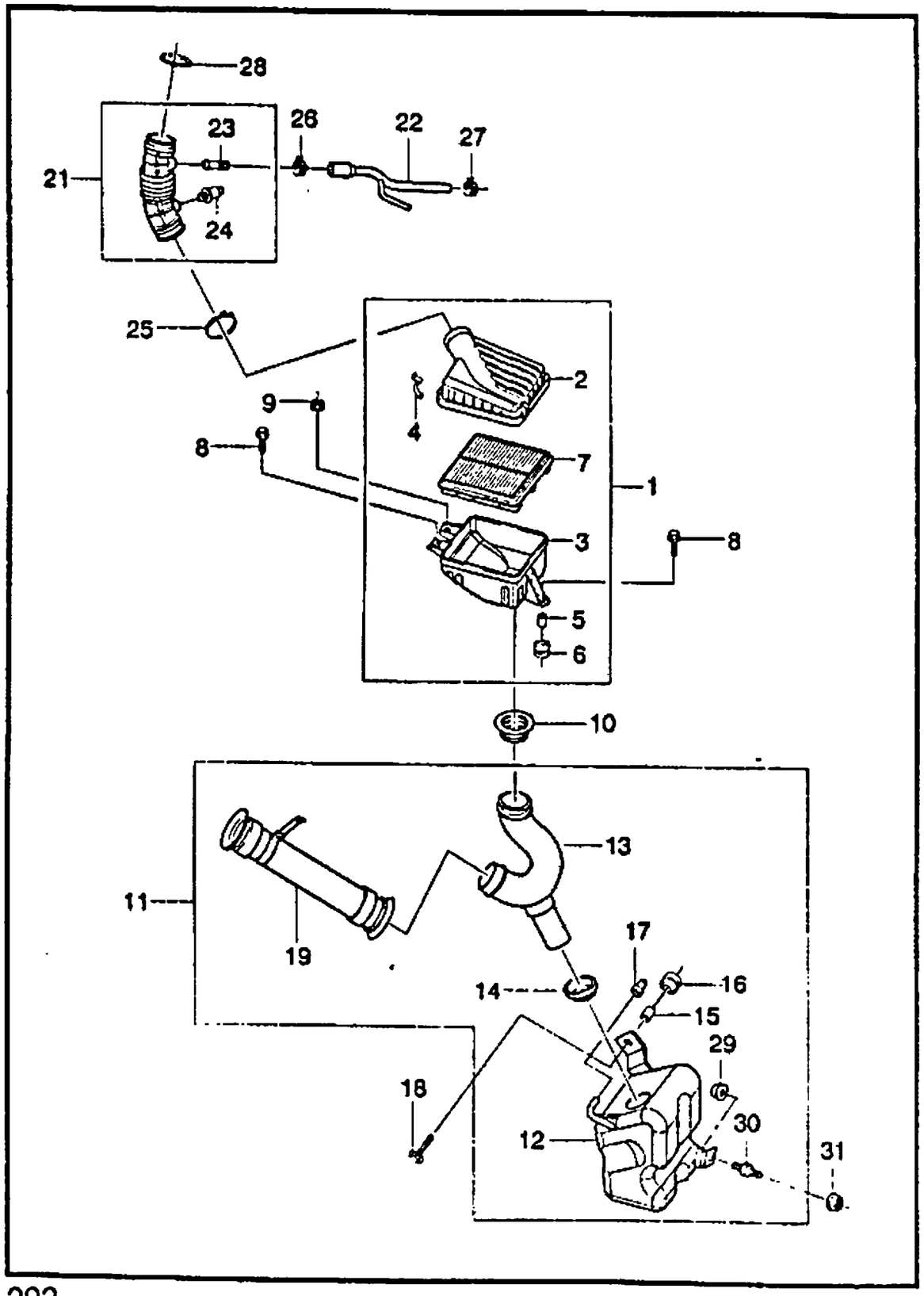

KEY NO. ITC	PART NO	MODEL ENG	T/A	BODY 4N	3H	5H	LEVEL S	SE	SX	OPTION	L/R	QTY	EFFECTIVE DATE FROM	TO	REMARKS	P/CODE
[01]	96182219	.	.	B	B	B	S	S	S			1			(E)AIR CLEANER A (D)LUFTREINIGUNG (F)PURIFICATEUR D'AIR (S)FILTRO DEL AIRE	
[02]	96182231	.	.	B	B	B	S	S	S			1			(E)AIR CLEANER-UPPER (D)LUFTREINIGUNG OBER (F)PURIFICATEUR D'AIR,HAUT (S)FILTRO DEL AIRE SUPERIOR	
[03]	96182232	.	.	B	B	B	S	S	S			1			(E)AIR CLEANER-LOWER (D)LUFTREINIGUNG UNTEN (F)PURIFICATEUR D'AIR,BAS (S)FILTRO DEL AIRE BAJO	
[04]	96300903	.	.	B	B	B	S	S	S			4			(E)CLIP-AIR CLEANER (D)KLEMME (F)ATTACHE (S)GRAPA	
[05]	96300905	.	.	B	B	B	S	S	S			3			(E)SPACER-ISOLATOR (D)DISTANZSTÜCK,ISOLATOR (F)ENTRETOISE-ISOLATEUR (S)ESPACIADOR-AISLADOR	
[06]	96303067	.	.	B	B	B	S	S	S			1			(E)ISOLATOR-AIR CLEANER (D)ISOLATOR,LUFTREINIGUNG (F)ISOLATEUR-FILTRE A AIR (S)AISLADOR-FILTRO DEL AIRE	
[07]	96182220	.	.	B	B	B	S	S	S			1			(E)ELEMENT A-AIR CLEANER (D)ELEMENT,LUFTREINUGUNG (F)ELEMENT-FILTRE A AIR (S)ELEMENTO-FILTRO DEL AIRE	
[08]	09116-06014	.	.	B	B	B	S	S	S			2			(E)BOLT (D)SCHRAUBE (F)BOULON (S)PERNO	
[09]	08361-25063	.	.	B	B	B	S	S	S			1			(E)NUT-HEXAGON (D)MUTTER (F)ECROU (S)TUERCA	
[10]															(E)TUBE-AIR CLEANER CONNECT (D)ROHRLEITUNG (F)TUYAU OU TUBE (S)TUBO	

ENG(ENGINE)	T/A(TRANSAXLE)	BODY TYPE
Y = 1.5SOHC 6 = 1.6DOHC . = COMMON	M = MANUAL T/A A = AUTOMATIC T/A . = COMMON	4 N = 4 DOOR NOTCHBACK 3 H = 3 DOOR HATCHBACK 5 H = 5 DOOR HATCHBACK

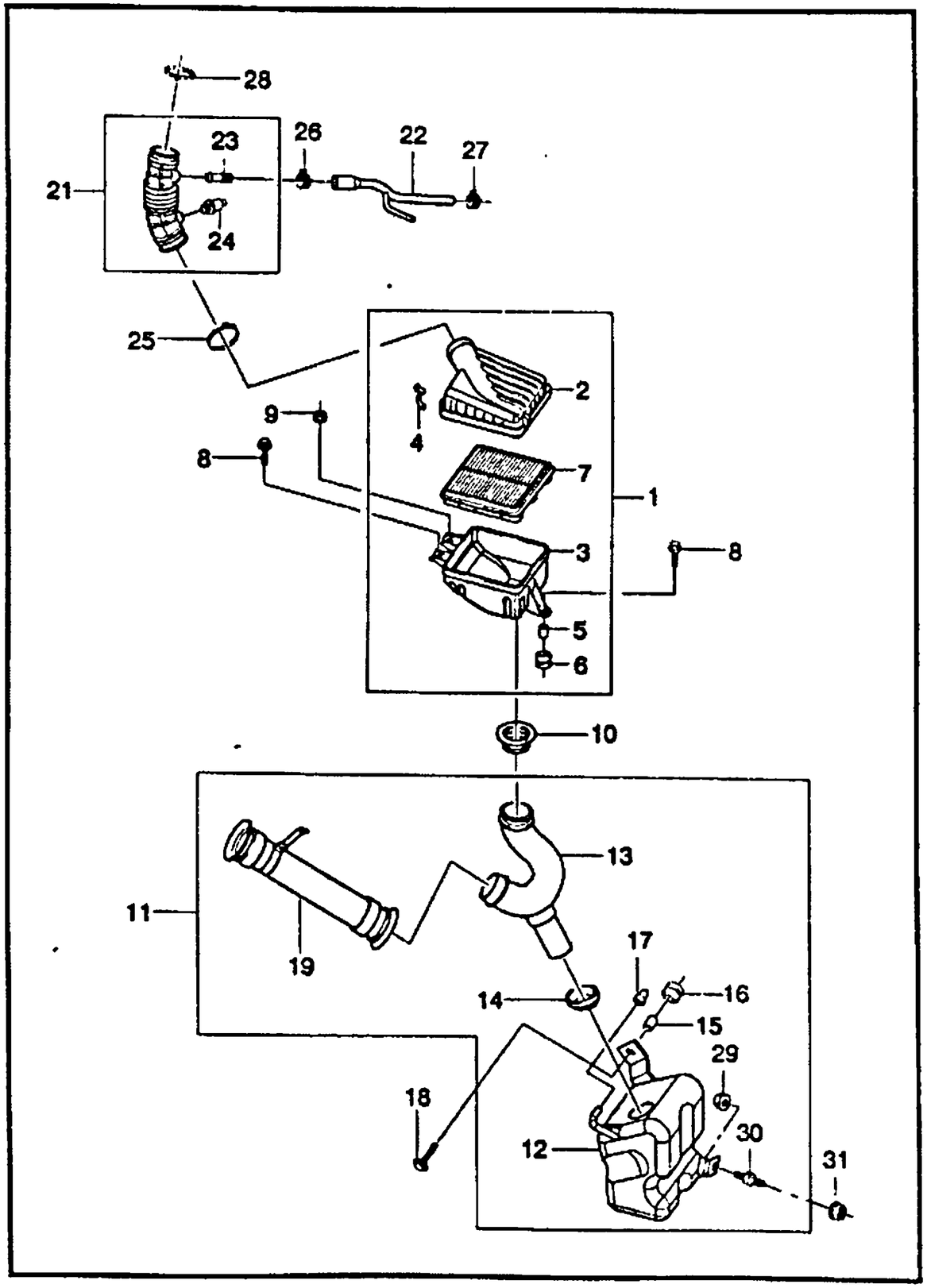

KEY NO. ITC	PART NO	MODEL ENG	T/A	BODY 4N	3H	5H	LEVEL S	SE	SX	OPTION	L/R	QTY	EFFECTIVE DATE FROM	TO	REMARKS	P/CODE
	96182223	.	.	B	B	B	S	S	S			1				
[11]	(E)RESONATOR A (D)RESONATOR										(F)RESONATEUR (S)RESONADOR					
	96352224	.	.	B	B	B	S	S	S			1		970520		
N	96352243	.	.	B	B	B	S	S	S			1	970520			
[12]	(E)RESONATOR (D)RESONATOR										(F)RESONATEUR (S)RESONADOR					
	96352026	.	.	B	B	B	S	S	S			1				
[13]	(E)DUCT-AIR INLET (D)SCHACHT LUFTEINLAß										(F)CONDUIT-ENTREE D'AIR (S)CONDUCTO-ENTRADA DE AIRE					
	96182233	.	.	B	B	B	S	S	S			1				
[14]	(E)SEAL-RESONATOR (D)DICHTUNG										(F)JOINT D'ETANCHEITE (S)SELLO					
	96181265	.	.	B	B	B	S	S	S			1				
[15]	(E)SPACER-ISOLATOR (D)DISTANZSTÜCK,ISOLATOR										(F)ENTRETOISE-ISOLATEUR (S)ESPACIADOR-AISLADOR					
	96300905	.	.	B	B	B	S	S	S			1				
[16]	(E)ISOLATOR-AIR CLEANER (D)ISOLATOR,LUFTREINIGUNG										(F)ISOLATEUR-FILTRE A AIR (S)AISLADOR-FILTRO DEL AIRE					
	96300904	.	.	B	B	B	S	S	S			1				
[17]	(E)ISOLATOR-INTAKE (D)ISOLATOR										(F)ISOLATEUR (S)AISLADOR					
	96351744	.	.	B	B	B	S	S	S			1				
[18]	(E)BOLT (D)SCHRAUBE										(F)BOULON (S)PERNO					
	09116-06014	.	.	B	B	B	S	S	S			1				
[19]	(E)HOSE A-AIR INLET (D)SCHACHT LUFTEINLAß										(F)TUYAU-ENTREE D'AIR (S)MANGUERA-ENTRADA DE AIRE					

ENG(ENGINE)	T/A(TRANSAXLE)	BODY TYPE
Y = 1.5SOHC 6 = 1.6DOHC . = COMMON	M = MANUAL T/A A = AUTOMATIC T/A . = COMMON	4 N = 4 DOOR NOTCHBACK 3 H = 3 DOOR HATCHBACK 5 H = 5 DOOR HATCHBACK

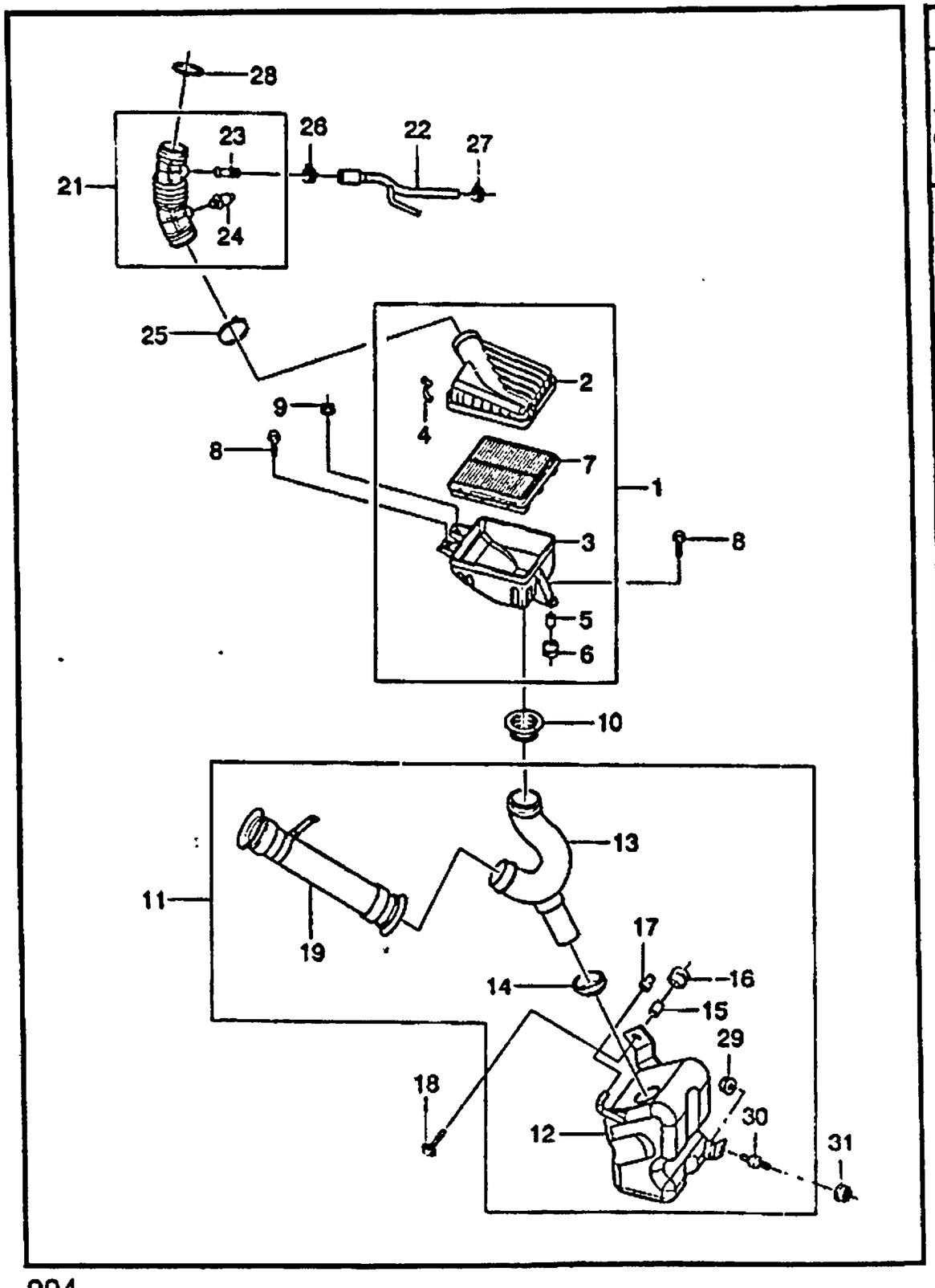

KEY NO. ITC	PART NO	MODEL ENG	T/A	BODY 4N	3H	5H	LEVEL S	SE	SX	OPTION	L/R	QTY	EFFECTIVE DATE FROM	TO	REMARKS	P/CODE
	96352183	.	.	B	B	B	S	S	S			1		970520		
N	96352225	.	.	B	B	B	S	S	S			1	970520			
[21]	(E)HOSE A-AIR OUTLET (D)SCHLAUCH										(F)TUYAU (S)MANGUERA					
	96182227	Y	.	B	B	B	S	S	S			1				
	96182228	6	.	B	B	B	.	.	O			1				
[22]	(E)HOSE-ENGINE VENTILATION (D)SCHLAUCH,VENTILATOR										(F)TUYAU-VENTILATION (S)MANGUERA-VENTILACION					
	96351640	Y	.	B	B	B	S	S	S			1				
	96351636	6	.	B	B	B	.	.	O			1				
[23]	(E)CONNECTOR-P.C.V HOSE (D)VERBINDUNG										(F)CONNECTEUR (S)CONECTOR					
	96184450	Y	.	B	B	B	S	S	S			1				
	96351115	6	.	B	B	B	.	.	O			1				
[24]	(E)SENSOR A-AIR TEMPERATURE (D)SENSOR,TEMPERATUR										(F)DETECTEUR-TEMPERATURE (S)SENSOR-TEMPERATURA					
	96183228	.	.	B	B	B	S	S	S			1				
[25]	(E)CLAMP (D)KLAMMER										(F)PINCE (S)ABRAZADERA					
	09402-80501	.	.	B	B	B	S	S	S			1				
[26]	(E)CLIP (D)KLEMME										(F)ATTACHE (S)GRAPA					
	09401-20401	Y	.	B	B	B	S	S	S			1				
	09401-22401	6	.	B	B	B	.	.	O			1				
[27]	(E)CLIP (D)KLEMME										(F)ATTACHE (S)GRAPA					
	09401-27403	Y	.	B	B	B	S	S	S			1				

ENG(ENGINE)	T/A(TRANSAXLE)	BODY TYPE
Y = 1.5SOHC 6 = 1.6DOHC . = COMMON	M = MANUAL T/A A = AUTOMATIC T/A . = COMMON	4 N = 4 DOOR NOTCHBACK 3 H = 3 DOOR HATCHBACK 5 H = 5 DOOR HATCHBACK

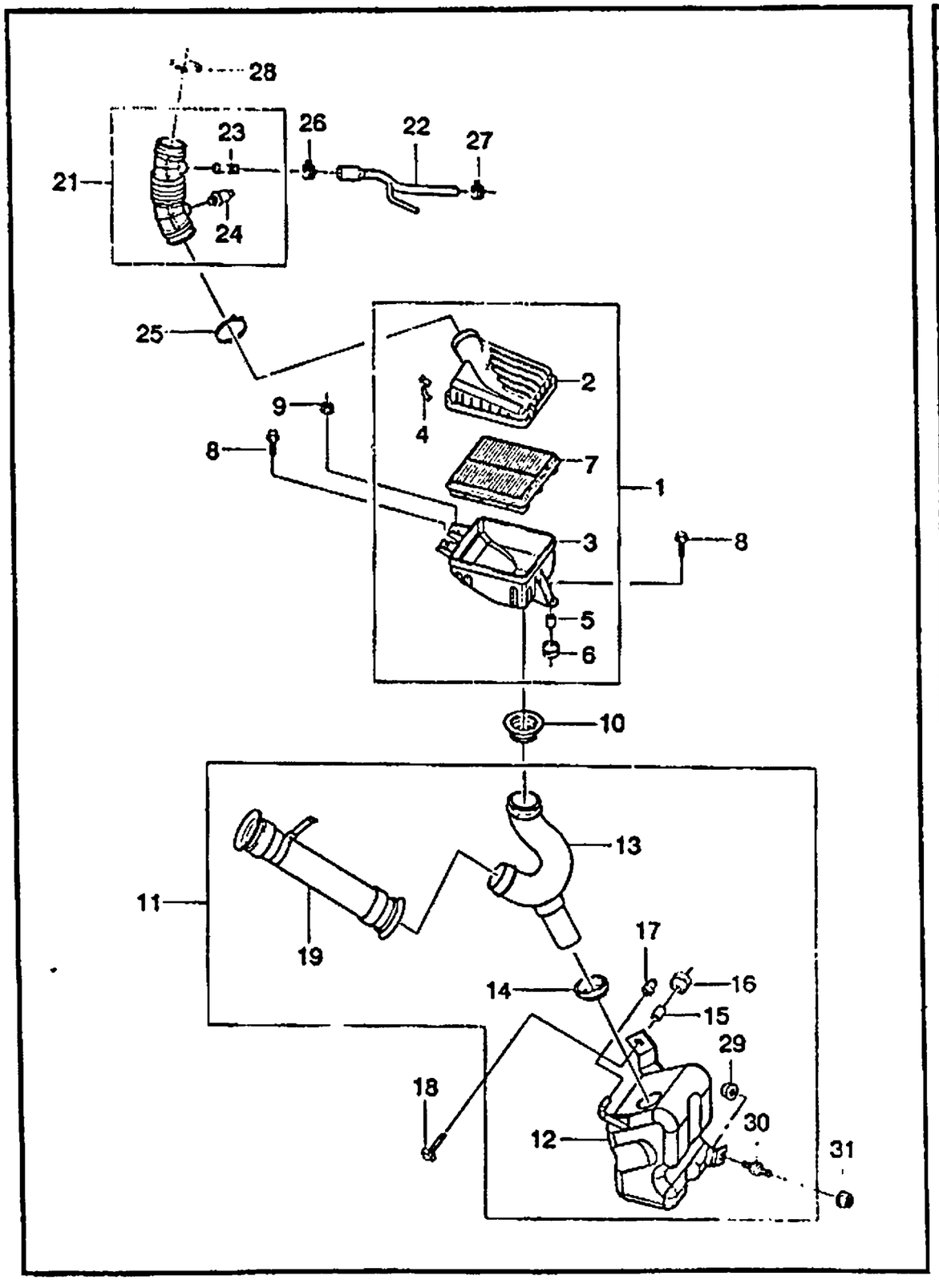

KEY NO.		PART NAME																
ITC	PART NO	MODEL								OPTION	L/R	QTY	EFFECTIVE DATE		REMARKS	P/CODE
		ENG	T/A	BODY			LEVEL						FROM	TO		
				4N	3H	5H	S	SE	SX							
	09401-22401	6	.	B	B	B	.	.	O			1				
[28]		(E)CLAMP (D)KLAMMER										(F)PINCE (S)ABRAZADERA				
	09412-70501	.	.	B	B	B	S	S	S			1				
[29]		(E)NUT (D)MUTTER										(F)ECROU (S)TUERCA				
	09159-06001	.	.	B	B	B	S	S	S			1		970901		
O	09159-06011	.	.	B	B	B	S	S	S			1	970901			
[30]		(E)BUMPER (D)STOßSTANGE										(F)PARE-CHOC (S)PARACHOQUES				
	96144011	.	.	B	B	B	S	S	S			1				
[31]		(E)NUT (D)MUTTER										(F)ECROU (S)TUERCA				
	09159-06001	.	.	B	B	B	S	S	S			1		970901		
O	09159-06011	.	.	B	B	B	S	S	S			1	970901			

ENG(ENGINE)	T/A(TRANSAXLE)	BODY TYPE
Y = 1.5SOHC 6 = 1.6DOHC . = COMMON	M = MANUAL T/A A = AUTOMATIC T/A . = COMMON	4 N = 4 DOOR NOTCHBACK 3 H = 3 DOOR HATCHBACK 5 H = 5 DOOR HATCHBACK

2430 INTAKE MANIFOLD(SOHC)

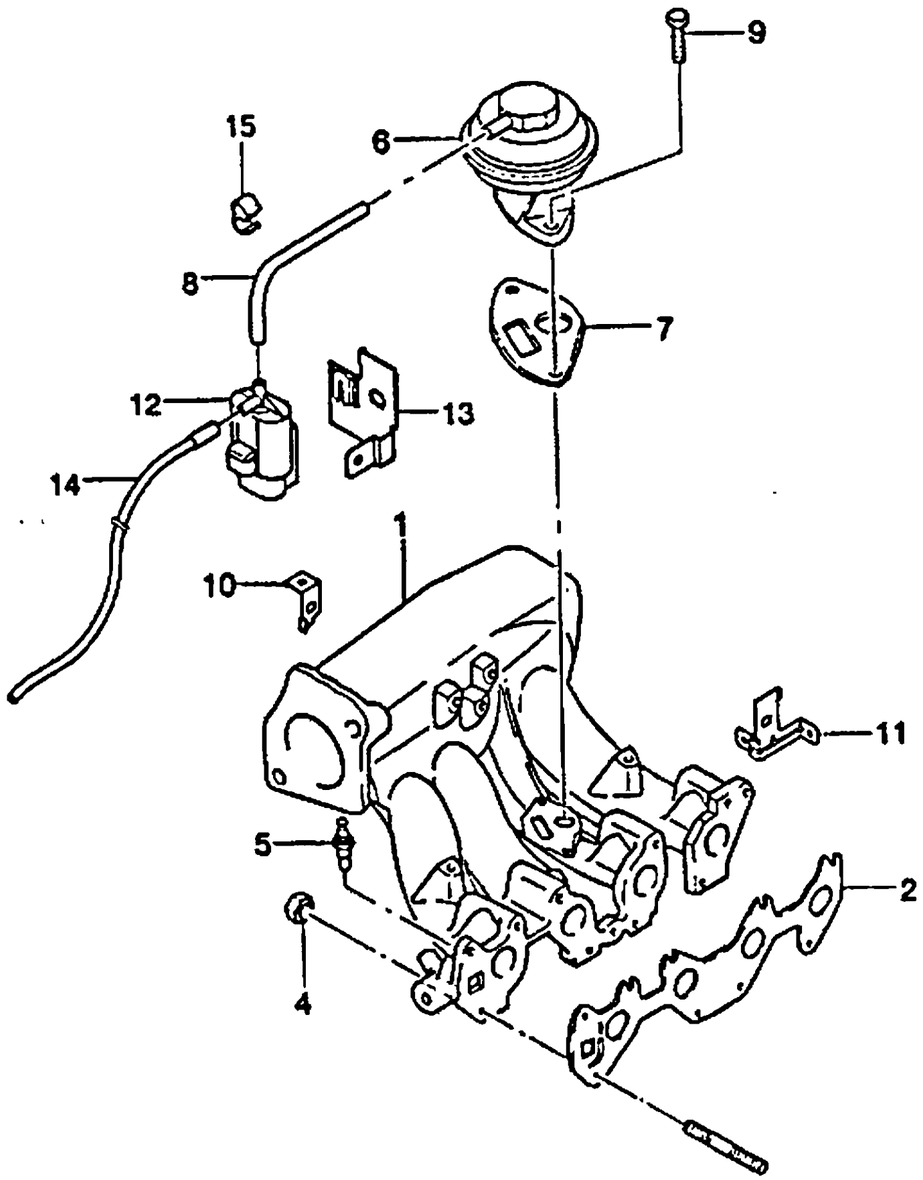

KEY NO. ITC	PART NO	MODEL ENG	T/A	BODY 4N	3H	5H	LEVEL S	SE	SX	OPTION	L/R	QTY	EFFECTIVE DATE FROM	TO	REMARKS	P/CODE
[01]		(E)MANIFOLD-INTAKE (D)SAMMELLEITUNG,EINLAß										(F)COLLECTEUR-ADMISSION (S)COLECTOR-ENTRADA				
96184771		Y	M	B	B	B	S	S	S	&NN4/NN6		1				
96182953		Y	A	B	B	B	O	O	O	&NN4/NN6		1				
96182953		Y	.	B	B	B	A	A	A	&NN7		1				
[02]		(E)GASKET-INTAKE MANIFOLD (D)DICHTUNG,SAMMELLEITUNG										(F)JOINT (S)JUNTA-COLECTOR DE ENTRADA				
96183118		Y	.	B	B	B	S	S	S			1				
[04]		(E)NUT-HEXAGON LOCK (D)MUTTER										(F)ECROU (S)TUERCA				
08311-38083		Y	.	B	B	B	S	S	S			9				
[05]		(E)SENSOR A-TEMPERATURE (D)SENSOR,TEMPERATUR										(F)DETECTEUR-TEMPERATURE (S)SENSOR-TEMPERATURA				
96177604		Y	.	B	B	B	S	S	S			1				
[06]		(E)VALVE-EGR (D)VENTIL										(F)SOUPAPE (S)VALVULA				
17089050		Y	A	B	B	B	O	O	O	&NN4/NN6		1				
17089050		Y	.	B	B	B	A	A	A	&NN7		1				
[07]		(E)GASKET-EGR (D)DICHTUNG										(F)JOINT (S)JUNTA				
96184987		Y	A	B	B	B	O	O	O	&NN4/NN6		1				
96184987		Y	.	B	B	B	A	A	A	&NN7		1				
[08]		(E)PIPE A-VACUUM (D)ROHR,VAKUUM										(F)TUYAU-DEPRESSION (S)TUBERIA-VACIO				
96242226		Y	A	B	B	B	O	O	O	&NN4/NN6		1				
96242228		Y	.	B	B	B	A	A	A	&NN7		1				
[09]		(E)BOLT-HEXAGON (D)SCHRAUBE										(F)BOULON (S)PERNO				

ENG(ENGINE)	T/A(TRANSAXLE)	BODY TYPE
Y = 1.5SOHC 6 = 1.6DOHC . = COMMON	M = MANUAL T/A A = AUTOMATIC T/A . = COMMON	4 N = 4 DOOR NOTCHBACK 3 H = 3 DOOR HATCHBACK 5 H = 5 DOOR HATCHBACK

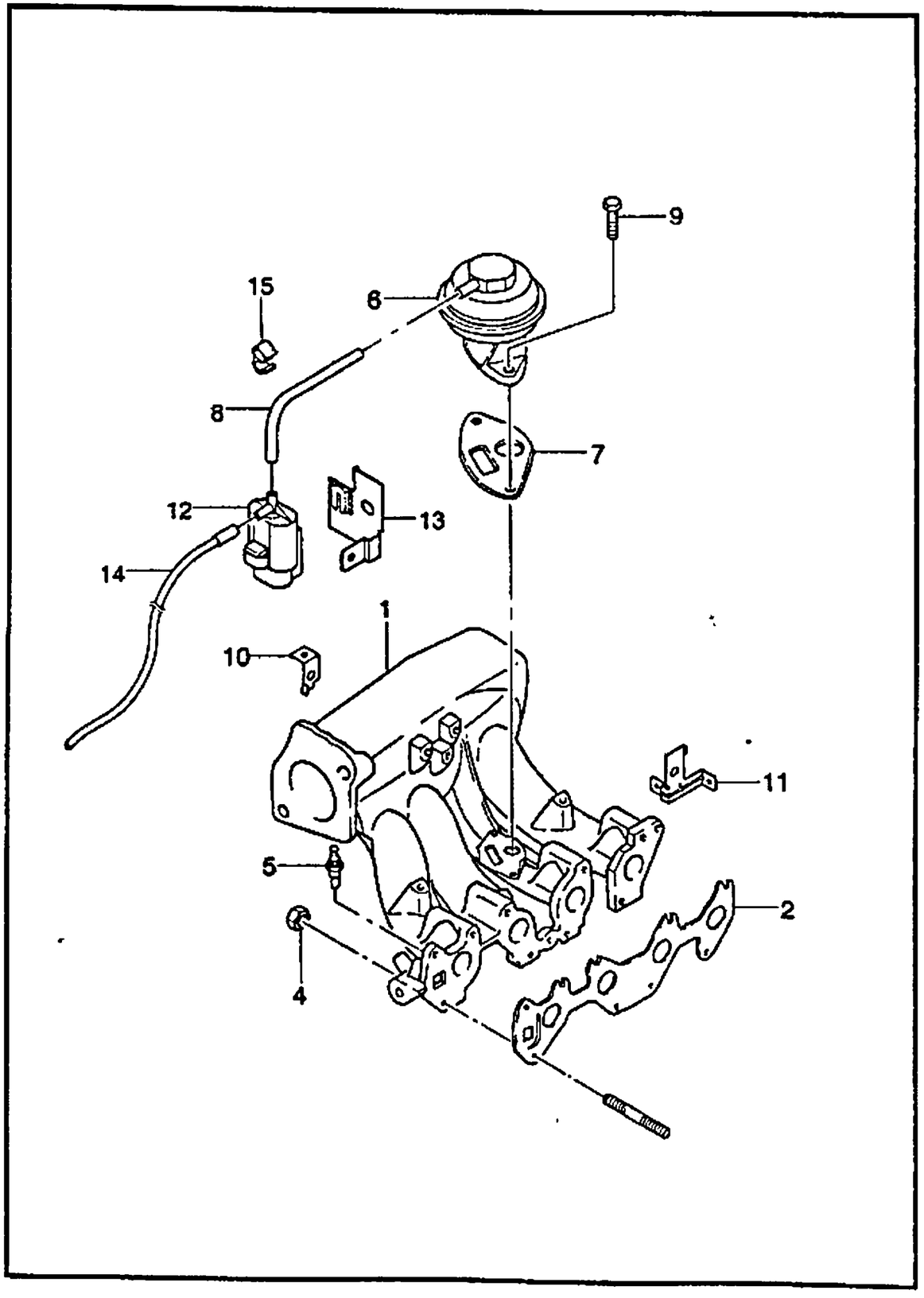

KEY NO. ITC	PART NO	MODEL ENG	T/A	BODY 4N	3H	5H	LEVEL S	SE	SX	OPTION	L/R	QTY	EFFECTIVE DATE FROM	TO	REMARKS	P/CODE
	11048333	Y	A	B	B	B	O	O	O	&NN4/NN6		2				
	11048333	Y	.	B	B	B	A	A	A	&NN7		2				
[10]	(E)BRACKET-ENGINE CONT.HARNESS *(D)TRÄGER*											*(F)SUPPORT* *(S)SOPORTE*				
	96234616	Y	.	B	B	B	S	S	S			1				
[11]	(E)BRACKET-ENGINE CONT.HARNESS *(D)TRÄGER*											*(F)SUPPORT* *(S)SOPORTE*				
	96234617	Y	.	B	B	B	S	S	S			1				
[12]	(E)VALVE-SOLENOID *(D)VENTIL*											*(F)SOUPAPE* *(S)VALVULA*				
	96350594	Y	.	B	B	B	A	A	A	&NN7		1				
[13]	(E)BRACKET-EGR *(D)TRÄGER*											*(F)SUPPORT* *(S)SOPORTE*				
	96350602	Y	.	B	B	B	A	A	A	&NN7		1				
[14]	(E)PIPE A-VACUUM *(D)ROHR,VAKUUM*											*(F)TUYAU-DEPRESSION* *(S)TUBERIA-VACIO*				
	96242229	Y	.	B	B	B	A	A	A	&NN7		1				
[15]	(E)CLIP *(D)KLEMME*											*(F)ATTACHE* *(S)GRAPA*				
	09408-00030	Y	.	B	B	B	A	A	A	&NN7		1				

ENG(ENGINE)	T/A(TRANSAXLE)	BODY TYPE
Y = 1.5SOHC 6 = 1.6DOHC . = COMMON	M = MANUAL T/A A = AUTOMATIC T/A . = COMMON	4 N = 4 DOOR NOTCHBACK 3 H = 3 DOOR HATCHBACK 5 H = 5 DOOR HATCHBACK

2431 INTAKE MANIFOLD(DOHC)

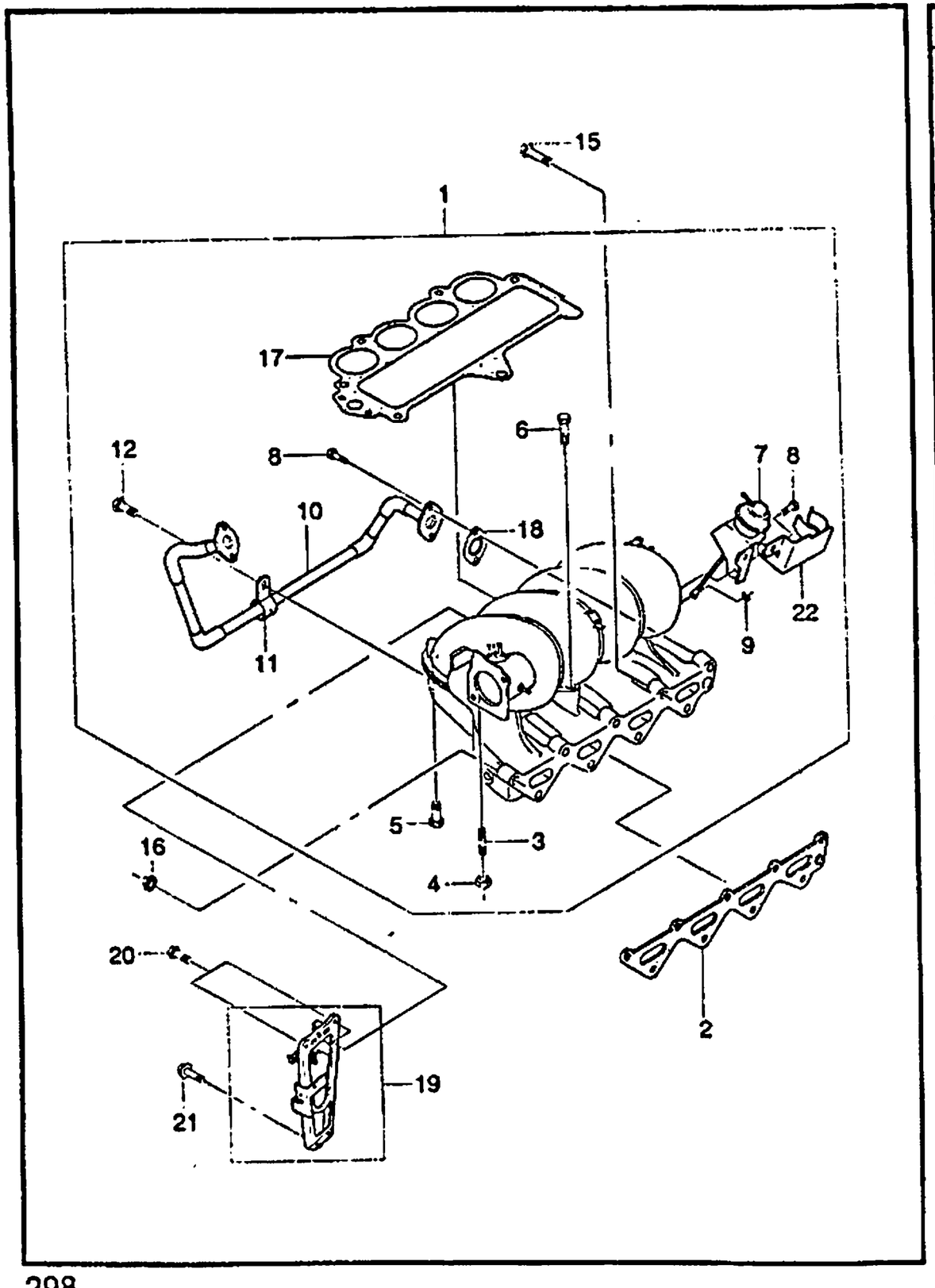

KEY NO. ITC	PART NO	MODEL ENG	T/A	BODY 4N	3H	5H	LEVEL S	SE	SX	OPTION	L/R	QTY	EFFECTIVE DATE FROM	TO	REMARKS	P/CODE
[01]		(E)MANIFOLD A-INTAKE,VGIS (D)SAMMELLEITUNG,EINLAß									(F)COLLECTEUR-ADMISSION (S)COLECTOR-ENTRADA					
96182872		6	.	B	B	B	.	.	O	&NN4/NN7		1		970522		
96351815		6	M	B	B	B	.	.	A	&NN6		1		970522		
96182872		6	A	B	B	B	.	.	A	&NN6		1		970522		
96182872		6	.	B	B	B	.	.	O	-KL9		1	970522			
96352535		6	.	B	B	B	.	.	A	&KL9		1			FOR BRAZIL	
[02]		(E)GASKET-INTAKE MANIFOLD (D)DICHTUNG,SAMMELLEITUNG									(F)JOINT (S)JUNTA-COLECTOR DE ENTRADA					
5094207001		6	.	B	B	B	.	.	O			1				
[03]		(E)BOLT-STUD (D)STIFTSCHRAUBE									(F)BOULON-TETON (S)PERNO-ESPIGA					
01420-08253		6	.	B	B	B	.	.	O			2				
[04]		(E)NUT-HEXAGON (D)MUTTER									(F)ECROU (S)TUERCA					
08310-12083		6	.	B	B	B	.	.	O			2				
[05]		(E)BOLT-HEXAGON (D)SCHRAUBE									(F)BOULON (S)PERNO					
01512-08253		6	.	B	B	B	.	.	O			4				
[06]		(E)BOLT-HEXAGON (D)SCHRAUBE									(F)BOULON (S)PERNO					
01120-08753		6	.	B	B	B	.	.	O			1				
[07]		(E)ACTUATOR A-VGIS (D)BETÄTIGUNG									(F)ACTIONNEUR (S)ACTUADOR					
96184029		6	.	B	B	B	.	.	O			1				
[08]		(E)BOLT-HEXAGON (D)SCHRAUBE									(F)BOULON (S)PERNO					
01110-06163		6	.	B	B	B	.	.	O	&NN4/NN7		6		970522		

ENG(ENGINE)	T/A(TRANSAXLE)	BODY TYPE
Y = 1.5SOHC 6 = 1.6DOHC . = COMMON	M = MANUAL T/A A = AUTOMATIC T/A . = COMMON	4 N = 4 DOOR NOTCHBACK 3 H = 3 DOOR HATCHBACK 5 H = 5 DOOR HATCHBACK

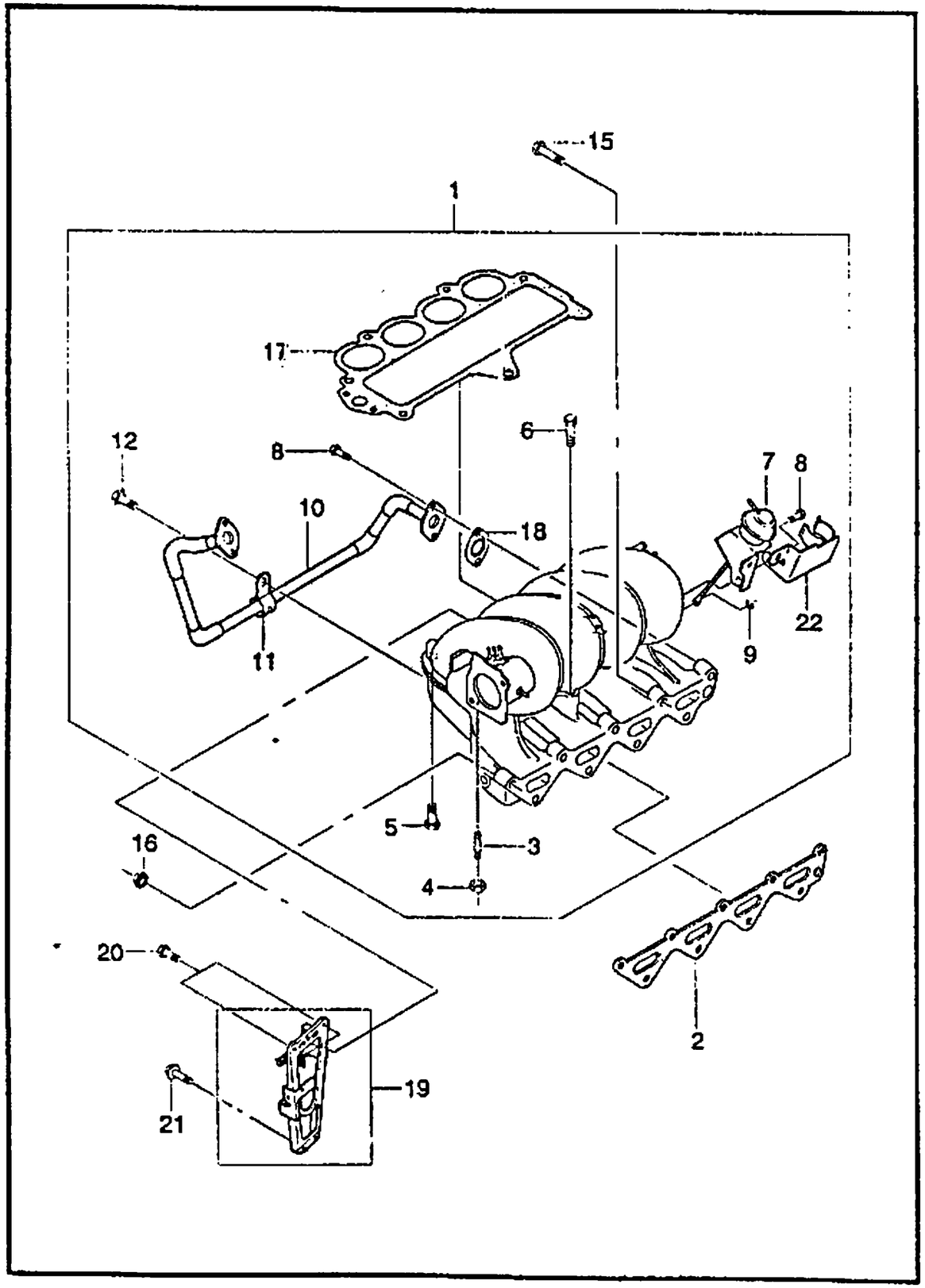

KEY NO. ITC	PART NO	MODEL ENG	T/A	BODY 4N	3H	5H	LEVEL S	SE	SX	OPTION	L/R	QTY	EFFECTIVE DATE FROM	TO	REMARKS	P/CODE
	01110-06163	6	M	B	B	B	.	.	A	&NN6		2		970522		
	01110-06163	6	A	B	B	B	.	.	A	&NN6		6		970522		
	01110-06163	6	.	B	B	B	.	.	O			6	970522			
[09]	(E)RING-RETAINING E TYPE (D)RING,HALTER										(F)ANNEAU-DE RETENTION (S)ANILLO-RETENEDOR					
	08332-11033	6	.	B	B	B	.	.	O			1				
[10]	(E)PIPE-EGR PASSAGE,VGIS (D)ROHR										(F)TUYAU (S)TUBERIA					
	96184030	6	.	B	B	B	.	.	O	&NN4/NN7		1		970522		
	96184030	6	A	B	B	B	.	.	A	&NN6		1		970522		
	96184030	6	.	B	B	B	.	.	O			1	970522			
[11]	(E)BRACKET-EGR,VGIS (D)TRÄGER										(F)SUPPORT (S)SOPORTE					
	96184111	6	.	B	B	B	.	.	O	&NN4/NN7		1		970522		
	96184111	6	A	B	B	B	.	.	A	&NN6		1		970522		
	96184111	6	.	B	B	B	.	.	O			1	970522			
[12]	(E)BOLT-HEXAGON (D)SCHRAUBE										(F)BOULON (S)PERNO					
	01117-06123	6	.	B	B	B	.	.	O	&NN4/NN7		1		970522		
	01117-06123	6	A	B	B	B	.	.	A	&NN6		1		970522		
	01117-06123	6	.	B	B	B	.	.	O			1	970522			
[15]	(E)BOLT-HEXAGON (D)SCHRAUBE										(F)BOULON (S)PERNO					
	01130-08353	6	.	B	B	B	.	.	O			7				
[16]	(E)NUT-HEXAGON LOCK (D)MUTTER										(F)ECROU (S)TUERCA					
	08311-38083	6	.	B	B	B	.	.	O			2				

ENG(ENGINE)	T/A(TRANSAXLE)	BODY TYPE
Y = 1.5SOHC 6 = 1.6DOHC . = COMMON	M = MANUAL T/A A = AUTOMATIC T/A . = COMMON	4 N = 4 DOOR NOTCHBACK 3 H = 3 DOOR HATCHBACK 5 H = 5 DOOR HATCHBACK

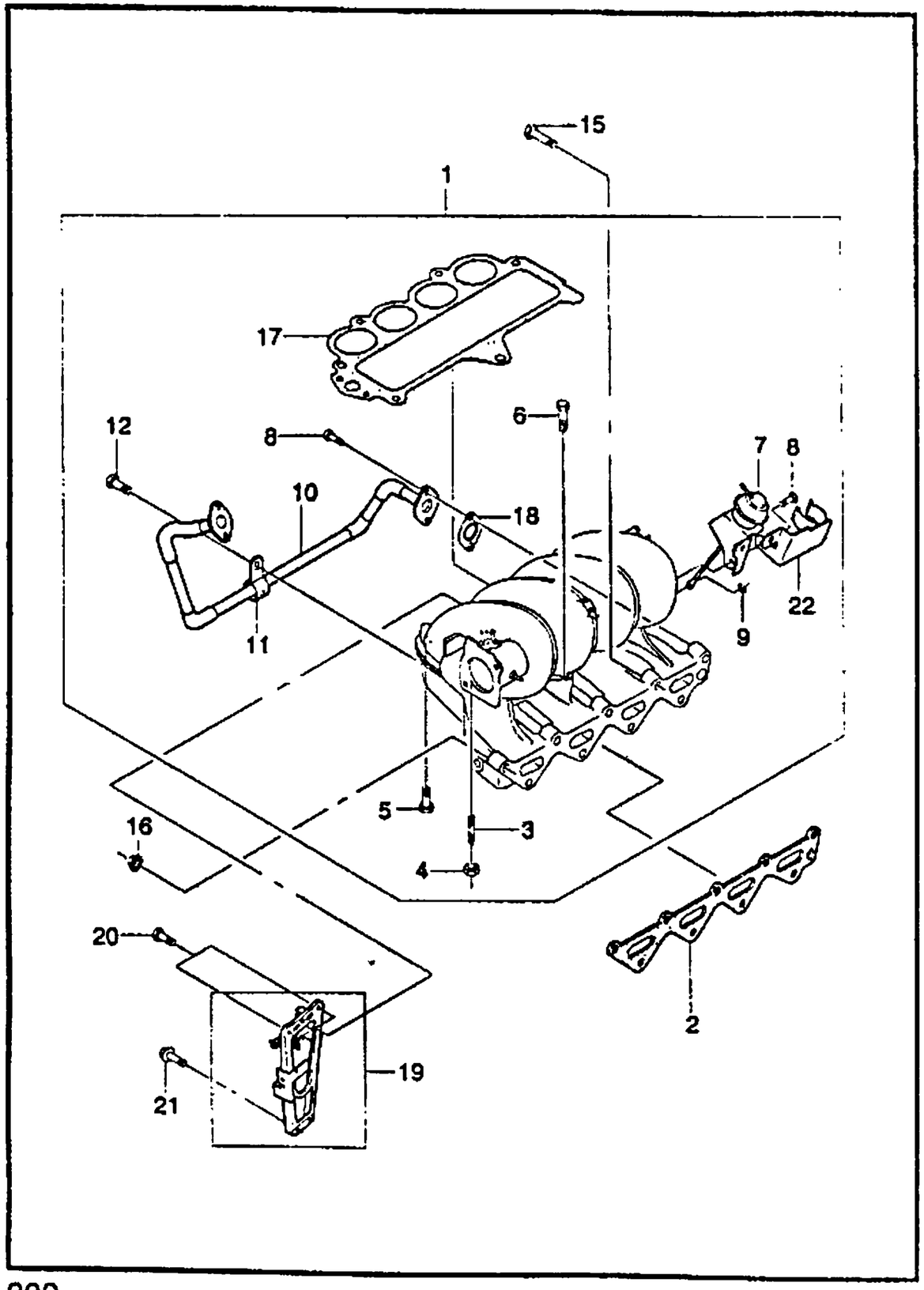

KEY NO. ITC	PART NO	MODEL ENG	T/A	BODY 4N	3H	5H	LEVEL S	SE	SX	OPTION	L/R	QTY	EFFECTIVE DATE FROM	TO	REMARKS	P/CODE
[17]		(E)GASKET-MANIFOLD,VGIS (D)DICHTUNG									(F)JOINT (S)JUNTA					
	96184699	6	.	B	B	B	.	.	O			1				
[18]		(E)GASKET-EGR PIPE,VGIS (D)DICHTUNG									(F)JOINT (S)JUNTA					
	96351344	6	.	B	B	B	.	.	O	&NN4/NN7		2		970522		
	96351344	6	A	B	B	B	.	.	A	&NN6		2		970522		
	96351344	6	.	B	B	B	.	.	O			2	970522			
[19]		(E)BRACKET-MANIFOLD,VGIS (D)TRÄGER									(F)SUPPORT (S)SOPORTE					
	96352245	6	.	B	B	B	.	.	O			1				
[20]		(E)BOLT-HEXAGON (D)SCHRAUBE									(F)BOULON (S)PERNO					
	01120-08163	6	.	B	B	B	.	.	O			2				
[21]		(E)BOLT (D)SCHRAUBE									(F)BOULON (S)PERNO					
	09116-10001	6	.	B	B	B	.	.	O			2				
[22]		(E)BRACKET-REGULATOR (D)TRÄGER									(F)SUPPORT (S)SOPORTE				-	
	96242770	6	.	B	B	B	.	.	A	&KL9		1			FOR BRAZIL	

ENG(ENGINE)	T/A(TRANSAXLE)	BODY TYPE
Y = 1.5SOHC	M = MANUAL T/A	4 N = 4 DOOR NOTCHBACK
6 = 1.6DOHC	A = AUTOMATIC T/A	3 H = 3 DOOR HATCHBACK
. = COMMON	. = COMMON	5 H = 5 DOOR HATCHBACK

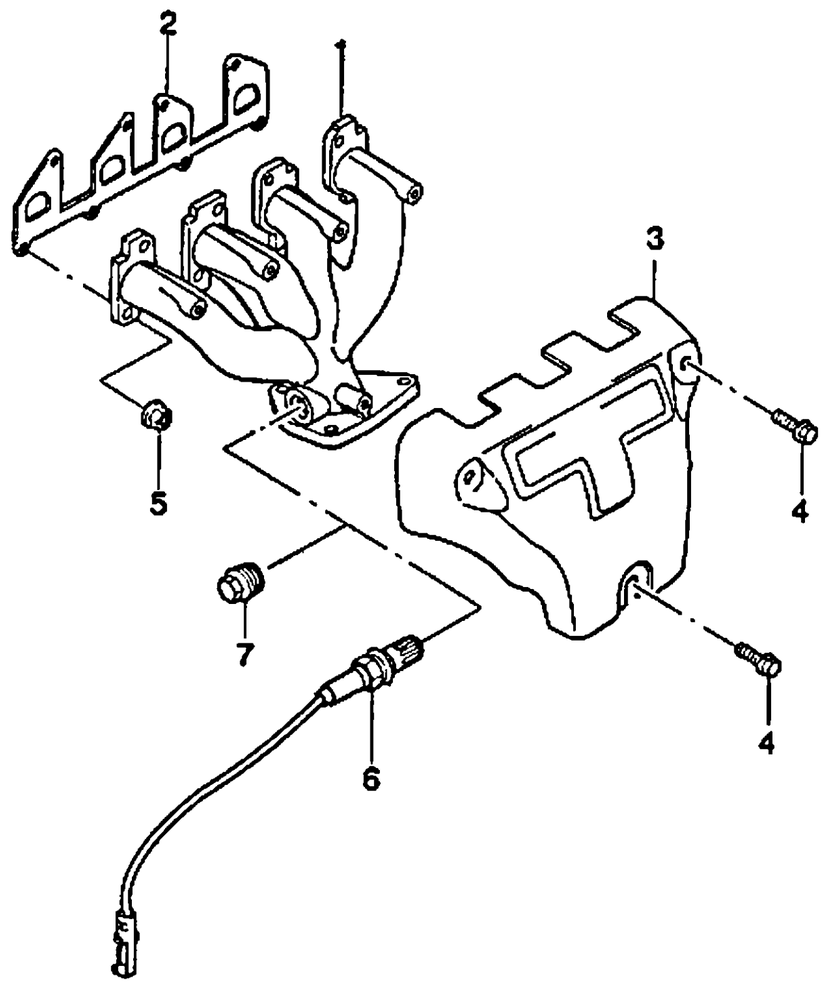

KEY NO. ITC	PART NO	MODEL ENG	MODEL T/A	BODY 4N	BODY 3H	BODY 5H	LEVEL S	LEVEL SE	LEVEL SX	OPTION	L/R	QTY	EFFECTIVE DATE FROM	EFFECTIVE DATE TO	REMARKS	P/CODE
[01]	96184642	(E)MANIFOLD-EXHAUST (D)SAMMELLEITUNG,ABGAS	Y	.	B	B	B	S	S	S		(F)COLLECTEUR-ECHAPPEMENT (S)COLECTOR-ESCAPE	1			
[02]	96181207	(E)GASKET-EXHAUST MANIFOLD (D)DICHTUNG,SAMMELLEITUNG	Y	.	B	B	B	S	S	S		(F)JOINT (S)JUNTA-COLECTOR DE ESCAPE	1			
[03]	96182236	(E)SHIELD-EXH MANIFOLD HEAT (D)HEIZSCHUTZTEIL	Y	.	B	B	B	S	S	S		(F)BOUCLIER THERMIQUE (S)ESCUDO REFRACTARIO	1			MS
[04]	01180-08162	(E)BOLT-HEXAGON (D)SCHRAUBE	Y	.	B	B	B	S	S	S		(F)BOULON (S)PERNO	3			
[05]	09159-08012	(E)NUT (D)MUTTER	Y	.	B	B	B	S	S	S		(F)ECROU (S)TUERCA	8			
[06]	25162753	(E)SENSOR A-EXHAUST GAS (D)SENSOR,ABGAS BELÜFTUNG	Y	.	B	B	B	A	A	A	&NN6/NN7	(F)DETECTEUR (S)SENSOR-OXIGENO DEL ESCAPE	1			
[07]	96100183	(E)BOLT (D)SCHRAUBE	Y	.	B	B	B	S	S	S	&NN4	(F)BOULON (S)PERNO	1	971001		
O	09247-18001		Y	.	B	B	B	S	S	S	&NN4		1	971001		

ENG(ENGINE)	T/A(TRANSAXLE)	BODY TYPE
Y = 1.5SOHC 6 = 1.6DOHC . = COMMON	M = MANUAL T/A A = AUTOMATIC T/A . = COMMON	4 N = 4 DOOR NOTCHBACK 3 H = 3 DOOR HATCHBACK 5 H = 5 DOOR HATCHBACK

2441 EXHAUST MANIFOLD(DOHC)

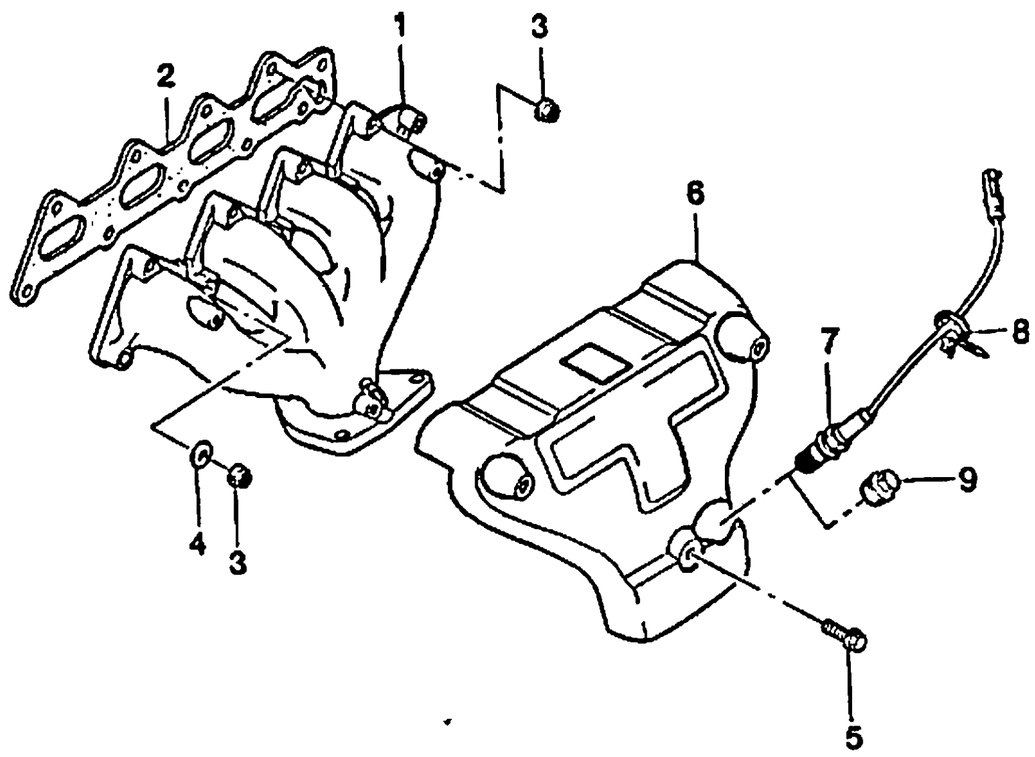

KEY NO. ITC	PART NO	MODEL ENG	T/A	BODY 4N	3H	5H	LEVEL S	SE	SX	OPTION	L/R	QTY	EFFECTIVE DATE FROM	TO	REMARKS	P/CODE
[01]		(E)MANIFOLD-EXHAUST (D)SAMMELLEITUNG,ABGAS									(F)COLLECTEUR-ECHAPPEMENT (S)COLECTOR,ESCAPE					
	96350544	6	.	B	B	B	.	.	O			1				
[02]		(E)GASKET-EXHAUST MANIFOLD (D)DICHTUNG,SAMMELLEITUNG									(F)JOINT (S)JUNTA-COLECTOR DE ESCAPE					
	509402100\	6	.	B	B	B	.	.	O			1		970507		
	Y 96350469	6	.	B	B	B	.	.	O			1	970507			
[03]		(E)NUT (D)MUTTER									(F)ECROU (S)TUERCA					
	09159-08012	6	.	B	B	B	.	.	O			10				
[04]		(E)WASHER (D)DICHTUNGSRING									(F)RONDELLE (S)ARANDELA					
	96143555	6	.	B	B	B	.	.	O			3				
[05]		(E)BOLT-HEXAGON (D)SCHRAUBE									(F)BOULON (S)PERNO					
	01180-08162	6	.	B	B	B	.	.	O			3				
[06]		(E)SHIELD-EXH MANIFOLD HEAT (D)HEIZSCHUTZTEIL									(F)BOUCLIER THERMIQUE (S)ESCUDO REFRACTARIO					
	96350821	6	.	B	B	B	.	.	O			1				MD
[07]		(E)SENSOR A-EXHAUST GAS (D)SENSOR,ABGAS BELÜFTUNG									(F)DETECTEUR (S)SENSOR-OXIGENO DEL ESCAPE					
	25162753	6	.	B	B	B	.	.	A	&NN6/NN7		1				
[08]		(E)CLAMP (D)KLAMMER									(F)PINCE (S)ABRAZADERA					
	09407-16401	6	.	B	B	B	.	.	O			1				
[09]		(E)BOLT (D)SCHRAUBE									(F)BOULON (S)PERNO					
	96100183	6	.	B	B	B	.	.	O	&NN4		1				

ENG(ENGINE)	T/A(TRANSAXLE)	BODY TYPE
Y = 1.5SOHC 6 = 1.6DOHC . = COMMON	M = MANUAL T/A A = AUTOMATIC T/A . = COMMON	4 N = 4 DOOR NOTCHBACK 3 H = 3 DOOR HATCHBACK 5 H = 5 DOOR HATCHBACK

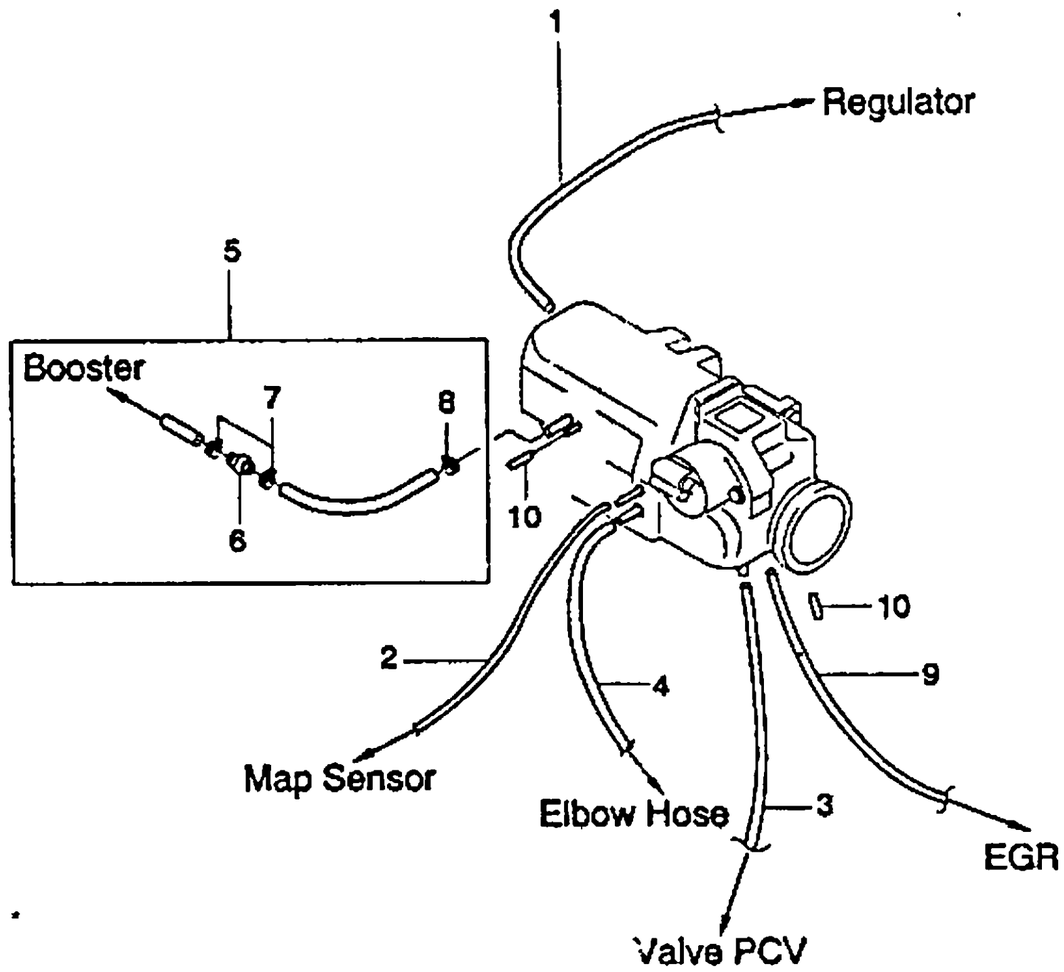

KEY NO. ITC	PART NO	MODEL ENG	T/A	BODY 4N	3H	5H	LEVEL S	SE	SX	OPTION	L/R	QTY	EFFECTIVE DATE FROM	TO	REMARKS	P/CODE
[01]		(E)HOSE-VACUUM (D)SCHLAUCH,VAKUUM REFER GROUP 2210 KEY NO. 10													(F)TUYAU-DEPRESSION (S)MANGUERA-VACIO	
[02]	96239375	(E)PIPE A-VACUUM (D)ROHR,VAKUUM	Y	.	B	B	B	S	S	S		1			(F)TUYAU-DEPRESSION (S)TUBERIA-VACIO	
[03]		(E)TUBE A-PURGE,ENGINE (D)ROHRLEITUNG REFER GROUP 2130 KEY NO. 15													(F)TUYAU OU TUBE (S)TUBO	
[04]		(E)HOSE-ENGINE VENTILATION (D)SCHLAUCH,VENTILATOR REFER GROUP 2410 KEY NO. 22													(F)TUYAU-VENTILATION (S)MANGUERA-VENTILACION	
[05]	96304432	(E)HOSE-VACUUM (D)SCHLAUCH,VAKUUM	Y	.	B	B	B	S	S	S		1			(F)TUYAU-DEPRESSION (S)MANGUERA-VACIO	
[06]	90193282	(E)VALVE-CHECK (D)VENTIL,PRÜF	Y	.	B	B	B	S	S	S		1			(F)SOUPAPE-SECURITE (S)VALVULA-PARADA	
[07]	09401-17402	(E)CLIP (D)KLEMME	Y	.	B	B	B	S	S	S		2			(F)ATTACHE (S)GRAPA	
[08]	09401-15402	(E)CLIP (D)KLEMME	Y	.	B	B	B	S	S	S		2			(F)ATTACHE (S)GRAPA	
[09]		(E)PIPE A-VACUUM (D)ROHR,VAKUUM REFER GROUP 2430 KEY NO. 08													(F)TUYAU-DEPRESSION (S)TUBERIA-VACIO	
[10]		(E)CAP (D)DECKEL													(F)CHAPEAU (S)TAPA	

ENG(ENGINE)	T/A(TRANSAXLE)	BODY TYPE
Y = 1.5SOHC 6 = 1.6DOHC . = COMMON	M = MANUAL T/A A = AUTOMATIC T/A . = COMMON	4 N = 4 DOOR NOTCHBACK 3 H = 3 DOOR HATCHBACK 5 H = 5 DOOR HATCHBACK

2450 VACUUM HOSE(SOHC)

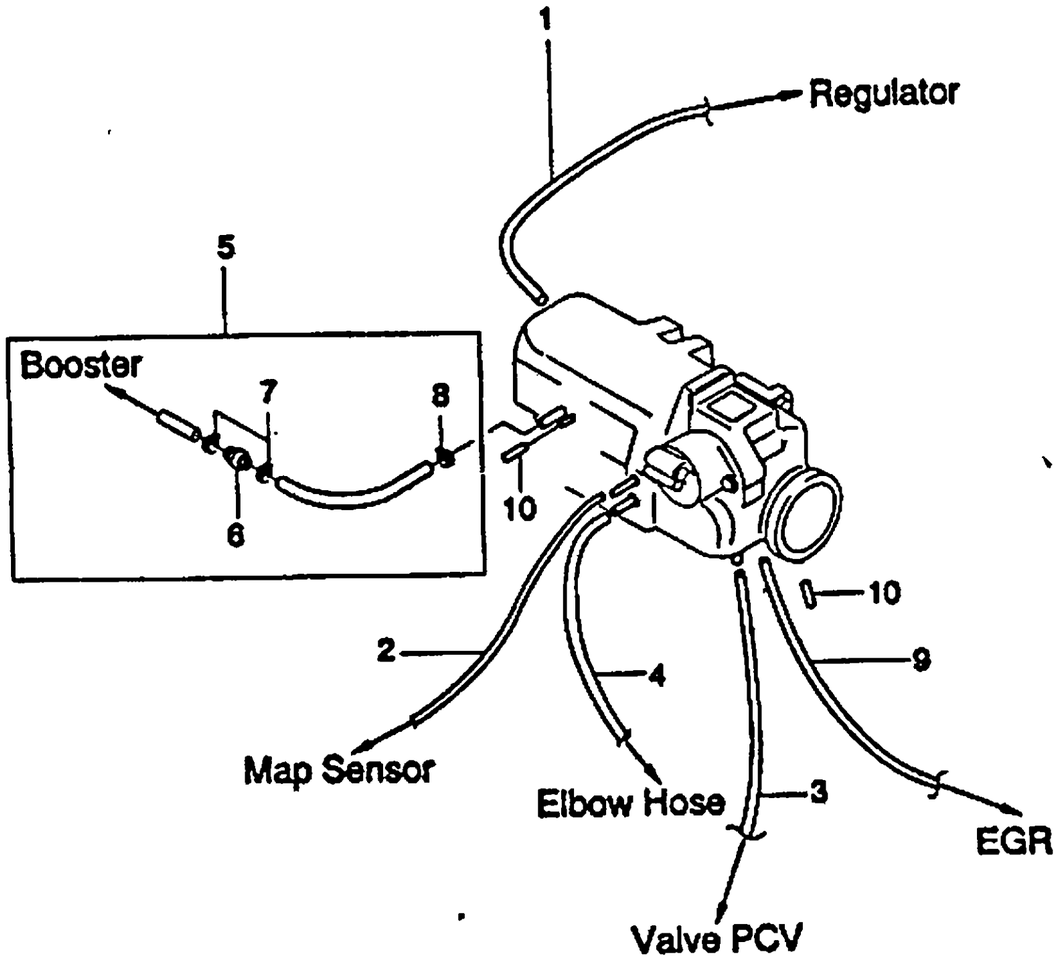

KEY NO.		PART NAME															
ITC	PART NO	MODEL								OPTION	L/R	QTY	EFFECTIVE DATE		REMARKS	P/CODE
		ENG	T/A	BODY			LEVEL						FROM	TO		
				4N	3H	5H	S	SE	SX							
	08981899	Y	.	B	B	B	S	S	S			1				

ENG(ENGINE)	T/A(TRANSAXLE)	BODY TYPE
Y = 1.5SOHC 6 = 1.6DOHC . = COMMON	M = MANUAL T/A A = AUTOMATIC T/A . = COMMON	4 N = 4 DOOR NOTCHBACK 3 H = 3 DOOR HATCHBACK 5 H = 5 DOOR HATCHBACK

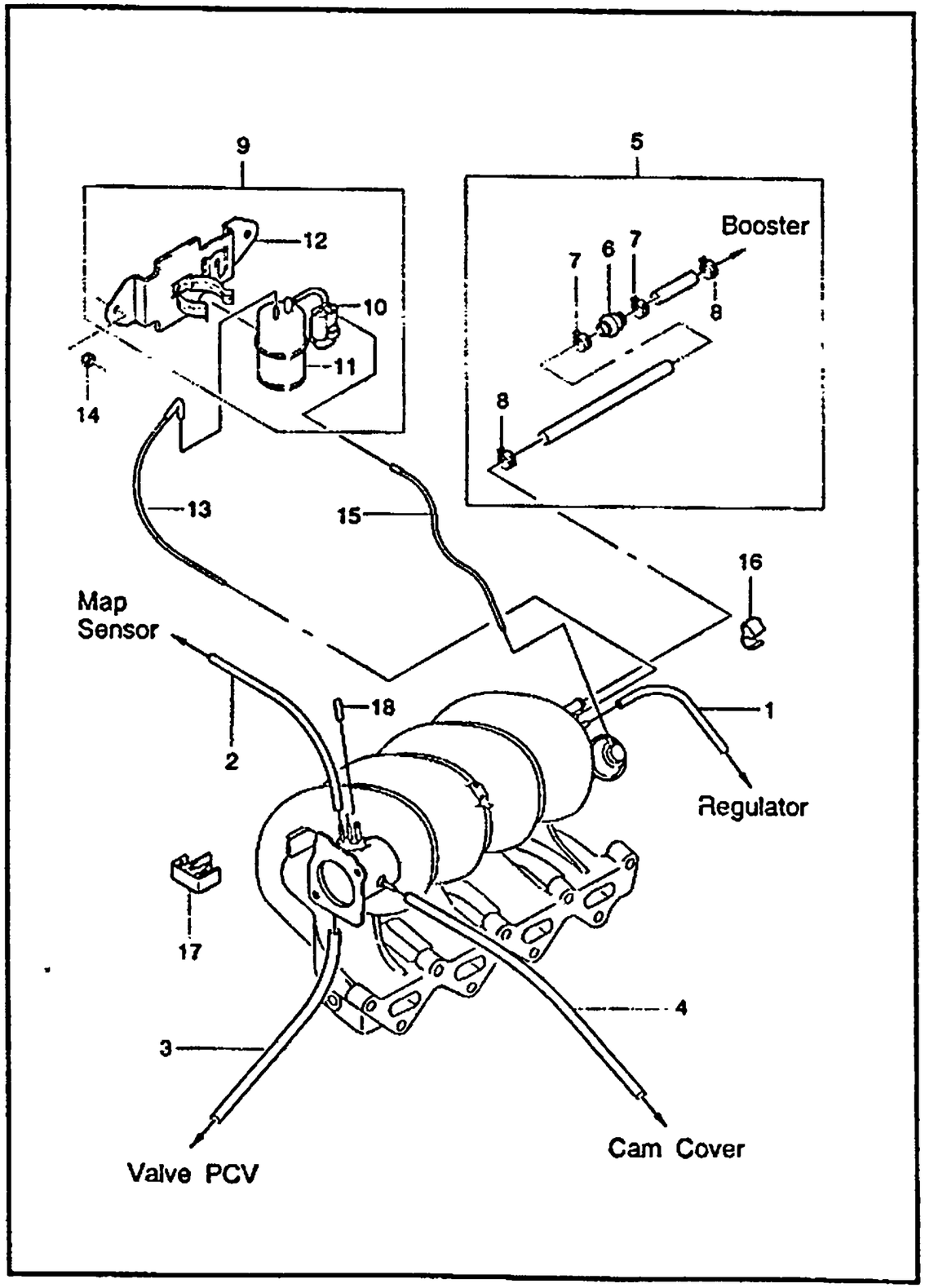

KEY NO. ITC	PART NO	MODEL ENG	T/A	BODY 4N	3H	5H	LEVEL S	SE	SX	OPTION	L/R	QTY	EFFECTIVE DATE FROM	TO	REMARKS	P/CODE
[01]		(E)HOSE-VACUUM (D)SCHLAUCH,VAKUUM									(F)TUYAU-DEPRESSION (S)MANGUERA-VACIO					
		REFER GROUP 2211 KEY NO. 10														
[02]		(E)PIPE A-VACUUM (D)ROHR,VAKUUM									(F)TUYAU-DEPRESSION (S)TUBERIA-VACIO					
	96239374	6	.	B	B	B	.	.	O			1				
[03]		(E)TUBE-PURGE,ENGINE (D)ROHRLEITUNG									(F)TUYAU OU TUBE (S)TUBO					
		REFER GROUP 2130 KEY NO. 15														
[04]		(E)HOSE-INTAKE,BREATHER (D)SCHLAUCH									(F)TUYAU (S)MANGUERA					
	96184788	6	.	B	B	B	.	.	O			1				
[05]		(E)HOSE A-VACUUM (D)SCHLAUCH,VAKUUM									(F)TUYAU-DEPRESSION (S)MANGUERA-VACIO					
	96306170	6	.	B	B	B	.	.	O			1		971001		
	96306170	6	.	B	B	B	.	.	O	-KL9		1	971001			
O	96257689	6	.	B	B	B	.	.	O	&KL9		1	971001			
[06]		(E)VALVE-CHECK (D)VENTIL,PRUF									(F)SOUPAPE-SECURITE (S)VALVULA-PARADA					
	90193282	6	.	B	B	B	.	.	O			1				
[07]		(E)CLIP (D)KLEMME									(F)ATTACHE (S)GRAPA					
	09401-17402	6	.	B	B	B	.	.	O			2				
[08]		(E)CLIP (D)KLEMME									(F)ATTACHE (S)GRAPA					
	09401-15402	6	.	B	B	B	.	.	O			2				
[09]		(E)SOLENOID A-VGIS (D)SOLENOID									(F)SOLENOIDE (S)SELENOIDE					

ENG(ENGINE)	T/A(TRANSAXLE)	BODY TYPE
Y = 1.5SOHC 6 = 1.6DOHC . = COMMON	M = MANUAL T/A A = AUTOMATIC T/A . = COMMON	4 N = 4 DOOR NOTCHBACK 3 H = 3 DOOR HATCHBACK 5 H = 5 DOOR HATCHBACK

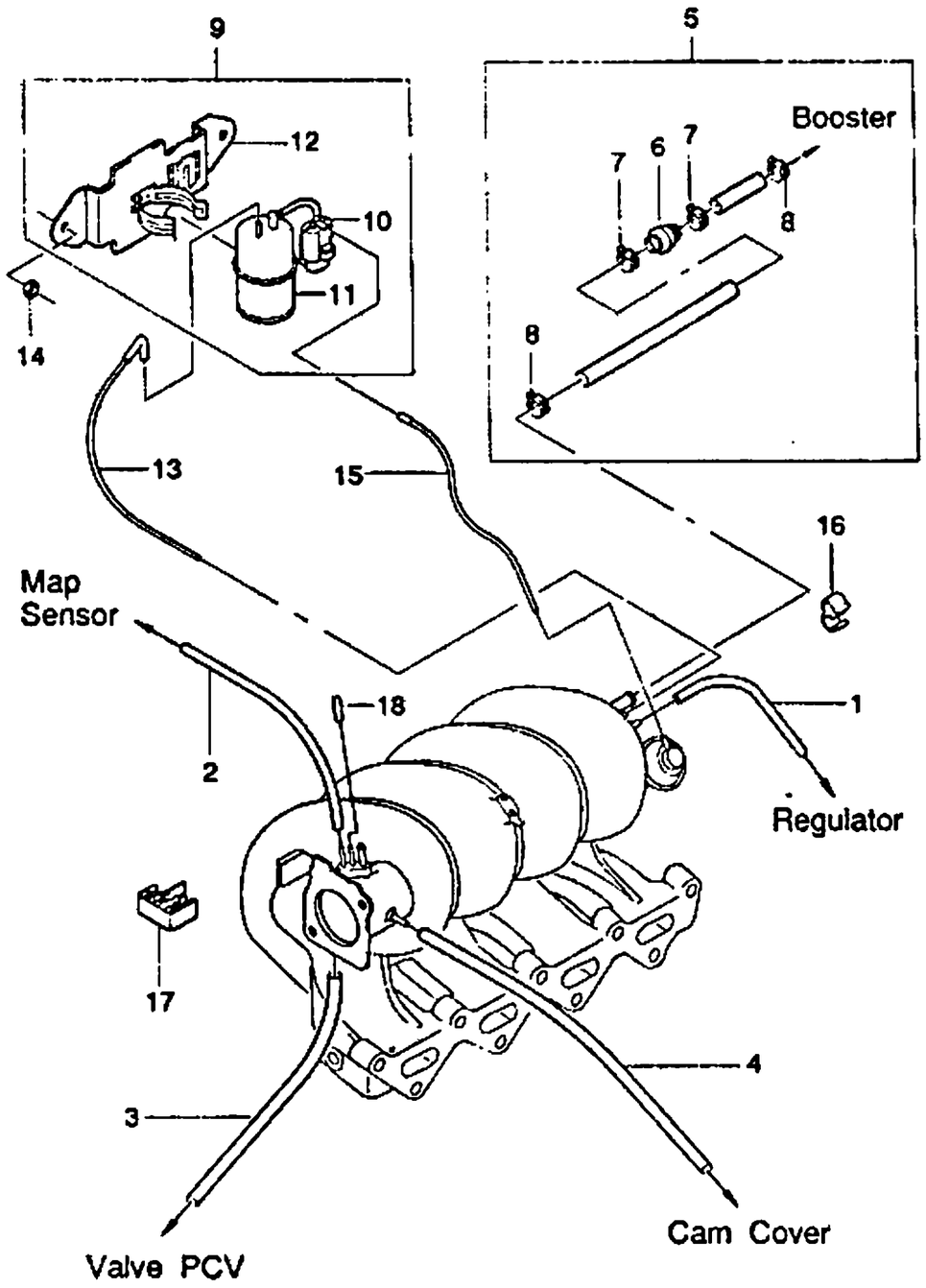

KEY NO. ITC	PART NO	MODEL ENG	MODEL T/A	MODEL BODY 4N	MODEL BODY 3H	MODEL BODY 5H	MODEL LEVEL S	MODEL LEVEL SE	MODEL LEVEL SX	OPTION	L/R	QTY	EFFECTIVE DATE FROM	EFFECTIVE DATE TO	REMARKS	P/CODE
[10]	96184584	6	.	B	B	B	.	.	O			1			(E)VALVE-SOLENOID (D)VENTIL (F)SOUPAPE (S)VALVULA	
[11]	96350594	6	.	B	B	B	.	.	O			1			(E)TANK-VACUUM,VGIS (D)TANK,VAKUUM (F)RESERVOIR-DEPRESSION (S)TANQUE-VACIO	
[12]	96350595	6	.	B	B	B	.	.	O			1			(E)BRACKET-VGIS (D)TRÄGER (F)SUPPORT (S)SOPORTE	
[13]	96350597	6	.	B	B	B	.	.	O			1			(E)PIPE A-VACUUM (D)ROHR,VAKUUM (F)TUYAU-DEPRESSION (S)TUBERIA-VACIO	
[14]	96244912	6	.	B	B	B	.	.	O			1			(E)NUT-HEXAGON FLANGE (D)MUTTER (F)ECROU (S)TUERCA	
[15]	08316-25063	6	.	B	B	B	.	.	O			2			(E)PIPE A-VACUUM (D)ROHR,VAKUUM (F)TUYAU-DEPRESSION (S)TUBERIA-VACIO	
[16]	96239379	6	.	B	B	B	.	.	O			1			(E)CLIP (D)KLEMME (F)ATTACHE (S)GRAPA	
[17]	09408-00030	6	.	B	B	B	.	.	O			1			(E)CLIP (D)KLEMME (F)ATTACHE (S)GRAPA	
[18]	09408-00081	6	.	B	B	B	.	.	O			2			(E)CAP (D)DECKEL (F)CHAPEAU (S)TAPA	
	90190478	6	.	B	B	B	.	.	O			1				

ENG(ENGINE)	T/A(TRANSAXLE)	BODY TYPE
Y = 1.5SOHC 6 = 1.6DOHC . = COMMON	M = MANUAL T/A A = AUTOMATIC T/A . = COMMON	4 N = 4 DOOR NOTCHBACK 3 H = 3 DOOR HATCHBACK 5 H = 5 DOOR HATCHBACK

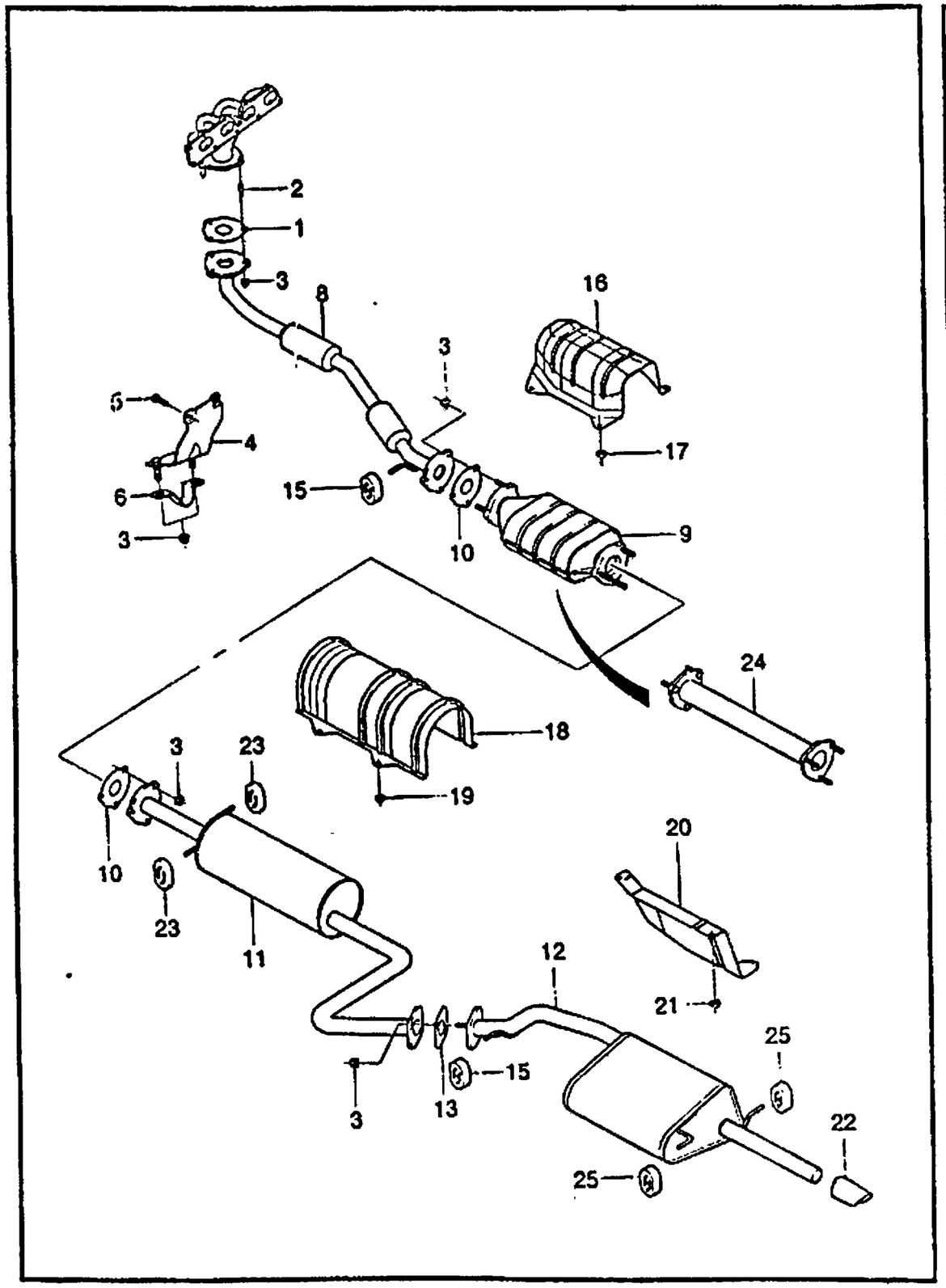

KEY NO.		PART NAME															
		MODEL															
				BODY			LEVEL										
ITC	PART NO	ENG	T/A	4N	3H	5H	S	SE	SX	OPTION	L/R	QTY	EFFECTIVE DATE FROM	EFFECTIVE DATE TO	REMARKS	PICODE
[01]	96184040	. .	. .	B	B	B	S	S	S			1	(E)GASKET-FRT EXHAUST PIPE (D)DICHTUNG		(F)JOINT (S)JUNTA-TUBERIA DE ESCAPE	
[02]	09108-10003	. .	. .	B	B	B	S	S	S			3	(E)BOLT-STUD (D)STIFTSCHRAUBE		(F)BOULON-TETON (S)PERNO-ESPIGA	
[03]	08311-38102	. .	. .	B	B	B	S	S	S			13	(E)NUT-HEXAGON LOCK (D)MUTTER		(F)ECROU (S)TUERCA	
[04]	96351913	. .	. .	B	B	B	S	S	S			1	(E)BRACKET A-UPPER (D)TRÄGER		(F)SUPPORT (S)SOPORTE	
[05]	09103-10050	. .	. .	B	B	B	S	S	S			2	(E)BOLT-HEXAGON FLANGE (D)SCHRAUBE		(F)BOULON (S)PERNO	
[06]	96351914	. .	. .	B	B	B	S	S	S			1	(E)BRACKET-LOWER (D)TRÄGER		(F)SUPPORT (S)SOPORTE	
[08]	96182250	Y	M	B	B	B	S	S	S			1	(E)PIPE A-EXHAUST,FRONT (D)ROHR		(F)TUYAU (S)TUBERIA	TF
	96352186	Y	A	B	B	B	O	O	O			1				TE
	96352213	6	M	B	B	B	.	.	O			1				TG
	96352215	6	A	B	B	B	.	.	O			1				TK
[09]	96350081	Y	.	B	B	B	A	A	A	&NN6		1	(E)CONVERTER A-CATALYTIC (D)KATALYSATOR		(F)CONVERTISSEUR-CATALYTIQUE (S)CONVERTIDOR-CATALITICO	KO
	96351364	6	.	B	B	B	.	.	A	&NN6		1				KH

ENG(ENGINE)	T/A(TRANSAXLE)	BODY TYPE
Y = 1.5SOHC 6 = 1.6DOHC . = COMMON	M = MANUAL T/A A = AUTOMATIC T/A . = COMMON	4 N = 4 DOOR NOTCHBACK 3 H = 3 DOOR HATCHBACK 5 H = 5 DOOR HATCHBACK

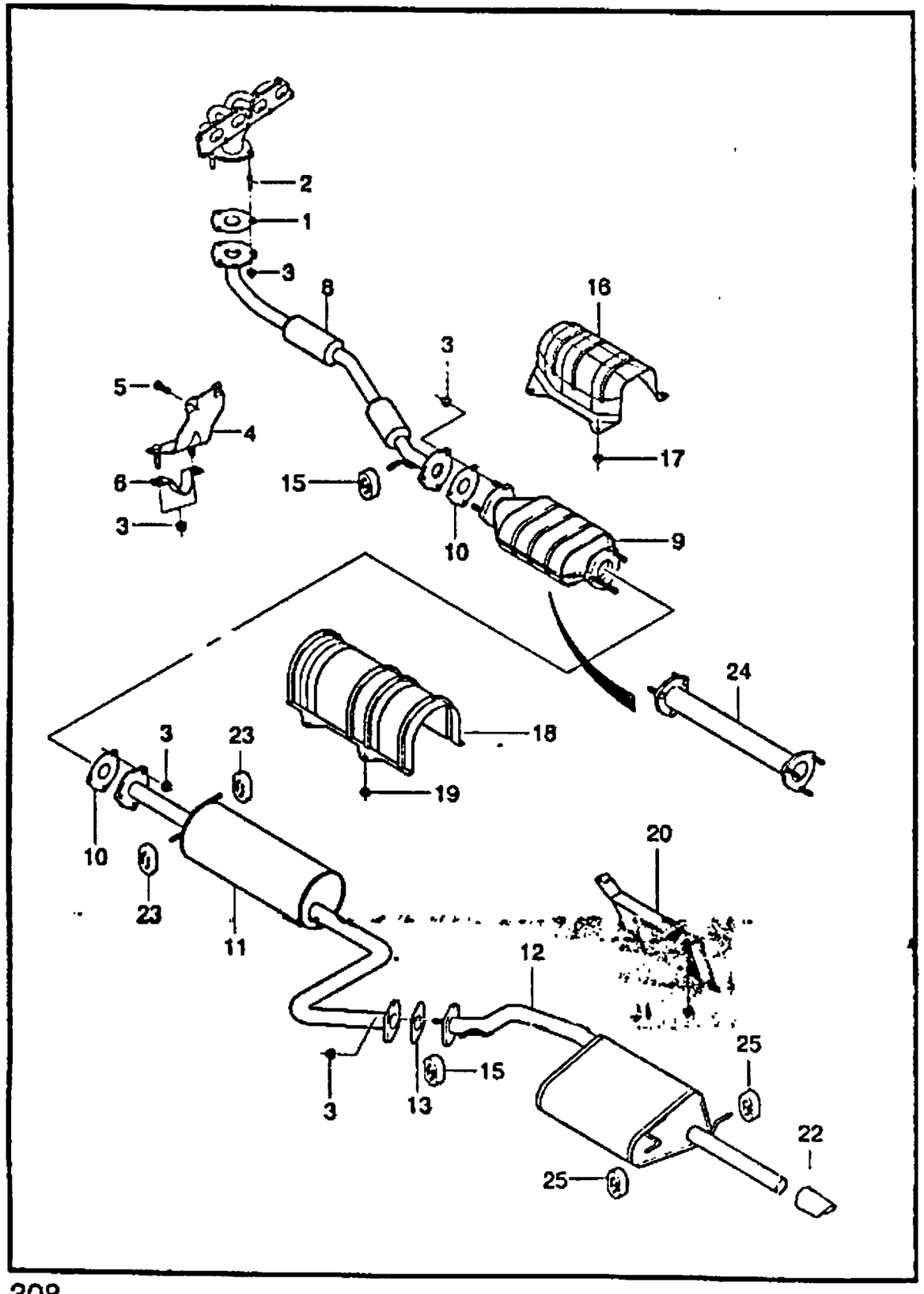

KEY NO. ITEM	PART NO	MODEL ENG	T/A	BODY 4N	3H	5H	LEVEL S	SE	SX	OPTION	L/R	QTY	EFFECTIVE DATE FROM	TO	REMARKS	P/CODE
	96350080	.	.	B	B	B	A	A	A	&NN7		1				EO
[10]	(E)GASKET-CATALYTIC CONVERTER (D)DICHTUNG										(F)JOINT-CONVERTISSEUR VATAL (S)JUNTA-CONVERTIDOR VATAL					
	96350814	.	..	B	B	B	S	S	S			2				
[11]	(E)MUFFLER A-EXHAUST,FRONT (D)AUSPUFFTOPF,VORNE										(F)POT D'ECHAPPEMENT (S)SILENCIADOR-ESCAPE-DELAN					
	96350723	.	.	B	B	B	S	S	S			1				[illegible]
[12]	(E)MUFFLER A-EXHAUST,REAR (D)AUSPUFFTOPF,HINTEN										(F)POT D'ECHAPPEMENT (S)SILENCIADOR-ESCAPE					
	96350734	.	.	B	.	.	S	S	S			1				TX
	96350703	.	.	.	B	B	S	.	S			1				TW
[13]	(E)GASKET-REAR MUFFLER (D)DICHTUNG										(F)JOINT (S)JUNTA					
	96181581	.	.	B	B	B	S	S	S			1				
[15]	(E)RUBBER-HANGER (D)GUMMI										(F)CAOUTCHOUC (S)GOMA					
	96351529	.	.	B	B	B	S	S	S			2			NO. 1,3	
[16]	(E)SHIELD-CATALYTIC CONV.PRO (D)SCHILD,KATALYSATOR										(F)BOUCLIER-PROTECTION (S)ESCUDO-PROTECTOR					
	96184956	.	.	B	B	B	S	S	S			1				GC
[17]	(E)NUT-LOCK (D)MUTTER										(F)ECROU (S)TUERCA					
	96351831	.	.	B	B	B	S	S	S			4				
[18]	(E)SHIELD-FRT MUFFLER PROTV. (D)SCHILD,SCHALLDAMPFER										(F)BOUCLIER-PROTECTION (S)ESCUDO-PROTECTOR					
	96184957	.	.	B	B	B	S	S	S			1				GF
[19]	(E)NUT-LOCK (D)MUTTER										(F)ECROU (S)TUERCA					

ENG(ENGINE)	T/A(TRANSAXLE)	BODY TYPE
Y = 1.5SOHC 6 = 1.6DOHC . = COMMON	M = MANUAL T/A A = AUTOMATIC T/A . = COMMON	4 N = 4 DOOR NOTCHBACK 3 H = 3 DOOR HATCHBACK 5 H = 5 DOOR HATCHBACK

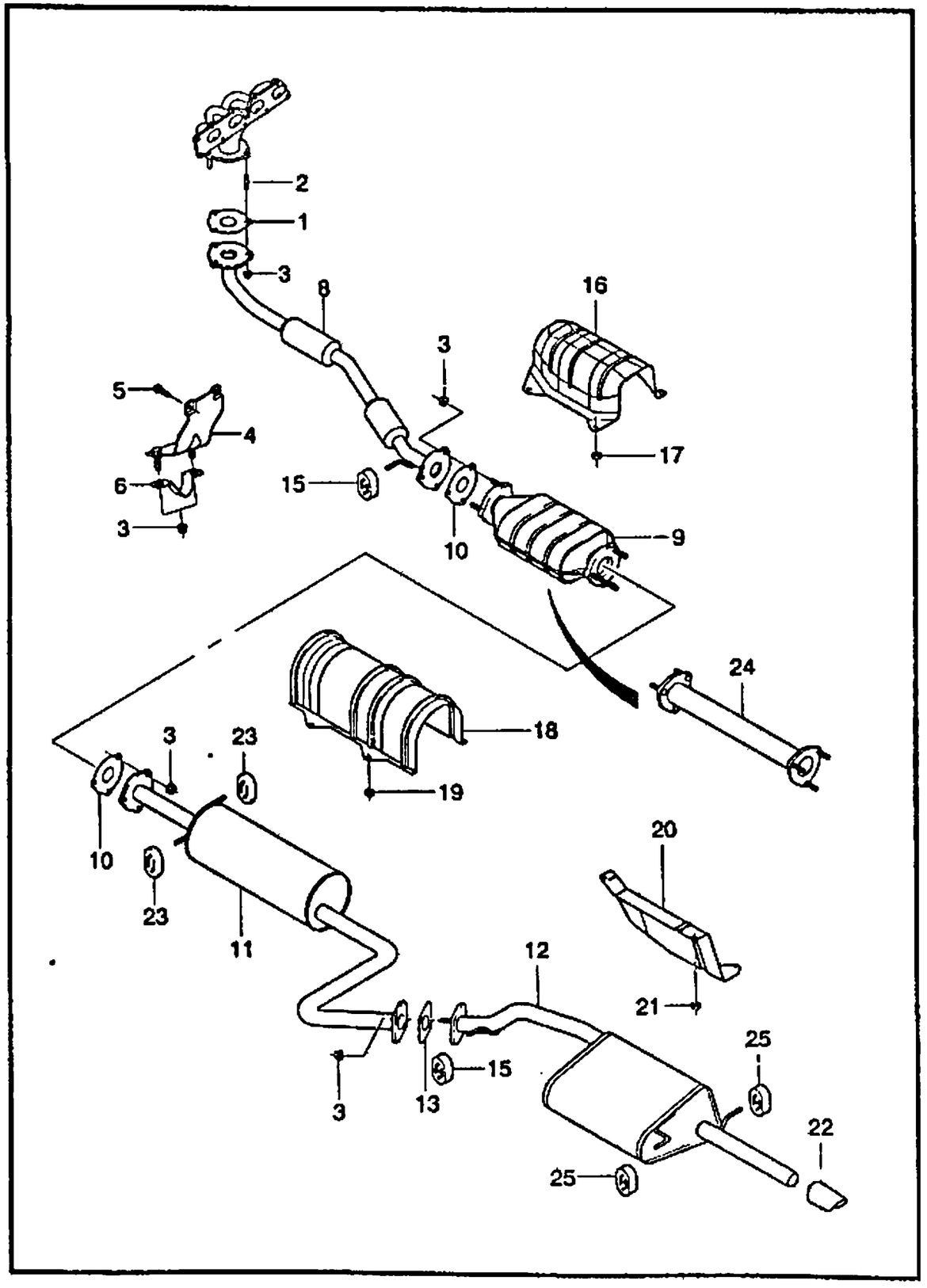

KEY NO. ITC	PART NO	MODEL ENG	T/A	BODY 4N	3H	5H	LEVEL S	SE	SX	OPTION	L/R	QTY	EFFECTIVE DATE FROM	TO	REMARKS	P/CODE
[20]	96351831	.	.	B	B	B	S	S	S			4				
	(E)SHIELD-RR MUFFLER PROTV.										(F)BOUCLIER-PROTECTION					
	(D)SCHILD,SCHALLDÄMPFER										(S)ESCUDO-PROTECTOR					
[21]	96350492	.	.	B	B	B	S	S	S			1				GR
	(E)NUT-LOCK										(F)ECROU					
	(D)MUTTER										(S)TUERCA					
[22]	96351831	.	.	B	B	B	S	S	S			4				
	(E)RING-TRIM,EXHAUST										(F)ANNEAU					
	(D)RING,AUSPUFF-VERZIERUNG										(S)ANILLO-ADORNO					
[23]	96180147	.	.	B	B	B	S	S	S			1				
	(E)RUBBER-HANGER										(F)CAOUTCHOUC					
	(D)GUMMI										(S)GOMA					
[24]	96351183	.	.	B	B	B	S	S	S			2			NO. 2	
	(E)PIPE A-EXHAUST,CONNECTOR										(F)TUYAU					
	(D)ROHR										(S)TUBERIA					
[25]	96351601	.	.	B	B	B	S	S	S	&NN4		1				
	(E)RUBBER-HANGER										(F)CAOUTCHOUC					
	(D)GUMMI										(S)GOMA					
	96181437	.	.	B	B	B	S	S	S			2			NO. 4,5	

ENG(ENGINE)	T/A(TRANSAXLE)	BODY TYPE
Y = 1.5SOHC	M = MANUAL T/A	4 N = 4 DOOR NOTCHBACK
6 = 1.6DOHC	A = AUTOMATIC T/A	3 H = 3 DOOR HATCHBACK
. = COMMON	. = COMMON	5 H = 5 DOOR HATCHBACK

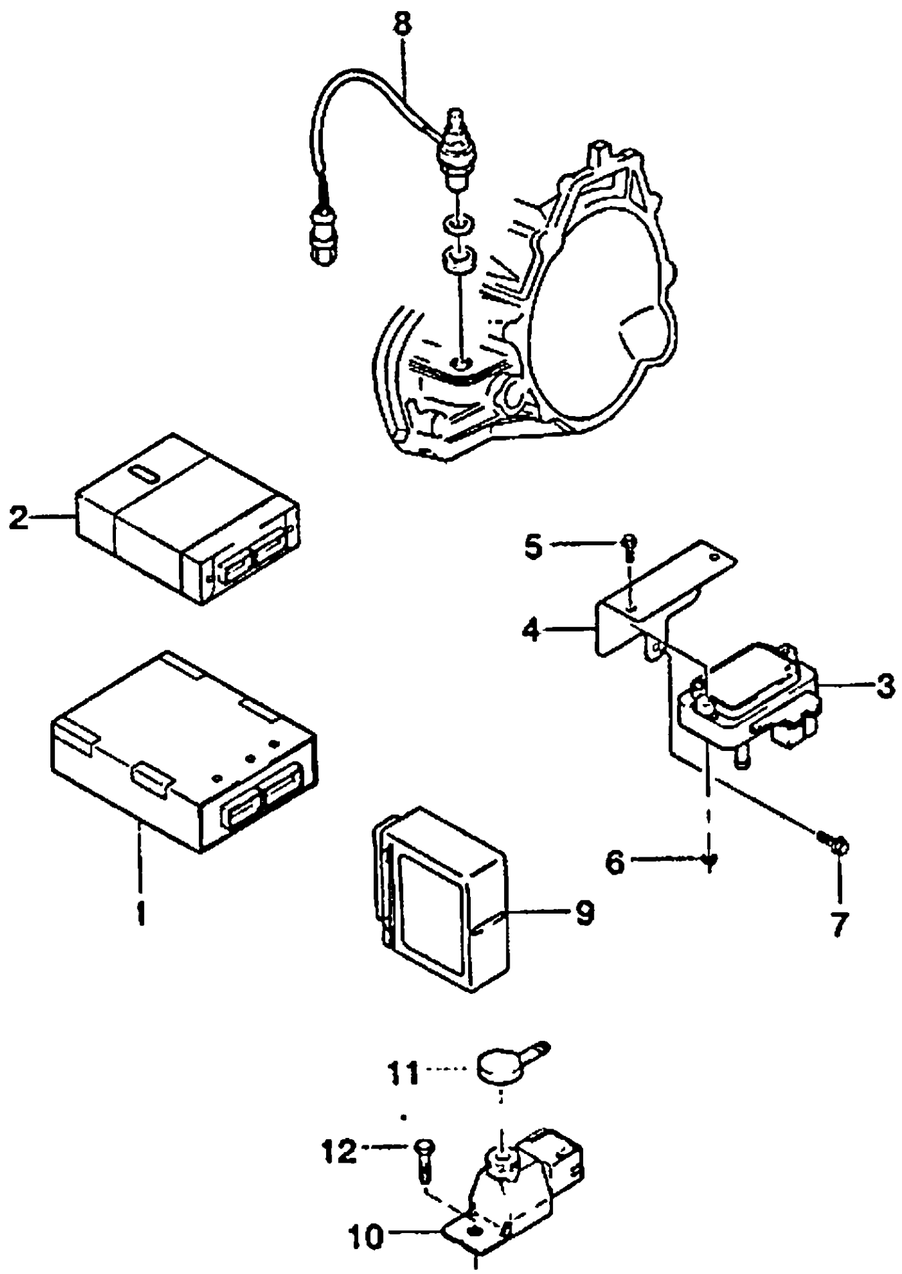

NOTE : @1-GENERAL AREA
@2-HIGH ALITUDE AREA
@3-LOW VOLATILITY AREA
@4-HOT AREA
@5-COLD AREA

KEY NO. ITC	PART NO	MODEL ENG	MODEL T/A	MODEL BODY 4N	MODEL BODY 3H	MODEL BODY 5H	MODEL LEVEL S	MODEL LEVEL SE	MODEL LEVEL SX	OPTION	L/R	QTY	EFFECTIVE DATE FROM	EFFECTIVE DATE TO	REMARKS	P/CODE
[01]		(E)MODULE-ENGINE CONTROL (D)STEUERUNGS-EINHEIT									(F)UNITE DE CONTROLE (S)UNIDAD DE CONTROL					
	16245849	Y	M	B	B	B	S	S	S	&NN4-UM1		1			@1	JJ
	16249619	Y	M	B	B	B	A	A	A	&NN4&UM1		1			@1	JX
	16240269	Y	M	B	B	B	A	A	A	&NN6-UM1		1			@1	BB
	16269529	Y	M	B	B	B	A	A	A	&NN6&UM1		1			@1	PP
	16247139	Y	M	B	B	B	A	A	A	&NN7-UM1		1			@1	GC
	16247149	Y	M	B	B	B	A	A	A	&NN7&UM1		1			@1	CA
	16245859	Y	A	B	B	B	O	O	O	&NN4-UM1		1			@1	JL
	16249639	Y	A	B	B	B	A	A	A	&NN4&UM1		1			@1	JY
	16240279	Y	A	B	B	B	A	A	A	&NN6-UM1		1			@1	BD
	16269539	Y	A	B	B	B	A	A	A	&NN6&UM1		1			@1	PV
	16247159	Y	A	B	B	B	A	A	A	&NN7-UM1		1			@1	GD
	16247169	Y	A	B	B	B	A	A	A	&NN7&UM1		1			@1	CN
	16247079	Y	M	B	B	B	A	A	A	&NN4-UM1/VB4		1			@2	KD
	96257285	Y	M	B	B	B	A	A	A	&NN4&VB4-UM1		1			@2	GA
	16247089	Y	M	B	B	B	A	A	A	&NN4&UM1		1			@2	KL
	16245839	Y	M	B	B	B	A	A	A	&NN6-UM1		1			@2	HJ
	16247099	Y	A	B	B	B	A	A	A	&NN4-UM1/VB4		1			@2	KF
	96257286	Y	A	B	B	B	A	A	A	&NN4&VB4-UM1		1			@2	GB
	16247109	Y	A	B	B	B	A	A	A	&NN4&UM1		1			@2	KM
	16246579	Y	A	B	B	B	A	A	A	&NN6-UM1		1			@2	HN
	16245869	Y	M	B	B	B	A	A	A	&NN6-UM1		1			@3	HY
	16245879	Y	A	B	B	B	A	A	A	&NN6-UM1		1			@3	HZ

ENG(ENGINE)	T/A(TRANSAXLE)	BODY TYPE
Y = 1.5SOHC	M = MANUAL T/A	4 N = 4 DOOR NOTCHBACK
6 = 1.6DOHC	A = AUTOMATIC T/A	3 H = 3 DOOR HATCHBACK
. = COMMON	. = COMMON	5 H = 5 DOOR HATCHBACK

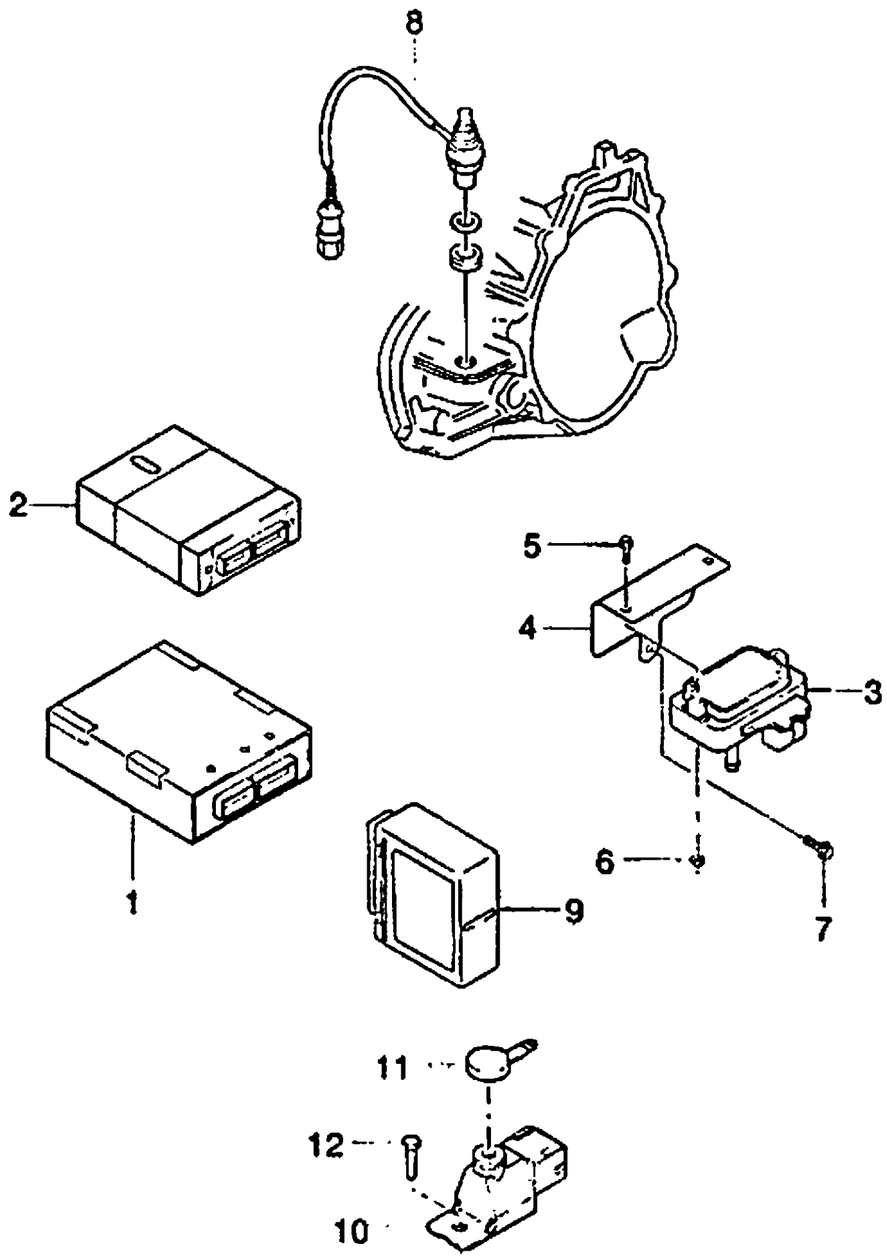

NOTE : @1-GENERAL AREA
@2-HIGH ALITUDE AREA
@3-LOW VOLATILITY AREA
@4-HOT AREA
@5-COLD AREA

KEY NO.		PART NAME														
		MODEL										EFFECTIVE DATE				
				BODY			LEVEL									
ITC	PART NO	ENG	T/A	4N	3H	5H	S	SE	SX	OPTION	L/R	QTY	FROM	TO	REMARKS	P/CODE
	16247119	Y	M	B	B	B	A	A	A	&NN4-UM1/VB4		1			@4	KV
	96257287	Y	M	B	B	B	A	A	A	&NN4&VB4-UM1		1			@4	GG
	16247179	Y	M	B	B	B	A	A	A	&NN7-UM1		1			@4	JC
	16269499	Y	M	B	B	B	A	A	A	&NN7&EC2&UM1		1			@4	PW
	16247129	Y	A	B	B	B	A	A	A	&NN4-UM1/VB4		1			@4	KW
	96257288	Y	A	B	B	B	A	A	A	&NN4&VB4-UM1		1			@4	GH
	16247199	Y	A	B	B	B	A	A	A	&NN7-UM1		1			@4	JD
	16269509	Y	A	B	B	B	A	A	A	&NN7&EC2&UM1		1			@4	PX
	16247059	Y	M	B	B	B	A	A	A	&NN4-UM1		1			@5	JZ
	16247069	Y	A	B	B	B	A	A	A	&NN4-UM1		1			@5	KC
	16246179	6	M	B	B	B	.	.	O	&NN4-UM1		1			@1	MV
	16249689	6	M	B	B	B	.	.	A	&NN4&UM1		1			@1	MX
	16246159	6	M	B	B	B	.	.	A	&NN6-UM1		1			@1	GF
	16246159	6	M	B	B	B	.	.	A	&NN7-UM1		1			@1	GF
	16246939	6	M	B	B	B	.	.	A	&NN7&UM1		1			@1	CQ
	16246189	6	A	B	B	B	.	.	O	&NN4-UM1		1			@1	MW
	16249699	6	A	B	B	B	.	.	A	&NN4&UM1		1			@1	MY
	16246169	6	A	B	B	B	.	.	A	&NN6-UM1		1			@1	GJ
	16246169	6	A	B	B	B	.	.	A	&NN7-UM1		1			@1	GJ
	16246899	6	A	B	B	B	.	.	A	&NN7&UM1		1			@1	CS
	16249729	6	M	B	B	B	.	.	A	&NN4-UM1/VB4		1			@2	NH
	16269989	6	M	B	B	B	.	.	A	&NN4VB4-UM1		1			@2	GM
	16249749	6	M	B	B	B	.	.	A	&NN4&UM1		1			@2	NZ
	16249649	6	M	B	B	B	.	.	A	&NN7-UM1		1			@2	KX

ENG(ENGINE)	T/A(TRANSAXLE)	BODY TYPE
Y = 1.5SOHC 6 = 1.6DOHC . = COMMON	M = MANUAL T/A A = AUTOMATIC T/A . = COMMON	4 N = 4 DOOR NOTCHBACK 3 H = 3 DOOR HATCHBACK 5 H = 5 DOOR HATCHBACK

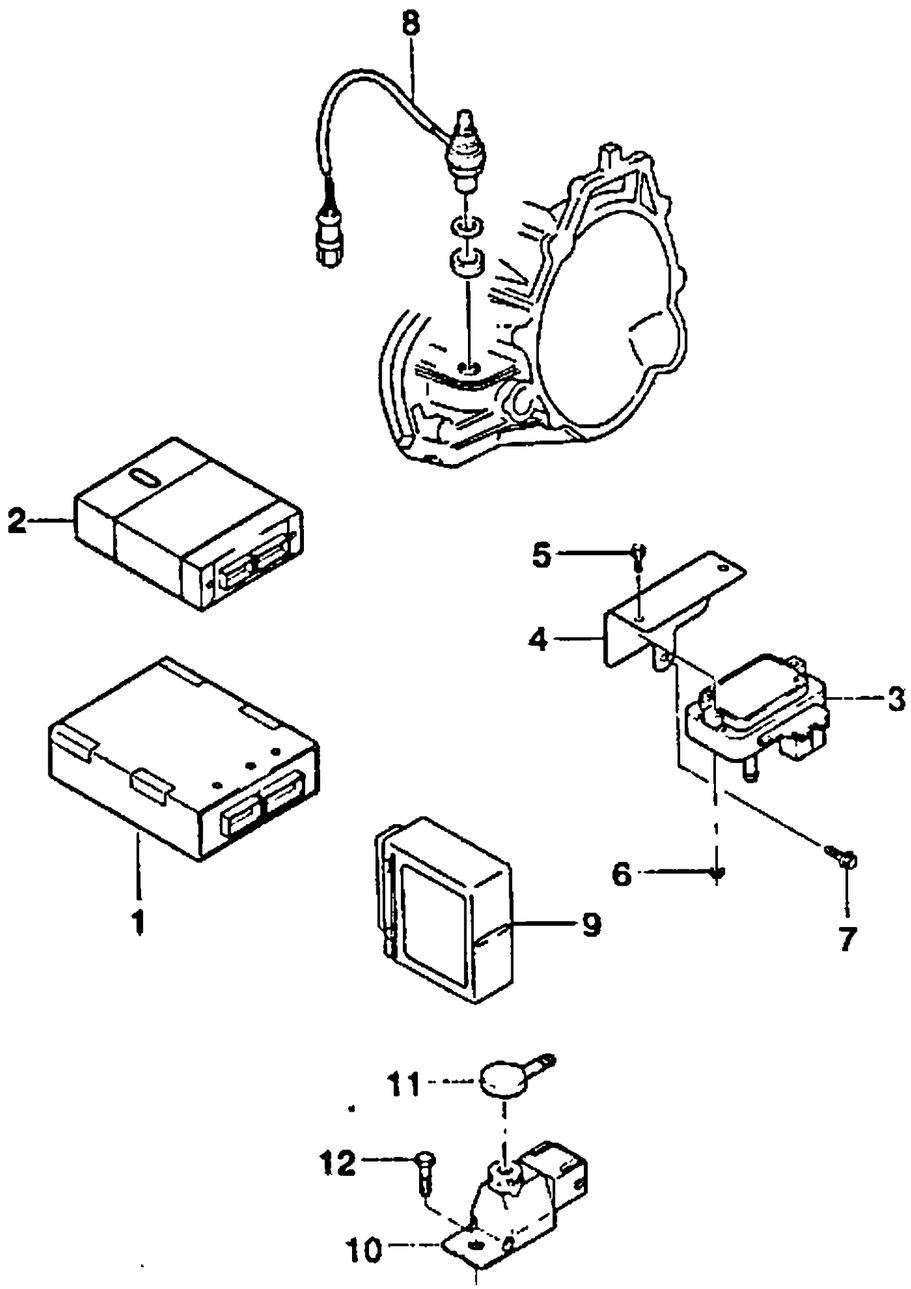

NOTE : @1-GENERAL AREA @2-HIGH ALITUDE AREA
@3-LOW VOLATILITY AREA
@4-HOT AREA @5-COLD AREA

KEY NO. ITC	PART NO	MODEL ENG	MODEL T/A	BODY 4N	BODY 3H	BODY 5H	LEVEL S	LEVEL SE	LEVEL SX	OPTION	L/R	QTY	EFFECTIVE DATE FROM	EFFECTIVE DATE TO	REMARKS	P/CODE
	16249739	6	A	B	B	B	.	.	A	&NN4-UM1/VB4		1			@2	NN
	16269999	6	A	B	B	B	.	.	A	&NN4VB4-UM1		1			@2	GP
	16249759	6	A	B	B	B	.	.	A	&NN4&UM1		1			@2	PC
	16249659	6	A	B	B	B	.	.	A	&NN7-UM1		1			@2	KY
	16249669	6	M	B	B	B	.	.	A	&NN7-UM1		1			@3	KZ
	16249679	6	A	B	B	B	.	.	A	&NN7-UM1		1			@3	MM
	16249769	6	M	B	B	B	.	.	A	&NN4-UM1/VB4		1			@4	PD
	09350009	6	M	B	B	B	.	.	A	&NN4&VB4-UM1		1			@4	GQ
	16269549	6	M	B	B	B	.	.	A	&NN4&UM1		1			@4	QA
	16246199	6	M	B	B	B	.	.	A	&NN7-UM1		1			@4	MN
	16269599	6	M	B	B	B	.	.	A	&NN7&EC2&UM1		1			@4	PY
	16249779	6	A	B	B	B	.	.	A	&NN4-UM1/VB4		1			@4	PE
	09350019	6	A	B	B	B	.	.	A	&NN4&VB4-UM1		1			@4	GR
	16269559	6	A	B	B	B	.	.	A	&NN4&UM1		1			@4	QD
	16246209	6	A	B	B	B	.	.	A	&NN7-UM1		1			@4	MR
	16269609	6	A	B	B	B	.	.	A	&NN7&EC2&UM1		1			@4	PZ
	16249709	6	M	B	B	B	.	.	A	&NN4-UM1		1			@5	MZ
	16249719	6	A	B	B	B	.	.	A	&NN4-UM1		1			@5	NF
	16269579	6	M	B	B	B	.	.	A	&KL9		1			FOR BRAZIL	MS
	16269589	6	A	B	B	B	.	.	A	&KL9		1			FOR BRAZIL	MT
	[02]	(E)MODULE-TRANSAXLE CONTROL (D)MODUL										(F)MODULE (S)MODULO				
	16245799	Y	A	B	B	B	O	O	O			1		970714		WK
O	16265669	Y	A	B	B	B	O	O	O			1	970714			XY

ENG(ENGINE)	T/A(TRANSAXLE)	BODY TYPE
Y = 1.5SOHC	M = MANUAL T/A	4 N = 4 DOOR NOTCHBACK
6 = 1.6DOHC	A = AUTOMATIC T/A	3 H = 3 DOOR HATCHBACK
. = COMMON	. = COMMON	5 H = 5 DOOR HATCHBACK

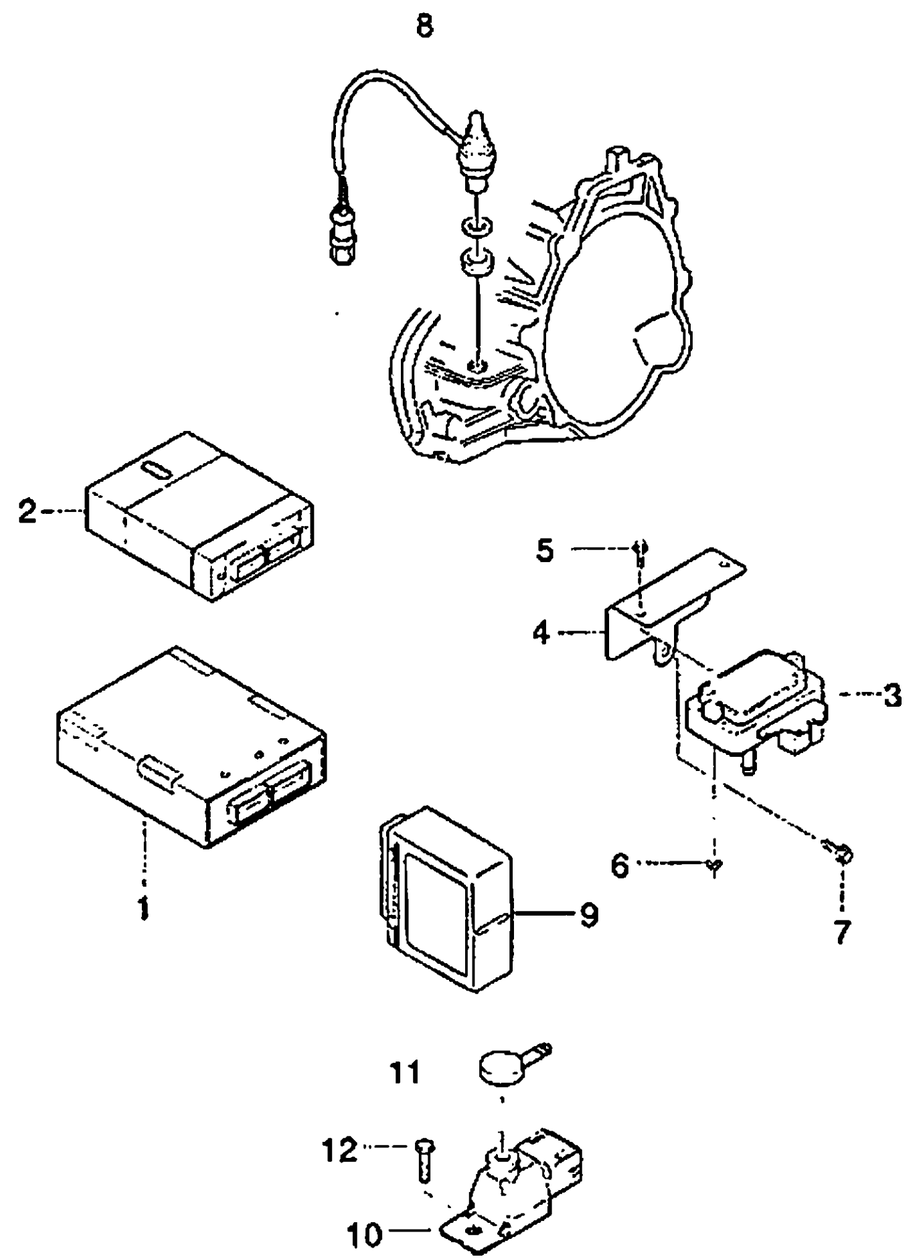

NOTE : @1-GENERAL AREA @2-HIGH ALITUDE AREA
@3-LOW VOLATILITY AREA
@4-HOT AREA @5-COLD AREA

KEY NO. ITC	PART NO	MODEL ENG	MODEL T/A	MODEL BODY 4N	MODEL BODY 3H	MODEL BODY 5H	MODEL LEVEL S	MODEL LEVEL SE	MODEL LEVEL SX	OPTION	L/R	QTY	EFFECTIVE DATE FROM	EFFECTIVE DATE TO	REMARKS	P/CODE
[13]	16245779	6	A	B	B	B	.	.	O			1			(E)SENSOR A-M.A.P. (D)SENSOR,VAKUUM (F)DETECTEUR-DEPRESSION (S)SENSOR-VACIO	WM
[04]	1613/039	.	.	B	B	B	S	S	S			1			(E)BRACKET-M.A.P. SENSOR (D)TRÄGER,VAKUUM (F)SUPPORT-DEPRESSION (S)SOPORTE-VACIO	
[05]	96351294	.	.	B	B	B	S	S	S			1			(E)BOLT-HEXAGON FLANGE (D)SCHRAUBE (F)BOULON (S)PERNO	
[06]	01517-06305	.	.	B	B	B	S	S	S			2			(E)NUT-HEXAGON FLANGE (D)MUTTER (F)ECROU (S)TUERCA	
[07]	08316-25065	.	.	B	B	B	S	S	S			2			(E)BOLT-HEXAGON FLANGE (D)SCHRAUBE (F)BOULON (S)PERNO	
[08]	01114-06125	.	.	B	B	B	S	S	S			1			(E)SENSOR A-DISTANCE (D)SENSOR,ENTFERNUNG (F)DETECTEUR-DISTANCE (S)SENSOR-DISTANCIA	
[09]	96190708	.	M	B	B	B	S	S	S			1			(E)CONTROL UNIT-IMMOBILIZER (D)STEUERUNGS-EINHEIT (F)UNITE DE CONTROLE (S)UNIDAD DE CONTROL	T6
[10]	96303500	.	.	B	B	B	A	A	A	&UM1		1			(E)POTENTIOMETER-CO (D)POTENTIOMETER (F)COMPTEUR DE POTENTIEL (S)CONDATOR DE POTENCIAL	
[11]	90306761	.	.	B	B	B	S	S	S	&NN4		1			(E)CAP-ANTI TAMPER (D)DECKEL (F)CHAPEAU (S)TAPA	
	90243777	.	.	B	B	B	S	S	S	&NN4		1				

ENG(ENGINE)	T/A(TRANSAXLE)	BODY TYPE
Y = 1.5SOHC 6 = 1.6DOHC . = COMMON	M = MANUAL T/A A = AUTOMATIC T/A . = COMMON	4 N = 4 DOOR NOTCHBACK 3 H = 3 DOOR HATCHBACK 5 H = 5 DOOR HATCHBACK

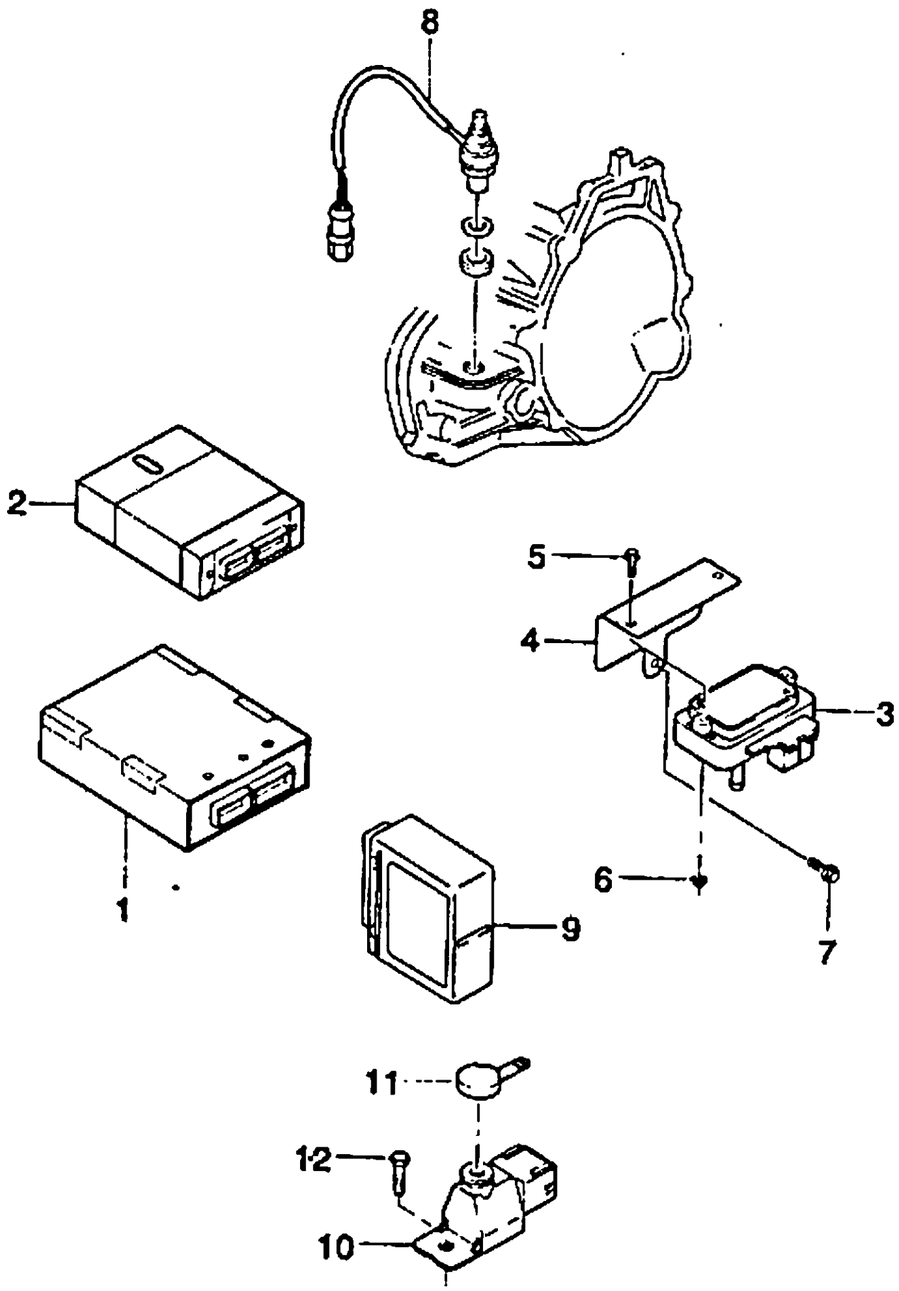

NOTE : @1-GENERAL AREA
@2-HIGH ALITUDE AREA
@3-LOW VOLATILITY AREA
@4-HOT AREA
@5-COLD AREA

KEY NO.	PART NAME														
ITC	PART NO	MODEL								OPTION	L/R	QTY	EFFECTIVE DATE		REMARKS	P/CODE
		ENG	T/A	BODY			LEVEL						FROM	TO		
				4N	3H	5H	S	SE	SX							
[12]	(E)SCREW-TAPPING (D)SCHRAUBE										(F)VIS (S)TORNILLO					
03152-63163		.	.	B	B	B	S	S	S	&NN4		1				

ENG(ENGINE)	T/A(TRANSAXLE)	BODY TYPE
Y = 1.5SOHC 6 = 1.6DOHC . = COMMON	M = MANUAL T/A A = AUTOMATIC T/A . = COMMON	4 N = 4 DOOR NOTCHBACK 3 H = 3 DOOR HATCHBACK 5 H = 5 DOOR HATCHBACK

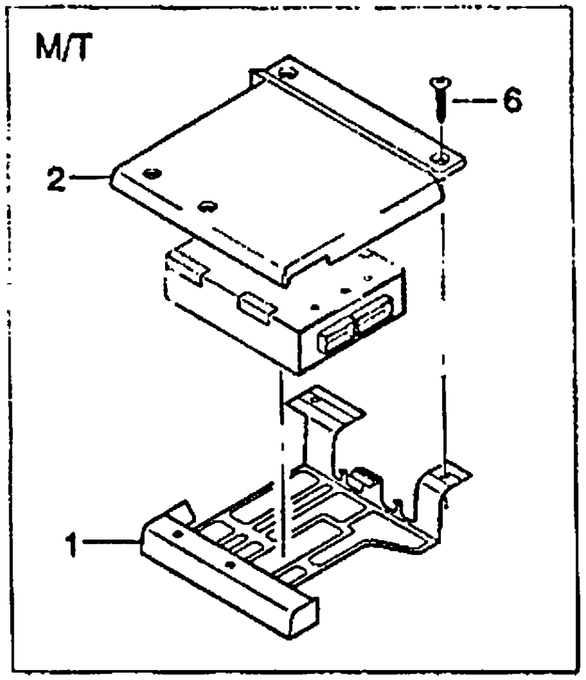

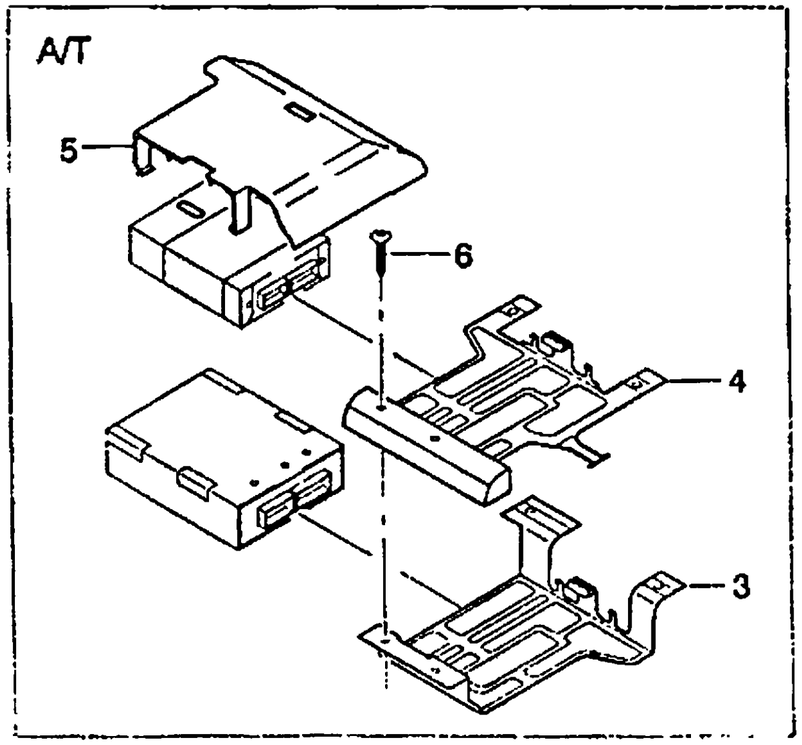

KEY NO. ITC	PART NO	MODEL ENG	MODEL T/A	MODEL BODY 4N	MODEL BODY 3H	MODEL BODY 5H	MODEL LEVEL S	MODEL LEVEL SE	MODEL LEVEL SX	OPTION	L/R	QTY	EFFECTIVE DATE FROM	EFFECTIVE DATE TO	REMARKS	P/CODE
[01]		(E)BRACKET-ENG&T.M CONT. (D)TRÄGER,STEUERUNGSEINHEIT									(F)SUPPORT-UNITE DE CONTROLE (S)SOPORTE-UNIDA DE CONTROL					
96232066		.	M	B	B	B	S	S	S			1				BA
[02]		(E)COVER-ECM&TCM (D)DECKEL									(F)CARTER (S)CUBIERTA					
96242607		.	M	B	B	B	S	S	S			1				CE
[03]		(E)BRACKET-ENGINE CONT.MODULE (D)TRÄGER,STEUERUNGSEINHEIT									(F)SUPPORT-UNITE DE CONTROLE (S)SOPORTE-UNIDA DE CONTROL					
96232067		.	A	B	B	B	O	O	O			1				BB
[04]		(E)BRACKET-TCM (D)TRÄGER									(F)SUPPORT (S)SOPORTE					
96304683		.	A	B	B	B	O	O	O			1				BM
[05]		(E)COVER-TCM (D)DECKEL									(F)CARTER (S)CUBIERTA					
96242608		.	A	B	B	B	O	O	O			1				CT
[06]		(E)SCREW (D)SCHRAUBE									(F)VIS (S)TORNILLO					
09136-06002		.	.	B	B	B	S	S	S			4				

ENG(ENGINE)	T/A(TRANSAXLE)	BODY TYPE
Y = 1.5SOHC 6 = 1.6DOHC . = COMMON	M = MANUAL T/A A = AUTOMATIC T/A . = COMMON	4 N = 4 DOOR NOTCHBACK 3 H = 3 DOOR HATCHBACK 5 H = 5 DOOR HATCHBACK

3 CLUTCH&TRANSAXLE

3110 CLUTCH COVER&DISK
3120 HYDRAULIC CLUTCH
3130 CLUTCH PEDAL
3210 MANUAL TRANSAXLE
3220 TRANSAXLE RELATED PARTS
3230 TRANSAXLE GEAR
3240 REVERSE&COUNTER GEAR
3250 BEARING PLATE
3260 GEAR SHIFT COVER&FORK
3270 DIFFERENTIAL GEAR
3510 AUTOMATIC TRANSAXLE
3520 CASE AND RELATED PARTS
3521 INTERNAL POWER TRAIN PARTS
3530 REVERSE INPUT CLUTCH ASSEMBLY
3531 DIRECT AND COAST CLUTCH ASSEMBLIES
3533 FORWARD CLUTCH ASSEMBLY
3535 FORWARD CLUTCH SUPPORT ASSEMBLY
3550 DRIVEN SPROCKET SUPPORT ASSEMBLY
3570 PARK LOCK AND DETENT LEVER
3910 SHIFT CONTROL(M/T)
3920 SHIFT CONTROL(A/T)

3110 CLUTCH COVER&DISK

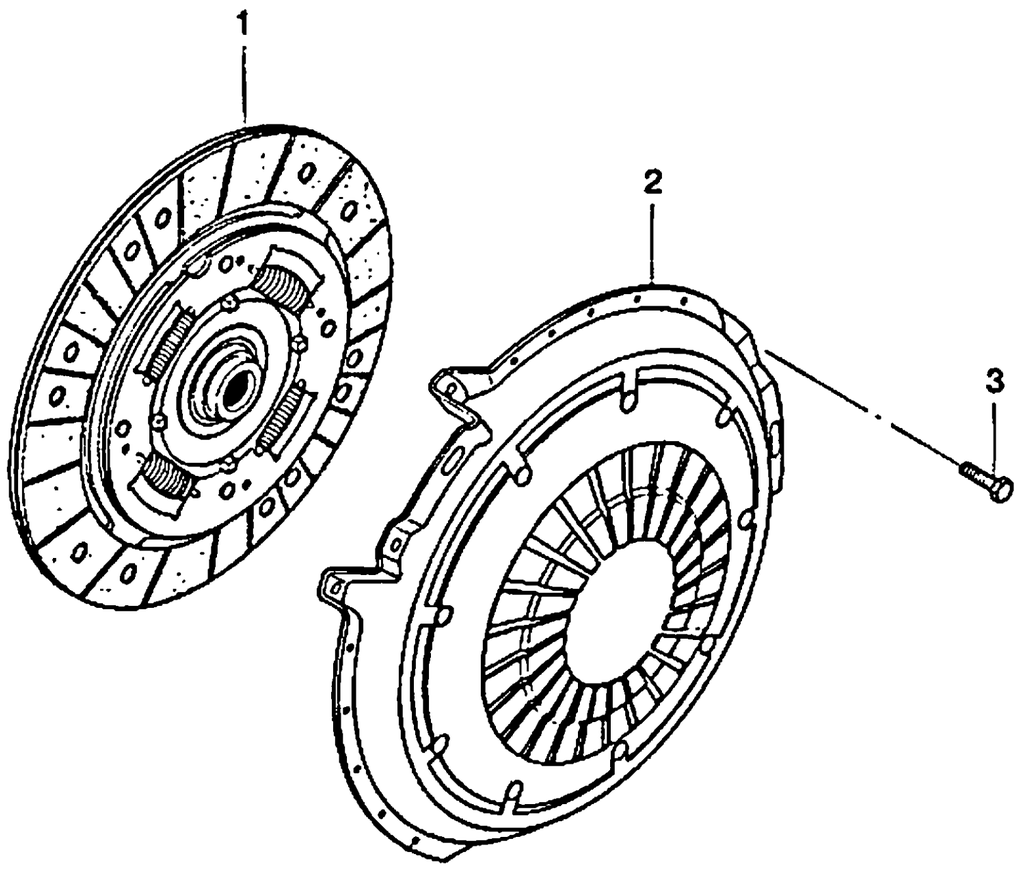

KEY NO. ITC	PART NO	MODEL ENG	T/A	BODY 4N	3H	6H	LEVEL S	SE	SX	OPTION	L/R	QTY	EFFECTIVE DATE FROM	TO	REMARKS	P/CODE
		(E)DISK-CLUTCH									(F)DISQUE-EMBRAYAGE					
[01]		(D)SCHEIBE,KUPPLUNG									(S)DISCO-EMBRAGUE					
96232994		Y	M	B	B	B	S	S	S			1				F1
96232995		6	M	B	B	B	.	.	O			1				
		(E)COVER-CLUTCH									(F)CARTER-EMBRAYAGE					
[02]		(D)DECKEL,KUPPLUNG									(S)CUBIERTA-EMBRAGUE					
96183980		Y	M	B	B	B	S	S	S			1				CL
96184505		6	M	B	B	B	.	.	O			1			POT	
		(E)BOLT									(F)BOULON					
[03]		(D)SCHRAUBE									(S)PERNO					
09100-07001		.	M	B	B	B	S	S	S			6				

ENG(ENGINE)	T/A(TRANSAXLE)	BODY TYPE
Y = 1.5SOHC	M = MANUAL T/A	4 N = 4 DOOR NOTCHBACK
6 = 1.6DOHC	A = AUTOMATIC T/A	3 H = 3 DOOR HATCHBACK
. = COMMON	. = COMMON	5 H = 5 DOOR HATCHBACK

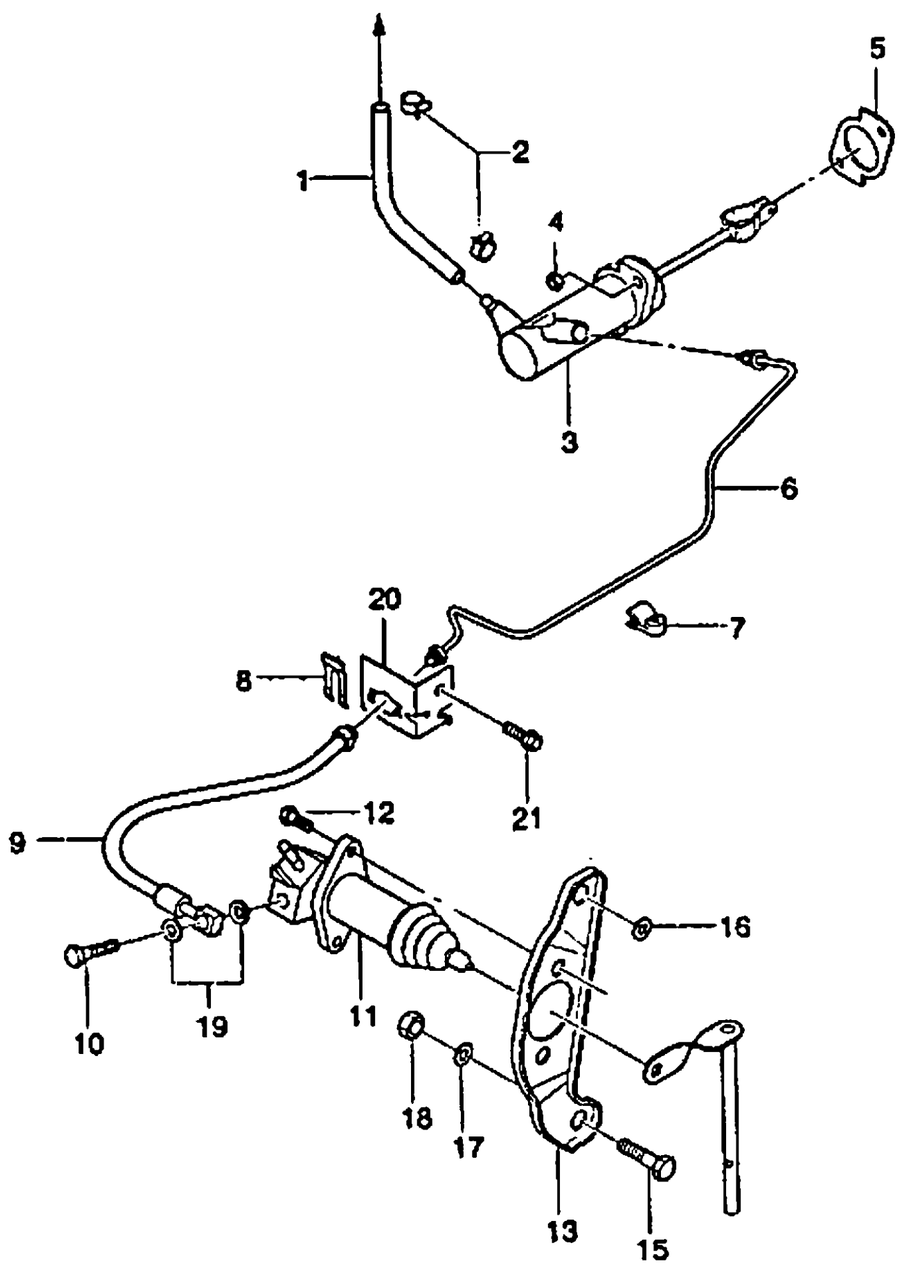

KEY NO. ITC	PART NO	MODEL ENG	T/A	BODY 4N	3H	5H	LEVEL S	SE	SX	OPTION	L/R	QTY	EFFECTIVE DATE FROM	TO	REMARKS	P/CODE	PART NAME
[01]	96184064	.	M	B	B	B	S	S	S		1				INCL #2		(E)HOSE A-RESERVOIR TANK (D)SCHLAUCH,BEHÄLTER (F)TUYAU-RESERVOIR (S)MANGUERA-RESERVA
[02]	09401-13401	.	M	B	B	B	S	S	S		2						(E)CLIP (D)KLEMME (F)ATTACHE (S)GRAPA
[03]	96184062	.	M	B	B	B	S	S	S		1						(E)CYLINDER A-CLUTCH MASTER (D)ZYLINDER,HAUPT (F)CYLINDRE-MAITRE (S)CILINDRO-MAESTRO
[04]	08311-18083	.	M	B	B	B	S	S	S		1						(E)NUT-HEXAGON LOCK (D)MUTTER (F)ECROU (S)TUERCA
[05]	96184061	.	M	B	B	B	S	S	S		2						(E)GASKET (D)DICHTUNG (F)JOINT (S)JUNTA
[06]	96233023	.	M	B	B	B	S	S	S		1						(E)PIPE A-CLUTCH MASTER CYL (D)ROHR,HYDRAULIK KUPPLUNG (F)TUYAU (S)TUBERIA
[07]	96180752	.	M	B	B	B	S	S	S		1						(E)CLIP (D)KLEMME (F)ATTACHE (S)GRAPA
[08]	96144733	.	M	B	B	B	S	S	S		1						(E)CLIP (D)KLEMME (F)ATTACHE (S)GRAPA
[09]	96184536	.	M	B	B	B	S	S	S		1						(E)HOSE A-HYDRAULIC CLUTCH (D)SCHLAUCH (F)TUYAU (S)MANGUERA
[10]																	(E)BOLT-UNION (D)SCHRAUBE (F)BOULON (S)PERNO

ENG(ENGINE)	T/A(TRANSAXLE)	BODY TYPE
Y = 1.5SOHC 6 = 1.6DOHC . = COMMON	M = MANUAL T/A A = AUTOMATIC T/A . = COMMON	4 N = 4 DOOR NOTCHBACK 3 H = 3 DOOR HATCHBACK 5 H = 5 DOOR HATCHBACK

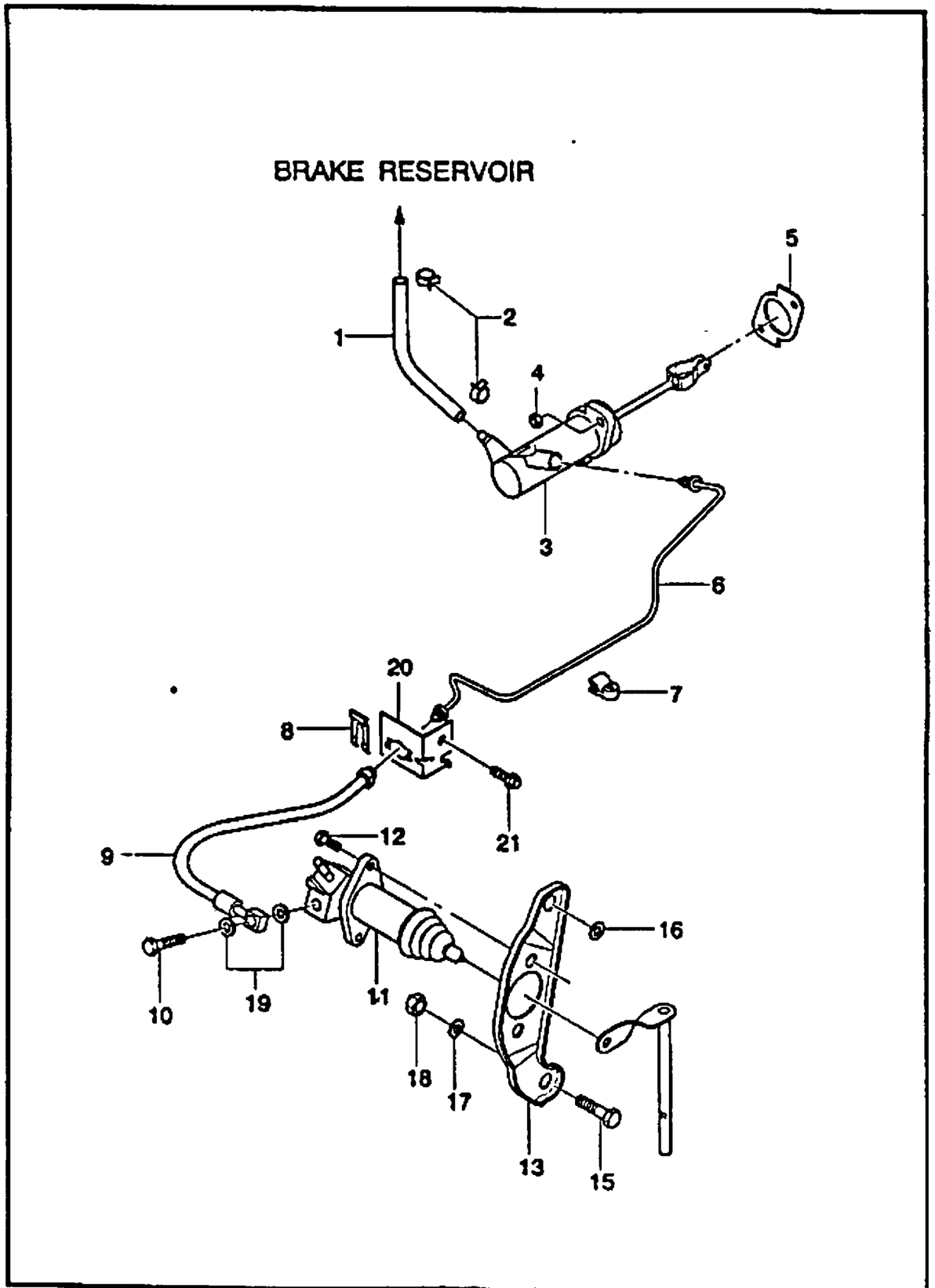

KEY NO. ITC	PART NO	MODEL ENG	T/A	BODY 4N	3H	5H	LEVEL S	SE	SX	OPTION	L/R	QTY	EFFECTIVE DATE FROM	TO	REMARKS	P/CODE
[11]	09360-10001	.	M	B	B	B	S	S	S	(E)CYLINDER A-CLUTCH RELEASE (D)ZYLINDER LÖSUNG		1			(F)CYLINDRE-RELACHE (S)CILINDRO-LIBERAR	
[12]	96159109	.	M	B	B	B	S	S	S	(E)BOLT (D)SCHRAUBE		1	970701		(F)BOULON (S)PERNO	
	Y 96104047	.	M	B	B	B	S	S	S			1	970701			
[13]	09106-08001	.	M	B	B	B	S	S	S	(E)BRACKET-RELEASE CYLINDER (D)TRÄGER		2			(F)SUPPORT (S)SOPORTE	
[15]	96243477	.	M	B	B	B	S	S	S	(E)BOLT-HEXAGON (D)SCHRAUBE		1			(F)BOULON (S)PERNO	
[16]	09100-12001	.	M	B	B	B	S	S	S	(E)WASHER-SPRING (D)DICHTUNGSRING		1			(F)RONDELLE (S)ARANDELA	
[17]	08321-31123	.	M	B	B	B	S	S	S	(E)WASHER-PLAIN (D)DICHTUNGSRING		1			(F)RONDELLE (S)ARANDELA	
[18]	08322-11123	.	M	B	B	B	S	S	S	(E)NUT-HEXAGON LOCK (D)MUTTER		1			(F)ECROU (S)TUERCA	
[19]	08311-18123	.	M	B	B	B	S	S	S	(E)WASHER-PLAIN (D)DICHTUNGSRING		1			(F)RONDELLE (S)ARANDELA	
[20]	09160-10002	.	M	B	B	B	S	S	S	(E)CLAMP-CLUTCH HOSE (D)KLAMMER		2			(F)PINCE (S)ABRAZADERA	

ENG(ENGINE)	T/A(TRANSAXLE)	BODY TYPE
Y = 1.5SOHC 6 = 1.6DOHC . = COMMON	M = MANUAL T/A A = AUTOMATIC T/A . = COMMON	4 N = 4 DOOR NOTCHBACK 3 H = 3 DOOR HATCHBACK 5 H = 5 DOOR HATCHBACK

BRAKE RESERVOIR

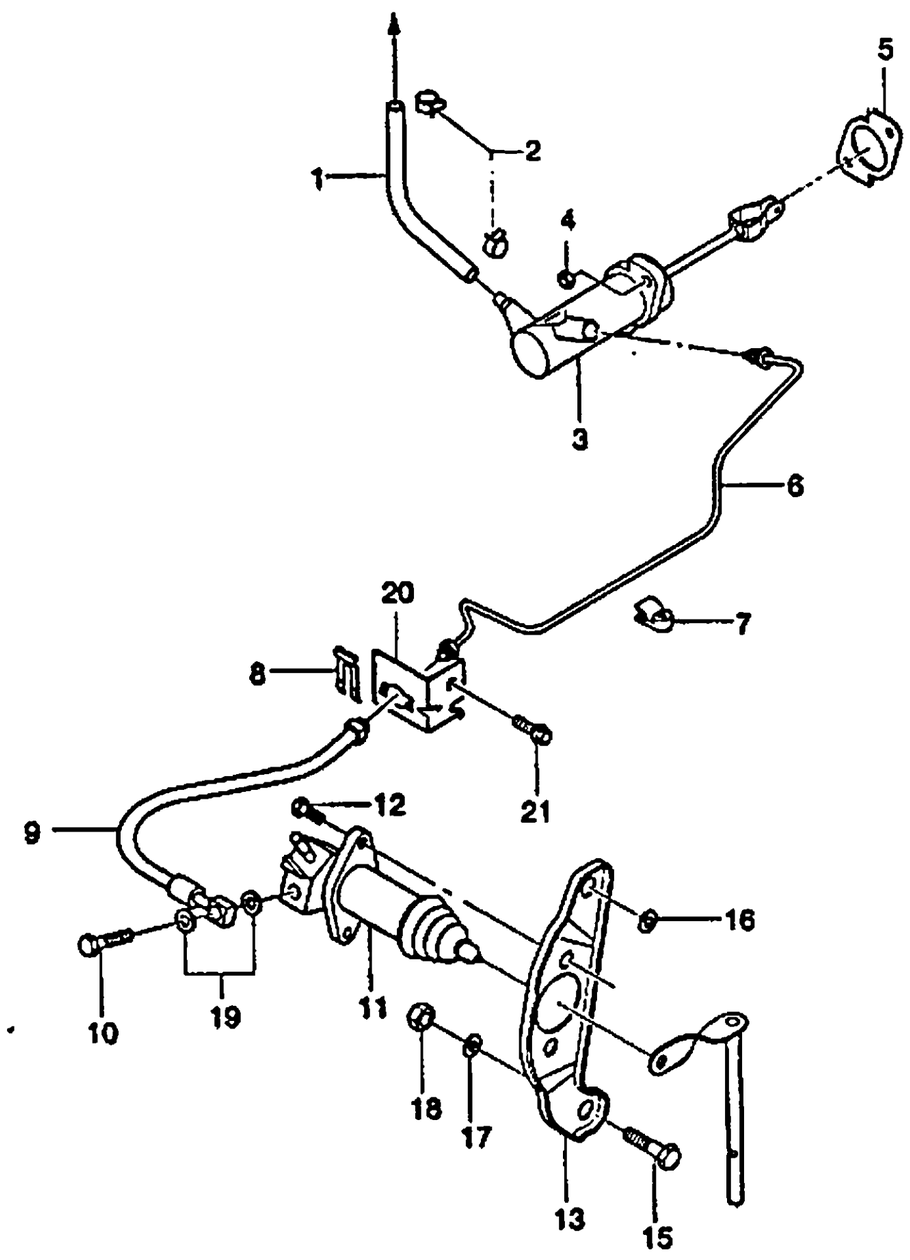

KEY NO. ITC	PART NO	MODEL ENG	T/A	BODY 4N	3H	5H	LEVEL S	SE	SX	OPTION	L/R	QTY	EFFECTIVE DATE FROM	TO	REMARKS	P/CODE
	9618459	.	M	B	B	B	S	S	S			1				
	[21]	(E)BOLT (D)SCHRAUBE (F)BOULON (S)PERNO														
	01514-06123	.	M	B	B	B	S	S	S			1				

ENG(ENGINE)	T/A(TRANSAXLE)	BODY TYPE
Y = 1.5SOHC	M = MANUAL T/A	4 N = 4 DOOR NOTCHBACK
6 = 1.6DOHC	A = AUTOMATIC T/A	3 H = 3 DOOR HATCHBACK
. = COMMON	. = COMMON	5 H = 5 DOOR HATCHBACK

3130 CLUTCH PEDAL

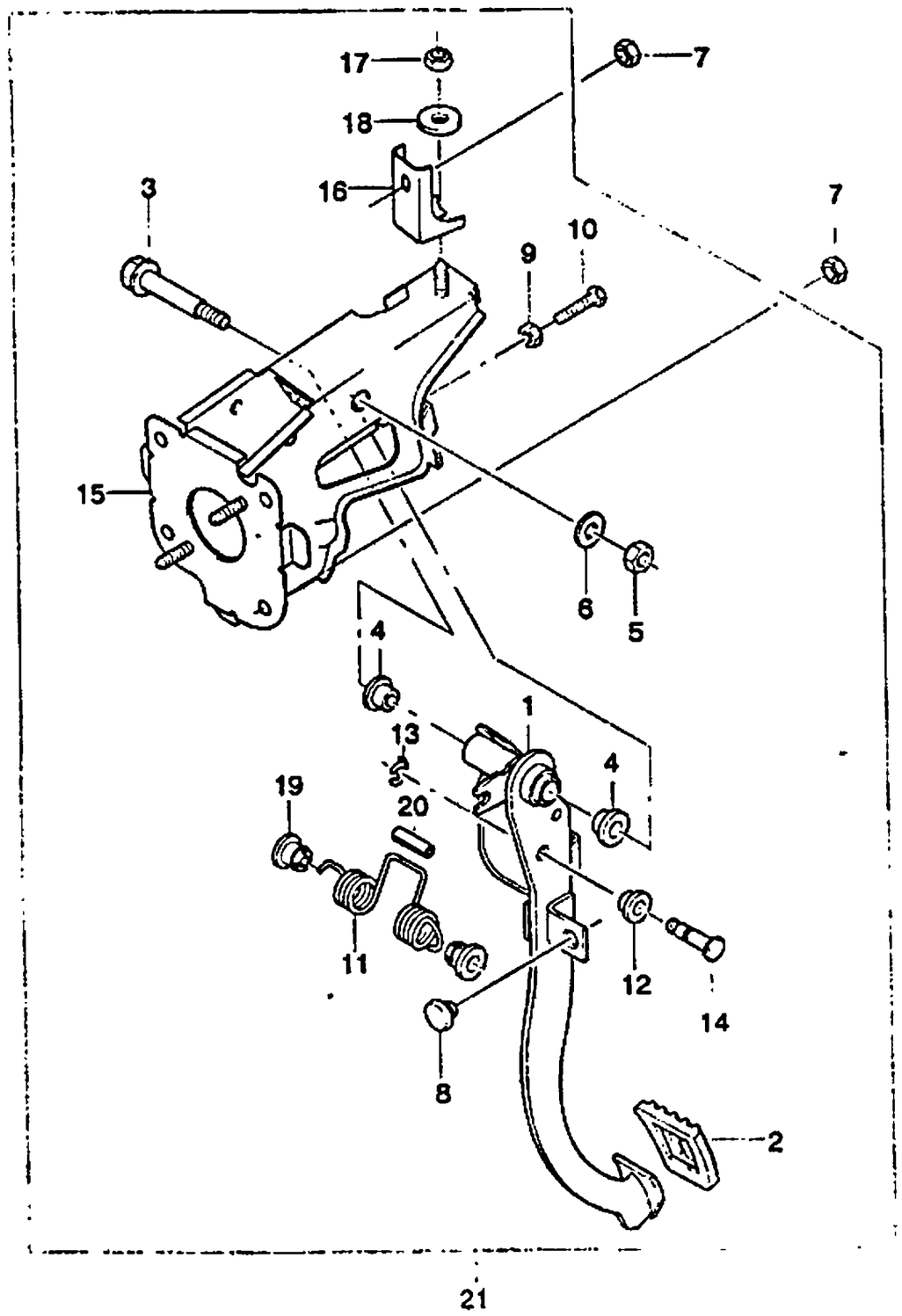

KEY NO.	PART NAME														
ITC	PART NO	MODEL								OPTION	L/R	QTY	EFFECTIVE DATE		REMARKS	P/CODE
		ENG	T/A	BODY			LEVEL						FROM	TO		
				4N	3H	5H	S	SE	SX							
[01]	96183919	.	M	B	B	B	S	S	S	(E)PEDAL A-CLUTCH (D)PEDAL,KUPPLUNG	(F)PEDALE-EMBRAYAGE (S)PEDAL-EMBRAGUE	1				
[02]	90105172	.	M	B	B	B	S	S	S	(E)COVER-PEDAL PLATE (D)UNTERLAGE	(F)PATIN (S)COJIN	1				
[03]	96183932	.	M	B	B	B	S	S	S	(E)SHAFT-CLUTCH PEDAL (D)SPINDEL,PEDAL MONTAGE	(F)ARBRE-MONTAGE PEDALE (S)EJE-MONTAJE DE PEDAL	1				
[04]	09306-14001	.	M	B	B	B	S	S	S	(E)BUSHING (D)LAGERFUTTER	(F)MANCHON (S)BUJE-PEDAL DEL EMBRAGUE	2				
[05]	09159-10002	.	M	B	B	B	S	S	S	(E)NUT (D)MUTTER	(F)ECROU (S)TUERCA	1				
[06]	08321-31103	.	M	B	B	B	S	S	S	(E)WASHER-SPRING (D)DICHTUNGSRING	(F)RONDELLE (S)ARANDELA	1				
[07]	09159-08003	.	M	B	B	B	S	S	S	(E)NUT-HEXAGON LOCK (D)MUTTER	(F)ECROU (S)TUERCA	6				
[08]	96157634	.	M	B	B	B	S	S	S	(E)BUFFER-CLUTCH PEDAL (D)STOßSCHEIBE	(F)TAMPON-PEDALE D'EMBRAYAGE (S)AMORTIGUADOR	2				
[09]	08310-22083	.	M	B	B	B	S	S	S	(E)NUT-HEXAGON (D)MUTTER	(F)ECROU (S)TUERCA	1				
[10]										(E)BOLT-HEXAGON (D)SCHRAUBE	(F)BOULON (S)PERNO					

ENG(ENGINE)	T/A(TRANSAXLE)	BODY TYPE
Y = 1.5SOHC 6 = 1.6DOHC . = COMMON	M = MANUAL T/A A = AUTOMATIC T/A . = COMMON	4 N = 4 DOOR NOTCHBACK 3 H = 3 DOOR HATCHBACK 5 H = 5 DOOR HATCHBACK

3130 CLUTCH PEDAL

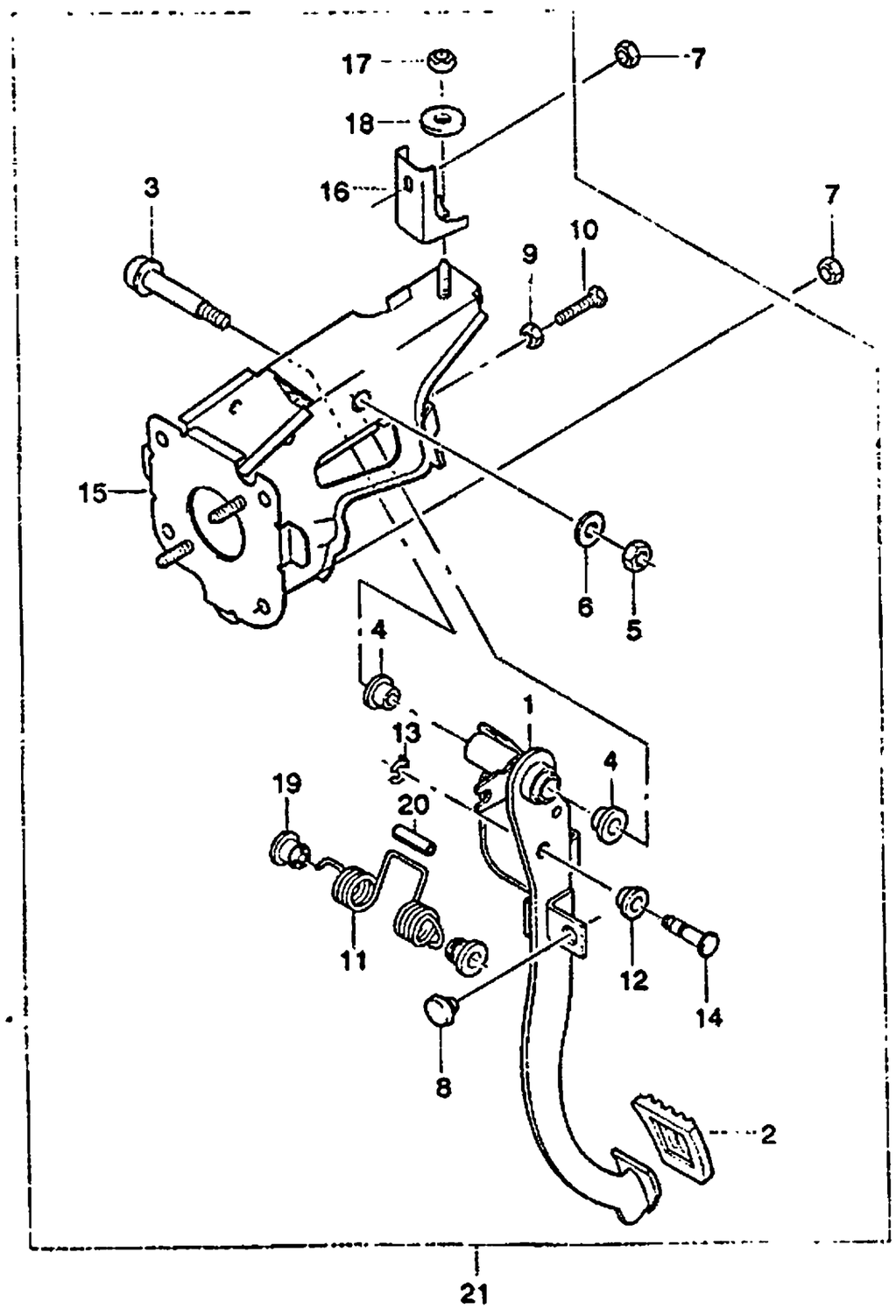

KEY NO.	PART NAME														
		MODEL										EFFECTIVE DATE			
				BODY			LEVEL								
ITC	PART NO	ENG	T/A	4N	3H	5H	S	SE	SX	OPTION	L/R	QTY	FROM	TO	REMARKS	P/CODE
	01107-08303	.	M	B	B	B	S	S	S			1				
[11]		(E)SPRING-TURN OVER (D)FEDERUNG,RÜCK										(F)RESSORT-RETOUR (S)RESORTE-REGRESO				
	96184060	.	M	B	B	B	S	S	S			1				
	96305924														NOT APPLIED	
[12]		(E)BUSHING (D)LAGERFUTTER										(F)MANCHON (S)BUJE-PEDAL DEL EMBRAGUE				
	09306-10003	.	M	B	B	B	S	S	S			1				
[13]		(E)RING-RETAINING,E TYPE (D)RING,HALTER										(F)ANNEAU-DE RETENTION (S)ANILLO-RETENEDOR				
	08332-21089	.	M	B	B	B	S	S	S			1				
[14]		(E)PIN (D)STIFT										(F)BROCHE (S)PASADOR				
	09208-10001	.	M	B	B	B	S	S	S			1				
[15]		(E)BRACE A-CLUTCH PEDAL (D)SCHIENE,KUPPLUNGSPEDAL										(F)SUPPORT-MONTAGE PEDALE (S)REFUERZO				
	96183927	.	M	B	B	B	S	S	S			1				
[16]		(E)BRACKET-CLUTCH PEDAL BRACE (D)TRÄGER										(F)SUPPORT (S)SOPORTE				
	96183935	.	M	B	B	B	S	S	S			1				
[17]		(E)NUT-HEXAGON LOCK (D)MUTTER										(F)ECROU (S)TUERCA				
	08311-18083	.	M	B	B	B	S	S	S			1				
[18]		(E)WASHER-PLAIN (D)DICHTUNGSRING										(F)RONDELLE (S)ARANDELA				
	09160-08004	.	M	B	B	B	S	S	S			1				
[19]		(E)BUSHING (D)LAGERFUTTER										(F)MANCHON (S)BUJE DE BOQUILLA				

ENG(ENGINE)	T/A(TRANSAXLE)	BODY TYPE
Y = 1.5SOHC 6 = 1.6DOHC . = COMMON	M = MANUAL T/A A = AUTOMATIC T/A . = COMMON	4 N = 4 DOOR NOTCHBACK 3 H = 3 DOOR HATCHBACK 5 H = 5 DOOR HATCHBACK

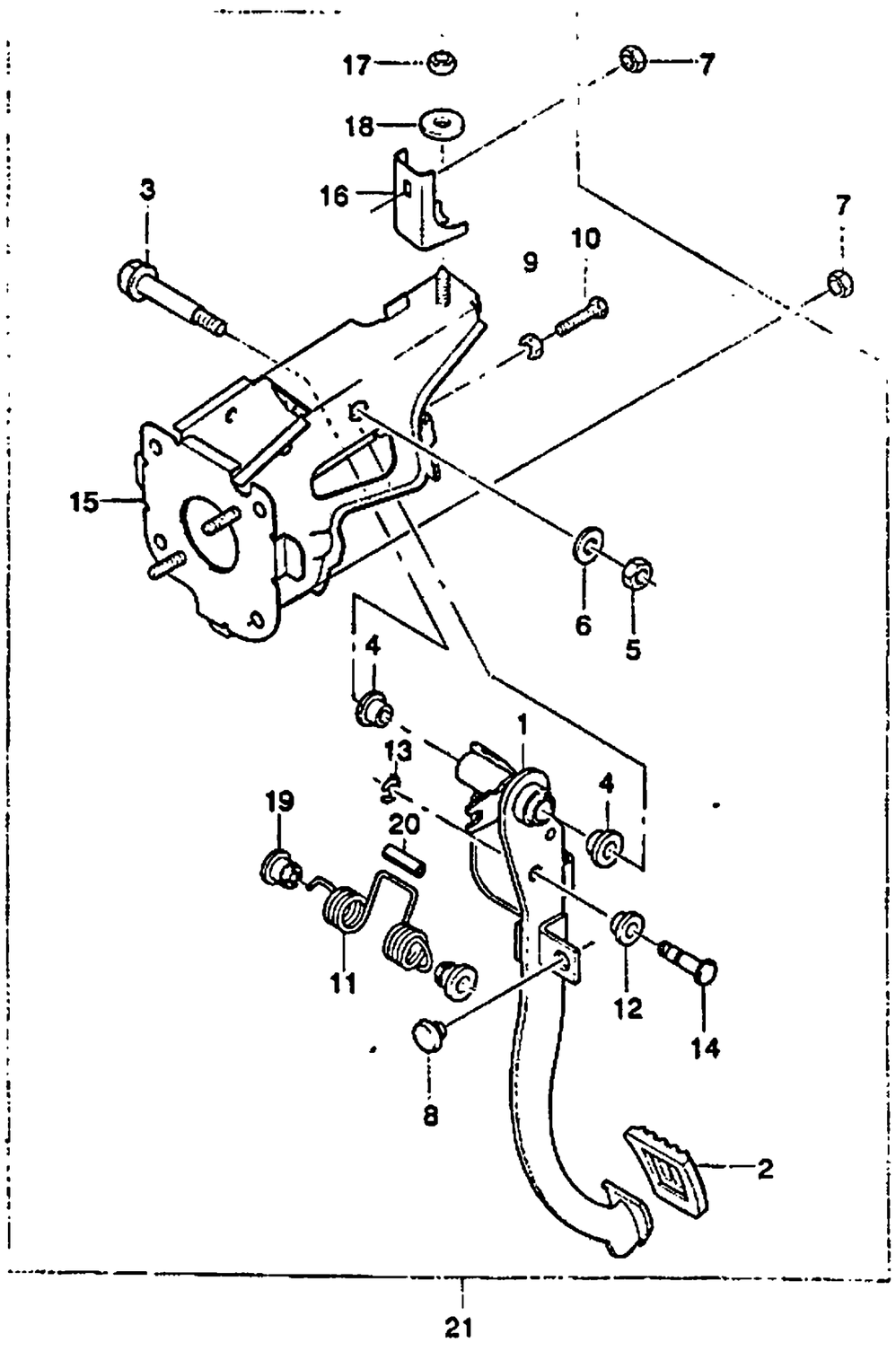

KEY NO.	PART NAME													
ITC	PART NO	MODEL							OPTION	L/R	QTY	EFFECTIVE DATE		REMARKS	P/CODE
		ENG	T/A	BODY			LEVEL					FROM	TO		
				4N	3H	5H	S	SE	SX						
[20]	96184537	.	M	B	B	B	S	S	S		2			(E)BUSHING (D)LAGERFUTTER (F)MANCHON (S)BUJE DE BOQUILLA	
[21]	96184050	.	M	B	B	B	S	S	S		1			(E)PEDAL UNIT-CLUTCH (D)PEDAL,KUPPLUNG (F)UNITE PEDALE-EMBRAYAGE (S)PEDAL UNIDAD -EMBRAGUE	
	96184054	.	M	B	B	B	S	S	S		1				

ENG(ENGINE)	T/A(TRANSAXLE)	BODY TYPE
Y = 1.5SOHC 6 = 1.6DOHC . = COMMON	M = MANUAL T/A A = AUTOMATIC T/A . = COMMON	4 N = 4 DOOR NOTCHBACK 3 H = 3 DOOR HATCHBACK 5 H = 5 DOOR HATCHBACK

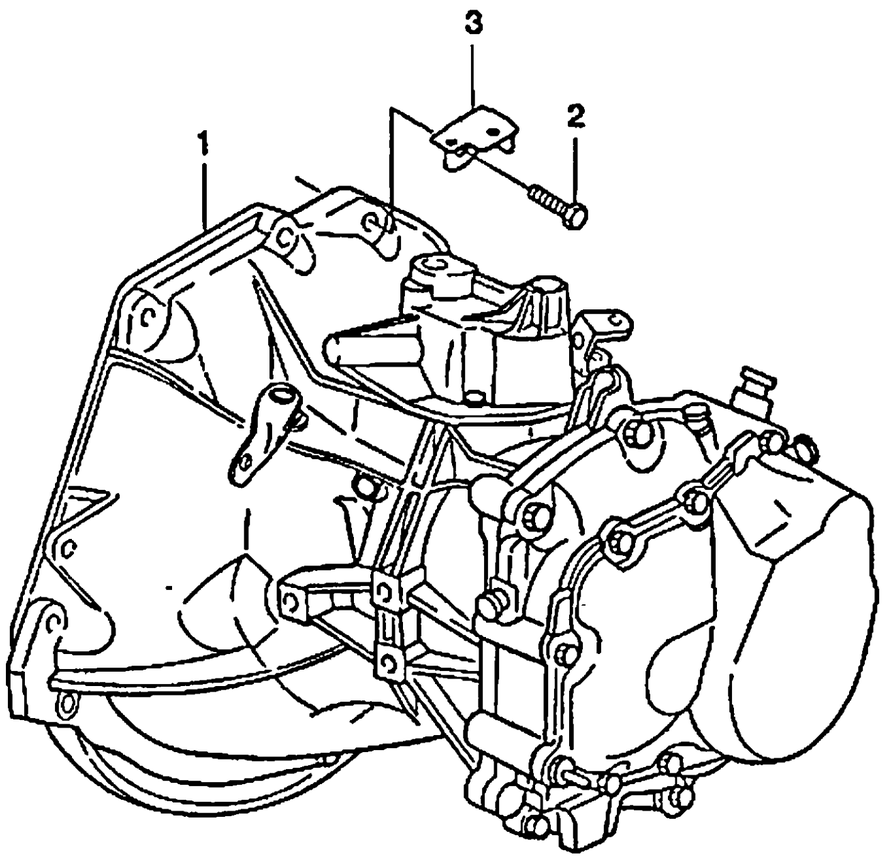

KEY NO. ITC	PART NO	MODEL ENG	T/A	BODY 4N	3H	5H	LEVEL S	SE	SX	OPTION	L/R	QTY	EFFECTIVE DATE FROM	TO	REMARKS	PICODE
[01]		(E)TRANSAXLE A-GEARSHIFT (D)ANTRIEB,GANGSCHALTUNG									(F)TRANSMISSION (S)EJE TRANSVERSAL					
	96243097	Y	M	B	B	B	S	S	S	&M85		1			RATIO : 4.176	MA
	96225023	6	M	B	B	B	.	.	O	&MG4-KL9/EC1		1			RATIO : 3.722	BS
	96243097	6	M	B	B	B	.	.	A	&M85&KL9/EC1		1				MA
[02]		(E)BOLT (D)SCHRAUBE									(F)BOULON (S)PERNO					
	09100-12002	.	M	B	B	B	S	S	S			8				
[03]		(E)BRACKET-ENGINE CONT.HARNESS (D)TRÄGER									(F)SUPPORT (S)SOPORTE					
	96234614	.	M	B	B	B	S	S	S			1				

ENG(ENGINE)	T/A(TRANSAXLE)	BODY TYPE
Y = 1.5SOHC	M = MANUAL T/A	4 N = 4 DOOR NOTCHBACK
6 = 1.6DOHC	A = AUTOMATIC T/A	3 H = 3 DOOR HATCHBACK
. = COMMON	. = COMMON	5 H = 5 DOOR HATCHBACK

3220 TRANSAXLE RELATED PARTS

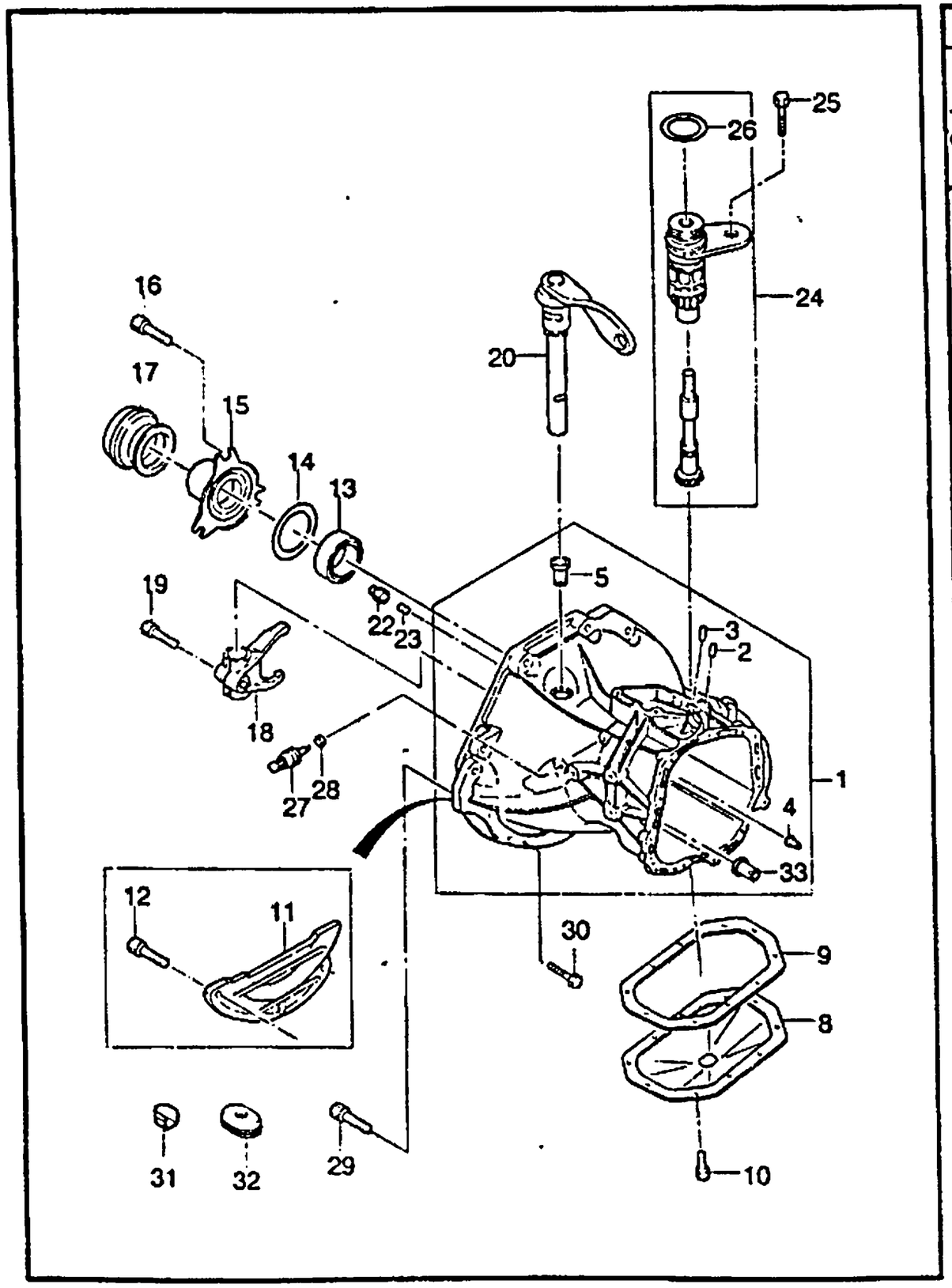

KEY NO. ITC	PART NO	MODEL ENG	T/A	BODY 4N	3H	5H	LEVEL S	SE	SX	OPTION	L/R	QTY	EFFECTIVE DATE FROM	TO	REMARKS	P/CODE
[01]	A96216453	(E)CASE A-TRANSAXLE (D)KASTEN,ANTRIEB	.	M	B	B	B	S	S	S		(F)CARTER-TRANSMISSION (S)CAJA-EJE TRANSVERSAL	1			
[02]	90147339	(E)PIN-DOWEL (D)STIFT,DÜBEL	.	M	B	B	B	S	S	S		(F)BROCHE-GOUJON (S)PASADOR-CLAVIJA	1			
[03]	90065583	(E)PIN-DOWEL (D)STIFT,DÜBEL	.	M	B	B	B	S	S	S		(F)BROCHE-GOUJON (S)PASADOR-CLAVIJA	2			
[04]	90121130	(E)SLEEVE-MAINSHAFT OIL DUCT (D)HÜLSE	.	M	B	B	B	S	S	S		(F)CHEMISE (S)MANGA	1			
[05]	90305912	(E)BUSHING-CLUTCH SHAFT (D)LAGERFUTTER	.	M	B	B	B	S	S	S		(F)MANCHON-ARBRE D'EMBRAYAGE (S)BUJE-EJE DEL EMBRAGUE	2			
[08]	90305635	(E)COVER-DIFFERENTIAL GEAR (D)DECKEL	.	M	B	B	B	S	S	S		(F)CARTER (S)CUBIERTA	1			
[09]	96179241	(E)GASKET-DIFF GEAR COVER (D)DICHTUNG	.	M	B	B	B	S	S	S		(F)JOINT (S)JUNTA	1			
[10]	09103-08028	(E)BOLT (D)SCHRAUBE	.	M	B	B	B	S	S	S		(F)BOULON (S)PERNO	10			
[11]	96224697	(E)COVER-TRANSMISSION CASE (D)DECKEL	.	M	B	B	B	S	S	S	&NN4/NN6	(F)CARTER (S)CUBIERTA	1	970701		
O	96242579		.	M	B	B	B	S	S	S	&NN4/NN6		1	970701	FOR STEEL OIL PAN	

ENG(ENGINE)	T/A(TRANSAXLE)	BODY TYPE
Y = 1.5SOHC 6 = 1.6DOHC . = COMMON	M = MANUAL T/A A = AUTOMATIC T/A . = COMMON	4 N = 4 DOOR NOTCHBACK 3 H = 3 DOOR HATCHBACK 5 H = 5 DOOR HATCHBACK

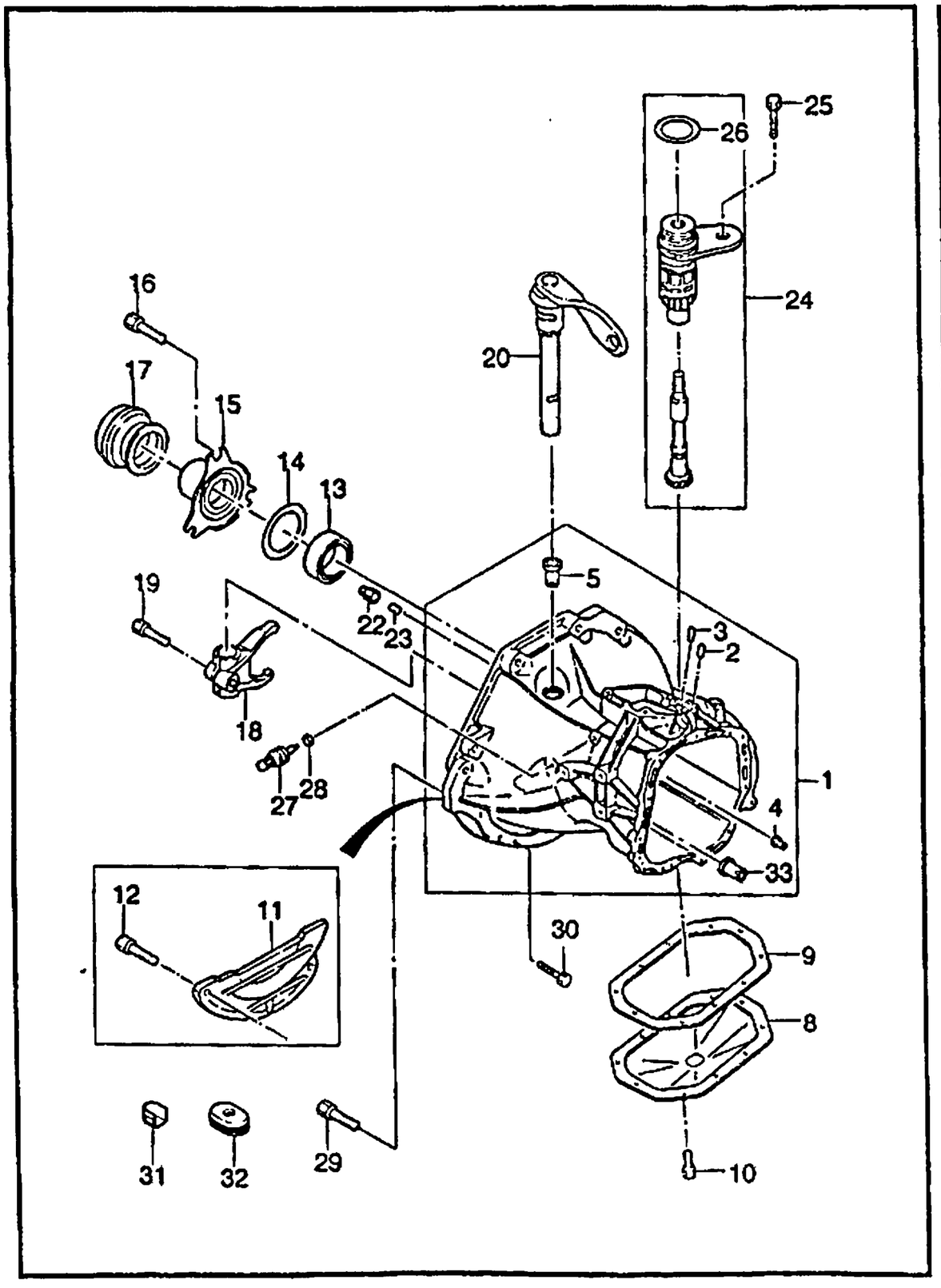

KEY NO.		PART NAME															
I T C	PART NO	MODEL								OPTION	L / R	Q T Y	EFFECTIVE DATE		REMARKS	P / C O D E
		E N G	T / A	BODY			LEVEL						FROM	TO		
				4 N	3 H	5 H	S	S E	S X							
[12]	09103-10046	(E)BOLT (D)SCHRAUBE .	M	B	B	B	S	S	S	&NN4/NN6	(F)BOULON (S)PERNO 3				FOR STEEL OIL PAN	
[13]	90182168	(E)RING-SHAFT SEAL (D)RING,STAB DICHTUNG .	M	B	B	B	S	S	S		(F)ANNEAU-JOINT D'ARBRE (S)ANILLO-BROCHE DE EJE 1				23X35X8	
[14]	90112258	(E)O RING (D)O RING .	M	B	B	B	S	S	S		(F)JOINT TORIQUE (S)ANILLO EN O 1				50.5X2.2	
[15]	90112325	(E)GUIDE-THRUST BEARING (D)FÜHRING,STOß LAGER .	M	B	B	B	S	S	S		(F)GUIDE-ROULEMENT DE BUTEE (S)GUIA-COJINETE DE EMPUJE 1					
[16]	09100-06004	(E)BOLT (D)SCHRAUBE .	M	B	B	B	S	S	S		(F)BOULON (S)PERNO 3					
[17]	90251210	(E)BEARING-CLUTCH THRUST (D)KUGELLAGER,KUPPLUNG SCHUB .	M	B	B	B	S	S	S		(F)ROULEMENT (S)COJINETE-EMPUJAR EMBRAGUE 1					
[18]	90372766	(E)FORK-CLUTCH RELEASE (D)GABEL,KUPPLUNG LÖSUNG .	M	B	B	B	S	S	S		(F)FOURCHETTE (S)HORQUILLA-LIBERACION 1					
[19]	09100-08020	(E)BOLT (D)SCHRAUBE .	M	B	B	B	S	S	S		(F)BOULON (S)PERNO 1					
[20]	96144874	(E)LEVER-RELEASE (D)HEBEL,LÖSUNG .	M	B	B	B	S	S	S		(F)LEVIER-RELACHE (S)PALANCA-SOLTAR (LIBERAR) 1					

ENG(ENGINE)	T/A(TRANSAXLE)	BODY TYPE
Y = 1.5SOHC 6 = 1.6DOHC . = COMMON	M = MANUAL T/A A = AUTOMATIC T/A . = COMMON	4 N = 4 DOOR NOTCHBACK 3 H = 3 DOOR HATCHBACK 5 H = 5 DOOR HATCHBACK

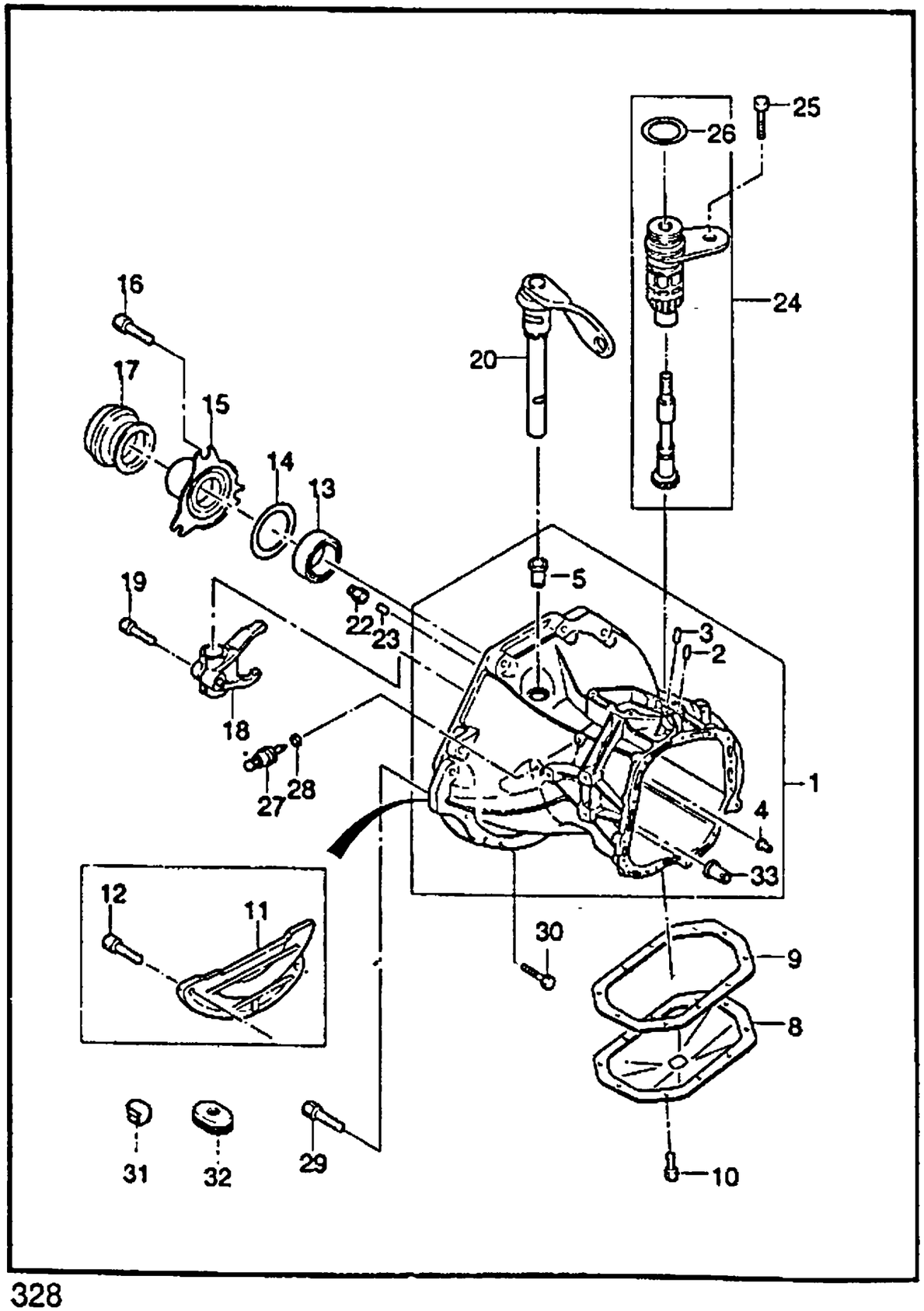

KEY NO. ITC	PART NO	MODEL ENG	T/A	BODY 4N	3H	5H	LEVEL S	SE	SX	OPTION	L/R	QTY	EFFECTIVE DATE FROM	TO	REMARKS	P/CODE
[22]	09246-18003	(E)PLUG-SCREW (D)STÖPSEL,SCHRAUBEN	.	M	B	B	B	S	S	S		(F)BOUCHON-VIS (S)TAPON-TORNILLO	1			
[23]	03449250	(E)MAGNET (D)MAGNET	.	M	B	B	B	S	S	S		(F)AIMANT (S)IMAN	1			
[24]	90375764	(E)GEAR A-DRIVEN WORM (D)GETRIEBE	.	M	B	B	B	S	S	S		(F)ENGRENAGE (S)ENGRANAJE-SINFIN	1			
[25]	09100-06003	(E)BOLT (D)SCHRAUBE	.	M	B	B	B	S	S	S		(F)BOULON (S)PERNO	1			
[26]	09280-17001	(E)O RING (D)O RING	.	M	B	B	B	S	S	S		(F)JOINT TORIQUE (S)ANILLO EN O	1			
[27]	96192077	(E)SWITCH A-BACK UP LIGHT (D)SCHALTER,RÜCKGANGS-LAMPE	.	M	B	B	B	S	S	S		(F)COMMUTATEUR (S)INTERRUPTOR	1			
[28]	09160-12003	(E)WASHER-PLAIN (D)DICHTUNGSRING	.	M	B	B	B	S	S	S		(F)RONDELLE (S)ARANDELA	1			
[29]	09103-10009	(E)BOLT (D)SCHRAUBE	.	M	B	B	B	A	A	A	&NN7	(F)BOULON (S)PERNO	3			
[30]	09103-10032	(E)BOLT (D)SCHRAUBE	.	M	B	B	B	A	A	A	&NN7	(F)BOULON (S)PERNO	1			
[31]		(E)GROMMET-OIL PAN,BOLT (D)ÖSE										(F)VIROLE (S)AISLANTE				

ENG(ENGINE)	T/A(TRANSAXLE)	BODY TYPE
Y = 1.5SOHC 6 = 1.6DOHC . = COMMON	M = MANUAL T/A A = AUTOMATIC T/A . = COMMON	4 N = 4 DOOR NOTCHBACK 3 H = 3 DOOR HATCHBACK 5 H = 5 DOOR HATCHBACK

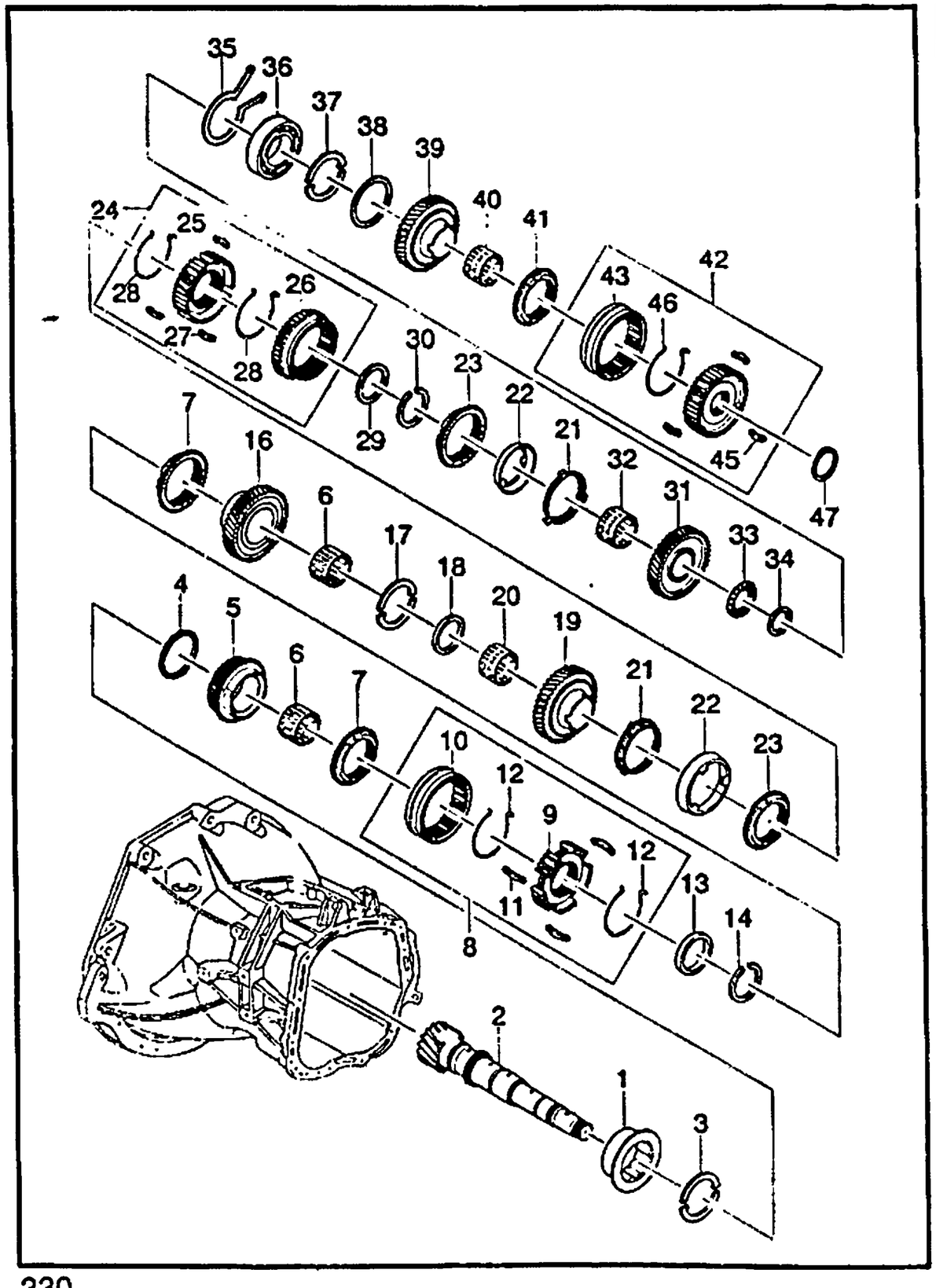

KEY NO. ITC	PART NO	MODEL ENG	MODEL T/A	MODEL BODY 4N	MODEL BODY 3H	MODEL BODY 5H	MODEL LEVEL S	MODEL LEVEL SE	MODEL LEVEL SX	OPTION	L/R	QTY	EFFECTIVE DATE FROM	EFFECTIVE DATE TO	REMARKS	P/CODE
[01]		(E)BEARING-ROLLER (D)ROLLENLAGER									(F)ROULEMENT-ROULEAU (S)COJINETE-RUEDECILLA					
90373802		.	M	B	B	B	S	S	S			1			42X72X18	
[02]		(E)SHAFT A-TRANSAXLE MAIN (D)SPINDEL,HAUPT,ANTRIEB									(F)ARBRE-PRINCIPAL (S)EJE-PRINCIPAL					
A96242687		Y	M	B	B	B	S	S	S	&M85		1			RATIO : 4.176	
A90373002		6	M	B	B	B	.	.	O	&MG4-KL9/EC1		1			RATIO : 3.722	
A96242687		6	M	B	B	B	.	.	A	&M85&KL9/EC1		1				
[03]		(E)WASHER-MAIN SHAFT THRUST (D)DICHTUNGSRING									(F)RONDELLE (S)ARANDELA					
90199104		.	M	B	B	B	S	S	S			2				
[04]		(E)RING-WASHER RETAINING (D)RING,DICHTUNG HALTER									(F)ANNEAU (S)ANILLO					
90112228		.	M	B	B	B	S	S	S			1				
[05]		(E)GEAR A-4TH SPEED (D)GETRIEBE,4.GANG									(F)ENGRENAGE-4EME VITESSE (S)ENGRANAJE-4TA VELOCIDAD					
A96237744		Y	M	B	B	B	S	S	S	&M85		1				
A96180759		6	M	B	B	B	.	.	O	&MG4-KL9/EC1		1				
A96237744		6	M	B	B	B	.	.	A	&M85&KL9/EC1		1				
[06]		(E)CAGE-NEEDLE (D)KÄFIG NADEL									(F)CAGE-AIGUILLE (S)JAULA-AGUJA					
90147685		.	M	B	B	B	S	S	S			2			38X42X24	
[07]		(E)RING-SYNCHRONIZING (D)RING,SYNCHRONISIERUNGS									(F)ANNEAU-SYNCHRONISATION (S)ANILLO-SINCRONIZADOR					
90304685		.	M	B	B	B	S	S	S			2				
[08]		(E)SLEEVE A-SHIFT (D)HÜLSE,5.GANG-SCHALTUNG									(F)CHEMISE-CHANGEMENT (S)MANGA-CAMBIO					
A90236634		.	M	B	B	B	S	S	S			1				

ENG(ENGINE)	T/A(TRANSAXLE)	BODY TYPE
Y = 1.5SOHC	M = MANUAL T/A	4 N = 4 DOOR NOTCHBACK
6 = 1.6DOHC	A = AUTOMATIC T/A	3 H = 3 DOOR HATCHBACK
. = COMMON	. = COMMON	5 H = 5 DOOR HATCHBACK

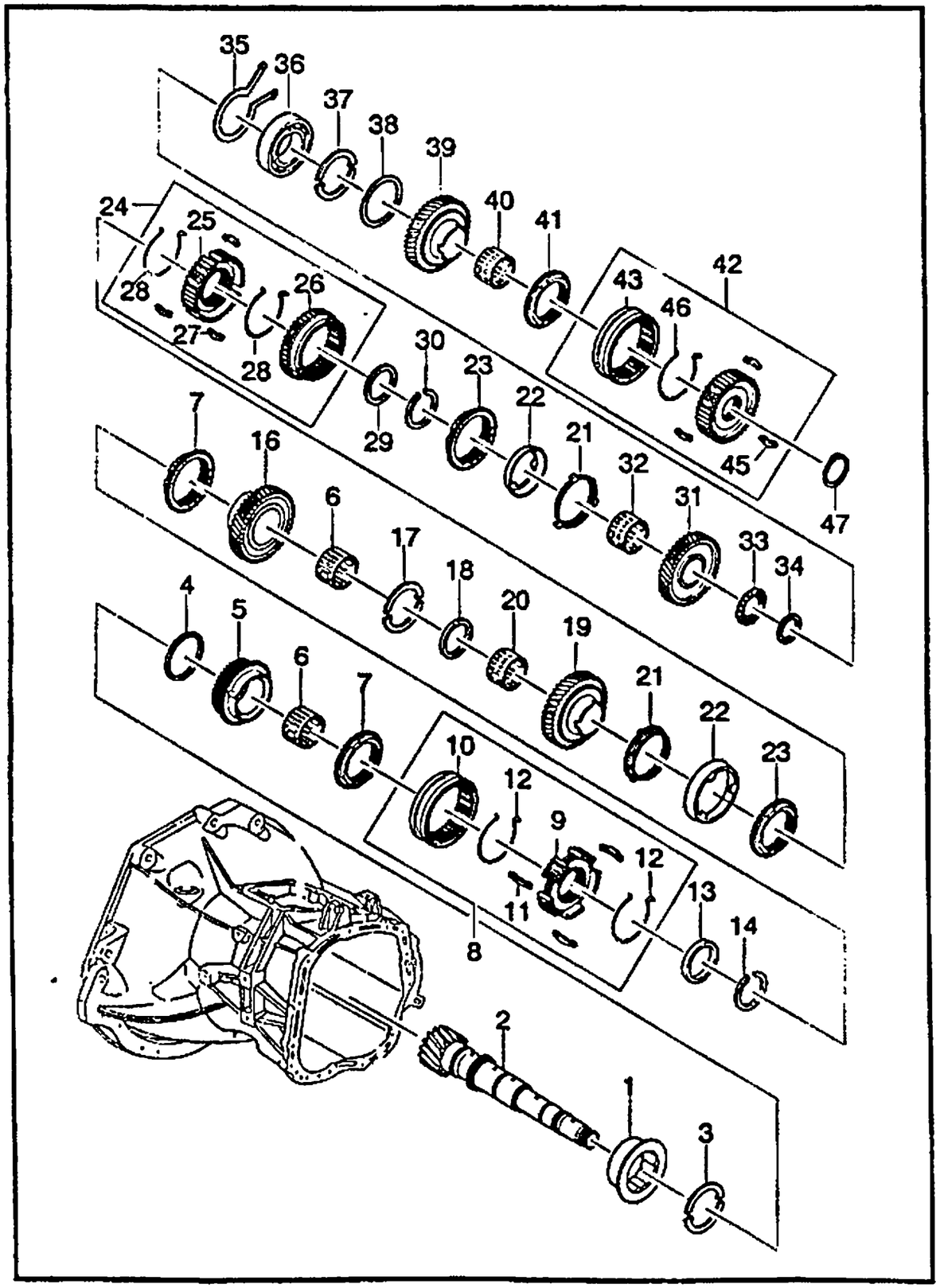

KEY NO. ITC	PART NO	MODEL ENG	T/A	BODY 4N	3H	5H	LEVEL S	SE	SX	OPTION	L/R	QTY	EFFECTIVE DATE FROM	TO	REMARKS	PICODE
[09] N/S(8)		(E)GEAR-CLUTCH (D)GETRIEBE,KUPPLUNG									(F)ENGRENAGE-EMBRAYAGE (S)ENGRANAJE-EMBRAGUE					
[10] N/S(8)		(E)RING-RETAINING (D)RING,HALTER									(F)ANNEAU-DE RETENTION (S)ANILLO-RETENEDOR					
[11]	90199973	(E)KEY-SYNCHRONIZER (D)SCHLÜSSEL,SYNCHRONISATOR	.	M	B	B	B	S	S	S	(F)CLE-SYNCHRONISATEUR (S)LLAVE-SINCRONIZADOR	3				
[12]	90250023	(E)SPRING-3&4TH SYNCHRONIZER (D)FEDERUNG,SYNCHRONISATOR	.	M	B	B	B	S	S	S	(F)RESSORT (S)RESORTE-SINCRONIZADOR 3/4	2				
[13]	09160-38001	(E)WASHER-PLAIN (D)DICHTUNGSRING	.	M	B	B	B	S	S	S	(F)RONDELLE (S)ARANDELA	1				
[14]	90373021	(E)CIRCLIP (D)RUND-KLEMME	.	M	B	B	B	S	S	S	(F)CIRCLIP (S)GRAPA CIRCULAR	1				
[16]	A96237742	(E)GEAR A-3RD SPEED (D)GETRIEBE,3.GANG	Y	M	B	B	B	S	S	S	(F)ENGRENAGE-3EME VITESSE (S)ENGRANAJE-3RA VELOCIDAD	1			&M85	
	A96180757		6	M	B	B	B	.	.	O	&MG4-KL9/EC1	1				
	A96237742		6	M	B	B	B	.	.	A	&M85&KL9/EC1	1				
[17]	90199644	(E)WASHER-MAIN SHAFT THRUST (D)DICHTUNGSRING	.	M	B	B	B	S	S	S	(F)RONDELLE (S)ARANDELA	2				
[18]		(E)RING-WASHER RETAINING (D)RING,DICHTUNG HALTER									(F)ANNEAU (S)ANILLO					

ENG(ENGINE)	T/A(TRANSAXLE)	BODY TYPE
Y = 1.5SOHC	M = MANUAL T/A	4 N = 4 DOOR NOTCHBACK
6 = 1.6DOHC	A = AUTOMATIC T/A	3 H = 3 DOOR HATCHBACK
. = COMMON	. = COMMON	5 H = 5 DOOR HATCHBACK

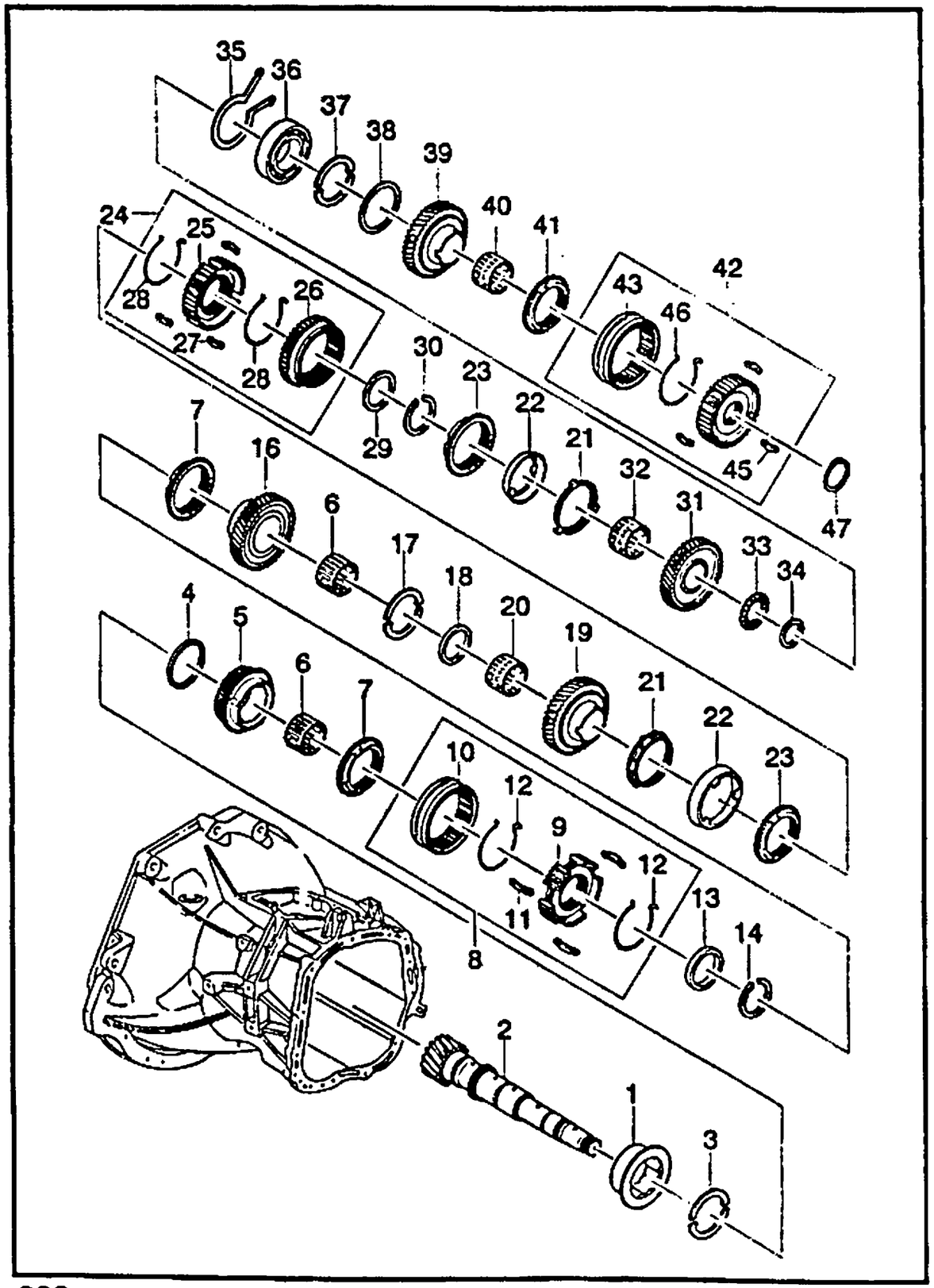

KEY NO. ITC	PART NO	MODEL ENG	T/A	BODY 4N	3H	5H	LEVEL S	SE	SX	OPTION	L/R	QTY	EFFECTIVE DATE FROM	TO	REMARKS	P/CODE
	90112228	.	M	B	B	B	S	S	S			1				
[19]		(E)GEAR A-2ND SPEED (D)GETRIEBE,2.GANG										(F)ENGRENAGE-2EME VITESSE (S)ENGRANAJE-2DA VELOCIDAD				
	A96237740	Y	M	B	B	B	S	S	S	&M85		1				
	A90236632	6	M	B	B	B	.	.	O	&MG4-KL9/EC1		1				
	A96237740	6	M	B	B	B	.	.	A	&M85&KL9/EC1		1				
[20]		(E)CAGE-NEEDLE (D)KÄFIG NADEL										(F)CAGE-AIGUILLE (S)JAULA-AGUJA				
	90373750	.	M	B	B	B	S	S	S			1			38X42X28	
[21]		(E)RING-INSIDE SYNCHRONIZER (D)RING,3 KEGEL ZWISCHEN										(F)ANNEAU (S)ANILLO-INTERMEDIO				
	90305938	.	M	B	B	B	S	S	S			2				
[22]		(E)RING-3 CONE INTERMEDIATE (D)RING,3 KEGEL ZWISCHEN										(F)ANNEAU (S)ANILLO-INTERMEDIO				
	90250034	.	M	B	B	B	S	S	S			2				
[23]		(E)RING-OUTSIDE SYNCHRONIZER (D)RING,SYNCHRONISATOR										(F)ANNEAU (S)ANILLO-SINCRONIZADOR				
	90305939	.	M	B	B	B	S	S	S			2				
[24]		(E)GEAR A-SLIDING (D)GETRIEBE										(F)ENGRENAGE-GLISSANT (S)ENGRANAJE-DESLIZADO				
	A90236633	.	M	B	B	B	S	S	S			1				
[25]		(E)PIECE-GUIDE 1ST&2ND SPEED (D)TEIL,FÜHRUNGS										(F)PIECE-GUIDE (S)PIEZA-GUIA				
N/S(24)																
[26]		(E)GEAR-SLIDING TO REVERSE (D)GLEITGETRIEBE,RÜCKWÄRTS										(F)ENGRENAGE (S)ENGRANAJE				
N/S(24)																

ENG(ENGINE)	T/A(TRANSAXLE)	BODY TYPE
Y = 1.5SOHC 6 = 1.6DOHC . = COMMON	M = MANUAL T/A A = AUTOMATIC T/A . = COMMON	4 N = 4 DOOR NOTCHBACK 3 H = 3 DOOR HATCHBACK 5 H = 5 DOOR HATCHBACK

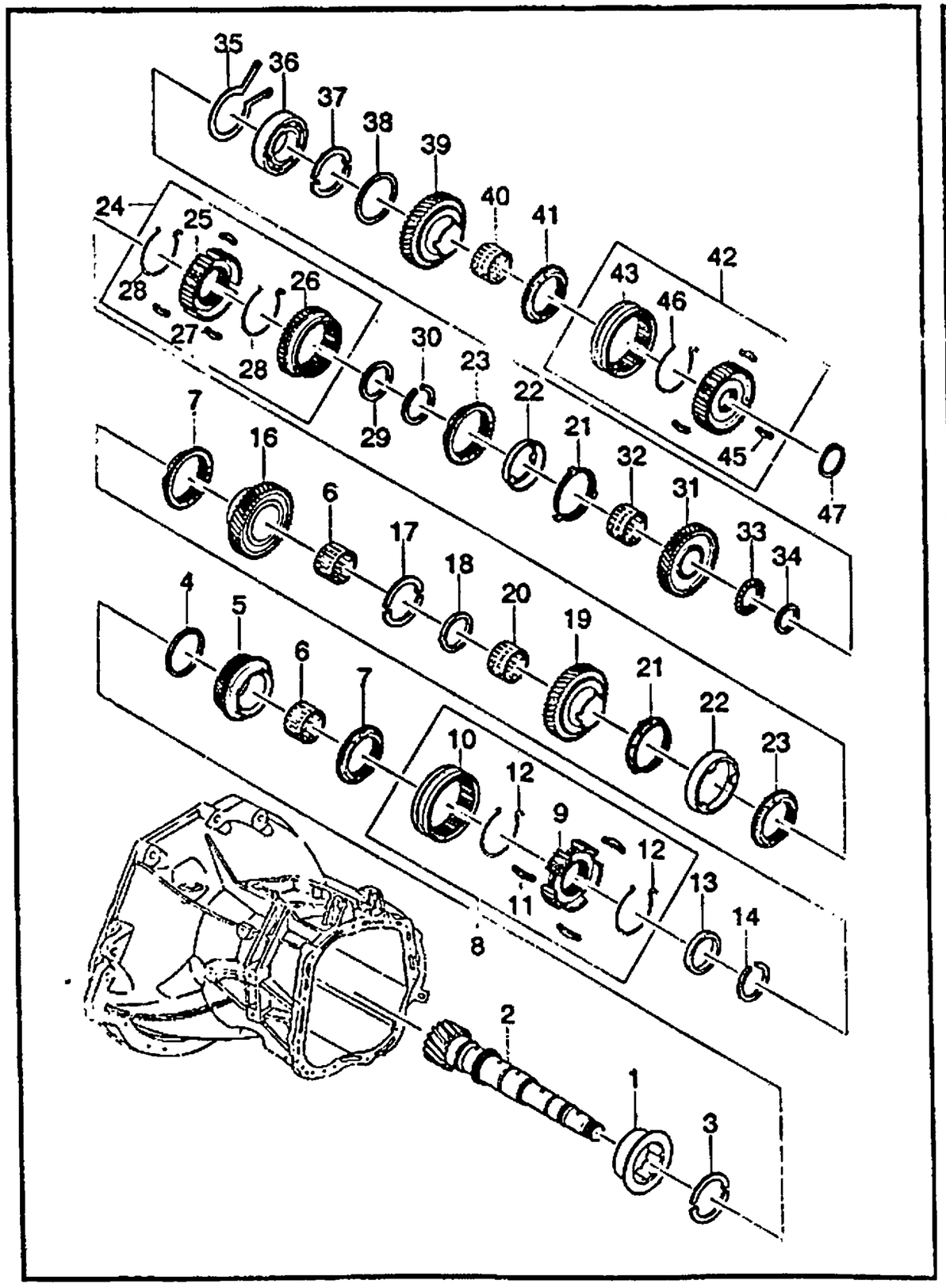

KEY NO. ITC	PART NO	MODEL ENG	T/A	BODY 4N	3H	5H	LEVEL S	SE	SX	OPTION	L/R	QTY	EFFECTIVE DATE FROM	TO	REMARKS	PICODE
[27]	90199019	.	M	B	B	B	S	S	S	(E)KEY-1ST&2ND SYNCHRONIZER (D)SCHLÜSSEL,SYNCHRONISATOR	(F)CLE-SYNCHRONISATEUR (S)LLAVE-SINCRONIZADOR	3				
[28]	90250029	.	M	B	B	B	S	S	S	(E)SPRING-1ST&2ND SYNCHRON (D)FEDERUNG,SYNCHRONISATOR	(F)RESSORT (S)RESORTE	2				
[29]	09160-33007	.	M	B	B	B	S	S	S	(E)WASHER-PLAIN (D)DICHTUNGSRING	(F)RONDELLE (S)ARANDELA	1				
[30]	90142582	.	M	B	B	B	S	S	S	(E)CIRCLIP (D)RUND-KLEMME	(F)CIRCLIP (S)GRAPA CIRCULAR	1				
[31]	90334381	.	M	B	B	B	S	S	S	(E)GEAR A-1ST SPEED (D)GETRIEBE,1.GANG	(F)ENGRENAGE-1ERE VITESSE (S)ENGRANAJE-1RA VELOCIDAD	1				
[32]	90373752	.	M	B	B	B	S	S	S	(E)CAGE-NEEDLE (D)KÄFIG NADEL	(F)CAGE-AIGUILLE (S)JAULA-AGUJA	1			33X37X26	
[33]	90373751	.	M	B	B	B	S	S	S	(E)CAGE-NEEDLE (D)KÄFIG NADEL	(F)CAGE-AIGUILLE (S)JAULA-AGUJA	1			33X52X2	
[34]	90142561	.	M	B	B	B	S	S	S	(E)DISK-MAINSHAFT (D)SCHEIBE,HAUPTSTANGE	(F)DISQUE (S)DISCO-EJE PRINCIPAL	1				
[35]	90373019	.	M	B	B	B	S	S	S	(E)RING-RETAINING (D)RING,HALTER	(F)ANNEAU-DE RETENTION (S)ANILLO-RETENEDOR	1				
[36]										(E)BEARING-GROOVE BALL (D)KUGELLAGER	(F)ROULEMENT-BILLE A SILLONS (S)COJINETE-BOLA DE RANURA					

ENG(ENGINE)	T/A(TRANSAXLE)	BODY TYPE
Y = 1.5SOHC 6 = 1.6DOHC . = COMMON	M = MANUAL T/A A = AUTOMATIC T/A . = COMMON	4 N = 4 DOOR NOTCHBACK 3 H = 3 DOOR HATCHBACK 5 H = 5 DOOR HATCHBACK

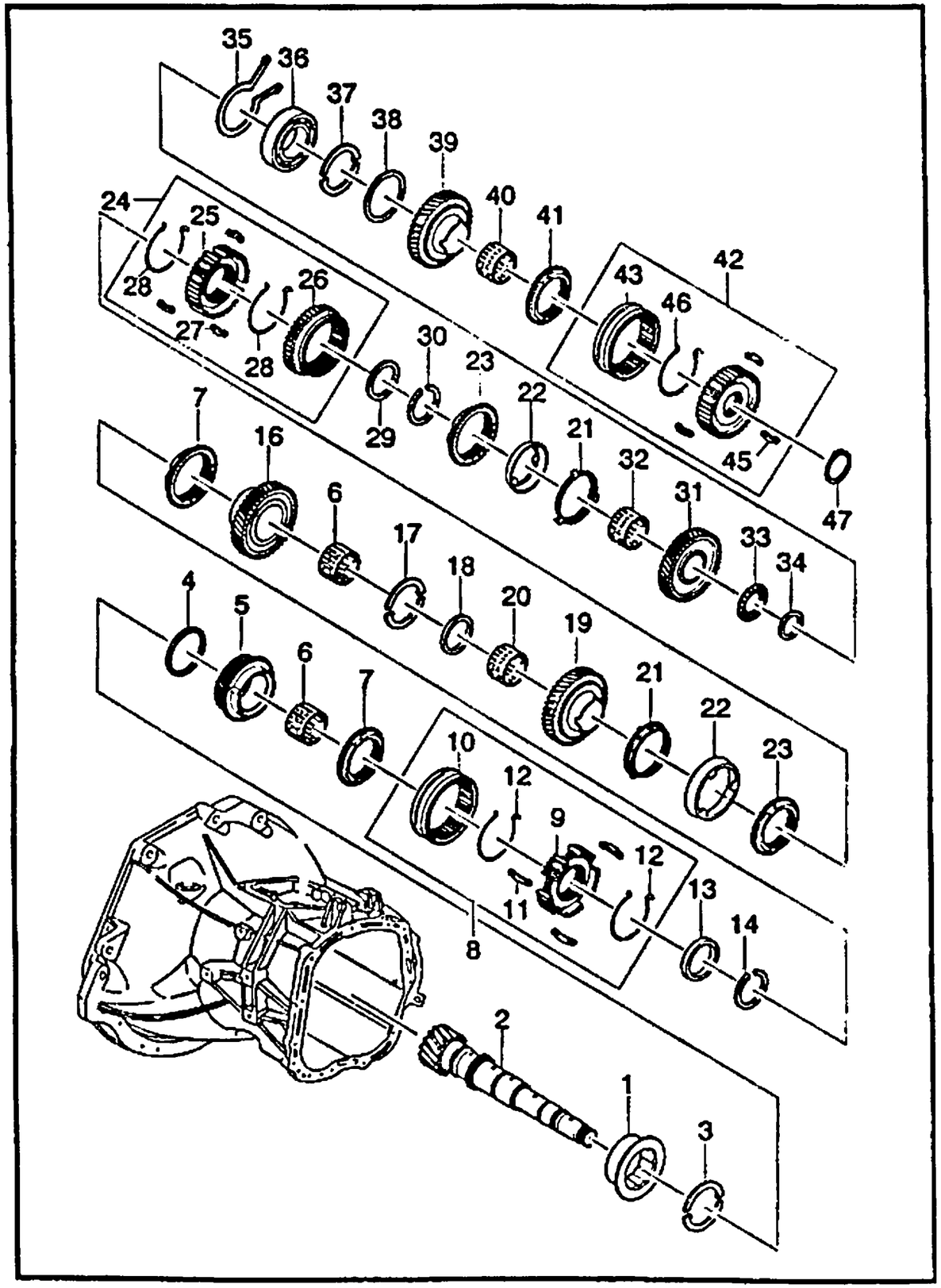

KEY NO. ITC	PART NO	MODEL ENG	T/A	BODY 4N	3H	5H	LEVEL S	SE	SX	OPTION	L/R	QTY	EFFECTIVE DATE FROM	TO	REMARKS	P/CODE
	96108006	.	M	B	B	B	S	S	S			1				
[37]		(E)WASHER-MAIN SHAFT THRUST (D)DICHTUNGSRING										(F)RONDELLE (S)ARANDELA				
	90223614	.	M	B	B	B	S	S	S			2				
[38]		(E)RING-RETAINING (D)RING,HALTER										(F)ANNEAU-DE RETENTION (S)ANILLO-RETENEDOR				
	90142139	.	M	B	B	B	S	S	S			1				
[39]		(E)GEAR A-5TH SPD TRANSAXLE (D)GETRIEBE,5.GANG ANTRIEB										(F)ENGRENAGE (S)ENGRANAJE-CAJA CAMBIOS				
	A96237746	Y	M	B	B	B	S	S	S	&M85		1				
	90334395	6	M	B	B	B	.	.	O	&MG4		1		970303		
Y	A90334396	6	M	B	B	B	.	.	O	&MG4-KL9/EC1		1	970303			
	A96237746	6	M	B	B	B	.	.	A	&M85&KL9/EC1		1				
[40]		(E)CAGE-NEEDLE (D)KÄFIG NADEL										(F)CAGE-AIGUILLE (S)JAULA-AGUJA				
	90373748	.	M	B	B	B	S	S	S			1				
[41]		(E)RING-SYNCHRONIZING (D)RING,SYNCHRONISIERUNGS										(F)ANNEAU-SYNCHRONISATION (S)ANILLO-SINCRONIZADOR				
	90304686	.	M	B	B	B	S	S	S			1				
[42]		(E)SLEEVE A-5TH SPEED SHIFT (D)HÜLSE										(F)CHEMISE (S)MANGA-CAMBIO				
	A90142140	.	M	B	B	B	S	S	S			1				
[43]		(E)SLEEVE-SHIFT (D)HÜLSE										(F)CHEMISE (S)MANGA-CAMBIO				
	N/S(42)															
[45]		(E)KEY-5TH SPD SYNCHRONIZER (D)SCHLÜßEL,SYNCHRONISATOR										(F)CLE-SYNCHRONISATEUR (S)LLAVE-SINCRONIZADOR				
	90142143	.	M	B	B	B	S	S	S			3				

ENG(ENGINE)	T/A(TRANSAXLE)	BODY TYPE
Y = 1.5SOHC	M = MANUAL T/A	4 N = 4 DOOR NOTCHBACK
6 = 1.6DOHC	A = AUTOMATIC T/A	3 H = 3 DOOR HATCHBACK
. = COMMON	. = COMMON	5 H = 5 DOOR HATCHBACK

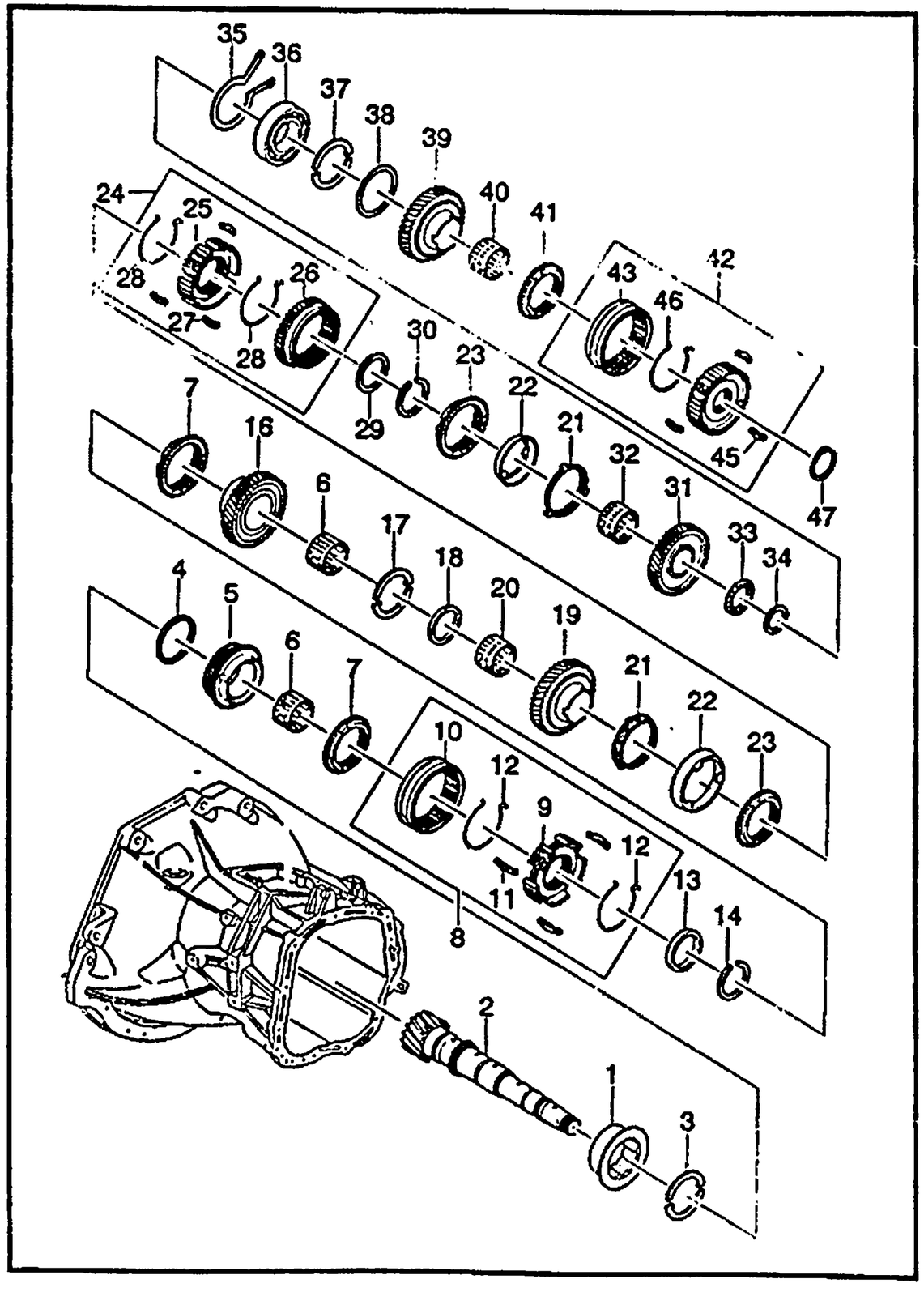

KEY NO. ITC	PART NO	MODEL ENG	MODEL T/A	BODY 4N	BODY 3H	BODY 5H	LEVEL S	LEVEL SE	LEVEL SX	OPTION	L/R	QTY	EFFECTIVE DATE FROM	EFFECTIVE DATE TO	REMARKS	P/CODE
		PART NAME														
[46]	90157546	(E)SPRING-5TH SPD SYNCHRONIZ (D)FEDERUNG,5.GANG SYNCHRO									(F)RESSORT-5EME VIT SYNCHRO (S)RESORTE	1				
[47]	90373017	(E)RING-RETAINING (D)RING,HALTER									(F)ANNEAU-DE RETENTION (S)ANILLO-RETENEDOR	1				

ENG(ENGINE)	T/A(TRANSAXLE)	BODY TYPE
Y = 1.5SOHC 6 = 1.6DOHC . = COMMON	M = MANUAL T/A A = AUTOMATIC T/A . = COMMON	4 N = 4 DOOR NOTCHBACK 3 H = 3 DOOR HATCHBACK 5 H = 5 DOOR HATCHBACK

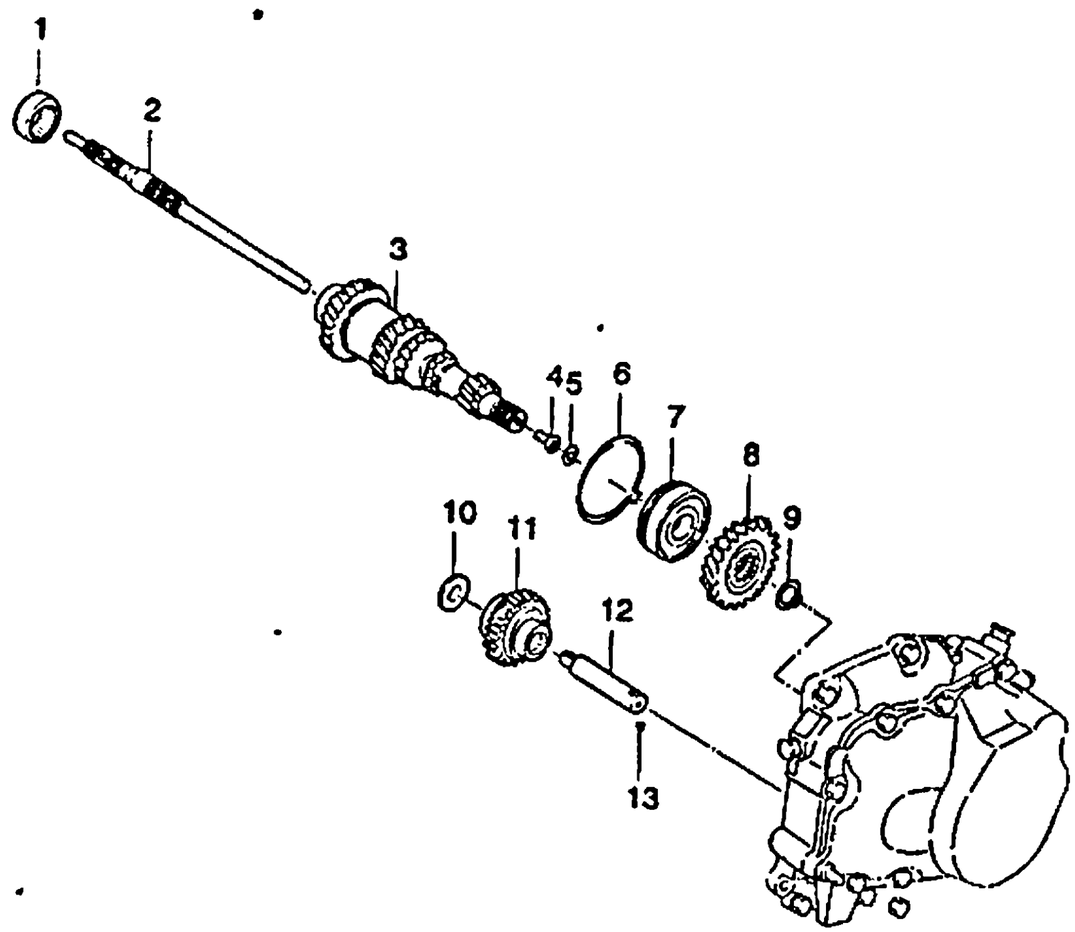

KEY NO.	PART NAME															
ITC	PART NO	MODEL								OPTION	L/R	QTY	EFFECTIVE DATE		REMARKS	P/CODE
		ENG	T/A	BODY			LEVEL						FROM	TO		
				4N	3H	5H	S	SE	SX							
[09]	(E)RING-RETAINING (D)RING,HALTER										(F)ANNEAU-DE RETENTION (S)ANILLO-RETENEDOR					
90373018		.	M	B	B	B	S	S	S			1				
[10]	(E)WASHER-PLAIN (D)DICHTUNGSRING										(F)RONDELLE (S)ARANDELA					
09160-16002		.	M	B	B	B	S	S	S			1				
[11]	(E)GEAR A-REVERSE IDLER (D)GETRIEBE,LEERLAUF										(F)ENGRENAGE (S)ENGRANAJE-OCIOSO					
A96161880		.	M	B	B	B	S	S	S			1				
[12]	(E)SHAFT-REVERSE GEAR (D)SPINDEL										(F)ARBRE (S)EJE					
90182850		.	M	B	B	B	S	S	S			1				
[13]	(E)BALL (D)KUGEL										(F)BOULE (S)BOLA					
06111-05004		.	M	B	B	B	S	S	S			1				

ENG(ENGINE)	T/A(TRANSAXLE)	BODY TYPE
Y = 1.5SOHC 6 = 1.6DOHC . = COMMON	M = MANUAL T/A A = AUTOMATIC T/A . = COMMON	4 N = 4 DOOR NOTCHBACK 3 H = 3 DOOR HATCHBACK 5 H = 5 DOOR HATCHBACK

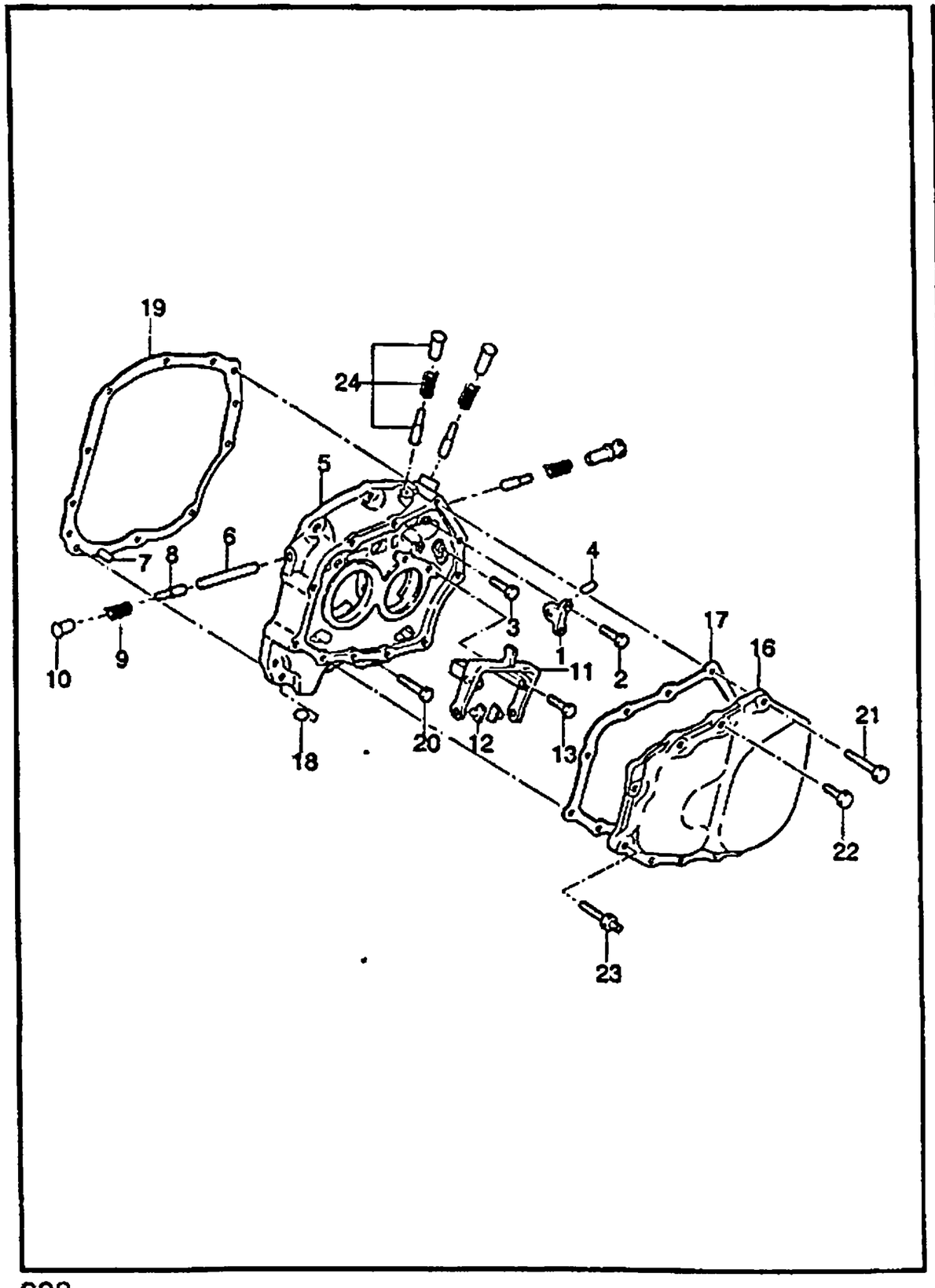

KEY NO. ITC	PART NO	MODEL ENG	T/A	BODY 4N	3H	5H	LEVEL S	SE	SX	OPTION	L/R	QTY	EFFECTIVE DATE FROM	TO	REMARKS	P/CODE
[01]	90147084	(E)BRIDGE-STRAIN BOLT (D)BRÜCKEN-SPANNUNGSSCHRAUBE	.	M	B	B	B	S	S	S		(F)PONT-BOULON DE TAMIS (S)PUENTE-PERNO DE TENSION	1			
[02]	09106-06003	(E)BOLT (D)SCHRAUBE	.	M	B	B	B	S	S	S		(F)BOULON (S)PERNO	2			
[03]	09106-06004	(E)BOLT (D)SCHRAUBE	.	M	B	B	B	S	S	S		(F)BOULON (S)PERNO	2			
[04]	90086156	(E)BOLT-GEARSHIFT STRAIN ROD (D)SCHRAUBE	.	M	B	B	B	S	S	S		(F)BOULON (S)PERNO	1			
[05]	96180859	(E)PLATE-BEARING (D)PLATTE,LAGER	.	M	B	B	B	S	S	S		(F)PLAQUE-ROULEMENT (S)PLACA-COJINETE	1			
[06]	90032052	(E)BOLT-GEARSHIFT STRAIN ROD (D)SCHRAUBE	.	M	B	B	B	S	S	S		(F)BOULON (S)PERNO	1			
[07]	11053109	(E)PIN-DOWEL (D)STIFT,DÜBEL	.	M	B	B	B	S	S	S		(F)BROCHE-GOUJON (S)PASADOR-CLAVIJA	2			
[08]	90189977	(E)PIN-BLOCKING (D)STIFT,BLOCKIER	.	M	B	B	B	S	S	S		(F)BROCHE-DE BLOCAGE (S)PASADOR-BLOQUEADOR	1			
[09]	90125326	(E)SPRING-COMPRESSION (D)FEDERUNG,VERDICHTUNG	.	M	B	B	B	S	S	S		(F)RESSORT-COMPRESSION (S)RESORTE-COMPRESION	1			
[10]		(E)PLUG (D)STÖPSEL										(F)BOUCHON (S)TAPON				

ENG(ENGINE)	T/A(TRANSAXLE)	BODY TYPE
Y = 1.5SOHC 6 = 1.6DOHC . = COMMON	M = MANUAL T/A A = AUTOMATIC T/A . = COMMON	4 N = 4 DOOR NOTCHBACK 3 H = 3 DOOR HATCHBACK 5 H = 5 DOOR HATCHBACK

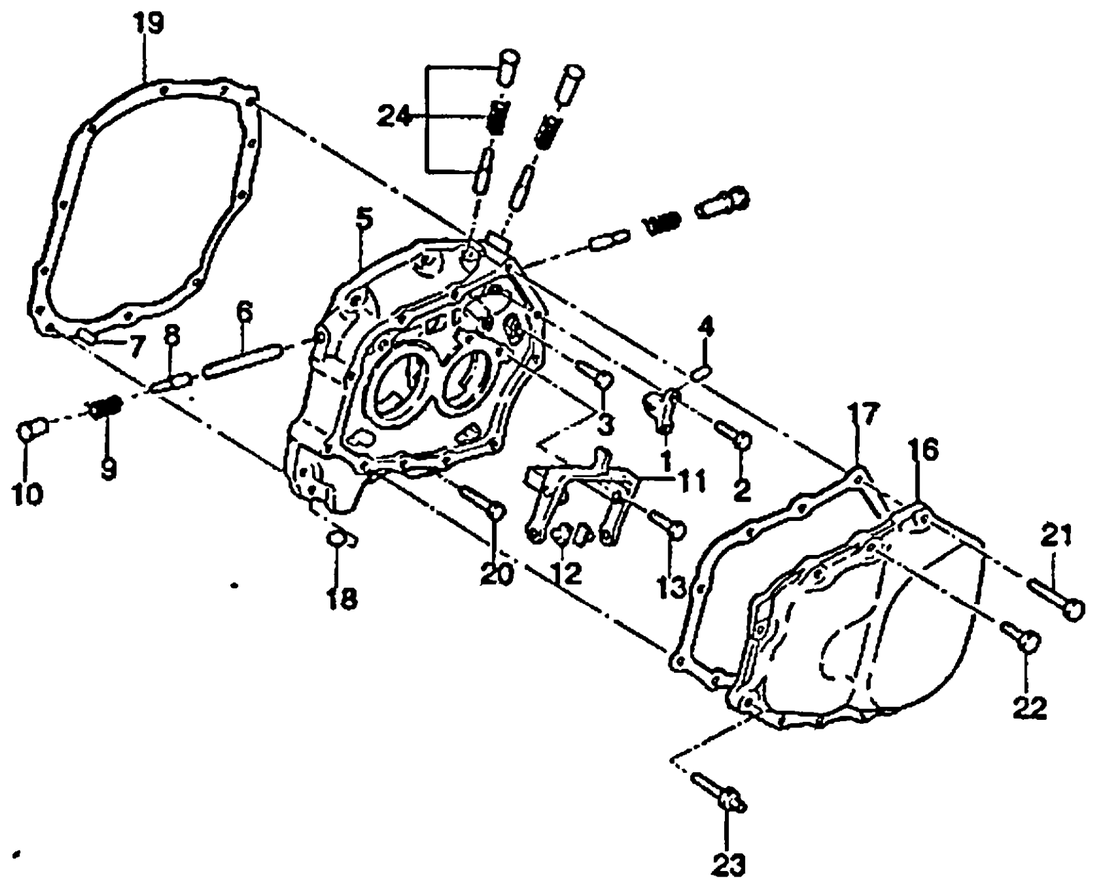

KEY NO. ITC	PART NO	MODEL ENG	T/A	BODY 4N	3H	5H	LEVEL S	SE	SX	OPTION	L/R	QTY	EFFECTIVE DATE FROM	TO	REMARKS	P/CODE
	90092564	.	M	B	B	B	S	S	S			1				
[11]	(E)FORK A-GEARSHIFT SLIDING (D)GABEL,GANGSCHALTUNG,GLEIT											(F)FOURCHETTE (S)HORQUILLA-DESLIZADOR				
	90342057	.	M	B	B	B	S	S	S			1				
[12]	(E)SHOE-GEARSHIFT (D)SCHUH,GANGSCHALTUNG											(F)SABOT-CHANGEMENT (S)ZAPATA-PALANCA DE CAMBIOS				
	96305524	.	M	B	B	B	S	S	S			2				
[13]	(E)BOLT (D)SCHRAUBE											(F)BOULON (S)PERNO				
	09106-08004	.	M	B	B	B	S	S	S			2				
[16]	(E)COVER-TRANSEAXLE (D)DECKEL,ANTRIEB											(F)CARTER-TRANSMISSION (S)CUBIERTA-EJE TRANSVERSAL				
	96175844	.	M	B	B	B	S	S	S			1				
[17]	(E)GASKET-TRANSAXLE COVER (D)DICHTUNG,ANTRIEB DECKEL											(F)JOINT (S)JUNTA				
	96179238	.	M	B	B	B	S	S	S			1				
[18]	(E)MAGNET (D)MAGNET											(F)AIMANT (S)IMAN				
	08957605	.	M	B	B	B	S	S	S			1				
[19]	(E)GASKET-BEARING PLATE (D)DICHTUNG,LAGER PLATTE											(F)JOINT-PLAQUE DE ROULEMENT (S)JUNTA-PLACA DE COJINETE				
	96179244	.	M	B	B	B	S	S	S			1				
[20]	(E)BOLT (D)SCHRAUBE											(F)BOULON (S)PERNO				
	09100-08016	.	M	B	B	B	S	S	S			5				
[21]	(E)BOLT (D)SCHRAUBE											(F)BOULON (S)PERNO				
	09100-08018	.	M	B	B	B	S	S	S			5				

ENG(ENGINE)	T/A(TRANSAXLE)	BODY TYPE
Y = 1.5SOHC G = 1.6DOHC . = COMMON	M = MANUAL T/A A = AUTOMATIC T/A . = COMMON	4 N = 4 DOOR NOTCHBACK 3 H = 3 DOOR HATCHBACK 5 H = 5 DOOR HATCHBACK

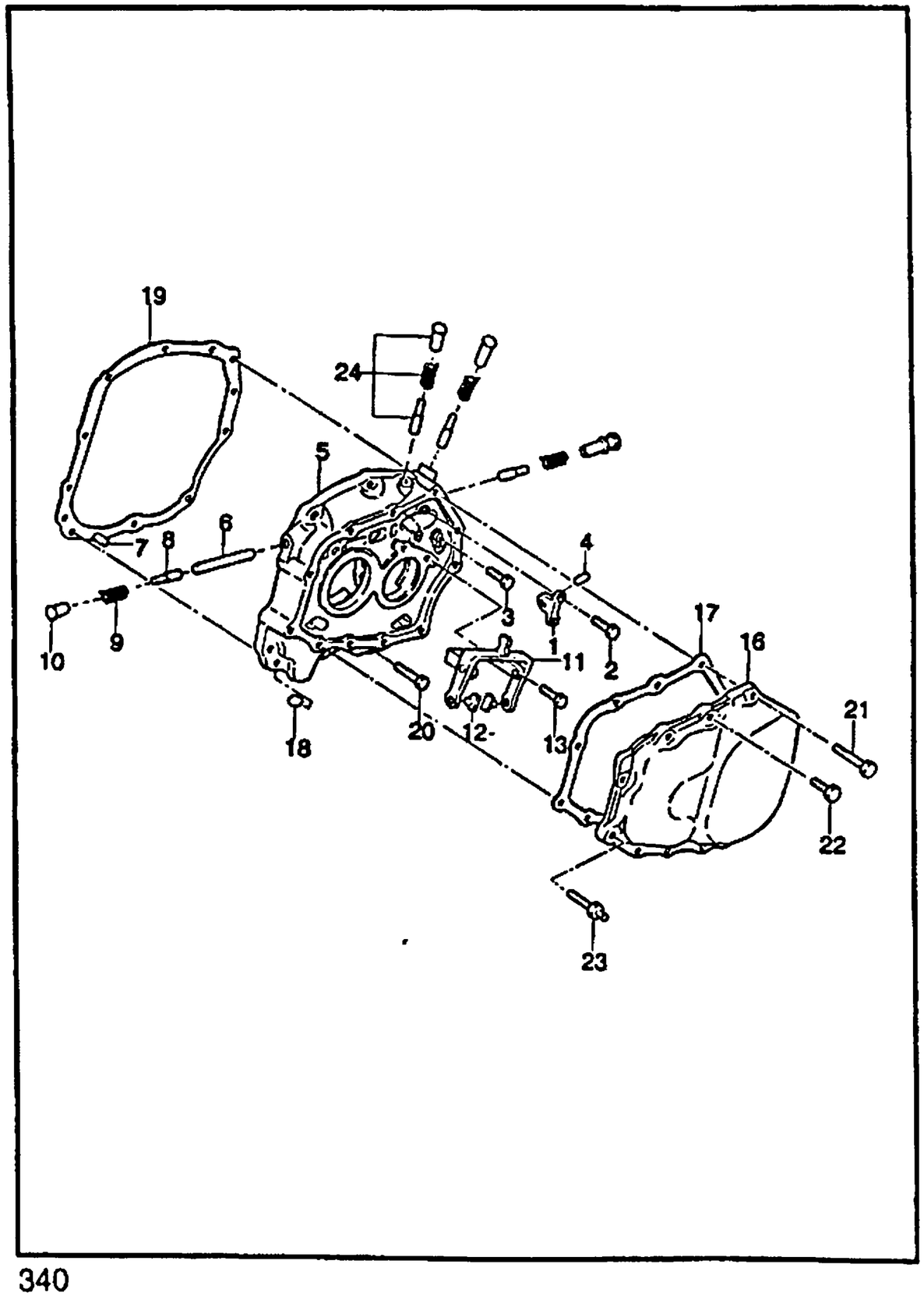

KEY NO.		PART NAME															
ITC	PART NO	MODEL								OPTION	L/R	QTY	EFFECTIVE DATE		REMARKS	P/CODE
		ENG	T/A	BODY			LEVEL						FROM	TO		
				4N	3H	5H	S	SE	SX							
	[22]	(E)BOLT (D)SCHRAUBE									(F)BOULON (S)PERNO					
	09100-07002	.	M	B	B	B	S	S	S			5				
	[23]	(E)SCREW (D)SCHRAUBE									(F)VIS (S)TORNILLO					
	90168610	.	M	B	B	B	S	S	S			1				
	[24]	(E)SLEEVE-DETENT (D)HÜLSE,RÜCK-HALTER									(F)CHEMISE-DETENTE (S)MANGA-SEGURO					
	90375062	.	M	B	B	B	S	S	S			3				

ENG(ENGINE)	T/A(TRANSAXLE)	BODY TYPE
Y = 1.5SOHC 6 = 1.6DOHC . = COMMON	M = MANUAL T/A A = AUTOMATIC T/A . = COMMON	4 N = 4 DOOR NOTCHBACK 3 H = 3 DOOR HATCHBACK 5 H = 5 DOOR HATCHBACK

3260 GEAR SHIFT COVER&FORK

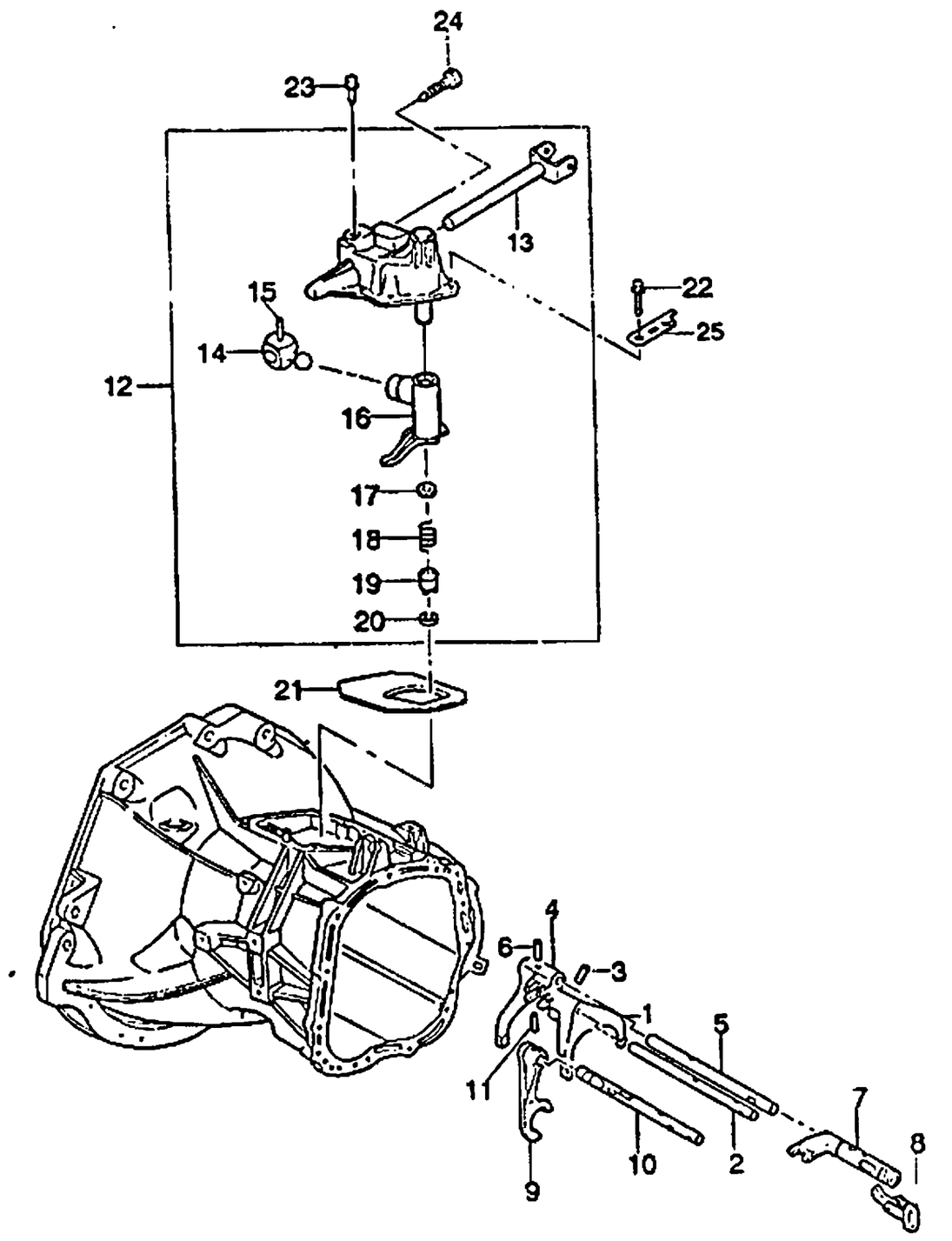

KEY NO. ITC	PART NO	MODEL ENG	MODEL T/A	MODEL BODY 4N	MODEL BODY 3H	MODEL BODY 5H	MODEL LEVEL S	MODEL LEVEL SE	MODEL LEVEL SX	OPTION	L/R	QTY	EFFECTIVE DATE FROM	EFFECTIVE DATE TO	REMARKS	P/CODE
[01]	90344077	.	M	B	B	B	S	S	S			1			(E)FORK-1ST&2ND GEARSHIFT (D)GABEL,1.&2.GANGSCHALTUNG (F)FOURCHETTE (S)HORQUILLA-CAMBIOS	
[02]	90375059	.	M	B	B	B	S	S	S			1			(E)ROD-1ST&2ND GEARSHIFT (D)STAB,1.&2.GANGSCHALTUNG (F)TRINGLE (S)VARILLA-PALANCA DE CAMBIO	
[03]	11054212	.	M	B	B	B	S	S	S			1			(E)PIN-COILED (D)STIFT,GEWICKELT (F)BROCHE-BOUDIN (S)PASADOR-ENROSCADO	
[04]	90184831	.	M	B	B	B	S	S	S			1			(E)FORK-3RD&4TH GEARSHIFT (D)GABEL,3.&4.GANGSCHALTUNG (F)FOURCHETTE (S)HORQUILLA-CAMBIOS	
[05]	90375060	.	M	B	B	B	S	S	S			1			(E)ROAD-3RD&4TH GEARSHIFT (D)STRAßE,3.&4.GANGSCHALTUNG (F)ROUTE (S)VIA-PALANCA DE CAMBIOS	
[06]	11054212	.	M	B	B	B	S	S	S			1			(E)PIN-COILED (D)STIFT,GEWICKELT (F)BROCHE-BOUDIN (S)PASADOR-ENROSCADO	
[07]	90375041	.	M	B	B	B	S	S	S			1			(E)PIECE-5TH SPEED ENGAGING (D)TEIL,BETATIGUNGS (F)PIECE-ENGAGEMENT (S)PIEZA-ENGRANAR	
[08]	90142154	.	M	B	B	B	S	S	S			1			(E)PAWL-GEARSHIFT ROD (D)SPERRHACKEN (F)CLIQUET (S)RETEN	
[09]	90199518	.	M	B	B	B	S	S	S			1			(E)FORK-GEARSHIFT REVERSE (D)GABEL (F)FOURCHETTE-MARCHE ARRIERE (S)HORQUILLA-CAMBIO	
[10]															(E)ROD-REVERSE GEARSHIFT (D)STAB (F)TRINGLE (S)VARILLA-PALANCA DE CAMBIO	

ENG(ENGINE)	T/A(TRANSAXLE)	BODY TYPE
Y = 1.5SOHC 6 = 1.6DOHC . = COMMON	M = MANUAL T/A A = AUTOMATIC T/A . = COMMON	4 N = 4 DOOR NOTCHBACK 3 H = 3 DOOR HATCHBACK 5 H = 5 DOOR HATCHBACK

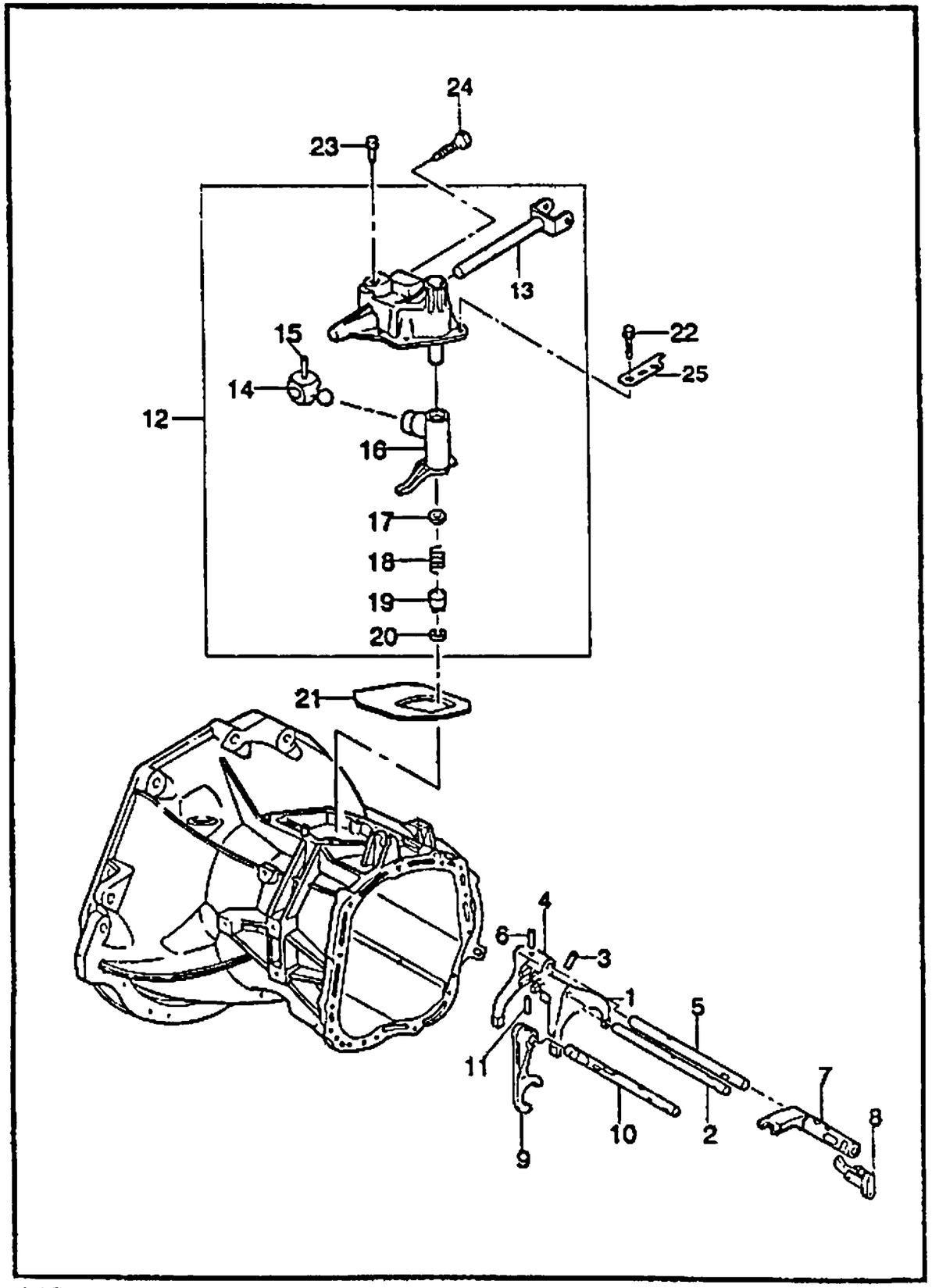

KEY NO. ITC	PART NO	MODEL ENG	MODEL T/A	MODEL BODY 4N	MODEL BODY 3H	MODEL BODY 5H	MODEL LEVEL S	MODEL LEVEL SE	MODEL LEVEL SX	OPTION	L/R	QTY	EFFECTIVE DATE FROM	EFFECTIVE DATE TO	REMARKS	PICODE
	90334195	.	M	B	B	B	S	S	S			1				
[11]	(E)PIN-COILED (D)STIFT,GEWICKELT										(F)BROCHE-BOUDIN (S)PASADOR-ENROSCADO					
	11054212	.	M	B	B	B	S	S	S			1				
[12]	(E)COVER A-GEARSHIFT (D)DECKEL,GANGSCHALTUNG										(F)CARTER (S)CUBIERTA					
	90374229	.	M	B	B	B	S	S	S			1				
[13]	(E)ROD A-GEARSHIFT (D)STAB,GANGSCHALTUNG										(F)TRINGLE (S)VARILLA-PALANCA DE CAMBIO					
	90147931	.	M	B	B	B	S	S	S			1				
[14]	(E)FINGER-SHIFT (D)FINGER,SCHALTUNG										(F)DOIGT-CHANGEMENT (S)DEDO-CAMBIOS					
	90157060	.	M	B	B	B	S	S	S			1				
[15]	(E)PIN-COILED (D)STIFT,GEWICKELT										(F)BROCHE-BOUDIN (S)PASADOR-ENROSCADO					
	11054212	.	M	B	B	B	S	S	S			1				
[16]	(E)LEVER-GEARSHIFT INTER (D)HEBEL,GANGSCHALTUNG										(F)LEVIER (S)PALANCA					
	96179218	.	M	B	B	B	S	S	S			1				
[17]	(E)PLATE-GUARD (D)PLATTE,SCHUTZ										(F)PLAQUE-GARDE (S)PLACA-GUARDIA					
	90142132	.	M	B	B	B	S	S	S			1				
[18]	(E)SPRING-COMPRESSION (D)FEDERUNG,VERDICHTUNG										(F)RESSORT-COMPRESSION (S)RESORTE-COMPRESION					
	90170121	.	M	B	B	B	S	S	S			1				
[19]	(E)BUSHING-GEARSHIFT COVER (D)LAGERFUTTER										(F)MANCHON (S)BUJE					
	90223591	.	M	B	B	B	S	S	S			1				

ENG(ENGINE)	T/A(TRANSAXLE)	BODY TYPE
Y = 1.5SOHC 6 = 1.6DOHC . = COMMON	M = MANUAL T/A A = AUTOMATIC T/A . = COMMON	4 N = 4 DOOR NOTCHBACK 3 H = 3 DOOR HATCHBACK 5 H = 5 DOOR HATCHBACK

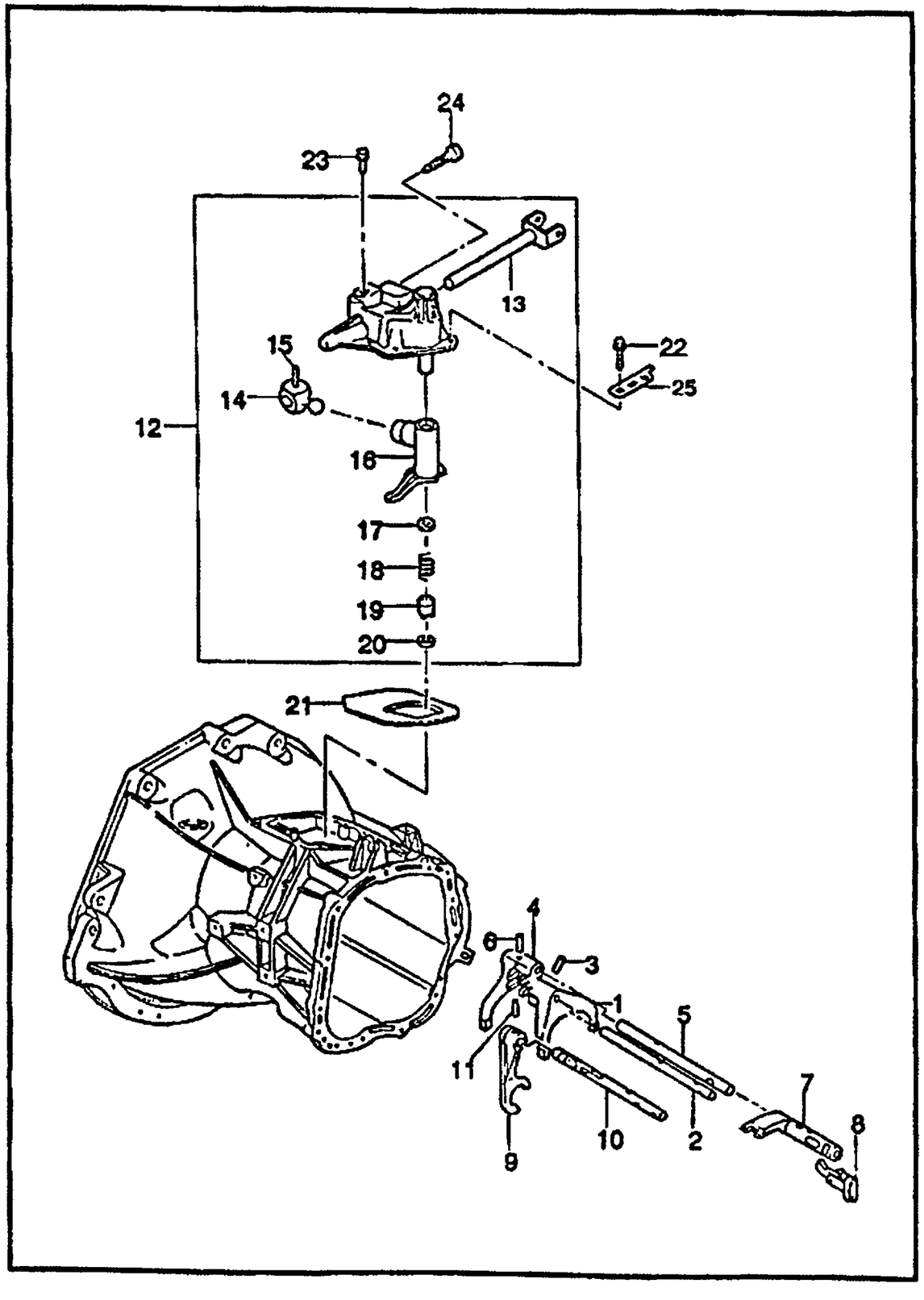

KEY NO. ITC	PART NO	MODEL ENG	MODEL T/A	BODY 4N	BODY 3H	BODY 5H	LEVEL S	LEVEL SE	LEVEL SX	OPTION	L/R	QTY	EFFECTIVE DATE FROM	EFFECTIVE DATE TO	REMARKS	PICODE
[20]	90223590	.	M	B	B	B	S	S	S	(E)RING-RETAINING (D)RING,HALTER		1			(F)ANNEAU-DE RETENTION (S)ANILLO-RETENEDOR	
[21]	96179248	.	M	B	B	B	S	S	S	(E)GASKET-GEARSHIFT COVER (D)DICHTUNG		1			(F)JOINT (S)JUNTA	
[22]	09100-07003	.	M	B	B	B	S	S	S	(E)BOLT (D)SCHRAUBE		4			(F)BOULON (S)PERNO	
[23]	90105651	.	M	B	B	B	S	S	S	(E)PLUG-GEARSHIFT COVER (D)STÖPSEL		1			(F)BOUCHON (S)TAPON	
[24]	90086885	.	M	B	B	B	S	S	S	(E)PLUG-OIL FILLER (D)STÖPSEL,ÖL ZUFUHR		1			(F)BOUCHON (S)TAPON-LLENAR ACEITE	
[25]	96234618	.	M	B	B	B	S	S	S	(E)BRACKET-ENGINE CONT.HARNESS (D)TRÄGER		1			(F)SUPPORT (S)SOPORTE	

ENG(ENGINE)	T/A(TRANSAXLE)	BODY TYPE
Y = 1.5SOHC 6 = 1.6DOHC . = COMMON	M = MANUAL T/A A = AUTOMATIC T/A . = COMMON	4 N = 4 DOOR NOTCHBACK 3 H = 3 DOOR HATCHBACK 5 H = 5 DOOR HATCHBACK

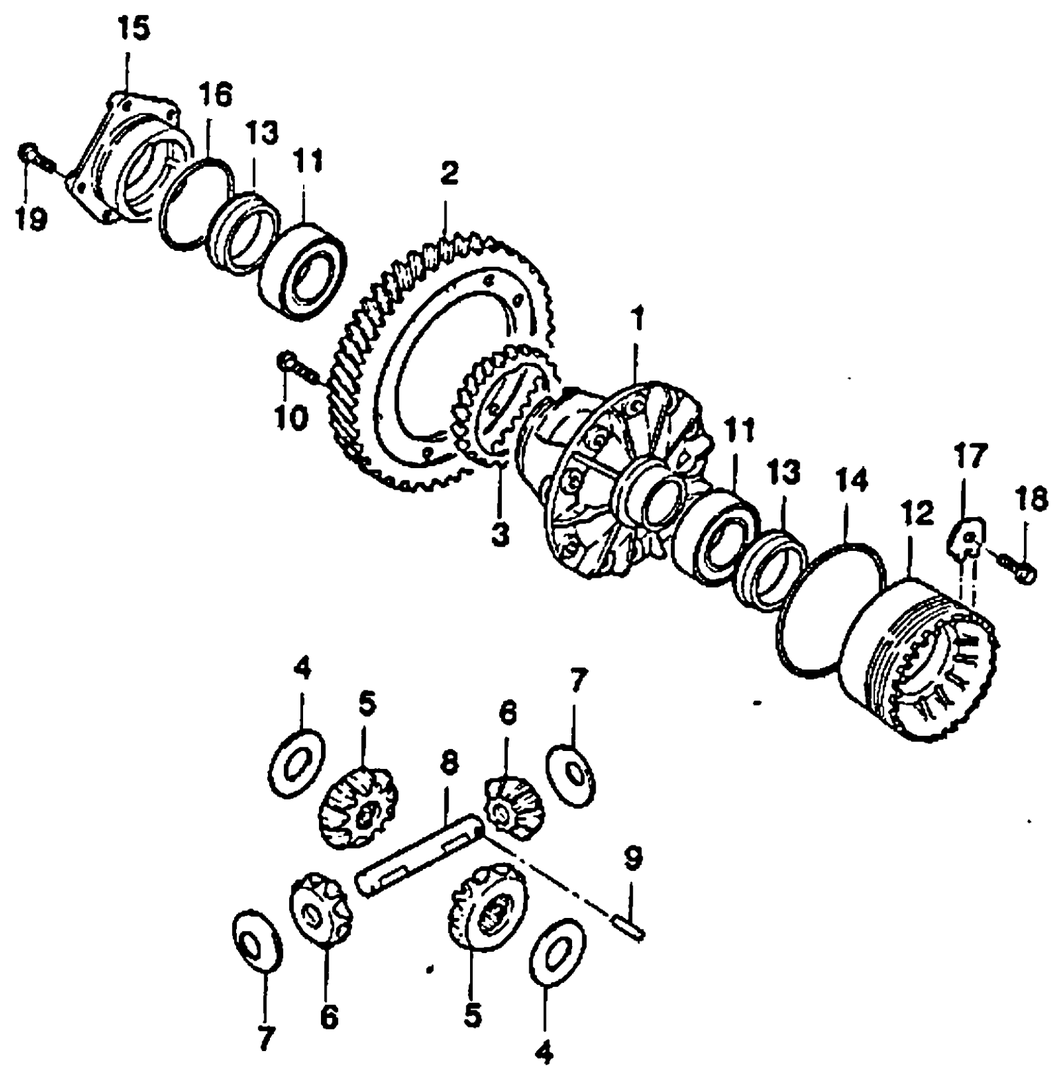

KEY NO. ITC	PART NO	MODEL ENG	MODEL T/A	MODEL BODY 4N	MODEL BODY 3H	MODEL BODY 5H	MODEL LEVEL S	MODEL LEVEL SE	MODEL LEVEL SX	OPTION	L/R	QTY	EFFECTIVE DATE FROM	EFFECTIVE DATE TO	REMARKS	P/CODE
[01]		(E)HOUSING-DIFFERENTIAL GEAR (D)GEHÄUSE									(F)LOGEMENT (S)CARCASA					
	90372052	.	M	B	B	B	S	S	S			1				
[02]		(E)GEAR-HELICAL DIFFERENTIAL (D)AUSGLEICHSGETRIEBE									(F)ENGRENAGE-HELICOIDAL (S)ENGRANAJE					
	96242700	Y	M	B	B	B	S	S	S	&M85		1			RATIO : 4.176	
	90279879	6	M	B	B	B	.	.	O	&MG4-KL9/EC1		1			RATIO : 3.722	
	96242700	6	M	B	B	B	.	.	A	&M85&KL9/EC1		1				
[03]		(E)GEAR-DRIVEN WORM (D)GETRIEBE									(F)ENGRENAGE (S)ENGRANAJE					
	90125064	.	M	B	B	B	S	S	S			1				
[04]		(E)WASHER-SIDE GEAR THRUST (D)DICHTUNGSRING									(F)RONDELLE (S)ARANDELA					
	14040531	.	M	B	B	B	S	S	S			2				
[05]		(E)GEAR-AXLE SHAFT BEVEL (D)GETRIEBE,ABSCHRÄGUNG									(F)ENGRENAGE (S)ENGRANAJE-BISEL					
	96183738	.	M	B	B	B	S	S	S			2				
[06]		(E)GEAR-BEVEL DIFFERENTIAL (D)GETRIEBE									(F)ENGRENAGE (S)ENGRANAJE					
	96183739	.	M	B	B	B	S	S	S			2				
[07]		(E)DISK-BEVEL GEAR (D)SCHEIBE,KEGELRADGETRIEBE									(F)DISQUE-ENGRENAGE BISEAUTE (S)DISCO-ENGRANAJE BISEL					
	00463061	.	M	B	B	B	S	S	S			2				
[08]		(E)SHAFT-DIFFERENTIAL GEAR (D)SPINDEL,AUSGLEICHSGETRIEB									(F)ARBRE (S)EJE-ENGRANAJE DIFERENCIAL					
	90372053	.	M	B	B	B	S	S	S			1				
[09]		(E)PIN-DIFFERENTIAL SPRING (D)STIFT,AUSGLEICHSGETRIEBE									(F)BROCHE (S)PASADOR					

ENG(ENGINE)	T/A(TRANSAXLE)	BODY TYPE
Y = 1.5SOHC 6 = 1.6DOHC . = COMMON	M = MANUAL T/A A = AUTOMATIC T/A . = COMMON	4 N = 4 DOOR NOTCHBACK 3 H = 3 DOOR HATCHBACK 5 H = 5 DOOR HATCHBACK

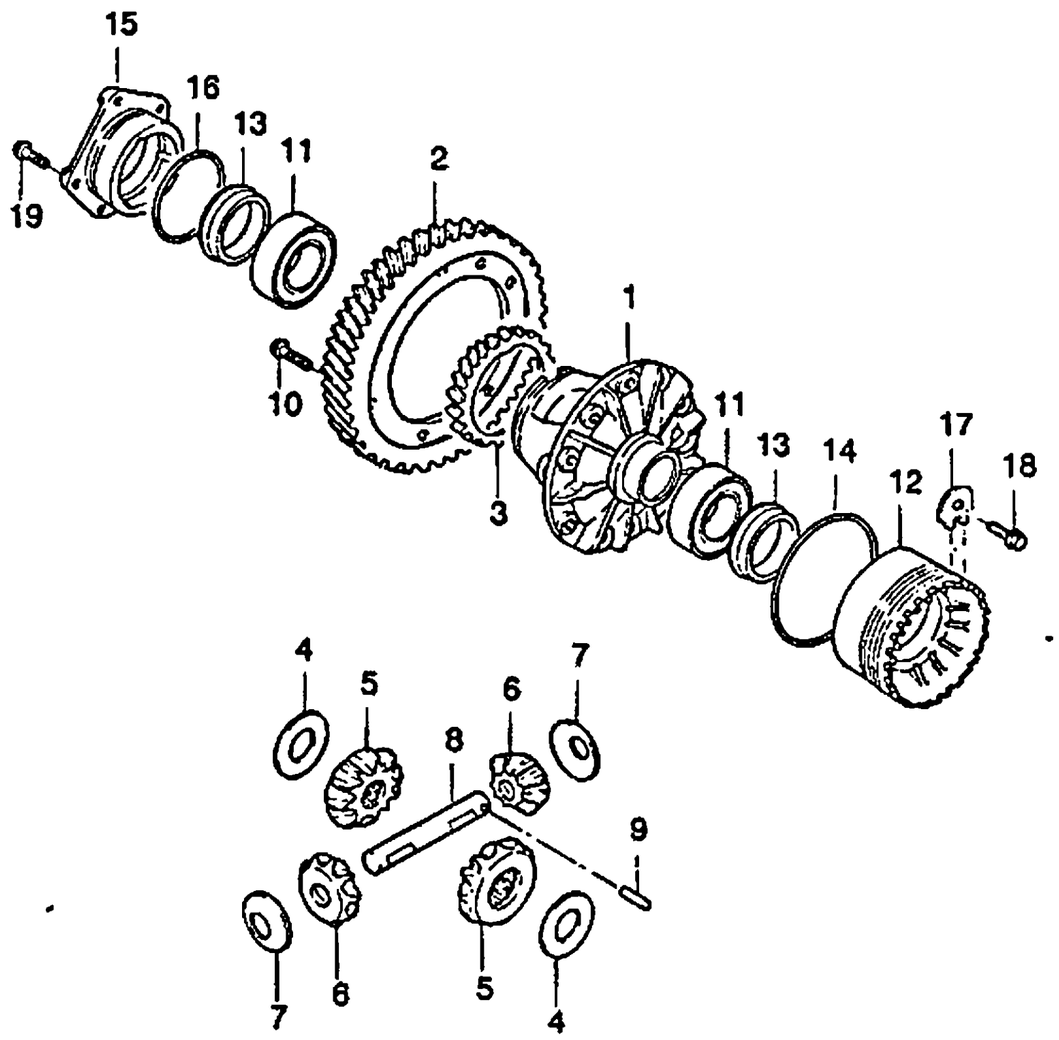

KEY NO. ITC	PART NO	MODEL ENG	T/A	BODY 4N	3H	5H	LEVEL S	SE	SX	OPTION	L/R	QTY	EFFECTIVE DATE FROM	TO	REMARKS	P/CODE
[10]	96169094	.	M	B	B	B	S	S	S			1			(E)BOLT (D)SCHRAUBE (F)BOULON (S)PERNO	
[11]	09103-10057	.	M	B	B	B	S	S	S			10			(E)BEARING-TAPERED ROLLER (D)ROLLENLAGER,ZUGESPITZT (F)ROULEMENT-ROULEAU FUSELE (S)COJINETE-RODILLO REDUCIDO	
[12]	96108125	.	M	B	B	B	S	S	S			2			(E)RING-DIFFERENTIAL BEARING (D)RING,AUSGLEICHS-LAGER (F)ANNEAU (S)ANILLO	
[13]	90121689	.	M	B	B	B	S	S	S			1			(E)RING-SHAFT SEAL (D)RING,STAB DICHTUNG (F)ANNEAU-JOINT D'ARBRE (S)ANILLO-BROCHE DE EJE	
[14]	90182166	.	M	B	B	B	S	S	S			2			(E)O RING-DIFFERENTIAL (D)O RING,AUSGLEICHSGETRIEBE (F)JOINT TORIQUE (S)ANILLO EN O-DIFERENCIAL	
[15]	90111402	.	M	B	B	B	S	S	S			1			(E)FLANGE-DIFF GEAR BEARING (D)FLANSCH (F)FLASQUE (S)PESTAÑA	
[16]	90121695	.	M	B	B	B	S	S	S			1			(E)O RING (D)O RING (F)JOINT TORIQUE (S)ANILLO EN O	
[17]	90129521	.	M	B	B	B	S	S	S			1			(E)PLATE-LOCKING (D)PLATTE,VERRIEGELUNG (F)PLAQUE-VERROUILLAGE (S)PLACA-CIERRE	
[18]	90079853	.	M	B	B	B	S	S	S			1			(E)BOLT (D)SCHRAUBE (F)BOULON (S)PERNO	
	09116-06029	.	M	B	B	B	S	S	S			1				

ENG(ENGINE)	T/A(TRANSAXLE)	BODY TYPE
Y = 1.5SOHC 6 = 1.6DOHC . = COMMON	M = MANUAL T/A A = AUTOMATIC T/A . = COMMON	4 N = 4 DOOR NOTCHBACK 3 H = 3 DOOR HATCHBACK 5 H = 5 DOOR HATCHBACK

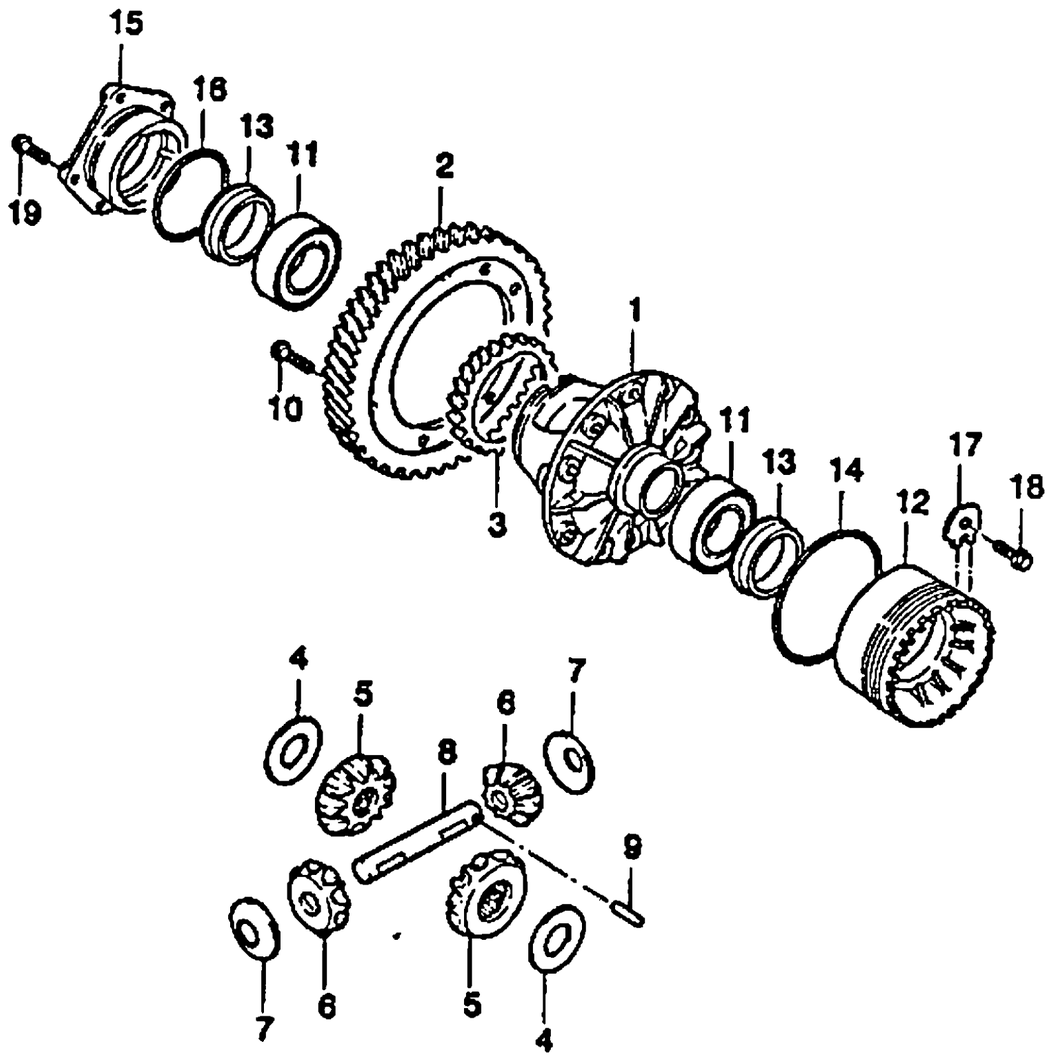

KEY NO.		PART NAME														
ITC	PART NO	MODEL								OPTION	L/R	QTY	EFFECTIVE DATE		REMARKS	P/CODE
		ENG	T/A	BODY			LEVEL						FROM	TO		
				4N	3H	5H	S	SE	SX							
[19]		(E)BOLT (D)SCHRAUBE									(F)BOULON (S)PERNO					
	09103-08026	.	M	B	B	B	S	S	S			6				

ENG(ENGINE)	T/A(TRANSAXLE)	BODY TYPE
Y = 1.5SOHC 6 = 1.6DOHC . = COMMON	M = MANUAL T/A A = AUTOMATIC T/A . = COMMON	4 N = 4 DOOR NOTCHBACK 3 H = 3 DOOR HATCHBACK 5 H = 5 DOOR HATCHBACK

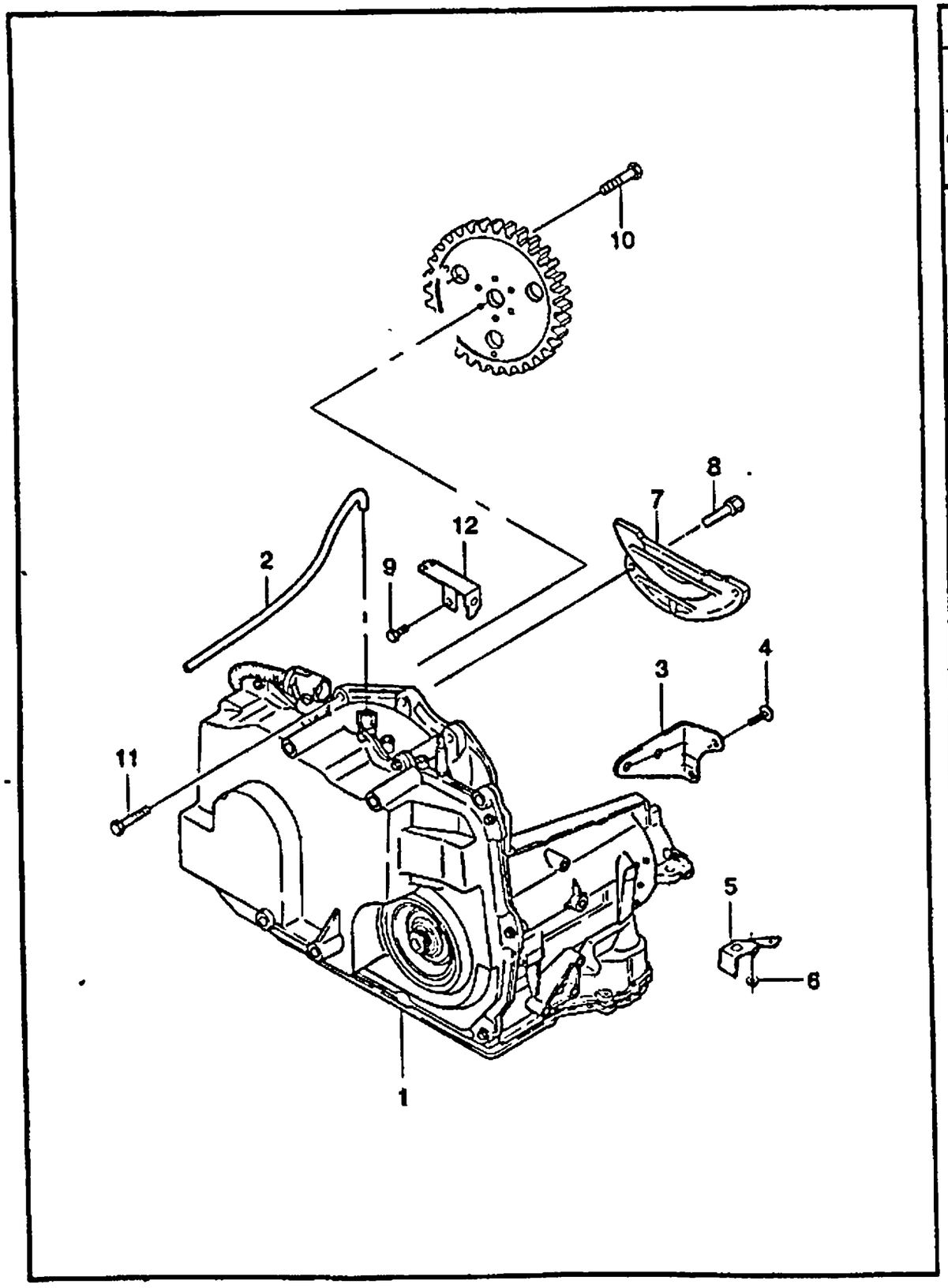

KEY NO. ITC	PART NO	MODEL ENG	T/A	BODY 4N	3H	5H	LEVEL S	SE	SX	OPTION	L/R	QTY	EFFECTIVE DATE FROM	TO	REMARKS	P/CODE
[01]		(E)TRANSAXLE A-AUTOMATIC (D)ANTRIEB,AUTOMATISCH									(F)TRANSMISSION-AUTOMATIQUE (S)EJE TRANSVERSAL					
	24210487	Y	A	B	B	B	O	O	O			1			-	7X
	24210488	6	A	B	B	B	.	.	O			1				7Y
[02]		(E)HOSE-VENTING (D)SCHLAUCH,BELÜFTUNG									(F)TUYAU-VENTILATION (S)MANGUERA-VENTILACION					
	96183828	.	A	B	B	B	O	O	O			1			900mm	
[03]		(E)SUPPORT-TRANSMISSION (D)TRÄGER									(F)SUPPORT (S)SOPORTE					
	96179228	.	A	B	B	B	O	O	O			1				
[04]		(E)BOLT-HEXAGON (D)SCHRAUBE									(F)BOULON (S)PERNO					
	09103-10009	.	A	B	B	B	O	O	O			3				
[05]		(E)BRACKET-SHIELD (D)TRÄGER									(F)SUPPORT (S)SOPORTE					
	96236245	.	A	B	B	B	O	O	O			1	970901			
[06]		(E)NUT (D)MUTTER									(F)ECROU (S)TUERCA					
	08316-25063	.	A	B	B	B	O	O	O			1	970901			
[07]		(E)COVER-CONVERTER (D)DECKEL									(F)CARTER (S)CUBIERTA					
	96245952	.	A	B	B	B	O	O	O			1				
[08]		(E)SCREW-TAPPING (D)SCHRAUBE									(F)VIS (S)TORNILLO					
	03252-63168	.	A	B	B	B	O	O	O			3				
[09]		(E)BOLT-HEXAGON (D)SCHRAUBE									(F)BOULON (S)PERNO					
	09100-12006	.	A	B	B	B	O	O	O			1				

ENG(ENGINE)	T/A(TRANSAXLE)	BODY TYPE
Y = 1.5SOHC 6 = 1.6DOHC . = COMMON	M = MANUAL T/A A = AUTOMATIC T/A . = COMMON	4 N = 4 DOOR NOTCHBACK 3 H = 3 DOOR HATCHBACK 5 H = 5 DOOR HATCHBACK

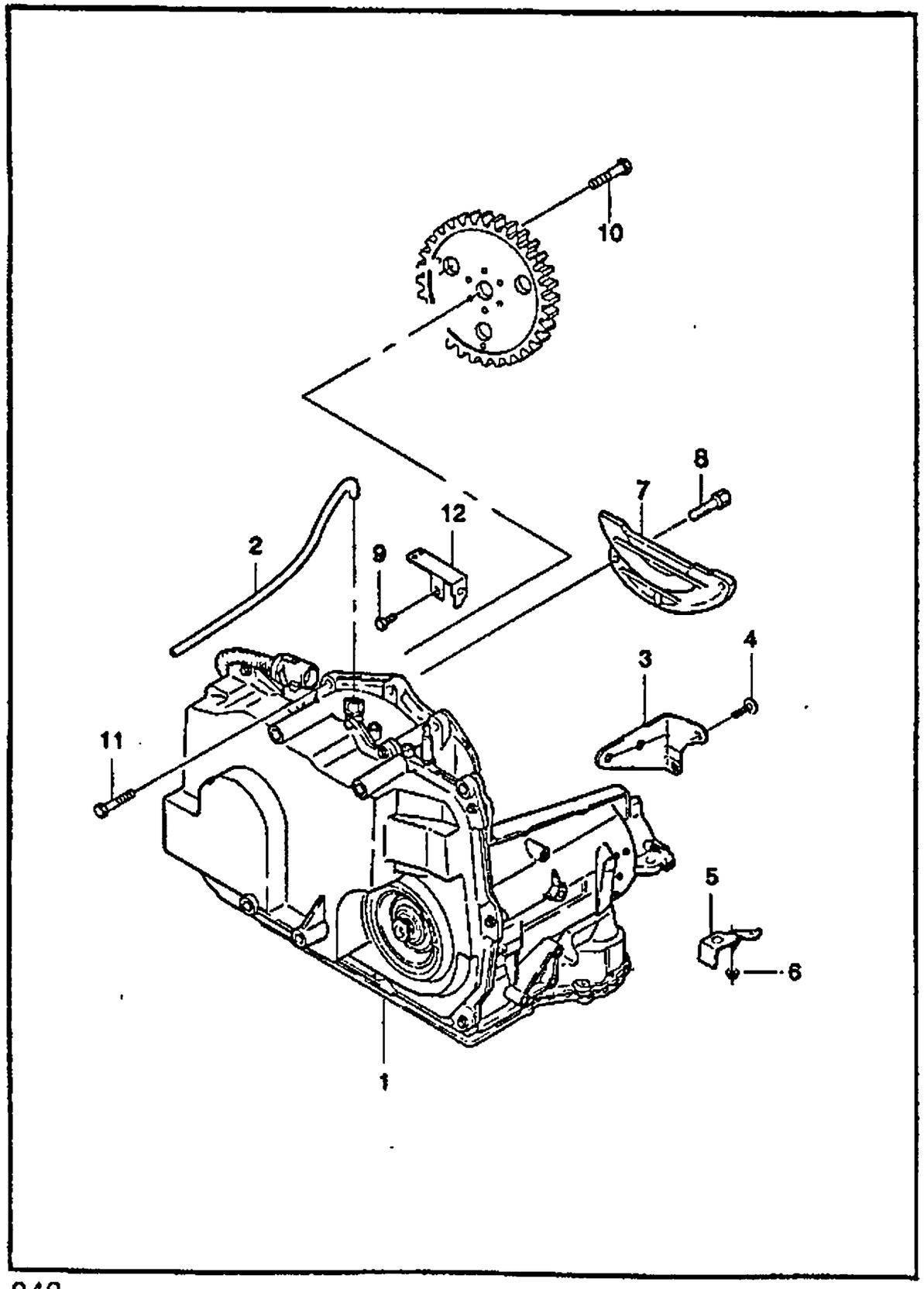

KEY NO. 1TC	PART NO	MODEL ENG	T/A	BODY 4N	3H	5H	LEVEL S	SE	SX	OPTION	L/R	QTY	EFFECTIVE DATE FROM	TO	REMARKS	P/CODE
[10]	09100-10006	.	A	B	B	B	O	O	O			3			(E)BOLT-HEXAGON (D)SCHRAUBE (F)BOULON (S)PERNO	
[11]	09100-12002	.	A	B	B	B	O	O	O			5			(E)BOLT-HEXAGON (D)SCHRAUBE (F)BOULON (S)PERNO	
[12]	96234606	.	A	B	B	B	O	O	O			1			(E)BRACKET-ENG CONT HARNESS (D)TRÄGER (F)SUPPORT (S)SOPORTE	
[A0]	24209093	.	A	B	B	B	O	O	O			1			(E)OVERHAUL KIT (D)WARTUNG SATZ (F)TROUSSE DE REPARATIONS (S)JUEGO DE REPARACION	
		- CONSIST OF -														
		FIG. NO 3520 #2,5,6,14,16,17,18,28,29,34,35 39,40,42														
		FIG. NO 3521 #7,12,14,19,22,25,32,33,53														
		FIG. NO 3530 #2,8,9,14														
		FIG. NO 3531 #1,5,10,19,23,34,														
		FIG. NO 3533 #3,10														
		FIG. NO 3535 #5														
		FIG. NO 3550 #5,6														
		FIG. NO 3570 #10,12														
[A1]	24210577	.	A	B	B	B	O	O	O			1			(E)GASKET KIT (D)DICHTUNG SATZ (F)TROUSSE DE JOINT (S)JUEGO DE JUNTA	
		- CONSIST OF -														

ENG(ENGINE)	T/A(TRANSAXLE)	BODY TYPE
Y = 1.5SOHC 6 = 1.6DOHC . = COMMON	M = MANUAL T/A A = AUTOMATIC T/A . = COMMON	4 N = 4 DOOR NOTCHBACK 3 H = 3 DOOR HATCHBACK 5 H = 5 DOOR HATCHBACK

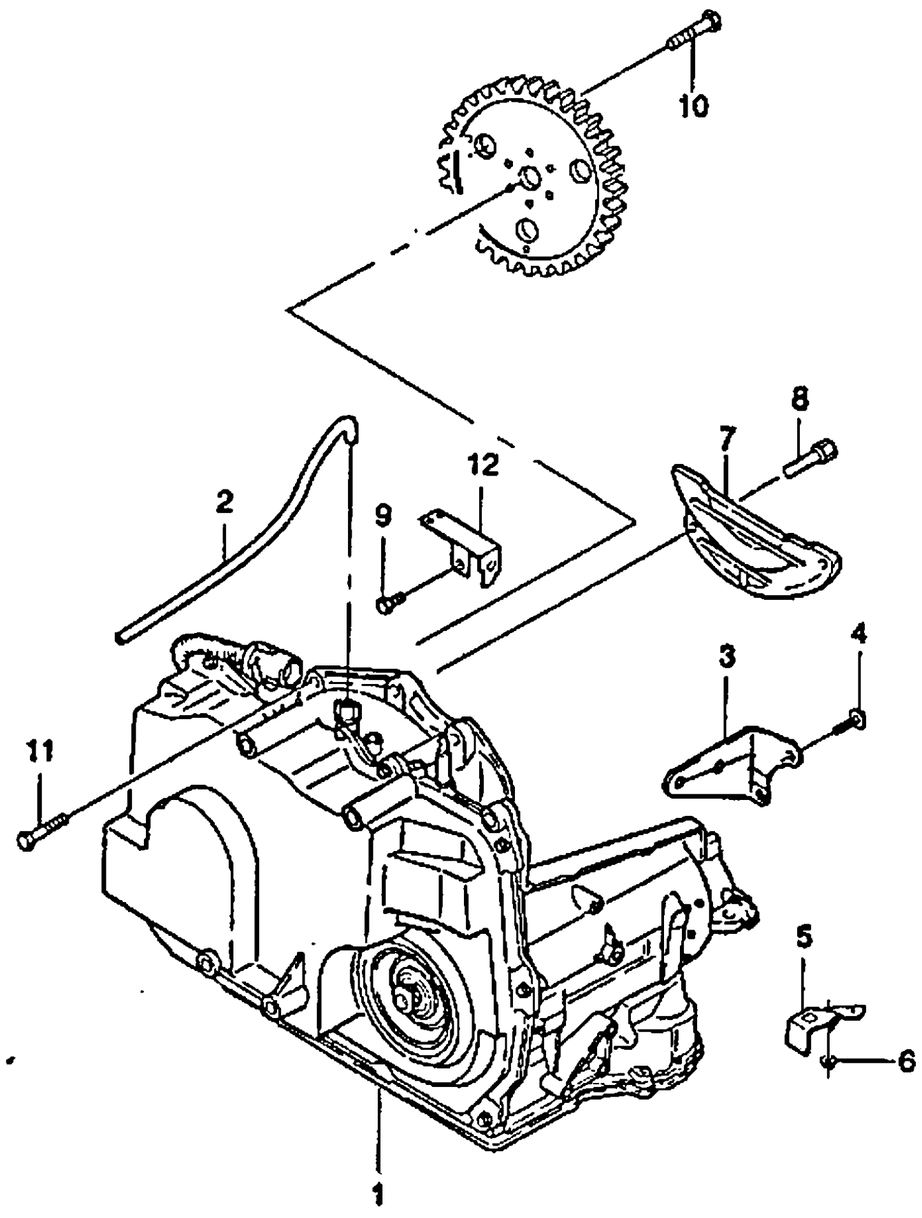

KEY NO.		PART NAME													
ITC	PART NO	MODEL							OPTION	L/R	QTY	EFFECTIVE DATE		REMARKS	P/CODE
		ENG	T/A	BODY			LEVEL					FROM	TO		
				4N	3H	5H	S	SE	SX						
		FIG. NO 3520 #6,14,17,18													
		FIG. NO 3521 #12,14,19,33													
		FIG. NO 3570 #10													

ENG(ENGINE)	T/A(TRANSAXLE)	BODY TYPE
Y = 1.5SOHC	M = MANUAL T/A	4 N = 4 DOOR NOTCHBACK
6 = 1.6DOHC	A = AUTOMATIC T/A	3 H = 3 DOOR HATCHBACK
. = COMMON	. = COMMON	5 H = 5 DOOR HATCHBACK

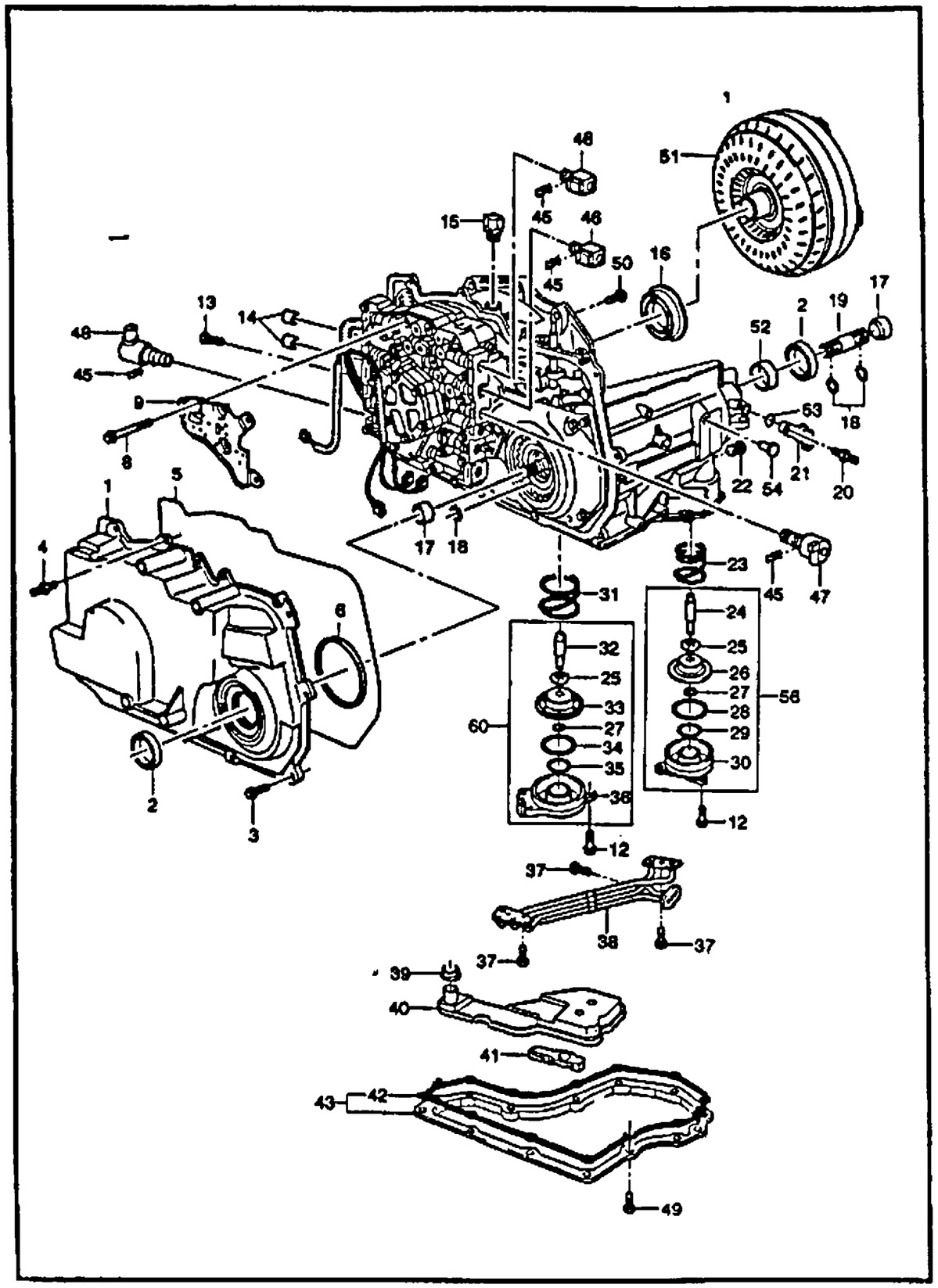

KEY NO.	PART NAME													
ITC	PART NO	MODEL							OPTION	L/R	QTY	EFFECTIVE DATE		REMARKS	P/CODE
		ENG	T/A	BODY			LEVEL					FROM	TO		
				4N	3H	5H	S	SE	SX						
[01]	(E)COVER-SIDE (D)DECKEL,SEITE									(F)CARTER-COTE (S)CUBIERTA-LADO					
24209574		.	A	B	B	B	O	O	O		1			INCL.#2,5,6,41	
[02]	(E)SEAL-OIL (D)DICHTUNG,ACHSE ÖL									(F)JOINT-HUILE DE PONT (S)SELLO-ACEITE DE EJE					
24201936		.	A	B	B	B	O	O	O		1				
[03]	(E)BOLT-SIDE COVER (D)SCHRAUBE,SEITENDECKEL									(F)BOULON-COUVERCLE COTE (S)PERNO-CUBIERTA DE LADO					
24203912		.	A	B	B	B	O	O	O		1			M8X1.25X23mm	
[04]	(E)STUD-SIDE COVER (D)STEG,SEITEN-DECKEL									(F)TOURILLON (S)TRAVESAÑO					
24208309		.	A	B	B	B	O	O	O		1			M8X1.25X20mm	
[05]	(E)GASKET-SIDE COVER (D)DICHTUNG									(F)JOINT-CARTER DE COTE (S)JUNTA-CUBIERTA LATERAL					
24200478		.	A	B	B	B	O	O	O		1				
[06]	(E)GASKET-SIDE CVR OIL LEVER (D)DICHTUNG									(F)JOINT (S)JUNTA					
08685154		.	A	B	B	B	O	O	O		1				
[08]	(E)BOLT (D)SCHRAUBE									(F)BOULON (S)PERNO					
24200205		.	A	B	B	B	O	O	O		12			M6X1.0X86mm	
[09]	(E)SWITCH-PRESSURE (D)SCHALTER,DRUCK									(F)COMMUTATEUR-PRESSION (S)INTERRUPTOR-PRESION					
24200495		.	A	B	B	B	O	O	O		1				
[12]	(E)BOLT (D)SCHRAUBE									(F)BOULON (S)PERNO					
24200207		.	A	B	B	B	O	O	O		2			M6X1.0X24mm	
[13]	(E)PLUG-LINE PRESS (D)STÖPSEL									(F)BOUCHON (S)TAPON					

ENG(ENGINE)	T/A(TRANSAXLE)	BODY TYPE
Y = 1.5SOHC	M = MANUAL T/A	4 N = 4 DOOR NOTCHBACK
6 = 1.6DOHC	A = AUTOMATIC T/A	3 H = 3 DOOR HATCHBACK
. = COMMON	. = COMMON	5 H = 5 DOOR HATCHBACK

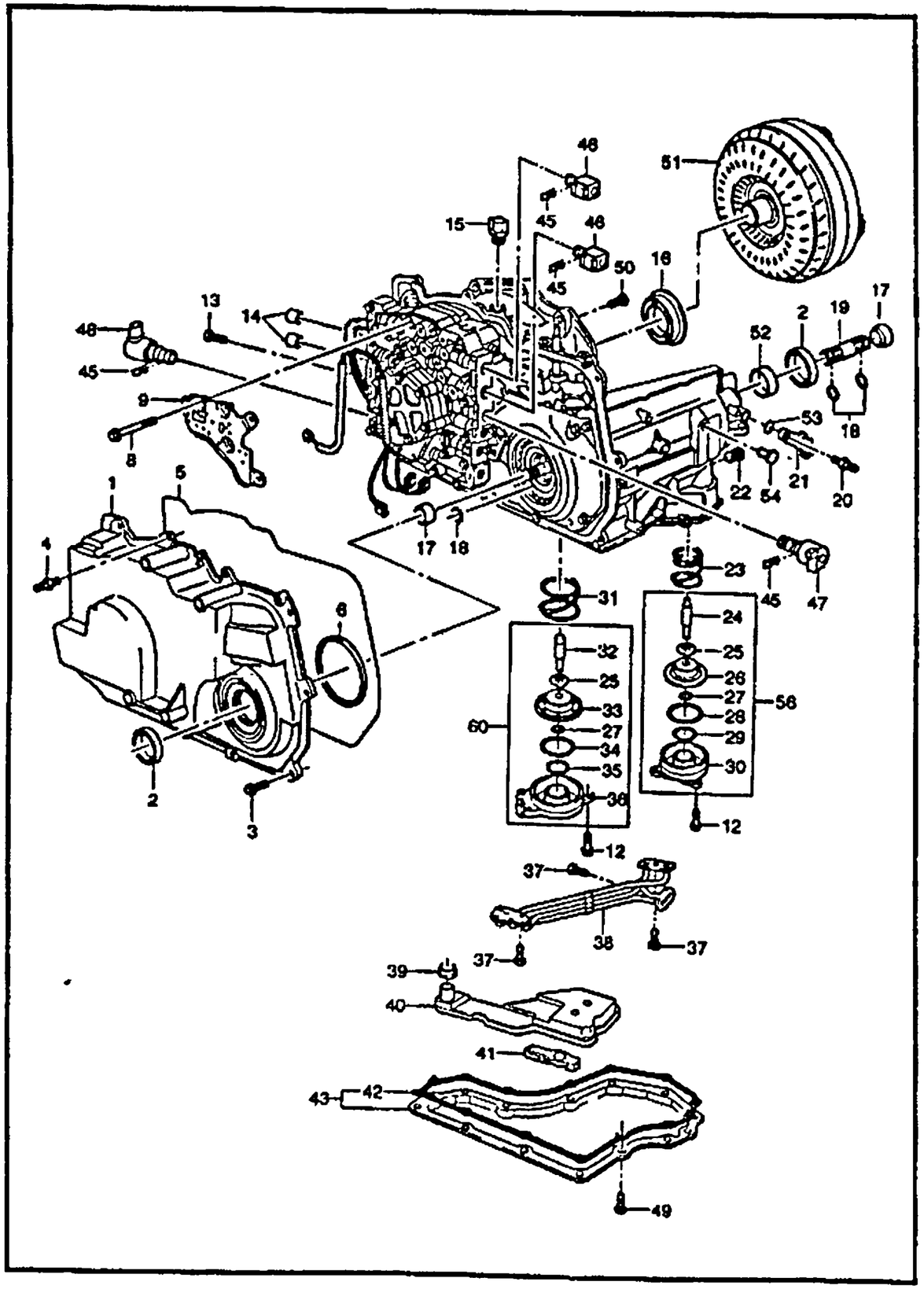

KEY NO. ITC	PART NO	MODEL ENG	T/A	BODY 4N	3H	5H	LEVEL S	SE	SX	OPTION	L/R	QTY	EFFECTIVE DATE FROM	TO	REMARKS	P/CODE
	08654382	.	A	B	B	B	O	O	O			1				
[14]		(E)SEALS-COOLER LINE (D)DICHTUNG										(F)JOINT (S)SELLO				
	24200326	.	A	B	B	B	O	O	O			2				
[15]		(E)CAP-VENTILATION (D)DECKEL										(F)CHAPEAU (S)TAPA				
	24200354	.	A	B	B	B	O	O	O			1				
[16]		(E)SEAL-TORQUE CONVERTER (D)DICHTUNG										(F)JOINT (S)SELLO				
	08685515	.	A	B	B	B	O	O	O			1				
[17]		(E)SLEEVE-OUTPUT/STUB SHAFT (D)HÜLSE										(F)CHEMISE (S)MANGA				
	08684482	.	A	B	B	B	O	O	O			1				
[18]		(E)RING-OUTPUT/STUB SHAFT (D)RING										(F)ANNEAU (S)ANILLO				
	07829495	.	A	B	B	B	O	O	O			2				
[19]		(E)SHAFT-STUB (D)SPINDEL										(F)ARBRE (S)EJE				
	24200734	.	A	B	B	B	O	O	O			1				
[20]		(E)STUD-OUTPUT SPD SENSOR (D)STEG										(F)TOURILLON (S)TRAVESAÑO				
	24200091	.	A	B	B	B	O	O	O			1			M6X1.0X11mm	
[21]		(E)SENSOR-OUTPUT SPEED (D)SENSOR,GESCHWINDIGKEIT										(F)DETECTEUR (S)SENSOR-VELOCIDAD				
	24207507	.	A	B	B	B	O	O	O			1				
[22]		(E)PLUG-LINE PRESS (D)STÖPSEL										(F)BOUCHON (S)TAPON				
	08654382	.	A	B	B	B	O	O	O			1				

ENG(ENGINE)	T/A(TRANSAXLE)	BODY TYPE
Y = 1.5SOHC 6 = 1.6DOHC . = COMMON	M = MANUAL T/A A = AUTOMATIC T/A . = COMMON	4 N = 4 DOOR NOTCHBACK 3 H = 3 DOOR HATCHBACK 5 H = 5 DOOR HATCHBACK

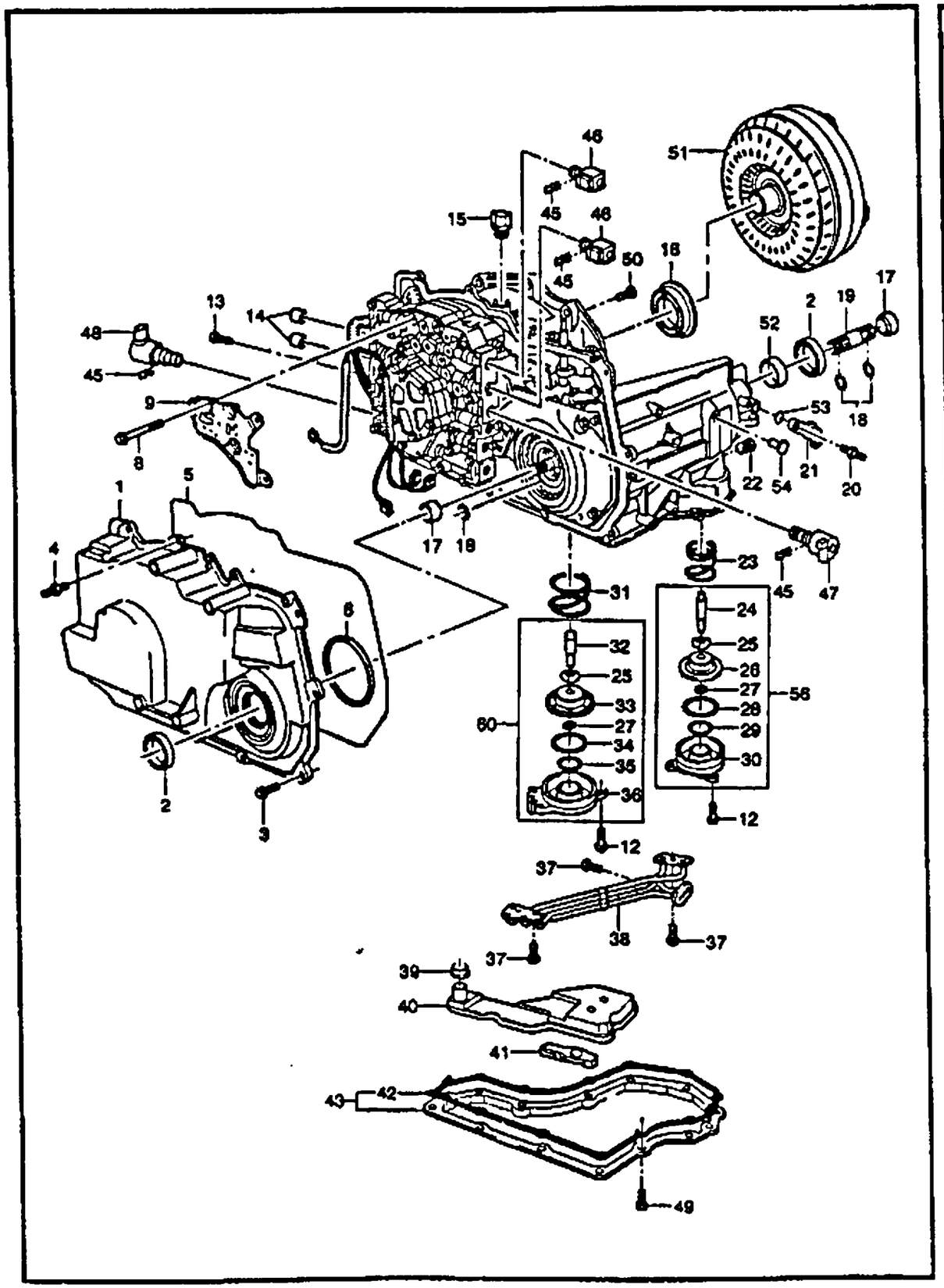

KEY NO. ITC	PART NO	MODEL ENG	T/A	BODY 4N	3H	5H	LEVEL S	SE	SX	OPTION	L/R	QTY	EFFECTIVE DATE FROM	TO	REMARKS	PICODE
[23]	08684393	.	A	B	B	B	O	O	O	(E)SPRING-SERVO RETURN (D)FEDERUNG,SERVO RÜCK	(F)RESSORT-SERVO RETOUR (S)RESORTE-RETORNO DE SERVO	1				
[24]	08684395	.	A	B	B	B	O	O	O	(E)PIN-SERVO APPLY (D)STIFT,SERVO ANWENDUNG	(F)BROCHE-APPLICATION SERVO (S)PASADOR-APPLY SERVO	1				
[25]	24203610	.	A	B	B	B	O	O	O	(E)SPRING-SERVO CUSHION (D)FEDERUNG,SERVO POLSTER	(F)RESSORT-SERVO COUSSIN (S)RESORTE-COJIN DE SERVO	2				
[26]	24201884	.	A	B	B	B	O	O	O	(E)PISTON-SERVO (D)KOLBEN,SERVO	(F)PISTON-SERVO (S)PISTON-SERVO	1				
[27]	11505767	.	A	B	B	B	O	O	O	(E)RING-SERVO SNAP (D)RING,SERVO DRUCK	(F)ANNEAU-SERVO PRESSION (S)ANILLO-BROCHE DE SERVO	2				
[28]	08684674	.	A	B	B	B	O	O	O	(E)SEAL-SERVO PISTON (D)DICHTUNG,SERVO KOLBEN	(F)JOINT-SERVO PISTON (S)SELLO-PISTON DE SERVO	1				
[29]	08684394	.	A	B	B	B	O	O	O	(E)SEAL-SERVO COVER (D)DICHTUNG,SERVO DECKEL	(F)JOINT-SERVO COUVERCLE (S)SELLO-CUBIERTA DE SERVO	1				
[30]	24201882	.	A	B	B	B	O	O	O	(E)COVER-SERVO(LO/REVERSE) (D)DECKEL	(F)COUVERTURE (S)CUBIERTA	1				
[31]	08684350	.	A	B	B	B	O	O	O	(E)SPRING-SERVO RETURN (D)FEDERUNG,SERVO RÜCK	(F)RESSORT-SERVO RETOUR (S)RESORTE-RETORNO DE SERVO	1				
[32]										(E)PIN-SERVO APPLY (D)STIFT,SERVO ANWENDUNG	(F)BROCHE-APPLICATION SERVO (S)PASADOR-APPLY SERVO					

ENG(ENGINE)	T/A(TRANSAXLE)	BODY TYPE
Y = 1.5SOHC 6 = 1.6DOHC . = COMMON	M = MANUAL T/A A = AUTOMATIC T/A . = COMMON	4 N = 4 DOOR NOTCHBACK 3 H = 3 DOOR HATCHBACK 5 H = 5 DOOR HATCHBACK

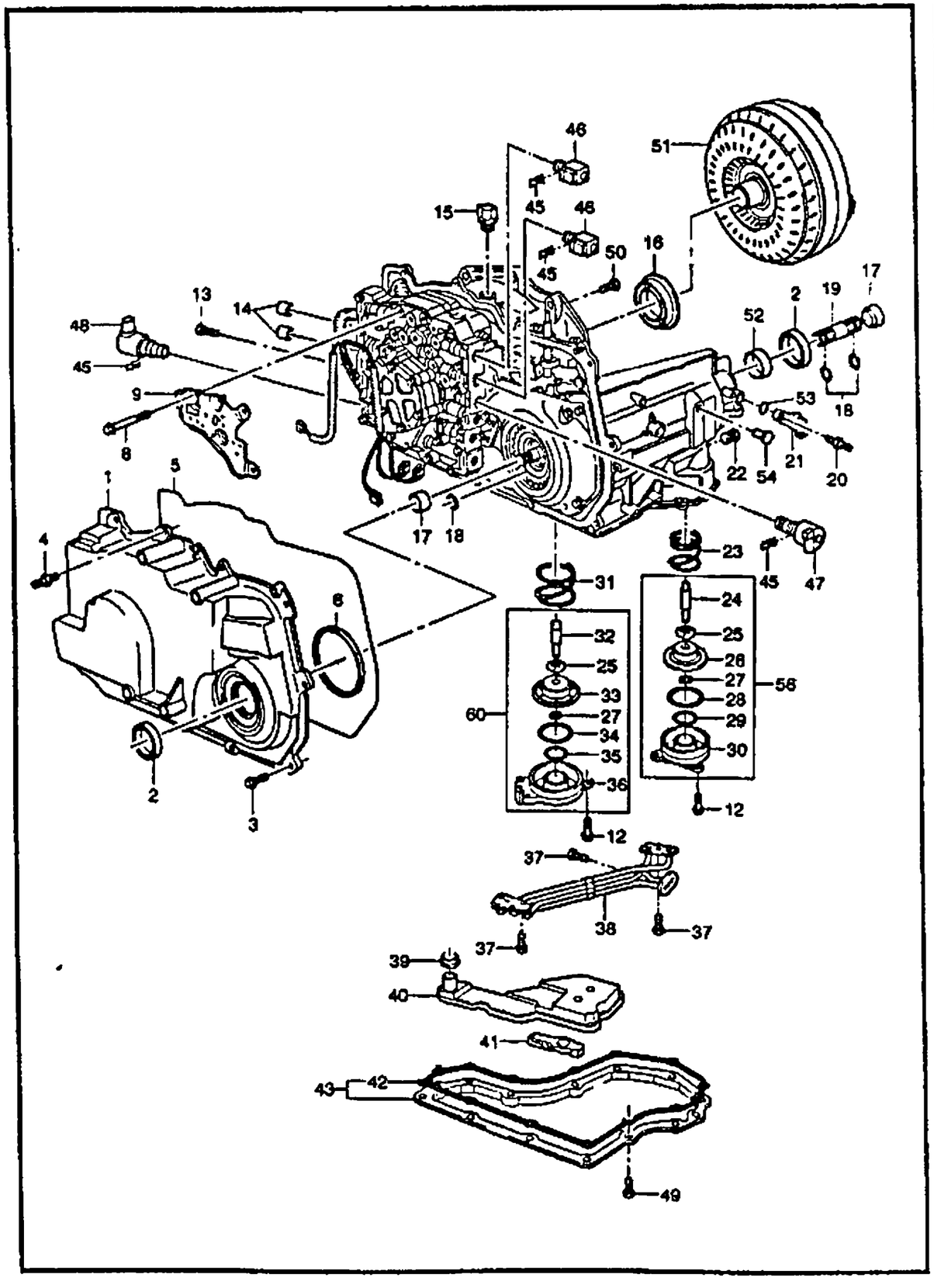

KEY NO. ITC	PART NO	MODEL ENG	MODEL T/A	MODEL BODY 4N	MODEL BODY 3H	MODEL BODY 5H	MODEL LEVEL S	MODEL LEVEL SE	MODEL LEVEL SX	OPTION	L/R	QTY	EFFECTIVE DATE FROM	EFFECTIVE DATE TO	REMARKS	P/CODE
	08684404	.	A	B	B	B	O	O	O			1				
	[33]	(E)PISTON-SERVO (D)KOLBEN,SERVO										(F)PISTON-SERVO (S)PISTON-SERVO				
	N/S(60)	.	A	B	B	B	O	O	O			1				
	[34]	(E)SEAL-SERVO PISTON (D)DICHTUNG,SERVO KOLBEN										(F)JOINT-SERVO PISTON (S)SELLO-PISTON DE SERVO				
	08684673	.	A	B	B	B	O	O	O			1				
	[35]	(E)SEAL-SERVO COVER (D)DICHTUNG,SERVO DECKEL										(F)JOINT-SERVO COUVERCLE (S)SELLO-CUBIERTA DE SERVO				
	08678473	.	A	B	B	B	O	O	O			1				
	[36]	(E)COVER-SERVO (D)DECKEL,SERVO										(F)CARTER-SERVO (S)CUBIERTA-SERVO				
	24201880	.	A	B	B	B	O	O	O			1				
	[37]	(E)BOLT (D)SCHRAUBE										(F)BOULON (S)PERNO				
	24200092	.	A	B	B	B	O	O	O			4			M6X1.0X15mm	
	[38]	(E)TUBE A-OIL FEED (D)ROHRLEITUNG,ÖL-ZUFUHR										(F)TUYAU-ALIMENTATION HUILE (S)TUBO-ALIMENTACION				
	24202349	.	A	B	B	B	O	O	O			1				
	[39]	(E)SEAL-OIL FILTER (D)DICHTUNG										(F)JOINT (S)SELLO				
	08684467	.	A	B	B	B	O	O	O			1				
	[40]	(E)FILTER A-OIL (D)FILTER										(F)FILTRE (S)FILTRO				
	08685185	.	A	B	B	B	O	O	O			1				
	Y 24203770	.	A	B	B	B	O	O	O			1				
	[41]	(E)VALVE-FILTER CONTROL (D)VENTIL										(F)SOUPAPE (S)VALVULA				

ENG(ENGINE)	T/A(TRANSAXLE)	BODY TYPE
Y = 1.5SOHC 6 = 1.6DOHC . = COMMON	M = MANUAL T/A A = AUTOMATIC T/A . = COMMON	4 N = 4 DOOR NOTCHBACK 3 H = 3 DOOR HATCHBACK 5 H = 5 DOOR HATCHBACK

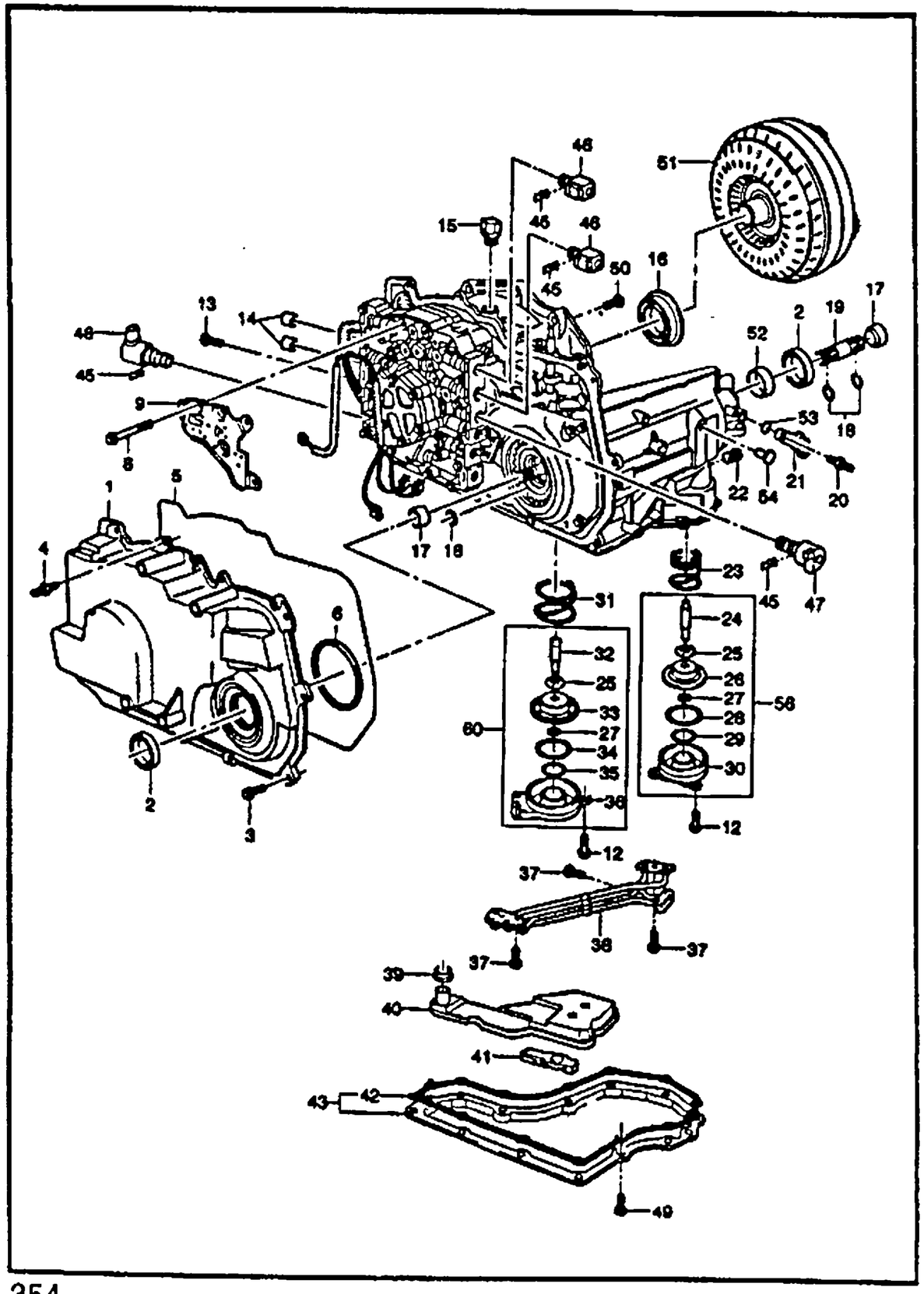

KEY NO. ITC	PART NO	MODEL ENG	T/A	BODY 4N	3H	5H	LEVEL S	SE	SX	OPTION	L/R	QTY	EFFECTIVE DATE FROM	TO	REMARKS	P/CODE
	24207186	.	A	B	B	B	O	O	O			1				
[42]		(E)GASKET-BOTTOM OIL PAN (D)DICHTUNG									(F)JOINT (S)JUNTA					
	24203590	.	A	B	B	B	O	O	O			1				
[43]		(E)PAN KIT-OIL (D)PFANNE,OL									(F)CARTER-HUILE (S)RECIPIENTE-ACEITE					
	24203769	.	A	B	B	B	O	O	O			1			INCL.#42	
[45]		(E)RETAINER (D)KLEMME,HALTERUNG									(F)ATTACHE-ARRETOIR (S)GRAPA-RETENEDOR					
	08685781	.	A	B	B	B	O	O	O			11				
[46]		(E)SOLENOID-SHIFT(A & B) (D)SOLENOID									(F)SOLENOIDE (S)SELENOIDE					
	24207236	.	A	B	B	B	O	O	O			2				
[47]		(E)SOLENOID-PRESSURE CONTROL (D)SOLENOID,DRUCK STEUERUNG									(F)SOLENOIDE (S)SELENOIDE					
	10478117	.	A	B	B	B	O	O	O			1				
[48]		(E)SOLENOID-TCC CONTROL (D)SOLENOID									(F)SOLENOIDE (S)SELENOIDE-CONTROL TCC					
	24207054	.	A	B	B	B	O	O	O			1				
[49]		(E)BOLT (D)SCHRAUBE									(F)BOULON (S)PERNO					
	24203911	.	A	B	B	B	O	O	O			10				
	24210147	.	A	B	B	B	O	O	O			2				
[50]		(E)BOLT (D)SCHRAUBE									(F)BOULON (S)PERNO					
	08685658	.	A	B	B	B	O	O	O			6			M8X1.25X16mm	
[51]		(E)CONVERTER-TORQUE (D)KATALYSATOR									(F)CONVERTISSEUR (S)CONVERTIDOR-CATALITICO					

ENG(ENGINE)	T/A(TRANSAXLE)	BODY TYPE
Y = 1.5SOHC 6 = 1.6DOHC . = COMMON	M = MANUAL T/A A = AUTOMATIC T/A . = COMMON	4 N = 4 DOOR NOTCHBACK 3 H = 3 DOOR HATCHBACK 5 H = 5 DOOR HATCHBACK

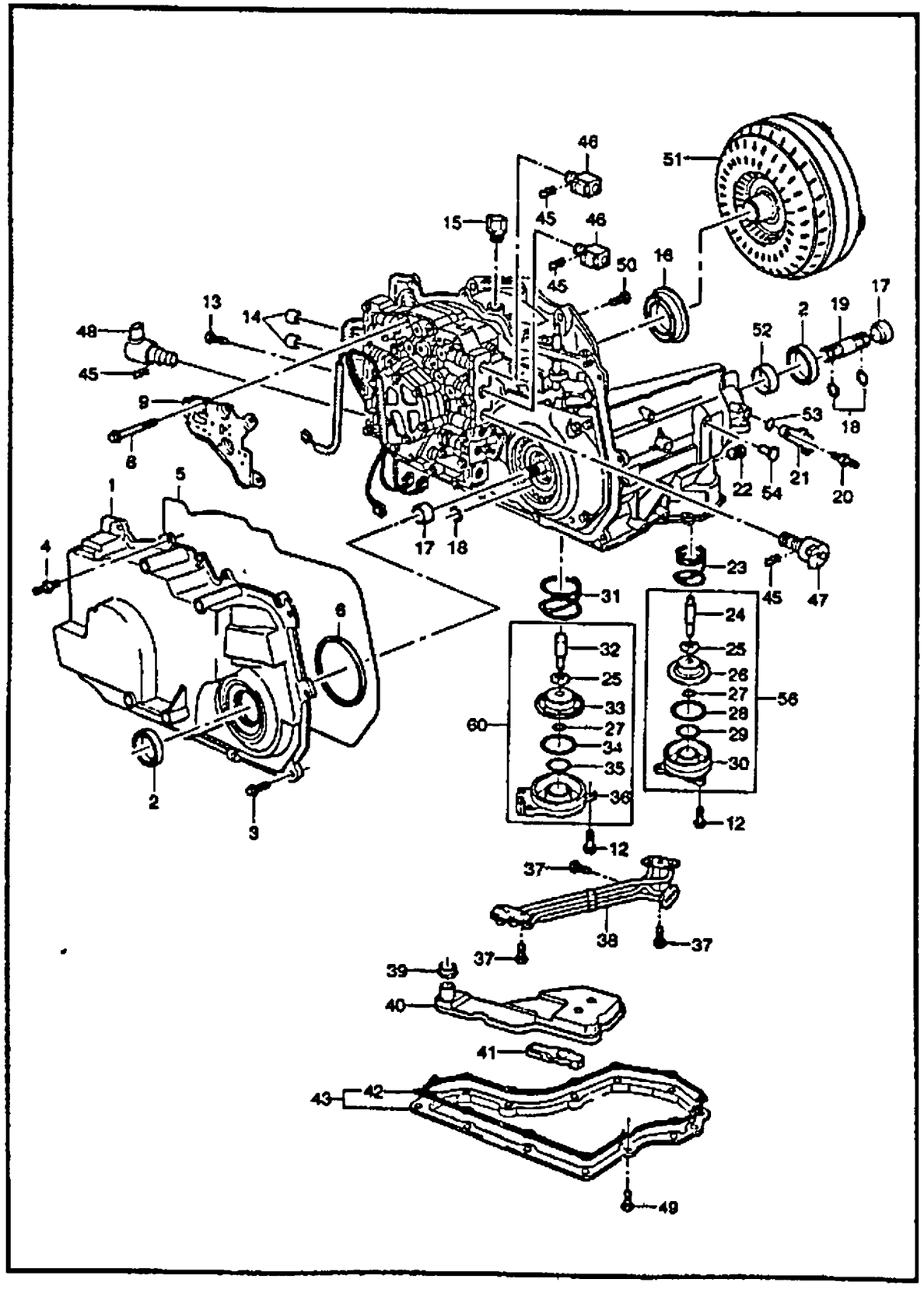

KEY NO. ITC	PART NO	MODEL ENG	MODEL T/A	MODEL BODY 4N	MODEL BODY 3H	MODEL BODY 5H	MODEL LEVEL S	MODEL LEVEL SE	MODEL LEVEL SX	OPTION	L/R	QTY	EFFECTIVE DATE FROM	EFFECTIVE DATE TO	REMARKS	P/CODE
	24203821	Y	A	B	B	B	O	O	O			1				
	24210147														NOT APPLIED	
	24211286	6	A	B	B	B	.	.	O			1				
[52]	(E)BUSHING-CASE TO FINAL DRV (D)LAGERFUTTER											(F)MANCHON (S)BUJE				
	08631119	.	A	B	B	B	O	O	O			1				
[53]	(E)SEAL-OUTPUT SPD SENSOR (D)DICHTUNG											(F)JOINT (S)SELLO				
	10475299	.	A	B	B	B	O	O	O			1				
[54]	(E)PIN-BAND ANCHOR,LO/REVERS (D)STIFT											(F)BROCHE (S)PASADOR				
	24202694	.	A	B	B	B	O	O	O			1				
[56]	(E)COVER A-REV BAND SERVO (D)DECKEL											(F)CARTER (S)CUBIERTA				
	24203623	.	A	B	B	B	O	O	O			1				
[60]	(E)COVER KIT-4TH BAND SERVO (D)DECKEL,SERVO											(F)CARTER-SERVO (S)CUBIERTA-SERVO				
	24203608	.	A	B	B	B	O	O	O			1				

ENG(ENGINE)	T/A(TRANSAXLE)	BODY TYPE
Y = 1.5SOHC 6 = 1.6DOHC . = COMMON	M = MANUAL T/A A = AUTOMATIC T/A . = COMMON	4 N = 4 DOOR NOTCHBACK 3 H = 3 DOOR HATCHBACK 5 H = 5 DOOR HATCHBACK

3521 INTERNAL POWER TRAIN PARTS

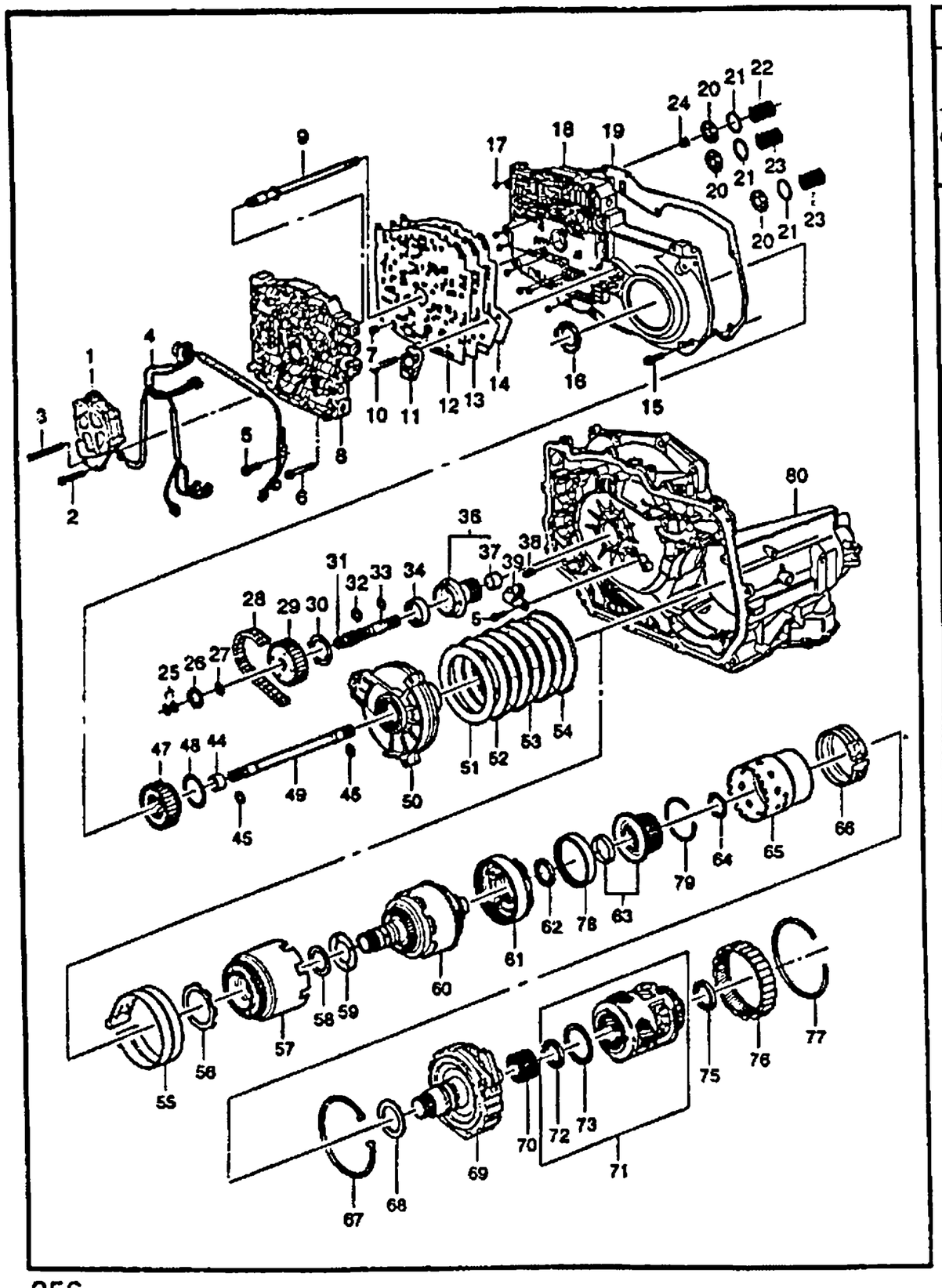

KEY NO. ITC	PART NO	MODEL ENG	MODEL T/A	BODY 4N	BODY 3H	BODY 5H	LEVEL S	LEVEL SE	LEVEL SX	OPTION	L/R	QTY	EFFECTIVE DATE FROM	EFFECTIVE DATE TO	REMARKS	P/CODE
[01]	24208987	.	A	B	B	B	O	O	O			1			(E)PUMP-OIL (D)PUMPE,ÖL (F)POMPE-HUILE (S)BOMBA-ACEITE	
[02]	24200209	.	A	B	B	B	O	O	O			4			(E)BOLT (D)SCHRAUBE (F)BOULON (S)PERNO	M8X1.25X58mm
[03]	24200208	.	A	B	B	B	O	O	O			3			(E)BOLT (D)SCHRAUBE (F)BOULON (S)PERNO	M6X1.0X99mm
[04]	15302843	.	A	B	B	B	O	O	O			1			(E)WIRING (D)VERDRAHTUNG (F)CABLAGE (S)INSTALACION ELECTRICA	
[05]	24200093	.	A	B	B	B	O	O	O			2			(E)BOLT (D)SCHRAUBE (F)BOULON (S)PERNO	M8X1.0X11mm
[06]	24200206	.	A	B	B	B	O	O	O			9			(E)BOLT (D)SCHRAUBE (F)BOULON (S)PERNO	M6X1.0X47mm
[07]	08683769	.	A	B	B	B	O	O	O			1			(E)FILTER A-OIL (D)FILTER (F)FILTRE (S)FILTRO	
[08]	24209128	.	A	B	B	B	O	O	O			1			(E)BODY A-CONTROL VALVE (D)KAROSSERIE (F)CORPS-SOUPAPE (S)CARROCERIA-VALVULA	
[09]	08684255	.	A	B	B	B	O	O	O			1			(E)SHAFT-OIL PUMP DRIVE (D)SPINDEL (F)ARBRE (S)EJE	
[10]															(E)BOLT (D)SCHRAUBE (F)BOULON (S)PERNO	

ENG(ENGINE)	T/A(TRANSAXLE)	BODY TYPE
Y = 1.5SOHC 6 = 1.6DOHC . = COMMON	M = MANUAL T/A A = AUTOMATIC T/A . = COMMON	4 N = 4 DOOR NOTCHBACK 3 H = 3 DOOR HATCHBACK 5 H = 5 DOOR HATCHBACK

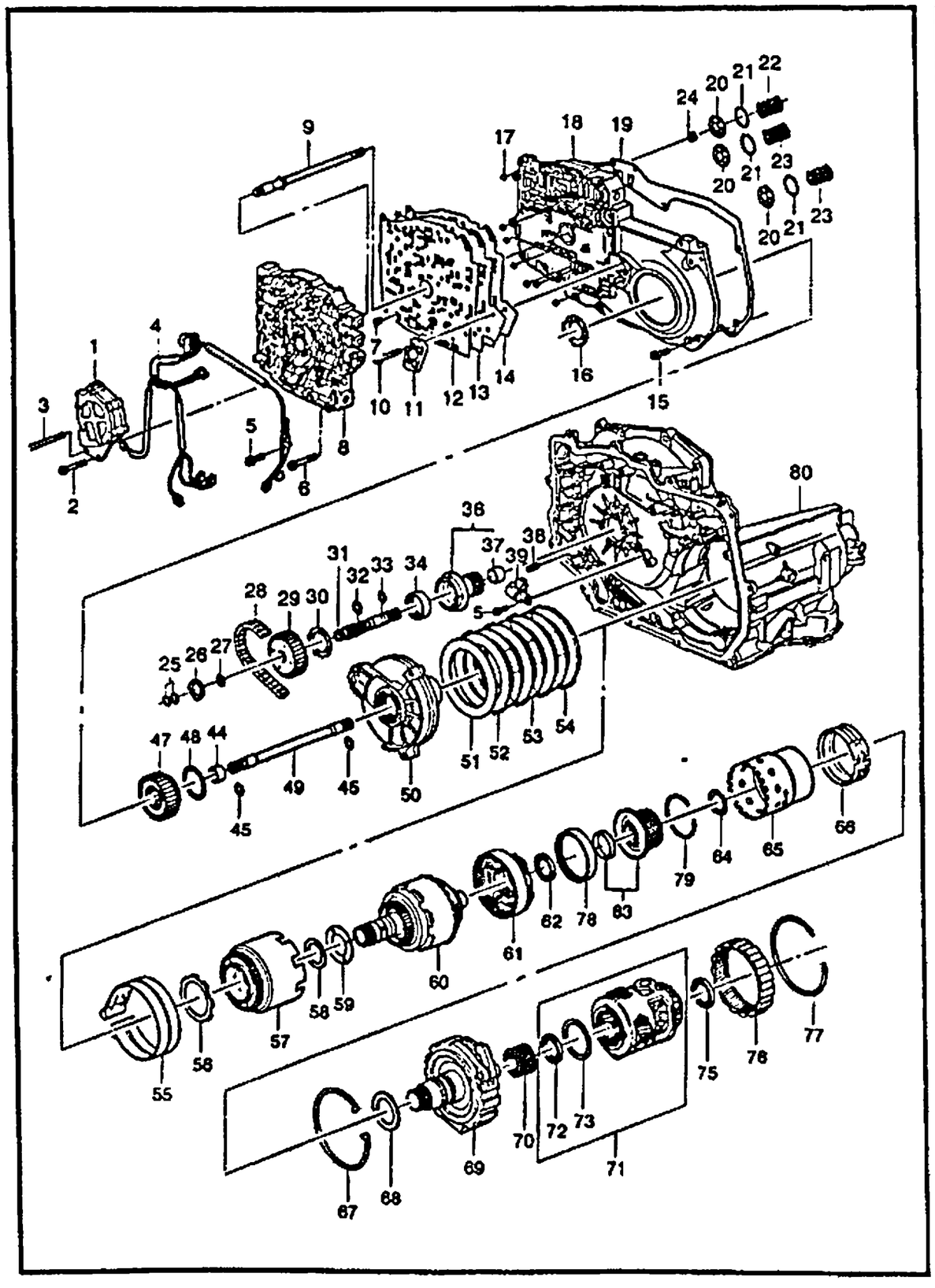

KEY NO. ITC	PART NO	MODEL ENG	MODEL T/A	MODEL BODY 4N	MODEL BODY 3H	MODEL BODY 5H	MODEL LEVEL S	MODEL LEVEL SE	MODEL LEVEL SX	OPTION	L/R	QTY	EFFECTIVE DATE FROM	EFFECTIVE DATE TO	REMARKS	PICODE
	24200214	.	A	B	B	B	O	O	O			2			M6X1.0X64mm	
[11]	(E)SUPPORT-SPACER PLATE *(D)TRÄGER*											*(F)SUPPORT* *(S)SOPORTE*				
	08685213	.	A	B	B	B	O	O	O			1				
[12]	(E)GASKET-VALVE BODY *(D)DICHTUNG*											*(F)JOINT* *(S)JUNTA*				
	24207387	.	A	B	B	B	O	O	O			1				
[13]	(E)PLATE-VALVE BODY SPACER *(D)PLATTE*											*(F)PLAQUE* *(S)PLACA*				
	24205050	.	A	B	B	B	O	O	O			1				
[14]	(E)GASKET-VALVE BODY *(D)DICHTUNG*											*(F)JOINT* *(S)JUNTA*				
	24207386	.	A	B	B	B	O	O	O			1				
[15]	(E)BOLT *(D)SCHRAUBE*											*(F)BOULON* *(S)PERNO*				
	24200207	.	A	B	B	B	O	O	O			14			M6X1.0X24mm	
[16]	(E)WASHER-DRIVEN SPROC.THRU. *(D)DICHTUNGSRING*											*(F)RONDELLE* *(S)ARANDELA*				
	08684379	.	A	B	B	B	O	O	O			1				
[17]	(E)BALL-CHECK *(D)KUGEL*											*(F)BOULE* *(S)BOLA*				
	00147485	.	A	B	B	B	O	O	O			7				
[18]	(E)PLATE-CHNNEL *(D)PLATTE*											*(F)PLAQUE* *(S)PLACA*				
	24208110	.	A	B	B	B	O	O	O			1				
[19]	(E)GASKET-CHNNEL PLATE *(D)DICHTUNG*											*(F)JOINT* *(S)JUNTA*				
	24201096	.	A	B	B	B	O	O	O			1				

ENG(ENGINE)	T/A(TRANSAXLE)	BODY TYPE
Y = 1.5SOHC 6 = 1.6DOHC . = COMMON	M = MANUAL T/A A = AUTOMATIC T/A . = COMMON	4 N = 4 DOOR NOTCHBACK 3 H = 3 DOOR HATCHBACK 5 H = 5 DOOR HATCHBACK

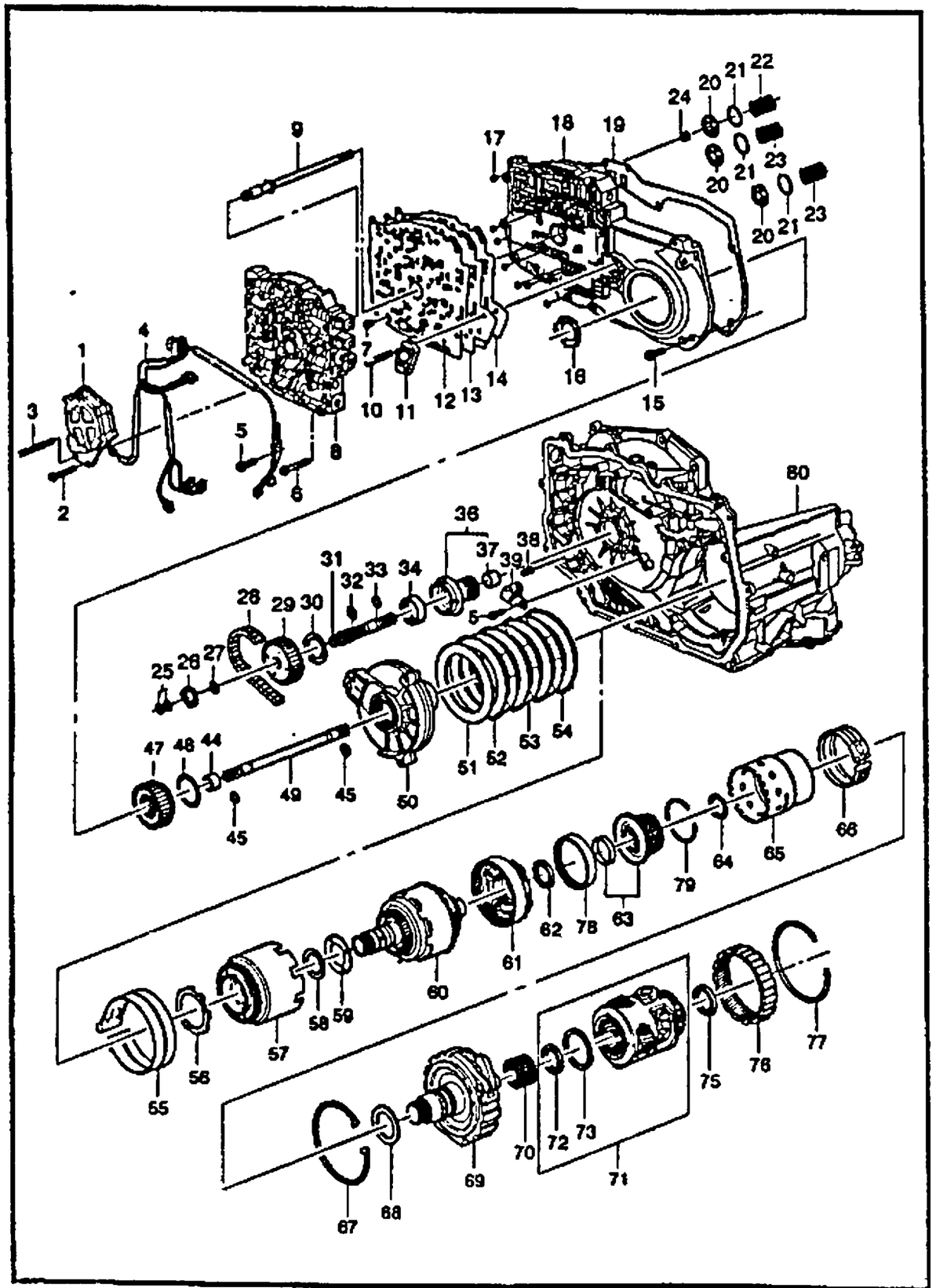

KEY NO.		PART NAME															
ITC	PART NO	MODEL								OPTION	L/R	QTY	EFFECTIVE DATE		REMARKS	P/CODE
		ENG	T/A	BODY 4N	BODY 3H	BODY 5H	LEVEL S	LEVEL SE	LEVEL SX				FROM	TO		
	[20]	(E)PISTON-ACCUMULATOR (D)KOLBEN									(F)PISTON (S)PISTON					
	24210508	.	A	B	B	B	O	O	O			3				
	[21]	(E)SEAL-ACCUM PISTON (D)DICHTUNG									(F)JOINT (S)SELLO					
	24206623	.	A	B	B	B	O	O	O			3				
	[22]	(E)SPRING (D)FEDERUNG									(F)RESSORT (S)RESORTE					
	08685241	.	A	B	B	B	O	O	O			1				
	[23]	(E)SPRING (D)FEDERUNG									(F)RESSORT (S)RESORTE					
	08685240	.	A	B	B	B	O	O	O			2				
	[24]	(E)SPRING (D)FEDERUNG									(F)RESSORT (S)RESORTE					
	24203557	.	A	B	B	B	O	O	O			2				
	[25]	(E)SEAL (D)DICHTUNG									(F)JOINT (S)SELLO					
	08643068	.	A	B	B	B	O	O	O			2				
	[26]	(E)WASHER-THRUST (D)DICHTUNGSRING									(F)RONDELLE (S)ARANDELA					
	08652868	.	A	B	B	B	O	O	O			1				
	[27]	(E)RING-SNAP (D)RING									(F)ANNEAU (S)ANILLO					
	08631210	.	A	B	B	B	O	O	O			1				
	[28]	(E)LINK A-DRIVE (D)KETTE									(F)CHAINE (S)CADENA					
	24200738	.	A	B	B	B	O	O	O			1				
	[29]	(E)SPROCKET-DRIVE (D)ZAHNKETTENRAD									(F)ENGRENAGE (S)RUEDA DE ESPIGAS					

ENG(ENGINE)	T/A(TRANSAXLE)	BODY TYPE
Y = 1.5SOHC 6 = 1.6DOHC . = COMMON	M = MANUAL T/A A = AUTOMATIC T/A . = COMMON	4 N = 4 DOOR NOTCHBACK 3 H = 3 DOOR HATCHBACK 5 H = 5 DOOR HATCHBACK

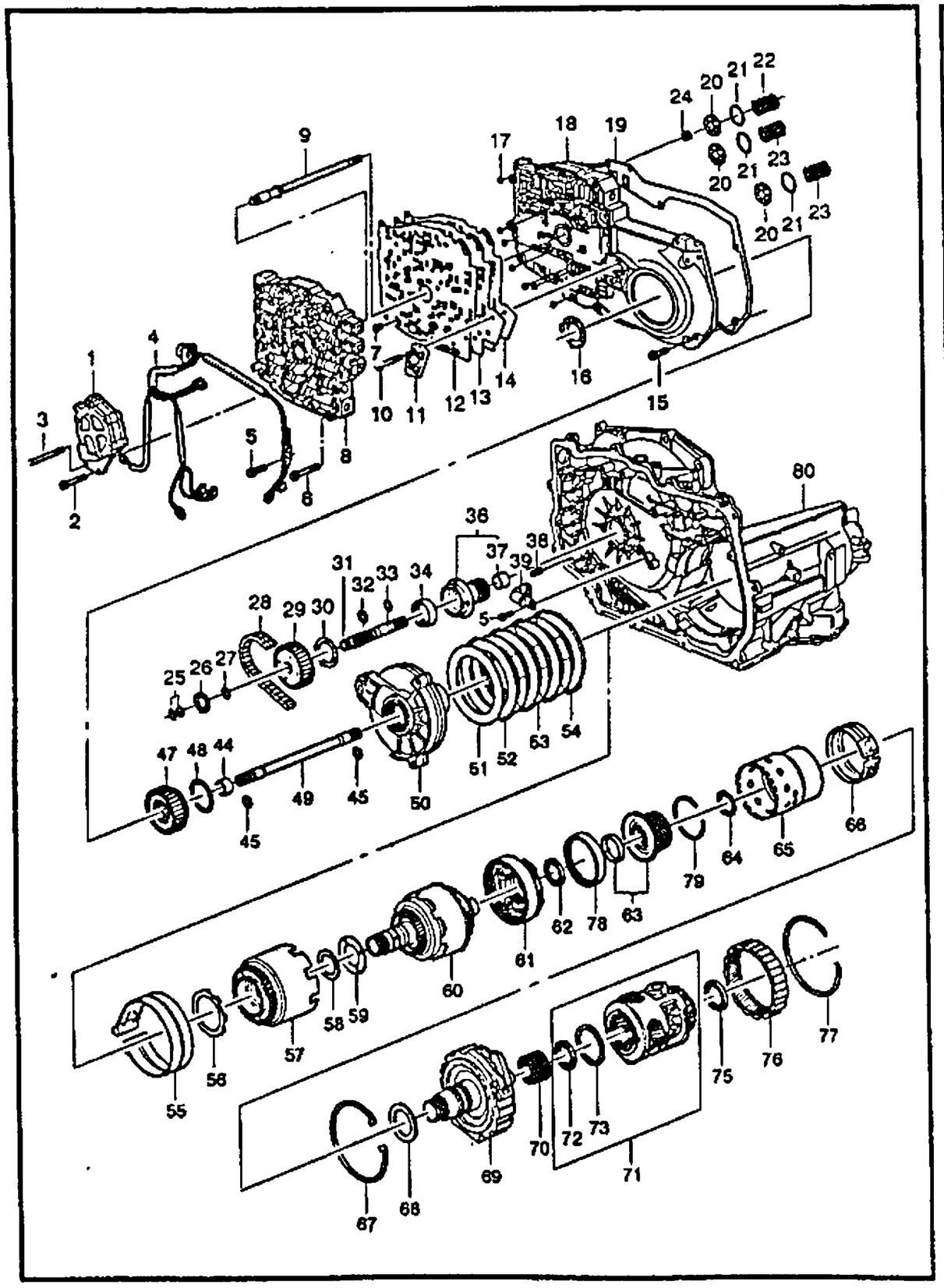

KEY NO. ITC	PART NO	MODEL ENG	T/A	BODY 4N	3H	5H	LEVEL S	SE	SX	OPTION	L/R	QTY	EFFECTIVE DATE FROM	TO	REMARKS	P/CODE
[30]	24204709	.	A	B	B	B	O	O	O			1			(E)WASHER-THRUST (D)DICHTUNGSRING (F)RONDELLE (S)ARANDELA	
[31]	08652841	.	A	B	B	B	O	O	O			1			(E)SHAFT-TURBINE (D)SPINDEL (F)ARBRE (S)EJE	
[32]	08652382	.	A	B	B	B	O	O	O			1			(E)SEAL-TURBINE SHAFT (D)DICHTUNG (F)JOINT (S)SELLO	
[33]	08637170	.	A	B	B	B	O	O	O			1			(E)SEAL-TURBINE SHAFT (D)DICHTUNG (F)JOINT (S)SELLO	
[34]	08677453	.	A	B	B	B	O	O	O			1			(E)BEARING (D)KUGELLAGER (F)ROULEMENT (S)COJINET	
[36]	24205179	.	A	B	B	B	O	O	O			1			(E)SUPPORT A-DRIVEN SPROCKET (D)TRÄGER (F)SUPPORT (S)SOPORTE	
[37]	08685660	.	A	B	B	B	O	O	O			1			(E)BUSHING (D)LAGERFUTTER (F)MANCHON (S)BUJE	
[38]	08628047	.	A	B	B	B	O	O	O			1			(E)PIN-DOWEL (D)STIFT (F)BROCHE (S)PASADOR	
[39]	08685132	.	A	B	B	B	O	O	O			4			(E)SENSOR-INPUT SPEED (D)SENSOR (F)DETECTEUR (S)SENSOR	
	10456545	.	A	B	B	B	O	O	O			1				

ENG(ENGINE)	T/A(TRANSAXLE)	BODY TYPE
Y = 1.5SOHC 6 = 1.6DOHC . = COMMON	M = MANUAL T/A A = AUTOMATIC T/A . = COMMON	4 N = 4 DOOR NOTCHBACK 3 H = 3 DOOR HATCHBACK 5 H = 5 DOOR HATCHBACK

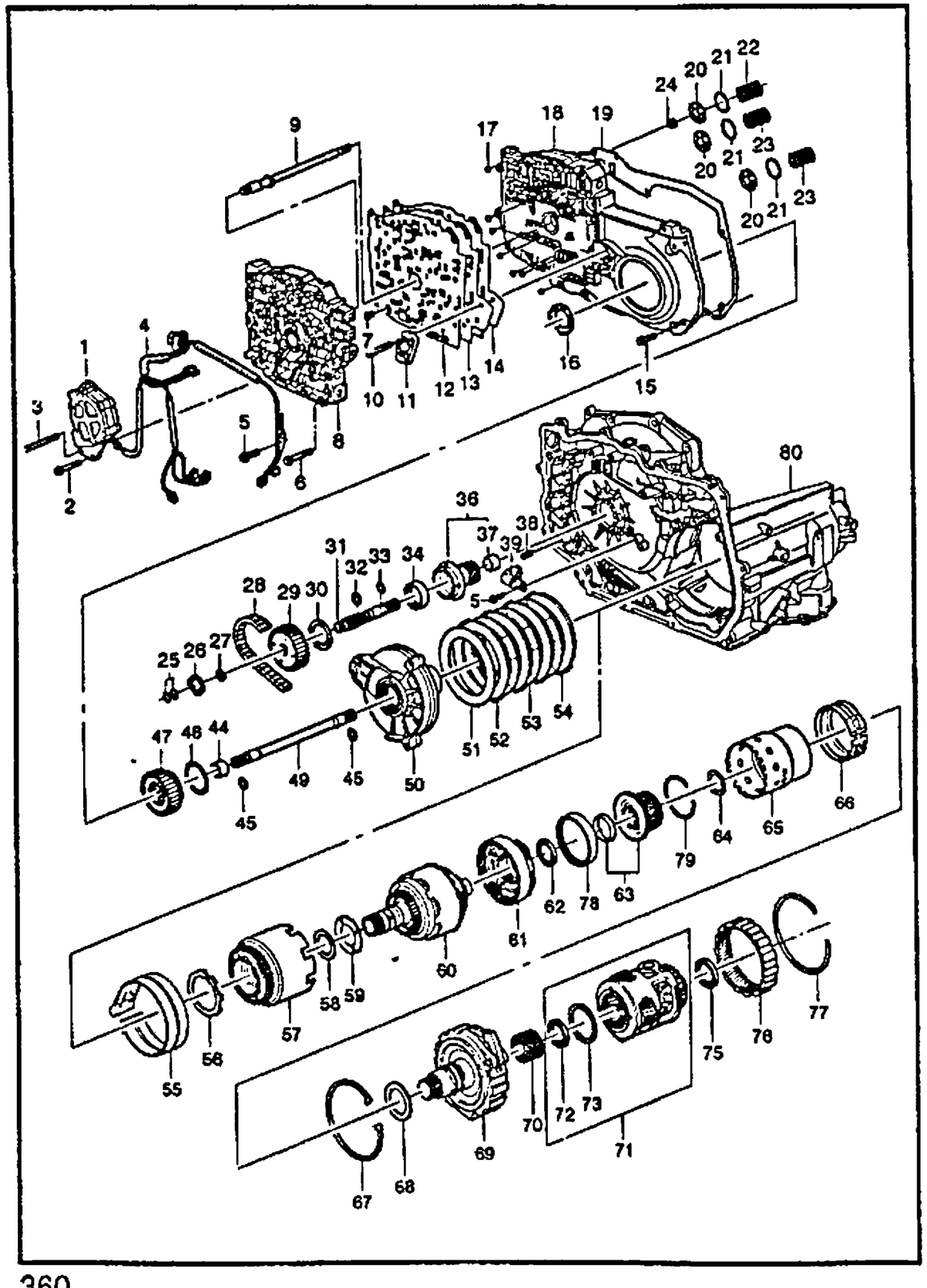

KEY NO. ITC	PART NO	MODEL ENG	MODEL T/A	MODEL BODY 4N	MODEL BODY 3H	MODEL BODY 5H	MODEL LEVEL S	MODEL LEVEL SE	MODEL LEVEL SX	OPTION	PART NAME	L/R	QTY	EFFECTIVE DATE FROM	EFFECTIVE DATE TO	REMARKS	P/CODE
[44]	08684482	.	A	B	B	B	O	O	O		(E)SLEEVE-OUTPUT/STUB SHAFT (D)HULSE		(F)CHEMISE (S)MANGA 1				
[45]	07829495	.	A	B	B	B	O	O	O		(E)RING-OUTPUT/STUB SHAFT (D)RING		(F)ANNEAU (S)ANILLO 2				
[47]	24204714	.	A	B	B	B	O	O	O		(E)SPROCKET-DRIVEN (D)ZAHNKETTENRAD		(F)ENGRENAGE (S)RUEDA DE ESPIGAS 1				
[48]	08637227	.	A	B	B	B	O	O	O		(E)WASHER-THRUST (D)DICHTUNGSRING		(F)RONDELLE (S)ARANDELA 1				
[49]	24200733	.	A	B	B	B	O	O	O		(E)SHAFT-OUTPUT (D)SPINDEL		(F)ARBRE (S)EJE 1				
[50]											REFER GROUP #3550						
[51]	24200298	.	A	B	B	B	O	O	O		(E)PLATE-DISC CLUTCH (D)PLATTE,SCHEIBEN-KUPPLUNG		(F)PLAQUE-EMBRAYAGE A DISQUE (S)PLACA-EMBRAGUE DISCO 1				
[52]	24200790	.	A	B	B	B	O	O	O		(E)PLATE-DISC CLUTCH (D)PLATTE,SCHEIBEN-KUPPLUNG		(F)PLAQUE-EMBRAYAGE A DISQUE (S)PLACA-EMBRAGUE DISCO 3				
[53]	08684322	.	A	B	B	B	O	O	O		(E)PLATE-DISC CLUTCH (D)PLATTE,SCHEIBEN-KUPPLUNG		(F)PLAQUE-EMBRAYAGE A DISQUE (S)PLACA-EMBRAGUE DISCO 3				
[54]											(E)PLATE-DISC CLUTCH (D)PLATTE,SCHEIBEN-KUPPLUNG		(F)PLAQUE-EMBRAYAGE A DISQUE (S)PLACA-EMBRAGUE DISCO				

ENG(ENGINE)	T/A(TRANSAXLE)	BODY TYPE
Y = 1.5SOHC 6 = 1.6DOHC . = COMMON	M = MANUAL T/A A = AUTOMATIC T/A . = COMMON	4 N = 4 DOOR NOTCHBACK 3 H = 3 DOOR HATCHBACK 5 H = 5 DOOR HATCHBACK

3521 INTERNAL POWER TRAIN PARTS

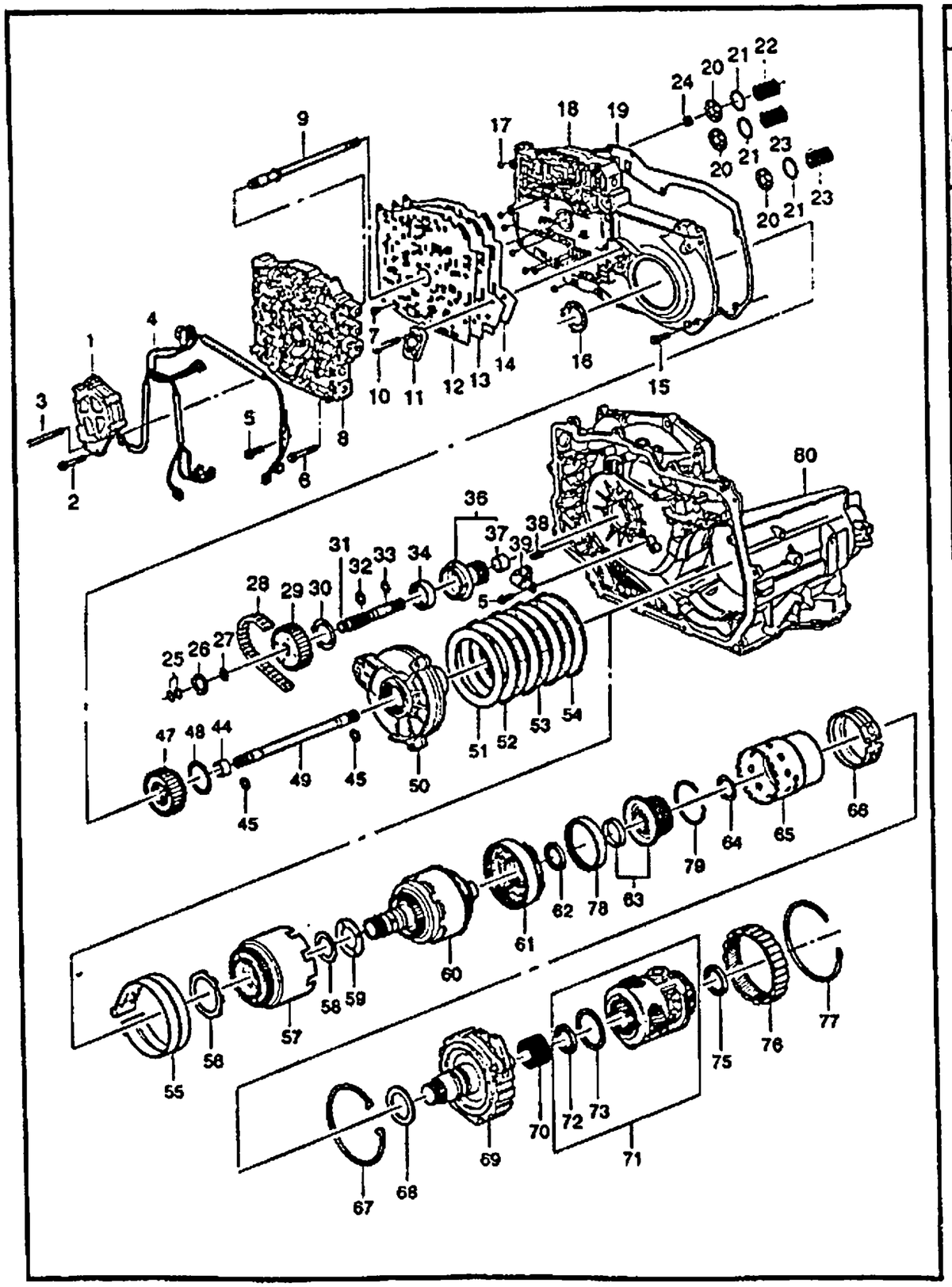

KEY NO. ITC	PART NO	MODEL ENG	MODEL T/A	BODY 4N	BODY 3H	BODY 5H	LEVEL S	LEVEL SE	LEVEL SX	OPTION	L/R	QTY	EFFECTIVE DATE FROM	EFFECTIVE DATE TO	REMARKS	P/CODE
	08684324	.	A	B	B	B	O	O	O			1				
[55]	(E)BAND-INTERMEDIATE/4TH (D)BAND											(F)BANDE (S)BRIDA				
	08684403	.	A	B	B	B	O	O	O			1				
[56]	(E)WASHER-THRUST (D)DICHTUNGSRING											(F)RONDELLE (S)ARANDELA				
	08684259	.	A	B	B	B	O	O	O			1				
[57]																
	REFER GROUP #3530															
[58]	(E)BEARING-THRUST (D)KUGELLAGER											(F)ROULEMENT (S)COJINET				
	24200249	.	A	B	B	B	O	O	O			1				
[59]	(E)WASHER-THRUST (D)DICHTUNGSRING									(SELECTIVE)		(F)RONDELLE (S)ARANDELA				
	08684469	.	A	B	B	B	O	O	O			1			BROWN	
		.	A	B	B	B	O	O	O						(SIZE1.50-1.60)	
	08684470	.	A	B	B	B	O	O	O			1			GRAY	
		.	A	B	B	B	O	O	O						(SIZE1.79-1.89)	
	08684471	.	A	B	B	B	O	O	O			1			NATURAL	
		.	A	B	B	B	O	O	O						(SIZE2.09-2.19)	
	08684472	.	A	B	B	B	O	O	O			1			BLACK	
		.	A	B	B	B	O	O	O						(SIZE2.39-2.49)	
	08684473	.	A	B	B	B	O	O	O			1			ORANGE	
		.	A	B	B	B	O	O	O						(SIZE2.68-2.78)	
	08684474	.	A	B	B	B	O	O	O			1			VIOLET	

ENG(ENGINE)	T/A(TRANSAXLE)	BODY TYPE
Y = 1.5SOHC	M = MANUAL T/A	4 N = 4 DOOR NOTCHBACK
6 = 1.6DOHC	A = AUTOMATIC T/A	3 H = 3 DOOR HATCHBACK
. = COMMON	. = COMMON	5 H = 5 DOOR HATCHBACK

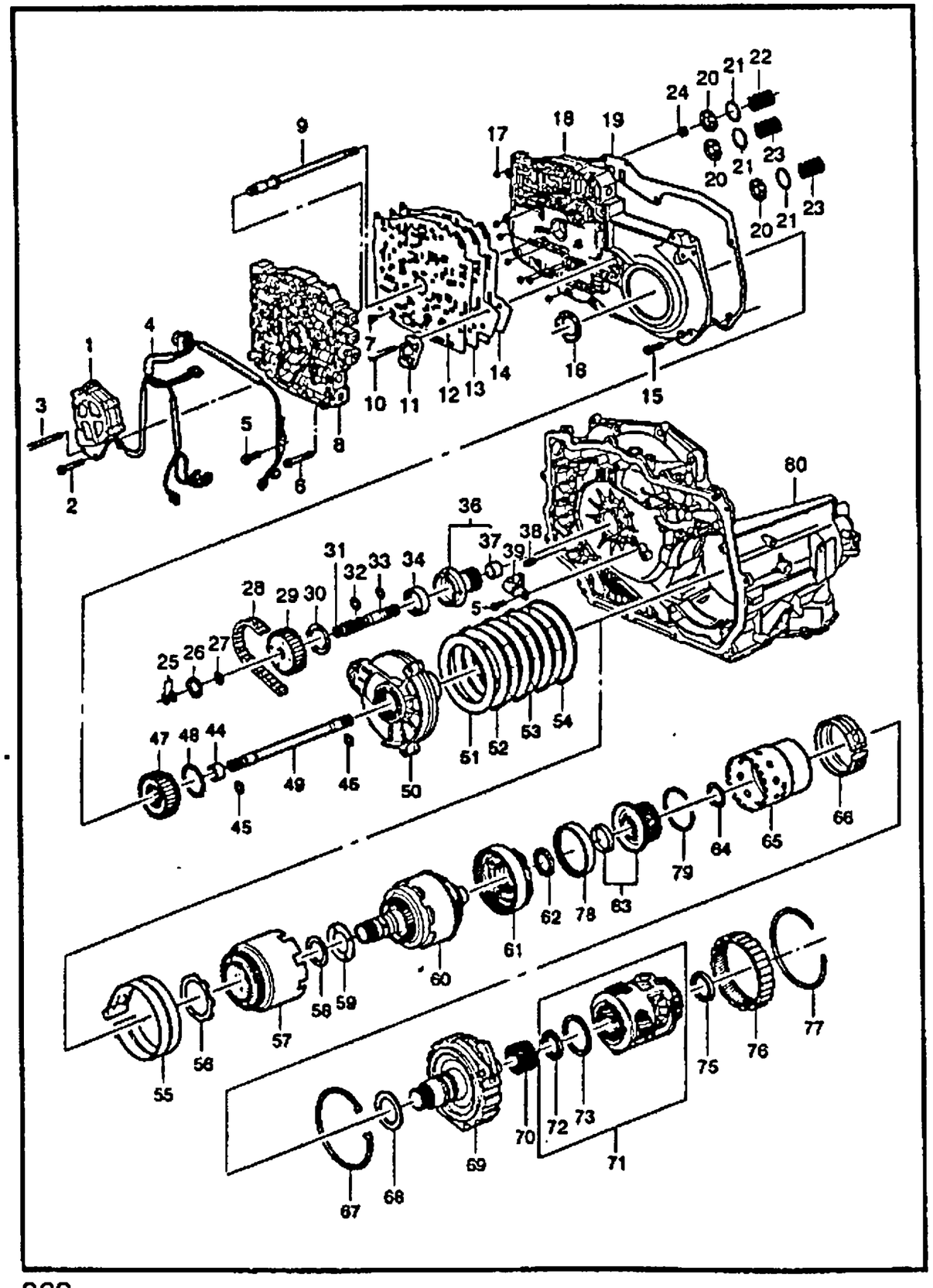

KEY NO. ITC	PART NO	MODEL ENG	T/A	BODY 4N	3H	5H	LEVEL S	SE	SX	OPTION	L/R	QTY	EFFECTIVE DATE FROM	TO	REMARKS	P/CODE
		.	A	B	B	B	O	O	O						(SIZE2.98-3.08)	
	08684475	.	A	B	B	B	O	O	O			1			YELLOW	
		.	A	B	B	B	O	O	O						(SIZE2.98-3.08)	
	08684476	.	A	B	B	B	O	O	O			1			RED	
		.	A	B	B	B	O	O	O						(SIZE3.57-3.67)	
	08684477	.	A	B	B	B	O	O	O			1			GREEN	
		.	A	B	B	B	O	O	O						(SIZE3.87-3.97)	
[60]																
	REFER GROUP #3531															
[61]		(E)CARRIER-INPUT(W/REACTION) *(D)GETRIEBE*										*(F)ENGRENAGE* *(S)ENGRANAJE*				
	24207008	.	A	B	B	B	O	O	O			1				
[62]		(E)BEARING-THRUST *(D)KUGELLAGER*										*(F)ROULEMENT* *(S)COJINET*				
	08644206	.	A	B	B	B	O	O	O			1				
[63]		(E)FLANGE-INPUT CARR *(D)FLANSCH*										*(F)FLASQUE* *(S)PESTAÑA*				
	24202220														NOT APPLIED	
	24202221	.	A	B	B	B	O	O	O			1				
[64]		(E)WASHER-THRUST *(D)DICHTUNGSRING*										*(F)RONDELLE* *(S)ARANDELA*				
	08685039	.	A	B	B	B	O	O	O			1				
[65]																
	REFER GROUP #3533															

ENG(ENGINE)	T/A(TRANSAXLE)	BODY TYPE
Y = 1.5SOHC	M = MANUAL T/A	4 N = 4 DOOR NOTCHBACK
6 = 1.6DOHC	A = AUTOMATIC T/A	3 H = 3 DOOR HATCHBACK
. = COMMON	. = COMMON	5 H = 5 DOOR HATCHBACK

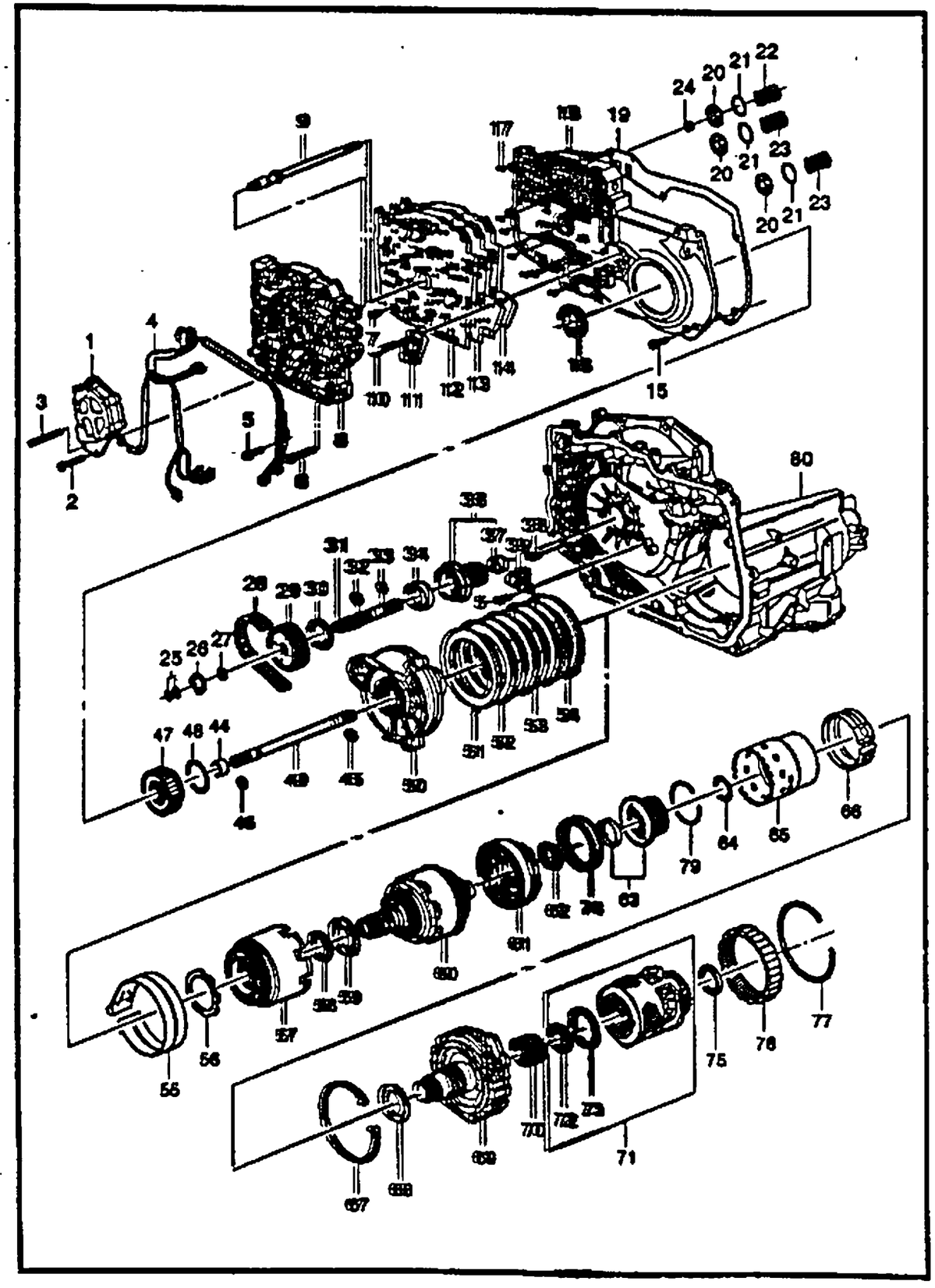

KEY NO.		PART NAME														
ITC	PART NO	MODEL								OPTION	L/R	QTY	EFFECTIVE DATE		REMARKS	P/CODE
		ENG	T/A	BODY			LEVEL						FROM	TO		
				4N	3H	5H	S	SE	SX							
[66]	08651614	(E)BAND-FORWARD CLUTCH (D)BAND									(F)BANDE (S)BRIDA	1				
		.	A	B	B	B	O	O	O							
[67]	24201607	(E)RING-FWD CLUTCH SUPT (D)RING									(F)ANNEAU (S)ANILLO	1				
		.	A	B	B	B	O	O	O							
[68]	24200250	(E)BEARING-THRUST (D)KUGELLAGER									(F)ROULEMENT (S)COJINET	1				
		.	A	B	B	B	O	O	O							
[69]		REFER GROUP #3635														
[70]	08684311	(E)GEAR-FRT DIFF CARR SUN (D)GETRIEBE									(F)ENGRENAGE (S)ENGRANAJE	1				
		.	A	B	B	B	O	O	O							
[71]	24203709	(E)FINAL DRIVE & DIFFERENTIA (D)GETRIEBE									(F)ENGRENAGE (S)ENGRANAJE	1				
		.	A	B	B	B	O	O	O							
[72]	08646254	(E)BEARING-THRUST (D)KUGELLAGER									(F)ROULEMENT (S)COJINET	1				
		.	A	B	B	B	O	O	O							
[73]	11501328	(E)RING (D)RING									(F)ANNEAU (S)ANILLO	1				
		.	A	B	B	B	O	O	O							
[75]	08631362	(E)BEARING-THRUST (D)KUGELLAGER									(F)ROULEMENT (S)COJINET	1				
		.	A	B	B	B	O	O	O							
[76]		(E)GEAR-FINAL DRIVE INTERNAL (D)GETRIEBE									(F)ENGRENAGE (S)ENGRANAJE					

ENG(ENGINE)	T/A(TRANSAXLE)	BODY TYPE
Y = 1.5SOHC 6 = 1.6DOHC . = COMMON	M = MANUAL T/A A = AUTOMATIC T/A . = COMMON	4 N = 4 DOOR NOTCHBACK 3 H = 3 DOOR HATCHBACK 5 H = 5 DOOR HATCHBACK

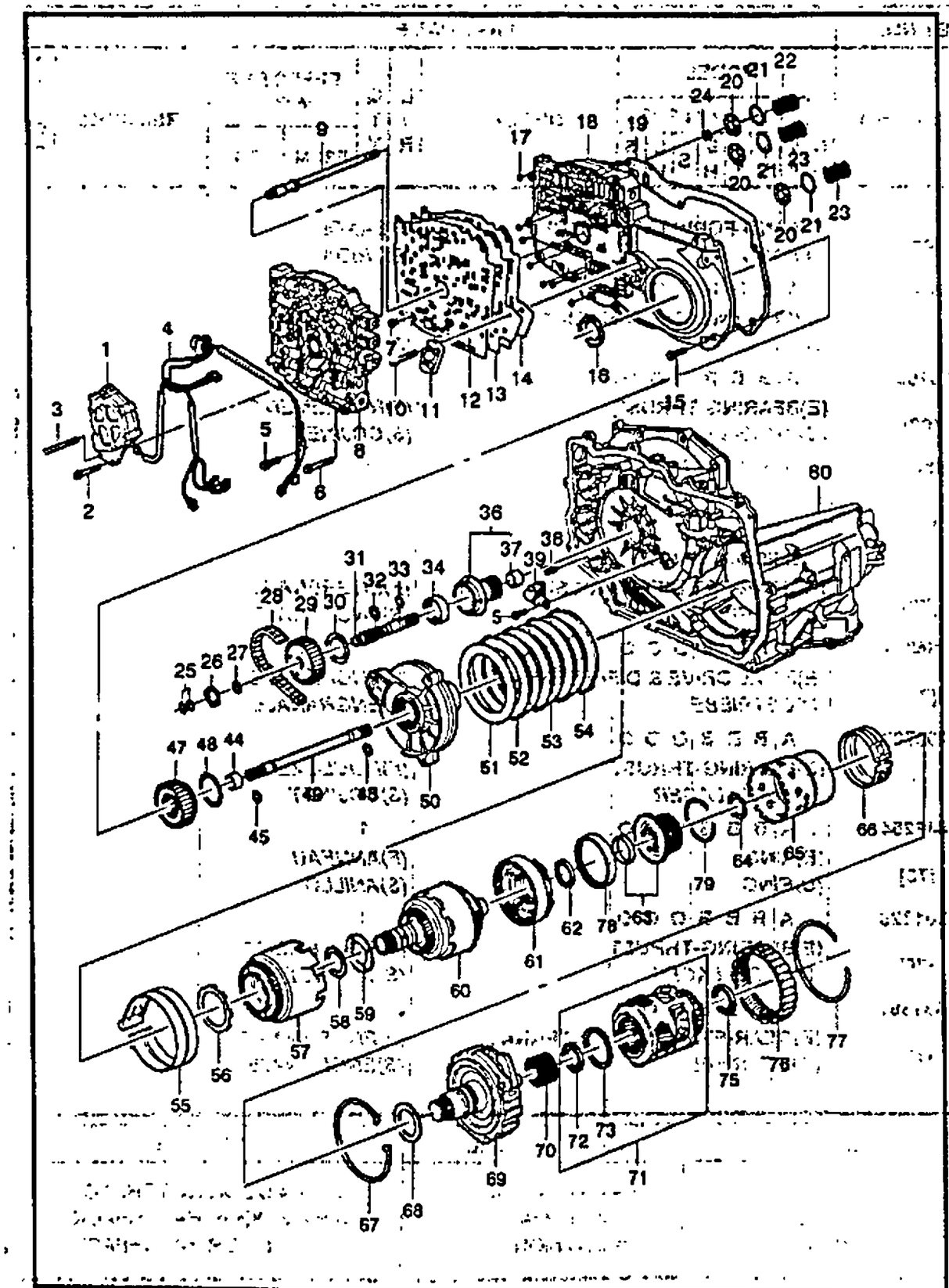

KEY NO. ITC	PART NO	MODEL ENG	MODEL T/A	MODEL BODY 4N	MODEL BODY 3H	MODEL BODY 5H	MODEL LEVEL S	MODEL LEVEL SE	MODEL LEVEL SX	OPTION	L/R	QTY	EFFECTIVE DATE FROM	EFFECTIVE DATE TO	REMARKS	P/CODE
	24201608	.	A	B	B	B	O	O	O			1				
[77]	(E)RING-FRETTING (D)RING											(F)ANNEAU (S)ANILLO				
	24201612	.	A	B	B	B	O	O	O			1				
[78]	(E)GEAR-INPUT (D)GETRIEBE											(F)ENGRENAGE (S)ENGRANAJE				
	08684574	.	A	B	B	B	O	O	O			1				
[79]	(E)RING-INPUT (D)RING											(F)ANNEAU (S)ANILLO				
	24203619	.	A	B	B	B	O	O	O			1				
[80]	(E)CASE-TRANSAXLE (D)KASTEN											(F)CARTER (S)CAJA				
	24208101	.	A	B	B	B	O	O	O			1				
O	24210088	.	A	B	B	B	O	O	O			1				

ENG(ENGINE)	T/A(TRANSAXLE)	BODY TYPE
Y = 1.5SOHC 6 = 1.6DOHC . = COMMON	M = MANUAL T/A A = AUTOMATIC T/A . = COMMON	4 N = 4 DOOR NOTCHBACK 3 H = 3 DOOR HATCHBACK 5 H = 5 DOOR HATCHBACK

3530 REVERSE INPUT CLUTCH ASSEMBLY

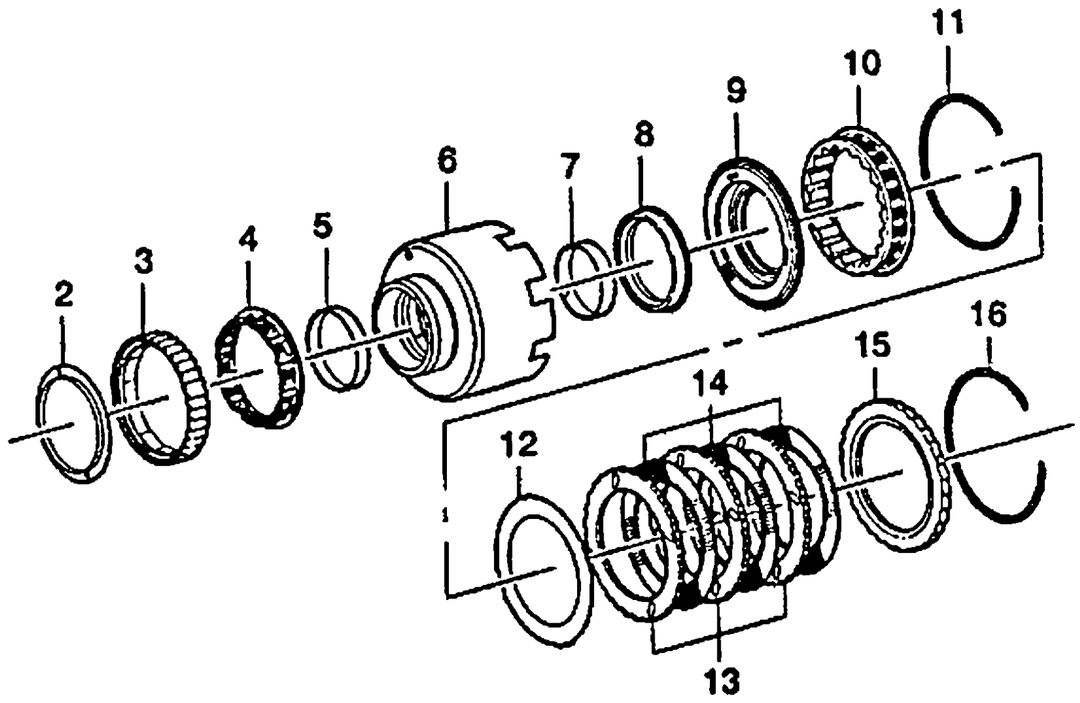

KEY NO. ITC	PART NO	MODEL ENG	MODEL T/A	BODY 4N	BODY 3H	BODY 5H	LEVEL S	LEVEL SE	LEVEL SX	OPTION	PART NAME	L/R	QTY	EFFECTIVE DATE FROM	EFFECTIVE DATE TO	REMARKS	P/CODE
[02]	24207224	.	A	B	B	B	O	O	O		(E)RETAINER-2ND ROLLER CLUTC (D)KLEMME,HALTERUNG	(F)ATTACHE-ARRETOIR (S)GRAPA-RETENEDOR	1				
[03]	08684671	.	A	B	B	B	O	O	O		(E)CAM-2ND ROLLER CLUTCH (D)NOCKE	(F)CAME (S)LEVA	1				
[04]	00930695	.	A	B	B	B	O	O	O		(E)CLUTCH-2ND ROLLER (D)KUPPLUNG	(F)EMBRAYAGE (S)EMBRAGUE	1				
[05]	08684268	.	A	B	B	B	O	O	O		(E)BUSHING-REVERSE CLUTCH (D)LAGERFUTTER	(F)MANCHON (S)BUJE	1				
[06]	24207313										(E)HOUSING-REVERSE CLUTCH (D)GEHÄUSE	(F)LOGEMENT (S)CARCASA				NOT APPLIED	
[07]	24204545	.	A	B	B	B	O	O	O		(E)BUSHING-REVERSE CLUTCH (D)LAGERFUTTER	(F)MANCHON (S)BUJE	1				
[08]	08684269	.	A	B	B	B	O	O	O		(E)SEAL (D)DICHTUNG	(F)JOINT (S)SELLO	1				
[09]	24205041	.	A	B	B	B	O	O	O		(E)PISTON A-REVERSE CLUTCH (D)KOLBEN	(F)PISTON (S)PISTON	1				
[10]	24205040	.	A	B	B	B	O	O	O		(E)SPRING & RETAINER (D)FEDERUNG	(F)RESSORT (S)RESORTE	1				
	24200758	.	A	B	B	B	O	O	O				1				

ENG(ENGINE)	T/A(TRANSAXLE)	BODY TYPE
Y = 1.5SOHC 6 = 1.6DOHC . = COMMON	M = MANUAL T/A A = AUTOMATIC T/A . = COMMON	4 N = 4 DOOR NOTCHBACK 3 H = 3 DOOR HATCHBACK 5 H = 5 DOOR HATCHBACK

3530 REVERSE INPUT CLUTCH ASSEMBLY

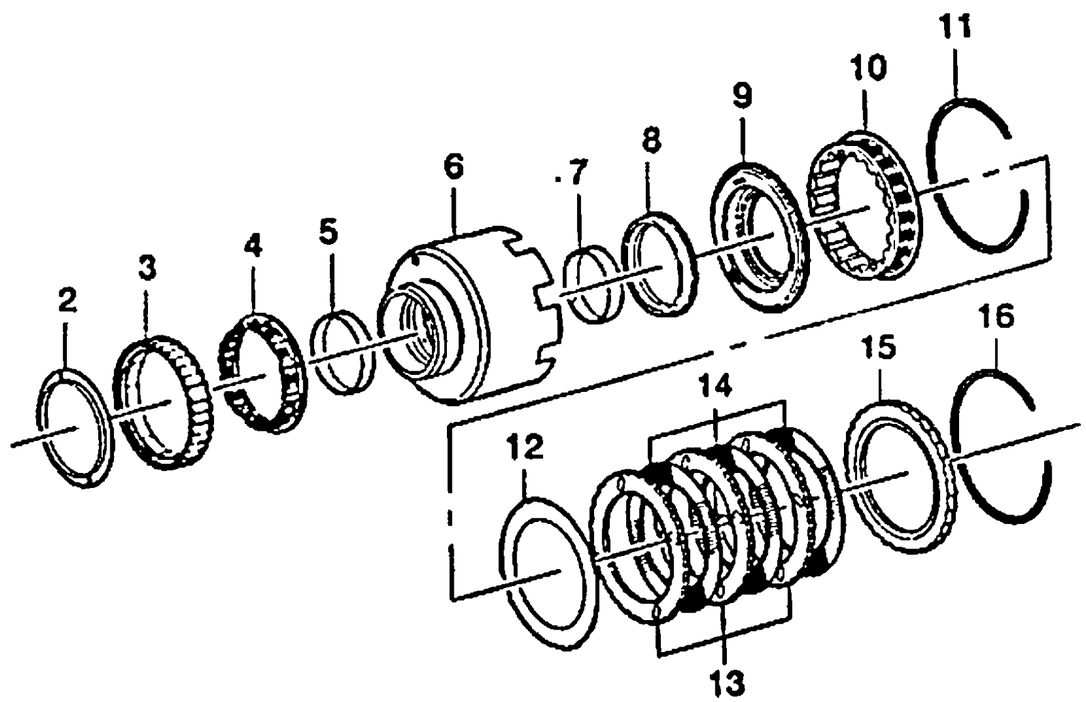

KEY NO.	PART NAME														
		MODEL													
				BODY			LEVEL					EFFECTIVE DATE			
ITC	PART NO	ENG	T/A	4N	3H	5H	S	SE	SX	OPTION	L/R	QTY	FROM	TO	REMARKS	PICODE
[11]	(E)RING-SNAP (D)RING										(F)ANNEAU (S)ANILLO					
08684283		.	A	B	B	B	O	O	O			1				
[12]	(E)PLATE-REVERSE CLUTCH(WAVE (D)PLATTE,SCHEIBEN-KUPPLUNG										(F)PLAQUE-EMBRAYAGE A DISQUE (S)PLACA-EMBRAGUE DISCO					
24200466		.	A	B	B	B	O	O	O			1				
[13]	(E)PLATE-REV.CLUTCH (STEEL) (D)PLATTE,SCHEIBEN-KUPPLUNG										(F)PLAQUE-EMBRAYAGE A DISQUE (S)PLACA-EMBRAGUE DISCO					
24207081		.	A	B	B	B	O	O	O			3				
[14]	(E)PLATE-REV.CLUTCH (FIBER) (D)PLATTE,SCHEIBEN-KUPPLUNG										(F)PLAQUE-EMBRAYAGE A DISQUE (S)PLACA-EMBRAGUE DISCO					
08684266		.	A	B	B	B	O	O	O			3				
[15]	(E)PLATE-REV.CLUTCH(BACK'G,A (D)PLATTE,SCHEIBEN-KUPPLUNG										(F)PLAQUE-EMBRAYAGE A DISQUE (S)PLACA-EMBRAGUE DISCO					
24200950		.	A	B	B	B	O	O	O			1			SELECTIVE	
24200756		.	A	B	B	B	O	O	O			1			SELECTIVE	
24200951		.	A	B	B	B	O	O	O			1			SELECTIVE	
[16]	(E)RING-SNAP (D)RING										(F)ANNEAU (S)ANILLO					
24200754		.	A	B	B	B	O	O	O			1				

ENG(ENGINE)	T/A(TRANSAXLE)	BODY TYPE
Y = 1.5SOHC	M = MANUAL T/A	4 N = 4 DOOR NOTCHRACK
G = 1.6DOHC	A = AUTOMATIC T/A	3 H = 3 DOOR HATCHBACK
. = COMMON	. = COMMON	5 H = 5 DOOR HATCHBACK

3531 DIRECT AND COAST CLUTCH ASSEMBLIES

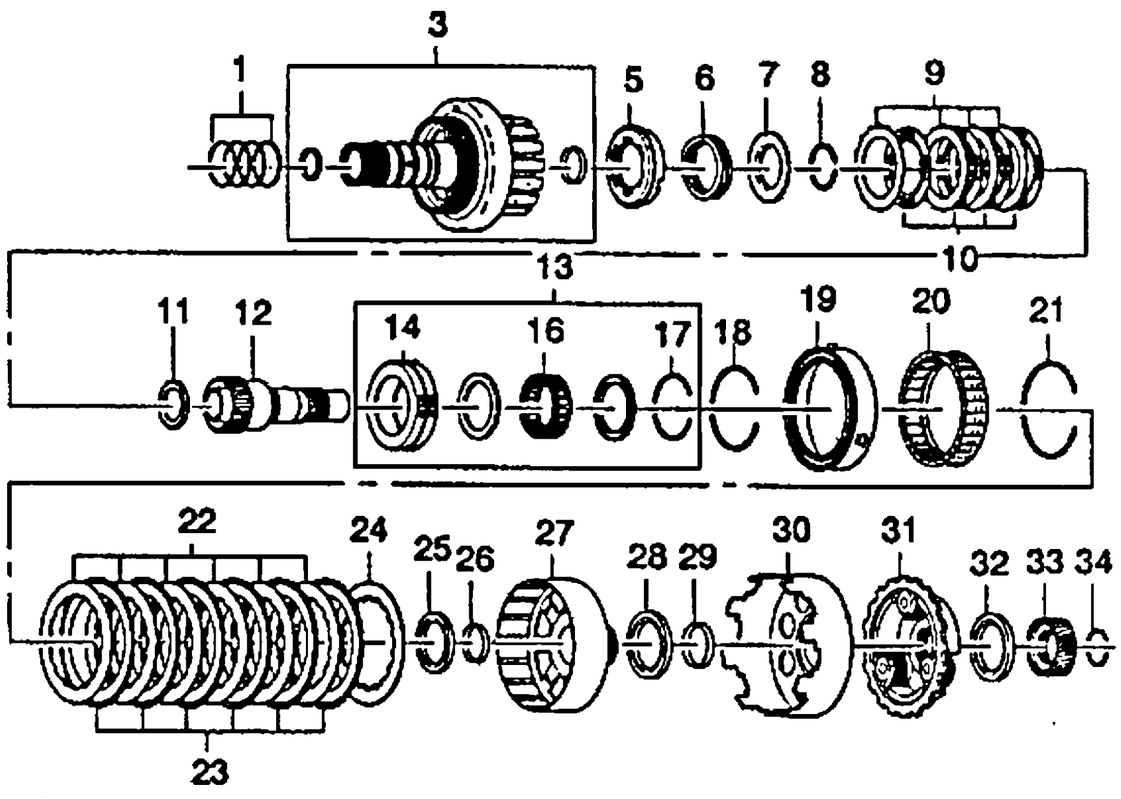

KEY NO. ITC	PART NO	MODEL ENG	T/A	BODY 4N	3H	5H	LEVEL S	SE	SX	OPTION	L/R	QTY	EFFECTIVE DATE FROM	TO	REMARKS	PICODE
[01]		(E)RING-SEAL (D)RING,DICHTUNG									(F)ANNEAU-JOINT (S)ANILLO-SELLO					
	08684272	.	A	B	B	B	O	O	O			4				
[03]		(E)HOUSING-DIRECT&COAST CLUT (D)GEHÄUSE									(F)LOGEMENT (S)CARCASA					
	24209113	.	A	B	B	B	O	O	O			1				
[05]		(E)PISTON-COAST CLUTCH (D)KOLBEN									(F)PISTON (S)PISTON					
	24205043	.	A	B	B	B	O	O	O			1				
[06]		(E)SPRING (D)FEDERUNG									(F)RESSORT (S)RESORTE					
	24204448	.	A	B	B	B	O	O	O			1				
[07]		(E)RETAINER (D)KLEMME,HALTERUNG									(F)ATTACHE-ARRETOIR (S)GRAPA-RETENEDOR					
	08684277	.	A	B	B	B	O	O	O			1				
[08]		(E)RING-COAST CLUTCH SPRING (D)RING									(F)ANNEAU (S)ANILLO					
	08684278	.	A	B	B	B	O	O	O			1				
[09]		(E)PLATE-COAST CLUTCH (STEEL (D)PLATTE,SCHEIBEN-KUPPLUNG									(F)PLAQUE-EMBRAYAGE A DISQUE (S)PLACA-EMBRAGUE DISCO					
	08685874	.	A	B	B	B	O	O	O			4				
[10]		(E)PLATE-COAST CLUTCH (FIBER (D)PLATTE,SCHEIBEN-KUPPLUNG									(F)PLAQUE-EMBRAYAGE A DISQUE (S)PLACA-EMBRAGUE DISCO					
	08684282	.	A	B	B	B	O	O	O			4				
[11]		(E)BEARING-THRUST (D)KUGELLAGER									(F)ROULEMENT (S)COJINET					
	24200249	.	A	B	B	B	O	O	O			1				
[12]		(E)SHAFT A-INPUT SUN GEAR (D)SPINDEL									(F)ARBRE (S)EJE					

ENG(ENGINE)	T/A(TRANSAXLE)	BODY TYPE
Y = 1.5SOHC 6 = 1.6DOHC . = COMMON	M = MANUAL T/A A = AUTOMATIC T/A . = COMMON	4 N = 4 DOOR NOTCHBACK 3 H = 3 DOOR HATCHBACK 5 H = 5 DOOR HATCHBACK

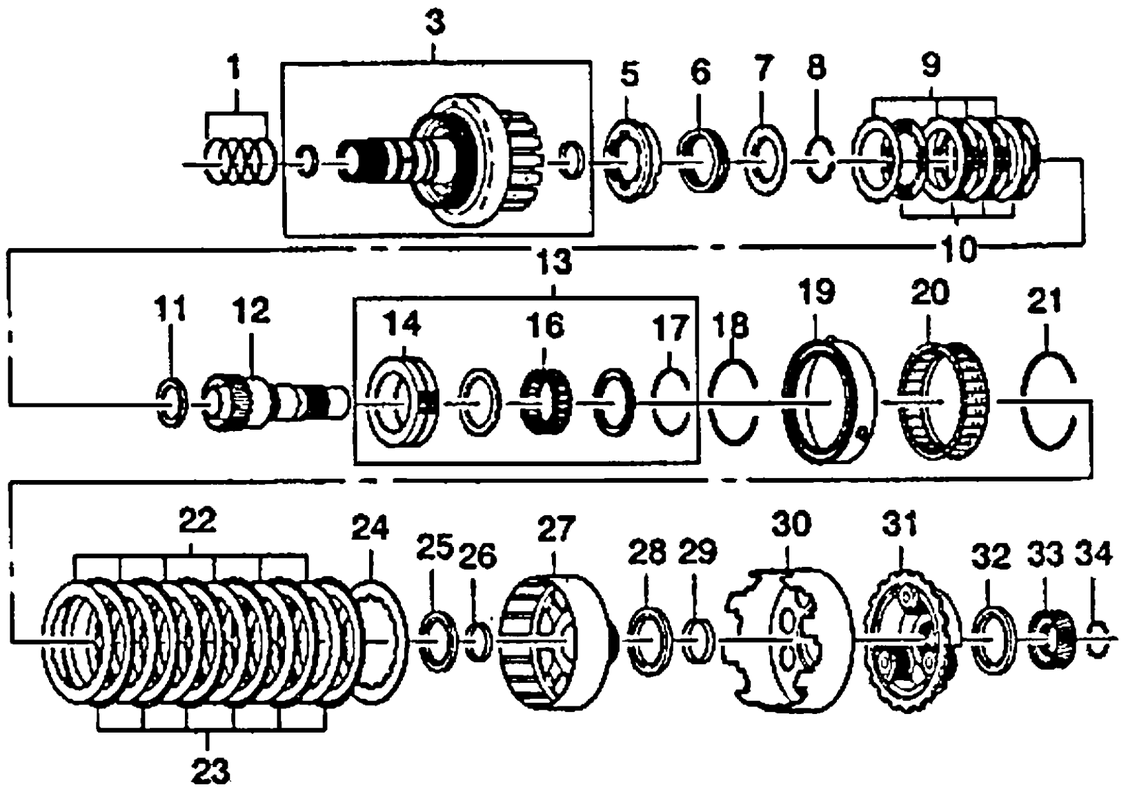

KEY NO. ITC	PART NO	MODEL ENG	T/A	BODY 4N	3H	5H	LEVEL S	SE	SX	OPTION	L/R	QTY	EFFECTIVE DATE FROM	TO	REMARKS	P/CODE
[13]	24203613	.	A	B	B	B	O	O	O	(E)RACE A-OTR(INPUT SPRAG) (D)GLEITBAHN		1			(F)CAGE (S)CARRERA	
[14]	24203616	.	A	B	B	B	O	O	O	(E)RACE-OTR(INPUT SPRAG) (D)GLEITBAHN		1			(F)CAGE (S)CARRERA	
[16]	24200497	.	A	B	B	B	O	O	O	(E)SPRAG-INPUT CLUTCH (D)KUPPLUNG,EINWEG		1			(F)EMBRAYAGE-SENS UNIQUE (S)EMBRAGUE-1 DIRECCION	
[17]	24203617	.	A	B	B	B	O	O	O	(E)RING-SNAP (D)RING		1			(F)ANNEAU (S)ANILLO	
[18]	08658889	.	A	B	B	B	O	O	O	(E)RING-SNAP (D)RING		1			(F)ANNEAU (S)ANILLO	
[19]	08685878	.	A	B	B	B	O	O	O	(E)PISTON A-DIRECT CLUTCH (D)KOLBEN		1			(F)PISTON (S)PISTON	
[20]	24205044	.	A	B	B	B	O	O	O	(E)SPRING A-DIRECT CLUTCH (D)FEDERUNG		1			(F)RESSORT (S)RESORTE	
[21]	08684610	.	A	B	B	B	O	O	O	(E)RING-DIRECT CLUTCH SPRING (D)RING		1			(F)ANNEAU (S)ANILLO	
[22]	08684280	.	A	B	B	B	O	O	O	(E)PLATE-DIRECT CLUTCH(STEEL (D)PLATTE,SCHEIBEN-KUPPLUNG		1			(F)PLAQUE-EMBRAYAGE A DISQUE (S)PLACA-EMBRAGUE DISCO	
	08685879	.	A	B	B	B	O	O	O			8				

ENG(ENGINE)	T/A(TRANSAXLE)	BODY TYPE
Y = 1.5SOHC 6 = 1.6DOHC . = COMMON	M = MANUAL T/A A = AUTOMATIC T/A . = COMMON	4 N = 4 DOOR NOTCHBACK 3 H = 3 DOOR HATCHBACK 5 H = 5 DOOR HATCHBACK

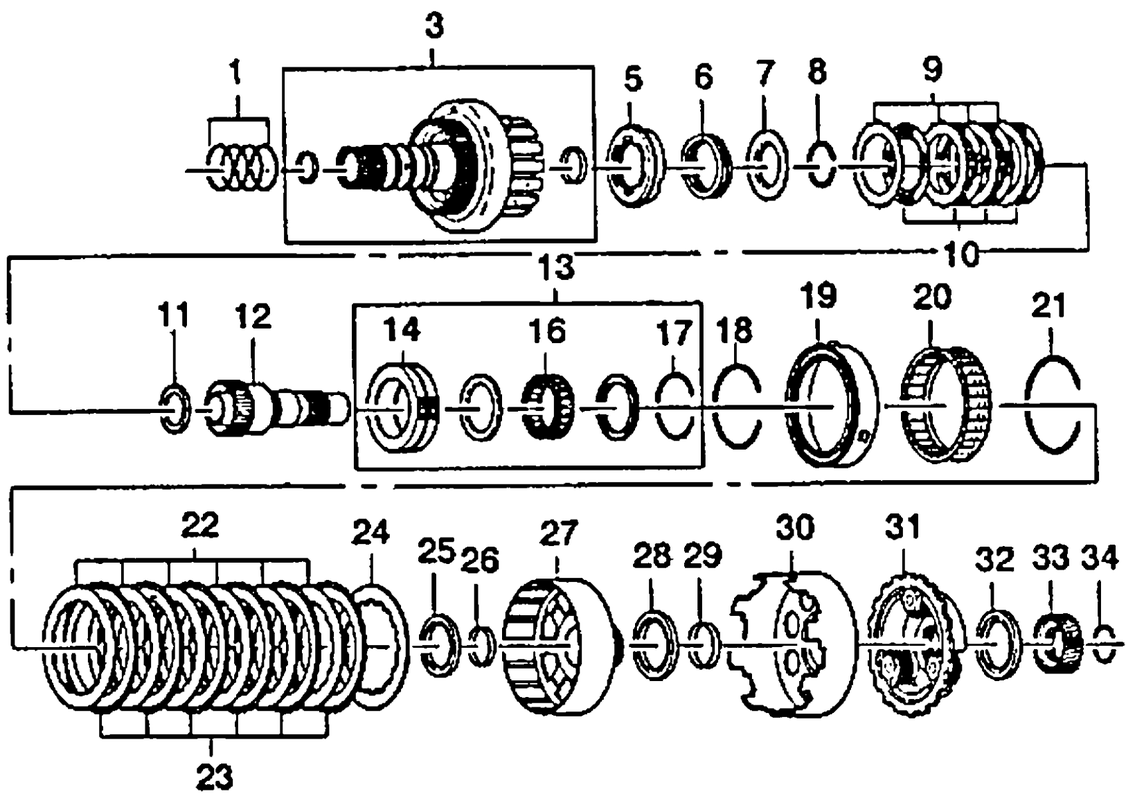

KEY NO.	PART NAME														
ITC	PART NO	MODEL								OPTION	L/R	QTY	EFFECTIVE DATE		REMARKS	P/CODE
		ENG	T/A	BODY			LEVEL						FROM	TO		
				4N	3H	5H	S	SE	SX							
[23]		(E)PLATE-DIRECT CLUTCH(FIBER (D)PLATTE,SCHEIBEN-KUPPLUNG									(F)PLAQUE-EMBRAYAGE A DISQUE (S)PLACA-EMBRAGUE DISCO					
08684415		.	A	B	B	B	O	O	O		4					
[24]		(E)PLATE-DIRECT CLUTCH(BACK' (D)PLATTE,SCHEIBEN-KUPPLUNG									(F)PLAQUE-EMBRAYAGE A DISQUE (S)PLACA-EMBRAGUE DISCO					
08685875		.	A	B	B	B	O	O	O		1					
[25]		(E)BEARING-THRUST (D)KUGELLAGER									(F)ROULEMENT (S)COJINET					
24200248		.	A	B	B	B	O	O	O		1					
[26]		(E)BUSHING-REACTION CARR.SHF (D)LAGERFUTTER									(F)MANCHON (S)BUJE					
08684589		.	A	B	B	B	O	O	O		1					
[27]		(E)SHELL-REACTION CARR.SHAFT (D)GEHÄUSE									(F)ENVELOPPE (S)CAPARAZON					
24202267		.	A	B	B	B	O	O	O		1					
[28]		(E)BEARING-THRUST (D)KUGELLAGER									(F)ROULEMENT (S)COJINET					
24200251		.	A	B	B	B	O	O	O		1					
[29]		(E)BUSHING-REACTION SUN GEAR (D)LAGERFUTTER									(F)MANCHON (S)BUJE					
08684586		.	A	B	B	B	O	O	O		1					
[30]		(E)SHELL-REACTION SUN GEAR (D)GEHÄUSE									(F)ENVELOPPE (S)CAPARAZON					
24202271		.	A	B	B	B	O	O	O		1					
[31]		(E)CARRIER A-REACTION (D)GETRIEBE									(F)ENGRENAGE (S)ENGRANAJE					
24208584		.	A	B	B	B	O	O	O		1					
[32]		(E)BEARING-THRUST (D)KUGELLAGER									(F)ROULEMENT (S)COJINET					

ENG(ENGINE)	T/A(TRANSAXLE)	BODY TYPE
Y = 1.5SOHC 6 = 1.6DOHC . = COMMON	M = MANUAL T/A A = AUTOMATIC T/A . = COMMON	4 N = 4 DOOR NOTCHBACK 3 H = 3 DOOR HATCHBACK 5 H = 5 DOOR HATCHBACK

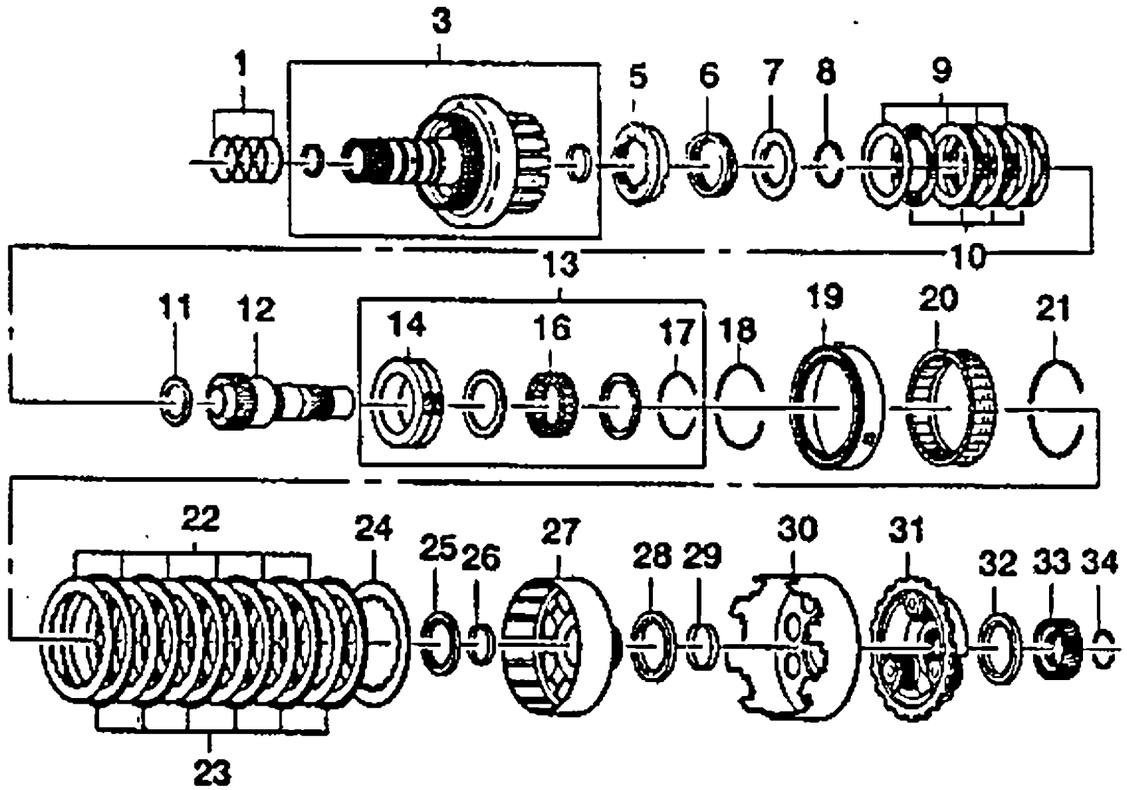

KEY NO. ITC	PART NO	MODEL ENG	T/A	BODY 4N	3H	5H	LEVEL S	SE	SX	OPTION	L/R	QTY	EFFECTIVE DATE FROM	TO	REMARKS	P/CODE
[33]	24200252	.	A	B	B	B	O	O	O			1			(E)GEAR-INPUT SUN (D)GETRIEBE (F)ENGRENAGE (S)ENGRANAJE	
[34]	08684581	.	A	B	B	B	O	O	O			1			(E)RING-SNAP (D)RING (F)ANNEAU (S)ANILLO	
	08684580	.	A	B	B	B	O	O	O			1				

ENG(ENGINE)	T/A(TRANSAXLE)	BODY TYPE
Y = 1.5SOHC 6 = 1.6DOHC . = COMMON	M = MANUAL T/A A = AUTOMATIC T/A . = COMMON	4 N = 4 DOOR NOTCHBACK 3 H = 3 DOOR HATCHBACK 5 H = 5 DOOR HATCHBACK

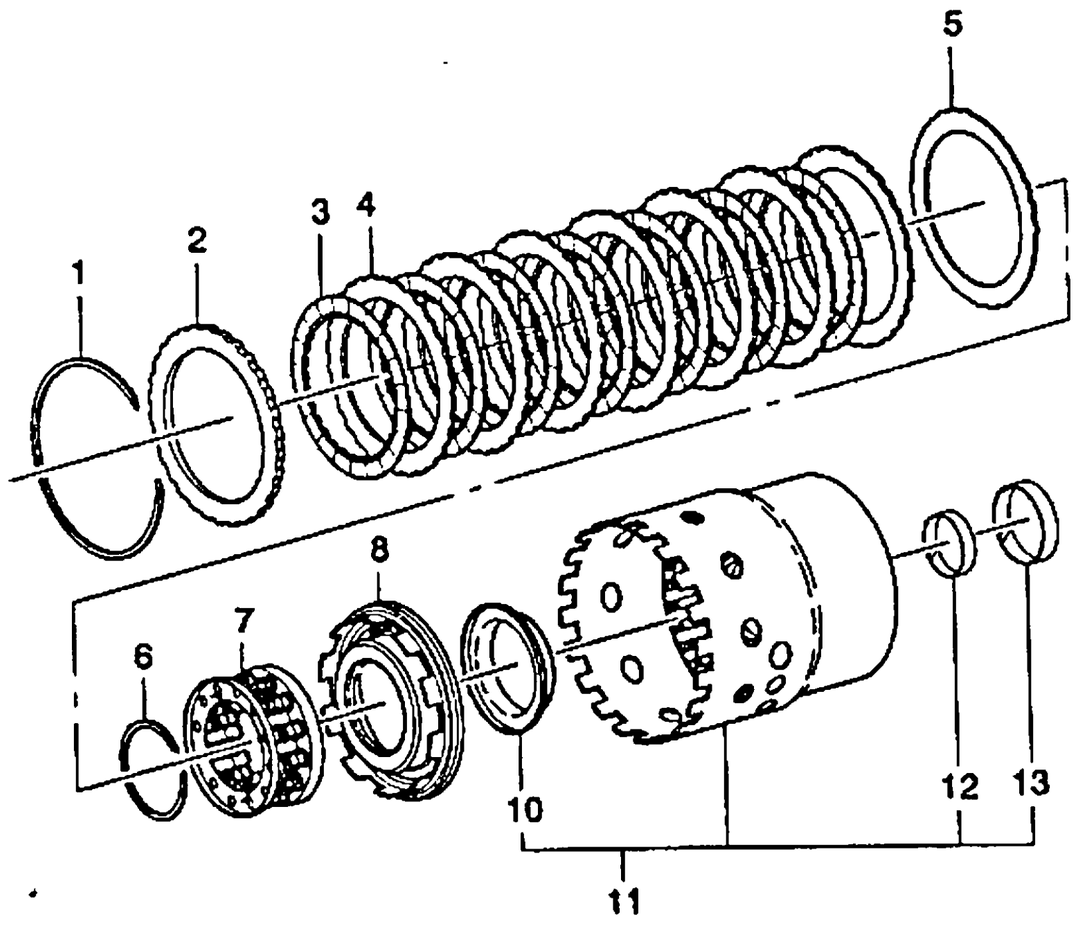

KEY NO. ITC	PART NO	MODEL ENG	MODEL T/A	BODY 4N	BODY 3H	BODY 5H	LEVEL S	LEVEL SE	LEVEL SX	OPTION	L/R	QTY	EFFECTIVE DATE FROM	EFFECTIVE DATE TO	REMARKS	P/CODE
[01]		(E)RING-SNAP (D)RING									(F)ANNEAU (S)ANILLO					
	08684893	.	A	B	B	B	O	O	O			1				
[02]		(E)PLATE-FWD CLUTCH(BACK'G) (D)PLATTE,SCHEIBEN-KUPPLUNG									(F)PLAQUE-EMBRAYAGE A DISQUE (S)PLACA-EMBRAGUE DISCO					
	24200595	.	A	B	B	B	O	O	O			1				
[03]		(E)PLATE-FWD CLUTCH(FIBER) (D)PLATTE,SCHEIBEN-KUPPLUNG									(F)PLAQUE-EMBRAYAGE A DISQUE (S)PLACA-EMBRAGUE DISCO					
	08684445	.	A	B	B	B	O	O	O			7				
[04]		(E)PLATE-FWD CLUTCH(STEEL) (D)PLATTE,SCHEIBEN-KUPPLUNG									(F)PLAQUE-EMBRAYAGE A DISQUE (S)PLACA-EMBRAGUE DISCO					
	08684444	.	A	B	B	B	O	O	O			7				
[05]		(E)PLATE-FWD CLUTCH(WAVED) (D)PLATTE,SCHEIBEN-KUPPLUNG									(F)PLAQUE-EMBRAYAGE A DISQUE (S)PLACA-EMBRAGUE DISCO					
	24200467	.	A	B	B	B	O	O	O			1				
[06]		(E)RING-SNAP (D)RING									(F)ANNEAU (S)ANILLO					
	08684443	.	A	B	B	B	O	O	O			1				
[07]		(E)SPRING (D)FEDERUNG									(F)RESSORT (S)RESORTE					
	08684712	.	A	B	B	B	O	O	O			1				
	Y 24208652	.	A	B	B	B	O	O	O			1				
[08]		(E)PISTON A-FWD CLUTCH (D)KOLBEN									(F)PISTON (S)PISTON					
	24208641	.	A	B	B	B	O	O	O			1				
[10]		(E)SEAL & SLEEVE A (D)DICHTUNG									(F)JOINT (S)SELLO					
	24208642	.	A	B	B	B	O	O	O			1				

ENG(ENGINE)	T/A(TRANSAXLE)	BODY TYPE
Y = 1.5SOHC 6 = 1.6DOHC . = COMMON	M = MANUAL T/A A = AUTOMATIC T/A . = COMMON	4 N = 4 DOOR NOTCHBACK 3 H = 3 DOOR HATCHBACK 5 H = 5 DOOR HATCHBACK

3533 FORWARD CLUTCH ASSEMBLY

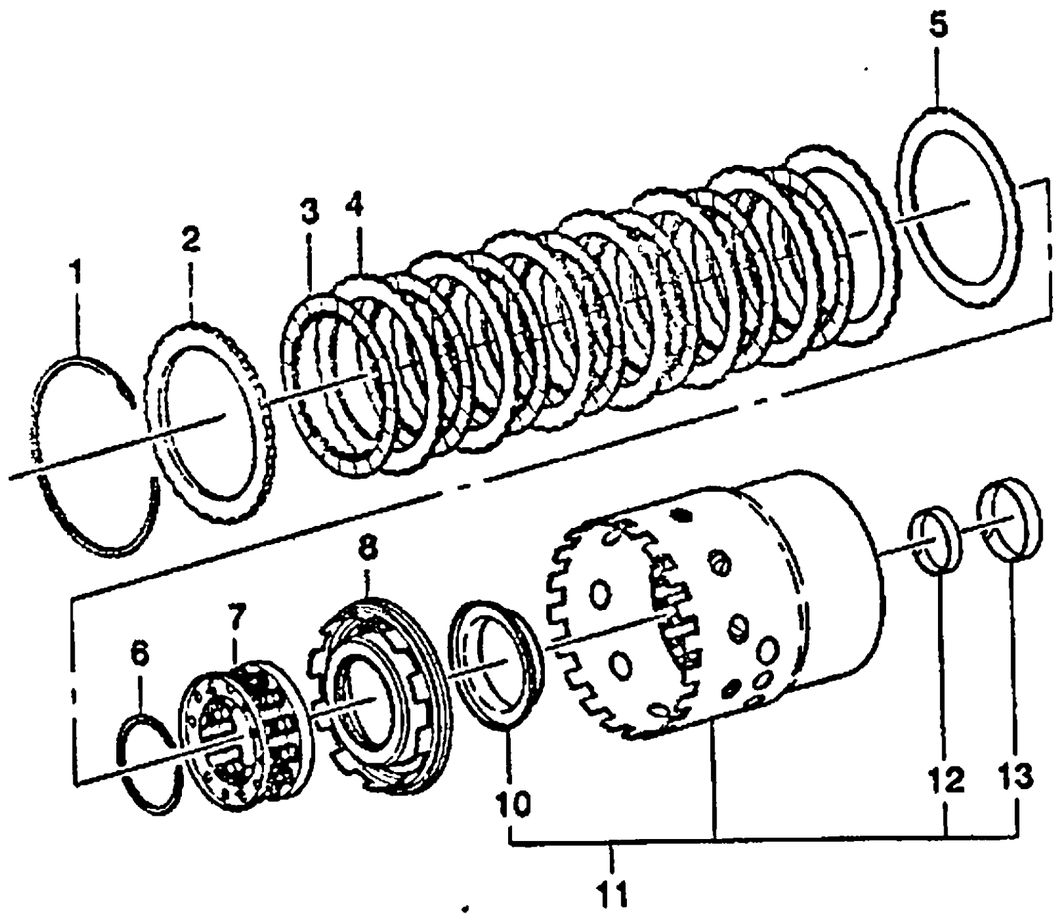

KEY NO. ITC	PART NO	MODEL ENG	MODEL T/A	MODEL BODY 4N	MODEL BODY 3H	MODEL BODY 5H	MODEL LEVEL S	MODEL LEVEL SE	MODEL LEVEL SX	OPTION	L/R	QTY	EFFECTIVE DATE FROM	EFFECTIVE DATE TO	REMARKS	P/CODE
[11]	24208640	.	A	B	B	B	O	O	O			1			(E)HOUSING-FWD CLUTCH (D)GEHÄUSE (F)LOGEMENT (S)CARCASA	
[12]	08684390	.	A	B	B	B	O	O	O			1			(E)BUSHING (D)LAGERFUTTER (F)MANCHON (S)BUJE	
[13]	08684389	.	A	B	B	B	O	O	O			1			(E)BUSHING (D)LAGERFUTTER (F)MANCHON (S)BUJE	

ENG(ENGINE)	T/A(TRANSAXLE)	BODY TYPE
Y = 1.5SOHC	M = MANUAL T/A	4 N = 4 DOOR NOTCHBACK
6 = 1.6DOHC	A = AUTOMATIC T/A	3 H = 3 DOOR HATCHBACK
. = COMMON	. = COMMON	5 H = 5 DOOR HATCHBACK

3535 FORWARD CLUTCH SUPPORT ASSEMBLY

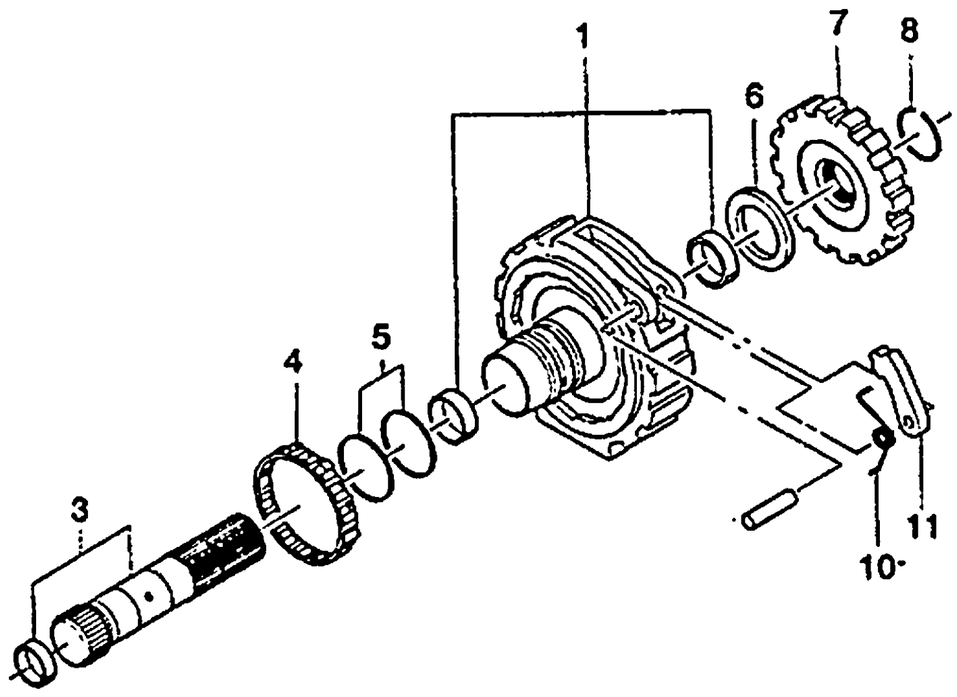

KEY NO. ITC	PART NO	MODEL ENG	MODEL T/A	MODEL BODY 4N	MODEL BODY 3H	MODEL BODY 5H	MODEL LEVEL S	MODEL LEVEL SE	MODEL LEVEL SX	OPTION	L/R	QTY	EFFECTIVE DATE FROM	EFFECTIVE DATE TO	REMARKS	P/CODE
[01]		(E)SUPPORT A-FORWARD CLUTCH (D)TRÄGER									(F)SUPPORT (S)SOPORTE					
	24204222														NOT APPLIED	
	24204810	.	A	B	B	B	O	O	O			1				
[03]		(E)SHAFT-FINAL DRIVE SUN (D)SPINDEL									(F)ARBRE (S)EJE					
	24201609	.	A	B	B	B	O	O	O			1				
[04]		(E)ROLLER-FWD CLUTCH (D)ROLLE									(F)ROULEAU (S)RODILLO					
	00930694	.	A	B	B	B	O	O	O			1				
[05]		(E)RING-OIL SEAL (D)RING									(F)ANNEAU (S)ANILLO					
	24204223	.	A	B	B	B	O	O	O			2				
[06]		(E)BEARING-THRUST (D)KUGELLAGER									(F)ROULEMENT (S)COJINET					
	24200246	.	A	B	B	B	O	O	O			1				
[07]		(E)GEAR-PARK LOCK (D)GETRIEBE									(F)ENGRENAGE (S)ENGRANAJE					
	24204708	.	A	B	B	B	O	O	O			1				
[08]		(E)RING-SNAP (D)RING									(F)ANNEAU (S)ANILLO					
	08684580	.	A	B	B	B	O	O	O			1				
[10]		(E)SPRING-PARK PAWL (D)FEDERUNG									(F)RESSORT (S)RESORTE					
	24200129	.	A	B	B	B	O	O	O			1				
[11]		(E)PAWL-PARK (D)SPERRHACKEN									(F)CLIQUET (S)RETEN					
	24200797	.	A	B	B	B	O	O	O			1				

ENG(ENGINE)	T/A(TRANSAXLE)	BODY TYPE
Y = 1.5SOHC 6 = 1.6DOHC . = COMMON	M = MANUAL T/A A = AUTOMATIC T/A . = COMMON	4 N = 4 DOOR NOTCHBACK 3 H = 3 DOOR HATCHBACK 5 H = 5 DOOR HATCHBACK

3550 DRIVEN SPROCKET SUPPORT ASSEMBLY

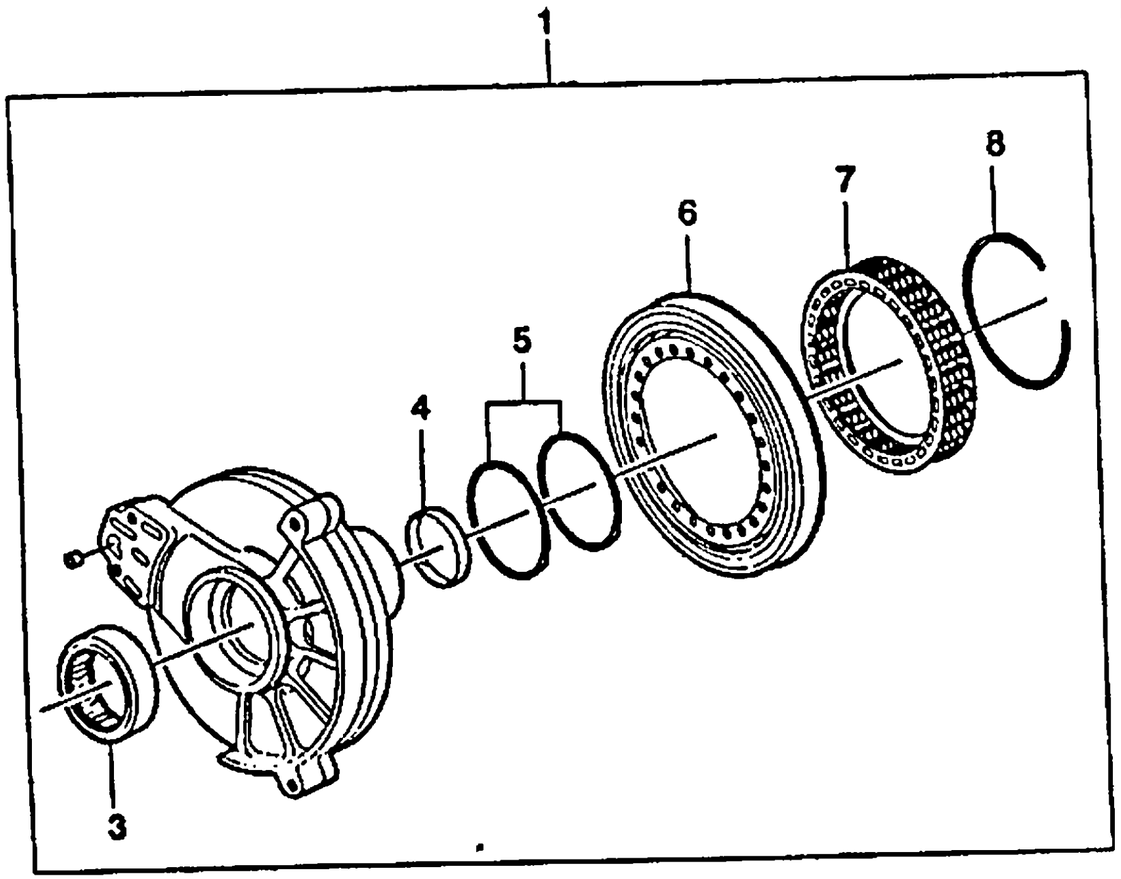

KEY NO. ITC	PART NO	MODEL ENG	T/A	BODY 4N	3H	5H	LEVEL S	SE	SX	OPTION	L/R	QTY	EFFECTIVE DATE FROM	TO	REMARKS	P/CODE
[01]	24207143	(E)SUPPORT A-DRIVEN SPROCKET (D)TRÄGER	.	A	B	B	B	O	O	O		(F)SUPPORT (S)SOPORTE 1				
[03]	08631190	(E)BEARING-THRUST (D)KUGELLAGER	.	A	B	B	B	O	O	O		(F)ROULEMENT (S)COJINET 1				
[04]	08684330	(E)BUSHING-DRVN SPROCKET SUP (D)LAGERFUTTER	.	A	B	B	B	O	O	O		(F)MANCHON (S)BUJE 1				
[05]	24201613	(E)SEAL (D)DICHTUNG	.	A	B	B	B	O	O	O		(F)JOINT (S)SELLO 2				
[06]	24205042	(E)PISTON-2ND CLUTCH (D)KOLBEN	.	A	B	B	B	O	O	O		(F)PISTON (S)PISTON 1				
[07]	08684327	(E)SPRING-2ND CLUTCH (D)FEDERUNG	.	A	B	B	B	O	O	O		(F)RESSORT (S)RESORTE 1				
[08]	08684325	(E)RING-2ND CLUTCH SPRING RE (D)RING	.	A	B	B	B	O	O	O		(F)ANNEAU (S)ANILLO 1				

ENG(ENGINE)	T/A(TRANSAXLE)	BODY TYPE
Y = 1.5SOHC 6 = 1.6DOHC . = COMMON	M = MANUAL T/A A = AUTOMATIC T/A . = COMMON	4 N = 4 DOOR NOTCHBACK 3 H = 3 DOOR HATCHBACK 5 H = 5 DOOR HATCHBACK

3570 PARK LOCK AND DETENT LEVER

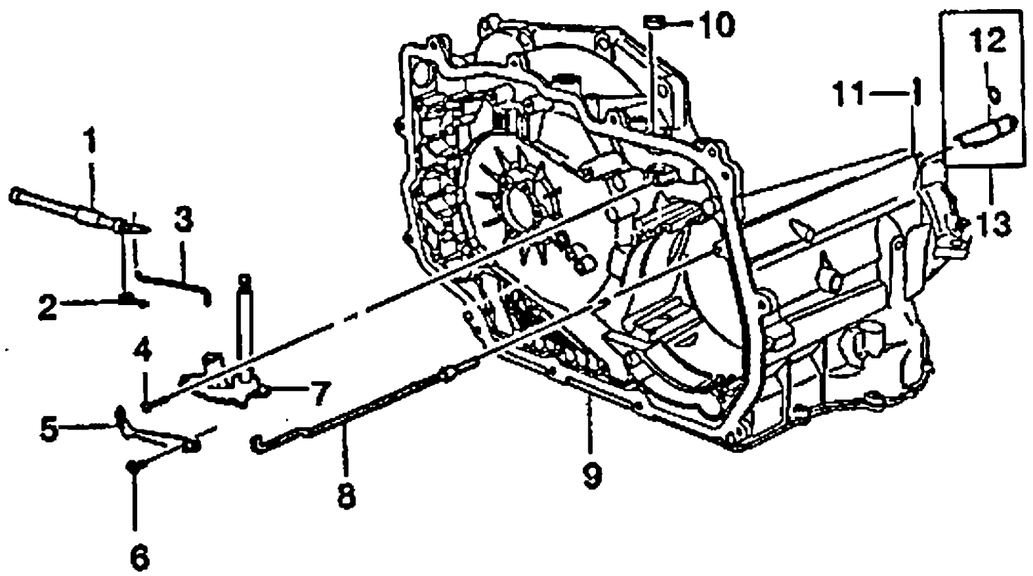

KEY NO. ITC	PART NO	MODEL ENG	T/A	BODY 4N	3H	5H	LEVEL S	SE	SX	OPTION	L/R	QTY	EFFECTIVE DATE FROM	TO	REMARKS	P/CODE
[01]	24201006	.	A	B	B	B	O	O	O		(E)VALVE-MAIN (D)VENTIL	(F)SOUPAPE (S)VALVULA	1			
[02]	24207209	.	A	B	B	B	O	O	O		(E)RETAINER (D)KLEMME,HALTERUNG	(F)ATTACHE-ARRETOIR (S)GRAPA-RETENEDOR	1			
[03]	08685147	.	A	B	B	B	O	O	O		(E)LINK-MANUAL VALVE (D)VERBINDUNG	(F)ACOUPLEMENT (S)ENLACE	1			
[04]	08685700	.	A	B	B	B	O	O	O		(E)PIN-MANUAL SHAFT (D)STIFT	(F)BROCHE (S)PASADOR	1			
[05]	24204221	.	A	B	B	B	O	O	O		(E)DETENT-MANUAL SHAFT (D)SPERRHACKEN	(F)CLIQUET (S)RETEN	1			
[06]	24200092	.	A	B	B	B	O	O	O		(E)BOLT (D)SCHRAUBE	(F)BOULON (S)PERNO	1		M6X1.0X15mm	
[07]	24203588	.	A	B	B	B	O	O	O		(E)LEVER&SHAFT A (D)HEBEL	(F)LEVIER (S)PALANCA	1			
[08]	24202424	.	A	B	B	B	O	O	O		(E)ACTUATOR-PARKING LOCK (D)BETÄTIGUNG	(F)ACTIONNEUR (S)ACTUADOR	1			
[10]	08644709	.	A	B	B	B	O	O	O		(E)SEAL-MANUAL SHAFT (D)DICHTUNG	(F)JOINT (S)SELLO	1			
[11]											(E)PIN-ACTUATOR GUIDE SPRING (D)STIFT	(F)BROCHE (S)PASADOR				

ENG(ENGINE)	T/A(TRANSAXLE)	BODY TYPE
Y = 1.5SOHC 6 = 1.6DOHC . = COMMON	M = MANUAL T/A A = AUTOMATIC T/A . = COMMON	4 N = 4 DOOR NOTCHBACK 3 H = 3 DOOR HATCHBACK 5 H = 5 DOOR HATCHBACK

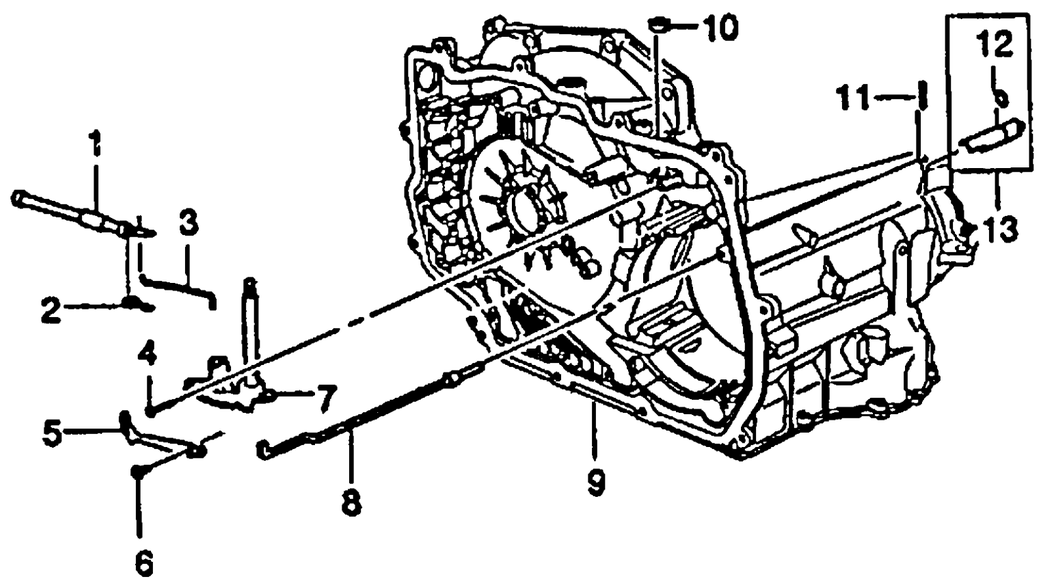

KEY NO. ITC	PART NO	MODEL ENG	T/A	BODY 4N	3H	5H	LEVEL S	SE	SX	OPTION	L/R	QTY	EFFECTIVE DATE FROM	TO	REMARKS	P/CODE
	09427406	.	A	B	B	B	O	O	O			1				
[12]	(E)SEAL-ACTUATOR GUIDE (D)DICHTUNG										(F)JOINT (S)SELLO					
	08675086	.	A	B	B	B	O	O	O			1				
[13]	(E)GUIDE A-PARK'G LOCK (D)FÜHRING										(F)GUIDE (S)GUIA					
	08675325	.	A	B	B	B	O	O	O			1				

ENG(ENGINE)	T/A(TRANSAXLE)	BODY TYPE
Y = 1.5SOHC 6 = 1.6DOHC . = COMMON	M = MANUAL T/A A = AUTOMATIC T/A . = COMMON	4 N = 4 DOOR NOTCHBACK 3 H = 3 DOOR HATCHBACK 5 H = 5 DOOR HATCHBACK

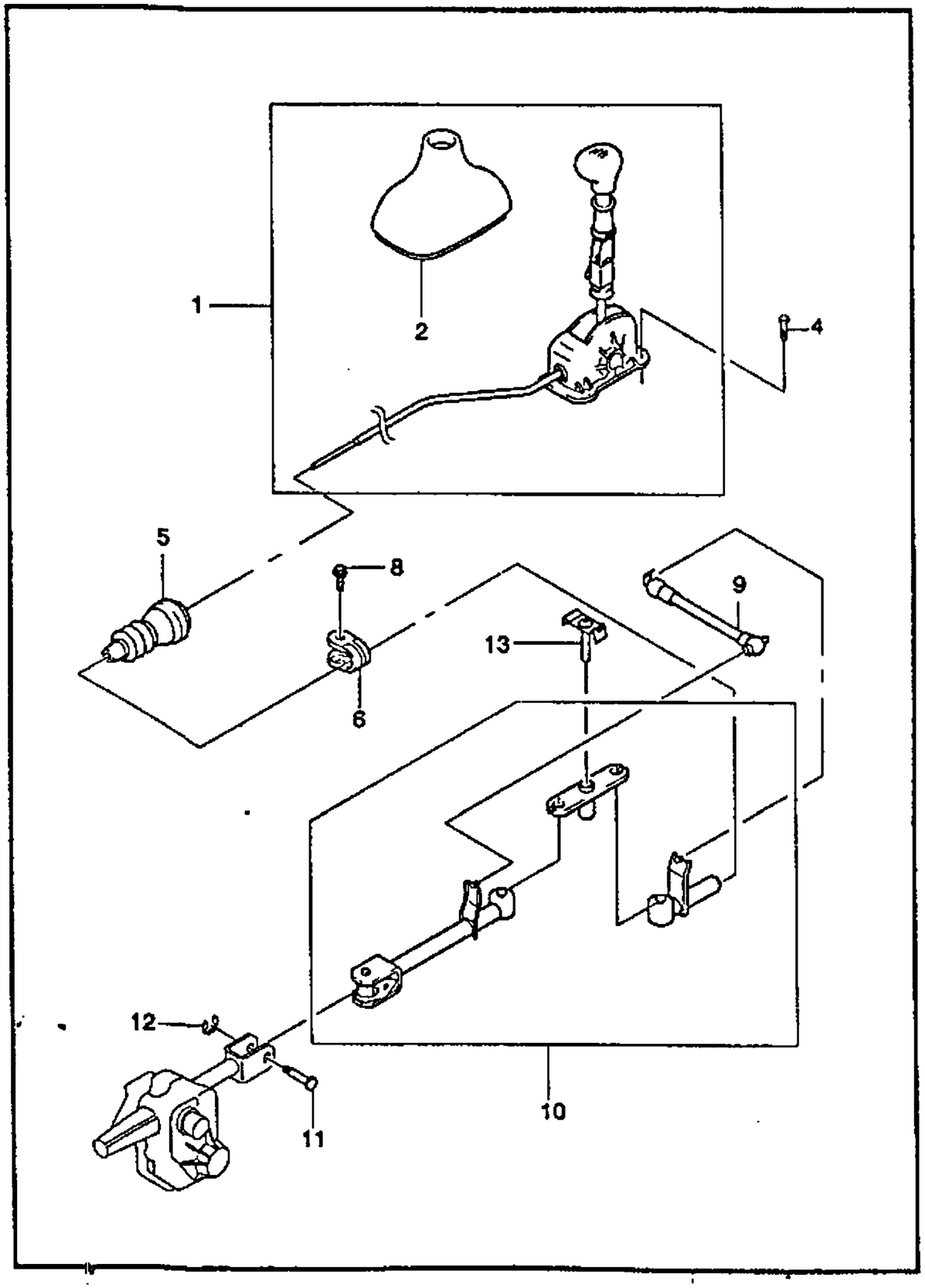

KEY NO. ITC	PART NO	MODEL ENG	MODEL T/A	MODEL BODY 4N	MODEL BODY 3H	MODEL BODY 5H	MODEL LEVEL S	MODEL LEVEL SE	MODEL LEVEL SX	OPTION	PART NAME (E)/(D)	PART NAME (F)/(S)	L/R	QTY	EFFECTIVE DATE FROM	EFFECTIVE DATE TO	REMARKS	PICODE
[01]	96244989	.	M	B	B	B	S	S	S		(E)CONTROL A-GEARSHIFT (D)STEUERUNG,GANGSCHALTUNG	(F)CONTROLE (S)CONTROL-PALANCA DE CAMBIO		1				
[02]	96303182	.	M	B	B	B	S	S	S		(E)BOOT A-CONSOLE (D)KOFFERRAUM,KONSOLE	(F)GAINE-CONSOLE (S)CAPUCHON-GABINETE		1				
[04]	09119-06002	.	M	B	B	B	S	S	S		(E)BOLT (D)SCHRAUBE	(F)BOULON (S)PERNO		4				
[05]	96133781	.	M	B	B	B	S	S	S		(E)BELLOWS A-GEARSHIFT TUBE (D)GEBLÄSE	(F)SOUFFLET-TUBE (S)FUELLE		1				
[06]	90217840	.	M	B	B	B	S	S	S		(E)CLAMP (D)KLAMMER	(F)PINCE (S)ABRAZADERA		1				
[08]	09117-08001	.	M	B	B	B	S	S	S		(E)BOLT (D)SCHRAUBE	(F)BOULON (S)PERNO		1				
[09]	90250156	.	M	B	B	B	S	S	S		(E)ROD-GEARSHIFT CONTROL (D)STAB	(F)TRINGLE (S)VARILLA-PALANCA DE CAMBIO		1				
[10]	90342949	.	M	B	B	B	S	S	S		(E)CONTROL A-GEARSHIFT GUIDE (D)STEUERUNG,GANGSCHALTUNGS	(F)CONTROLE-GUIDE (S)CONTROL-GUIA		1				
[11]	09208-08001	.	M	B	B	B	S	S	S		(E)PIN (D)STIFT	(F)BROCHE (S)PASADOR		1				
[12]											(E)CLIP-RETAINING (D)KLEMME	(F)ATTACHE (S)GRAPA						

ENG(ENGINE)	T/A(TRANSAXLE)	BODY TYPE
Y = 1.5SOHC 6 = 1.6DOHC . = COMMON	M = MANUAL T/A A = AUTOMATIC T/A . = COMMON	4 N = 4 DOOR NOTCHBACK 3 H = 3 DOOR HATCHBACK 5 H = 5 DOOR HATCHBACK

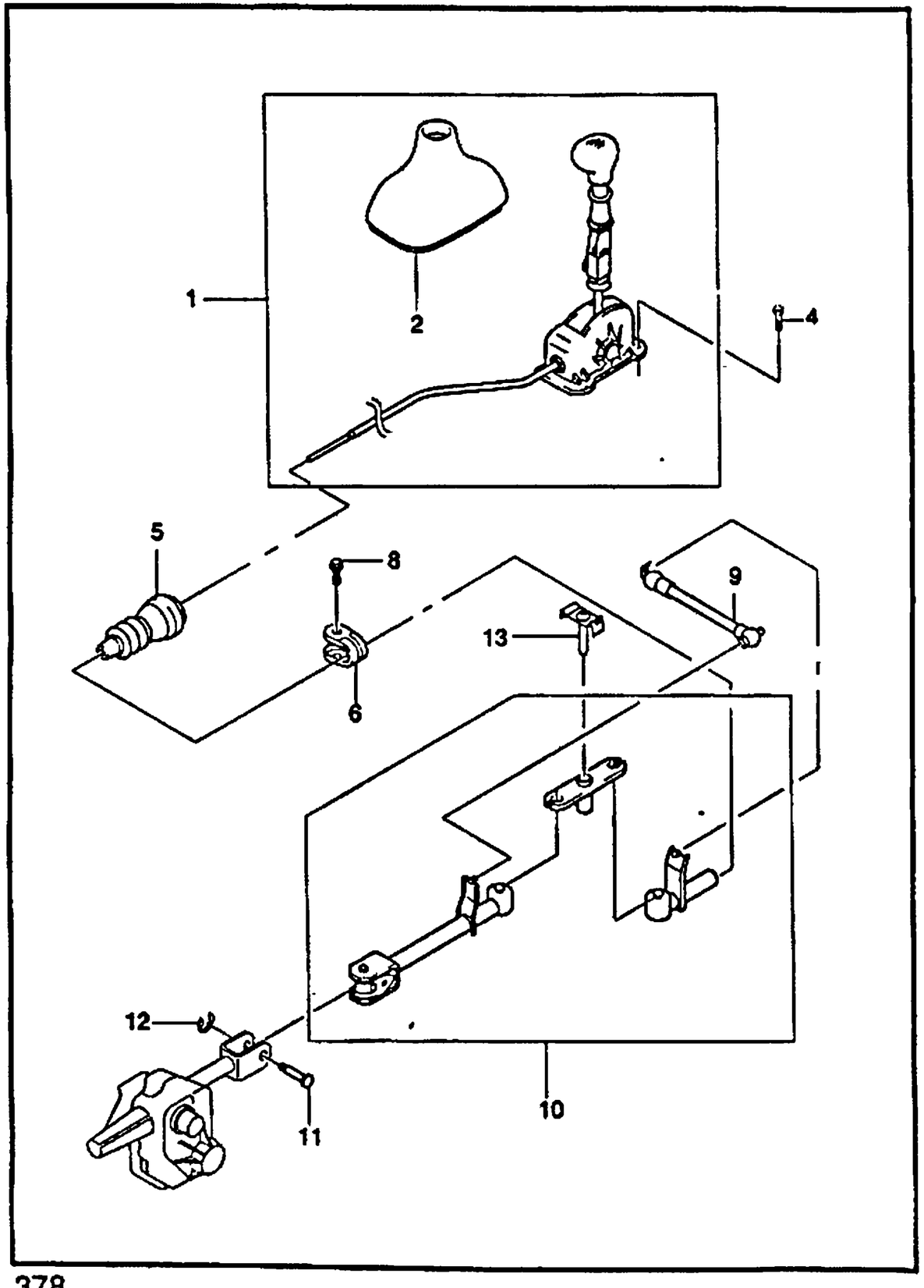

KEY NO.		PART NAME															
ITC	PART NO	MODEL								OPTION	L/R	QTY	EFFECTIVE DATE		REMARKS	P/CODE
		ENG	T/A	BODY			LEVEL						FROM	TO		
				4N	3H	6H	S	SE	SX							
	08335-11069	.	M	B	B	B	S	S	S			1				
	[13]	(E)BOLT (D)SCHRAUBE										(F)BOULON (S)PERNO				
	96182212	.	M	B	B	B	S	S	S			1				

ENG(ENGINE)	T/A(TRANSAXLE)	BODY TYPE
Y = 1.5SOHC 6 = 1.6DOHC . = COMMON	M = MANUAL T/A A = AUTOMATIC T/A . = COMMON	4 N = 4 DOOR NOTCHBACK 3 H = 3 DOOR HATCHBACK 5 H = 5 DOOR HATCHBACK

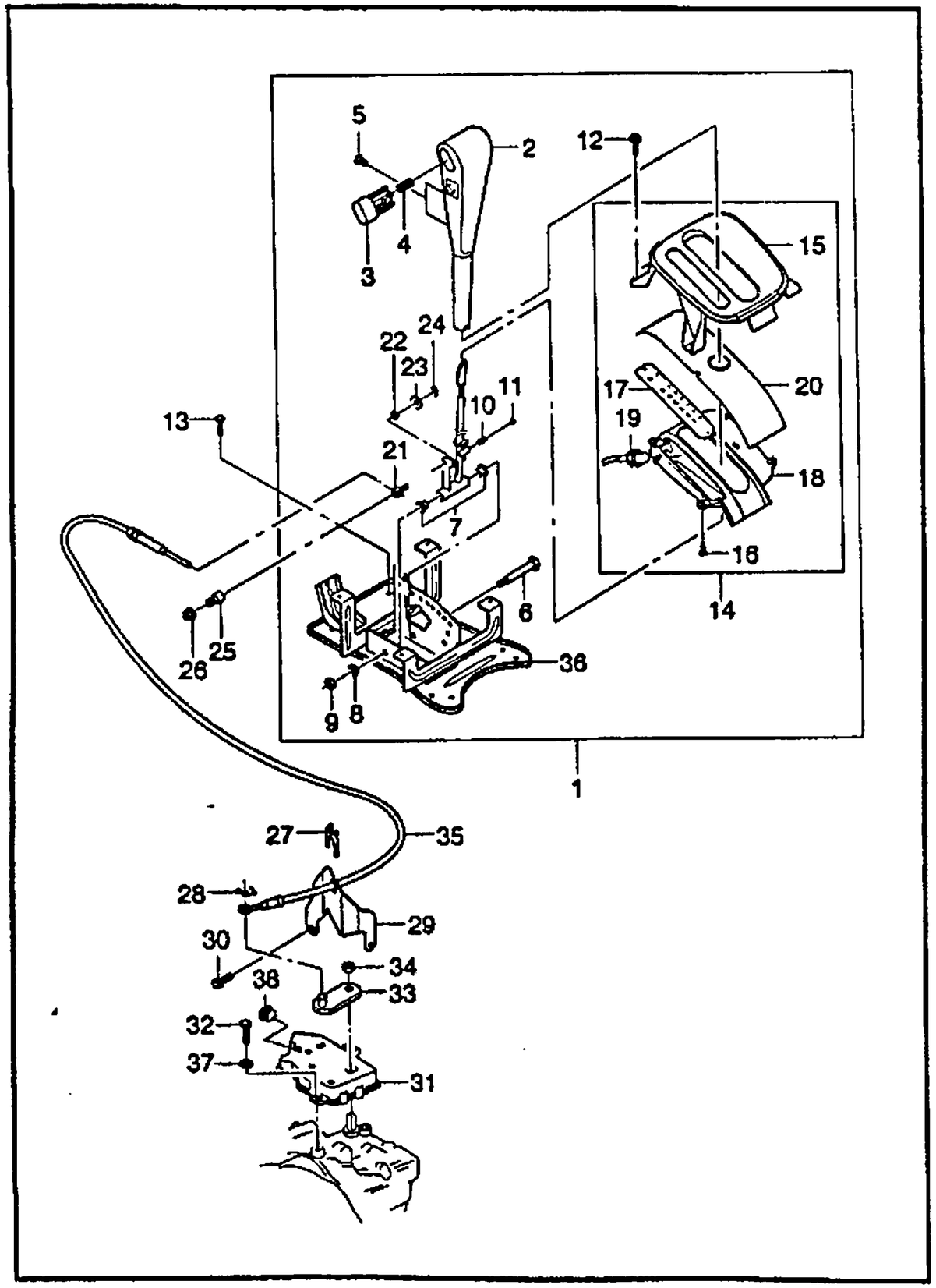

KEY NO. ITC	PART NO	MODEL ENG	T/A	BODY 4N	3H	5H	LEVEL S	SE	SX	OPTION	L/R	QTY	EFFECTIVE DATE FROM	TO	REMARKS	P/CODE
[01]	96228515	.	A	B	B	B	O	O	O			1			(E)CONTROL A-SELECTOR (D)STEUERUNG,WÄHLER (F)CONTROLE-SELECTEUR (S)CONTROL-SELECTOR	
[02]	96242557	.	A	B	B	B	O	O	O			1			(E)HANDLE A-SELECTOR CONTROL (D)HENKEL (F)POIGNEE (S)MANIJA	
[03]	96228514	.	A	B	B	B	O	O	O			1			(E)BUTTON A-SELECTOR CONTROL (D)KNOPF (F)BOUTON (S)BOTON	
[04]	09440-12001	.	A	B	B	B	O	O	O			1			(E)SPRING (D)FEDERUNG (F)RESSORT (S)RESORTE	
[05]	09127-04003	.	A	B	B	B	O	O	O			2			(E)SCREW (D)SCHRAUBE (F)VIS (S)TORNILLO	
[06]	96228503	.	A	B	B	B	O	O	O			1			(E)PIECE (D)TEIL (F)PIECE (S)PIEZA	
[07]	09306-10004	.	A	B	B	B	O	O	O			2			(E)BUSHING (D)LAGERFUTTER (F)MANCHON (S)BUJE DE BOQUILLA	
[08]	08321-31083	.	A	B	B	B	O	O	O			1			(E)WASHER-SPRING (D)DICHTUNGSRING (F)RONDELLE (S)ARANDELA	
[09]	08310-22083	.	A	B	B	B	O	O	O			1			(E)NUT-HEXAGON (D)MUTTER (F)ECROU (S)TUERCA	
[10]															(E)SPRING (D)FEDERUNG (F)RESSORT (S)RESORTE	

ENG(ENGINE)	T/A(TRANSAXLE)	BODY TYPE
Y = 1.5SOHC 6 = 1.6DOHC . = COMMON	M = MANUAL T/A A = AUTOMATIC T/A . = COMMON	4 N = 4 DOOR NOTCHBACK 3 H = 3 DOOR HATCHBACK 5 H = 5 DOOR HATCHBACK

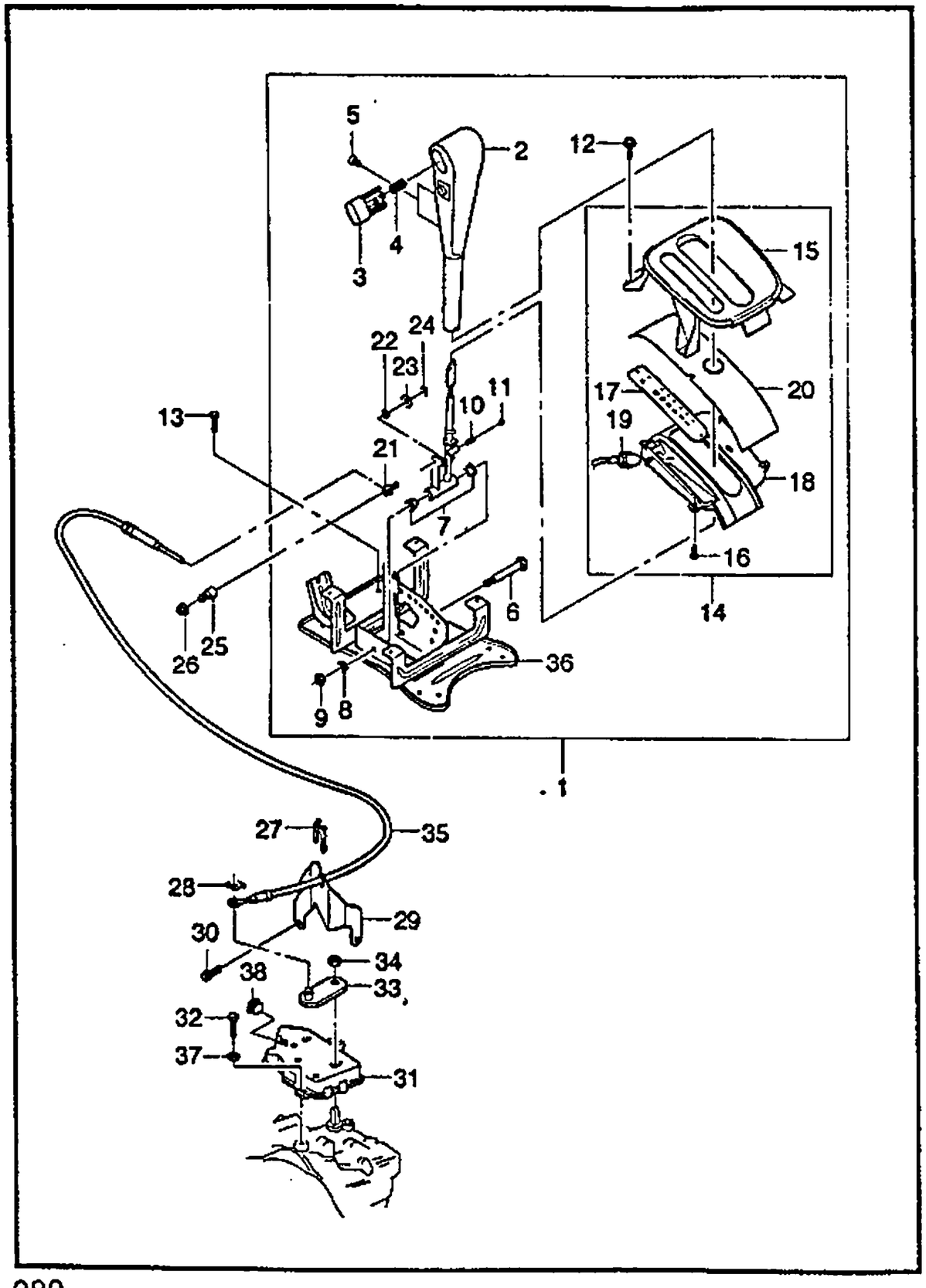

KEY NO. ITC	PART NO	MODEL ENG	T/A	BODY 4N	3H	5H	LEVEL S	SE	SX	OPTION	L/R	QTY	EFFECTIVE DATE FROM	TO	REMARKS	PICODE
[11]	09440-07001	.	A	B	B	B	O	O	O			1			(E)BALL-STEEL (D)KUGEL (F)BOULE (S)BOLA	
[12]	06112-10004	.	A	B	B	B	O	O	O			1			(E)SCREW (D)SCHRAUBE (F)VIS (S)TORNILLO	
[13]	02114-14108	.	A	B	B	B	O	O	O			4			(E)BOLT (D)SCHRAUBE (F)BOULON (S)PERNO	
[14]	09119-06002	.	A	B	B	B	O	O	O			4			(E)CAP A-FRONT CONSOLE (D)DECKEL,KONSOLE,AUTOM. (F)CHAPEAU-CONSOLE,AUTO (S)TAPA-CONSOLA,AUTO	
[15]	96236784	.	A	B	B	B	O	O	O			1			(E)CAP-CONSOLE,UPPER (D)DECKEL,KONSOLE,AUTOM. (F)CHAPEAU-CONSOLE,AUTO (S)TAPA-CONSOLA,AUTO	
[16]	96236787	.	A	B	B	B	O	O	O			1			(E)SCREW-TAPPING (D)SCHRAUBE (F)VIS (S)TORNILLO	
[17]	03140-42096	.	A	B	B	B	O	O	O			4			(E)SCALE-CONSOLE (D)MAß,KONSOLE (F)BALANCE-CONSOLE (S)ESCALA-CONSOLA	
[18]	96218104	.	A	B	B	B	O	O	O			1			(E)CAP-CONSOLE,LOWER (D)DECKEL,KONSOLE,AUTOM. (F)CHAPEAU-CONSOLE,AUTO (S)TAPA-CONSOLA,AUTO	
[19]	96236790	.	A	B	B	B	O	O	O			1			(E)LAMP A-SCALE CONSOLE AUTO (D)LAMPE,VORDERE KONSOLE (F)LAMPE-CONSOLE AVANT (S)LAMPARA	
	96169967	.	A	B	B	B	O	O	O			1				

ENG(ENGINE)	T/A(TRANSAXLE)	BODY TYPE
Y = 1.5SOHC 6 = 1.6DOHC . = COMMON	M = MANUAL T/A A = AUTOMATIC T/A . = COMMON	4 N = 4 DOOR NOTCHBACK 3 H = 3 DOOR HATCHBACK 5 H = 5 DOOR HATCHBACK

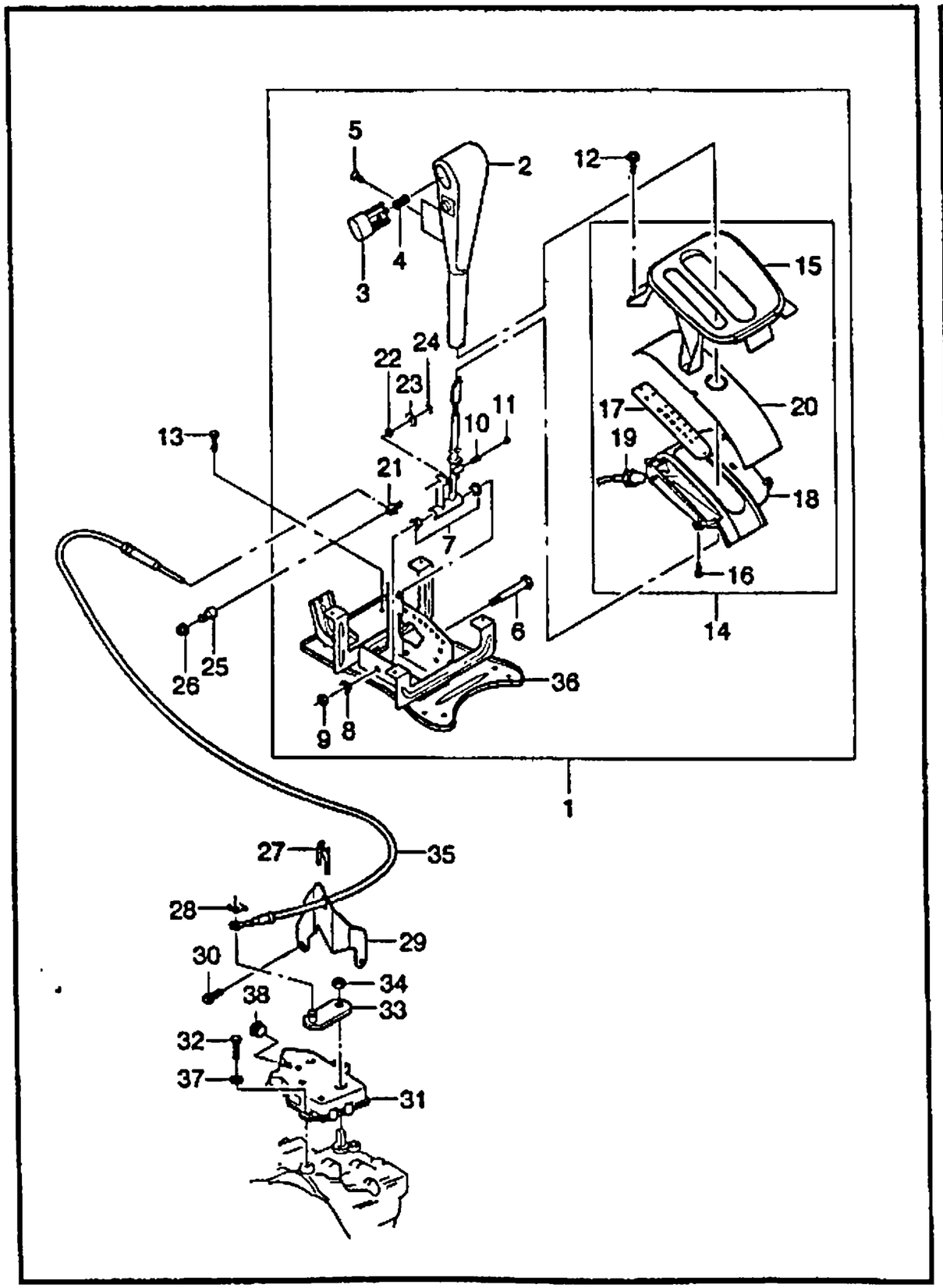

KEY NO. ITC	PART NO	MODEL ENG	T/A	BODY 4N	3H	5H	LEVEL S	SE	SX	OPTION	L/R	QTY	EFFECTIVE DATE FROM	TO	REMARKS	P/CODE
[20]	96218105	(E)SLIDER-CONSOLE (D)GLEIT,KONSOLE	.	A	B	B	B	O	O	O	(F)GLISSIERE-CONSOLE (S)FRENILLO-CONSOLA	1				
[21]	96155676	(E)PIECE-SELECTOR CONT GUIDE (D)TEIL,FÜHRUNGS	.	A	B	B	B	O	O	O	(F)PIECE-GUIDE (S)PIEZA-GUIA	1				
[22]	09164-08001	(E)WASHER-CONICAL SPRING (D)DICHTUNGSRING	.	A	B	B	B	O	O	O	(F)RONDELLE (S)ARANDELA	1				
[23]	09160-08006	(E)WASHER-PLAIN (D)DICHTUNGSRING	.	A	B	B	B	O	O	O	(F)RONDELLE (S)ARANDELA	1				
[24]	09383-06002	(E)E RING (D)RING	.	A	B	B	B	O	O	O	(F)ANNEAU (S)ANILLO	1				
[25]	90121099	(E)PIECE-CLAMPING (D)TEIL	.	A	B	B	B	O	O	O	(F)PIECE (S)PIEZA	1				
[26]	08316-28063	(E)NUT-HEXAGON FLANGE (D)MUTTER	.	A	B	B	B	O	O	O	(F)ECROU (S)TUERCA	1				
[27]	09383-19005	(E)E RING (D)RING	.	A	B	B	B	O	O	O	(F)ANNEAU (S)ANILLO	1				
[28]	09383-06001	(E)E RING (D)RING	.	A	B	B	B	O	O	O	(F)ANNEAU (S)ANILLO	1				
[29]		(E)FASTENER-SELECTOR CABLE (D)BEFESTIGUNG,KABEL WAHL									(F)ATTACHE-CABLE SELECT (S)GRAPA					

ENG(ENGINE)	T/A(TRANSAXLE)	BODY TYPE
Y = 1.5SOHC 6 = 1.6DOHC . = COMMON	M = MANUAL T/A A = AUTOMATIC T/A . = COMMON	4 N = 4 DOOR NOTCHBACK 3 H = 3 DOOR HATCHBACK 5 H = 5 DOOR HATCHBACK

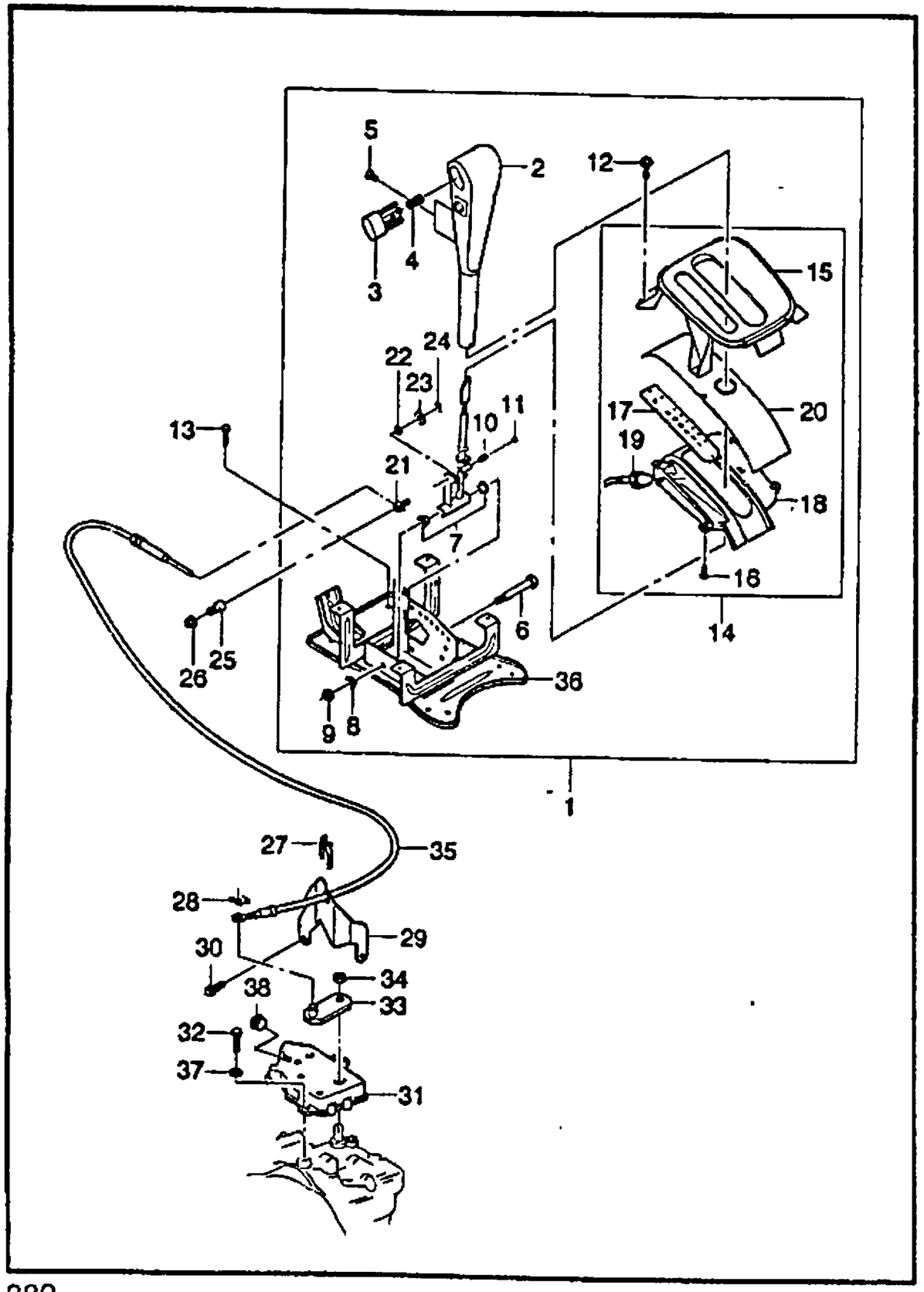

KEY NO. ITC	PART NO	MODEL ENG	T/A	BODY 4N	3H	5H	LEVEL S	SE	SX	OPTION	L/R	QTY	EFFECTIVE DATE FROM	TO	REMARKS	P/CODE
	96226013	.	A	B	B	B	O	O	O			1				
[30]		(E)BOLT (D)SCHRAUBE										(F)BOULON (S)PERNO				
	01130-08203	.	A	B	B	B	O	O	O			1				
[31]		(E)SWITCH A-NSBU (D)SCHALTER										(F)COMMUTATEUR (S)INTERRUPTOR-NSBU SELLADO				
	11516166	.	A	B	B	B	O	O	O			1		970602		
	Y 12450161	.	A	B	B	B	O	O	O			1	970602			
[32]		(E)BOLT-HEXAGON (D)SCHRAUBE										(F)BOULON (S)PERNO				
	01130-08203	.	A	B	B	B	O	O	O			1				
[33]		(E)LEVER A-TRANSMISSION (D)HEBEL,TRIEBWELLE										(F)LEVIER-TRANSMISSION (S)PALANCA-TRANSMISION				
	96182099	.	A	B	B	B	O	O	O			1				
[34]		(E)NUT (D)MUTTER										(F)ECROU (S)TUERCA				
	09159-10003	.	A	B	B	B	O	O	O			1				
[35]		(E)CABLE A-SELECTOR CONTROL (D)KABEL,WÄHLER										(F)CABLE-CONTROLE SELECTEUR (S)CABLE-CONTROL DE SELECTOR				
	96242556	.	A	B	B	B	O	O	O			1				TG
[36]		(E)PLATE A-BASE (D)PLATTE,BODEN										(F)PLAQUE-BASE (S)PLACA-BASE				
	96228658	.	A	B	B	B	O	O	O			1				
[37]		(E)WASHER-PLAIN (D)DICHTUNGSRING										(F)RONDELLE (S)ARANDELA				
	09160-08004	.	A	B	B	B	O	O	O			1				
[38]		(E)PLUG-NSBU SWITCH (D)STÖPSEL										(F)BOUCHON (S)TAPON				

ENG(ENGINE)	T/A(TRANSAXLE)	BODY TYPE
Y = 1.5SOHC 6 = 1.6DOHC . = COMMON	M = MANUAL T/A A = AUTOMATIC T/A . = COMMON	4 N = 4 DOOR NOTCHBACK 3 H = 3 DOOR HATCHBACK 5 H = 5 DOOR HATCHBACK

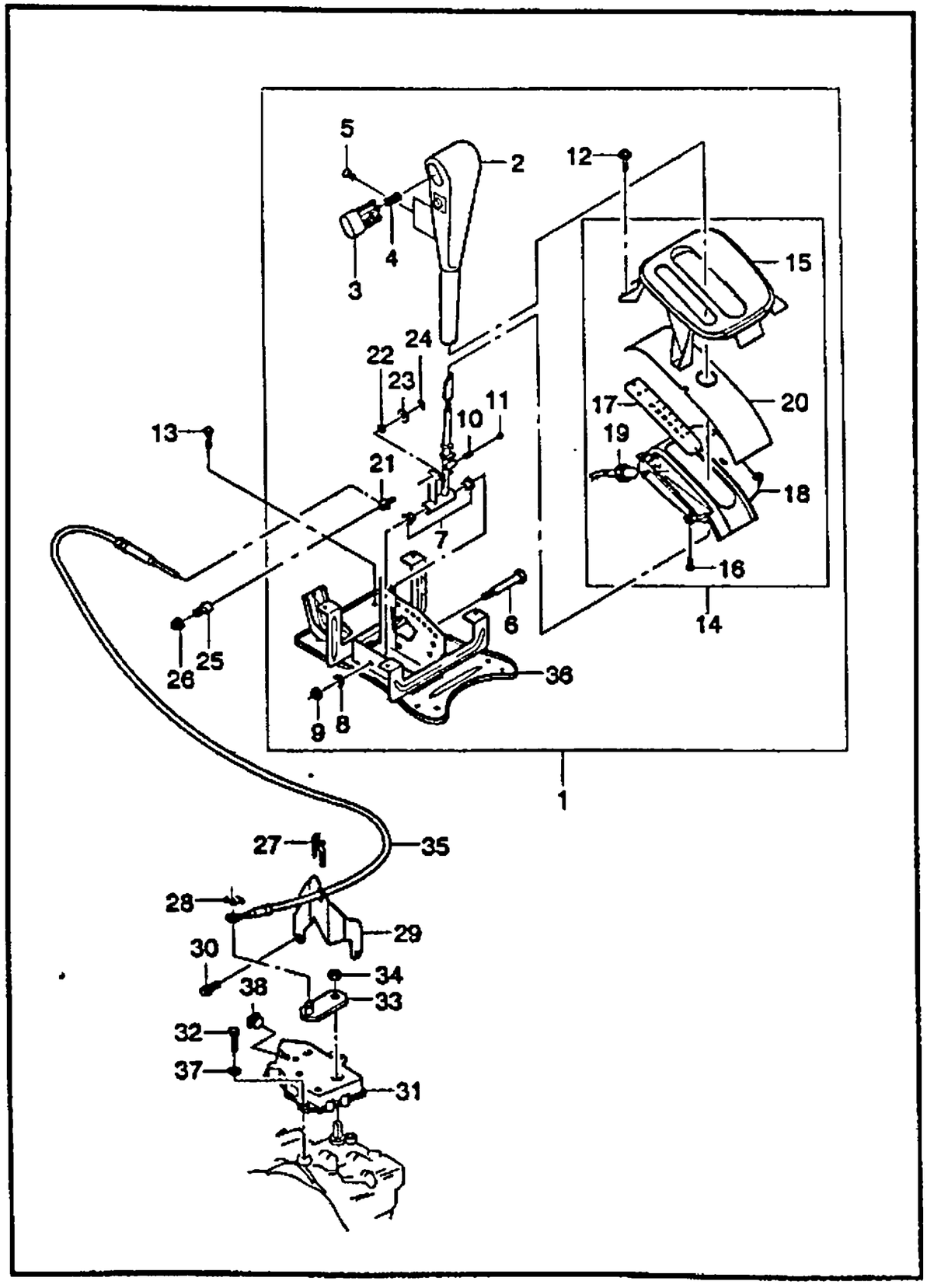

KEY NO. ITC	PART NO	MODEL ENG	T/A	BODY 4N	3H	5H	LEVEL S	SE	SX	OPTION	L/R	QTY	EFFECTIVE DATE FROM	TO	REMARKS	P/CODE
	96245741	.	A	B	B	B	O	O	O			1				

ENG(ENGINE)	T/A(TRANSAXLE)	BODY TYPE
Y = 1.5SOHC 6 = 1.6DOHC . = COMMON	M = MANUAL T/A A = AUTOMATIC T/A . = COMMON	4 N = 4 DOOR NOTCHBACK 3 H = 3 DOOR HATCHBACK 5 H = 5 DOOR HATCHBACK

4 CHASSIS

4110 AXLE SHAFT UNIT
4120 AXLE SHAFT PARTS(M/T)
4121 AXLE SHAFT PARTS(A/T)
4130 KNUCKLE&HUB
4140 FRONT SHOCK ABSORBER
4150 CONTROL ARM
4310 REAR AXLE
4320 REAR SHOCK ABSORBER
4510 FRONT BRAKE
4520 REAR BRAKE
4530 PARKING BRAKE
4610 MASTER BRAKE UNIT
4620 MASTER CYLINDER&BOOSTER
4630 MASTER BRAKE MOUNT
4640 BRAKE PEDAL(LHD)
4650 BRAKE PIPE(NON ABS)
4651 BRAKE PIPE(ABS)
4710 ANTI LOCK BRAKE SYSTEM
4720 HYDRAULIC MODULATOR
4810 STEERING WHEEL
4820 STEERING COLUMN COVER
4830 NON TILT STEERING COLUMN
4831 TILTABLE STEERING COLUMN
4910 STEERING GEAR UNIT
4920 MANUAL STEERING GEAR PARTS(LHD)
4930 POWER STEERING GEAR PARTS
4940 TIE ROD
4950 POWER STEERING PIPE LINE

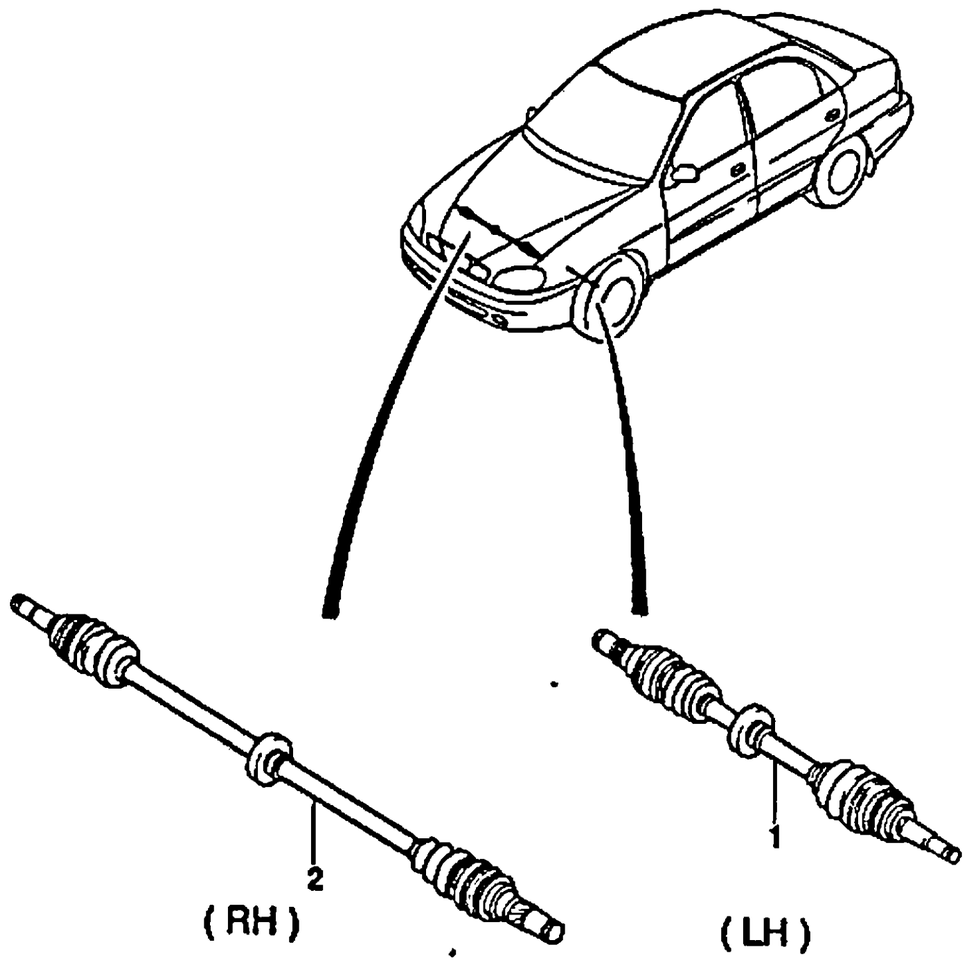

KEY NO.		PART NAME														
ITC	PART NO	MODEL								OPTION	L/R	QTY	EFFECTIVE DATE		REMARKS	P/CODE
		ENG	T/A	BODY			LEVEL						FROM	TO		
				4N	3H	5H	S	SE	SX							
[01]		(E)SHAFT A-FRT AXLE (D)SPINDEL,VORDER-ACHSE									(F)ARBRE-PONT AVANT (S)EJE-FRENTE					
	96229091	Y	M	B	B	B	S	S	S	-JL9	LH	1		970422		SM
Y	96251135	Y	M	B	B	B	S	S	S	-JL9	LH	1	970422			BR
	96183016	Y	M	B	B	B	.	O	O	&JL9	LH	1		970422		UM
Y	96251184	Y	M	B	B	B	.	O	O	&JL9	LH	1	970422			AV
	96238233	Y	A	B	B	B	O	O	O	-JL9	LH	1				LC
	96225969	Y	A	B	B	B	.	O	O	&JL9	LH	1				LQ
	96229093	6	M	B	B	B	.	.	O	-JL9	LH	1		970422		WM
Y	96251183	6	M	B	B	B	.	.	O	-JL9	LH	1	970422			AU
	96229095	6	M	B	B	B	.	.	O	&JL9	LH	1		970422		YM
Y	96241975	6	M	B	B	B	.	.	O	&JL9	LH	1	970422			GP
	96238235	6	A	B	B	B	.	.	O	-JL9	LH	1				CA
	96238237	6	A	B	B	B	.	.	O	&JL9	LH	1				CB
[02]		(E)SHAFT A-FRT AXLE (D)SPINDEL,VORDER-ACHSE									(F)ARBRE-PONT AVANT (S)EJE-FRENTE					
	96229092	Y	M	B	B	B	S	S	S	-JL9	RH	1		970422		TM
Y	96251136	Y	M	B	B	B	S	S	S	-JL9	RH	1	970422			CR
	96183017	Y	M	B	B	B	.	O	O	&JL9	RH	1		970422		VM
Y	96251185	Y	M	B	B	B	.	O	O	&JL9	RH	1	970422			AW
	96238234	Y	A	B	B	B	O	O	O	-JL9	RH	1				RC
	96225970	Y	A	B	B	B	.	O	O	&JL9	RH	1				RQ
	96229094	6	M	B	B	B	.	.	O	-JL9	RH	1		970422		XM
Y	96241974	6	M	B	B	B	.	.	O	-JL9	RH	1	970422			FP
	96229096	6	M	B	B	B	.	.	O	&JL9	RH	1		970422		ZM

ENG(ENGINE)	T/A(TRANSAXLE)	BODY TYPE
Y = 1.5SOHC 6 = 1.6DOHC . = COMMON	M = MANUAL T/A A = AUTOMATIC T/A . = COMMON	4 N = 4 DOOR NOTCHBACK 3 H = 3 DOOR HATCHBACK 5 H = 5 DOOR HATCHBACK

4110 AXLE SHAFT UNIT

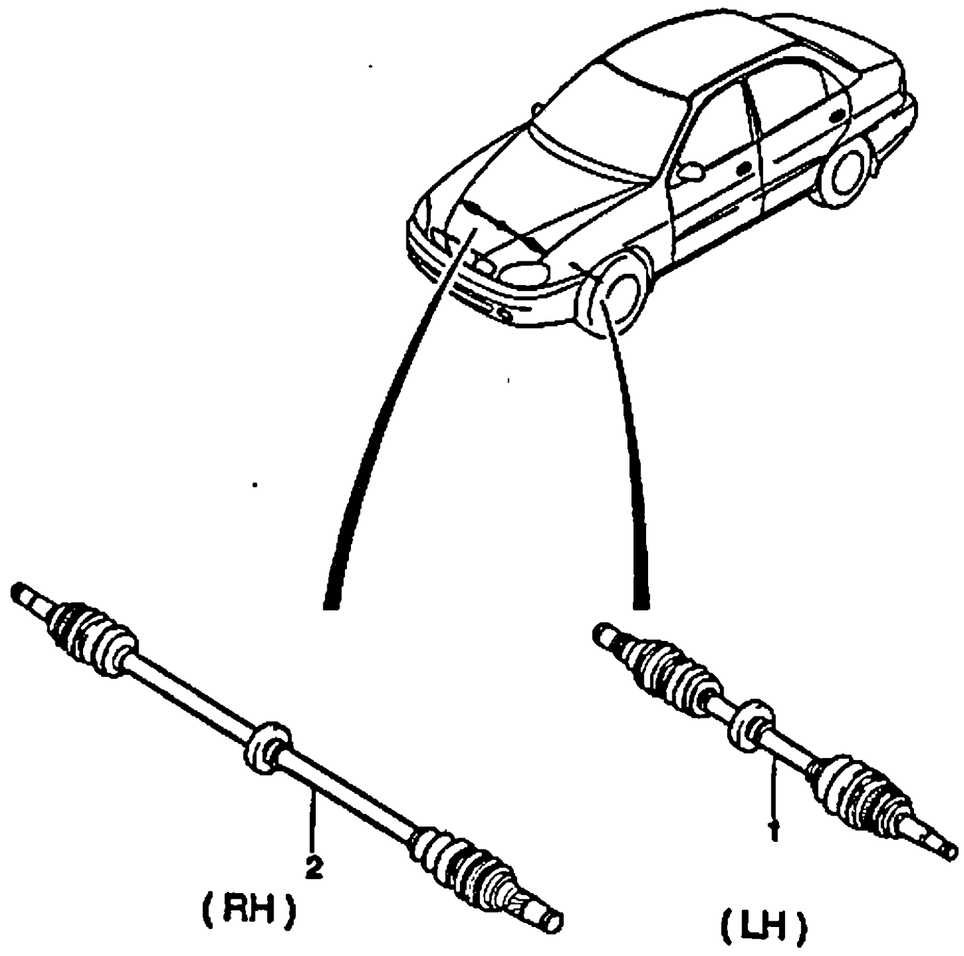

KEY NO.		PART NAME														
ITG	PART NO	MODEL							OPTION	L/R	QTY	EFFECTIVE DATE		REMARKS	P/CODE
		ENG	T/A	BODY			LEVEL					FROM	TO		
				4N	3H	5H	S	SE	SX						
Y	96241977	6	M	B	B	B	.	.	O	&JL9	RH	1	970422		AQ
	96238236	6	A	B	B	B	.	.	O	~JL9	RH	1			RX
	96238238	6	A	B	B	B	.	.	O	&JL9	RH	1			RY

ENG(ENGINE)	T/A(TRANSAXLE)	BODY TYPE
Y = 1.5SOHC 6 = 1.6DOHC . = COMMON	M = MANUAL T/A A = AUTOMATIC T/A . = COMMON	4 N = 4 DOOR NOTCHBACK 3 H = 3 DOOR HATCHBACK 5 H = 5 DOOR HATCHBACK

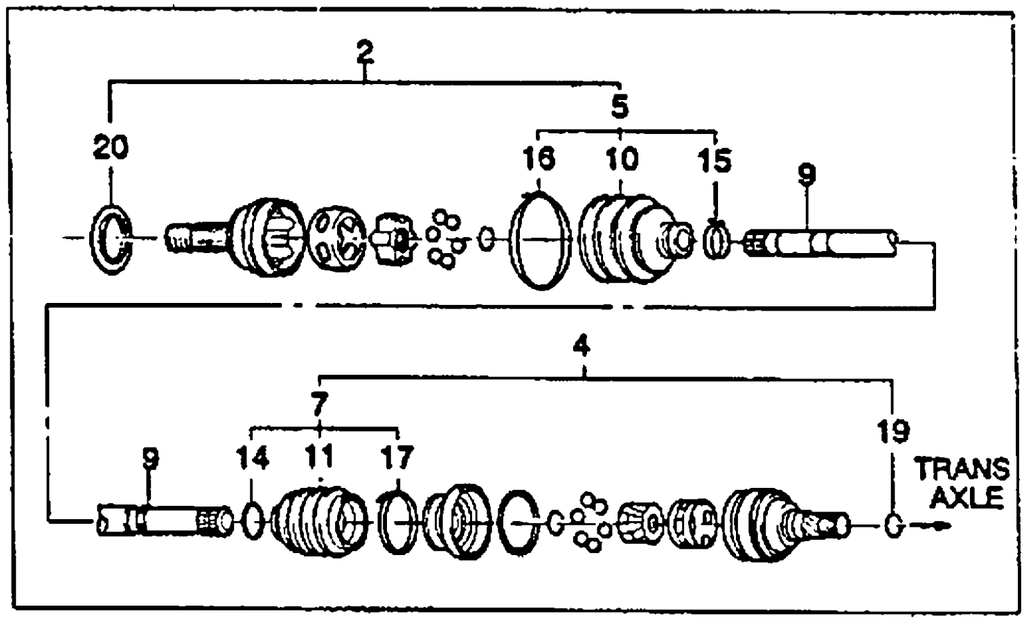

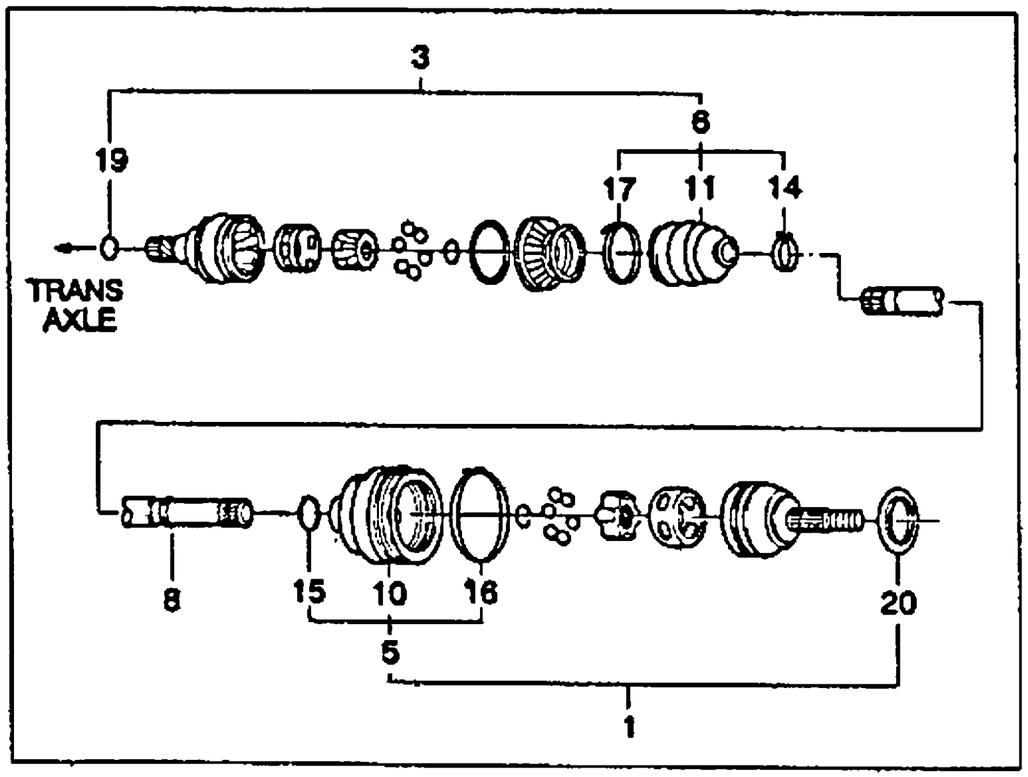

KEY NO. ITC	PART NO	MODEL ENG	T/A	BODY 4N	3H	5H	LEVEL S	SE	SX	OPTION	L/R	QTY	EFFECTIVE DATE FROM	TO	REMARKS	P/CODE
[01]		(E)JOINT A-SEAL&C/V (D)GLIED,ABDICHTUNG									(F)JOINT-JOINT D'ETANCHEITE (S)UNION-SELLO Y C/V					
	96243569	Y	M	B	B	B	S	S	S	-JL9	LH	1		970422		
Y	96257804	Y	M	B	B	B	S	S	S	-JL9	LH	1	970422			
	96243571	Y	M	B	B	B	.	O	O	&JL9	LH	1		970422		
Y	96237803	Y	M	B	B	B	.	O	O	&JL9	LH	1	970422			
	96243573	6	M	B	B	B	.	.	O	-JL9	LH	1		970422		
Y	96257802	6	M	B	B	B	.	.	O	-JL9	LH	1	970422			
	96243575	6	M	B	B	B	.	.	O	&JL9	LH	1		970422		
Y	96257801	6	M	B	B	B	.	.	O	&JL9	LH	1	970422			
[02]		(E)JOINT A-SEAL&C/V (D)GLIED,ABDICHTUNG									(F)JOINT-JOINT D'ETANCHEITE (S)UNION-SELLO Y C/V					
	96243569	Y	M	B	B	B	S	S	S	-JL9	RH	1		970422		
Y	96257804	Y	M	B	B	B	S	S	S	-JL9	RH	1	970422			
	96243571	Y	M	B	B	B	.	O	O	&JL9	RH	1		970422		
Y	96257803	Y	M	B	B	B	.	O	O	&JL9	RH	1	970422			
	96243573	6	M	B	B	B	.	.	O	-JL9	RH	1		970422		
Y	96257802	6	M	B	B	B	.	.	O	-JL9	RH	1	970422			
	96243575	6	M	B	B	B	.	.	O	&JL9	RH	1		970422		
Y	96257801	6	M	B	B	B	.	.	O	&JL9	RH	1	970422			
[03]		(E)JOINT A-SEAL&C/C (D)GLIED,ABDICHTUNG									(F)JOINT-JOINT D'ETANCHEITE (S)UNION-SELLO Y C/V					
	96243576	.	M	B	B	B	S	S	S		LH	1				
[04]		(E)JOINT A-SEAL&C/C (D)GLIED,ABDICHTUNG									(F)JOINT-JOINT D'ETANCHEITE (S)UNION-SELLO Y C/V					
	96243576	.	M	B	B	B	S	S	S		RH	1				

ENG(ENGINE)	T/A(TRANSAXLE)	BODY TYPE
Y = 1.5SOHC	M = MANUAL T/A	4 N = 4 DOOR NOTCHBACK
6 = 1.6DOHC	A = AUTOMATIC T/A	3 H = 3 DOOR HATCHBACK
. = COMMON	. = COMMON	5 H = 5 DOOR HATCHBACK

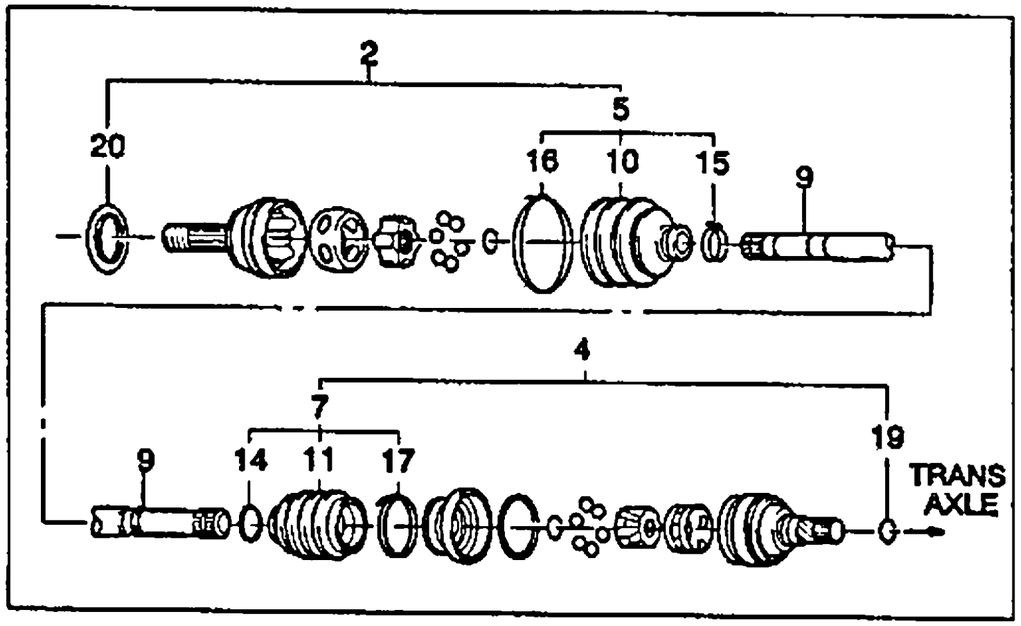

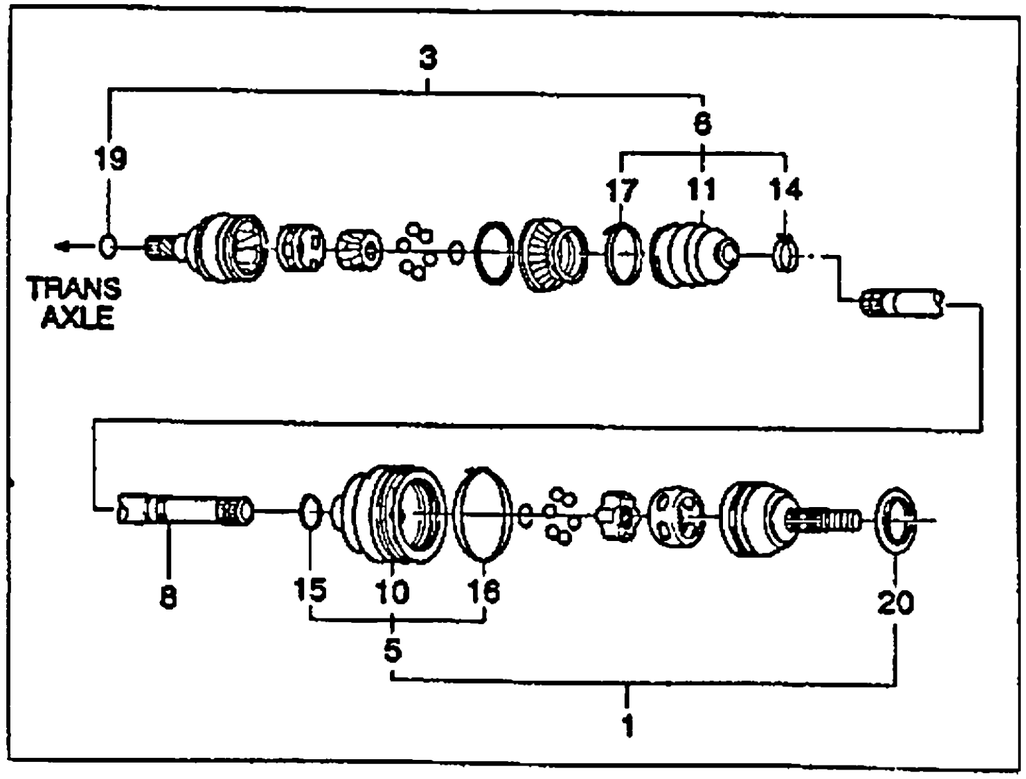

KEY NO. ITC	PART NO	MODEL ENG	MODEL T/A	MODEL BODY 4N	MODEL BODY 3H	MODEL BODY 5H	MODEL LEVEL S	MODEL LEVEL SE	MODEL LEVEL SX	OPTION	L/R	QTY	EFFECTIVE DATE FROM	EFFECTIVE DATE TO	REMARKS	P/CODE
[05]		(E)SEAL KIT-C/V JOINT (D)DICHTUNGS-SATZ,GLIED									(F)TROUSSE DE JOINTS-JOINT (S)JUGO DE SELLOS-UNION					
96243578		.	M	B	B	B	S	S	S			2				
[06]		(E)SEAL KIT-C/G JOINT (D)DICHTUNGS-SATZ,GLIED									(F)TROUSSE DE JOINTS-JOINT (S)JUGO DE SELLOS-UNION					
96243579		.	M	B	B	B	S	S	S		LH	1				
[07]		(E)SEAL KIT-C/G JOINT (D)DICHTUNGS-SATZ,GLIED									(F)TROUSSE DE JOINTS-JOINT (S)JUGO DE SELLOS-UNION					
96243579		.	M	B	B	B	S	S	S		RH	1				
[08]		(E)SHAFT-AXLE (D)SPINDEL,ACHSE									(F)ARBRE-AXE OU PONT (S)EJE-EJE					
510842		.	M	B	B	B	S	S	S		LH	1				
[09]		(E)SHAFT-AXLE (D)SPINDEL,ACHSE									(F)ARBRE-AXE OU PONT (S)EJE-EJE					
510843		.	M	B	B	B	S	S	S		RH	1				
[10]		(E)SEAL-C/V JOINT (D)DICHTUNG									(F)JOINT (S)SELLO-UNION C/V					
510346		.	M	B	B	B	S	S	S			2				
[11]		(E)SEAL-C/G JOINT (D)DICHTUNG,QUERRILLE GLIED									(F)JOINT (S)SELLO-UNION C/G					
510469		.	M	B	B	B	S	S	S			2				
[14]		(E)CLAMP (D)KLAMMER									(F)PINCE (S)ABRAZADERA					
510429		.	M	B	B	B	S	S	S			2			C/V JOINT	
[15]		(E)CLAMP (D)KLAMMER									(F)PINCE (S)ABRAZADERA					
510464		.	M	B	B	B	S	S	S			2			C/G JOINT	
[16]		(E)CLAMP (D)KLAMMER									(F)PINCE (S)ABRAZADERA					

ENG(ENGINE)	T/A(TRANSAXLE)	BODY TYPE
Y = 1.5SOHC 6 = 1.6DOHC . = COMMON	M = MANUAL T/A A = AUTOMATIC T/A . = COMMON	4 N = 4 DOOR NOTCHBACK 3 H = 3 DOOR HATCHBACK 5 H = 5 DOOR HATCHBACK

4120 AXLE SHAFT PARTS(M/T)

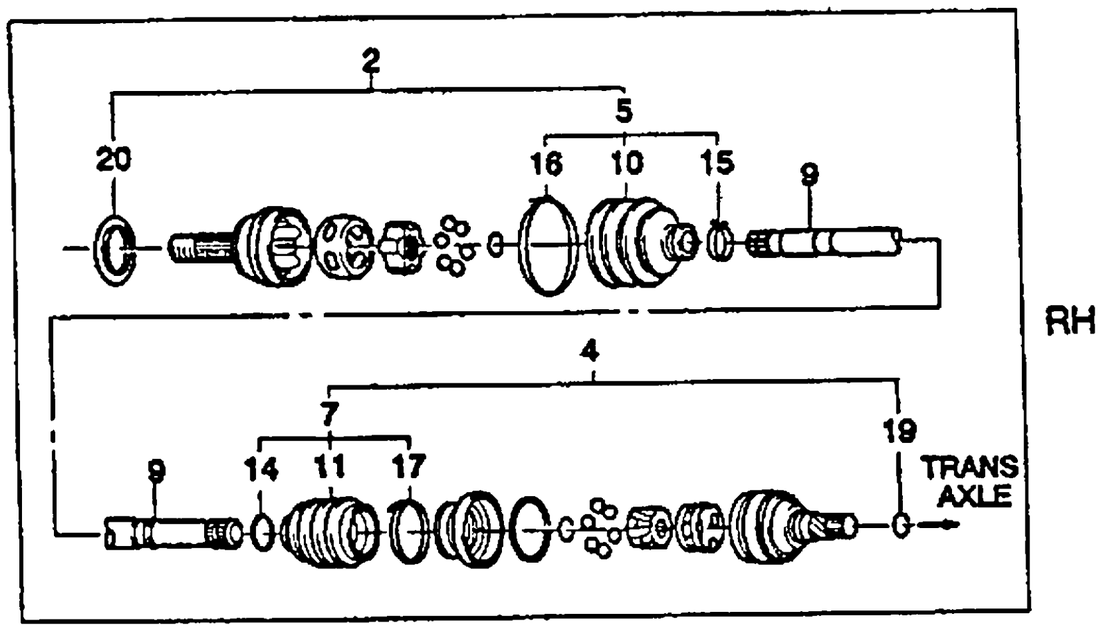

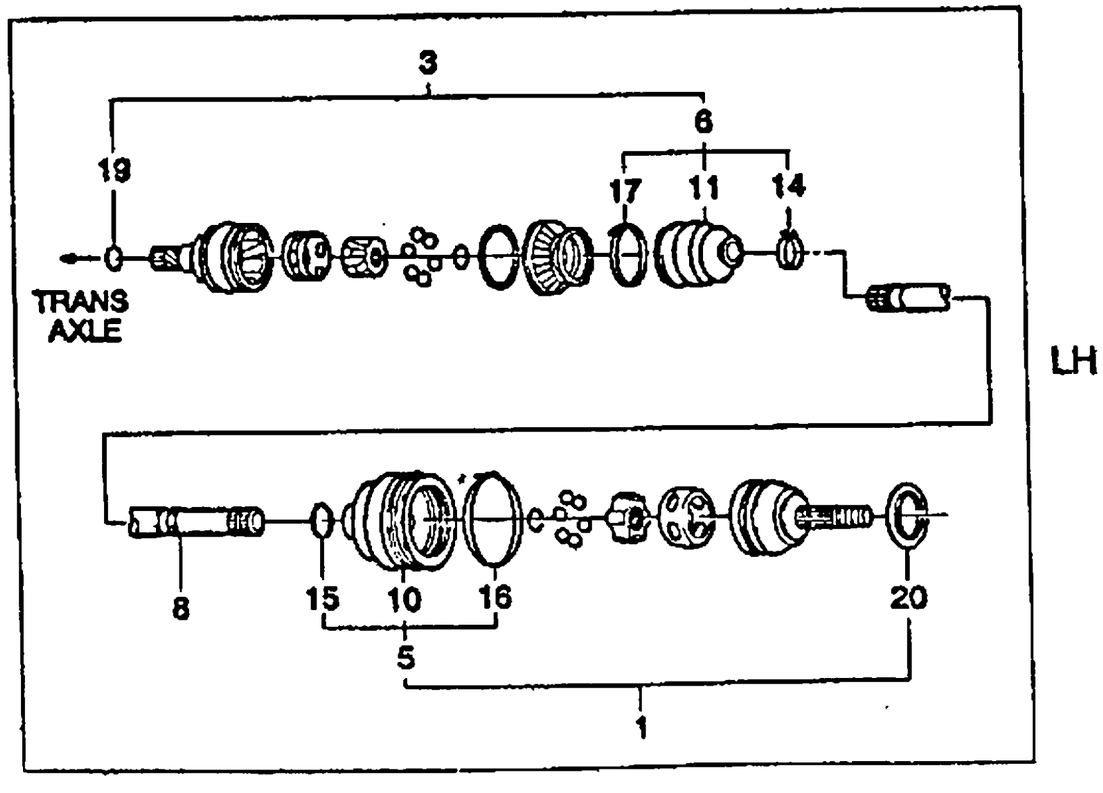

KEY NO. ITC	PART NO	MODEL ENG	T/A	BODY 4N	3H	5H	LEVEL S	SE	SX	OPTION	L/R	QTY	EFFECTIVE DATE FROM	TO	REMARKS	PICODE
	510430	.	M	B	B	B	S	S	S			2			C/V JOINT	
[17]	(E)CLAMP (D)KLAMMER										(F)PINCE (S)ABRAZADERA					
	510466	.	M	B	B	B	S	S	S			2				
[19]	(E)RING-JOINT RETAINING (D)RING,HALTER										(F)ANNEAU-DE RETENTION (S)ANILLO-RETENEDOR					
	510470	.	M	B	B	B	S	S	S			2				
[20]	(E)RING-DEFLECTING (D)RING										(F)ANNEAU (S)ANILLO					
	510449	.	M	B	B	B	S	S	S			2				

ENG(ENGINE)	T/A(TRANSAXLE)	BODY TYPE
Y = 1.5SOHC 6 = 1.6DOHC . = COMMON	M = MANUAL T/A A = AUTOMATIC T/A . = COMMON	4 N = 4 DOOR NOTCHBACK 3 H = 3 DOOR HATCHBACK 5 H = 5 DOOR HATCHBACK

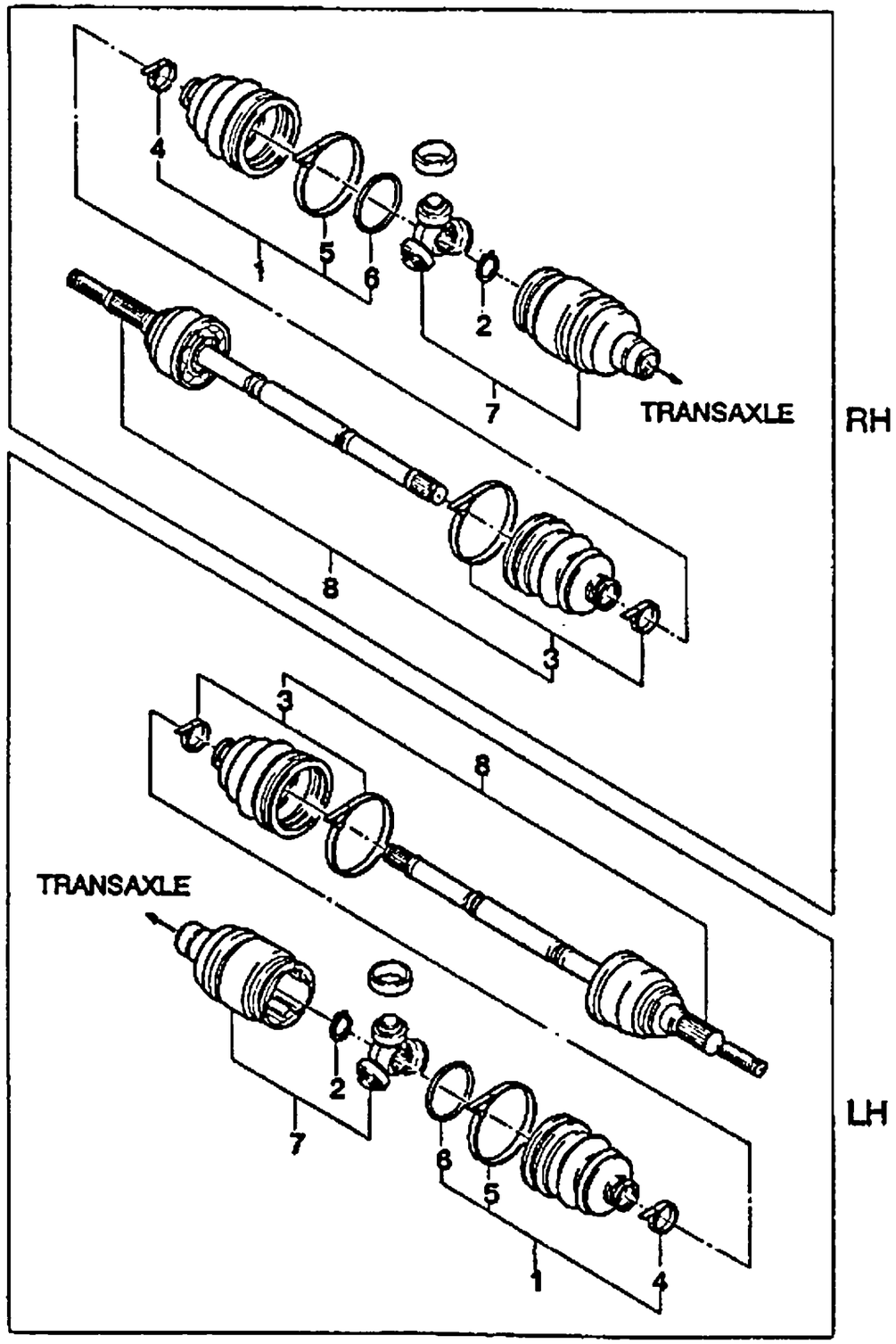

#2,4,5,6, IS SERVICED ONLY SET

KEY NO. ITC	PART NO	MODEL ENG	MODEL T/A	MODEL BODY 4N	MODEL BODY 3H	MODEL BODY 5H	MODEL LEVEL S	MODEL LEVEL SE	MODEL LEVEL SX	OPTION	L/R	QTY	EFFECTIVE DATE FROM	EFFECTIVE DATE TO	REMARKS	P/CODE
[01]		(E)BOOT SET-INNER (D)KOFFERRAUM-SATZ									(F)TROUSSE DE GAINE (S)JUEGO DE BOTA					
	96220401	.	A	B	B	B	O	O	O			2			INCL. #2	
[03]		(E)BOOT SET-OUTER (D)KOFFERRAUM-SATZ									(F)TROUSSE DE GAINE (S)JUEGO DE BOTA					
	96220402	.	A	B	B	B	O	O	O			2			INCL. #2,4,5,6	
[07]		(E)JOINT SET-INNER (D)GLIED SATZ									(F)JEU DE JOINTS (S)JUEGO DE UNION					
	96220403	.	A	B	B	B	O	O	O			2			INCL. #2,4,5	
[08]		(E)JOINT SET-OUTER (D)GLIED SATZ									(F)JEU DE JOINTS (S)JUEGO DE UNION					
	96250527	Y	A	B	B	B	O	O	O	-JL9	LH	1			INCL. #2,4,5,6	
	96250528	Y	A	B	B	B	O	O	O	-JL9	RH	1			INCL. #2,4,5,6	
	96250525	Y	A	B	B	B	.	O	O	&JL9	LH	1			INCL. #2,4,5,6	
	96250526	Y	A	B	B	B	.	O	O	&JL9	RH	1			INCL. #2,4,5,6	
	96250521	6	A	B	B	B	.	.	O	-JL9	LH	1			INCL. #2,4,5,6	
	96250522	6	A	B	B	B	.	.	O	-JL9	RH	1			INCL. #2,4,5,6	
	96250523	6	A	B	B	B	.	.	O	&JL9	LH	1			INCL. #2,4,5,6	
	96250524	6	A	B	B	B	.	.	O	&JL9	RH	1			INCL. #2,4,5,6	

ENG(ENGINE)	T/A(TRANSAXLE)	BODY TYPE
Y = 1.5SOHC 6 = 1.6DOHC . = COMMON	M = MANUAL T/A A = AUTOMATIC T/A . = COMMON	4 N = 4 DOOR NOTCHBACK 3 H = 3 DOOR HATCHBACK 5 H = 5 DOOR HATCHBACK

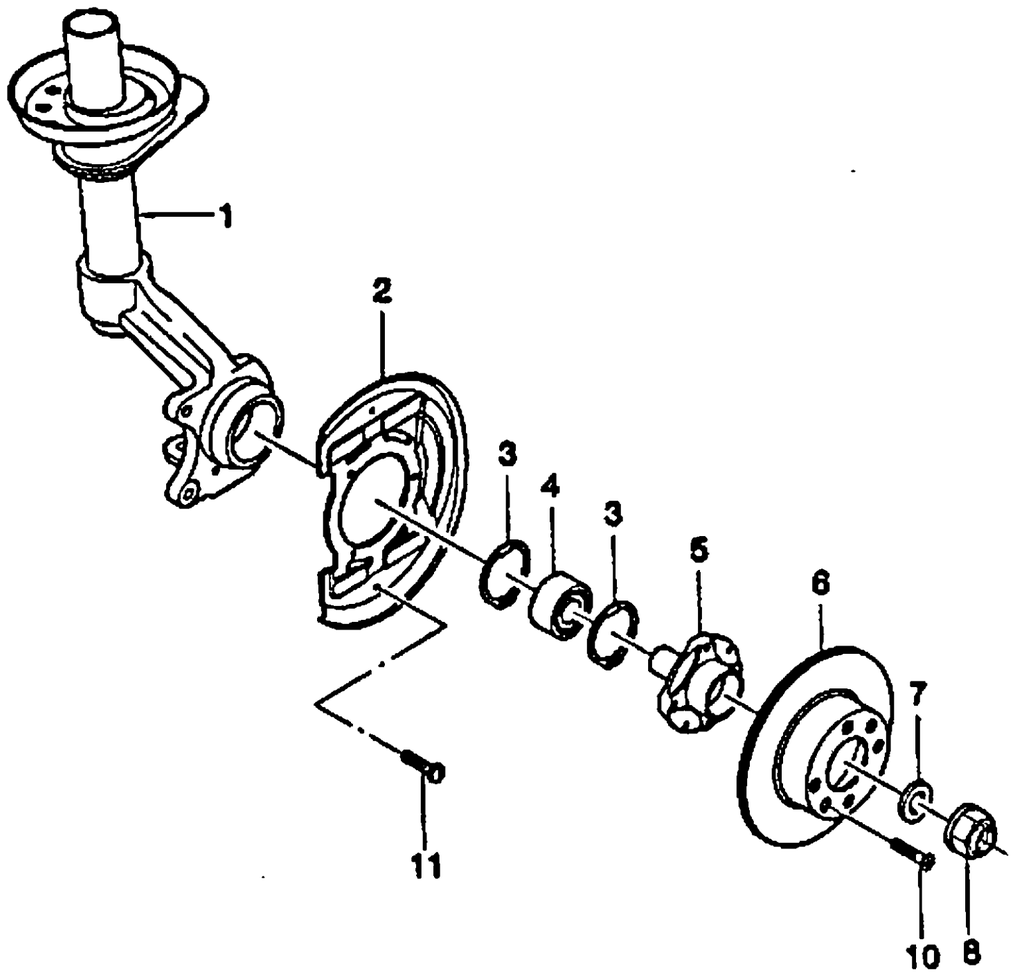

KEY NO. ITC	PART NO	MODEL ENG	T/A	BODY 4N	3H	5H	LEVEL S	SE	SX	OPTION	L/R	QTY	EFFECTIVE DATE FROM	TO	REMARKS	P/CODE
[01]		(E)KNUCKLE A-STEERING (D)KNUCKLE LENKUNG									(F)ARTICULATION-DIRECTION (S)NUDILLO-VOLANTE					
96219508		Y	.	B	B	B	S	S	S	-JL9	LH	1				
96219509		Y	.	B	B	B	S	S	S	-JL9	RH	1				
96219506		Y	.	B	B	B	.	O	O	&JL9	LH	1				
96219507		Y	.	B	B	B	.	O	O	&JL9	RH	1				
96219512		6	.	B	B	B	.	.	O	-JL9	LH	1				
96219513		6	.	B	B	B	.	.	O	-JL9	RH	1				
96219510		6	.	B	B	B	.	.	O	&JL9	LH	1				
96219511		6	.	B	B	B	.	.	O	&JL9	RH	1				
[02]		(E)COVER-SHEET (D)DECKEL,LENKUNG NUCKLE									(F)COUVERCLE (S)CUBIERTA-LAMINA					
96304481		Y	.	B	B	B	S	S	S	&JB3		2				
96176932		6	.	B	B	B	.	.	O	&JB4		2				
[03]		(E)RING-RETAINING (D)RING,HALTER									(F)ANNEAU-DE RETENTION (S)ANILLO-RETENEDOR					
09381-67001		Y	.	B	B	B	S	S	S	&JB3		4				
09381-76001		6	.	B	B	B	.	.	O	&JB4		4				
[04]		(E)BEARING (D)KUGELLAGER									(F)ROULEMENT-BILLE INCLINEE (S)COJINETE-BOLA INCLINADA					
09267-34001		Y	.	B	B	B	S	S	S	&JB3		2		970701		
Y 09267-34002		Y	.	B	B	B	S	S	S	&JB3		2	970701			
09267-39001		6	.	B	B	B	.	.	O	&JB4		2		970701		
Y 09267-39005		6	.	B	B	B	.	.	O	&JB4		2	970701			
[05]		(E)HUB-BRAKE DISK,FRONT (D)NABE,SCHEIBENBREMSE									(F)MOYEU-DISQUE DE FREIN (S)CUBO-FRENO DE DISCOS					

ENG(ENGINE)	T/A(TRANSAXLE)	BODY TYPE
Y = 1.5SOHC 6 = 1.6DOHC . = COMMON	M = MANUAL T/A A = AUTOMATIC T/A . = COMMON	4 N = 4 DOOR NOTCHBACK 3 H = 3 DOOR HATCHBACK 5 H = 5 DOOR HATCHBACK

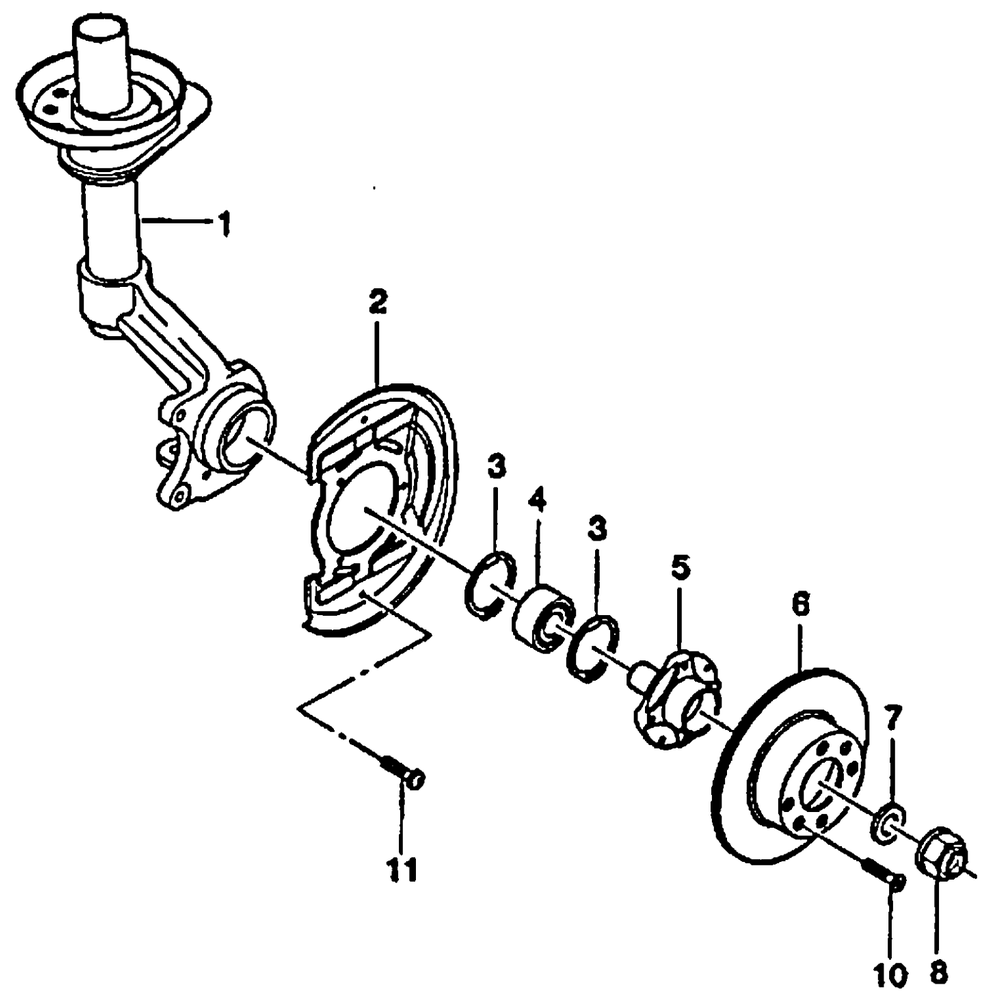

KEY NO. ITC	PART NO	MODEL ENG	T/A	BODY 4N	3H	5H	LEVEL S	SE	SX	OPTION	L/R	QTY	EFFECTIVE DATE FROM	TO	REMARKS	P/CODE
	96176252	Y	.	B	B	B	S	S	S	&JB3		2				
	96162249	6	.	B	B	B	.	.	O	&JB4		2				
[06]	(E)DISK-VENTILATED BRAKE (D)SCHEIBENBREMSE											(F)DISQUE-FREIN (S)DISCO-FRENO				
	90121445	Y	.	B	B	B	S	S	S	&JB3		2				DV
	96179110	6	.	B	B	B	.	.	O	&JB4		2				DQ
[07]	(E)WASHER-PLAIN (D)DICHTUNGSRING											(F)RONDELLE (S)ARANDELA				
	09160-20001	.	.	B	B	B	S	S	S			2				
[08]	(E)NUT (D)MUTTER											(F)ECROU (S)TUERCA				
	09159-20004	.	.	B	B	B	S	S	S			2				
[10]	(E)SCREW (D)SCHRAUBE											(F)VIS (S)TORNILLO				
	02126-06103	.	.	B	B	B	S	S	S			2	970404			
	Y 02126-06123	.	.	B	B	B	S	S	S			2	970404			
[11]	(E)SCREW (D)SCHRAUBE											(F)VIS (S)TORNILLO				
	02116-36103	.	.	B	B	B	S	S	S			6				

ENG(ENGINE)	T/A(TRANSAXLE)	BODY TYPE
Y = 1.5SOHC 6 = 1.6DOHC . = COMMON	M = MANUAL T/A A = AUTOMATIC T/A . = COMMON	4 N = 4 DOOR NOTCHBACK 3 H = 3 DOOR HATCHBACK 5 H = 5 DOOR HATCHBACK

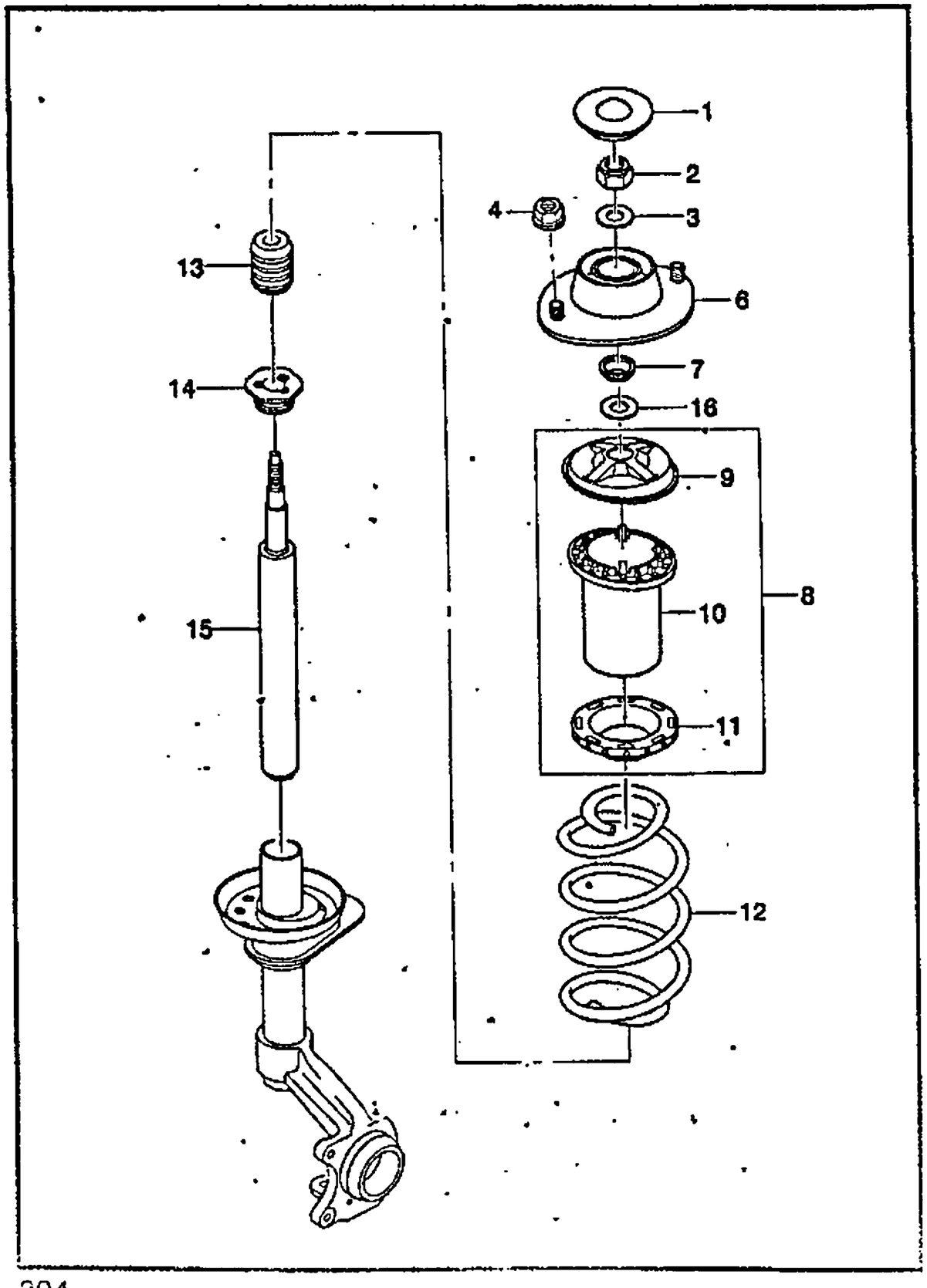

KEY NO.	PART NAME															
ITC	PART NO	MODEL								OPTION	L/R	QTY	EFFECTIVE DATE		REMARKS	PICODE
		ENG	T/A	BODY			LEVEL						FROM	TO		
				4N	3H	5H	S	SE	SX							
[01]	90079044			. .	B	B	B	S	S	S	(E)CAP-STRUT MOUNT (D)DECKEL,SPREIZE-MONTAGE	(F)CHAPEAU-MONTAGE TENDEUR (S)TAPA-MONTAJE DE PUNTAL	2			
[02]	09159-12003			. .	B	B	B	S	S	S	(E)NUT (D)MUTTER	(F)ECROU (S)TUERCA	2			
[03]	09160-12002			. .	B	B	B	S	S	S	(E)WASHER-PLAIN (D)DICHTUNGSRING	(F)RONDELLE (S)ARANDELA	2			
[04]	08311-38082			. .	B	B	S	S	S	S	(E)NUT-HEXAGON LOCK (D)MUTTER	(F)ECROU (S)TUERCA	2			
[06]	96225638			. .	B	B	B	S	S	S	(E)STRUT-SHOCK ABSOR MOUNT (D)STUTZE	(F)TENDEUR (S)BRIDA-MONTAJE	2			
[07]	90079042			. .	B	B	B	S	S	S	(E)PLATE-BALL BEARING (D)PLATTE,KUGELLAGER	(F)PLAQUE-ROULEMENT A BILLES (S)PLACA-COJINETE DE BOLA	2			
[08]	96133096			. .	B	B	B	S	S	S	(E)SEAT A-SPRING,UPPER (D)SITZ,FEDERUNG,OBERE	(F)SIEGE-RESSORT,HAUT (S)ASIENTO-RESORTE,SUPERIOR	2			
[09]	96133097			. .	B	B	B	S	S	S	(E)SEAT A-SPRING,UPPER (D)SITZ,FEDERUNG,OBERE	(F)SIEGE-RESSORT,HAUT (S)ASIENTO-RESORTE,SUPERIOR	2			
[10]	90305062			. .	B	B	B	S	S	S	(E)LOCATOR-FRONT SPRING (D)FINDER,VORDERE FEDERUNG	(F)LOCALISATEUR (S)LOCALIZADOR	2			
[11]											(E)RING-FR SPRING INSULATOR (D)RING	(F)ANNEAU (S)ANILLO-AISLADOR				

ENG(ENGINE)	T/A(TRANSAXLE)	BODY TYPE
Y = 1.5SOHC 6 = 1.6DOHC . = COMMON	M = MANUAL T/A A = AUTOMATIC T/A . = COMMON	4 N = 4 DOOR NOTCHBACK 3 H = 3 DOOR HATCHBACK 5 H = 5 DOOR HATCHBACK

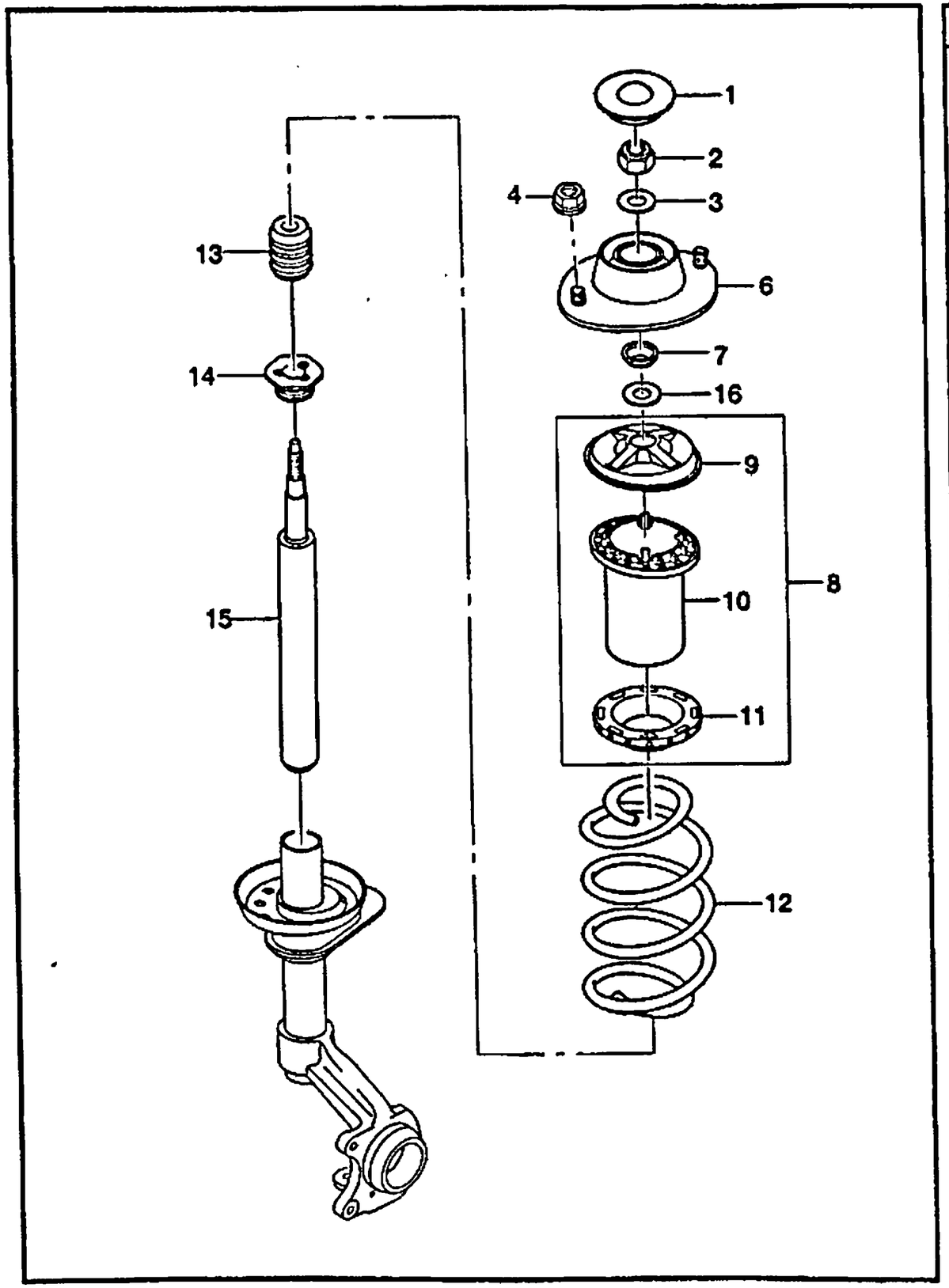

KEY NO. ITC	PART NO	MODEL ENG	T/A	BODY 4N	3H	5H	LEVEL S	SE	SX	OPTION	L/R	QTY	EFFECTIVE DATE FROM	TO	REMARKS	PICODE
	90216299	.	.	B	B	B	S	S	S			2				
[12]		(E)SPRING-FRONT (D)FEDERUNG,VORDERE										(F)RESSORT-AVANT (S)RESORTE-FRENTE				
	96223500	Y	M	B	B	B	S	S	S	&C46&F39		2				
	96223501	Y	M	B	B	B	A	A	A	&C46&F40		2				
	96232695	Y	M	B	B	B	O	O	O	&C59/C60&F39		2				
	96223502	Y	M	B	B	B	A	A	A	&C59/C60&F40		2				
	96223501	Y	A	B	B	B	O	O	O	&C46&F39		2				
	96223508	Y	A	B	B	B	A	A	A	&C46&F40		2				
	96223502	Y	A	B	B	B	O	O	O	&C59/C60&F39		2				
	96246623	Y	A	B	B	B	A	A	A	&C59/C60&F40		2				
	96223501	6	M	B	B	B	.	.	O	&C46&F39		2				
	96223508	6	M	B	B	B	.	.	A	&C46&F40		2				
	96223502	6	M	B	B	B	.	.	O	&C59/C60&F39		2				
	96246623	6	M	B	B	B	.	.	A	&C59/C60&F40		2				
	96223502	6	A	B	B	B	.	.	O	&C46&F39		2				
	96246623	6	A	B	B	B	.	.	A	&C46&F40		2				
	96223508	6	A	B	B	B	.	.	O	&C59/C60&F39		2				
	96246624	6	A	B	B	B	.	.	A	&C59/C60&F40		2				
[13]		(E)BUMPER-HOLLOW (D)STOßSTANGE,HOHL										(F)PARE-CHOC-EXCAVATION (S)TOPE-HUECO				
	90142884	Y	.	B	B	B	S	S	S			2				
	90125889	6	.	B	B	B	.	.	O			2				
[14]		(E)RING-THREADED (D)RING,SCHRAUBENGEWINDE										(F)ANNEAU-FILETE (S)ANILLO-CON ROSCA				

ENG(ENGINE)	T/A(TRANSAXLE)	BODY TYPE
Y = 1.5SOHC 6 = 1.6DOHC . = COMMON	M = MANUAL T/A A = AUTOMATIC T/A . = COMMON	4 N = 4 DOOR NOTCHBACK 3 H = 3 DOOR HATCHBACK 5 H = 5 DOOR HATCHBACK

4140 FRONT SHOCK ABSORBER

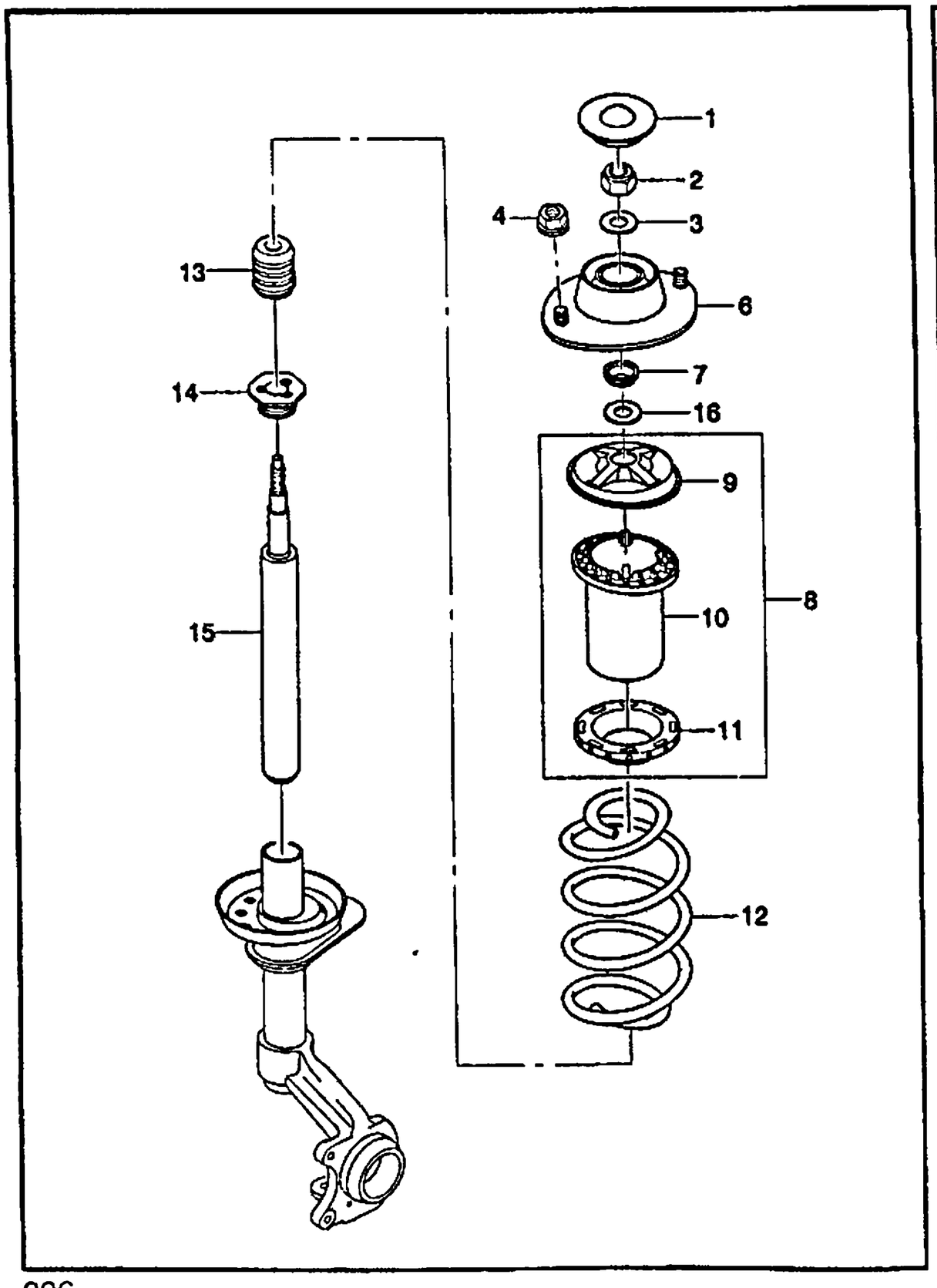

KEY NO.	PART NAME																
ITC	PART NO	MODEL								OPTION	L/R	QTY	EFFECTIVE DATE		REMARKS	P/CODE
		ENG	T/A	BODY			LEVEL						FROM	TO		
				4N	3H	5H	S	SE	SX							
	90063897	.	.	B	B	B	S	S	S			2				
[15]	(E)CARTRIDGE-SHOCK ABSORBER (D)KASSETTE,STOßDÄMPFER											(F)CARTOUCHE-AMORTISSEUR (S)CARTUCHO-AMORTIGUADOR				
	96226992	.	.	B	B	B	S	S	S			2				
[16]	(E)WASHER-PLAIN (D)DICHTUNGSRING											(F)RONDELLE (S)ARANDELA				
	09160-14005	.	.	B	B	B	S	S	S			2				

ENG(ENGINE)	T/A(TRANSAXLE)	BODY TYPE
Y = 1.5SOHC 6 = 1.6DOHC . = COMMON	M = MANUAL T/A A = AUTOMATIC T/A . = COMMON	4 N = 4 DOOR NOTCHBACK 3 H = 3 DOOR HATCHBACK 5 H = 5 DOOR HATCHBACK

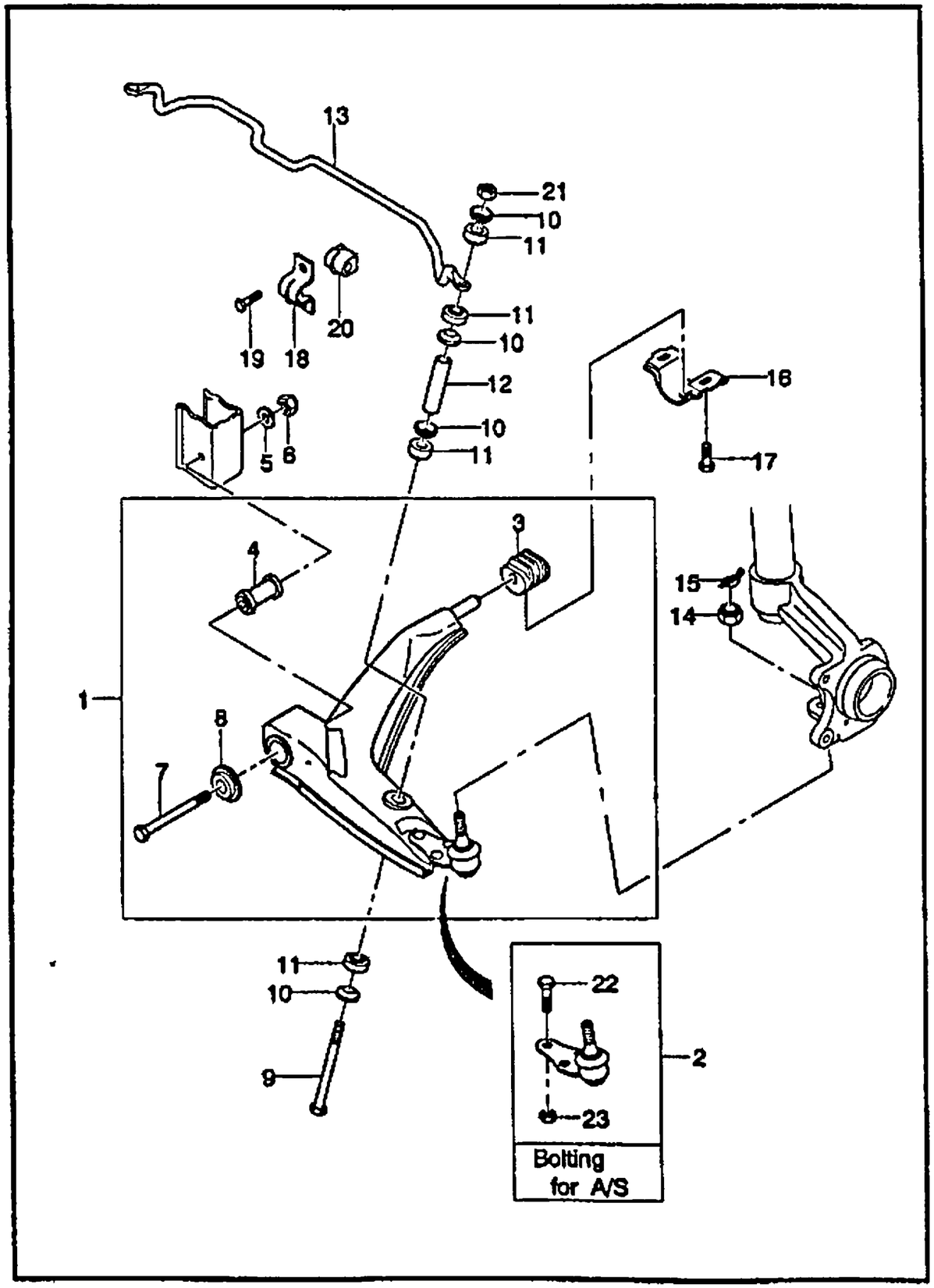

KEY NO. ITC	PART NO	MODEL ENG	T/A	BODY 4N	3H	5H	LEVEL S	SE	SX	OPTION	L/R	QTY	EFFECTIVE DATE FROM	TO	REMARKS	P/CODE
[01]		(E)ARM A-CONTROL (D)ARM,STEUERUNG									(F)BRAS-CONTROLE (S)BRAZO-CONTROL					
	96218397	.	.	B	B	B	S	S	S	&F39	LH	1				
	96218398	.	.	B	B	B	S	S	S	&F39	RH	1				
	96218399	.	.	B	B	B	A	A	A	&F40	LH	1				
	96218400	.	.	B	B	B	A	A	A	&F40	RH	1				
[02]		(E)JOINT SET-CONTROL ARM BAL (D)GLIED SATZ,KONSTANT ARM									(F)JEU DE JOINTS (S)JUEGO DE UNION					
	94788122	.	.	B	B	B	S	S	S			2				
[03]		(E)BUSHING-RR CONT ARM DAMPING (D)LAGERFUTTER									(F)COUSSINET (S)BUJE-AMORTIGUADOR					
	90235040	.	.	B	B	B	S	S	S			2				
[04]		(E)BUSHING-FRT CONT ARM DAMPING (D)LAGERFUTTER									(F)MANCHON (S)BUJE-AMORTIGUADOR,FRENTE					
	96185973	.	.	B	B	B	S	S	S			2				
[05]		(E)WASHER-PLAIN (D)DICHTUNGSRING									(F)RONDELLE (S)ARANDELA					
	09160-14007	.	.	B	B	B	S	S	S			2				
[06]		(E)NUT-HEXAGON LOCK (D)MUTTER									(F)ECROU (S)TUERCA					
	08311-28143	.	.	B	B	B	S	S	S			2				
[07]		(E)BOLT-HEXAGON (D)SCHRAUBE									(F)BOULON (S)PERNO					
	09100-14004	.	.	B	B	B	S	S	S			2				
[08]		(E)PLATE (D)PLATTE									(F)PLAQUE (S)PLACA					
	90105063	.	.	B	B	B	S	S	S			2				

ENG(ENGINE)	T/A(TRANSAXLE)	BODY TYPE
Y = 1.5SOHC 6 = 1.6DOHC . = COMMON	M = MANUAL T/A A = AUTOMATIC T/A . = COMMON	4 N = 4 DOOR NOTCHBACK 3 H = 3 DOOR HATCHBACK 5 H = 5 DOOR HATCHBACK

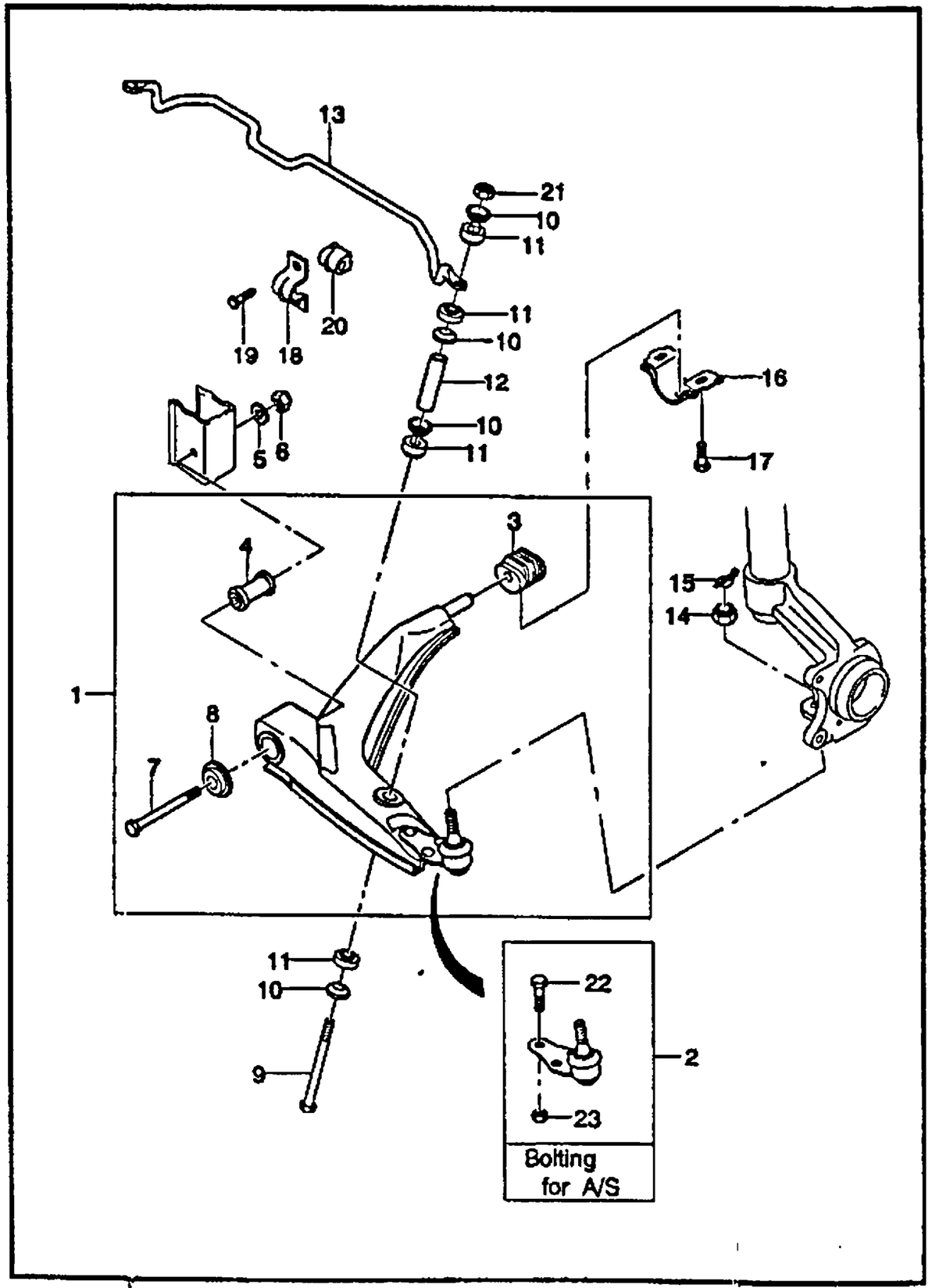

KEY NO. ITC	PART NO	MODEL ENG	T/A	BODY 4N	3H	5H	LEVEL S	SE	SX	OPTION	L/R	QTY	EFFECTIVE DATE FROM	TO	REMARKS	P/CODE
[09]		(E)BOLT-HEXAGON (D)SCHRAUBE									(F)BOULON (S)PERNO					
	09100-08001	.	.	B	B	B	S	S	S			2				
[10]		(E)PLATE-BUMPER (D)PLATTE,STOßSTANGE									(F)PLAQUE-PARE-CHOC (S)PLACA-PARACHOQUES					
	90209277	.	.	B	B	B	S	S	S			8				
[11]		(E)BUMPER-STABILIZER (D)STOßSTANGE,STABILISATOR									(F)PARE-CHOC-STABILISATEUR (S)TOPE-ESTABILIZADOR					
	02875013	.	.	B	B	B	S	S	S			8				
[12]		(E)TUBE (D)ROHRLEITUNG									(F)TUYAU OU TUBE (S)TUBO					
	11087513	.	.	B	B	B	S	S	S			2				
[13]		(E)STABILIZER-FRONT (D)STABILISATOR,VORNE									(F)STABILISATEUR-AVANT (S)ESTABLIZADOR-FRENTE					
	96226986	.	.	B	B	B	S	S	S			1				
[14]		(E)NUT (D)MUTTER									(F)ECROU (S)TUERCA					
	09141-12001	.	.	B	B	B	S	S	S			2				
[15]		(E)SPRING-RETAINING (D)FEDERUNG,HALTER									(F)RESSORT-D'ARRET (S)RESORTE-RETENIENDO					
	90095298	.	.	B	B	B	S	S	S			2				
[16]		(E)CAP-DAMPING BUSHING (D)DECKEL,DÄMPFUNGS-FUTTER									(F)CHAPEAU (S)TAPA-BUJE DE AMORTIGUADOR					
	90344190	.	.	B	B	B	S	S	S			2				
[17]		(E)BOLT-HEXAGON FLANGE (D)SCHRAUBE									(F)BOULON (S)PERNO					
	09103-10010	.	.	B	B	B	S	S	S			4				
[18]		(E)CLAMP-STABILIZER BUSHING (D)KLAMMER									(F)PINCE (S)ABRAZADERA-BUJE					

ENG(ENGINE)	T/A(TRANSAXLE)	BODY TYPE
Y = 1.5SOHC 6 = 1.6DOHC . = COMMON	M = MANUAL T/A A = AUTOMATIC T/A . = COMMON	4 N = 4 DOOR NOTCHBACK 3 H = 3 DOOR HATCHBACK 5 H = 5 DOOR HATCHBACK

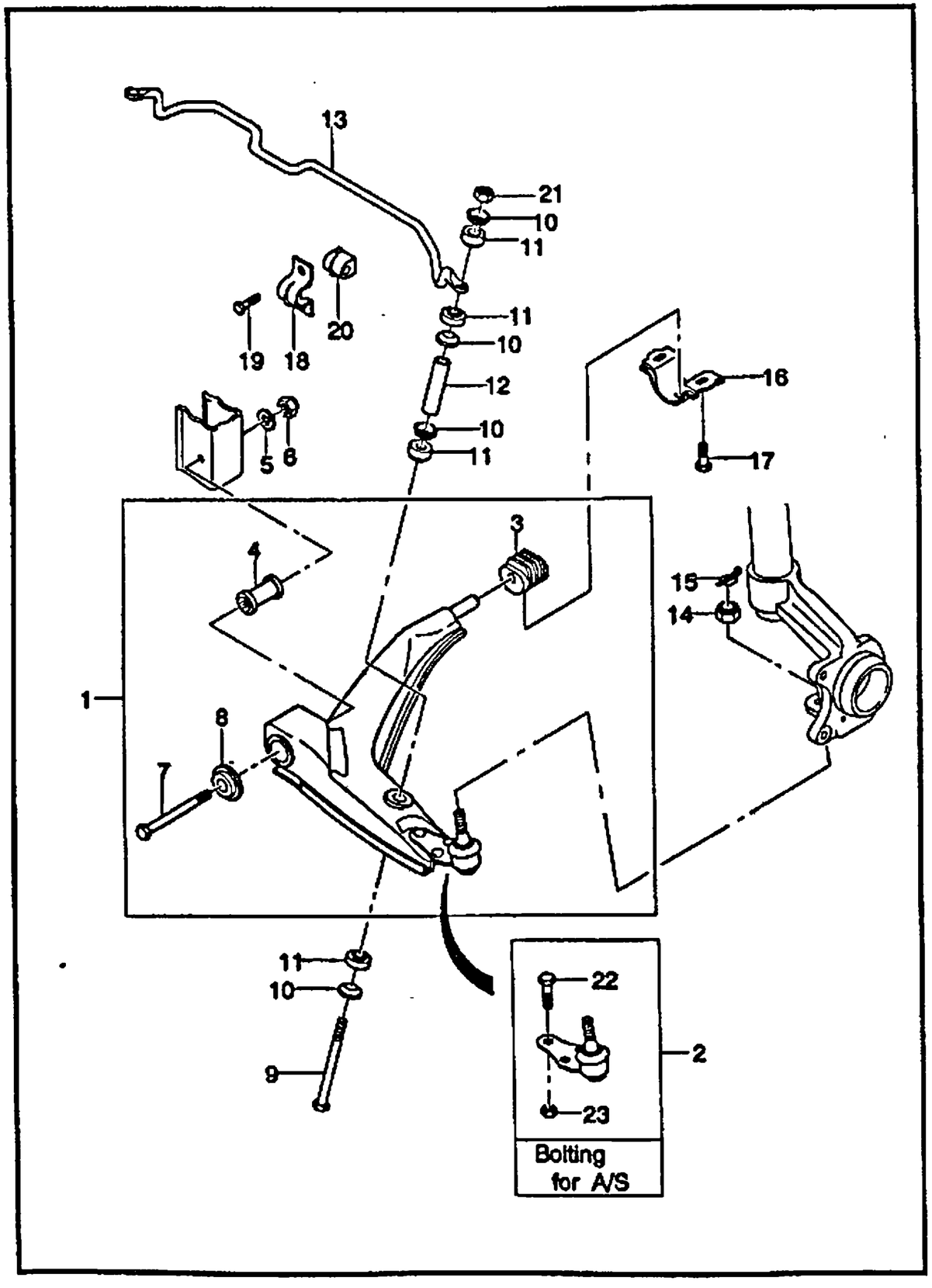

KEY NO. ITC	PART NO	MODEL ENG	T/A	BODY 4N	3H	5H	LEVEL S	SE	SX	OPTION	L/R	QTY	EFFECTIVE DATE FROM	TO	REMARKS	P/CODE
	96230714	.	.	B	B	B	S	S	S			2				
[19]	(E)BOLT-HEXAGON (D)SCHRAUBE										(F)BOULON (S)PERNO					
	09100-10003	.	.	B	B	B	S	S	S			4				
[20]	(E)BUSHING-STABILIZER BAR (D)LAGERFUTTER,STABILISATOR										(F)MANCHON-STABILISATEUR (S)BUJE-ESTABILIZADOR					
	96227420	.	.	B	B	B	S	S	S			2		970701		
O	96246674	.	.	B	B	B	S	S	S			2	970701			
[21]	(E)NUT-HEXAGON LOCK (D)MUTTER										(F)ECROU (S)TUERCA					
	08311-28082	.	.	B	B	B	S	S	S			2				
[22]	(E)BOLT-HEXAGON (D)SCHRAUBE										(F)BOULON (S)PERNO					
	09100-10020	.	.	B	B	B	S	S	S			3				
[23]	(E)NUT-HEXAGON LOCK (D)MUTTER										(F)ECROU (S)TUERCA					
	09159-10016	.	.	B	B	B	S	S	S			3				

ENG(ENGINE)	T/A(TRANSAXLE)	BODY TYPE
Y = 1.5SOHC	M = MANUAL T/A	4 N = 4 DOOR NOTCHBACK
6 = 1.6DOHC	A = AUTOMATIC T/A	3 H = 3 DOOR HATCHBACK
. = COMMON	. = COMMON	5 H = 5 DOOR HATCHBACK

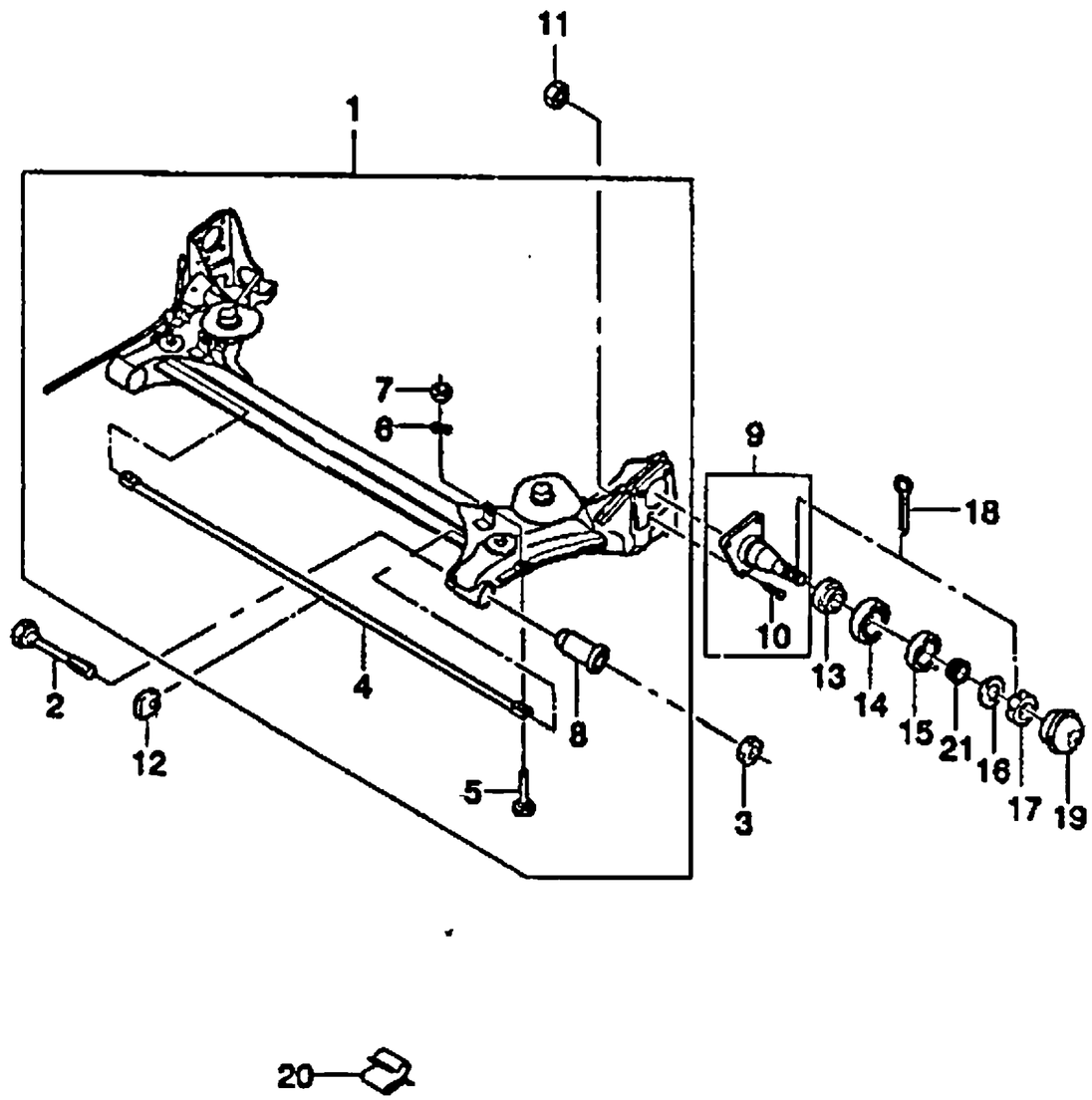

KEY NO. ITC	PART NO	PART NAME: MODEL ENG	T/A	BODY 4N	3H	5H	LEVEL S	SE	SX	OPTION	L/R	QTY	EFFECTIVE DATE FROM	TO	REMARKS	P/CODE
[01]	96219577	(E)AXLE A-REAR (D)ACHSE,HINTEN	.	.	B	B	B	S	S	S		(F)PONT-ARRIERE (S)EJE-TRASERO 1				
[02]	09100-12015	(E)BOLT-HEXAGON (D)SCHRAUBE	.	.	B	B	B	S	S	S		(F)BOULON (S)PERNO 2				
[03]	09159-12011	(E)NUT (D)MUTTER	.	.	B	B	B	S	S	S		(F)ECROU (S)TUERCA 2				
[04]	96208559	(E)STABILIZER-REAR (D)STABILISATOR,HINTEN	.	.	B	B	B	S	S	S		(F)STABILISATEUR-ARRIERE (S)ESTABILIZADOR-TRASERO 1				EE
[05]	09100-10016	(E)BOLT-HEXAGON (D)SCHRAUBE	.	.	B	B	B	S	S	S		(F)BOULON (S)PERNO 2				
[06]	09162-10002	(E)WASHER-SPRING (D)DICHTUNGSRING	.	.	B	B	B	S	S	S		(F)RONDELLE (S)ARANDELA 2				
[07]	09159-10008	(E)NUT (D)MUTTER	.	.	B	B	B	S	S	S		(F)ECROU (S)TUERCA 2				
[08]	90139050	(E)BUSHING-REAR AXLE DAMPING (D)LAGERFUTTER	.	.	B	B	B	S	S	S		(F)COUSSINET (S)BUJE-AMORTIGUADOR 2				
[09]	96115666	(E)SPINDLE A-WHEEL BEARING (D)SPINDEL	.	.	B	B	B	S	S	S	-JL9	(F)ROULEMENT PALIER (S)EJE 2				
[10]		(E)BOLT (D)SCHRAUBE										(F)BOULON (S)PERNO				

ENG(ENGINE)	T/A(TRANSAXLE)	BODY TYPE
Y = 1.5SOHC 6 = 1.6DOHC . = COMMON	M = MANUAL T/A A = AUTOMATIC T/A . = COMMON	4 N = 4 DOOR NOTCHBACK 3 H = 3 DOOR HATCHBACK 5 H = 5 DOOR HATCHBACK

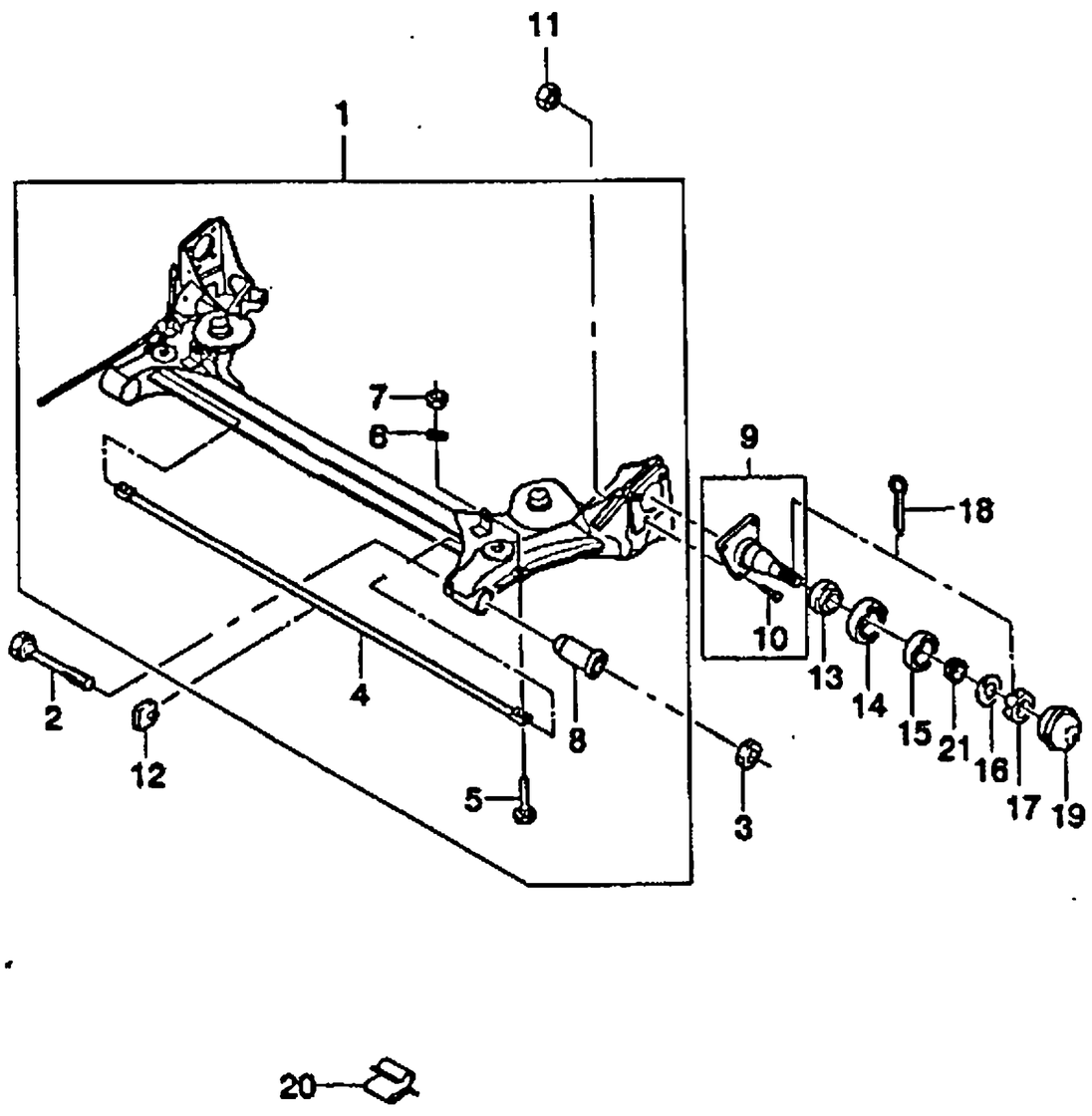

KEY NO. ITC	PART NO	MODEL ENG	T/A	BODY 4N	3H	5H	LEVEL S	SE	SX	OPTION	L/R	QTY	EFFECTIVE DATE FROM	TO	REMARKS	P/CODE
[11]	09119-10007	.	.	B	B	B	S	S	S	-JL9		8			(E)NUT (D)MUTTER (F)ECROU (S)TUERCA	
[12]	09159-10010	.	.	B	B	B	S	S	S	-JL9		8			(E)DAMPER-STABILIZER (D)DAMPFER STABILISATOR (F)AMORTISSEUR-STABILISATEUR (S)AMORTIGUADOR	
[13]	96208560	.	.	B	B	B	S	S	S			1			(E)SEAL (D)DICHTUNG (F)JOINT D'ETANCHEITE (S)SELLO	
[14]	09283-40001	.	.	B	B	B	S	S	S	-JL9		2			(E)BEARING (D)KUGELLAGER (F)ROULEMENT (S)COJINETE	
[15]	09265-29001	.	.	B	B	B	S	S	S	-JL9		2			(E)BEARING-OUTER (D)KUGELLAGER,AUSEN (F)ROULEMENT,EXTERIEUR (S)COJINETE,EXTERIOR	
[16]	09265-17201	.	.	B	B	B	S	S	S	-JL9		2			(E)WASHER (D)DICHTUNGSRING (F)RONDELLE (S)ARANDELA	
[17]	09166-16001	.	.	B	B	B	S	S	S	-JL9		2			(E)NUT (D)MUTTER (F)ECROU (S)TUERCA	
[18]	09141-16001	.	.	B	B	B	S	S	S	-JL9		2			(E)PIN-COTTER (D)STIFT (F)BROCHE (S)PASADOR	
[19]	09204-03001	.	.	B	B	B	S	S	S	-JL9		2			(E)CAP-HUB (D)DECKEL,HULSE (F)CHAPEAU-MOYEU (S)TAPA-CUBO	
	06696899	.	.	B	B	B	S	S	S	-JL9		2				

ENG(ENGINE)	T/A(TRANSAXLE)	BODY TYPE
Y = 1.5SOHC 6 = 1.6DOHC . = COMMON	M = MANUAL T/A A = AUTOMATIC T/A . = COMMON	4 N = 4 DOOR NOTCHBACK 3 H = 3 DOOR HATCHBACK 5 H = 5 DOOR HATCHBACK

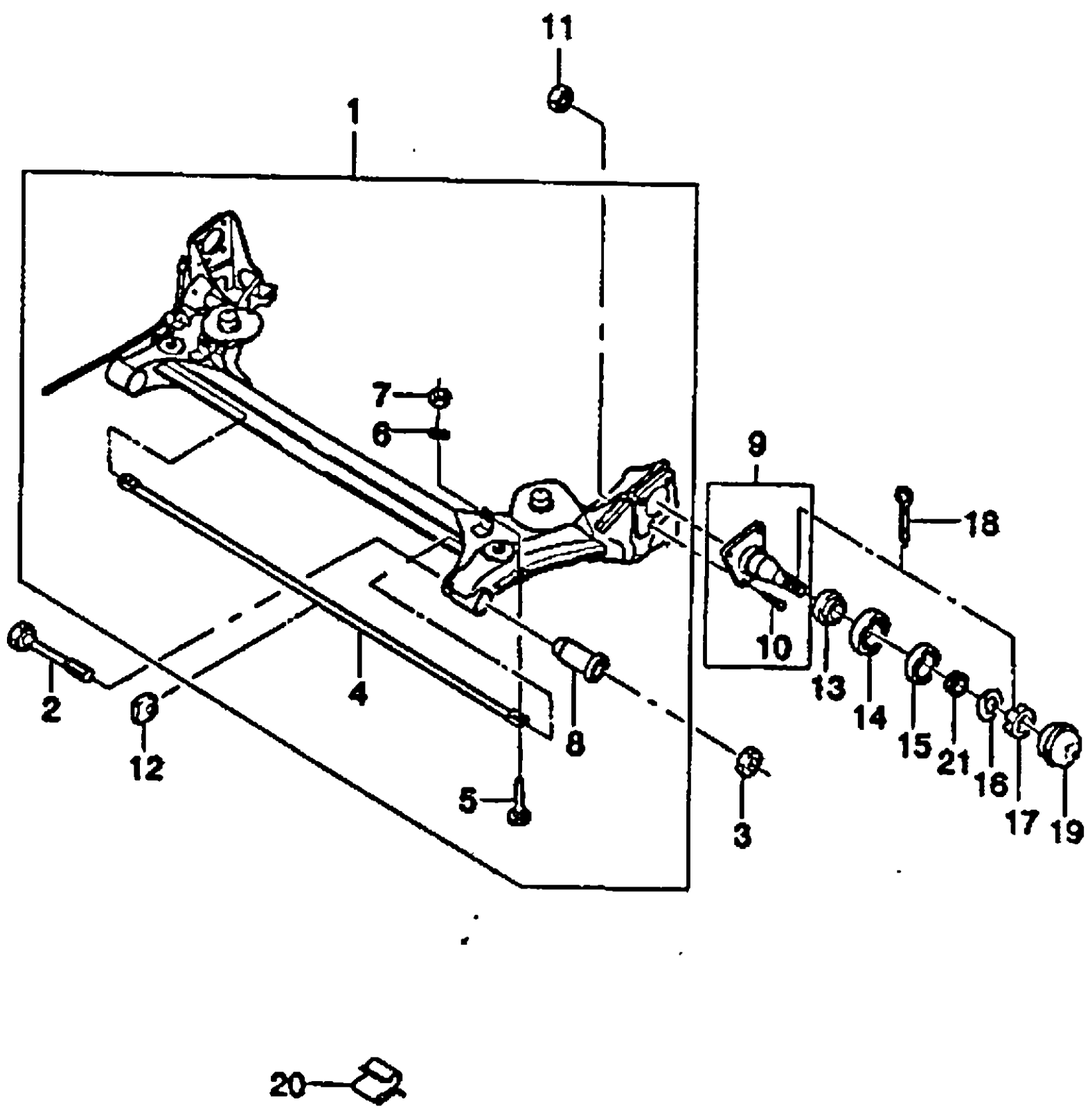

KEY NO.		PART NAME															
ITC	PART NO	MODEL								OPTION	L/R	QTY	EFFECTIVE DATE		REMARKS	P/CODE
		ENG	T/A	BODY			LEVEL						FROM	TO		
				4N	3H	5H	S	SE	SX							
	[20]	(E)CLIP (D)KLEMME									(F)ATTACHE (S)GRAPA					
	09408-00068	.	.	B	B	B	.	O	O	5JL9		3				
	[21]	(E)BEARING-INNER (D)KUGELLAGER,INNEN									(F)ROULEMENT,INTERNE (S)COJINETE-INTERNO					
	09265-17101	.	.	B	B	B	S	S	S	JL9		2				

ENG(ENGINE)	T/A(TRANSAXLE)	BODY TYPE
Y = 1.5SOHC 6 = 1.6DOHC . = COMMON	M = MANUAL T/A A = AUTOMATIC T/A . = COMMON	4 N = 4 DOOR NOTCHBACK 3 H = 3 DOOR HATCHBACK 5 H = 5 DOOR HATCHBACK

4320 REAR SHOCK ABSORBER

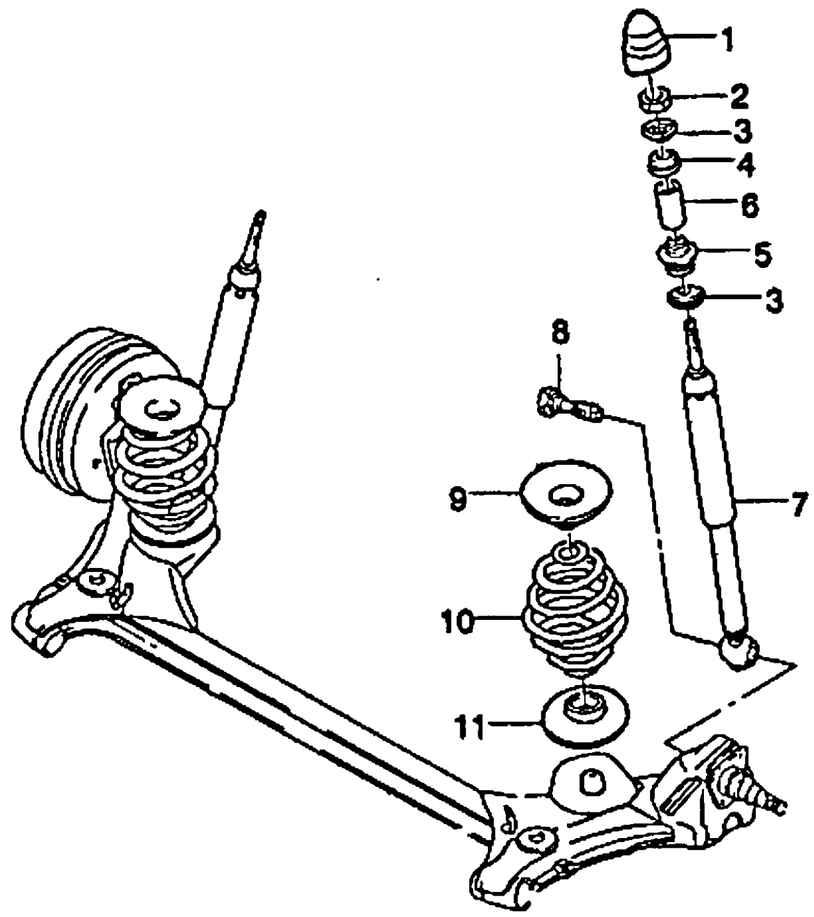

KEY NO. ITC	PART NO	MODEL ENG	T/A	BODY 4N	3H	5H	LEVEL S	SE	SX	OPTION	L/R	QTY	EFFECTIVE DATE FROM	TO	REMARKS	PICODE
[01]		(E)CAP-COVER (D)DECKEL									(F)CHAPEAU (S)TAPA- AMORTIGUADOR					
	96249401	.	.	.	B	B	S	.	S			2				
[02]		(E)NUT (D)MUTTER									(F)ECROU (S)TUERCA					
	09159-10003	.	.	B	B	B	S	S	S			2				
[03]		(E)PLATE-BUMPER,UPPER&LOWER (D)PLATTE,STOßSTANGE									(F)PLAQUE (S)PLACA-PARACHOQUES					
	90343956	.	.	B	B	B	S	S	S			4				
[04]		(E)BUMPER-SHOCK ABS,UPPER (D)STOßSCHEIBE									(F)PARE-CHOC (S)TOPE-AMORTIGUADOR,INF					
	96231921	.	.	B	B	B	S	S	S			2				
[05]		(E)BUMPER-SHOCK ABS,LOWER (D)STOßSCHEIBE									(F)PARE-CHOC-AMORTISSEUR,BAS (S)TOPE-AMORTIGUADOR,SUP					
	96231922	.	.	B	B	B	S	S	S			2		970807		
O	96246673	.	.	B	B	B	S	S	S			2	970807			
[06]		(E)SPACER (D)DISTANZSTÜCK									(F)ENTRETOISE (S)ESPACIADOR					
	96231920	.	.	B	B	B	S	S	S			2				
[07]		(E)ABSORBER A-SHOCK (D)STOßDÄMPFER									(F)AMORTISSEUR (S)AMORTIGUADOR-CHOQUE					
	96226990	.	.	B	B	B	S	S	S	&F39		2				XA
	96246626	.	.	B	B	B	A	A	A	&F40		2				XB
[08]		(E)BOLT (D)SCHRAUBE									(F)BOULON (S)PERNO					
	09111-10003	.	.	B	B	B	S	S	S			2				
[09]		(E)BUMPER-REAR AXLE (D)STOßSTANGE,HINTERE ACHSE									(F)PARE-CHOC-PONT ARRIERE (S)TOPE-EJE TRASERO					

ENG(ENGINE)	T/A(TRANSAXLE)	BODY TYPE
Y = 1.5SOHC 6 = 1.6DOHC . = COMMON	M = MANUAL T/A A = AUTOMATIC T/A . = COMMON	4 N = 4 DOOR NOTCHBACK 3 H = 3 DOOR HATCHBACK 5 H = 5 DOOR HATCHBACK

4320 REAR SHOCK ABSORBER

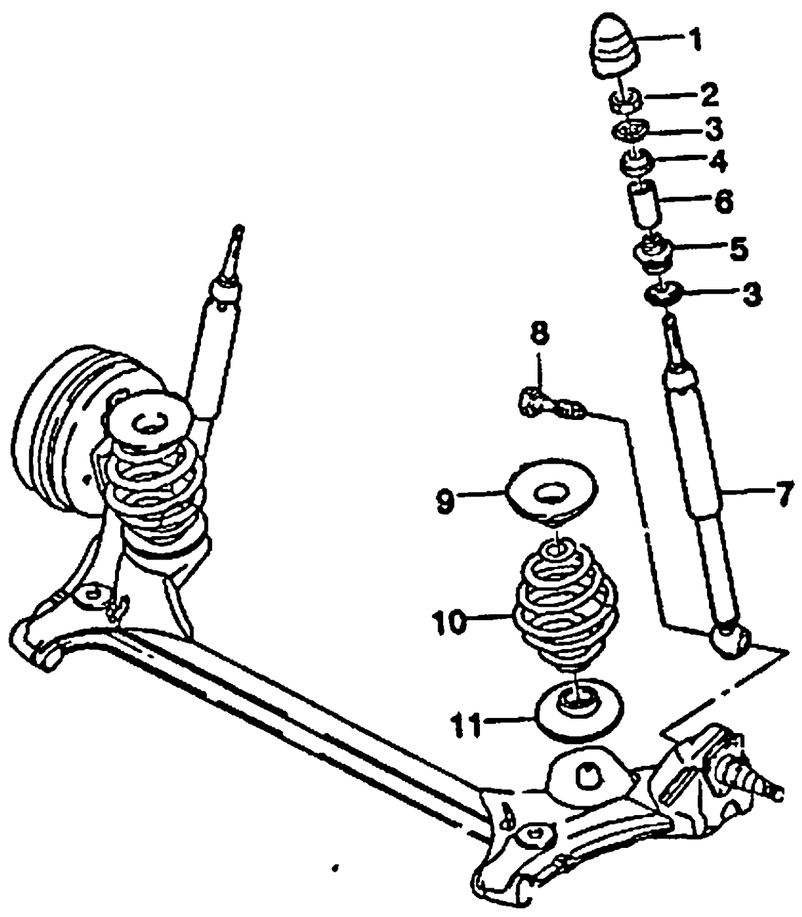

KEY NO. ITC	PART NO	MODEL ENG	MODEL T/A	MODEL BODY 4N	MODEL BODY 3H	MODEL BODY 5H	MODEL LEVEL S	MODEL LEVEL SE	MODEL LEVEL SX	OPTION	L/R	QTY	EFFECTIVE DATE FROM	EFFECTIVE DATE TO	REMARKS	P/CODE
	96179844	.	.	B	B	B	S	S	S			2				
	[10]	(E)SPRING-REAR (D)FEDERUNG,HINTEN									(F)RESSORT-ARRIERE (S)RESORTE-TRASERO					
	96226988	.	.	B	B	B	S	S	S	&F39		2				GG
	96099946	.	.	B	B	B	A	A	A	&F40		2				BO
	[11]	(E)RING-RR SPRING INSULATING (D)RING, ISOLIERUNG									(F)ANNEAU (S)ANILLO-AISLAMIENTO					
	90305263	.	.	B	B	B	S	S	S			2				

ENG(ENGINE)	T/A(TRANSAXLE)	BODY TYPE
Y = 1.5SOHC 6 = 1.6DOHC . = COMMON	M = MANUAL T/A A = AUTOMATIC T/A . = COMMON	4 N = 4 DOOR NOTCHBACK 3 H = 3 DOOR HATCHBACK 5 H = 5 DOOR HATCHBACK

4510 FRONT BRAKE

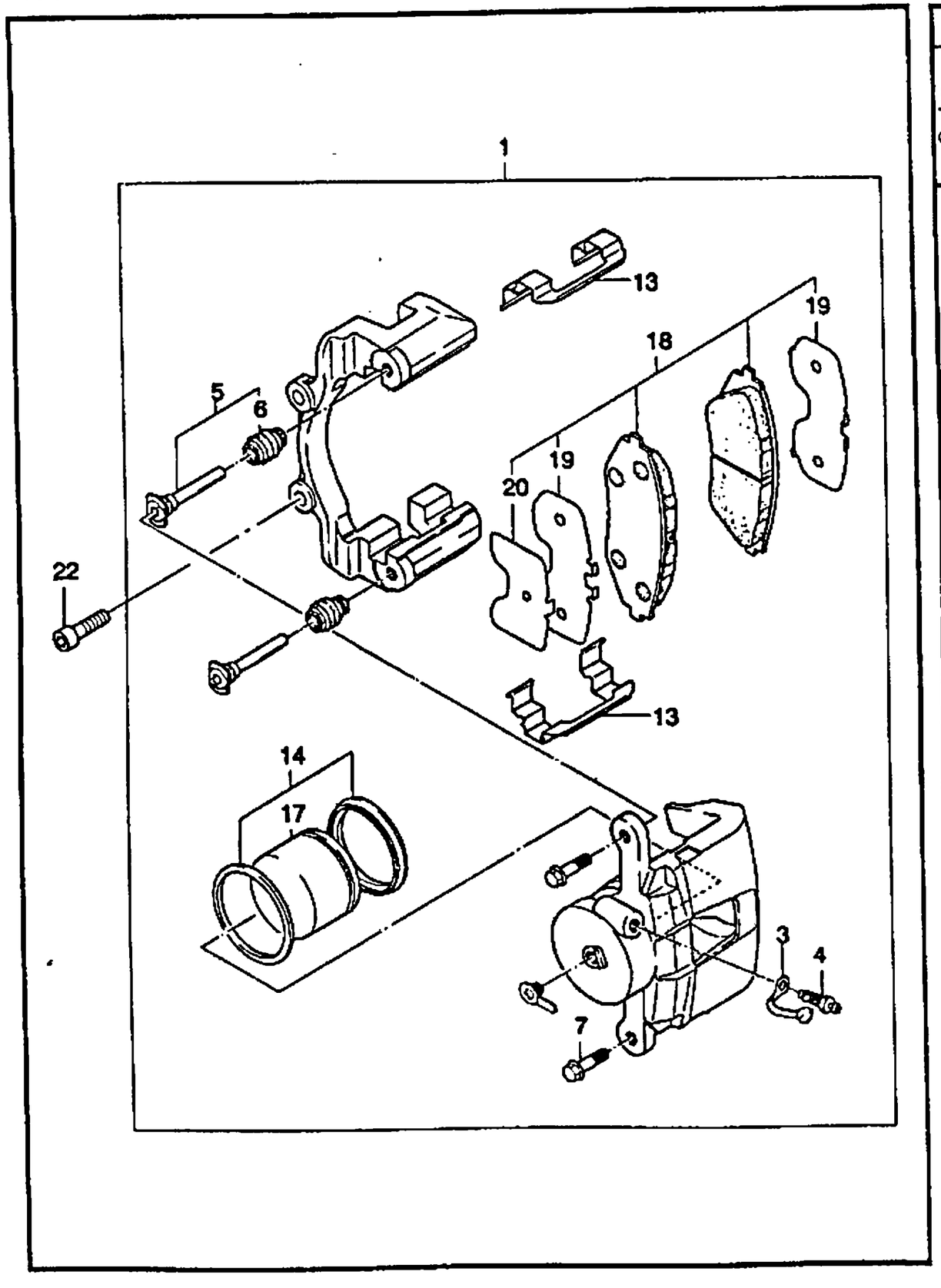

KEY NO. ITC	PART NO	MODEL ENG	T/A	BODY 4N	3H	5H	LEVEL S	SE	SX	OPTION	L/R	QTY	EFFECTIVE DATE FROM	TO	REMARKS	P/CODE
[01]		(E)CALIPER A-BRAKE SLIDING (D)TASTER,BREMS-GLEIT									(F)CALIBRE-FREIN COULISSANT (S)CALIBRADOR-DESLIZADOR					
96234339		Y	.	B	B	B	S	S	S	&JB3	LH	1			13INCH,VENT	VL
96234340		Y	.	B	B	B	S	S	S	&JB3	RH	1			13INCH,VENT	VR
96304482		6	.	B	B	B	.	.	O	&JB4	LH	1			14INCH,VENT	LD
96304433		6	.	B	B	B	.	.	O	&JB4	RH	1			14INCH,VENT	RD
[03]		(E)PROTECTOR-BLEEDER SCREW (D)SCHUTZTEIL									(F)PROTECTION (S)PROTECTOR					
410350		.	.	B	B	B	S	S	S			2				
[04]		(E)SCREW-BLEEDER (D)SCHRAUBE									(F)VIS (S)TORNILLO					
2007023		.	.	B	B	B	S	S	S			2				
[05]		(E)PIN KIT (D)STIFT									(F)BROCHE (S)PASADOR					
S4511003		.	.	B	B	B	S	S	S			1				
[06]		(E)BOOT-PIN (D)KOFFERRAUM									(F)GAINE (S)CAPUCHON					
410410		.	.	B	B	B	S	S	S			4				
[07]		(E)BOLT-PIN (D)SCHRAUBE									(F)BOULON (S)PERNO					
2006010		.	.	B	B	B	S	S	S			4				
[13]		(E)SPRING-PAD (D)FEDERUNG									(F)RESSORT (S)RESORTE					
410515		Y	.	B	B	B	S	S	S	&JB3		4				
410415		6	.	B	B	B	.	.	O	&JB4		4				
[14]		(E)SEAL KIT-PISTON (D)DICHTUNG									(F)JOINT D'ETANCHEITE (S)SELLO					
S4510008		Y	.	B	B	B	S	S	S	&JB3		1				

ENG(ENGINE)	T/A(TRANSAXLE)	BODY TYPE
Y = 1.5SOHC	M = MANUAL T/A	4 N = 4 DOOR NOTCHBACK
6 = 1.6DOHC	A = AUTOMATIC T/A	3 H = 3 DOOR HATCHBACK
. = COMMON	. = COMMON	5 H = 5 DOOR HATCHBACK

4510 FRONT BRAKE

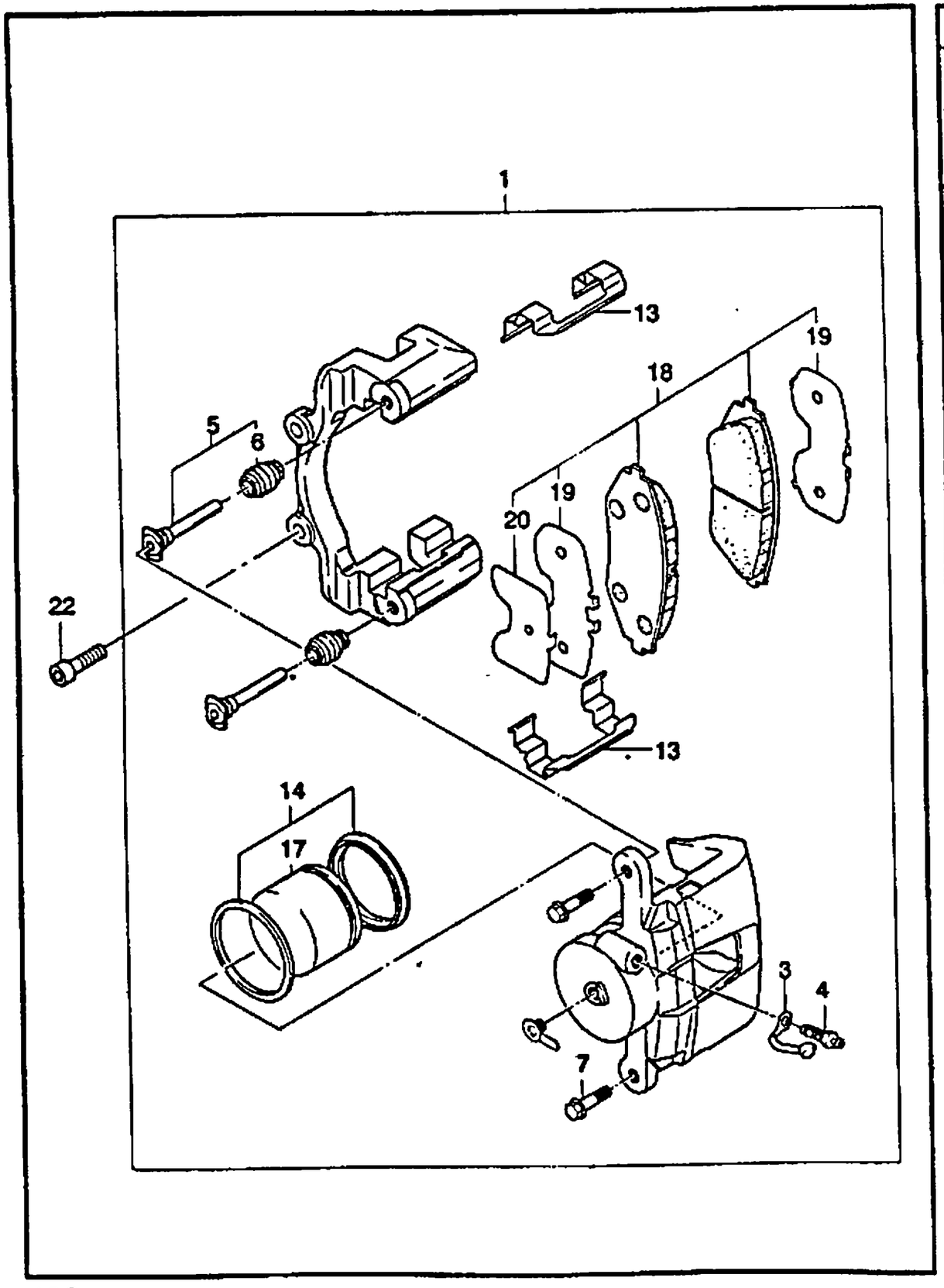

KEY NO. ITC	PART NO	MODEL ENG	T/A	BODY 4N	3H	5H	LEVEL S	SE	SX	OPTION	L/R	QTY	EFFECTIVE DATE FROM	TO	REMARKS	P/CODE
	S4511005	6	.	B	B	B	.	.	O	&JB4		1				
[17]		(E)PISTON (D)KOLBEN										(F)PISTON (S)PISTON				
	410507	Y	.	B	B	B	S	S	S	&JB3		2				
	410807	6	.	B	B	B	.	.	O	&JB4		2				
[18]		(E)PAD SET-BRAKE (D)UNTERLAGE-SATZ										(F)JEU DE PATINS-FREIN AVANT (S)JUEGO DE COJIN-FRENOS				
	S4510004	Y	.	B	B	B	S	S	S	&JB3		1				
	S4510005	6	.	B	B	B	.	.	O	&JB4		1				
[19]		(E)SHIM-ANT NOISE (D)AUSGLEICHSSCHEIBE										(F)CALE DE SUPPORT (S)CUÑA				
	410513	Y	.	B	B	B	S	S	S	&JB3		4				
	410413	6	.	B	B	B	.	.	O	&JB4		4				
[20]		(E)COVER-SHIM (D)DECKEL										(F)CARTER (S)CUBIERTA				
	410517	Y	.	B	B	B	S	S	S	&JB3		2				
	410417	6	.	B	B	B	.	.	O	&JB4		2				
[22]		(E)BOLT (D)SCHRAUBE										(F)BOULON (S)PERNO				
	09106-12002	.	.	B	B	B	S	S	S			4				

ENG(ENGINE)	T/A(TRANSAXLE)	BODY TYPE
Y = 1.5SOHC 6 = 1.6DOHC . = COMMON	M = MANUAL T/A A = AUTOMATIC T/A . = COMMON	4 N = 4 DOOR NOTCHBACK 3 H = 3 DOOR HATCHBACK 5 H = 5 DOOR HATCHBACK

4520 REAR BRAKE

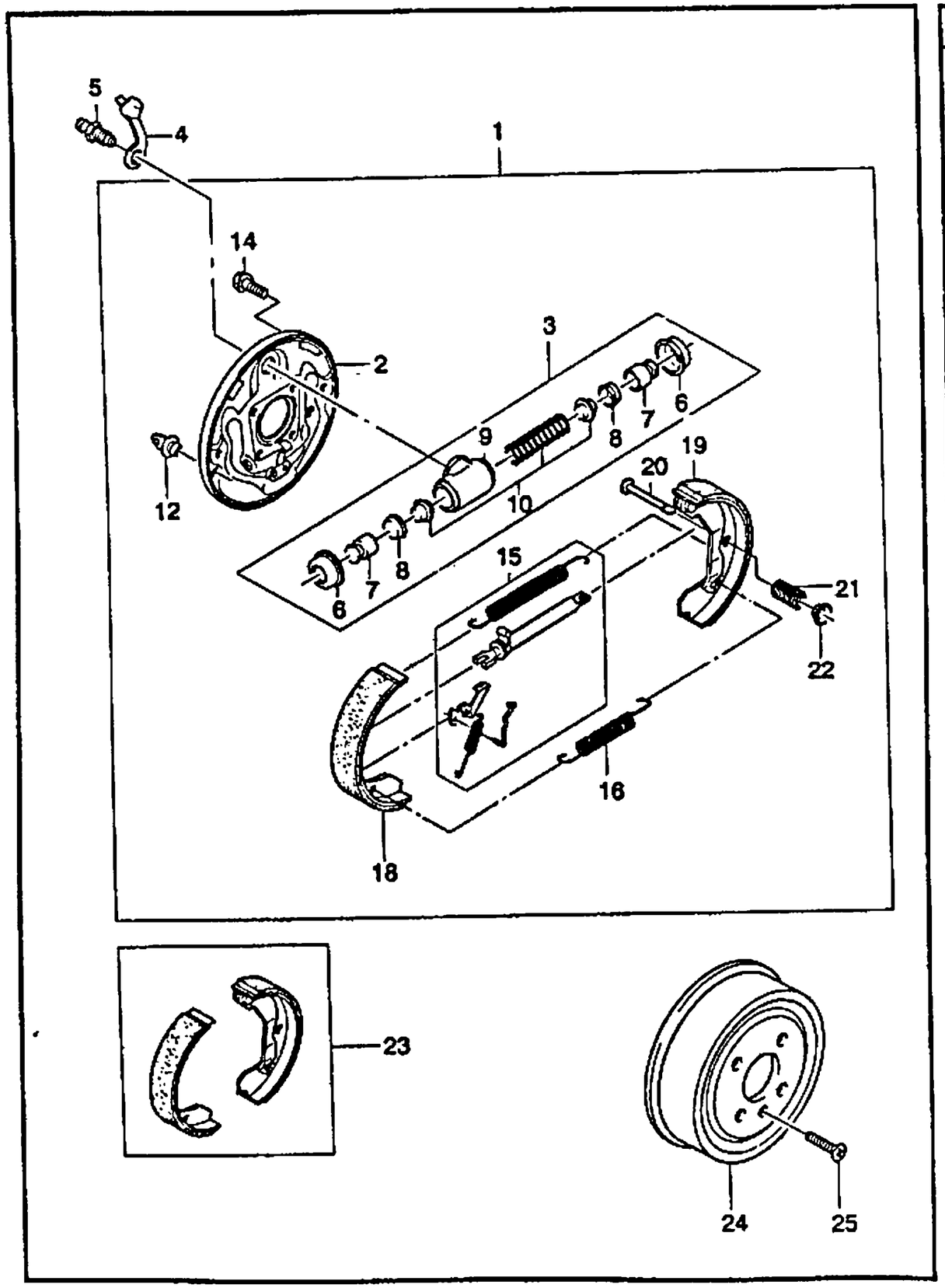

KEY NO. ITC	PART NO	MODEL ENG	T/A	BODY 4N	3H	5H	LEVEL S	SE	SX	OPTION	L/R	QTY	EFFECTIVE DATE FROM	TO	REMARKS	P/CODE
[01]		(E)BRAKE A-REAR (D)BREMSE,HINTEN									(F)FREIN-ARRIERE (S)FRENO-TRASERO					
	96304439	Y	.	B	B	B	S	S	S		LH	1			Φ 17.46	ML
	96304440	Y	.	B	B	B	S	S	S		RH	1			Φ 17.46	MR
	96304443	6	.	B	B	B	.	.	O		LH	1			Φ 19.05	DL
	96304444	6	.	B	B	B	.	.	O		RH	1			Φ 19.05	DR
[02]		(E)PLATE-BRAKE BACKING (D)PLATTE,BREMS RÜCKEN									(F)PLAQUE-FOND DE FREIN (S)PLACA-FRENO DE REVERSA					
	96233628	.	.	B	B	B	S	S	S		LH	1				
	96233629	.	.	B	B	B	S	S	S		RH	1				
[03]		(E)CYLINDER-BRAKE WHEEL (D)ZYLINDER,BREMSRAD									(F)CYLINDRE-FREIN ROUE (S)CILINDRO-RUEDA FRENO					
	90235420	Y	.	B	B	B	S	S	S			2				
	90235422	6	.	B	B	B	.	.	O			2				
[04]		(E)DUST CAP (D)STAUBDECKEL									(F)CHAPEAU-POUSSIERE (S)TAPA-POLVO					
	06620325	.	.	B	B	B	S	S	S			2				
[05]		(E)JET (D)DUESE									(F)JET (S)SURTIDOR					
	09493-02001	.	.	B	B	B	S	S	S			2				
[06]		(E)CAP-BRAKE WHEEL CYLINDER (D)DECKEL,BREMS-RAD-ZYLINDER									(F)CHAPEAU (S)TAPA-CILINDRO DE RUEDA					
	96179002	Y	.	B	B	B	S	S	S			4				
	96179003	6	.	B	B	B	.	.	O			4				
[07]		(E)PISTON-WHEEL CYLINDER (D)KOLBEN,RAD ZYLINDER									(F)PISTON (S)PISTON-CILINDRO DE FRENO					
	90168036	Y	.	B	B	B	S	S	S			4				

ENG(ENGINE)	T/A(TRANSAXLE)	BODY TYPE
Y = 1.5SOHC 6 = 1.6DOHC . = COMMON	M = MANUAL T/A A = AUTOMATIC T/A . = COMMON	4 N = 4 DOOR NOTCHBACK 3 H = 3 DOOR HATCHBACK 5 H = 5 DOOR HATCHBACK

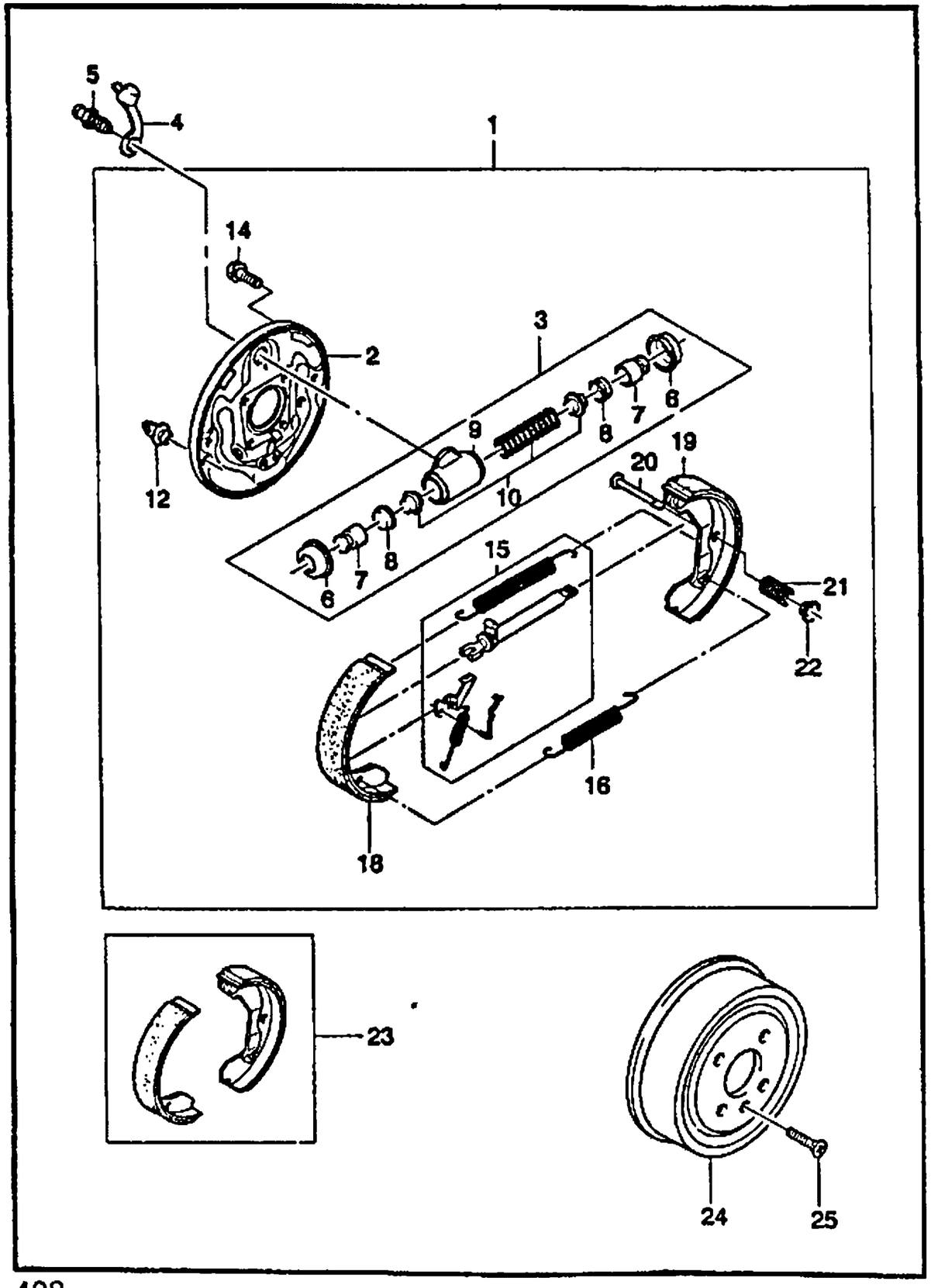

KEY NO.		PART NAME															
		MODEL															
				BODY			LEVEL						EFFECTIVE DATE				
ITC	PART NO	ENG	T/A	4N	3H	5H	S	SE	SX	OPTION	L/R	QTY	FROM	TO	REMARKS	P/CODE
	90168037	6	.	B	B	B	.	.	O			4				
[08]		(E)CUFF-WHEEL CYLINDER (D)HÜLSEN, BREMSTROMMEL										(F)MANCHETTE (S)PUÑO-CILINDRO DE RUEDA				
	90168030	Y	.	B	B	B	S	S	S			4				
	90168031	6	.	B	B	B	.	.	O			4				
[09]		(E)BODY-CYLINDER (D)ZYLINDER,KÖRPER										(F)CYLINDRE-CORPS (S)CILINDRO-CUERPO				
N/S(3)																
[10]		(E)SPRING-COMPRESSION (D)FEDERUNG,VERDICHTUNG										(F)RESSORT-COMPRESSION (S)RESORTE-COMPRESION				
	90189461	Y	.	B	B	B	S	S	S			2				
	90189462	6	.	B	B	B	.	.	O			2				
[12]		(E)PLUG (D)STÖPSEL										(F)BOUCHON (S)TAPON				
	90063579	.	.	B	B	B	S	S	S			4				
[14]		(E)SCREW (D)SCHRAUBE										(F)VIS (S)TORNILLO				
	11045532	.	.	B	B	B	S	S	S			2				
[15]		(E)READJUSTING UNIT (D)NEU-EINSTELLUNG EINHEIT										(F)UNITE DE REAJUSTEMENT (S)UNIDAD DE REAJUSTE				
	90199718	.	.	B	B	B	S	S	S			LH 1				
	90199719	.	.	B	B	B	S	S	S			RH 1				
[16]		(E)SPRING-EXTENSION (D)FEDERUNG,VERLÄNGERUNG										(F)RESSORT-EXTENSION (S)RESORTE-EXTENSION				
	96179133	.	.	B	B	B	S	S	S			2				
[18]		(E)SHOE A-BRAKE,FRONT (D)SCHUH,BREMS-VORNE										(F)SABOT-FREIN,AVANT (S)ZAPATA-FRENO,DELANTERO				
	96241681	Y	.	B	B	B	S	S	S			2				

ENG(ENGINE)	T/A(TRANSAXLE)	BODY TYPE
Y = 1.5SOHC 6 = 1.6DOHC . = COMMON	M = MANUAL T/A A = AUTOMATIC T/A . = COMMON	4 N = 4 DOOR NOTCHBACK 3 H = 3 DOOR HATCHBACK 5 H = 5 DOOR HATCHBACK

4520 REAR BRAKE

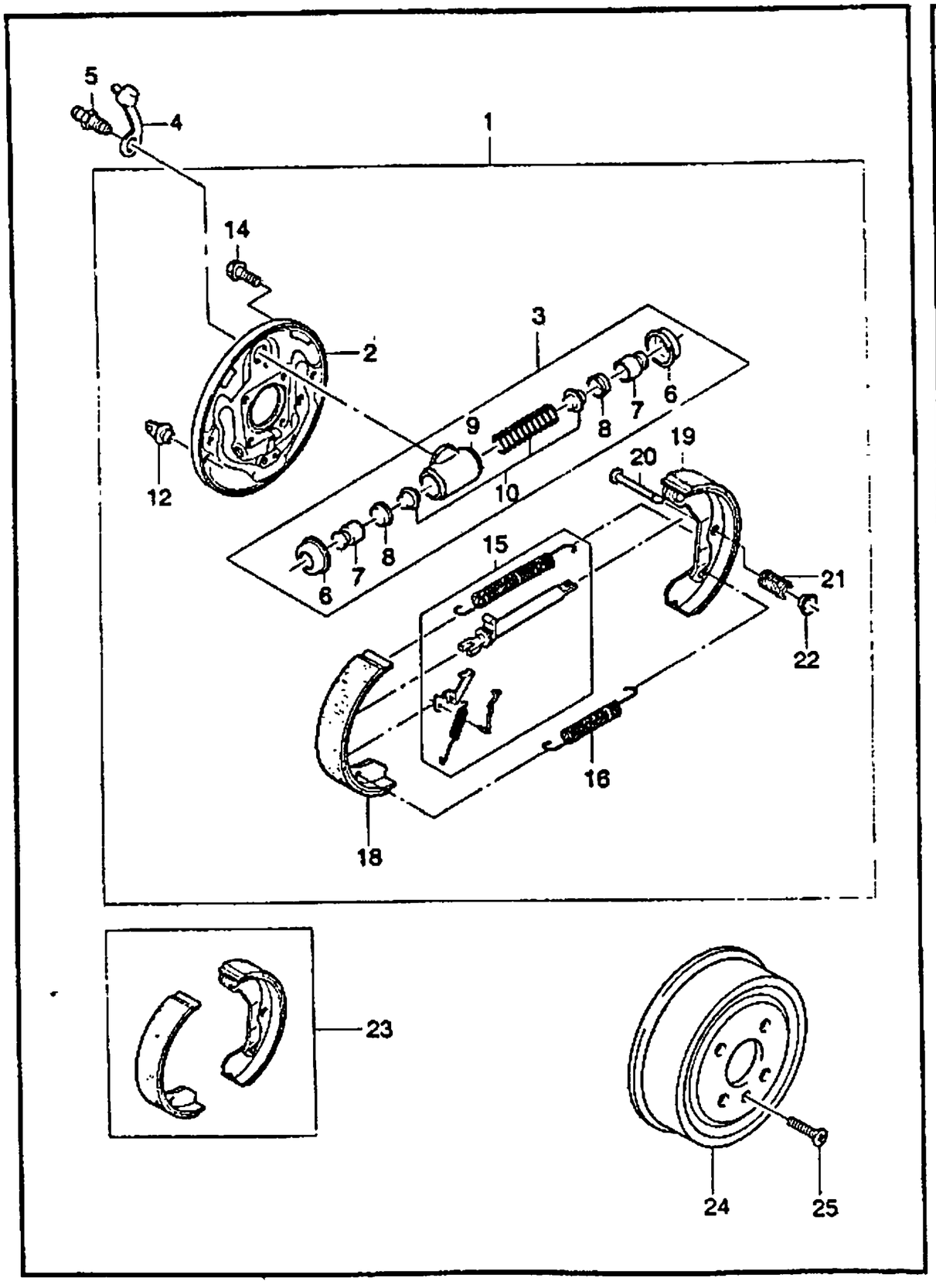

KEY NO. ITC	PART NO	MODEL ENG	T/A	BODY 4N	3H	5H	LEVEL S	SE	SX	OPTION	L/R	QTY	EFFECTIVE DATE FROM	TO	REMARKS	P/CODE
	96226105	6	.	B	B	B	.	.	O			2				
[19]	(E)SHOE A-BRAKE,REAR (D)SCHUH,BREMS-HINTEN											(F)SABOT-FREIN,ARRIERE (S)ZAPATA-FRENO,TRASERO				
	96241679	Y	.	B	B	B	S	S	S		LH	1				
	96241680	Y	.	B	B	B	S	S	S		RH	1				
	96226101	6	.	B	B	B	.	.	O		LH	1				
	96226103	6	.	B	B	B	.	.	O		RH	1				
[20]	(E)PIN-RETAINING SPRING (D)STIFT,HALTER-FEDERUNG											(F)BROCHE (S)PASADOR-RESORTE RETENEDOR				
	06638956	.	.	B	B	B	S	S	S			4				
[21]	(E)SPRING-COMPRESSION (D)FEDERUNG,VERDICHTUNG											(F)RESSORT-COMPRESSION (S)RESORTE-COMPRESION				
	06681527	.	.	B	B	B	S	S	S			4				
[22]	(E)PLATE-SECURING SPRING (D)PLATTE											(F)PLAQUE-RESSORT D'ATTACHE (S)PLACA-RESORTE DE ASEGURAR				
	06663706	.	.	B	B	B	S	S	S			4				
[23]	(E)SHOE SET-BRAKE,REAR (D)SCHUH SATZ,BREMS-,HINTEN											(F)JEU DE SABOTS-FREIN (S)JUEGO DE ZAPATO-FRENO				
	S4520003	Y	.	B	B	B	S	S	S			1				
	96226110	6	.	B	B	B	.	.	O			1				
[24]	(E)DRUM-BRAKE (D)BREMSTROMMEL											(F)TAMBOUR-FREIN (S)TAMBOR-TORNILLO				
	96193771	.	.	B	B	B	S	S	S	-JL9		2			W/HUB	
	96175281	.	.	B	B	B	.	O	O	&JL9		2			WO/HUB	
[25]	(E)SCREW (D)SCHRAUBE											(F)VIS (S)TORNILLO				
	02126-06123	.	.	B	B	B	.	O	O	&JL9		2				

ENG(ENGINE)	T/A(TRANSAXLE)	BODY TYPE
Y = 1.5SOHC 6 = 1.6DOHC . = COMMON	M = MANUAL T/A A = AUTOMATIC T/A . = COMMON	4 N = 4 DOOR NOTCHBACK 3 H = 3 DOOR HATCHBACK 5 H = 5 DOOR HATCHBACK

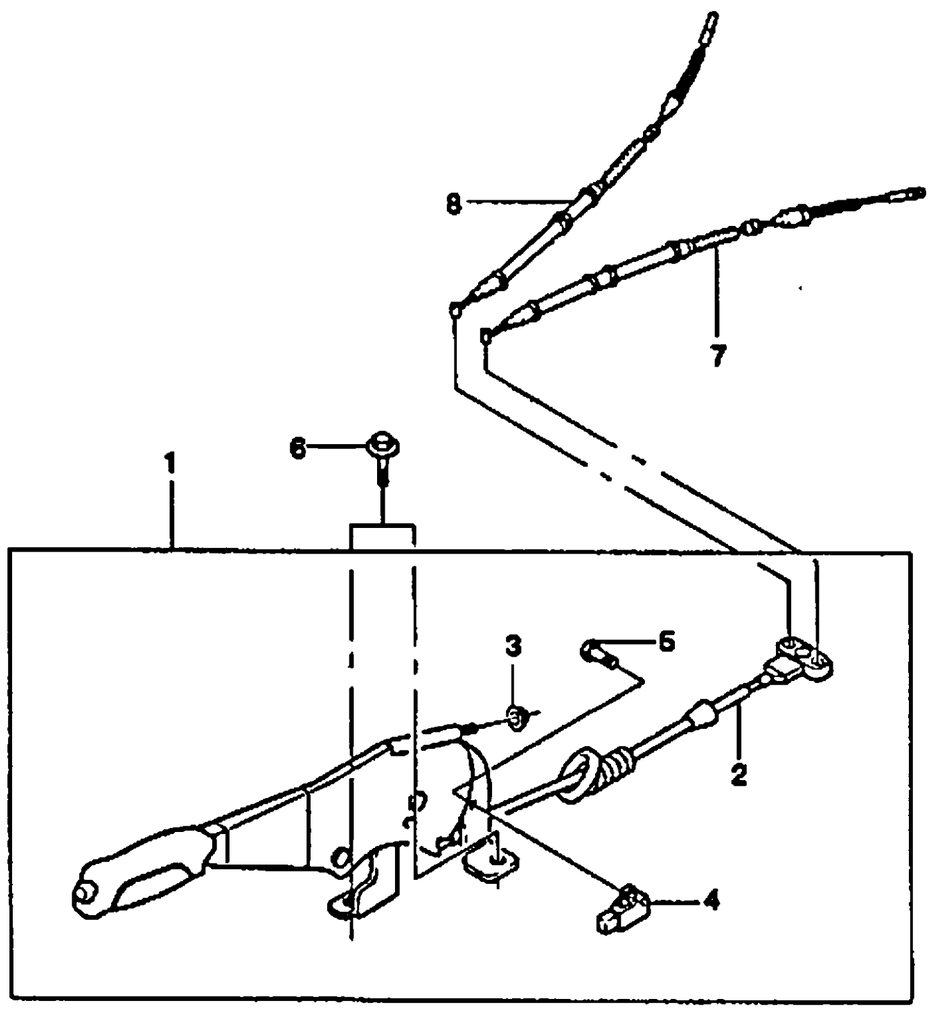

9	10	11

KEY NO.		PART NAME														
ITC	PART NO	MODEL							OPTION	L/R	QTY	EFFECTIVE DATE		REMARKS	PICODE
		ENG	T/A	BODY			LEVEL					FROM	TO		
				4N	3H	5H	S	SE	SX						
[01]	96304484	.	.	B	B	B	S	S	S	(E)LEVER A-PARKING BRAKE (D)HEBEL,HANDBREMSE	(F)LEVIER-FREIN DE SECOURS (S)PALANCA	1			
[02]	96232674	.	.	B	B	B	S	S	S	(E)CABLE A-PARKING LEVER (D)KABEL	(F)CABLE (S)CABLE	1			
[03]	09159-06010	.	.	B	B	B	S	S	S	(E)NUT (D)MUTTER	(F)ECROU (S)TUERCA	1			
[04]	90087504	.	.	B	B	B	S	S	S	(E)SWITCH A-P/BRAKE WARNING (D)SCHALTER	(F)COMMUTATEUR (S)INTERRUPTOR	1			
[05]	01137-05102	.	.	B	B	B	S	S	S	(E)BOLT-HEXAGON (D)SCHRAUBE	(F)BOULON (S)PERNO	1			
[06]	01517-08163	.	.	B	B	B	S	S	S	(E)BOLT-HEXAGON FLANGE (D)SCHRAUBE	(F)BOULON (S)PERNO	2			
[07]	96230545	.	.	B	B	B	S	S	S	(E)CABLE A-PARKING BRAKE (D)KABEL,HANDBREMSE	(F)FREIN DE SECOURS (S)CABLE	LH 1			
[08]	96245829	.	.	B	B	B	S	S	S	(E)CABLE A-PARKING BRAKE (D)KABEL,HANDBREMSE	(F)FREIN DE SECOURS (S)CABLE	RH 1			
[09]	90111423	.	.	B	B	B	S	S	S	(E)CLAMP-PRESSURE HOSE (D)KLAMMER	(F)PINCE (S)ABRAZADERA	1			
[10]										(E)NUT-HEXAGON (D)MUTTER	(F)ECROU (S)TUERCA				

ENG(ENGINE)	T/A(TRANSAXLE)	BODY TYPE
Y = 1.5SOHC 6 = 1.6DOHC . = COMMON	M = MANUAL T/A A = AUTOMATIC T/A . = COMMON	4 N = 4 DOOR NOTCHBACK 3 H = 3 DOOR HATCHBACK 5 H = 5 DOOR HATCHBACK

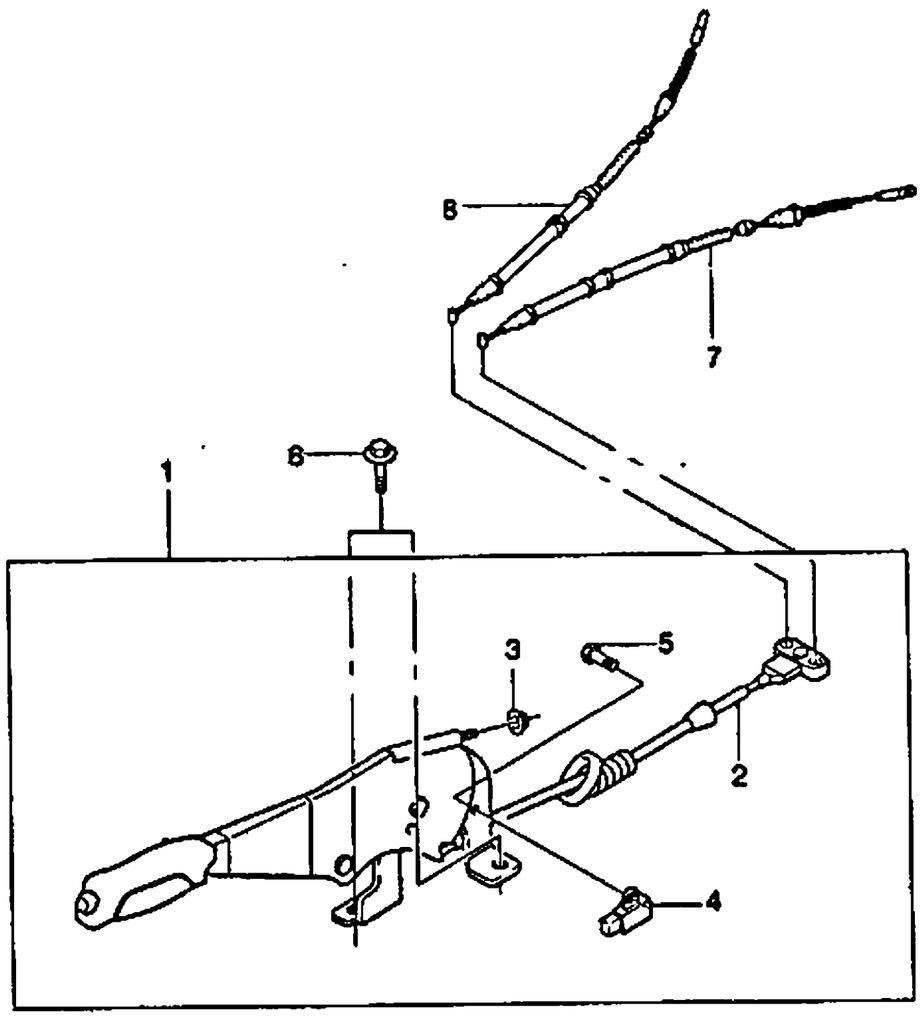

9	10	11

KEY NO.		PART NAME														
ITC	PART NO	MODEL								OPTION	L/R	QTY	EFFECTIVE DATE		REMARKS	P/CODE
		ENG	T/A	BODY			LEVEL						FROM	TO		
				4N	3H	5H	S	SE	SX							
	08361-25063	.	.	B	B	B	S	S	S			7				
	[11]	(E)CLIP (D)KLEMME										(F)ATTACHE (S)GRAPA				
	96308272	.	.	B	B	B	S	S	S			2				

ENG(ENGINE)	T/A(TRANSAXLE)	BODY TYPE
Y = 1.5SOHC 6 = 1.6DOHC . = COMMON	M = MANUAL T/A A = AUTOMATIC T/A . = COMMON	4 N = 4 DOOR NOTCHBACK 3 H = 3 DOOR HATCHBACK 5 H = 5 DOOR HATCHBACK

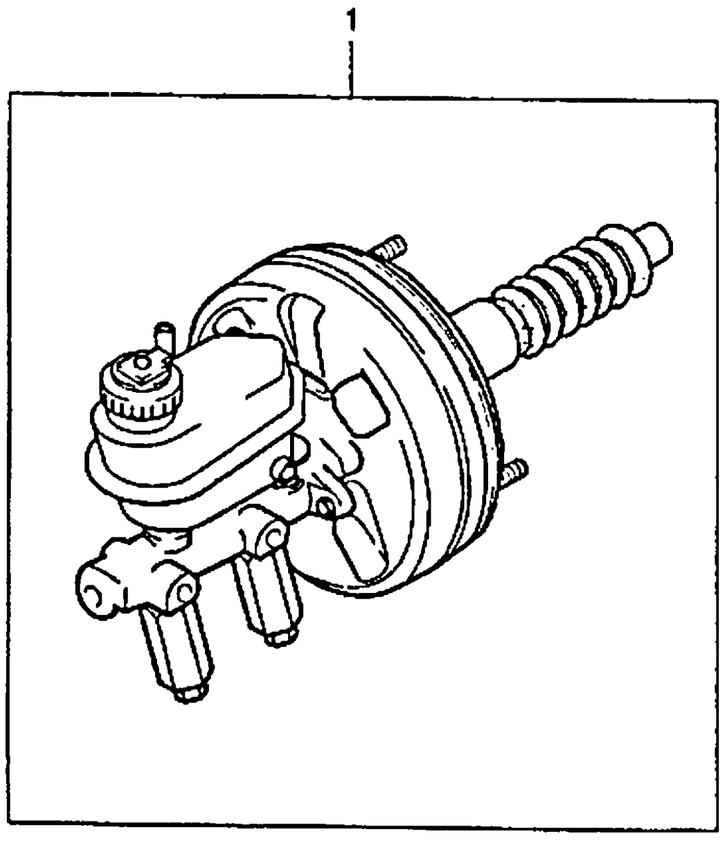

KEY NO.		PART NAME														
ITC	PART NO	MODEL								OPTION	L/R	QTY	EFFECTIVE DATE		REMARKS	P/CODE
		ENG	T/A	BODY			LEVEL						FROM	TO		
				4N	3H	5H	S	SE	SX							
[01]		(E)CYLINDER A-BRAKE MASTER (D)ZYLINDER HAUPT									(F)CYLINDRE-MAITRE (S)CILINDRO-MAESTRO					
	96306181	Y	M	B	B	B	S	S	S	-JL9		1			Φ20.64	TA
	96306182	Y	M	B	B	B	.	O	O	&JL9		1			Φ20.64	TC
	96228915	Y	A	B	B	B	O	O	O	-JL9		1			Φ20.64	TB
	96228918	Y	A	B	B	B	.	O	O	&JL9		1			Φ20.64	TD
	96306184	6	M	B	B	B	.	.	O	-JL9		1			Φ22.22	TE
	96306183	6	M	B	B	B	.	.	O	&JL9		1			Φ22.22	TG
	96228924	6	A	B	B	B	.	.	O	-JL9		1			Φ22.22	TF
	96228921	6	A	B	B	B	.	.	O	&JL9		1			Φ22.22	TH

ENG(ENGINE)	T/A(TRANSAXLE)	BODY TYPE
Y = 1.5SOHC 6 = 1.6DOHC . = COMMON	M = MANUAL T/A A = AUTOMATIC T/A . = COMMON	4 N = 4 DOOR NOTCHBACK 3 H = 3 DOOR HATCHBACK 5 H = 5 DOOR HATCHBACK

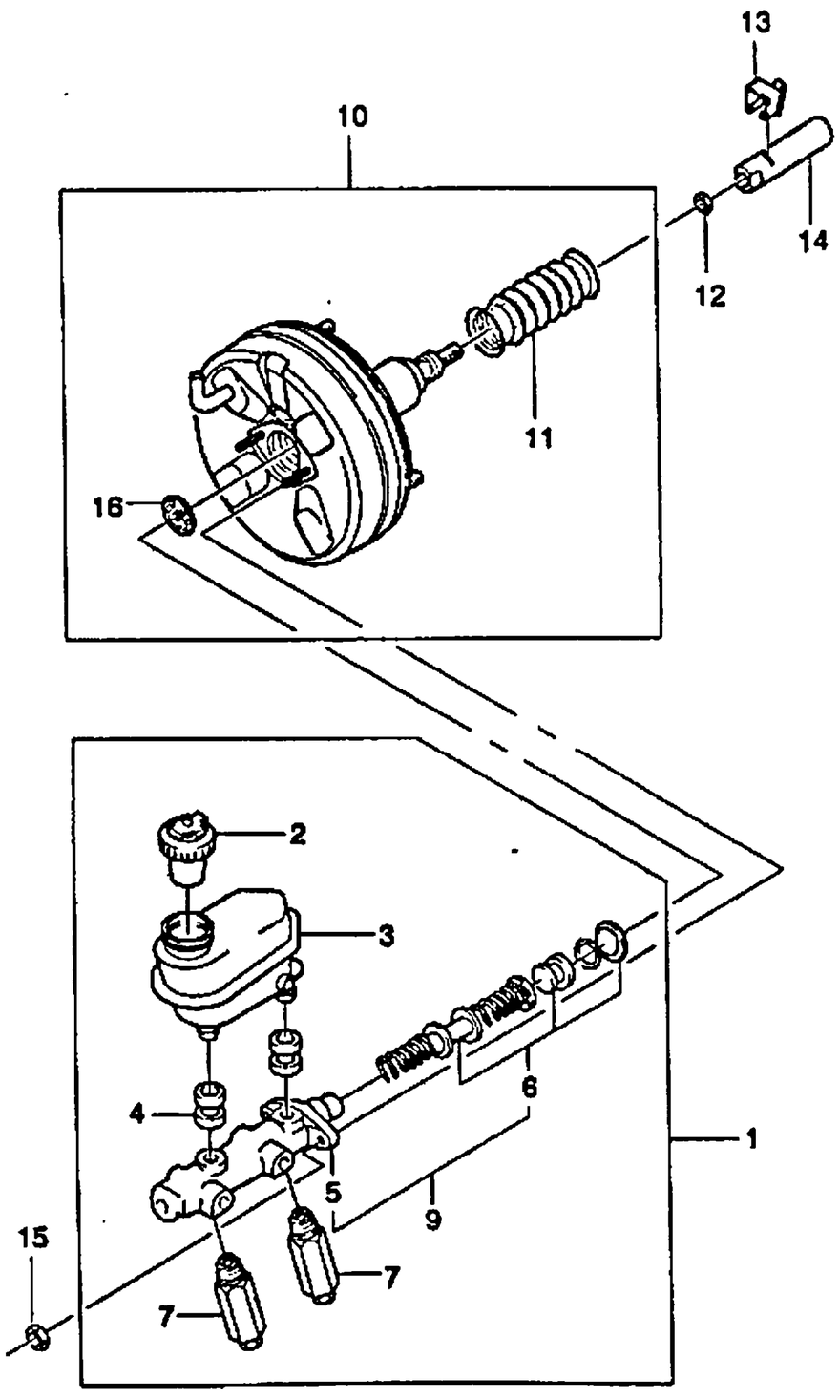

KEY NO. ITC	PART NO	MODEL ENG	MODEL T/A	BODY 4N	BODY 3H	BODY 5H	LEVEL S	LEVEL SE	LEVEL SX	OPTION	L/R	QTY	EFFECTIVE DATE FROM	EFFECTIVE DATE TO	REMARKS	P/CODE
[01]	(E)CYLINDER A • MASTER (D)ZYLINDER HAUPT										(F)CYLINDRE-MAITRE (S)CILINDRO-MAESTRO					
426505		Y	M	B	B	B	S	S	S	-JL9		1				
426503		Y	M	B	B	B	.	O	O	&JL9		1				
426506		Y	A	B	B	B	O	O	O	-JL9		1				
426504		Y	A	B	B	B	.	O	O	&JL9		1				
426570		6	M	B	B	B	.	.	O	-JL9		1				
426507		6	M	B	B	B	.	.	O	&JL9		1				
426571		6	A	B	B	B	.	.	O	-JL9		1				
426508		6	A	B	B	B	.	.	O	&JL9		1				
[02]	(E)CAP-RESERVOIR (D)DECKEL,BEHÄLTER										(F)CHAPEAU-RESERVOIR (S)TAPA-RESERVA					
426495		.	.	B	B	B	S	S	S			1				
[03]	(E)BODY-RESERVOIR (D)KAROSSERIE,BEHÄLTER										(F)CORPS-RESERVOIR (S)CARROCERIA-EMBALSE					
426475		.	M	B	B	B	S	S	S			1				
426499		.	A	B	B	B	O	O	O			1				
[04]	(E)SEAL-RESERVOIR (D)DICHTUNG,BEHÄLTER										(F)JOINT-RESERVOIR (S)SELLO-RESERVA					
3492377		.	.	B	B	B	S	S	S			2				
[05]	(E)BODY-MASTER CYLINDER (D)KAROSSERIE,HAUPTZYLINDER										(F)CORPS-CYLINDRE PRINCIPAL (S)CARROCERIA-CILINDRO					
N/S(9)																
[06]	(E)PISTON&SEAL KIT (D)KOLBEN&VERDICHTUNGS-SATZ										(F)PISTON&TROUSSE DE JOINT (S)JUEGO DE PISTON Y SELLO					
3492436		Y	.	B	B	B	S	S	S			1				
3492355		6	.	B	B	B	.	.	O			1				

ENG(ENGINE)	T/A(TRANSAXLE)	BODY TYPE
Y = 1.5SOHC 6 = 1.6DOHC . = COMMON	M = MANUAL T/A A = AUTOMATIC T/A . = COMMON	4 N = 4 DOOR NOTCHBACK 3 H = 3 DOOR HATCHBACK 5 H = 5 DOOR HATCHBACK

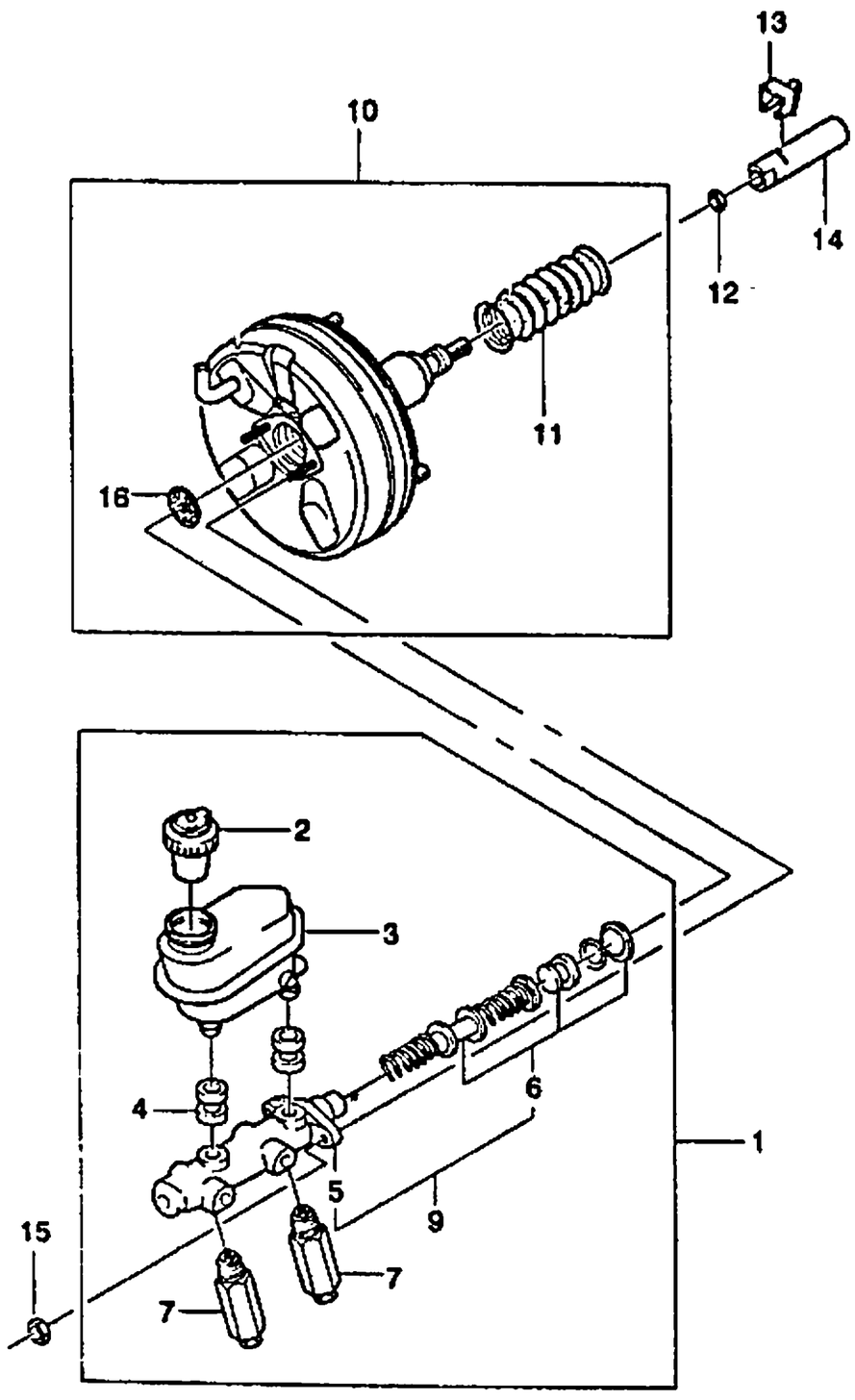

KEY NO. ITC	PART NO	MODEL ENG	T/A	BODY 4N	3H	5H	LEVEL S	SE	SX	OPTION	L/R	QTY	EFFECTIVE DATE FROM	TO	REMARKS	P/CODE
[07]		(E)PROPORTIONER-BRAKE (D)PROPORTIONIERUNG,BREMSE									(F)DOSEUR-FREIN (S)PROPORCIONADOR-FRENO					
	3488967	Y	.	B	B	B	S	S	S	-JL9		2				
	426120	6	.	B	B	B	.	.	O	-JL9		2				
[09]		(E)CYLINDER SUB A-MASTER (D)UNTER-ZYLINDER,HAUPT									(F)CYLINDRE SUB-MAITRE (S)CILINDRO SUB-MAESTRO					
	426382	Y	.	B	B	B	S	S	S	-JL9		1				
	426383	Y	.	B	B	B	.	O	O	&JL9		1				
	426253	6	.	B	B	B	.	.	O	-JL9		1				
	426299	6	.	B	B	B	.	.	O	&JL9		1				
[10]		(E)BOOSTER-BRAKE (D)BREMSVERSTÄRKER									(F)SURPRESSEUR-FREIN (S)SERVO-FRENO					
	426589	.	.	B	B	B	S	S	S			1				
[11]		(E)BOOT-BRAKE BOOSTER (D)KOFFERRAUM									(F)GAINE (S)CAPUCHON-SERVO DE FRENO					
	3492912A	.	.	B	B	B	S	S	S			1				
[12]		(E)NUT (D)MUTTER									(F)ECROU (S)TUERCA					
	09159-10002	.	.	B	B	B	S	S	S			1				
[13]		(E)SPRING-RETAINING (D)FEDERUNG,HALTER									(F)RESSORT-D'ARRET (S)RESORTE-RETENIENDO					
	90184913	.	.	B	B	B	S	S	S			1				
[14]		(E)ADJUSTER (D)EINSTELLVORRICHTUNG									(F)AJUSTEUR (S)AJUSTADOR					
	90184914	.	.	B	B	B	S	S	S			1				
[15]		(E)NUT (D)MUTTER									(F)ECROU (S)TUERCA					
	2909253	.	.	B	B	B	S	S	S			2				

ENG(ENGINE)	T/A(TRANSAXLE)	BODY TYPE
Y = 1.5SOHC 6 = 1.6DOHC . = COMMON	M = MANUAL T/A A = AUTOMATIC T/A . = COMMON	4 N = 4 DOOR NOTCHBACK 3 H = 3 DOOR HATCHBACK 5 H = 5 DOOR HATCHBACK

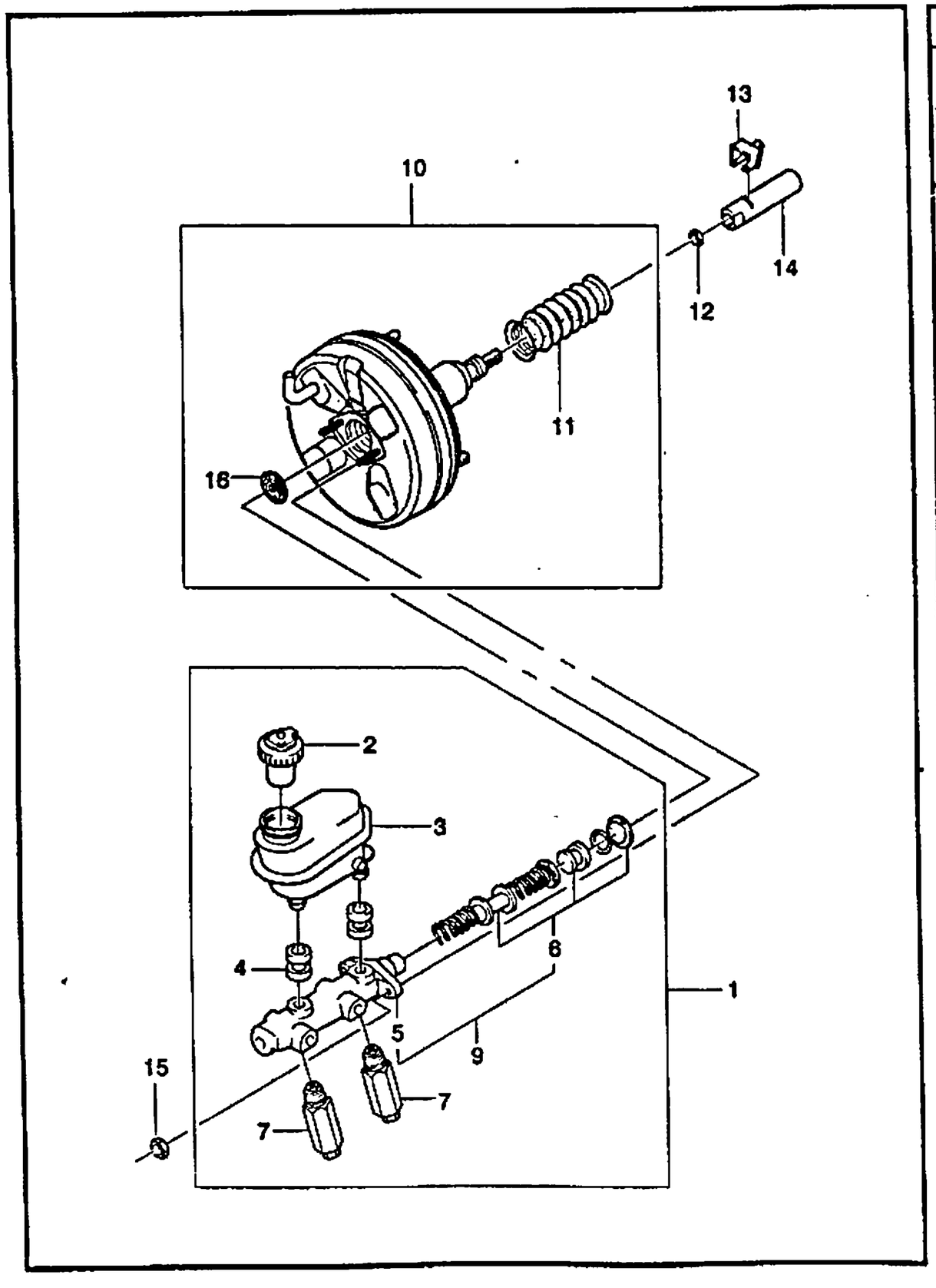

KEY NO.		PART NAME															
ITC	PART NO	MODEL								OPTION	L/R	QTY	EFFECTIVE DATE		REMARKS	PICODE
		ENG	T/A	BODY			LEVEL						FROM	TO		
				4N	3H	5H	S	SE	SX							
[16]		(E)SEAL-FRONT HOUSING									(F)JOINT-LOGEMENT AVANT					
		(D)DICHTUNG,VORDER-GEHÄUSE									(S)SELLO-CARTER DEL FRENTE					
	03488577	.	.	B	B	B	S	S	S			1				

ENG(ENGINE)	T/A(TRANSAXLE)	BODY TYPE
Y = 1.5SOHC	M = MANUAL T/A	4 N = 4 DOOR NOTCHBACK
6 = 1.6DOHC	A = AUTOMATIC T/A	3 H = 3 DOOR HATCHBACK
. = COMMON	. = COMMON	5 H = 5 DOOR HATCHBACK

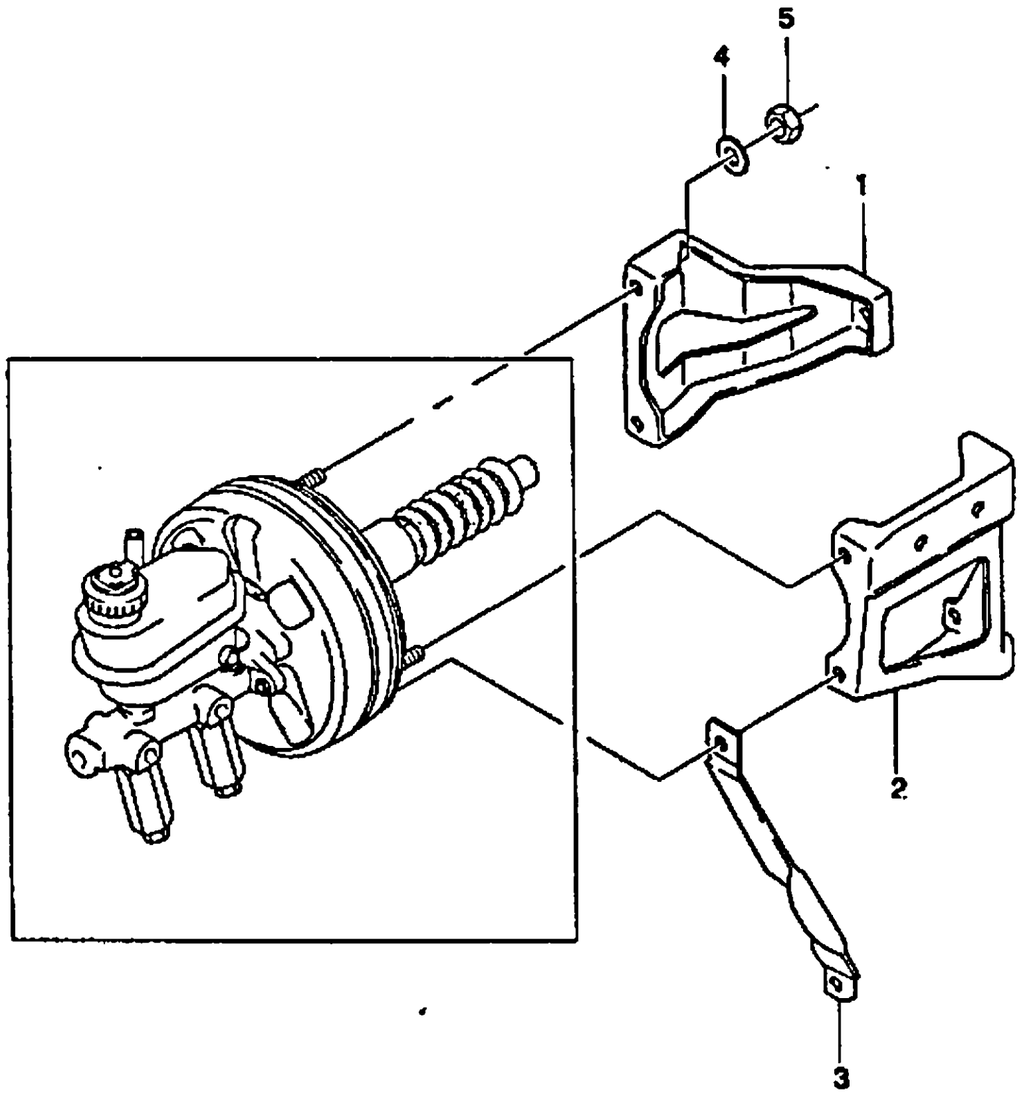

KEY NO. ITC	PART NO	MODEL ENG	T/A	BODY 4N	BODY 3H	BODY 5H	LEVEL S	LEVEL SE	LEVEL SX	OPTION	L/R	QTY	EFFECTIVE DATE FROM	EFFECTIVE DATE TO	REMARKS	P/CODE
[01]	90184911	.	.	B	B	B	S	S	S	(E)BRACE-MASTER BRAKE UNIT (D)SCHIENE,HAUPTBREMSE	(F)SUPPORT (S)REFUERZO	1				
[02]	90184912	.	.	B	B	B	S	S	S	(E)BRACE-MASTER BRAKE UNIT (D)SCHIENE,HAUPTBREMSE	(F)SUPPORT (S)REFUERZO	1				
[03]	96243317	.	.	B	B	B	S	S	S	(E)STRUT-TENSION (D)STÜTZE,SPANNUNG	(F)TENDEUR-TENSION (S)BRIDA-TENSION	1				
[04]	08322-11083	.	.	B	B	B	S	S	S	(E)WASHER-PLAIN (D)DICHTUNGSRING	(F)RONDELLE (S)ARANDELA	3				
[05]	08310-11083	.	.	B	B	B	S	S	S	(E)NUT-HEXAGON (D)MUTTER	(F)ECROU (S)TUERCA	4				

ENG(ENGINE)	T/A(TRANSAXLE)	BODY TYPE
Y = 1.5SOHC	M = MANUAL T/A	4 N = 4 DOOR NOTCHBACK
6 = 1.6DOHC	A = AUTOMATIC T/A	3 H = 3 DOOR HATCHBACK
. = COMMON	. = COMMON	5 H = 5 DOOR HATCHBACK

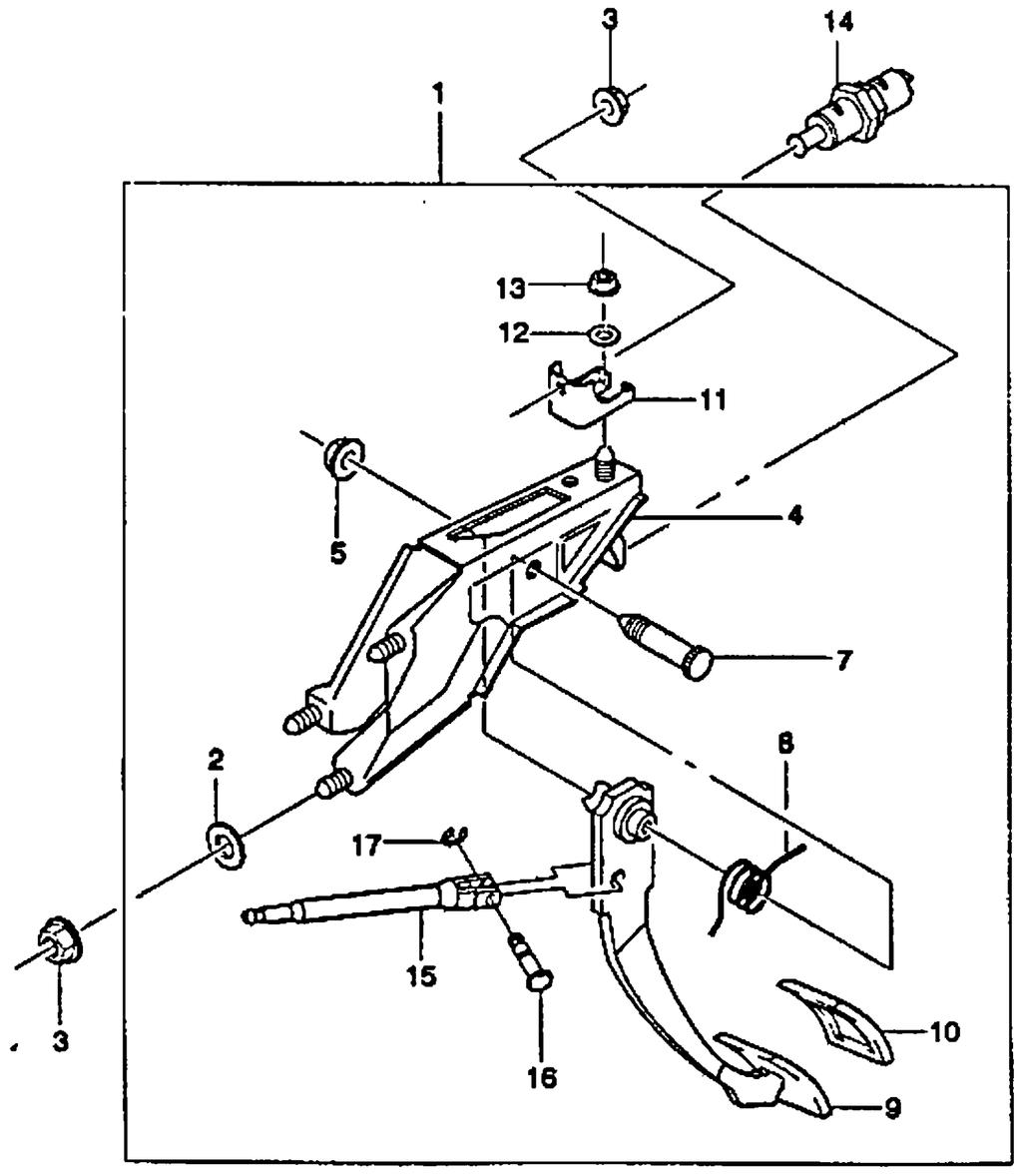

KEY NO. ITC	PART NO	MODEL ENG	T/A	BODY 4N	3H	5H	LEVEL S	SE	SX	OPTION	L/R	QTY	EFFECTIVE DATE FROM	TO	REMARKS	P/CODE
[01]		(E)PEDAL A-BRAKE (D)PEDAL,BREMSE									(F)PEDALE-FREIN (S)PEDAL-FRENO					
	96306187	.	M	B	B	B	S	S	S	-EC1		1				PA
	96250892	.	M	B	B	B	A	A	A	&EC1		1				PE
	96306149	.	A	B	B	B	O	O	O	-EC1		1				PB
	96250893	.	A	B	B	B	A	A	A	&EC1		1				PF
[02]		(E)DISK-INSULATION (D)SCHEIBE,ISOLIERUNG									(F)DISQUE-ISOLATION (S)DISCO-AISLAMIENTO					
	96156393	.	.	B	B	B	S	S	S			3				
[03]		(E)NUT (D)MUTTER									(F)ECROU (S)TUERCA					
	09159-08003	.	.	B	B	B	S	S	S			6				
[04]		(E)BRACE A-BRAKE PEDAL (D)SCHIENE,BREMSPEDAL									(F)SUPPORT-MONTAGE PEDALE (S)REFUERZO					
	96306185	.	.	B	B	B	S	S	S			1				
[05]		(E)NUT (D)MUTTER									(F)ECROU (S)TUERCA					
	09159-10007	.	.	B	B	B	S	S	S			1				
[07]		(E)SHAFT-PEDAL MOUNTING (D)SPINDEL,PEDAL MONTAGE									(F)ARBRE-MONTAGE PEDALE (S)EJE-MONTAJE DE PEDAL					
	96215326	.	.	B	B	B	S	S	S			1				
[08]		(E)SPRING (D)FEDERUNG,PEDAL MONTAGE									(F)RESSORT (S)RESORTE					
	09448-24001	.	.	B	B	B	S	S	S			1				
[09]		(E)PEDAL-BRAKE (D)PEDAL,BREMSE									(F)PEDALE-FREIN (S)PEDAL-FRENO					
	96192176														NOT APPLIED	
	96193094	.	M	B	B	B	S	S	S	-EC1		1				

ENG(ENGINE)	T/A(TRANSAXLE)	BODY TYPE
Y = 1.5SOHC 6 = 1.6DOHC . = COMMON	M = MANUAL T/A A = AUTOMATIC T/A . = COMMON	4 N = 4 DOOR NOTCHBACK 3 H = 3 DOOR HATCHBACK 5 H = 5 DOOR HATCHBACK

4640 BRAKE PEDAL(LHD)

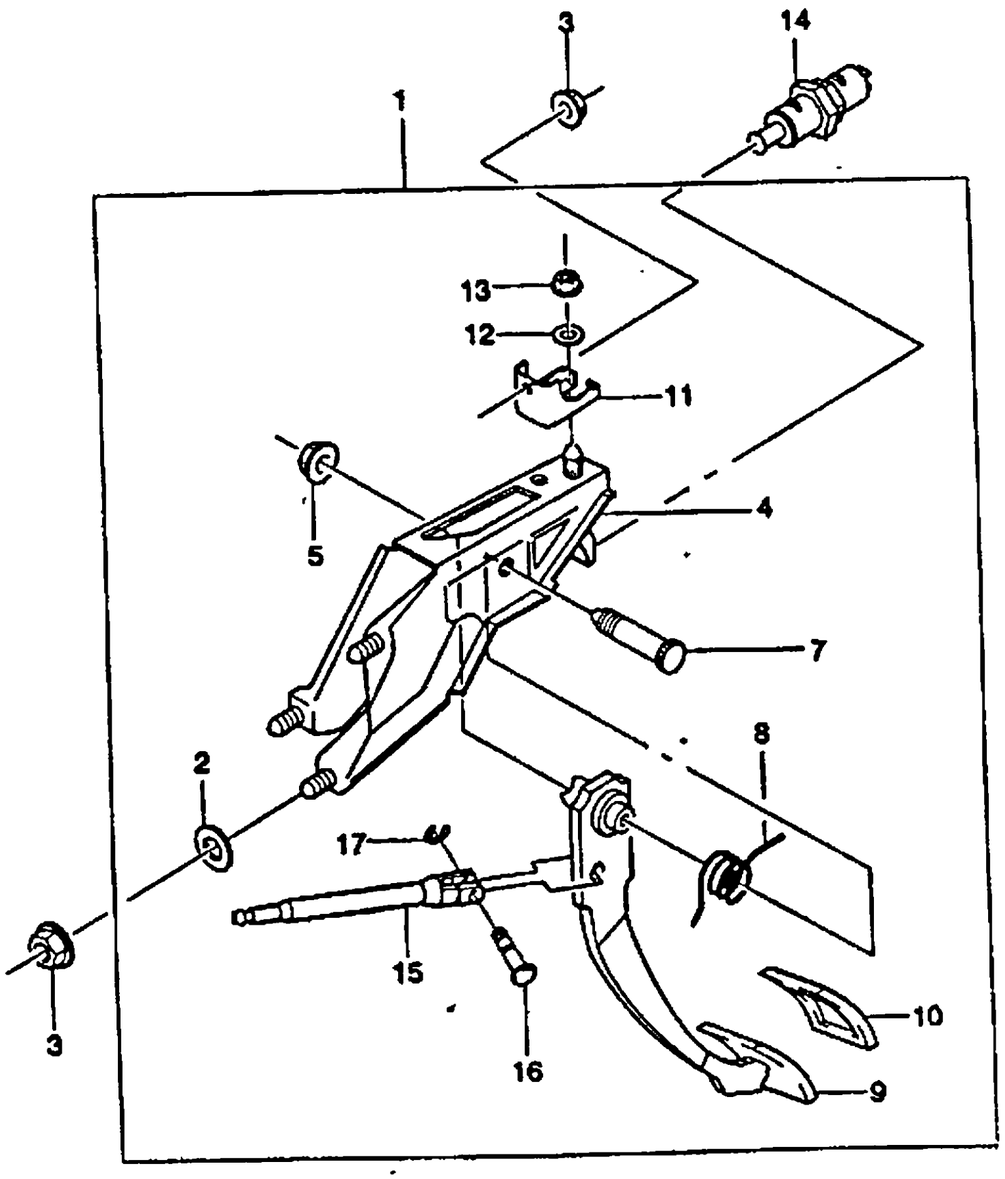

KEY NO. ITC	PART NO	MODEL ENG	T/A	BODY 4N	3H	5H	LEVEL S	SE	SX	OPTION	L/R	QTY	EFFECTIVE DATE FROM	TO	REMARKS	P/CODE
	96289190	.	M	B	B	B	A	A	A	&EC1		1				
	96192177														NOT APPLIED	
	96193095	.	A	B	B	B	O	O	O	-EC1		1				
	96289191	.	A	B	B	B	A	A	A	&EC1		1				
[10]	(E)COVER-PEDAL PLATE (D)UNTERLAGE,BERMSPEDAL											(F)PATIN-PEDALE DE FREIN (S)COJIN-PEDAL DE FRENO				
	90105172	.	M	B	B	B	S	S	S			1				
	90135701	.	A	B	B	B	O	O	O			1				
[11]	(E)BRACKET-BRAKE PEDAL BRACE (D)TRÄGER											(F)SUPPORT (S)SOPORTE				
	96306186	.	.	B	B	B	S	S	S			1				
[12]	(E)WASHER-PLAIN (D)DICHTUNGSRING											(F)RONDELLE (S)ARANDELA				
	09160-08002	.	.	B	B	B	S	S	S			1				
[13]	(E)NUT-HEXAGON LOCK (D)MUTTER											(F)ECROU (S)TUERCA				
	08311-18083	.	.	B	B	B	S	S	S			1				
[14]	(E)SWITCH A-STOP LAMP (D)SCHALTER,STOP-LAMPE											(F)COMMUTATEUR-LAMPE D'ARRET (S)INTERRUPTOR				
	96212027	.	.	B	B	B	S	S	S			1				
[15]	(E)ROD A-PISTON (D)KOLBENSTANGE											(F)TRINGLE-PISTON (S)VARILLA-PISTON				
	90289187	.	.	B	B	B	S	S	S			1				
[16]	(E)PIN (D)STIFT											(F)BROCHE (S)PASADOR				
	09208-10001	.	.	B	B	B	S	S	S			1				
[17]	(E)RING-RETAINING E TYPE (D)RING,HALTER											(F)ANNEAU-DE RETENTION (S)ANILLO-RETENEDOR				

ENG(ENGINE)	T/A(TRANSAXLE)	BODY TYPE
Y = 1.5SOHC 6 = 1.6DOHC . = COMMON	M = MANUAL T/A A = AUTOMATIC T/A . = COMMON	4 N = 4 DOOR NOTCHBACK 3 H = 3 DOOR HATCHBACK 5 H = 5 DOOR HATCHBACK

4640 BRAKE PEDAL(LHD)

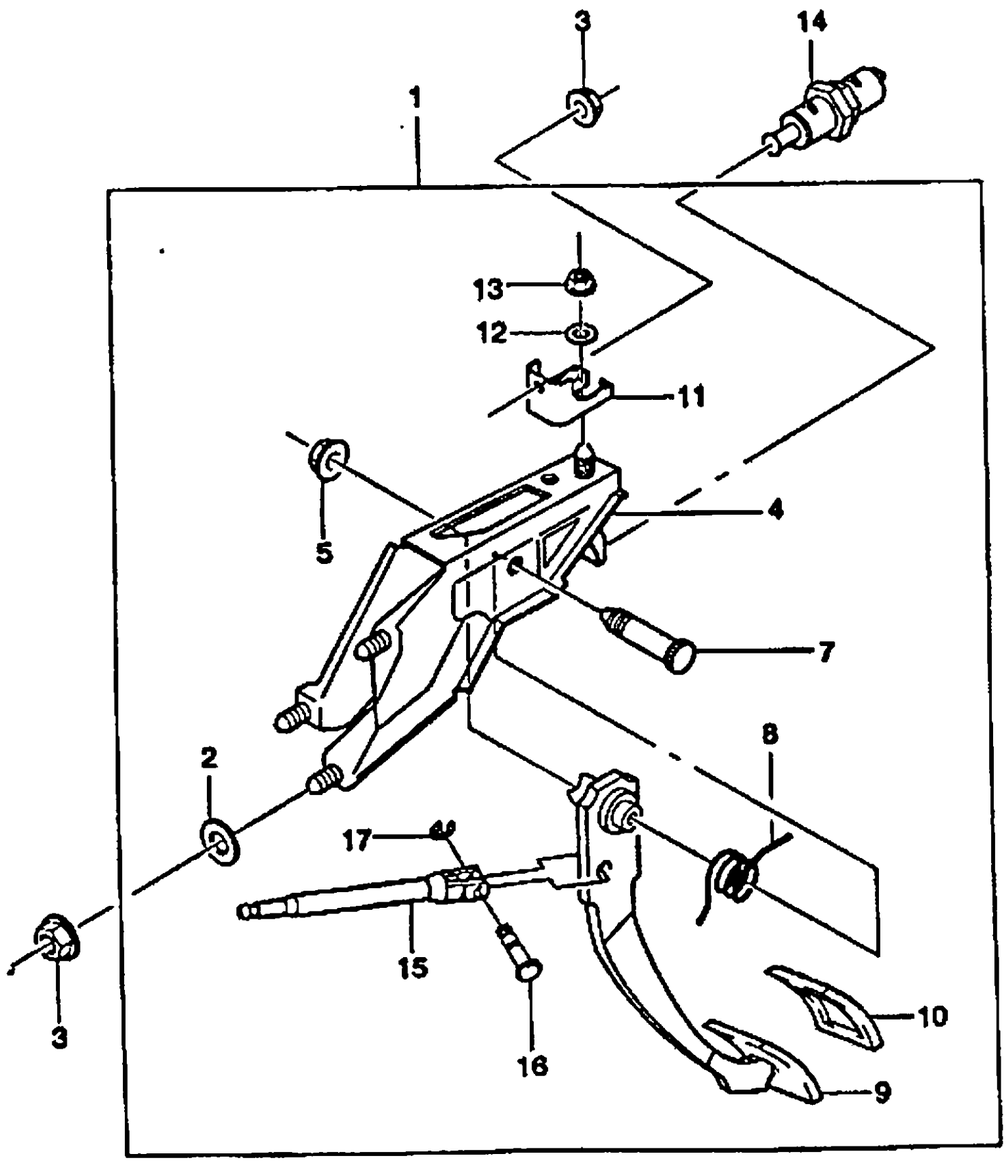

KEY NO.	PART NAME															
ITC	PART NO	MODEL								OPTION	L/R	QTY	EFFECTIVE DATE		REMARKS	P/CODE
		ENG	T/A	BODY			LEVEL						FROM	TO		
				4N	3H	5H	S	SE	SX							
	08332-21089	.	.	B	B	B	S	S	S			1				

ENG(ENGINE)	T/A(TRANSAXLE)	BODY TYPE
Y = 1.5SOHC 6 = 1.6DOHC . = COMMON	M = MANUAL T/A A = AUTOMATIC T/A . = COMMON	4 N = 4 DOOR NOTCHBACK 3 H = 3 DOOR HATCHBACK 5 H = 5 DOOR HATCHBACK

4650 BRAKE PIPE(NON ABS)

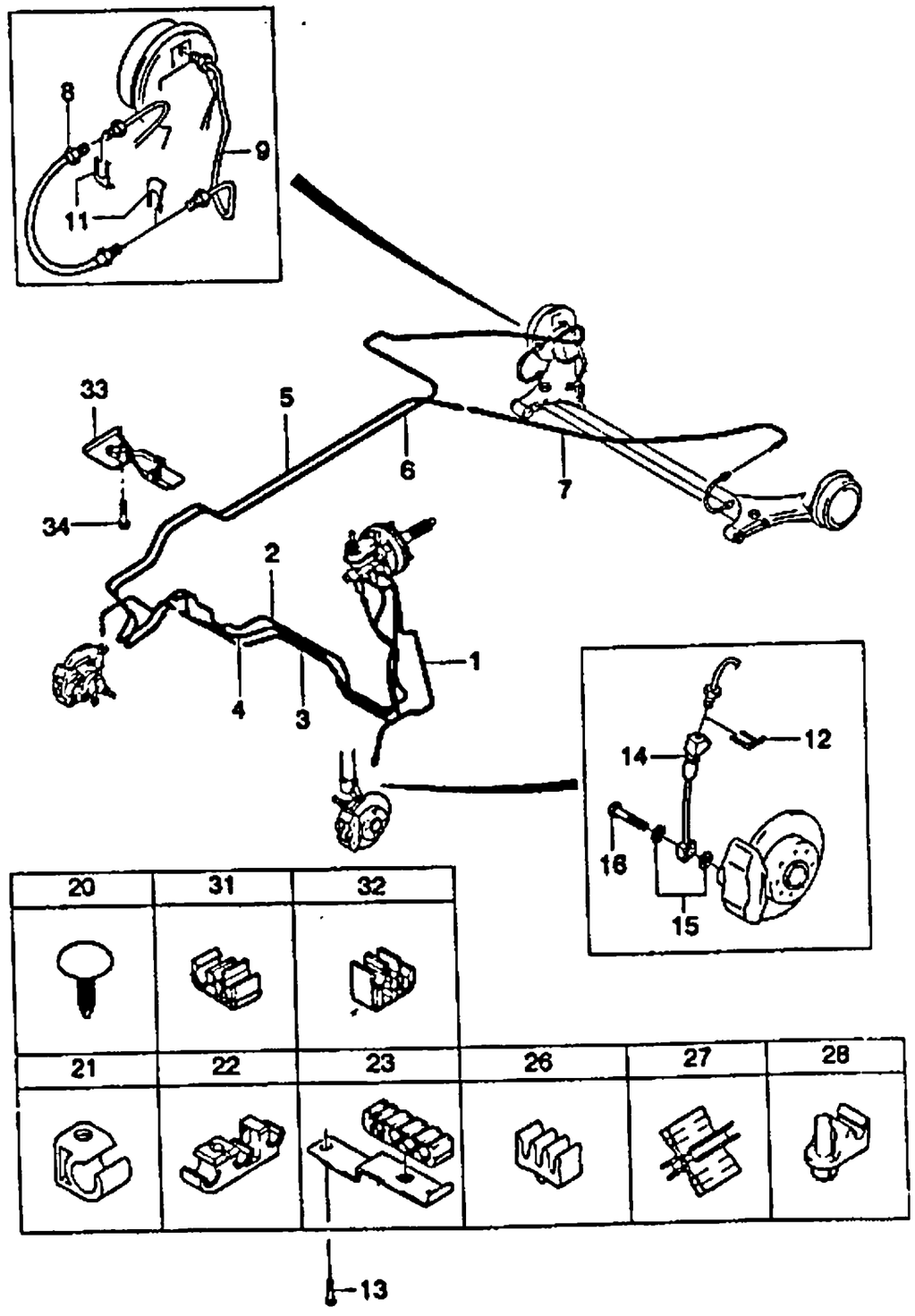

KEY NO. ITC	PART NO	MODEL ENG	T/A	BODY 4N	3H	5H	LEVEL S	SE	SX	OPTION	PART NAME	L/R	QTY	EFFECTIVE DATE FROM	TO	REMARKS	P/CODE
[01]	96306678	.	.	B	B	B	S	S	S	-JL9	(E)PIPE A-BRAKE,FRONT (D)ROHR,BREMSE,VORDERE	(F)TUYAU-FREIN,AVANT (S)TUBERIA-FRENO,DELANTERO LH 1					NF
[02]	96248672	.	.	B	B	B	S	S	S	-JL9	(E)PIPE A-BRAKE,FRONT (D)ROHR,BREMSE,VORDERE	(F)TUYAU-FREIN,AVANT (S)TUBERIA-FRENO,DELANTERO RH 1					
[03]	96248673	.	.	B	B	B	S	S	S	-JL9	(E)PIPE A-BRAKE, REAR,1ST (D)ROHR,BREMSE,HINTERE	(F)TUYAU-FREIN,ARRIERE (S)TUBERIA-FRENO,TRASERO LH 1					
[04]	96248674	.	.	B	B	B	S	S	S	-JL9	(E)PIPE A-BRAKE, REAR,1ST (D)ROHR,BREMSE,HINTERE	(F)TUYAU-FREIN,ARRIERE (S)TUBERIA-FRENO,TRASERO RH 1		970609			
	N 96256672	.	.	B	B	B	S	S	S	-JL9		RH 1		970609			
[05]	96304479	.	.	B	B	B	S	S	S	-JL9	(E)PIPE A-BRAKE, REAR,2ND (D)ROHR,BREMSE,HINTERE	(F)TUYAU-FREIN,ARRIERE (S)TUBERIA-FRENO,TRASERO LH 1					NU
[06]	96306168	.	.	B	B	B	S	S	S	-JL9	(E)PIPE A-BRAKE, REAR,2ND (D)ROHR,BREMSE,HINTERE	(F)TUYAU-FREIN,ARRIERE (S)TUBERIA-FRENO,TRASERO RH 1		970609			NW
	N 96256676	.	.	B	B	B	S	S	S	-JL9		RH 1		970609			
[07]	96237761	.	.	B	B	B	S	S	S	-JL9	(E)PIPE A-BRAKE,REAR,3RD (D)ROHR,BREMSE,HINTERE	(F)TUYAU-FREIN,ARRIERE (S)TUBERIA-FRENO,TRASERO LH 1					NV
[08]	96215570	.	.	B	B	B	S	S	S	-JL9	(E)HOSE A-BRAKE,REAR (D)SCHLAUCH,BREMSE,HINTEN	(F)TUYAU-FREIN,ARRIERE (S)MANGUERA-FRENO,TRASERO 2					
[09]											(E)PIPE A-BRAKE,REAR (D)ROHR,BREMSE,HINTERE	(F)TUYAU-FREIN,ARRIERE (S)TUBERIA-FRENO,TRASERO					

ENG(ENGINE)	T/A(TRANSAXLE)	BODY TYPE
Y = 1.5SOHC 6 = 1.6DOHC . = COMMON	M = MANUAL T/A A = AUTOMATIC T/A . = COMMON	4 N = 4 DOOR NOTCHBACK 3 H = 3 DOOR HATCHBACK 5 H = 5 DOOR HATCHBACK

4650 BRAKE PIPE(NON ABS)

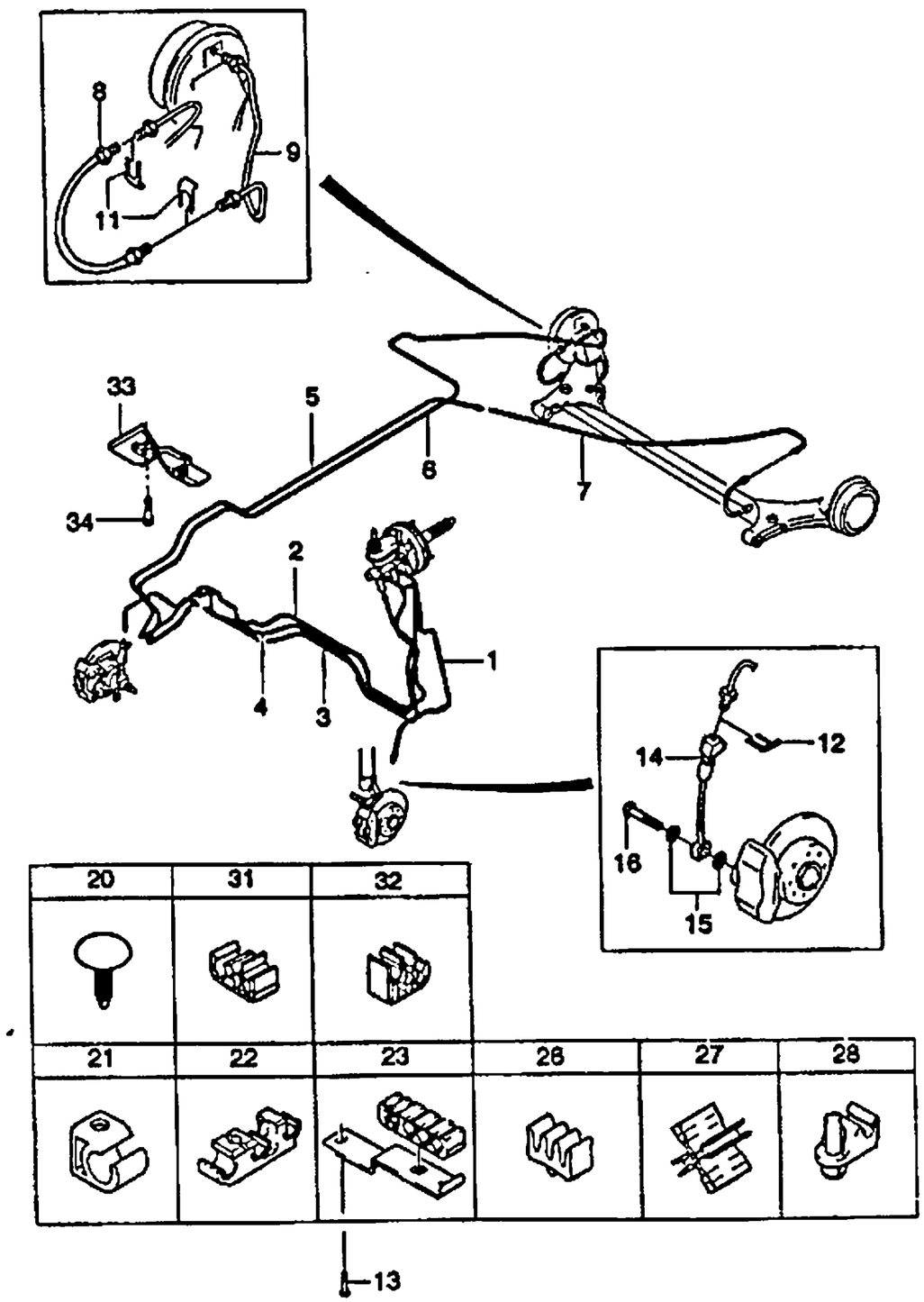

KEY NO. ITC	PART NO	MODEL ENG	T/A	BODY 4N	3H	5H	LEVEL S	SE	SX	OPTION	L/R	QTY	EFFECTIVE DATE FROM	TO	REMARKS	P/CODE
	96306664	.	.	B	B	B	S	S	S	-JL9	LH	1				
	96306666	.	.	B	B	B	S	S	S	-JL9	RH	1				
[11]	(E)E RING (D)RING										(F)ANNEAU (S)ANILLO					
	09383-12003	.	.	B	B	B	S	S	S	-JL9		4				
[12]	(E)E RING (D)RING										(F)ANNEAU (S)ANILLO					
	09383-12003	.	.	B	B	B	S	S	S	-JL9		2				
[13]	(E)BOLT-HEXAGON (D)SCHRAUBE										(F)BOULON (S)PERNO					
	02714-06163	.	.	B	B	B	S	S	S	-JL9		3				
[14]	(E)HOSE A-BRAKE,FRONT (D)SCHLAUCH,BREMSE,VORNE										(F)TUYAU-FREIN,AVANT (S)MANGUERA-FRENO,FRENTE					
	96212323	.	.	B	B	B	S	S	S	-JL9		2				
[15]	(E)WASHER-PLAIN (D)DICHTUNGSRING										(F)RONDELLE (S)ARANDELA					
	09160-10002	.	.	B	B	B	S	S	S	-JL9		4				
[16]	(E)BOLT-UNION (D)SCHRAUBE										(F)BOULON (S)PERNO					
	09360-10002	.	.	B	B	B	S	S	S	-JL9		2				
[20]	(E)CLIP (D)KLEMME										(F)ATTACHE (S)GRAPA					
	09409-07328	.	.	B	B	B	S	S	S	-JL9		2				
[21]	(E)CLIP (D)KLEMME										(F)ATTACHE (S)GRAPA					
	09408-00082	.	.	B	B	B	S	S	S	-JL9		5				
[22]	(E)CLIP (D)KLEMME										(F)ATTACHE (S)GRAPA					

ENG(ENGINE)	T/A(TRANSAXLE)	BODY TYPE
Y = 1.5SOHC 6 = 1.6DOHC . = COMMON	M = MANUAL T/A A = AUTOMATIC T/A . = COMMON	4 N = 4 DOOR NOTCHBACK 3 H = 3 DOOR HATCHBACK 5 H = 5 DOOR HATCHBACK

4650 BRAKE PIPE(NON ABS)

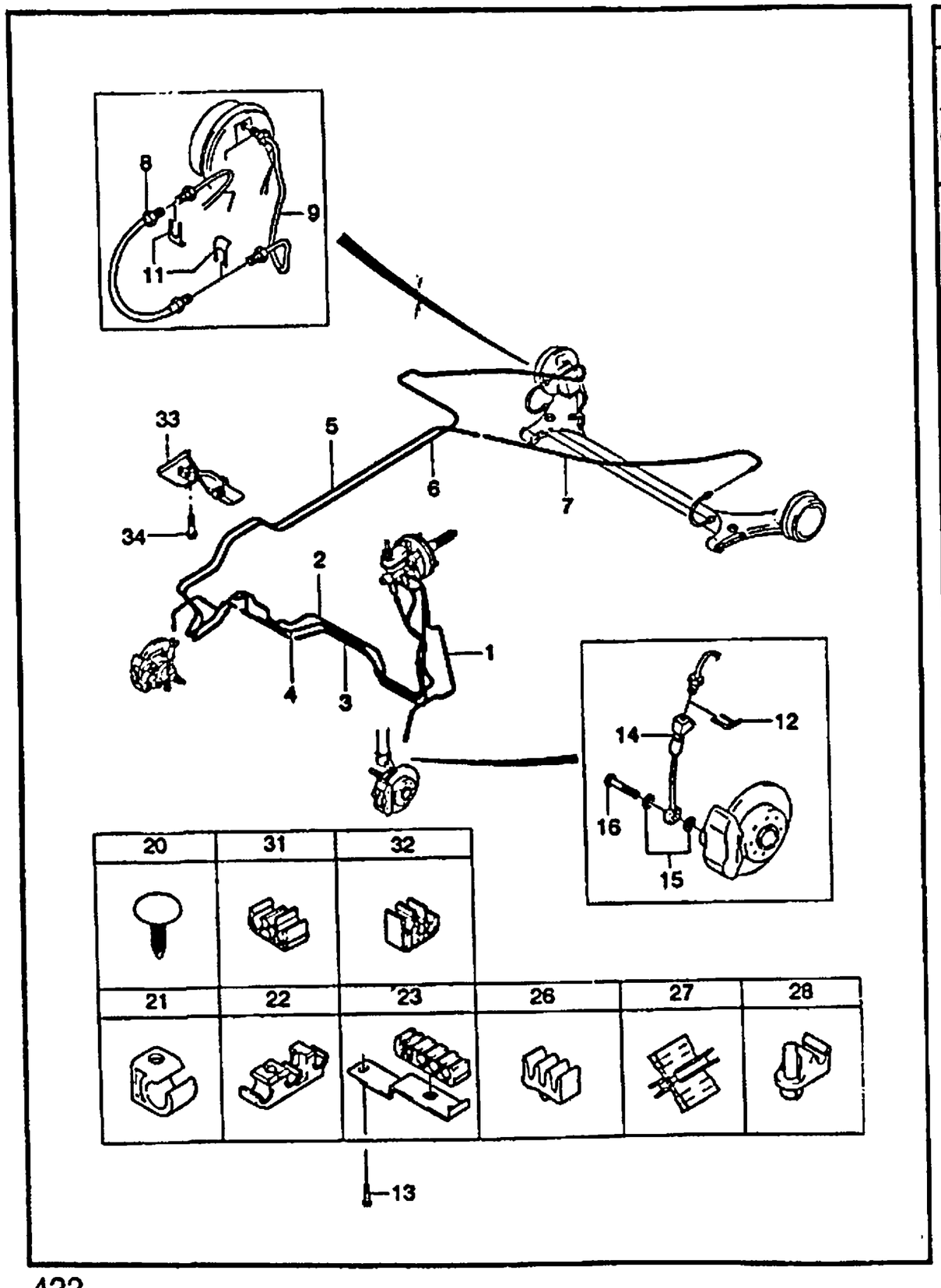

KEY NO. ITC	PART NO	MODEL ENG	MODEL T/A	MODEL BODY 4N	MODEL BODY 3H	MODEL BODY 5H	MODEL LEVEL S	MODEL LEVEL SE	MODEL LEVEL SX	OPTION	L/R	QTY	EFFECTIVE DATE FROM	EFFECTIVE DATE TO	REMARKS	PICODE
[23]	09408-00006	.	.	B	B	B	S	S	S	-JL9		4			(E)CLIP A (D)KLEMME (F)ATTACHE (S)GRAPA	
[26]	96304429	.	.	B	B	B	S	S	S	-JL9		3			(E)CLIP (D)KLEMME (F)ATTACHE (S)GRAPA	
[27]	09408-00007	.	.	B	B	B	S	S	S	-JL9		2			(E)CLIP (D)KLEMME (F)ATTACHE (S)GRAPA	
[28]	09408-00008	.	.	B	B	B	S	S	S	-JL9		1			(E)CLIP (D)KLEMME (F)ATTACHE (S)GRAPA	
[31]	09408-00009	.	.	B	B	B	S	S	S	-JL9		1			(E)CLIP (D)KLEMME (F)ATTACHE (S)GRAPA	
[32]	09408-00079	.	.	B	B	B	S	S	S	-JL9		1			(E)CLIP (D)KLEMME (F)ATTACHE (S)GRAPA	
[33]	09408-00080	.	.	B	B	B	S	S	S	-JL9		1			(E)SHIELD A-BRAKE PROTV (D)SCHILD (F)BOUCLIER (S)ESCUDO	
[34]	96243676	.	.	B	B	B	S	S	S	-JL9		1			(E)BOLT (D)SCHRAUBE (F)BOULON (S)PERNO	
[A0]	09118-06010	.	.	B	B	B	S	S	S	-JL9		1			(E)PIPE A-BRAKE,FUEL (D)ROHR,BREMSE (F)TUYAU-FREIN (S)TUBERIA-FRENO	
	96256674	.	.	B	B	B	S	S	S	&NN4-VB4/JL9/KL9		1				

ENG(ENGINE)	T/A(TRANSAXLE)	BODY TYPE
Y = 1.5SOHC 6 = 1.6DOHC . = COMMON	M = MANUAL T/A A = AUTOMATIC T/A . = COMMON	4 N = 4 DOOR NOTCHBACK 3 H = 3 DOOR HATCHBACK 5 H = 5 DOOR HATCHBACK

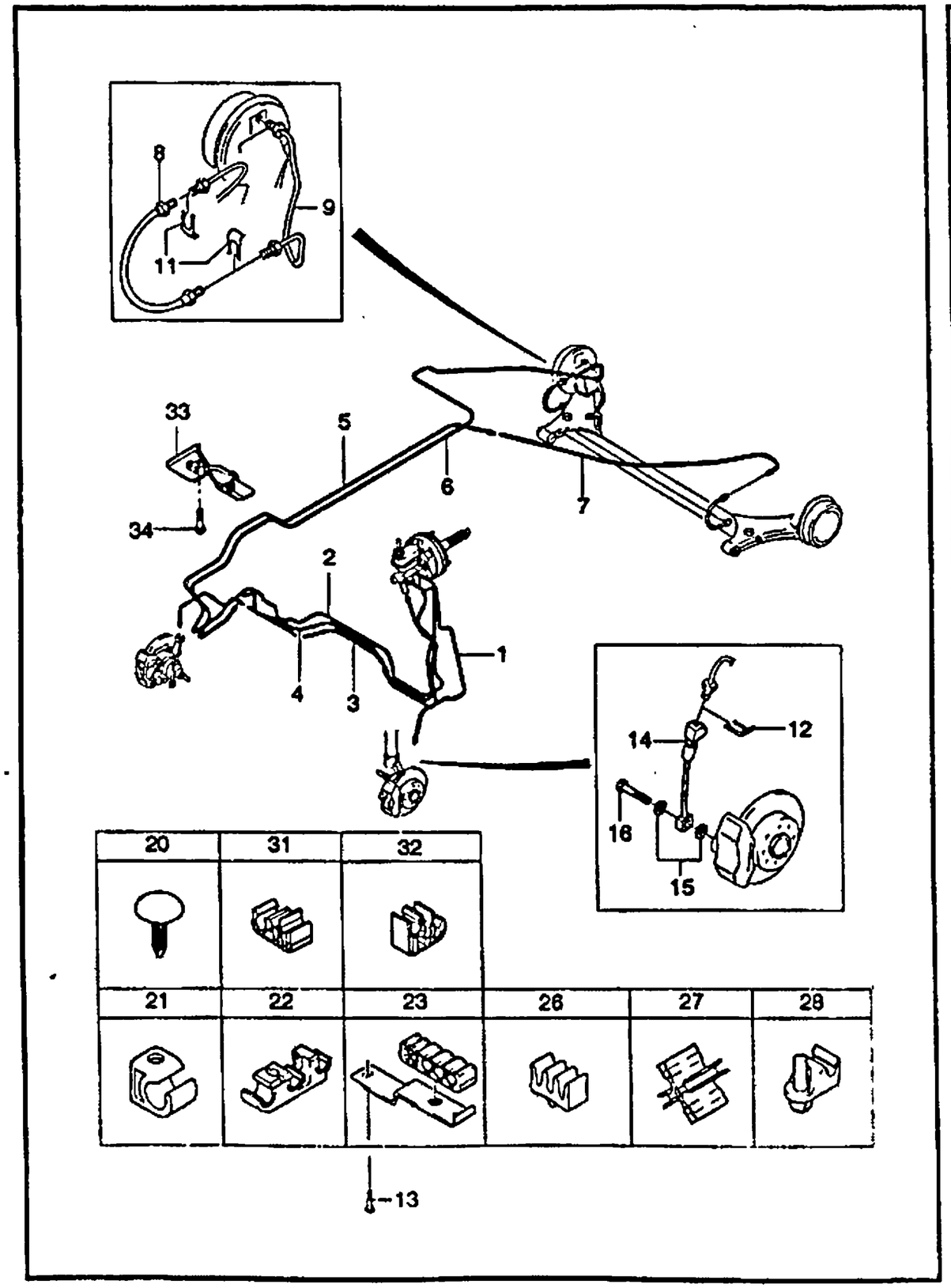

KEY NO.		PART NAME														
ITC	PART NO	MODEL								OPTION	L/R	QTY	EFFECTIVE DATE		REMARKS	P/CODE
		ENG	T/A	BODY			LEVEL						FROM	TO		
				4N	3H	5H	S	SE	SX							
	96218173	.	.	B	B	B	A	A	A	&NN4&VB4-JL9/KL9		1		970609		NT
N	96256673	.	.	B	B	B	A	A	A	&NN4&VB4-JL9/KL9		1	970609			
	96218173	.	.	B	B	B	A	A	A	&NN6/NN7-JL9/KL9		1		970609		NT
N	96256673	.	.	B	B	B	A	A	A	&NN6/NN7-JL9/KL9		1	970609			
	96252759														NOT APPLIED	
	96256675	6	.	B	B	B	.	.	A	&KL9-JL9		1				
															REFER TO BELOW	
		-CONSIST OF-														
		PIPE-FUEL FEEDING,CENTER													2120-03	
		PIPE-FUEL RETURN,CENTER													2120-04	
		PIPE-PURGE,CENTER													2130-09	
		PIPE A-BRAKE REAR,2ND(LH)													4650-05	
		PIPE A-BRAKE REAR,2ND(RH)													4650-06	
		SHIELD A-PROTV,BRAKE,FUEL													4650-33	

GROUP NO — KEY NO

ENG(ENGINE)	T/A(TRANSAXLE)	BODY TYPE
Y = 1.5SOHC	M = MANUAL T/A	4 N = 4 DOOR NOTCHBACK
6 = 1.6DOHC	A = AUTOMATIC T/A	3 H = 3 DOOR HATCHBACK
. = COMMON	. = COMMON	5 H = 5 DOOR HATCHBACK

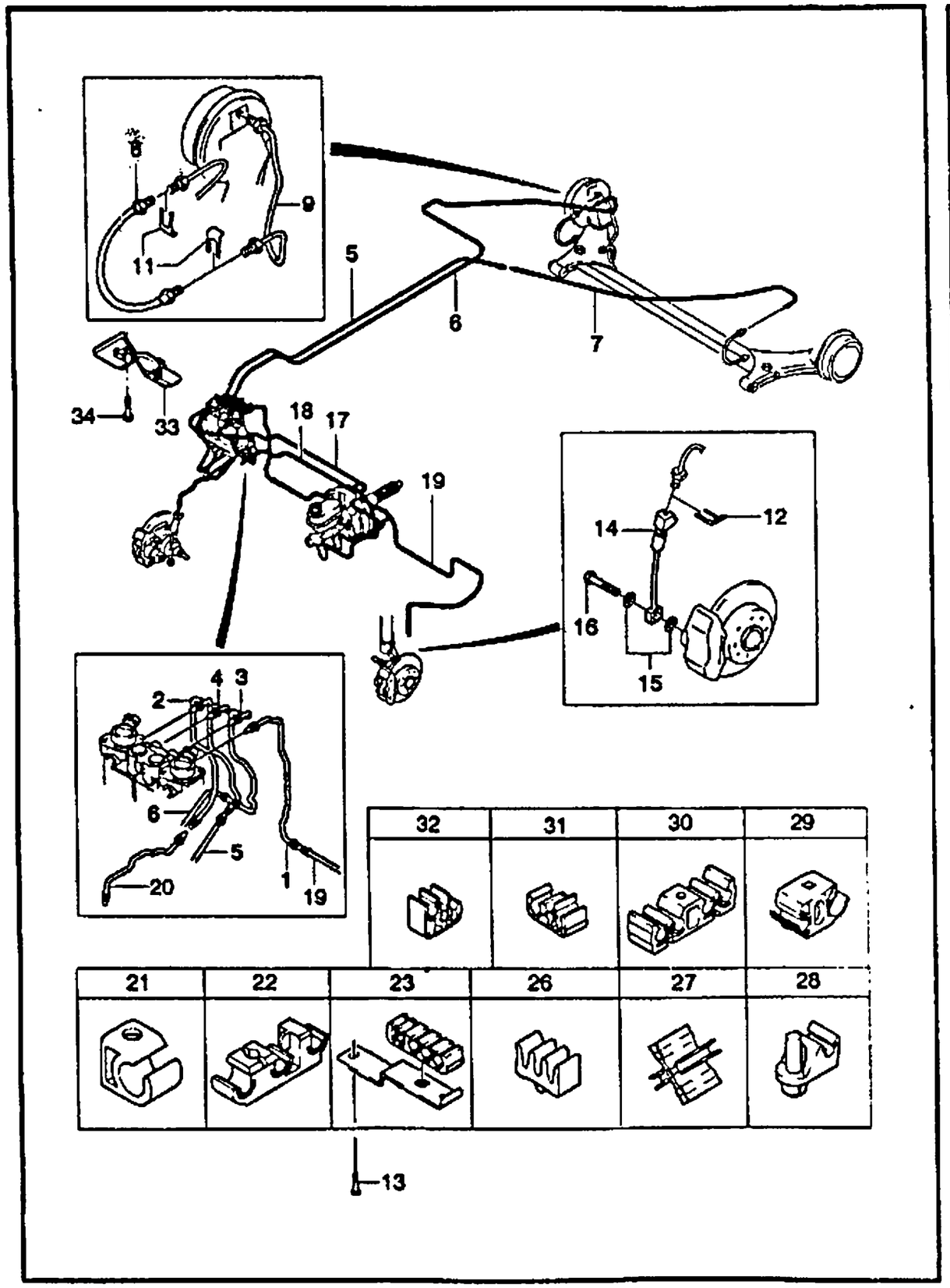

KEY NO.	PART NAME															
ITC	PART NO	MODEL								OPTION	L/R	QTY	EFFECTIVE DATE		REMARKS	P/CODE
		ENG	T/A	BODY 4N	BODY 3H	BODY 5H	LEVEL S	LEVEL SE	LEVEL SX				FROM	TO		
[01]		(E)PIPE A-BRAKE,FRONT,1ST (D)ROHR,BREMSE,VORDERE									(F)TUYAU-FREIN,AVANT (S)TUBERIA-FRENO,DELANTERO					
	96304457	.	.	B	B	B	.	O	O	&JL9	LH	1				
[02]		(E)PIPE A-BRAKE,FRONT,1ST (D)ROHR,BREMSE,VORDERE									(F)TUYAU-FREIN,AVANT (S)TUBERIA-FRENO,DELANTERO					
	96304458	.	.	B	B	B	.	O	O	&JL9	RH	1				
[03]		(E)PIPE A-BRAKE, REAR,1ST (D)ROHR,BREMSE,HINTERE									(F)TUYAU-FREIN,ARRIERE (S)TUBERIA-FRENO,TRASERO					
	96304459	.	.	B	B	B	.	O	O	&JL9	LH	1				
[04]		(E)PIPE A-BRAKE, REAR,1ST (D)ROHR,BREMSE,HINTERE									(F)TUYAU-FREIN,ARRIERE (S)TUBERIA-FRENO,TRASERO					
	96304460	.	.	B	B	B	.	O	O	&JL9	RH	1		970609		
	N 96256677	.	.	B	B	B	.	O	O	&JL9	RH	1	970609			
[05]		(E)PIPE A-BRAKE, REAR,2ND (D)ROHR,BREMSE,HINTERE									(F)TUYAU-FREIN,ARRIERE (S)TUBERIA-FRENO,TRASERO					
	96304479	.	.	B	B	B	.	O	O	&JL9	LH	1				NU
[06]		(E)PIPE A-BRAKE, REAR,2ND (D)ROHR,BREMSE,HINTERE									(F)TUYAU-FREIN,ARRIERE (S)TUBERIA-FRENO,TRASERO					
	96306168	.	.	B	B	B	.	O	O	&JL9	RH	1		970609		NW
	N 96256676	.	.	B	B	B	.	O	O	&JL9	RH	1	970609			
[07]		(E)PIPE A-BRAKE,REAR,3RD (D)ROHR,BREMSE,HINTERE									(F)TUYAU-FREIN,ARRIERE (S)TUBERIA-FRENO,TRASERO					
	96237761	.	.	B	B	B	.	O	O	&JL9	LH	1				NV
[08]		(E)HOSE A-BRAKE,REAR (D)SCHLAUCH,BREMSE,HINTEN									(F)TUYAU-FREIN,ARRIERE (S)MANGUERA-FRENO,TRASERO					
	96215570	.	.	B	B	B	.	O	O	&JL9		2				
[09]		(E)PIPE A-BRAKE,REAR (D)ROHR,BREMSE,HINTERE									(F)TUYAU-FREIN,ARRIERE (S)TUBERIA-FRENO,TRASERO					

ENG(ENGINE)	T/A(TRANSAXLE)	BODY TYPE
Y = 1.5SOHC	M = MANUAL T/A	4 N = 4 DOOR NOTCHBACK
6 = 1.6DOHC	A = AUTOMATIC T/A	3 H = 3 DOOR HATCHBACK
. = COMMON	. = COMMON	5 H = 5 DOOR HATCHBACK

4651 BRAKE PIPE(ABS)

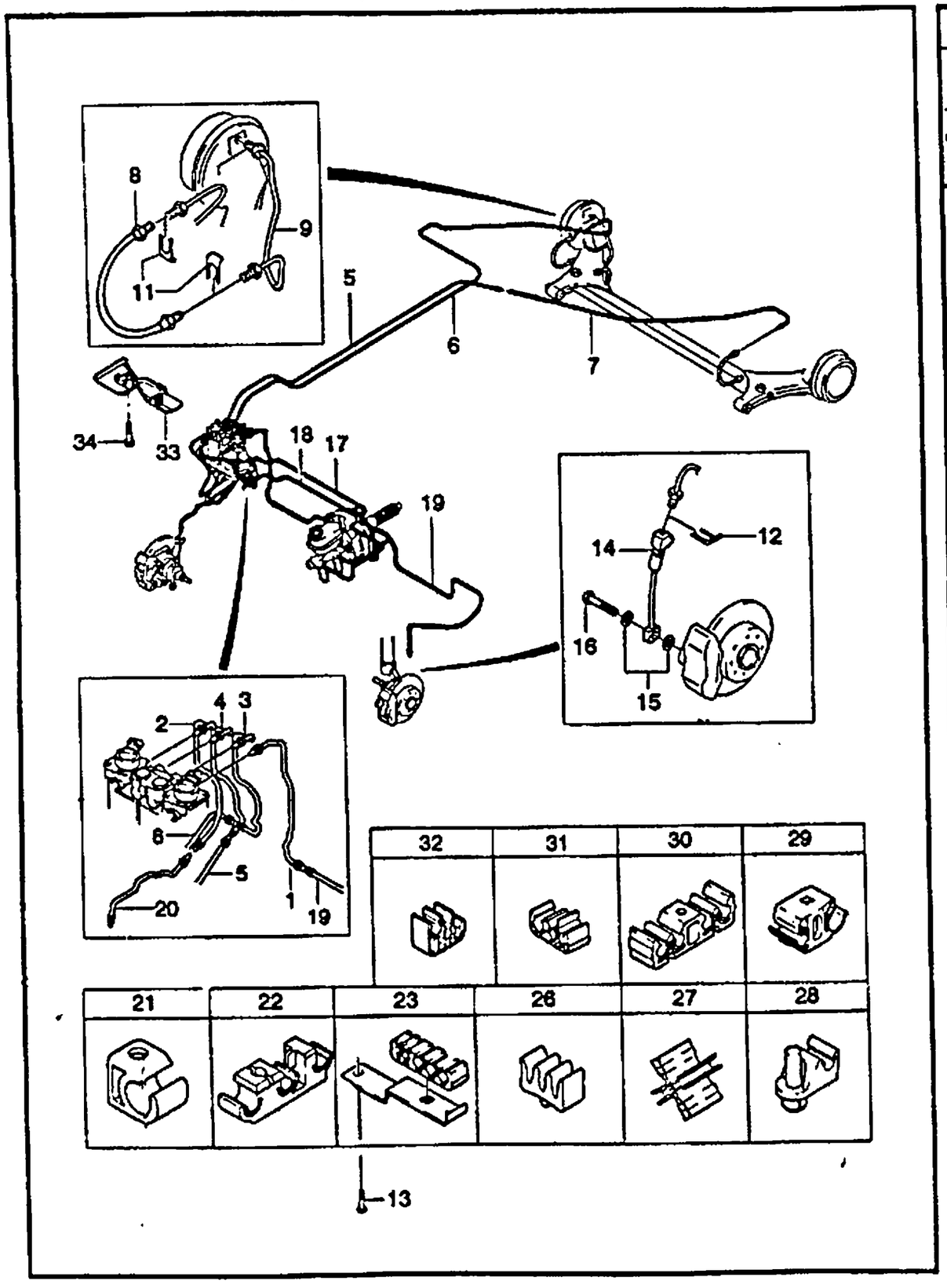

KEY NO. ITC	PART NO	MODEL ENG	T/A	BODY 4N	3H	5H	LEVEL S	SE	SX	OPTION	L/R	QTY	EFFECTIVE DATE FROM	TO	REMARKS	P/CODE
	96306664	.	.	B	B	B	.	O	O	&JL9	LH	1				
	96306666	.	.	B	B	B	.	O	O	&JL9	RH	1				
[11]	(E)E RING (D)RING										(F)ANNEAU (S)ANILLO					
	09383-12003	.	.	B	B	B	.	O	O	&JL9		4				
[12]	(E)E RING (D)RING										(F)ANNEAU (S)ANILLO					
	09383-12003	.	.	B	B	B	.	O	O	&JL9		2				
[13]	(E)BOLT-HEXAGON (D)SCHRAUBE										(F)BOULON (S)PERNO					
	02714-06163	.	.	B	B	B	.	O	O	&JL9		3				
[14]	(E)HOSE A-BRAKE,FRONT (D)SCHLAUCH,BREMSE,VORNE										(F)TUYAU-FREIN,AVANT (S)MANGUERA-FRENO,FRENTE					
	96212323	.	.	B	B	B	.	O	O	&JL9		2				
[15]	(E)WASHER-PLAIN (D)DICHTUNGSRING										(F)RONDELLE (S)ARANDELA					
	09160-10002	.	.	B	B	B	.	O	O	&JL9		4				
[16]	(E)BOLT-UNION (D)SCHRAUBE										(F)BOULON (S)PERNO					
	09360-10002	.	.	B	B	B	.	O	O	&JL9		2				
[17]	(E)PIPE A-BRAKE,PRIMARY (D)ROHR-BREMSE,HAUPT										(F)TUYAU-FREIN,PRIMAIRE (S)TUBERIA-FRENO,PRIMARIA					
	96304462	.	.	B	B	B	.	O	O	&JL9		1				
[18]	(E)PIPE A-BRAKE,SECONDARY (D)ROHR,BREMSE,2.										(F)TUYAU-FREIN,SECONDAIRE (S)TUBERIA-FRENO,SECUNDARIO					
	96304461	.	.	B	B	B	.	O	O	&JL9		1				
[19]	(E)PIPE A-BRAKE,FRONT,2ND (D)ROHR,BREMSE,VORDERE										(F)TUYAU-FREIN,AVANT (S)TUBERIA-FRENO,DELANTERO					

ENG(ENGINE)	T/A(TRANSAXLE)	BODY TYPE
Y = 1.5SOHC 6 = 1.6DOHC . = COMMON	M = MANUAL T/A A = AUTOMATIC T/A . = COMMON	4 N = 4 DOOR NOTCHBACK 3 H = 3 DOOR HATCHBACK 5 H = 5 DOOR HATCHBACK

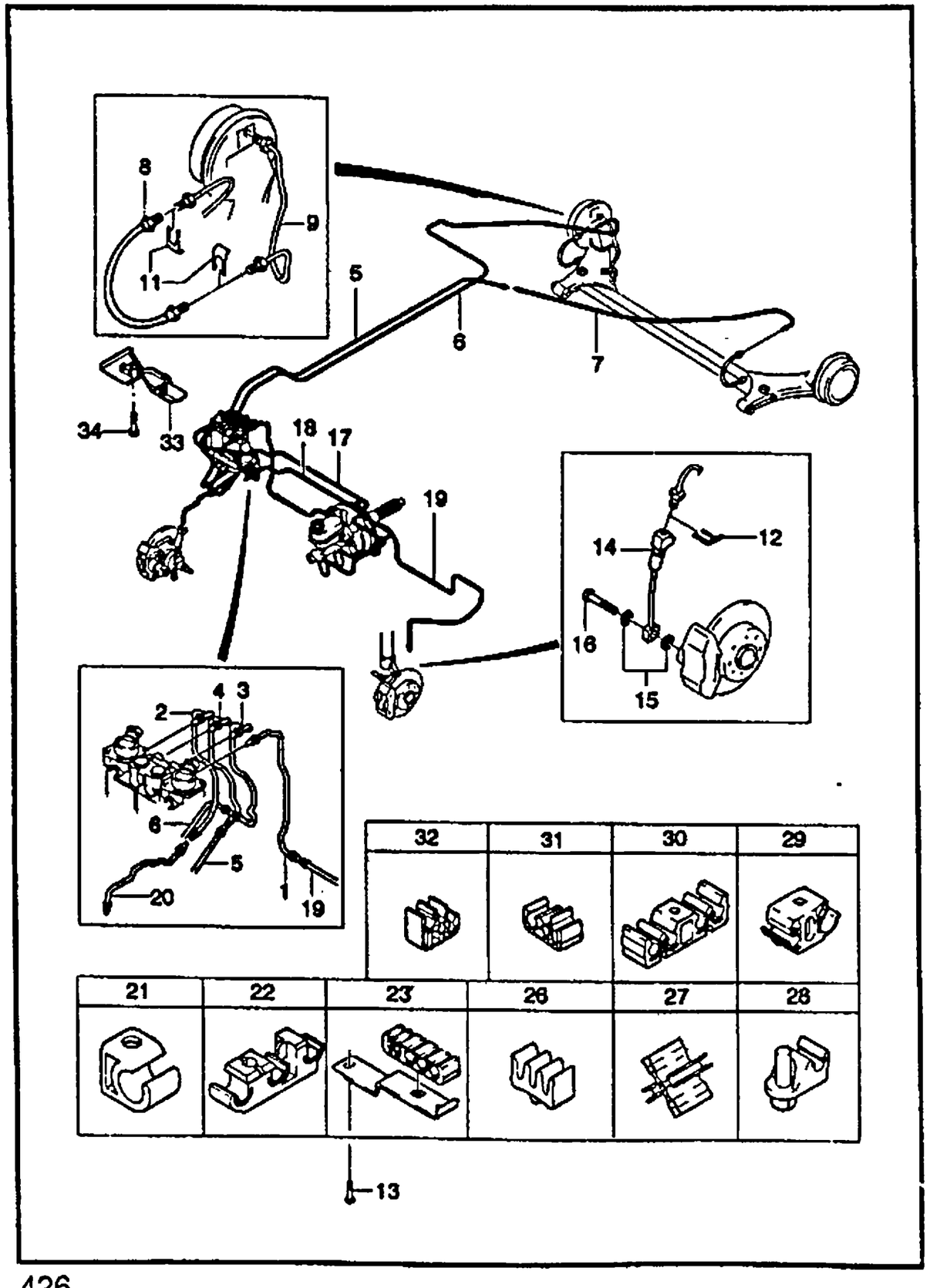

KEY NO.		PART NAME															
ITC	PART NO	MODEL							OPTION	L/R	QTY	EFFECTIVE DATE		REMARKS	P/CODE
		ENG	T/A	BODY			LEVEL					FROM	TO		
				4N	3H	5H	S	SE	SX						
[20]	96248675	.	.	B	B	B	.	O	O	&JL9	LH	1		(E)PIPE A-BRAKE,FRONT,2ND (D)ROHR,BREMSE,VORDERE (F)TUYAU-FREIN,AVANT (S)TUBERIA-FRENO,DELANTERO	
[21]	96304423	.	.	B	B	B	.	O	O	&JL9	RH	1		(E)CLIP (D)KLEMME (F)ATTACHE (S)GRAPA	
[22]	09408-00082	.	.	B	B	B	.	O	O	&JL9		3		(E)CLIP (D)KLEMME (F)ATTACHE (S)GRAPA	
[23]	09408-00006	.	.	B	B	B	.	O	O	&JL9		4		(E)CLIP A (D)KLEMME (F)ATTACHE (S)GRAPA	
[26]	96304429	.	.	B	B	B	.	O	O	&JL9		3		(E)CLIP (D)KLEMME (F)ATTACHE (S)GRAPA	
[27]	09408-00007	.	.	B	B	B	.	O	O	&JL9		2		(E)CLIP (D)KLEMME (F)ATTACHE (S)GRAPA	
[28]	09408-00008	.	.	B	B	B	.	O	O	&JL9		1		(E)CLIP (D)KLEMME (F)ATTACHE (S)GRAPA	
[29]	09408-00009	.	.	B	B	B	.	O	O	&JL9		1		(E)CLIP (D)KLEMME (F)ATTACHE (S)GRAPA	
[30]	09408-00004	.	.	B	B	B	.	O	O	&JL9		2		(E)CLIP (D)KLEMME (F)ATTACHE (S)GRAPA	
	09408-00038	.	.	B	B	B	.	O	O	&JL9		1			

ENG(ENGINE)	T/A(TRANSAXLE)	BODY TYPE
Y = 1.5SOHC 6 = 1.6DOHC . = COMMON	M = MANUAL T/A A = AUTOMATIC T/A . = COMMON	4 N = 4 DOOR NOTCHBACK 3 H = 3 DOOR HATCHBACK 5 H = 5 DOOR HATCHBACK

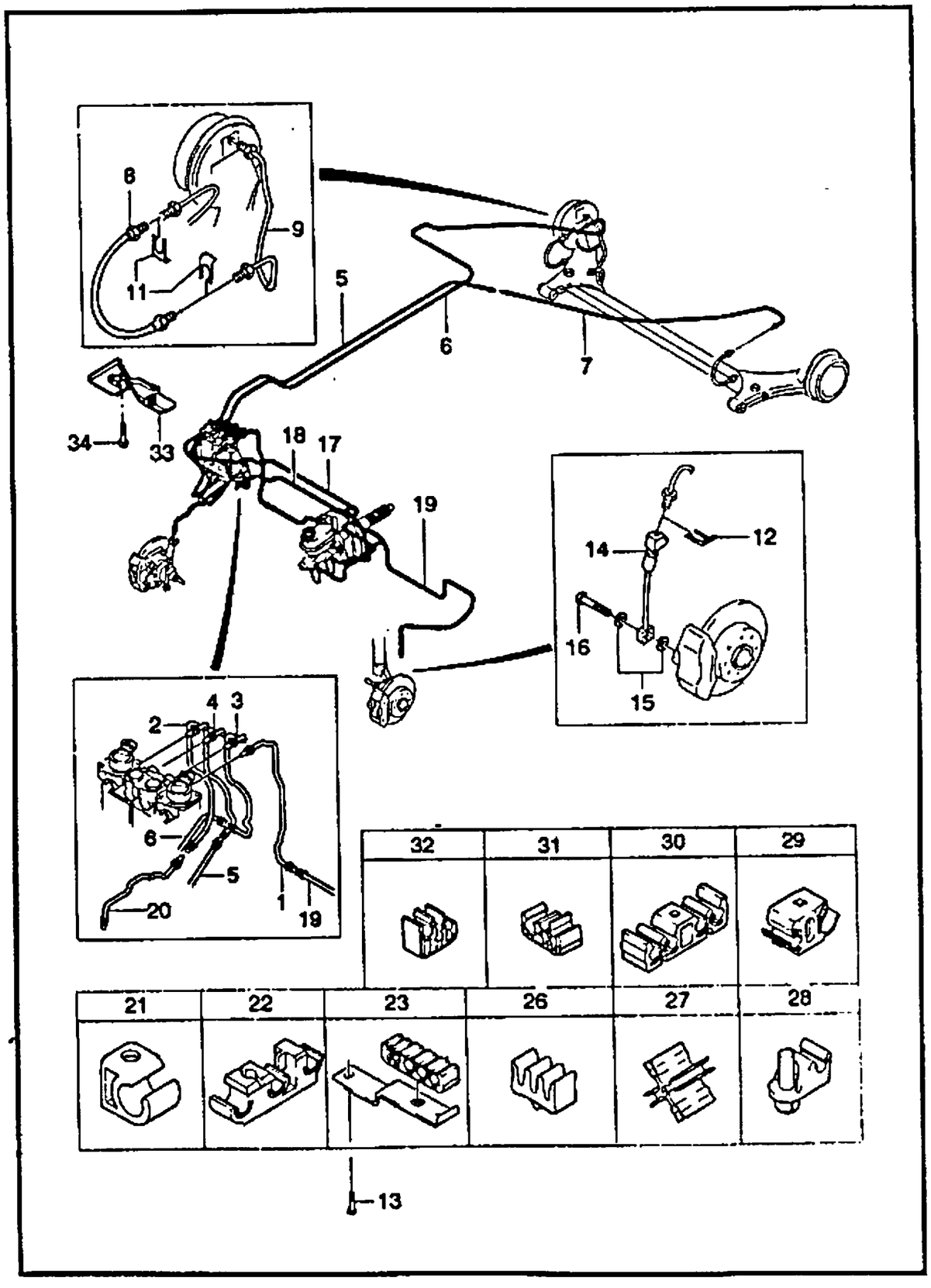

KEY NO. ITC	PART NO	MODEL ENG	T/A	BODY 4N	3H	5H	LEVEL S	SE	SX	OPTION	L/R	QTY	EFFECTIVE DATE FROM	TO	REMARKS	P/CODE
	[31]	(E)CLIP (D)KLEMME									(F)ATTACHE (S)GRAPA					
	09408-00079	.	.	B	B	B	.	O	O	&JL9		1				
	[32]	(E)CLIP (D)KLEMME									(F)ATTACHE (S)GRAPA					
	09408-00080	.	.	B	B	B	.	O	O	&JL9		1				
	[33]	(E)SHIELD A-BRAKE PROTV (D)SCHILD									(F)BOUCLIER (S)ESCUDO					
	96243676	.	.	B	B	B	.	O	O	&JL9		1				
	[34]	(E)BOLT (D)SCHRAUBE									(F)BOULON (S)PERNO					
	09118-06010	.	.	B	B	B	.	O	O	&JL9		1				
	[A0]	(E)PIPE A-BRAKE,FUEL (D)ROHR,BREMSE									(F)TUYAU-FREIN (S)TUBERIA-FRENO					
	96256674	.	.	B	B	B	.	O	O	&NN4&JL9-VB4/KL9		1				
	96218173	.	.	B	B	B	.	A	A	&NN4&VB4&JL9-KL9		1		970609		NT
N	96256673	.	.	B	B	B	.	A	A	&NN4&VB4&JL9-KL9		1	970609			
	96218173	.	.	B	B	B	.	A	A	&NN6/NN7&JL9-KL9		1		970609		NT
N	96256673	.	.	B	B	B	.	A	A	&NN6/NN7&JL9-KL9		1	970609			
	96252759														NOT APPLIED	
	96256675	6	.	B	B	B	.	.	A	&JL9&KL9		1				
															REFER TO BELOW	
		- CONSIST OF -														
		PIPE-FUEL FEEDING,CENTER													2120-03	
		PIPE-FUEL RETURN,CENTER													2120-04	
		PIPE-PURGE,CENTER													2130-09	
		PIPE A-BRAKE REAR,2ND(LH)													4651-05	

ENG(ENGINE)	T/A(TRANSAXLE)	BODY TYPE
Y = 1.5SOHC	M = MANUAL T/A	4 N = 4 DOOR NOTCHBACK
6 = 1.6DOHC	A = AUTOMATIC T/A	3 H = 3 DOOR HATCHBACK
. = COMMON	. = COMMON	5 H = 5 DOOR HATCHBACK

4651 BRAKE PIPE(ABS)

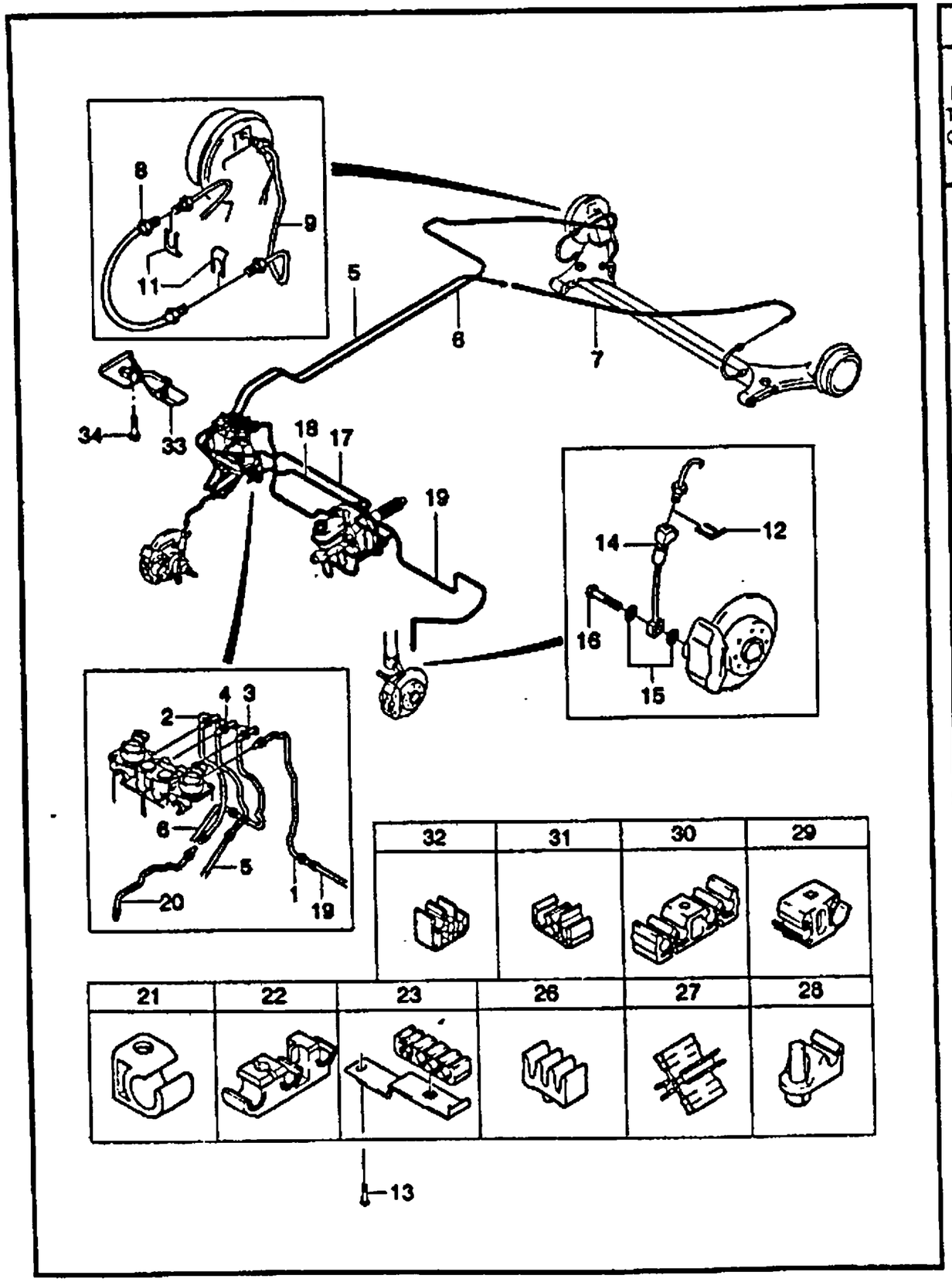

KEY NO.		PART NAME													
ITC	PART NO	MODEL								OPTION	L/R	QTY	EFFECTIVE DATE		REMARKS	P/CODE
		ENG	T/A	BODY			LEVEL						FROM	TO		
				4N	3H	5H	S	SE	SX							
		PIPE A-BRAKE REAR,2ND(RH)													4651-06	
		SHIELD A-PROTV,BRAKE,FUEL													4651-33	
															GROUP NO / KEY NO	

ENG(ENGINE)	T/A(TRANSAXLE)	BODY TYPE
Y = 1.5SOHC	M = MANUAL T/A	4 N = 4 DOOR NOTCHBACK
6 = 1.6DOHC	A = AUTOMATIC T/A	3 H = 3 DOOR HATCHBACK
. = COMMON	. = COMMON	5 H = 5 DOOR HATCHBACK

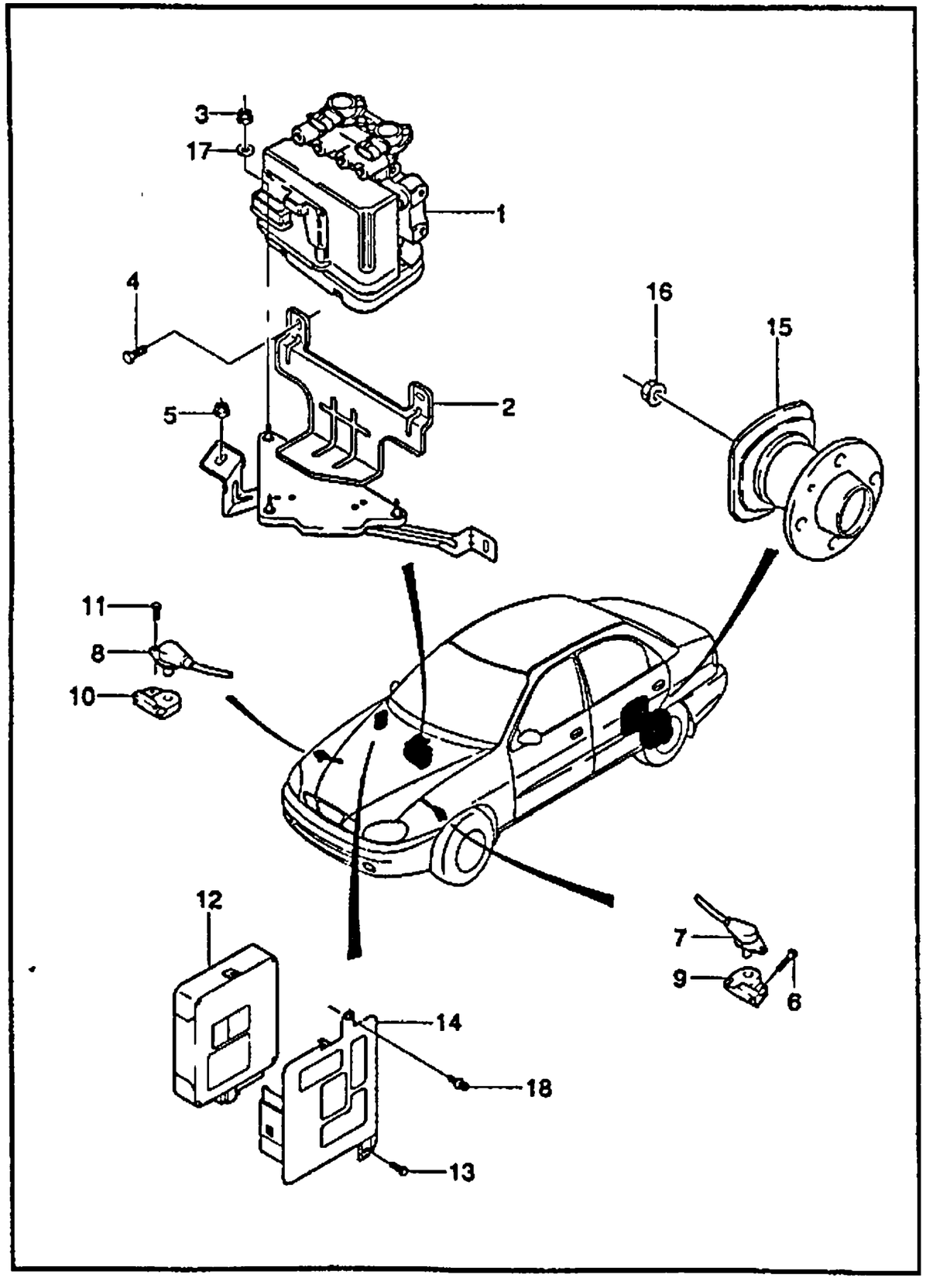

KEY NO.		PART NAME															
ITC	PART NO	MODEL								OPTION	L/R	QTY	EFFECTIVE DATE		REMARKS	P/CODE
		ENG	T/A	BODY			LEVEL						FROM	TO		
				4N	3H	5H	S	SE	SX							
[01]		(E)HYDRAULIC UNIT-BRAKE (D)HYDRAULIK EINHEIT,BREMSE									(F)UNITE HYDRAULIQUE-FREIN (S)UNIDAD HIDRAULICA-FRENO					
	96304464	Y	.	B	B	B	.	O	O	&JL9		1				MA
	96306147	6	.	B	B	B	.	.	O	&JL9		1				MB
[02]		(E)BRACKET A-HYDRAULIC UNIT (D)TRÄGER,STEUERUNGSEINHEIT									(F)SUPPORT-UNITE DE CONTROLE (S)SOPORTE-UNIDA DE CONTROL					
	96304465	.	.	B	B	B	.	O	O	&JL9		1				
[03]		(E)NUT-HEXAGON FLANGE (D)MUTTER									(F)ECROU (S)TUERCA					
	08316-28063	.	.	B	B	B	.	O	O	&JL9		3				
[04]		(E)BOLT-HEXAGON (D)SCHRAUBE									(F)BOULON (S)PERNO					
	01137-08165	.	.	B	B	B	.	O	O	&JL9		3				
[05]		(E)NUT-HEXAGON FLANGE (D)MUTTER									(F)ECROU (S)TUERCA					
	08316-18083	.	.	B	B	B	.	O	O	&JL9		1				
[06]		(E)BOLT (D)SCHRAUBE									(F)BOULON (S)PERNO					
	07130-06165	.	.	B	B	B	.	O	O	&JL9		2				
[07]		(E)SENSOR-WHEEL SPEED (D)SENSOR,GESCHWINDIGKEIT									(F)DETECTEUR-VITESSE DE ROUE (S)SENSOR-VELOCIDAD DE RUEDA					
	10456154	.	.	B	B	B	.	O	O	&JL9	LH	1		970617		
	Y 10456266	.	.	B	B	B	.	O	O	&JL9	LH	1		970617		
[08]		(E)SENSOR-WHEEL SPEED (D)SENSOR,GESCHWINDIGKEIT									(F)DETECTEUR-VITESSE DE ROUE (S)SENSOR-VELOCIDAD DE RUEDA					
	10456155	.	.	B	B	B	.	O	O	&JL9	RH	1		970617		
	Y 10456267	.	.	B	B	B	.	O	O	&JL9	RH	1		970617		

ENG(ENGINE)	T/A(TRANSAXLE)	BODY TYPE
Y = 1.5SOHC 6 = 1.6DOHC . = COMMON	M = MANUAL T/A A = AUTOMATIC T/A . = COMMON	4 N = 4 DOOR NOTCHBACK 3 H = 3 DOOR HATCHBACK 5 H = 5 DOOR HATCHBACK

4710 ANTI LOCK BRAKE SYSTEM

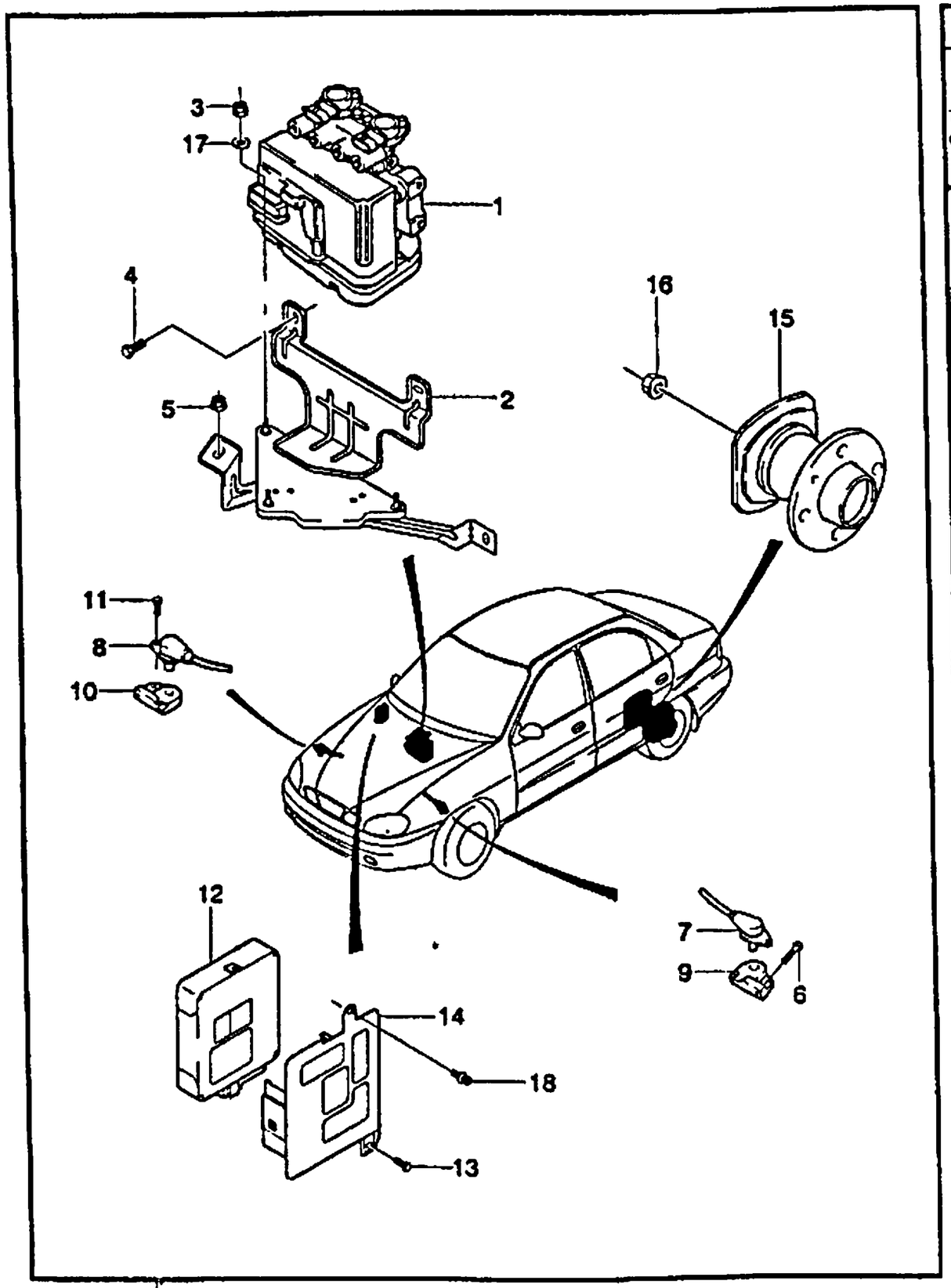

KEY NO. ITC	PART NO	MODEL ENG	T/A	BODY 4N	3H	5H	LEVEL S	SE	SX	OPTION	PART NAME	L/R	QTY	EFFECTIVE DATE FROM	TO	REMARKS	P/CODE
[09]	96146791	.	.	B	B	B	.	O	O	&JL9	(E)BRACKET A-SPEED SENSOR (D)TRÄGER	LH	1			(F)SUPPORT (S)SOPORTE-SENSOR	
[10]	96146792	.	.	B	B	B	.	O	O	&JL9	(E)BRACKET A-SPEED SENSOR (D)TRÄGER	RH	1			(F)SUPPORT (S)SOPORTE-SENSOR	
[11]	09106-06006	.	.	B	B	B	.	O	O	&JL9	(E)BOLT (D)SCHRAUBE		2			(F)BOULON (S)PERNO	
[12]	96306176	.	.	B	B	B	.	O	O	&JL9	(E)CONTROL UNIT-ABS (D)STEUERUNGS-EINHEIT,ABS		1			(F)UNITE DE CONTROLE ABS (S)UNIDAD DE CONTROL-ABS	TB
[13]	03160-48196	.	.	B	B	B	.	O	O	&JL9	(E)SCREW-TAPPING (D)SCHRAUBE		3			(F)VIS (S)TORNILLO	
[14]	96306212	.	.	B	B	B	.	O	O	&JL9	(E)BRACKET-CONTROL UNIT (D)TRÄGER,STEUERUNGSEINHEIT		1		970521	(F)SUPPORT-UNITE DE CONTROLE (S)SOPORTE-UNIDA DE CONTROL	
[15]	N 96250304	.	.	B	B	B	.	O	O	&JL9	(E)BEARING A-WHEEL (D)KUGELLAGER,RAD		1	970521		(F)ROULEMENT-ROUE (S)COJINETE-RUEDA	
[16]	07466975	.	.	B	B	B	.	O	O	&JL9	(E)NUT (D)MUTTER		2			(F)ECROU (S)TUERCA	
[17]	09159-10010	.	.	B	B	B	.	O	O	&JL9	(E)WASHER-PLAIN (D)DICHTUNGSRING		8			(F)RONDELLE (S)ARANDELA	
	09160-06002	.	.	B	B	B	.	O	O	&JL9			2				

ENG(ENGINE)	T/A(TRANSAXLE)	BODY TYPE
Y = 1.5SOHC 6 = 1.6DOHC . = COMMON	M = MANUAL T/A A = AUTOMATIC T/A . = COMMON	4 N = 4 DOOR NOTCHBACK 3 H = 3 DOOR HATCHBACK 5 H = 5 DOOR HATCHBACK

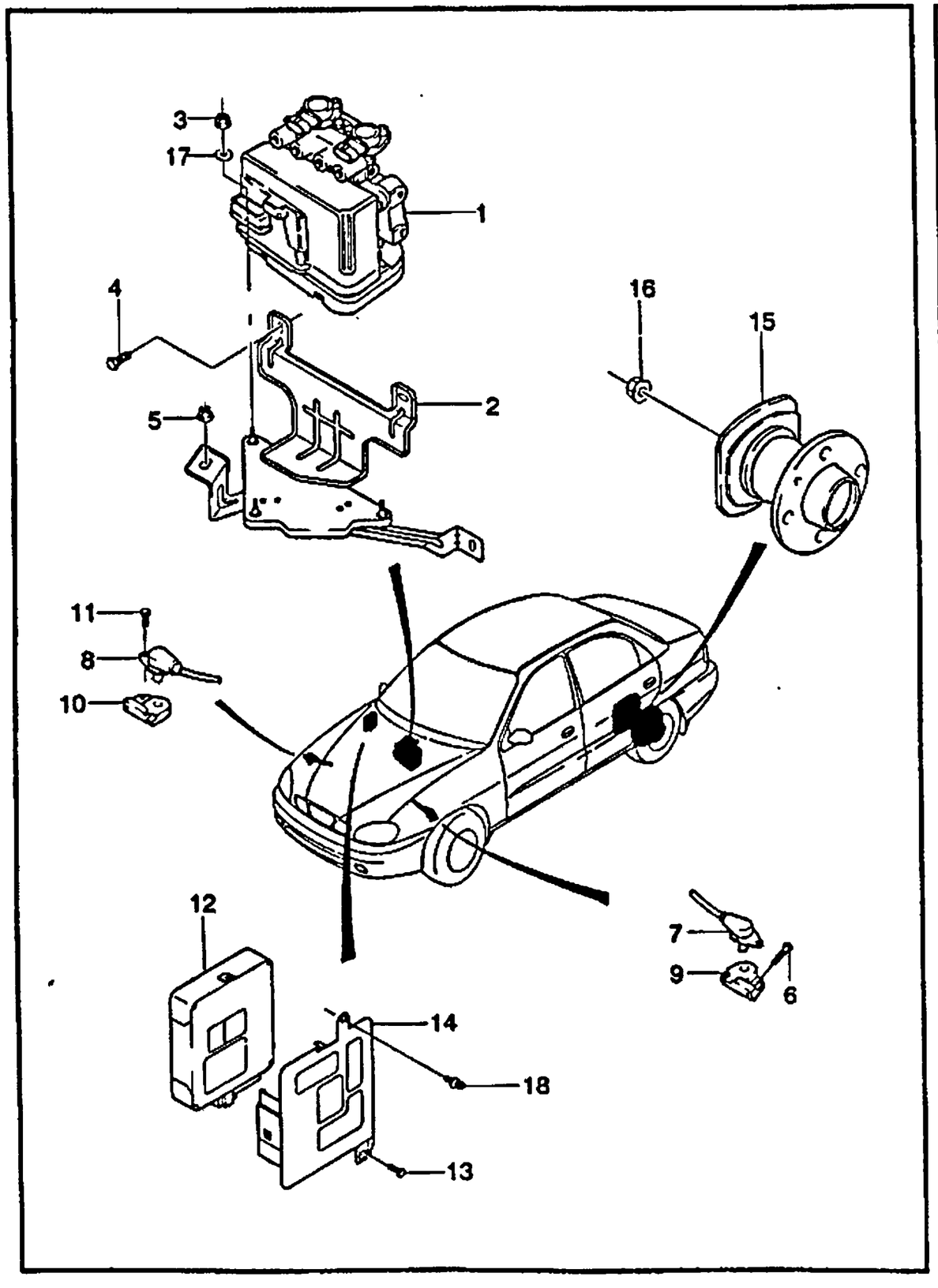

KEY NO.		PART NAME														
ITC	PART NO	MODEL								OPTION	L/R	QTY	EFFECTIVE DATE		REMARKS	P/CODE
		ENG	T/A	BODY			LEVEL						FROM	TO		
				4N	3H	5H	S	SE	SX							
	[18]	(E)CLIP (D)KLEMME									(F)ATTACHE (S)GRAPA					
	09409-06327	.	.	B	B	B	.	O	O	&JL9		1				

ENG(ENGINE)	T/A(TRANSAXLE)	BODY TYPE
Y = 1.5SOHC 6 = 1.6DOHC . = COMMON	M = MANUAL T/A A = AUTOMATIC T/A . = COMMON	4 N = 4 DOOR NOTCHBACK 3 H = 3 DOOR HATCHBACK 5 H = 5 DOOR HATCHBACK

4720 HYDRAULIC MODULATOR

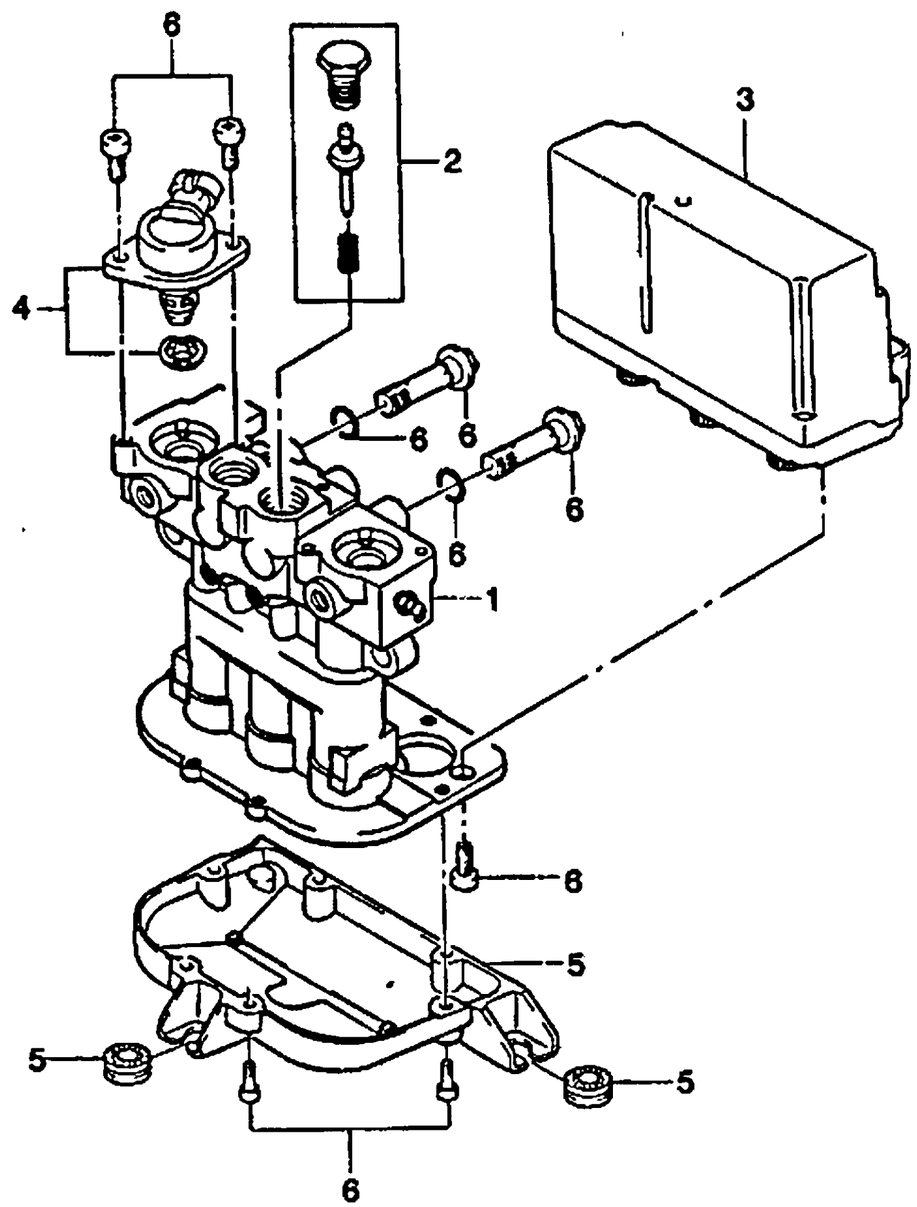

KEY NO. ITC	PART NO	MODEL ENG	T/A	BODY 4N	3H	5H	LEVEL S	SE	SX	OPTION	L/R	QTY	EFFECTIVE DATE FROM	TO	REMARKS	P/CODE
[01]		(E)MODULATOR A-ABS (D)MODULATOR,ABS									(F)MODULATEUR-ABS (S)MODULADOR-ABS					
	18025679	Y	.	B	B	B	.	O	O	&JL9		1				
	18024772	6	.	B	B	B	.	.	O	&JL9		1				
[02]		(E)VALVE A-PROPORTIONER (D)VENTIL,PROPORTIONS									(F)SOUPAPE-PROPORTION (S)VALVULA-PROPORCIONAL					
	18029786	.	.	B	B	B	.	O	O	&JL9		1				
		- CONSIST OF -														
		PISTON(1)														
		SEAL(1)														
		CAP A(1)														
[03]		(E)PACK A-MOTOR (D)PACKET,MOTOR									(F)PAQUET-MOTEUR (S)PAQUETE-MOTOR					
	18029785	.	.	B	B	B	.	O	O	&JL9		1				
[04]		(E)SOLENOID (D)SOLENOID									(F)SOLENOIDE (S)SELENOIDE					
	18029783	.	.	B	B	B	.	O	O	&JL9		1				
[05]		(E)COVER-GEAR (D)DECKEL									(F)CARTER (S)CUBIERTA					
	18029891	.	.	B	B	B	.	O	O	&JL9		1				
[06]		(E)HARDWARE KIT (D)METALLWAREN-SATZ									(F)TROUSSE FERRURES (S)JUEGO DE FERRETERIA					
	18029784	.	.	B	B	B	.	O	O	&JL9		1				
		- CONSIST OF -														
		SCREW M6X1.0(3)														
		SCREW M4X0.7(6)														
		SCREW M6X1.0(6)														

ENG(ENGINE)	T/A(TRANSAXLE)	BODY TYPE
Y = 1.5SOHC 6 = 1.6DOHC . = COMMON	M = MANUAL T/A A = AUTOMATIC T/A . = COMMON	4 N = 4 DOOR NOTCHBACK 3 H = 3 DOOR HATCHBACK 5 H = 5 DOOR HATCHBACK

4720 HYDRAULIC MODULATOR

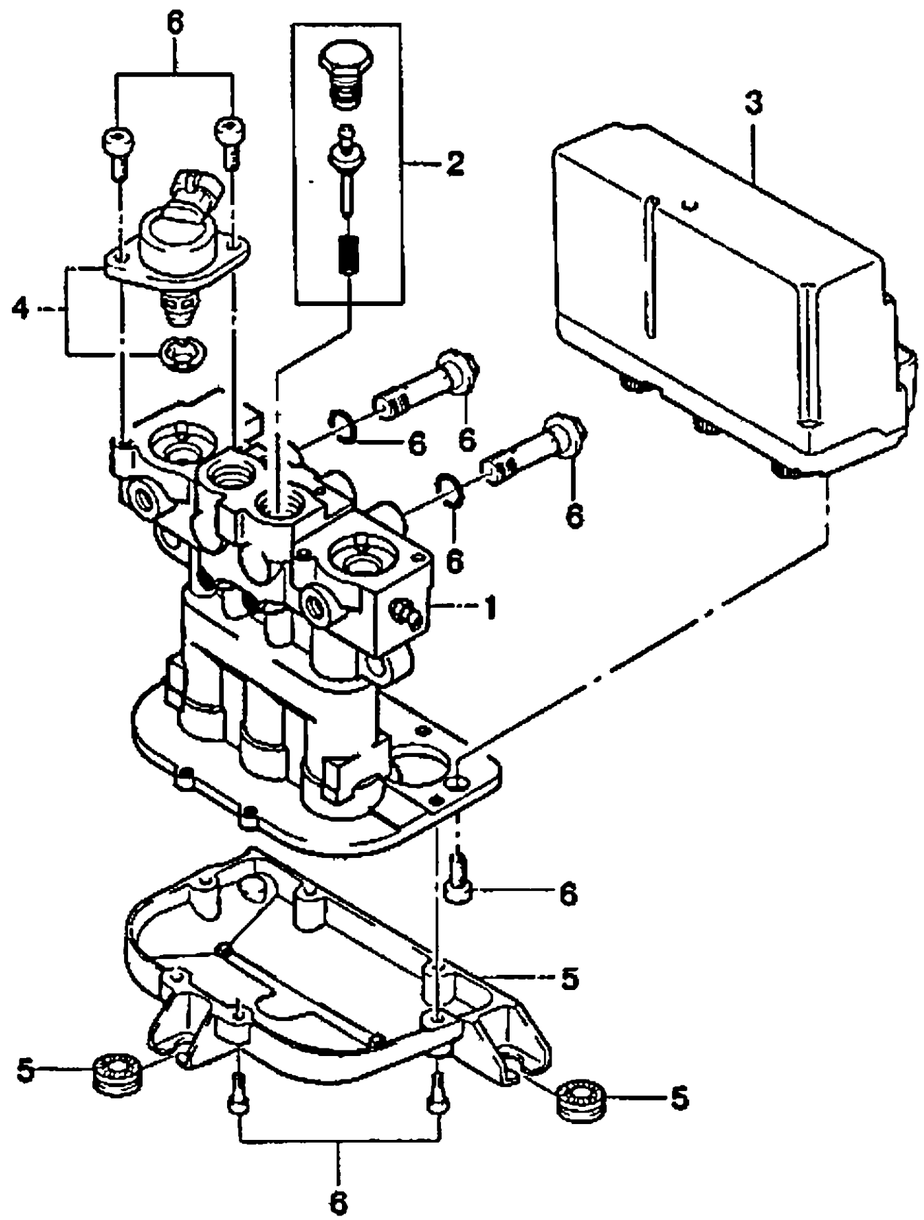

KEY NO.		PART NAME													
ITC	PART NO	MODEL								OPTION	L/R	QTY	EFFECTIVE DATE		REMARKS	P/CODE
		ENG	T/A	BODY			LEVEL						FROM	TO		
				4N	3H	5H	S	SE	SX							
		SEAL(2)														

ENG(ENGINE)	T/A(TRANSAXLE)	BODY TYPE
Y = 1.5SOHC	M = MANUAL T/A	4 N = 4 DOOR NOTCHBACK
6 = 1.6DOHC	A = AUTOMATIC T/A	3 H = 3 DOOR HATCHBACK
. = COMMON	. = COMMON	5 H = 5 DOOR HATCHBACK

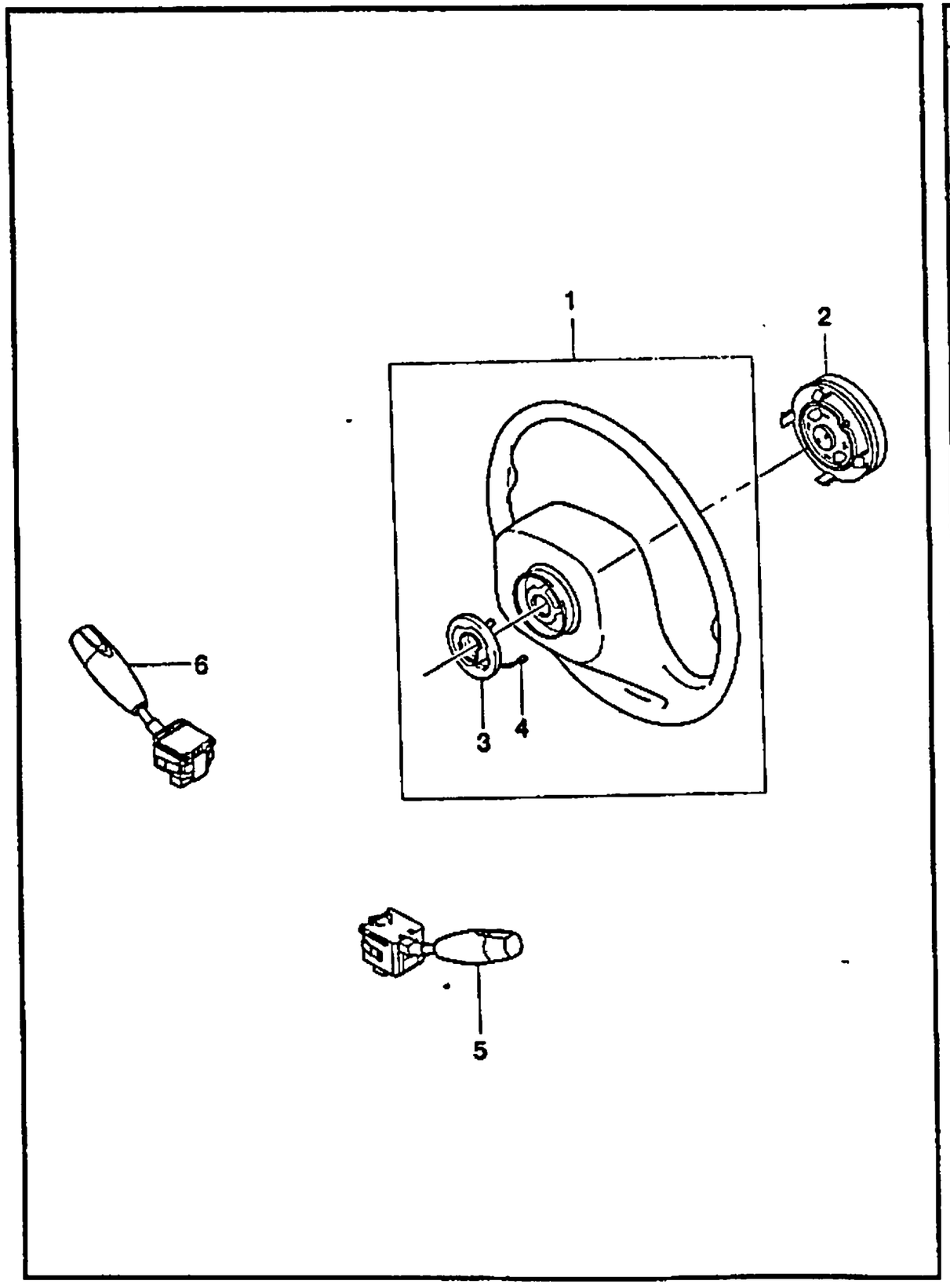

KEY NO. ITC	PART NO	MODEL ENG	T/A	BODY 4N	3H	5H	LEVEL S	SE	SX	OPTION	L/R	QTY	EFFECTIVE DATE FROM	TO	REMARKS	P/CODE
[01]	96239024	(E)WHEEL A-STEERING W/O SIR (D)RAD,LENK	.	.	B	B	B	S	S	S		(F)VOLANT DE DIRECTION (S)RUEDA-VOLANTE 1				TW
[02]	96239023	(E)CAP A-HORN (D)DECKEL,HUPE	.	.	B	B	B	S	S	S		(F)CHAPEAU-AVERTISSEUR (S)TAPA-BOCINA 1				TH
[03]	96304414	(E)CONTACT A-SLIDING (D)KONTAKT,GLEIT	.	.	B	B	B	S	S	S		(F)CONTACT-GLISSANT (S)CONTACTO-DESLIZANTE 1				
[04]	96304415	(E)CABLE A-GROUND (D)KABEL	.	.	B	B	B	S	S	S		(F)CABLE (S)CABLE 1				
[05]	96230794	(E)SWITCH A-SIGNAL (D)SCHALTER,SIGNAL	.	.	B	B	B	S	S	S		(F)COMMUTATEUR-SIGNAL (S)INTERRUPTOR-SEÑAL 1				ZA
[06]	96242526	(E)SWITCH A-WIPER (D)SCHALTER,SCHEIBENWISCHER	.	.	B	B	B	.	.	A	&T98&T97	1				ZE
	96230798		.	.	B	.	.	S	S	S	-C25	1				CA
	96230800		.	.	.	B	B	S	.	S	&C25	1				CB

ENG(ENGINE)	T/A(TRANSAXLE)	BODY TYPE
Y = 1.5SOHC	M = MANUAL T/A	4 N = 4 DOOR NOTCHBACK
6 = 1.6DOHC	A = AUTOMATIC T/A	3 H = 3 DOOR HATCHBACK
. = COMMON	. = COMMON	5 H = 5 DOOR HATCHBACK

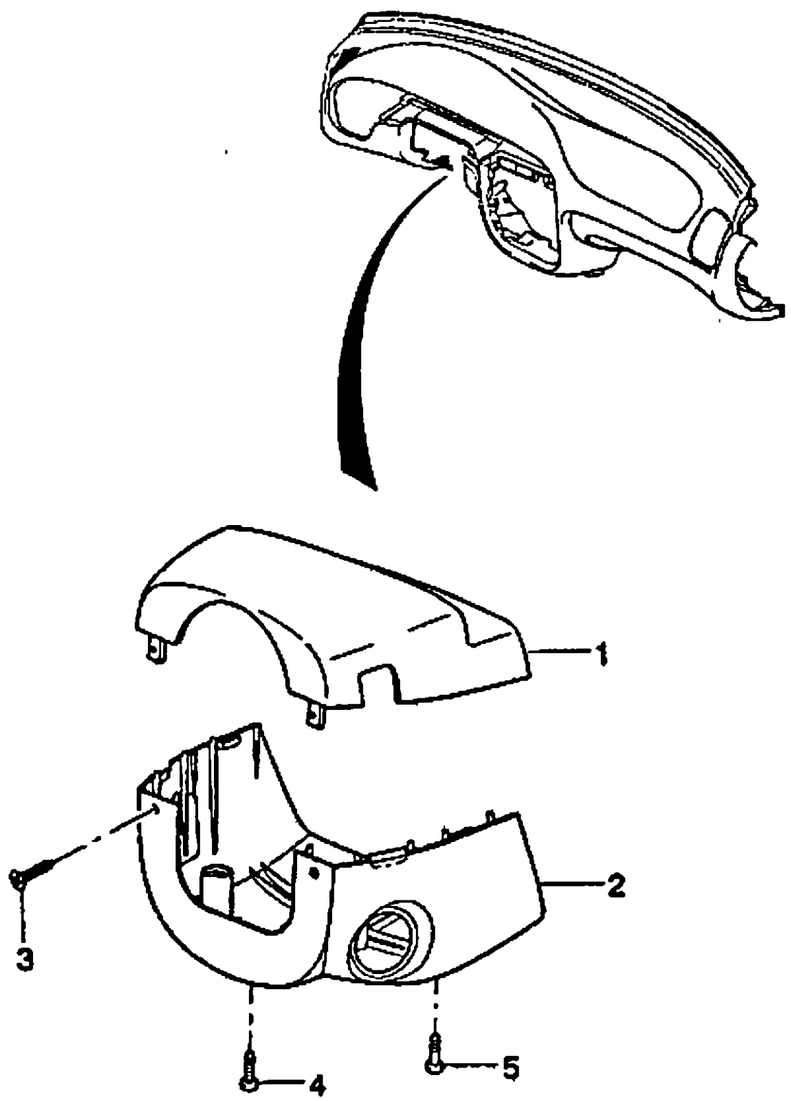

KEY NO. ITC	PART NO	MODEL ENG	T/A	BODY 4N	3H	5H	LEVEL S	SE	SX	OPTION	L/R	QTY	EFFECTIVE DATE FROM	TO	REMARKS	P/CODE
[01]		(E)COVER-STEERING COLUMN,UPR (D)DECKEL,LENKSÄULE,OBERE									(F)COUVERCLE (S)CUBIERTA					
96242958		.	.	B	B	B	S	S	S			1				T1
[02]		(E)COVER-STEERING COLUMN,LWR (D)DECKEL,LENKSÄULE,UNTERE									(F)COUVERCLE (S)CUBIERTA					
96242964		.	.	B	B	B	S	S	S	-N33		1				T6
96242962		.	.	B	B	B	.	.	O	&N33		1				T4
[03]		(E)SCREW-TAPPING (D)SCHRAUBE									(F)VIS (S)TORNILLO					
03220-42095		.	.	B	B	B	S	S	S			2				
[04]		(E)SCREW-TAPPING (D)SCHRAUBE									(F)VIS (S)TORNILLO					
03210-48095		.	.	B	B	B	S	S	S			2				
[05]		(E)SCREW (D)SCHRAUBE									(F)VIS (S)TORNILLO					
09136-04006		.	.	B	B	B	S	S	S			1				

ENG(ENGINE)	T/A(TRANSAXLE)	BODY TYPE
Y = 1.5SOHC 6 = 1.6DOHC . = COMMON	M = MANUAL T/A A = AUTOMATIC T/A . = COMMON	4 N = 4 DOOR NOTCHBACK 3 H = 3 DOOR HATCHBACK 5 H = 5 DOOR HATCHBACK

4830 NON TILT STEERING COLUMN

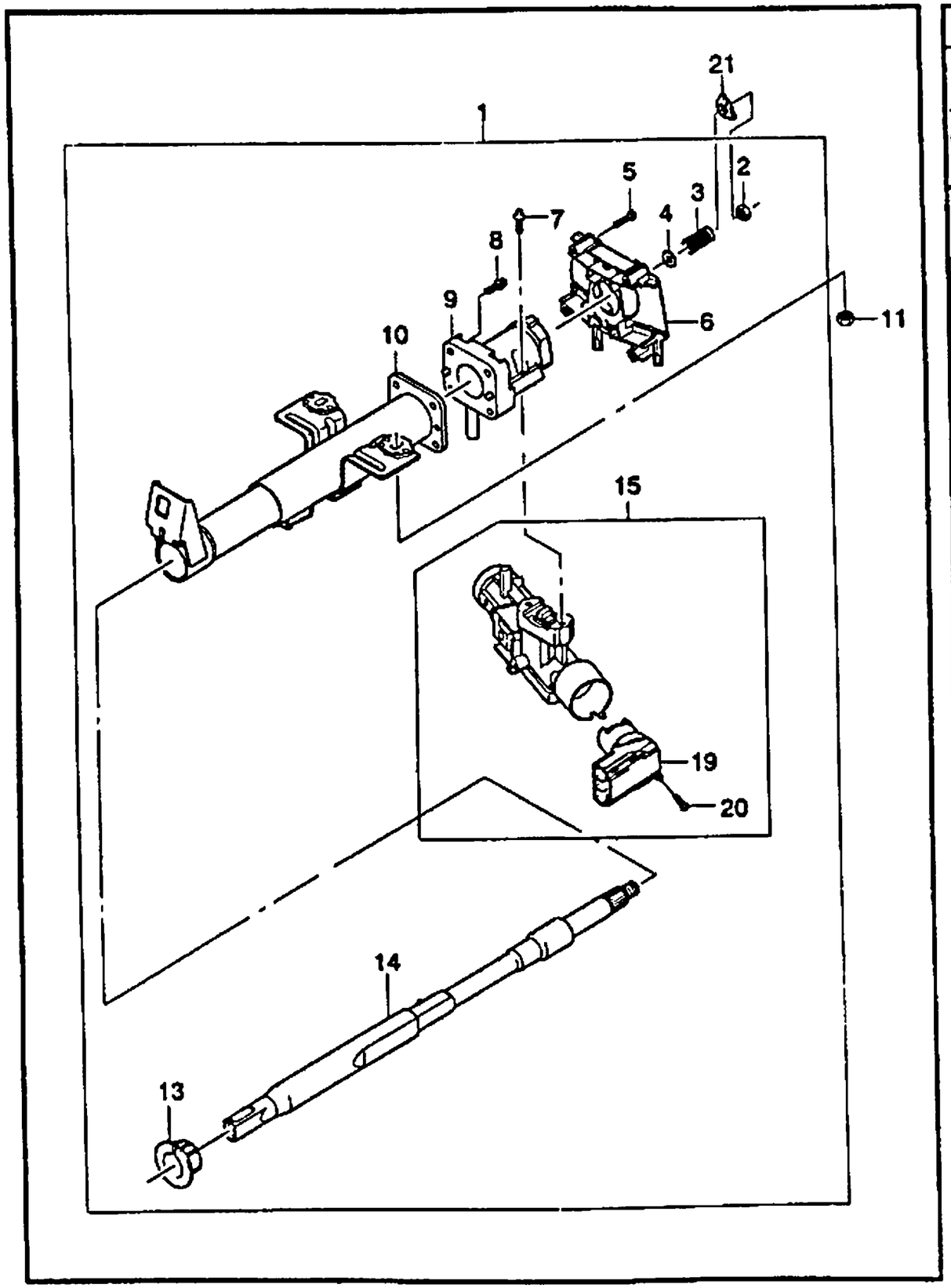

KEY NO. ITC	PART NO	MODEL ENG	MODEL T/A	MODEL BODY 4N	MODEL BODY 3H	MODEL BODY 5H	MODEL LEVEL S	MODEL LEVEL SE	MODEL LEVEL SX	OPTION	L/R	QTY	EFFECTIVE DATE FROM	EFFECTIVE DATE TO	REMARKS	P/CODE
[01]		(E)COLUMN A-STEERING (D)SÄULE,LENKUNG									(F)COLONNE-DIRECTION (S)COLUMNA-CONDUCIR					
96304406		.	.	B	B	B	S	S	S	&N55-N33		1				SS
96214477		.	.	B	B	B	.	O	O	&N68-N33		1				SF
[02]		(E)NUT (D)MUTTER									(F)ECROU (S)TUERCA					
530952		.	.	B	B	B	S	S	S	-AJ3		1			M14X1.5	
530545		.	.	B	B	B	.	O	O	&AJ3		1			M14X1.5	
[03]		(E)SPRING (D)FEDERUNG									(F)RESSORT (S)RESORTE					
530803		.	.	B	B	B	S	S	S			1				
[04]		(E)WASHER (D)DICHTUNGSRING									(F)RONDELLE (S)ARANDELA					
530546		.	.	B	B	B	S	S	S			1				
[05]		(E)SCREW (D)SCHRAUBE									(F)VIS (S)TORNILLO					
530590		.	.	B	B	B	S	S	S			2				
[06]		(E)HOUSING A-SIGNAL SWITCH (D)GEHÄUSE SIGNAL SCHALTER									(F)LOGEMENT (S)CARCASA					
530445		.	.	B	B	B	S	S	S	-AJ3		1				
530923		.	.	B	B	B	.	O	O	&AJ3		1				
530723		.	.	B	B	B	.	O	O	&AJ3		1				
[07]		(E)BOLT-SHEAR (D)SCHRAUBE,SCHERE									(F)BOULON-CISAILLE (S)PERNO-CORTAR					
530549		.	.	B	B	B	S	S	S			2			M6X1.0	
[08]		(E)BOLT-SUPPORT (D)SCHRAUBE									(F)BOULON (S)PERNO					
530600		.	.	B	B	B	S	S	S			4			M8X1.25	

ENG(ENGINE)	T/A(TRANSAXLE)	BODY TYPE
Y = 1.5SOHC	M = MANUAL T/A	4 N = 4 DOOR NOTCHBACK
6 = 1.6DOHC	A = AUTOMATIC T/A	3 H = 3 DOOR HATCHBACK
. = COMMON	. = COMMON	5 H = 5 DOOR HATCHBACK

4830 NON TILT STEERING COLUMN

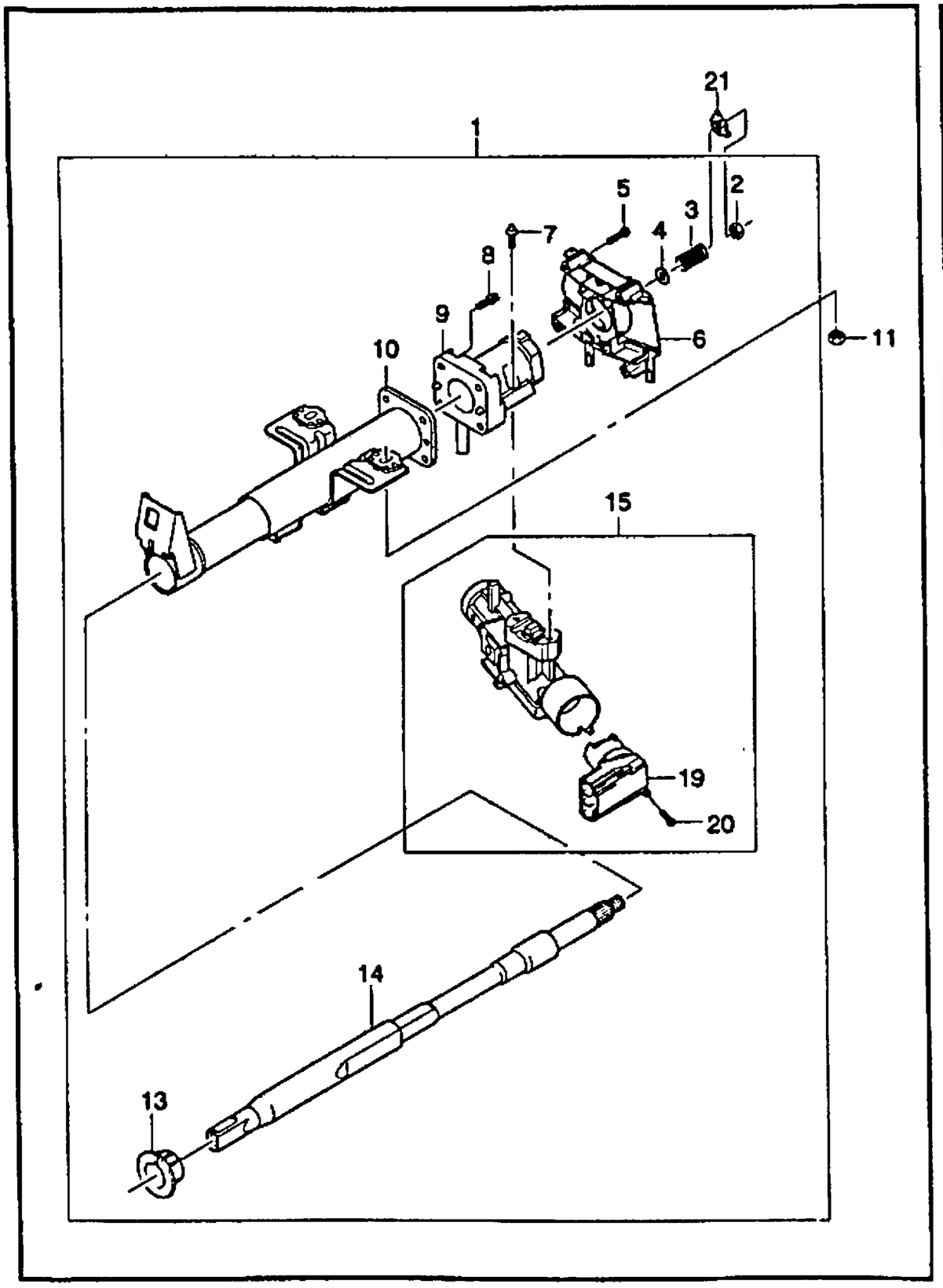

KEY NO.	PART NAME															
ITC	PART NO	MODEL								OPTION	L/R	QTY	EFFECTIVE DATE		REMARKS	P/CODE
		ENG	T/A	BODY			LEVEL						FROM	TO		
				4N	3H	5H	S	SE	SX							
[09]		(E)HOUSING A-STEERING COLUMN (D)GEHÄUSE LENKSÄULE									(F)LOGEMENT (S)CARCASA-COLUMNA DE VOLANT					
530751		.	.	B	B	B	S	S	S		1					
[10]		(E)JACKET A-STEERING COLUMN (D)MANTEL,LENKSÄULE									(F)JAQUETTE (S)CUBIERTA					
530485		.	.	B	B	B	S	S	S		1					
[11]		(E)NUT (D)MUTTER									(F)ECROU (S)TUERCA					
08361-28083		.	.	B	B	B	S	S	S		3					
[13]		(E)SPACER (D)DISTANZSTÜCK									(F)ENTRETOISE (S)ESPACIADOR					
530995		.	.	B	B	B	S	S	S		1					
530280		.	.	B	B	B	S	S	S		1					
[14]		(E)SHAFT A-STEERING COLUMN (D)SPINDEL,LENKSÄULE									(F)ARBRE (S)EJE-COLUMNA DE VOLANTE					
530486		.	.	B	B	B	S	S	S		1					
[15]		(E)HOUSING A-IGNITION SWITCH (D)GEHÄUSE ZÜNDUNGS-SCHALTER									(F)LOGEMENT (S)CARCASA					
630825		.	.	B	B	B	S	S	S		1					
[19]		(E)SWITCH-IGNITION (D)SCHALTER,ZÜNDUNG									(F)COMMUTATEUR-CONTACT (S)INTERRUPTOR-IGNICION					
96238726		.	.	B	B	B	S	S	S		1					
[20]		(E)BOLT (D)SCHRAUBE									(F)BOULON (S)PERNO					
001711-4016		.	.	B	B	B	S	S	S		1					
[21]		(E)PLATE-LOCKING (D)PLATTE,VERRIEGELUNG									(F)PLAQUE-VERROUILLAGE (S)PLACA-CIERRE					
03451666		.	.	B	B	B	.	O	O	&AJ3	1					

ENG(ENGINE)	T/A(TRANSAXLE)	BODY TYPE
Y = 1.5SOHC 6 = 1.6DOHC . = COMMON	M = MANUAL T/A A = AUTOMATIC T/A . = COMMON	4 N = 4 DOOR NOTCHBACK 3 H = 3 DOOR HATCHBACK 5 H = 5 DOOR HATCHBACK

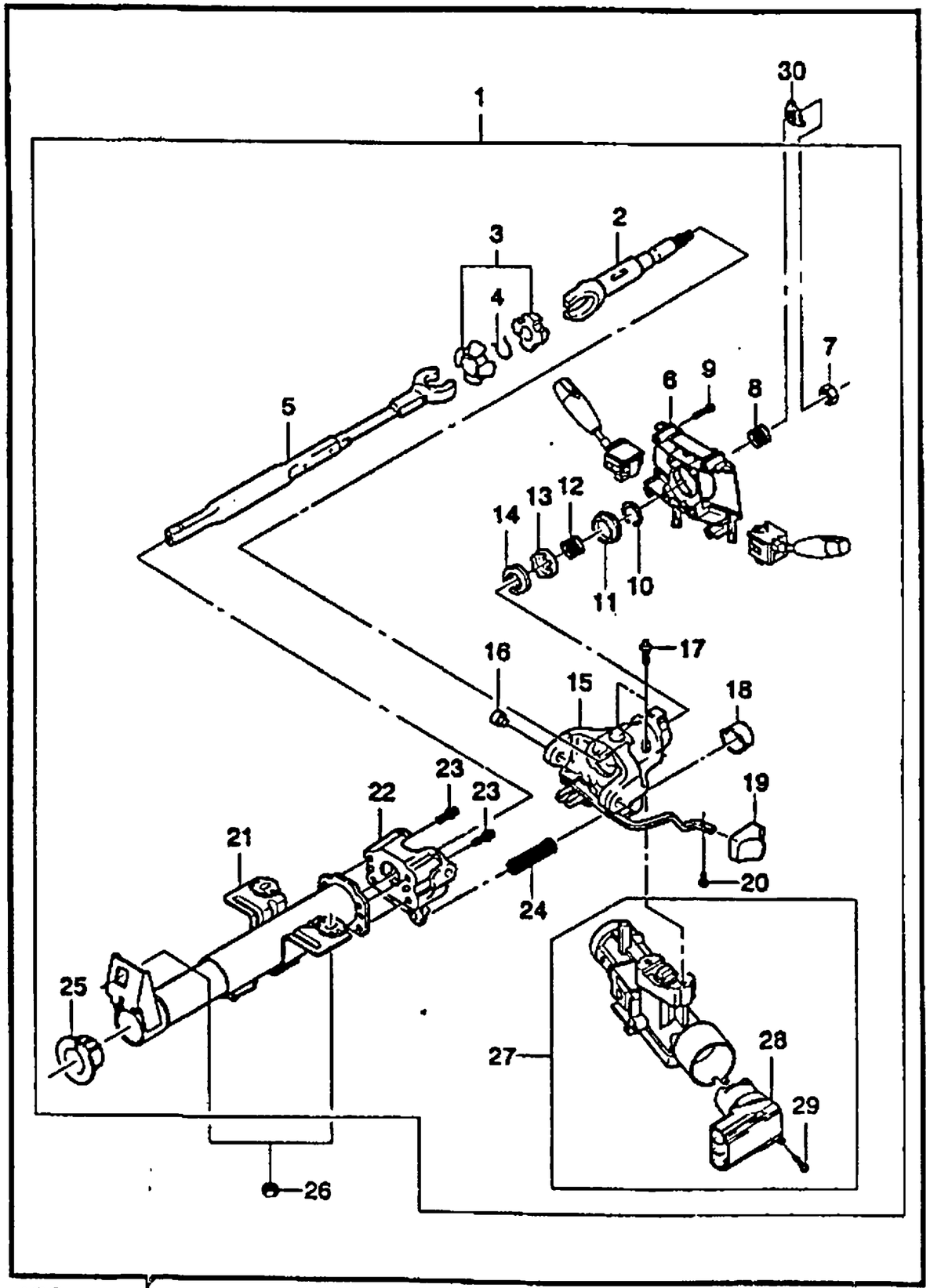

KEY NO. ITC	PART NO	MODEL ENG	MODEL T/A	MODEL BODY 4N	MODEL BODY 3H	MODEL BODY 5H	MODEL LEVEL S	MODEL LEVEL SE	MODEL LEVEL SX	OPTION	L/R	QTY	EFFECTIVE DATE FROM	EFFECTIVE DATE TO	REMARKS	P/CODE
[01]		(E)COLUMN A-TILT.STEERING (D)SÄULE,KIPPLENKUNG									(F)COLONNE-DIRECTION (S)COLUMNA-CONDUCIR					
	96230715	.	.	B	B	B	.	.	O	&N33&N55		1				TS
	96230716	.	.	B	B	B	.	.	O	&N33&N58		1				TF
[02]		(E)SHAFT A-RACER&UPPER (D)SPINDEL									(F)ARBRE (S)EJE					
	530964	.	.	B	B	B	.	.	O			1				
[03]		(E)SPHERE-CENTERING (D)KUGEL-CENTRE									(F)SPHÈRE-CENTRE (S)ESFERA					
	530625	.	.	B	B	B	.	.	O			2				
[04]		(E)SPRING (D)FEDERUNG									(F)RESSORT (S)RESORTE					
	530626	.	.	B	B	B	.	.	O			1				
[05]		(E)SHAFT A-LOWER STRG (D)SPINDEL									(F)ARBRE (S)EJE					
	530918	.	.	B	B	B	.	.	O			1				
[06]		(E)HOUSING A-SIGNAL SWITCH (D)GEHÄUSE									(F)LOGEMENT (S)CARCASA					
	530445	.	.	B	B	B	.	.	O	-AJ3		1				
	530923	.	.	B	B	B	.	.	O	&AJ3		1				
	530723	.	.	B	B	B	.	.	O	&AJ3		1				
[07]		(E)NUT (D)MUTTER									(F)ECROU (S)TUERCA					
	530952	.	.	B	B	B	.	.	O	-AJ3		1			M14X1.5	
	530545	.	.	B	B	B	.	.	O	&AJ3		1			M14X1.5	
[08]		(E)SPRING (D)FEDERUNG									(F)RESSORT (S)RESORTE					
	530561	.	.	B	B	B	.	.	O			1				

ENG(ENGINE)	T/A(TRANSAXLE)	BODY TYPE
Y = 1.5SOHC 6 = 1.6DOHC . = COMMON	M = MANUAL T/A A = AUTOMATIC T/A . = COMMON	4 N = 4 DOOR NOTCHBACK 3 H = 3 DOOR HATCHBACK 5 H = 5 DOOR HATCHBACK

4831 TILTABLE STEERING COLUMN

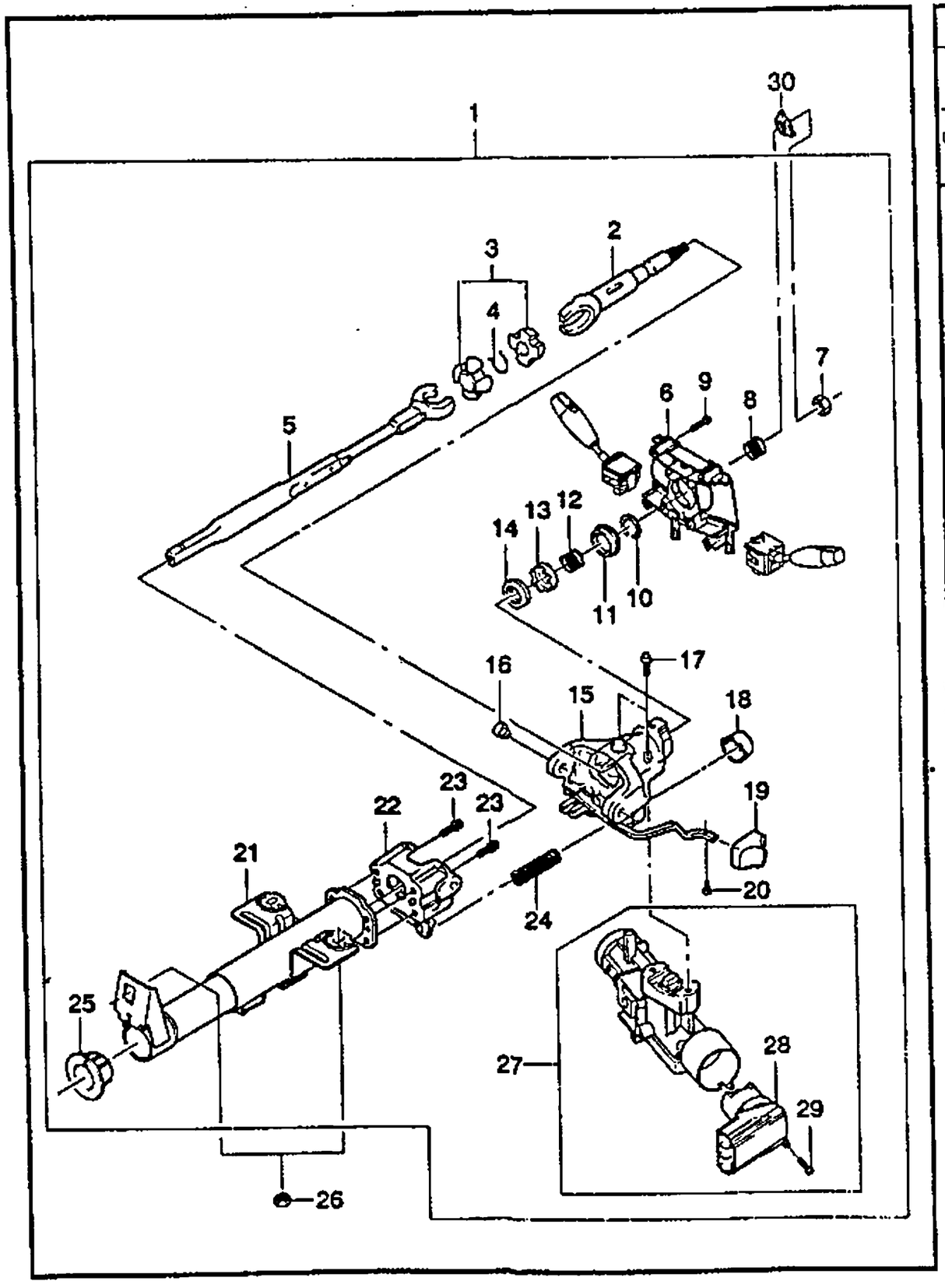

KEY NO. ITC	PART NO	PART NAME: MODEL ENG	T/A	BODY 4N	3H	5H	LEVEL S	SE	SX	OPTION	L/R	QTY	EFFECTIVE DATE FROM	TO	REMARKS	PICODE
[09]		(E)SCREW (D)SCHRAUBE									(F)VIS (S)TORNILLO					
	530590	.	.	B	B	B	.	.	O			2				
[10]		(E)RING-RETAINING (D)RING,HALTER									(F)ANNEAU-DE RETENTION (S)ANILLO-RETENEDOR					
	530503	.	.	B	B	B	.	.	O			1				
[11]		(E)RETAINER-SPRING (D)HALTER									(F)ARRETOIR (S)RETENEDOR					
	530553	.	.	B	B	B	.	.	O			1				
[12]		(E)SPRING (D)FEDERUNG									(F)RESSORT (S)RESORTE					
	530552	.	.	B	B	B	.	.	O			1				
[13]		(E)SEAT-UPR BEARING INR RACE (D)SITZ,OBERER LAGER									(F)SIEGE (S)ASIENTO					
	530524	.	.	B	B	B	.	.	O			1				
[14]		(E)RACE-INNER (D)GLEITBAHN,INNEN									(F)CAGE-INTERNE (S)CARRERA-INTERNA					
	530502	.	.	B	B	B	.	.	O			1				
[15]		(E)HOUSING A-STRG COLUMN (D)GEHÄUSE									(F)LOGEMENT (S)CARCASA					
	530913	.	.	B	B	B	.	.	O			1				
[16]		(E)PIN-PIVOT (D)STIFT									(F)BROCHE (S)PASADOR					
	530515	.	.	B	B	B	.	.	O			2				
[17]		(E)BOLT-SHEAR (D)SCHRAUBE,SCHERE									(F)BOULON-CISAILLE (S)PERNO-CORTAR					
	530549	.	.	B	B	B	.	.	O			2			M6X1.0	
[18]		(E)RETAINER-SPRING (D)HALTER									(F)ARRETOIR (S)RETENEDOR					

ENG(ENGINE)	T/A(TRANSAXLE)	BODY TYPE
Y = 1.5SOHC	M = MANUAL T/A	4 N = 4 DOOR NOTCHBACK
6 = 1.6DOHC	A = AUTOMATIC T/A	3 H = 3 DOOR HATCHBACK
. = COMMON	. = COMMON	5 H = 5 DOOR HATCHBACK

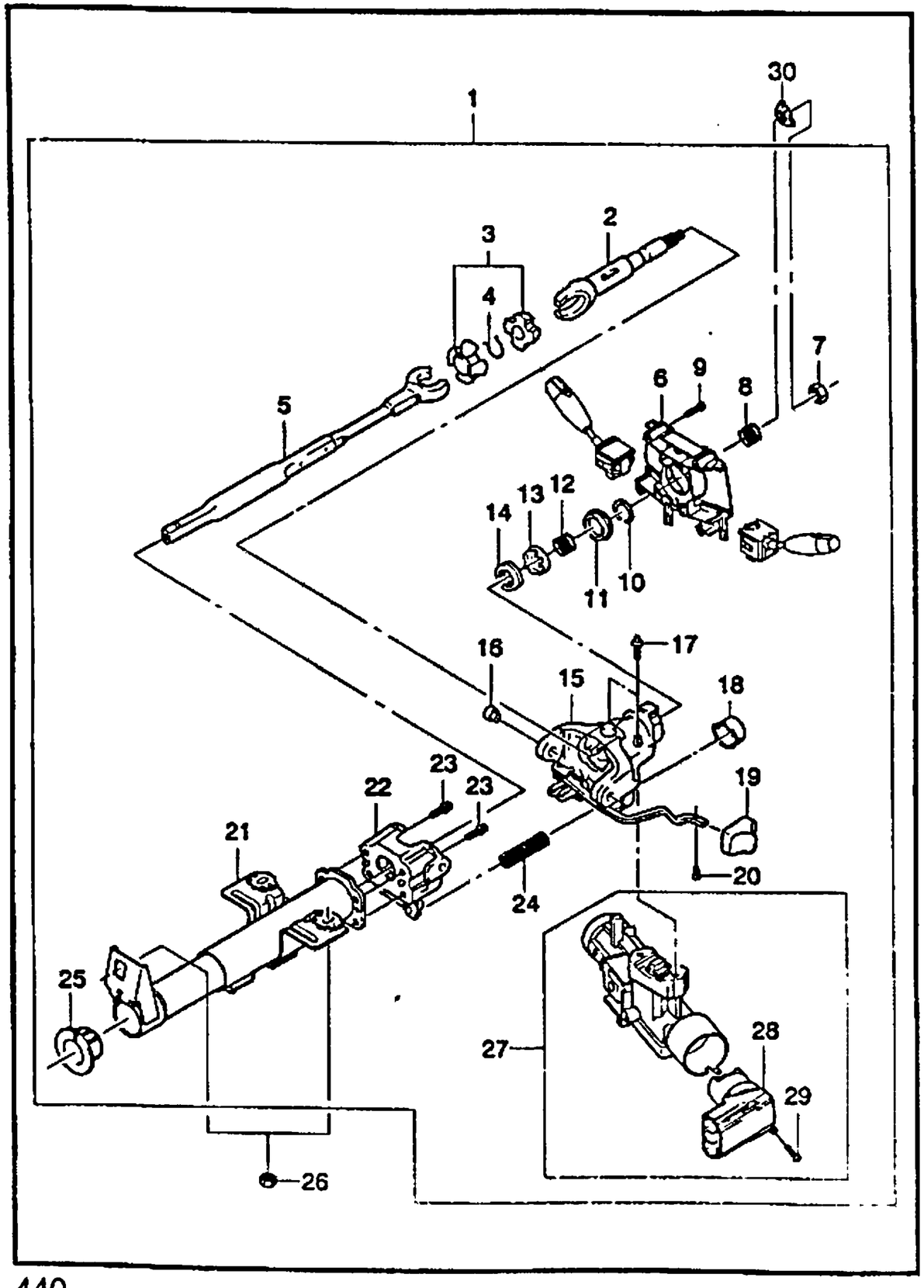

KEY NO. ITC	PART NO	MODEL ENG	T/A	BODY 4N	3H	5H	LEVEL S	SE	SX	PART NAME / OPTION	L/R	QTY	EFFECTIVE DATE FROM	TO	REMARKS	P/CODE
[19]	530509	.	.	B	B	B	.	.	O	(E)HANDLE-TILTABLE LEVER (D)HENKEL	(F)POIGNEE (S)MANIJA	1				
[20]	530953	.	.	B	B	B	.	.	O	(E)SCREW (D)SCHRAUBE	(F)VIS (S)TORNILLO	1				
[21]	530848	.	.	B	B	B	.	.	O	(E)JACKET A-STEERING COLUMN (D)MANTEL,LENKSÄULE	(F)JAQUETTE (S)CUBIERTA	1				
[22]	530914	.	.	B	B	B	.	.	O	(E)SUPPORT-STRG COLUMN HSG (D)TRÄGER,LENKSÄULE GEHÄUSE	(F)SUPPORT (S)SOPORTE	1				
[23]	530494	.	.	B	B	B	.	.	O	(E)SCREW (D)SCHRAUBE	(F)VIS (S)TORNILLO	1				
[24]	530600	.	.	B	B	B	.	.	O	(E)SPRING (D)FEDERUNG	(F)RESSORT (S)RESORTE	4			M8X1.25	
[25]	530750	.	.	B	B	B	.	.	O	(E)SPACER (D)DISTANZSTÜCK	(F)ENTRETOISE (S)ESPACIADOR	1				
	530995	.	.	B	B	B	.	.	O			1				
[26]	530280	.	.	B	B	B	.	.	O	(E)NUT (D)MUTTER	(F)ECROU (S)TUERCA	1				
[27]	08361-28083	.	.	B	B	B	.	.	O	(E)HOUSING A-IGNITION SWITCH (D)GEHÄUSE ZÜNDUNGS-SCHALTER	(F)LOGEMENT (S)CARCASA	3				

ENG(ENGINE)	T/A(TRANSAXLE)	BODY TYPE
Y = 1.5SOHC 6 = 1.6DOHC . = COMMON	M = MANUAL T/A A = AUTOMATIC T/A . = COMMON	4 N = 4 DOOR NOTCHBACK 3 H = 3 DOOR HATCHBACK 5 H = 5 DOOR HATCHBACK

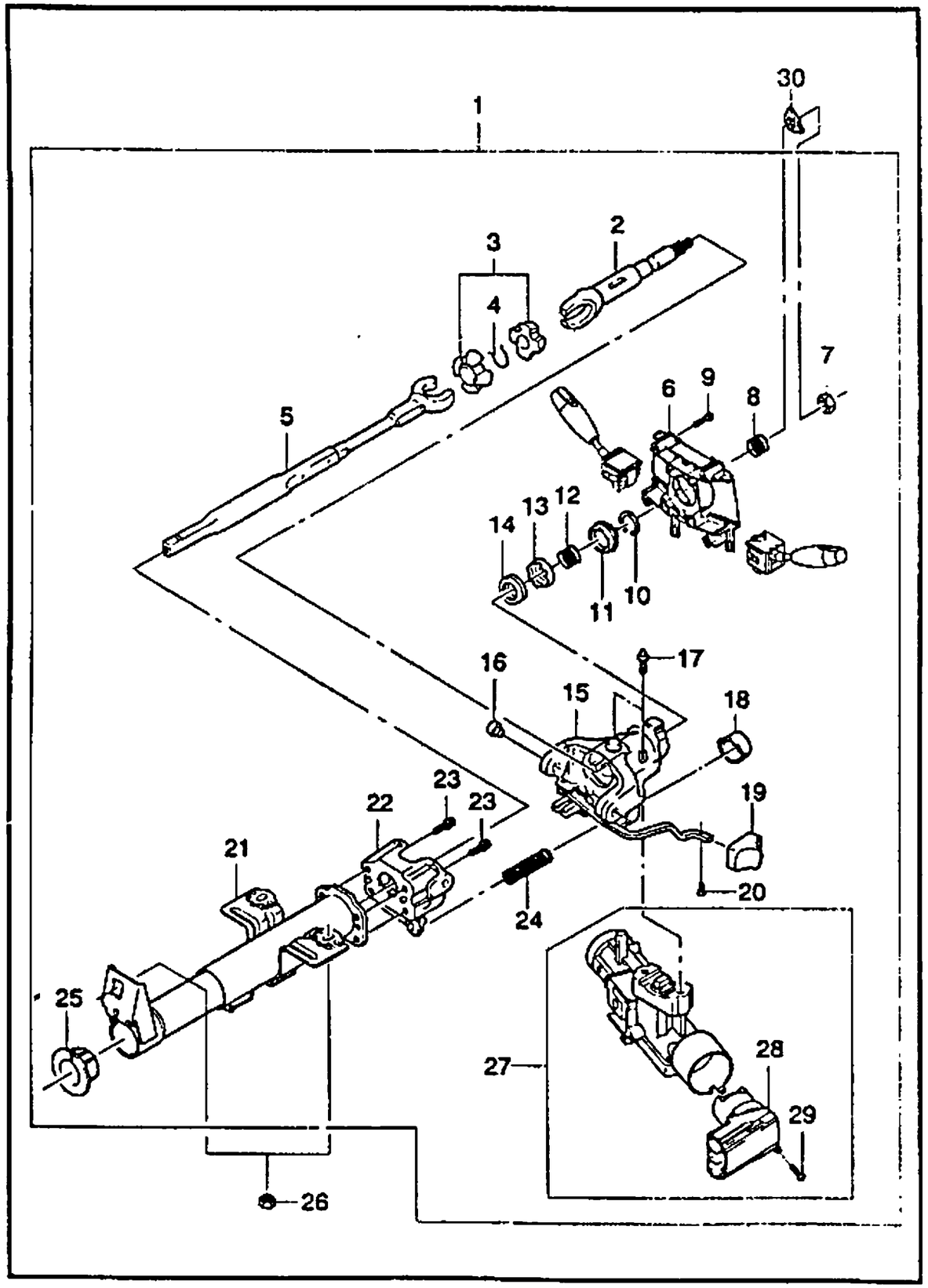

KEY NO. ITC	PART NO	MODEL ENG	MODEL T/A	MODEL BODY 4N	MODEL BODY 3H	MODEL BODY 5H	MODEL LEVEL S	MODEL LEVEL SE	MODEL LEVEL SX	OPTION	L/R	QTY	EFFECTIVE DATE FROM	EFFECTIVE DATE TO	REMARKS	P/CODE
[28]	530825	.	.	B	B	B	.	.	O			1			(E)SWITCH-IGNITION (D)SCHALTER,ZÜNDUNG (F)COMMUTATEUR-CONTACT (S)INTERRUPTOR-IGNICION	
[29]	96238726	.	.	B	B	B	.	.	O			1			(E)BOLT (D)SCHRAUBE (F)BOULON (S)PERNO	
[30]	001711-4016	.	.	B	B	B	.	.	O			1			(E)PLATE-LOCKING (D)PLATTE,VERRIEGELUNG (F)PLAQUE-VERROUILLAGE (S)PLACA-CIERRE	
	03461666	.	.	B	B	B	.	.	O	&AJ3		1				

ENG(ENGINE)	T/A(TRANSAXLE)	BODY TYPE
Y = 1.5SOHC 6 = 1.6DOHC . = COMMON	M = MANUAL T/A A = AUTOMATIC T/A . = COMMON	4 N = 4 DOOR NOTCHBACK 3 H = 3 DOOR HATCHBACK 5 H = 5 DOOR HATCHBACK

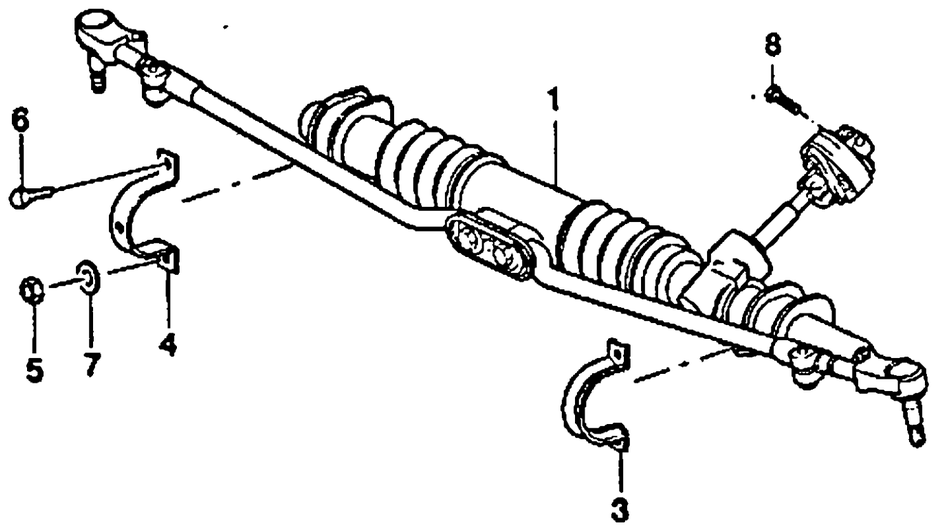

KEY NO. ITC	PART NO	MODEL ENG	T/A	BODY 4N	3H	5H	LEVEL S	SE	SX	OPTION	L/R	QTY	EFFECTIVE DATE FROM	TO	REMARKS	P/CODE
		PART NAME														
[01]		(E)GEAR A-STEERING (D)GETRIEBE,LENKUNG									(F)ENGRENAGE-DIRECTION (S)ENGRANAJE-VOLANTE					
	96304378	.	.	B	B	B	S	S	.	&N51		1		970716		AP
	96304378	.	.	B	B	B	S	S	.	&N51-F40		1	970716			AP
	96255507	.	.	B	B	B	A	A	.	&N51&F40		1	970716			MP
[02]		(E)GEAR A-POWER STEERING (D)GETRIEBE,KRAFTLENKUNG									(F)ENGRENAGE (S)ENGRANAJE-SERVODIRECCION					
	96216615	.	.	B	B	B	O	O	S	&N40		1		970716		SU
	96216615	.	.	B	B	B	O	O	S	&N40-F40		1	970716			SU
	96255506	.	.	B	B	B	A	A	A	&N40&F40		1	970716			PA
[03]		(E)BRACKET-STEERING GEAR (D)TRÄGER,LENKGETRIEBE									(F)SUPPORT (S)SOPORTE-ENGRANAJE					
	90334562	.	.	B	B	B	S	S	S		LH	1				
[04]		(E)BRACKET-STEERING GEAR (D)TRÄGER,LENKUNG GETRIEBE									(F)SUPPORT (S)SOPORTE					
	90121248	.	.	B	B	B	S	S	S		RH	1				
[05]		(E)NUT-HEXAGON LOCK (D)MUTTER									(F)ECROU (S)TUERCA					
	08311-18083	.	.	B	B	B	S	S	S			2				
[06]		(E)BOLT-HEXAGON (D)SCHRAUBE									(F)BOULON (S)PERNO					
	09100-08009	.	.	B	B	B	S	S	S			2				
[07]		(E)WASHER-PLAIN (D)DICHTUNGSRING									(F)RONDELLE (S)ARANDELA					
	09160-08005	.	.	B	B	B	S	S	S			2				
[08]		(E)BOLT (D)SCHRAUBE									(F)BOULON (S)PERNO					
	09117-08003	.	.	B	B	B	S	S	S			1				

ENG(ENGINE)	T/A(TRANSAXLE)	BODY TYPE
Y = 1.5SOHC	M = MANUAL T/A	4 N = 4 DOOR NOTCHBACK
6 = 1.6DOHC	A = AUTOMATIC T/A	3 H = 3 DOOR HATCHBACK
. = COMMON	. = COMMON	5 H = 5 DOOR HATCHBACK

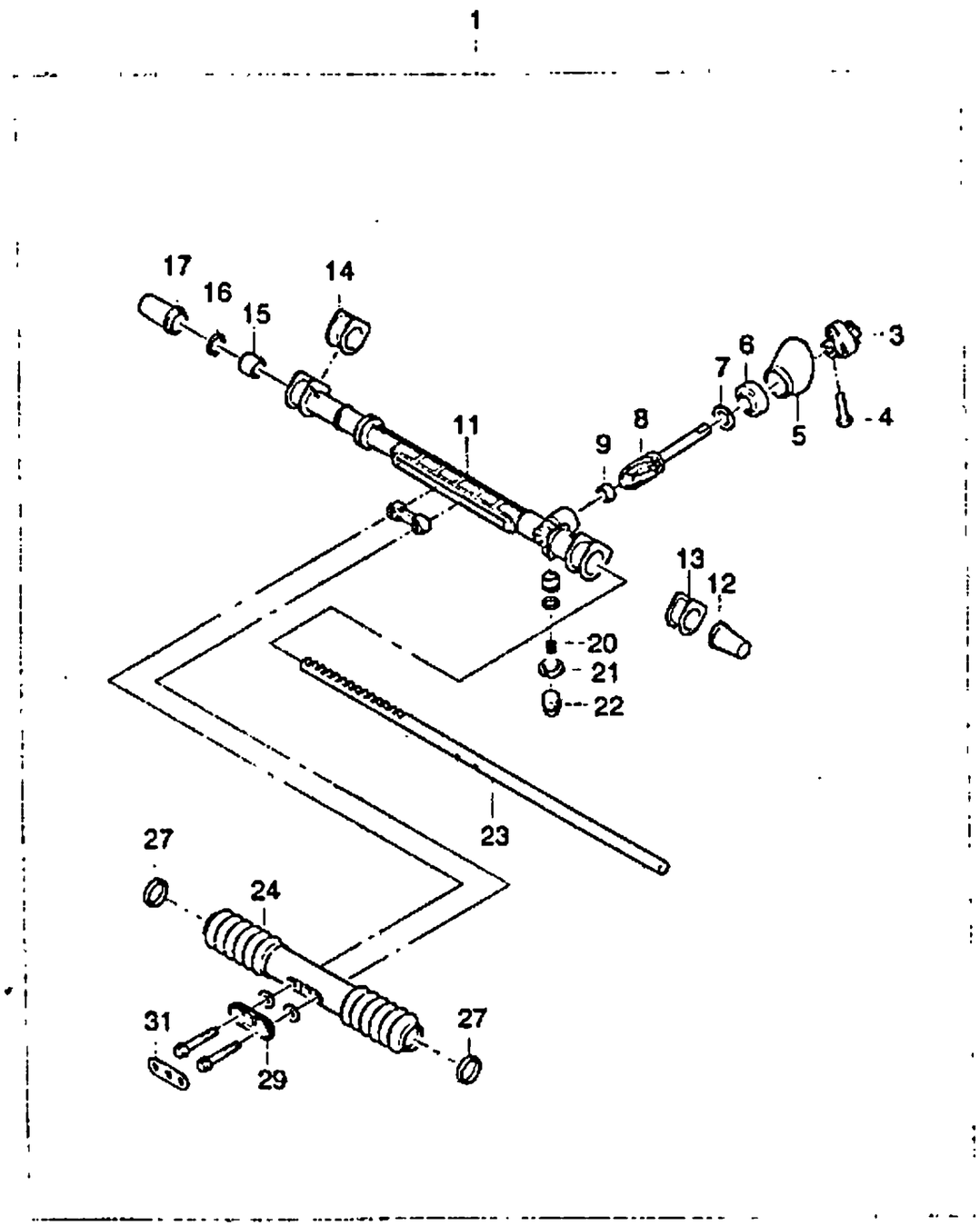

KEY NO. ITC	PART NO	MODEL ENG	MODEL T/A	BODY 4N	BODY 3H	BODY 5H	LEVEL S	LEVEL SE	LEVEL SX	OPTION	L/R	QTY	EFFECTIVE DATE FROM	EFFECTIVE DATE TO	REMARKS	P/CODE
[01]		(E)SHORT GEAR A (D)KURZ GETRIEBE									(F)ENGRENAGE COURT (S)ENGRANAJE CORTO					
	520558	.	.	B	B	B	S	S	.	&N51		1				
[03]		(E)COUPLING A-FLANGE&STRG (D)KUPPLUNG,FLANSCH&LENKUNG									(F)ACCOUPLEMENT (S)ACOPLAMIENTO					
	520689	.	.	B	B	B	S	S	.	&N51		1				
[04]		(E)BOLT (D)SCHRAUBE									(F)BOULON (S)PERNO					
	09117-08003	.	.	B	B	B	S	S	.	&N51		1				
[05]		(E)SEAL-DASH RUBBER (D)DICHTUNG									(F)JOINT (S)SELLO-GOMA SALPICADERO					
	07848183	.	.	B	B	B	S	S	.	&N51		1				
[06]		(E)SEAL-PINION (D)DICHTUNG,RITZEL									(F)JOINT-PIGNON (S)SELLO-PIÑON					
	07819410	.	.	B	B	B	S	S	.	&N51		1				
[07]		(E)RING-RETAINING (D)RING,HALTER									(F)ANNEAU-DE RETENTION (S)ANILLO-RETENEDOR					
	05684948	.	.	B	B	B	S	S	.	&N51		1				
[08]		(E)PINION-BEARING (D)RITZEL,LAGER									(F)PIGNON-ROULEMENT (S)PIÑON-COJINETE					
	520758	.	.	B	B	B	S	S	.	&N51		1				
[09]		(E)BEARING-ROLLER (D)ROLLENLAGER									(F)ROULEMENT-ROULEAU (S)COJINETE-RUEDECILLA					
	07819358	.	.	B	B	B	S	S	.	&N51		1				
[11]		(E)HOUSING-RACK&PINION (D)GEHÄUSE									(F)LOGEMENT (S)CARCASA					
	26026617	.	.	B	B	B	S	S	.	&N51		1				
[12]		(E)COVER-HOUSING END (D)DECKEL,GEHÄUSE-ENDE									(F)COUVERCLE (S)CUBIERTA					

ENG(ENGINE)	T/A(TRANSAXLE)	BODY TYPE
Y = 1.5SOHC 6 = 1.6DOHC . = COMMON	M = MANUAL T/A A = AUTOMATIC T/A . = COMMON	4 N = 4 DOOR NOTCHBACK 3 H = 3 DOOR HATCHBACK 5 H = 5 DOOR HATCHBACK

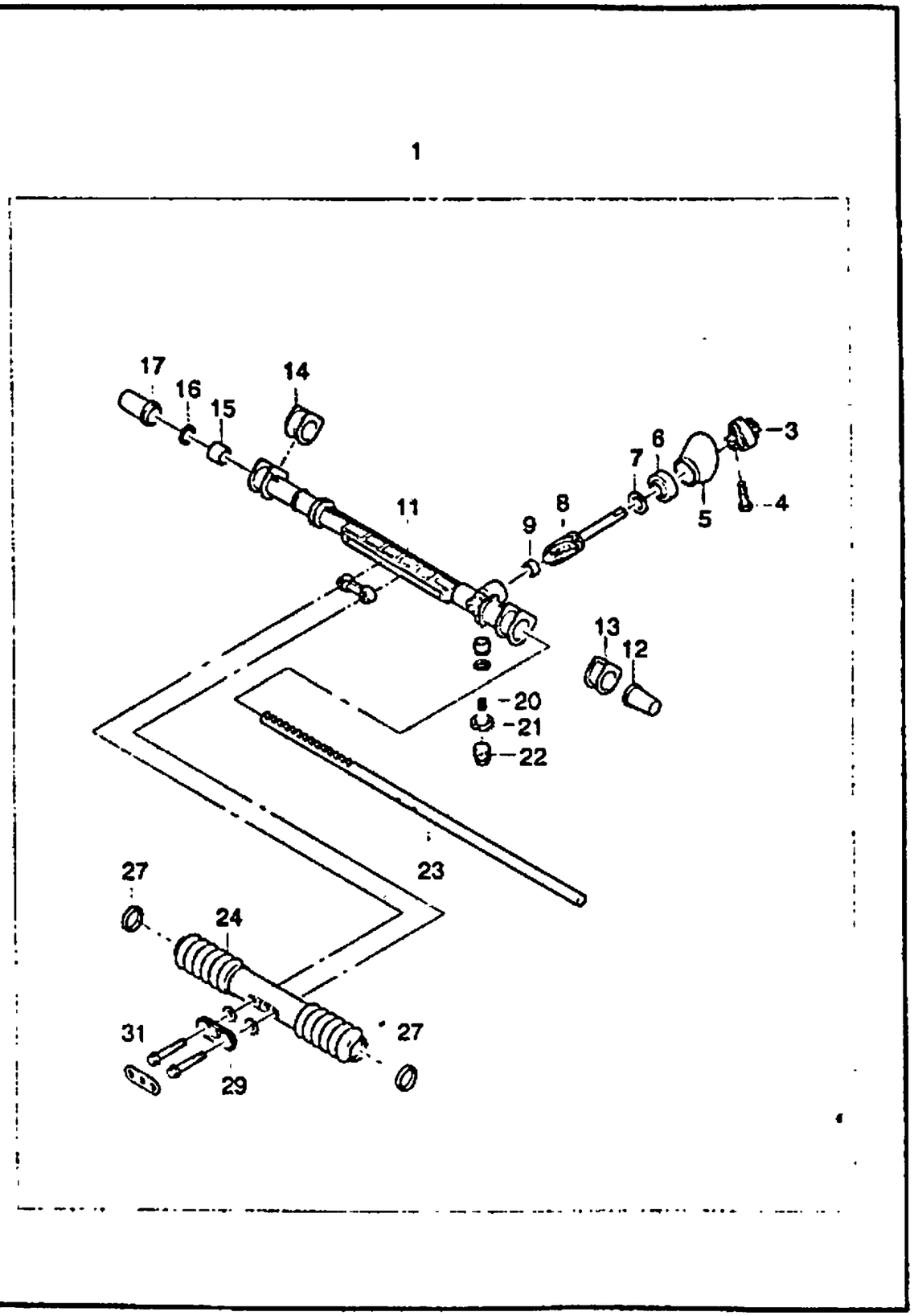

KEY NO. ITC	PART NO	MODEL ENG	MODEL T/A	MODEL BODY 4N	MODEL BODY 3H	MODEL BODY 5H	MODEL LEVEL S	MODEL LEVEL SE	MODEL LEVEL SX	OPTION	L/R	QTY	EFFECTIVE DATE FROM	EFFECTIVE DATE TO	REMARKS	P/CODE
[13]	07849949	.	.	B	B	B	S	S	.	&N51		1			(E)GROMMET-MOUNTING (D)ÖSE,MONTAGE (F)VIROLE-MONTAGE (S)AISLANTE-MONTAJE	
[14]	26000626	.	.	B	B	B	S	S	.	&N51		1			(E)GROMMET-MOUNTING (D)ÖSE,MONTAGE (F)VIROLE-MONTAGE (S)AISLANTE-MONTAJE	
[15]	07848188	.	.	B	B	B	S	S	.	&N51		1			(E)BUSHING-RACK (D)LAGERFUTTER,ZAHNSTANGE (F)MANCHON-CREMAILLERE (S)BUJE	
[16]	07834425	.	.	B	B	B	S	S	.	&N51		1			(E)RING-RETAINING (D)RING,HALTER (F)ANNEAU-DE RETENTION (S)ANILLO-RETENEDOR	
[17]	07834429	.	.	B	B	B	S	S	.	&N51		1			(E)COVER-HOUSING END (D)DECKEL,GEHÄUSE-ENDE (F)COUVERCLE (S)CUBIERTA	
[20]	07849987	.	.	B	B	B	S	S	.	&N51		1			(E)SPRING-ADJUSTER (D)FEDERUNG,RICHTER (F)RESSORT-AJUSTEUR (S)RESORTE-AJUSTADOR	
[21]	07819378	.	.	B	B	B	S	S	.	&N51		1			(E)NUT-ADJUSTER PLUG LOCK (D)MUTTER (F)ECROU (S)TUERCA	
[22]	07834434	.	.	B	B	B	S	S	.	&N51		1			(E)PLUG-ADJUSTER (D)STÖPSEL (F)BOUCHON (S)TAPON	
[23]	07834435	.	.	B	B	B	S	S	.	&N51		1			(E)RACK-STEERING (D)GESTELL,LENKUNG (F)CREMAILLERE-DIRECTION (S)ENGRANAJE DE CREMALLERA	
	07849959	.	.	B	B	B	S	S	.	&N51		1				

ENG(ENGINE)	T/A(TRANSAXLE)	BODY TYPE
Y = 1.5SOHC 6 = 1.6DOHC . = COMMON	M = MANUAL T/A A = AUTOMATIC T/A . = COMMON	4 N = 4 DOOR NOTCHBACK 3 H = 3 DOOR HATCHBACK 5 H = 5 DOOR HATCHBACK

4920 MANUAL STEERING GEAR PARTS(LHD)

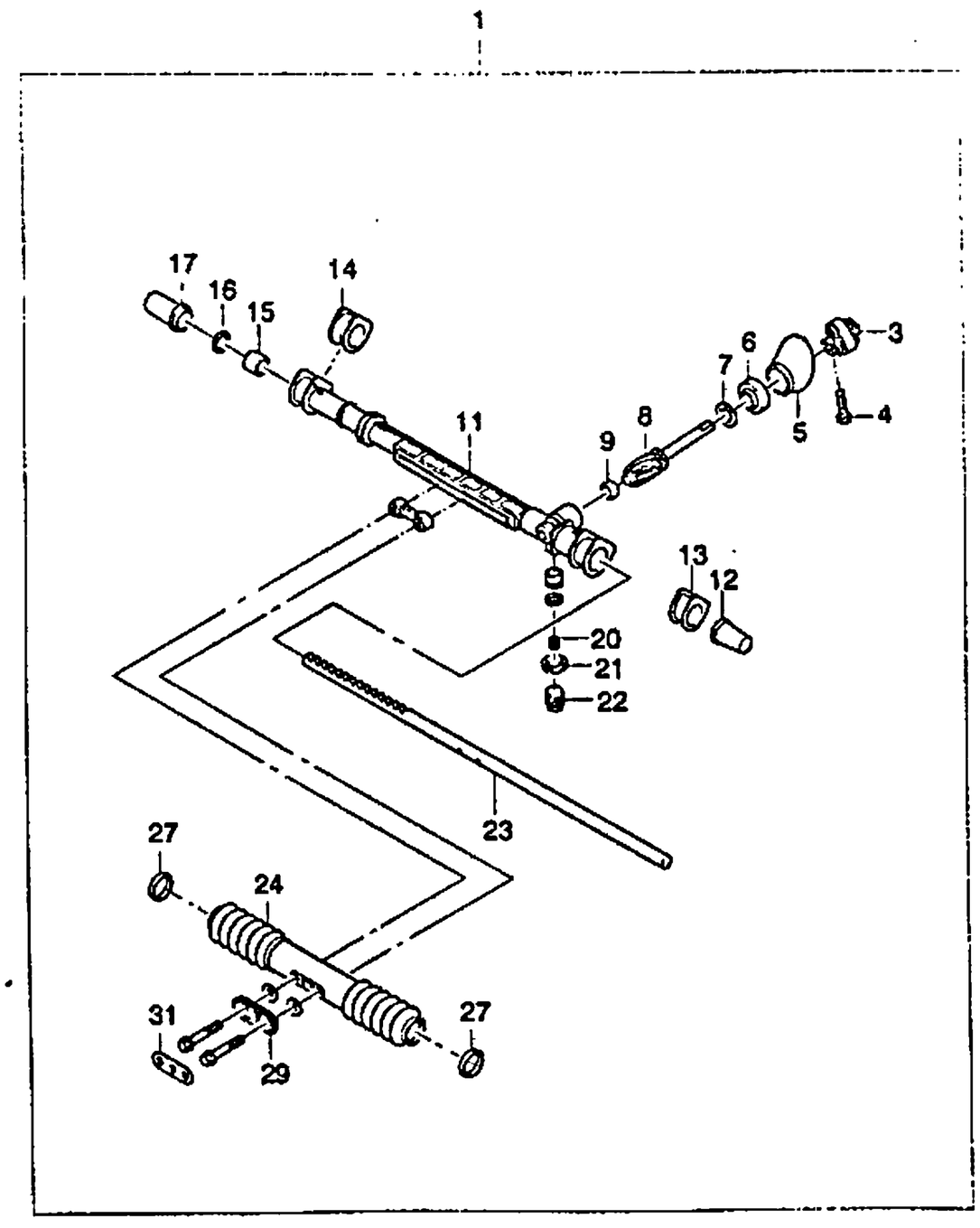

KEY NO. ITC	PART NO	MODEL ENG	T/A	BODY 4N	3H	5H	LEVEL S	SE	SX	OPTION	L/R	QTY	EFFECTIVE DATE FROM	TO	REMARKS	PICODE
		PART NAME														
[24]	26021070	(E)BOOT-RACK&PINION (D)KOFFERRAUM	.	.	B	B	B	S	S	. &N51	(F)GAINE (S)CAPUCHON	1				
[27]	26021589	(E)CLAMP-SEAL RETAINING (D)KLAMMER	.	.	B	B	B	S	S	. &N51	(F)PINCE (S)ABRAZADERA	2				
[29]	26001550	(E)PLATE-DISTANCE (D)PLATTE,ABSTAND	.	.	B	B	B	S	S	. &N51	(F)PLAQUE-DISTANCE (S)PLACA-DISTANCIA	1				
[31]	26001761	(E)PLATE-LOCKING (D)PLATTE,VERRIEGELUNG	.	.	B	B	B	S	S	. &N51	(F)PLAQUE-VERROUILLAGE (S)PLACA-CIERRE	1				

ENG(ENGINE)	T/A(TRANSAXLE)	BODY TYPE
Y = 1.5SOHC 6 = 1.6DOHC . = COMMON	M = MANUAL T/A A = AUTOMATIC T/A . = COMMON	4 N = 4 DOOR NOTCHBACK 3 H = 3 DOOR HATCHBACK 5 H = 5 DOOR HATCHBACK

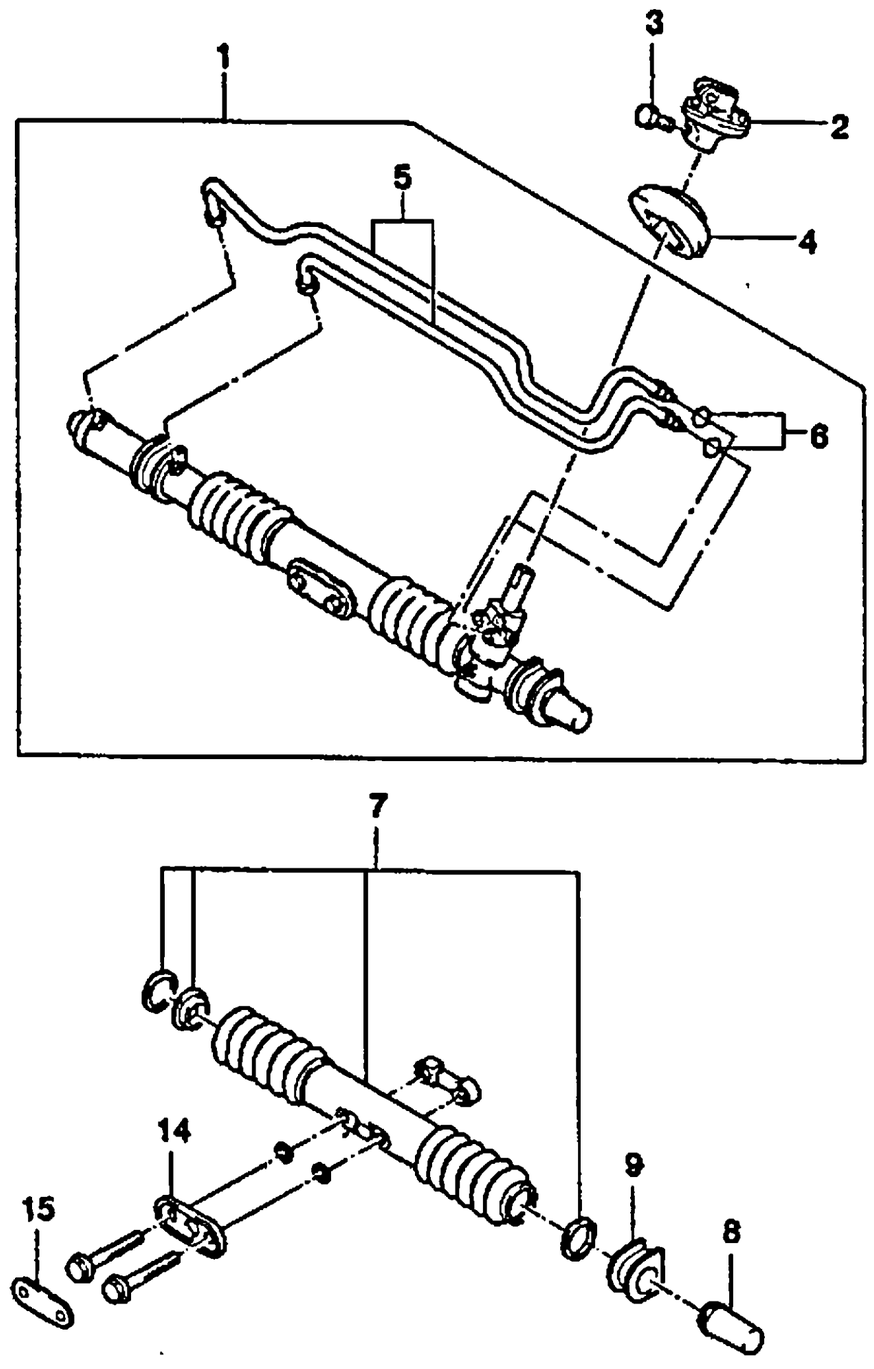

KEY NO. ITC	PART NO	MODEL ENG	MODEL T/A	MODEL BODY 4N	MODEL BODY 3H	MODEL BODY 5H	MODEL LEVEL S	MODEL LEVEL SE	MODEL LEVEL SX	OPTION	L/R	QTY	EFFECTIVE DATE FROM	EFFECTIVE DATE TO	REMARKS	P/CODE
[01]		(E)SHORT GEAR A (D)KURZ GETRIEBE									(F)ENGRENAGE COURT (S)ENGRANAJE CORTO					
	520533	.	.	B	B	B	O	O	S	&N40		1				
[02]		(E)COUPLING-FLANGE&STEERING (D)KUPPLUNG,FLANSCH&LENKUNG									(F)ACCOUPLEMENT (S)ACOPLAMIENTO					
	520689	.	.	B	B	B	O	O	S	&N40		1				
[03]		(E)BOLT (D)SCHRAUBE									(F)BOULON (S)PERNO					
	09117-08003	.	.	B	B	B	O	O	S	&N40		1				
[04]		(E)SEAL-DASH RUBBER (D)DICHTUNG									(F)JOINT (S)SELLO-GOMA SALPICADERO					
	26013593	.	.	B	B	B	O	O	S	&N40		1				
[05]		(E)LINE KIT-CYLINDER (D)AUSKLEIDUNGS,ZYLINDER									(F)TROUSSE DE LIGNE-CYLINDRE (S)JUEGO DE LINEA-CILINDRO					
	26020486	.	.	B	B	B	O	O	S	&N40		1				
[06]		(E)O RING (D)O RING									(F)JOINT TORIQUE (S)ANILLO EN O					
	26005047	.	.	B	B	B	O	O	S	&N40		2				
[07]		(E)BOOT KIT (D)KOFFERRAUM-SATZ								-	(F)TROUSSE DE GAINE (S)JUEGO DE BOTA					
	26024585	.	.	B	B	B	O	O	S	&N40		1				
[08]		(E)COVER-HOUSING END (D)DECKEL,GEHÄUSE-ENDE									(F)COUVERCLE (S)CUBIERTA					
	07849949	.	.	B	B	B	O	O	S	&N40		1				
[09]		(E)GROMMET-MOUNTING (D)ÖSE,MONTAGE									(F)VIROLE-MONTAGE (S)AISLANTE-MONTAJE					
	26000626	.	.	B	B	B	O	O	S	&N40		LH	1			
	07848187	.	.	B	B	B	O	O	S	&N40		RH	1			

ENG(ENGINE)	T/A(TRANSAXLE)	BODY TYPE
Y = 1.5SOHC 6 = 1.6DOHC . = COMMON	M = MANUAL T/A A = AUTOMATIC T/A . = COMMON	4 N = 4 DOOR NOTCHBACK 3 H = 3 DOOR HATCHBACK 5 H = 5 DOOR HATCHBACK

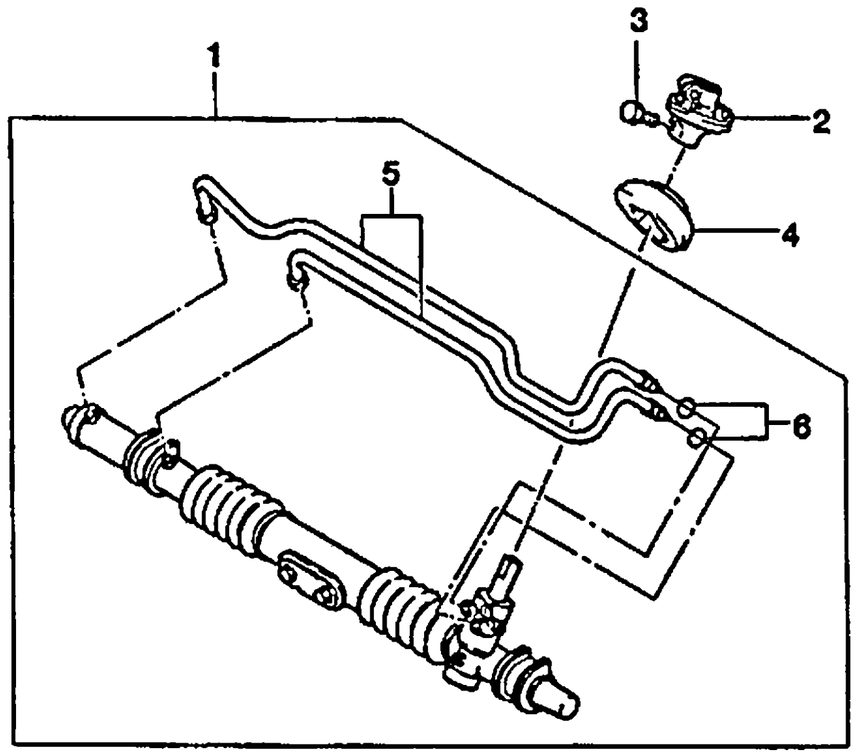

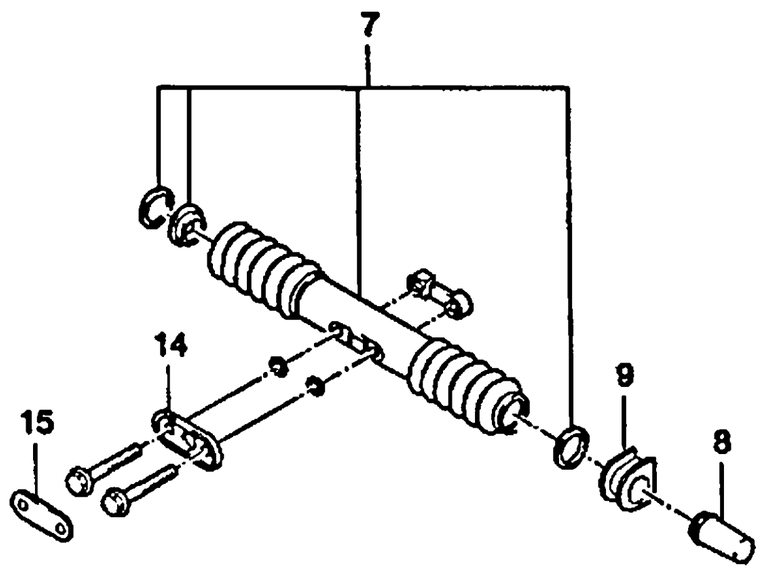

KEY NO. ITC	PART NO	MODEL ENG	T/A	BODY 4N	3H	5H	LEVEL S	SE	SX	OPTION	L/R	QTY	EFFECTIVE DATE FROM	TO	REMARKS	P/CODE
[14]	26001550	.	.	B	B	B	O	O	S	&N40		1			(E)PLATE-DISTANCE (D)PLATTE,ABSTAND (F)PLAQUE-DISTANCE (S)PLACA-DISTANCIA	
[15]	26001761	.	.	B	B	B	O	O	S	&N40		1			(E)PLATE-LOCKING (D)PLATTE,VERRIEGELUNG (F)PLAQUE-VERROUILLAGE (S)PLACA-CIERRE	

ENG(ENGINE)	T/A(TRANSAXLE)	BODY TYPE
Y = 1.5SOHC 6 = 1.6DOHC . = COMMON	M = MANUAL T/A A = AUTOMATIC T/A . = COMMON	4 N = 4 DOOR NOTCHBACK 3 H = 3 DOOR HATCHBACK 5 H = 5 DOOR HATCHBACK

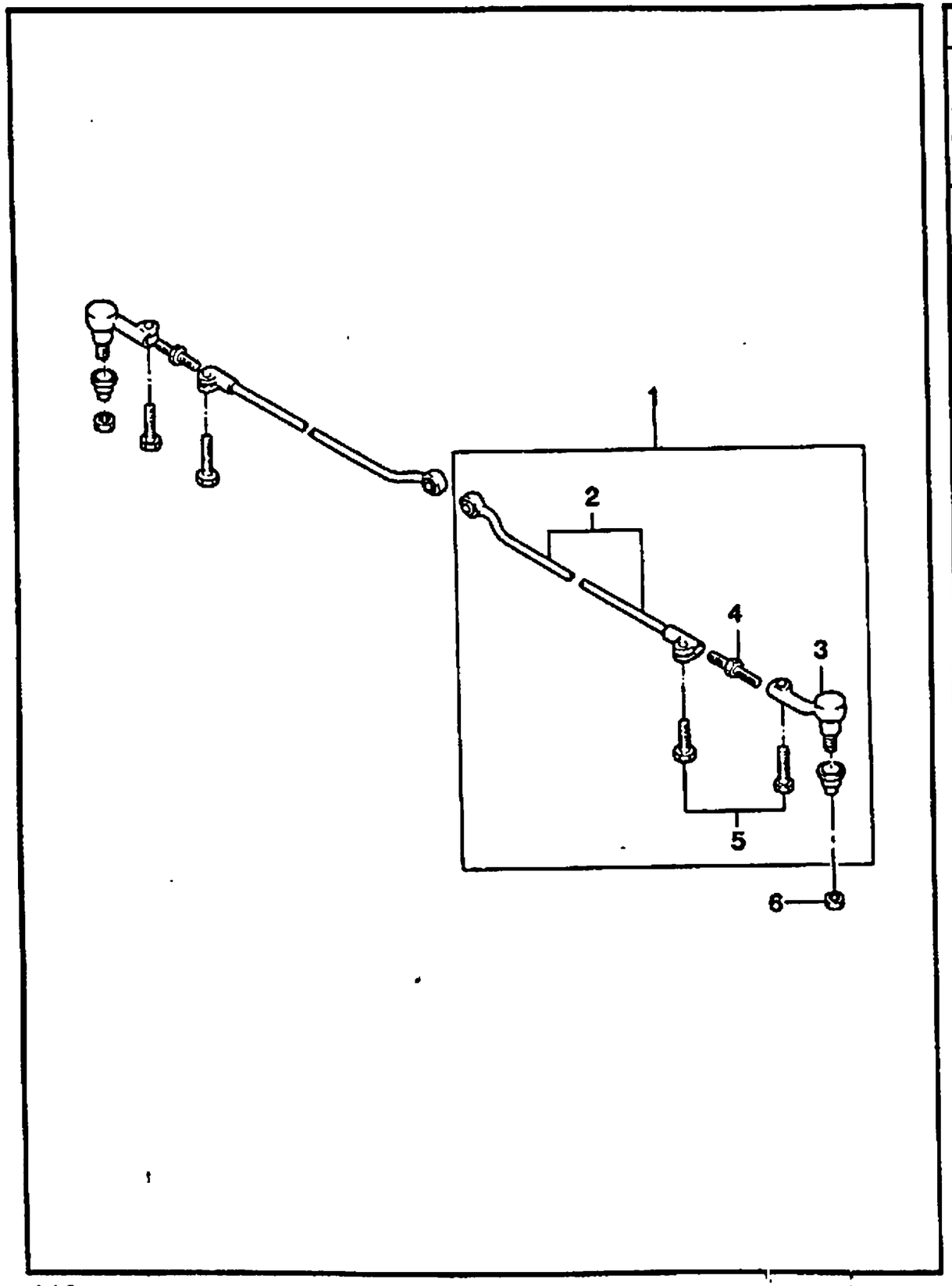

KEY NO. ITC	PART NO	MODEL ENG	MODEL T/A	MODEL BODY 4N	MODEL BODY 3H	MODEL BODY 5H	MODEL LEVEL S	MODEL LEVEL SE	MODEL LEVEL SX	OPTION	L/R	QTY	EFFECTIVE DATE FROM	EFFECTIVE DATE TO	REMARKS	P/CODE
[01]		(E)ROD A-TIE (D)VERBINDUNGSSTANGE									(F)TRINGLE-BARRE (S)VARILLA-AMARRE					
	07846481	.	.	B	B	B	S	S	.	&N51	LH	1		970716		
	07846481	.	.	B	B	B	S	S	.	&N51-F40	LH	1	970716			
	96255510	.	.	B	B	B	A	A	.	&N51&F40	LH	1	970716			
	07846480	.	.	B	B	B	S	S	.	&N51	RH	1		970716		
	07846480	.	.	B	B	B	S	S	.	&N51-F40	RH	1	970716			
	96255511	.	.	B	B	B	A	A	.	&N51&F40	RH	1	970716			
	96216616	.	.	B	B	B	O	O	S	&N40	LH	1		970716		
	96216616	.	.	B	B	B	O	O	S	&N40-F40	LH	1	970716			
	96255508	.	.	B	B	B	A	A	A	&N40&F40	LH	1	970716			
	96216620	.	.	B	B	B	O	O	S	&N40	RH	1		970716		
	96216620	.	.	B	B	B	O	O	S	&N40-F40	RH	1	970716			
	96255509	.	.	B	B	B	A	A	A	&N40&F40	RH	1	970716			
[02]		(E)ROD-TIE (D)VERBINDUNGSSTANGE									(F)TRINGLE-BARRE (S)VARILLA-AMARRE					
	07848281	.	.	B	B	B	S	S	.	&N51	LH	1				
	07848282	.	.	B	B	B	S	S	.	&N51	RH	1				
	96216618	.	.	B	B	B	O	O	S	&N40	LH	1				
	96216622	.	.	B	B	B	O	O	S	&N40	RH	1				
[03]		(E)HEAD END A-TIE ROD (D)SPURSTANGENKOPF									(F)BIELLETTE DE DIRECTION (S)CABEZA DE RÓTULA					
	07846495	.	.	B	B	B	S	S	S		LH	1		970716		
	07846495	.	.	B	B	B	S	S	S	-F40	LH	1	970716			
	96255512	.	.	B	B	B	A	A	A	&F40	LH	1	970716			

ENG(ENGINE)	T/A(TRANSAXLE)	BODY TYPE
Y = 1.5SOHC 6 = 1.6DOHC . = COMMON	M = MANUAL T/A A = AUTOMATIC T/A . = COMMON	4 N = 4 DOOR NOTCHBACK 3 H = 3 DOOR HATCHBACK 5 H = 5 DOOR HATCHBACK

4940 TIE ROD

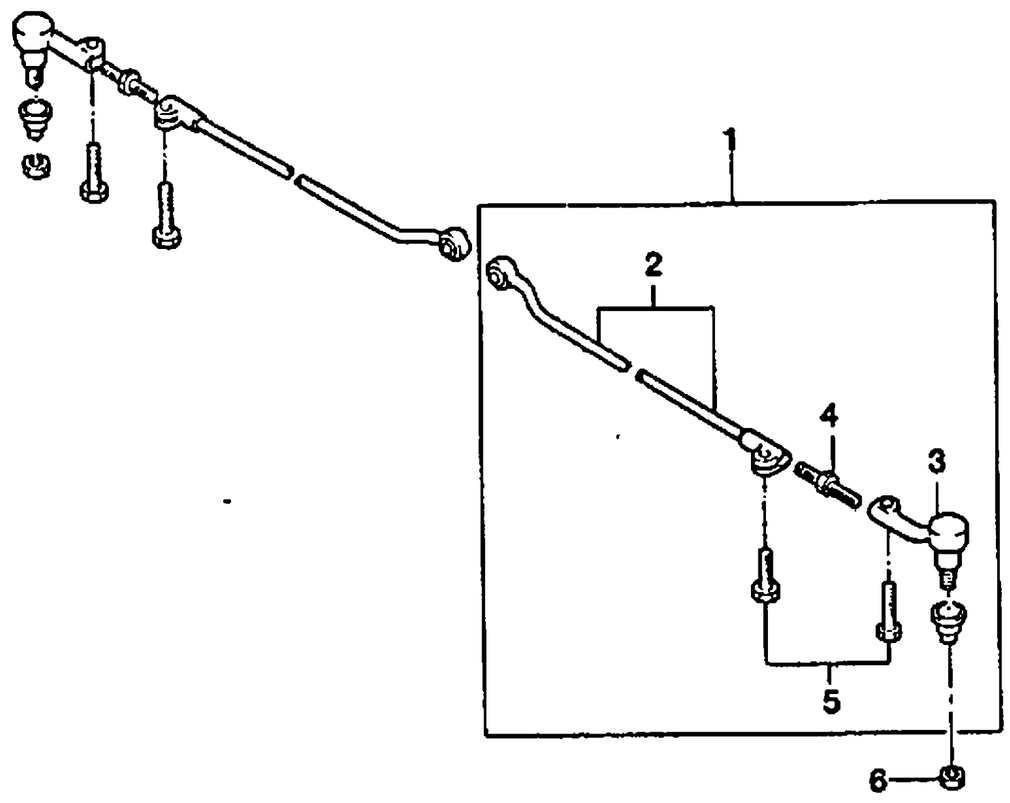

KEY NO. ITC	PART NO	MODEL ENG	T/A	BODY 4N	3H	5H	LEVEL S	SE	SX	OPTION	L/R	QTY	EFFECTIVE DATE FROM	TO	REMARKS	P/CODE
	07846485	.	.	B	B	B	S	S	S		RH	1		970716		
	07846485	.	.	B	B	B	S	S	S	-F40	RH	1	970716			
	96255513	.	.	B	B	B	S	S	S	&F40	RH	1	970716			
[04]	(E)BOLT-ADJUSTER (D)SCHRAUBE										(F)BOULON (S)PERNO					
	07846696	.	.	B	B	B	S	S	S			1				
[05]	(E)BOLT-HEXAGON (D)SCHRAUBE										(F)BOULON (S)PERNO					
	09100-08002	.	.	B	B	B	S	S	S			4				
[06]	(E)NUT (D)MUTTER										(F)ECROU (S)TUERCA					
	09159-12010	.	.	B	B	B	S	S	S			2				

ENG(ENGINE)	T/A(TRANSAXLE)	BODY TYPE
Y = 1.5SOHC	M = MANUAL T/A	4 N = 4 DOOR NOTCHBACK
6 = 1.6DOHC	A = AUTOMATIC T/A	3 H = 3 DOOR HATCHBACK
. = COMMON	. = COMMON	5 H = 5 DOOR HATCHBACK

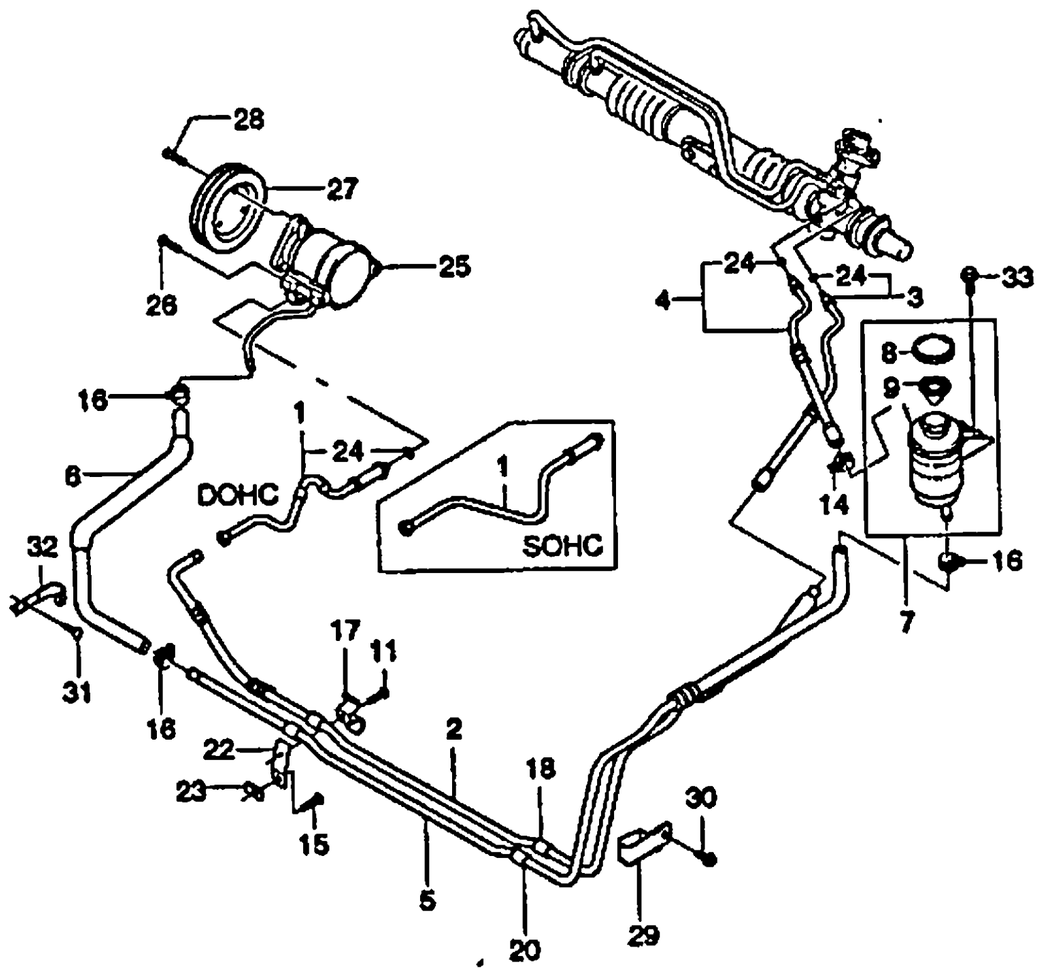

KEY NO. ITC	PART NO	MODEL ENG	T/A	BODY 4N	3H	5H	LEVEL S	SE	SX	OPTION	L/R	QTY	EFFECTIVE DATE FROM	TO	REMARKS	P/CODE
[01]		(E)PIPE A-HIGH PRESSURE,PUMP (D)ROHR									(F)TUYAU (S)TUBERIA					
	96304375	Y	.	B	B	B	O	O	S	&N40		1		970616		
O	96246614	Y	.	B	B	B	O	O	S	&N40		1	970616			
	96228670	6	.	B	B	B	.	.	O	&N40		1		970616		
O	96246615	6	.	B	B	B	.	.	O	&N40		1	970616			
[02]		(E)HOSE A-ELASTIC,GEAR (D)SCHLAUCH,GUMMI,GETRIEBE									(F)TUYAU-ELASTIQUE,ENGRENAGE (S)MANGUERA-ELASTICA					
	96304383	.	.	B	B	B	O	O	S	&N40		1				
[03]		(E)PIPE A-HIGH PRESSURE,GEAR (D)ROHR									(F)TUYAU (S)TUBERIA					
	96304381	.	.	B	B	B	O	O	S	&N40		1				
[04]		(E)HOSE A-RETURN FLOW (D)SCHLAUCH,RÜCK-FLUß									(F)TUYAU-RETOUR ECOULEMENT (S)MANGUERA-FLUJO DE RETORNO					
	96304380	.	.	B	B	B	O	O	S	&N40		1				
[05]		(E)HOSE A-SUCTION,RESERVOIR (D)SCHLAUCH,ANSAUGUNG									(F)TUYAU-ASPIRATION (S)MANGUERA-SUCCION					
	96232170	.	.	B	B	B	O	O	S	&N40		1		970901		
O	96254886	.	.	B	B	B	O	O	S	&N40		1	970901			
[06]		(E)HOSE A-SUCTION LINE,PUMP (D)SCHLAUCH,SAUGLEITUNG									(F)TUYAU (S)MANGUERA-LINEA DE SUCCION					
	96304372	.	.	B	B	B	O	O	S	&N40		1				
[07]		(E)RESERVOIR-POWER STRG OIL (D)BEHÄLTER,ÖL									(F)RESERVOIR-HUILE (S)RESERVA-ACEITE					
	96304394	.	.	B	B	B	O	O	S	&N40		1				
[08]		(E)CAP-OIL RESERVOIR (D)DECKEL,ÖL-BEHÄLTER									(F)CHAPEAU-RESERVOIR D'HUILE (S)TAPA-RESERVA DE ACEITE					
	96304395	.	.	B	B	B	O	O	S	&N40		1				

ENG(ENGINE)	T/A(TRANSAXLE)	BODY TYPE
Y = 1.5SOHC 6 = 1.6DOHC . = COMMON	M = MANUAL T/A A = AUTOMATIC T/A . = COMMON	4 N = 4 DOOR NOTCHBACK 3 H = 3 DOOR HATCHBACK 5 H = 5 DOOR HATCHBACK

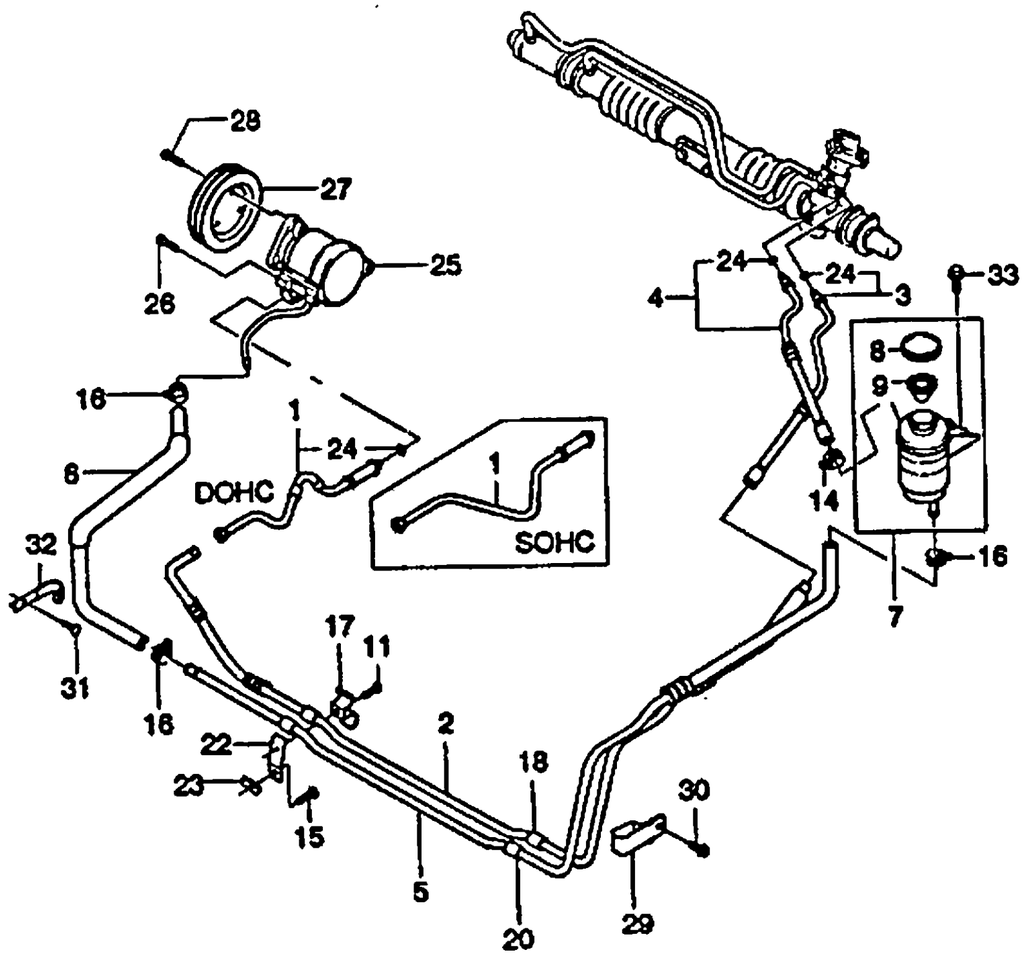

KEY NO. ITC	PART NO	MODEL ENG	T/A	BODY 4N	3H	5H	LEVEL S	SE	SX	OPTION	L/R	QTY	EFFECTIVE DATE FROM	TO	REMARKS	P/CODE
[09]		(E)SHIELD-OIL RESERVOIR (D)SCHILD									(F)BOUCLIER (S)ESCUDO					
	96226875	.	.	B	B	B	O	O	S	&N40		1				
[11]		(E)SCREW-TAPPING (D)SCHRAUBE									(F)VIS (S)TORNILLO					
	03110-48133	.	.	B	B	B	O	O	S	&N40		2				
[14]		(E)CLIP (D)KLEMME									(F)ATTACHE (S)GRAPA					
	09401-17401	.	.	B	B	B	O	O	S	&N40		1				
[15]		(E)SCREW (D)SCHRAUBE									(F)VIS (S)TORNILLO					
	09139-06005	.	.	B	B	B	O	O	S	&N40		2				
[16]		(E)CLIP (D)KLEMME									(F)ATTACHE (S)GRAPA					
	09401-21401	.	.	B	B	B	O	O	S	&N40		3				
[17]		(E)CLAMP (D)KLAMMER									(F)PINCE (S)ABRAZADERA					
	90217449	.	.	B	B	B	O	O	S	&N40		2	970901			
O	96254889	.	.	B	B	B	O	O	S	&N40		2	970901			
[18]		(E)GROMMET (D)ÖSE									(F)VIROLE (S)AISLANTE					
	09308-10006	.	.	B	B	B	O	O	S	&N40		3				
[20]		(E)GROMMET (D)ÖSE									(F)VIROLE (S)AISLANTE					
	09308-16001	.	.	B	B	B	O	O	S	&N40		3				
[22]		(E)BRACKET (D)TRÄGER									(F)SUPPORT (S)SOPORTE					
	96228671	.	.	B	B	B	O	O	S	&N40		2	970901			

ENG(ENGINE)	T/A(TRANSAXLE)	BODY TYPE
Y = 1.5SOHC 6 = 1.6DOHC . = COMMON	M = MANUAL T/A A = AUTOMATIC T/A . = COMMON	4 N = 4 DOOR NOTCHBACK 3 H = 3 DOOR HATCHBACK 5 H = 5 DOOR HATCHBACK

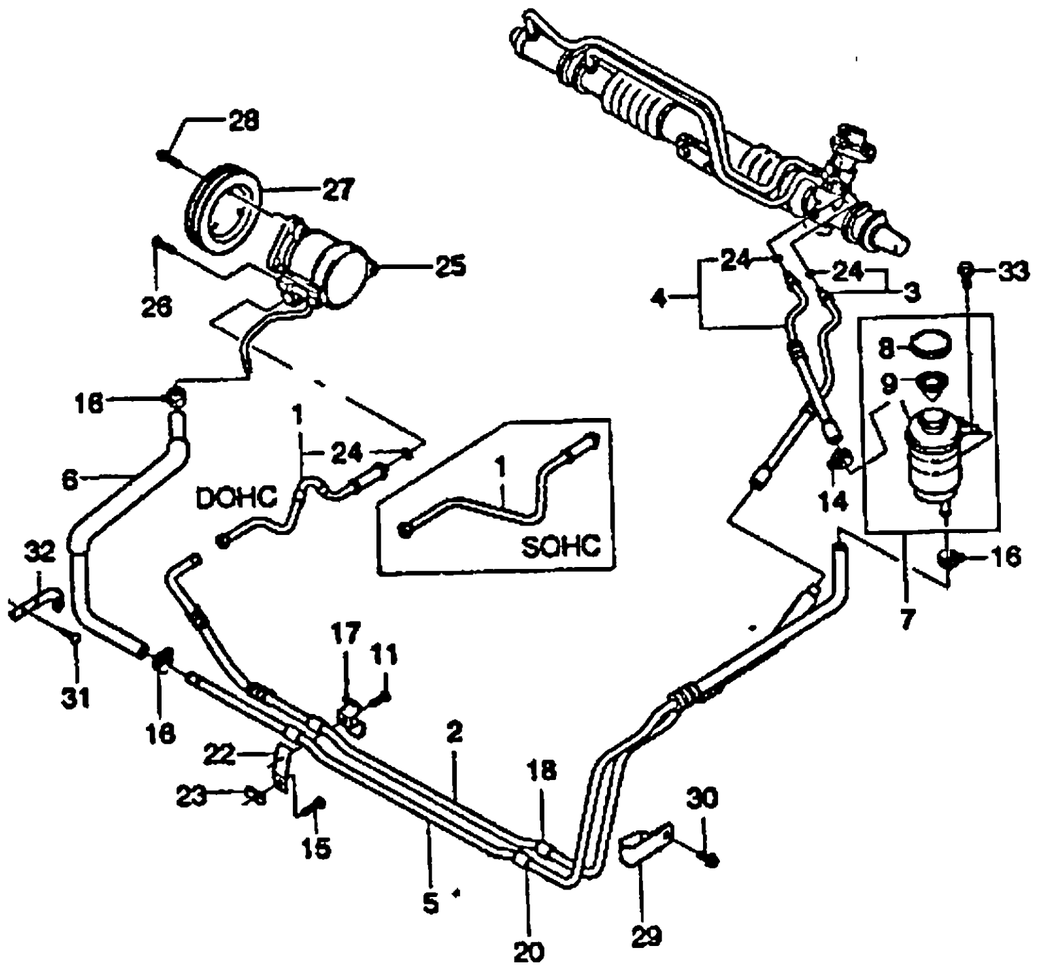

KEY NO. ITC	PART NO	MODEL ENG	T/A	BODY 4N	3H	5H	LEVEL S	SE	SX	OPTION	L/R	QTY	EFFECTIVE DATE FROM	TO	REMARKS	P/CODE
O	96254887	.	.	B	B	B	O	O	S	&N40		2	970901			
[23]	(E)NUT-SPEED (D)MUTTER										(F)ECROU (S)TUERCA					
	09148-06012	.	.	B	B	B	O	O	S	&N40		2				
[24]	(E)O RING (D)O RING										(F)JOINT TORIQUE (S)ANILLO EN O					
	09280-07001	.	.	B	B	B	O	O	S	&N40		3				
[25]	(E)PUMP A-POWER STEERING (D)PUMPE,HYDRAULIK EINHEIT										(F)POMPE-UNITE HYDRAULIQUE (S)BOMBA-UNIDAD HIDRAULICA					
	96230842	.	.	B	B	B	O	O	S	&N40		1				TR
[26]	(E)BOLT-HEXAGON (D)SCHRAUBE										(F)BOULON (S)PERNO					
	01103-08703	.	.	B	B	B	O	O	S	&N40		2				
[27]	(E)PULLEY-HYDRAULIC PUMP (D)ROLLE,HYDRAULIK PUMPE										(F)POULIE-POMPE HYDRAULIQUE (S)POLEA-BOMBA HIDRAULICA					
	90299071	.	.	B	B	B	O	O	S	&N40		1				
[28]	(E)BOLT-HEXAGON (D)SCHRAUBE										(F)BOULON (S)PERNO					
	09100-08003	.	.	B	B	B	O	O	S	&N40		3				
[29]	(E)CLAMP (D)KLAMMER										(F)PINCE (S)ABRAZADERA					
	96248572	.	.	B	B	B	O	O	S	&N40		1				
[30]	(E)BOLT (D)SCHRAUBE										(F)BOULON (S)PERNO					
	09116-08008	.	.	B	B	B	O	O	S	&N40		1				
[31]	(E)SCREW-TAPPING (D)SCHRAUBE										(F)VIS (S)TORNILLO					
	03110-48133	.	.	B	B	B	O	O	S	&N40		1				

ENG(ENGINE)	T/A(TRANSAXLE)	BODY TYPE
Y = 1.5SOHC	M = MANUAL T/A	4 N = 4 DOOR NOTCHBACK
6 = 1.6DOHC	A = AUTOMATIC T/A	3 H = 3 DOOR HATCHBACK
. = COMMON	. = COMMON	5 H = 5 DOOR HATCHBACK

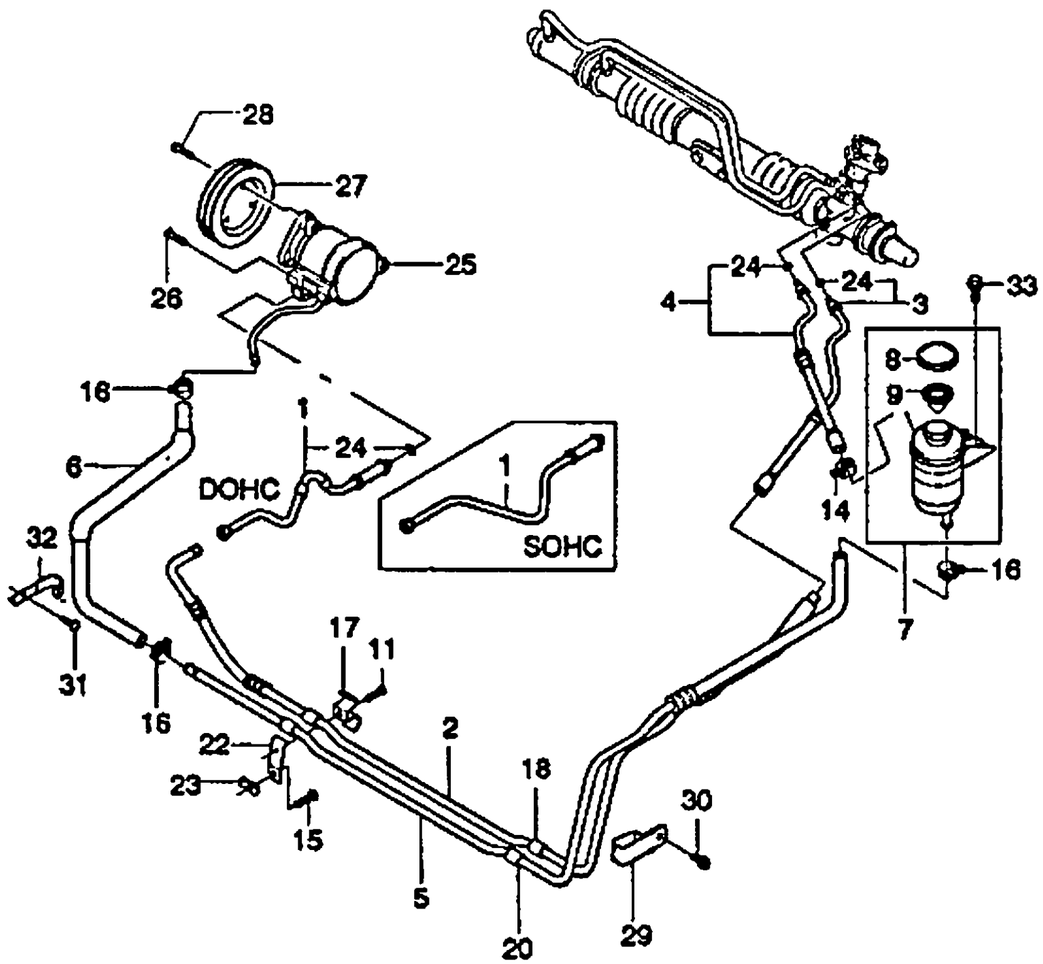

KEY NO. ITC	PART NO	MODEL ENG	MODEL T/A	BODY 4N	BODY 3H	BODY 5H	LEVEL S	LEVEL SE	LEVEL SX	OPTION	L/R	QTY	EFFECTIVE DATE FROM	EFFECTIVE DATE TO	REMARKS	P/CODE
	[32]	(E)CLAMP (D)KLAMMER									(F)PINCE (S)ABRAZADERA					
	09403-26301	.	.	B	B	B	O	O	S	&N40		1				
	[33]	(E)BOLT (D)SCHRAUBE									(F)BOULON (S)PERNO					
	09116-06011	.	.	B	B	B	O	O	S	&N40		2				

ENG(ENGINE)	T/A(TRANSAXLE)	BODY TYPE
Y = 1.5SOHC 6 = 1.6DOHC . = COMMON	M = MANUAL T/A A = AUTOMATIC T/A . = COMMON	4 N = 4 DOOR NOTCHBACK 3 H = 3 DOOR HATCHBACK 5 H = 5 DOOR HATCHBACK

5 ELECTRICAL EQUIPMENTS

5110 FRONT LAMP
5140 REAR LAMP(N/B)
5141 REAR LAMP(H/B)
5220 INSTRUMENT CLUSTER
5310 WINDSHIELD WIPER
5320 BACK WINDOW WIPER
5330 WINDSHIELD WASHER
5410 ELECTRICAL PARTS
5420 ANTENNA
5430 AUDIO SYSTEM
5510 AIR BAG SYSTEM
5610 BATTERY
5620 FUSE & RELAY
5710 WIRING HARNESS

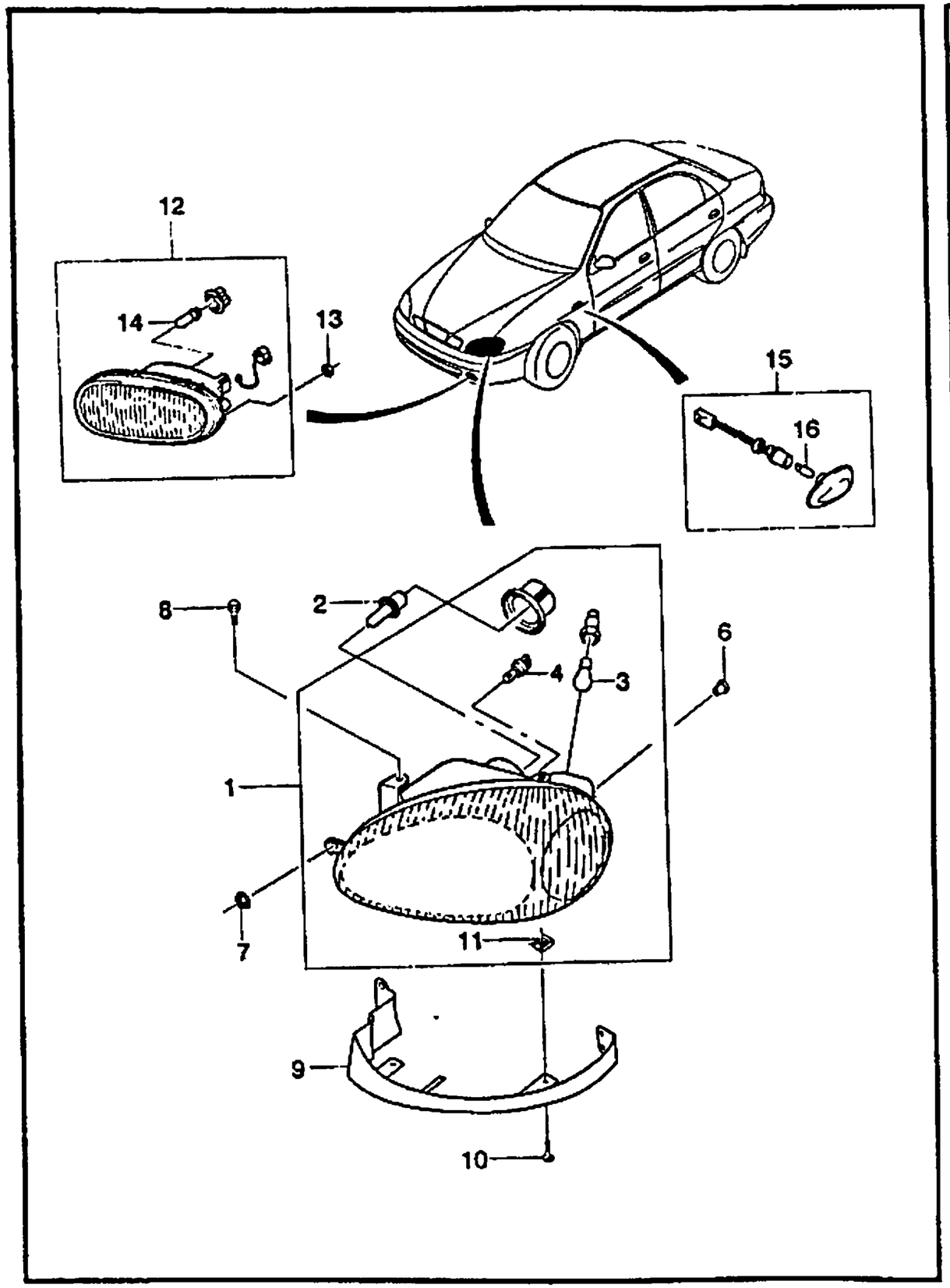

KEY NO. ITC	PART NO	MODEL ENG	T/A	BODY 4N	3H	5H	LEVEL S	SE	SX	OPTION	L/R	QTY	EFFECTIVE DATE FROM	TO	REMARKS	P/CODE
[01]		(E)LAMP A-HEAD (D)LAMPE,SCHEINWERFER									(F)LAMPE-PHARE (S)LAMPARA-CABECERA					
96304606		.	.	B	B	B	S	S	S	-HL4	LH	1				HL
96304607		.	.	B	B	B	S	S	S	-HL4	RH	1				HM
96304610		.	.	B	B	B	A	A	A	&HL4	LH	1				HP
96304611		.	.	B	B	B	A	A	A	&HL4	RH	1				HQ
[02]		(E)BULB-HEAD LAMP (D)BIRNE									(F)AMPOULE (S)BOMBILLA					
05104-60553		.	.	B	B	B	S	S	S			2			60/55W	
[03]		(E)BULB-TURN SIGNAL (D)BIRNE									(F)AMPOULE (S)BOMBILLA					
05201-21004		.	.	B	B	B	S	S	S			2			21W	
[04]		(E)BULB-POSITION (D)BIRNE									(F)AMPOULE (S)BOMBILLA					
05302-05003		.	.	B	B	B	S	S	S			2			5W	
[06]		(E)CLIP (D)KLEMME									(F)ATTACHE (S)GRAPA					
09409-10305		.	.	B	B	B	S	S	S			2				
[07]		(E)NUT (D)MUTTER									(F)ECROU (S)TUERCA					
09159-06011		.	.	B	B	B	S	S	S			2				
[08]		(E)BOLT (D)SCHRAUBE									(F)BOULON (S)PERNO					
09116-06026		.	.	B	B	B	S	S	S			4			W/WASHER	
[09]		(E)SPACER-HEAD LAMP (D)DISTANZSTÜCK									(F)ENTRETOISE (S)ESPACIADOR					
96304656		.	.	B	B	B	S	S	S		LH	1				
96304657		.	.	B	B	B	S	S	S		RH	1				

ENG(ENGINE)	T/A(TRANSAXLE)	BODY TYPE
Y = 1.5SOHC 6 = 1.6DOHC . = COMMON	M = MANUAL T/A A = AUTOMATIC T/A . = COMMON	4 N = 4 DOOR NOTCHBACK 3 H = 3 DOOR HATCHBACK 5 H = 5 DOOR HATCHBACK

5110 FRONT LAMP

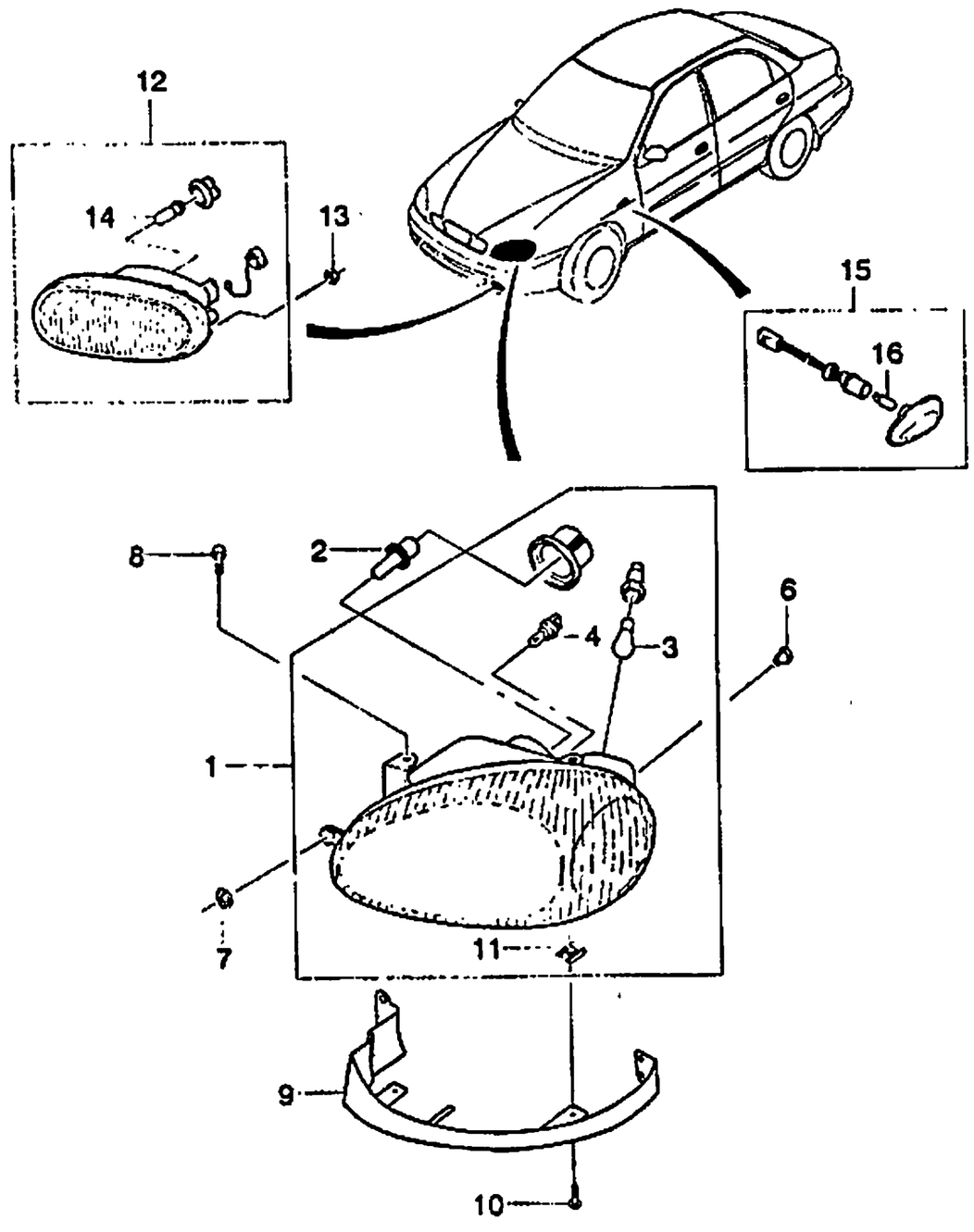

KEY NO. ITC	PART NO	MODEL ENG	MODEL T/A	MODEL BODY 4N	MODEL BODY 3H	MODEL BODY 5H	MODEL LEVEL S	MODEL LEVEL SE	MODEL LEVEL SX	OPTION	L/R	QTY	EFFECTIVE DATE FROM	EFFECTIVE DATE TO	REMARKS	P/CODE
[10]		(E)SCREW-TAPPING (D)SCHRAUBE									(F)VIS (S)TORNILLO					
	03170-42133	.	.	B	B	B	S	S	S			4				
[11]		(E)NUT-SPEED (D)MUTTER									(F)ECROU (S)TUERCA					
	09148-04004	.	.	B	B	B	S	S	S			4				
[12]		(E)LAMP A-FOG,FRONT (D)LAMPE,NEBEL									(F)LAMPE (S)LAMPARA-NEBLINA					
	96303261	.	.	B	B	B	.	.	O	&T97	LH	1				
	96303262	.	.	B	B	B	.	.	O	&T97	RH	1				
[13]		(E)NUT (D)MUTTER									(F)ECROU (S)TUERCA					
	09159-05005	.	.	B	B	B	.	.	O	&T97		4				
[14]		(E)BULB-FOG LAMP (D)BIRNE									(F)AMPOULE (S)BOMBILLA					
	05103-55003	.	.	B	B	B	.	.	O	&T97		2			55W	
[15]		(E)LAMP A-TURN SIGNAL,SIDE (D)LAMPE									(F)LAMPE (S)LAMPARA .					
	96303241	.	.	B	B	B	A	A	A	&FL6		2				
[16]		(E)BULB- TURN SIGNAL SIDE (D)BIRNE									(F)AMPOULE (S)BOMBILLA					
	05302-05003	.	.	B	B	B	A	A	A	&FL6		2			5W	

ENG(ENGINE)	T/A(TRANSAXLE)	BODY TYPE
Y = 1.5SOHC	M = MANUAL T/A	4 N = 4 DOOR NOTCHBACK
6 = 1.6DOHC	A = AUTOMATIC T/A	3 H = 3 DOOR HATCHBACK
. = COMMON	. = COMMON	5 H = 5 DOOR HATCHBACK

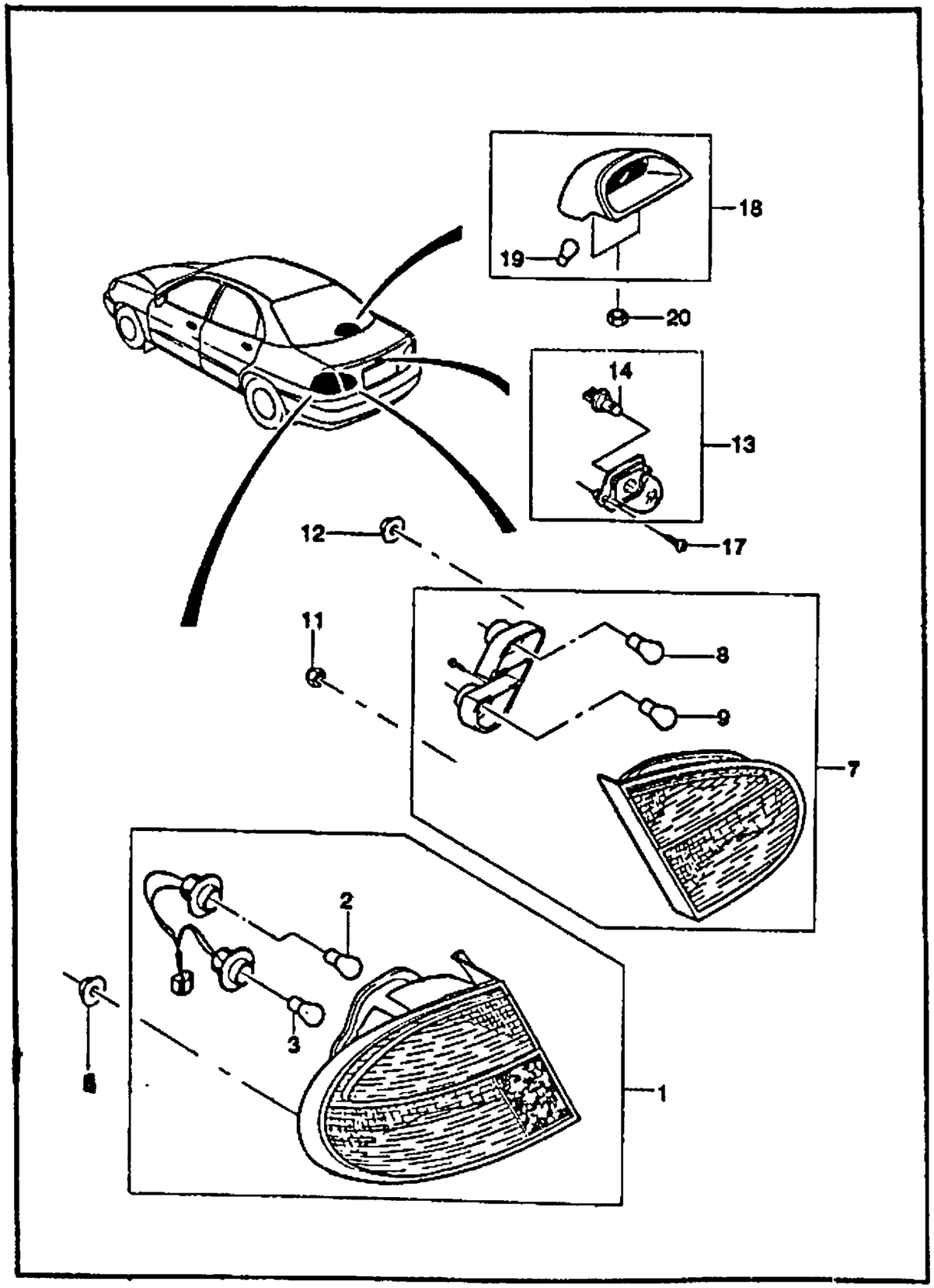

KEY NO. ITC	PART NO	MODEL ENG	T/A	BODY 4N	3H	5H	LEVEL S	SE	SX	OPTION	L/R	QTY	EFFECTIVE DATE FROM	TO	REMARKS	P/CODE
[01]		(E)LAMP A-TAIL (D)LAMPE,HINTERTEIL									(F)LAMPE-EXTREMITE ARRIERE (S)LAMPARA-COLA					
	96304620	.	.	B	.	.	S	S	S		LH	1				RJ
	96304621	.	.	B	.	.	S	S	S		RH	1				RK
[02]		(E)BULB-TURN SIGNAL (D)BIRNE									(F)AMPOULE (S)BOMBILLA					
	05201-21004	.	.	B	.	.	S	S	S			2			21W	
[03]		(E)BULB-TAIL STOP (D)BIRNE									(F)AMPOULE (S)BOMBILLA					
	05202-21053	.	.	B	.	.	S	S	S			2			21/5W	
[06]		(E)NUT-HEXAGON FLANGE (D)MUTTER									(F)ECROU (S)TUERCA					
	08316-25053	.	.	B	.	.	S	S	S			8				
[07]		(E)LAMP A-EXTENSION TAIL (D)LAMPE,VERLÄNGERUNG									(F)LAMPE-EXTENSION (S)LAMPARA-EXTENSION					
	96248143	.	.	B	.	.	S	S	S	-T98	LH	1		971001		EL
Y	96239383	.	.	B	.	.	S	S	S	-T98	LH	1	971001			EQ
	96248144	.	.	B	.	.	S	S	S	-T98	RH	1		971001		EM
Y	96239384	.	.	B	.	.	S	S	S	-T98	RH	1	971001			ER
	96304631	.	.	B	.	.	A	A	A	&T98	LH	1				EJ
	96304632	.	.	B	.	.	A	A	A	&T98	RH	1				EK
[08]		(E)BULB-BACK UP (D)BIRNE									(F)AMPOULE (S)BOMBILLA					
	05201-21003	.	.	B	.	.	S	S	S			2			21W	
[09]		(E)BULB-TAIL STOP (D)BIRNE									(F)AMPOULE (S)BOMBILLA					
	05202-21053	.	.	B	.	.	S	S	S	-T98		2		971001	21/5W	

ENG(ENGINE)	T/A(TRANSAXLE)	BODY TYPE
Y = 1.5SOHC 6 = 1.6DOHC . = COMMON	M = MANUAL T/A A = AUTOMATIC T/A . = COMMON	4 N = 4 DOOR NOTCHBACK 3 H = 3 DOOR HATCHBACK 5 H = 5 DOOR HATCHBACK

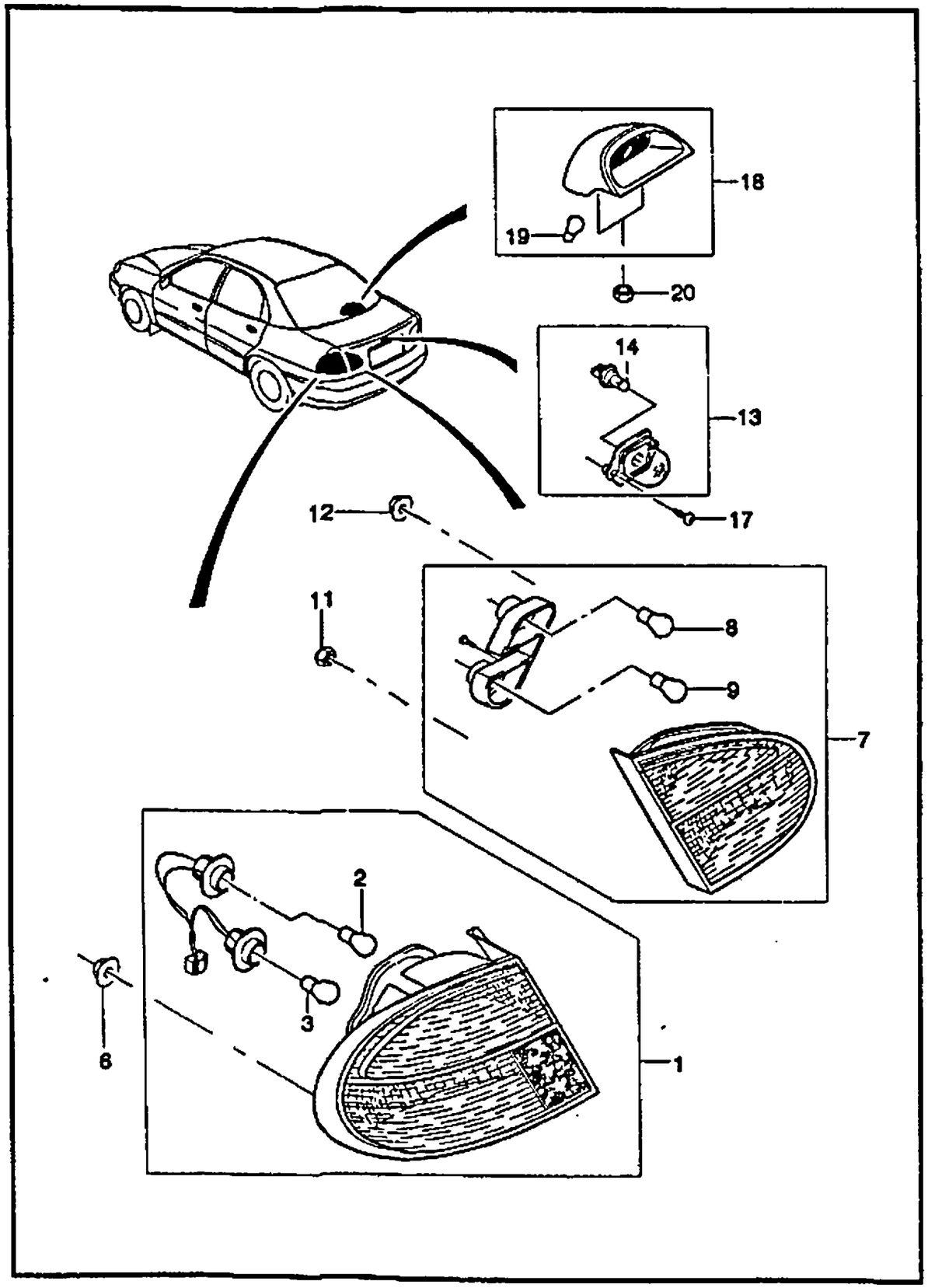

KEY NO. ITC	PART NO	MODEL ENG	T/A	BODY 4N	3H	5H	LEVEL S	SE	SX	OPTION	L/R	QTY	EFFECTIVE DATE FROM	TO	REMARKS	P/CODE
Y	05232-27081	.	.	B	.	.	S	S	S	-T98		2	971001		27/8W	
	05201-21003	.	.	B	.	.	A	A	A	&T98		2			21W	
[11]	(E)NUT-CAP (D)MUTTER											(F)ECROU (S)TUERCA				
	09145-05001	.	.	B	.	.	S	S	S			4				
[12]	(E)NUT-HEXAGON FLANGE (D)MUTTER											(F)ECROU (S)TUERCA				
	08316-25053	.	.	B	.	.	S	S	S			2				
[13]	(E)LAMP A-LICENSE (D)LAMPE,NUMMERSCHILD											(F)LAMPE (S)LAMPARA-PLACA DE LICENCIA				
	96237708	.	.	B	.	.	S	S	S			2				LE
[14]	(E)BULB-LICENSE (D)BIRNE											(F)AMPOULE (S)BOMBILLA				
	05302-05003	.	.	B	.	.	S	S	S			2			5W	
[17]	(E)SCREW-TAPPING (D)SCHRAUBE											(F)VIS (S)TORNILLO				
	03110-42132	.	.	B	.	.	S	S	S			4				
[18]	(E)LAMP A-HIGH MOUNTED STOP (D)LAMPE											(F)LAMPE (S)LAMPARA				
	96304677	.	.	B	.	.	A	A	A	&T93		1				CB
[19]	(E)BULB-HIGH MOUNTED STOP (D)BIRNE											(F)AMPOULE (S)BOMBILLA				
	05201-21003	.	.	B	.	.	A	A	A	&T93		1			21W	
[20]	(E)NUT-HEXAGON (D)MUTTER											(F)ECROU (S)TUERCA				
	08361-25053	.	.	B	.	.	A	A	A	&T93		2			W/WASHER	

ENG(ENGINE)	T/A(TRANSAXLE)	BODY TYPE
Y = 1.5SOHC 6 = 1.6DOHC . = COMMON	M = MANUAL T/A A = AUTOMATIC T/A . = COMMON	4 N = 4 DOOR NOTCHBACK 3 H = 3 DOOR HATCHBACK 5 H = 5 DOOR HATCHBACK

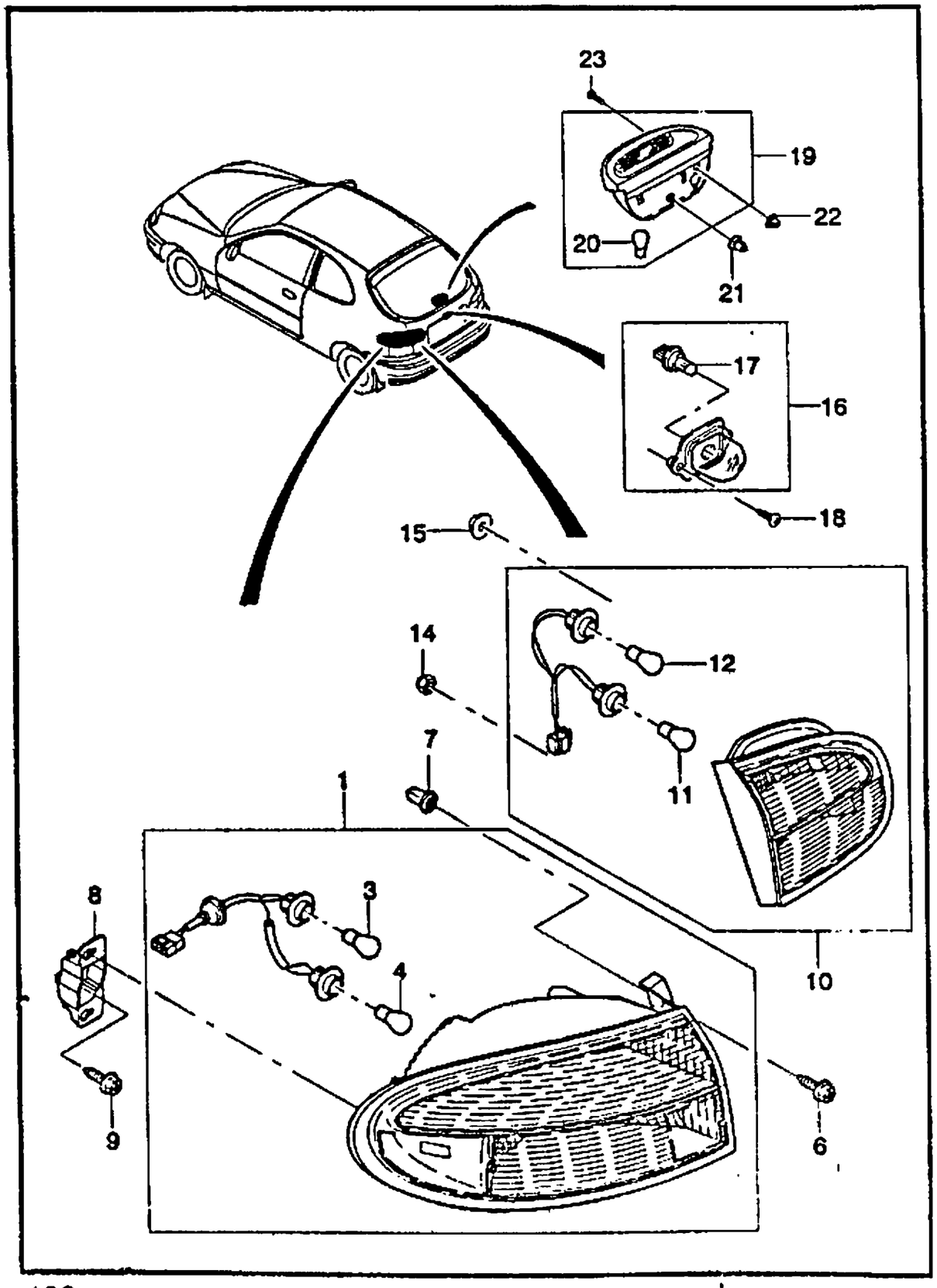

KEY NO. ITC	PART NO	MODEL ENG	T/A	BODY 4N	3H	5H	LEVEL S	SE	SX	OPTION	L/R	QTY	EFFECTIVE DATE FROM	TO	REMARKS	P/CODE
	[01]	(E)LAMP A-TAIL (D)LAMPE,HINTERTEIL									(F)LAMPE-EXTREMITE ARRIERE (S)LAMPARA-COLA					
	96304618	.	.	.	B	B	S	.	S		LH	1				RG
	96304619	.	.	.	B	B	S	.	S		RH	1				RH
	[03]	(E)BULB-TURN SIGNAL (D)BIRNE									(F)AMPOULE (S)BOMBILLA					
	05201-21004	.	.	.	B	B	S	.	S			2			21W	
	[04]	(E)BULB-TAIL STOP (D)BIRNE									(F)AMPOULE (S)BOMBILLA					
	05202-21053	.	.	.	B	B	S	.	S			2			21/5W	
	[06]	(E)SCREW-TAPPING (D)SCHRAUBE									(F)VIS (S)TORNILLO					
	09132-04013	.	.	.	B	B	S	.	S			4				
	[07]	(E)NUT-SPEED (D)MUTTER									(F)ECROU (S)TUERCA					
	09148-03006	.	.	.	B	B	S	.	S			4				
	[08]	(E)BRACKET A-REAR COMB LAMP (D)TRÄGER									(F)SUPPORT (S)SOPORTE					
	96223420	.	.	.	B	B	S	.	S		LH	1				
	96224456	.	.	.	B	B	S	.	S		RH	1				
	[09]	(E)SCREW-TAPPING (D)SCHRAUBE									(F)VIS (S)TORNILLO					
	09132-04013	.	.	.	B	B	S	.	S			4				
	[10]	(E)LAMP A-EXTENSION TAIL (D)LAMPE,VERLÄNGERUNG									(F)LAMPE-EXTENSION (S)LAMPARA-EXTENSION					
	96248145	.	.	.	B	B	S	.	S	-T98	LH	1		971001		EU
	Y 96239381	.	.	.	B	B	S	.	S	-T98	LH	1	971001			ES
	96248146	.	.	.	B	B	S	.	S	-T98	RH	1		971001		EV

ENG(ENGINE)	T/A(TRANSAXLE)	BODY TYPE
Y = 1.5SOHC 6 = 1.6DOHC . = COMMON	M = MANUAL T/A A = AUTOMATIC T/A . = COMMON	4 N = 4 DOOR NOTCHBACK 3 H = 3 DOOR HATCHBACK 5 H = 5 DOOR HATCHBACK

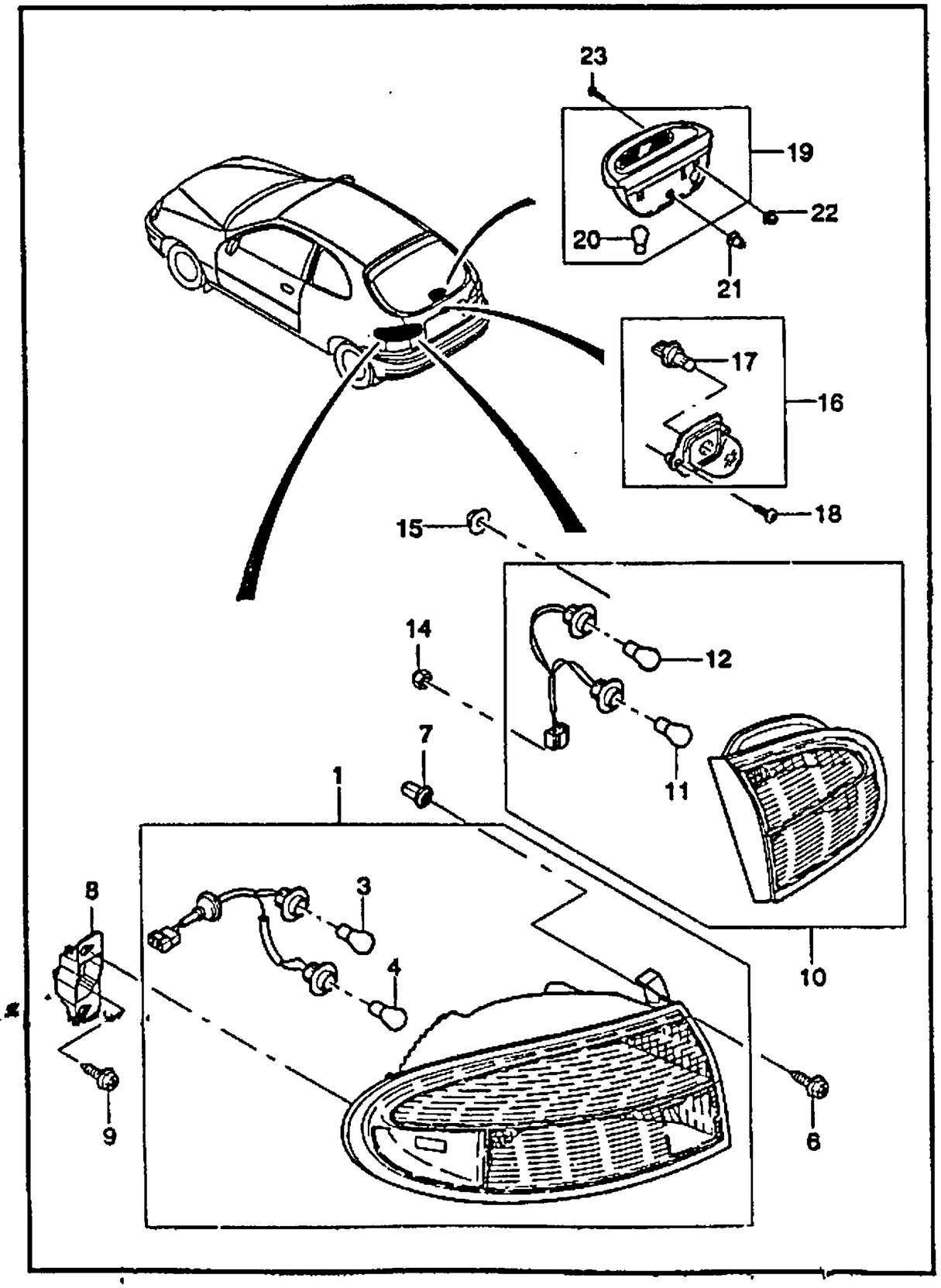

KEY NO. ITC	PART NO	MODEL ENG	T/A	BODY 4N	3H	5H	LEVEL S	SE	SX	OPTION	L/R	QTY	EFFECTIVE DATE FROM	TO	REMARKS	P/CODE
Y	96239382	.	.	.	B	B	S	.	S	-T98	RH	1	971001			ET
	96304629	.	.	.	B	B	A	.	A	&T98	LH	1				EG
	96304630	.	.	.	B	B	A	.	A	&T98	RH	1				EH
	[11]	(E)BULB-TAIL STOP (D)BIRNE									(F)AMPOULE (S)BOMBILLA					
	05202-21053	.	.	.	B	B	S	.	S	-T98		2		971001	21/5W	
Y	05232-27081	.	.	.	B	B	S	.	S	-T98		2	971001		27/8W	
	05201-21003	.	.	.	B	B	A	.	A	&T98		2			21W	
	[12]	(E)BULB-BACK UP (D)BIRNE									(F)AMPOULE (S)BOMBILLA					
	05201-21003	.	.	.	B	B	S	.	S			2			21W	
	[14]	(E)NUT-CAP (D)MUTTER									(F)ECROU (S)TUERCA					
	09145-05001	.	.	.	B	B	S	.	S			4				
	[15]	(E)NUT-HEXAGON FLANGE (D)MUTTER									(F)ECROU (S)TUERCA					
	08316-25053	.	.	.	B	B	S	.	S			2				
	[16]	(E)LAMP A-LICENSE (D)LAMPE,NUMMERSCHILD									(F)LAMPE (S)LAMPARA-PLACA DE LICENCIA					
	96237708	.	.	.	B	B	S	.	S			2				LE
	[17]	(E)BULB-LICENSE (D)BIRNE									(F)AMPOULE (S)BOMBILLA					
	05302-05003	.	.	.	B	B	S	.	S			2			5W	
	[18]	(E)SCREW-TAPPING (D)SCHRAUBE									(F)VIS (S)TORNILLO					
	03110-42132	.	.	.	B	B	S	.	S			4				
	[19]	(E)LAMP A-HIGH MOUNTED STOP (D)LAMPE									(F)LAMPE (S)LAMPARA					

ENG(ENGINE)	T/A(TRANSAXLE)	BODY TYPE
Y = 1.5SOHC 6 = 1.6DOHC . = COMMON	M = MANUAL T/A A = AUTOMATIC T/A . = COMMON	4 N = 4 DOOR NOTCHBACK 3 H = 3 DOOR HATCHBACK 5 H = 5 DOOR HATCHBACK

5141 REAR LAMP(H/B)

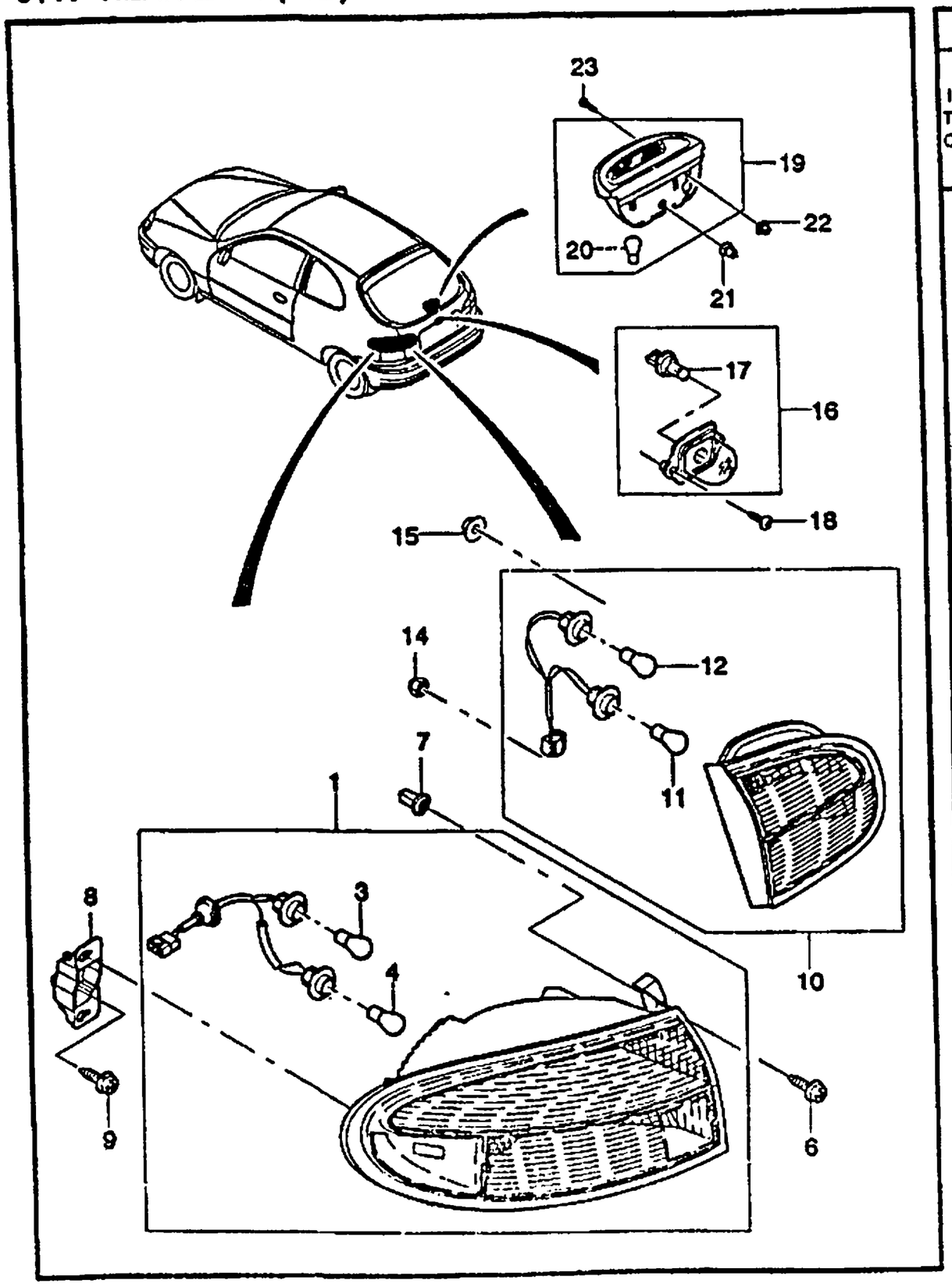

KEY NO. ITC	PART NO	MODEL ENG	MODEL T/A	MODEL BODY 4N	MODEL BODY 3H	MODEL BODY 5H	MODEL LEVEL S	MODEL LEVEL SE	MODEL LEVEL SX	OPTION	L/R	QTY	EFFECTIVE DATE FROM	EFFECTIVE DATE TO	REMARKS	P/CODE
[20]	96303244	.	.	.	B	B	A	.	A	&T93		1				CA
	(E)BULB-HIGH MOUNTED STOP (D)BIRNE											(F)AMPOULE (S)BOMBILLA				
[21]	05201-21003	.	.	.	B	B	A	.	A	&T93		1			21W	
	(E)CLIP (D)KLEMME											(F)ATTACHE (S)GRAPA				
[22]	09409-10305	.	.	.	B	B	A	.	A	&T93		2				
	(E)NUT-SPEED (D)MUTTER											(F)ECROU (S)TUERCA				
[23]	09148-04003	.	.	.	B	B	A	.	A	&T93		2				
	(E)SCREW-TAPPING (D)SCHRAUBE											(F)VIS (S)TORNILLO				
	03160-42165	.	.	.	B	B	A	.	A	&T93		2				

ENG(ENGINE)	T/A(TRANSAXLE)	BODY TYPE
Y = 1.5SOHC 6 = 1.6DOHC . = COMMON	M = MANUAL T/A A = AUTOMATIC T/A . = COMMON	4 N = 4 DOOR NOTCHBACK 3 H = 3 DOOR HATCHBACK 5 H = 5 DOOR HATCHBACK

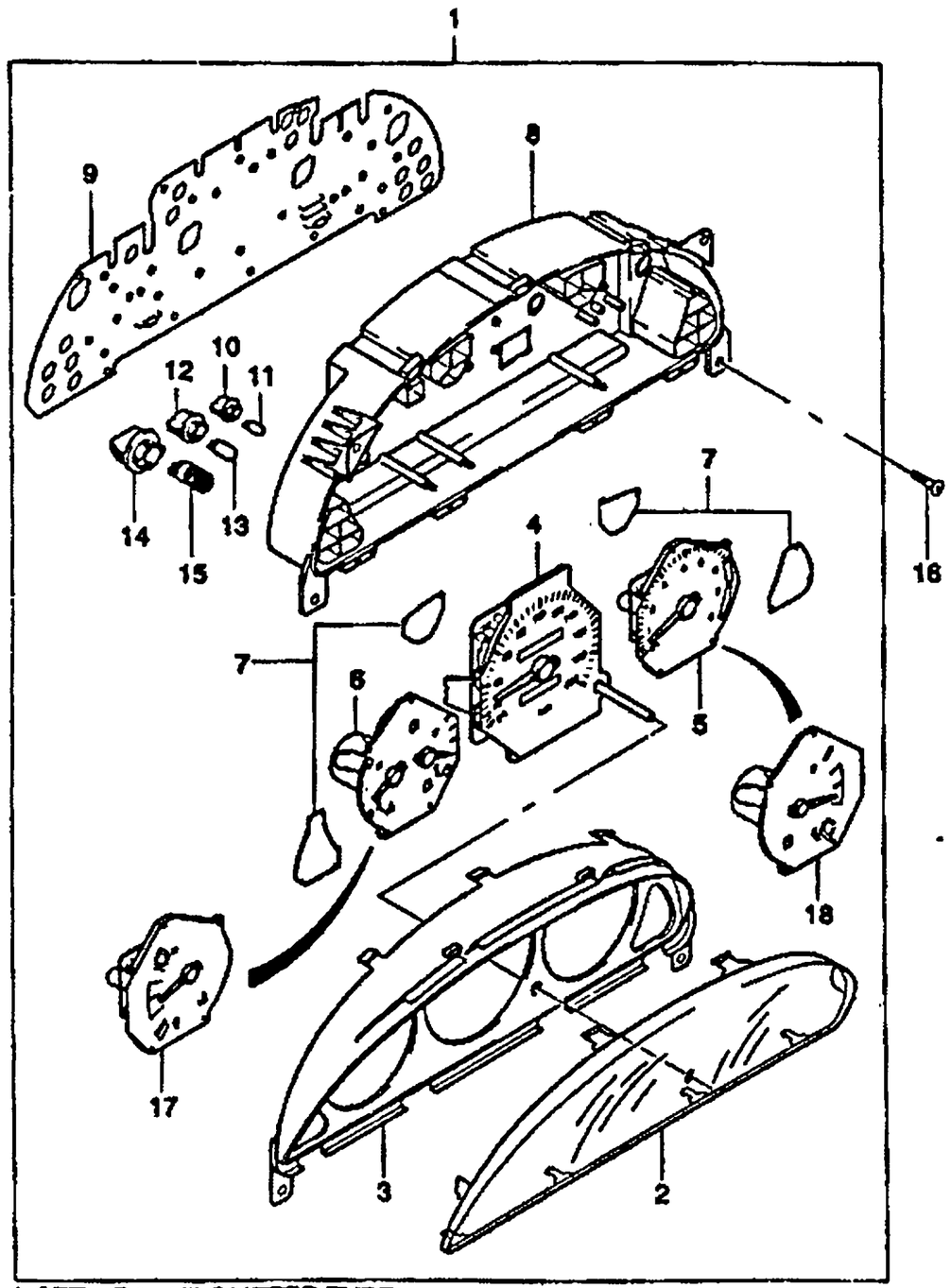

NOTE : @1 - KILOMETER TYPE

KEY NO. ITC	PART NO	MODEL ENG	T/A	BODY 4N	3H	5H	LEVEL S	SE	SX	OPTION	L/R	QTY	EFFECTIVE DATE FROM	TO	REMARKS	P/CODE
[01]		(E)CLUSTER-INSTRUMENT (D)INSTRUMENT									(F)TABLEAU DE BORD (S)INSTRUMENTO					
	96304893	.	M	B	B	B	S	.	.	-U44		1			@1, WO/TACHO	RA
	96304900	.	M	B	B	B	.	S	S	-ABF/AJ3/U44		1			@1, W/TACHO	RF
	96304900	.	M	B	B	B	.	S	S	-JL9/T97/U44		1			@1, W/TACHO	RF
	96304717	.	M	B	B	B	.	O	O	&ABF/AJ3-U44		1		970715	@1, W/TACHO	RG
	96304717	.	M	B	B	B	.	O	O	&ABF/AJ3/T98-U44		1	970715		@1, W/TACHO	RG
	96304717	.	M	B	B	B	.	O	O	&JL9/T97-U44		1		970715	@1, W/TACHO	RG
	96304717	.	M	B	B	B	.	O	O	&JL9/T97/T98-U44		1	970715		@1, W/TACHO	RG
	96304894	.	M	B	B	B	A	.	.	&U44-ABF/AJ3		1			@1, WO/TACHO	RB
	96304894	.	M	B	B	B	A	.	.	&U44-JL9/T97		1			@1, WO/TACHO	RB
	96304718	.	M	B	B	B	.	A	A	&U44		1			@1, W/TACHO	RH
	96304896	.	A	B	B	B	O	.	.	-U44		1			@1, WO/TACHO	RD
	96304720	.	A	B	B	B	.	O	O	-U44		1			@1, W/TACHO	RK
	96304895	.	A	B	B	B	A	.	.	&U44		1			@1, WO/TACHO	RC
	96304719	.	A	B	B	B	.	A	A	&U44		1			@1, W/TACHO	RJ
[02]		(E)LENS-INSTRUMENT (D)OBJEKTIV									(F)LENTILLE (S)LENTE					
	96218671	.	.	B	B	B	S	S	S			1				
[03]		(E)PLATE-WINDOW (D)PLATTE									(F)PLAQUE (S)PLACA					
	96218670	.	.	B	B	B	S	S	S			1				
[04]		(E)SPEEDOMETER A (D)GESCHWINDIGKEITSMESSER									(F)COMPTEUR DE VITESSE (S)VELOCIMETRO					
	96214624	.	.	B	B	B	S	S	S	-U44		1			@1	
	96218647	.	.	B	B	B	A	A	A	&U44		1			@1	

ENG(ENGINE)	T/A(TRANSAXLE)	BODY TYPE
Y = 1.5SOHC 6 = 1.6DOHC . = COMMON	M = MANUAL T/A A = AUTOMATIC T/A . = COMMON	4 N = 4 DOOR NOTCHBACK 3 H = 3 DOOR HATCHBACK 5 H = 5 DOOR HATCHBACK

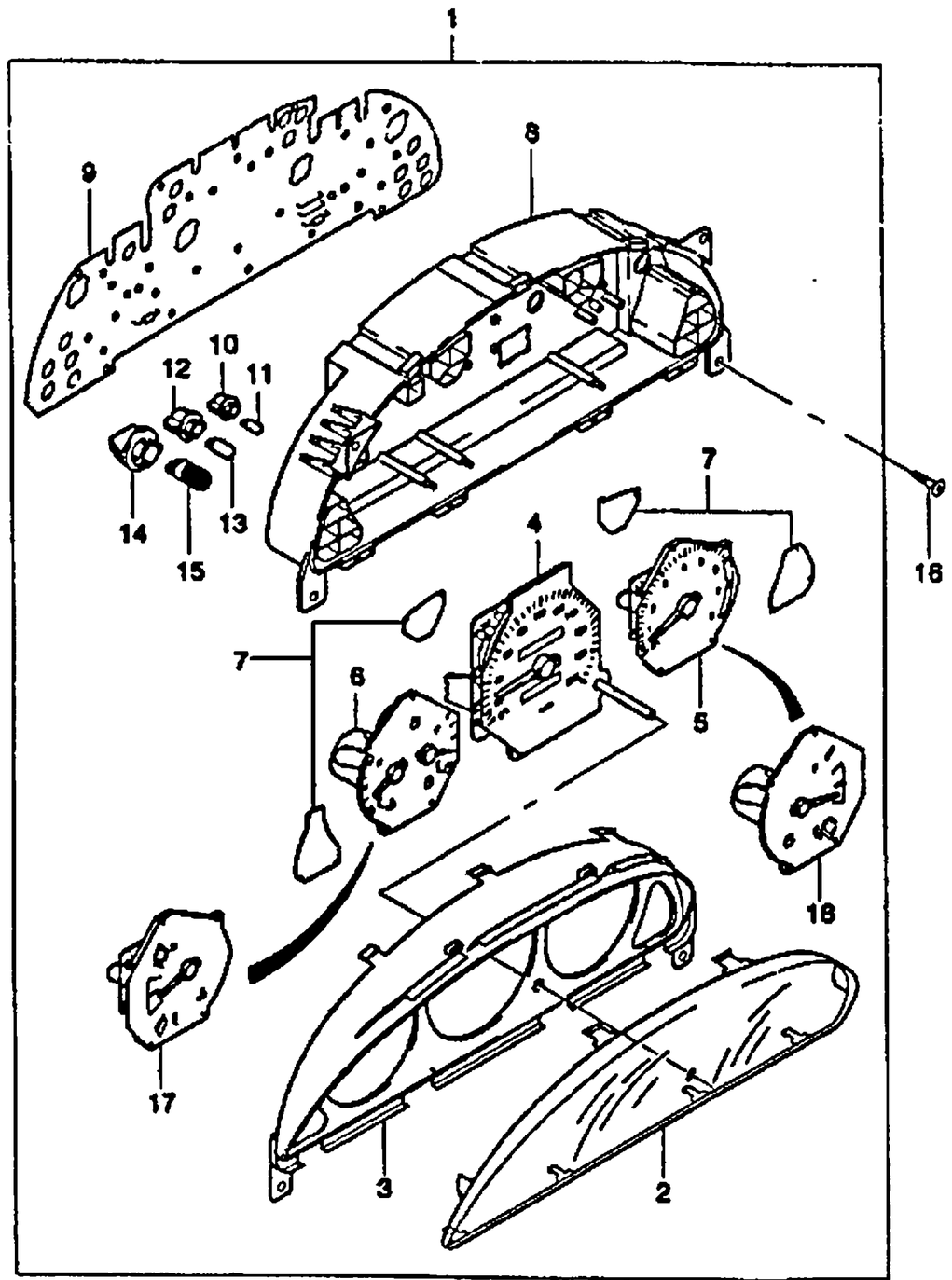

NOTE : @1 - KILOMETER TYPE.

KEY NO. ITC	PART NO	MODEL ENG	MODEL T/A	MODEL BODY 4N	MODEL BODY 3H	MODEL BODY 5H	MODEL LEVEL S	MODEL LEVEL SE	MODEL LEVEL SX	OPTION	L/R	QTY	EFFECTIVE DATE FROM	EFFECTIVE DATE TO	REMARKS	P/CODE
[05]		(E)TACHOMETER A (D)TACHOMETER									(F)TACHYMETRE (S)TACOMETRO					
	96214665	.	M	B	B	B	.	S	S			1			W/TACHO	
	96218649	.	A	B	B	B	.	O	O			1			W/TACHO	
[06]		(E)GAUGE A-FUEL&TEMPERATURE (D)ANZEIGE,BENZIN&TEMPERATUR									(F)JAUGE (S)JUNTA					
	96214629	.	.	B	B	B	.	S	S			1			W/TACHO	
[07]		(E)FILTER A-TELLTALES (D)FILTER									(F)FILTRE (S)FILTRO					
	96236132	.	.	B	B	B	S	S	S			1				
[08]		(E)CASE-INSTRUMENT CLUSTER (D)KASTEN,INSTRUMENT									(F)BOITIER-TABLEAU DE BORD (S)CAJA-INSTRUMENTOS					
	96214669	.	.	B	B	B	S	.	.			1			W/O/TACHO	
	96214668	.	.	B	B	B	.	S	S			1			W/TACHO	
[09]		(E)BOARD A-PRINTED CIRCUIT (D)PLATTE,DRUCK KREIS									(F)PLAQUE-CIRCUIT IMPRIME (S)PLACA-CIRCUITO IMPRESO					
	96214667	.	.	B	B	B	S	.	.			1			W/O/TACHO	
	96214666	.	.	B	B	B	.	S	S			1			W/TACHO	
[10]		(E)SOCKET (D)FASSUNG BIRNE									(F)CULOT-AMPOULE (S)ENCHUFE-BOMBILLA					
	94797620	.	.	B	B	B	S	S	S	-ABF/AJ3/JL9/T97		9			SMALL	
	94797520	.	.	B	B	B	O	O	O	&ABF/AJ3/JL9/T97		12			SMALL	
[11]		(E)BULB-SMALL (D)BIRNE									(F)AMPOULE (S)BOMBILLA					
	09471-12014	.	.	B	B	B	S	S	S	-ABF/AJ3/JL9/T97		9			SMALL	
	09471-12014	.	.	B	B	B	O	O	O	&ABF/AJ3/JL9/T97		12			SMALL	
[12]		(E)SOCKET (D)FASSUNG BIRNE									(F)CULOT-AMPOULE (S)ENCHUFE-BOMBILLA					

ENG(ENGINE)	T/A(TRANSAXLE)	BODY TYPE
Y = 1.5SOHC 6 = 1.6DOHC . = COMMON	M = MANUAL T/A A = AUTOMATIC T/A . = COMMON	4 N = 4 DOOR NOTCHBACK 3 H = 3 DOOR HATCHBACK 5 H = 5 DOOR HATCHBACK

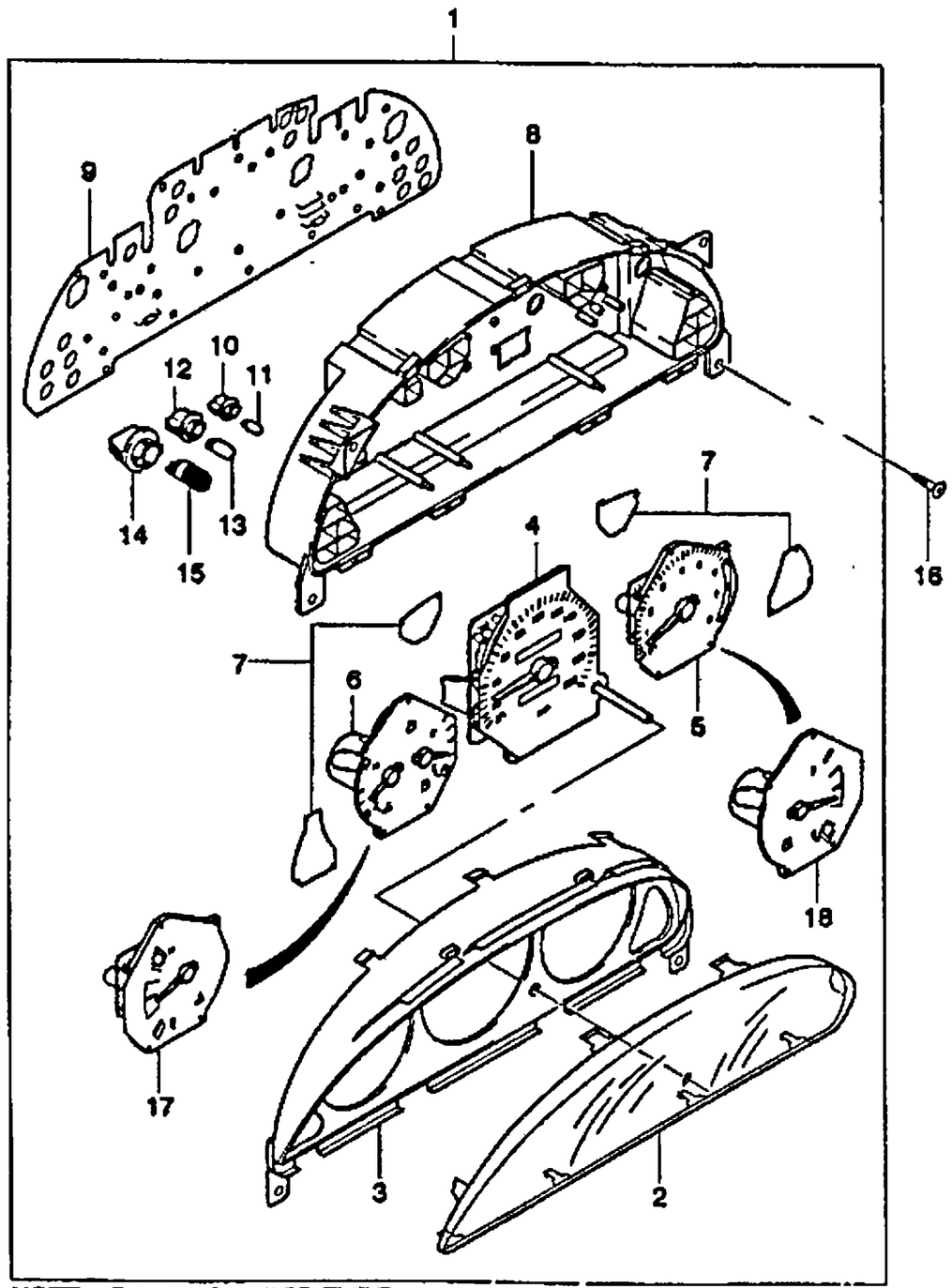

NOTE : @1 - KILOMETER TYPE.

KEY NO.	PART NO	MODEL ENG	MODEL T/A	MODEL BODY 4N	MODEL BODY 3H	MODEL BODY 5H	MODEL LEVEL S	MODEL LEVEL SE	MODEL LEVEL SX	OPTION	L/R	QTY	EFFECTIVE DATE FROM	EFFECTIVE DATE TO	REMARKS	P/CODE
[13]	96077679	.	.	B	B	B	S	S	S			1			MEDIUM (E)BULB-MEDIUM (F)AMPOULE (D)BIRNE (S)BOMBILLA	
[14]	09471-12015	.	.	B	B	B	S	S	S			1			MEDIUM (E)SOCKET (F)CULOT-AMPOULE (D)FASSUNG BIRNE (S)ENCHUFE-BOMBILLA	
[15]	94797519	.	.	B	B	B	S	S	S			4			LARGE (E)BULB-LARGE (F)AMPOULE (D)BIRNE (S)BOMBILLA	
[16]	05301-03003	.	.	B	B	B	S	S	S			4			LARGE (E)SCREW-TAPPING (F)VIS (D)SCHRAUBE (S)TORNILLO	
[17]	03160-48165	.	.	B	B	B	S	S	S			4			(E)GAUGE A-TEMPERATURE (F)JAUGE-TEMPÉRATURE (D)ANZEIGE,TEMPERATUR (S)JUNTA-TEMPERATURA	
[18]	96214631	.	.	B	B	B	S	.	.			1			WO/TACHO (E)GAUGE A-FUEL (F)JAUGE-CARBURANT (D)ANZEIGE,BENZIN (S)JUNTA-COMBUSTIBLE	
	96214627	.	.	B	B	B	S	.	.			1			WO/TACHO	

ENG(ENGINE)	T/A(TRANSAXLE)	BODY TYPE
Y = 1.5SOHC 6 = 1.6DOHC . = COMMON	M = MANUAL T/A A = AUTOMATIC T/A . = COMMON	4 N = 4 DOOR NOTCHBACK 3 H = 3 DOOR HATCHBACK 5 H = 5 DOOR HATCHBACK

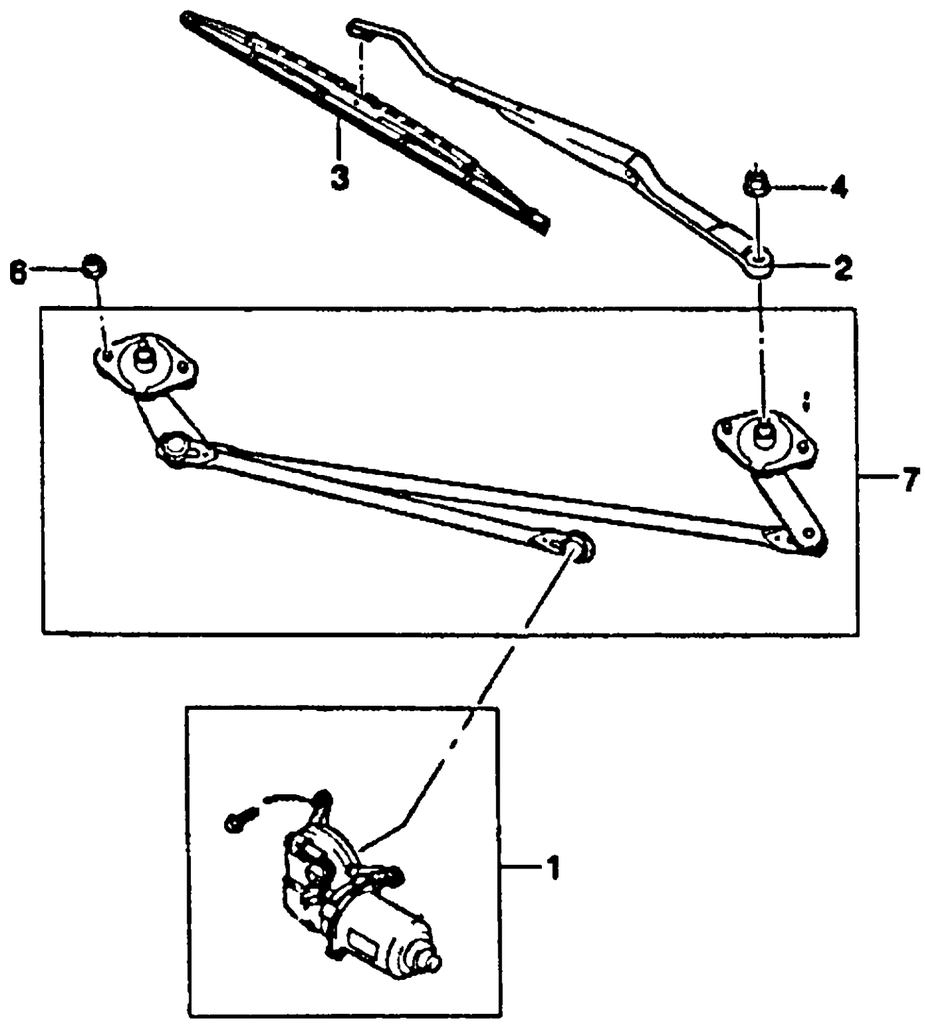

KEY NO.		PART NAME															
ITC	PART NO	MODEL								OPTION	L/R	QTY	EFFECTIVE DATE		REMARKS	P/CODE
		ENG	T/A	BODY			LEVEL						FROM	TO		
				4N	3H	5H	S	SE	SX							
[01]		(E)MOTOR A-WINDSHIELD WIPER (D)MOTOR,SCHEIBENWISCHER									(F)ESSUIE-GLACE (S)MOTOR-LIMPIAPARABRISAS					
	96303118	.	.	B	B	B	S	S	S			1				LM
[02]		(E)ARM A-WIPER (D)ARM,SCHEIBENWISCHER									(F)BRAS-ESSUIE-GLACE (S)BRAZO-LIMPIAPARABRISAS					
	96306872	.	.	B	B	B	S	S	S		LH	1				
	96306103	.	.	B	B	B	S	S	S		RH	1				
[03]		(E)BLADE A-WIPER (D)SCHEIBENWISCHERGUMMI									(F)BALAI D'ESSUIE-GLACE (S)ESCOBILLA-LIMPIAPARABRISA					
	96132997	.	.	B	B	B	S	S	S			2				
[04]		(E)NUT-CAP (D)MUTTER									(F)ECROU (S)TUERCA					
	09145-08001	.	.	B	B	B	S	S	S			2				
[06]		(E)NUT-HEXAGON FLANGE (D)MUTTER									(F)ECROU (S)TUERCA					
	08316-25063	.	.	B	B	B	S	S	S			4				
[07]		(E)LINKAGE A-WIPER (D)VERBINDUNG									(F)ACOUPLEMENT (S)ENLACE					
	96303360	.	.	B	B	B	S	S	S			1				K5

ENG(ENGINE)	T/A(TRANSAXLE)	BODY TYPE
Y = 1.5SOHC 6 = 1.6DOHC . = COMMON	M = MANUAL T/A A = AUTOMATIC T/A . = COMMON	4 N = 4 DOOR NOTCHBACK 3 H = 3 DOOR HATCHBACK 5 H = 5 DOOR HATCHBACK

5320 BACK WINDOW WIPER

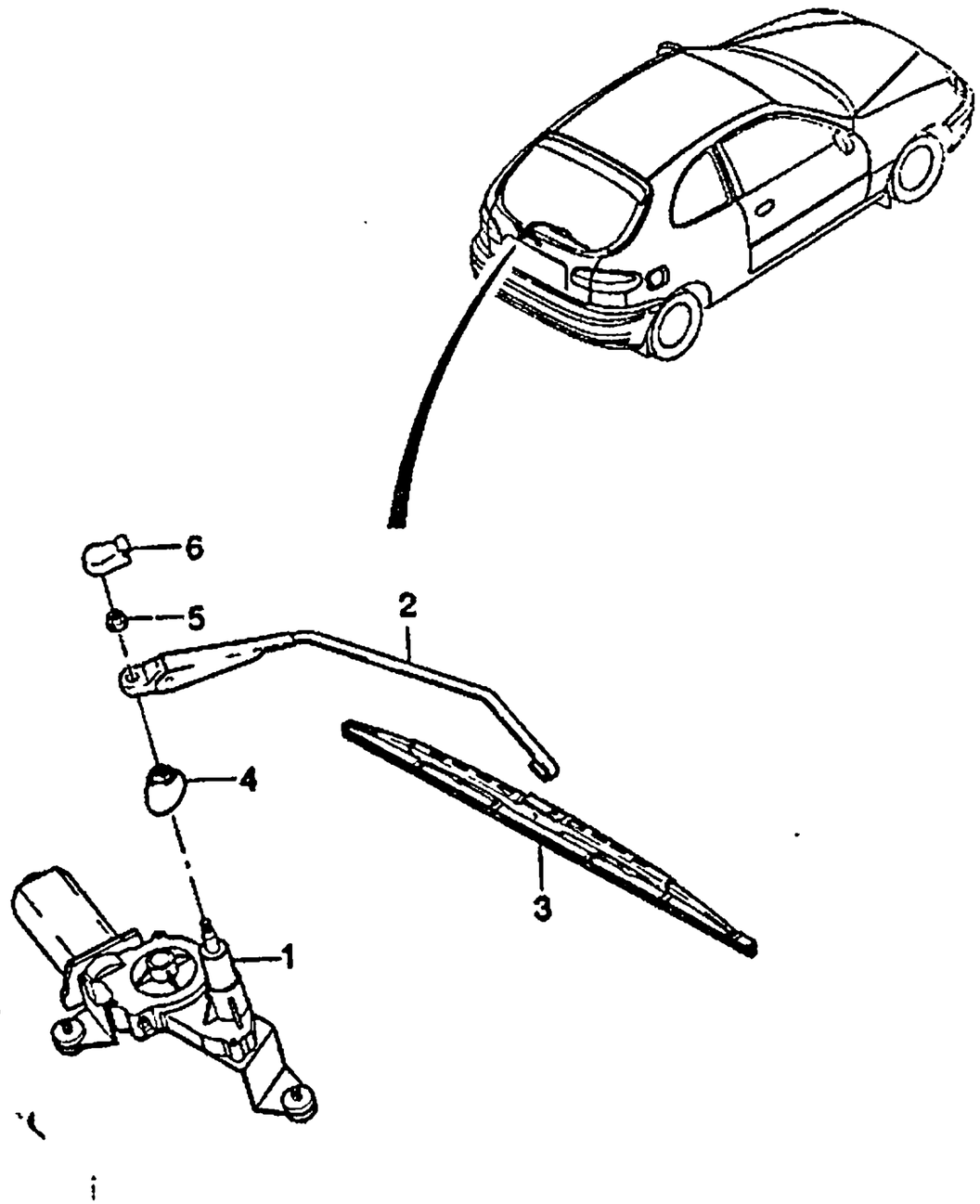

KEY NO.	PART NAME															
ITC	PART NO	MODEL								OPTION	L/R	QTY	EFFECTIVE DATE		REMARKS	P/CODE
		ENG	T/A	BODY			LEVEL						FROM	TO		
				4N	3H	5H	S	SE	SX							
[01]	(E)MOTOR A-BACK WINDOW WIPER (D)MOTOR,SCHEIBENWISCHER										(F)MOTEUR-ESSUIE (S)MOTOR-LIMPIAPARABRISAS					
96303127		.	.	.	B	B	S	.	S			1				BM
[02]	(E)ARM A-WIPER (D)ARM,SCHEIBENWISCHER										(F)BRAS-ESSUIE-GLACE (S)BRAZO-LIMPIAPARABRISAS					
96303365		.	.	.	B	B	S	.	S			1				
[03]	(E)BLADE A-WIPER (D)SCHEIBENWISCHERGUMMI										(F)BALAI D'ESSUIE-GLACE (S)ESCOBILLA-LIMPIAPARABRISA					
96132997		.	.	.	B	B	S	.	S			1				
[04]	(E)GROMMET-WIPER MOTOR (D)ÖSE										(F)VIROLE (S)AISLANTE					
96221124		.	.	.	B	B	S	.	S			1				
[05]	(E)NUT-HEXAGON FLANGE (D)MUTTER										(F)ECROU (S)TUERCA					
08316-25063		.	.	.	B	B	S	.	S			1				
[06]	(E)CAP-WIPER ARM (D)DECKEL,SCHEIBENWISCHER										(F)CHAPEAU (S)TAPA-LIMPIAPARABRISAS					
96303372		.	.	.	B	B	S	.	S			1				E2

ENG(ENGINE)	T/A(TRANSAXLE)	BODY TYPE
Y = 1.5SOHC 6 = 1.6DOHC . = COMMON	M = MANUAL T/A A = AUTOMATIC T/A . = COMMON	4 N = 4 DOOR NOTCHBACK 3 H = 3 DOOR HATCHBACK 5 H = 5 DOOR HATCHBACK

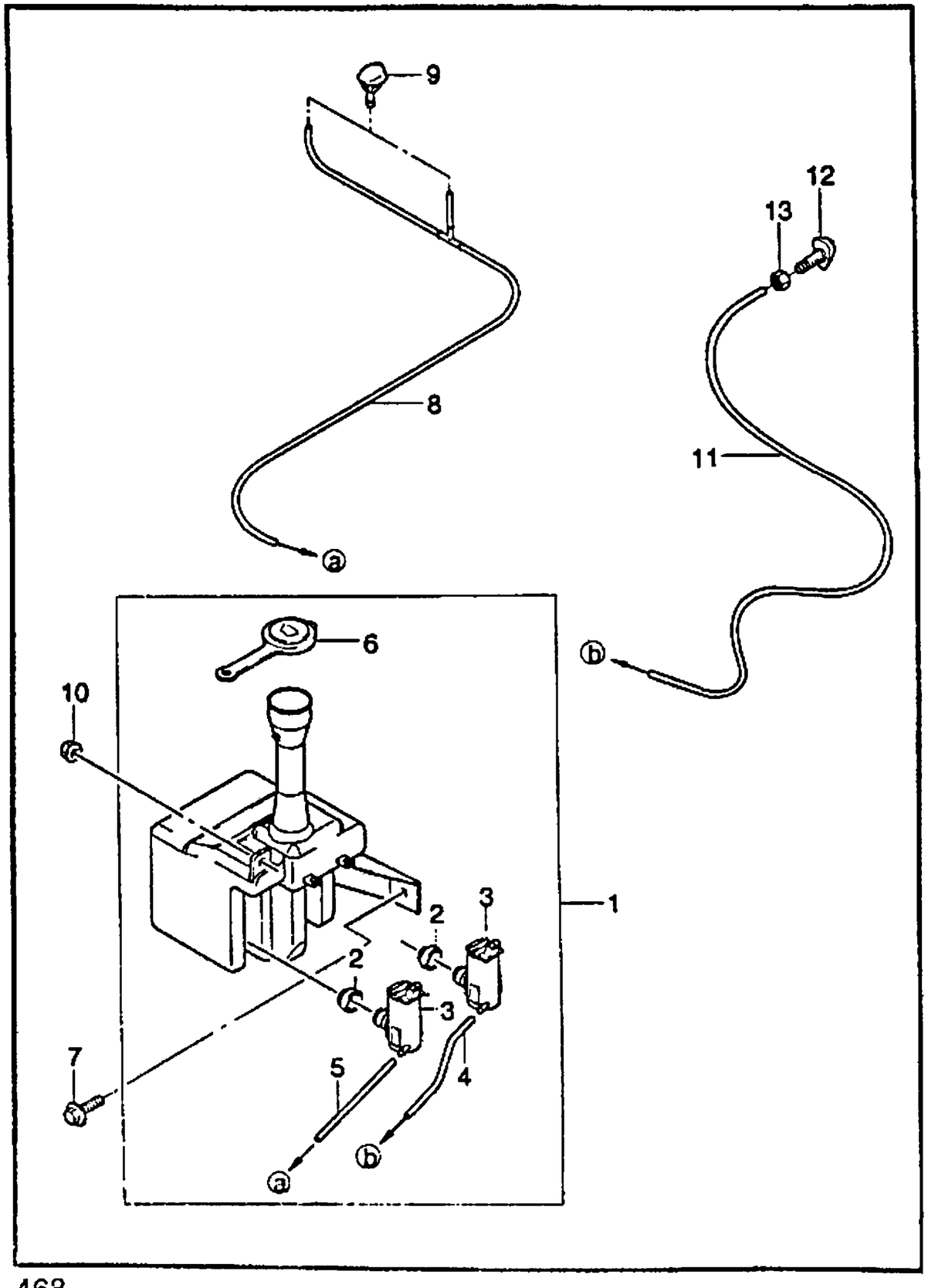

KEY NO. ITC	PART NO	MODEL ENG	T/A	BODY 4N	3H	5H	LEVEL S	SE	SX	OPTION	L/R	QTY	EFFECTIVE DATE FROM	TO	REMARKS	P/CODE
		PART NAME														
[01]		(E)RESERVOIR A-WINDSHIELD (D)BEHÄLTER									(F)RESERVOIR (S)RESERVA					
	96303534	.	.	B	.	.	S	S	S	-C25		1				RN
	96303535	.	.	.	B	B	S	.	S	&C25		1		970602		RB
N	96255654	.	.	.	B	B	S	.	S	&C25		1	970602			
[02]		(E)GROMMET-PUMP (D)ÖSE									(F)VIROLE (S)AISLANTE					
	96233400	.	.	B	.	.	S	S	S	-C25		1				
	96233400	.	.	.	B	B	S	.	S	&C25		2				
[03]		(E)PUMP A (D)PUMPE,ELEKTRISCHE									(F)POMPE-LAVEUR ELECTRIQUE (S)BOMBA -LIMPIADOR					
	96190259	.	.	B	.	.	S	S	S	-C25		1				
	96190259	.	.	.	B	B	S	.	S	&C25		2				
[04]		(E)HOSE A-RESERVOIR (D)SCHLAUCH,BEHÄLTER									(F)TUYAU-RESERVOIR (S)MANGUERA-RESERVA					
	96233398	.	.	.	B	B	S	.	S	&C25		1		970602	980mm	
N	T.B.D	.	.	.	B	B	S	.	S	&C25		1	970602		280mm	
[05]		(E)HOSE A-RESERVOIR (D)SCHLAUCH,BEHÄLTER									(F)TUYAU-RESERVOIR (S)MANGUERA-RESERVA					
	96233397	.	.	B	B	B	S	S	S			1				
[06]		(E)CAP-RESERVOIR (D)DECKEL,BEHÄLTER									(F)CHAPEAU-RESERVOIR (S)TAPA-RESERVA					
	96233396	.	.	B	B	B	S	S	S			1				
[07]		(E)BOLT (D)SCHRAUBE									(F)BOULON (S)PERNO					
	09116-06024	.	.	B	B	B	S	S	S			1			WWASHER	
[08]		(E)HOSE A-HOOD (D)SCHLAUCH,HAUBE									(F)TUYAU-CAPOT (S)MANGUERA-CAPO					

ENG(ENGINE)	T/A(TRANSAXLE)	BODY TYPE
Y = 1.5SOHC 6 = 1.6DOHC . = COMMON	M = MANUAL T/A A = AUTOMATIC T/A . = COMMON	4 N = 4 DOOR NOTCHBACK 3 H = 3 DOOR HATCHBACK 5 H = 5 DOOR HATCHBACK

5330 WINDSHIELD WASHER

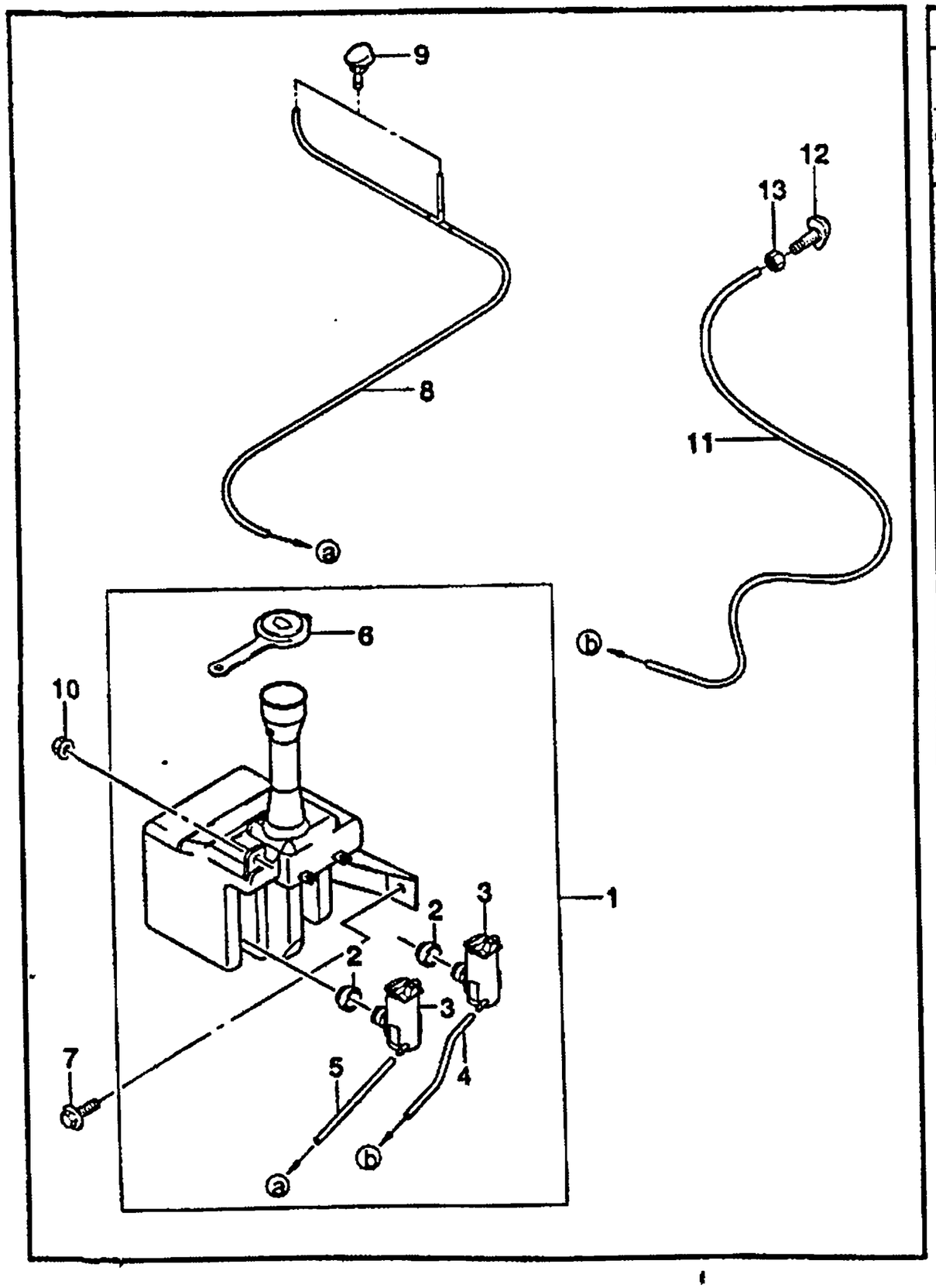

KEY NO. ITC	PART NO	MODEL ENG	T/A	BODY 4N	3H	5H	LEVEL S	SE	SX	OPTION	L/R	QTY	EFFECTIVE DATE FROM	TO	REMARKS	P/CODE
	96304915	.	.	B	B	B	S	S	S			1		970502		
O	96252906	.	.	B	B	B	S	S	S			1	970502			
[09]	(E)NOZZLE A-WINDSHIELD WASHE (D)MÜNDUNG,WINDSCHUTZSCHEIBE										(F)BEC-LAVE (S)BOQUILLA-LIMPIAPARABRISAS					
	96231860	.	.	B	B	B	S	S	S			2				
[10]	(E)NUT-HEXAGON (D)MUTTER										(F)ECROU (S)TUERCA					
	08361-25063	.	.	B	B	B	S	S	S			2			W/WASHER	
[11]	(E)HOSE-REAR WASHER (D)SCHLAUCH										(F)TUYAU (S)MANGUERA					
	96242636	.	.	.	B	.	S	.	S	&C25		1				
	96242637	.	.	.	.	B	S	.	S	&C25		1				
[12]	(E)NOZZLE A-REAR WASHER (D)MÜNDUNG,WASCHANLAGE										(F)BEC-LAVE-GLACE ARRIERE (S)BOQUILLA-LIMPIADOR					
	96303537	.	.	.	B	B	S	.	S	&C25		1				
[13]	(E)NUT (D)MUTTER										(F)ECROU (S)TUERCA					
	09159-08011	.	.	.	B	B	S	.	S	&C25		1				

ENG(ENGINE)	T/A(TRANSAXLE)	BODY TYPE
Y = 1.5SOHC	M = MANUAL T/A	4 N = 4 DOOR NOTCHBACK
6 = 1.6DOHC	A = AUTOMATIC T/A	3 H = 3 DOOR HATCHBACK
. = COMMON	. = COMMON	5 H = 5 DOOR HATCHBACK

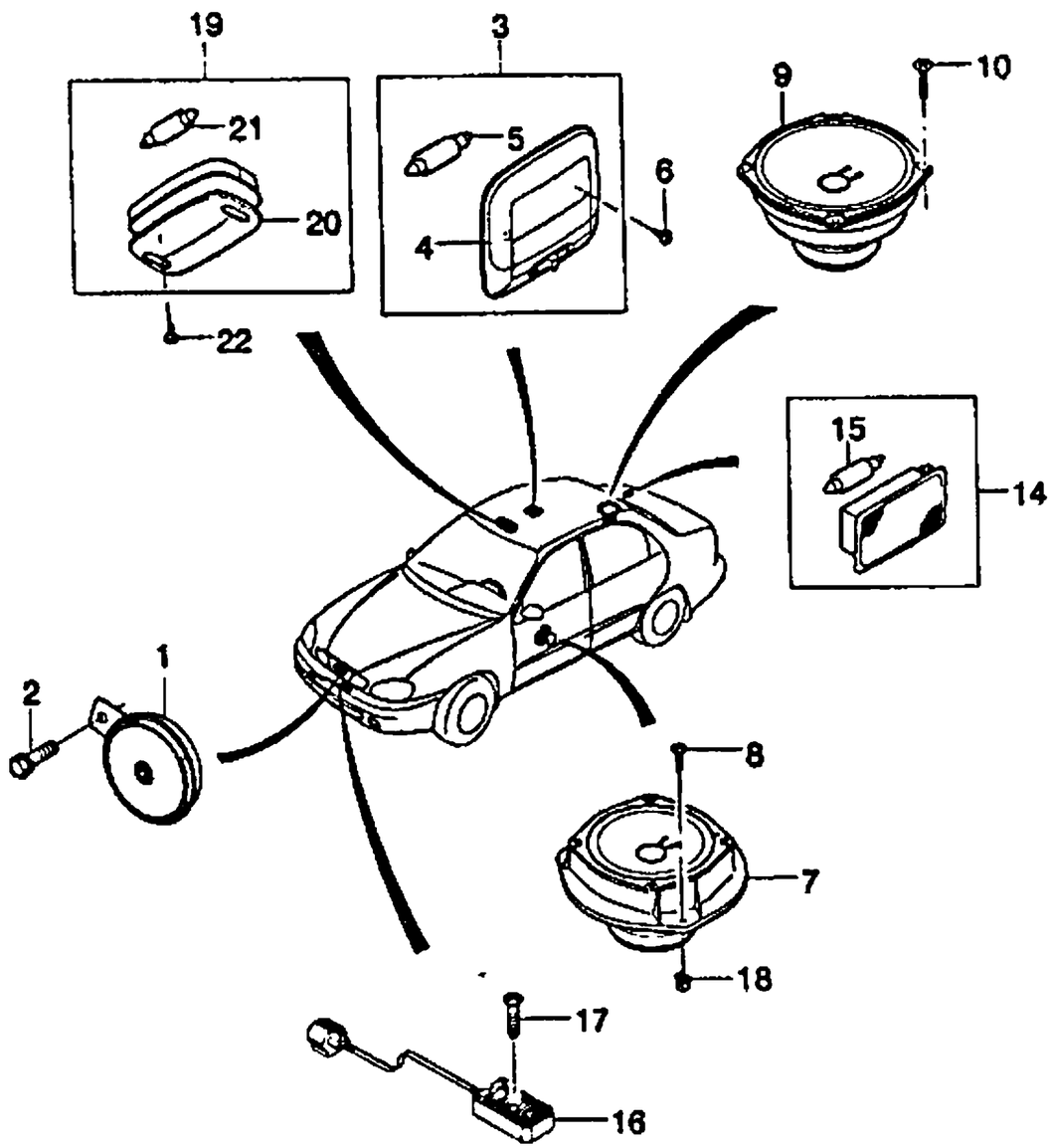

KEY NO. ITC	PART NO	MODEL ENG	MODEL T/A	BODY 4N	BODY 3H	BODY 5H	LEVEL S	LEVEL SE	LEVEL SX	OPTION	L/R	QTY	EFFECTIVE DATE FROM	EFFECTIVE DATE TO	REMARKS	P/CODE
[01]	(E)HORN A (D)HUPE										(F)AVERTISSEUR (S)BOCINA					
96242524		.	.	B	B	B	S	S	S	-2G3/U05		1		970609		FL
96242619		.	.	B	B	B	A	A	A	&2G3-U05		1		970609		EL
96242524		.	.	B	B	B	S	S	S			1	970609			FL
96242525		.	.	B	B	B	A	A	A	&U05		1			NOT APPLIED	FH
[02]	(E)BOLT (D)SCHRAUBE										(F)BOULON (S)PERNO					
09118-08003		.	.	B	B	B	S	S	S	-U05		1			W/WASHER	
09118-08003		.	.	B	B	B	A	A	A	&U05		2			NOT APPLIED	
[03]	(E)LAMP A-ROOM,CENTER (D)LAMPE,RAUM										(F)LAMPE-INTERIEUR (S)LAMPARA-CABINA					
96236130		.	.	B	B	B	S	S	S	-CF6		1				
[04]	(E)LENS-ROOM LAMP (D)OBJEKTIV										(F)LENTILLE (S)LENTE					
96230743		.	.	B	B	B	S	S	S	-CF6		1				
[05]	(E)BULB (D)BIRNE										(F)AMPOULE (S)BOMBILLA					
05404-10001		.	.	B	B	B	S	S	S	-CF6		1			10W(34mm)	
[06]	(E)SCREW-TAPPING (D)SCHRAUBE										(F)VIS (S)TORNILLO					
03170-42138		.	.	B	B	B	S	S	S	-CF6		2				
[07]	(E)SPEAKER A-FRONT (D)LAUTSPRECHER,VORNE										(F)HAUT-PARLEUR-AVANT (S)ALTAVOZ-FRENTE					
96303513		.	.	B	B	B	S	S	S			2				
[08]	(E)SCREW-TAPPING (D)SCHRAUBE										(F)VIS (S)TORNILLO					
03160-48165		.	.	B	B	B	S	S	S			6				

ENG(ENGINE)	T/A(TRANSAXLE)	BODY TYPE
Y = 1.5SOHC	M = MANUAL T/A	4 N = 4 DOOR NOTCHBACK
6 = 1.6DOHC	A = AUTOMATIC T/A	3 H = 3 DOOR HATCHBACK
. = COMMON	. = COMMON	5 H = 5 DOOR HATCHBACK

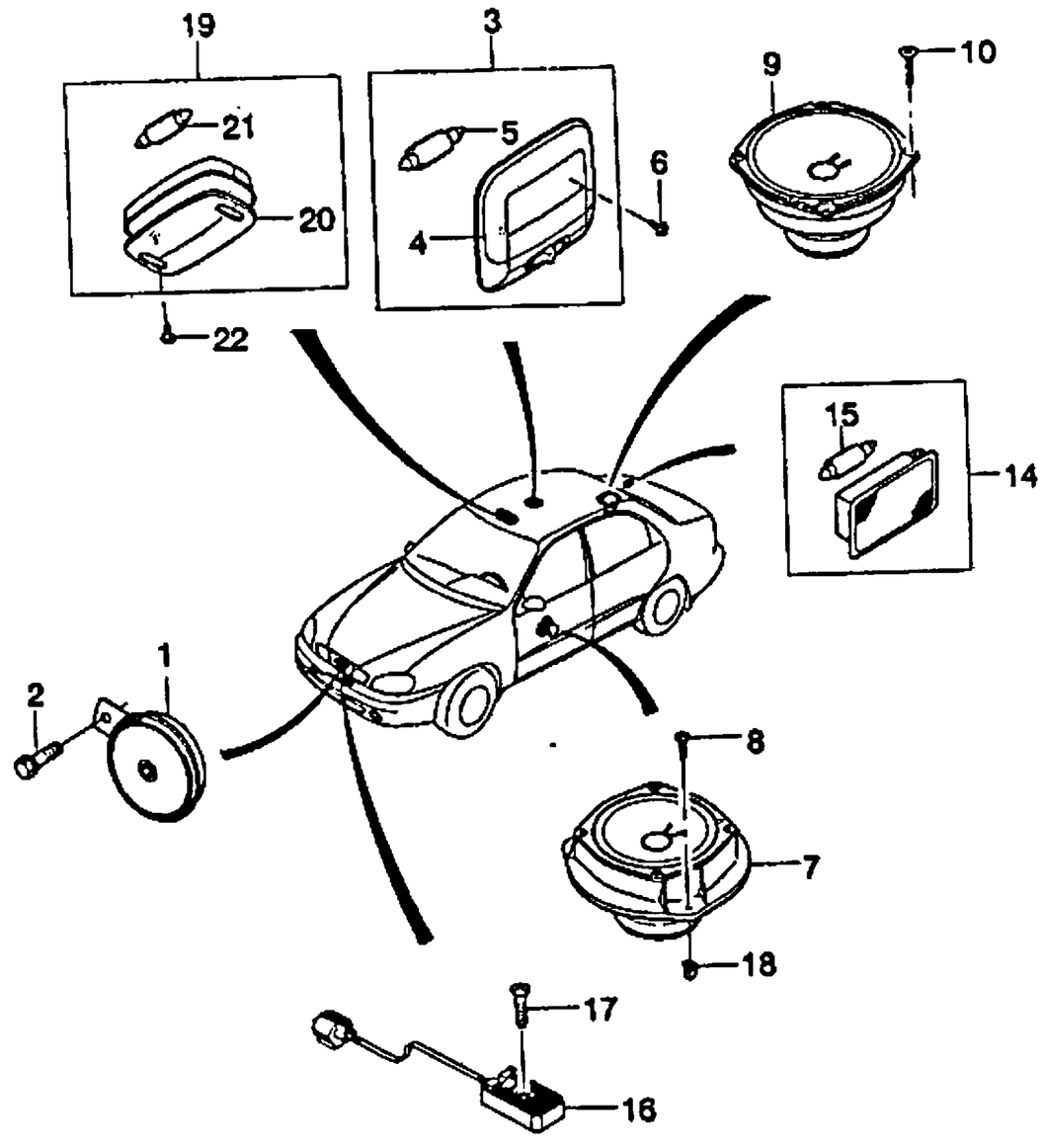

KEY NO. ITC	PART NO	MODEL ENG	T/A	BODY 4N	3H	5H	LEVEL S	SE	SX	OPTION	L/R	QTY	EFFECTIVE DATE FROM	TO	REMARKS	P/CODE
[09]		(E)SPEAKER A-REAR (D)LAUTSPRECHER,HINTEN									(F)HAUT-PARLEUR-ARRIERE (S)ALTAVOZ-TRASERO					
	96303515	.	.	B	.	.	O	O	S	&US8		2			STANDARD	ST
	96303516	.	.	B	.	.	.	O	O	&U83		2			DELUXE	DL
	96216123	.	.	.	B	B	O	.	S	&US8		2			STANDARD	HS
	96216124	.	.	.	B	B	.	.	O	&U83		2			DELUXE	HD
[10]		(E)SCREW-TAPPING (D)SCHRAUBE									(F)VIS (S)TORNILLO					
	03110-48095	.	.	B	B	B	O	O	S			8				
[14]		(E)LAMP A-TRUNK (D)LAMPE									(F)LAMPE (S)LAMPARA					
	08972943	.	.	B	B	B	S	S	S			1		970602		
	Y 96247398	.	.	B	B	B	S	S	S			1	970602			
[15]		(E)BULB (D)BIRNE									(F)AMPOULE (S)BOMBILLA					
	05405-10001	.	.	B	B	B	S	S	S			1			10W(40mm)	
[16]		(E)RESISTOR (D)WIDERSTAND									(F)RESISTANCE (S)RESISTOR					
	96190362	.	.	B	B	B	S	S	S	&C46		1				
[17]		(E)BOLT-HEXAGON FLANGE (D)SCHRAUBE									(F)BOULON (S)PERNO					
	01517-06353	.	.	B	B	B	S	S	S	&C46		1				
[18]		(E)NUT-SPEED (D)MUTTER									(F)ECROU (S)TUERCA					
	09148-04005	.	.	B	B	B	S	S	S			6				
[19]		(E)LAMP A-ROOM,FRONT (D)LAMPE,RAUM,VORNE									(F)LAMPE-INTERIEUR,AVANT (S)LAMPARA-CABINA,DELANTERO					
	96238283	.	.	B	B	B	O	O	O	&CF6		1				

ENG(ENGINE)	T/A(TRANSAXLE)	BODY TYPE
Y = 1.5SOHC 6 = 1.6DOHC . = COMMON	M = MANUAL T/A A = AUTOMATIC T/A . = COMMON	4 N = 4 DOOR NOTCHBACK 3 H = 3 DOOR HATCHBACK 5 H = 5 DOOR HATCHBACK

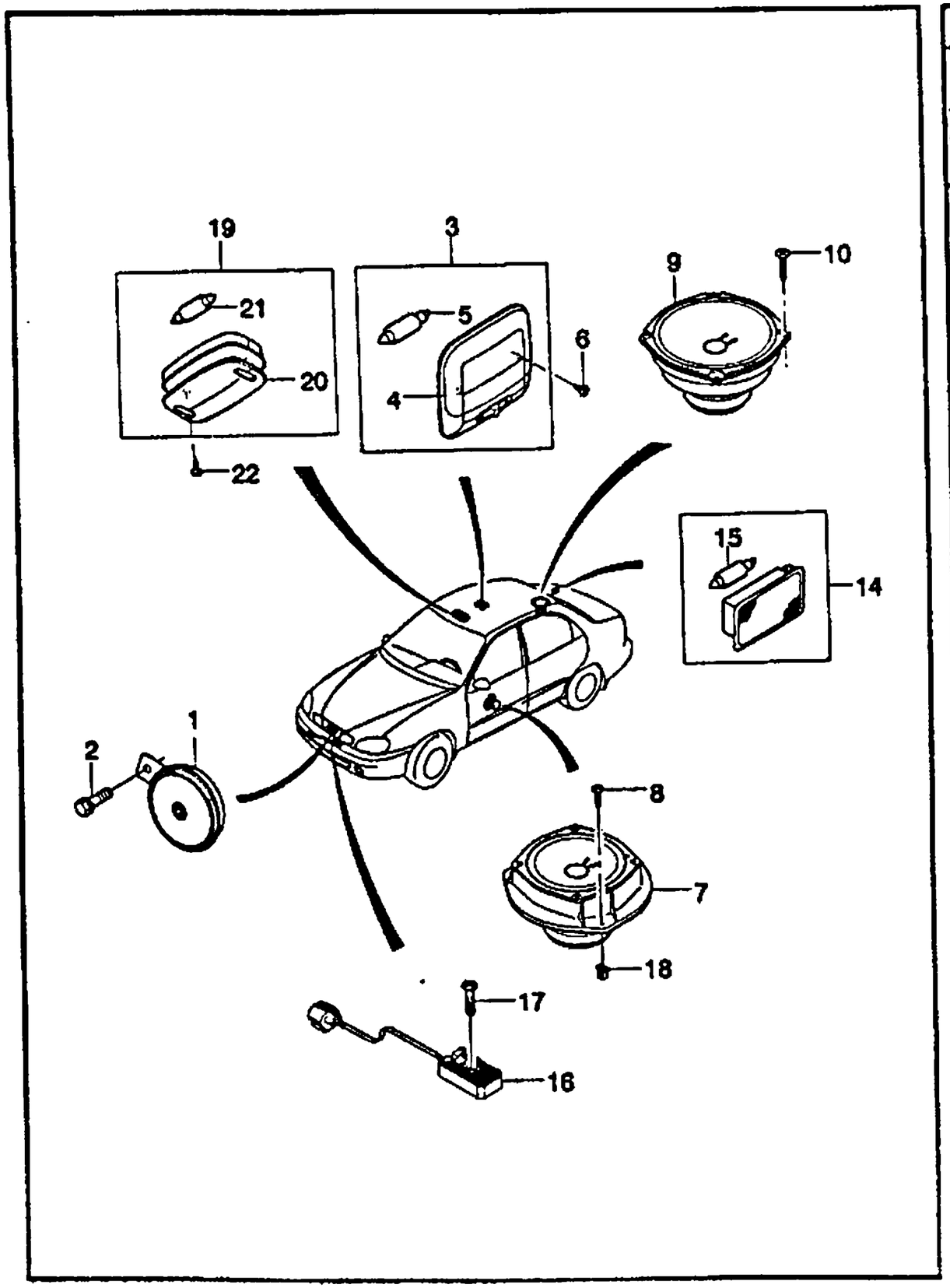

KEY NO. ITC	PART NO	MODEL ENG	T/A	BODY 4N	3H	5H	LEVEL S	SE	SX	OPTION	L/R	QTY	EFFECTIVE DATE FROM	TO	REMARKS	P/CODE
	[20]	(E)LENS-ROOM LAMP,FRONT (D)OBJEKTIV									(F)LENTILLE (S)LENTE					
	96238279	.	.	B	B	B	O	O	O	&CF6		1				
	[21]	(E)BULB (D)BIRNE									(F)AMPOULE (S)BOMBILLA					
	05404-10001	.	.	B	B	B	O	O	O	&CF6		1			10W(34mm)	
	[22]	(E)SCREW-TAPPING (D)SCHRAUBE									(F)VIS (S)TORNILLO					
	03170-42138	.	.	B	B	B	O	O	O	&CF6		2				

ENG(ENGINE)	T/A(TRANSAXLE)	BODY TYPE
Y = 1.5SOHC	M = MANUAL T/A	4 N = 4 DOOR NOTCHBACK
6 = 1.6DOHC	A = AUTOMATIC T/A	3 H = 3 DOOR HATCHBACK
. = COMMON	. = COMMON	5 H = 5 DOOR HATCHBACK

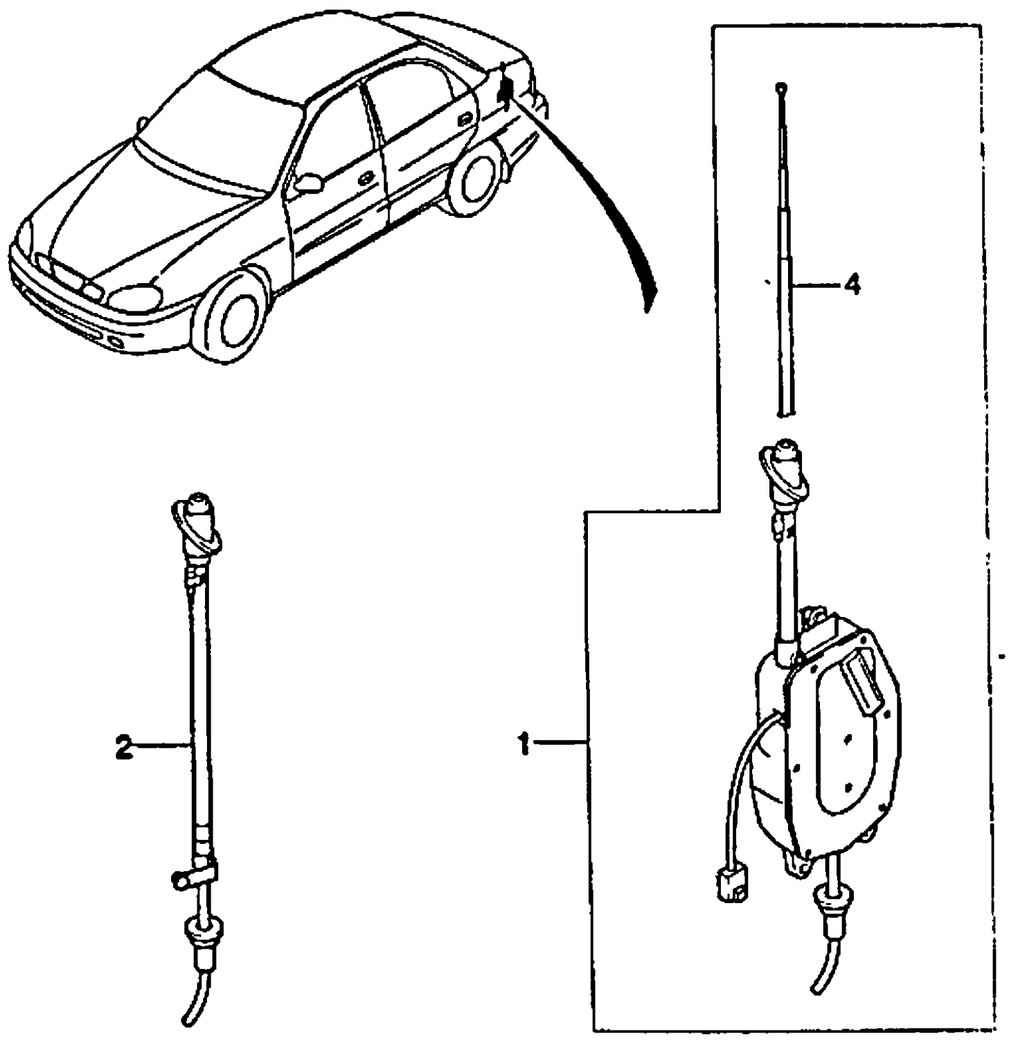

KEY NO.		PART NAME														
		MODEL														
				BODY			LEVEL									
ITC	PART NO	ENG	T/A	4N	3H	5H	S	SE	SX	OPTION	L/R	QTY	EFFECTIVE DATE FROM	EFFECTIVE DATE TO	REMARKS	P/CODE
	[01]	(E)ANTENNA A-AUTOMATIC (D)ANTENNE AUTOMATISCH									(F)ANTENNE-AUTOMATIQUE (S)ANTENA-AUTOMATICO					
	96303522	.	.	B	.	.	.	.	S	&U75		1				AN
	96219197	.	.	.	B	.	.	.	S	&U75		1				AH
	96242523	.	.	.	.	B	.	.	S	&U75		1				A5
	[02]	(E)ANTENNA A-MANUAL (D)ANTENNE MANUELLE									(F)ANTENNE-MANUELLE (S)ANTENA-MANUAL					
	96303521	.	.	B	.	.	S	S	.	&U73		1		970407		MN
O	96255031	.	.	B	.	.	S	S	.	&U73		1	970407			NM
	96219195	.	.	.	B	.	S	.	.	&U73		1		970407		MH
O	96255032	.	.	.	B	.	S	.	.	&U73		1	970407			3M
	96242521	.	.	.	.	B	S	.	.	&U73		1		970407		M5
O	96255033	.	.	.	.	B	S	.	.	&U73		1	970407			5M
	[04]	(E)POLE-ANTENNA (D)STAB,ANTENNE									(F)HAMPE-ANTENNE (S)POSTE-ANTENA					
	S5420004	.	.	B	B	B	.	.	S	&U75		1				

ENG(ENGINE)	T/A(TRANSAXLE)	BODY TYPE
Y = 1.5SOHC 6 = 1.6DOHC . = COMMON	M = MANUAL T/A A = AUTOMATIC T/A . = COMMON	4 N = 4 DOOR NOTCHBACK 3 H = 3 DOOR HATCHBACK 5 H = 5 DOOR HATCHBACK

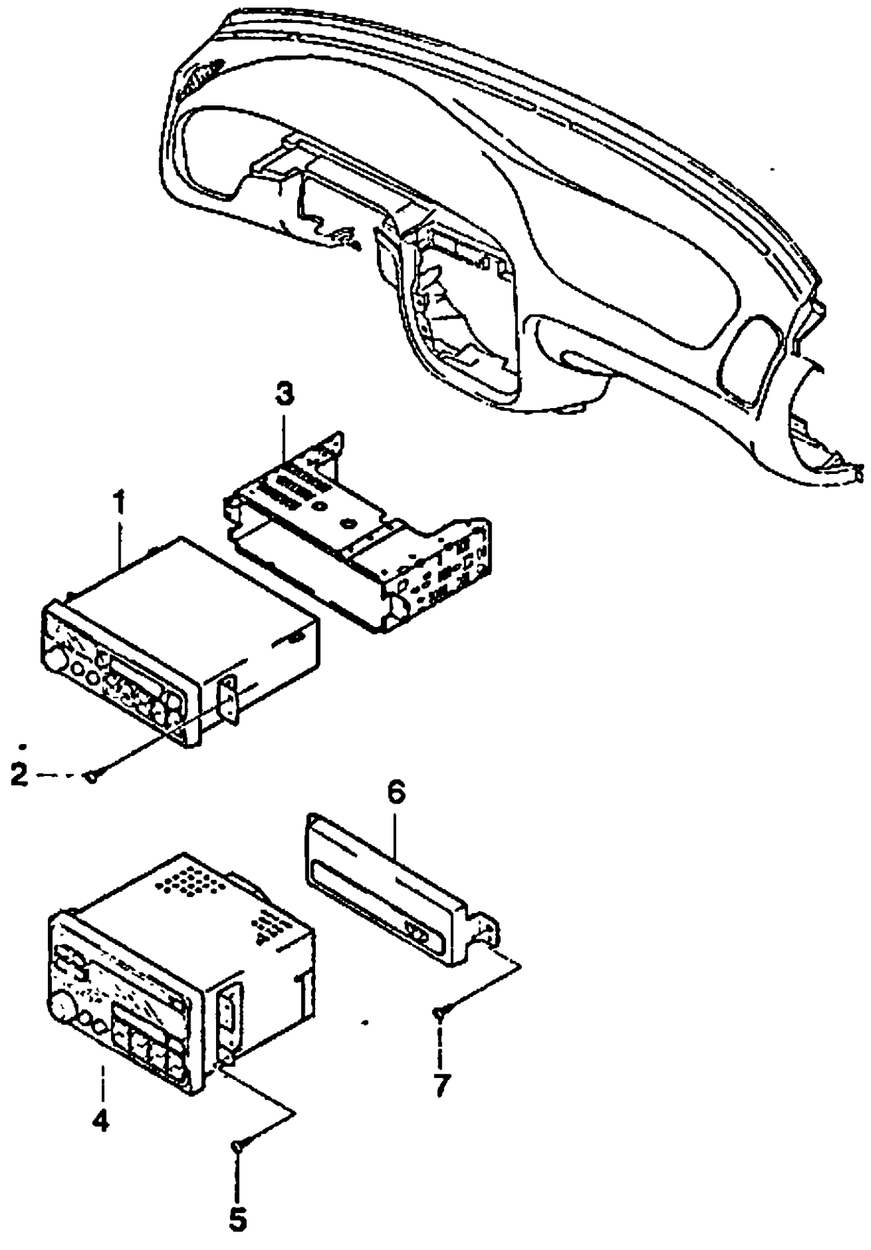

KEY NO.		PART NAME															
ITC	PART NO	MODEL								OPTION	L/R	QTY	EFFECTIVE DATE		REMARKS	P/CODE
		ENG	T/A	BODY			LEVEL						FROM	TO		
				4N	3H	5H	S	SE	SX							
[01]		(E)CASSETTE (D)KASSETTE									(F)CASSETTE (S)CASETE					
96252563		.	.	B	B	B	O	O	O	&UNA-XLA/2G3		1				BA
96242627		.	.	B	B	B	A	A	A	&UNA&2G3		1				BE
96252737		.	.	B	B	B	A	A	A	&UNA&XLA		1				BL
96248434		.	.	B	B	B	O	O	O	&UN1-XLA/2G3		1				SA
96222377		.	.	B	B	B	A	A	A	&UN1&2G3		1				SE
96222379		.	.	B	B	B	A	A	A	&UN1&XLA		1				SL
96248432		.	.	B	B	B	.	O	O	&UN6-XLA/2G3		1				DD
96312715		.	.	B	B	B	.	A	A	&UN6&2G3		1				WF
96312721		.	.	B	B	B	.	A	A	&UN6&XLA		1				WK
[02]		(E)SCREW (D)SCHRAUBE									(F)VIS (S)TORNILLO					
02116-05165		.	.	B	B	B	O	O	O	&UN1/UN6		2				
[03]		(E)FRAME-CASSETTE (D)RAHMEN-KASSETTE									(F)CADRE-CASSETTE (S)ARMADURA-CASETE					
96254552		.	.	B	B	B	S	S	S			1			A/S ONLY	
[04]		(E)PLAYER-COMPACT DISK (D)SPIELER,CD									(F)MAGNETOPHONE (S)PLACA-CD					
96252564		.	.	B	B	B	.	O	O	-XLA/2G3		1				CA
96229570		.	.	B	B	B	.	A	A	&2G3		1				CE
96229572		.	.	B	B	B	.	A	A	&XLA		1				CL
[05]		(E)SCREW (D)SCHRAUBE									(F)VIS (S)TORNILLO					
02116-05165		.	.	B	B	B	.	O	O			4				
[06]		(E)COVER-BLANK,RADIO (D)DECKEL									(F)COUVERCLE (S)CUBIERTA					

ENG(ENGINE)	T/A(TRANSAXLE)	BODY TYPE
Y = 1.5SOHC 6 = 1.6DOHC . = COMMON	M = MANUAL T/A A = AUTOMATIC T/A . = COMMON	4 N = 4 DOOR NOTCHBACK 3 H = 3 DOOR HATCHBACK 5 H = 5 DOOR HATCHBACK

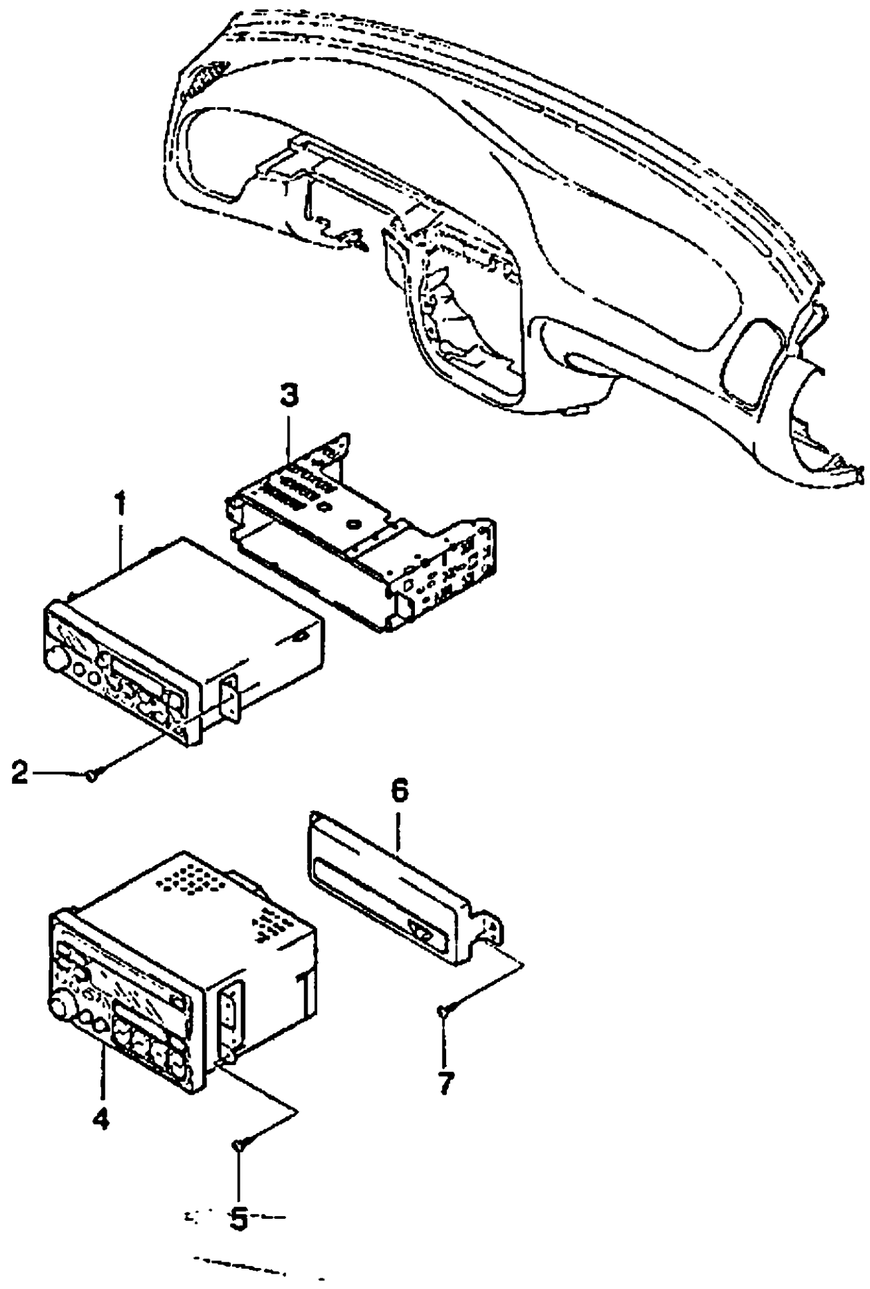

KEY NO. ITC	PART NO	MODEL ENG	T/A	BODY 4N	3H	5H	LEVEL S	SE	SX	OPTION	L/R	QTY	EFFECTIVE DATE FROM	TO	REMARKS	P/CODE
	96236135	.	.	B	B	B	S	S	S			1				BR
	[07]	(E)SCREW (D)SCHRAUBE									(F)VIS (S)TORNILLO					
	02116-05165	.	.	B	B	B	S	S	S			2				

ENG(ENGINE)	T/A(TRANSAXLE)	BODY TYPE
Y = 1.5SOHC 6 = 1.6DOHC . = COMMON	M = MANUAL T/A A = AUTOMATIC T/A . = COMMON	4 N = 4 DOOR NOTCHBACK 3 H = 3 DOOR HATCHBACK 5 H = 5 DOOR HATCHBACK

5510 AIR BAG SYSTEM

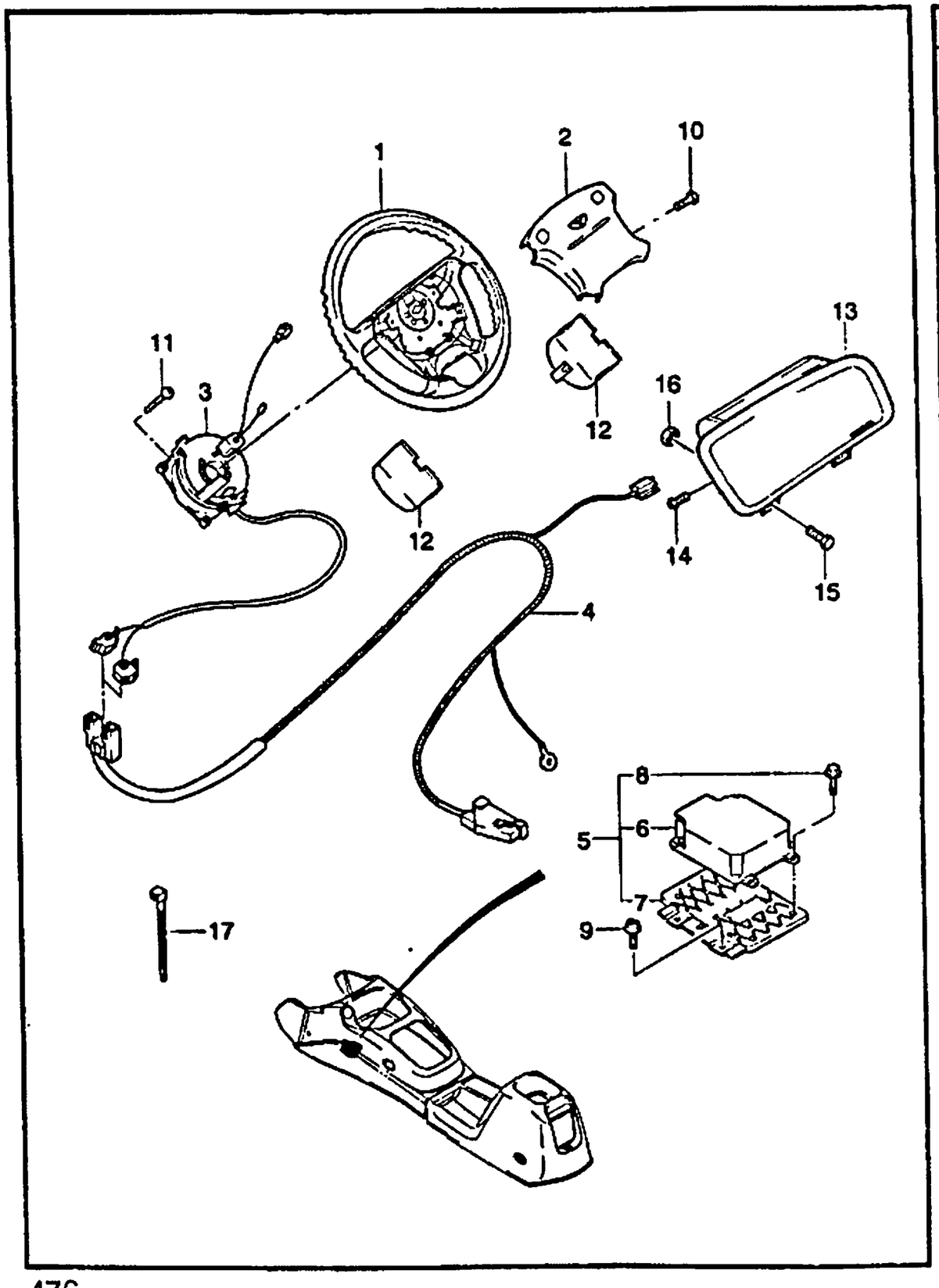

KEY NO.	PART NAME														
ITC	PART NO	MODEL								OPTION	L/R	QTY	EFFECTIVE DATE		REMARKS	P/CODE
		ENG	T/A	BODY			LEVEL						FROM	TO		
				4N	3H	5H	S	SE	SX							
[01]	(E)WHEEL A-STEERING,W/SIR (D)RAD,LENK										(F)VOLANT DE DIRECTION (S)RUEDA-VOLANTE					
96238765	. .			B	B	B	.	O	O			1				HP
[02]	(E)MODULE-AIR BAG DRIVER (D)MODUL,AIR BAG										(F)MODULE-AIR BAG (S)MODULO-AIR BAG					
96220427	. .			B	B	B	.	O	O			1				
[03]	(E)SPRING A-AIR BAG CLOCK (D)FEDERUNG										(F)RESSORT (S)RESORTE					
96230847	. .			B	B	B	.	O	O			1				
[04]	(E)WIRING-AIR BAG (D)VERDRAHTUNG,AIR BAG										(F)CABLAGE (S)INSTALACION ELECTRICA					
96304225	. .			B	B	B	.	O	O	&AJ3		1				WE
96217551	. .			B	B	B	.	O	O	&ABF		1				WD
[05]	(E)MODULE-SENSOR&DIAGNOSTIC (D)MODUL,SENSOR&DIAGNOSTIK										(F)MODULE (S)MODULO					
96220438	. .			B	B	B	.	O	O	&AJ3		1				
96220425	. .			B	B	B	.	O	O	&ABF		1				
[06]	(E)MODULE-SENSOR&DIAGNOSTIC (D)MODUL,SENSOR&DIAGNOSTIK										(F)MODULE (S)MODULO					
96220439	. .			B	B	B	.	O	O	&AJ3		1				
96217003	. .			B	B	B	.	O	O	&ABF		1				
[07]	(E)BRACKET-AIR BAG MODULE (D)TRÄGER,AIR BAG MODUL										(F)SUPPORT (S)SOPORTE					
96217010	. .			B	B	B	.	O	O			1				
[08]	(E)BOLT (D)SCHRAUBE										(F)BOULON (S)PERNO					
09119-06011	. .			B	B	B	.	O	O			3				

ENG(ENGINE)	T/A(TRANSAXLE)	BODY TYPE
Y = 1.5SOHC 6 = 1.6DOHC . = COMMON	M = MANUAL T/A A = AUTOMATIC T/A . = COMMON	4 N = 4 DOOR NOTCHBACK 3 H = 3 DOOR HATCHBACK 5 H = 5 DOOR HATCHBACK

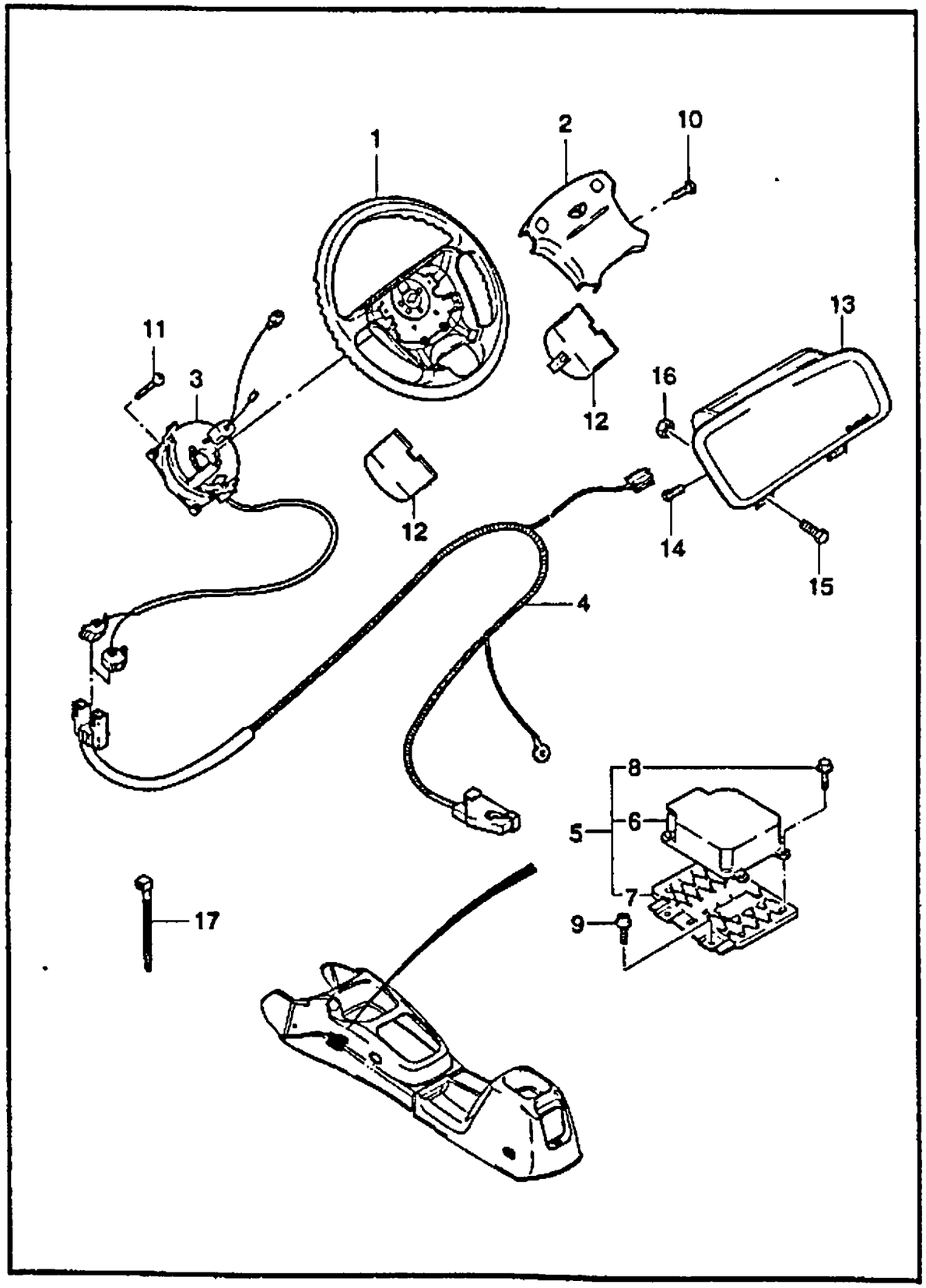

KEY NO.	PART NAME														
ITC	PART NO	MODEL								OPTION	L/R	QTY	EFFECTIVE DATE		REMARKS	P/CODE
		ENG	T/A	BODY			LEVEL						FROM	TO		
				4N	3H	5H	S	SE	SX							
[09]	(E)BOLT (D)SCHRAUBE										(F)BOULON (S)PERNO					
09116-06027	. .			B	B	B	.	O	O			4			W/WASHER	
[10]	(E)BOLT (D)SCHRAUBE										(F)BOULON (S)PERNO					
96179417	. .			B	B	B	.	O	O			2			MB	
[11]	(E)SCREW-TAPPING (D)SCHRAUBE										(F)VIS (S)TORNILLO					
03110-48139	. .			B	B	B	.	O	O			4				
[12]	(E)CAP-STRG WHEEL LWR COVER (D)DECKEL										(F)CHAPEAU (S)TAPA					
96238766	. .			B	B	B	.	O	O		LH	1				
96238767	. .			B	B	B	.	O	O		RH	1				
[13]	(E)MODULE-AIR BAG,PASSENGER (D)MODUL,AIR BAG										(F)MODULE-AIR BAG (S)MODULO-AIR BAG					
96220430	. .			B	B	B	.	O	O	&ABF-2G3		1				
96245086	. .			B	B	B	.	A	A	&ABF&2G3		1				
[14]	(E)BOLT (D)SCHRAUBE										(F)BOULON (S)PERNO					
09119-06011	. .			B	B	B	.	O	O	&ABF		4				
[15]	(E)BOLT (D)SCHRAUBE										(F)BOULON (S)PERNO					
09119-08013	. .			B	B	B	.	O	O	&ABF		2				
[16]	(E)NUT (D)MUTTER										(F)ECROU (S)TUERCA					
09159-08003	. .			B	B	B	.	O	O	&ABF		2				
[17]	(E)STRAP-MOUNTING (D)BAND,MONTAGE										(F)BRETELLE-MONTAGE (S)BRIDA-MONTAJE					

ENG(ENGINE)	T/A(TRANSAXLE)	BODY TYPE
Y = 1.5SOHC 6 = 1.6DOHC . = COMMON	M = MANUAL T/A A = AUTOMATIC T/A . = COMMON	4 N = 4 DOOR NOTCHBACK 3 H = 3 DOOR HATCHBACK 5 H = 5 DOOR HATCHBACK

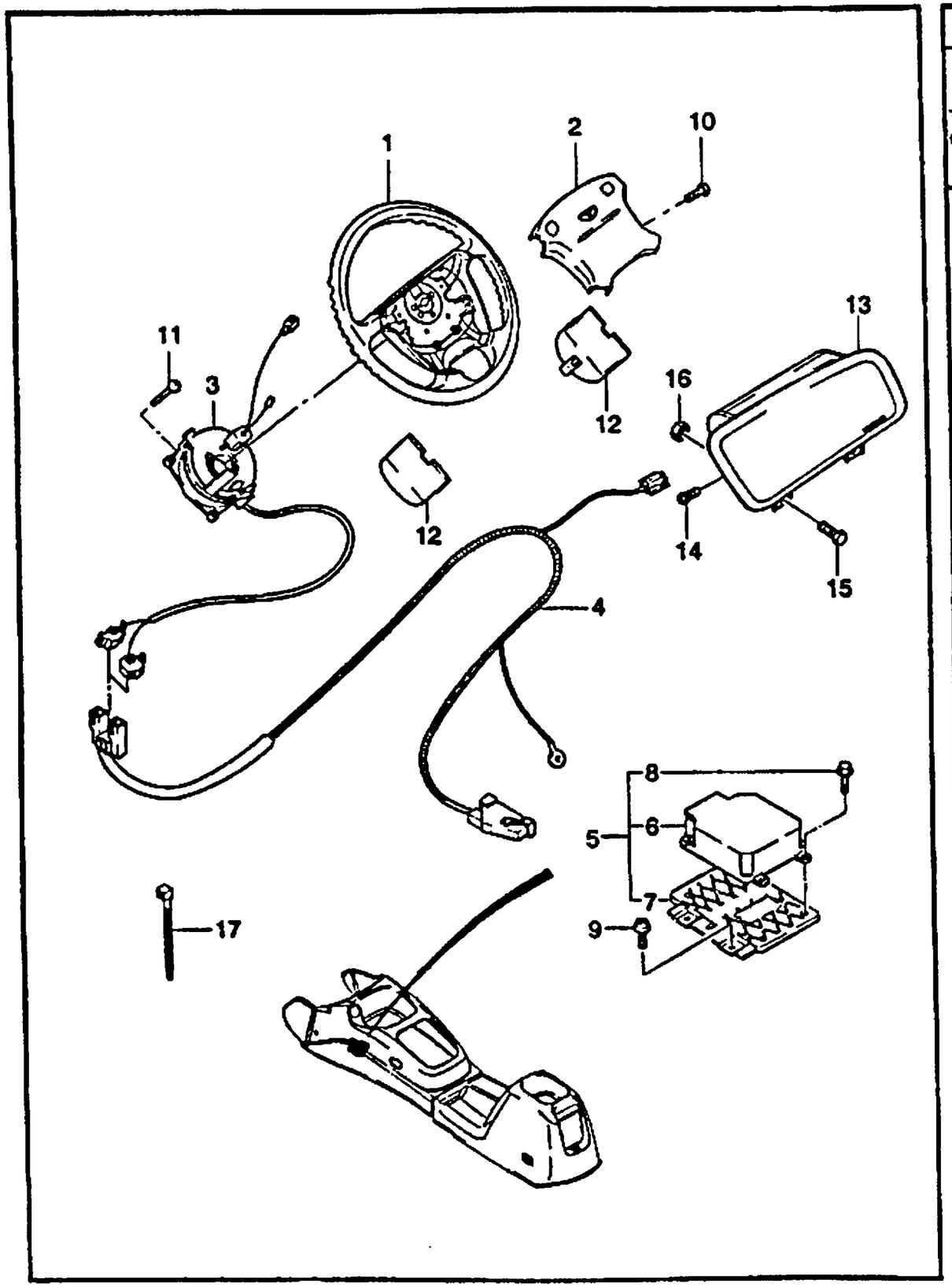

KEY NO.		PART NAME															
ITC	PART NO	MODEL								OPTION	L/R	QTY	EFFECTIVE DATE		REMARKS	P/CODE
		ENG	T/A	BODY			LEVEL						FROM	TO		
				4N	3H	5H	S	SE	SX							
	96224564	.	.	B	B	B	.	O	O	&ABF		1				

ENG(ENGINE)	T/A(TRANSAXLE)	BODY TYPE
Y = 1.5SOHC 6 = 1.6DOHC . = COMMON	M = MANUAL T/A A = AUTOMATIC T/A . = COMMON	4 N = 4 DOOR NOTCHBACK 3 H = 3 DOOR HATCHBACK 5 H = 5 DOOR HATCHBACK

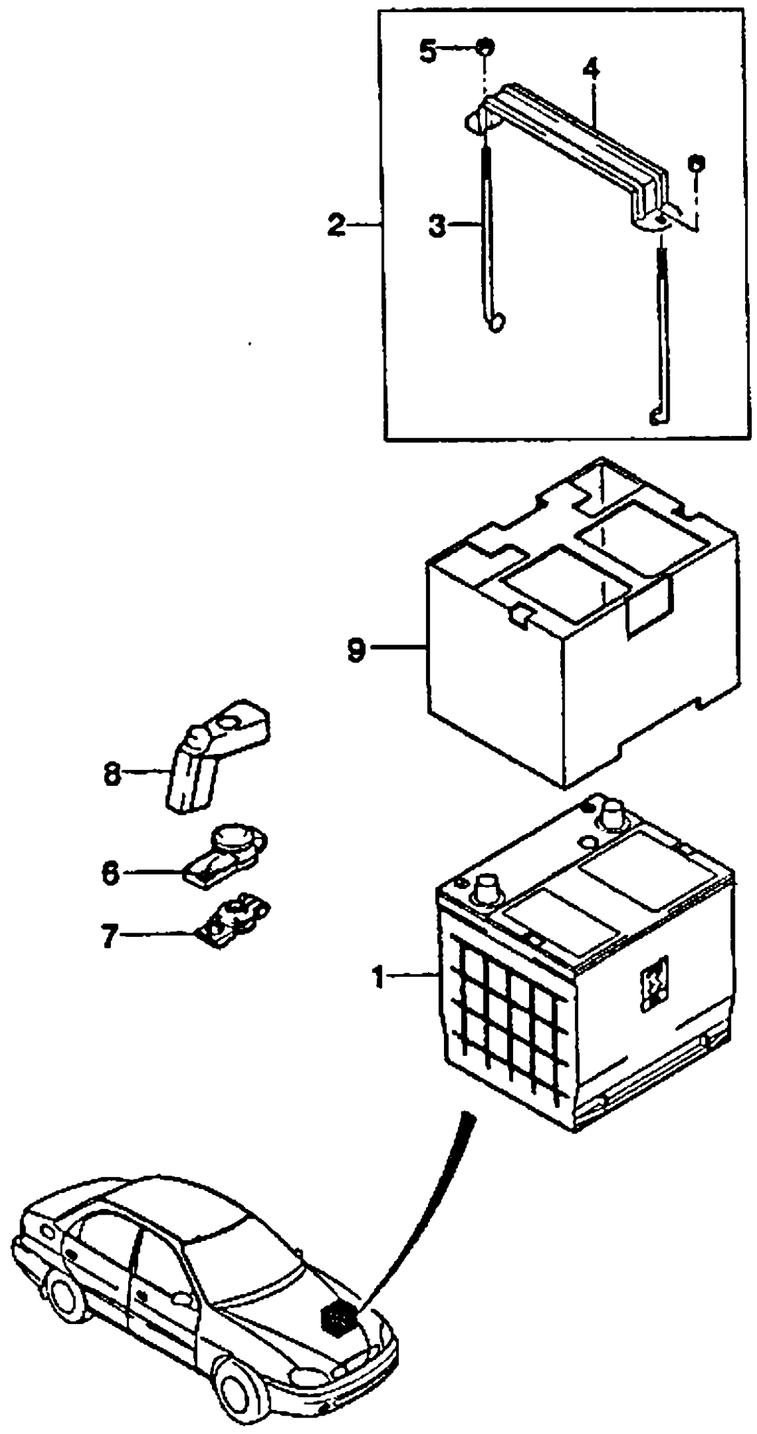

KEY NO. ITC	PART NO	MODEL ENG	MODEL T/A	MODEL BODY 4N	MODEL BODY 3H	MODEL BODY 5H	MODEL LEVEL S	MODEL LEVEL SE	MODEL LEVEL SX	OPTION	L/R	QTY	EFFECTIVE DATE FROM	EFFECTIVE DATE TO	REMARKS	P/CODE
		(E)BATTERY A									(F)BATTERIE					
[01]		(D)BATTERIE									(S)BATERIA					
96230966		.	.	B	B	B	S	S	S			1			55A	TB
96190267		.	.	B	B	B	A	A	A	&XPH		1			45A	TA
		(E)HOLDER A-BATTERY									(F)MONTURE					
[02]		(D)BEHÄLTER									(S)RETNEDOR					
96190269		.	.	B	B	B	S	S	S			1				MS
		(E)ROD-HOLDER									(F)TRINGLE-BATTERIE					
[03]		(D)STAB,BATTERIE									(S)VARILLA-BATERIA					
96305846		.	.	B	B	B	S	S	S			2				
		(E)BAR-HOLDER									(F)BARRE					
[04]		(D)STANGE									(S)BARRA					
96305845		.	.	B	B	B	S	S	S			1				
		(E)NUT-HEXAGON									(F)ECROU					
[05]		(D)MUTTER									(S)TUERCA					
08361-25063		.	.	B	B	B	S	S	S			2			W/WASHER	
		(E)COVER-BATTERY TERMINAL									(F)CHAPEAU-POLE DE BATTERIE					
[06]		(D)DECKEL,BATTERIE-PFOSTEN									(S)CUBIERTA					
96187088		.	.	B	B	B	S	S	S			1			(-) TERMINAL	
96187087		.	.	B	B	B	S	S	S			1			(+) TERMINAL	
		(E)CONNECTOR A-BATTERY									(F)CONNECTEUR-BATTERIE					
[07]		(D)VERBINDUNG,BATTERIE									(S)CONECTOR-BATERIA					
96187092		.	.	B	B	B	S	S	S			1			(-) TERMINAL	
96187093		.	.	B	B	B	S	S	S			1			(+) TERMINAL	
		(E)CAP-BATTERY									(F)CHAPEAU-POLE DE BATTERIE					
[08]		(D)DECKEL,BATTERIE-PFOSTEN									(S)TAPA					
96239892		.	.	B	B	B	S	S	S			1			(-) TERMINAL	
96239891		.	.	B	B	B	S	S	S			1			(+) TERMINAL	

ENG(ENGINE)	T/A(TRANSAXLE)	BODY TYPE
Y = 1.5SOHC	M = MANUAL T/A	4 N = 4 DOOR NOTCHBACK
6 = 1.6DOHC	A = AUTOMATIC T/A	3 H = 3 DOOR HATCHBACK
. = COMMON	. = COMMON	5 H = 5 DOOR HATCHBACK

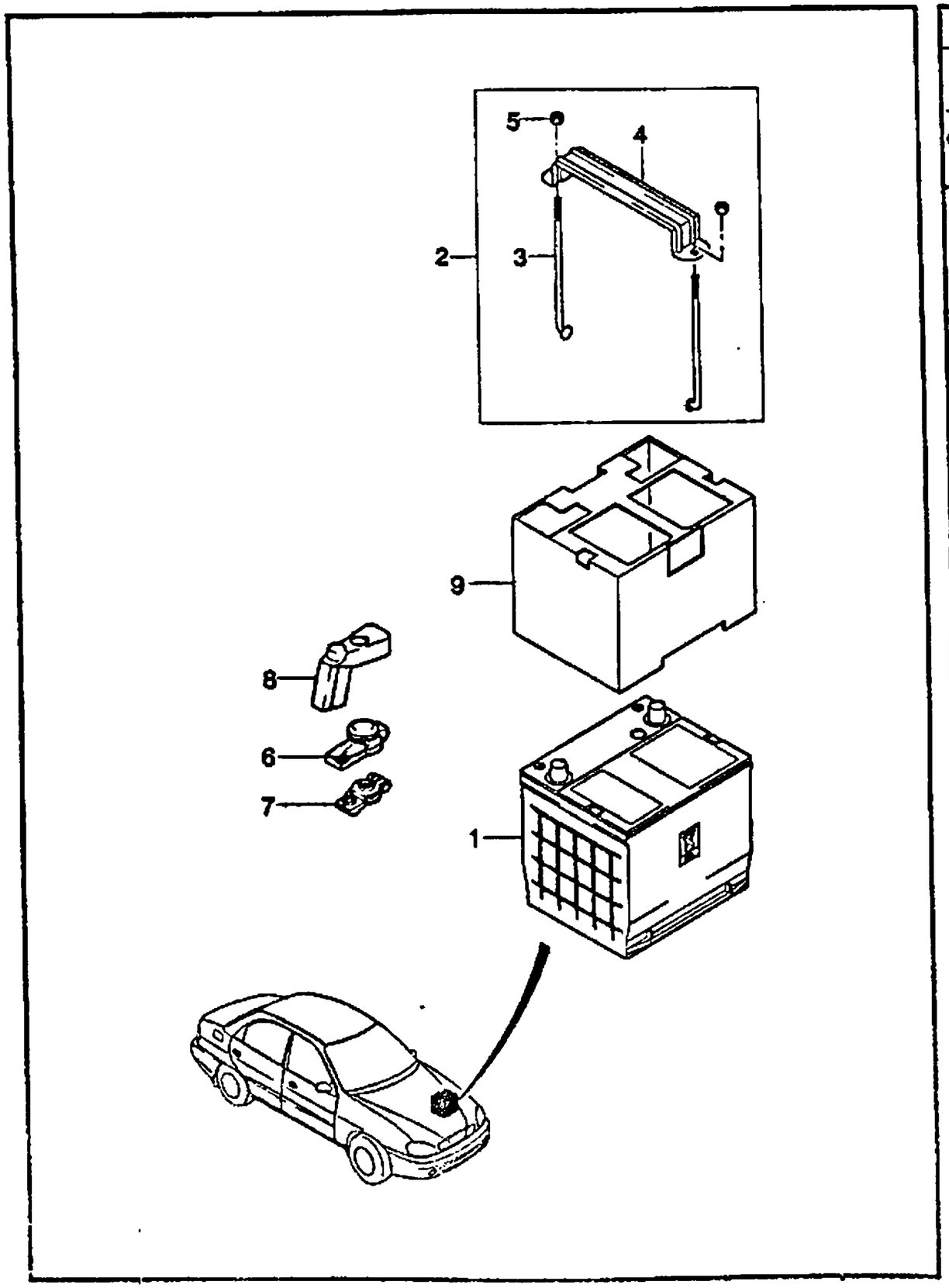

KEY NO.	PART NAME														
ITC	PART NO	MODEL								OPTION	L/R	QTY	EFFECTIVE DATE		REMARKS	P/CODE
		ENG	T/A	BODY 4N	BODY 3H	BODY 5H	LEVEL S	LEVEL SE	LEVEL SX				FROM	TO		
	[09]	(E)SHIELD A-HEAT,BATTERY (D)SCHILD									(F)BOUCLIER (S)ESCUDO					
	96303981	.	.	B	B	B	A	A	A	&XHA		1				

ENG(ENGINE)	T/A(TRANSAXLE)	BODY TYPE
Y = 1.5SOHC 6 = 1.6DOHC . = COMMON	M = MANUAL T/A A = AUTOMATIC T/A . = COMMON	4 N = 4 DOOR NOTCHBACK 3 H = 3 DOOR HATCHBACK 5 H = 5 DOOR HATCHBACK

5620 FUSE & RELAY

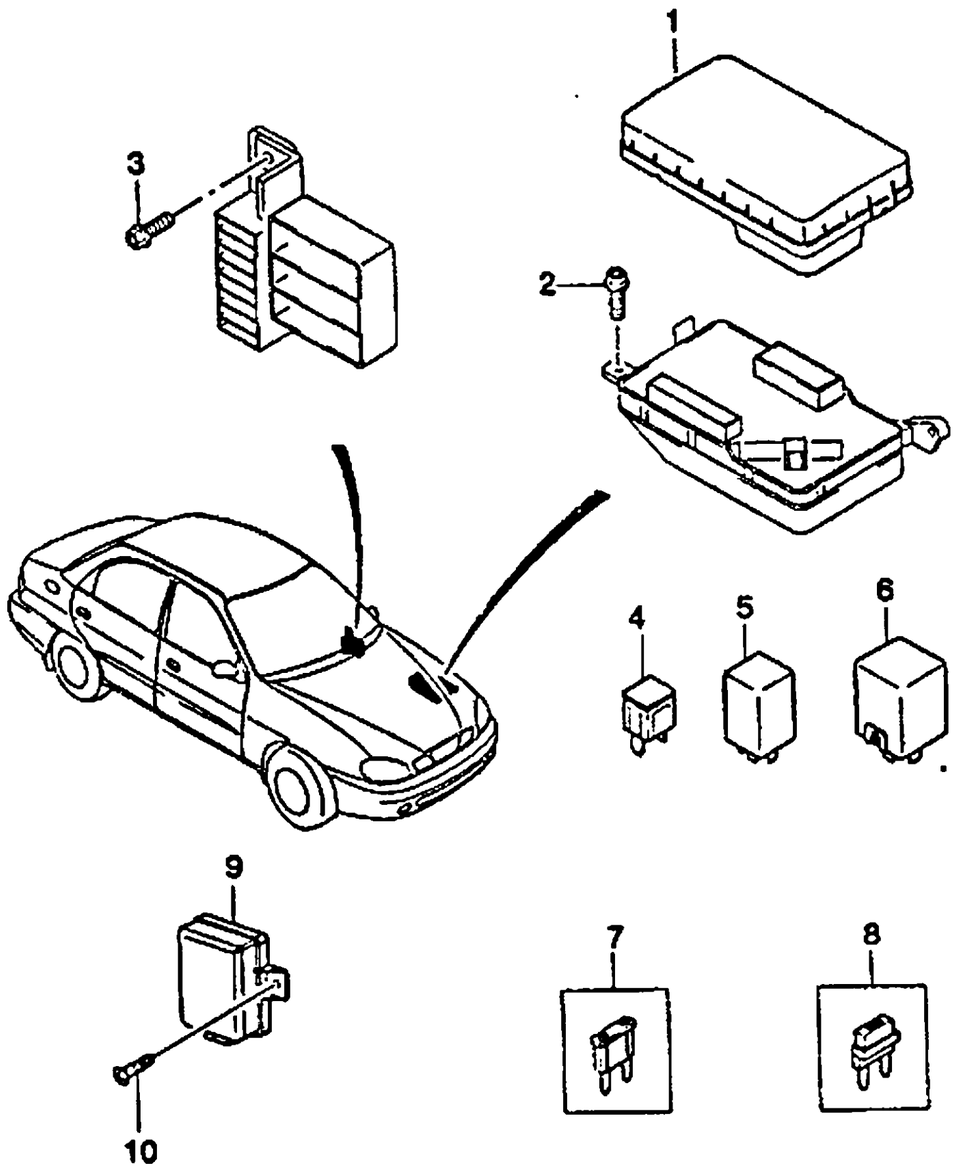

KEY NO. ITC	PART NO	MODEL ENG	T/A	BODY 4N	3H	5H	LEVEL S	SE	SX	OPTION	L/R	QTY	EFFECTIVE DATE FROM	TO	REMARKS	P/CODE
[01]		(E)COVER-FUSE BOX,UPPER (D)DECKEL									(F)CARTER (S)CUBIERTA					
	96245532	.	.	B	B	B	S	S	S			1				
[02]		(E)BOLT-HEXAGON FLANGE (D)SCHRAUBE									(F)BOULON (S)PERNO					
	01514-06165	.	.	B	B	B	S	S	S			2				
[03]		(E)BOLT-HEXAGON FLANGE (D)SCHRAUBE									(F)BOULON (S)PERNO					
	01514-06203	.	.	B	B	B	S	S	S			3				
[04]		(E)FUSE-SLOW (D)SICHERUNG									(F)FUSIBLE (S)FUSIBLE					
	61009	.	.	B	B	B	S	S	S			1			20A	
	61010	.	.	B	B	B	S	S	S			1			30A	
	61011	.	.	B	B	B	S	S	S			1			40A	
	61001	.	.	B	B	B	S	S	S			1			80A	
[05]		(E)RELAY A (D)RELAIS									(F)RELAI (S)RELEVADOR					
	90229206	.	.	B	B	B	S	S	S			1			CLG FAN LOW	
	90191753	.	.	B	B	B	S	S	S			1			FUEL PUMP	
	90244312	.	.	B	B	B	S	S	S			1			A/C BLOWER	
	96312300	.	.	B	B	B	S	S	S			1			INT. WIPER	
	90229206	.	.	B	B	B	S	S	S			1			HEAD LAMP	
	90229206	.	.	B	B	B	S	S	S			1			TAIL LAMP	
	90244312	.	.	B	B	B	S	S	S			1			RR DEFOGGER	
	90229206	.	.	B	B	B	S	S	S			1			HORN	
	90244312	.	.	B	B	B	O	O	S	&A32/A31		1			PWR WINDOW	

ENG(ENGINE)	T/A(TRANSAXLE)	BODY TYPE
Y = 1.5SOHC	M = MANUAL T/A	4 N = 4 DOOR NOTCHBACK
6 = 1.6DOHC	A = AUTOMATIC T/A	3 H = 3 DOOR HATCHBACK
. = COMMON	. = COMMON	5 H = 5 DOOR HATCHBACK

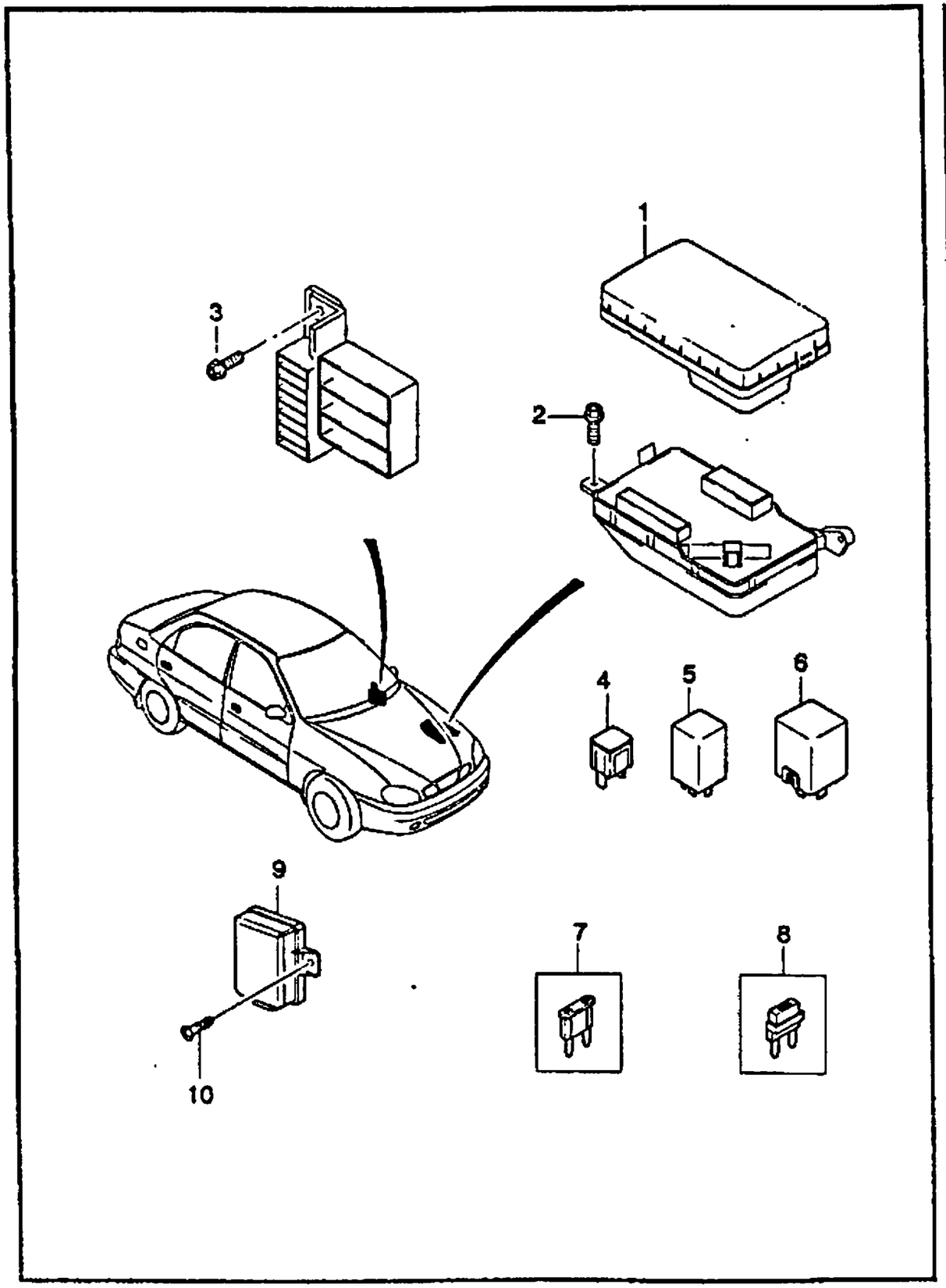

KEY NO. ITC	PART NO	MODEL ENG	T/A	BODY 4N	3H	5H	LEVEL S	SE	SX	OPTION	L/R	QTY	EFFECTIVE DATE FROM	TO	REMARKS	P/CODE
	90229206	.	.	B	B	B	.	.	O	&T97		1			FR FOG LAMP	
	90191753	.	.	B	B	B	O	O	O	&C59/C60		1			CLG FAN	
	90244312	.	.	B	B	B	O	O	O	&C59/C60		1			CLG FAN HIGH	
	90229208	.	.	B	B	B	O	O	O	&C59/C60		1			COMPRESSOR	
	12088595	.	.	B	B	B	.	O	O	&JL9		1			ABS	
	96242630	.	.	B	B	B	A	A	A	&T98		1			RR FOG LAMP	
[06]	(E)BLINKER UNIT (D)BLINKER										(F)UNITE CLIGNOTANTE (S)UNIDAD INTERMITENTE					
	96312545	.	.	B	B	B	S	S	S			1			2/4X21W	
[07]	(E)FUSE-MIN (D)SICHERUNG										(F)FUSIBLE (S)FUSIBLE					
	96234924	.	.	B	B	B	S	S	S			1			10AMP	
	96234923	.	.	B	B	B	S	S	S			1			15AMP	
	96234922	.	.	B	B	B	S	S	S			1			20AMP	
	96234921	.	.	B	B	B	S	S	S			1			25AMP	
[08]	(E)DIODE (D)DIODE										(F)DIODE (S)DIODE					
	96234932	.	.	B	B	B	S	S	S			1				
[09]	(E)MODULE A-CHIME BELL (D)MODUL,GLOCKE										(F)MODULE-CARILLON (S)MODULO-CAMPANA DE REPIQUE					
	96219056	.	.	B	B	B	S	S	S	-U44		1				CN
	96223528	.	.	B	B	B	A	A	A	&U44		1				CY
[10]	(E)SCREW-TAPPING (D)SCHRAUBE										(F)VIS (S)TORNILLO					
	03112-42133	.	.	B	B	B	S	S	S			2				

ENG(ENGINE)	T/A(TRANSAXLE)	BODY TYPE
Y = 1.5SOHC 6 = 1.6DOHC . = COMMON	M = MANUAL T/A A = AUTOMATIC T/A . = COMMON	4 N = 4 DOOR NOTCHBACK 3 H = 3 DOOR HATCHBACK 5 H = 5 DOOR HATCHBACK

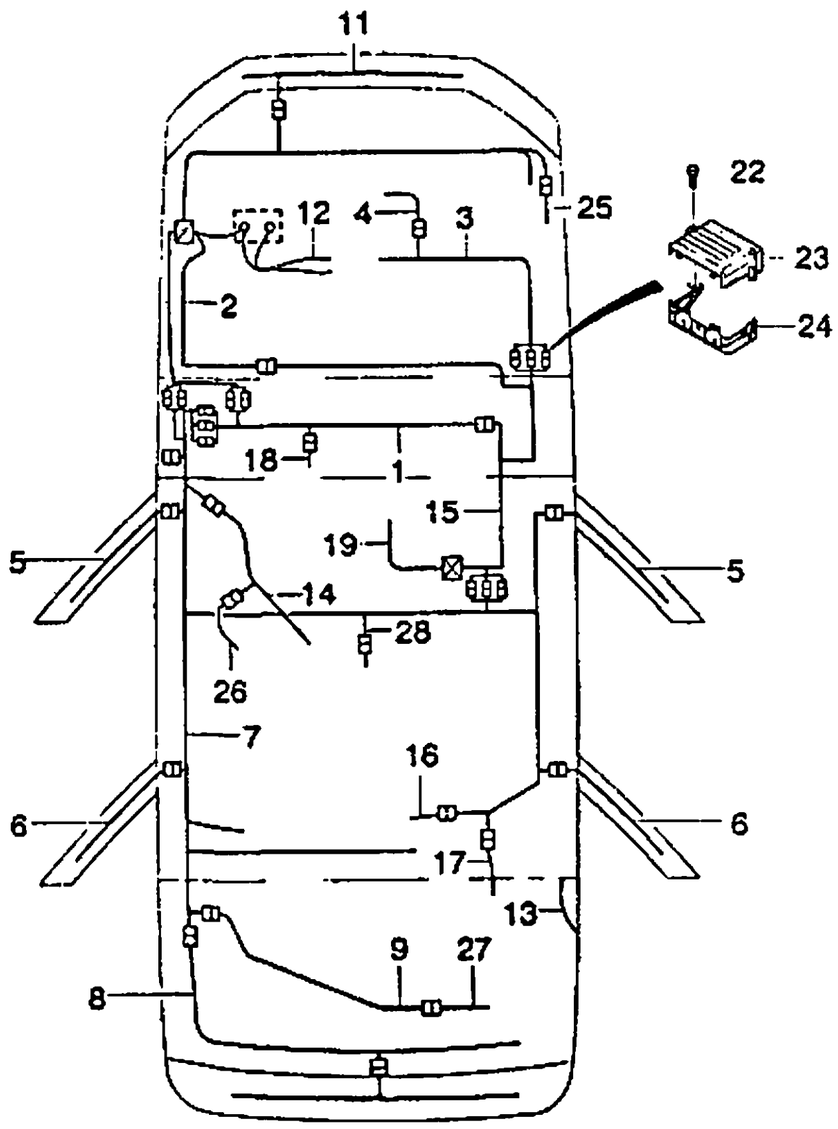

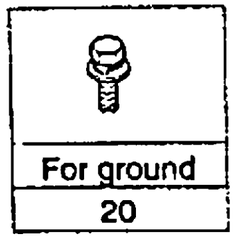

KEY NO. ITC	PART NO	MODEL ENG	MODEL T/A	MODEL BODY 4N	MODEL BODY 3H	MODEL BODY 5H	MODEL LEVEL S	MODEL LEVEL SE	MODEL LEVEL SX	OPTION	L/R	QTY	EFFECTIVE DATE FROM	EFFECTIVE DATE TO	REMARKS	PICODE
	[01]	(E)WIRING-INSTRUMENT PANEL (D)VERDRAHTUNG,INSTRUMENTENB (F)CABLAGE-TABLEAU DE BORD (S)INSTALACION ELECTRICA														
	96254088	.	.	B	B	B	S	S	S	&D39		1		970907		NM
N	96258719	.	.	B	B	B	S	S	S	&D39		1	970901			FU
	96254084	.	.	B	B	B	A	A	A	&D39&T98-HL4/UM1		1		970901		NH
N	96258715	.	.	B	B	B	A	A	A	&D39&T98-HL4/UM1		1	970901			FQ
	96254081	.	.	B	B	B	A	A	A	&D39		1		970901	FOR LITHUANIA, POLAND	NE
N	96258712	.	.	B	B	B	A	A	A	&D39		1	970901		FOR LITHUANIA, POLAND	FM
	96254082	.	.	B	B	B	A	A	A	&D39		1		970901	FOR ISRAEL	NF
N	96258713	.	.	B	B	B	A	A	A	&D39		1	970901		FOR ISRAEL	FN
	96254083	.	.	B	B	B	A	A	A	&D39&HL4&T98-UM1		1		970901		NG
N	96258714	.	.	B	B	B	A	A	A	&D39&HL4&T98-UM1		1	970901			FP
	96254086	.	.	B	B	B	A	A	A	&D39&UM1-HL4/T98		1		970901		NK
N	96258717	.	.	B	B	B	A	A	A	&D39&UM1-HL4/T98		1	970901			FS
	96254078	.	.	B	B	B	.	.	A	&DD4&UM1-HL4/T98		1				NB
	96254080	.	.	B	B	B	.	.	O	&DD4		1				ND
	96252219	.	.	B	B	B	.	.	A	&DD4&T98-HL4/UM1		1				JJ
	96252216	.	.	B	B	B	.	.	A	&DD4		1			FOR LITHUANIA, POLAND	JF
	96252217	.	.	B	B	B	.	.	A	&DD4		1			FOR ISRAEL	JG
	96252218	.	.	B	B	B	.	.	A	&DD4&HL4&T98-UM1		1				JH
	96254087	.	.	B	B	B	A	A	A	&D39&HL4-UM1/T98		1		970901	NOT APPLIED	NL
N	96258718	.	.	B	B	B	A	A	A	&D39&HL4-UM1/T98		1	970901		NOT APPLIED	FT

ENG(ENGINE)	T/A(TRANSAXLE)	BODY TYPE
Y = 1.5SOHC 6 = 1.6DOHC . = COMMON	M = MANUAL T/A A = AUTOMATIC T/A . = COMMON	4 N = 4 DOOR NOTCHBACK 3 H = 3 DOOR HATCHBACK 5 H = 5 DOOR HATCHBACK

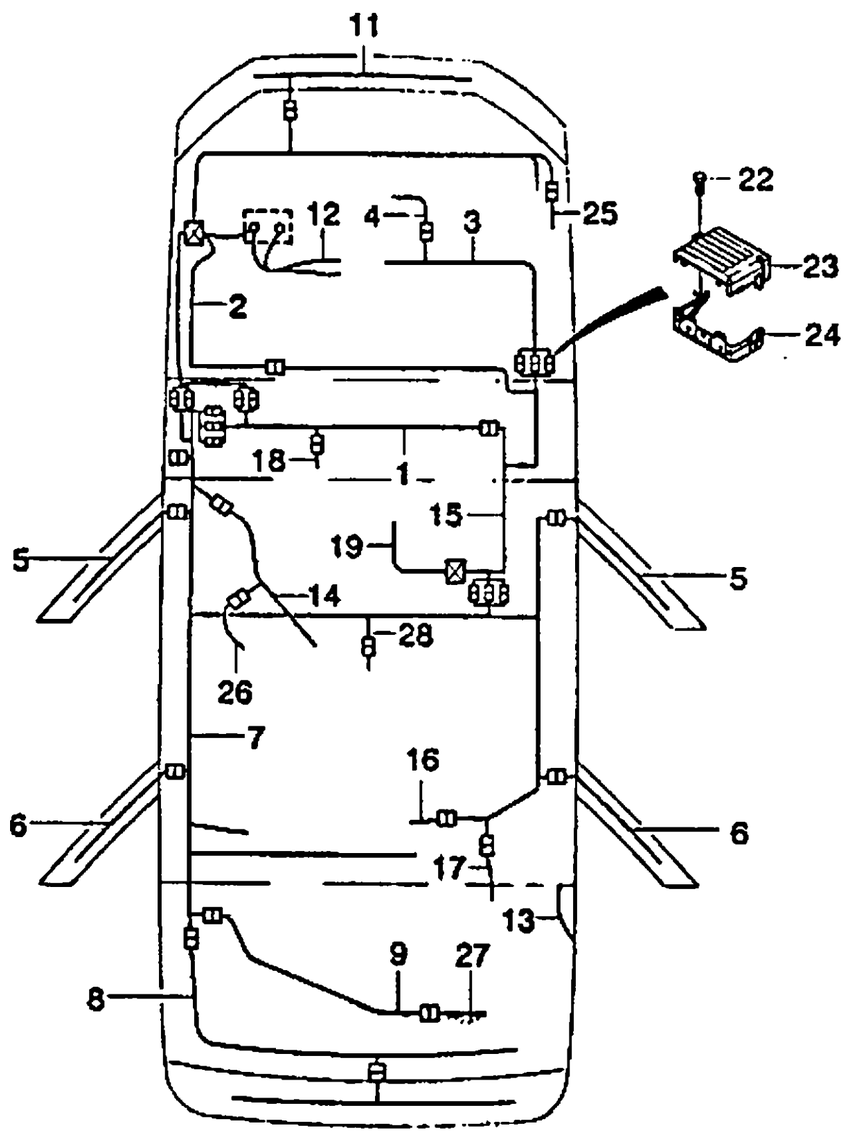

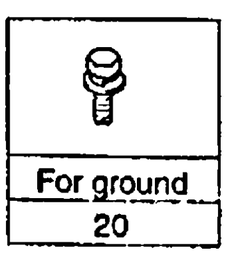

KEY NO. ITC	PART NO	MODEL ENG	T/A	BODY 4N	3H	5H	LEVEL S	SE	SX	OPTION	L/R	QTY	EFFECTIVE DATE FROM	TO	REMARKS	P/CODE
	96254077	.	.	B	B	B	.	.	A	&DD4&HL4&UM1-T98		1			NOT APPLIED	NA
	96254079	.	.	B	B	B	.	.	A	&DD4&HL4-T98/UM1		1			NOT APPLIED	NC
[02]		(E)WIRING-FRONT (D)VERDRAHTUNG,VORNE									(F)CABLAGE-AVANT (S)INSTALACION ELECTRICA					
	96252265	.	.	B	B	B	S	S	S	&C46-JL9/T97		1			SINGLE HORN	XR
	96252257	.	.	B	B	B	.	O	O	&C46&JL9-T97		1			SINGLE HORN	XH
	96252263	.	.	B	B	B	.	.	O	&C46&T97-JL9		1			SINGLE HORN	XP
	96252255	.	.	B	B	B	.	.	O	&C46&JL9&T97		1			SINGLE HORN	XF
	96252261	.	.	B	B	B	O	O	O	&C59/C60-JL9/T97		1			SINGLE HORN	XM
	96252253	.	.	B	B	B	.	O	O	&C59/C60&JL9-T97		1			SINGLE HORN	XD
	96252259	.	.	B	B	B	.	.	O	&C59/C60&T97-JL9		1			SINGLE HORN	XK
	96252251	.	.	B	B	B	.	.	O	&C59/C60&JL9&T97		1			SINGLE HORN	XB
	96255192	.	.	B	B	B	.	.	A	&C46-JL9/T97		1			FOR BRAZIL	K9
	96255187	.	.	B	B	B	.	.	A	&C46&JL9&T97		1			FOR BRAZIL	J7
	96255188	.	.	B	B	B	.	.	A	&C46&JL9-T97		1			FOR BRAZIL	J9
	96255191	.	.	B	B	B	.	.	A	&C46&T97-JL9		1			FOR BRAZIL	K7
	96255190	.	.	B	B	B	.	.	A	&C59/C60-JL9/T97		1			FOR BRAZIL	K5
	96255185	.	.	B	B	B	.	.	A	&C59/C60&JL9&T97		1			FOR BRAZIL	J3
	96255186	.	.	B	B	B	.	.	A	&C59/C60&JL9-T97		1			FOR BRAZIL	J5
	96255189	.	.	B	B	B	.	.	A	&C59/C60&T97-JL9		1			FOR BRAZIL	K3
	96252264	.	.	B	B	B	A	A	A	&C46-JL9/T97		1			NOT APPLIED	XQ
	96252256	.	.	B	B	B	.	A	A	&C46&JL9-T97		1			NOT APPLIED	XG
	96252262	.	.	B	B	B	.	.	A	&C46&T97-JL9		1			NOT APPLIED	XN
	96252254	.	.	B	B	B	.	.	A	&C46&JL9&T97		1			NOT APPLIED	XE

ENG(ENGINE)	T/A(TRANSAXLE)	BODY TYPE
Y = 1.5SOHC 6 = 1.6DOHC . = COMMON	M = MANUAL T/A A = AUTOMATIC T/A . = COMMON	4 N = 4 DOOR NOTCHBACK 3 H = 3 DOOR HATCHBACK 5 H = 5 DOOR HATCHBACK

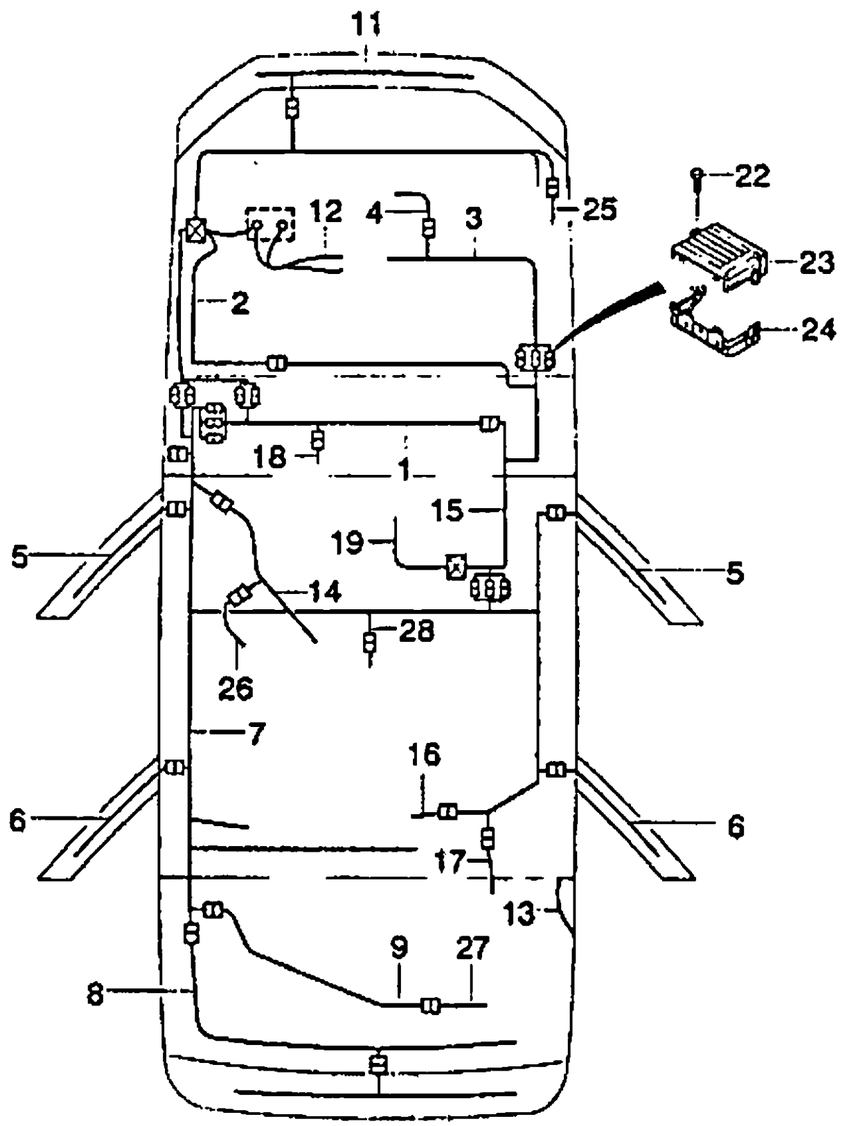

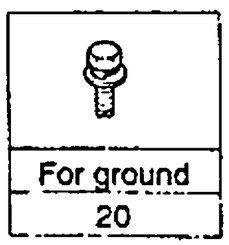

KEY NO. ITC	PART NO	MODEL ENG	T/A	BODY 4N	3H	5H	LEVEL S	SE	SX	OPTION	L/R	QTY	EFFECTIVE DATE FROM	TO	REMARKS	P/CODE
	96252260	.	.	B	B	B	A	A	A	&C59/C60-JL9/T97		1			NOT APPLIED	XL
	96252252	.	.	B	B	B	.	A	A	&C59/C60&JL9-T97		1			NOT APPLIED	XC
	96252258	.	.	B	B	B	.	.	A	&C59/C60&T97-JL9		1			NOT APPLIED	XJ
	96252250	.	.	B	B	B	.	.	A	&C59/C60&JL9&T97		1			NOT APPLIED	XA
	[03]	(E)WIRING-ENGINE (D)VERDRAHTUNG,MOTOR									(F)CABLAGE-MOTEUR (S)INSTALACION ELECTRICA					
	96254117	Y	M	B	B	B	S	S	S	&NN4-VB4		1				MG
	96235335	Y	M	B	B	B	A	A	A	&NN7		1				HN
	96243365	Y	M	B	B	B	A	A	A	&NN4&VB4		1				9D
	96306006	Y	M	B	B	B	A	A	A	&NN6		1				HA
	96254118	Y	A	B	B	B	O	O	O	&NN4-VB4		1				MH
	96235336	Y	A	B	B	B	A	A	A	&NN7		1				HP
	96243366	Y	A	B	B	B	A	A	A	&NN4&VB4		1				9E
	96306007	Y	A	B	B	B	A	A	A	&NN6		1				HB
	96254119	6	M	B	B	B	.	.	S			1		970610		MJ
N	96255171	6	M	B	B	B	.	.	S	&NN4-VB4		1	970610			DP
	96216498	6	M	B	B	B	.	.	A	&NN7		1				HF
	96243367	6	M	B	B	B	.	.	A	&NN4&VB4		1				9F
	96306008	6	M	B	B	B	.	.	A	&NN6		1				HC
	96254120	6	A	B	B	B	.	.	O			1		970610		MK
N	96255172	6	A	B	B	B	.	.	O	&NN4-VB4		1	970610			DQ
	96216499	6	A	B	B	B	.	.	A	&NN7		1				HG
	96243368	6	A	B	B	B	.	.	A	&NN4&VB4		1				9G
	96306009	6	A	B	B	B	.	.	A	&NN6		1				HD

ENG(ENGINE)	T/A(TRANSAXLE)	BODY TYPE
Y = 1.5SOHC 6 = 1.6DOHC . = COMMON	M = MANUAL T/A A = AUTOMATIC T/A . = COMMON	4 N = 4 DOOR NOTCHBACK 3 H = 3 DOOR HATCHBACK 5 H = 5 DOOR HATCHBACK

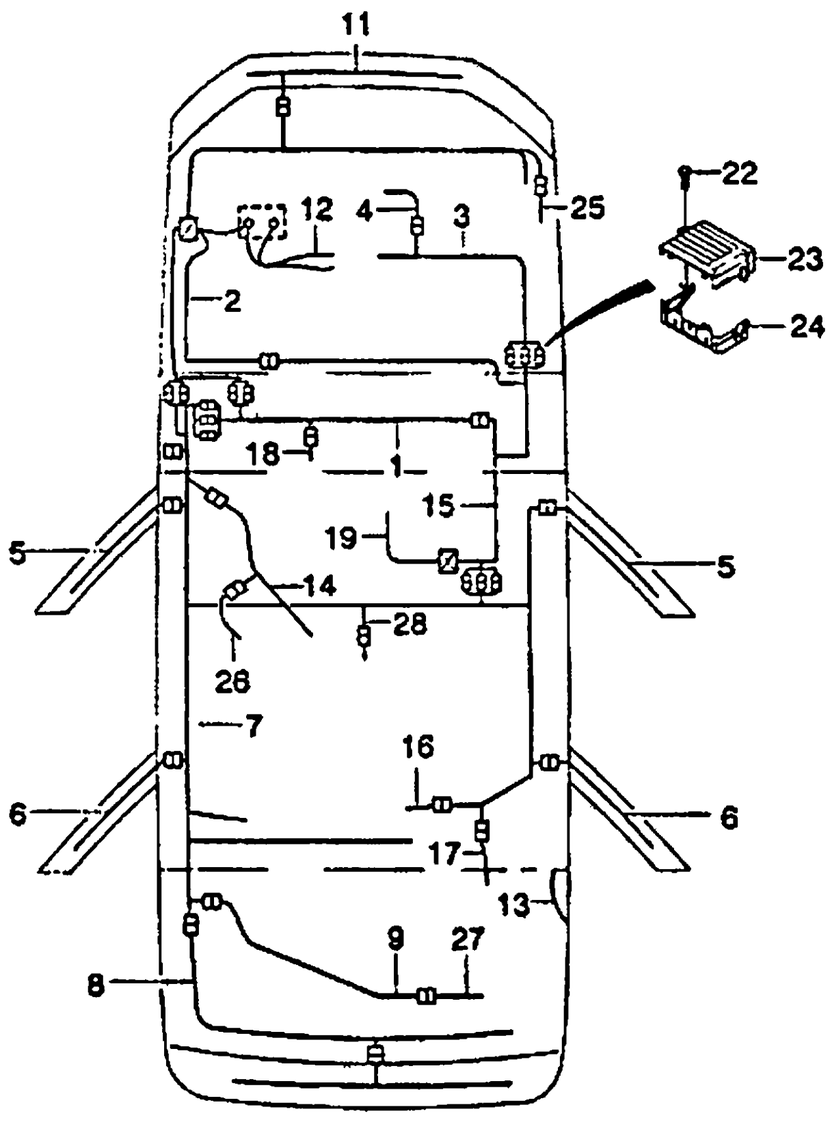

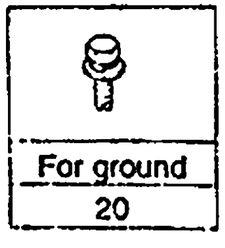

KEY NO. ITC	PART NO	MODEL ENG	T/A	BODY 4N	3H	5H	LEVEL S	SE	SX	OPTION	L/R	QTY	EFFECTIVE DATE FROM	TO	REMARKS	P/CODE
[04]		(E)WIRING-FUEL INJECTION (D)VERDRAHTUNG,EINSPRITZ									(F)CABLAGE-INJECTION (S)INSTALACION ELECTRICA					
	96239890	6	.	B	B	B	.	.	O			1				WE
[05]		(E)WIRING-FRONT DOOR (D)VERDRAHTUNG,VORDERTÜR									(F)CABLAGE-PORTE AVANT (S)INSTALACION ELECTRICA					
	96306030	.	.	B	.	B	S	S	.	&A30&D39-AU3		2				TS
	96306027	.	.	B	.	B	O	O	S	&AU3	LH	1				TN
	96306032	.	.	B	.	B	O	O	S	&AU3&D39	RH	1				5B
	96306029	.	.	B	.	B	O	O	.	&AU3&A30&D39	LH	1				TR
	96306033	.	.	B	.	B	O	O	.	&AU3&A30&D39	RH	1				5C
	96306031	.	.	B	.	B	.	.	O	&AU3&DD4	RH	1				5A
	96227435	.	.	.	B	.	S	.	.	&A30&D39		2				5D
	96227438	.	.	.	B	.	O	.	S	&AU3&A32	LH	1				5E
	96227443	.	.	.	B	.	O	.	S	&AU3&A32&D39	RH	1				5F
	96227445	.	.	.	B	.	.	.	O	&AU3&A32&DD4	RH	1				5G
[06]		(E)WIRING-REAR DOOR (D)VERDRAHTUNG,HINTERTÜR									(F)CABLAGE-PORTE ARRIERE (S)INSTALACION ELECTRICA					
	96304236			B	.	B	O	O	S	&AU3-A31		2				TC
	96250935			B	.	B	.	.	O	&AU3&A31		2				VR
[07]		(E)WIRING-FLOOR (D)VERDRAHTUNG,BODEN									(F)CABLAGE-PLANCHER (S)INSTALACION ELECTRICA					
	96252306	.	.	B	.	.	S	S	.	&A30-AU3JL9		1				LS
	96252299	.	.	B	.	.	.	O	.	&AU3&A32&JL9		1				LK
	96252302	.	.	B	.	.	.	O	.	&A30&JL9-AU3		1				LN
	96252303	.	.	B	.	.	.	O	.	&AU3&A32-JL9		1				LP
	96258765	.	.	B	.	.	.	O	.	&AU3&A31&JL9		1				EB

ENG(ENGINE)	T/A(TRANSAXLE)	BODY TYPE
Y = 1.5SOHC	M = MANUAL T/A	4 N = 4 DOOR NOTCHBACK
6 = 1.6DOHC	A = AUTOMATIC T/A	3 H = 3 DOOR HATCHBACK
. = COMMON	. = COMMON	5 H = 5 DOOR HATCHBACK

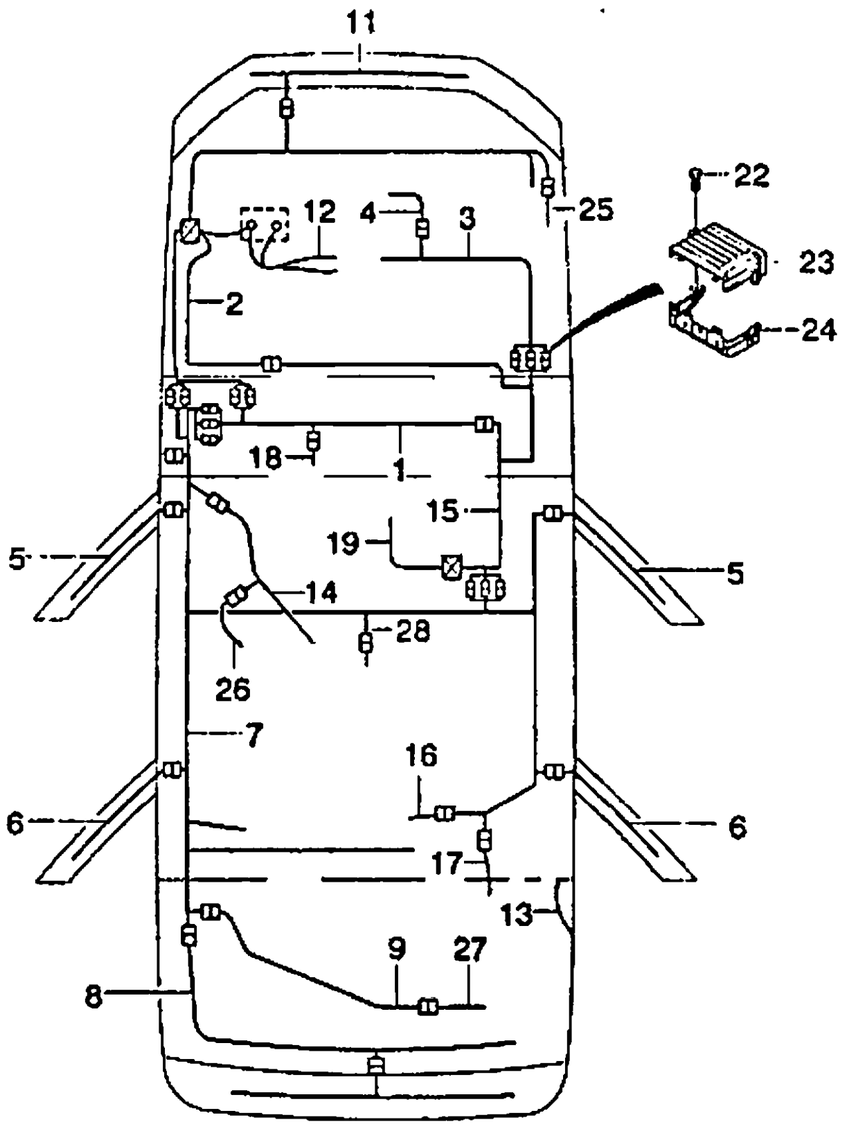

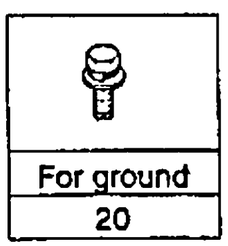

KEY NO. ITC	PART NO	MODEL ENG	MODEL T/A	BODY 4N	BODY 3H	BODY 5H	LEVEL S	LEVEL SE	LEVEL SX	OPTION	L/R	QTY	EFFECTIVE DATE FROM	EFFECTIVE DATE TO	REMARKS	P/CODE
	96258766	.	.	B	.	.	.	O	.	&AU3&A31-JL9		1				EC
	96252310	.	.	B	.	.	.	.	S	&AU3&A32-JL9		1				LW
	96252307	.	.	B	.	.	.	.	O	&AU3&A31&JL9		1				LT
	96252308	.	.	B	.	.	.	.	O	&AU3&A32&JL9		1				LU
	96252309	.	.	B	.	.	.	.	O	&AU3&A31-JL9		1				LV
	96255126	.	.	B	.	.	.	.	A	&KL9&A32-JL9		1			FOR BRAZIL	3K
	96255124	.	.	B	.	.	.	.	A	&KL9&A32&JL9		1			FOR BRAZIL	3H
	96255125	.	.	B	.	.	.	.	A	&KL9&A31-JL9		1			FOR BRAZIL	3J
	96255123	.	.	B	.	.	.	.	A	&KL9&A31&JL9		1			FOR BRAZIL	3G
	96252348	.	.	.	B	.	S	.	.	&A30-AU3/JL9		1				4W
	96252350	.	.	.	B	.	O	.	.	&AU3&A32-JL9		1				4Y
	96252351	.	.	.	B	.	.	.	S	&AU3&A32-JL9		1				4Z
	96252353	.	.	.	B	.	.	.	O	&AU3&A32&JL9		1				F2
	96255100	.	.	.	B	.	.	.	A	&KL9&A32-JL9		1			FOR BRAZIL	FD
	96255102	.	.	.	B	.	.	.	A	&KL9&A32&JL9		1			FOR BRAZIL	FF
	96252355	.	.	.	.	B	S	.	.	&A30-AU3/JL9		1				F4
	96252354	.	.	.	.	B	O	.	.	&AU3&A32-JL9		1				F3
	96252357	.	.	.	.	B	.	.	S	&AU3&A32-JL9		1		970602		F6
N	96255092	.	.	.	.	B	.	.	S	&AU3&A32-JL9		1	970602			FY
	96252361	.	.	.	.	B	.	.	O	&AU3&A31&JL9		1		970602		G1
N	96255095	.	.	.	.	B	.	.	O	&AU3&A31&JL9		1	970602			3B
	96252360	.	.	.	.	B	.	.	O	&AU3&A31-JL9		1		970602		F9
N	96255094	.	.	.	.	B	.	.	O	&AU3&A31-JL9		1	970602			3A
	96252359	.	.	.	.	B	.	.	O	&AU3&A32&JL9		1		970602		F8

ENG(ENGINE)	T/A(TRANSAXLE)	BODY TYPE
Y = 1.5SOHC 6 = 1.6DOHC . = COMMON	M = MANUAL T/A A = AUTOMATIC T/A . = COMMON	4 N = 4 DOOR NOTCHBACK 3 H = 3 DOOR HATCHBACK 5 H = 5 DOOR HATCHBACK

5710 WIRING HARNESS

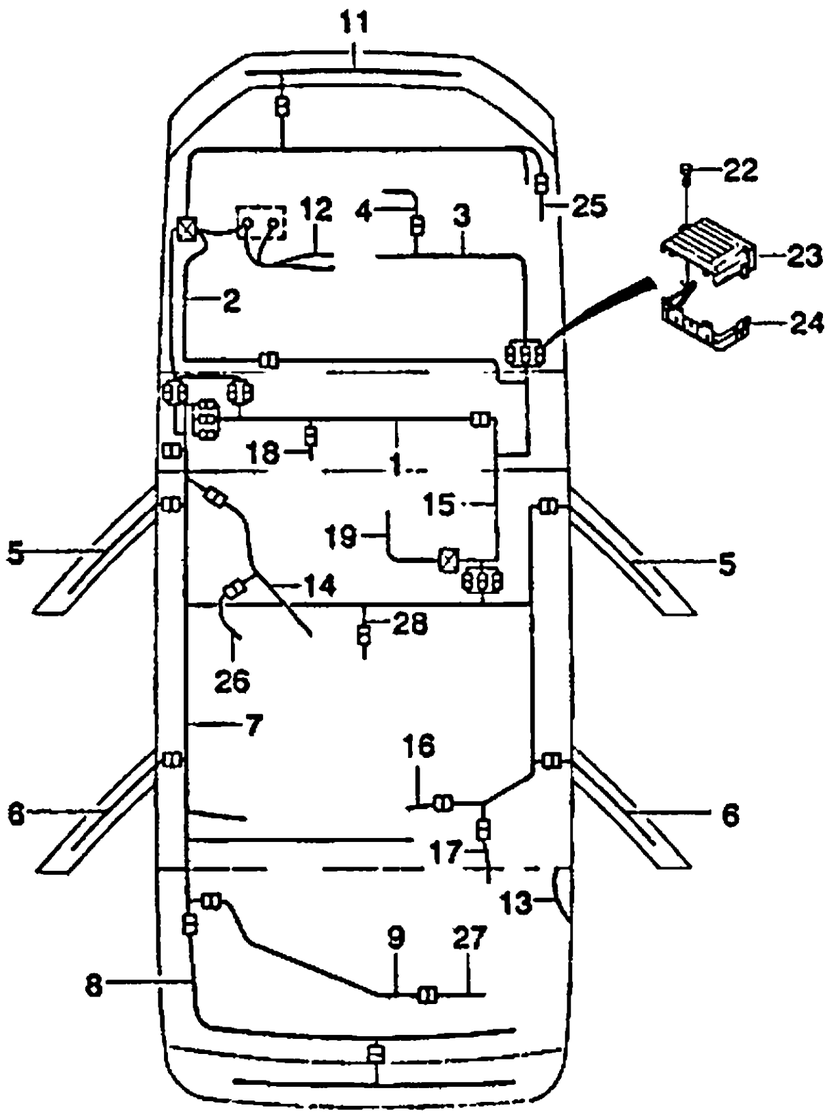

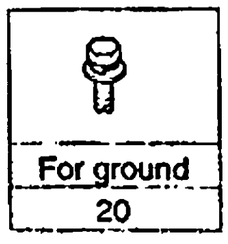

KEY NO. ITC	PART NO	MODEL ENG	T/A	BODY 4N	3H	5H	LEVEL S	SE	SX	OPTION	L/R	QTY	EFFECTIVE DATE FROM	TO	REMARKS	PICODE
N	96255093	.	.	.	.	B	.	.	O	&AU3&A32&JL9		1	970602			FZ
	96255106	.	.	.	.	B	.	.	A	&KL9&A32-JL9		1			FOR BRAZIL	FK
	96255108	.	.	.	.	B	.	.	A	&KL9&A32&JL9		1			FOR BRAZIL	FM
	96255109	.	.	.	.	B	.	.	A	&KL9&A31-JL9		1			FOR BRAZIL	FN
	96255110	.	.	.	.	B	.	.	A	&KL9&A31&JL9		1			FOR BRAZIL	FP
	96258767	.	.	B	.	.	.	O	.	&A31&JL9-AU3		1			NOT APPLIED	ED
	96258768	.	.	B	.	.	.	O	.	&A31-AU3/JL9		1			NOT APPLIED	EE
	[08]	(E)WIRING-TRUNK (D)VERDRAHTUNG									(F)CABLAGE-COFFRE (S)INSTALACION ELECTRICA					
	96306014	.	.	B	.	.	S	S	S			1				TD
	96243390	.	.	.	B	B	S	.	.	-US8/U83		1				7S
	96242515	.	.	.	B	B	O	.	S	&US8/U83		1				7N
	[09]	(E)WIRING-TRUNK LID&TAILGATE (D)VERDRAHTUNG									(F)CABLAGE (S)INSTALACION ELECTRICA					
	96306016	.	.	B	.	.	S	S	S	-T98		1			FOR TRUNK	TT
	96217030	.	.	B	.	.	A	A	A	&T98		1			FOR TRUNK	TU
	96217032	.	.	.	B	B	S	.	.	-AU3/T93.		1			FOR TAILGATE	7B
	96217034	.	.	.	B	B	A	.	.	&T93-AU3.		1			FOR TAILGATE	7D
	96217035	.	.	.	B	B	A	.	A	&AU3&T93.		1			FOR TAILGATE	7E
	96217036	.	.	.	B	B	O		S	&AU3-T93.		1			FOR TAILGATE	7F
	[11]	(E)WIRING-FRONT BUMPER (D)VERDRAHTUNG									(F)CABLAGE (S)INSTALACION ELECTRICA					
	96236220	.	.	B	B	B	.	.	O	&VT1&T97		1				TK
	96236223	.	.	B	B	B	.	.	O	&VT2&T97		1				TJ
	[12]	(E)WIRING-BATTERY CABLE (D)VERDRAHTUNG									(F)CABLAGE (S)INSTALACION ELECTRICA					

ENG(ENGINE)	T/A(TRANSAXLE)	BODY TYPE
Y = 1.5SOHC 6 = 1.6DOHC . = COMMON	M = MANUAL T/A A = AUTOMATIC T/A . = COMMON	4 N = 4 DOOR NOTCHBACK 3 H = 3 DOOR HATCHBACK 5 H = 5 DOOR HATCHBACK

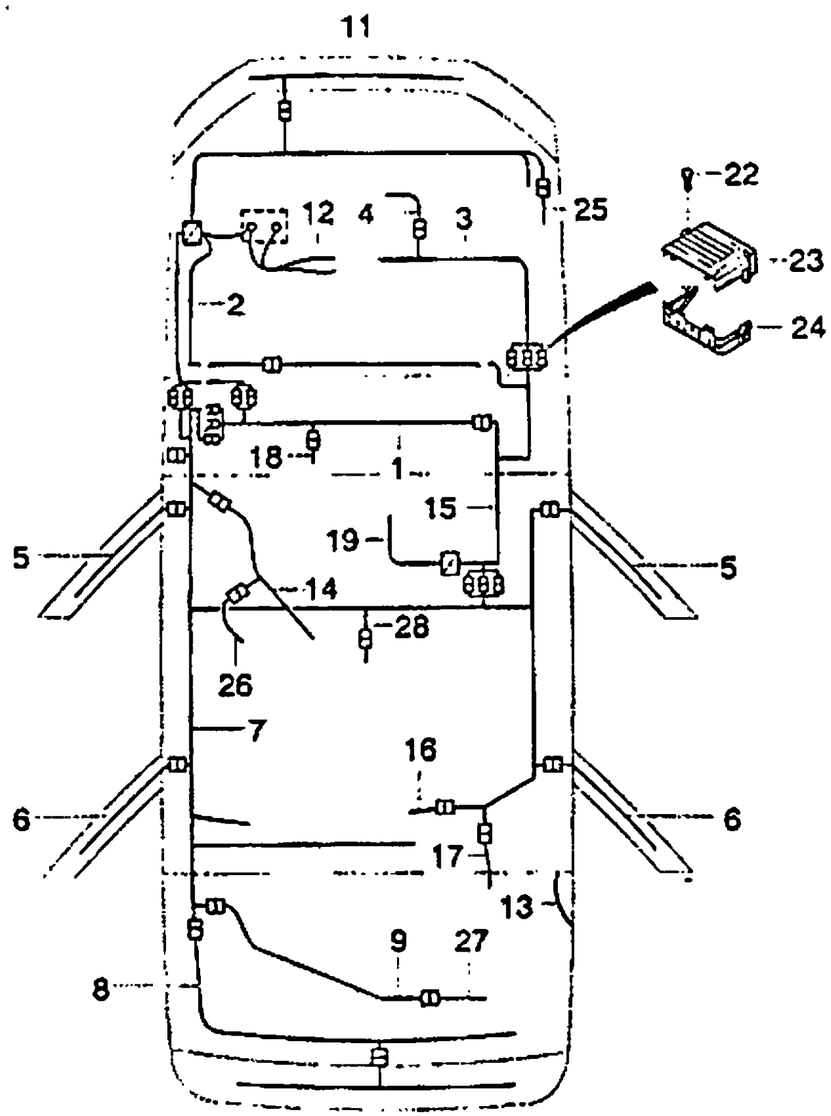

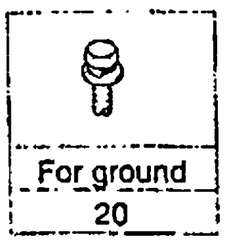

KEY NO. ITC	PART NO	MODEL ENG	T/A	BODY 4N	3H	5H	LEVEL S	SE	SX	OPTION	L/R	QTY	EFFECTIVE DATE FROM	TO	REMARKS	P/CODE
	96304994	.	.	B	B	B	S	S	S			1				3X
[13]	(E)WIRING-BACK WDO HEATED (D)VERDRAHTUNG,HINTERE FENST										(F)CABLE (S)ALAMBRE					
	96306001	.	.	B	B	B	S	S	S			1				
[14]	(E)WIRING-ROOF (D)VERDRAHTUNG										(F)CABLAGE (S)INSTALACION ELECTRICA					
	96304237	.	.	B	.	.	S	S	S	-C25		1		970602		6H
N	96255145	.	.	B	.	.	S	S	S	-C25		1	970602	971001		2F
N	96258770	.	.	B	B	B	S	S	S			1	971001			5J
	96242513	.	.	.	B	.	S	.	S	&C25		1		970602		7K
N	96255144	.	.	.	B	.	S	.	S	&C25		1	970602	971001		2E
N	96258769	.	.	.	B	.	S	.	S	&C25		1	971001			5H
	96242512	.	.	.	.	B	S	.	S	&C25		1		970602		7F
N	96255146	.	.	.	.	B	S	.	S	&C25		1	970602	971001		2G
N	96258769	.	.	.	.	B	S	.	S	&C25		1	971001			5H
[15]	(E)WIRING-ECM & ABS (D)VERDRAHTUNG										(F)CABLAGE (S)INSTALACION ELECTRICA					
	96243370	Y	M	B	B	B	S	S	S	&C46&NN4-JL9		1				9H
	96243378	Y	M	B	B	B	O	O	O	&C59/C60&NN4-JL9		1				9S
	96243371	Y	M	B	B	B	.	O	O	&C46&JL9&NN4		1				9J
	96243379	Y	M	B	B	B	.	O	O	&C59/C60&JL9&NN4		1				9T
	96243372	Y	A	B	B	B	O	O	O	&C46&NN4-JL9		1				9K
	96243380	Y	A	B	B	B	O	O	O	&C59/C60&NN4-JL9		1				9U
	96243373	Y	A	B	B	B	.	O	O	&C46&JL9&NN4		1				9L
	96243381	Y	A	B	B	B	.	O	O	&C59/C60&JL9&NN4		1				9V

ENG(ENGINE)	T/A(TRANSAXLE)	BODY TYPE
Y = 1.5SOHC G = 1.6DOHC . = COMMON	M = MANUAL T/A A = AUTOMATIC T/A . = COMMON	4 N = 4 DOOR NOTCHBACK 3 H = 3 DOOR HATCHBACK 5 H = 5 DOOR HATCHBACK

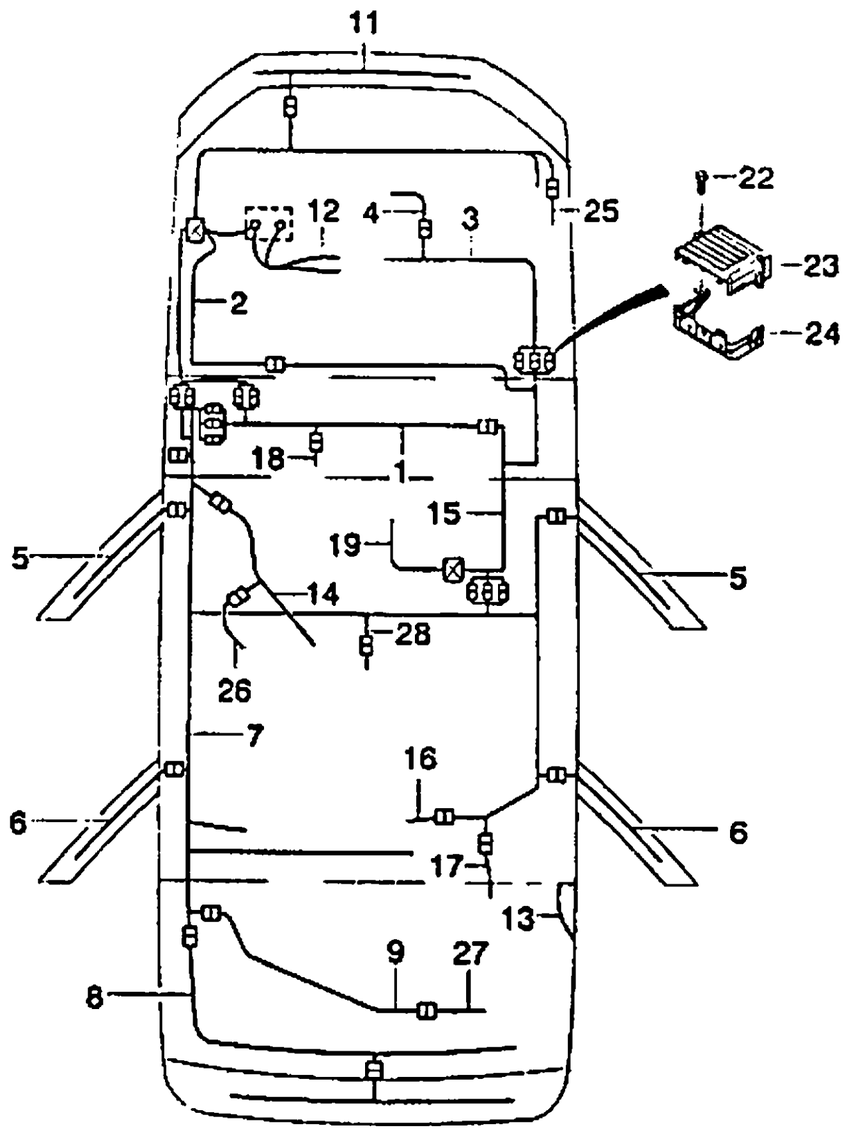

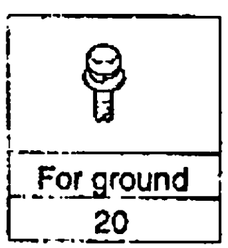

KEY NO. ITC	PART NO	MODEL ENG	T/A	BODY 4N	3H	5H	LEVEL S	SE	SX	OPTION	L/R	QTY	EFFECTIVE DATE FROM	TO	REMARKS	P/CODE
	96217037	Y	M	B	B	B	A	A	A	&C46&NN6-JL9		1				KA
	96243343	Y	M	B	B	B	A	A	A	&C59/C60&NN6-JL9		1				8E
	96235345	Y	M	B	B	B	A	A	A	&C46&NN7-JL9		1				6C
	96243339	Y	M	B	B	B	A	A	A	&C59/C60&NN7-JL9		1				8A
	96217038	Y	M	B	B	B	.	A	A	&C46&JL9&NN6		1				KB
	96243344	Y	M	B	B	B	.	A	A	&C59/C60&JL9&NN6		1				8F
	96235346	Y	M	B	B	B	.	A	A	&C46&JL9&NN7		1				6D
	96243340	Y	M	B	B	B	.	A	A	&C59/C60&JL9&NN7		1				8B
	96217039	Y	A	B	B	B	A	A	A	&C46&NN6-JL9		1				KC
	96243345	Y	A	B	B	B	A	A	A	&C59/C60&NN6-JL9		1				8G
	96235347	Y	A	B	B	B	A	A	A	&C46&NN7-JL9		1				6E
	96243341	Y	A	B	B	B	A	A	A	&C59/C60&NN7-JL9		1				8C
	96243342	Y	A	B	B	B	.	A	A	&C59/C60&JL9&NN7		1				8D
	96217040	Y	A	B	B	B	.	A	A	&C46&JL9&NN6		1				KD
	96243346	Y	A	B	B	B	.	A	A	&C59/C60&JL9&NN6		1				8H
	96235348	Y	A	B	B	B	.	A	A	&C46&JL9&NN7		1				6F
	96243374	6	M	B	B	B	.	.	O	&C46&NN4-JL9		1				9M
	96243382	6	M	B	B	B	.	.	O	&C59/C60&NN4-JL9		1				9W
	96243375	6	M	B	B	B	.	.	O	&C46&JL9&NN4		1				9N
	96243383	6	M	B	B	B	.	.	O	&C59/C60&JL9&NN4		1				9X
	96243376	6	A	B	B	B	.	.	O	&C46&NN4-JL9		1				9P
	96243384	6	A	B	B	B	.	.	O	&C59/C60&NN4-JL9		1				9Y
	96243377	6	A	B	B	B	.	.	O	&C46&JL9&NN4		1				9R
	96243385	6	A	B	B	B	.	.	O	&C59/C60&JL9&NN4		1				9Z

ENG(ENGINE)	T/A(TRANSAXLE)	BODY TYPE
Y = 1.5SOHC 6 = 1.6DOHC . = COMMON	M = MANUAL T/A A = AUTOMATIC T/A . = COMMON	4 N = 4 DOOR NOTCHBACK 3 H = 3 DOOR HATCHBACK 5 H = 5 DOOR HATCHBACK

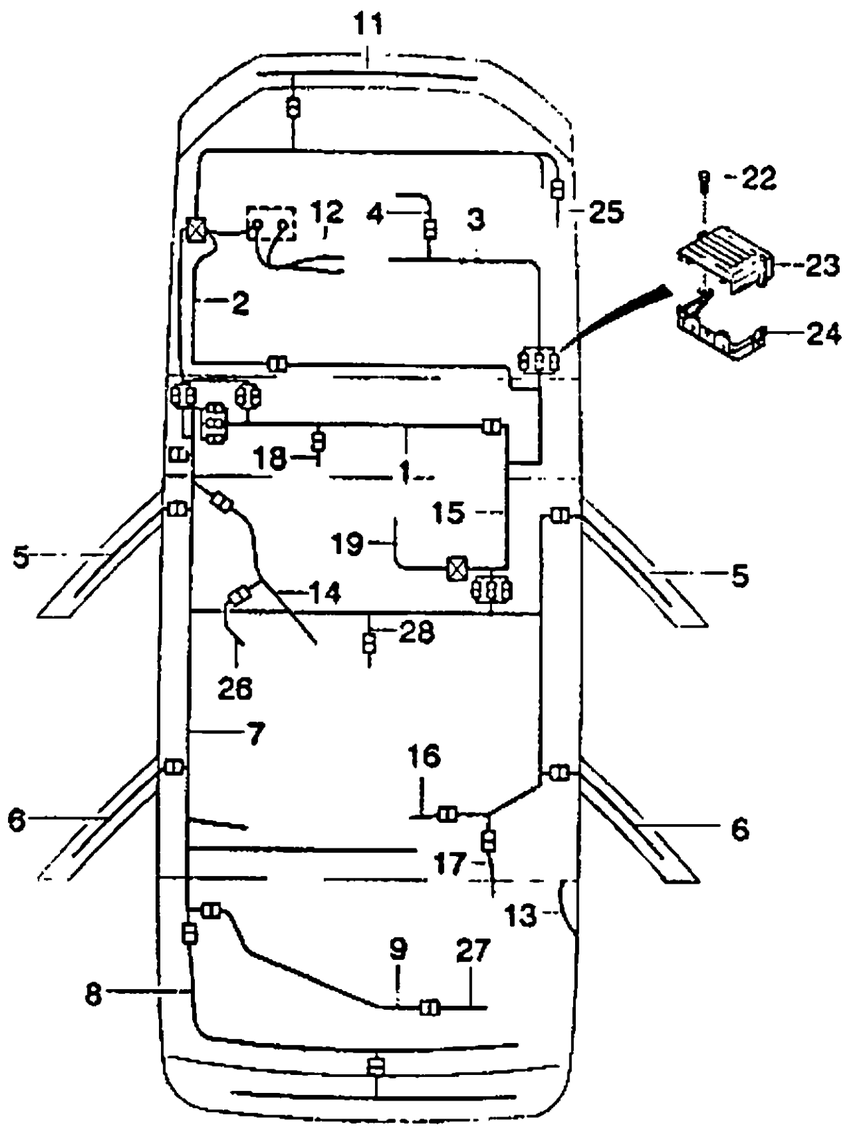

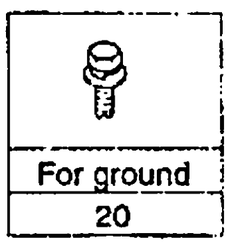

KEY NO. ITC	PART NO	MODEL ENG	T/A	BODY 4N	3H	5H	LEVEL S	SE	SX	OPTION	L/R	QTY	EFFECTIVE DATE FROM	TO	REMARKS	P/CODE
	96217041	6	M	B	B	B	.	.	A	&C46&NN6-JL9		1				KE
	96243347	6	M	B	B	B	.	.	A	&C59/C60&NN6-JL9		1				8J
	96217049	6	M	B	B	B	.	.	A	&C46&NN7-JL9		1				KM
	96243353	6	M	B	B	B	.	.	A	&C59/C60&NN7-JL9		1				8Q
	96217042	6	M	B	B	B	.	.	A	&C46&JL9&NN6		1				KF
	96243348	6	M	B	B	B	.	.	A	&C59/C60&JL9&NN6		1				8K
	96217050	6	M	B	B	B	.	.	A	&C46&JL9&NN7		1				KN
	96243354	6	M	B	B	B	.	.	A	&C59/C60&JL9&NN7		1				8R
	96217043	6	A	B	B	B	.	.	A	&C46&NN6-JL9		1				KG
	96243349	6	A	B	B	B	.	.	A	&C59/C60&NN6-JL9		1				8L
	96217051	6	A	B	B	B	.	.	A	&C46&NN7-JL9		1				KP
	96243355	6	A	B	B	B	.	.	A	&C59/C60&NN7-JL9		1				8S
	96217044	6	A	B	B	B	.	.	A	&C46&JL9&NN6		1				KH
	96243350	6	A	B	B	B	.	.	A	&C59/C60&JL9&NN6		1				8M
	96217052	6	A	B	B	B	.	.	A	&C46&JL9&NN7		1				KR
	96243356	6	A	B	B	B	.	.	A	&C59/C60&JL9&NN7		1				8T
[16]	(E)WIRING-ABS REAR SENSOR *(D)VERDRAHTUNG*										*(F)CABLAGE* *(S)INSTALACION ELECTRICA*					
	96304995	.	.	B	B	B	.	O	O	&JL9		1				
[17]	(E)WIRING-FUEL TANK *(D)VERDRAHTUNG*										*(F)CABLAGE* *(S)INSTALACION ELECTRICA*					
	96232850	.	.	B	B	B	S	S	S			1				6A
[18]	(E)WIRE-CIGAR LIGHTER EXTENS *(D)VERDRAHTUNG*										*(F)CABLES* *(S)ALAMBRE*					
	96243388	.	.	B	B	B	S	S	S			1				

ENG(ENGINE)	T/A(TRANSAXLE)	BODY TYPE
Y = 1.5SOHC 6 = 1.6DOHC . = COMMON	M = MANUAL T/A A = AUTOMATIC T/A . = COMMON	4 N = 4 DOOR NOTCHBACK 3 H = 3 DOOR HATCHBACK 5 H = 5 DOOR HATCHBACK

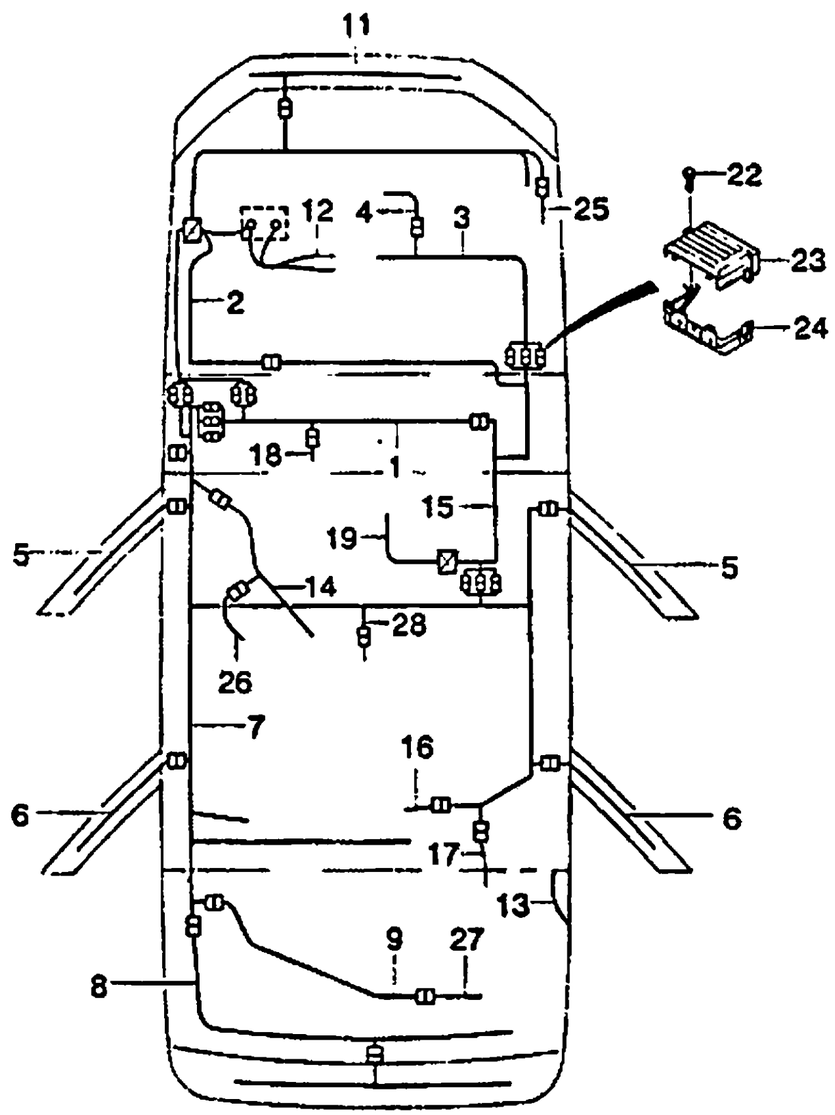

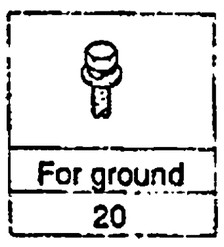

KEY NO. ITC	PART NO	MODEL ENG	T/A	BODY 4N	3H	5H	LEVEL S	SE	SX	OPTION	L/R	QTY	EFFECTIVE DATE FROM	TO	REMARKS	P/CODE
[19]		(E)WIRING-R.O.N. JUMP (D)VERDRAHTUNG									(F)CABLAGE (S)INSTALACION ELECTRICA					
	96232850	.	.	B	B	B	S	S	S			1				6A
[20]		(E)BOLT (D)SCHRAUBE									(F)BOULON (S)PERNO					
	09115-06001	.	.	B	B	B	S	S	S			8				
[22]		(E)BOLT-HEXAGON FLANGE (D)SCHRAUBE									(F)BOULON (S)PERNO					
	01514-06165	.	.	B	B	B	S	S	S			3				
[23]		(E)COVER-CONNECTION BRACKET (D)DECKEL									(F)CARTER (S)CUBIERTA					
	96234604	.	.	B	B	B	S	S	S			1				
[24]		(E)BRACKET-ENGINE CONT.HARNE (D)TRÄGER									(F)SUPPORT (S)SOPORTE					
	96234603	.	.	B	B	B	S	S	S			1				
[25]		(E)WIRE-EXTN S/TURN SIG LAMP (G)VERDRAHTUNG-VERLÄNGERUN									(F)CABLAGE-RALLONGE LAMPE (S)INSTALACION ELECTRICA					
	- 96245540	.	.	B	B	B	A	A	A	&FL6	RH	1				
[26]		(E)WIRING-SUNROOF (D)VERDRAHTUNG									(F)CABLAGE (S)INSTALACION ELECTRICA					
	96242510	.	.	B	.	.	O	O	O			1		970602		
	N 96255147	.	.	B	.	.	O	O	O			1	970602			2H
	96250676	.	.	.	B	.	O	.	O			1		970602		PC
	N 96255149	.	.	.	B	.	O	.	O			1	970602			2K
	96250675	.	.	.	.	B	O	.	O			1		970602		PB
	N 96255148	.	.	.	.	B	O	.	O			1	970602			2J
[27]		(E)WIRING-EXTENSION T/GATE (D)VERDRAHTUNG-VERLÄNGERUN									(F)CABLAGE-RALLONGE (S)INSTALACION ELECTRICA					

ENG(ENGINE)	T/A(TRANSAXLE)	BODY TYPE
Y = 1.5SOHC 6 = 1.6DOHC . = COMMON	M = MANUAL T/A A = AUTOMATIC T/A . = COMMON	4 N = 4 DOOR NOTCHBACK 3 H = 3 DOOR HATCHBACK 5 H = 5 DOOR HATCHBACK

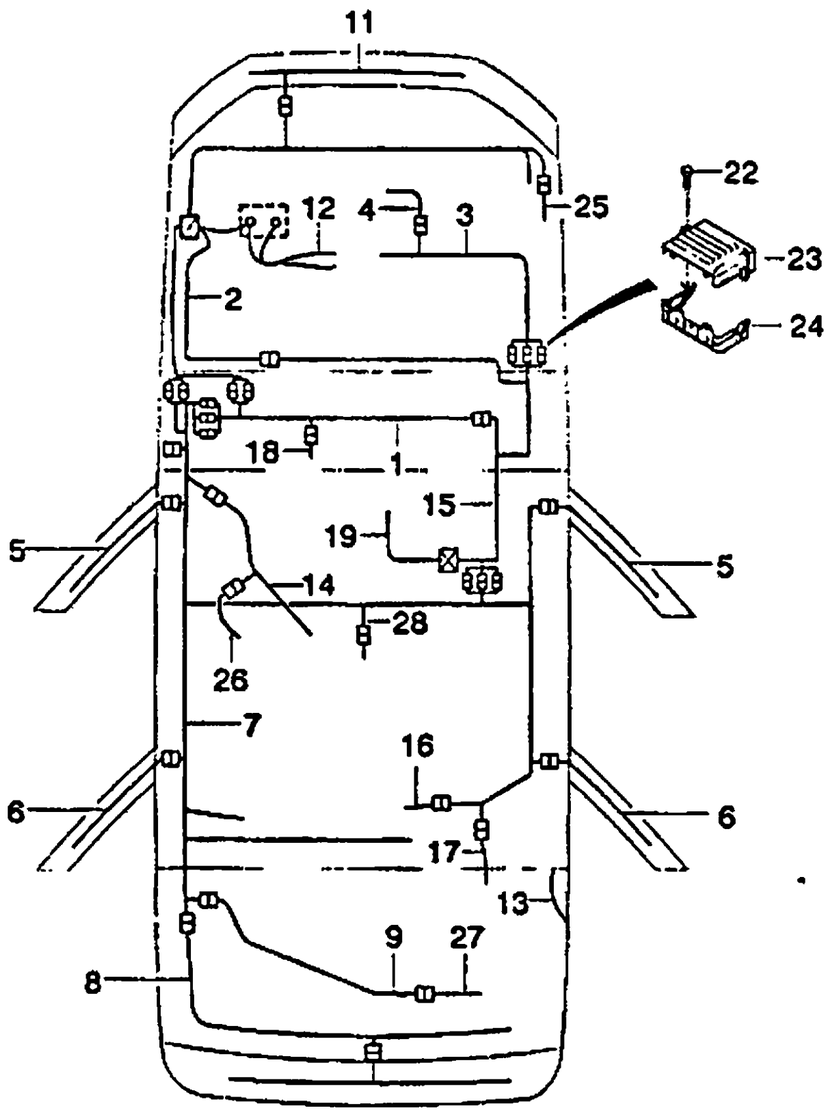

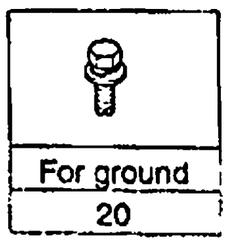

KEY NO.		PART NAME															
ITC	PART NO	MODEL								OPTION	L/R	QTY	EFFECTIVE DATE		REMARKS	P/CODE
		ENG	T/A	BODY			LEVEL						FROM	TO		
				4N	3H	5H	S	SE	SX							
	96246695	.	.	.	B	B	S	.	S			1				RJ
	[28]	(E)WIRING-EXTENSION A/T (D)VERDRAHTUNG-VERLÄNGERUN									(F)CABLAGE-RALLONGE A/T (S)INSTALACION ELECTRICA					
	96250974	.	A	B	B	B	O	O	O			1				PT

ENG(ENGINE)	T/A(TRANSAXLE)	BODY TYPE
Y = 1.5SOHC 6 = 1.6DOHC . = COMMON	M = MANUAL T/A A = AUTOMATIC T/A . = COMMON	4 N = 4 DOOR NOTCHBACK 3 H = 3 DOOR HATCHBACK 5 H = 5 DOOR HATCHBACK

6 BODY & EXTERIOR

6110 HOOD PANEL
6130 FRONT PANEL
6140 FENDER PANEL
6150 DASH PANEL & COWL
6210 FRONT DOOR PANEL
6220 FRONT DOOR LOCKING
6230 FRONT WINDOW LIFTER
6240 FRONT WEATHERSTRIP
6250 ELECTRIC DOOR LOCKING
6310 REAR DOOR PANEL
6320 REAR DOOR LOCKING
6330 REAR WINDOW LIFTER
6340 REAR WEATHERSTRIP
6360 QUATER WINDOW LOCKING
6410 SIDE BODY PANEL(N/B)
6411 SIDE BODY PANEL(5DOOR H/B)
6412 SIDE BODY PANEL(3DOOR H/B)
6420 FUEL FILLER LOCKING
6430 ROOF PANEL
6440 TRUNK LID PANEL
6441 TAILGATE PANEL
6450 TRUNK LID LOCKING
6451 TAILGATE LOCKING
6460 CAR LOCKING
6510 FRONT FLOOR PANEL
6520 REAR FLOOR PANEL
6530 FRAME
6630 OUTSIDE MIRROR
6640 GLASS I
6641 GLASS II
6650 EMBLEM & LETTERING
6660 WHEELS & WHEEL COVER
6670 LABEL & STICKER
6710 GRILLE
6720 FRONT BUMPER
6730 REAR BUMPER
6750 MUD GUARD

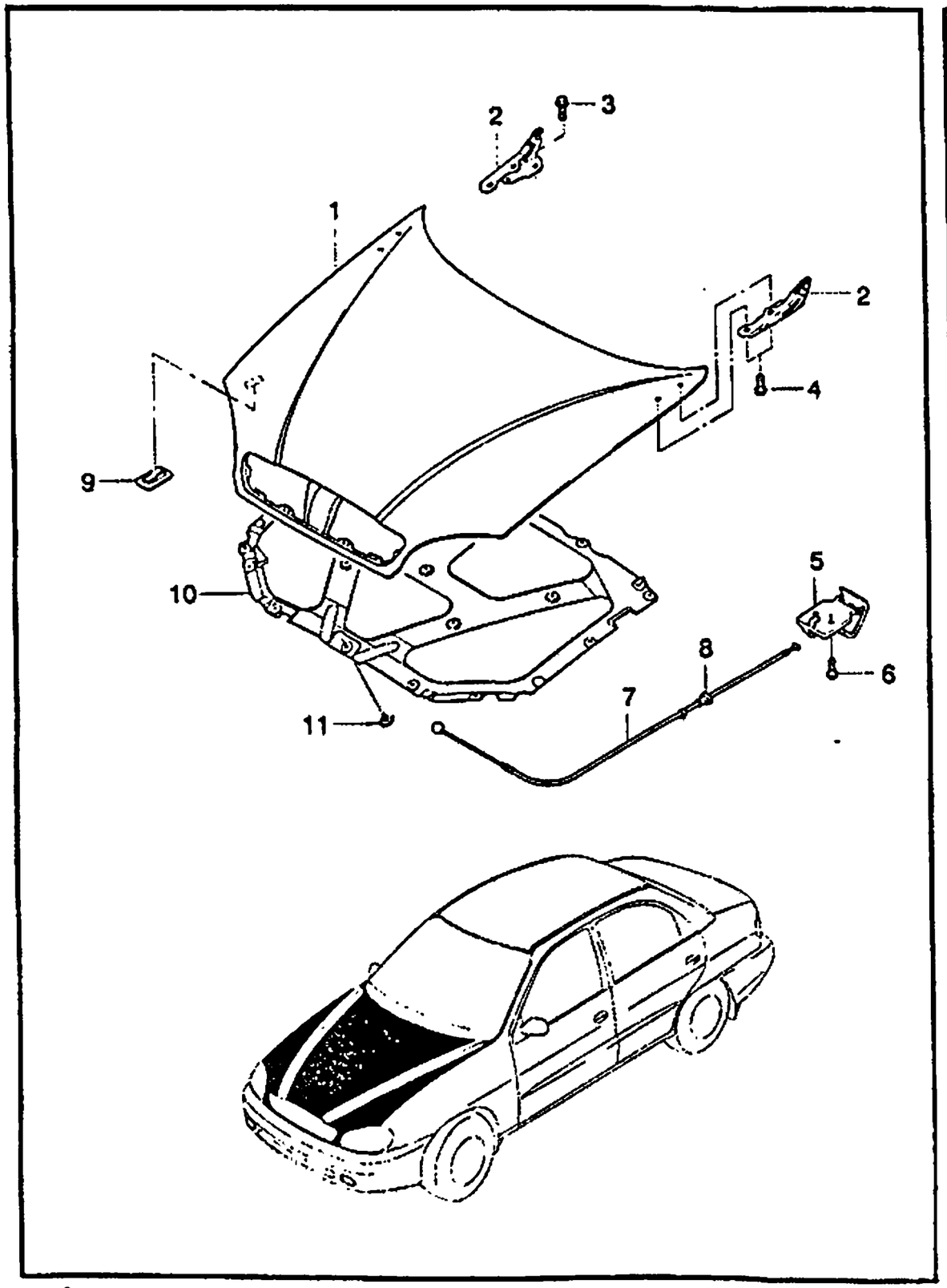

KEY NO. ITC	PART NO	MODEL ENG	T/A	BODY 4N	3H	5H	LEVEL S	SE	SX	OPTION	L/R	QTY	EFFECTIVE DATE FROM	TO	REMARKS	P/CODE
[01]		(E)PANEL A-HOOD (D)HAUBE,BLECH									(F)PANNEAU DE CAPOT (S)PANEL DEL CAPO					
	A96303303	.	.	B	B	B	S	S	S	&XCK		1		970502		HA
	O A96255481	.	.	B	B	B	S	S	S	&XCK		1	970502			
	A96307013	.	.	B	B	B	A	A	A	&XCP		1		970502		HB
	O A96255482	.	.	B	B	B	A	A	A	&XCP		1	970502			
[02]		(E)HINGE A-HOOD (D)BESCHLAG,HAUBE									(F)CHARNIERE-CAPOT (S)BISAGRA					
	96303296	.	.	B	B	B	S	S	S		LH	1		970901		
	96255037	.	.	B	B	B	S	S	S	&XCK	LH	1	970901			
	96303296	.	.	B	B	B	A	A	A	&XCP	LH	1	970901			
	96304580	.	.	B	B	B	S	S	S		RH	1		970901		
	96255038	.	.	B	B	B	S	S	S	&XCK	RH	1	970901			
	96304580	.	.	B	B	B	A	A	A	&XCP	RH	1	970901			
[03]		(E)BOLT-HEXAGON (D)SCHRAUBE									(F)BOULON (S)PERNO					
	01127-08203	.	.	B	B	B	S	S	S			4				
[04]		(E)BOLT-HEXAGON (D)SCHRAUBE									(F)BOULON (S)PERNO					
	01127-08203	.	.	B	B	B	S	S	S			4				
[05]		(E)LEVER A-HOOD RELEASE (D)HEBEL									(F)LEVIER (S)PALANCA					
	96236189	.	.	B	B	B	S	S	S			1			INCL #7,8	N5
[06]		(E)SCREW-TAPPING (D)SCHRAUBE									(F)VIS (S)TORNILLO					
	03151-48165	.	.	B	B	B	S	S	S			2				

ENG(ENGINE)	T/A(TRANSAXLE)	BODY TYPE
Y = 1.5SOHC	M = MANUAL T/A	4 N = 4 DOOR NOTCHBACK
6 = 1.6DOHC	A = AUTOMATIC T/A	3 H = 3 DOOR HATCHBACK
. = COMMON	. = COMMON	5 H = 5 DOOR HATCHBACK

6110 HOOD PANEL

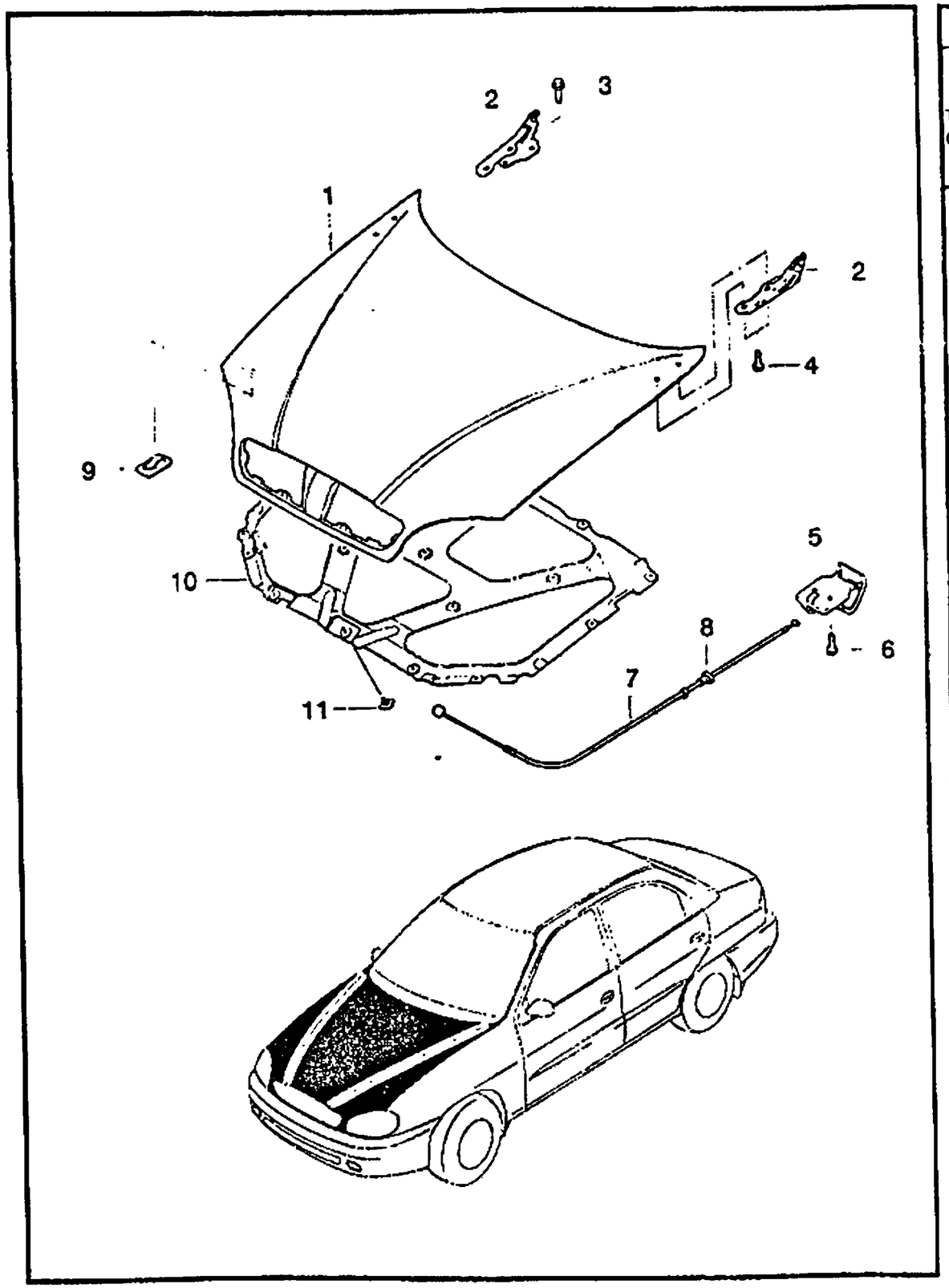

KEY NO. ITC	PART NO	MODEL ENG	T/A	BODY 4N	3H	5H	LEVEL S	SE	SX	OPTION	L/R	QTY	EFFECTIVE DATE FROM	TO	REMARKS	P/CODE
[07]		(E)CABLE A-HOOD RELEASE (D)KABEL,HAUBE BOGEN									(F)CABLE-BOWDEN DE CAPOT (S)CABLE-CAPO BOWDEN					
	96303301	.	.	B	B	B	S	S	S			1			INCL #8	
[08]		(E)GROMMET (D)ÖSE									(F)VIROLE (S)AISLANTE					
	96222846	.	.	B	B	B	S	S	S			1				
[09]		(E)SEAT-HOOD HOLD OPEN ROD (D)SITZ,ÖFFNUNGS-STANGE									(F)SIEGE (S)ASIENTO					
	90149859	.	.	B	B	B	S	S	S			1				
[10]		(E)INSULATION-HOOD (D)ISOLIERUNG									(F)ISOLATION (S)AISLAMIENTO					
	96254519	6	.	B	B	B	.	.	O	-2G3		1				TZ
	96252558	6	.	B	B	B	.	.	A	&2G3		1				TV
[11]		(E)CLIP (D)KLEMME									(F)ATTACHE (S)GRAPA					
	09409-06328	6	.	B	B	B	.	.	O			17				

ENG(ENGINE)	T/A(TRANSAXLE)	BODY TYPE
Y = 1.5SOHC	M = MANUAL T/A	4 N = 4 DOOR NOTCHBACK
6 = 1.6DOHC	A = AUTOMATIC T/A	3 H = 3 DOOR HATCHBACK
. = COMMON	. = COMMON	5 H = 5 DOOR HATCHBACK

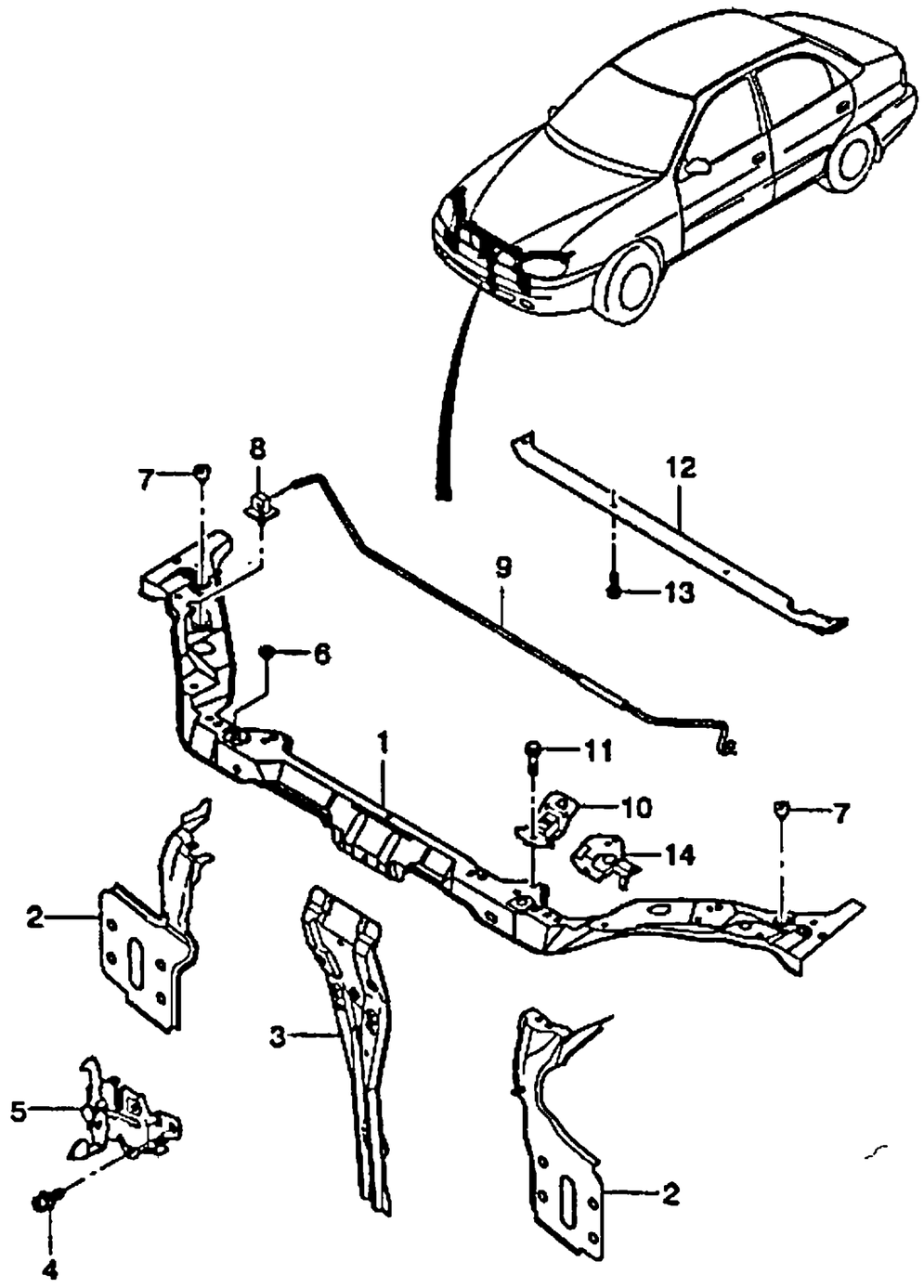

KEY NO.	PART NAME																
ITC	PART NO	MODEL									OPTION	L/R	QTY	EFFECTIVE DATE		REMARKS	P/CODE
		ENG	T/A	BODY			LEVEL							FROM	TO		
				4N	3H	5H	S	SE	SX								
[01]		(E)PANEL A-FRONT,UPPER (D)VERKLEIDUNG,VORNE										(F)PANNEAU-AVANT (S)PANEL-FRENTE					
	96303597	.	.	B	B	B	S	S	S				1				
[02]		(E)PANEL A-FRONT,SIDE (D)VERKLEIDUNG,VORNE										(F)PANNEAU-AVANT (S)PANEL-FRENTE					
	96216195	.	.	B	B	B	S	S	S			LH	1				
	96216196	.	.	B	B	B	S	S	S			RH	1				
[03]		(E)SUPPORT A-FRONT PANEL (D)TRÄGER,VERKLEIDUNGSBLECH										(F)SUPPORT (S)SOPORTE					
	96303601	.	.	B	B	B	S	S	S				1				
[04]		(E)BOLT (D)SCHRAUBE										(F)BOULON (S)PERNO					
	09118-06001	.	.	B	B	B	S	S	S				3			W/WASHER	
[05]		(E)LATCH A-HOOD (D)VERSCHLUß,HAUBE-VERSCHLU										(F)LOQUET-VERROU DE CAPOT (S)PESTILLO					
	96303295	.	.	B	B	B	S	S	S				1				K7
[06]		(E)BUMPER-HOOD,FRONT (D)STOßSTANGE,HAUBE,VORNE										(F)PARE-CHOC-CAPOT,AVANT (S)TOPE-CAPO,FRENTE					
	96245706	.	.	B	B	B	S	S	S				2				
[07]		(E)BUMPER (D)STOßSTANGE										(F)PARE-CHOC (S)PARACHOQUES					
	96169594	.	.	B	B	B	S	S	S				2				
[08]		(E)PIVOT A-SUPPORT HOOD (D)DREHTREIL,TRÄGERWELLE										(F)PIVOT-TRINGLE DE SUPPORT (S)PIVOTE-VARA DE APOYO					
	96165268	.	.	B	B	B	S	S	S				1				
[09]		(E)ROD A-HOOD HOLD OPEN (D)STAB,HAUBE ÖFFNUNGS										(F)TRINGLE (S)VARILLA					
	96233432	.	.	B	B	B	S	S	S				1				

ENG(ENGINE)	T/A(TRANSAXLE)	BODY TYPE
Y = 1.5SOHC	M = MANUAL T/A	4 N = 4 DOOR NOTCHBACK
6 = 1.6DOHC	A = AUTOMATIC T/A	3 H = 3 DOOR HATCHBACK
. = COMMON	. = COMMON	5 H = 5 DOOR HATCHBACK

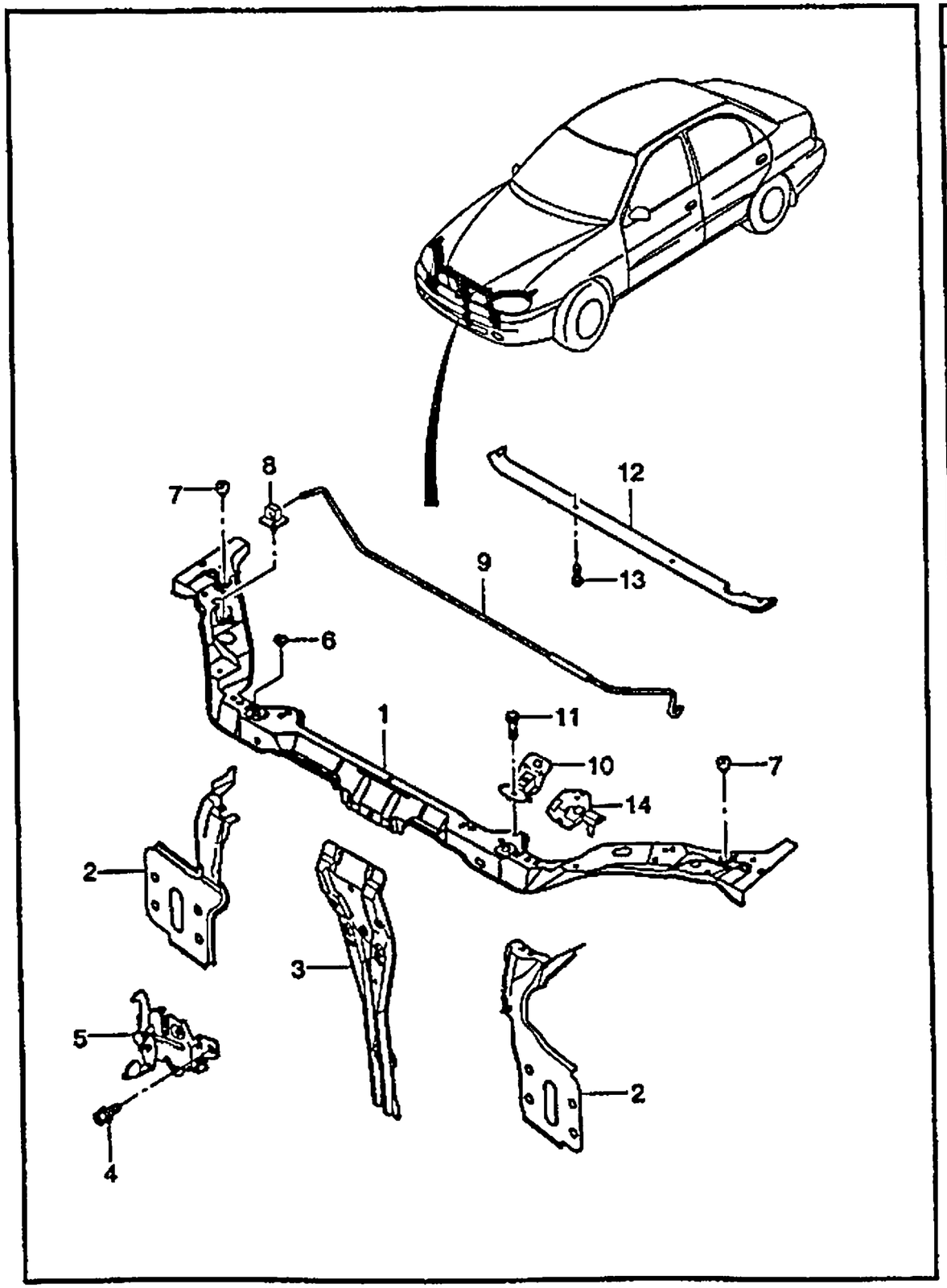

KEY NO.		PART NAME													
ITC	PART NO	MODEL								OPTION	L/R	QTY	EFFECTIVE DATE		REMARKS	P/CODE
		ENG	T/A	BODY			LEVEL						FROM	TO		
				4N	3H	5H	S	SE	SX							
[10] 96233191		(E)BRACKET A-HOOD ROD (D)TRÄGER,OFFNUNGSSTANGE									(F)SUPPORT (S)SOPORTE-VARA	1				
[11] 09118-06002		(E)BOLT (D)SCHRAUBE									(F)BOULON (S)PERNO	1			WNWASHER	
[12] 96216960		(E)AIR DAM-FRONT (D)LUFTSPERRE,VORNE									(F)BARRAGE AIR-AVANT (S)PRESA DE AIRE-FRENTE	1				
[13] 03152-63162		(E)SCREW-TAPPING (D)SCHRAUBE									(F)VIS (S)TORNILLO	4				
[14] 96235371		(E)REINF A-HOOD ROD BRACKET (D)VERSTÄRKUNG									(F)RENFORCEMENT (S)REFUERZO	1				

ENG(ENGINE)	T/A(TRANSAXLE)	BODY TYPE
Y = 1.5SOHC 6 = 1.6DOHC . = COMMON	M = MANUAL T/A A = AUTOMATIC T/A . = COMMON	4 N = 4 DOOR NOTCHBACK 3 H = 3 DOOR HATCHBACK 5 H = 5 DOOR HATCHBACK

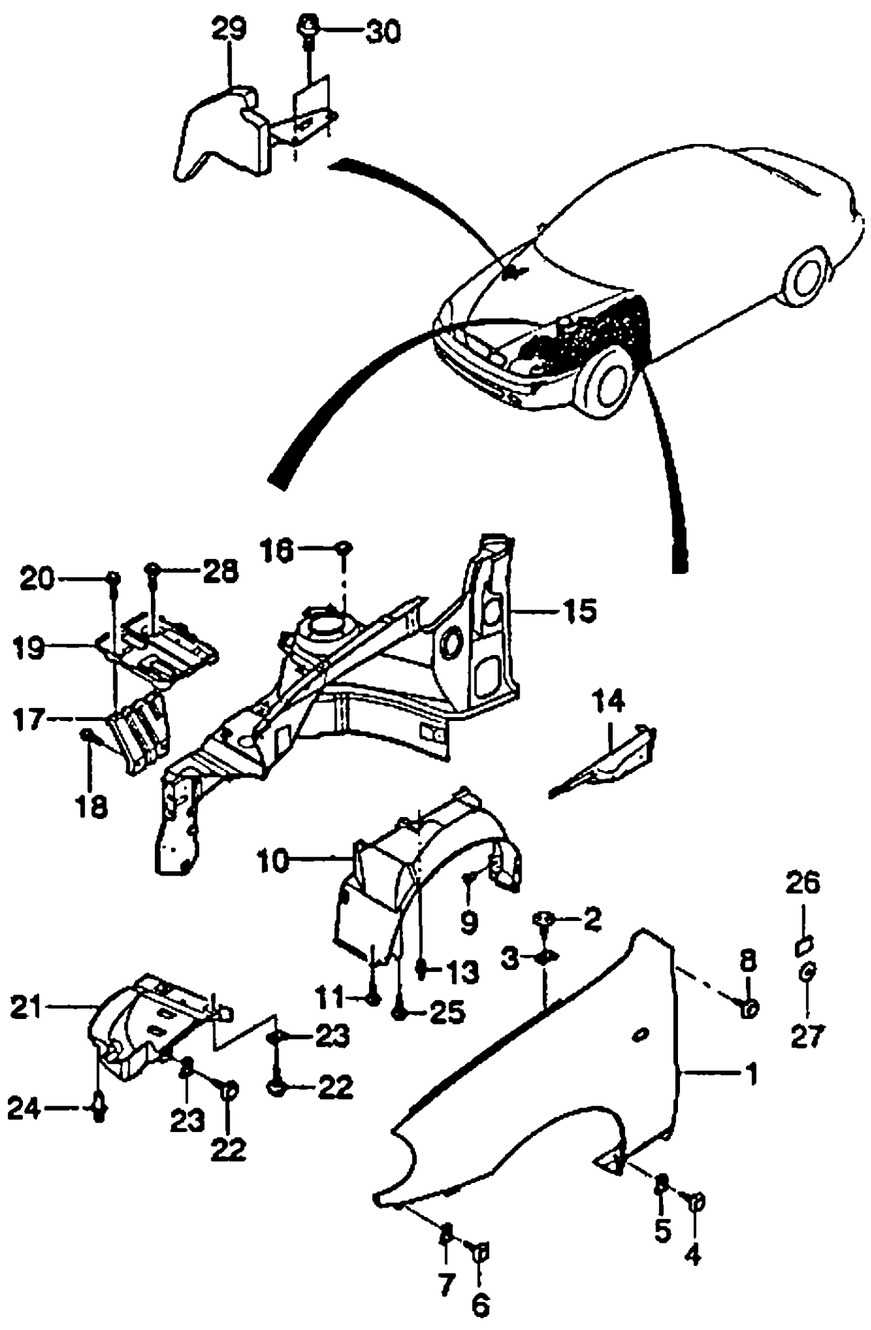

KEY NO. ITC	PART NO	MODEL ENG	T/A	BODY 4N	3H	5H	LEVEL S	SE	SX	OPTION	L/R	QTY	EFFECTIVE DATE FROM	TO	REMARKS	P/CODE
[01]	(E)PANEL A-FENDER (D)VERKLEIDUNG,KOTFLÜGEL (F)PANNEAU-GARDE-BOUE (S)ALETA DEL.															
A96303294	.	.	B	B	B	S	S	S	&XCK-FL6	LH	1					FA
A96304579	.	.	B	B	B	S	S	S	&XCK-FL6	RH	1					FN
A96220732	.	.	B	B	B	A	A	A	&FL6&XCK	LH	1					FC
A96220733	.	.	B	B	B	A	A	A	&FL6&XCK	RH	1					FQ
A96221072	.	.	B	B	B	A	A	A	&FL6&XCP	LH	1					FD
A96221073	.	.	B	B	B	A	A	A	&FL6&XCP	RH	1					FR
[02]	(E)SCREW (D)SCHRAUBE (F)VIS (S)TORNILLO															
09139-06006	.	.	B	B	B	S	S	S			8					
[03]	(E)NUT-SPEED (D)MUTTER (F)ECROU (S)TUERCA															
09148-06019	.	.	B	B	B	S	S	S			8					
[04]	(E)SCREW (D)SCHRAUBE (F)VIS (S)TORNILLO															
09139-06006	.	.	B	B	B	S	S	S			4					
[05]	(E)NUT-SPEED (D)MUTTER (F)ECROU (S)TUERCA															
09148-06019	.	.	B	B	B	S	S	S			4					
[06]	(E)SCREW (D)SCHRAUBE (F)VIS (S)TORNILLO															
09139-06006	.	.	B	B	B	S	S	S			4					
[07]	(E)NUT-SPEED (D)MUTTER (F)ECROU (S)TUERCA															
09148-06019	.	.	B	B	B	S	S	S			4					
[08]	(E)SCREW (D)SCHRAUBE (F)VIS (S)TORNILLO															

ENG(ENGINE)	T/A(TRANSAXLE)	BODY TYPE
Y = 1.5SOHC 6 = 1.6DOHC . = COMMON	M = MANUAL T/A A = AUTOMATIC T/A . = COMMON	4 N = 4 DOOR NOTCHBACK 3 H = 3 DOOR HATCHBACK 5 H = 5 DOOR HATCHBACK

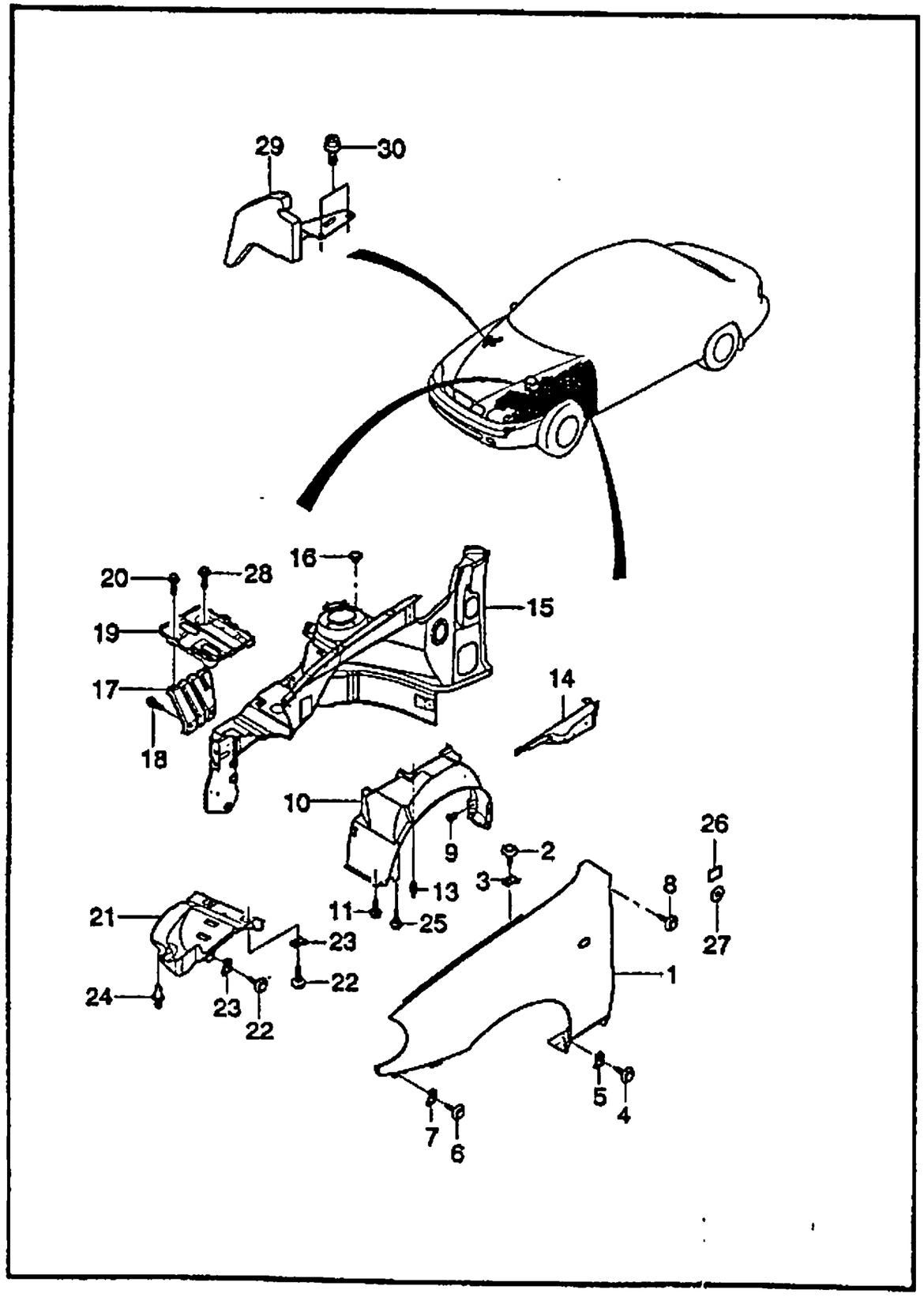

KEY NO. ITC	PART NO	MODEL ENG	T/A	BODY 4N	3H	5H	LEVEL S	SE	SX	OPTION	L/R	QTY	EFFECTIVE DATE FROM	TO	REMARKS	P/CODE
	09139-06006	.	.	B	B	B	S	S	S			2				
[09]	(E)NUT (D)MUTTER										(F)ECROU (S)TUERCA					
	09159-06006	.	.	B	B	B	S	S	S			2				
[10]	(E)LINER-FENDER (D)AUSKLEIDUNG,KOTFLÜGEL										(F)GARNITURE-GARDE-BOUE (S)REVESTIMIENTO-GUARDAFANGO					
	96242551	.	.	B	B	B	S	S	S			LH 1				
	96242552	.	.	B	B	B	S	S	S			RH 1				
[11]	(E)SCREW-TAPPING (D)SCHRAUBE										(F)VIS (S)TORNILLO					
	09136-04005	.	.	B	B	B	S	S	S			2				
[13]	(E)CLIP (D)KLEMME										(F)ATTACHE (S)GRAPA					
	09409-07303	.	.	B	B	B	S	S	S			8				
[14]	(E)BRACE-WHEELHOUSE (D)SCHIENE,RAD-GEHÄUSE										(F)SUPPORT-TIMONERIE (S)REFUERZO-TIMONERA					
	96306384	.	.	B	B	B	S	S	S			LH 1				HB
	96306385	.	.	B	B	B	S	S	S			RH 1				H2
[15]	(E)WHEELHOUSE A (D)VERKLEIDUNG,RAD-GEHÄUSE										(F)PANNEAU-TIMONERIE AVANT (S)PANEL-VOLANTE DELANTERO					
	96304491	.	.	B	B	B	S	S	S			LH 1				WB
	96250659	.	.	B	B	B	S	S	S			RH 1		970604		W2
Y	96252573	.	.	B	B	B	S	S	S			RH 1	970604			W3
[16]	(E)PLUG (D)STÖPSEL										(F)BOUCHON (S)TAPON					
	09250-10001	.	.	B	B	B	S	S	S			2				
[17]	(E)SUPPORT A-BATTERY TRAY (D)TRÄGER										(F)SUPPORT (S)SOPORTE					

ENG(ENGINE)	T/A(TRANSAXLE)	BODY TYPE
Y = 1.5SOHC 6 = 1.6DOHC . = COMMON	M = MANUAL T/A A = AUTOMATIC T/A . = COMMON	4 N = 4 DOOR NOTCHBACK 3 H = 3 DOOR HATCHBACK 5 H = 5 DOOR HATCHBACK

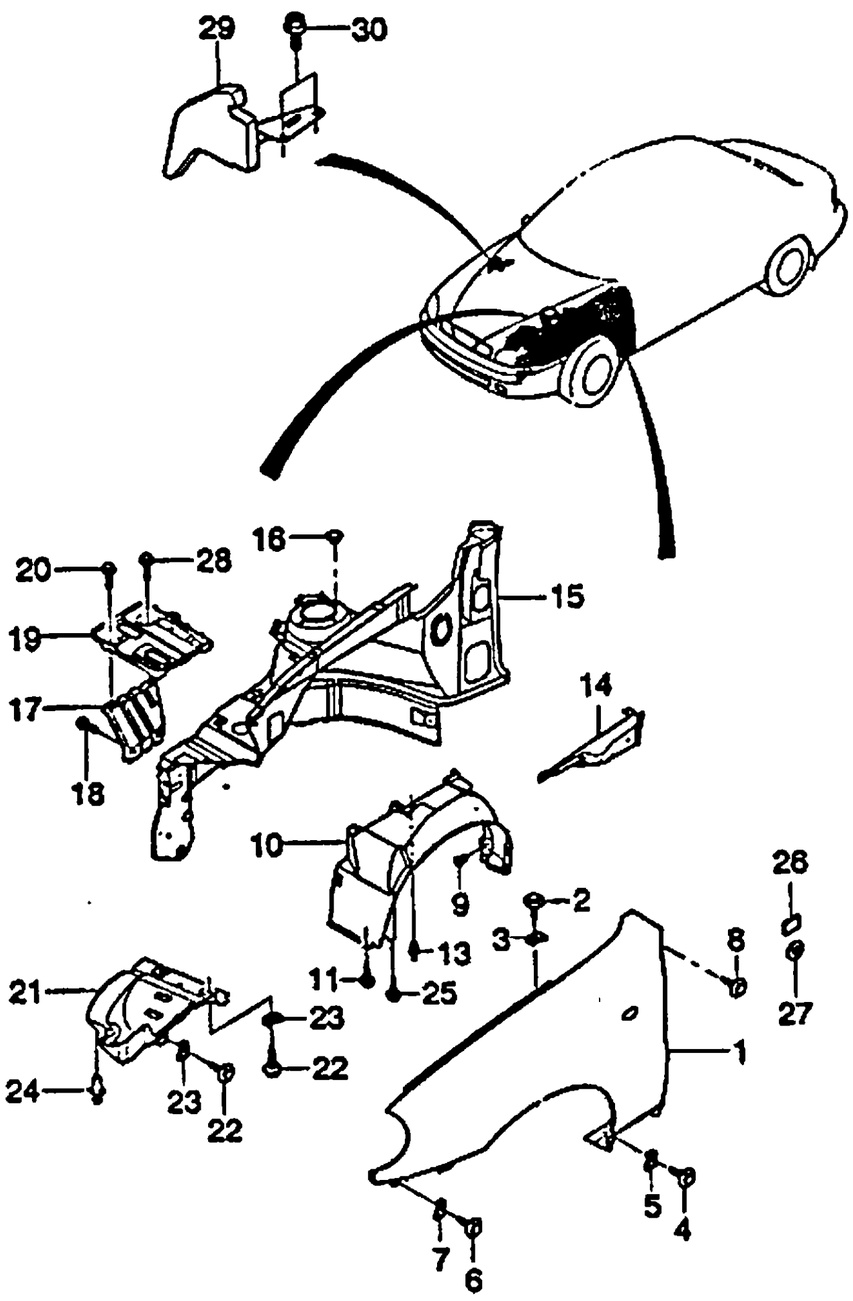

KEY NO. ITC	PART NO	MODEL ENG	T/A	BODY 4N	3H	5H	LEVEL S	SE	SX	OPTION	L/R	QTY	EFFECTIVE DATE FROM	TO	REMARKS	P/CODE
	96226880	.	.	B	B	B	S	S	S			1				
[18]	(E)BOLT-HEXAGON FLANGE (D)SCHRAUBE (F)BOULON (S)PERNO															
	02860-08203	.	.	B	B	B	S	S	S			2		970509		
	Y 01517-08163	.	.	B	B	B	S	S	S			2	970509			
[19]	(E)TRAY-BATTERY (D)PFANNE,BATTERIE (F)PLATEAU-BATTERIE (S)BANDEJA-BATERIA															
	96242192	.	.	B	B	B	S	S	S			1				
[20]	(E)BOLT-HEXAGON FLANGE (D)SCHRAUBE (F)BOULON (S)PERNO															
	02860-08203	.	.	B	B	B	S	S	S			1		970509		
	Y 01517-08163	.	.	B	B	B	S	S	S			1	970509			
[21]	(E)GUARD-SPLASH (D)KOTFLÜGEL (F)GARDE (S)PROTECTOR															
	96251301	.	.	B	B	B	S	S	S			1				
[22]	(E)SCREW-TAPPING (D)SCHRAUBE (F)VIS (S)TORNILLO															
	09136-04005	.	.	B	B	B	S	S	S			3		970804		
	Y 09136-04013	.	.	B	B	B	S	S	S			3	970804			
[23]	(E)NUT-SPEED (D)MUTTER (F)ECROU (S)TUERCA															
	09148-04010	.	.	B	B	B	S	S	S			3				
[24]	(E)HOOK (D)HAKEN (F)CROCHET (S)PERCHA															
	09410-00100	.	.	B	B	B	S	S	S			1				
[25]	(E)SCREW-TAPPING (D)SCHRAUBE (F)VIS (S)TORNILLO															
	09136-04005	.	.	B	B	B	S	S	S			4		970804		

ENG(ENGINE)	T/A(TRANSAXLE)	BODY TYPE
Y = 1.5SOHC	M = MANUAL T/A	4 N = 4 DOOR NOTCHBACK
6 = 1.6DOHC	A = AUTOMATIC T/A	3 H = 3 DOOR HATCHBACK
. = COMMON	. = COMMON	5 H = 5 DOOR HATCHBACK

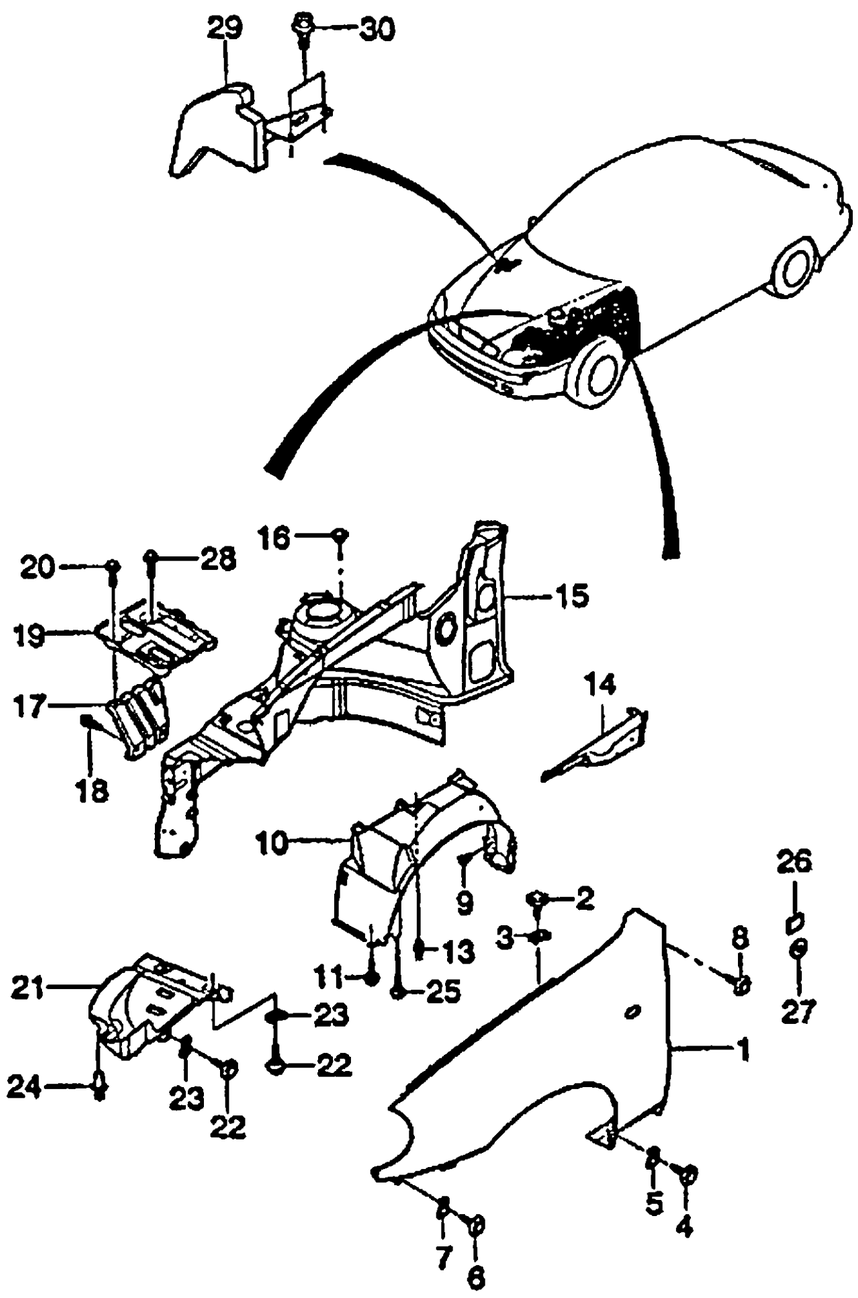

KEY NO. ITC	PART NO	MODEL ENG	T/A	BODY 4N	3H	5H	LEVEL S	SE	SX	OPTION	L/R	QTY	EFFECTIVE DATE FROM	TO	REMARKS	P/CODE
	Y 09136-04013	.	.	B	B	B	S	S	S			4	970804			
[26]	(E)SEALING-BUTYL (D)DICHTUNG (F)JOINT (S)SELLO															
	96238376	.	.	B	B	B	S	S	S			2				
[27]	(E)SEALING-BUTYL (D)DICHTUNG (F)JOINT (S)SELLO															
	96245279	.	.	B	B	B	S	S	S			2				
[28]	(E)BOLT-HEXAGON FLANGE (D)SCHRAUBE (F)BOULON (S)PERNO															
	01517-08162	.	.	B	B	B	S	S	S			3				
[29]	(E)INSULATION A-AIR INTAKE (D)ISOLIERUNG (F)ISOLATION (S)AISLAMIENTO															
	96247387	.	.	B	B	B	S	S	S			1				
[30]	(E)BOLT (D)SCHRAUBE (F)BOULON (S)PERNO															
	09116-06024	.	.	B	B	B	S	S	S			2			W/WASHER	

ENG(ENGINE)	T/A(TRANSAXLE)	BODY TYPE
Y = 1.5SOHC 6 = 1.6DOHC . = COMMON	M = MANUAL T/A A = AUTOMATIC T/A . = COMMON	4 N = 4 DOOR NOTCHBACK 3 H = 3 DOOR HATCHBACK 5 H = 5 DOOR HATCHBACK

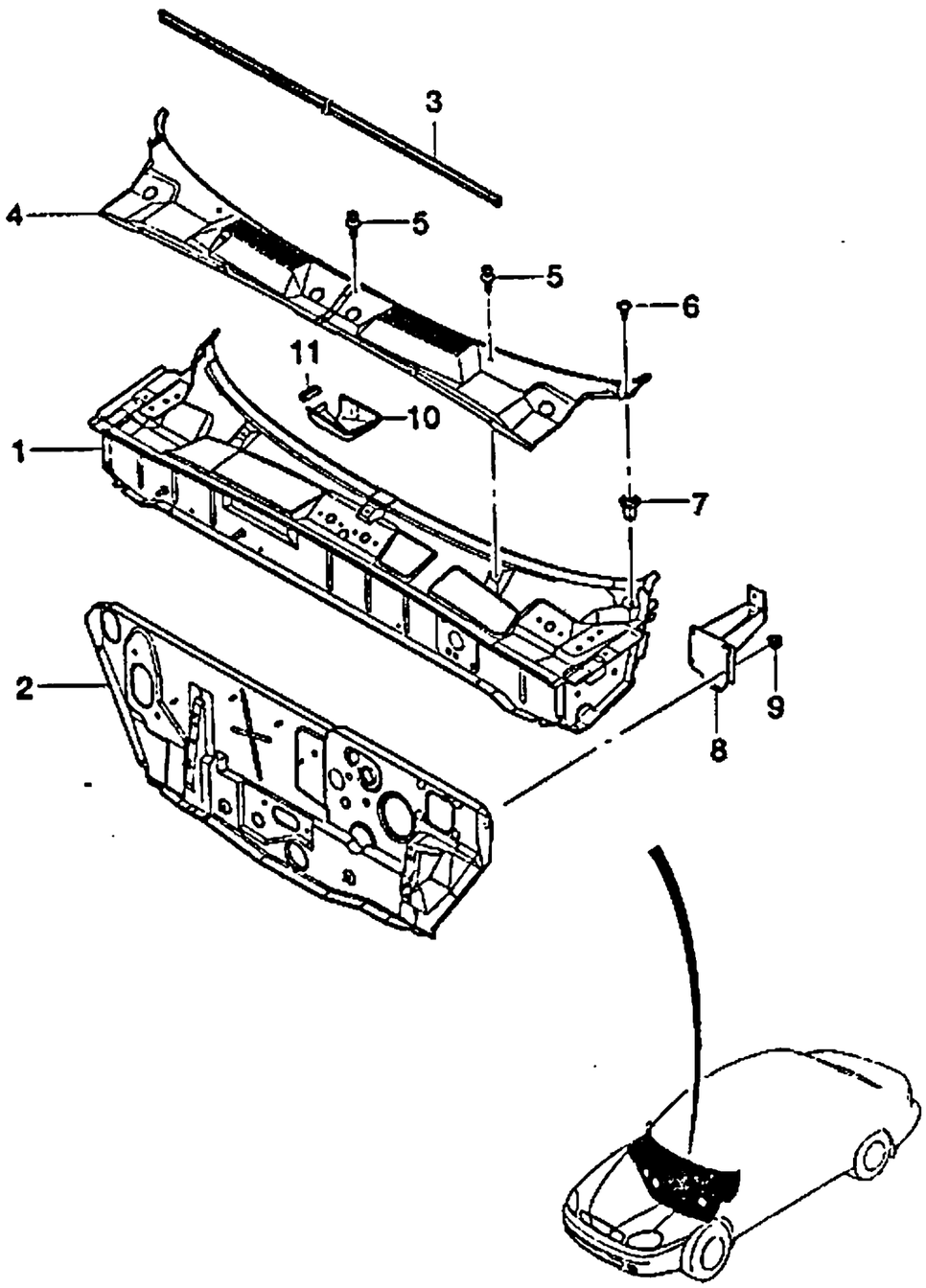

KEY NO.		PART NAME																
ITC	PART NO	MODEL								OPTION	L/R	QTY	EFFECTIVE DATE		REMARKS	P/CODE
		ENG	T/A	BODY			LEVEL						FROM	TO		
				4N	3H	6H	S	SE	SX							
[01]		(E)PANEL A-DASH,UPPER (D)VERKLEIDUNG,ARMATURENBRET									(F)PANNEAU-TABLEAU DE BORD (S)PANEL-SALPICAR					
	96218304	.	.	B	B	B	S	S	S			1				DB
[02]		(E)PANEL A-DASH,LOWER (D)PLATTE									(F)PLAQUE (S)PLACA-GOLPEADOR					
	96246753	.	.	B	B	B	S	S	S			1				D4
[03]		(E)WEATHERSTRIP-HOOD (D)DICHTUNGSLEISTE									(F)ISOLATION EN BANDELETTE (S)BURLETE					
	96303226	.	.	B	B	B	S	S	S			1				
[04]		(E)COWL (D)HAUBE									(F)CHAPEAU (S)CAPUCHA					
	96304672	.	.	B	B	B	S	S	S		LH	1				
	96304673	.	.	B	B	B	S	S	S		RH	1				
[05]		(E)CLIP (D)KLEMME									(F)ATTACHE (S)GRAPA					
	09409-06327	.	.	B	B	B	S	S	S			8				
[06]		(E)SCREW-TAPPING (D)SCHRAUBE									(F)VIS (S)TORNILLO					
	03160-42132	.	.	B	B	B	S	S	S			2		970602		
	N 09132-05002	.	.	B	B	B	S	S	S			2	970602			
[07]		(E)NUT-SPEED (D)MUTTER									(F)ECROU (S)TUERCA					
	09148-03001	.	.	B	B	B	S	S	S			2				
[08]		(E)SUPPORT A-DASH PANEL (D)TRÄGER									(F)SUPPORT (S)SOPORTE					
	96233565	.	A	B	B	B	O	O	O			1		970512		
	O 96247422	.	A	B	B	B	O	O	O			1	970512			

ENG(ENGINE)	T/A(TRANSAXLE)	BODY TYPE
Y = 1.5SOHC 6 = 1.6DOHC . = COMMON	M = MANUAL T/A A = AUTOMATIC T/A . = COMMON	4 N = 4 DOOR NOTCHBACK 3 H = 3 DOOR HATCHBACK 5 H = 5 DOOR HATCHBACK

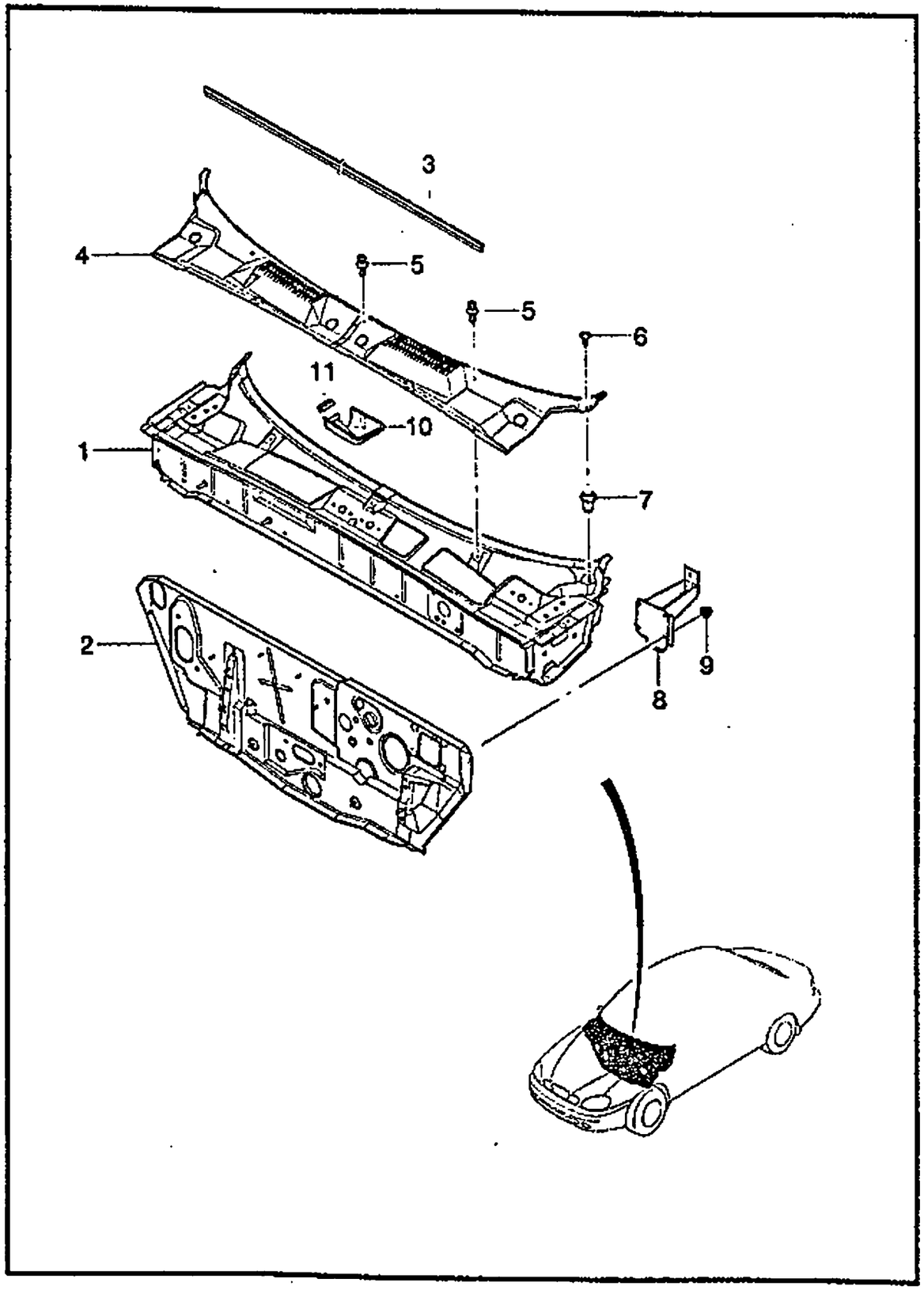

KEY NO.		PART NAME														
		MODEL														
				BODY			LEVEL									
ITC	PART NO	ENG	T/A	4N	3H	5H	S	SE	SX	OPTION	L/R	QTY	EFFECTIVE DATE FROM	EFFECTIVE DATE TO	REMARKS	P/CODE
[09]		(E)NUT (D)MUTTER									(F)ECROU (S)TUERCA					
	09159-08003	.	A	B	B	B	O	O	O			8				
[10]		(E)COVER A-DASH,TOP (D)DECKEL									(F)COUVERCLE (S)CUBIERTA					
	96242195	.	.	B	B	B	S	S	S			1				
[11]		(E)COVER-FLANGE,DASH TOP (D)DECKEL									(F)COUVERCLE (S)CUBIERTA					
	96246176	.	.	B	B	B	S	S	S			1				

ENG(ENGINE)	T/A(TRANSAXLE)	BODY TYPE
Y = 1.5SOHC 6 = 1.6DOHC . = COMMON	M = MANUAL T/A A = AUTOMATIC T/A . = COMMON	4 N = 4 DOOR NOTCHBACK 3 H = 3 DOOR HATCHBACK 5 H = 5 DOOR HATCHBACK

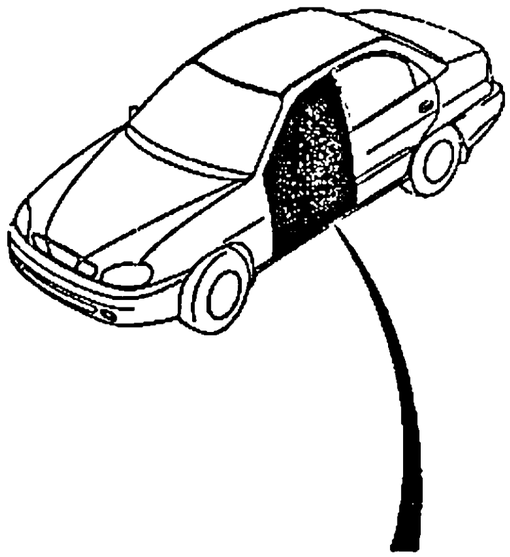

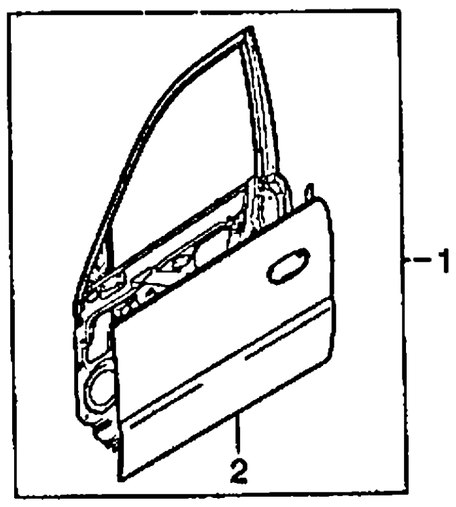

KEY NO. ITC	PART NO	MODEL ENG	T/A	BODY 4N	3H	5H	LEVEL S	SE	SX	OPTION	L/R	QTY	EFFECTIVE DATE FROM	TO	REMARKS	P/CODE
[01]		(E)PANEL A-FRONT DOOR (D)VERKLEIDUNG,VORDERTÜR									(F)PANNEAU-PORTE AVANT (S)PANEL-PUERTA DEL FRENTE					
	A96307283	.	.	B	.	B	S	S	S	&XCK	LH	1				RA
	A96307284	.	.	B	.	B	S	S	S	&XCK	RH	1				R1
	A96303836	.	.	B	.	B	A	A	A	&XCP	LH	1				RB
	A96303837	.	.	B	.	B	A	A	A	&XCP	RH	1				R2
	A96307281	.	.	.	B	.	S	.	S	&XCK	LH	1				KA
	A96307282	.	.	.	B	.	S	.	S	&XCK	RH	1				K1
	A96303834	.	.	.	B	.	A	.	A	&XCP	LH	1				KB
	A96303835	.	.	.	B	.	A	.	A	&XCP	RH	1				K2
[02]		(E)PANEL-FRONT DOOR OUTER (D)VERKLEIDUNG									(F)PANNEAU (S)PANEL					
	A96310023	.	.	B	.	B	S	S	S	&XCK	LH	1				
	A96310024	.	.	B	.	B	S	S	S	&XCK	RH	1				
	A96303911	.	.	B	.	B	A	A	A	&XCP	LH	1				
	A96303912	.	.	B	.	B	A	A	A	&XCP	RH	1				
	A96310021	.	.	.	B	.	S	.	S	&XCK	LH	1				
	A96310022	.	.	.	B	.	S	.	S	&XCK	RH	1				
	A96303909	.	.	.	B	.	A	.	A	&XCP	LH	1				
	A96303910	.	.	.	B	.	A	.	A	&XCP	RH	1				

ENG(ENGINE)	T/A(TRANSAXLE)	BODY TYPE
Y = 1.5SOHC	M = MANUAL T/A	4 N = 4 DOOR NOTCHBACK
6 = 1.6DOHC	A = AUTOMATIC T/A	3 H = 3 DOOR HATCHBACK
. = COMMON	. = COMMON	5 H = 5 DOOR HATCHBACK

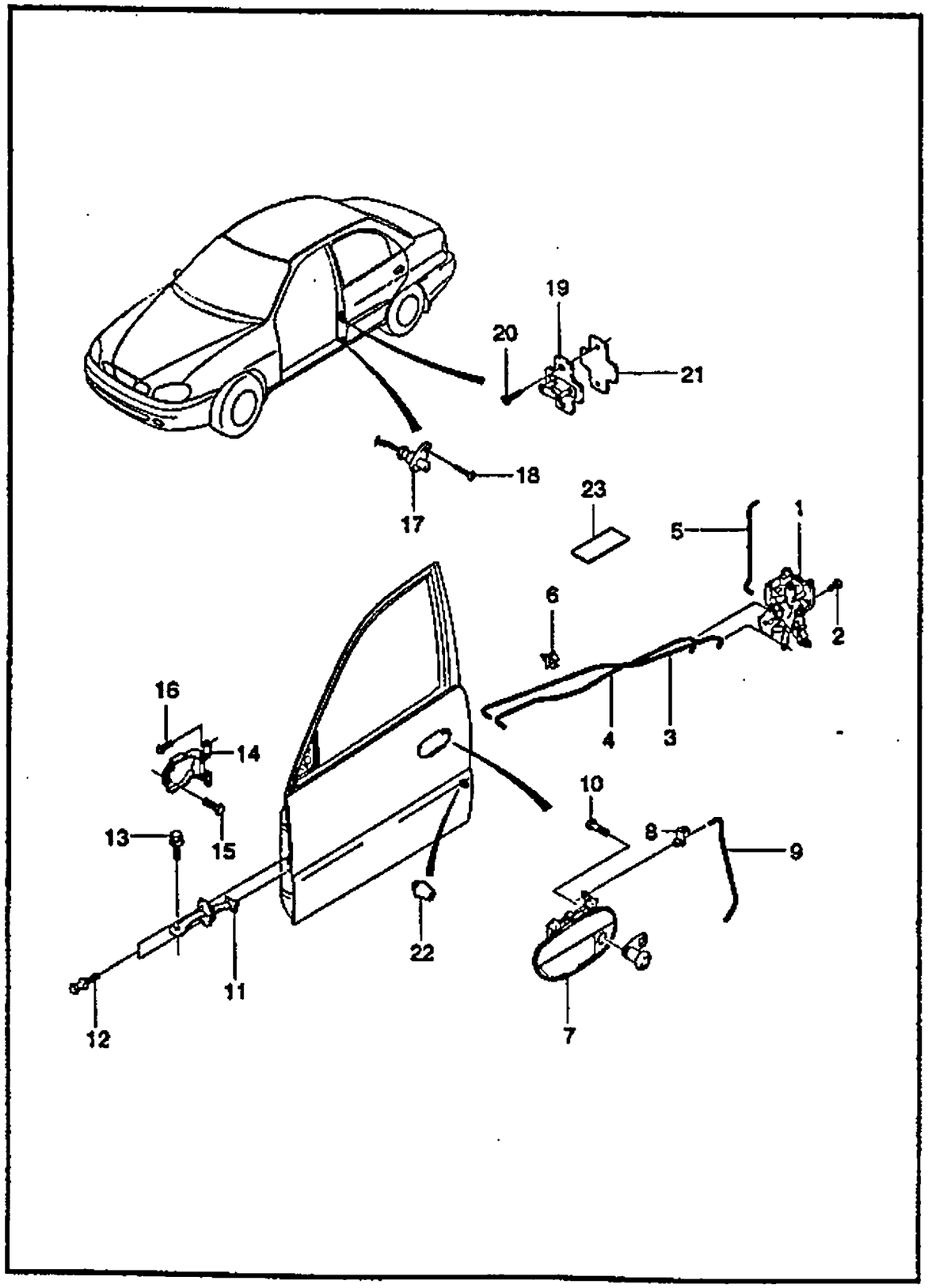

KEY NO. ITC	PART NO	MODEL ENG	MODEL T/A	BODY 4N	BODY 3H	BODY 5H	LEVEL S	LEVEL SE	LEVEL SX	OPTION	L/R	QTY	EFFECTIVE DATE FROM	EFFECTIVE DATE TO	REMARKS	P/CODE
[01]	(E)LATCH A-FRONT DOOR (D)VERSCHLUß,VORDERTÜR										(F)LOQUET-PORTE AVANT (S)PESTILLO-PUERTA					
96305415		.	.	B	B	B	S	S	.	-AU3	LH	1				
96305418		.	.	B	B	B	S	S	.	-AU3	RH	1				
96305409		.	.	B	B	B	O	O	S	&AU3	LH	1				
96305412		.	.	B	B	B	O	O	S	&AU3	RH	1				
[02]	(E)SCREW (D)SCHRAUBE										(F)VIS (S)TORNILLO					
09125-06002		.	.	B	B	B	S	S	S			6				
[03]	(E)ROD-FRONT DOOR LOCKING (D)STAB										(F)TRINGLE (S)VARILLA					
96304033		.	.	B	.	B	S	S	S		LH	1				
96304034		.	.	B	.	B	S	S	S		RH	1				
96304756		.	.	.	B	.	S	.	S		LH	1				
96304757		.	.	.	B	.	S	.	S		RH	1				
[04]	(E)ROD-FRT DOOR INSIDE HANDL (D)STAB										(F)TRINGLE (S)VARILLA					
96304031		.	.	B	.	B	S	S	S		LH	1				
96304032		.	.	B	.	B	S	S	S		RH	1				
96304754		.	.	.	B	.	S	.	S		LH	1				
96304755		.	.	.	B	.	S	.	S		RH	1				
[05]	(E)ROD-FRT DOOR KEY CYLINDER (D)STAB										(F)TRINGLE (S)VARILLA					
96304000		.	.	B	.	B	S	S	S		LH	1				
96304001		.	.	B	.	B	S	S	S		RH	1				
96304752		.	.	.	B	.	S	.	S		LH	1				

ENG(ENGINE)	T/A(TRANSAXLE)	BODY TYPE
Y = 1.5SOHC 6 = 1.6DOHC . = COMMON	M = MANUAL T/A A = AUTOMATIC T/A . = COMMON	4 N = 4 DOOR NOTCHBACK 3 H = 3 DOOR HATCHBACK 5 H = 5 DOOR HATCHBACK

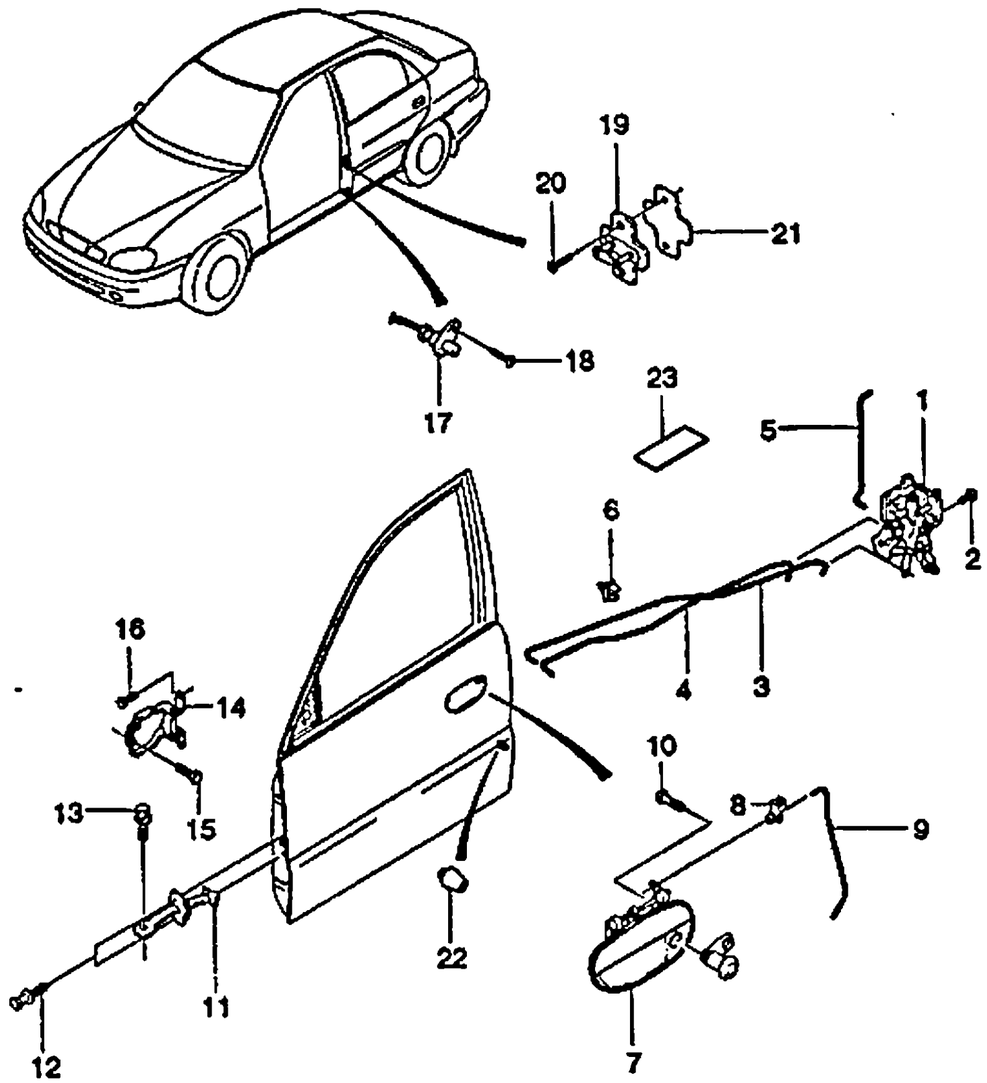

KEY NO. ITC	PART NO	MODEL ENG	MODEL T/A	MODEL BODY 4N	MODEL BODY 3H	MODEL BODY 5H	MODEL LEVEL S	MODEL LEVEL SE	MODEL LEVEL SX	OPTION	L/R	QTY	EFFECTIVE DATE FROM	EFFECTIVE DATE TO	REMARKS	P/CODE
	96304753	.	.	.	B	.	S	.	S		RH	1				
[06]	(E)CLIP (D)KLEMME										(F)ATTACHE (S)GRAPA					
	09408-00021	.	.	B	B	B	S	S	S			2				
[07]	(E)HANDLE A-FRT DOOR OUTSIDE (D)HENKEL,TÜR,AUßEN										(F)POIGNEE-EXTERIEURE PORTE (S)MANIJA-EXTERNA PUERTA					
	96226249	.	.	B	.	B	S	S	S		LH	1				NA
	96226250	.	.	B	.	B	S	S	S		RH	1				NB
	96226251	.	.	.	B	.	S	.	S		LH	1				NC
	96226252	.	.	.	B	.	S	.	S		RH	1				ND
[08]	(E)CLAMP (D)KLAMMER										(F)PINCE (S)ABRAZADERA					
	09403-04301	.	.	B	B	B	S	S	S			2				
[09]	(E)ROD-OUTSIDE HANDLE (D)STAB,AUßEN-GRIFF										(F)TRINGLE (S)VARILLA-MANIJA EXTERNA					
	96304016	.	.	B	.	B	S	S	S			2				
	96306632	.	.	.	B	.	S	.	S			2				
[10]	(E)BOLT-HEXAGON (D)SCHRAUBE										(F)BOULON (S)PERNO					
	01114-06103	.	.	B	B	B	S	S	S			4				
[11]	(E)CHECK A-FRONT DOOR (D)TÜR-PRÜF										(F)ARRET-PORTE (S)PUERTA DE VERIFICAR					
	96303990	.	.	B	B	B	S	S	S		LH	1				
	96303991	.	.	B	B	B	S	S	S		RH	1				
[12]	(E)BOLT-HEXAGON (D)SCHRAUBE										(F)BOULON (S)PERNO					
	01117-06162	.	.	B	B	B	S	S	S			4				

ENG(ENGINE)	T/A(TRANSAXLE)	BODY TYPE
Y = 1.5SOHC 6 = 1.6DOHC . = COMMON	M = MANUAL T/A A = AUTOMATIC T/A . = COMMON	4 N = 4 DOOR NOTCHBACK 3 H = 3 DOOR HATCHBACK 5 H = 5 DOOR HATCHBACK

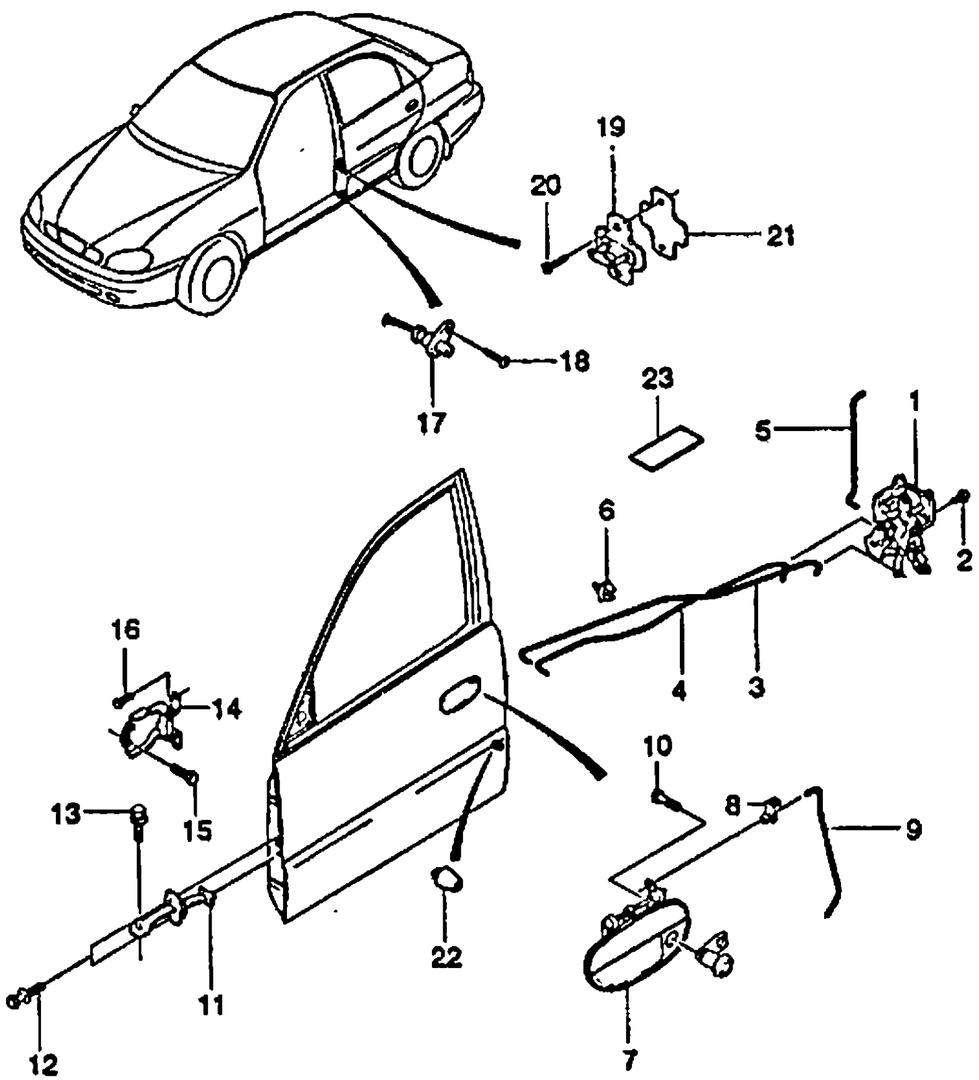

KEY NO.	PART NAME																
ITC	PART NO	MODEL								OPTION	L/R	QTY	EFFECTIVE DATE		REMARKS	P/CODE
		ENG	T/A	BODY 4N	BODY 3H	BODY 5H	LEVEL S	LEVEL SE	LEVEL SX				FROM	TO		
[13]		(E)BOLT (D)SCHRAUBE									(F)BOULON (S)PERNO					
	09118-08003	.	.	B	B	B	S	S	S			2		970512	W/WASHER	
	Y 09118-08009	.	.	B	B	B	S	S	S			2	970512		W/WASHER	
[14]		(E)HINGE A-FRONT DOOR (D)BESCHLAG,VORDERTÜR									(F)CHARNIERE-PORTE AVANT (S)BISAGRA-PUERTA					
	96224310	.	.	B	B	B	S	S	S		LH	1			UPPER	EA
	96224311	.	.	B	B	B	S	S	S		LH	1			LOWER	EB
	96224311	.	.	B	B	B	S	S	S		RH	1			UPPER	EB
	96224310	.	.	B	B	B	S	S	S		RH	1			LOWER	EA
[15]		(E)BOLT (D)SCHRAUBE									(F)BOULON (S)PERNO					
	09118-08008	.	.	B	B	B	S	S	S			8			W/WASHER	
[16]		(E)BOLT-HEXAGON FLANGE (D)SCHRAUBE									(F)BOULON (S)PERNO					
	09103-08018	.	.	B	B	B	S	S	S			8				
[17]		(E)SWITCH A-DOOR CONTACT (D)SCHALTER,TÜR KONTAKT									(F)COMMUTATEUR-CONTACT PORTE (S)INTERRUPTOR					
	96235956	.	.	B	B	B	S	S	S			2				
[18]		(E)SCREW-TAPPING (D)SCHRAUBE									(F)VIS (S)TORNILLO					
	03170-42095	.	.	B	B	B	S	S	S			2				
[19]		(E)STRIKER A-DOOR (D)SCHLÄGER									(F)MARTEAU (S)HUELGUISTA					
	96301668	.	.	B	B	B	S	S	S			2				
[20]		(E)BOLT (D)SCHRAUBE									(F)BOULON (S)PERNO					
	09119-08026	.	.	B	B	B	S	S	S			4				

ENG(ENGINE)	T/A(TRANSAXLE)	BODY TYPE
Y = 1.5SOHC	M = MANUAL T/A	4 N = 4 DOOR NOTCHBACK
6 = 1.6DOHC	A = AUTOMATIC T/A	3 H = 3 DOOR HATCHBACK
. = COMMON	. = COMMON	5 H = 5 DOOR HATCHBACK

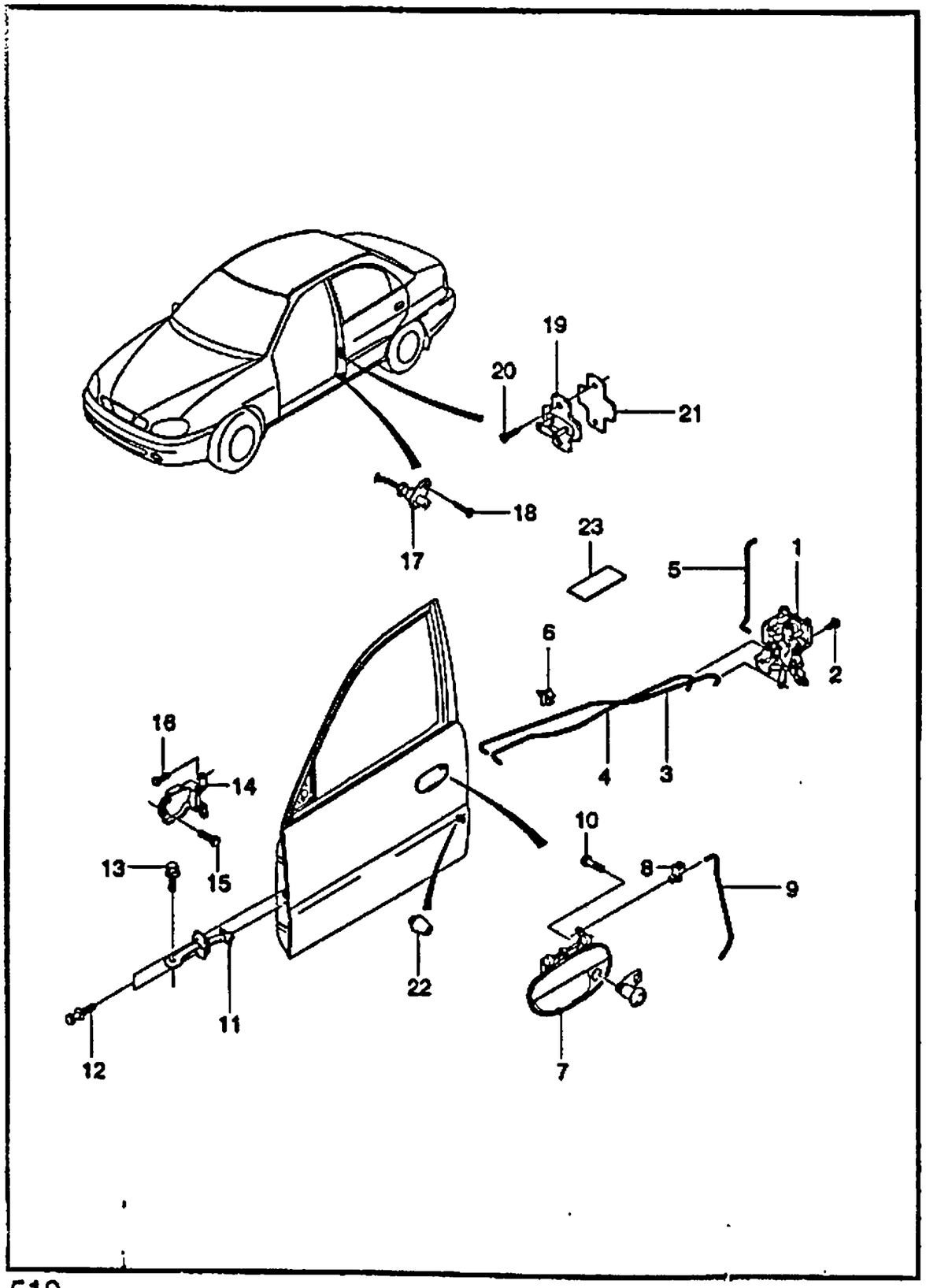

KEY NO.		PART NAME														
ITC	PART NO	MODEL								OPTION	L/R	QTY	EFFECTIVE DATE		REMARKS	P/CODE
		ENG	T/A	BODY			LEVEL						FROM	TO		
				4N	3H	5H	S	SE	SX							
[21]		(E)WASHER-DISTANCE (D)DICHTUNGSRING,DISTANZ									(F)RONDELLE-DISTANCE (S)ARANDELA-DISTANCIA					
	96216377	.	.	B	B	B	S	S	S			2				
[22]		(E)BUMPER-TRUNK LID,LWR (D)STOßSTANGE									(F)PARE-CHOC (S)PARACHOQUES					
	96240768	.	.	B	.	B	S	S	S			2				
	96169620	.	.	.	B	.	S	.	S			2				
[23]		(E)STRIP-INSULATING (D)AUSZIEHEN									(F)BANDE (S)FLEJE					
	96249231	.	.	B	B	B	S	S	S			2				

ENG(ENGINE)	T/A(TRANSAXLE)	BODY TYPE
Y = 1.5SOHC 6 = 1.6DOHC . = COMMON	M = MANUAL T/A A = AUTOMATIC T/A . = COMMON	4 N = 4 DOOR NOTCHBACK 3 H = 3 DOOR HATCHBACK 5 H = 5 DOOR HATCHBACK

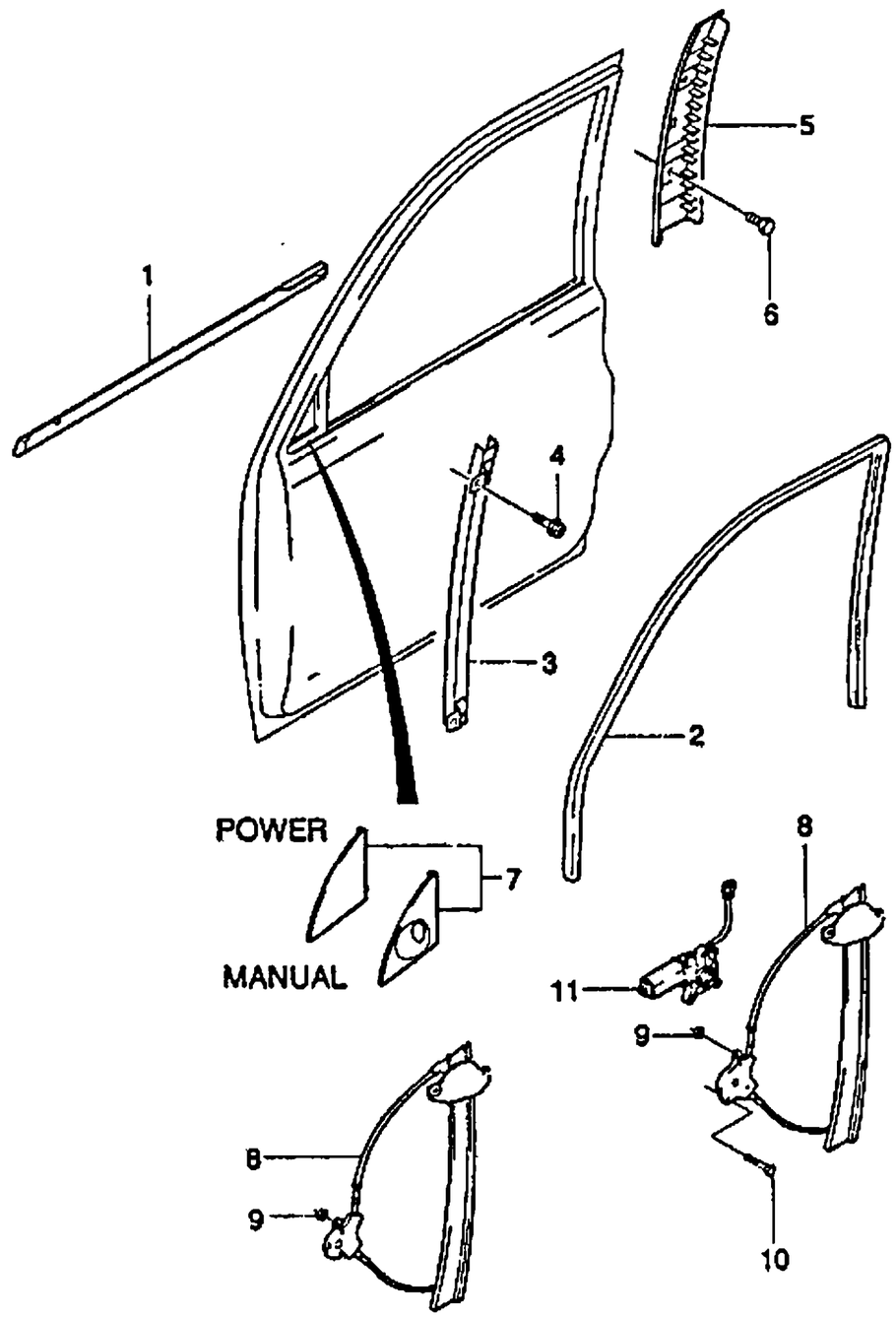

KEY NO.		PART NAME															
ITC	PART NO	MODEL								OPTION	L/R	QTY	EFFECTIVE DATE		REMARKS	P/CODE
		ENG	T/A	BODY			LEVEL						FROM	TO		
				4N	3H	5H	S	SE	SX							
	[01]	(E)MOLDING A-FRT DOOR OTR CH (D)MOLDURA-PUERTA DELANTE									(F)MOULURE-PORTE AVANT (S)PREßTEIL,VORDERTÜR					
	96304086	.	.	B	.	B	S	S	S		LH	1				
	96304087	.	.	B	.	B	S	S	S		RH	1				
	96304084	.	.	.	B	.	S	.	S		LH	1				
	96304085	.	.	.	B	.	S	.	S		RH	1				
	[02]	(E)GLASS RUN-FRONT DOOR (D)RILLE,SCHEIBE,ABLAUF									(F)RAINURE-CHEMIN DE GLACE (S)CANAL-CORRIDA DE VIDRIO					
	96304082	.	.	B	.	B	S	S	S		LH	1				
	96304083	.	.	B	.	B	S	S	S		RH	1				
	96304080	.	.	.	B	.	S	.	S		LH	1				
	96304081	.	.	.	B	.	S	.	S		RH	1				
	[03]	(E)RAIL A-FRT DOOR GUIDE,RR (D)SCHIENE,FÜHRUNG									(F)RAIL-GUIDE (S)RIEL-GUIA					
	96246242	.	.	B	.	B	S	S	S		LH	1		970901		
O	96257724	.	.	B	.	B	S	S	S		LH	1	970901			
	96246243	.	.	B	.	B	S	S	S		RH	1		970901		
O	96257725	.	.	B	.	B	S	S	S		RH	1	970901			
	96303993	.	.	.	B	.	S	.	S		LH	1		970901		
O	96257722	.	.	.	B	.	S	.	S		LH	1	970901			
	96303994	.	.	.	B	.	S	.	S		RH	1		970901		
O	96257723	.	.	.	B	.	S	.	S		RH	1	970901			
	[04]	(E)BOLT (D)SCHRAUBE									(F)BOULON (S)PERNO					
	09116-06034	.	.	B	B	B	S	S	S			4			W/WASHER	

ENG(ENGINE)	T/A(TRANSAXLE)	BODY TYPE
Y = 1.5SOHC 6 = 1.6DOHC . = COMMON	M = MANUAL T/A A = AUTOMATIC T/A . = COMMON	4 N = 4 DOOR NOTCHBACK 3 H = 3 DOOR HATCHBACK 5 H = 5 DOOR HATCHBACK

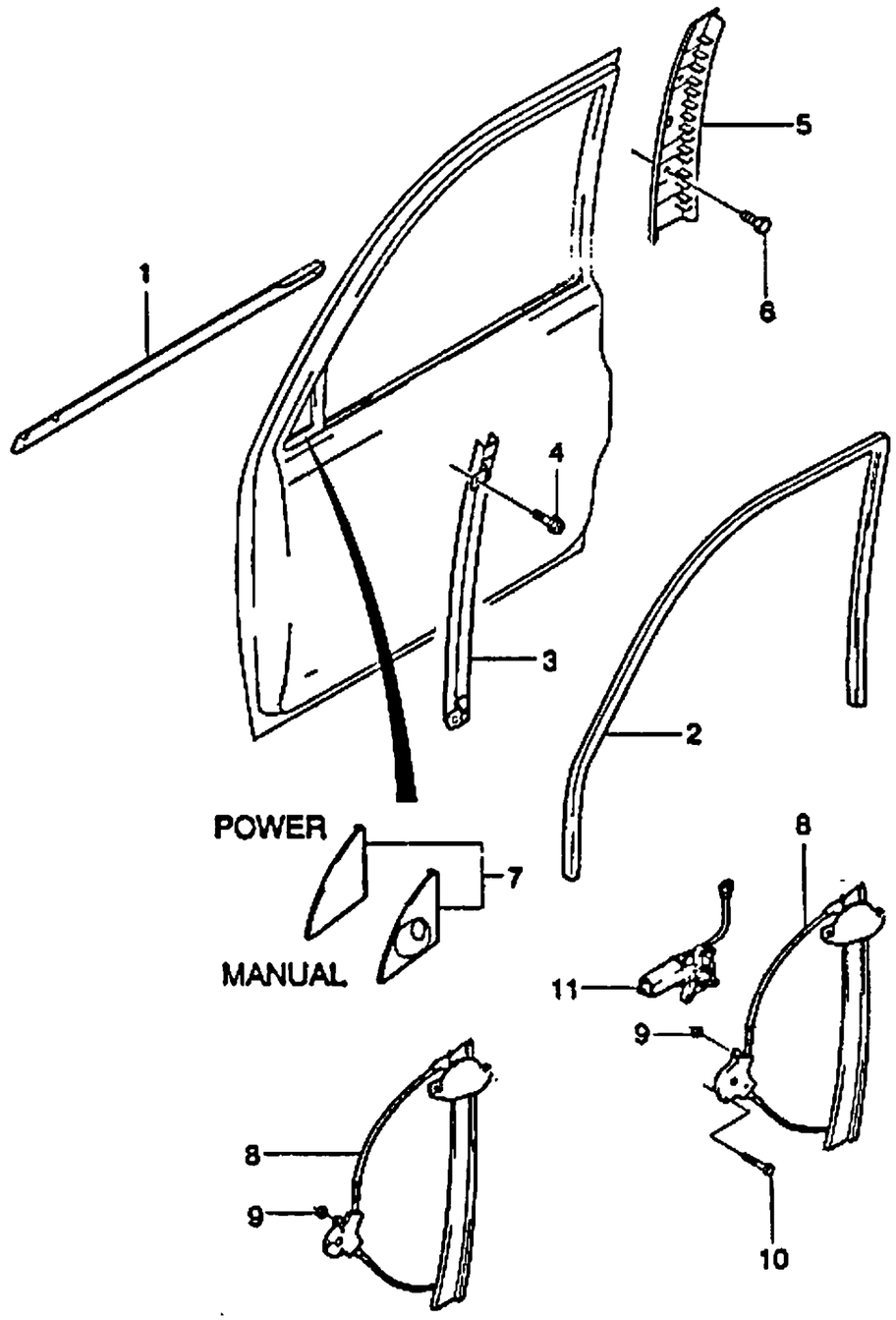

KEY NO. ITC	PART NO	MODEL ENG	T/A	BODY 4N	3H	5H	LEVEL S	SE	SX	OPTION	L/R	QTY	EFFECTIVE DATE FROM	TO	REMARKS	P/CODE
	[06]	(E)GARNISH-FRONT DOOR CENTER (D)VERZIERUNG									(F)GARNITURE (S)ORNAMENTO					
	96304715	.	.	B	.	B	S	S	S		LH	1				
	96304716	.	.	B	.	B	S	S	S		RH	1				
	96304713	.	.	.	B	.	S	.	S		LH	1				
	96304714	.	.	.	B	.	S	.	S		RH	1				
	[06]	(E)SCREW-TAPPING (D)SCHRAUBE									(F)VIS (S)TORNILLO					
	03111-42132	.	.	B	.	B	S	S	S			8				
	09132-04009	.	.	.	B	.	S	.	S			2		970701		
	N 09136-04011	.	.	.	B	.	S	.	S			2	970701			
	[07]	(E)COVER A-WINDOW FRAME INR (D)DECKEL,FENSTERRAHMEN									(F)COUVERTURE (S)CUBIERTA-MARCO DE VENTANA					
	96304172	.	.	B	B	B	S	S	S	&D33	LH	1				
	96304173	.	.	B	B	B	S	S	S	&D39	RH	1				
	96304175	.	.	B	B	B	.	.	O	&DD4	RH	1				
	[08]	(E)LIFTER-FRT DOOR WINDOW (D)HEBER,FENSTERSCHEIBE									(F)LEVIER-FENETRE,AVANT (S)LEVANTADOR-VENTANA					
	96304038	.	.	B	.	B	S	S	.	&A30	LH	1				W1
	96304040	.	.	B	.	B	S	S	.	&A30	RH	1				W2
	96225383	.	.	B	.	B	O	O	S	&A32/A31	LH	1				
	96225384	.	.	B	.	B	O	O	S	&A32/A31	RH	1				
	96304039	.	.	.	B	.	S	.	.	&A30	LH	1				W3
	96304041	.	.	.	B	.	S	.	.	&A30	RH	1				W4
	96233470	.	.	.	B	.	O	.	S	&A32	LH	1				
	96233471	.	.	.	B	.	O	.	S	&A32	RH	1				

ENG(ENGINE)	T/A(TRANSAXLE)	BODY TYPE
Y = 1.5SOHC 6 = 1.6DOHC . = COMMON	M = MANUAL T/A A = AUTOMATIC T/A . = COMMON	4 N = 4 DOOR NOTCHBACK 3 H = 3 DOOR HATCHBACK 5 H = 5 DOOR HATCHBACK

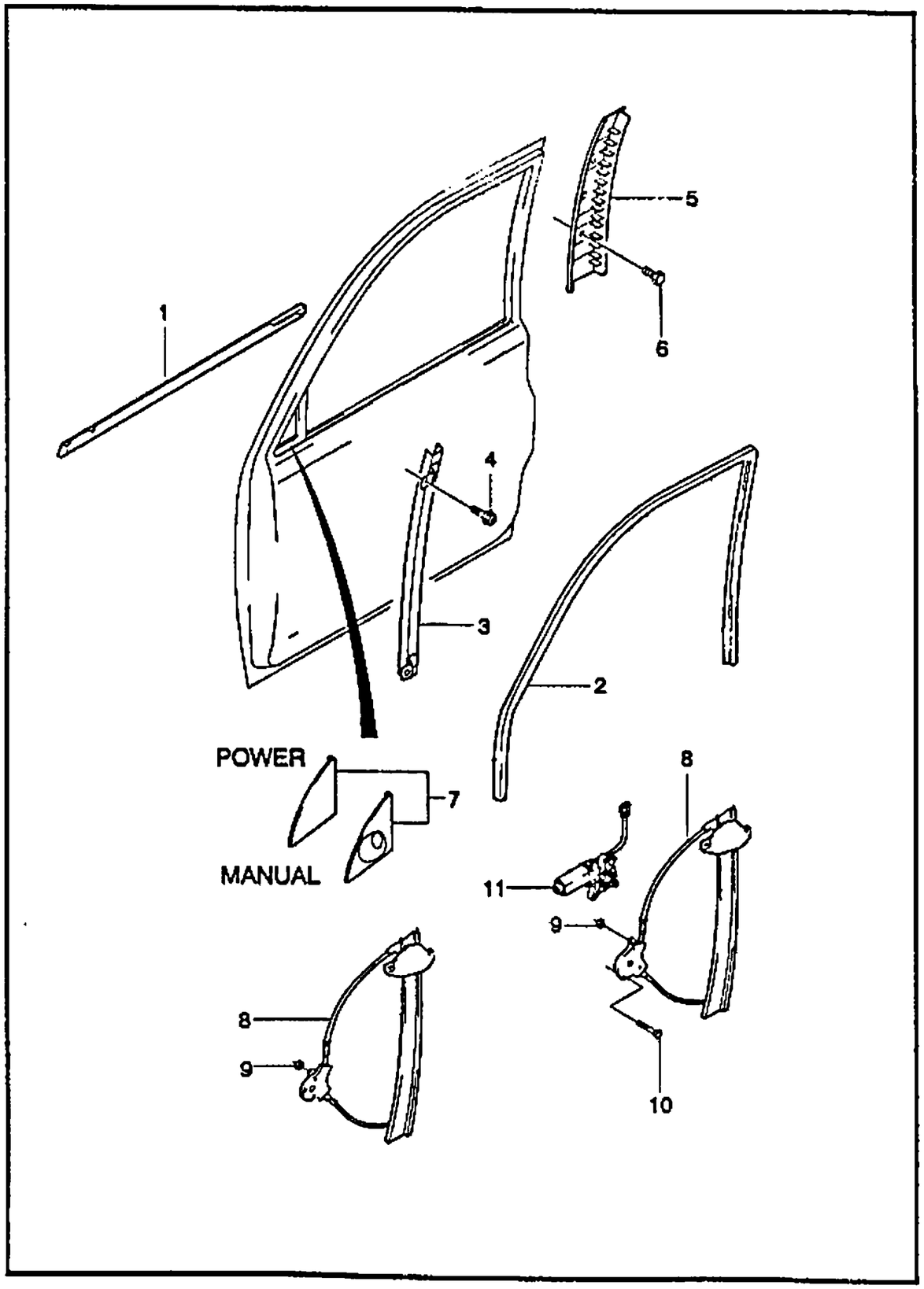

KEY NO. ITC	PART NO	MODEL ENG	T/A	BODY 4N	3H	5H	LEVEL S	SE	SX	OPTION	L/R	QTY	EFFECTIVE DATE FROM	TO	REMARKS	P/CODE
		PART NAME														
[09]		(E)NUT-HEXAGON FLANGE (D)MUTTER									(F)ECROU (S)TUERCA					
	08316-25063	.	.	B	B	B	S	S	.	&A30		12				
	08316-25063	.	.	B	B	B	O	O	S	&A32/A31		14				
[10]		(E)SCREW (D)SCHRAUBE									(F)VIS (S)TORNILLO					
	96227795	.	.	B	B	B	O	O	S	&A32/A31		6				
[11]		(E)MOTOR A-POWER WINDOW (D)MOTOR,FENSTERSCHEIBE									(F)MOTEUR (S)MOTOR-VENTANA ELECTRICA					
	96190207	.	.	B	B	B	O	O	S	&A32/A31	LH	1				TC
	96190208	.	.	B	B	B	O	O	S	&A32/A31	RH	1				TD

ENG(ENGINE)	T/A(TRANSAXLE)	BODY TYPE
Y = 1.5SOHC 6 = 1.6DOHC . = COMMON	M = MANUAL T/A A = AUTOMATIC T/A . = COMMON	4 N = 4 DOOR NOTCHBACK 3 H = 3 DOOR HATCHBACK 5 H = 5 DOOR HATCHBACK

5240 FRONT WEATHERSTRIP

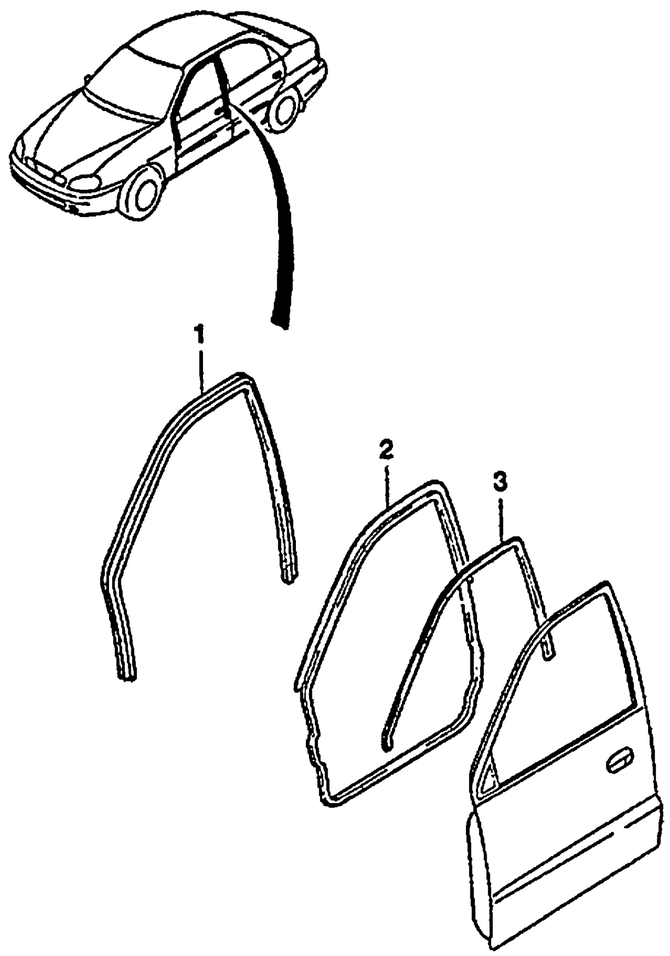

KEY NO. ITC	PART NO	MODEL ENG	T/A	BODY 4N	3H	5H	LEVEL S	SE	SX	OPTION	L/R	QTY	EFFECTIVE DATE FROM	TO	REMARKS	P/CODE
[01]		(E)COVER-FRT DOOR OPEN FLANG (D)DECKEL									(F)CARTER (S)CUBIERTA					
	96238367	.	.	B	.	B	S	S	S			2				
	96238366	.	.	.	B	.	S	.	S			2				
[02]		(E)WEATHERSTRIP A-FRONT DOOR (D)DICHTUNGSLEISTE									(F)ISOLATION EN BANDELETTE (S)BURLETE					
	96304074	.	.	B	.	B	S	S	S		LH	1				
	96304075	.	.	B	.	B	S	S	S		RH	1				
	96304072	.	.	.	B	.	S	.	S		LH	1				
	96304073	.	.	.	B	.	S	.	S		RH	1				
[03]		(E)WEATHERSTRIP-FR DOOR,2ND (D)DICHTUNGSLEISTE									(F)ISOLATION EN BANDELETTE (S)BURLETE					
	96304078	.	.	B	.	B	S	S	S		LH	1				
	96304079	.	.	B	.	B	S	S	S		RH	1				
	96304076	.	.	.	B	.	S	.	S		LH	1				
	96304077	.	.	.	B	.	S	.	S		RH	1				

ENG(ENGINE)	T/A(TRANSAXLE)	BODY TYPE
Y = 1.5SOHC 6 = 1.6DOHC . = COMMON	M = MANUAL T/A A = AUTOMATIC T/A . = COMMON	4 N = 4 DOOR NOTCHBACK 3 H = 3 DOOR HATCHBACK 5 H = 5 DOOR HATCHBACK

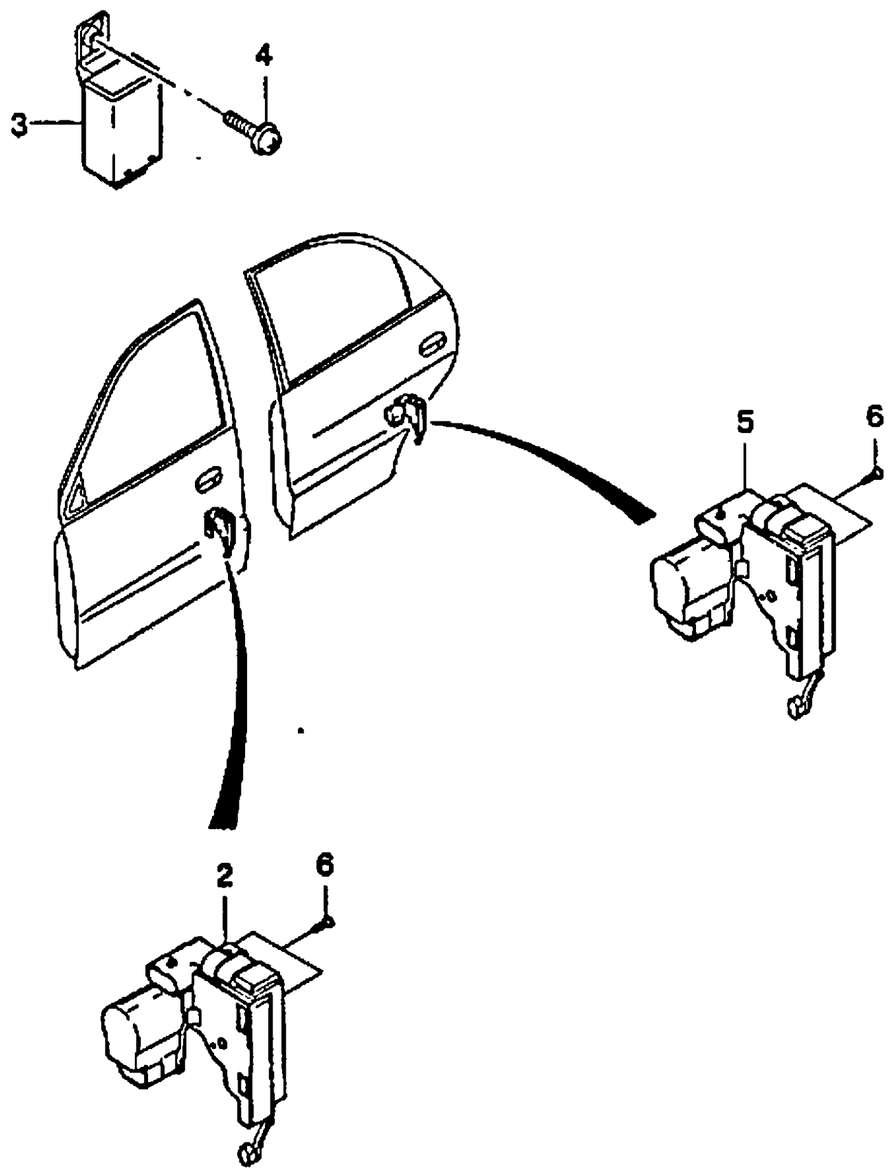

KEY NO.	PART NAME															
ITC	PART NO	MODEL								OPTION	L/R	QTY	EFFECTIVE DATE		REMARKS	P/CODE
		ENG	T/A	BODY			LEVEL						FROM	TO		
				4N	3H	5H	S	SE	SX							
[02]		(E)ACTUATOR A-DOOR (D)BETÄTIGUNG									(F)ACTIONNEUR (S)ACTUADOR					
	96229552	.	.	B	B	B	O	O	S	&AU3		1			CO DRIVE	
[03]		(E)RELAY A-CENTRAL DOOR LOCK (D)RELAIS									(F)RELAI (S)RELEVADOR					
	96216279	.	.	B	B	B	O	O	S	&AU3		1				
[04]		(E)BOLT (D)SCHRAUBE									(F)BOULON (S)PERNO					
	01517-06123	.	.	B	B	B	O	O	S	&AU3		1				
[05]		(E)ACTUATOR A-DOOR (D)BETÄTIGUNG									(F)ACTIONNEUR (S)ACTUADOR					
	96229551	.	.	B	.	B	O	O	S	&AU3		LH 1				
	96229552	.	.	B	.	B	O	O	S	&AU3		RH 1				
[06]		(E)SCREW (D)SCHRAUBE									(F)VIS (S)TORNILLO					
	07-2012-0011	.	.	B	B	B	O	O	S	&AU3		1				

ENG(ENGINE)	T/A(TRANSAXLE)	BODY TYPE
Y = 1.5SOHC 6 = 1.6DOHC . = COMMON	M = MANUAL T/A A = AUTOMATIC T/A . = COMMON	4 N = 4 DOOR NOTCHBACK 3 H = 3 DOOR HATCHBACK 5 H = 5 DOOR HATCHBACK

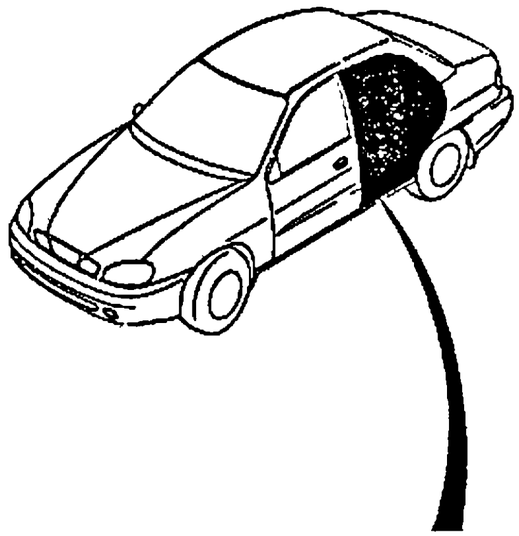

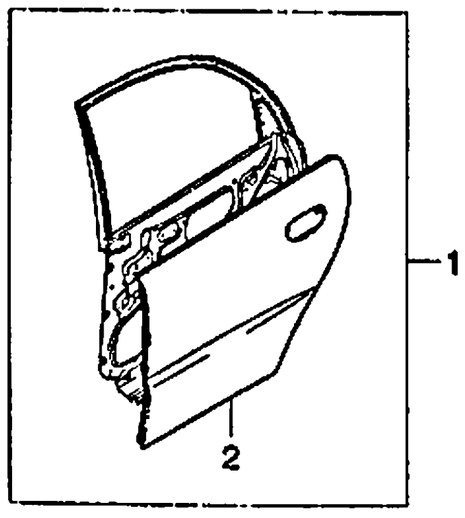

KEY NO.		PART NAME														
ITC	PART NO	MODEL								OPTION	L/R	QTY	EFFECTIVE DATE		REMARKS	P/CODE
		ENG	T/A	BODY			LEVEL						FROM	TO		
				4N	3H	5H	S	SE	SX							
[01]		(E)PANEL A-REAR DOOR (D)VERKLEIDUNG,HINTERTÜR									(F)PANNEAU-PORTE ARRIERE (S)PANEL-PUERTA TRASERA					
	A96310031	.	.	B	.	B	S	S	S	&XCK	LH	1				RA
	A96310032	.	.	B	.	B	S	S	S	&XCK	RH	1				R1
	A96303928	.	.	B	.	B	A	A	A	&XCP	LH	1				RB
	A96303929	.	.	B	.	B	A	A	A	&XCP	RH	1				R2
[02]		(E)PANEL-REAR DOOR OUTER (D)VERKLEIDUNG									(F)PANNEAU (S)PANEL					
	A96310058	.	.	B	.	B	S	S	S	&XCK	LH	1				
	A96310059	.	.	B	.	B	S	S	S	&XCK	RH	1				
	A96303970	.	.	B	.	B	A	A	A	&XCP	LH	1				
	A96303971	.	.	B	.	B	A	A	A	&XCP	RH	1				

ENG(ENGINE)	T/A(TRANSAXLE)	BODY TYPE
Y = 1.5SOHC 6 = 1.6DOHC . = COMMON	M = MANUAL T/A A = AUTOMATIC T/A . = COMMON	4 N = 4 DOOR NOTCHBACK 3 H = 3 DOOR HATCHBACK 5 H = 5 DOOR HATCHBACK

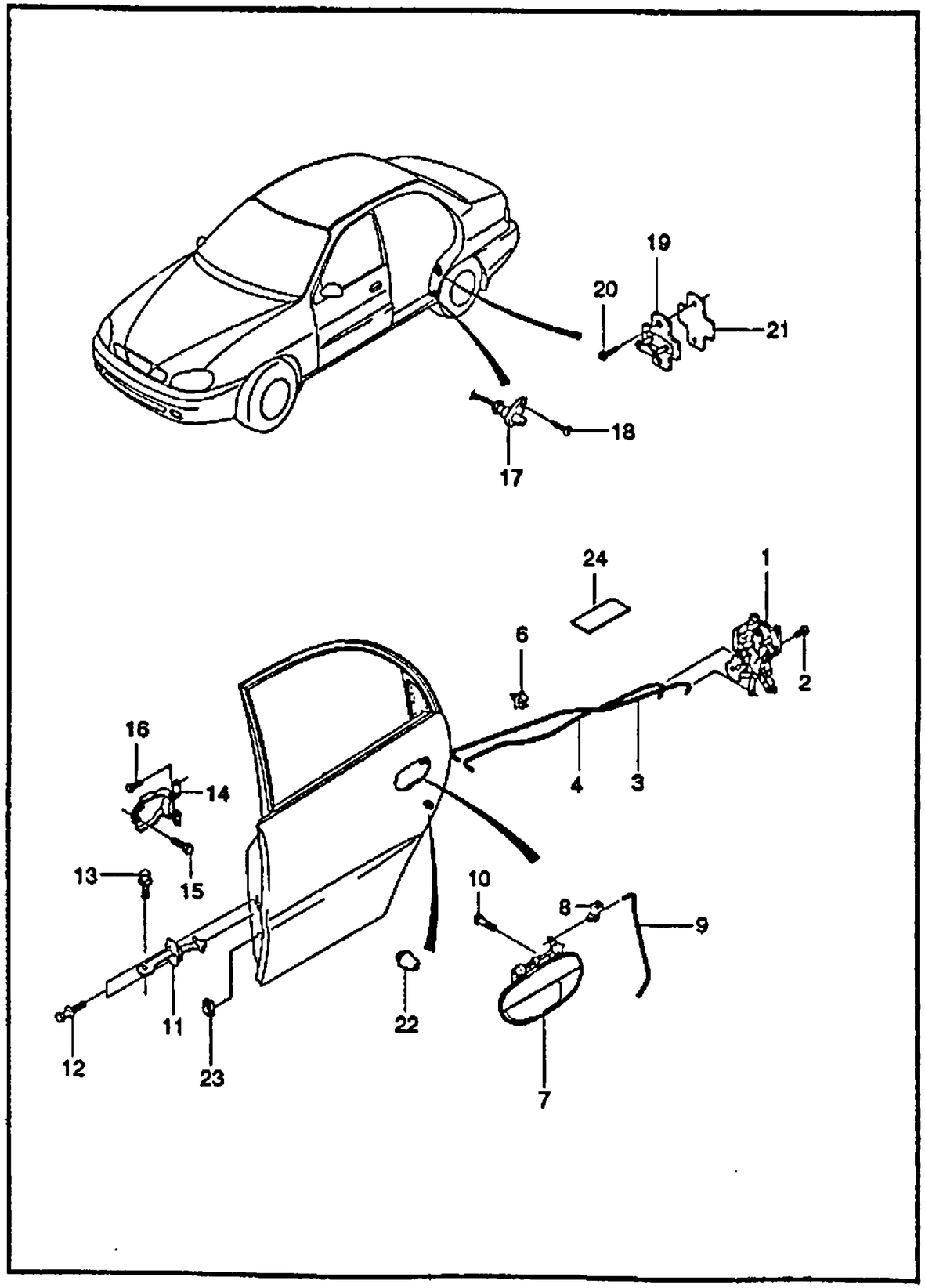

KEY NO.		PART NAME															
ITC	PART NO	MODEL								OPTION	L/R	QTY	EFFECTIVE DATE		REMARKS	P/CODE
		ENG	T/A	BODY			LEVEL						FROM	TO		
				4N	3H	5H	S	SE	SX							
[01]		(E)LATCH A-REAR DOOR (D)VERSCHLUß,HINTERTÜR									(F)LOQUET-PORTE ARRIERE (S)PESTILLO-PUERTA TRASERA					
96305419		.	.	B	.	B	S	S	.	-AU3	LH	1				
96305420		.	.	B	.	B	S	S	.	-AU3	RH	1				
96305413		.	.	B	.	B	O	O	S	&AU3	LH	1				
96305414		.	.	B	.	B	O	O	S	&AU3	RH	1				
[02]		(E)SCREW (D)SCHRAUBE									(F)VIS (S)TORNILLO					
09125-06002		.	.	B	.	B	S	S	S			6				
[03]		(E)ROD-REAR DOOR LOCKING (D)STAB									(F)TRINGLE (S)VARILLA-CON CIERRE DE PUE					
96304127		.	.	B	.	B	S	S	S		LH	1				
96304128		.	.	B	.	B	S	S	S		RH	1				
[04]		(E)ROD-RR DOOR INSIDE HANDLE (D)STAB									(F)TRINGLE (S)VARILLA					
96304125		.	.	B	.	B	S	S	S		LH	1				
96304126		.	.	B	.	B	S	S	S		RH	1	-			
[06]		(E)CLIP (D)KLEMME									(F)ATTACHE (S)GRAPA					
09408-00021		.	.	B	.	B	S	S	S			2				
[07]		(E)HANDLE A-RR DOOR OUTSIDE (D)HENKEL,TÜR,AUßEN									(F)POIGNEE-EXTERIEURE PORTE (S)MANIJA-EXTERNA PUERTA					
96226329		.	.	B	.	B	S	S	S		LH	1				NE
96226330		.	.	B	.	B	S	S	S		RH	1				NF
[08]		(E)CLAMP (D)KLAMMER									(F)PINCE (S)ABRAZADERA					
09403-04301		.	.	B	.	B	S	S	S			2				

ENG(ENGINE)	T/A(TRANSAXLE)	BODY TYPE
Y = 1.5SOHC 6 = 1.6DOHC . = COMMON	M = MANUAL T/A A = AUTOMATIC T/A . = COMMON	4 N = 4 DOOR NOTCHBACK 3 H = 3 DOOR HATCHBACK 5 H = 5 DOOR HATCHBACK

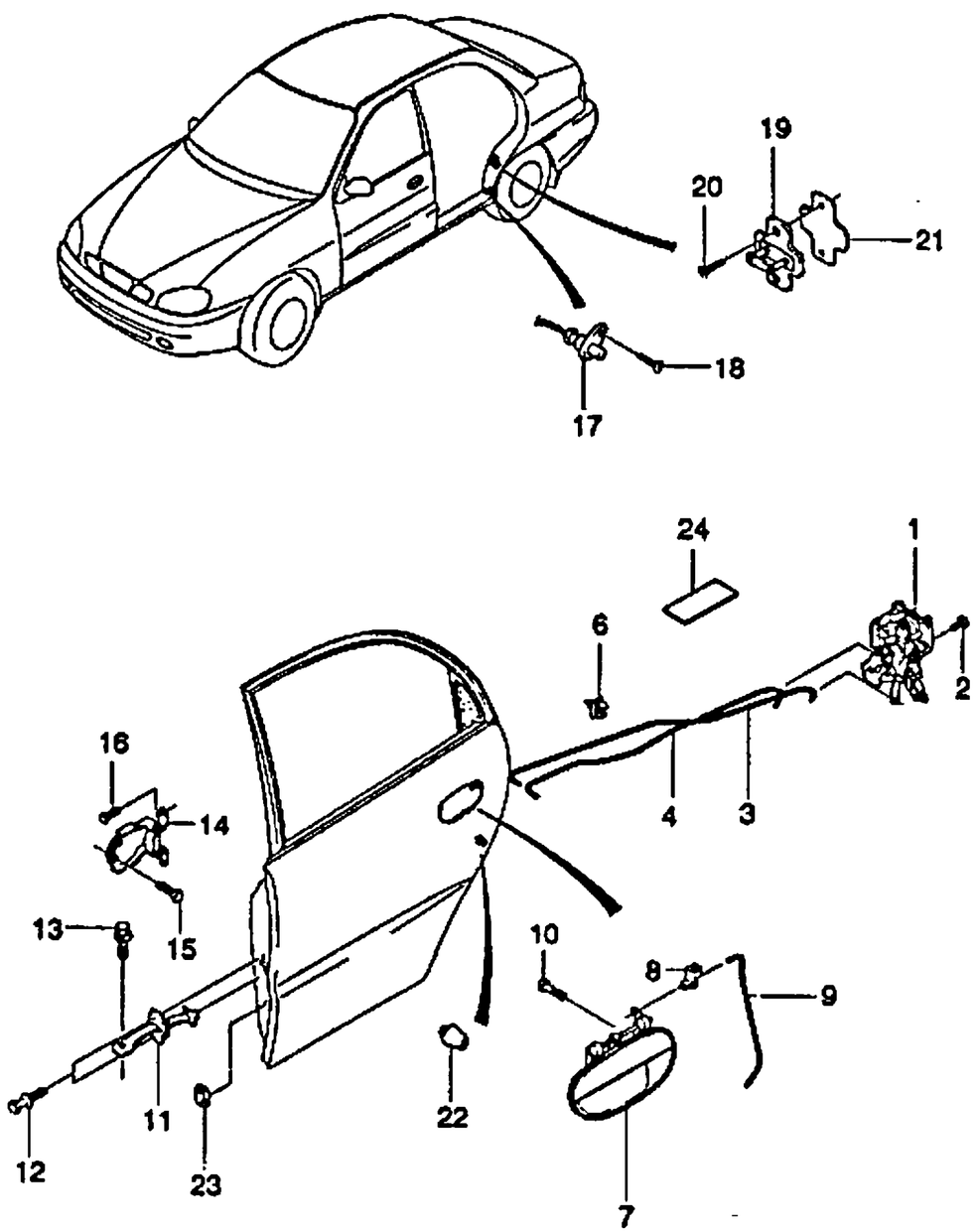

KEY NO.		PART NAME														
ITC	PART NO	MODEL								OPTION	L/R	QTY	EFFECTIVE DATE		REMARKS	P/CODE
		ENG	T/A	BODY			LEVEL						FROM	TO		
				4N	3H	5H	S	SE	SX							
[09]		(E)ROD-RR DOOR OUTSIDE HANDL (D)STAB,AUßEN-GRIFF									(F)TRINGLE (S)VARILLA-MANIJA EXTERNA					
	96304110	.	.	B	.	B	S	S	S			2				
[10]		(E)BOLT-HEXAGON (D)SCHRAUBE									(F)BOULON (S)PERNO					
	01114-06103	.	.	B	.	B	S	S	S			4				
[11]		(E)CHECK A-REAR DOOR (D)TÜR-PRÜF									(F)ARRET-PORTE (S)PUERTA DE VERIFICAR					
	96304088	.	.	B	.	B	S	S	S			LH	1			
	96304089	.	.	B	.	B	S	S	S			RH	1			
[12]		(E)BOLT-HEXAGON (D)SCHRAUBE									(F)BOULON (S)PERNO					
	01117-06162	.	.	B	.	B	S	S	S			4				
[13]		(E)BOLT (D)SCHRAUBE									(F)BOULON (S)PERNO					
	09118-08003	.	.	B	.	B	S	S	S			2		970512	W/WASHER	
	Y 09118-08009	.	.	B	.	B	S	S	S			2	970512		W/WASHER	
[14]		(E)HINGE A-REAR DOOR (D)BESCHLAG,HINTERTÜR									(F)CHARNIERE-PORTE ARRIERE (S)BISAGRA-PUERTA					
	96224312	.	.	B	.	B	S	S	S			LH	1		UPPER	HA
	96224313	.	.	B	.	B	S	S	S			LH	1		LOWER	HB
	96224313	.	.	B	.	B	S	S	S			RH	1		UPPER	HB
	96224312	.	.	B	.	B	S	S	S			RH	1		LOWER	HA
[15]		(E)BOLT (D)SCHRAUBE									(F)BOULON (S)PERNO					
	09118-08008	.	.	B	.	B	S	S	S			8			W/WASHER	
[16]		(E)BOLT-HEXAGON FLANGE (D)SCHRAUBE									(F)BOULON (S)PERNO					

ENG(ENGINE)	T/A(TRANSAXLE)	BODY TYPE
Y = 1.5SOHC 6 = 1.6DOHC . = COMMON	M = MANUAL T/A A = AUTOMATIC T/A . = COMMON	4 N = 4 DOOR NOTCHBACK 3 H = 3 DOOR HATCHBACK 5 H = 5 DOOR HATCHBACK

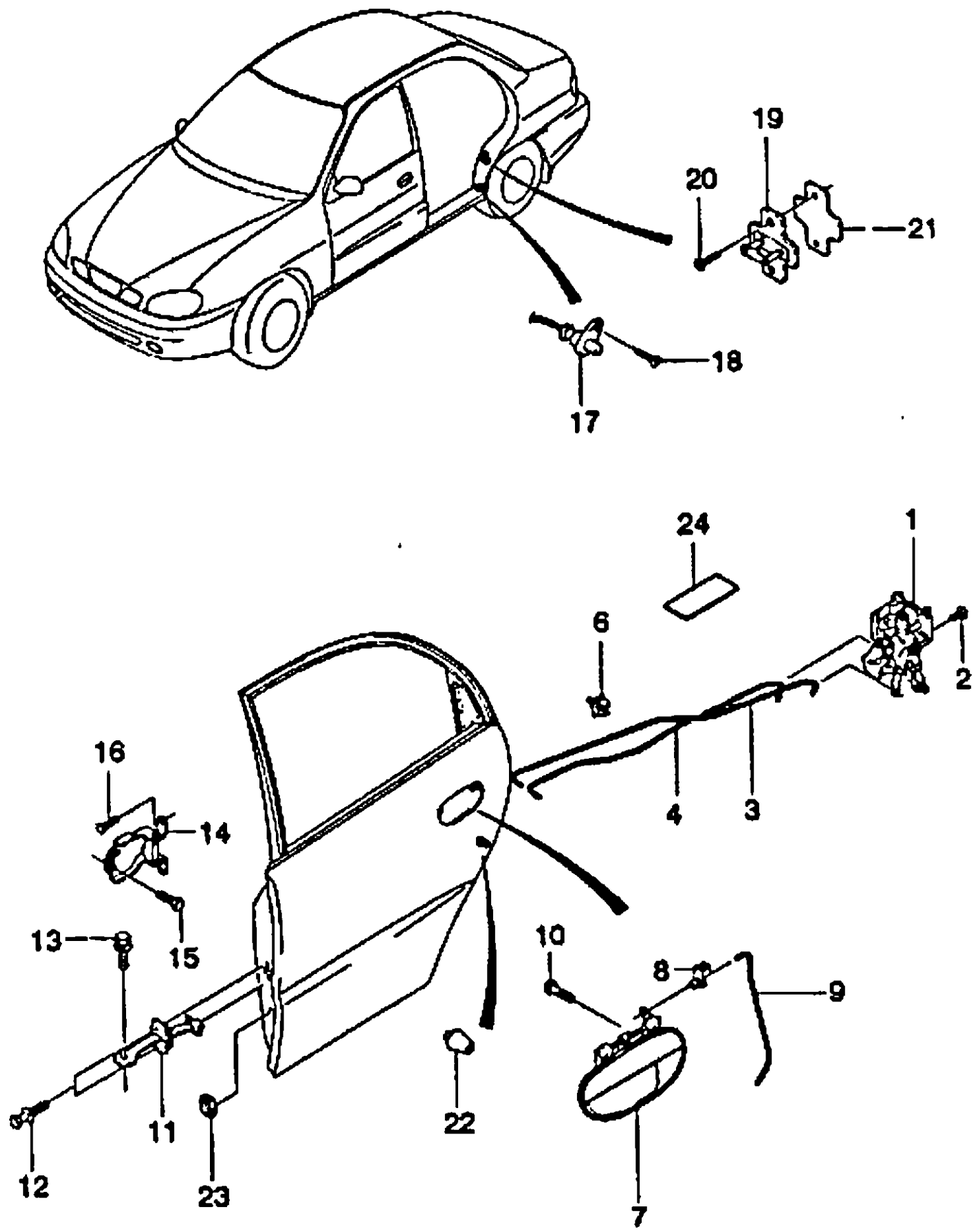

KEY NO. ITC	PART NO	MODEL ENG	T/A	BODY 4N	3H	5H	LEVEL S	SE	SX	OPTION	L/R	QTY	EFFECTIVE DATE FROM	TO	REMARKS	P/CODE
[17]	09103-08018	.	.	B	.	B	S	S	S			8			(E)SWITCH A-DOOR CONTACT (D)SCHALTER,TÜR KONTAKT (F)COMMUTATEUR-CONTACT PORTE (S)INTERRUPTOR	
[18]	96235966	.	.	B	.	B	S	S	S			2			(E)SCREW-TAPPING (D)SCHRAUBE (F)VIS (S)TORNILLO	
[19]	03170-42096	.	.	B	.	B	S	S	S			2			(E)STRIKER A-DOOR (D)SCHLÄGER (F)MARTEAU (S)HUELGUISTA	
[20]	96301668	.	.	B	.	B	S	S	S			2			(E)BOLT (D)SCHRAUBE (F)BOULON (S)PERNO	
[21]	09119-08026	.	.	B	.	B	S	S	S			4			(E)WASHER-DISTANCE (D)DICHTUNGSRING,DISTANZ (F)RONDELLE-DISTANCE (S)ARANDELA-DISTANCIA	
[22]	96216377	.	.	B	.	B	S	S	S			2			(E)BUMPER-TRUNK LID,LWR (D)STOßSTANGE (F)PARE-CHOC (S)PARACHOQUES	
[23]	96169620	.	.	B	.	B	S	S	S			2			(E)PLUG-REAR DOOR (D)STÖPSEL (F)BOUCHON (S)TAPON	
[24]	96236225	.	.	B	.	B	S	S	.	-AU3		2			(E)STRIP-INSULATING (D)AUSZIEHEN (F)BANDE (S)FLEJE	
	96249231	.	.	B	.	B	S	S	S			2				

ENG(ENGINE)	T/A(TRANSAXLE)	BODY TYPE
Y = 1.5SOHC 6 = 1.6DOHC . = COMMON	M = MANUAL T/A A = AUTOMATIC T/A . = COMMON	4 N = 4 DOOR NOTCHBACK 3 H = 3 DOOR HATCHBACK 5 H = 5 DOOR HATCHBACK

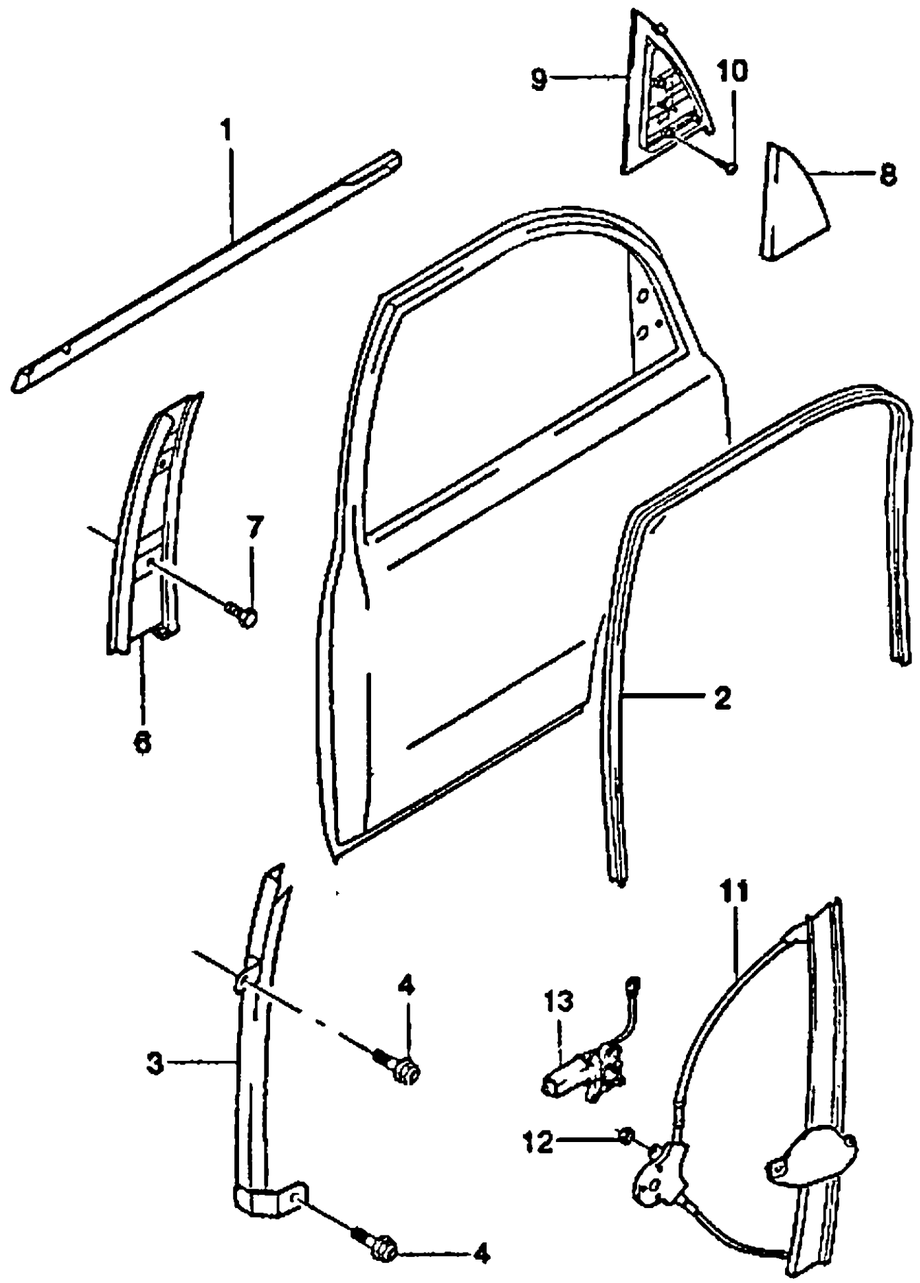

KEY NO. ITC	PART NO	MODEL ENG	T/A	BODY 4N	3H	5H	LEVEL S	SE	SX	OPTION	L/R	QTY	EFFECTIVE DATE FROM	TO	REMARKS	P/CODE
[01]		(E)MOLDING-RR DR OTR CHANNEL (D)MOLDURA-PUERTA TRASERA									(F)MOULURE-PORTE ARRIERE (S)PREßTEIL,HINTERTÜR					
96304162		.	.	B	.	B	S	S	S		LH	1				
96304163		.	.	B	.	B	S	S	S		RH	1				
[02]		(E)GLASS RUN-REAR DOOR (D)RILLE,SCHEIBE,ABLAUF									(F)RAINURE-CHEMIN DE GLACE (S)CANAL-CORRIDA DE VIDRIO					
96304158		.	.	B	.	B	S	S	S		LH	1				
96304159		.	.	B	.	B	S	S	S		RH	1				
[03]		(E)RAIL A-REAR DOOR GUIDE,RR (D)SCHIENE,FÜHRUNG									(F)RAIL-GUIDE (S)RIEL-GUIA					
96247142		.	.	B	.	B	S	S	S		LH	1				
96247143		.	.	B	.	B	S	S	S		RH	1				
[04]		(E)BOLT (D)SCHRAUBE									(F)BOULON (S)PERNO					
09116-06034		.	.	B	.	B	S	S	S			4			W/WASHER	
[06]		(E)GARNISH A-RR DOOR, CENTER (D)VERZIERUNG									(F)GARNITURE (S)ORNAMENTO					
96304726		.	.	B	.	B	S	S	S		LH	1				
96304727		.	.	B	.	B	S	S	S		RH	1				
[07]		(E)SCREW-TAPPING (D)SCHRAUBE									(F)VIS (S)TORNILLO					
03111-42132		.	.	B	.	B	S	S	S			6				
[08]		(E)COVER-WINDOW FRAME INNER (D)DECKEL,FENSTERRAHMEN									(F)COUVERTURE (S)CUBIERTA-MARCO DE VENTANA					
96238369		.	.	B	.	B	S	S	S		LH	1		971001		
O 96256348		.	.	B	.	B	S	S	S		LH	1	971001			
96238370		.	.	B	.	B	S	S	S		RH	1		971001		

ENG(ENGINE)	T/A(TRANSAXLE)	BODY TYPE
Y = 1.5SOHC 6 = 1.6DOHC . = COMMON	M = MANUAL T/A A = AUTOMATIC T/A . = COMMON	4 N = 4 DOOR NOTCHBACK 3 H = 3 DOOR HATCHBACK 5 H = 5 DOOR HATCHBACK

6330 REAR WINDOW LIFTER

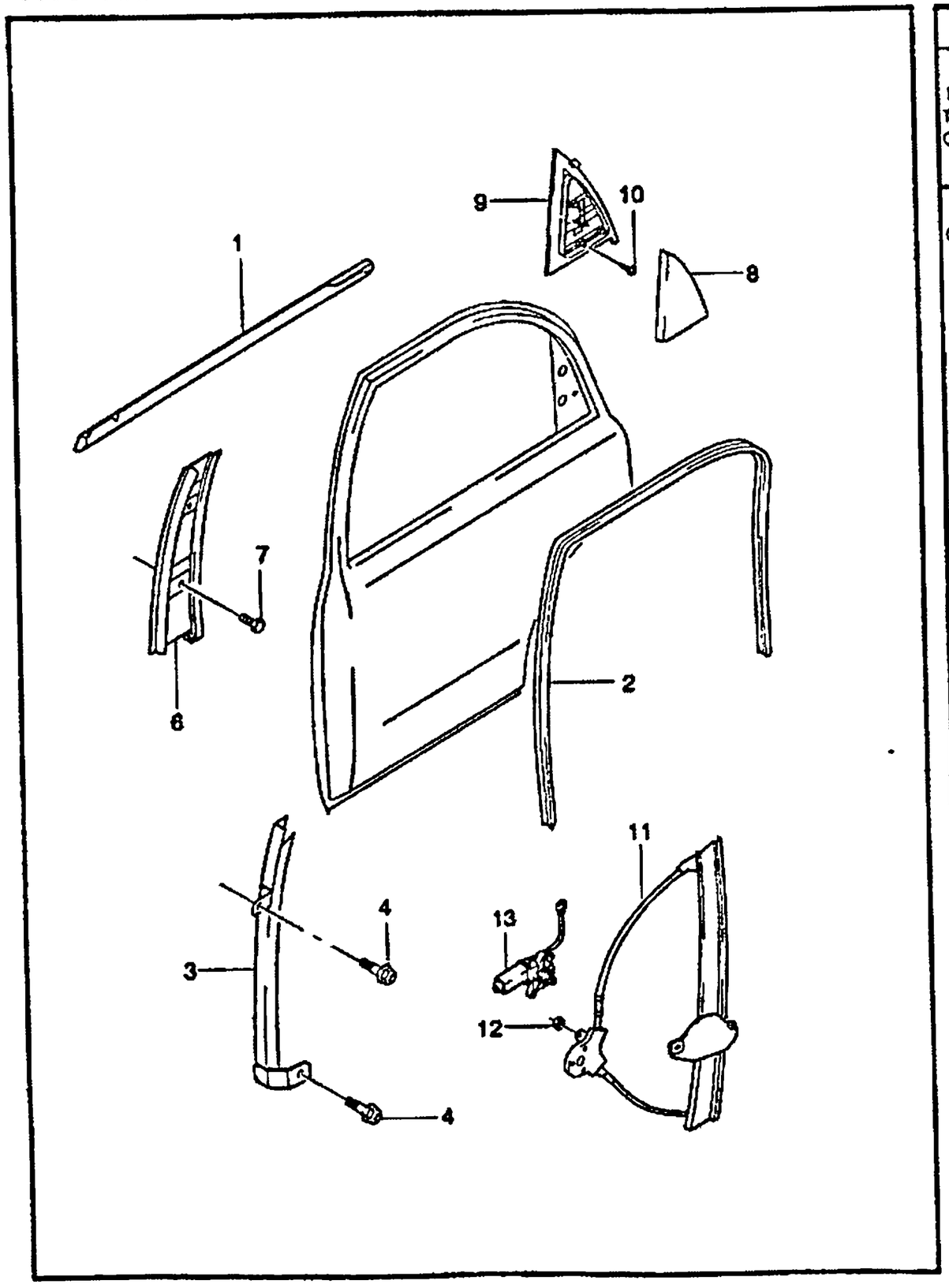

KEY NO. ITC	PART NO	MODEL ENG	T/A	BODY 4N	3H	5H	LEVEL S	SE	SX	OPTION	L/R	QTY	EFFECTIVE DATE FROM	TO	REMARKS	P/CODE
O	96256349	.	.	B	.	B	S	S	S		RH	1	971001			
[09]	(E)GARNISH A-REAR DOOR, REAR (D)VERZIERUNG										(F)GARNITURE (S)ORNAMENTO					
	96304733	.	.	B	.	B	S	S	S		LH	1				
	96304734	.	.	B	.	B	S	S	S		RH	1				
[10]	(E)SCREW-TAPPING (D)SCHRAUBE										(F)VIS (S)TORNILLO					
	03140-42136	.	.	B	.	B	S	S	S			6				
[11]	(E)REGULATOR A-RR DOOR WDO (D)REGULATOR										(F)REGULATEUR (S)REGULADOR					
	96304132	.	.	B	.	B	S	S	S	&A30/A32	LH	1				A1
	96304134	.	.	B	.	B	S	S	S	&A30/A32	RH	1				A2
	96245711	.	.	B	.	B	.	O	O	&A31	LH	1				
	96245712	.	.	B	.	B	.	O	O	&A31	RH	1				
[12]	(E)NUT-HEXAGON FLANGE (D)MUTTER										(F)ECROU (S)TUERCA					
	08316-25063	.	.	B	.	B	S	S	S	&A30/A32		12				
	08316-25063	.	.	B	.	B	.	O	O	&A31		14				
[13]	(E)MOTOR A-POWER WINDOW (D)MOTOR,FENSTERSCHEIBE										(F)MOTEUR (S)MOTOR-VENTANA ELECTRICA					
	96190207	.	.	B	.	B	.	O	O	&A31	LH	1				TC
	96190208	.	.	B	.	B	.	O	O	&A31	RH	1				TD

ENG(ENGINE)	T/A(TRANSAXLE)	BODY TYPE
Y = 1.5SOHC	M = MANUAL T/A	4 N = 4 DOOR NOTCHBACK
6 = 1.6DOHC	A = AUTOMATIC T/A	3 H = 3 DOOR HATCHBACK
. = COMMON	. = COMMON	5 H = 5 DOOR HATCHBACK

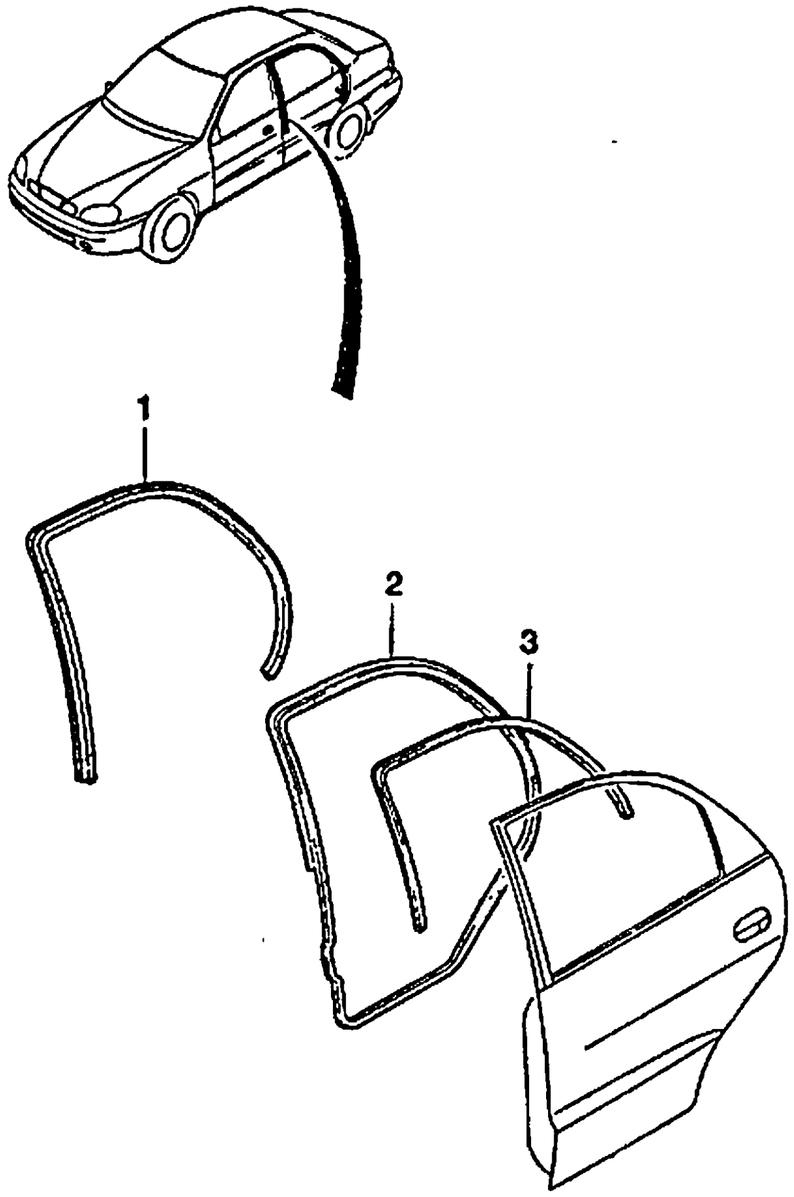

KEY NO.		PART NAME															
ITC	PART NO	MODEL								OPTION	L/R	QTY	EFFECTIVE DATE		REMARKS	P/CODE
		ENG	T/A	BODY			LEVEL						FROM	TO		
				4N	3H	5H	S	SE	SX							
[01]		(E)COVER-RR DOOR OPEN'G FLAN (D)DECKEL									(F)CARTER (S)CUBIERTA					
	96238367	.	.	B	.	.	S	S	.	&AM6		2				
	96238366	.	.	B	.	.	.	.	S	&AM9		2				
	96238366	.	.	B	.	.	A	A	A	&AMB		2				
	96238366	.	.	.	.	B	S	.	S	&AMB/AM9		2				
[02]		(E)WEATHERSTRIP A-REAR DOOR (D)DICHTUNGSLEISTE									(F)ISOLATION EN BANDELETTE (S)BURLETE					
	96304154	.	.	B	.	B	S	S	S		LH	1				
	96304155	.	.	B	.	B	S	S	S		RH	1				
[03]		(E)WEATHERSTRIP-RR DOOR,2ND (D)DICHTUNGSLEISTE									(F)ISOLATION EN BANDELETTE (S)BURLETE					
	96304156	.	.	B	.	B	S	S	S		LH	1				
	96304157	.	.	B	.	B	S	S	S		RH	1				

ENG(ENGINE)	T/A(TRANSAXLE)	BODY TYPE
Y = 1.5SOHC 6 = 1.6DOHC . = COMMON	M = MANUAL T/A A = AUTOMATIC T/A . = COMMON	4 N = 4 DOOR NOTCHBACK 3 H = 3 DOOR HATCHBACK 5 H = 5 DOOR HATCHBACK

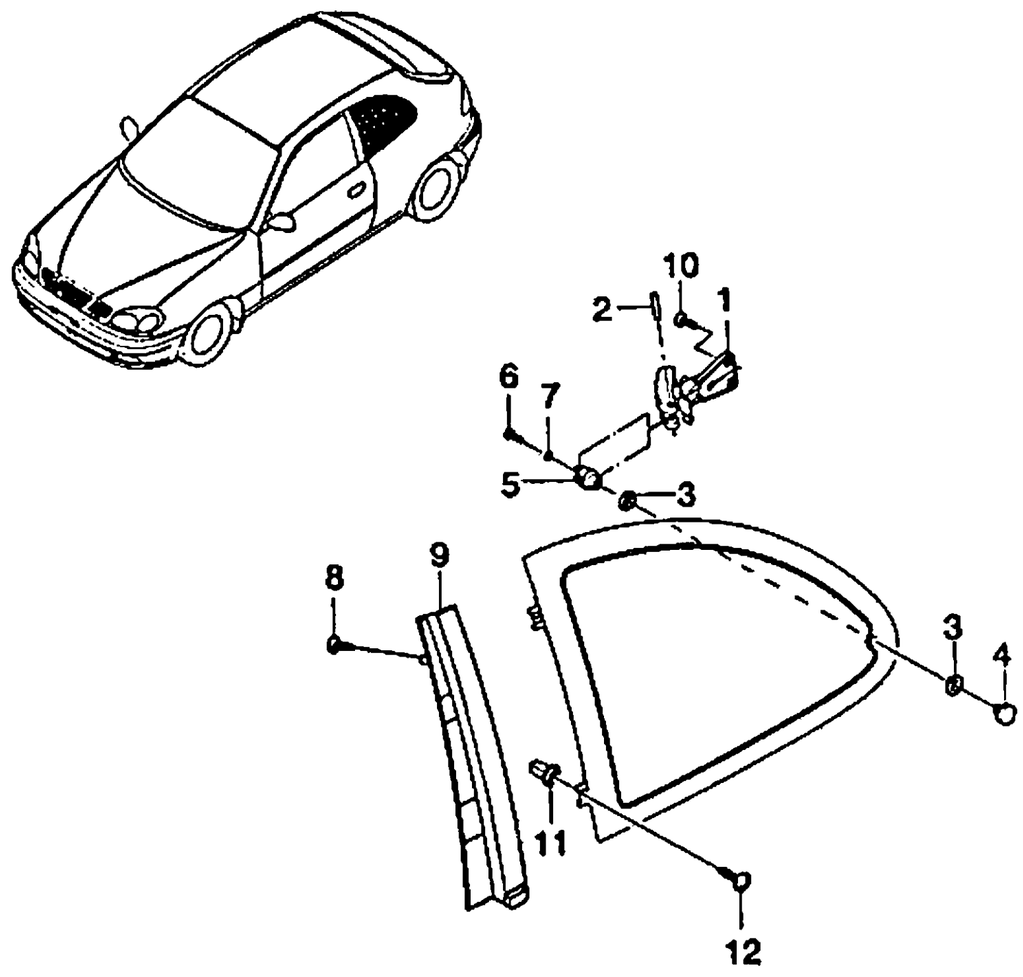

KEY NO.		PART NAME															
ITC	PART NO	MODEL								OPTION	L/R	QTY	EFFECTIVE DATE		REMARKS	P/CODE
		ENG	T/A	BODY 4N	BODY 3H	BODY 5H	LEVEL S	LEVEL SE	LEVEL SX				FROM	TO		
	[01]	(E)LOCK A-HINGED WINDOW (D)SCHLOß									(F)VERROU (S)CERRADURA-VENTANABISAGRA					
	96307266	.	.	.	B	.	S	.	S			2				
	[02]	(E)PIN-HINGED WINDOW LOCK (D)STIFT,FENSTERVERSCHLUß									(F)BROCHE (S)PASADOR					
	03437757	.	.	.	B	.	S	.	S			2		970325		
O	96251236	.	.	.	B	.	S	.	S			2	970325			
	[03]	(E)GROMMET (D)ÖSE									(F)VIROLE (S)AISLANTE					
	96222232	.	.	.	B	.	S	.	S			4				
	[04]	(E)NUT A-HINGED WINDOW (D)MUTTER									(F)ECROU (S)TUERCA					
	90047124	.	.	.	B	.	S	.	S			2				
	[05]	(E)SUPPORT-HINGED WDO PIVOT (D)TRÄGER									(F)SUPPORT (S)SOPORTE					
	03466314	.	.	.	B	.	S	.	S			2				
	[06]	(E)SCREW-CR MACHINE (D)SCHRAUBE									(F)VIS (S)TORNILLO					
	02116-05083	.	.	.	B	.	S	.	S			2				
	[07]	(E)WASHER-TOOTHED LOCK (D)DICHTUNGSRING									(F)RONDELLE-VERROU DE DENT (S)ARANDELA-CIERRE DE DIENTE					
	09163-05002	.	.	.	B	.	S	.	S			2				
	[08]	(E)SCREW-TAPPING (D)SCHRAUBE									(F)VIS (S)TORNILLO					
	03140-42135	.	.	.	B	.	S	.	S			6				
	[09]	(E)GARNISH-HINGED WINDOW (D)VERZIERUNG									(F)GARNITURE (S)ORNAMENTO					
	96251191	.	.	.	B	.	S	.	S			LH 1				

ENG(ENGINE)	T/A(TRANSAXLE)	BODY TYPE
Y = 1.5SOHC 6 = 1.6DOHC . = COMMON	M = MANUAL T/A A = AUTOMATIC T/A . = COMMON	4 N = 4 DOOR NOTCHBACK 3 H = 3 DOOR HATCHBACK 5 H = 5 DOOR HATCHBACK

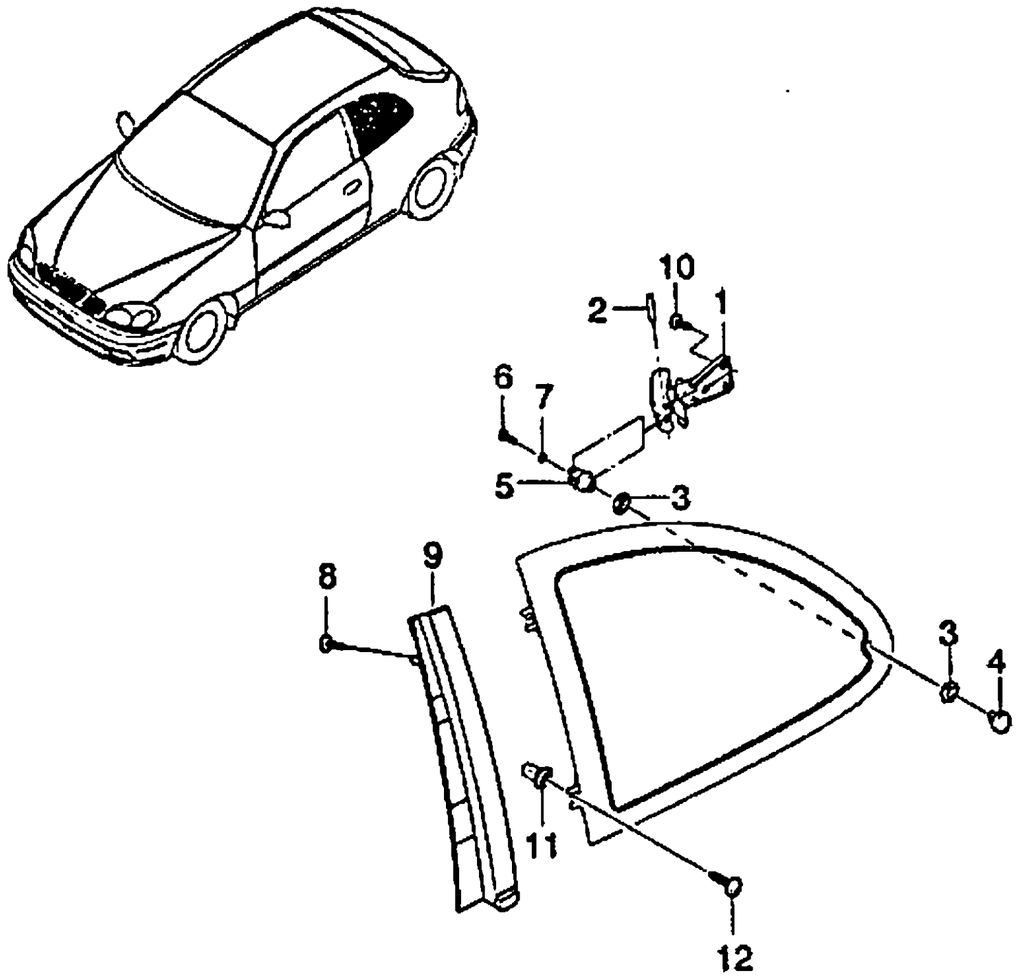

KEY NO.		PART NAME														
ITC	PART NO	MODEL								OPTION	L/R	QTY	EFFECTIVE DATE		REMARKS	PICODE
		ENG	T/A	BODY 4N	BODY 3H	BODY 5H	LEVEL S	LEVEL SE	LEVEL SX				FROM	TO		
	96251192	.	.	.	B	.	S	.	S		RH	1				
	[10]	(E)SCREW-TAPPING (D)SCHRAUBE									(F)VIS (S)TORNILLO					
	03160-42135	.	.	.	B	.	S	.	S			6				
	[11]	(E)NUT-SPEED (D)MUTTER									(F)ECROU (S)TUERCA					
	09148-03001	.	.	.	B	.	S	.	S			4				
	[12]	(E)SCREW-TAPPING (D)SCHRAUBE									(F)VIS (S)TORNILLO					
	03160-42132	.	.	.	B	.	S	.	S			4				

ENG(ENGINE)	T/A(TRANSAXLE)	BODY TYPE
Y = 1.5SOHC 6 = 1.6DOHC . = COMMON	M = MANUAL T/A A = AUTOMATIC T/A . = COMMON	4 N = 4 DOOR NOTCHBACK 3 H = 3 DOOR HATCHBACK 5 H = 5 DOOR HATCHBACK

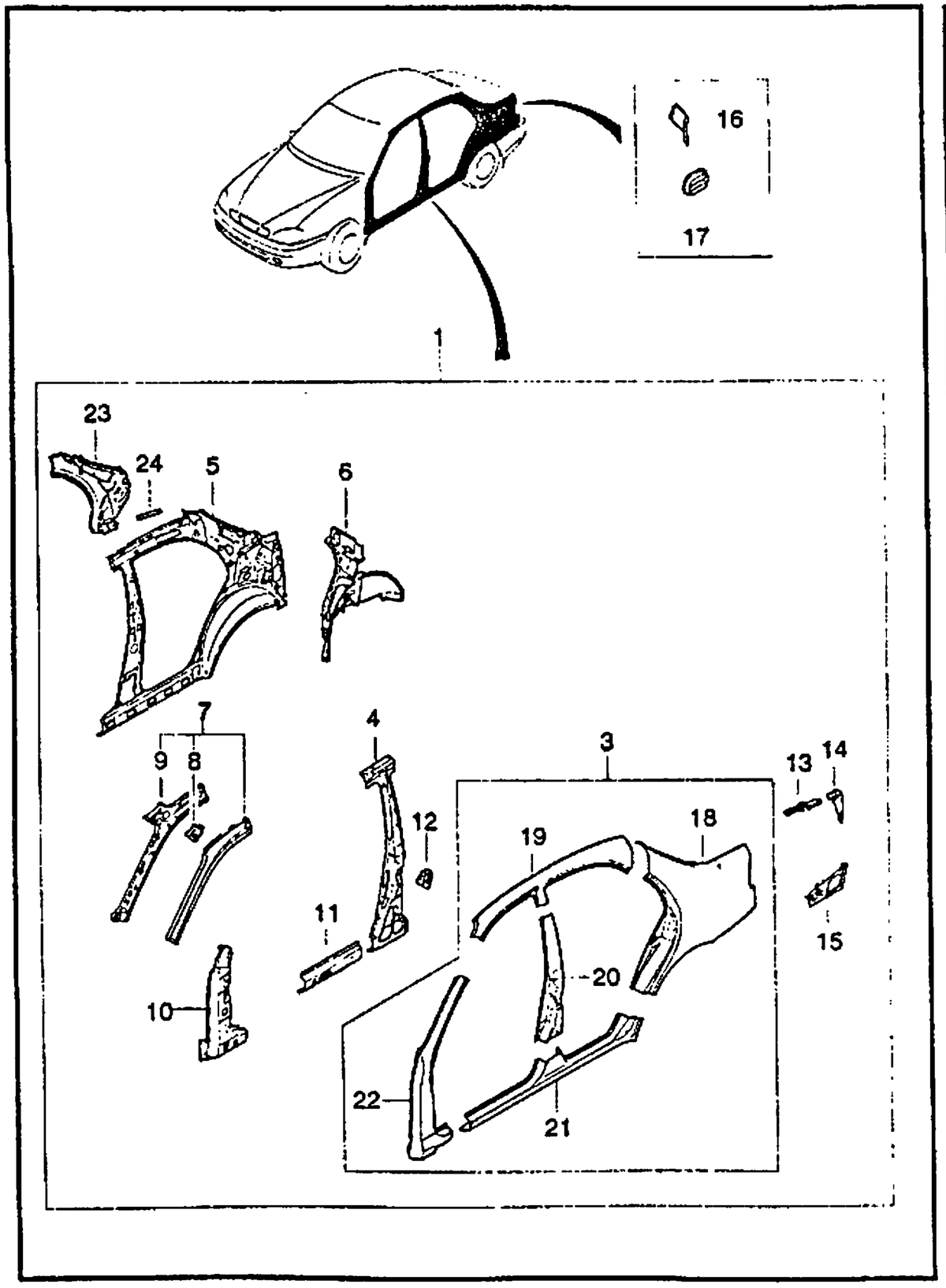

KEY NO. ITC	PART NO	MODEL ENG	T/A	BODY 4N	3H	5H	LEVEL S	SE	SX	OPTION	L/R	QTY	EFFECTIVE DATE FROM	TO	REMARKS	P/CODE
	[01]	(E)PANEL A1-SIDE (D)VERKLEIDUNG A1,SEITE,AUßEN									(F)PANNEAU A1-COTE EXTERNE (S)PANEL A1-LADO EXTERNO					
	A96226341	.	.	B	.		S	S	.	&AM6-CF6	LH	1				S6
	A96226342	.	.	B	.		S	S	.	&AM6-CF6	RH	1				SF
	A96248519	.	.	B	.		O	O	.	&AM6&CF6	LH	1				G3
	A96248520	.	.	B	.		O	O	.	&AM6&CF6	RH	1				SM
	A96306503	.	.	B	.		.	.	S	&AM9-CF6	LH	1				S8
	A96306503	.	.	B	.		A	A	A	&AMB-CF6	LH	1				S8
	A96306504	.	.	B	.		.	.	S	&AM9-CF6	RH	1				SH
	A96306504	.	.	B	.		A	A	A	&AMB-CF6	RH	1				SH
	A96248523	.	.	B	.		.	.	O	&AM9&CF6	LH	1				G5
	A96248524	.	.	B	.		.	.	O	&AM9&CF6	RH	1				SP
	[03]	(E)PANEL-SIDE OUTER (D)VERKLEIDUNG,SEITE,AUßEN									(F)PANNEAU-COTE EXTERNE (S)PANEL-LADO EXTERNO					
	A96306511	.	.	B	.	.	S	S	S		LH	1				S6
	A96306512	.	.	B	.	.	S	S	S		RH	1		970623		SF
N	A96255371	.	.	B	.	.	S	S	S		RH	1	970623			D6
	[04]	(E)REINF A-CENTER PILLAR (D)VERSTÄRKUNG,ZENTRAL-SÄULE									(F)RENFORCEMENT (S)REFUERZO-PILAR DEL CENTRO					
	96244271	.	.	B	.	.	S	S	S		LH	1				
	96244272	.	.	B	.	.	S	S	S		RH	1				
	[05]	(E)PANEL-SIDE INNER (D)VERKLEIDUNG,SEITE,INNEN									(F)PANNEAU-COTE INTERNE (S)PANEL-LADO INTERNO					
	96306560	.	.	B	.	.	S	S	S		LH	1				
	96306561	.	.	B	.	.	S	S	S		RH	1				

ENG(ENGINE)	T/A(TRANSAXLE)	BODY TYPE
Y = 1.5SOHC 6 = 1.6DOHC . = COMMON	M = MANUAL T/A A = AUTOMATIC T/A . = COMMON	4 N = 4 DOOR NOTCHBACK 3 H = 3 DOOR HATCHBACK 5 H = 5 DOOR HATCHBACK

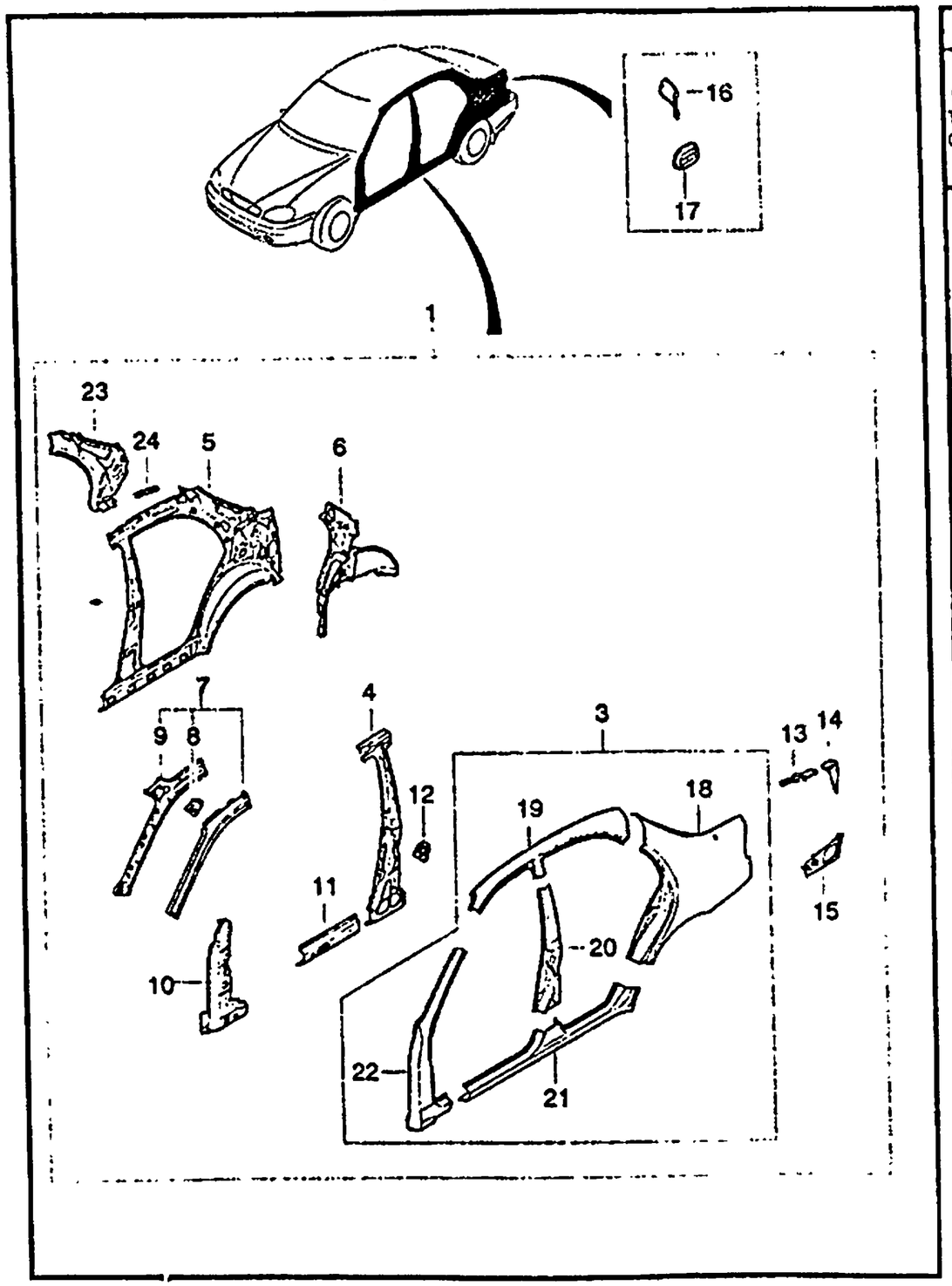

KEY NO. ITC	PART NO	MODEL ENG	MODEL T/A	MODEL BODY 4N	MODEL BODY 3H	MODEL BODY 5H	MODEL LEVEL S	MODEL LEVEL SE	MODEL LEVEL SX	OPTION	L/R	QTY	EFFECTIVE DATE FROM	EFFECTIVE DATE TO	REMARKS	P/CODE
[06]	(E)WHEELHOUSE A-INNER (D)VERKLEIDUNG,RAD-GEHÄUSE										(F)PANNEAU-IMONERIE (S)PANEL-VOLANTE INTERNO					
96307026		.	.	B	.	.	S	S	.	&AM6	LH	1				WB
96307027		.	.	B	.	.	S	S	.	&AM6	RH	1				W2
96226337		.	.	B	.	.	.	.	S	&AM9	LH	1				WD
96226337		.	.	B	.	.	A	A	A	&AMB	LH	1				WD
96226338		.	.	B	.	.	.	.	S	&AM9	RH	1				W4
96226338		.	.	B	.	.	A	A	A	&AMB	RH	1				W4
[07]	(E)PILLAR A-FRONT (D)SÄULE,VORDER-KAROSSERIE										(F)PILIER-CORPS AVANT (S)PILAR-FRENTE DE CUERPO					
96303787		.	.	B	.	.	S	S	S		LH	1				LA
96303788		.	.	B	.	.	S	S	S		RH	1				L1
[08]	(E)PATCH-FRONT PILLAR (D)TEIL,VORDER-SÄULE										(F)PIECE-PILIER,AVANT (S)PIEZA-FRENTE DE PILAR					
96233763		.	.	B	.	.	S	S	S		LH	1				
96233764		.	.	B	.	.	S	S	S		RH	1				
[09]	(E)PILLAR A-FRONT,INNER (D)SÄULE,VORDER-KAROSSERIE										(F)PILIER-CORPS AVANT (S)PILAR-FRENTE DE CUERPO					
96307046		.	.	B	.	.	S	S	S		LH	1				
96307047		.	.	B	.	.	S	S	S		RH	1				
[10]	(E)REINF A-FRONT PILLAR,LWR (D)VERSTÄRKUNG										(F)RENFORCEMENT (S)REFUERZO-BISAGRA					
96306612		.	.	B	.	.	S	S	S		LH	1				NA
96306613		.	.	B	.	.	S	S	S		RH	1				N1
[11]	(E)REINFORCEMENT-ROCKER (D)VERSTÄRKUNG										(F)RENFORCEMENT (S)REFUERZO					
96242967		.	.	B	.	.	S	S	S		LH	1				

ENG(ENGINE)	T/A(TRANSAXLE)	BODY TYPE
Y = 1.5SOHC	M = MANUAL T/A	4 N = 4 DOOR NOTCHBACK
6 = 1.6DOHC	A = AUTOMATIC T/A	3 H = 3 DOOR HATCHBACK
. = COMMON	. = COMMON	5 H = 5 DOOR HATCHBACK

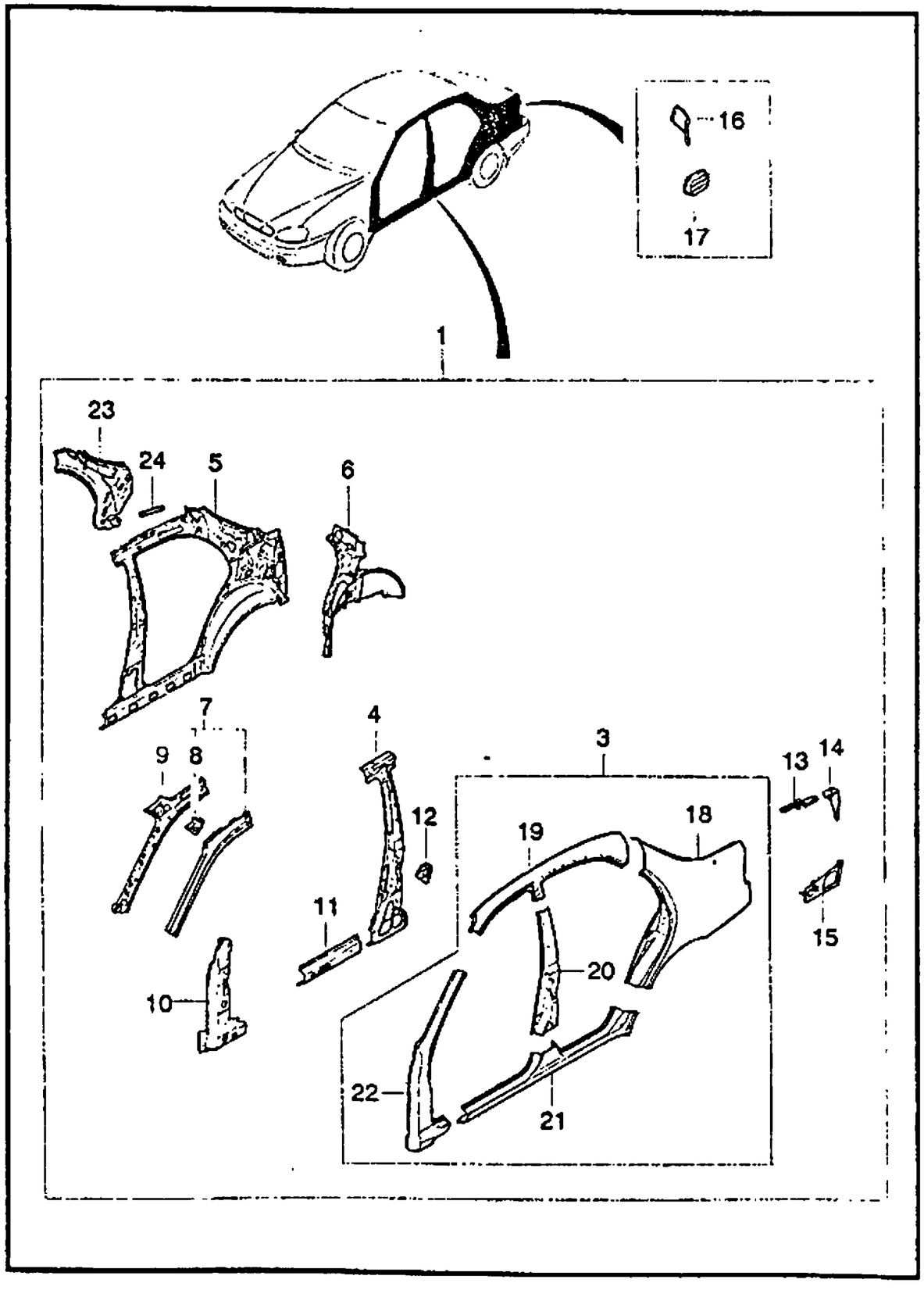

KEY NO. ITC	PART NO	MODEL ENG	MODEL T/A	BODY 4N	BODY 3H	BODY 5H	LEVEL S	LEVEL SE	LEVEL SX	OPTION	L/R	QTY	EFFECTIVE DATE FROM	EFFECTIVE DATE TO	REMARKS	P/CODE
	96242968	.	.	B	.	.	S	S	S		RH	1				
[12]	(E)REINF-RR DOOR STRIKER (D)VERSTÄRKUNG										(F)RENFORCEMENT (S)REFUERZO					
	96303715	.	.	B	.	.	S	S	S		LH	1				RA
	96303716	.	.	B	.	.	S	S	S		RH	1				R1
[13]	(E)GUSSET-SIDE PANEL OUTER (D)ECKBLECH										(F)GOUSSET-PANNEAU DE COTE (S)ANGULAR-PANEL DEL LADO					
	96306513	.	.	B	.	.	S	S	S		LH	1				
	96306514	.	.	B	.	.	S	S	S		RH	1				
[14]	(E)PATCH-TAIL LAMP HOUSING (D)TEIL-GEHÄUSE										(F)PIECE-LOGEMENT (S)PIEZA-CARCASA					
	96306522	.	.	B	.	.	S	S	S		LH	1				
	96306523	.	.	B	.	.	S	S	S		RH	1				
[15]	(E)EXTENSION-SIDE PANEL OTR (D)VERLÄNGERUNG,SEITE,AUßEN										(F)EXTENSION-COTE,EXTERIEUR (S)EXTENSION-LADO EXTERIOR					
	96306538	.	.	B	.	.	S	S	S		LH	1				ED
	96306539	.	.	B	.	.	S	S	S		RH	1				E4
[16]	(E)SPACER A-SIDE BODY,REAR (D)DISTANZSTÜCK										(F)ENTRETOISE (S)ESPACIADOR					
	96306484	.	.	B	.	.	S	S	S		LH	1				AD
	96306485	.	.	B	.	.	S	S	S		RH	1				A4
[17]	(E)INSERT A-VENTILATION (D)EINSATZ,VENTILATOR										(F)INSERTION-VENTILATION (S)REFUERZO-VENTILACION					
	96242978	.	.	B	.	.	S	S	S			2				
[18]	(E)PANEL-QUATER (D)VERKLEIDUNG,VIERTEL										(F)PANNEAU-QUART (S)PANEL-CUADRANTE					
	A96250421	.	.	B	.		S	S	S		LH	1				

ENG(ENGINE)	T/A(TRANSAXLE)	BODY TYPE
Y = 1.5SOHC 6 = 1.6DOHC . = COMMON	M = MANUAL T/A A = AUTOMATIC T/A . = COMMON	4 N = 4 DOOR NOTCHBACK 3 H = 3 DOOR HATCHBACK 5 H = 5 DOOR HATCHBACK

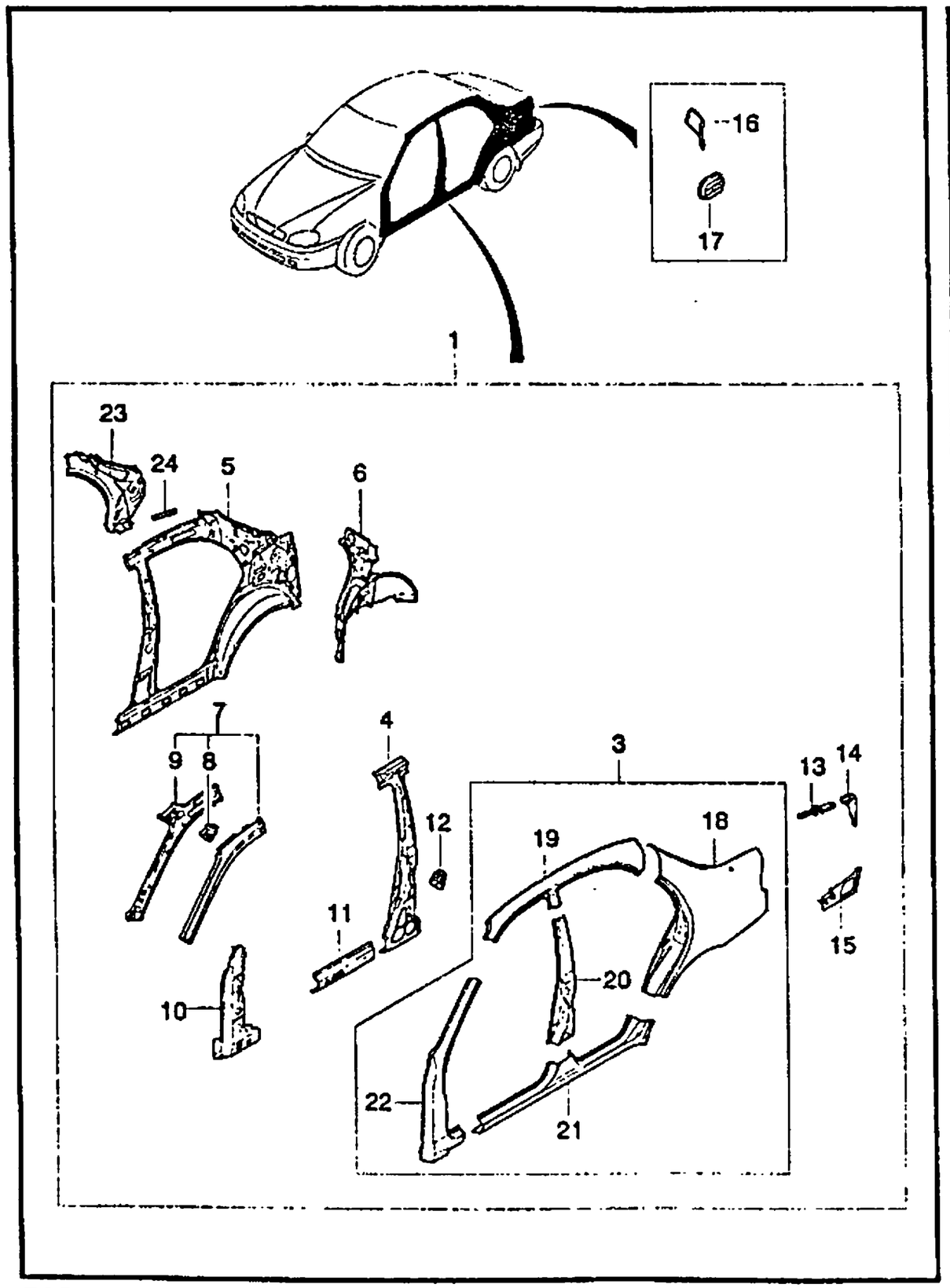

KEY NO.	PART NAME															
ITC	PART NO	MODEL							OPTION	L/R	QTY	EFFECTIVE DATE		REMARKS	PICODE
		ENG	T/A	BODY 4N	BODY 3H	BODY 5H	LEVEL S	LEVEL SE	LEVEL SX			FROM	TO		
	A96250422	.	.	B	.		S	S	S		RH	1			
[19]	(E)PANEL-ROOF SIDE (D)VERKLEIDUNG,SEITE,AUßEN										(F)PANNEAU-COTE EXTERNE (S)PANEL-LADO EXTERNO ,TECHO				
	A96248534	.	.	B	.		S	S	S		LH	1			
	A96248535	.	.	B	.		S	S	S		RH	1			
[20]	(E)PANEL-HINHE PILLAR,CTR (D)VERKLEIDUNG,BESCHLAG,SÄUL										(F)PANNEAU (S)PANEL-PILAR BISAGAR				
	A96248536	.	.	B	.		S	S	S		LH	1			
	A96248537	.	.	B	.		S	S	S		RH	1			
[21]	(E)PANEL-ROCKER (D)VERKLEIDUNG,SCHWENKUNG										(F)PANNEAU-CULBUTEUR (S)PANEL-ARCO EXTERNO				
	A96248538	.	.	B	.		S	S	S		LH	1			
	A96248539	.	.	B	.		S	S	S		RH	1			
[22]	(E)PANEL-HINHE PILLAR,FRONT (D)VERKLEIDUNG,BESCHLAG,SÄUL										(F)PANNEAU (S)PANEL-PILAR BISAGRA				
	A96248540	.	.	B	.		S	S	S		LH	1			
	A96248541	.	.	B	.		S	S	S		RH	1			
[23]	(E)REINF A-LOCK PILLAR (D)VERSTÄRKUNG										(F)RENFORCEMENT (S)REFUERZO				
	96303747	.	.	B	.	.	S	S	S		LH	1			
	96303748	.	.	B	.	.	S	S	S		RH	1			
[24]	(E)REINF A-REAR ASSIST GRIP (D)VERSTÄRKUNG										(F)RENFORCEMENT (S)REFUERZO				
	96307023	.	.	B	.	.	S	S	S	-CF6		2			
	96240749	.	.	B	.	.	O	O	O	&CF6	LH	1			
	96240750	.	.	B	.	.	O	O	O	&CF6	RH	1			

ENG(ENGINE)	T/A(TRANSAXLE)	BODY TYPE
Y = 1.5SOHC 6 = 1.6DOHC . = COMMON	M = MANUAL T/A A = AUTOMATIC T/A . = COMMON	4 N = 4 DOOR NOTCHBACK 3 H = 3 DOOR HATCHBACK 5 H = 5 DOOR HATCHBACK

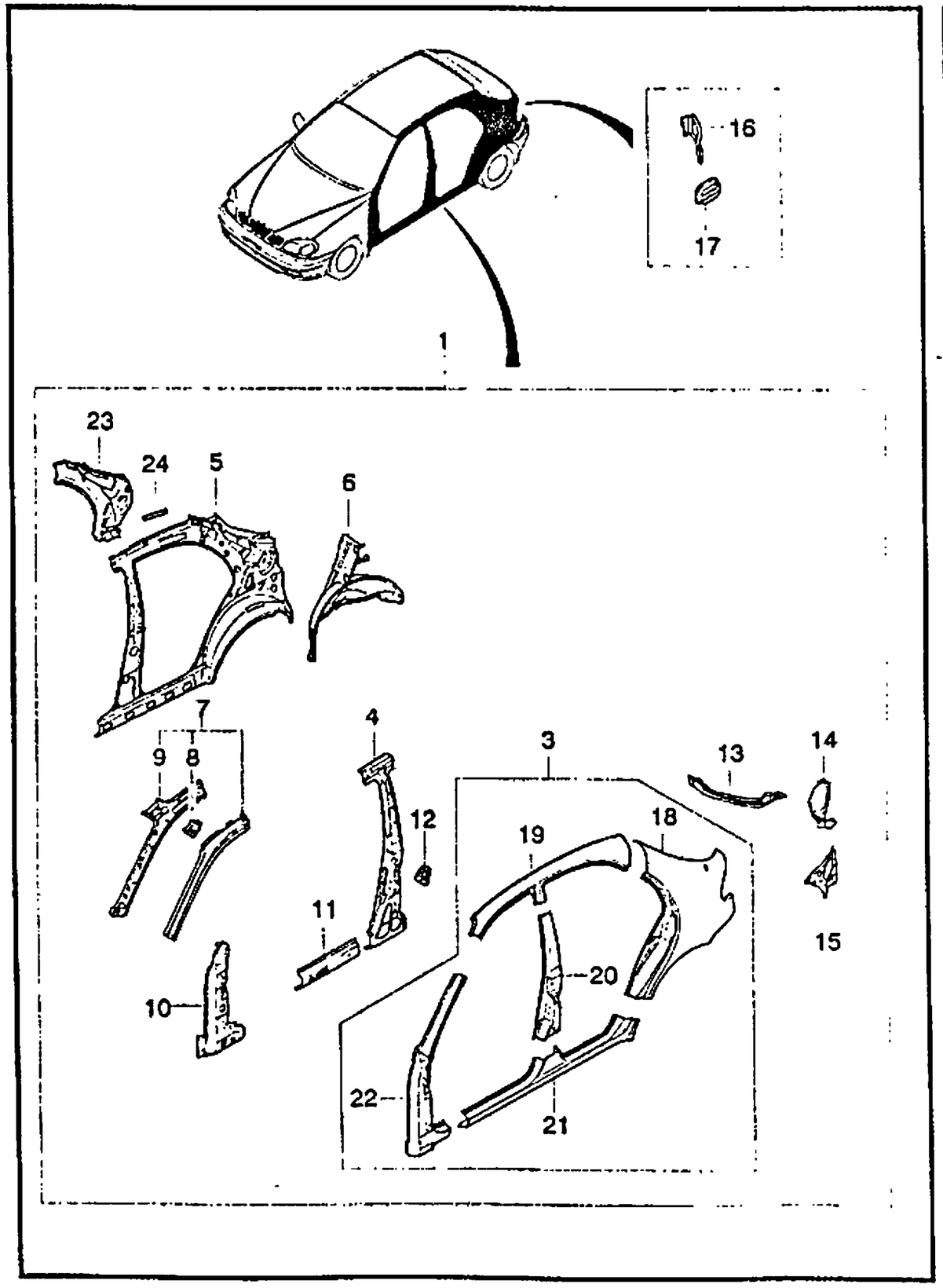

KEY NO.		PART NAME														
ITC	PART NO	MODEL							OPTION	L/R	QTY	EFFECTIVE DATE		REMARKS	P/CODE
		ENG	T/A	BODY 4N	BODY 3H	BODY 5H	LEVEL S	LEVEL SE	LEVEL SX						
	[01]	(E)PANEL A1-SIDE (D)VERKLEIDUNG A1,SEITE,AUßEN								(F)PANNEAU A1-COTE EXTERNE (S)PANEL A1-LADO EXTERNO					
	A96233181	.	.	.	.	B	S	.	S	-CF6	LH	1			S4
	A96233182	.	.	.	.	B	S	.	S	-CF6	RH	1			SD
	A96250400	.	.	.	.	B	O	.	O	&CF6	LH	1			G7
	A96250401	.	.	.	.	B	O	.	O	&CF6	RH	1			SR
	[03]	(E)PANEL-SIDE OUTER (D)VERKLEIDUNG,SEITE,AUßEN								(F)PANNEAU-COTE EXTERNE (S)PANEL-LADO EXTERNO					
	A96307223	.	.	.	.	B	S	.	S		LH	1			S4
	A96307224	.	.	.	.	B	S	.	S		RH	1		970630	SD
N	A96255367	.	.	.	.	B	S	.	S		RH	1	970630		D4
	[04]	(E)REINF A-CENTER PILLAR (D)VERSTÄRKUNG,ZENTRAL-SÄULE								(F)RENFORCEMENT (S)REFUERZO-PILAR DEL CENTRO					
	96244271	.	.	.	.	B	S	.	S		LH	1			
	96244272	.	.	.	.	B	S	.	S		RH	1			
	[05]	(E)PANEL-SIDE INNER (D)VERKLEIDUNG,SEITE,INNEN								(F)PANNEAU-COTE INTERNE (S)PANEL-LADO INTERNO					
	96307239	.	.	.	.	B	S	.	S		LH	1			
	96307240	.	.	.	.	B	S	.	S		RH	1			
	[06]	(E)WHEELHOUSE A-INNER (D)VERKLEIDUNG,RAD-GEHÄUSE								(F)PANNEAU-IMONERIE (S)PANEL-VOLANTE INTERNO					
	96307032	.	.	.	.	B	S	.	S		LH	1			WF
	96307033	.	.	.	.	B	S	.	S		RH	1			W6
	[07]	(E)PILLAR A-FRONT (D)SÄULE,VORDER-KAROSSERIE								(F)PILIER-CORPS AVANT (S)PILAR-FRENTE DE CUERPO					
	96303787	.	.	.	.	B	S	.	S		LH	1			LA
	96303788	.	.	.	.	B	S	.	S		RH	1			L1

ENG(ENGINE)	T/A(TRANSAXLE)	BODY TYPE
Y = 1.5SOHC 6 = 1.6DOHC . = COMMON	M = MANUAL T/A A = AUTOMATIC T/A . = COMMON	4 N = 4 DOOR NOTCHBACK 3 H = 3 DOOR HATCHBACK 5 H = 5 DOOR HATCHBACK

6411 SIDE BODY PANEL(5DOOR H/B)

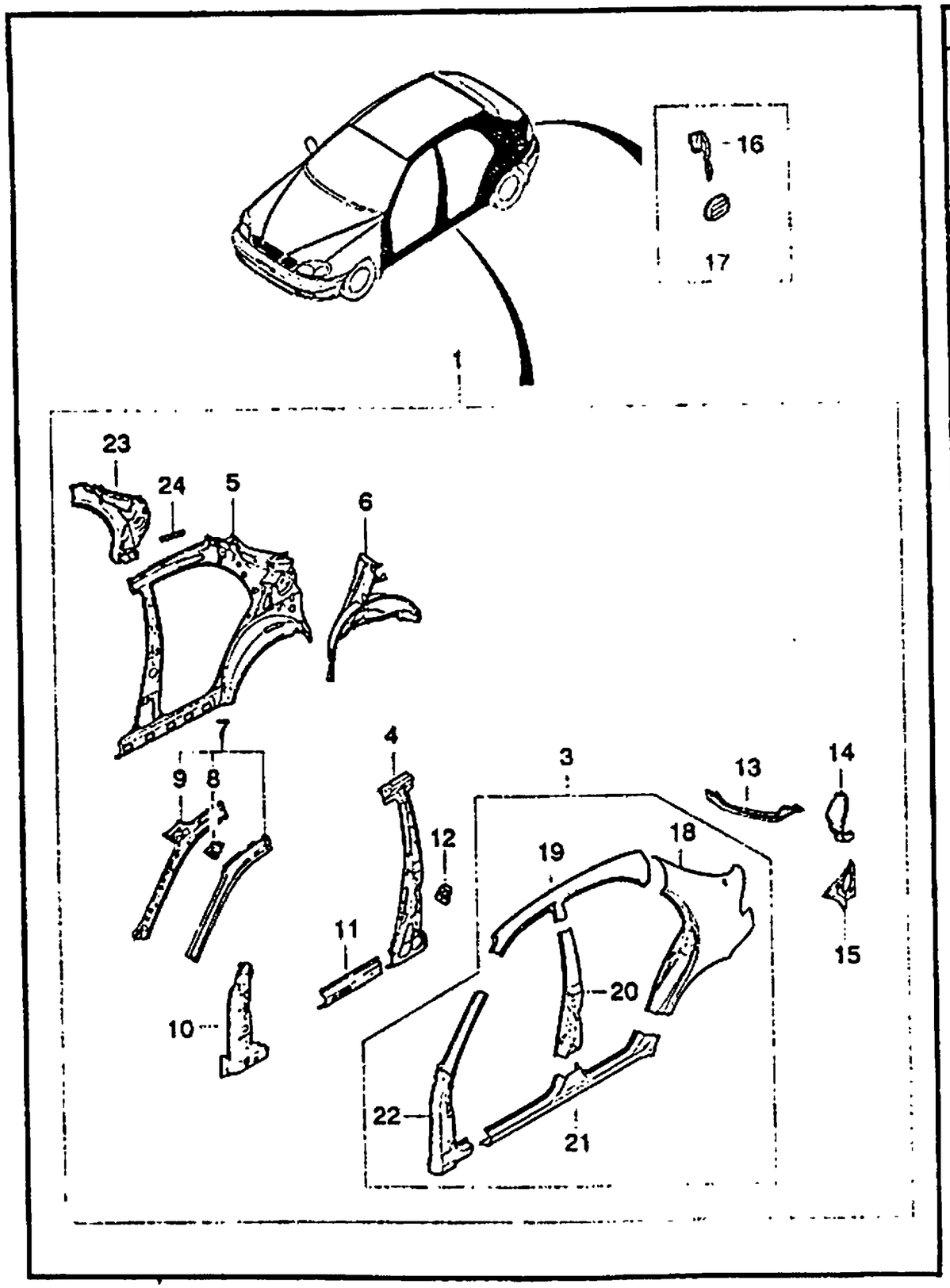

KEY NO. ITC	PART NO	MODEL ENG	T/A	BODY 4N	3H	5H	LEVEL S	SE	SX	OPTION	L/R	QTY	EFFECTIVE DATE FROM	TO	REMARKS	PICODE
[08]		(E)PATCH-FRONT PILLAR (D)TEIL,VORDER-SÄULE									(F)PIECE-PILIER,AVANT (S)PIEZA-FRENTE DE PILAR					
96233763		.	.	.	.	B	S	.	S		LH	1				
96233764		.	.	.	.	B	S	.	S		RH	1				
[09]		(E)PILLAR A-FRONT,INNER (D)SÄULE,VORDER-KAROSSERIE									(F)PILIER-CORPS AVANT (S)PILAR-FRENTE DE CUERPO					
96307046		.	.	.	.	B	S	.	S		LH	1				
96307047		.	.	.	.	B	S	.	S		RH	1				
[10]		(E)REINF A-FRONT PILLAR,LWR (D)VERSTÄRKUNG									(F)RENFORCEMENT (S)REFUERZO-BISAGRA					
96306612		.	.	.	.	B	S	.	S		LH	1				NA
96306613		.	.	.	.	B	S	.	S		RH	1				N1
[11]		(E)REINFORCEMENT-ROCKER (D)VERSTÄRKUNG									(F)RENFORCEMENT (S)REFUERZO					
96242967		.	.	.	.	B	S	.	S		LH	1				
96242968		.	.	.	.	B	S	.	S		RH	1				
[12]		(E)REINF A-STRIKER,REAR DOOR (D)VERSTÄRKUNG									(F)RENFORCEMENT (S)REFUERZO					
96303715		.	.	.	.	B	S	.	S		LH	1				RA
96303716		.	.	.	.	B	S	.	S		RH	1				R1
[13]		(E)PIECE-SIDE PANEL OTR CONN (D)TEIL,VERBINDUNGS									(F)PIECE (S)PIEZA					
96306524		.	.	.	.	B	S	.	S		LH	1				CB
96306525		.	.	.	.	B	S	.	S		RH	1				C2
[14]		(E)PATCH A-TAIL LAMP HOUSING (D)TEIL-GEHÄUSE									(F)PIECE-LOGEMENT (S)PIEZA-CARCASA					
96310159		.	.	.	.	B	S	.	S		LH	1				LB

ENG(ENGINE)	T/A(TRANSAXLE)	BODY TYPE
Y = 1.5SOHC	M = MANUAL T/A	4 N = 4 DOOR NOTCHBACK
6 = 1.6DOHC	A = AUTOMATIC T/A	3 H = 3 DOOR HATCHBACK
. = COMMON	. = COMMON	5 H = 5 DOOR HATCHBACK

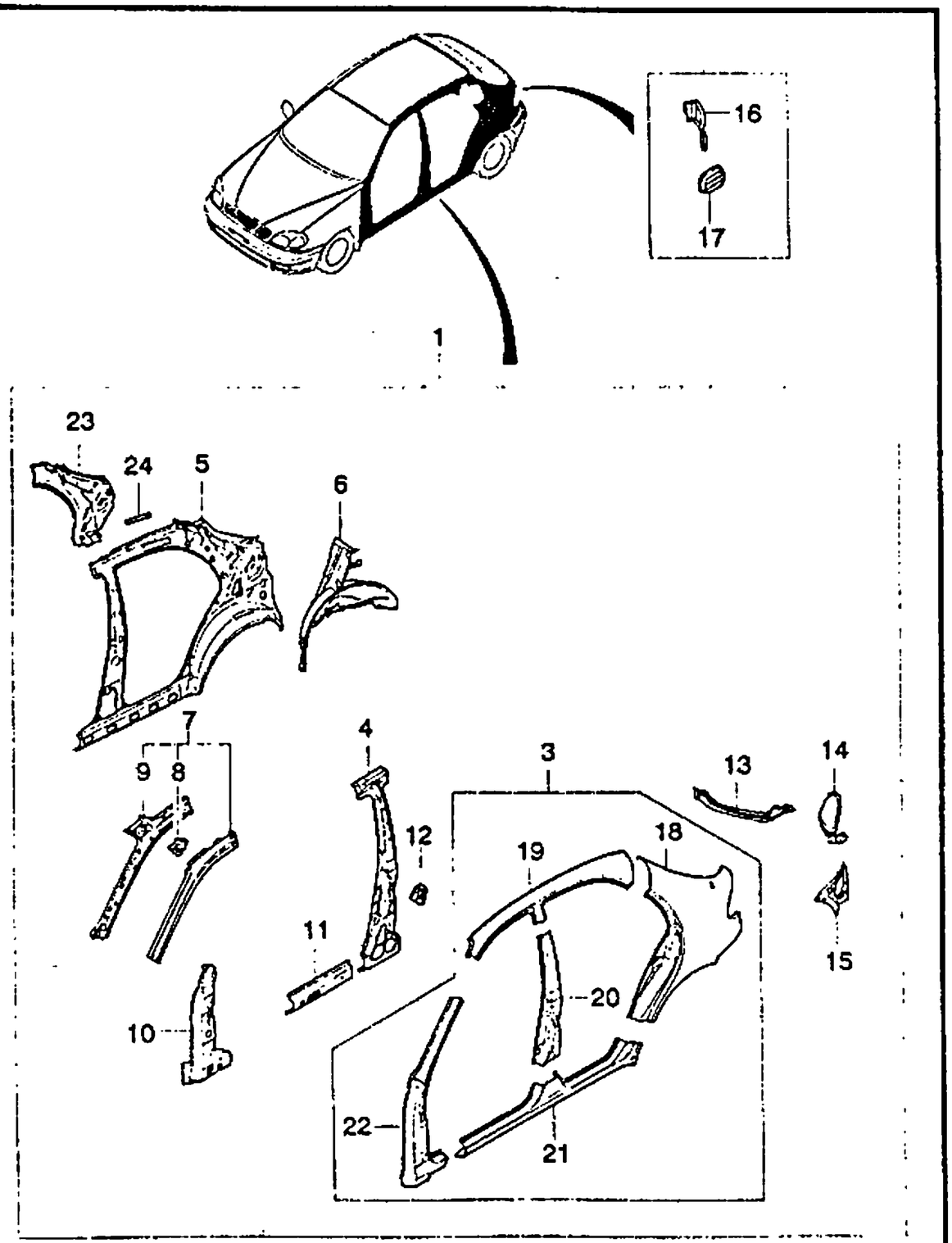

KEY NO. ITC	PART NO	MODEL ENG	T/A	BODY 4N	3H	5H	LEVEL S	SE	SX	OPTION	L/R	QTY	EFFECTIVE DATE FROM	TO	REMARKS	P/CODE
	96310160	.	.	.	.	B	S	.	S		RH	1				L2
[15]	(E)EXTENSION-SIDE PANEL,OTR (D)VERLÄNGERUNG,SEITE,AUßEN										(F)EXTENSION-COTE,EXTERIEUR (S)EXTENSION-LADO EXTERIOR					
	96306534	.	.	.	.	B	S	.	S		LH	1				EB
	96306535	.	.	.	.	B	S	.	S		RH	1				E2
[16]	(E)SPACER A-SIDE BODY,REAR (D)DISTANZSTÜCK										(F)ENTRETOISE (S)ESPACIADOR					
	96307247	.	.	.	.	B	S	.	S		LH	1				AB
	96307248	.	.	.	.	B	S	.	S		RH	1				A2
[17]	(E)INSERT A-VENTILATION (D)EINSATZ,VENTILATOR										(F)INSERTION-VENTILATION (S)REFUERZO-VENTILACION					
	96242978	.	.	.	.	B	S	.	S			2				
[18]	(E)PANEL-QUATER (D)VERKLEIDUNG,VIERTEL										(F)PANNEAU-QUART (S)PANEL-CUADRANTE					
	A96248552	.	.	.	.	B	S	.	S		LH	1				
	A96248553	.	.	.	.	B	S	.	S		RH	1				
[19]	(E)PANEL-ROOF SIDE (D)VERKLEIDUNG,SEITE,AUßEN										(F)PANNEAU-COTE EXTERNE (S)PANEL-LADO EXTERNO,TECHO					
	A96248550	.	.	.	.	B	S	.	S		LH	1				
	A96248551	.	.	.	.	B	S	.	S		RH	1				
[20]	(E)PANEL-HINHE PILLAR,CTR (D)VERKLEIDUNG,BESCHLAG,SÄUL										(F)PANNEAU (S)PANEL-PILAR BISAGAR					
	A96248554	.	.	.	.	B	S	.	S		LH	1				
	A96248555	.	.	.	.	B	S	.	S		RH	1				
[21]	(E)PANEL-ROCKER (D)VERKLEIDUNG,SCHWENKUNG										(F)PANNEAU-CULBUTEUR (S)PANEL-ARCO EXTERNO					
	A96248556	.	.	.	.	B	S	.	S		LH	1				

ENG(ENGINE)	T/A(TRANSAXLE)	BODY TYPE
Y = 1.5SOHC 6 = 1.6DOHC . = COMMON	M = MANUAL T/A A = AUTOMATIC T/A . = COMMON	4 N = 4 DOOR NOTCHBACK 3 H = 3 DOOR HATCHBACK 5 H = 5 DOOR HATCHBACK

6411 SIDE BODY PANEL(5DOOR H/B)

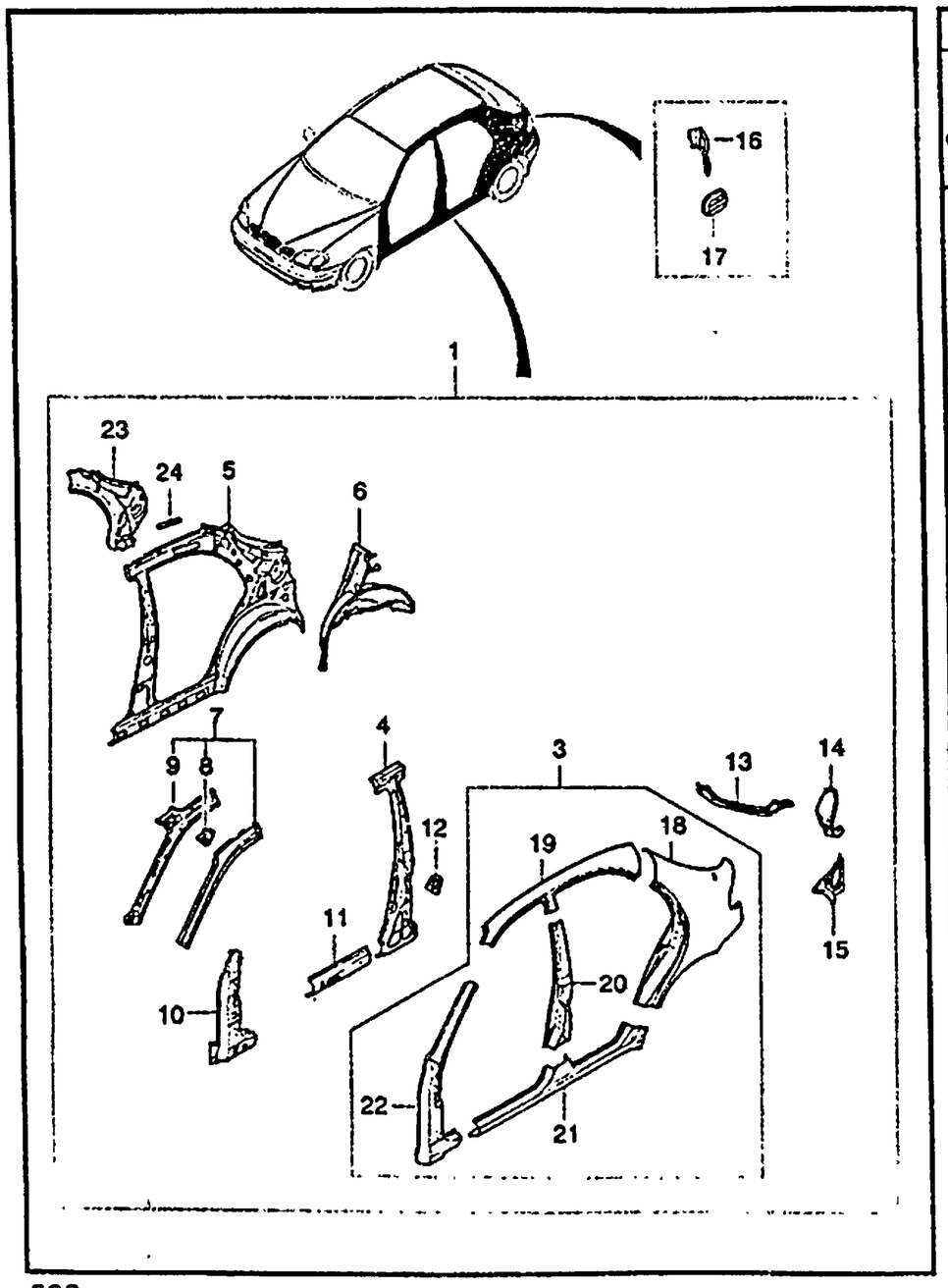

KEY NO.	PART NAME																
I-C	PART NO	MODEL								OPTION	L/R	QTY	EFFECTIVE DATE		REMARKS	P/CODE
		ENG	T/A	BODY 4N	BODY 3H	BODY 5H	LEVEL S	LEVEL SE	LEVEL SX				FROM	TO		
	A96248557	.	.	.	.	B	S	.	S		RH	1				
[22]	(E)PANEL-HINHE PILLAR,FRONT (D)VERKLEIDUNG,BESCHLAG,SÄUL										(F)PANNEAU (S)PANEL-PILAR BISAGRA					
	A96248558	.	.	.	.	B	S	.	S		LH	1				
	A96248559	.	.	.	.	B	S	.	S		RH	1				
[23]	(E)REINF A-LOCK PILLAR (D)VERSTÄRKUNG										(F)RENFORCEMENT (S)REFUERZO					
	96307241	.	.	.	.	B	S	.	S		LH	1				
	96307242	.	.	.	.	B	S	.	S		RH	1				
[24]	(E)REINF A-REAR ASSIST GRIP (D)VERSTÄRKUNG										(F)RENFORCEMENT (S)REFUERZO					
	96307023	.	.	.	.	B	S	.	S	-CF6		2				
	96240749	.	.	.	.	B	O	.	O	&CF6	LH	1				
	96240750	.	.	.	.	B	O	.	O	&CF6	RH	1				

ENG(ENGINE)	T/A(TRANSAXLE)	BODY TYPE
Y = 1.5SOHC 6 = 1.6DOHC . = COMMON	M = MANUAL T/A A = AUTOMATIC T/A . = COMMON	4 N = 4 DOOR NOTCHBACK 3 H = 3 DOOR HATCHBACK 5 H = 5 DOOR HATCHBACK

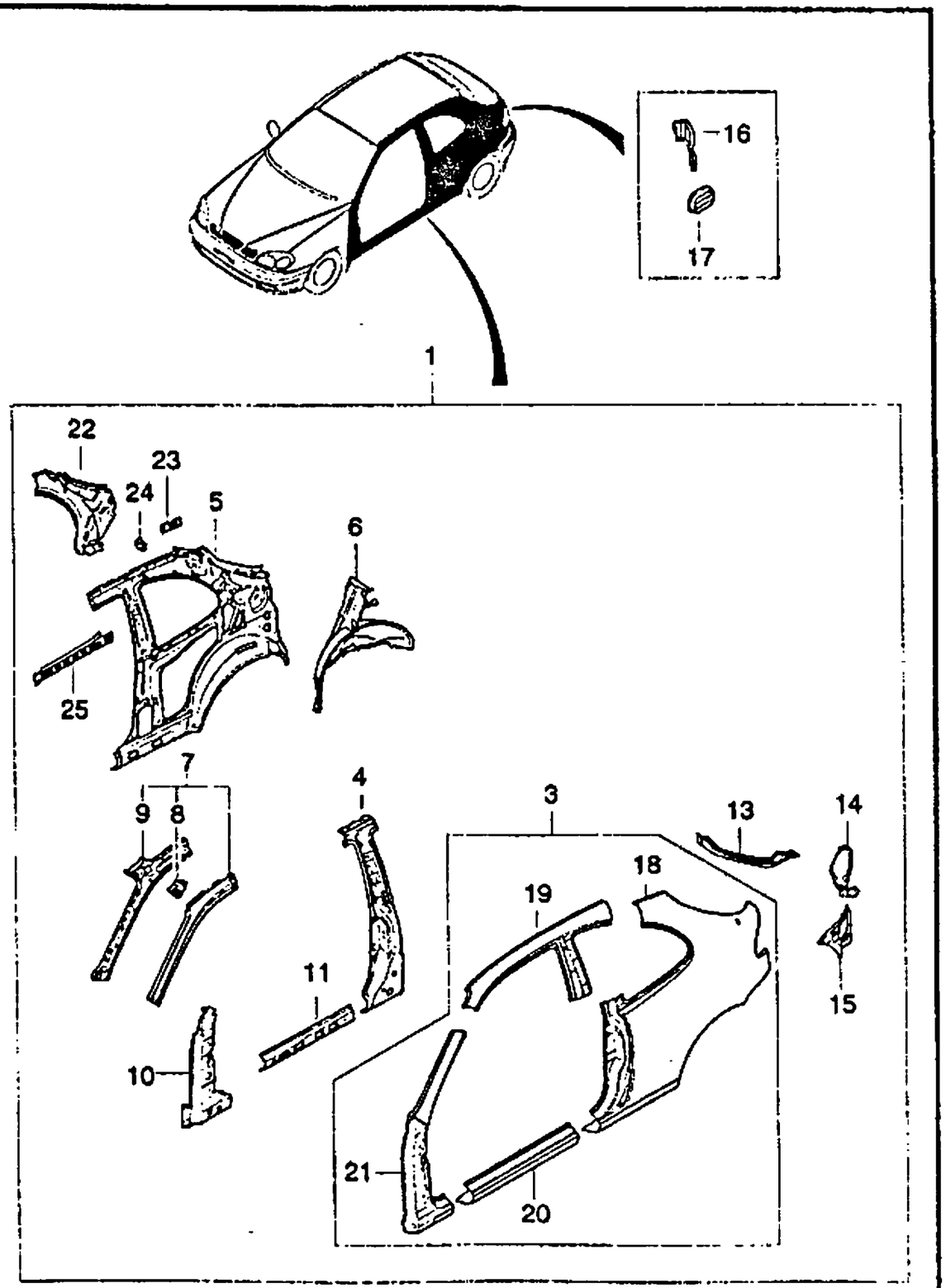

KEY NO. ITC	PART NO	MODEL ENG	T/A	BODY 4N	3H	5H	LEVEL S	SE	SX	OPTION	L/R	QTY	EFFECTIVE DATE FROM	TO	REMARKS	P/CODE
	[01]	(E)PANEL A1-SIDE (D)VERKLEIDUNG A1,SEITE,AUßEN									(F)PANNEAU A1-COTE EXTERNE (S)PANEL A1-LADO EXTERNO					
	A96306501	.	.	.	B		S	.	S	-CF6	LH	1				
	A96306502	.	.	.	B		S	.	S	-CF6	RH	1				
	A96251001	.	.	.	B		O	.	O	&CF6	LH	1				
	A96251002	.	.	.	B		O	.	O	&CF6	RH	1				
	[03]	(E)PANEL-SIDE,OUTER (D)VERKLEIDUNG,SEITE,AUßEN									(F)PANNEAU-COTE EXTERNE (S)PANEL-LADO EXTERNO					
	A96251006	.	.	.	B	.	S	.	S		LH	1				
	A96251007	.	.	.	B	.	S	.	S		RH	1		970616		
N	A96255363	.	.	.	B	.	S	.	S		RH	1	970616			
	[04]	(E)REINF A-CENTER PILLAR (D)VERSTÄRKUNG,ZENTRAL-SÄULE									(F)RENFORCEMENT (S)REFUERZO-PILAR DEL CENTRO					
	96303686	.	.	.	B	.	S	.	S		LH	1				PA
	96303687	.	.	.	B	.	S	.	S		RH	1				P1
	[05]	(E)PANEL A-SIDE INNER (D)VERKLEIDUNG,SEITE,INNEN									(F)PANNEAU-COTE INTERNE (S)PANEL-LADO INTERNO					
	96306558	.	.	.	B	.	S	.	S		LH	1				
	96306559	.	.	.	B	.	S	.	S		RH	1				
	[06]	(E)WHEELHOUSE A-INNER (D)VERKLEIDUNG,RAD-GEHÄUSE									(F)PANNEAU-IMONERIE (S)PANEL-VOLANTE INTERNO					
	96307032	.	.	.	B	.	S	.	S		LH	1				WF
	96307033	.	.	.	B	.	S	.	S		RH	1				W6
	[07]	(E)PILLAR A-FRONT (D)SÄULE,VORDER-KAROSSERIE									(F)PILIER-CORPS AVANT (S)PILAR-FRENTE DE CUERPO					
	96303787	.	.	.	B	.	S	.	S		LH	1				LA
	96303788	.	.	.	B	.	S	.	S		RH	1				L1

ENG(ENGINE)	T/A(TRANSAXLE)	BODY TYPE
Y = 1.5SOHC 6 = 1.6DOHC . = COMMON	M = MANUAL T/A A = AUTOMATIC T/A . = COMMON	4 N = 4 DOOR NOTCHBACK 3 H = 3 DOOR HATCHBACK 5 H = 5 DOOR HATCHBACK

6412 SIDE BODY PANEL(3DOOR H/B)

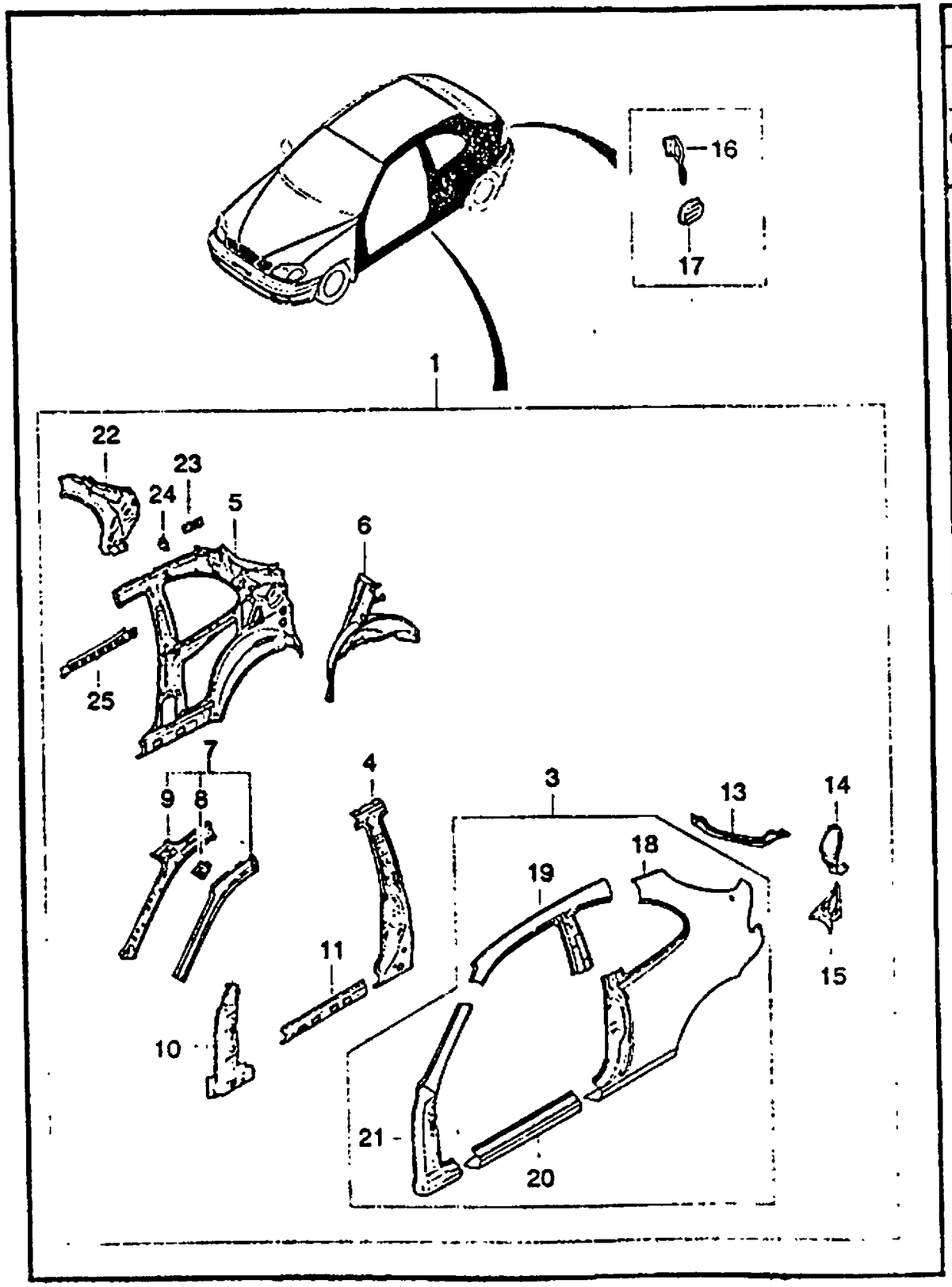

KEY NO. ITC	PART NO	MODEL ENG	T/A	BODY 4N	3H	5H	LEVEL S	SE	SX	OPTION	L/R	QTY	EFFECTIVE DATE FROM	TO	REMARKS	P/CODE
[08]		(E)PATCH-FRONT PILLAR (D)TEIL,VORDER-SÄULE									(F)PIECE-PILIER,AVANT (S)PIEZA-FRENTE DE PILAR					
	96233763	.	.	.	B	.	S	.	S		LH	1				
	96233764	.	.	.	B	.	S	.	S		RH	1				
[09]		(E)PILLAR A-FRONT,INNER (D)SÄULE,VORDER-KAROSSERIE									(F)PILIER-CORPS AVANT (S)PILAR-FRENTE DE CUERPO					
	96307046	.	.	.	B	.	S	.	S		LH	1				
	96307047	.	.	.	B	.	S	.	S		RH	1				
[10]		(E)REINF A-FRONT PILLAR,LWR (D)VERSTÄRKUNG									(F)RENFORCEMENT (S)REFUERZO-BISAGRA					
	96306612	.	.	.	B	.	S	.	S		LH	1				NA
	96306613	.	.	.	B	.	S	.	S		RH	1				N1
[11]		(E)REINFORCEMENT-ROCKER (D)VERSTÄRKUNG									(F)RENFORCEMENT (S)REFUERZO					
	96242806	.	.	.	B	.	S	.	S		LH	1				
	96242807	.	.	.	B	.	S	.	S		RH	1				
[13]		(E)PIECE-SIDE PANEL OTR CONN (D)TEIL,VERBINDUNGS									(F)PIECE (S)PIEZA					
	96306524	.	.	.	B	.	S	.	S		LH	1				CB
	96306525	.	.	.	B	.	S	.	S		RH	1				C2
[14]		(E)PATCH A-TAIL LAMP HOUSING (D)TEIL-GEHÄUSE									(F)PIECE-LOGEMENT (S)PIEZA-CARCASA					
	96310159	.	.	.	B	.	S	.	S		LH	1				LB
	96310160	.	.	.	B	.	S	.	S		RH	1				L2
[15]		(E)EXTENSION-SIDE PANEL,OTR (D)VERLÄNGERUNG,SEITE,AUßEN									(F)EXTENSION-COTE,EXTERIEUR (S)EXTENSION-LADO EXTERIOR					
	96306534	.	.	.	B	.	S	.	S		LH	1				EB

ENG(ENGINE)	T/A(TRANSAXLE)	BODY TYPE
Y = 1.5SOHC	M = MANUAL T/A	4 N = 4 DOOR NOTCHBACK
6 = 1.6DOHC	A = AUTOMATIC T/A	3 H = 3 DOOR HATCHBACK
. = COMMON	. = COMMON	5 H = 5 DOOR HATCHBACK

6412 SIDE BODY PANEL(3DOOR H/B)

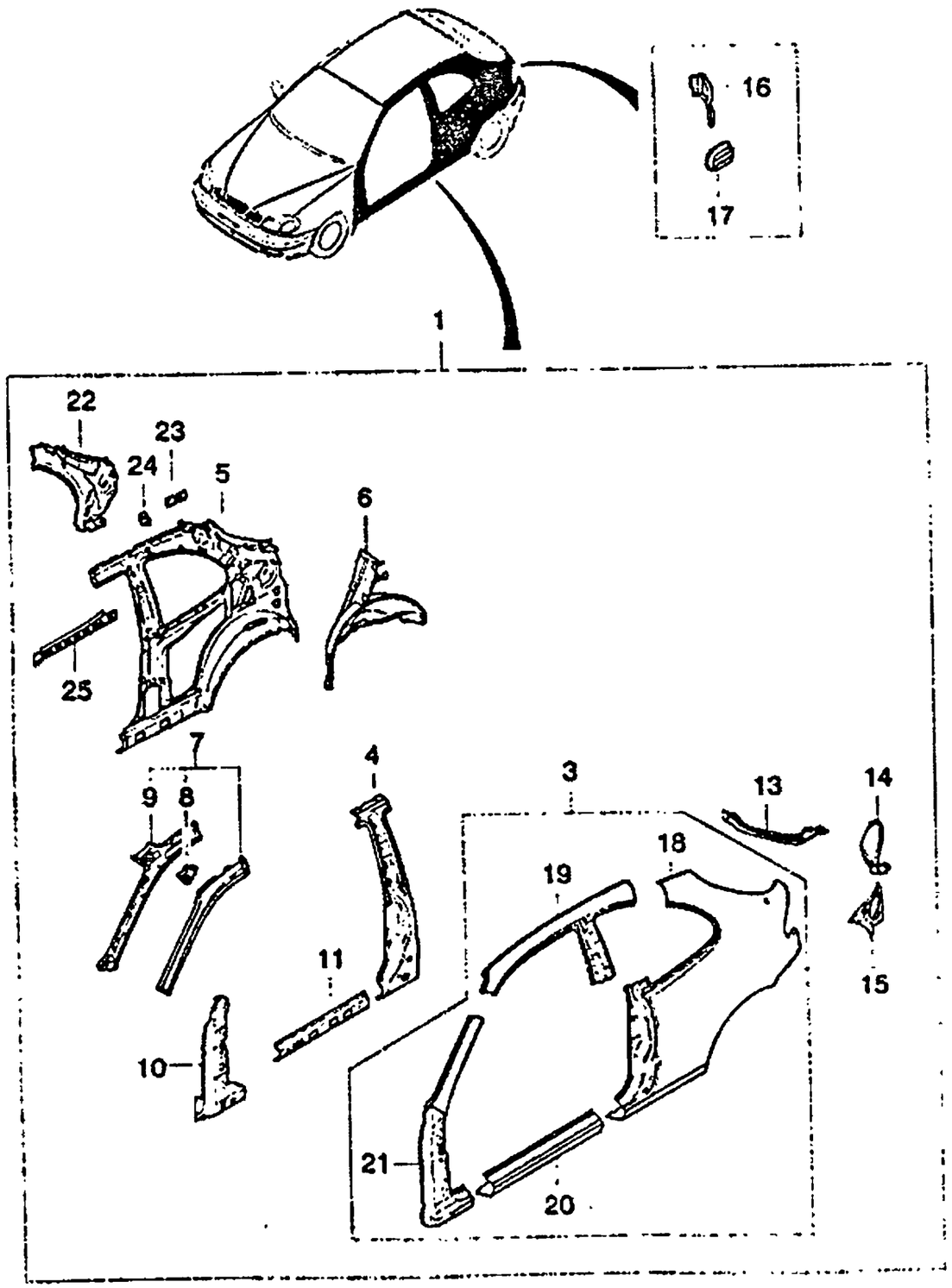

KEY NO. ITC	PART NO	MODEL ENG	MODEL T/A	MODEL BODY 4N	MODEL BODY 3H	MODEL BODY 5H	MODEL LEVEL S	MODEL LEVEL SE	MODEL LEVEL SX	OPTION	L/R	QTY	EFFECTIVE DATE FROM	EFFECTIVE DATE TO	REMARKS	P/CODE
	96306535	.	.	.	B	.	S	.	S		RH	1				E2
[16]		(E)SPACER A-SIDE BODY,REAR (D)DISTANZSTÜCK									(F)ENTRETOISE (S)ESPACIADOR					
	96307247	.	.	.	B	.	S	.	S		LH	1				AB
	96307248	.	.	.	B	.	S	.	S		RH	1				A2
[17]		(E)INSERT A-VENTILATION (D)EINSATZ,VENTILATOR									(F)INSERTION-VENTILATION (S)REFUERZO-VENTILACION					
	96242978	.	.	.	B	.	S	.	S			2				
[18]		(E)PANEL- QUATER (D)VERKLEIDUNG,VIERTEL									(F)PANNEAU-QUART (S)PANEL-CUADRANTE					
	A96248544	.	.	.	B		S	.	S		LH	1				
	A96248545	.	.	.	B		S	.	S		RH	1				
[19]		(E)PANEL-ROOF SIDE (D)VERKLEIDUNG,SEITE,AUßEN									(F)PANNEAU-COTE EXTERNE (S)PANEL-LADO EXTERNO,TECHO					
	A96248542	.	.	.	B		S	.	S		LH	1				
	A96248543	.	.	.	B		S	.	S		RH	1				
[20]		(E)PANEL-ROCKER (D)VERKLEIDUNG,SCHWENKUNG									(F)PANNEAU-CULBUTEUR (S)PANEL-ARCO EXTERNO					
	A96248546	.	.	.	B		S	.	S		LH	1				
	A96248547	.	.	.	B		S	.	S		RH	1				
[21]		(E)PANEL-HINHE PILLAR,FRONT (D)VERKLEIDUNG,BESCHLAG,SÄUL									(F)PANNEAU (S)PANEL-PILAR BISAGRA					
	A96248548	.	.	.	B		S	.	S		LH	1				
	A96248549	.	.	.	B		S	.	S		RH	1				
[22]		(E)REINF A-LOCK PILLAR (D)VERSTÄRKUNG									(F)RENFORCEMENT (S)REFUERZO					
	96303749	.	.	.	B	.	S	.	S		LH	1				

ENG(ENGINE)	T/A(TRANSAXLE)	BODY TYPE
Y = 1.5SOHC	M = MANUAL T/A	4 N = 4 DOOR NOTCHBACK
6 = 1.6DOHC	A = AUTOMATIC T/A	3 H = 3 DOOR HATCHBACK
. = COMMON	. = COMMON	5 H = 5 DOOR HATCHBACK

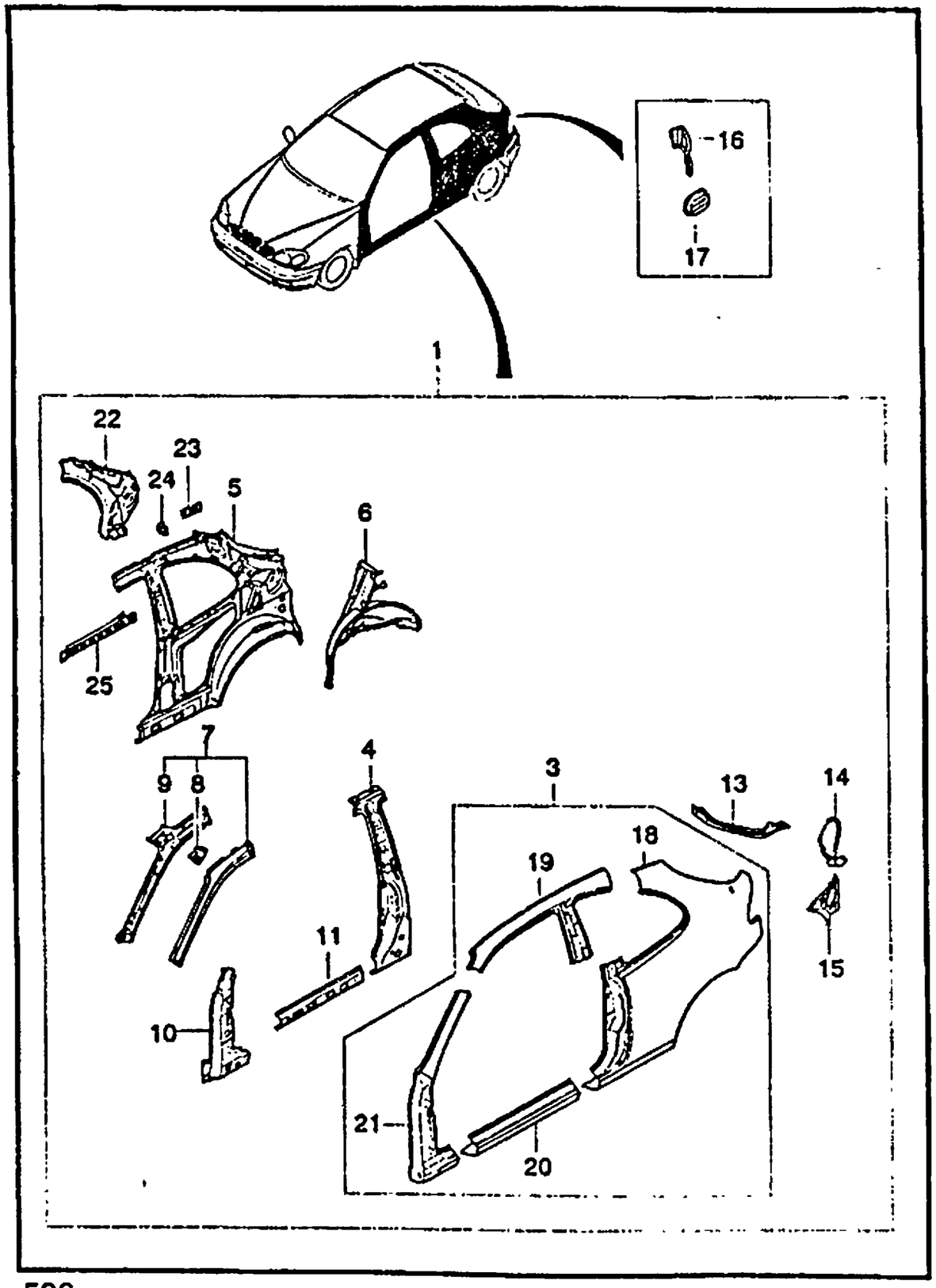

KEY NO.		PART NAME															
ITC	PART NO	MODEL								OPTION	L/R	QTY	EFFECTIVE DATE		REMARKS	P/CODE
		ENG	T/A	BODY 4N	BODY 3H	BODY 5H	LEVEL S	LEVEL SE	LEVEL SX				FROM	TO		
	96303750	.	.	.	B	.	S	.	S		RH	1				
[23]		(E)REINF A-SUNROOF BRACKET (D)VERSTÄRKUNG									(F)RENFORCEMENT (S)REFUERZO					
	96240740	.	.	.	B	.	O	.	O	&CF6	LH	1				
	96240741	.	.	.	B	.	O	.	O	&CF6	RH	1				
[24]		(E)REINFORCEMENT A-COAT HOOK (D)VERSTÄRKUNG									(F)RENFORCEMENT (S)REFUERZO					
	96307022	.	.	.	B	.	S	.	S	-CF6	LH	1				
	96310175	.	.	.	B	.	S	.	S	-CF6	RH	1				
[25]		(E)RAIL-SIDE PANEL,INNER (D)SCHIENE,SEITE,INNEN									(F)RAIL-COTE INTERNE (S)RIEL-LADO INTERNO					
	96307123	.	.	.	B	.	S	.	S		LH	1				
	96307124	.	.	.	B	.	S	.	S		RH	1				

ENG(ENGINE)	T/A(TRANSAXLE)	BODY TYPE
Y = 1.5SOHC G = 1.6DOHC . = COMMON	M = MANUAL T/A A = AUTOMATIC T/A . = COMMON	4 N = 4 DOOR NOTCHBACK 3 H = 3 DOOR HATCHBACK 5 H = 5 DOOR HATCHBACK

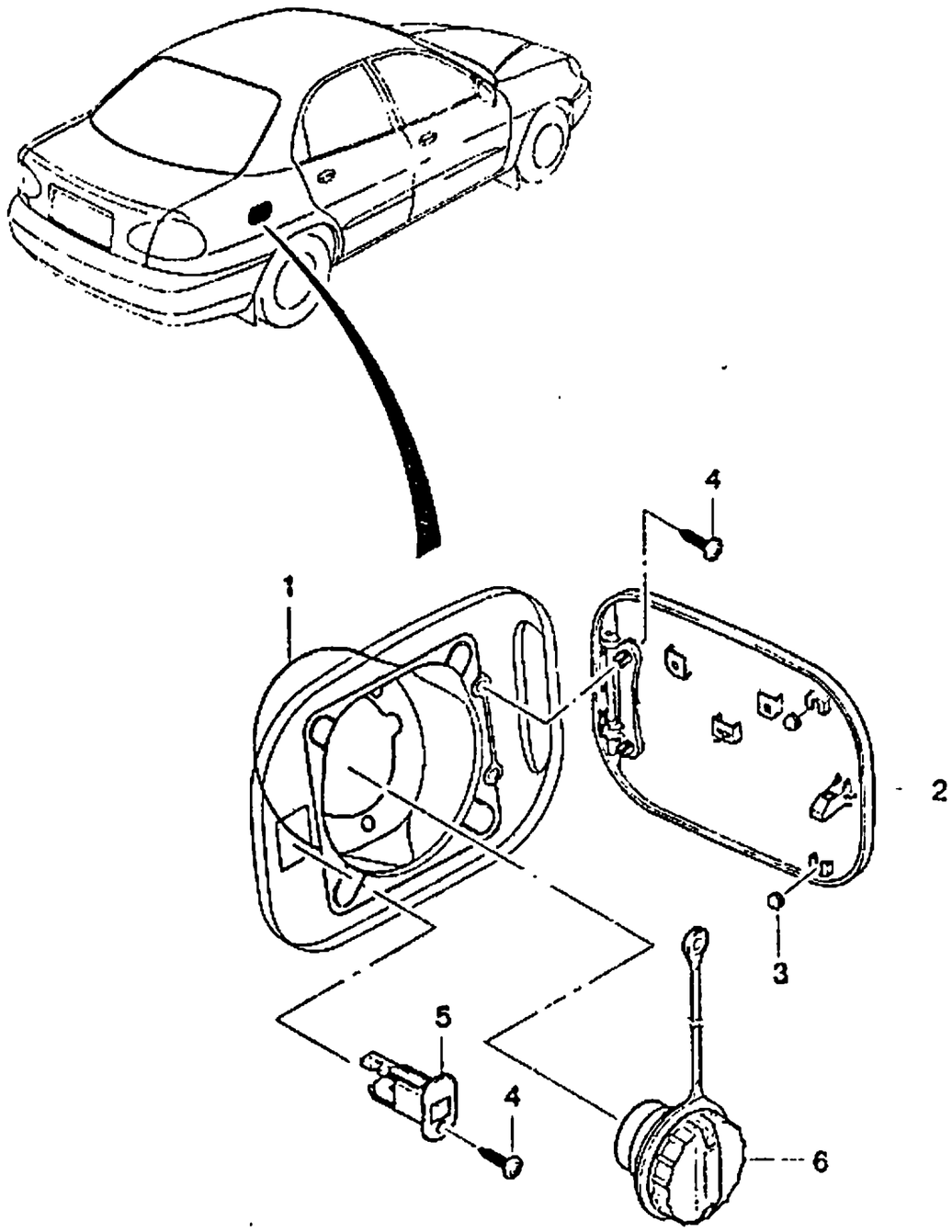

KEY NO. ITC	PART NO	MODEL ENG	MODEL T/A	MODEL BODY 4N	MODEL BODY 3H	MODEL BODY 5H	MODEL LEVEL S	MODEL LEVEL SE	MODEL LEVEL SX	OPTION	PART NAME	L/R	QTY	EFFECTIVE DATE FROM	EFFECTIVE DATE TO	REMARKS	P/CODE
[01]											(E)CAP-FUEL FILLER (D)DECKEL,BENZINTANK		(F)CHAPEAU (S)TAPA-TOMA DE GASOLINA				
	96306516	.	.	B	B	B	S	S	S				1				FB
[02]											(E)DOOR A-FUEL FILLER (D)TÜR,BENZINTANK		(F)PORTE-REMPLISSAGE (S)PUERTA-ECHAR COMBUSTIBLE				
	96303245	.	.	B	.	.	S	S	S				1			INCL. #3	
	96303238	.	.	.	B	.	S	.	S				1			INCL. #3	
	96307261	.	.	.	.	B	S	.	S				1			INCL. #3	
[03]											(E)BUMPER-FUEL FILLER DOOR (D)STOßSTANGE		(F)PARE-CHOC (S)PARACHOQUES				
	96246535	.	.	B	B	B	S	S	S				2				
[04]											(E)SCREW-TAPPING (D)SCHRAUBE		(F)VIS (S)TORNILLO				
	03160-42132	.	.	B	B	B	S	S	S				3				
[05]											(E)LOCK A-FUEL FILLER DOOR (D)SCHLOß		(F)VERROU (S)CERRADURA				
	96248525	.	.	B	B	B	S	S	S				1		970616		
N	96250424	.	.	B	B	B	S	S	S				1	970616			
[06]											(E)CAP-FUEL SCREW (D)SCHRAUBEDECKEL,BENZINTANK		(F)CHAPEAU (S)TAPA-TORNILLO				
	22591475	.	.	B	B	B	S	S	S				1				

ENG(ENGINE)	T/A(TRANSAXLE)	BODY TYPE
Y = 1.5SOHC 6 = 1.6DOHC . = COMMON	M = MANUAL T/A A = AUTOMATIC T/A . = COMMON	4 N = 4 DOOR NOTCHBACK 3 H = 3 DOOR HATCHBACK 5 H = 5 DOOR HATCHBACK

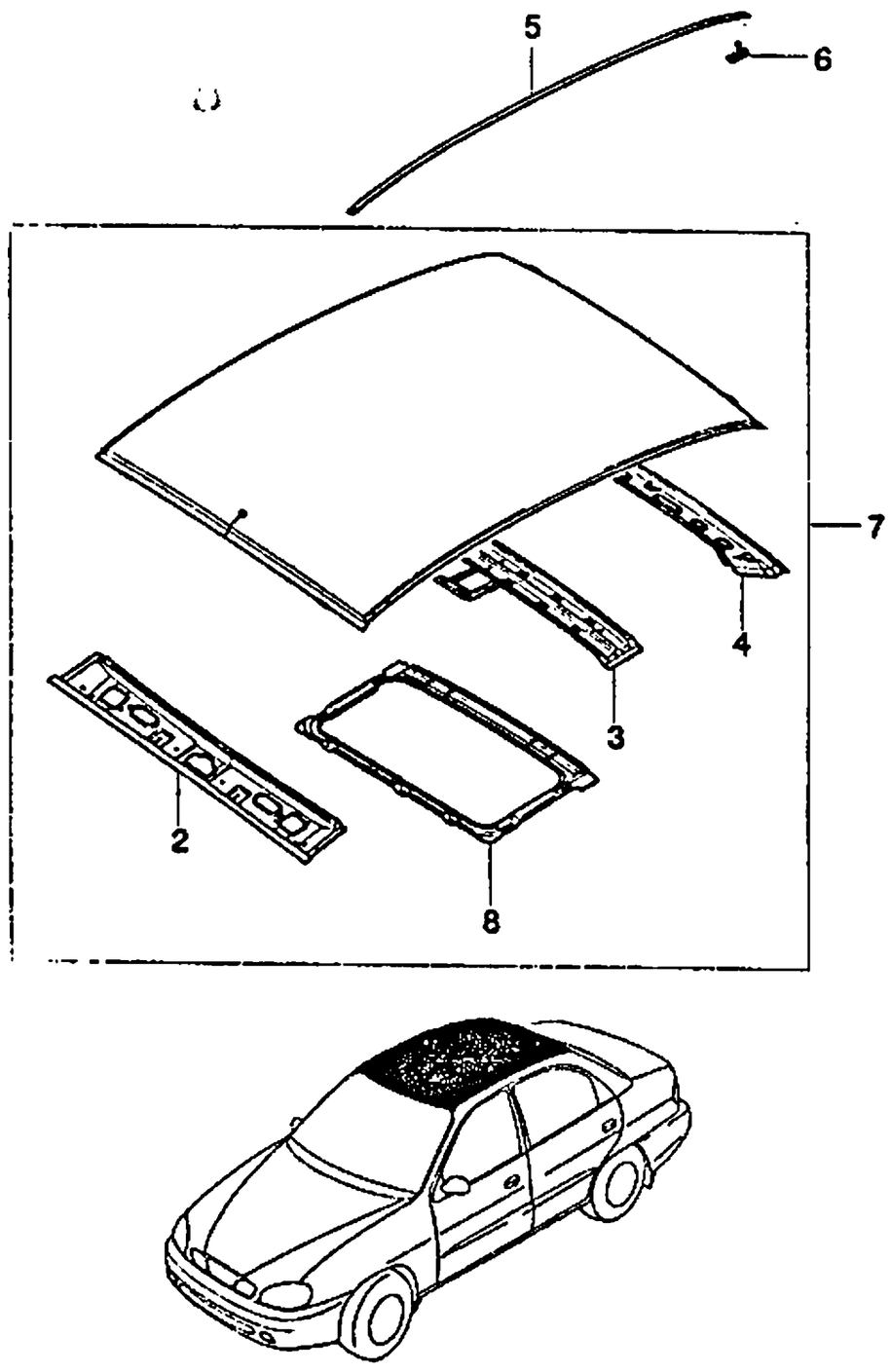

KEY NO. ITC	PART NO	MODEL ENG	MODEL T/A	MODEL BODY 4N	MODEL BODY 3H	MODEL BODY 5H	MODEL LEVEL S	MODEL LEVEL SE	MODEL LEVEL SX	OPTION	L/R	QTY	EFFECTIVE DATE FROM	EFFECTIVE DATE TO	REMARKS	PICODE
[02]	(E)RAIL-WINDSHIELD HEADER (D)SCHIENE										(F)RAIL-HAUT DE PARE-BRISE (S)RIEL					
96303820		.	.	B	B	B	S	S	S			1				
[03]	(E)SUPPORT A-ROOF,CENTER (D)TRÄGER,DACH										(F)SUPPORT-TOIT (S)SOPORTE-TECHO					
96307051		.	.	B	B	B	S	S	S	-CF6		1				
[04]	(E)FRAME-ROOF,REAR (D)RAHMEN,HINTERES DACH										(F)CADRE-TOIT ARRIERE (S)ARMADURA-TECHO TRASERO					
96303823		.	.	B	.	.	S	S	S			1				
96303824		.	.	.	B	B	S	.	S			1				
[05]	(E)MOLDING A-ROOF (D)PREßTEIL,DACH										(F)MOULURE-TOIT (S)MOLOURA-TECHO					
96303484		.	.	B	.	.	S	S	S		LH	1				
96306107		.	.	B	.	.	S	S	S		RH	1				
96306233		.	.	.	B	B	S	.	S		LH	1				
96306234		.	.	.	B	B	S	.	S		RH	1				
[06]	(E)CLIP-ROOF MOLDING (D)KLEMME										(F)ATTACHE (S)GRAPA					
96233387		.	.	B	B	B	S	S	S			8				
[07]	(E)PANEL A-ROOF (D)VERKLEIDUNG,DACH										(F)PANNEAU-TOIT (S)PANEL-TECHO					
A96303816		.	.	B	.	.	S	S	S	-CF6		1			INCL.#2~4	
96232378		.	.	B	.	.	O	O	O	&CF6		1			INCL.#2,4,8	
A96303817		.	.	.	B	.	S	.	S	-CF6		1			INCL.#2~4	
96232379		.	.	.	B	.	O	.	O	&CF6		1			INCL.#2,4,8	
A96230852		.	.	.	.	B	S	.	S	-CF6		1			INCL.#2~4	
96232380		.	.	.	.	B	O	.	O	&CF6		1			INCL.#2,4,8	

ENG(ENGINE)	T/A(TRANSAXLE)	BODY TYPE
Y = 1.5SOHC	M = MANUAL T/A	4 N = 4 DOOR NOTCHBACK
6 = 1.6DOHC	A = AUTOMATIC T/A	3 H = 3 DOOR HATCHBACK
. = COMMON	. = COMMON	5 H = 5 DOOR HATCHBACK

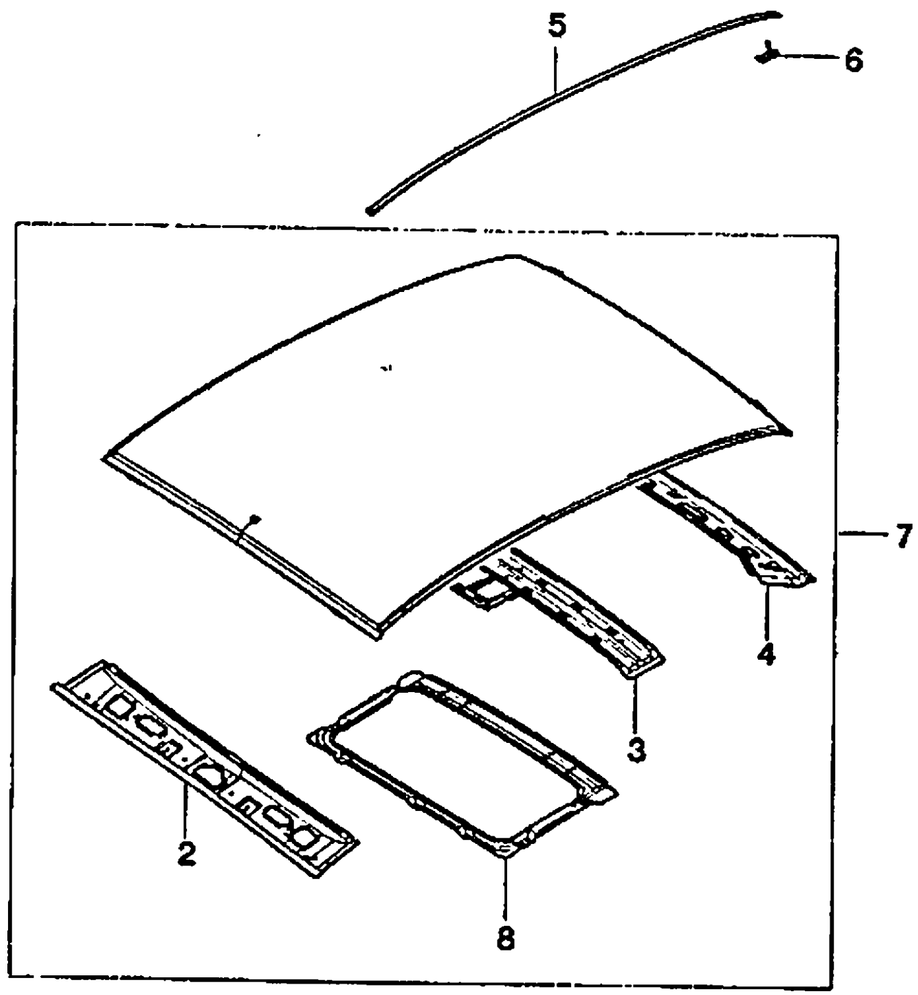

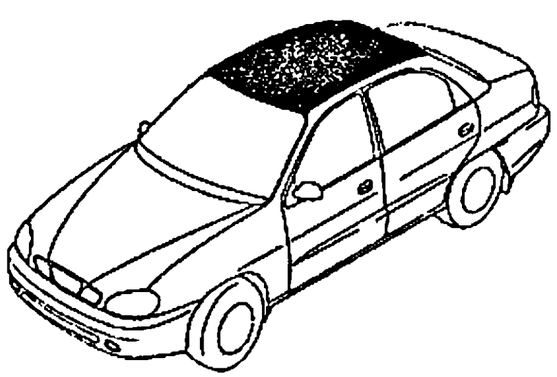

KEY NO.		PART NAME														
ITC	PART NO	MODEL							OPTION	L/R	QTY	EFFECTIVE DATE		REMARKS	P/CODE
		ENG	T/A	BODY 4N	BODY 3H	BODY 5H	LEVEL S	LEVEL SE	LEVEL SX				FROM	TO		
[08]		(E)FRAME A-SUN ROOF (D)RAHMEN									(F)CADRE (S)ARMADURA					
	96240722	.	.	B	.	B	O	O	O	&CF6		1				
	96240723	.	.	.	B	.	O	.	O	&CF6		1				

ENG(ENGINE)	T/A(TRANSAXLE)	BODY TYPE
Y = 1.5SOHC 6 = 1.6DOHC . = COMMON	M = MANUAL T/A A = AUTOMATIC T/A . = COMMON	4 N = 4 DOOR NOTCHBACK 3 H = 3 DOOR HATCHBACK 5 H = 5 DOOR HATCHBACK

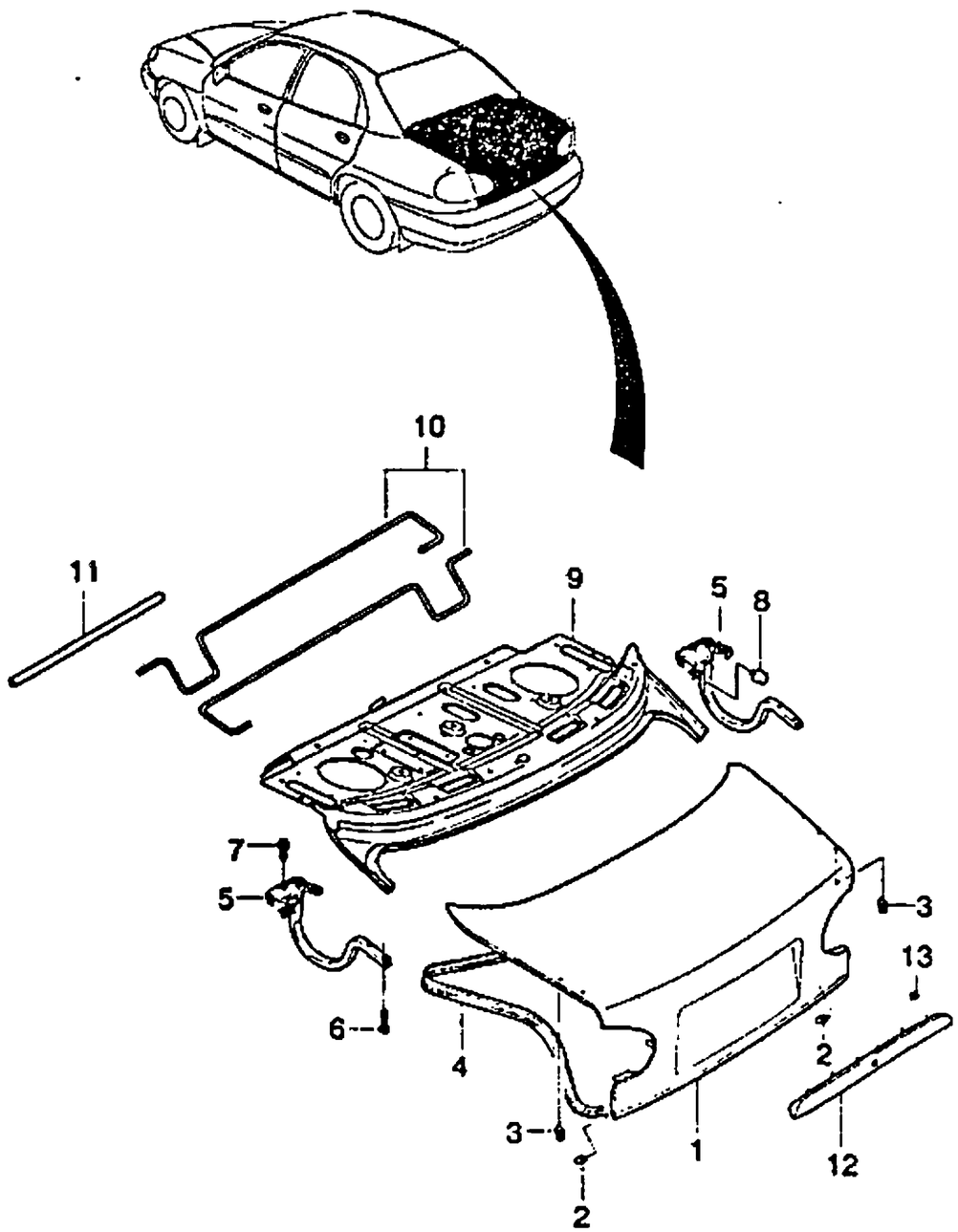

KEY NO.		PART NAME															
ITC	PART NO	MODEL								OPTION	L/R	QTY	EFFECTIVE DATE		REMARKS	P/CODE
		ENG	T/A	BODY 4N	BODY 3H	BODY 5H	LEVEL S	LEVEL SE	LEVEL SX				FROM	TO		
[01]		(E)PANEL A-TRUNK LID (D)VERKLEIDUNG,KOFFERRAUM									(F)PANNEAU-CAPOT DE COFFRE (S)TAPA DEL PORTAEQUIPAJE					
	A96228756	.	.	B	.	.	S	S	S	&XCK-XBR		1				LB
	A96303333	.	.	B	.	.	.	.	A	&XCK&XBR		1				LA
	A96228757	.	.	B	.	.	A	A	A	&XCP		1				LD
[02]		(E)BUMPER-TRUNK LID LOWER (D)STOßSCHEIBE									(F)PARE-CHOC (S)TOPE-TAPA DE PORTAEQUIPAJ					
	96240768	.	.	B	.	.	S	S	S			2				
[03]		(E)BUMPER (D)STOßSTANGE									(F)PARE-CHOC (S)PARACHOQUES					
	96169594	.	.	B	.	.	S	S	S			2				
[04]		(E)WEATHERSTRIP A-TRUNK LID (D)DICHTUNGSLEISTE									(F)ISOLATION EN BANDELETTE (S)BURLETE					
	96303249	.	.	B	.	.	S	S	S			1		970901		
	N 96250354	.	.	B	.	.	S	S	S			1	970901			
[05]		(E)HINGE A-TRUNK LID (D)BESCHLAG,KOFFERRAUM									(F)CHARNIERE-CAPOT DE COFFRE (S)BISAGRA					
	96303325	.	.	B	.	.	S	S	S		LH	1				GA
	96306119	.	.	B	.	.	S	S	S		RH	1				G1
[06]		(E)BOLT (D)SCHRAUBE									(F)BOULON (S)PERNO					
	09118-06004	.	.	B	.	.	S	S	S			4			W/WASHER	
[07]		(E)BOLT (D)SCHRAUBE									(F)BOULON (S)PERNO					
	09118-06003	.	.	B	.	.	S	S	S			6			W/WASHER	
[08]		(E)BUMPER-TRUNK LID HINGE AR (D)STOßSCHEIBE									(F)PARE-CHOC-CAPOT DE COFFRE (S)TOPE					
	96185310	.	.	B	.	.	S	S	S			2				

ENG(ENGINE)	T/A(TRANSAXLE)	BODY TYPE
Y = 1.5SOHC 6 = 1.6DOHC . = COMMON	M = MANUAL T/A A = AUTOMATIC T/A . = COMMON	4 N = 4 DOOR NOTCHBACK 3 H = 3 DOOR HATCHBACK 5 H = 5 DOOR HATCHBACK

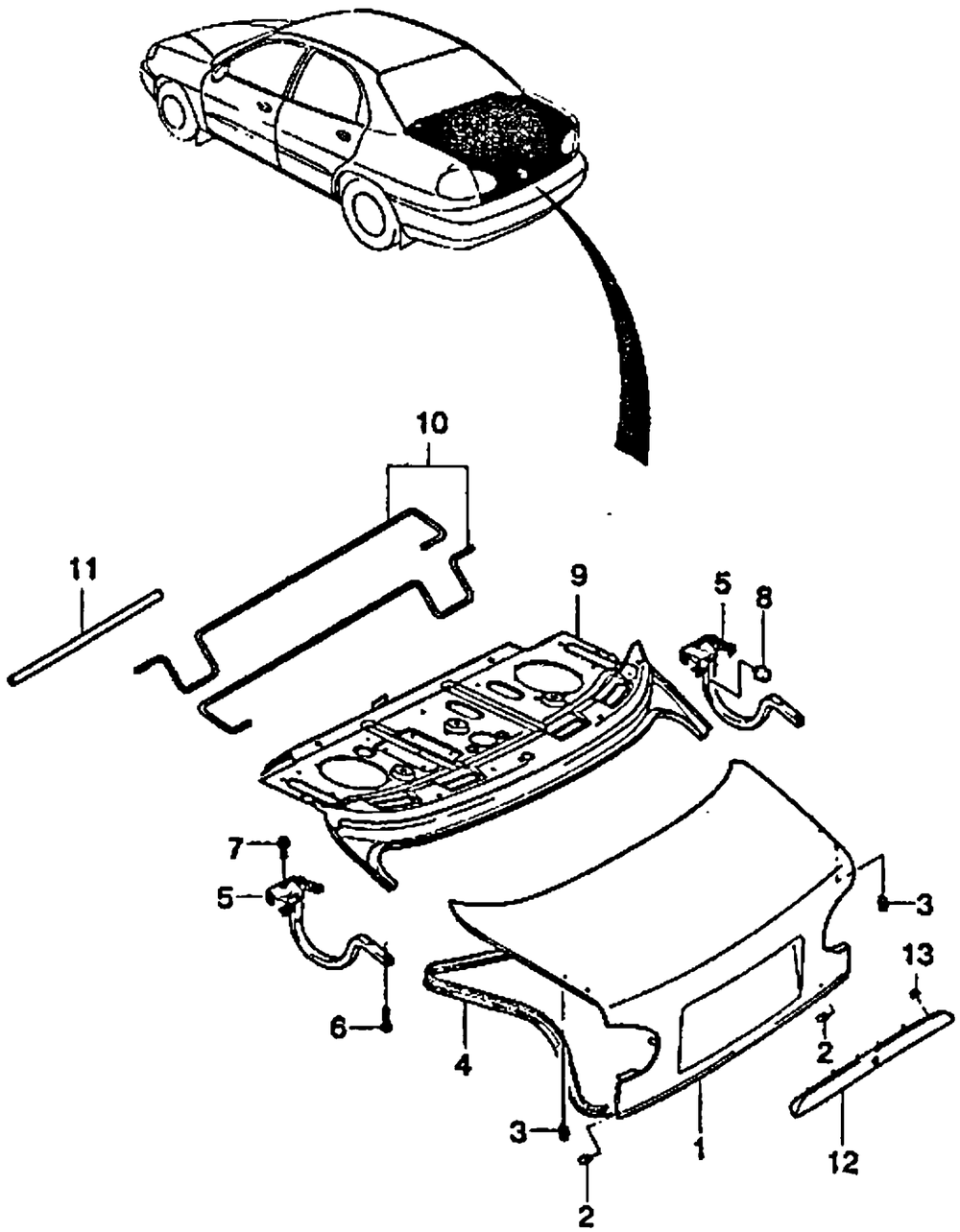

KEY NO. ITC	PART NO	MODEL ENG	T/A	BODY 4N	3H	5H	LEVEL S	SE	SX	OPTION	L/R	QTY	EFFECTIVE DATE FROM	TO	REMARKS	P/CODE
[09]		(E)PANEL A-BACK,UPPER (D)VERKLEIDUNG,HINTEN,OBEN									(F)PANNEAU-ARRIERE HAUT (S)PANEL-RESPALDO SUPERIOR					
96226339		.	.	B	.	.	S	S	.	&AM6		1				BB
96303806		.	.	B	.	.	.	.	S	&AM9		1				BD
96303806		.	.	B	.	.	A	A	A	&AMB		1				BD
[10]		(E)BAR-TRUNK LID TORSION (D)STANGE									(F)BARRE (S)BARRA					
96304597		.	.	B	.	.	S	S	S		LH	1				
96304598		.	.	B	.	.	S	S	S		RH	1				
[11]		(E)HOSE-SPRING (D)SCHLAUCH									(F)TUYAU (S)MANGUERA					
94825352		.	.	B	.	.	S	S	S			1				
[12]		(E)HANDLE A-TRUNK LID (D)HENKEL									(F)POIGNEE (S)MANIJA					
96303267		.	.	B	.	.	S	S	S			1				
[13]		(E)NUT-HEXAGON FLANGE (D)MUTTER									(F)ECROU (S)TUERCA					
08316-25053		.	.	B	.	.	S	S	S			4				

ENG(ENGINE)	T/A(TRANSAXLE)	BODY TYPE
Y = 1.5SOHC 6 = 1.6DOHC . = COMMON	M = MANUAL T/A A = AUTOMATIC T/A . = COMMON	4 N = 4 DOOR NOTCHBACK 3 H = 3 DOOR HATCHBACK 5 H = 5 DOOR HATCHBACK

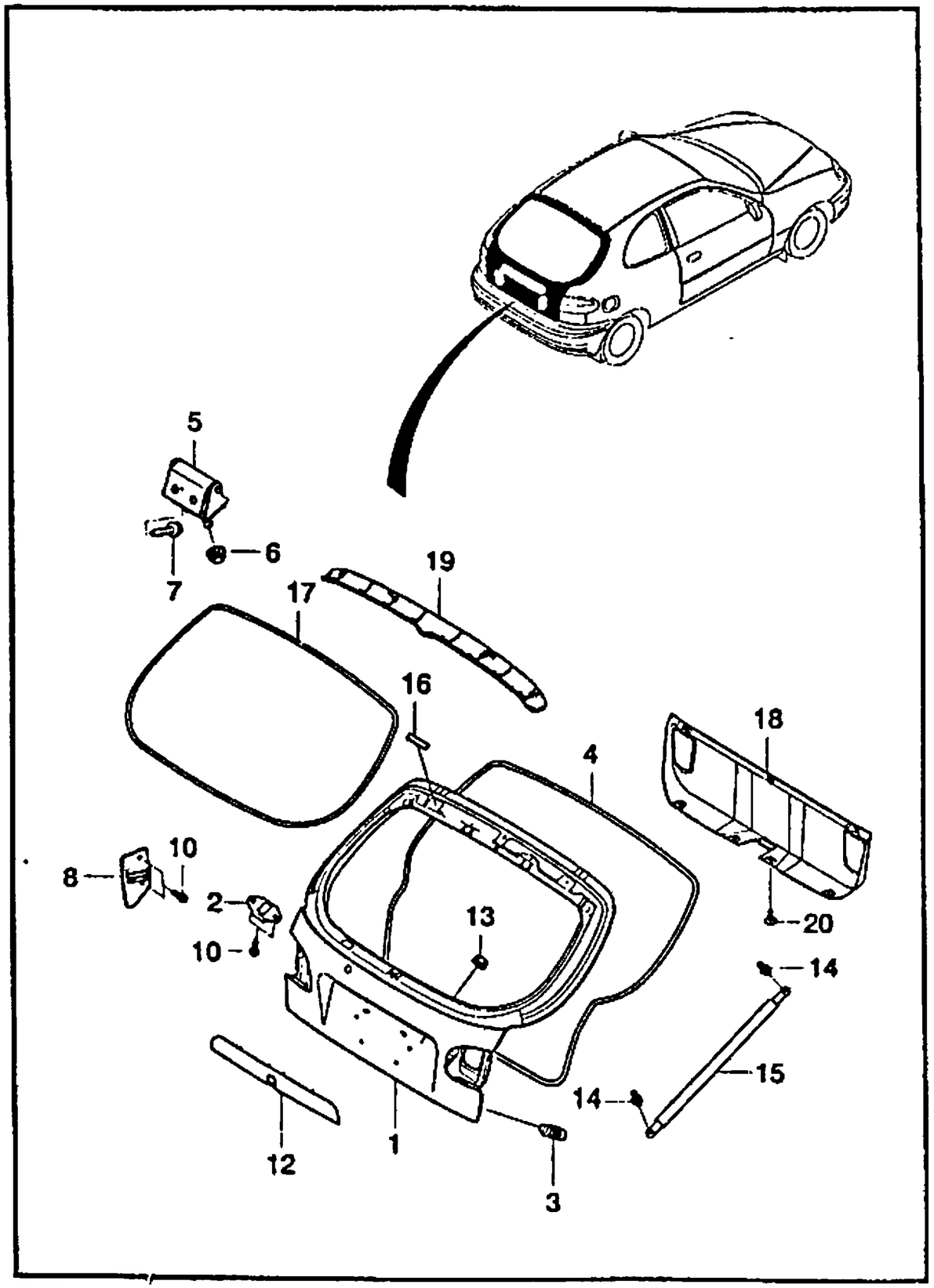

KEY NO. ITC	PART NO	MODEL ENG	T/A	BODY 4N	3H	5H	LEVEL S	SE	SX	OPTION	L/R	QTY	EFFECTIVE DATE FROM	TO	REMARKS	P/CODE
[01]		(E)PANEL A-TAILGATE (D)VERKLEIDUNG,HINTERTEIL									(F)PANNEAU-HAYON (S)PANEL-COMPUERTA DE COLA					
A96224442		.	.	.	B	B	S	.	S	&XCK-XBR		1				TB
A96303345		.	.	.	B	B	.	.	A	&XCK&XBR		1				TA
A96224443		.	.	.	B	B	A	.	A	&XCP		1				TD
[02]		(E)BUMPER (D)STOßSTANGE									(F)PARE-CHOC (S)PARACHOQUES					
96307168		.	.	.	B	B	S	.	S			2				
[03]		(E)BUMPER (D)STOßSTANGE									(F)PARE-CHOC (S)PARACHOQUES					
96169594		.	.	.	B	B	S	.	S			2				
[04]		(E)WEATHERSTRIP A-TAIL GATE (D)DICHTUNGSLEISTE									(F)ISOLATION EN BANDELETTE (S)BURLETE					
96250362		.	.	.	B	B	S	.	S			1				
[05]		(E)HINGE A-TAILGATE (D)BESCHLAG									(F)CHARNIERE (S)BISAGRA					
96306236		.	.	.	B	B	S	.	S		LH	1				GA
96232686		.	.	.	B	B	S	.	S		RH	1				G1
[06]		(E)NUT-HEXAGON FLANGE (D)MUTTER									(F)ECROU (S)TUERCA					
08316-28083		.	.	.	B	B	S	.	S			4				
[07]		(E)BOLT-GP HEXAGON FLANGE (D)SCHRAUBE									(F)BOULON (S)PERNO					
01800-08163		.	.	.	B	B	S	.	S			4				
[08]		(E)BUMPER-T/GATE SLIDING,LWR (D)STOßSTANGE									(F)PARE-CHOC (S)PARACHOQUES					
96307169		.	.	.	B	B	S	.	S		LH	1				
96224445		.	.	.	B	B	S	.	S		RH	1				

ENG(ENGINE)	T/A(TRANSAXLE)	BODY TYPE
Y = 1.5SOHC	M = MANUAL T/A	4 N = 4 DOOR NOTCHBACK
6 = 1.6DOHC	A = AUTOMATIC T/A	3 H = 3 DOOR HATCHBACK
. = COMMON	. = COMMON	5 H = 5 DOOR HATCHBACK

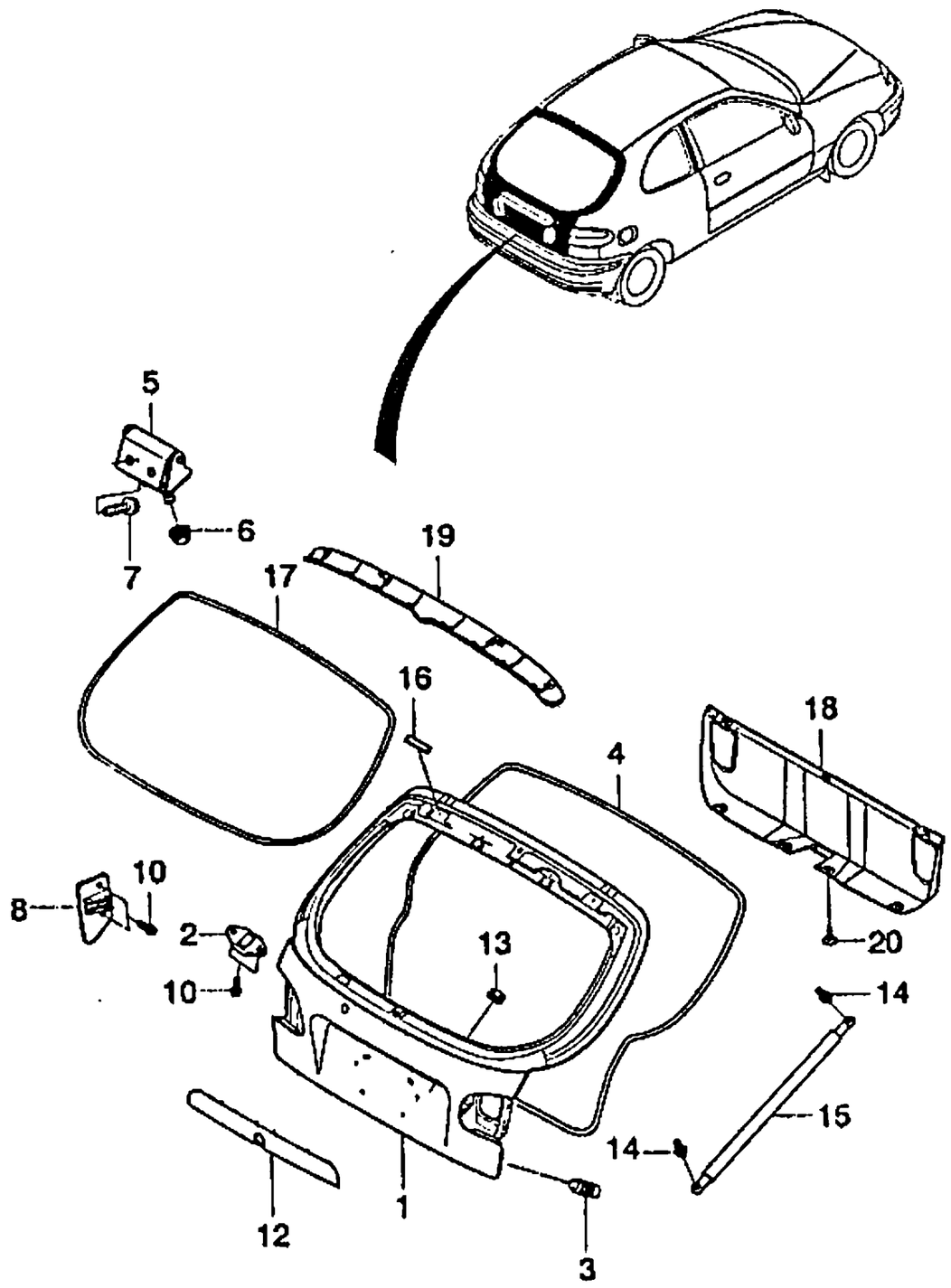

KEY NO. / ITC	PART NO	MODEL: ENG	T/A	BODY: 4N	3H	5H	LEVEL: S	SE	SX	OPTION	L/R	QTY	EFFECTIVE DATE FROM	TO	REMARKS	P/CODE
[10]	01517-06165	(E)BOLT-HEXAGON FLANGE (D)SCHRAUBE									(F)BOULON (S)PERNO	8				
[12]	96234770	(E)HANDLE A-TAILGATE (D)HENKEL									(F)POIGNEE (S)MANIJA	1				
[13]	08316-25053	(E)NUT-HEXAGON FLANGE (D)MUTTER									(F)ECROU (S)TUERCA	4				
[14]	96228420	(E)JOINT A-BALL (D)GLIED,KUGEL									(F)JOINT-BOULE (S)UNION-BOLA	4				
[15]	96306157	(E)SPRING-TAILGATE GAS (D)FEDERUNG									(F)RESSORT (S)RESORTE	2				H5
[16]	96303215	(E)FASTENER (D)BEFESTIGUNG									(F)ATTACHE (S)GRAPA	2	970615			
[17]	96237573	(E)COVER-TAILGATE GLASS (D)DECKEL									(F)CARTER (S)CUBIERTA	1				
[18]	96236114	(E)TRIM A-TAILGATE (D)VERKLEIDUNG,HINTERTEIL									(F)GARNITURE-HAYON (S)ADORNO-COMPUERTA DE COLA	1				
[19]	96236116	(E)COVER A-TAILGATE,UPR (D)DECKEL									(F)CARTER (S)CUBIERTA	1				
[20]		(E)CLIP (D)KLEMME									(F)ATTACHE (S)GRAPA					

ENG(ENGINE)	T/A(TRANSAXLE)	BODY TYPE
Y = 1.5SOHC 6 = 1.6DOHC . = COMMON	M = MANUAL T/A A = AUTOMATIC T/A . = COMMON	4 N = 4 DOOR NOTCHBACK 3 H = 3 DOOR HATCHBACK 5 H = 5 DOOR HATCHBACK

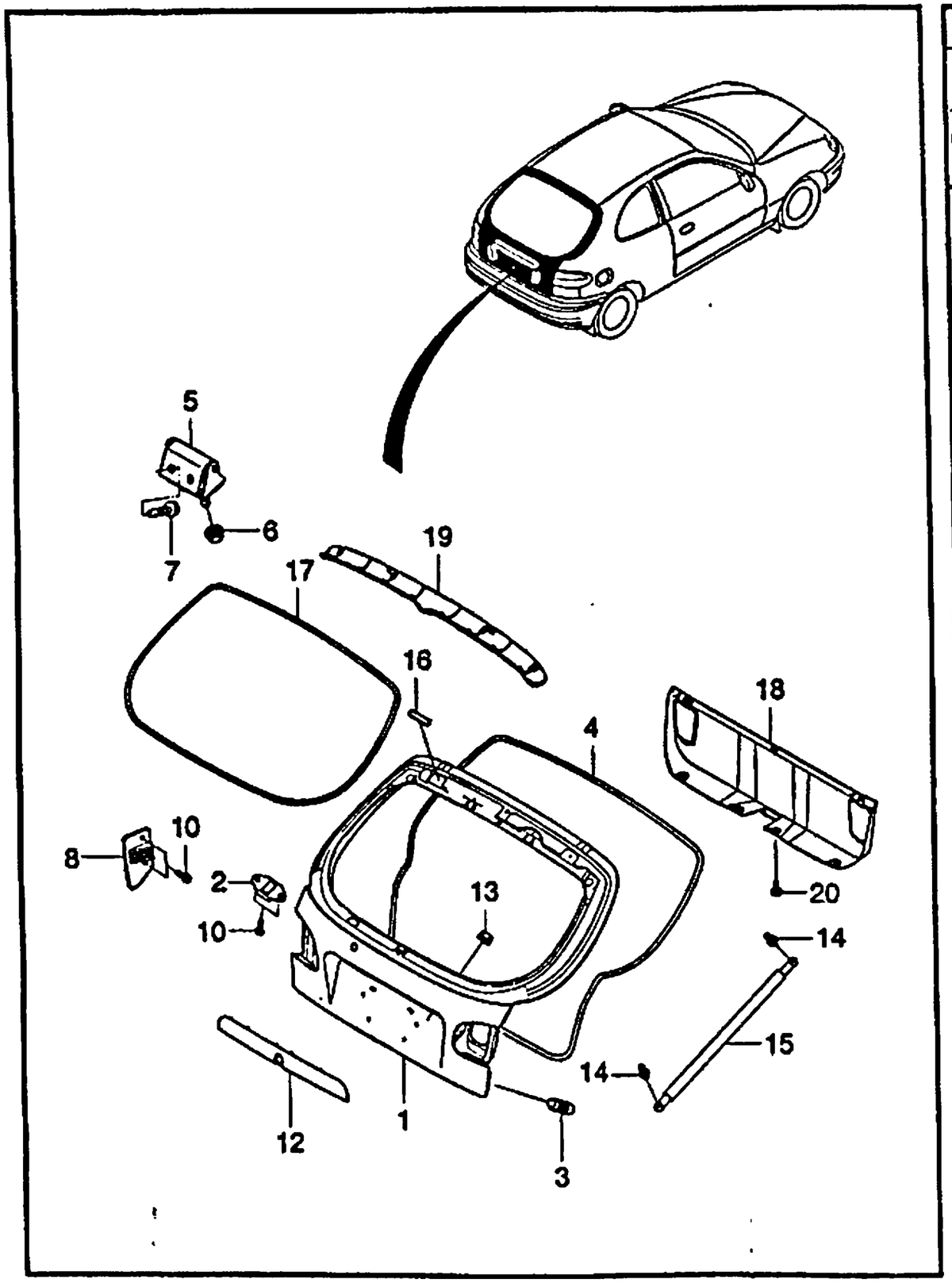

KEY NO.	PART NAME														
ITC	PART NO	MODEL								OPTION	L/R	QTY	EFFECTIVE DATE		REMARKS	P/CODE
		ENG	T/A	BODY			LEVEL						FROM	TO		
				4N	3H	5H	S	SE	SX							
	09409-07326	.	.	.	B	B	S	.	S			7				

ENG(ENGINE)	T/A(TRANSAXLE)	BODY TYPE
Y = 1.5SOHC 6 = 1.6DOHC . = COMMON	M = MANUAL T/A A = AUTOMATIC T/A . = COMMON	4 N = 4 DOOR NOTCHBACK 3 H = 3 DOOR HATCHBACK 5 H = 5 DOOR HATCHBACK

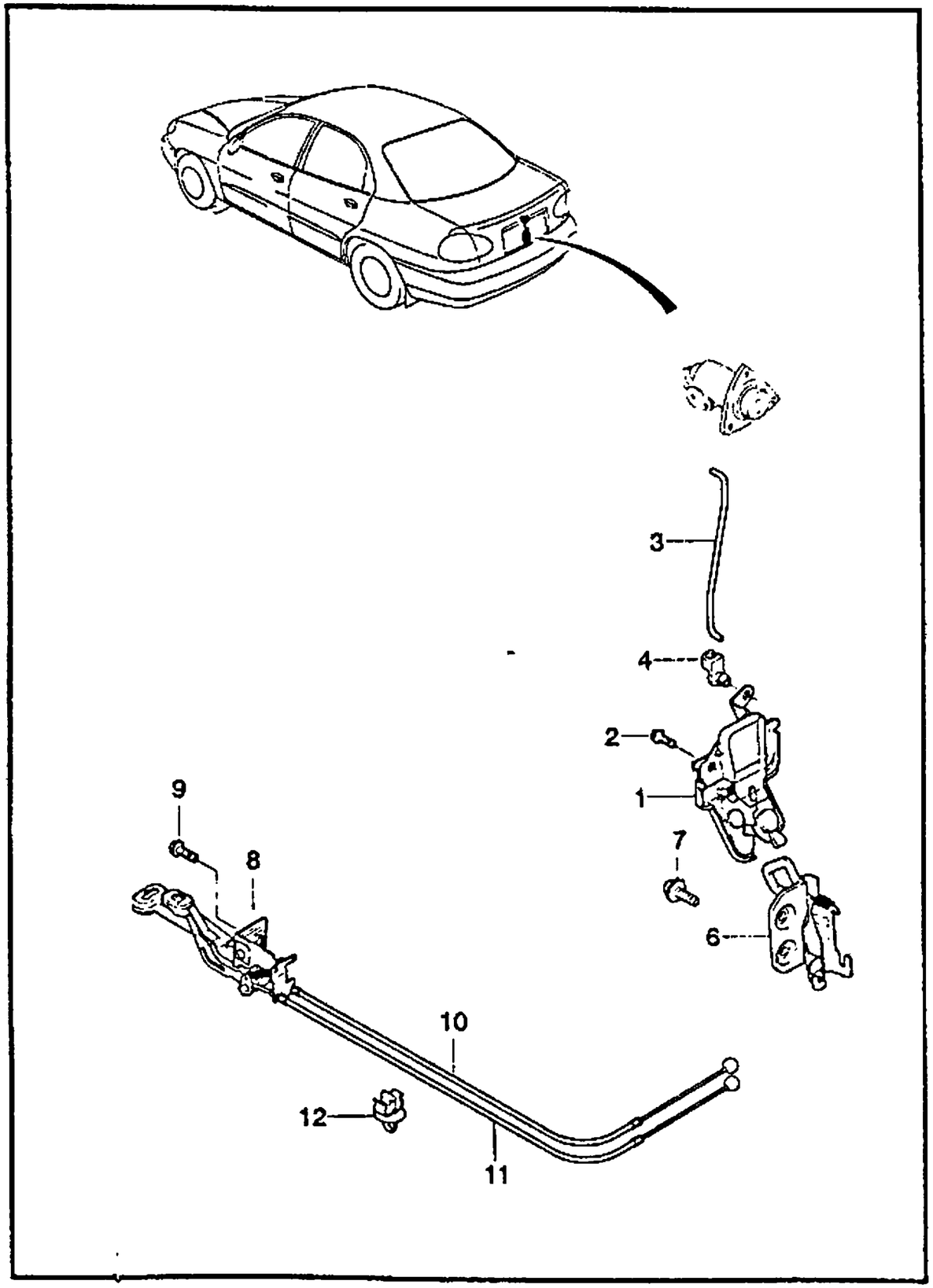

KEY NO.		PART NAME															
ITC	PART NO	MODEL								OPTION	L/R	QTY	EFFECTIVE DATE		REMARKS	P/CODE
		ENG	T/A	BODY			LEVEL						FROM	TO		
				4N	3H	5H	S	SE	SX							
[01]	96214300	(E)LATCH A-TRUNK LID (D)VERSCHLUß,KOFFERRAUM									(F)LOQUET-CAPOT DE COFFRE (S)PESTILLO	1				
		.	.	B	.	.	S	S	S							
[02]	09119-06023	(E)BOLT (D)SCHRAUBE									(F)BOULON (S)PERNO	2				
		.	.	B	.	.	S	S	S							
[03]	96304759	(E)ROD-LATCH PULLING (D)STAB,SCHOß-ÖFFNUNG									(F)TRINGLE-LOQUET (S)VARILLA-PESTILLO DE JALAR	1				
		.	.	B	.	.	S	S	S							
[04]	09403-03302	(E)CLAMP (D)KLAMMER									(F)PINCE (S)ABRAZADERA	1				
		.	.	B	.	.	S	S	S							
[06]	96303364	(E)STRIKER A-LATCH (D)SCHLÄGER									(F)MARTEAU (S)HUELGUISTA	1				
		.	.	B	.	.	S	S	S							
[07]	09118-06003	(E)BOLT (D)SCHRAUBE									(F)BOULON (S)PERNO	2			W/WASHER	
		.	.	B	.	.	S	S	S							
[08]	96220202	(E)LEVER A-T/LID & F/FILLER (D)HEBEL									(F)LEVIER (S)PALANCA	1			INCL #10,11	H1
		.	.	B	.	.	S	S	S							
[09]	09118-06003	(E)BOLT (D)SCHRAUBE									(F)BOULON (S)PERNO	1			W/WASHER	
		.	.	B	.	.	S	S	S							
[10]	96216134	(E)CABLE A-TRUNK LID (D)KABEL									(F)CABLE (S)CABLE	1				
		.	.	B	.	.	S	S	S							
[11]		(E)CABLE A-FUEL FILLER DOOR (D)KABEL									(F)CABLE (S)CABLE					

ENG(ENGINE)	T/A(TRANSAXLE)	BODY TYPE
Y = 1.5SOHC 6 = 1.6DOHC . = COMMON	M = MANUAL T/A A = AUTOMATIC T/A . = COMMON	4 N = 4 DOOR NOTCHBACK 3 H = 3 DOOR HATCHBACK 5 H = 5 DOOR HATCHBACK

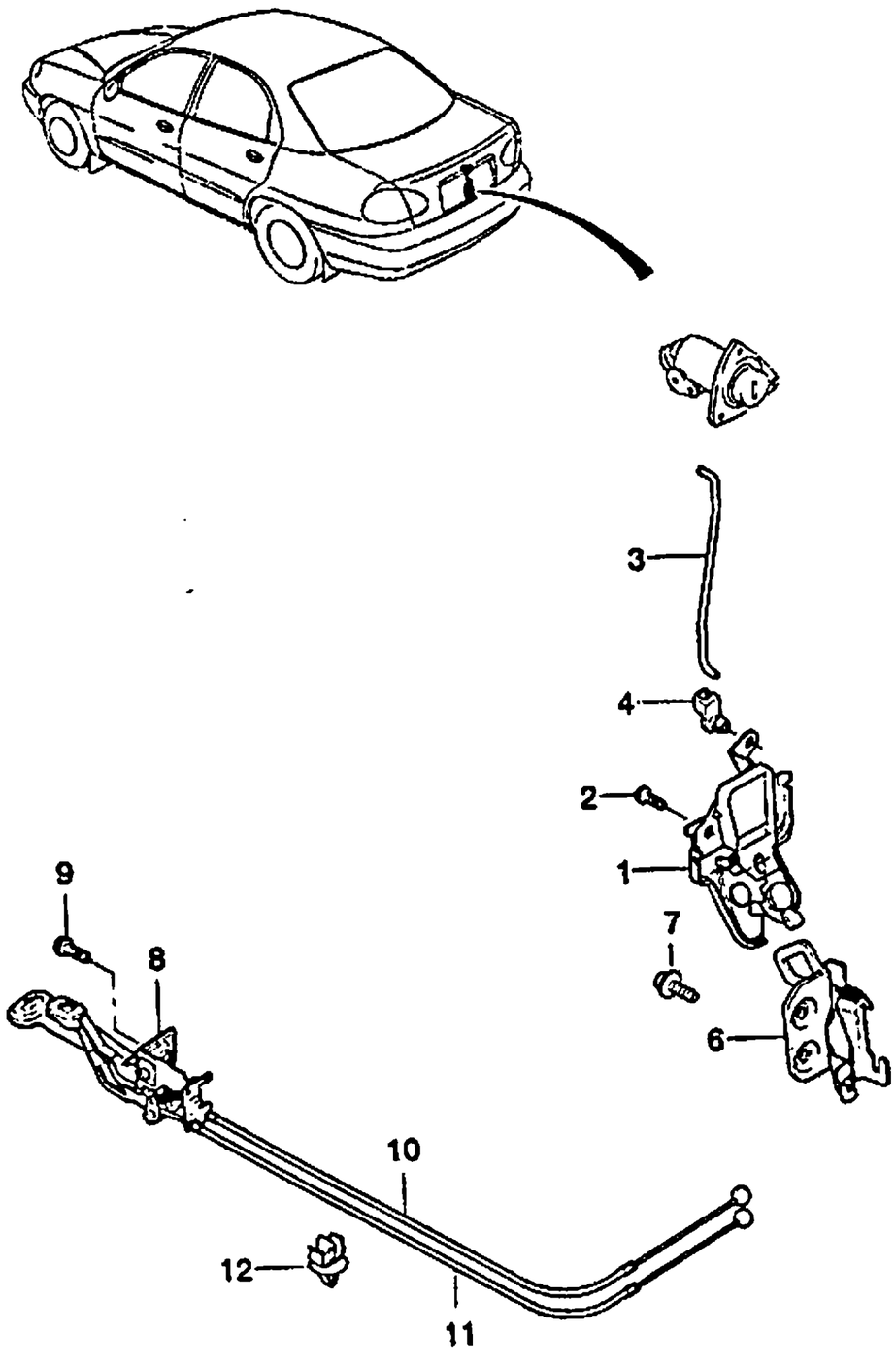

KEY NO.		PART NAME														
ITC	PART NO	MODEL							OPTION	L/R	QTY	EFFECTIVE DATE		REMARKS	P/CODE
		ENG	T/A	BODY			LEVEL					FROM	TO		
				4N	3H	5H	S	SE	SX						
	96216135	.	.	B	.	.	S	S	S		1				
	[12]	(E)CLIP (D)KLEMME									(F)ATTACHE (S)GRAPA				
	09408-00018	.	.	B	.	.	S	S	S		1				

ENG(ENGINE)	T/A(TRANSAXLE)	BODY TYPE
Y = 1.5SOHC 6 = 1.6DOHC . = COMMON	M = MANUAL T/A A = AUTOMATIC T/A . = COMMON	4 N = 4 DOOR NOTCHBACK 3 H = 3 DOOR HATCHBACK 5 H = 5 DOOR HATCHBACK

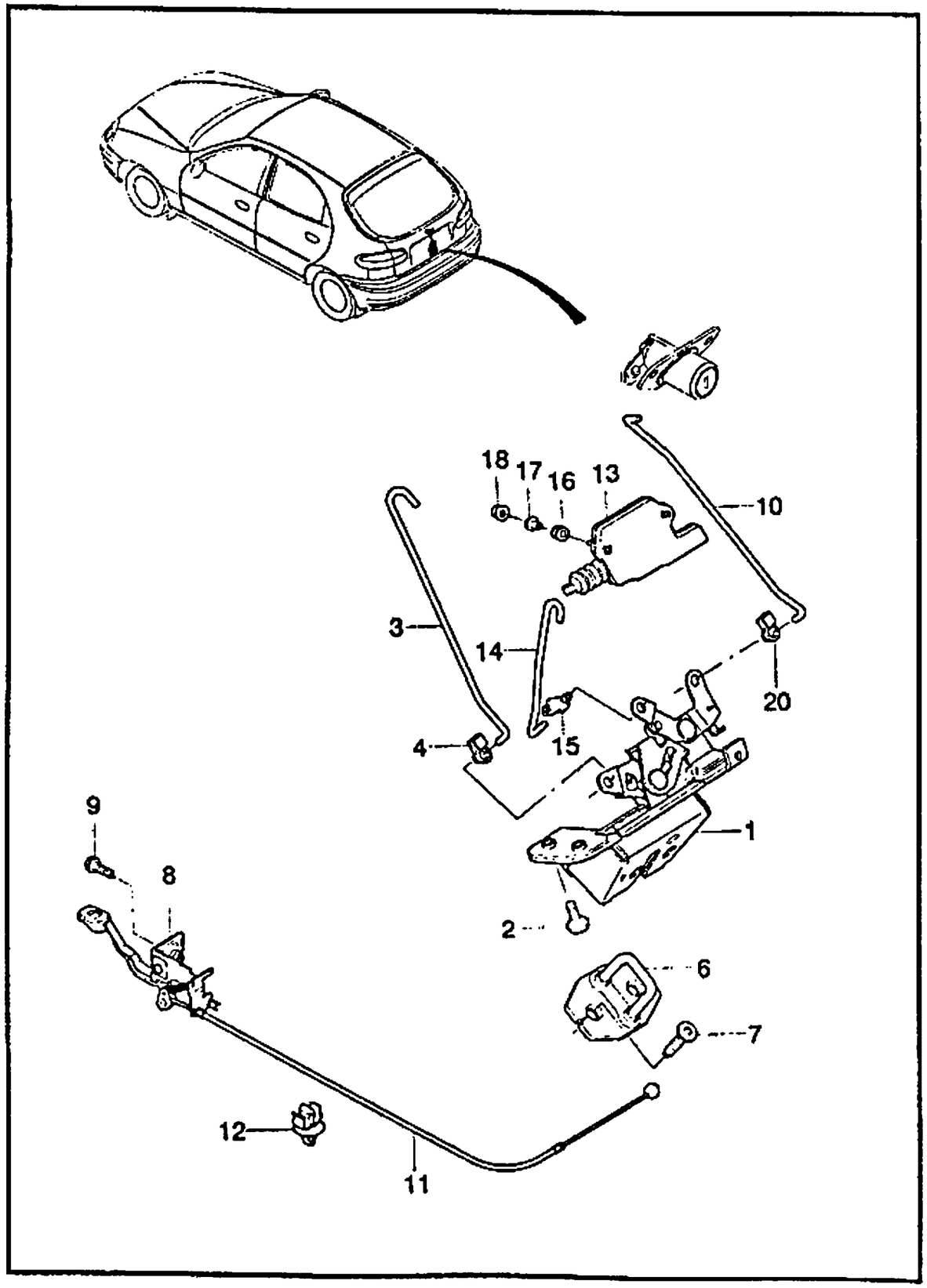

KEY NO.	PART NO	MODEL ENG	MODEL T/A	MODEL BODY 4N	MODEL BODY 3H	MODEL BODY 5H	MODEL LEVEL S	MODEL LEVEL SE	MODEL LEVEL SX	OPTION	L/R	QTY	EFFECTIVE DATE FROM	EFFECTIVE DATE TO	REMARKS	P/CODE
[01]	96232493	.	.	.	B	B	S	.	S			1				
[02]	09137-06001	.	.	.	B	B	S	.	S			3				
[03]	96234313	.	.	.	B	B	S	.	S			1				
[04]	09403-04301	.	.	.	B	B	S	.	S			1				
[06]	96232494	.	.	.	B	B	S	.	S			1				
[07]	09119-08026	.	.	.	B	B	S	.	S			2				
[08]	96310090	.	.	.	B	B	S	.	S			1			INCL #11	H3
[09]	09118-06003	.	.	.	B	B	S	.	S			1			W/WASHER	
[10]	96234309	.	.	.	B	B	S	.	S			1				
[11]																

KEY NO.	PART NAME
[01]	(E)LATCH A-TAILGATE (D)VERSCHLUß,HINTERTEIL (F)LOQUET-HAYON (S)PESTILLO
[02]	(E)SCREW-MACHINE (D)SCHRAUBE (F)VIS (S)TORNILLO
[03]	(E)ROD-LATCH PULLING (D)STAB,SCHOß-ÖFFNUNG (F)TRINGLE-LOQUET (S)VARILLA-PESTILLO DE JALAR
[04]	(E)CLAMP (D)KLAMMER (F)PINCE (S)ABRAZADERA
[06]	(E)STRIKER A-TAILGATE (D)SCHLÄGER (F)MARTEAU (S)HUELGUISTA
[07]	(E)BOLT (D)SCHRAUBE (F)BOULON (S)PERNO
[08]	(E)LEVER A-FUEL FILLER DOOR (D)HEBEL (F)LEVIER (S)PALANCA
[09]	(E)BOLT (D)SCHRAUBE (F)BOULON (S)PERNO
[10]	(E)ROD-KEY CYLINDER (D)STAB (F)TRINGLE (S)VARILLA
[11]	(E)CABLE A-FUEL FILLER DOOR (D)KABEL (F)CABLE (S)CABLE

ENG(ENGINE)	T/A(TRANSAXLE)	BODY TYPE
Y = 1.5SOHC 6 = 1.6DOHC . = COMMON	M = MANUAL T/A A = AUTOMATIC T/A . = COMMON	4 N = 4 DOOR NOTCHBACK 3 H = 3 DOOR HATCHBACK 5 H = 5 DOOR HATCHBACK

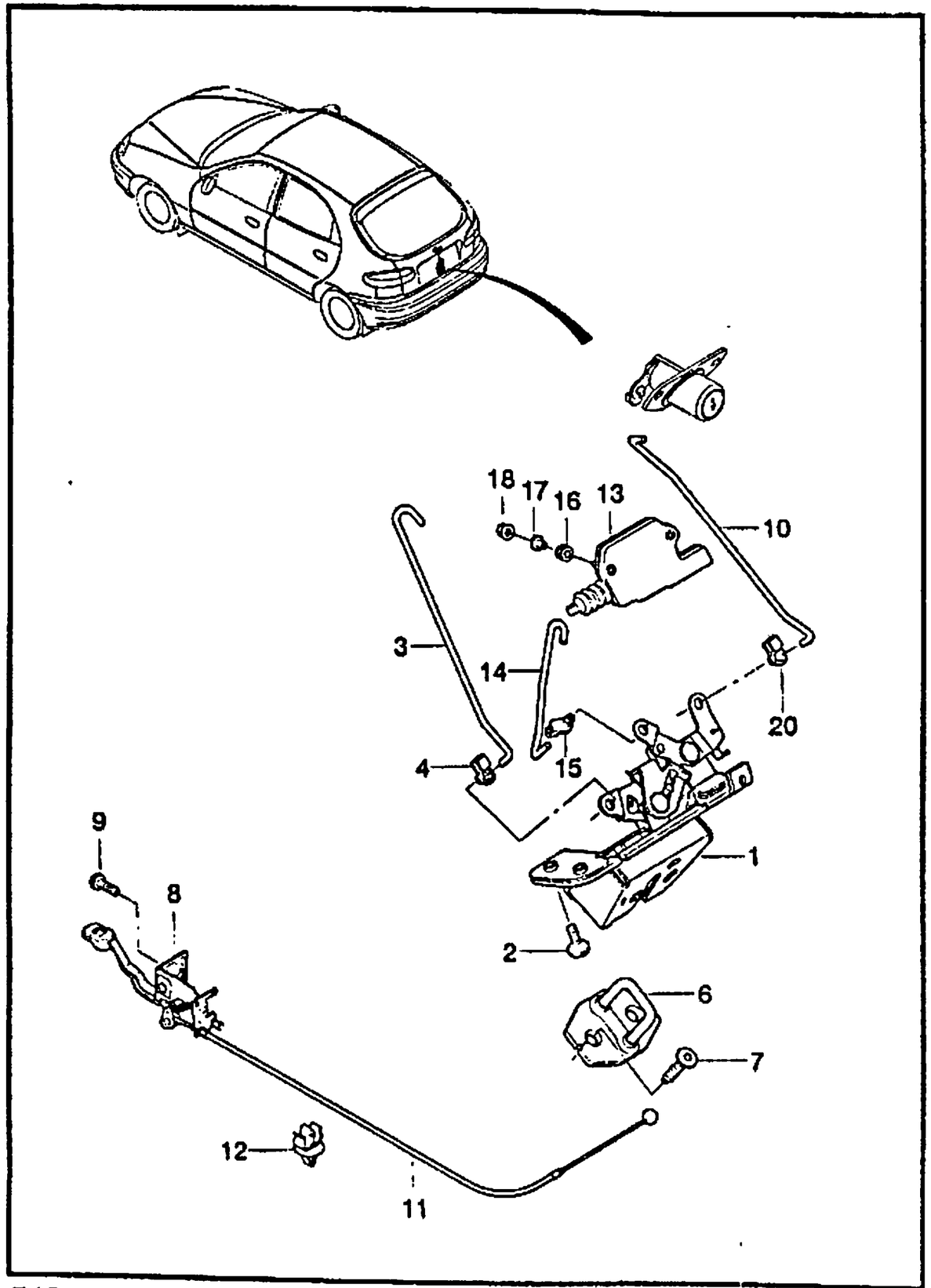

KEY NO.		PART NAME															
ITC	PART NO	MODEL								OPTION	L/R	QTY	EFFECTIVE DATE		REMARKS	P/CODE
		ENG	T/A	BODY			LEVEL						FROM	TO		
				4N	3H	5H	S	SE	SX							
	96232709	.	.	.	B	B	S	.	S		1					
[12]	(E)CLIP (D)KLEMME										(F)ATTACHE (S)GRAPA					
	09408-00018	.	.	.	B	B	S	.	S		1					
[13]	(E)ACTUATOR A-TAILGATE (D)BETÄTIGUNG										(F)ACTIONNEUR (S)ACTUADOR					
	96237555	.	.	.	B	B	O	.	S	&AU3	1					KH
[14]	(E)ROD-TAILGATE ACTUATOR (D)STAB										(F)TRINGLE (S)VARILLA					
	96234312	.	.	.	B	B	O	.	S	&AU3	1					
[15]	(E)CLAMP (D)KLAMMER										(F)PINCE (S)ABRAZADERA					
	09403-03302	.	.	.	B	B	O	.	S	&AU3	1					
[16]	(E)BUSHING (D)LAGERFUTTER										(F)MANCHON (S)BUJE DE BOQUILLA					
	09320-07001	.	.	.	B	B	O	.	S	&AU3	2					
[17]	(E)BUSHING (D)LAGERFUTTER										(F)MANCHON (S)BUJE DE BOQUILLA					
	09306-04001	.	.	.	B	B	O	.	S	&AU3	2					
[18]	(E)NUT (D)MUTTER										(F)ECROU (S)TUERCA					
	09159-04004	.	.	.	B	B	O	.	S	&AU3	2					
[20]	(E)CLIP (D)KLEMME										(F)ATTACHE (S)GRAPA					
	09408-00077	.	.	.	B	B	S	.	S		1					

ENG(ENGINE)	T/A(TRANSAXLE)	BODY TYPE
Y = 1.5SOHC 6 = 1.6DOHC . = COMMON	M = MANUAL T/A A = AUTOMATIC T/A . = COMMON	4 N = 4 DOOR NOTCHBACK 3 H = 3 DOOR HATCHBACK 5 H = 5 DOOR HATCHBACK

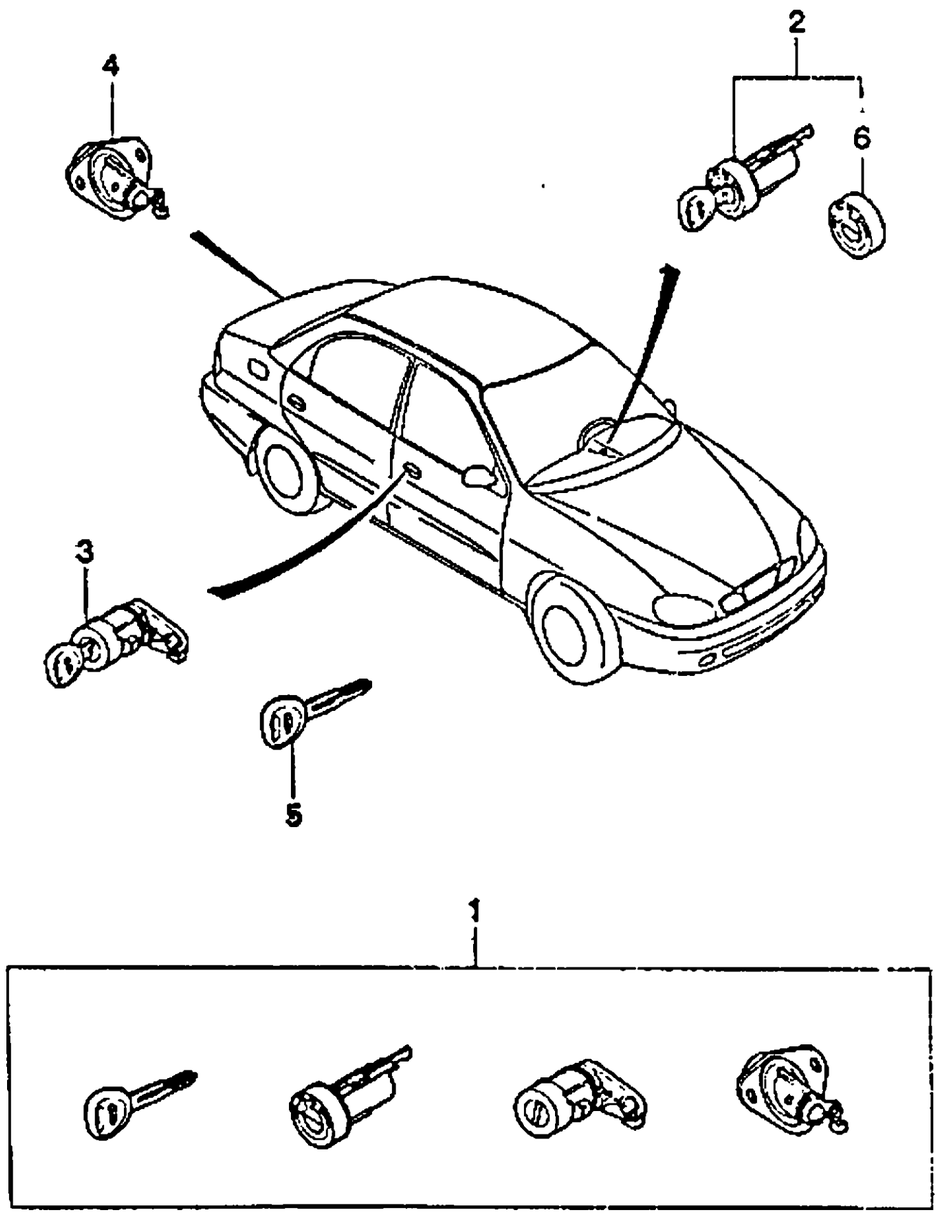

KEY NO.		PART NAME															
ITC	PART NO	MODEL								OPTION	L/R	QTY	EFFECTIVE DATE		REMARKS	P/CODE
		ENG	T/A	BODY			LEVEL						FROM	TO		
				4N	3H	5H	S	SE	SX							
[01]		(E)LOCK SET-CAR (D)SCHLOß-SATZ,AUTOMOBIL									(F)JEU VERROU-VOITURE (S)JUEGO DE CERRADURA-CABINA					
96213542		.	.	B	.	.	S	S	S	-UM1		1				T2
96304764		.	.	B	.	.	A	A	A	&UM1		1				T1
96236253		.	.	.	B	B	S	.	S	-UM1		1				T3
96236254		.	.	.	B	B	A	.	A	&UM1		1				T4
[02]		(E)LOCK SET-STEERING (D)SCHLOß-SATZ,LENKUNG									(F)JEU VERROU-DIRECTION (S)JUEGO DE CERRADURA					
S6460020		.	.	B	B	B	S	S	S	-UM1		1				
S6460037		.	.	B	B	B	A	A	A	&UM1		1				
[03]		(E)LOCK SET-DOOR (D)SCHLOß-SATZ,TÜR									(F)JEU VERROU-PORTE (S)JUEGO DE CERRADURA-PUERTA					
S6460021		.	.	B	B	B	S	S	S		LH	1				
S6460022		.	.	B	B	B	S	S	S		RH	1				
[04]		(E)LOCK SET-TRUNK (D)SCHLOß-SATZ,KOFFERRAUM									(F)JEU VERROU-COFFRE (S)JUEGO DE CERRADURA					
S6460023		.	.	B	.	.	S	S	S			1			TRUNK LID	
S6460043		.	.	.	B	B	S	.	S			1			TAILGATE	
[05]		(E)KEY-BLANK (D)SCHLÜßEL,UNBEARBEITET									(F)CLE-BLANC (S)LLAVE-EN BLANCO					
S6460019		.	.	B	B	B	S	S	S	-UM1		1				
S6460042		.	.	B	B	B	A	A	A	&UM1		1				
[06]		(E)CAP (D)DECKEL									(F)CHAPEAU (S)TAPA					
96225803		.	.	B	B	B	S	S	S	-UM1		1				
96303503		.	.	B	B	B	A	A	A	&UM1		1				

ENG(ENGINE)	T/A(TRANSAXLE)	BODY TYPE
Y = 1.5SOHC 6 = 1.6DOHC . = COMMON	M = MANUAL T/A A = AUTOMATIC T/A . = COMMON	4 N = 4 DOOR NOTCHBACK 3 H = 3 DOOR HATCHBACK 5 H = 5 DOOR HATCHBACK

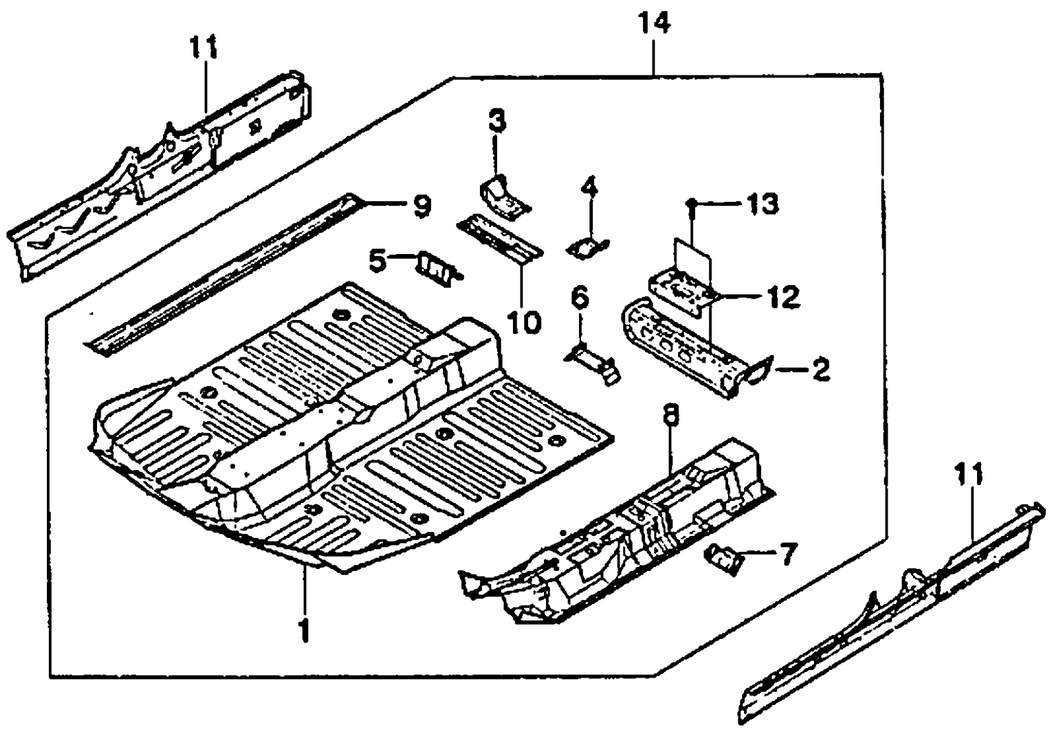

KEY NO. ITC	PART NO	MODEL ENG	T/A	BODY 4N	3H	5H	LEVEL S	SE	SX	OPTION	L/R	QTY	EFFECTIVE DATE FROM	TO	REMARKS	P/CODE
[01]		(E)PANEL A-FLOOR,FRONT (D)VERKLEIDUNG,BODEN,VORNE									(F)PANNEAU-PLANCHER,AVANT (S)PANEL-PISO,FRENTE					
	A96306304	.	.	B	B	B	S	S	S			1				FD
[02]		(E)CROSSMEMBER A-FRONT SEAT (D)QUERTRÄGER,VORDERSITZ									(F)BARRE DE TRAVERSE (S)TRANSVERSAL-ASIENTO					
	96303380	.	.	B	B	B	S	S	S		LH	1				CA
	96306121	.	.	B	B	B	S	S	S		RH	1				CB
[03]		(E)SUPPORT A-FRONT SEAT,OTR (D)TRÄGER									(F)SUPPORT (S)SOPORTE					
	96303382	.	.	B	B	B	S	S	S		LH	1		970624		SA
O	96251599	.	.	B	B	B	S	S	S		LH	1	970624			SA
	96306123	.	.	B	B	B	S	S	S		RH	1		970624		S1
O	96251600	.	.	B	B	B	S	S	S		RH	1	970624			S1
[04]		(E)SUPPORT A-FRONT SEAT,INR (D)TRÄGER									(F)SUPPORT (S)SOPORTE					
	96303383	.	.	B	B	B	S	S	S		LH	1				NA
	96306124	.	.	B	B	B	S	S	S		RH	1				N1
[05]		(E)BRACKET A-ECM (D)TRÄGER									(F)SUPPORT (S)SOPORTE					
	96215606	.	.	B	B	B	S	S	S			1				
[06]		(E)BRACKET A-CONNECTING PIEC (D)TRÄGER									(F)SUPPORT (S)SOPORTE					
	96303384	.	.	B	B	B	S	S	S			1				
[07]		(E)BRACKET-CONSOLE (D)TRÄGER									(F)SUPPORT (S)SOPORTE					
	96215387	.	.	B	B	B	S	S	S			1				
[08]		(E)REINFORCEMENT A-TUNNEL (D)VERSTÄRKUNG									(F)RENFORCEMENT-TUNNEL AVANT (S)REFUERZO-TUNEL DEL FRENTE					

ENG(ENGINE)	T/A(TRANSAXLE)	BODY TYPE
Y = 1.5SOHC 6 = 1.6DOHC . = COMMON	M = MANUAL T/A A = AUTOMATIC T/A . = COMMON	4 N = 4 DOOR NOTCHBACK 3 H = 3 DOOR HATCHBACK 5 H = 5 DOOR HATCHBACK

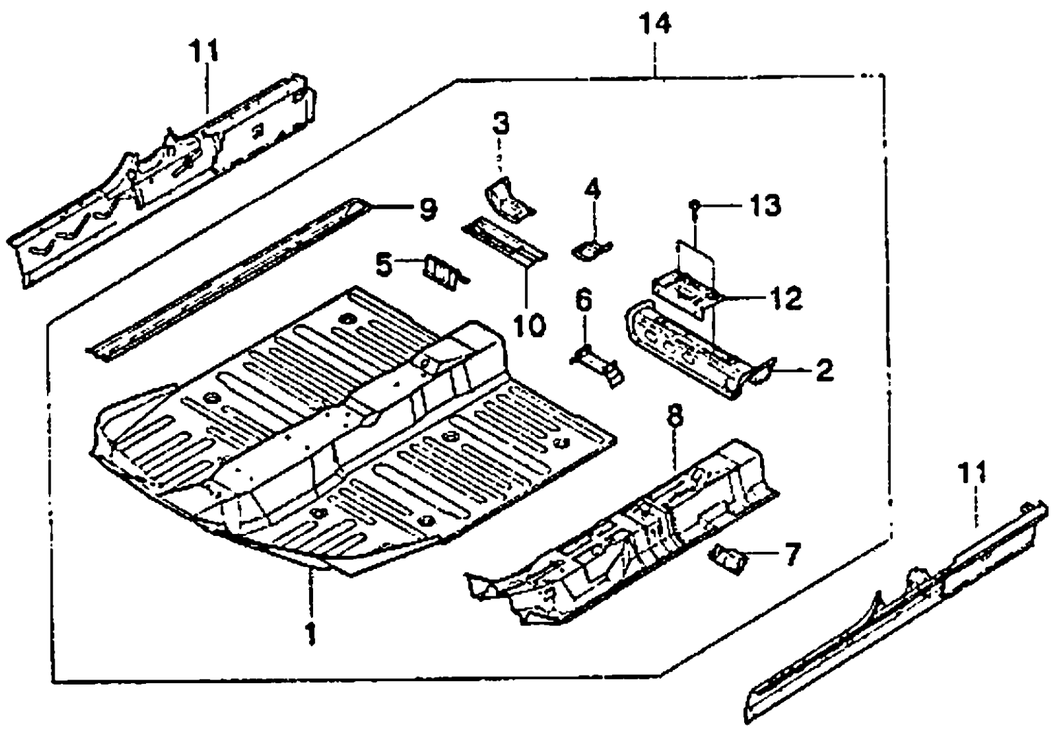

KEY NO. ITC	PART NO	MODEL ENG	T/A	BODY 4N	3H	5H	LEVEL S	SE	SX	OPTION	L/R	QTY	EFFECTIVE DATE FROM	TO	REMARKS	P/CODE
	96250466	.	.	B	B	B	S	S	S			1				
[09]	(E)SIDE MEMBER A-FLOOR (D)RAHMEN,SEITE										(F)CADRE-COTE (S)ARMADURA-LADO					
	96306348	.	.	B	B	B	S	S	S		LH	1				BB
	96306314	.	.	B	B	B	S	S	S		RH	1				B2
[10]	(E)CROSSMEMBER-FRT FLOOR,LWR (D)QUERTRÄGER										(F)BARRE DE TRAVERSE (S)TRANSVERSAL					
	96227504	.	.	B	B	B	S	S	S			2				LB
[11]	(E)PANEL A-FLOOR SIDE (D)VERKLEIDUNG,BODEN,SEITE										(F)PANNEAU-PLANCHER,COTE (S)PANEL-PISO,LADO					
	96306318	.	.	B	.	B	S	S	S		LH	1				SD
	96306320	.	.	B	.	B	S	S	S		RH	1				S4
	96306317	.	.	.	B	.	S	.	S		LH	1				SB
	96306319	.	.	.	B	.	S	.	S		RH	1				S2
[12]	(E)BRACKET A-FIRE EXTINGUISHER (D)TRÄGER										(F)SUPPORT (S)SOPORTE					
	96248577	.	.	B	B	B	A	A	A			1			FOR LEBANON,LIBYA	
	96248583	.	.	B	B	B	A	A	A			1			FOR BRAZIL,POLAND	
[13]	(E)SCREW-TAPPING (D)SCHRAUBE										(F)VIS (S)TORNILLO					
	09132-04004	.	.	B	B	B	A	A	A			2		971001	FOR LEBANON,LIBYA	
	O 09132-04013	.	.	B	B	B	A	A	A			2	971001		FOR LEBANON,LIBYA	
	09132-04004	.	.	B	B	B	A	A	A			2		971001	FOR BRAZIL,POLAND	

ENG(ENGINE)	T/A(TRANSAXLE)	BODY TYPE
Y = 1.5SOHC 6 = 1.6DOHC . = COMMON	M = MANUAL T/A A = AUTOMATIC T/A . = COMMON	4 N = 4 DOOR NOTCHBACK 3 H = 3 DOOR HATCHBACK 5 H = 5 DOOR HATCHBACK

6510 FRONT FLOOR PANEL

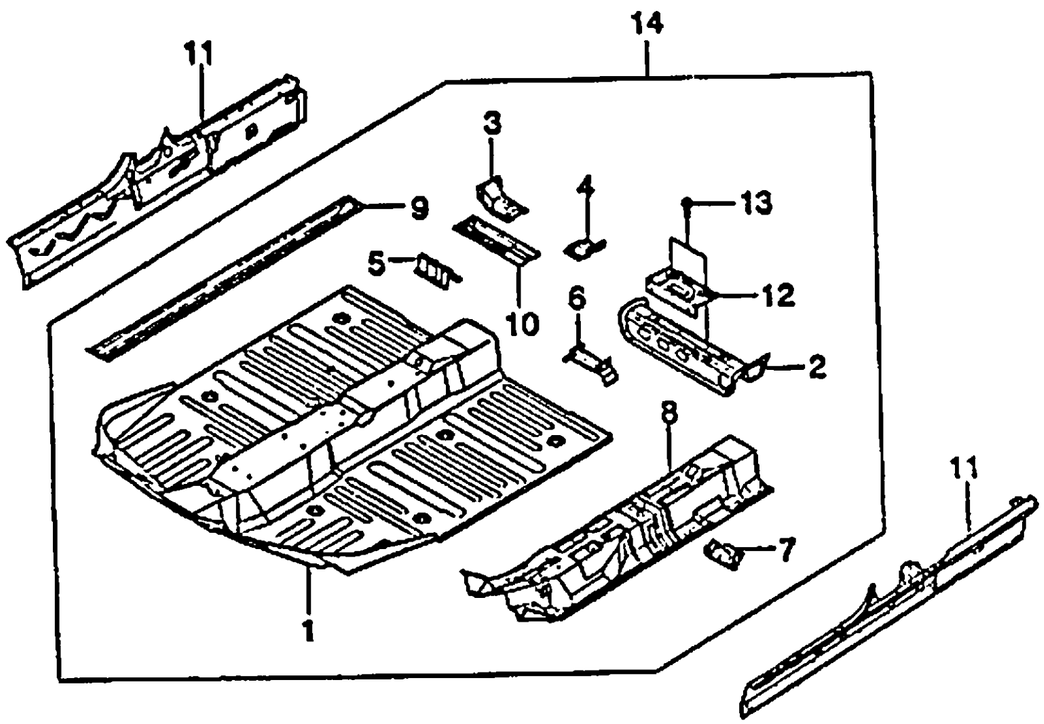

KEY NO. ITC	PART NO	MODEL ENG	T/A	BODY 4N	3H	5H	LEVEL S	SE	SX	OPTION	L/R	QTY	EFFECTIVE DATE FROM	TO	REMARKS	P/CODE
O	09132-04013	.	.	B	B	B	A	A	A			2	971001		FOR BRAZIL,POLAND	
	[14]	(E)PANEL A-FLOOR,FRONT (D)VERKLEIDUNG,BODEN,VORNE									(F)PANNEAU-PLANCHER,AVANT (S)PANEL-PISO,FRENTE					
	A96306303	.	.	B	B		S	S	S			1				FB

ENG(ENGINE)	T/A(TRANSAXLE)	BODY TYPE
Y = 1.5SOHC 6 = 1.6DOHC . = COMMON	M = MANUAL T/A A = AUTOMATIC T/A . = COMMON	4 N = 4 DOOR NOTCHBACK 3 H = 3 DOOR HATCHBACK 5 H = 5 DOOR HATCHBACK

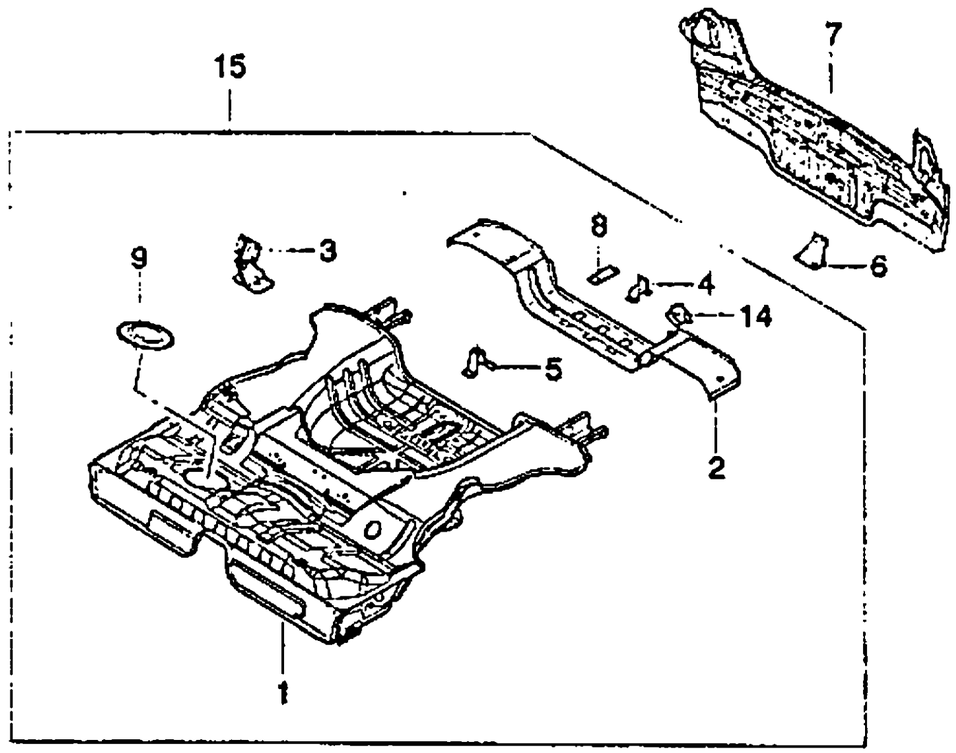

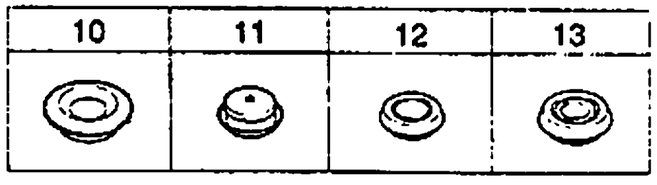

KEY NO. ITC	PART NO	MODEL ENG	T/A	BODY 4N	3H	5H	LEVEL S	SE	SX	OPTION	L/R	QTY	EFFECTIVE DATE FROM	TO	REMARKS	P/CODE
		PART NAME														
[01]		(E)PANEL A-FLOOR,REAR (D)VERKLEIDUNG,BODEN,HINTEN									(F)PANNEAU-PLANCHER (S)PANEL-PISO,ATRAS					
	A96306407	.	.	B	.	.	S	S	S		1					
	A96306408	.	.	.	B	B	S	.	S		1					
[02]		(E)EXTENSION-FLOOR PANEL,RR (D)VERLÄNGERUNG									(F)RALLONGE (S)EXTENSION-PANEL DEL PISO					
	A96306409	.	.	B	.	.	S	S	S		1					EB
[03]		(E)BRACKET A-RR SEAT BACK,CT (D)TRÄGER									(F)SUPPORT (S)SOPORTE					
	96250617	.	.	B	B	B	S	.	S	&AM9	1					
	96250617	.	.	B	B	B	A	A	A	&AMB	1					
[04]		(E)BRACKET A-JACK,NO.1 (D)TRÄGER									(F)SUPPORT (S)SOPORTE					
	96216610	.	.	B	.	.	S	S	S		1					
[05]		(E)STAND A-SPARE WHEEL (D)STÄNDER,ERSATZRAD									(F)SUPPORT-ROUE DE SECOURS (S)PIE-RUEDA DE REPUESTO					
	96303404	.	.	B	B	B	S	S	S		1					
[06]		(E)REINFORCEMENT A-RR BUMPER (D)VERSTÄRKUNG									(F)RENFORCEMENT (S)REFUERZO					
	96303405	.	.	B	B	B	S	S	S		2					
[07]		(E)PANEL A-BACK,LOWER (D)VERKLEIDUNG,HINTEN,UNTEN									(F)PANNEAU-ARRIERE BAS (S)PANEL-RESPALDO BAJA					
	96306372	.	.	B	.	.	S	S	S		1					BD
	96306370	.	.	.	B	B	S	.	S		1					BB
[08]		(E)BRACKET-JACK,NO.2 (D)TRÄGER									(F)SUPPORT (S)SOPORTE					
	96216613	.	.	B	.	.	S	S	S		1					

ENG(ENGINE)	T/A(TRANSAXLE)	BODY TYPE
Y = 1.5SOHC 6 = 1.6DOHC . = COMMON	M = MANUAL T/A A = AUTOMATIC T/A . = COMMON	4 N = 4 DOOR NOTCHBACK 3 H = 3 DOOR HATCHBACK 5 H = 5 DOOR HATCHBACK

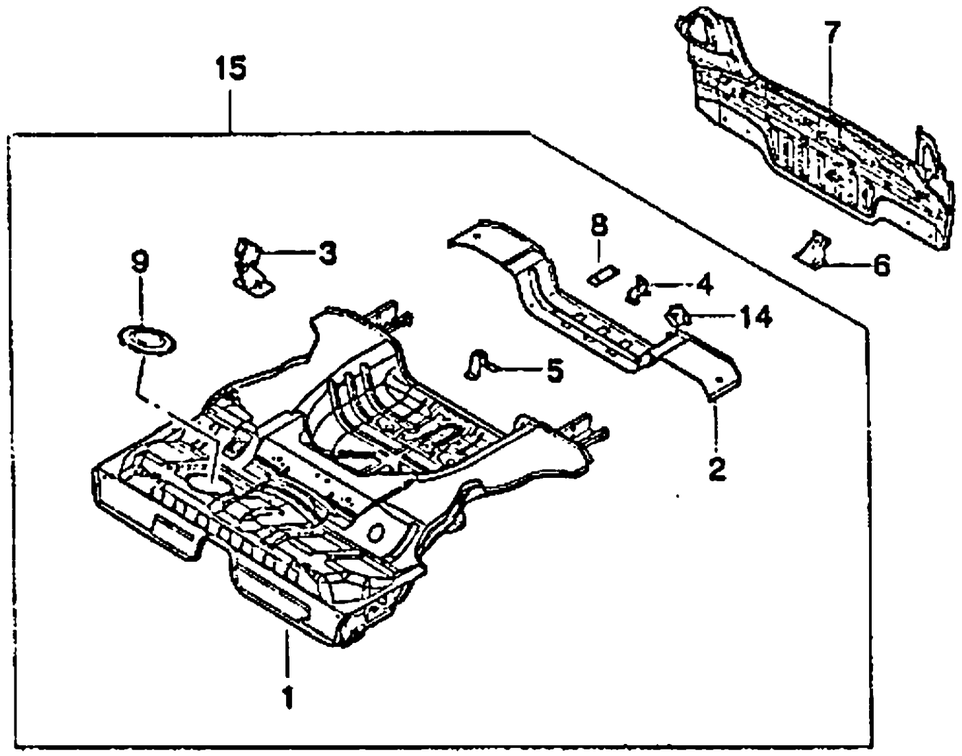

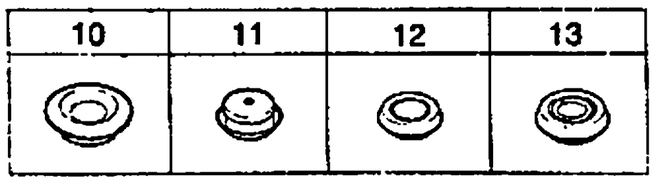

KEY NO. ITC	PART NO	MODEL ENG	T/A	BODY 4N	3H	5H	LEVEL S	SE	SX	OPTION	L/R	QTY	EFFECTIVE DATE FROM	TO	REMARKS	P/CODE	PART NAME
[09]	96221241	.	.	B	B	B	S	S	S			1					(E)CAP-FUEL TANK SERVICE (D)DECKEL (F)CHAPEAU (S)TAPA
[10]	09241-40001	.	.	B	B	B	S	S	S			12					(E)PLUG (D)STÖPSEL (F)BOUCHON (S)TAPON
[11]	09241-21001	.	.	B	B	B	S	S	S			9					(E)PLUG (D)STÖPSEL (F)BOUCHON (S)TAPON
[12]	09241-30003	.	.	B	B	B	S	S	S			6					(E)PLUG (D)STÖPSEL (F)BOUCHON (S)TAPON
[13]	09241-40002	.	.	B	B	B	S	S	S			1					(E)PLUG (D)STÖPSEL (F)BOUCHON (S)TAPON
[14]	96225158	.	.	.	B	B	S	.	S			1					(E)BRACKET-JACK,LOWER (D)TRÄGER (F)SUPPORT (S)SOPORTE
[15]	A96306389	.	.	B	.		S	S	.	&AM6		1					(E)PANEL A1-FLOOR,REAR (D)VERKLEIDUNG,BODEN,HINTEN (F)PANNEAU-PLANCHER (S)PANEL-PISO,ATRAS
	A96304541	.	.	B	.		.	.	S	&AM9		1					
	A96304541	.	.	B	.		A	A	A	&AMB		1					
	A96306394	.	.	.	B	B	S	.	S			1					

ENG(ENGINE)	T/A(TRANSAXLE)	BODY TYPE
Y = 1.5SOHC 6 = 1.6DOHC . = COMMON	M = MANUAL T/A A = AUTOMATIC T/A . = COMMON	4 N = 4 DOOR NOTCHBACK 3 H = 3 DOOR HATCHBACK 5 H = 5 DOOR HATCHBACK

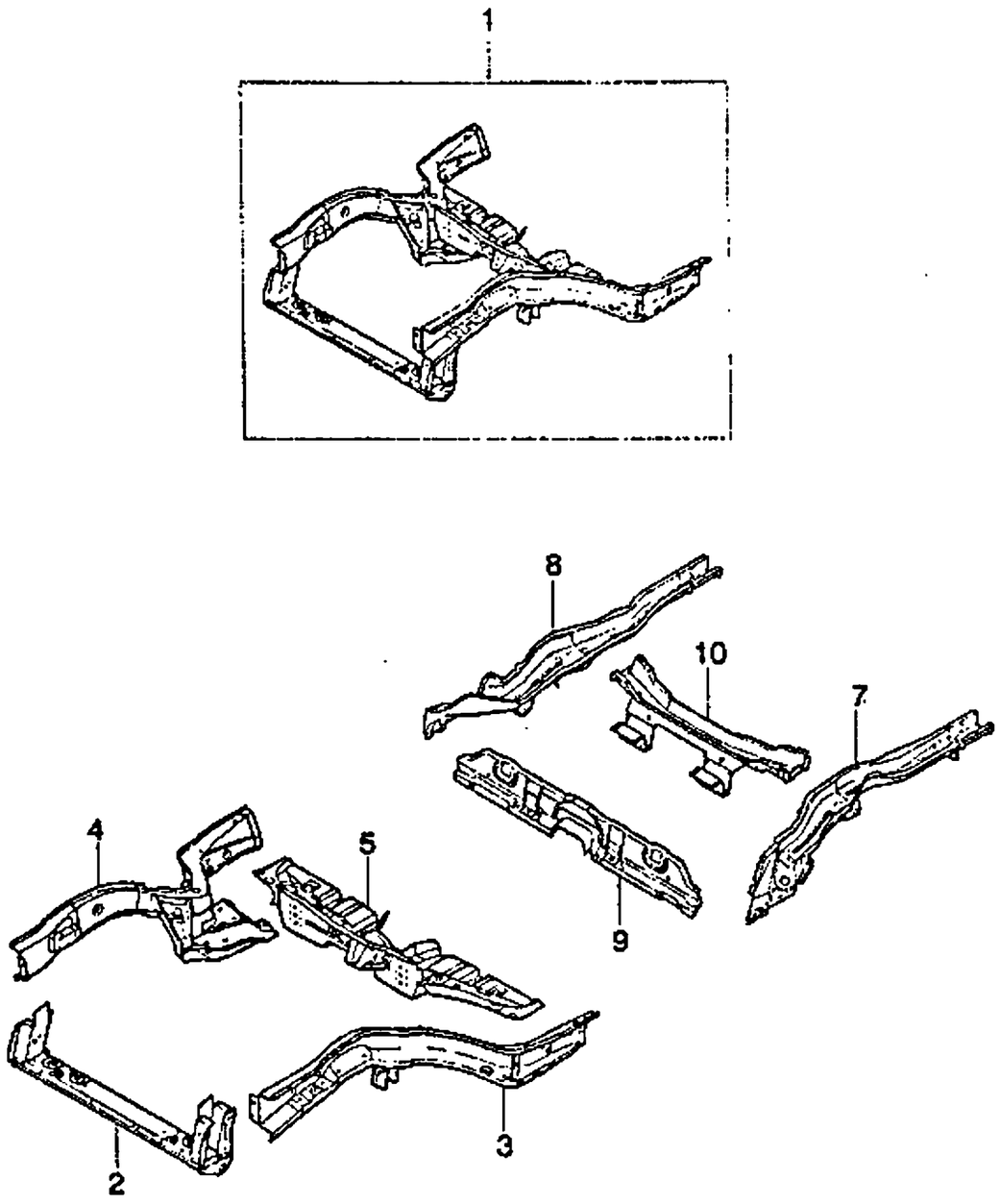

KEY NO. ITC	PART NO	MODEL ENG	T/A	BODY 4N	3H	5H	LEVEL S	SE	SX	OPTION	L/R	QTY	EFFECTIVE DATE FROM	TO	REMARKS	PICODE
[01]		(E)FRAMEWORK A-FRONT (D)AUSSTATTUNG GESTELL									(F)TRAVAIL-CADRE AVANT (S)TRABAJO-ARMADURA					
A96306256		M	B	B	B	S	S	S				1				MD
A96306255		A	B	B	B	O	O	O				1				MB
[02]		(E)CROSSMEMBER A-RADIATOR (D)QUERTRÄGER,KÜHLER									(F)BARRE DE TRAVERSE (S)TRANSVERSAL-RADIADOR					
96306685		.	.	B	B	B	S	S	S			1		970407		CB
N 96251570		.	.	B	B	B	S	S	S			1	970407			U2
[03]		(E)LONGITUDINAL A-FRONT (D)LÄNGENTEIL,VORNE									(F)LONGITUDINAL-AVANT (S)LONGITUDINAL-FRENTE					
96248574		.	M	B	B	B	S	S	S			LH 1				M4
96248576		.	A	B	B	B	O	O	O			LH 1				M2
[04]		(E)LONGITUDINAL A-FRONT (D)LÄNGENTEIL,VORNE									(F)LONGITUDINAL-AVANT (S)LONGITUDINAL-FRENTE					
96306280		.	.	B	B	B	S	S	S			RH 1				L2
[05]		(E)CROSSMEMBER A-FLR PNL,FRT (D)QUERTRÄGER									(F)BARRE DE TRAVERSE (S)TRANSVERSAL					
96303374		.	.	B	B	B	S	S	S			1				PB
[07]		(E)LONGITUDINAL A-REAR (D)LÄNGENTEIL,HINTEN									(F)LONGITUDINAL-ARRIERE (S)LONGITUDINAL-TRASERO					
96250474		.	.	B	.	.	S	S	S			LH 1				H4
96250476		.	.	.	B	B	S	.	S			LH 1				H2
[08]		(E)LONGITUDINAL A-REAR (D)LÄNGENTEIL,HINTEN									(F)LONGITUDINAL-ARRIERE (S)LONGITUDINAL-TRASERO					
96306437		.	.	B	.	.	S	S	S			RH 1				L4
96306438		.	.	.	B	B	S	.	S			RH 1				L2
[09]		(E)CMBR A-RR FLOOR,PNL,FRT (D)QUERTRÄGER									(F)BARRE DE TRAVERSE (S)TRANSVERSAL					

ENG(ENGINE)	T/A(TRANSAXLE)	BODY TYPE
Y = 1.5SOHC 6 = 1.6DOHC . = COMMON	M = MANUAL T/A A = AUTOMATIC T/A . = COMMON	4 N = 4 DOOR NOTCHBACK 3 H = 3 DOOR HATCHBACK 5 H = 5 DOOR HATCHBACK

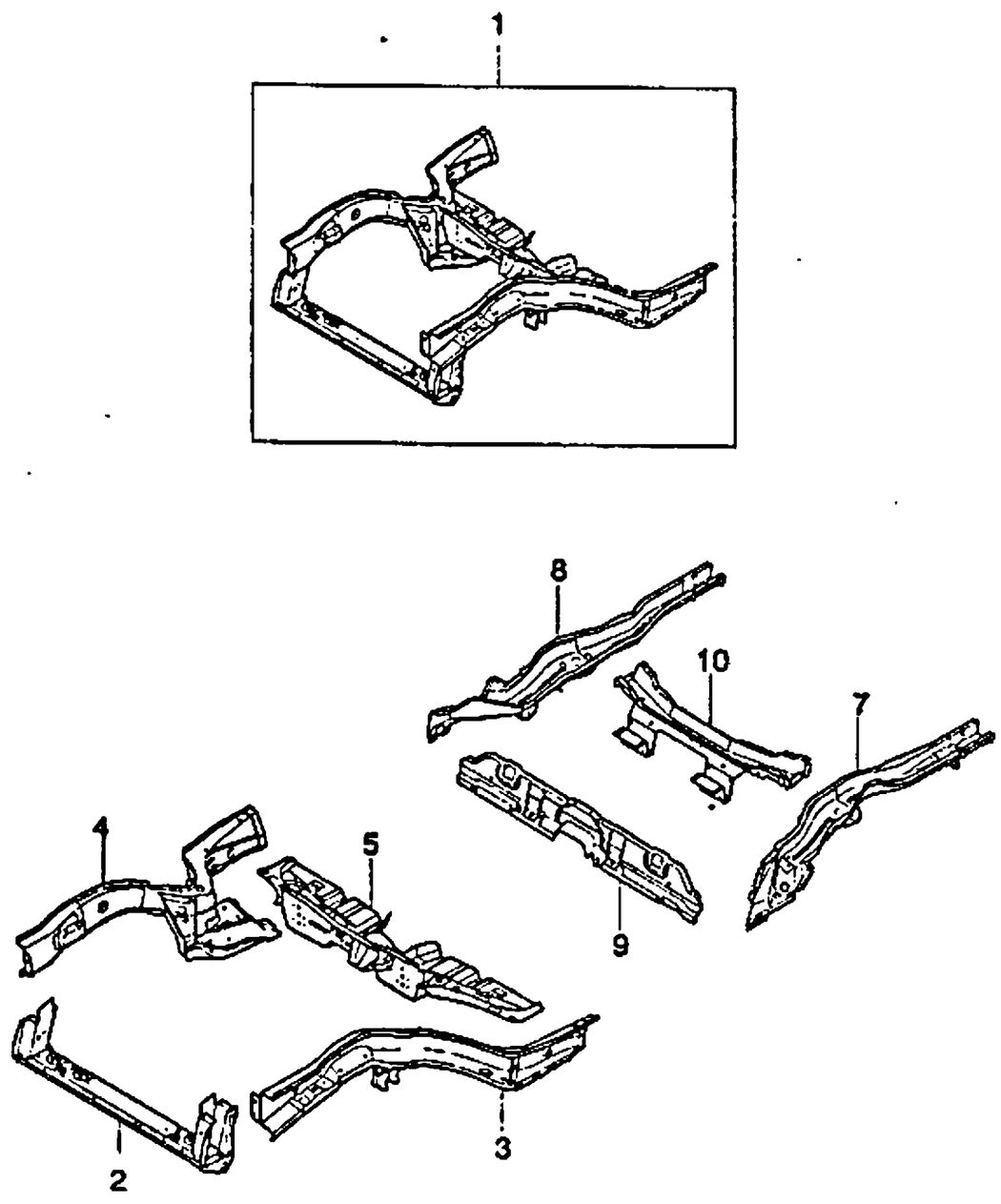

KEY NO.		PART NAME														
ITC.	PART NO	MODEL							OPTION	L/R	QTY	EFFECTIVE DATE		REMARKS	P/CODE
		ENG	T/A	BODY			LEVEL					FROM	TO		
				4N	3H	5H	S	SE	SX						
	96306466	.	.	B	B	B	S	S	S		1				RB
	[10]	(E)CMBR A-RR FLOOR PNL,CTR (D)QUERTRÄGER									(F)BARRE DE TRAVERSE (S)TRANSVERSAL				
	96306472	.	.	B	B	B	S	S	S		1				RB

ENG(ENGINE)	T/A(TRANSAXLE)	BODY TYPE
Y = 1.5SOHC 6 = 1.6DOHC . = COMMON	M = MANUAL T/A A = AUTOMATIC T/A . = COMMON	4 N = 4 DOOR NOTCHBACK 3 H = 3 DOOR HATCHBACK 5 H = 5 DOOR HATCHBACK

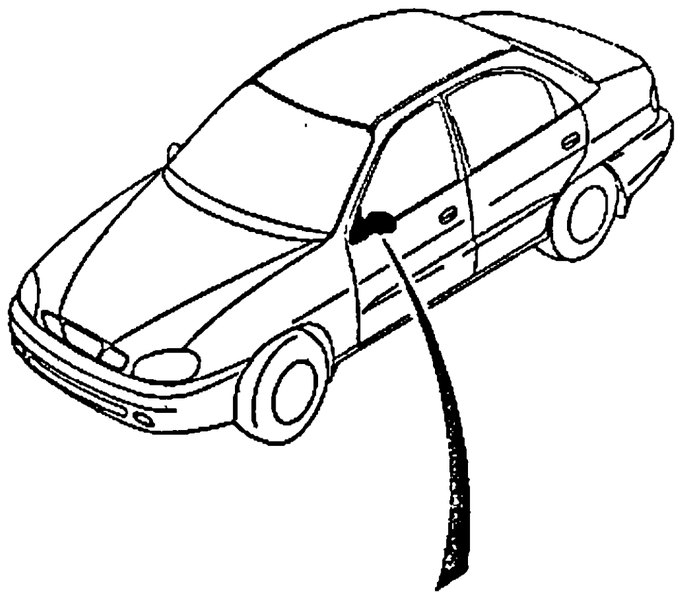

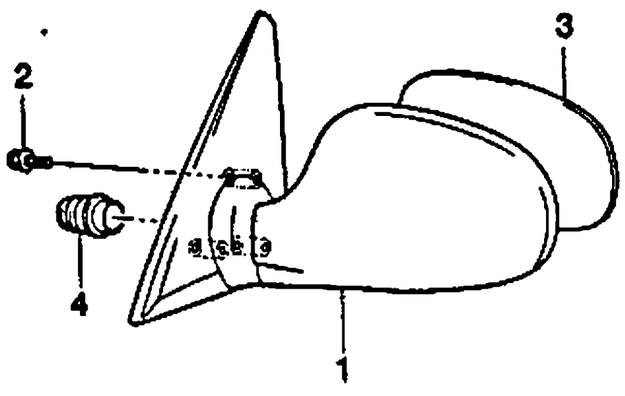

KEY NO.		PART NAME															
ITC	PART NO	MODEL								OPTION	L/R	QTY	EFFECTIVE DATE		REMARKS	P/CODE
		ENG	T/A	BODY			LEVEL						FROM	TO		
				4N	3H	5H	S	SE	SX							
[01]		(E)MIRROR A-OUTSIDE (D)SPIEGEL,AUßEN									(F)RETROVISEUR-EXTERIEUR (S)ESPEJO-EXTERNO					
96304167		.	.	B	B	B	S	S	S	&D33	LH	1				CA
96227724		.	.	B	B	B	S	S	S	&D39	RH	1				CE
96227725		.	.	B	B	B	.	.	O	&DD4	RH	1				EE
[02]		(E)SCREW (D)SCHRAUBE									(F)VIS (S)TORNILLO					
09138-06027		.	.	B	B	B	S	S	S			6				
[03]		(E)GLASS-MIRROR (D)GLAS									(F)GLACE (S)VIDRIO					
S6630006		.	.	B	B	B	S	S	S		LH	1				
S6630007		.	.	B	B	B	S	S	S		RH	1				
[04]		(E)BOOT-KNOB (D)KOFFERRAUM									(F)GAINE (S)CAPUCHON					
31121708		.	.	B	B	B	S	S	S			2				

ENG(ENGINE)	T/A(TRANSAXLE)	BODY TYPE
Y = 1.5SOHC 6 = 1.6DOHC . = COMMON	M = MANUAL T/A A = AUTOMATIC T/A . = COMMON	4 N = 4 DOOR NOTCHBACK 3 H = 3 DOOR HATCHBACK 5 H = 5 DOOR HATCHBACK

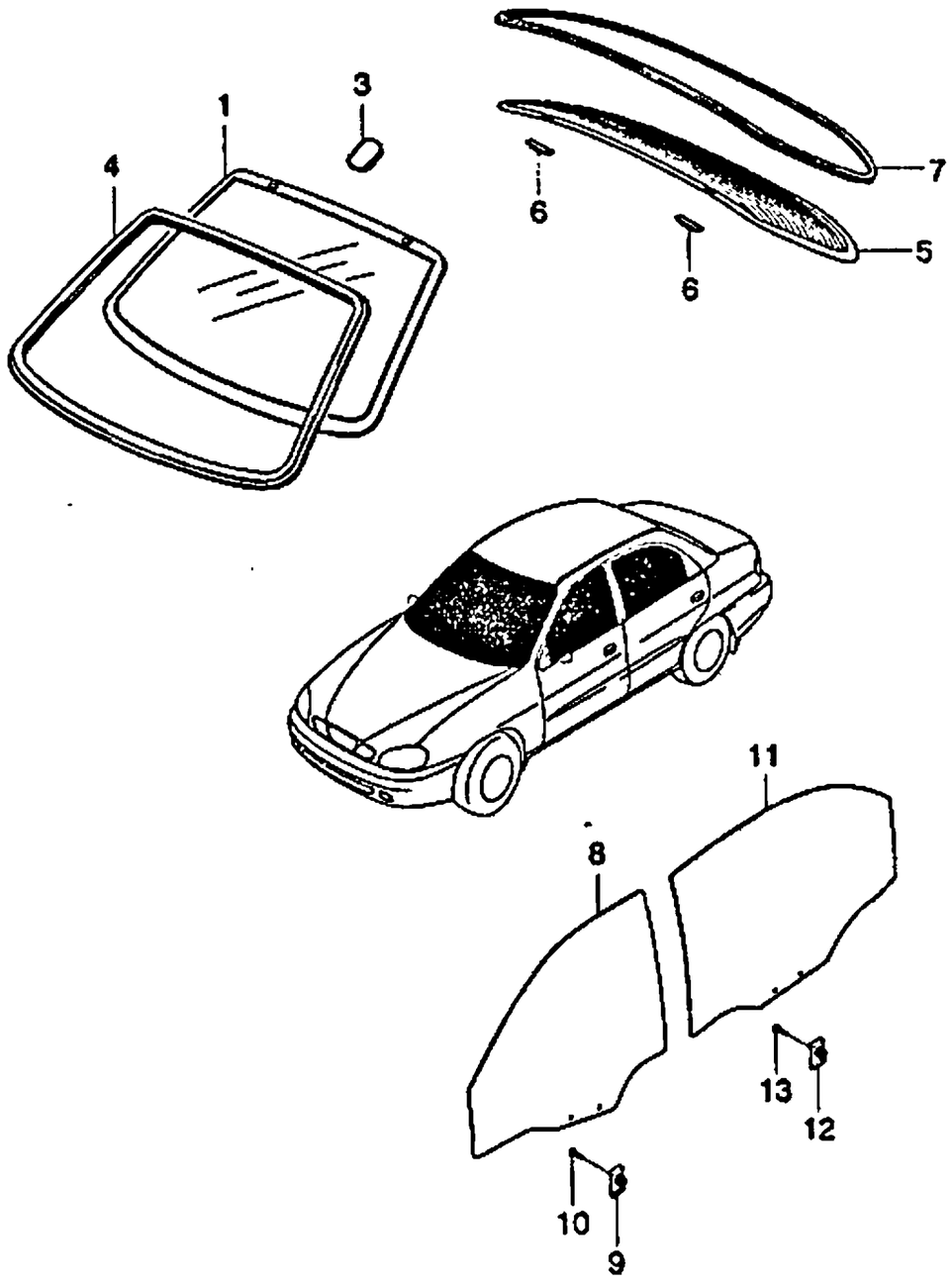

KEY NO. ITC	PART NO	MODEL ENG	T/A	BODY 4N	3H	5H	LEVEL S	SE	SX	OPTION	L/R	QTY	EFFECTIVE DATE FROM	TO	REMARKS	P/CODE
[01]		(E)GLASS A-WINDSHIELD (D)GLAS,WINDSCHUTZSCHEIBE									(F)GLACE-PARE-BRISE (S)VIDRIO-PARABRISAS					
	96303213	.	.	B	.	.	S	.	.	&A22		1		970526		
O	96256902	.	.	B	.	.	S	.	.	&A22		1	970526			
	96306108	.	.	B	.	.	O	S	S	&A01		1				
[03]		(E)PLATE-CARRIER (D)PLATTE									(F)PLAQUE (S)PLACA					
	90126071	.	.	B	.	.	S	S	S			1				
[04]		(E)MOLDING-WINDSHIELD (D)PREßTEIL,WINDSCHUTZSCHEIB									(F)MOULURE-PARE-BRISE (S)MOLOURA-PARABRISAS					
	96240757	.	.	B	.	.	S	S	S			1				
[05]		(E)GLASS A-BACK WINDOW (D)GLAS									(F)GLACE-FENETRE ARRIERE (S)VIDRIO-VENTANA TRASERA					
	96306110	.	.	B	.	.	S	.	.	&A22		1				
	96306112	.	.	B	.	.	O	S	S	&A01		1				
[06]		(E)STOPPER-GLASS,UPPER (D)STÖPSEL									(F)ARRETOIR OU BOUCHON (S)TAPON					
	96216138	.	.	B	.	.	S	S	S			2				
[07]		(E)MOLDING-BACK WINDOW (D)PREßTEIL,FENSTERSCHEIBE									(F)MOULURE-FENETRE ARRIERE (S)MOLOURA-VENTANA TRASERA					
	96240758	.	.	B	.	.	S	S	S			1				
[08]		(E)GLASS-FRT DOOR WINDOW (D)GLAS									(F)GLACE-FENETRE AVANT (S)VIDRIO-VENTANA DELANTERA					
	96304048	.	.	B	.	.	S	.	.	&A22		LH 1				
	96304050	.	.	B	.	.	S	.	.	&A22		RH 1				
	96304052	.	.	B	.	.	O	S	S	&A01		LH 1				
	96304054	.	.	B	.	.	O	S	S	&A01		RH 1				

ENG(ENGINE)	T/A(TRANSAXLE)	BODY TYPE
Y = 1.5SOHC 6 = 1.6DOHC . = COMMON	M = MANUAL T/A A = AUTOMATIC T/A . = COMMON	4 N = 4 DOOR NOTCHBACK 3 H = 3 DOOR HATCHBACK 5 H = 5 DOOR HATCHBACK

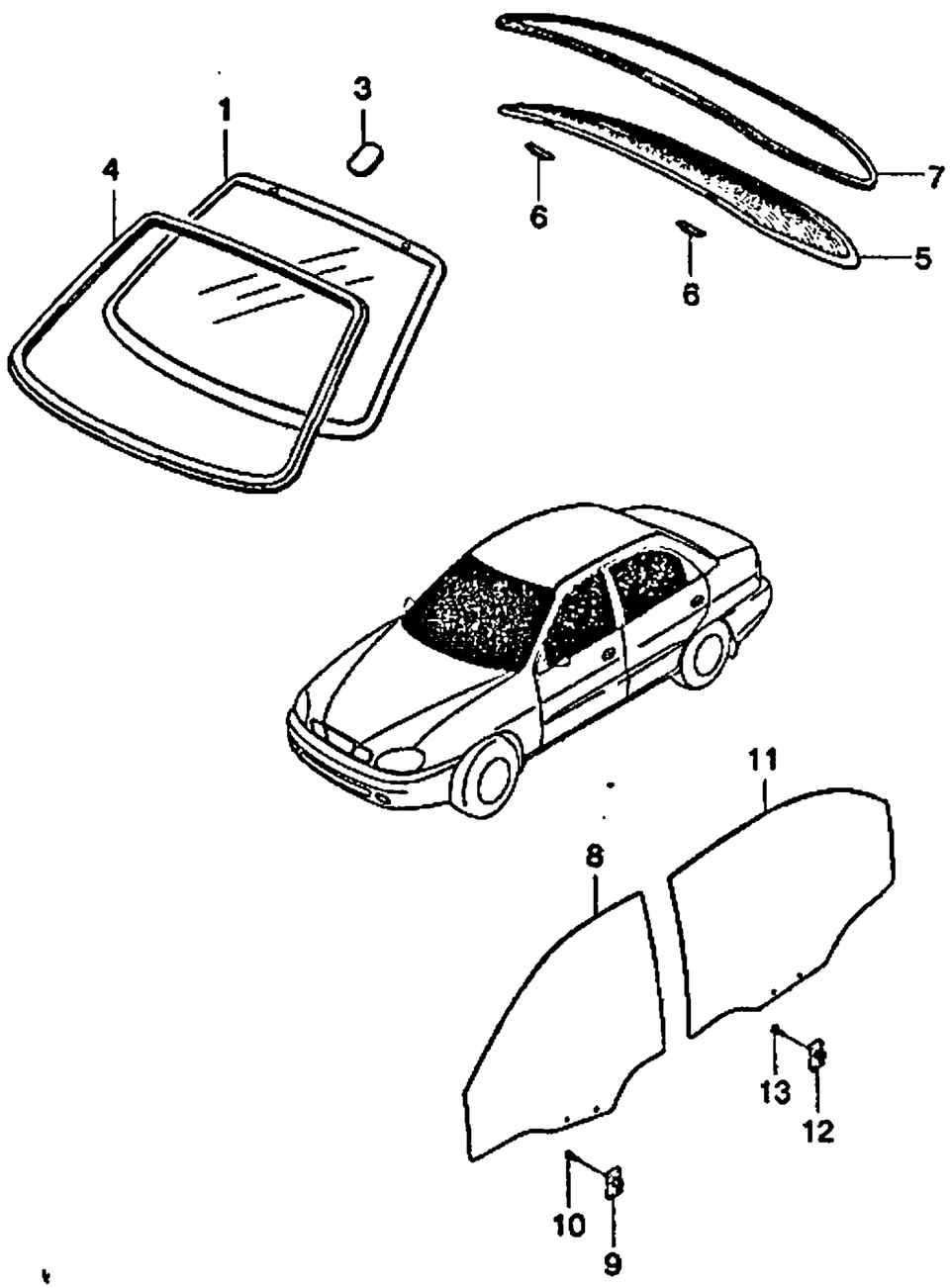

KEY NO. ITC	PART NO	MODEL ENG	T/A	BODY 4N	3H	5H	LEVEL S	SE	SX	OPTION	L/R	QTY	EFFECTIVE DATE FROM	TO	REMARKS	P/CODE
[09]		(E)NUT-SPEED (D)MUTTER									(F)ECROU (S)TUERCA					
	09148-06002	.	.	B	.	.	S	S	S			4				
[10]		(E)SCREW-TAPPING (D)SCHRAUBE									(F)VIS (S)TORNILLO					
	03140-63163	.	.	B	.	.	S	S	S			4				
[11]		(E)GLASS-RR DOOR WINDOW (D)GLAS									(F)GLACE-FENETRE ARRIERE (S)VIDRIO-VENTANA TRASERA					
	96304138	.	.	B	.	.	S	.	.	&A22	LH	1				
	96304140	.	.	B	.	.	S	.	.	&A22	RH	1				
	96304142	.	.	B	.	.	O	S	S	&A01	LH	1				
	96304144	.	.	B	.	.	O	S	S	&A01	RH	1				
[12]		(E)NUT-SPEED (D)MUTTER									(F)ECROU (S)TUERCA					
	09148-06002	.	.	B	.	.	S	S	S			4				
[13]		(E)SCREW-TAPPING (D)SCHRAUBE									(F)VIS (S)TORNILLO					
	03140-63163	.	.	B	.	.	S	S	S			4				

ENG(ENGINE)	T/A(TRANSAXLE)	BODY TYPE
Y = 1.5SOHC 6 = 1.6DOHC . = COMMON	M = MANUAL T/A A = AUTOMATIC T/A . = COMMON	4 N = 4 DOOR NOTCHBACK 3 H = 3 DOOR HATCHBACK 5 H = 5 DOOR HATCHBACK

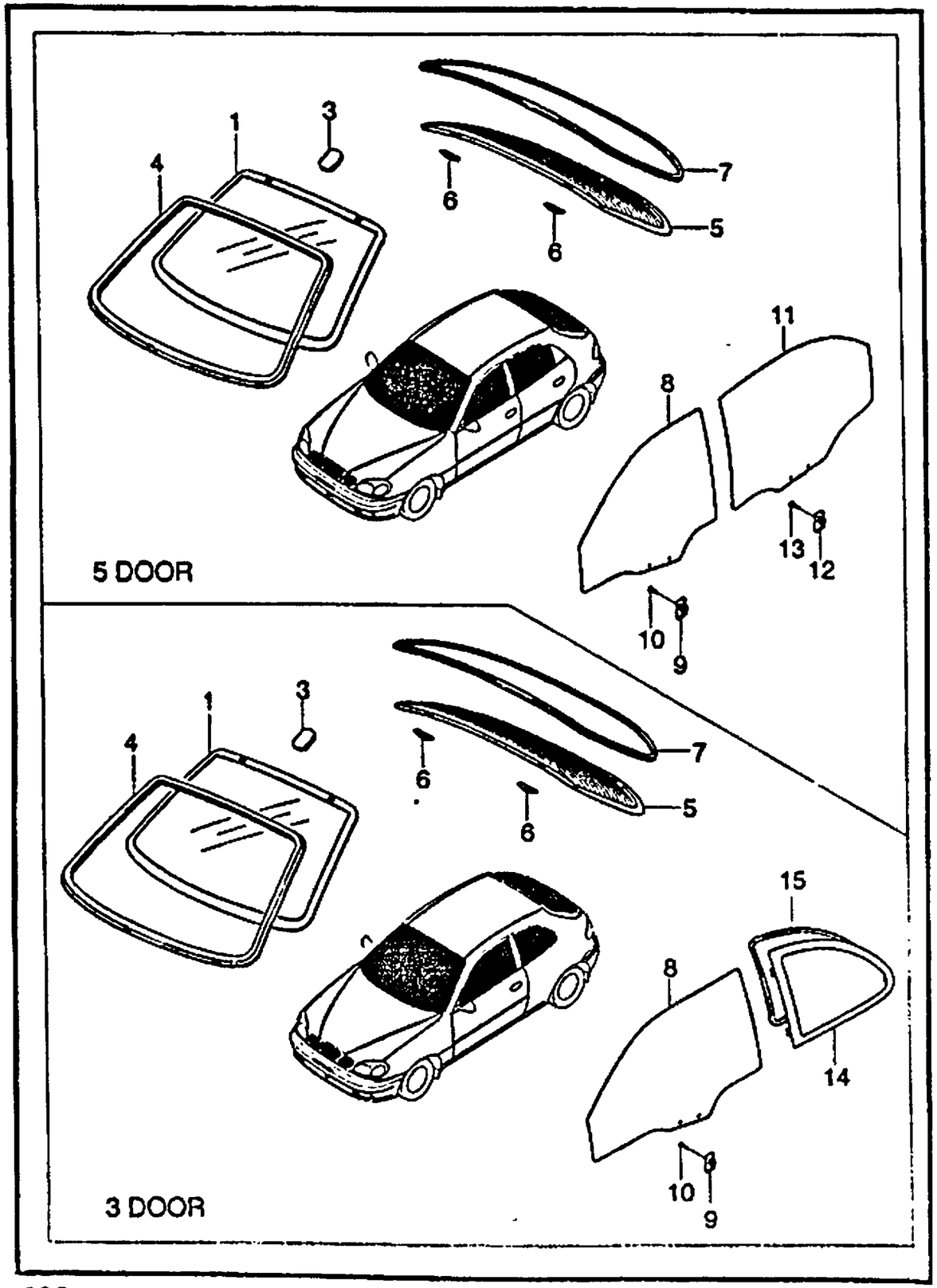

KEY NO. ITC	PART NO	MODEL ENG	T/A	BODY 4N	3H	5H	LEVEL S	SE	SX	OPTION	L/R	QTY	EFFECTIVE DATE FROM	TO	REMARKS	P/CODE
	[01]	(E)GLASS A-WINDSHIELD (D)GLAS,WINDSCHUTZSCHEIBE									(F)GLACE-PARE-BRISE (S)VIDRIO-PARABRISAS					
	96303213	.	.	.	B	B	S	.	.	&A22		1		970526		
O	96256902	.	.	.	B	B	S	.	.	&A22		1	970526			
	96306108	.	.	.	B	B	O	.	S	&A01		1				
	[03]	(E)PLATE-CARRIER (D)PLATTE									(F)PLAQUE (S)PLACA					
	90126071	.	.	.	B	B	S	.	S			1				
	[04]	(E)MOLDING-WINDSHIELD (D)PREßTEIL,WINDSCHUTZSCHEIB									(F)MOULURE-PARE-BRISE (S)MOLOURA-PARABRISAS					
	96240757	.	.	.	B	B	S	.	S			1				
	[05]	(E)GLASS A-TAILGATE (D)GLAS,HINTERTEIL									(F)GLACE-HAYON (S)VIDRIO-COMPUERTA DE COLA					
	96306141	.	.	.	B	B	S	.	.	&A22-T45		1				K1
	96306144	.	.	.	B	B	O	.	S	&A01-T45		1				K4
	96224320	.	.	.	B	B	.	.	O	&A01&T45		1				K8
	[06]	(E)STOPPER-GLASS,UPPER (D)STÖPSEL									(F)ARRETOIR OU BOUCHON (S)TAPON					
	96216138	.	.	.	B	B	S	.	S			2				
	[07]	(E)MOLDING-TAILGATE GLASS (D)PREßTEIL,GLAS,HINTERTEIL									(F)MOULURE-GLACE,HAYON (S)MOLOURA-VIDRIO					
	96233056	.	.	.	B	B	S	.	S			1				
	[08]	(E)GLASS-FRT DOOR WINDOW (D)GLAS									(F)GLACE-FENETRE AVANT (S)VIDRIO-VENTANA DELANTERA					
	96304049	.	.	.	B	.	S	.	.	&A22		LH 1				
	96304051	.	.	.	B	.	S	.	.	&A22		RH 1				
	96304053	.	.	.	B	.	O	.	S	&A01		LH 1				

ENG(ENGINE)	T/A(TRANSAXLE)	BODY TYPE
Y = 1.5SOHC 6 = 1.6DOHC . = COMMON	M = MANUAL T/A A = AUTOMATIC T/A . = COMMON	4 N = 4 DOOR NOTCHBACK 3 H = 3 DOOR HATCHBACK 5 H = 5 DOOR HATCHBACK

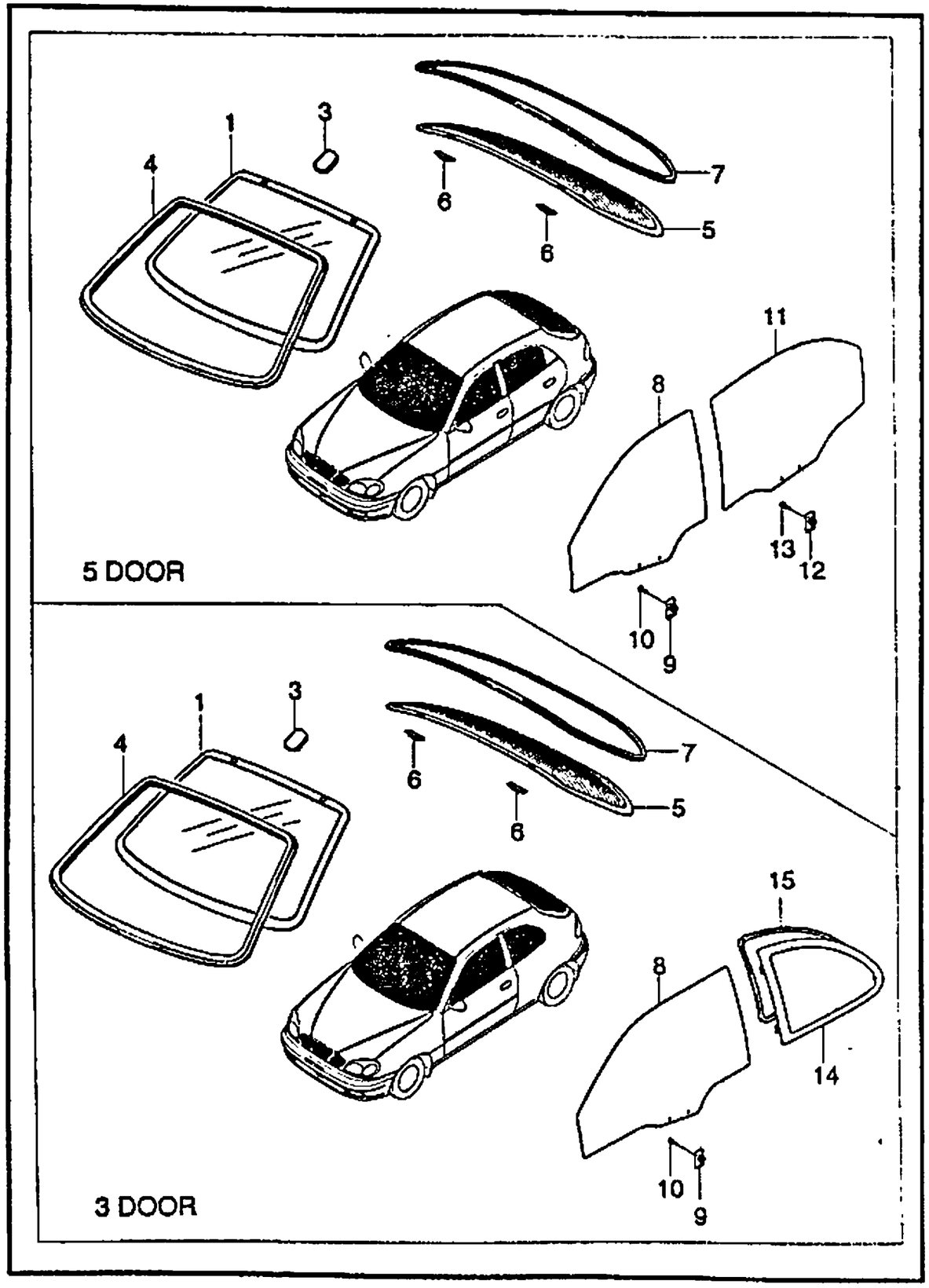

KEY NO.		PART NAME															
		MODEL															
				BODY			LEVEL							EFFECTIVE DATE			
ITC	PART NO	ENG	T/A	4N	3H	5H	S	SE	SX	OPTION	L/R	QTY	FROM	TO	REMARKS	P/CODE
	96304055	.	.	.	B	.	O	.	S	&A01	RH	1				
	96304048	.	.	.	.	B	S	.	.	&A22	LH	1				
	96304050	.	.	.	.	B	S	.	.	&A22	RH	1				
	96304052	.	.	.	.	B	O	.	S	&A01	LH	1				
	96304054	.	.	.	.	B	O	.	S	&A01	RH	1				
[09]	(E)NUT-SPEED *(D)MUTTER*										*(F)ECROU* *(S)TUERCA*					
	09148-06002	.	.	.	B	B	S	.	S			4				
[10]	(E)SCREW-TAPPING *(D)SCHRAUBE*										*(F)VIS* *(S)TORNILLO*					
	03140-63163	.	.	.	B	B	S	.	S			4				
[11]	(E)GLASS-RR DOOR WINDOW *(D)GLAS*										*(F)GLACE-FENETRE ARRIERE* *(S)VIDRIO-VENTANA TRASERA*					
	96304138	.	.	.	.	B	S	.	.	&A22	LH	1				
	96304140	.	.	.	.	B	S	.	.	&A22	RH	1				
	96304142	.	.	.	.	B	O	.	S	&A01	LH	1				
	96304144	.	.	.	.	B	O	.	S	&A01	RH	1				
[12]	(E)NUT-SPEED *(D)MUTTER*										*(F)ECROU* *(S)TUERCA*					
	09148-06002	.	.	.	.	B	S	.	S			4				
[13]	(E)SCREW-TAPPING *(D)SCHRAUBE*										*(F)VIS* *(S)TORNILLO*					
	03140-63163	.	.	.	.	B	S	.	S			4				
[14]	(E)GLASS A-HINGED WINDOW *(D)GLAS,KIPPFENSTER*										*(F)GLACE-FENETRE* *(S)VIDRIO-VENTANA BISAGRA*					
	96234660	.	.	.	B	.	S	.	.	&A22	LH	1				
	96234661	.	.	.	B	.	S	.	.	&A22	RH	1				

ENG(ENGINE)	T/A(TRANSAXLE)	BODY TYPE
Y = 1.5SOHC 6 = 1.6DOHC . = COMMON	M = MANUAL T/A A = AUTOMATIC T/A . = COMMON	4 N = 4 DOOR NOTCHBACK 3 H = 3 DOOR HATCHBACK 5 H = 5 DOOR HATCHBACK

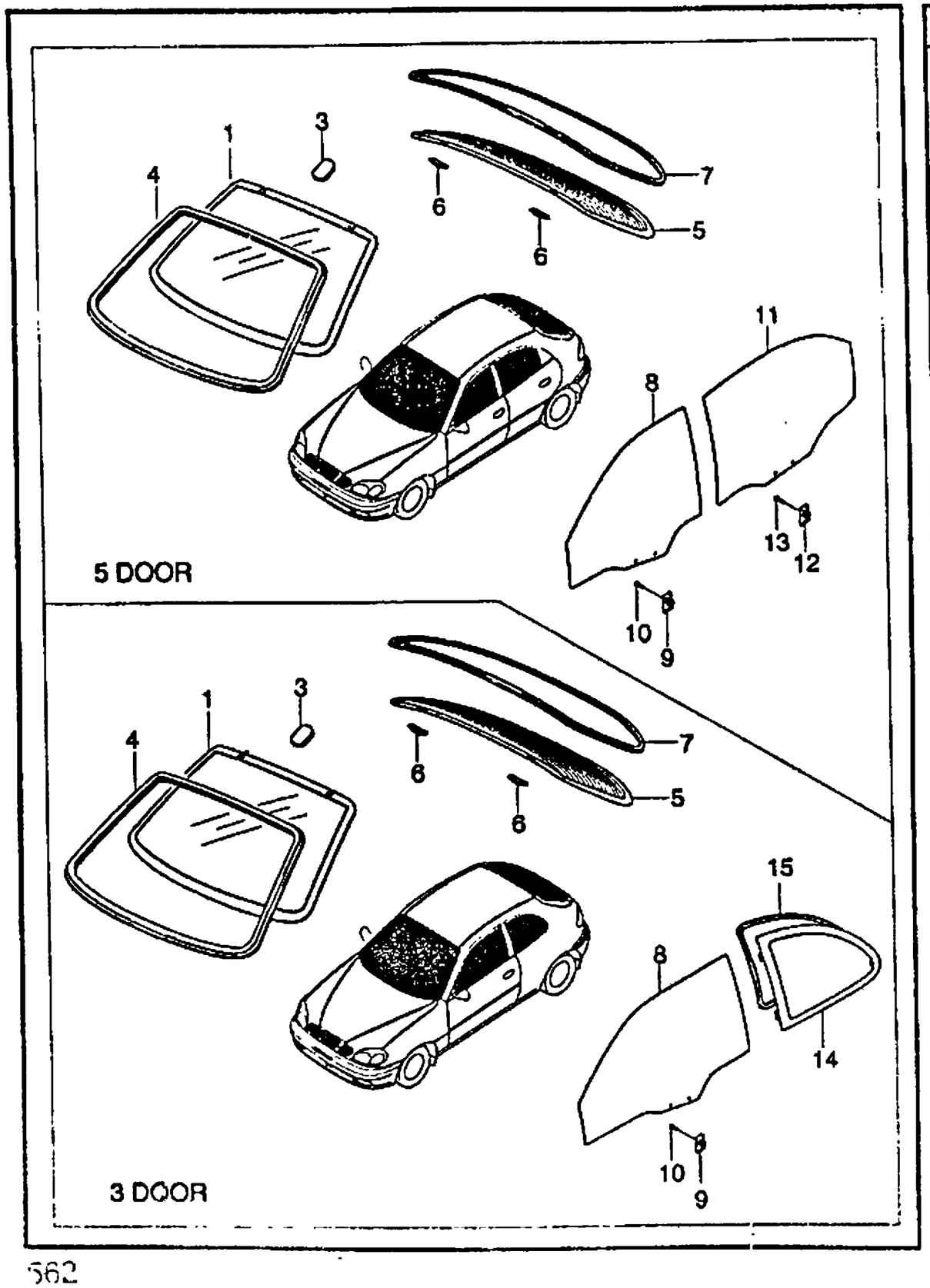

KEY NO.		PART NAME															
ITC	PART NO	MODEL								OPTION	L/R	QTY	EFFECTIVE DATE		REMARKS	P/CODE
		ENG	T/A	BODY			LEVEL						FROM	TO		
				4N	3H	6H	S	SE	SX							
	96234662	.	.	.	B	.	O	.	S	&A01	LH	1			•	
	96234663	.	.	.	B	.	O	.	S	&A01	RH	1				
	[15]	(E)WEATHERSTRIP-HINGED WDO (D)DICHTUNGSLEISTE									(F)ISOLATION EN BANDELETTE (S)BURLETE					
	96303243	.	.	.	B	.	S	.	S			2				

ENG(ENGINE)	T/A(TRANSAXLE)	BODY TYPE
Y = 1.5SOHC 6 = 1.6DOHC . = COMMON	M = MANUAL T/A A = AUTOMATIC T/A . = COMMON	4 N = 4 DOOR NOTCHBACK 3 H = 3 DOOR HATCHBACK 5 H = 5 DOOR HATCHBACK

5J13

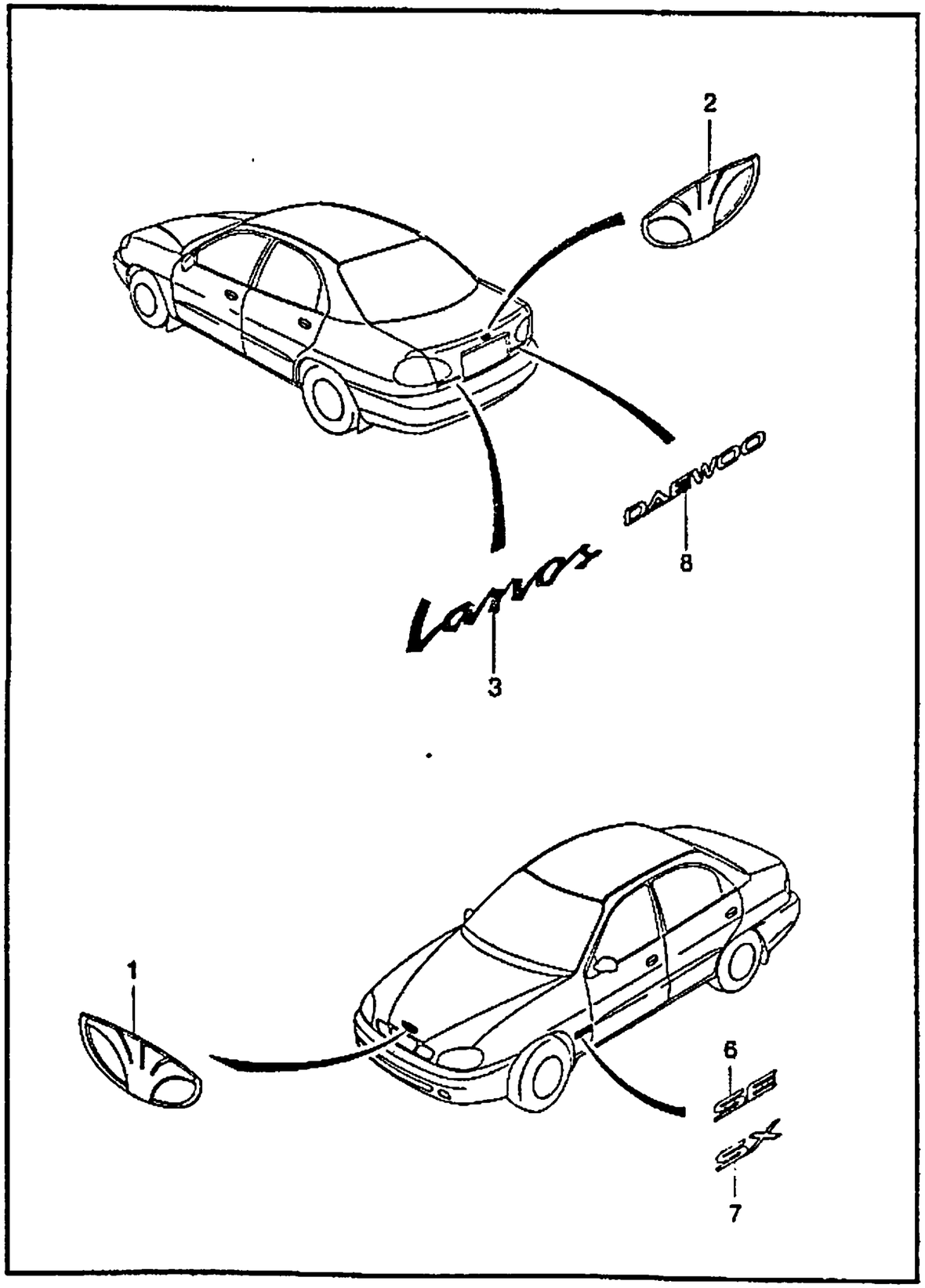

KEY NO. ITC	PART NO	MODEL ENG	T/A	BODY 4N	3H	5H	LEVEL S	SE	SX	OPTION	L/R	QTY	EFFECTIVE DATE FROM	TO	REMARKS	P/CODE
[01]	(E)EMBLEM-HOOD (D)ETIKETT										(F)EMBLEME (S)EMBLEMA				•	
96303492		.	.	B	B	B	S	S	S			1				
[02]	(E)EMBLEM A (D)ETIKETT										(F)EMBLEME (S)EMBLEMA					
96303493		.	.	B	.	.	S	S	S			1			TRUNK LID	
96243520		.	.	.	B	B	S	.	S			1			TAILGATE	
[03]	(E)LETTERING A-LANOS (D)BESCHRIFTUNG-'LANOS'										(F)LETTRES-'LANOS' (S)LETRAS-'LANOS'					
96226350		.	.	B	.	.	S	S	S			1			TRUNK LID	
96245521		.	.	.	B	B	S	.	S			1			TAILGATE	
[06]	(E)LETTERING A-SE (D)BESCHRIFTUNG-'SE'										(F)LETTRES-'SE' (S)LETRAS-'SE'					
96250233		.	.	B	.	.	.	S	.			2				
[07]	(E)LETTERING A-SX (D)BESCHRIFTUNG-'SX'										(F)LETTRES-'SX' (S)LETRAS-'SX'					
96250234		.	.	B	B	B	.	.	S			2				
[08]	(E)LETTERING A-DAEWOO (D)BESCHRIFTUNG-'DAEWOO'										(F)LETTRES-'DAEWOO' (S)LETRAS-'DAEWOO'					
96303494		.	.	B	.	.	S	S	S			1				
96249417		.	.	.	B	B	S	.	S			1				

ENG(ENGINE)	T/A(TRANSAXLE)	BODY TYPE
Y = 1.5SOHC 6 = 1.6DOHC . = COMMON	M = MANUAL T/A A = AUTOMATIC T/A . = COMMON	4 N = 4 DOOR NOTCHBACK 3 H = 3 DOOR HATCHBACK 5 H = 5 DOOR HATCHBACK

6660 WHEELS & WHEEL COVER

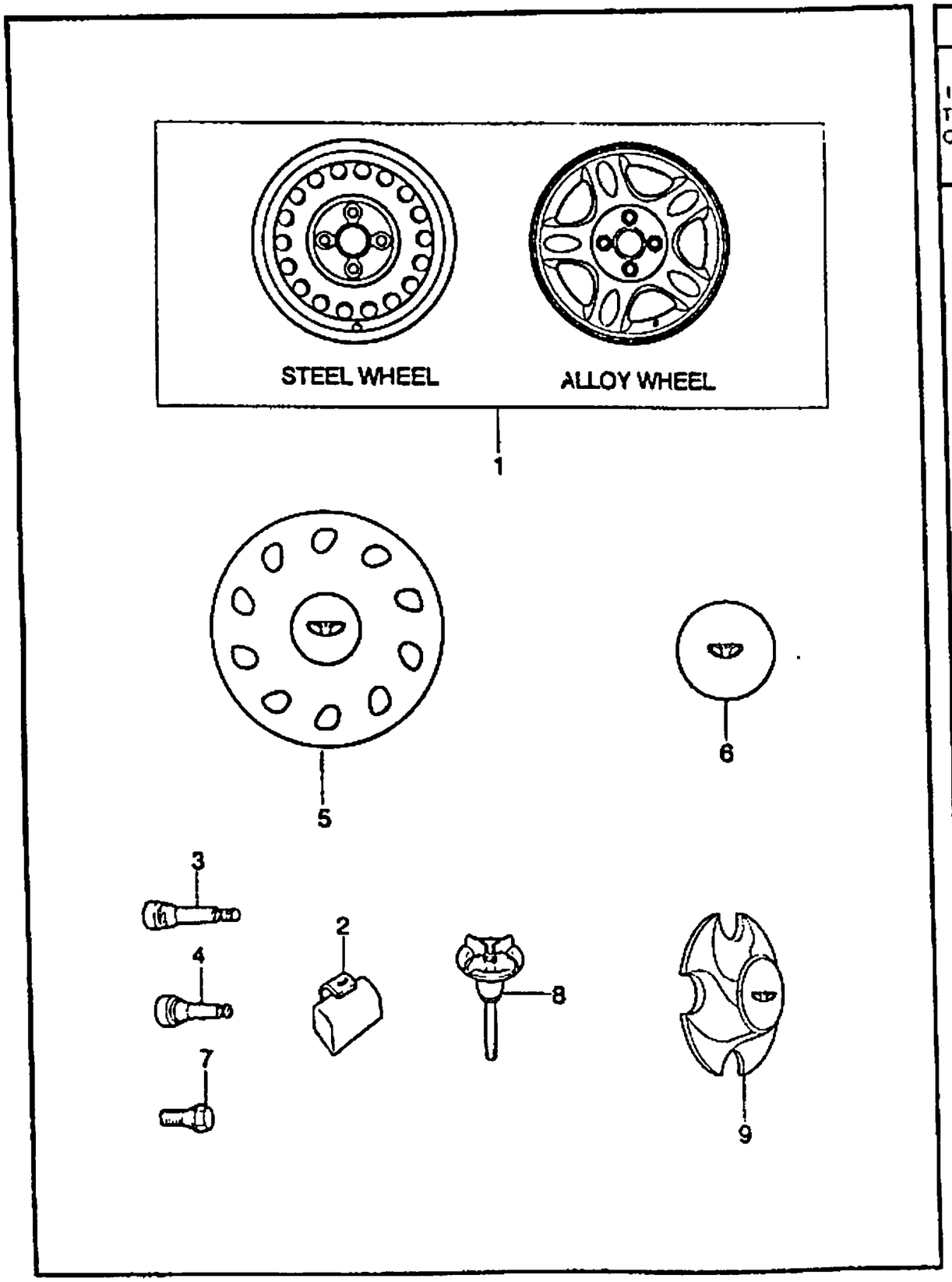

KEY NO. ITC	PART NO	MODEL ENG	T/A	BODY 4N	3H	5H	LEVEL S	SE	SX	OPTION	L/R	QTY	EFFECTIVE DATE FROM	TO	REMARKS	P/CODE
[01]		(E)WHEEL A (D)RAD									(F)ROUE (S)RUEDA					
	96162637	.	.	B	B	B	S	.	.	&N76&W9U		5			5 JX13	WH
	96162636	.	.	B	B	B	O	S	S	&N76&W9M		5			5 JX13	HF
	90304218	.	.	B	B	B	.	.	O	&PX8		5			5 1/2JX14	HY
	96303778	.	.	B	B	B	.	.	O	&PG4		5			5 1/2JX14	AL
[02]		(E)WEIGHT-BALANCE (D)GEWICHT AUSGLEICH									(F)POIDS-EQUILIBRAGE (S)PESO-BALANCE					
	96209681	.	.	B	B	B	S	S	S	&N76/PX8		1			5G	
	96209715	.	.	B	B	B	S	S	S	&N76/PX8		1			10G	
	96209716	.	.	B	B	B	S	S	S	&N76/PX8		1			15G	
	96209717	.	.	B	B	B	S	S	S	&N76/PX8		1			20G	
	96209718	.	.	B	B	B	S	S	S	&N76/PX8		1			25G	
	96209719	.	.	B	B	B	S	S	S	&N76/PX8		1			30G	
	96209720	.	.	B	B	B	S	S	S	&N76/PX8		1			35G	
	96209721	.	.	B	B	B	S	S	S	&N76/PX8		1			40G	
	96209722	.	.	B	B	B	S	S	S	&N76/PX8		1			45G	
	96209723	.	.	B	B	B	S	S	S	&N76/PX8		1			50G	
	96209724	.	.	B	B	B	S	S	S	&N76/PX8		1			55G	
	96209725	.	.	B	B	B	S	S	S	&N76/PX8		1			60G	
	96209679	.	.	B	B	B	.	.	O	&PG4		1			5G	
	96209680	.	.	B	B	B	.	.	O	&PG4		1			10G	
	96209682	.	.	B	B	B	.	.	O	&PG4		1			15G	
	96209683	.	.	B	B	B	.	.	O	&PG4		1			20G	
	96209684	.	.	B	B	B	.	.	O	&PG4		1			25G	

ENG(ENGINE)	T/A(TRANSAXLE)	BODY TYPE
Y = 1.5SOHC 6 = 1.6DOHC . = COMMON	M = MANUAL T/A A = AUTOMATIC T/A . = COMMON	4 N = 4 DOOR NOTCHBACK 3 H = 3 DOOR HATCHBACK 5 H = 5 DOOR HATCHBACK

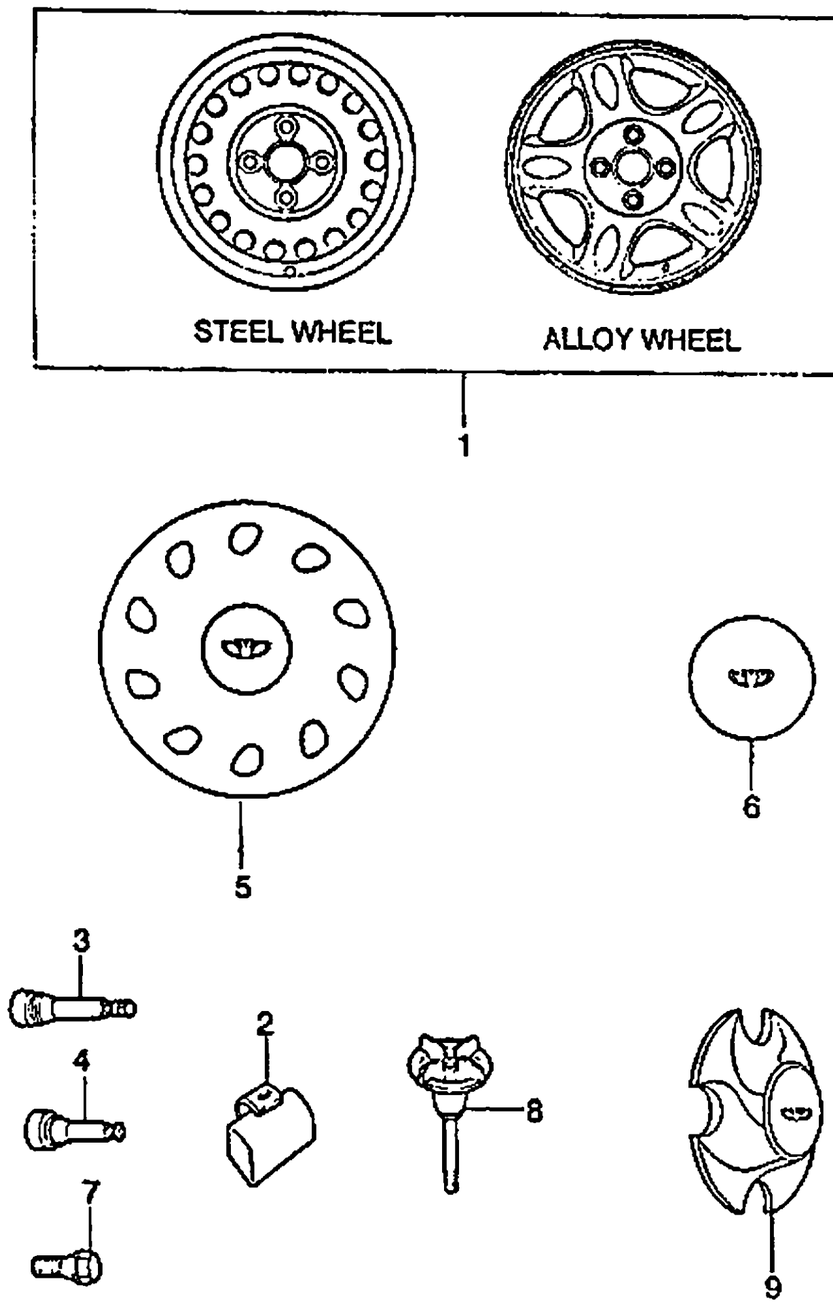

KEY NO.	PART NAME															
ITEM	PART NO	MODEL								OPTION	L/R	QTY	EFFECTIVE DATE		REMARKS	P/CODE
		ENG	T/A	BODY			LEVEL						FROM	TO		
				4N	3H	5H	S	SE	SX							
	96209685	.	.	B	B	B	.	.	O	&PG4		1			30G	
	96209686	.	.	B	B	B	.	.	O	&PG4		1			35G	
	96209687	.	.	B	B	B	.	.	O	&PG4		1			40G	
	96209688	.	.	B	B	B	.	.	O	&PG4		1			45G	
	96209689	.	.	B	B	B	.	.	O	&PG4		1			50G	
	96209690	.	.	B	B	B	.	.	O	&PG4		1			55G	
	96209691	.	.	B	B	B	.	.	O	&PG4		1			60G	
[03]	(E)VALVE-TIRE *(D)VENTIL,REIFEN*										*(F)SOUPAPE-PNEU* *(S)VALVULA-LLANTA*					
	90223915	.	.	B	B	B	O	S	S	&W9M		5				
[04]	(E)VALVE-RUBBER *(D)VENTIL,GUMMI*										*(F)SOUPAPE-CAOUTCHOUC* *(S)VALVULA-LLANTA*					
	11049239	.	.	B	B	B	S	.	O	&W9U/PG4		5				
[05]	(E)COVER A-WHEEL *(D)DECKEL,RAD*										*(F)CARTER-ROUE* *(S)CUBIERTA-RUEDA*					
	96304348	.	.	B	B	B	O	S	S	&P13		4			13 Inch	T3
	96306210	.	.	B	B	B	.	.	O	&P11		4			14 Inch	T4
[06]	(E)CAP-WHEEL HUB *(D)DECKEL,RADNABE*										*(F)CHAPEAU-MOYEU DE ROUE* *(S)TAPA-CUBO DE RUEDA*					
	96304347	.	.	B	B	B	.	.	O	&PG4		4				
[07]	(E)BOLT *(D)SCHRAUBE*										*(F)BOULON* *(S)PERNO*					
	09119-12001	.	.	B	B	B	S	S	S			16				
[08]	(E)BOLT A-SPARE WHEEL WING *(D)SCHRAUBE*										*(F)BOULON* *(S)PERNO*					
	96167631	.	.	B	B	B	S	S	S	&N76		1				
	96167632	.	.	B	B	B	.	.	O	&PX8/PG4		1				

ENG(ENGINE)	T/A(TRANSAXLE)	BODY TYPE
Y = 1.5SOHC 6 = 1.6DOHC . = COMMON	M = MANUAL T/A A = AUTOMATIC T/A . = COMMON	4 N = 4 DOOR NOTCHBACK 3 H = 3 DOOR HATCHBACK 5 H = 5 DOOR HATCHBACK

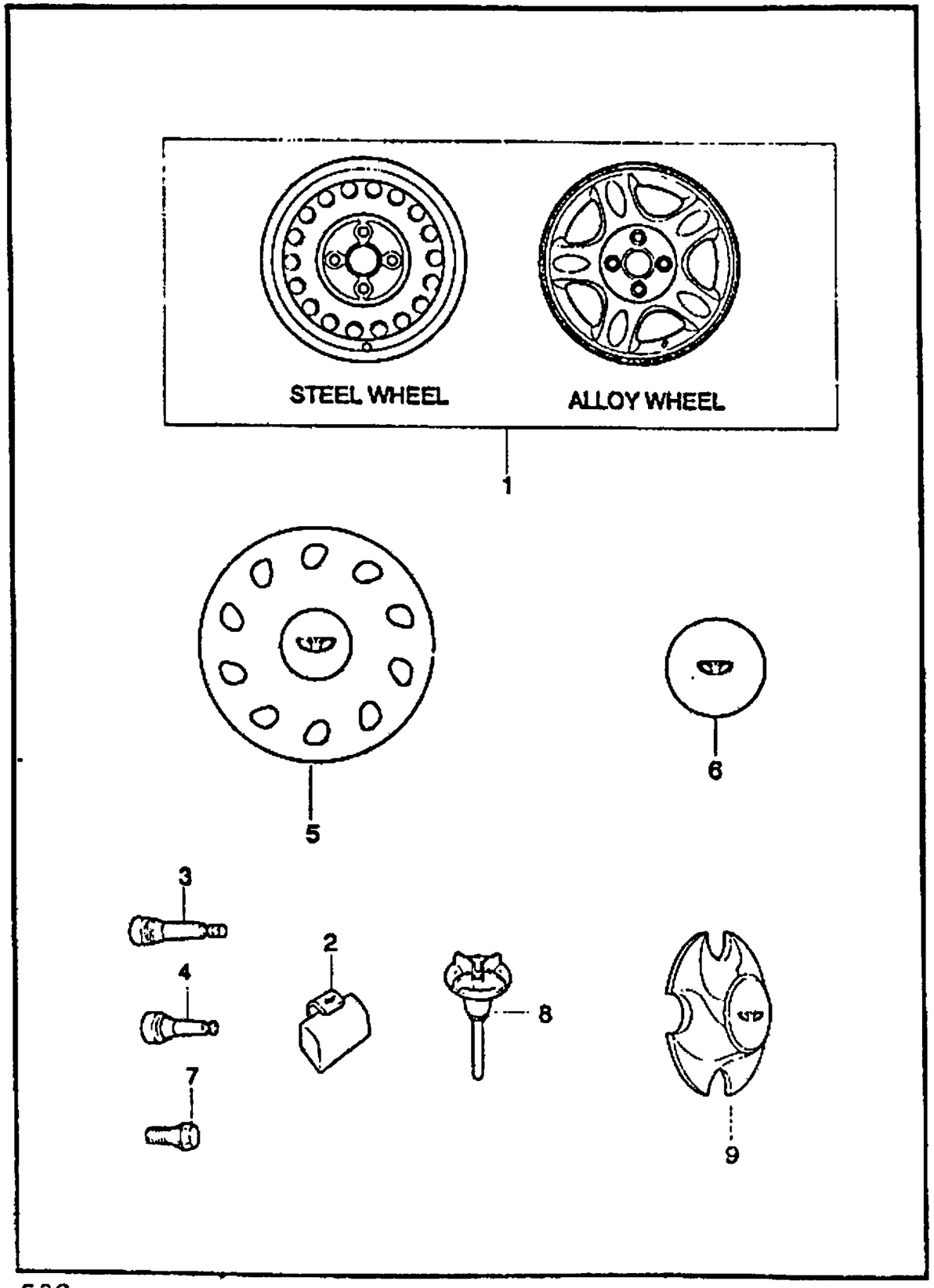

KEY NO.	PART NAME															
ITC	PART NO	MODEL								OPTION	L/R	QTY	EFFECTIVE DATE		REMARKS	P/CODE
		ENG	T/A	BODY			LEVEL						FROM	TO		
				4N	3H	5H	S	SE	SX							
	[09]	(E)CAP-HUB (D)DECKEL									(F)CHAPEAU (S)TAPA					
	96304346	.	.	B	B	B	S	.	.	&PA5		4				

ENG(ENGINE)	T/A(TRANSAXLE)	BODY TYPE
Y = 1.5SOHC 6 = 1.6DOHC . = COMMON	M = MANUAL T/A A = AUTOMATIC T/A . = COMMON	4 N = 4 DOOR NOTCHBACK 3 H = 3 DOOR HATCHBACK 5 H = 5 DOOR HATCHBACK

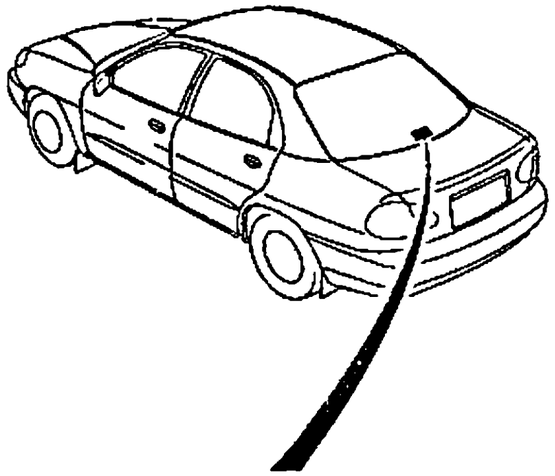

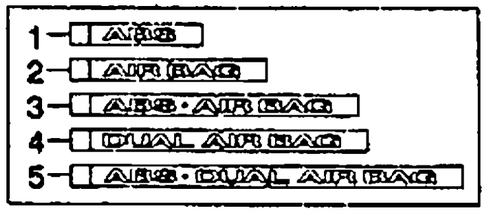

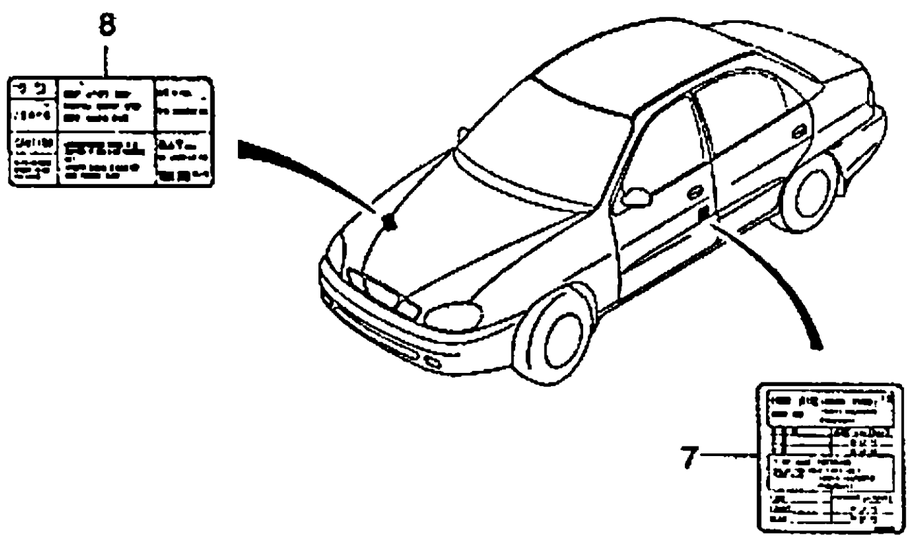

KEY NO.		PART NAME															
		MODEL											EFFECTIVE DATE				
				BODY			LEVEL										
ITC	PART NO	ENG	T/A	4N	3H	5H	S	SE	SX	OPTION	L/R	QTY	FROM	TO	REMARKS	P/CODE
[01]		(E)STICKER-ABS (D)ETIKETT-'ABS'									(F)VIGNETTE-'ABS' (S)ETIQUETA-'ABS'					
96245663		.	.	B	B	B	.	O	O	&JL9		1				
[02]		(E)STICKER-AIR BAG (D)ETIKETT-'AIR BAG									(F)VIGNETTE-'AIR BAG' (S)ETIQUETA-'AIR BAG'					
96245664		.	.	B	B	B	.	O	O	&AJ3		1				
[03]		(E)STICKER-ABS & AIR BAG (D)ETIKETT-'ABS & AIR BAG'									(F)VIGNETTE-'ABS & AIR BAG' (S)ETIQUETA-'ABS & AIR BAG'					
96245665		.	.	B	B	B	.	O	O	&JL9&AJ3		1				
[04]		(E)STICKER-DUAL AIR BAG (D)ETIKETT-'DUAL AIR BAG'									(F)VIGNETTE-'DUAL AIR BAG' (S)ETIQUETA-'DUAL AIR BAG'					
96245666		.	.	B	B	B	.	O	O	&ABF		1				
[05]		(E)STICKER-ABS&DUAL AIR BAG (D)ETIKETT-'ABS&DUAL AIR BAG									(F)VIGNETTE-'ABS&DUAL AIR BA (S)ETIQUETA-'ABS&DUAL AIR BA					
96245667		.	.	B	B	B	.	O	O	&JL9&ABF		1				
[07]		(E)STICKER-TIRE PRESSURE (D)ETIKETT									(F)VIGNETTE (S)ETIQUETA					
96304349		.	.	B	B	B	S	S	.	&QTF		1				
96304466		.	.	B	B	B	O	O	S	&QTJ/QUS		1				
[08]		(E)STICKER-AIR CONDITIONING (D)ETIKETT									(F)VIGNETTE (S)ETIQUETA					
96242973		.	.	B	B	B	O	O	O	&C60		1				

ENG(ENGINE)	T/A(TRANSAXLE)	BODY TYPE
Y = 1.5SOHC 6 = 1.6DOHC . = COMMON	M = MANUAL T/A A = AUTOMATIC T/A . = COMMON	4 N = 4 DOOR NOTCHBACK 3 H = 3 DOOR HATCHBACK 5 H = 5 DOOR HATCHBACK

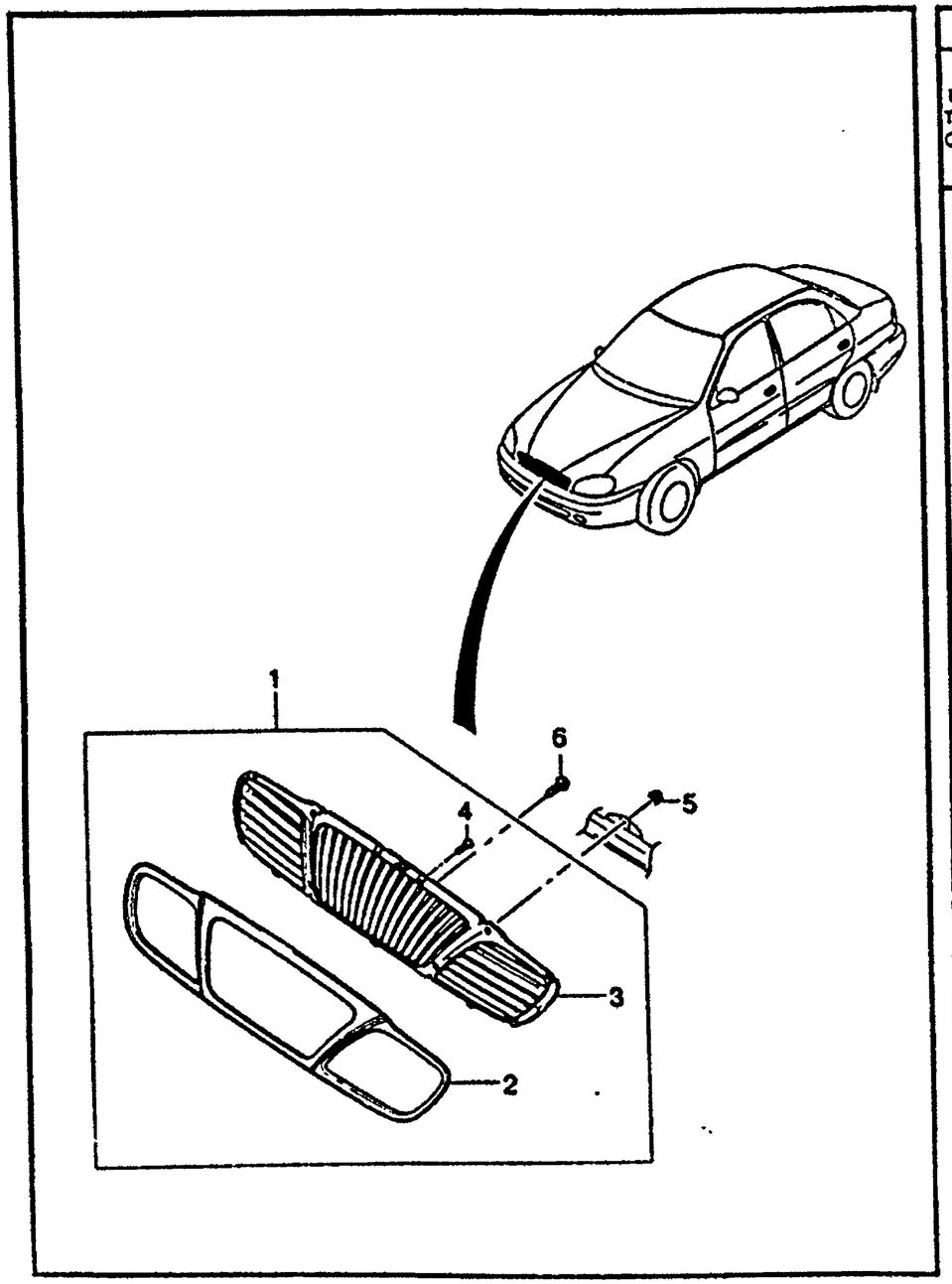

KEY NO. ITC	PART NO	MODEL ENG	T/A	BODY 4N	3H	5H	LEVEL S	SE	SX	OPTION	L/R	QTY	EFFECTIVE DATE FROM	TO	REMARKS	PICODE
[01]	96303229	(E)GRILLE A-RADIATOR (D)GITTER,KÜHLER	.	.	B	B	B	S	S	S		(F)GRILLE-RADIATEUR (S)REJA-RADIADOR 1				
[02]	96215293	(E)COVER-RADIATOR GRILLE (D)DECKEL	.	.	B	B	B	S	S	S		(F)CARTER (S)CUBIERTA 1				
[03]	96215294	(E)HOUSING A-RADIATOR GRILLE (D)GEHÄUSE	.	.	B	B	B	S	S	S		(F)LOGEMENT (S)CARCASA 1				
[04]	09132-03001	(E)SCREW-TAPPING (D)SCHRAUBE	.	.	B	B	B	S	S	S		(F)VIS (S)TORNILLO 13				
[05]	08316-25042	(E)NUT-HEXAGON FLANGE (D)MUTTER	.	.	B	B	B	S	S	S		(F)ECROU (S)TUERCA 6				
[06]	03151-42132	(E)SCREW-TAPPING (D)SCHRAUBE	.	.	B	B	B	S	S	S		(F)VIS (S)TORNILLO 2				

ENG(ENGINE)	T/A(TRANSAXLE)	BODY TYPE
Y = 1.5SOHC 6 = 1.6DOHC . = COMMON	M = MANUAL T/A A = AUTOMATIC T/A . = COMMON	4 N = 4 DOOR NOTCHBACK 3 H = 3 DOOR HATCHBACK 5 H = 5 DOOR HATCHBACK

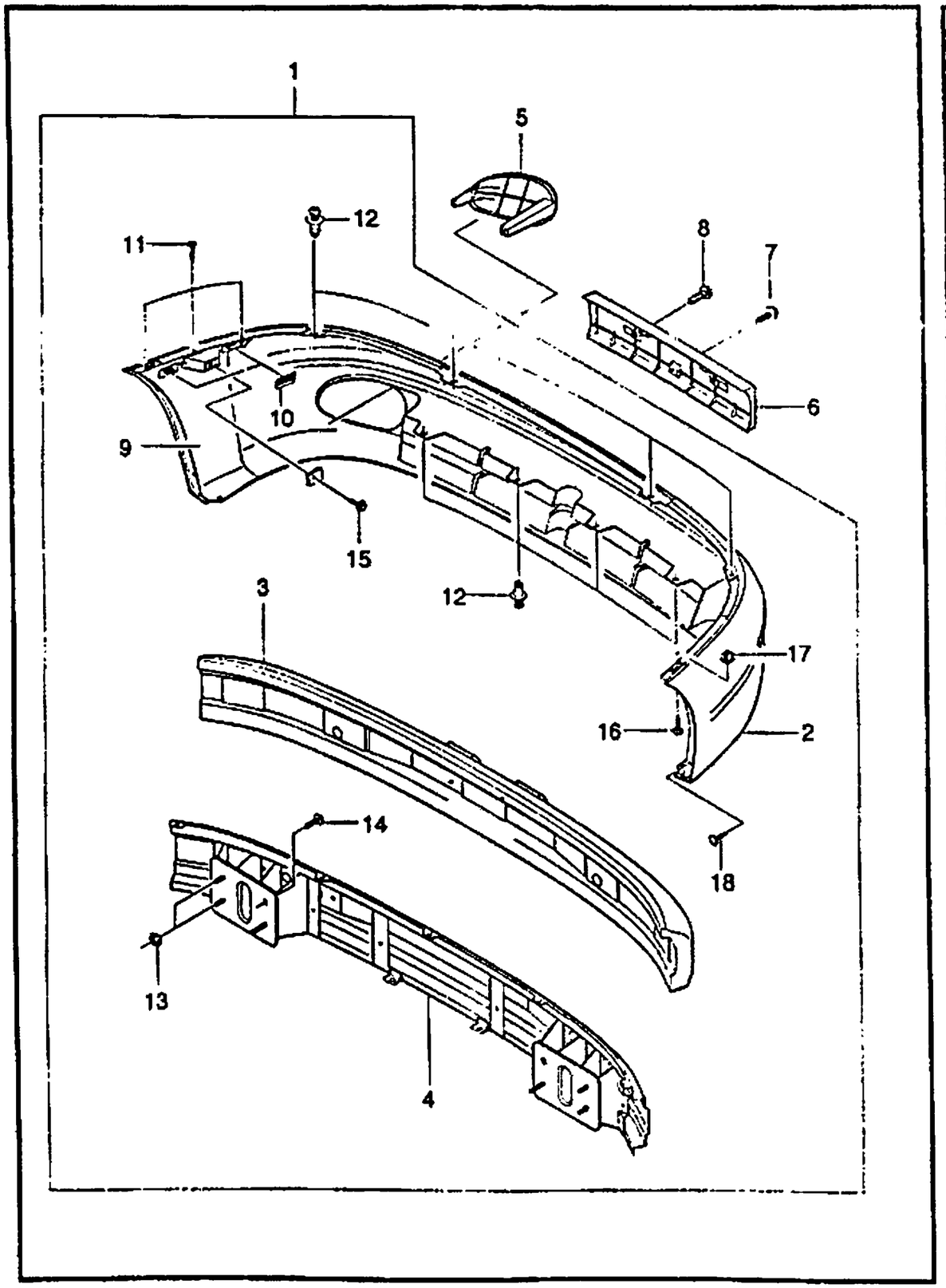

KEY NO.	PART NAME															
ITC	PART NO	MODEL								OPTION	L/R	QTY	EFFECTIVE DATE		REMARKS	P/CODE
		ENG	T/A	BODY			LEVEL						FROM	TO		
				4N	3H	5H	S	SE	SX							
[01]		(E)BUMPER A-FRONT (D)STOßSTANGE,VORNE									(F)PARE-CHOC-AVANT (S)PARACHOQUES-FRENTE					
S6720006		.	.	B	B	B	S	S	S	&VT2		1				
S6720007		.	.	B	B	B	.	O	O	&VT3		1				
[02]		(E)FASCIA A-BUMPER,FRONT (D)SCHILD,VORDERE STOßSTANGE									(F)BANDELETTES (S)PARACHOQUES					
96226164		.	.	B	B	B	S	S	S			1				
[03]		(E)ABSORBER-FRT BUMPER ENERG (D)VORDERE STOßSTANGE									(F)AMORTISSEUR (S)AMORTIGUADOR					
96303216		.	.	B	B	B	S	S	S	&VT2		1				
96214018		.	.	B	B	B	.	O	O	&VT3		1				
[04]		(E)BEAM A-FRONT BUMPER IMPAC (D)STANGE,VORDERE STOßSTANGE									(F)BARRE (S)BARRA-IMPACTO					
96303218		.	.	B	B	B	S	S	S	&VT2		1				
96214019		.	.	B	B	B	.	O	O	&VT3		1				
[05]		(E)GRILLE A-FRONT FOG LAMP (D)GITTER,VORDERE NEBELLAMPE									(F)GRILLE (S)REJA-LAMPARA DE NEBLINA					
96303479		.	.	B	B	B	S	S	S	-T97		LH 1				
96306248		.	.	B	B	B	S	S	S	-T97		RH 1				
[06]		(E)BRACKET A-LICENSE PLATE (D)TRÄGER									(F)SUPPORT (S)SOPORTE					
96215626		.	.	B	B	B	A	A	A	&T12		1				
[07]		(E)SCREW-TAPPING (D)SCHRAUBE									(F)VIS (S)TORNILLO					
03112-48222		.	.	B	B	B	A	A	A	&T12		1				
[08]		(E)BOLT (D)SCHRAUBE									(F)BOULON (S)PERNO					
09119-06017		.	.	B	B	B	A	A	A	&T12		2				

ENG(ENGINE)	T/A(TRANSAXLE)	BODY TYPE
Y = 1.5SOHC 6 = 1.6DOHC . = COMMON	M = MANUAL T/A A = AUTOMATIC T/A . = COMMON	4 N = 4 DOOR NOTCHBACK 3 H = 3 DOOR HATCHBACK 5 H = 5 DOOR HATCHBACK

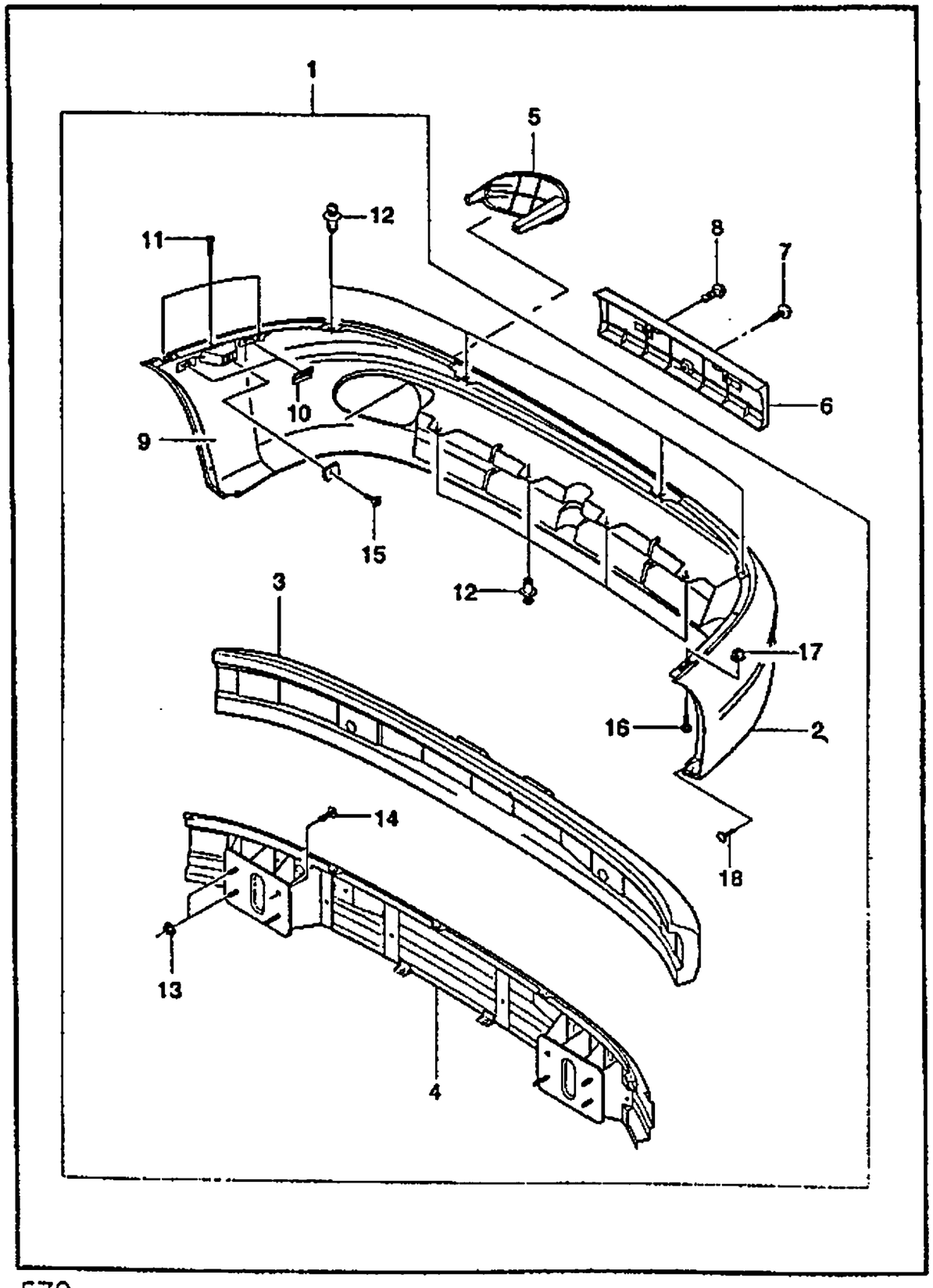

KEY NO. ITC	PART NO	MODEL ENG	T/A	BODY 4N	3H	5H	LEVEL S	SE	SX	OPTION	L/R	QTY	EFFECTIVE DATE FROM	TO	REMARKS	P/CODE
[09]	(E)BRACKET A-FRT BUMPER SIDE (D)TRÄGER										(F)SUPPORT (S)SOPORTE					
96303220		.	.	B	B	B	S	S	S		LH	1				
96303221		.	.	B	B	B	S	S	S		RH	1				
[10]	(E)NUT-SPEED (D)MUTTER										(F)ECROU (S)TUERCA					
09148-01001		.	.	B	B	B	S	S	S			4				
[11]	(E)SCREW-TAPPING (D)SCHRAUBE										(F)VIS (S)TORNILLO					
03130-42133		.	.	B	B	B	S	S	S			6				
[12]	(E)CLIP (D)KLEMME										(F)ATTACHE (S)GRAPA					
09409-09302		.	.	B	B	B	S	S	S			9				
[13]	(E)NUT (D)MUTTER										(F)ECROU (S)TUERCA					
09159-08010		.	.	B	B	B	S	S	S			4				
[14]	(E)BOLT (D)SCHRAUBE										(F)BOULON (S)PERNO					
09118-08003		.	.	B	B	B	.	O	O	&VT3		2			W/WASHER	
[15]	(E)BOLT (D)SCHRAUBE										(F)BOULON (S)PERNO					
09119-06017		.	.	B	B	B	S	S	S			2	970804			
Y 09116-06039		.	.	B	B	B	S	S	S			2	970804			
[16]	(E)SCREW-TAPPING (D)SCHRAUBE										(F)VIS (S)TORNILLO					
09136-04005		.	.	B	B	B	S	S	S			4				
[17]	(E)NUT-SPEED (D)MUTTER										(F)ECROU (S)TUERCA					

ENG(ENGINE)	T/A(TRANSAXLE)	BODY TYPE
Y = 1.5SOHC	M = MANUAL T/A	4 N = 4 DOOR NOTCHBACK
6 = 1.6DOHC	A = AUTOMATIC T/A	3 H = 3 DOOR HATCHBACK
. = COMMON	. = COMMON	5 H = 5 DOOR HATCHBACK

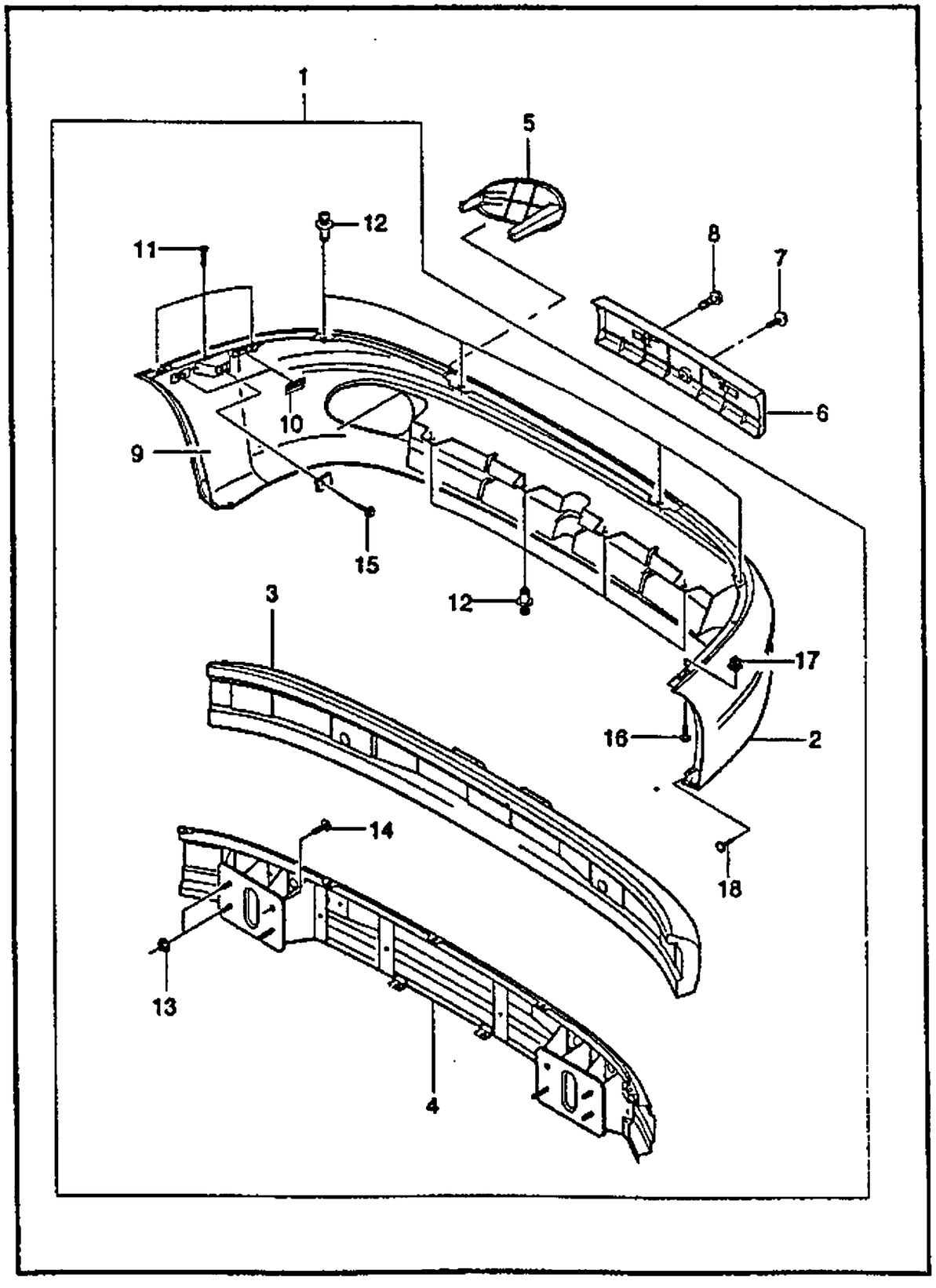

KEY NO.		PART NAME														
ITC	PART NO	MODEL								OPTION	L/R	QTY	EFFECTIVE DATE		REMARKS	P/CODE
		ENG	T/A	BODY			LEVEL						FROM	TO		
				4N	3H	5H	S	SE	SX							
	09148-04003	.	.	B	B	B	S	S	S			2				
		(E)SCREW-TAPPING									(F)VIS					
	[18]	(D)SCHRAUBE									(S)TORNILLO					
	09136-04005	.	.	B	B	B	S	S	S			2				

ENG(ENGINE)	T/A(TRANSAXLE)	BODY TYPE
Y = 1.5SOHC	M = MANUAL T/A	4 N = 4 DOOR NOTCHBACK
6 = 1.6DOHC	A = AUTOMATIC T/A	3 H = 3 DOOR HATCHBACK
. = COMMON	. = COMMON	5 H = 5 DOOR HATCHBACK

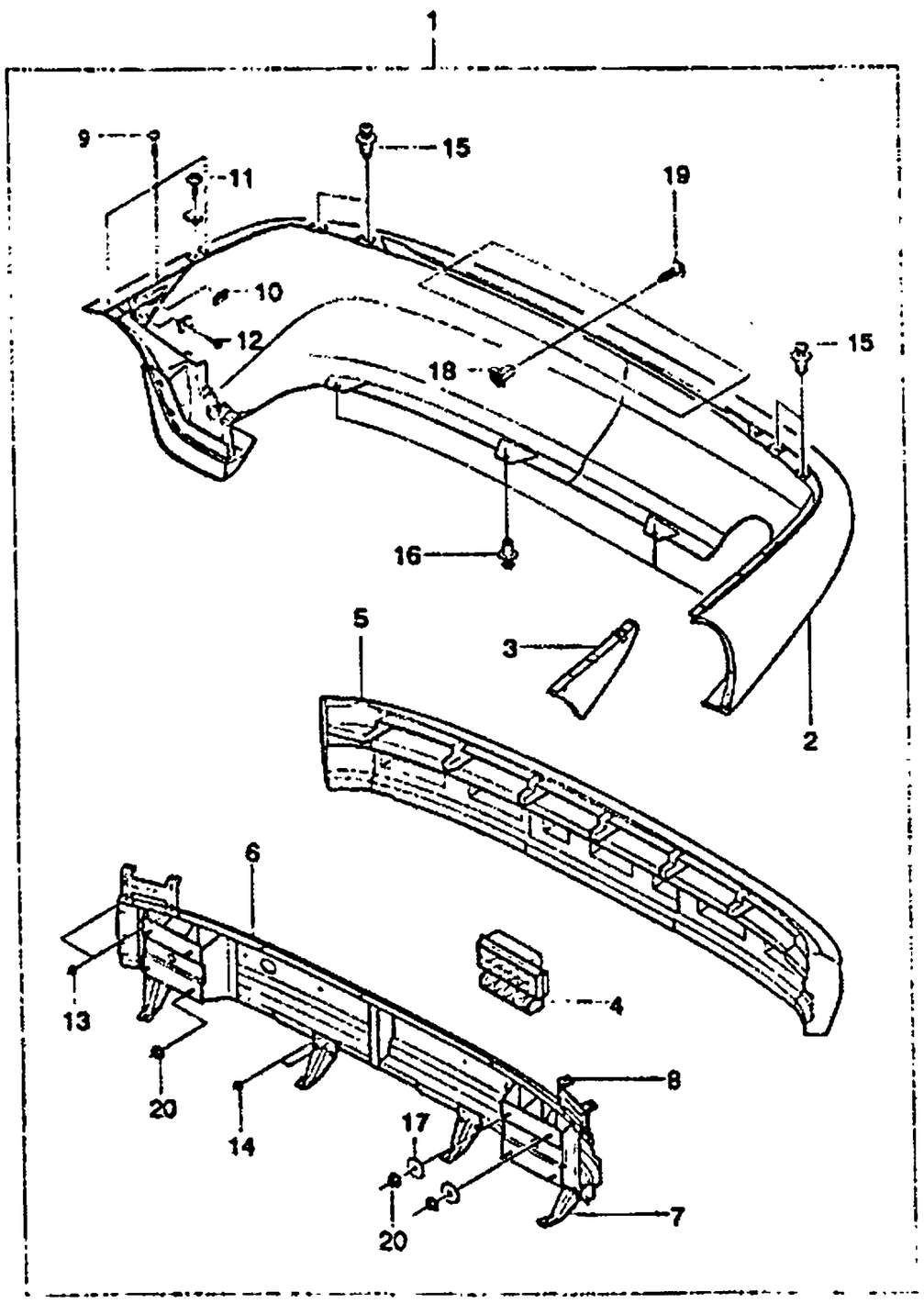

KEY NO. ITC	PART NO	MODEL ENG	MODEL T/A	BODY 4N	BODY 3H	BODY 5H	LEVEL S	LEVEL SE	LEVEL SX	OPTION	L/R	QTY	EFFECTIVE DATE FROM	EFFECTIVE DATE TO	REMARKS	P/CODE
		PART NAME														
[01]		(E)BUMPER A-REAR (D)STOßSTANGE,HINTEN									(F)PARE-CHOC-ARRIERE (S)PARACHOQUES-TRASERO					
	96303222	.	.	B	.	.	S	S	S			1				
	96232611	.	.	.	B	B	S	.	S			1				
[02]		(E)FASCIA A-BUMPER,REAR (D)SCHILD,HINTERE STOßSTANGE									(F)BANDELETTES (S)PARACHOQUES TRASERO					
	96226178	.	.	B	.	.	S	S	S			1				
	96226180	.	.	.	B	B	S	.	S			1				
[03]		(E)BRACKET A-RR BUMPER SIDE (D)TRÄGER,HINTERE STOßSTANGE									(F)SUPPORT (S)SOPORTE-LADO					
	96303482	.	.	B	.	.	S	S	S			LH 1				
	96215644	.	.	B	.	.	S	S	S			RH 1				
	96215645	.	.	.	B	B	S	.	S			LH 1				
	96215646	.	.	.	B	B	S	.	S			RH 1				
[05]		(E)ABSORBER-RR BUMPER ENERGY (D)HINTERE STOßSTANGE									(F)AMORTISSEUR (S)AMORTIGUADOR					
	96303225	.	.	B	.	.	S	S	S			1				
	96215632	.	.	.	B	B	S	.	S			1				
[06]		(E)BEAM A-REAR BUMPER IMPACT (D)STANGE,HINTERE STOßSTANGE									(F)BARRE (S)BARRA-IMPACTO					
	96303227	.	.	B	B	B	S	S	S			1				
[07]		(E)SUPPORT-REAR FASCIA,LOWER (D)TRÄGER									(F)SUPPORT (S)SOPORTE					
	96216493	.	.	B	.	.	S	S	S			4				
	96217114	.	.	.	B	B	S	.	S			LH 1				
	96217115	.	.	.	B	B	S	.	S			RH 1				

ENG(ENGINE)	T/A(TRANSAXLE)	BODY TYPE
Y = 1.5SOHC 6 = 1.6DOHC . = COMMON	M = MANUAL T/A A = AUTOMATIC T/A . = COMMON	4 N = 4 DOOR NOTCHBACK 3 H = 3 DOOR HATCHBACK 5 H = 5 DOOR HATCHBACK

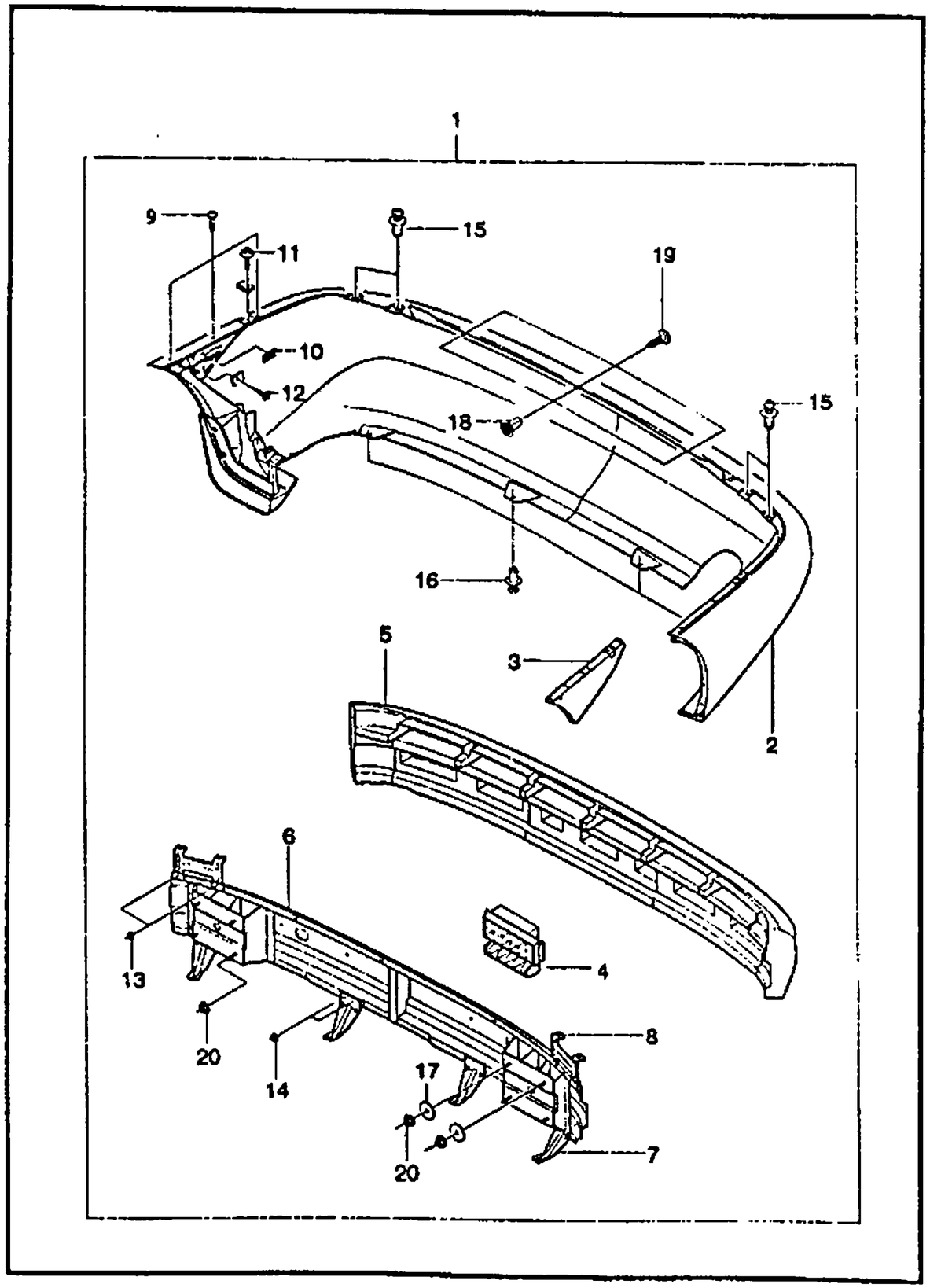

KEY NO. ITC	PART NO	MODEL ENG	MODEL T/A	BODY 4N	BODY 3H	BODY 5H	LEVEL S	LEVEL SE	LEVEL SX	OPTION	L/R	QTY	EFFECTIVE DATE FROM	EFFECTIVE DATE TO	REMARKS	P/CODE
		PART NAME														
[08]		(E)SUPPORT-REAR FASCIA,UPPER (D)TRÄGER									(F)SUPPORT (S)SOPORTE					
	96215642	.	.	B	B		S	.	S		LH	1				
	96226268	.	.	B	B		S	.	S		RH	1				
[10]		(E)NUT-SPEED (D)MUTTER									(F)ECROU (S)TUERCA					
	09148-01001	.	.	B	B	B	S	S	S			2				
[11]		(E)BOLT (D)SCHRAUBE									(F)BOULON (S)PERNO					
	09119-06020	.	.	B	B	B	S	S	S			2		970908		
	Y 09119-06039	.	.	B	B	B	S	S	S			2	970908			
[12]		(E)BOLT (D)SCHRAUBE									(F)BOULON (S)PERNO					
	09119-06017	.	.	B	B	B	S	S	S			2		970804		
	Y 09116-06039	.	.	B	B	B	S	S	S			2	970804			
[13]		(E)RIVET (D)NIETE									(F)RIVET (S)ROBLON (REMACHE)					
	09229-04002	.	.	B	B	B	S	S	S			4				
[14]		(E)RIVET (D)NIETE									(F)RIVET (S)ROBLON (REMACHE)					
	09229-04002	.	.	B	B	B	S	S	S			8				
[15]		(E)CLIP (D)KLEMME									(F)ATTACHE (S)GRAPA					
	09409-09302	.	.	B	B	B	S	S	S			4				
[16]		(E)CLIP (D)KLEMME									(F)ATTACHE (S)GRAPA					
	09409-09302	.	.	B	B	B	S	S	S			4				

ENG(ENGINE)	T/A(TRANSAXLE)	BODY TYPE
Y = 1.5SOHC 6 = 1.6DOHC . = COMMON	M = MANUAL T/A A = AUTOMATIC T/A . = COMMON	4 N = 4 DOOR NOTCHBACK 3 H = 3 DOOR HATCHBACK 5 H = 5 DOOR HATCHBACK

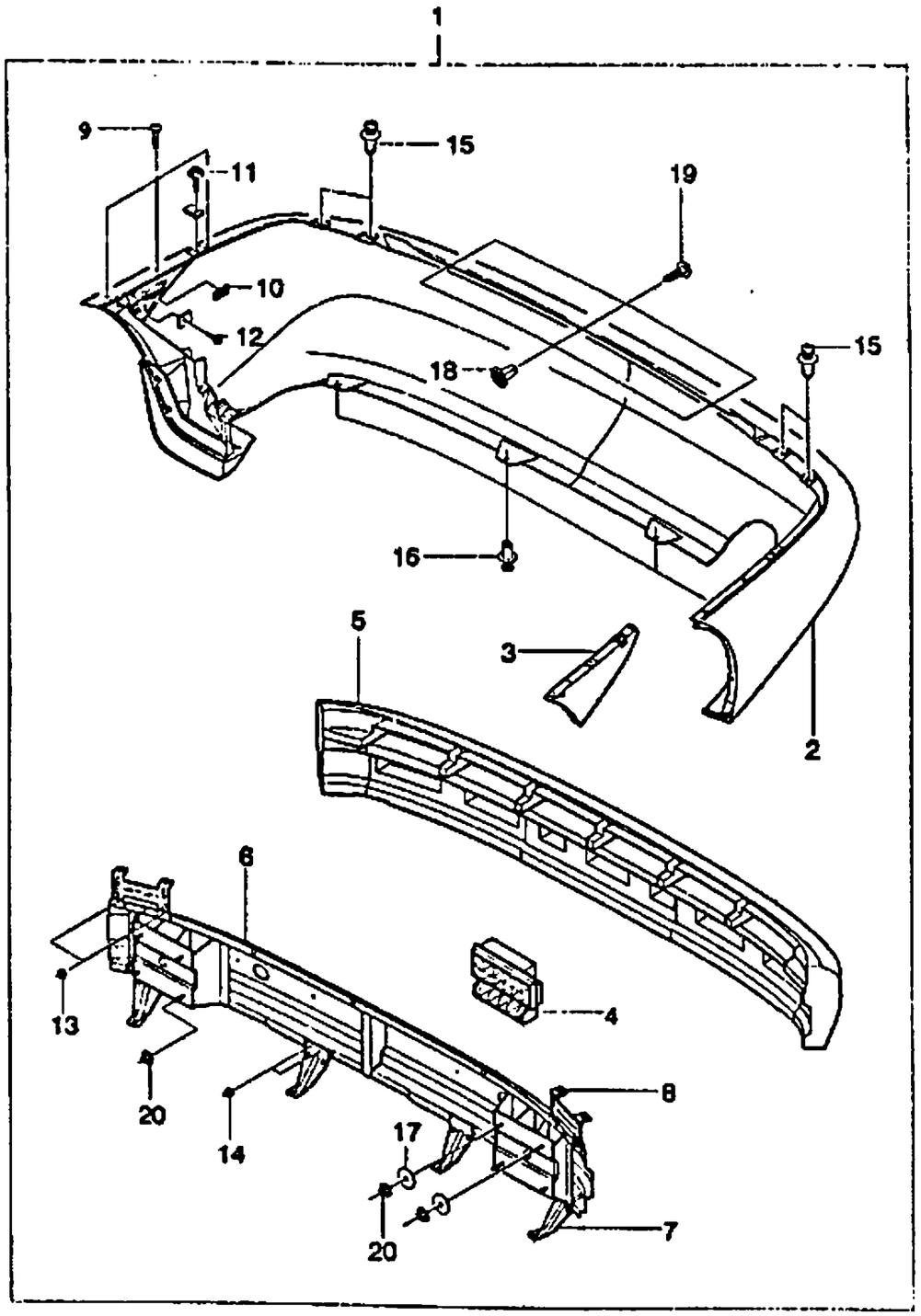

KEY NO. ITC	PART NO	PART NAME: (E)WASHER-PLAIN (D)DICHTUNGSRING	MODEL ENG	T/A	BODY 4N	3H	5H	LEVEL S	SE	SX	OPTION	L/R	QTY	EFFECTIVE DATE FROM	TO	REMARKS	P/CODE
[17]		(F)RONDELLE (S)ARANDELA															
	09161-07001		.	.	B	B	B	S	S	S			4	970804			
Y	09161-09001		.	.	B	B	B	S	S	S			4	970804			
[18]		(E)NUT-SPEED (D)MUTTER (F)ECROU (S)TUERCA															
	09148-03006		.	.	B	B	B	S	S	S			3				
[19]		(E)SCREW-TAPPING (D)SCHRAUBE (F)VIS (S)TORNILLO															
	03160-42132		.	.	B	B	B	S	S	S			3				
[20]		(E)NUT (D)MUTTER (F)ECROU (S)TUERCA															
	09159-08010		.	.	B	B	B	S	S	S			6				

ENG(ENGINE)	T/A(TRANSAXLE)	BODY TYPE
Y = 1.5SOHC 6 = 1.6DOHC . = COMMON	M = MANUAL T/A A = AUTOMATIC T/A . = COMMON	4 N = 4 DOOR NOTCHBACK 3 H = 3 DOOR HATCHBACK 5 H = 5 DOOR HATCHBACK

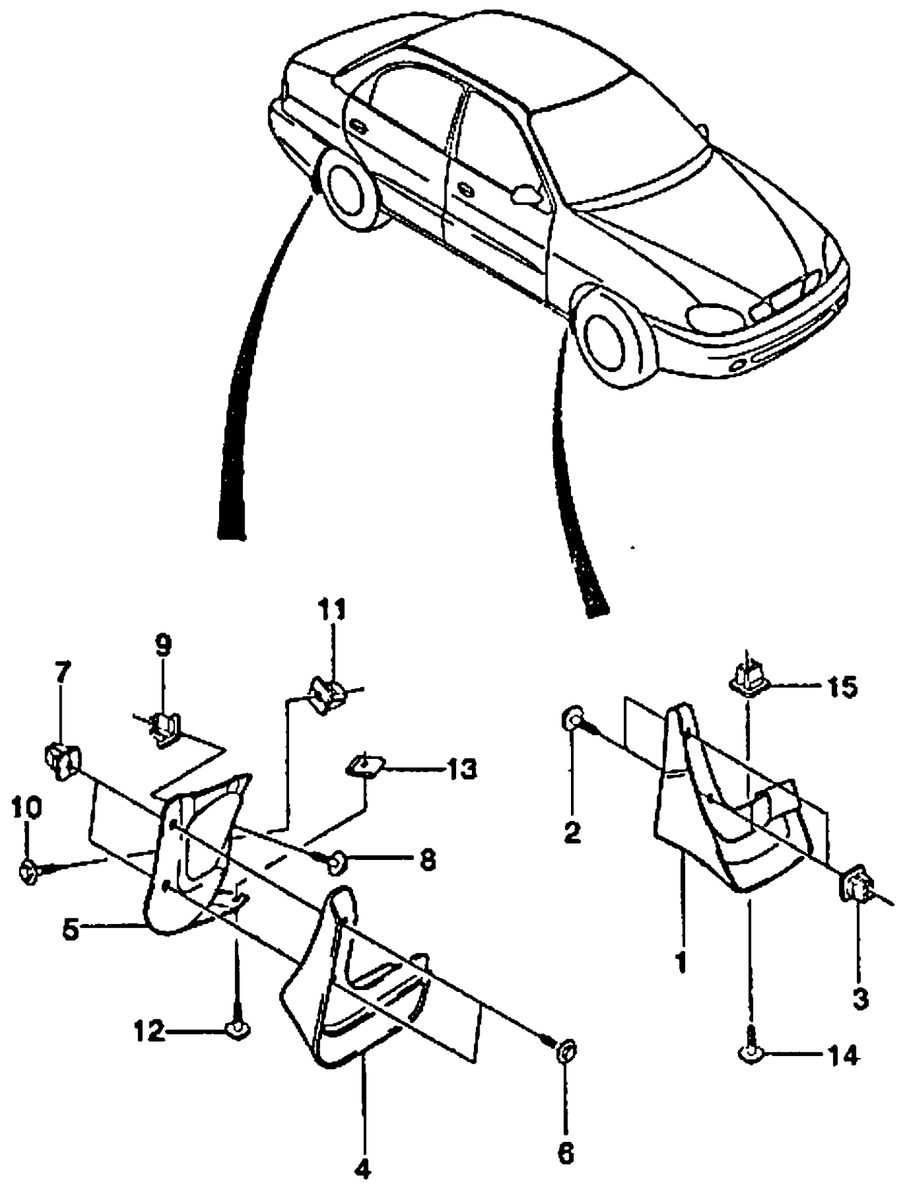

KEY NO. ITC	PART NO	MODEL ENG	T/A	BODY 4N	3H	5H	LEVEL S	SE	SX	OPTION	L/R	QTY	EFFECTIVE DATE FROM	TO	REMARKS	P/CODE
[01]		(E)GUARD A-MUD,FRONT (D)KOTFLÜGEL									(F)GARDE-GARDE-BOUE (S)PROTECTOR-GUARDAFANGO					
	96303235	.	.	B	B	B	A	A	A		LH	1				
	96306140	.	.	B	B	B	A	A	A		RH	1				
[02]		(E)SCREW-TAPPING (D)SCHRAUBE									(F)VIS (S)TORNILLO					
	09136-04005	.	.	B	B	B	A	A	A			4		970804		
	Y 09136-04013	.	.	B	B	B	A	A	A			4	970804			
[03]		(E)NUT-SPEED (D)MUTTER									(F)ECROU (S)TUERCA					
	09148-04003	.	.	B	B	B	A	A	A			4				
[04]		(E)GUARD-MUD,REAR (D)KOTFLÜGEL,SCHLAMM									(F)GARDE-BOUE (S)PROTECTOR-LODO					
	96303233	.	.	B	.	.	A	A	A		LH	1				
	96306249	.	.	B	.	.	A	A	A		RH	1				
	96303239	.	.	.	B	B	A	.	A		LH	1				
	96306250	.	.	.	B	B	A	.	A		RH	1				
[05]		(E)GUARD-WHEEL,REAR (D)KOTFLÜGEL,SCHLAMM									(F)GARDE-BOUE (S)PROTECTOR-LODO					
	96306231	.	.	B	.	.	S	S	S		LH	1				
	96306232	.	.	B	.	.	S	S	S		RH	1				
	96304674	.	.	.	B	B	S	.	S		LH	1				
	96304675	.	.	.	B	B	S	.	S		RH	1				
[06]		(E)SCREW-TAPPING (D)SCHRAUBE									(F)VIS (S)TORNILLO					
	09136-04005	.	.	B	B	B	A	A	A			4				

ENG(ENGINE)	T/A(TRANSAXLE)	BODY TYPE
Y = 1.5SOHC 6 = 1.6DOHC . = COMMON	M = MANUAL T/A A = AUTOMATIC T/A . = COMMON	4 N = 4 DOOR NOTCHBACK 3 H = 3 DOOR HATCHBACK 5 H = 5 DOOR HATCHBACK

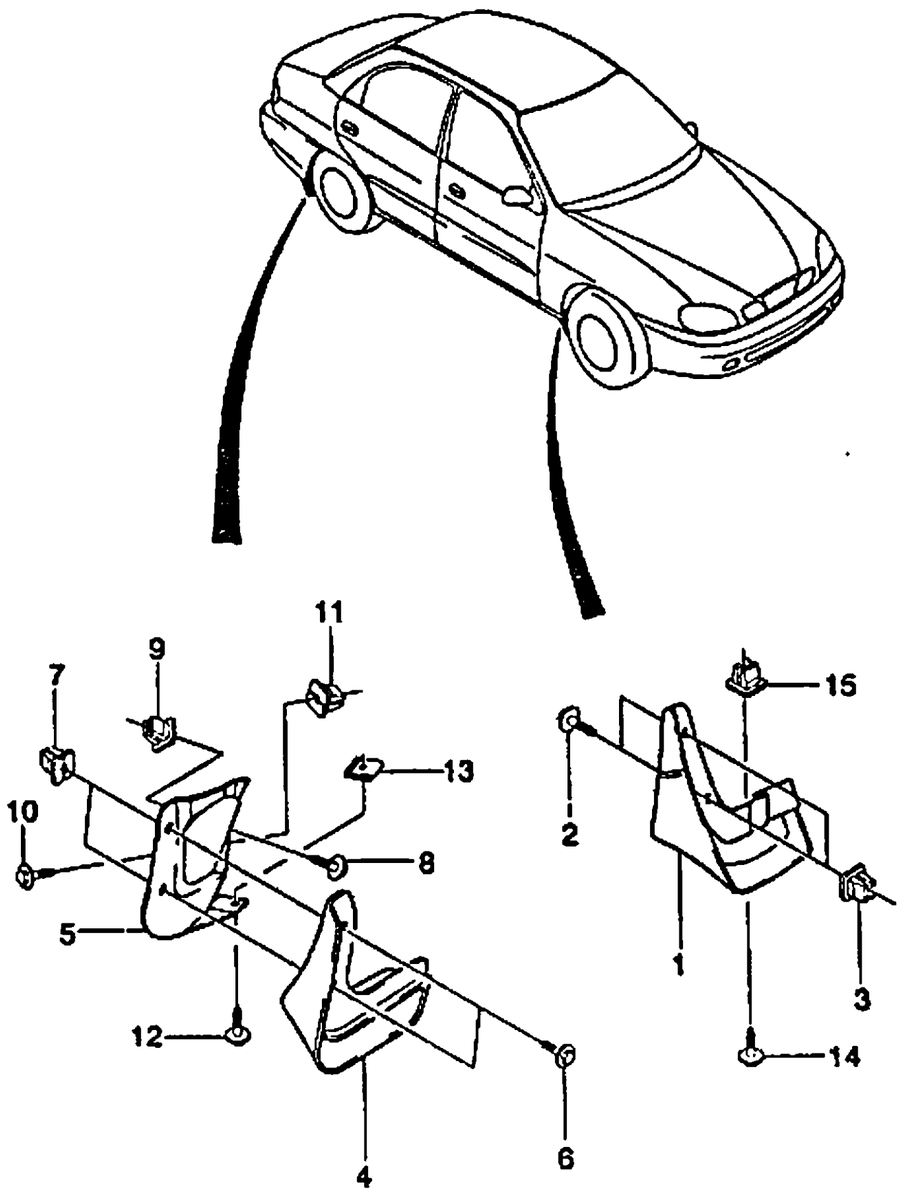

KEY NO. ITC	PART NO	MODEL ENG	MODEL T/A	MODEL BODY 4N	MODEL BODY 3H	MODEL BODY 5H	MODEL LEVEL S	MODEL LEVEL SE	MODEL LEVEL SX	OPTION	L/R	QTY	EFFECTIVE DATE FROM	EFFECTIVE DATE TO	REMARKS	P/CODE
[07]	09148-04010	(E)NUT-SPEED (D)MUTTER		.	.	B	B	B	A	A	A		(F)ECROU (S)TUERCA 4			
[08]	09136-04005	(E)SCREW-TAPPING (D)SCHRAUBE		.	.	B	B	B	A	A	A		(F)VIS (S)TORNILLO 2			
[09]	09148-04003	(E)NUT-SPEED (D)MUTTER		.	.	B	B	B	A	A	A		(F)ECROU (S)TUERCA 2			
[10]	09136-04005	(E)SCREW-TAPPING (D)SCHRAUBE		.	.	B	B	B	A	A	A		(F)VIS (S)TORNILLO 2			
[11]	09148-04003	(E)NUT-SPEED (D)MUTTER		.	.	B	B	B	A	A	A		(F)ECROU (S)TUERCA 2			
[12]	09136-04005	(E)SCREW-TAPPING (D)SCHRAUBE		.	.	B	B	B	A	A	A		(F)VIS (S)TORNILLO 2			
[13]	09148-04010	(E)NUT-SPEED (D)MUTTER		.	.	B	B	B	A	A	A		(F)ECROU (S)TUERCA 2			
[14]	09136-04005	(E)SCREW-TAPPING (D)SCHRAUBE		.	.	B	B	B	A	A	A		(F)VIS (S)TORNILLO 2			
[15]	09148-04003	(E)NUT-SPEED (D)MUTTER		.	.	B	B	B	A	A	A		(F)ECROU (S)TUERCA 2			

ENG(ENGINE)	T/A(TRANSAXLE)	BODY TYPE
Y = 1.5SOHC 6 = 1.6DOHC . = COMMON	M = MANUAL T/A A = AUTOMATIC T/A . = COMMON	4 N = 4 DOOR NOTCHBACK 3 H = 3 DOOR HATCHBACK 5 H = 5 DOOR HATCHBACK

7 INTERIOR

7110 INSTRUMENT PANEL
7120 MOLDING & SWITCH
7130 INSTRUMENT CENTER PARTS
7140 CONSOLE
7210 FRONT DOOR TRIM
7220 REAR DOOR TRIM
7310 HEADLINING
7320 SHELF BACK PANEL
7321 COVER-CENTER,LOAD COMPT
7330 FRONT PILLAR TRIM (4DOOR N/B)
7331 FRONT PILLAR TRIM (5DOOR H/B)
7332 FRONT PILLAR TRIM (3DOOR H/B)
7340 REAR PILLAR TRIM (N/B)
7341 REAR PILLAR TRIM (H/B)
7350 SUNSHADE & INSIDE MIRROR
7510 FRONT SEAT
7520 FRONT SEAT PARTS
7530 SEAT GUIDE RAIL
7540 REAR SEAT I
7541 REAR SEAT II
7550 FRONT SEAT BELT
7560 REAR SEAT BELT
7610 FRONT FLOOR CARPET
7620 REAR FLOOR CARPET
7630 DEADENER

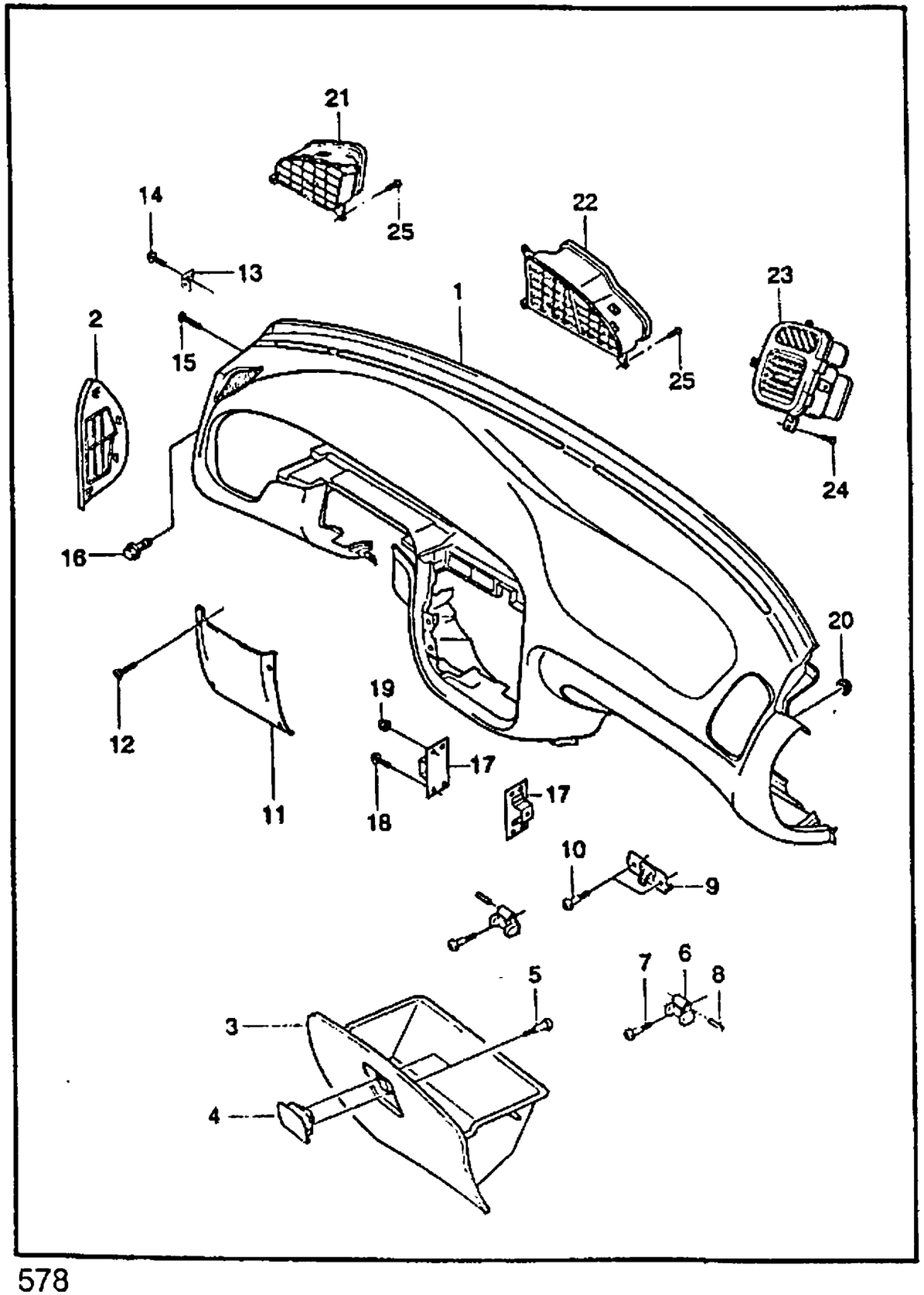

KEY NO. ITC	PART NO	MODEL ENG	T/A	BODY 4N	3H	5H	LEVEL S	SE	SX	OPTION	L/R	QTY	EFFECTIVE DATE FROM	TO	REMARKS	P/CODE
[01]		(E)PANEL-INSTRUMENT (D)VERKLEIDUNG,INSTRUMENT									(F)PANNEAU-TABLEAU DE BORD (S)PANEL-INSTRUMENTO					
	96235802	.	.	B	B	B	S	S	S	-ABF		1				
	96235804	.	.	B	B	B	.	O	O	&ABF		1				
[02]		(E)COVER-INST PANEL,SIDE (D)DECKEL									(F)CARTER (S)CUBIERTA					
	96246806	.	.	B	B	B	S	S	S		LH	1				R3
	96246808	.	.	B	B	B	S	S	S		RH	1				R4
[03]		(E)BOX A-GLOVE (D)HANDSCHUHFACH									(F)BOITE-GANTS (S)CAJA-GUANTERA					
	96235825	.	.	B	B	B	S	S	S	-ABF		1			INCL. #4~6,8	R7
	96235823	.	.	B	B	B	.	O	O	&ABF		1			INCL. #4~6,8	R5
[04]		(E)LOCK A-GLOVE BOX (D)SCHLOß,HANDSCHUHFACH									(F)VERROU-BOITE A GANTS (S)CERRADURA					
	96235836	.	.	B	B	B	S	S	S			1				
[05]		(E)SCREW (D)SCHRAUBE									(F)VIS (S)TORNILLO					
	02124-04123	.	.	B	B	B	S	S	S			2				
[06]		(E)HINGE-GLOVE BOX (D)BESCHLAG,HANDSCHUHFACH									(F)CHARNIERE-BOITE A GANTS (S)BISAGRA					
	96221361	.	.	B	B	B	S	S	S			2				
[07]		(E)SCREW (D)SCHRAUBE									(F)VIS (S)TORNILLO					
	02146-15205	.	.	B	B	B	S	S	S			2				
[08]		(E)PIN-GLOVE BOX (D)STIFT,HANDSCHUHFACH									(F)BROCHE-BOITE A GANTS (S)PASADOR-GUANTERA					
	96221307	.	.	B	B	B	S	S	S			2				

ENG(ENGINE)	T/A(TRANSAXLE)	BODY TYPE
Y = 1.5SOHC 6 = 1.6DOHC . = COMMON	M = MANUAL T/A A = AUTOMATIC T/A . = COMMON	4 N = 4 DOOR NOTCHBACK 3 H = 3 DOOR HATCHBACK 5 H = 5 DOOR HATCHBACK

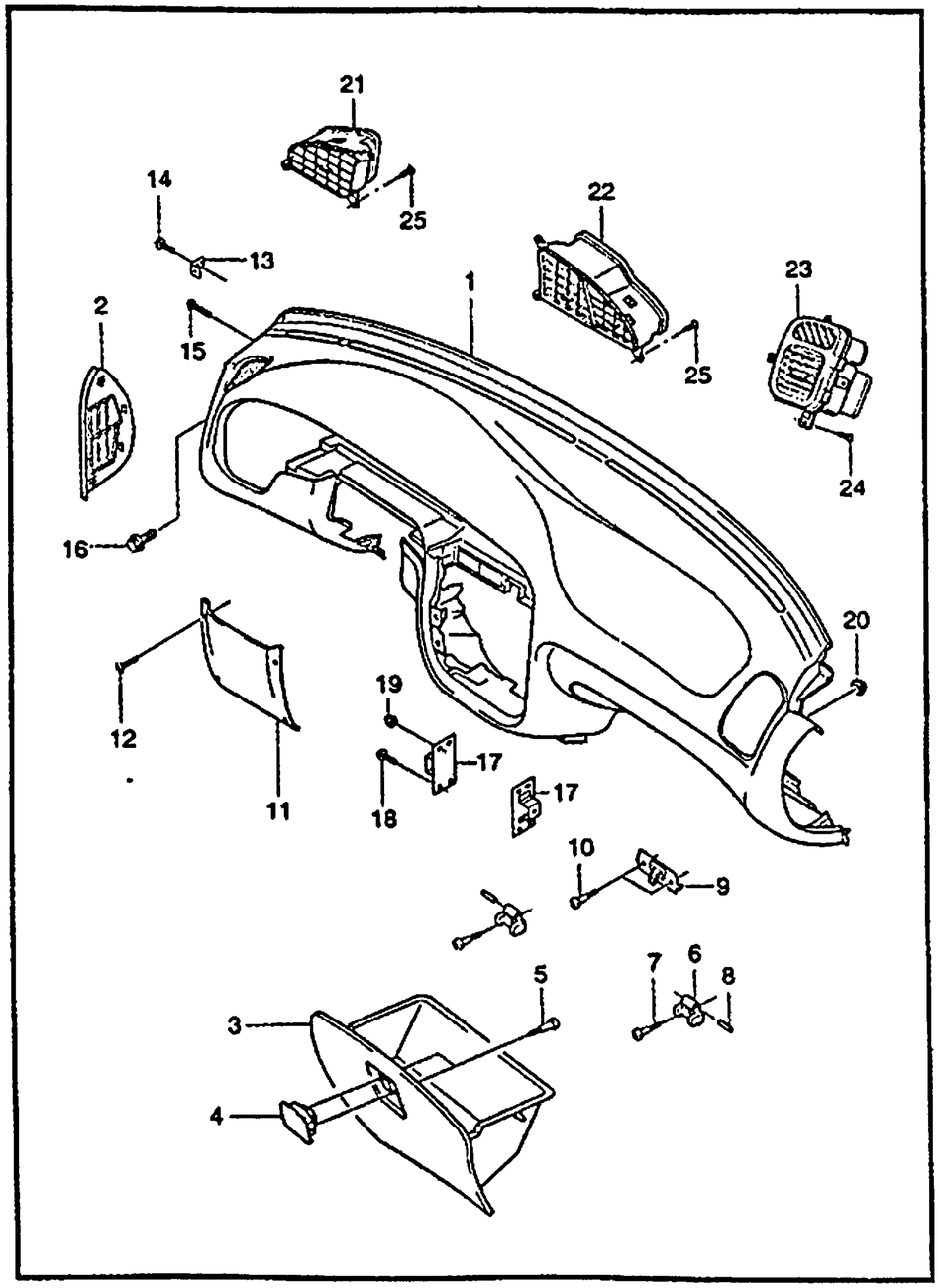

KEY NO. ITC	PART NO	MODEL ENG	T/A	BODY 4N	3H	5H	LEVEL S	SE	SX	OPTION	L/R	QTY	EFFECTIVE DATE FROM	TO	REMARKS	P/CODE
[09]		(E)STRIKER A-GLOVE BOX (D)SCHLÄGER (F)MARTEAU (S)HUELGUISTA														
	96221301	.	.	B	B	B	S	S	S			1				
[10]		(E)SCREW (D)SCHRAUBE (F)VIS (S)TORNILLO														
	02146-15165	.	.	B	B	B	S	S	S			2				
[11]		(E)COVER-INST PANEL,LOWER (D)DECKEL (F)CARTER (S)CUBIERTA														
	96235788	.	.	B	B	B	S	S	S			1				R3
[12]		(E)SCREW-TAPPING (D)SCHRAUBE (F)VIS (S)TORNILLO														
	03160-48165	.	.	B	B	B	S	S	S			4				
[13]		(E)BRACKET A-INST PANEL,SIDE (D)TRÄGER (F)SUPPORT (S)SOPORTE														
	96307185	.	.	B	B	B	S	S	S			2				
[14]		(E)BOLT-HEXAGON (D)SCHRAUBE (F)BOULON (S)PERNO														
	01107-06123	.	.	B	B	B	S	S	S			2				
[15]		(E)SCREW (D)SCHRAUBE (F)VIS (S)TORNILLO														
	02146-15165	.	.	B	B	B	S	S	S			2				
[16]		(E)BOLT (D)SCHRAUBE (F)BOULON (S)PERNO														
	09116-08008	.	.	B	B	B	S	S	S			6			W/WASHER	
[17]		(E)PIECE A-CONNECTING (D)TEIL,VERBINDUNGS (F)PIECE-DE CONNEXION (S)PIEZA-CONEXION														
	96214161	.	.	B	B	B	S	S	S		LH	1				
	96214201	.	.	B	B	B	S	S	S		RH	1				

ENG(ENGINE)	T/A(TRANSAXLE)	BODY TYPE
Y = 1.5SOHC	M = MANUAL T/A	4 N = 4 DOOR NOTCHBACK
6 = 1.6DOHC	A = AUTOMATIC T/A	3 H = 3 DOOR HATCHBACK
. = COMMON	. = COMMON	5 H = 5 DOOR HATCHBACK

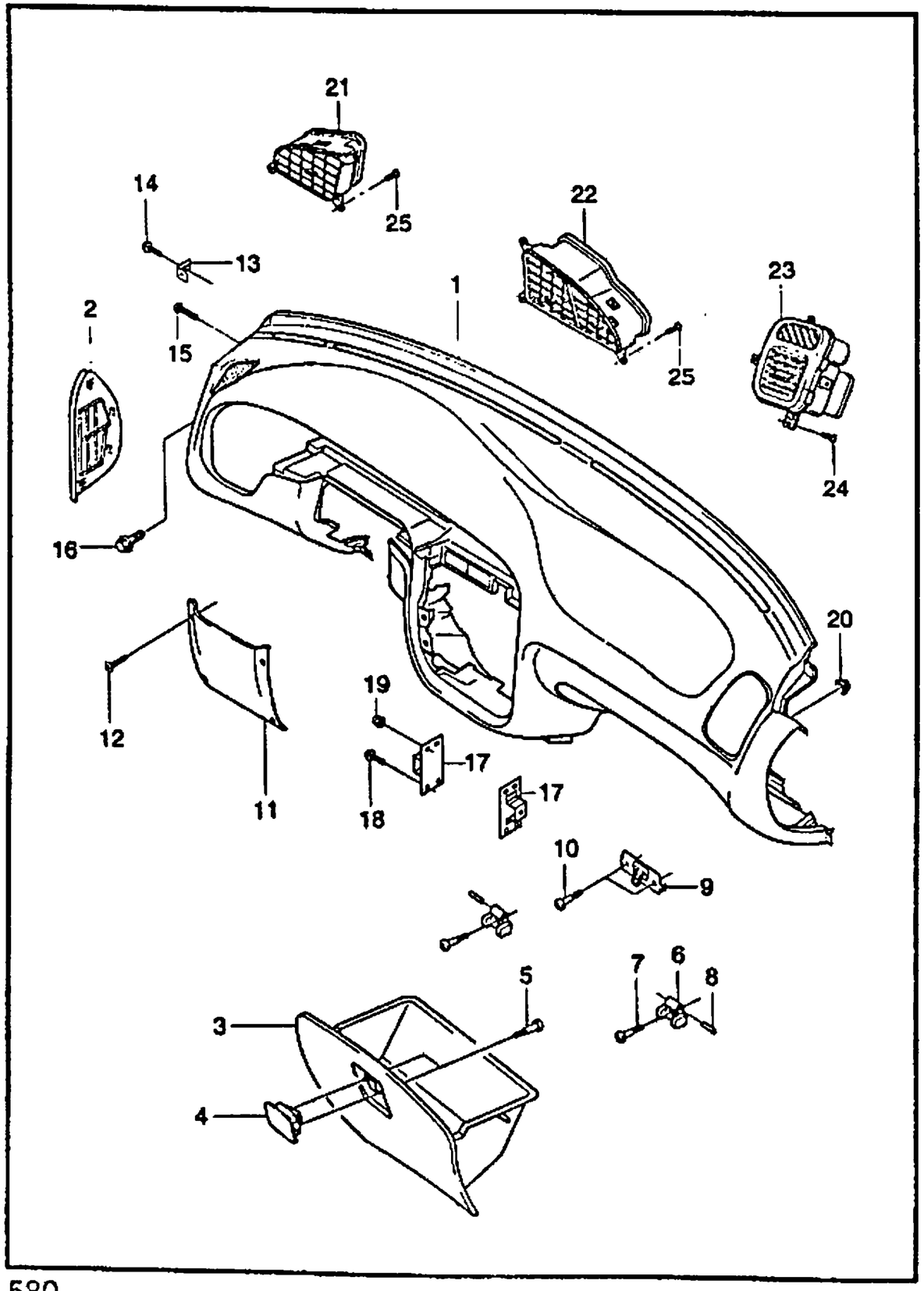

KEY NO.		PART NAME														
I T C	PART NO	MODEL								OPTION	L / R	Q T Y	EFFECTIVE DATE		REMARKS	P / C O D E
		E N G	T / A	BODY			LEVEL						FROM	TO		
				4 N	3 H	5 H	S	S E	S X							
	[18]	(E)BOLT-HEXAGON (D)SCHRAUBE									(F)BOULON (S)PERNO					
	01117-06123	. .		B	B	B	S	S	S			4				
	[19]	(E)NUT-HEXAGON FLANGE (D)MUTTER									(F)ECROU (S)TUERCA					
	08316-15063	. .		B	B	B	S	S	S			4				
	[20]	(E)NUT-HEXAGON (D)MUTTER									(F)ECROU (S)TUERCA					
	08316-28083	. .		B	B	B	S	S	S			2				
	[21]	(E)NOZZLE A-VENT.,DRIVER (D)ABFLUß,LUFT									(F)SORTIE-AIR (S)SALIDA-AIRE					
	96241655	. .		B	B	B	S	S	S			LH 1				
	[22]	(E)NOZZLE A-VENT.,CENTER (D)ABFLUß,LUFT									(F)SORTIE-AIR (S)SALIDA-AIRE					
	96241653	. .		B	B	B	S	S	S			1				
	[23]	(E)NOZZLE A-VENT.,ASSIST. (D)ABFLUß,LUFT									(F)SORTIE-AIR (S)SALIDA-AIRE					
	96236809	. .		B	B	B	S	S	S			RH 1				
	[24]	(E)SCREW-TAPPING (D)SCHRAUBE									(F)VIS (S)TORNILLO					
	03140-48165			B	B	B									NOT APPLED	
	03160-48165	. .		B	B	B	S	S	S			4				
	[25]	(E)SCREW-TAPPING (D)SCHRAUBE									(F)VIS (S)TORNILLO					
	03240-42165	. .		B	B	B	S	S	S			6				

ENG(ENGINE)	T/A(TRANSAXLE)	BODY TYPE
Y = 1.5SOHC 6 = 1.6DOHC . = COMMON	M = MANUAL T/A A = AUTOMATIC T/A . = COMMON	4 N = 4 DOOR NOTCHBACK 3 H = 3 DOOR HATCHBACK 5 H = 5 DOOR HATCHBACK

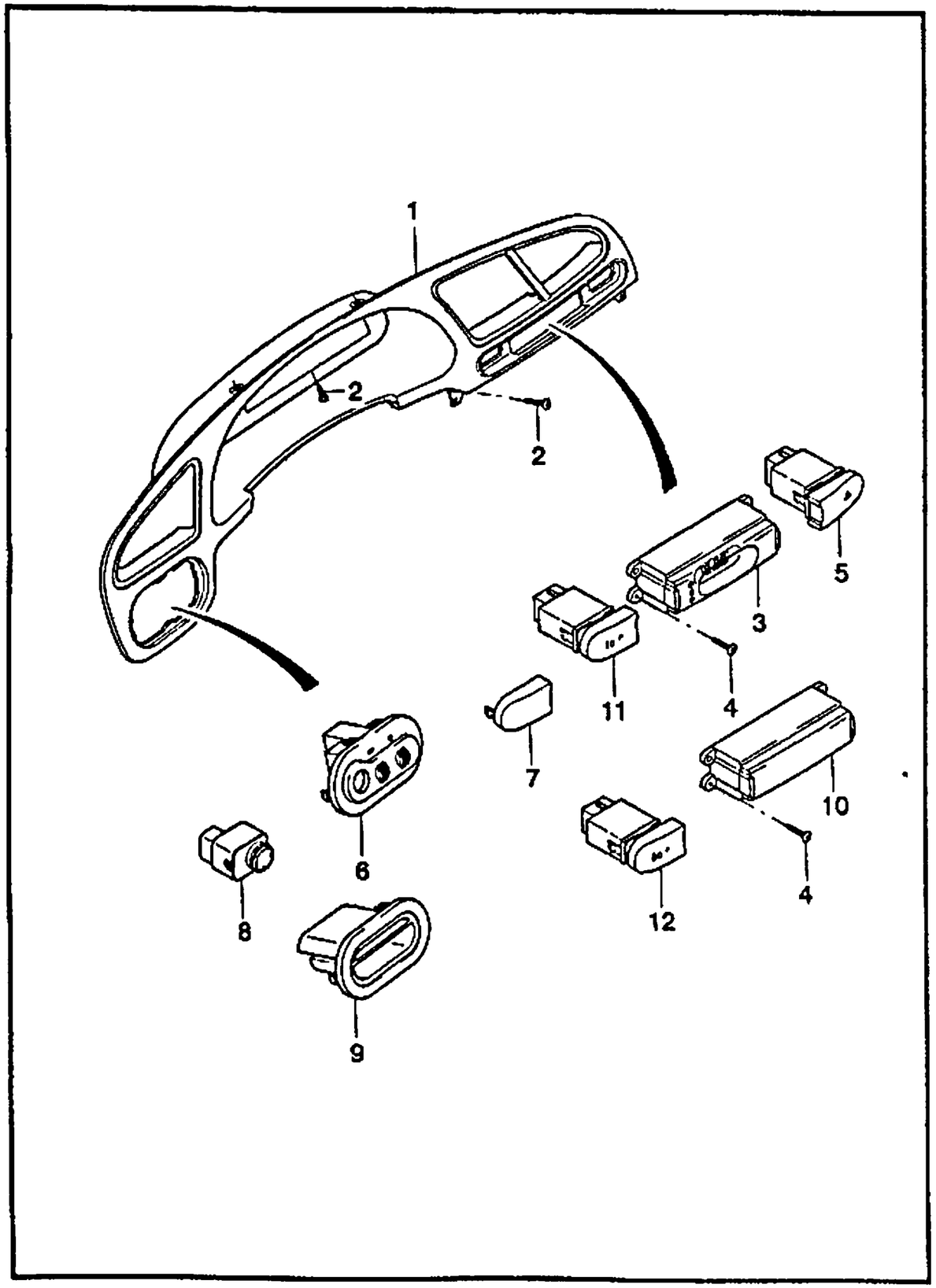

KEY NO. ITC	PART NO	MODEL ENG	T/A	BODY 4N	3H	5H	LEVEL S	SE	SX	OPTION	L/R	QTY	EFFECTIVE DATE FROM	TO	REMARKS	P/CODE
[01]	(E)HOUSING-INSTRUMENT CLUSTE (D)GEHÄUSE ARMATURENBRETT										(F)LOGEMENT-GRAPPE (S)CARCASA-TABLERO DE INSTRU					
96240807		.	.	B	B	B	S	S	S			1		970602		B3
96255623		.	.	B	B	B	S	S	S	-N33		1	970602			B5
96240807		.	.	B	B	B	.	.	O	&N33		1	970602			B3
96240807		.	.	B	B	B	.	O	O	&N33		1			POLAND ONLY	B3
[02]	(E)SCREW-TAPPING (D)SCHRAUBE										(F)VIS (S)TORNILLO					
03160-48165		.	.	B	B	B	S	S	S			6				
[03]	(E)CLOCK A-DIGITAL (D)UHR,DIGITAL										(F)HORLOGE-DIGITALE (S)RELOJ-DIGITAL					
96236122		.	.	B	B	B	O	S	S	-UM1		1				CA
96236123		.	.	B	B	B	A	A	A	&UM1		1				CB
[04]	(E)SCREW-TAPPING (D)SCHRAUBE										(F)VIS (S)TORNILLO					
03110-42135		.	.	B	B	B	S	S	S			2				
[05]	(E)SWITCH A-HAZARD LIGHT (D)SCHALTER,WARNBLINKER										(F)COMMUTATEUR (S)INTERRUPTOR					
96231858		.	.	B	B	B	S	S	S			1				HY
[06]	(E)SWITCH A-HOUSING (D)SCHALTER										(F)COMMUTATEUR (S)INTERRUPTOR					
96230809		.	.	B	B	B	.	.	O	&DD4-HL4		1				ME
96230807		.	.	B	B	B	.	.	A	&DD4&HL4		1				MB
96230811		.	.	B	B	B	A	A	A	&HL4-DD4		1				MH
[07]	(E)COVER-BLANK, F/LAMP S/W (D)DECKEL										(F)COUVERCLE (S)CUBIERTA					
96230804		.	.	B	B	B	S	S	S	-T97/T98		1				DC

ENG(ENGINE)	T/A(TRANSAXLE)	BODY TYPE
Y = 1.5SOHC 6 = 1.6DOHC . = COMMON	M = MANUAL T/A A = AUTOMATIC T/A . = COMMON	4 N = 4 DOOR NOTCHBACK 3 H = 3 DOOR HATCHBACK 5 H = 5 DOOR HATCHBACK

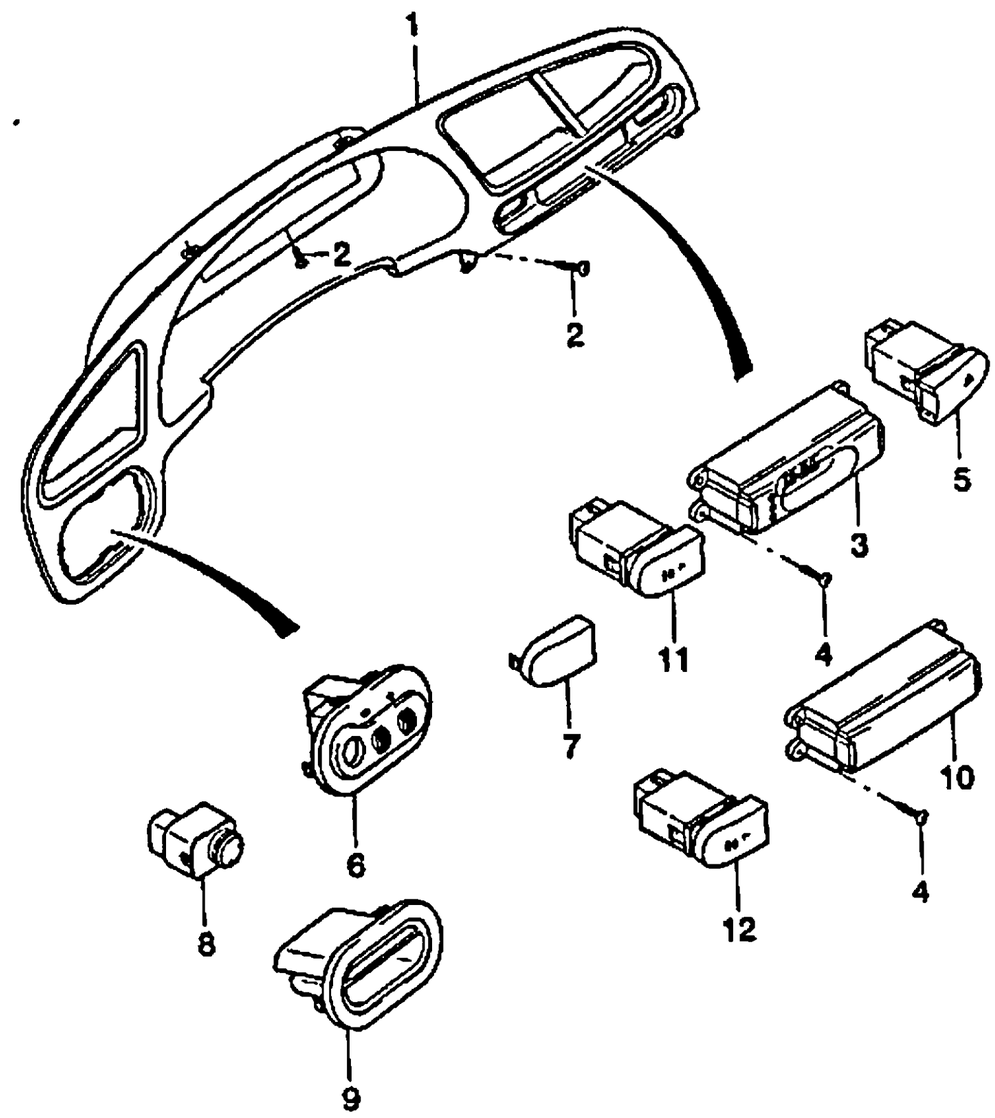

KEY NO. ITC	PART NO	MODEL ENG	T/A	BODY 4N	3H	5H	LEVEL S	SE	SX	OPTION	L/R	QTY	EFFECTIVE DATE FROM	TO	REMARKS	P/CODE
[08]		(E)SWITCH A-MIRROR ADJUST (D)SCHALTER									(F)COMMUTATEUR (S)INTERRUPTOR					
	96230818	.	.	B	B	B	.	.	O	&DD4		1				KP
[09]		(E)BOX A-DEPOSIT, CARD (D)KASTEN									(F)BOITE-DEPOT (S)CAJA DE DEPOSITOS					
	96242595	.	.	B	B	B	S	S	S			1				
[10]		(E)COVER-BLANK,CLOCK (D)DECKEL									(F)COUVERCLE (S)CUBIERTA					
	96236126	.	.	B	B	B	S	.	.	-UM1		1				CC
	96236127	.	.	B	B	B	A	.	.	&UM1		1				CD
[11]		(E)SWITCH A-FOG LAMP (D)SCHALTER									(F)COMMUTATEUR (S)INTERRUPTOR					
	96230802	.	.	B	B	B	.	O	O	&T97-T98		1				DA
[12]		(E)SWITCH A-FOG LAMP,REAR (D)SCHALTER									(F)COMMUTATEUR (S)INTERRUPTOR					
	96242528	.	.	B	B	B	A	A	A	&T98		1				DE

ENG(ENGINE)	T/A(TRANSAXLE)	BODY TYPE
Y = 1.5SOHC	M = MANUAL T/A	4 N = 4 DOOR NOTCHBACK
6 = 1.6DOHC	A = AUTOMATIC T/A	3 H = 3 DOOR HATCHBACK
. = COMMON	. = COMMON	5 H = 5 DOOR HATCHBACK

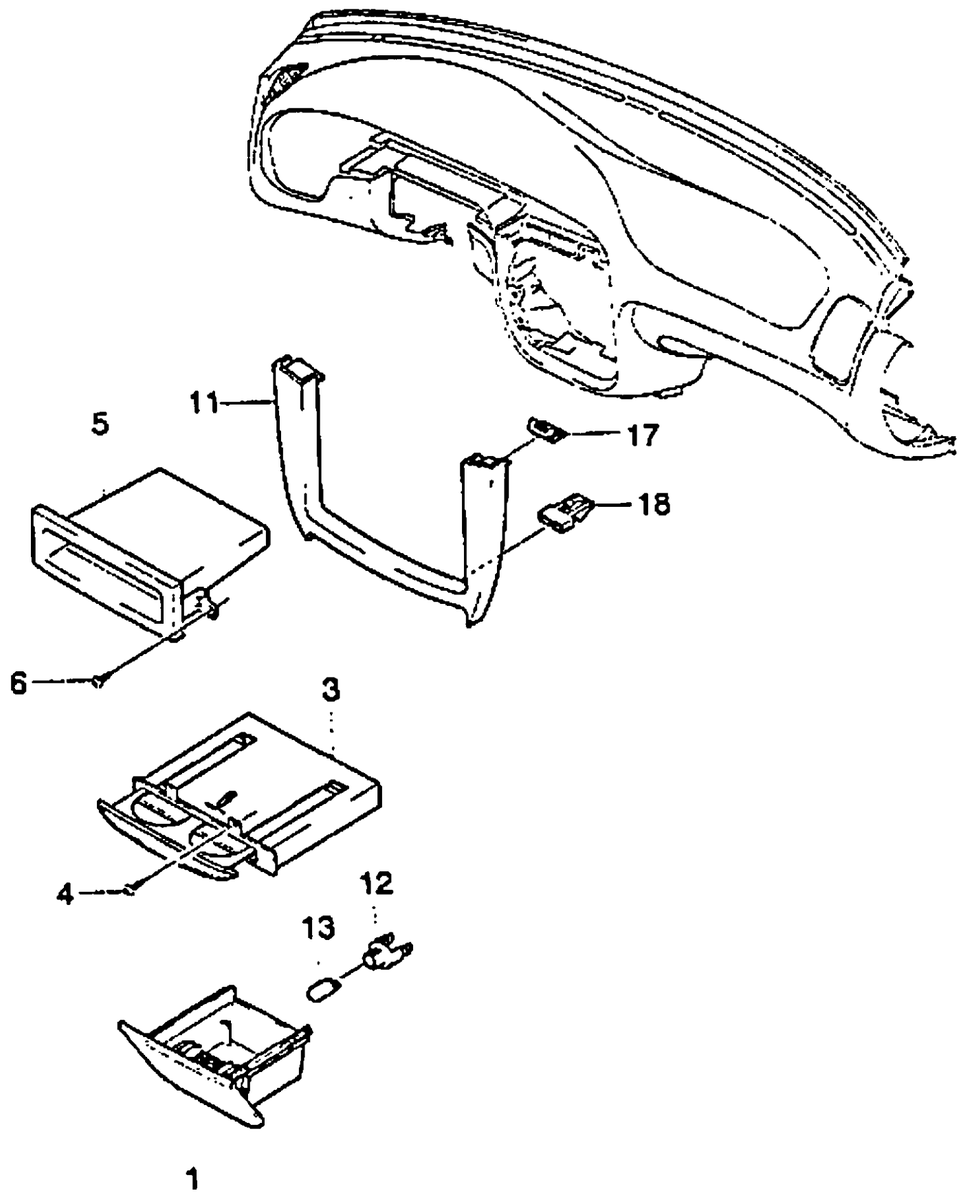

KEY NO. ITC	PART NO	MODEL ENG	T/A	BODY 4N	3H	5H	LEVEL S	SE	SX	OPTION	L/R	QTY	EFFECTIVE DATE FROM	TO	REMARKS	P/CODE
[01]		(E)ASHTRAY A-INSTRUMENT PNL (D)ASCHENBECHER									(F)CENDRIER-TABLEAU DE BORD (S)CENICERO					
96235808		.	.	B	B	B	S	S	S			1				
[03]		(E)HOLDER A-CUP (D)BEHÄLTER									(F)MONTURE (S)RETNEDOR					
96242957		.	.	B	B	B	S	S	S			1				
[04]		(E)SCREW-TAPPING (D)SCHRAUBE									(F)VIS (S)TORNILLO					
03160-42165		.	.	B	B	B	S	S	S			2				
[05]		(E)BOX-I/P CENTER DEPOSIT (D)ZENTRAL-FACH									(F)BOITE-DEPOT CENTRAL (S)CAJA-DEPOSITO					
96304289		.	.	B	B	B	S	S	S			1				B1
[06]		(E)SCREW (D)SCHRAUBE									(F)VIS (S)TORNILLO					
02116-05165		.	.	B	B	B	S	S	S			2				
[11]		(E)BEZEL A-AUDIO (D)KASTEN									(F)BISEAU (S)BISEL					
96303173		.	.	B	B	B	S	S	S			1				B2
[12]		(E)SOCKET (D)FASSUNG BIRNE									(F)CULOT-AMPOULE (S)ENCHUFE-BOMBILLA					
11067612		.	.	B	B	B	S	S	S			1				
[13]		(E)BULB (D)BIRNE									(F)AMPOULE (S)BOMBILLA					
11062449		.	.	B	B	B	S	S	S			1				
Y 09471-12012		.	.	B	B	B	S	S	S			1				
[16]		(E)FRAME-CASSETTE (D)RAHMEN-KASSETTE									(F)CADRE-CASSETTE (S)ARMADURA-CASETE					
96254552		.	.	B	B	B	S	S	S			1			A/S ONLY	

ENG(ENGINE)	T/A(TRANSAXLE)	BODY TYPE
Y = 1.5SOHC 6 = 1.6DOHC . = COMMON	M = MANUAL T/A A = AUTOMATIC T/A . = COMMON	4 N = 4 DOOR NOTCHBACK 3 H = 3 DOOR HATCHBACK 5 H = 5 DOOR HATCHBACK

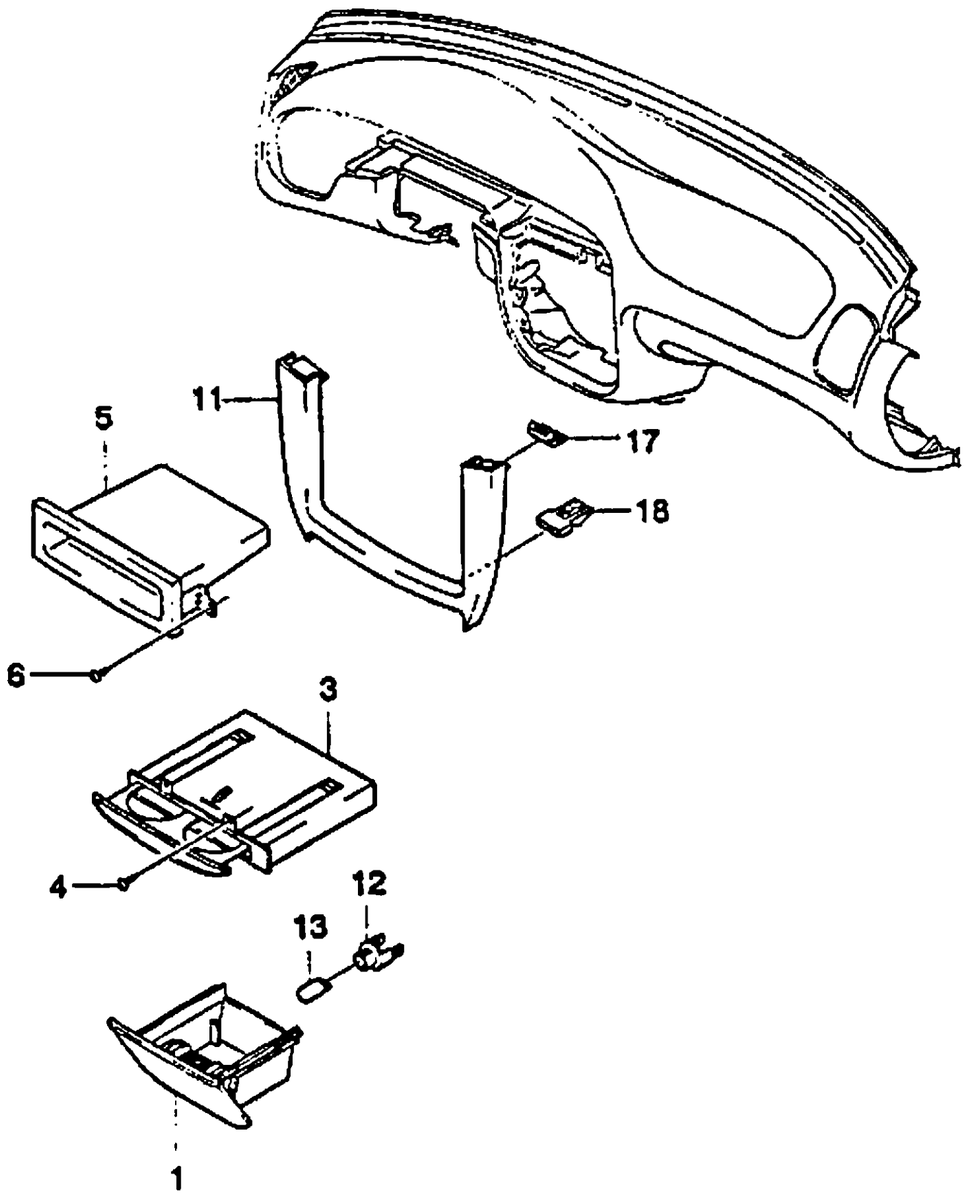

KEY NO.		PART NAME															
ITC	PART NO	MODEL								OPTION	L/R	QTY	EFFECTIVE DATE		REMARKS	P/CODE
		ENG	T/A	BODY			LEVEL						FROM	TO		
				4N	3H	5H	S	SE	SX							
[17]		(E)CLIP-SPRING									(F)ATTACHE					
		(D)RAHMEN-KASSETTE									(S)GRAPA					
96232340		.	.	B	B	B	S	S	S			2				
[18]		(E)CLIP-SPRING									(F)ATTACHE					
		(D)RAHMEN-KASSETTE									(S)GRAPA					
96221359		.	.	B	B	B	S	S	S			2				

ENG(ENGINE)	T/A(TRANSAXLE)	BODY TYPE
Y = 1.5SOHC	M = MANUAL T/A	4 N = 4 DOOR NOTCHBACK
6 = 1.6DOHC	A = AUTOMATIC T/A	3 H = 3 DOOR HATCHBACK
. = COMMON	. = COMMON	5 H = 5 DOOR HATCHBACK

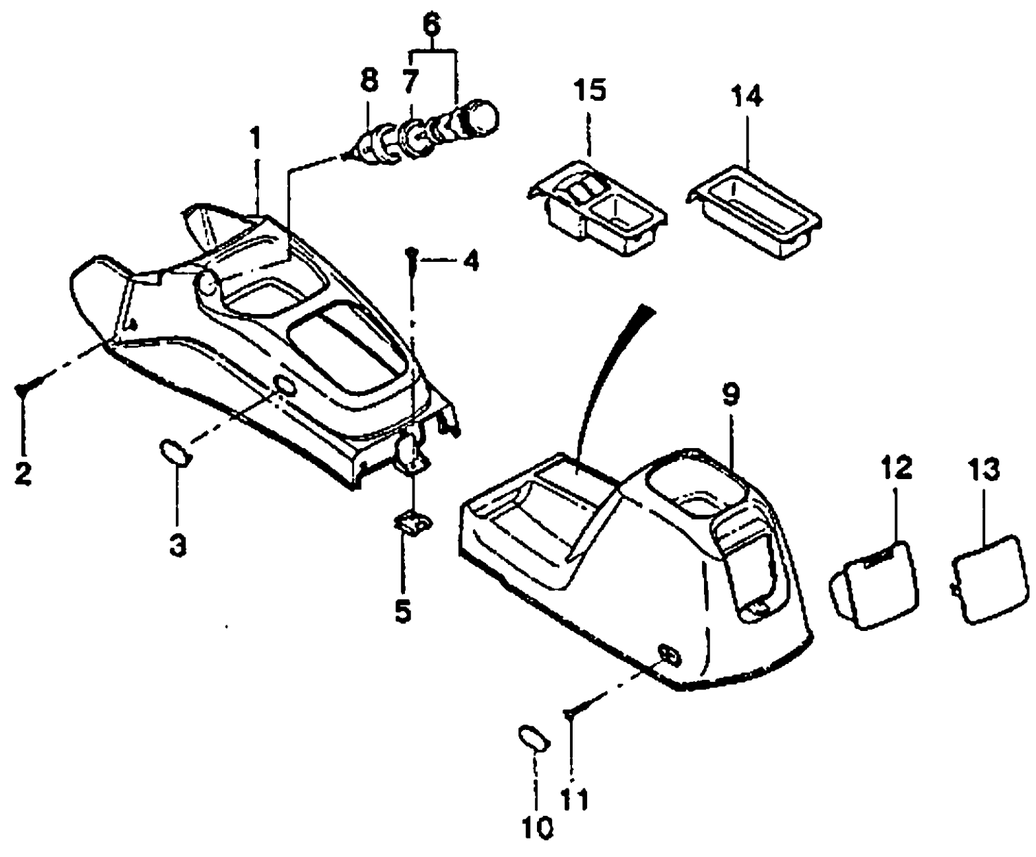

KEY NO. ITC	PART NO	MODEL ENG	T/A	BODY 4N	3H	5H	LEVEL S	SE	SX	OPTION	L/R	QTY	EFFECTIVE DATE FROM	TO	REMARKS	P/CODE
[01]		(E)CONSOLE-FRONT (D)KONSOLE VORNE									(F)CONSOLE-AVANT (S)CONSOLA-FRENTE					
	96236781	.	.	B	B	B	S	S	S			1		970701		LH
N	96252617	.	.	B	B	B	S	S	S			1	970701			
[02]		(E)SCREW-TAPPING (D)SCHRAUBE									(F)VIS (S)TORNILLO					
	03160-48165	.	.	B	B	B	S	S	S			2				
[03]		(E)PLUG-CONSOLE (D)STÖPSEL									(F)BOUCHON (S)TAPON					
	96236795	.	.	B	B	B	S	S	S			1				
[04]		(E)SCREW-TAPPING (D)SCHRAUBE									(F)VIS (S)TORNILLO					
	03160-48165	.	.	B	B	B	S	S	S			1				
[05]		(E)NUT-SPEED (D)MUTTER									(F)ECROU (S)TUERCA					
	09148-04013	.	.	B	B	B	S	S	S			1				
[06]		(E)LIGHTER A-CIGAR (D)ANZÜNDER,ZIGARETTEN									(F)ALLUME-CIGARETTE (S)ENCENDEDOR					
	96160018	.	.	B	B	B	S	S	S			1		970701		
N	96242635	.	.	B	B	B	S	S	S			1	970701			
[08]		(E)RING A-LIGHT (D)RING,ZIGARETTEN-ANZÜNDER									(F)ANNEAU-ALLUME-CIGARETTE (S)ANILLO-LUZ DE CIGARRILLO					
	96242616	.	.	B	B	B	S	S	S			1		970701		
N	96233408	.	.	B	B	B	S	S	S			1	970701			
[09]		(E)CONSOLE A-REAR (D)KONSOLE HINTEN									(F)CONSOLE-ARRIERE (S)CONSOLA-TRASERO					
	96239363	.	.	B	B	B	S	S	S			1		970807		
O	96252621	.	.	B	B	B	S	S	S			1	970807			

ENG(ENGINE)	T/A(TRANSAXLE)	BODY TYPE
Y = 1.5SOHC 6 = 1.6DOHC . = COMMON	M = MANUAL T/A A = AUTOMATIC T/A . = COMMON	4 N = 4 DOOR NOTCHBACK 3 H = 3 DOOR HATCHBACK 5 H = 5 DOOR HATCHBACK

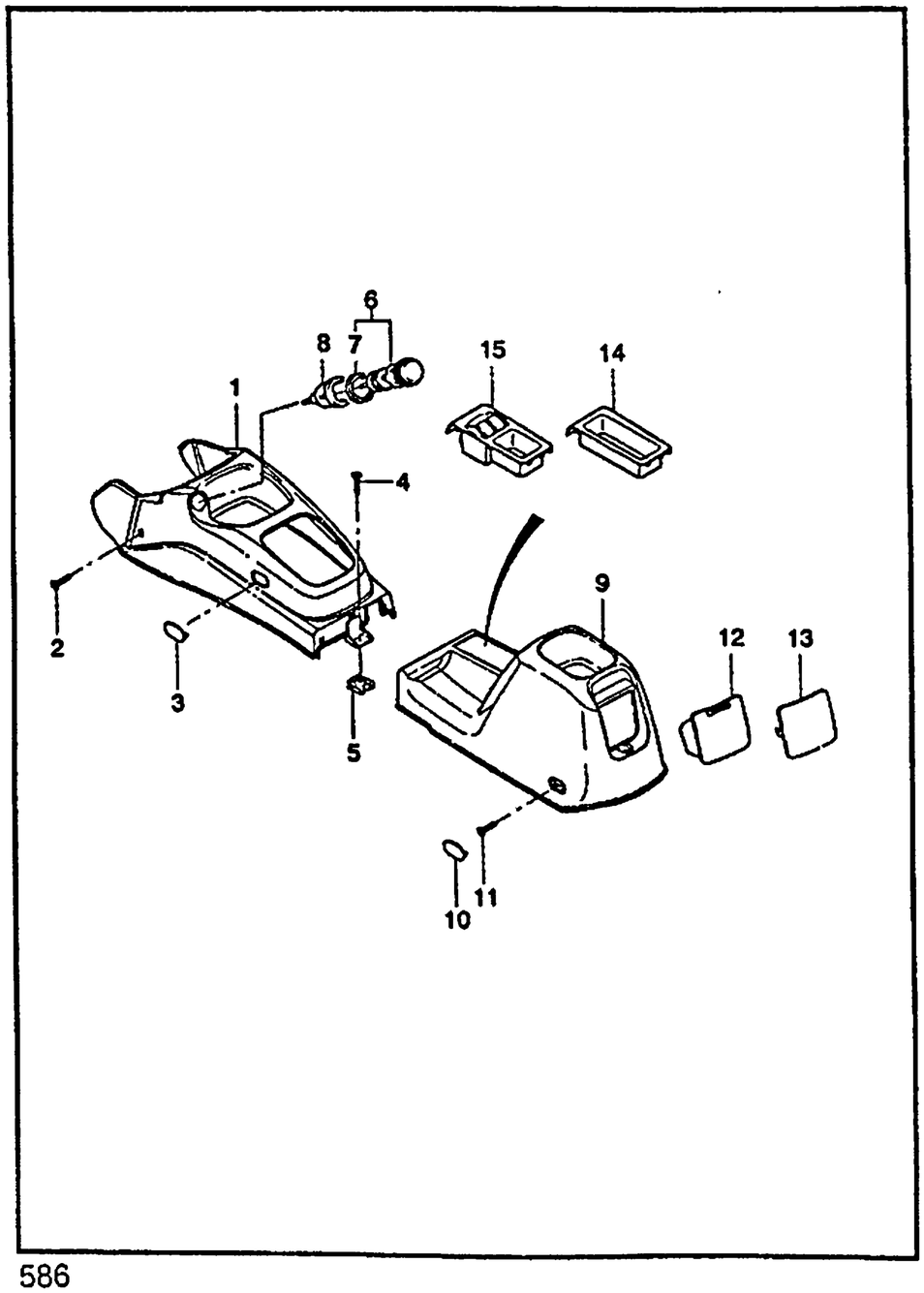

KEY NO. ITC	PART NO	MODEL ENG	T/A	BODY 4N	3H	5H	LEVEL S	SE	SX	OPTION	L/R	QTY	EFFECTIVE DATE FROM	TO	REMARKS	P/CODE
[10]		(E)PLUG-CONSOLE (D)STÖPSEL									(F)BOUCHON (S)TAPON					
	96236795	.	.	B	B	B	S	S	S			2		970907		
[11]		(E)SCREW-TAPPING (D)SCHRAUBE									(F)VIS (S)TORNILLO					
	03240-48165	.	.	B	B	B	S	S	S			2				
	Y 03160-48165	.	.	B	B	B	S	S	S			2				
[12]		(E)ASHTRAY A-CONSOLE,REAR (D)ASCHENBECHER									(F)CENDRIER (S)CENICERO					
	96236792	.	.	B	B	B	.	.	S			1		970901		
	96236792	.	.	B	B	B	S	S	S			1	970901			
[13]		(E)COVER-REAR CONSOLE (D)DECKEL									(F)COUVERCLE (S)CUBIERTA					
	96239325	.	.	B	B	B	S	S	.			1		970901		
[14]		(E)COVER-BLANK,WDO LIFTER SW (D)DECKEL									(F)COUVERCLE (S)CUBIERTA					
	96233407	.	.	B	B	B	S	S	.	&A30		1				KB
[15]		(E)SWITCH A-WINDOW LIFTER (D)SCHALTER									(F)COMMUTATEUR (S)INTERRUPTOR					
	96233406	.	.	B	B	B	O	O	S	&A32		1				KA
	96242532	.	.	B	.	B	.	.	O	&A31		1				KA

ENG(ENGINE)	T/A(TRANSAXLE)	BODY TYPE
Y = 1.5SOHC	M = MANUAL T/A	4 N = 4 DOOR NOTCHBACK
6 = 1.6DOHC	A = AUTOMATIC T/A	3 H = 3 DOOR HATCHBACK
. = COMMON	. = COMMON	5 H = 5 DOOR HATCHBACK

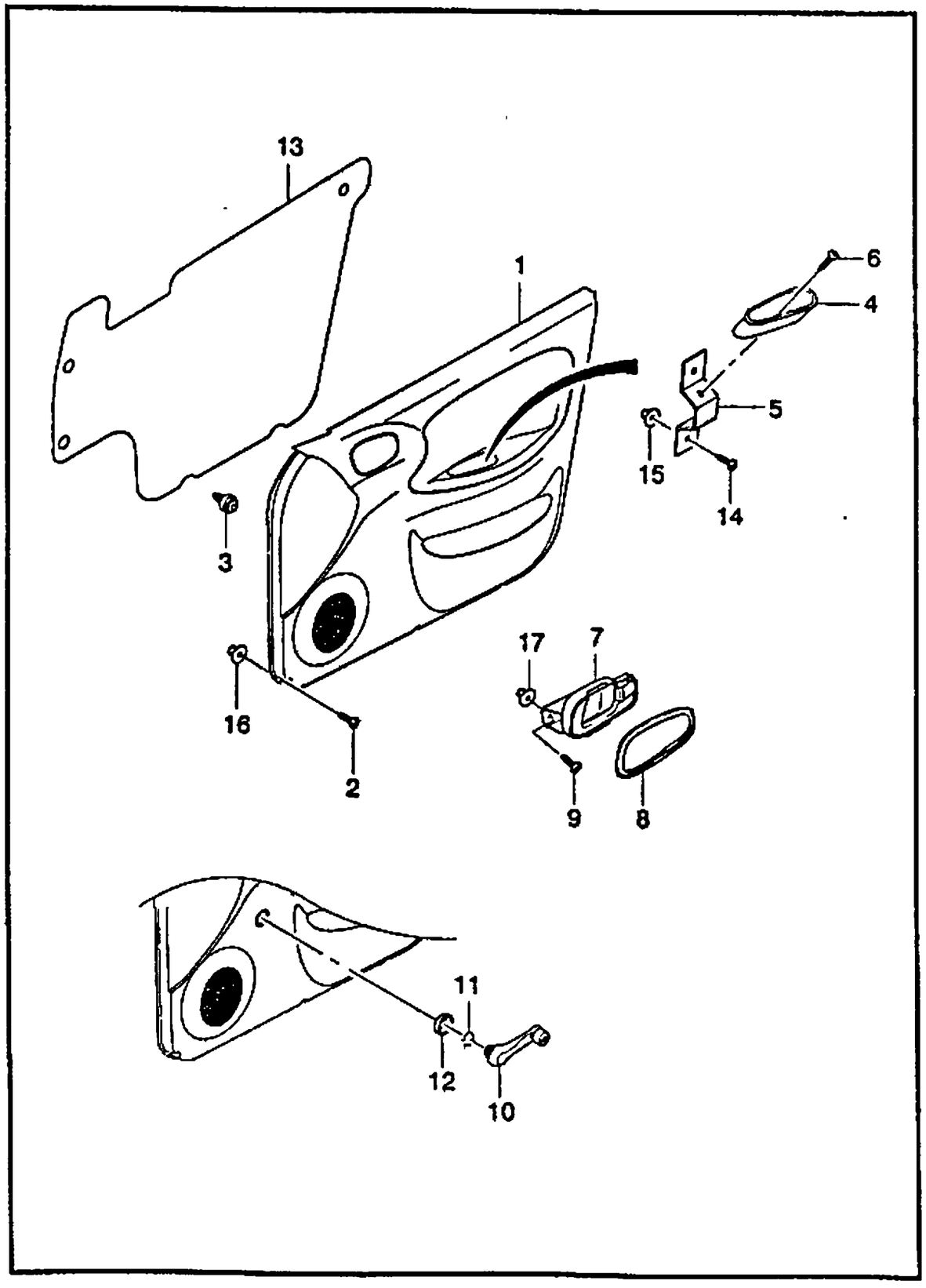

KEY NO.		PART NAME															
ITC	PART NO	MODEL								OPTION	L/R	QTY	EFFECTIVE DATE		REMARKS	P/CODE
		ENG	T/A	BODY 4N	BODY 3H	BODY 5H	LEVEL S	LEVEL SE	LEVEL SX				FROM	TO		
	[01]	(E)TRIM A-FRONT DOOR (D)VERKLEIDUNG,VORDERTÜR									(F)GARNITURE-PORTE AVANT (S)ADORNO-PUERTA DELANTERA					
	96236137	.	.	B	.	B	S	.	.	&A30&TD1	LH	1				A1
	96236138	.	.	B	.	B	S	.	.	&A30&TD1	RH	1				A2
	96247276	.	.	B	.	B	O	S	.	&A30&TD2	LH	1				J5
	96247277	.	.	B	.	B	O	S	.	&A30&TD2	RH	1				J6
	96236141	.	.	B	.	B	O	O	S	&A31/A32&TD2	LH	1				A5
	96236142	.	.	B	.	B	O	O	S	&A31/A32&TD2	RH	1				A6
	96236145	.	.	.	B	.	S	.	.	&A30&TD1	LH	1				G1
	96236146	.	.	.	B	.	S	.	.	&A30&TD1	RH	1				G2
	96247284	.	.	.	B	.	O	.	.	&A30&TD2	LH	1				M3
	96247285	.	.	.	B	.	O	.	.	&A30&TD2	RH	1				M4
	96236149	.	.	.	B	.	O	.	S	&A32&TD2	LH	1				G5
	96236150	.	.	.	B	.	O	.	S	&A32&TD2	RH	1				G6
	[02]	(E)SCREW-TAPPING (D)SCHRAUBE									(F)VIS (S)TORNILLO					
	03160-48165	.	.	B	B	B	S	S	S			6				
	[03]	(E)CLIP (D)KLEMME									(F)ATTACHE (S)GRAPA					
	09409-08301	.	.	B	.	B	S	S	S			10				
	09409-08301	.	.	.	B	.	S	.	S			12				
	[04]	(E)HANDLE-DOOR POCKET (D)HENKEL									(F)POIGNEE (S)MANIJA					
	96236165	.	.	B	B	B	S	.	.	&TD1		2				
	96236166	.	.	B	B	B	O	S	S	&TD2		2				

ENG(ENGINE)	T/A(TRANSAXLE)	BODY TYPE
Y = 1.5SOHC 6 = 1.6DOHC . = COMMON	M = MANUAL T/A A = AUTOMATIC T/A . = COMMON	4 N = 4 DOOR NOTCHBACK 3 H = 3 DOOR HATCHBACK 5 H = 5 DOOR HATCHBACK

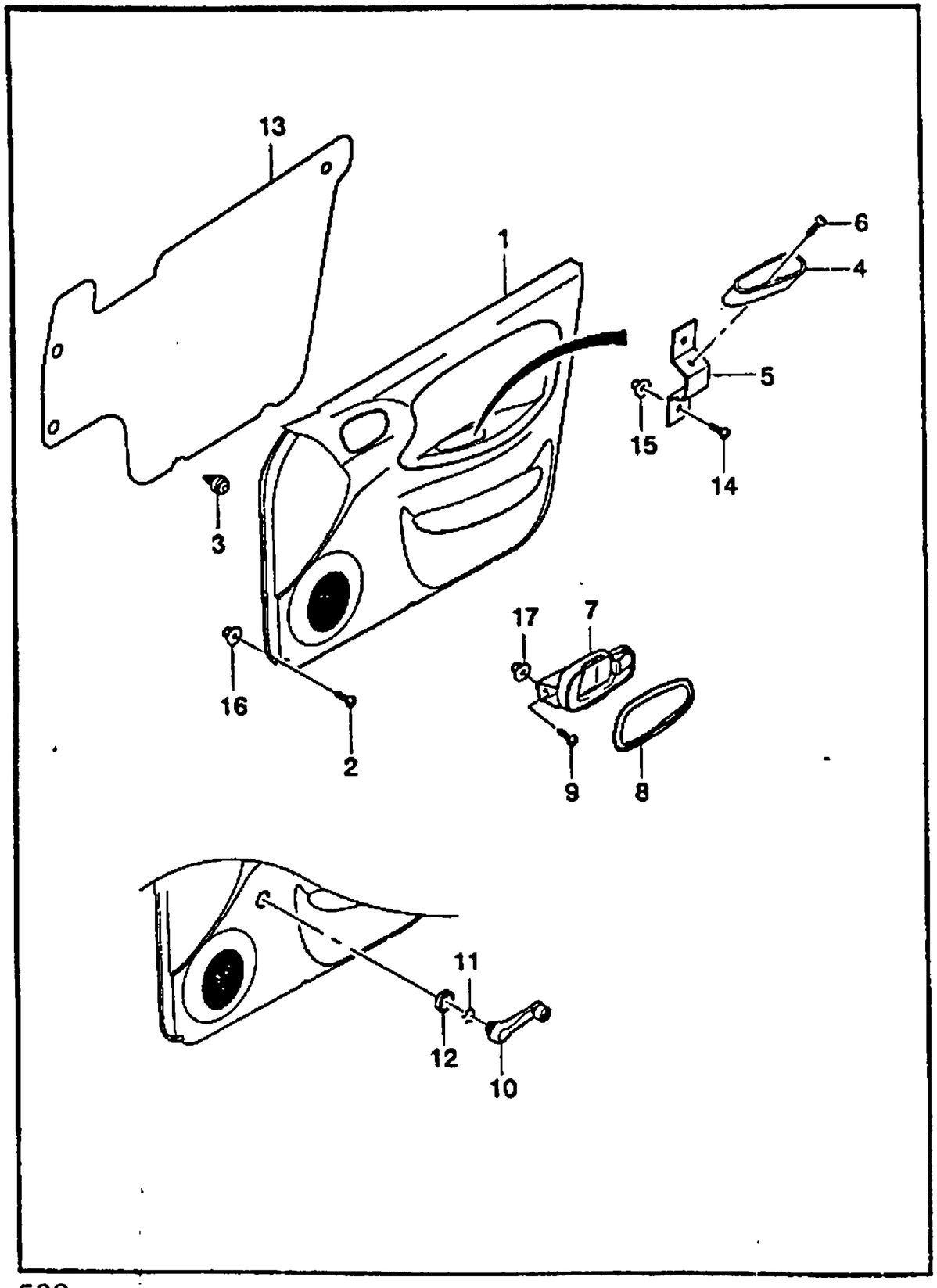

KEY NO.	PART NAME															
ITC	PART NO	MODEL								OPTION	L/R	QTY	EFFECTIVE DATE		REMARKS	P/CODE
		ENG	T/A	BODY			LEVEL						FROM	TO		
				4N	3H	5H	S	SE	SX							
[05]		(E)BRACKET-DOOR POCKET HANDL (D)TRÄGER									(F)SUPPORT (S)SOPORTE					
	96304828	.	.	B	B	B	S	S	S			2				
[06]		(E)SCREW-TAPPING (D)SCHRAUBE									(F)VIS (S)TORNILLO					
	03160-48165	.	.	B	B	B	S	S	S			2				
[07]		(E)HANDLE A-DOOR INSIDE (D)HENKEL									(F)POIGNEE (S)MANIJA					
	96238351	.	.	B	B	B	S	S	S		LH	1				
	96238352	.	.	B	B	B	S	S	S		RH	1				
[08]		(E)ESCUTCHEON-INSIDE HANDLE (D)ESCHTCHEON									(F)ECUSSON (S)EMBELLECEDOR					
	96238359	.	.	B	B	B	S	S	S		LH	1				
	96238360	.	.	B	B	B	S	S	S		RH	1				
[09]		(E)SCREW-TAPPING (D)SCHRAUBE									(F)VIS (S)TORNILLO					
	03160-48165	.	.	B	B	B	S	S	S			2				
[10]		(E)CRANK A-WINDOW LIFTER (D)KURBEL,FENSTER HEBER									(F)MANIVELLE-SOULEVEUR (S)MANIVELA-LEVANTADOR					
	96238361	.	.	B	B	B	S	S	.	&A30		2				
[11]		(E)RING (D)RING									(F)ANNEAU (S)ANILLO					
	09388-00001	.	.	B	B	B	S	S	.	&A30		2				
[12]		(E)WASHER-WINDOW LIFTER CRAN (D)DICHTUNGSRING									(F)RONDELLE (S)ARANDELA					
	96238365	.	.	B	B	B	S	S	.	&A30		2				
[13]		(E)SEAL-FRONT DOOR TRIM (D)DICHTUNG									(F)JOINT (S)SELLO					

ENG(ENGINE)	T/A(TRANSAXLE)	BODY TYPE
Y = 1.5SOHC	M = MANUAL T/A	4 N = 4 DOOR NOTCHBACK
6 = 1.6DOHC	A = AUTOMATIC T/A	3 H = 3 DOOR HATCHBACK
. = COMMON	. = COMMON	5 H = 5 DOOR HATCHBACK

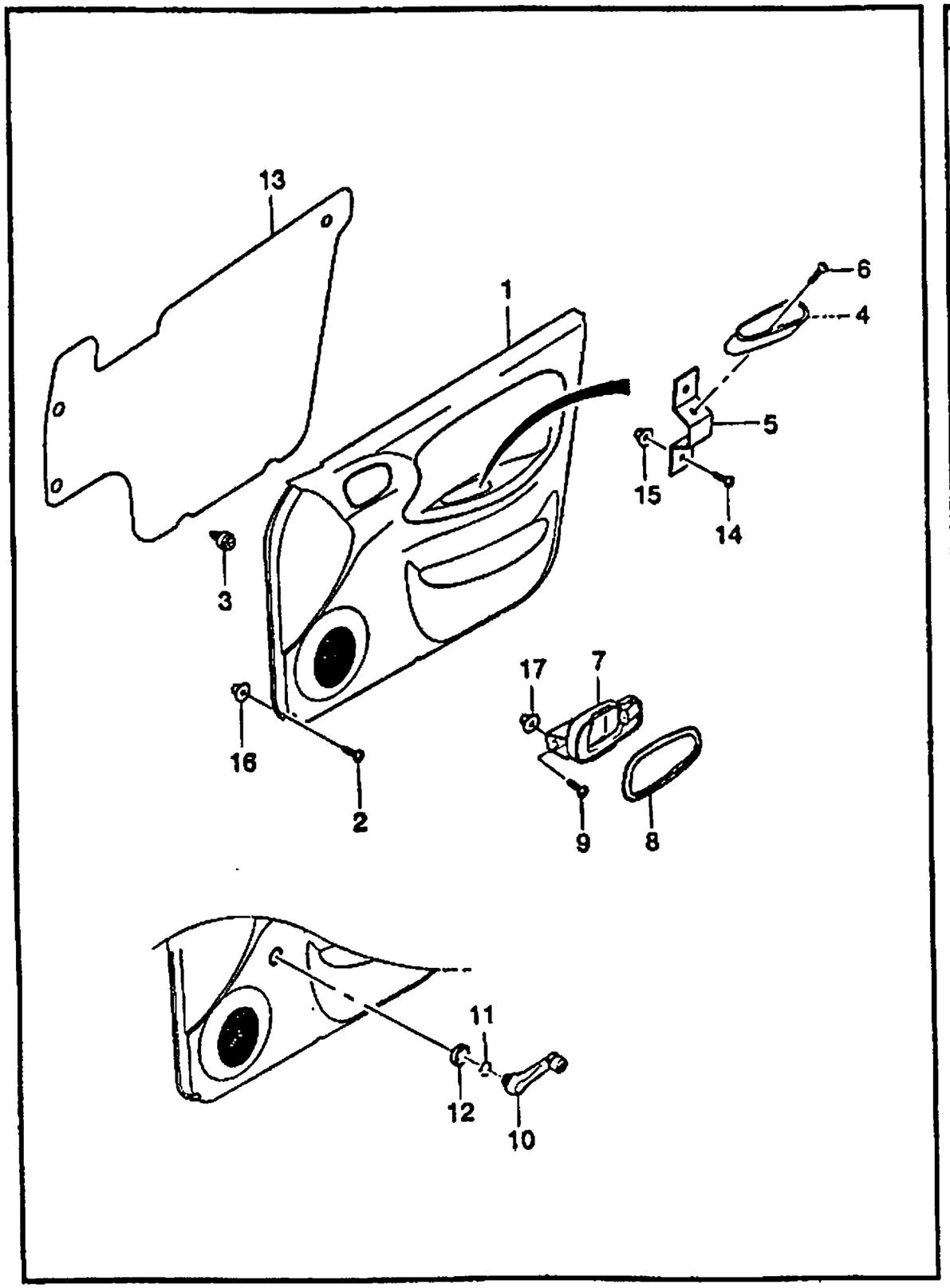

KEY NO. ITC	PART NO	MODEL ENG	T/A	BODY 4N	3H	5H	LEVEL S	SE	SX	OPTION	L/R	QTY	EFFECTIVE DATE FROM	TO	REMARKS	P/CODE
	96304070	.	.	B	.	B	S	S	S		LH	1				
	96304071	.	.	B	.	B	S	S	S		RH	1				
	96304068	.	.	.	B	.	S	.	S		LH	1				
	96304069	.	.	.	B	.	S	.	S		RH	1				
[14]	(E)SCREW-TAPPING (D)SCHRAUBE										(F)VIS (S)TORNILLO					
	03160-48165	.	.	B	B	B	S	S	S			4				
[15]	(E)NUT-SPEED (D)MUTTER										(F)ECROU (S)TUERCA					
	09148-04005	.	.	B	B	B	S	S	S			4				
[16]	(E)NUT-SPEED (D)MUTTER										(F)ECROU (S)TUERCA					
	09148-04005	.	.	B	B	B	S	S	S			6				
[17]	(E)NUT-SPEED (D)MUTTER										(F)ECROU (S)TUERCA					
	09148-04005	.	.	B	B	B	S	S	S			2				

ENG(ENGINE)	T/A(TRANSAXLE)	BODY TYPE
Y = 1.5SOHC	M = MANUAL T/A	4 N = 4 DOOR NOTCHBACK
6 = 1.6DOHC	A = AUTOMATIC T/A	3 H = 3 DOOR HATCHBACK
. = COMMON	. = COMMON	5 H = 5 DOOR HATCHBACK

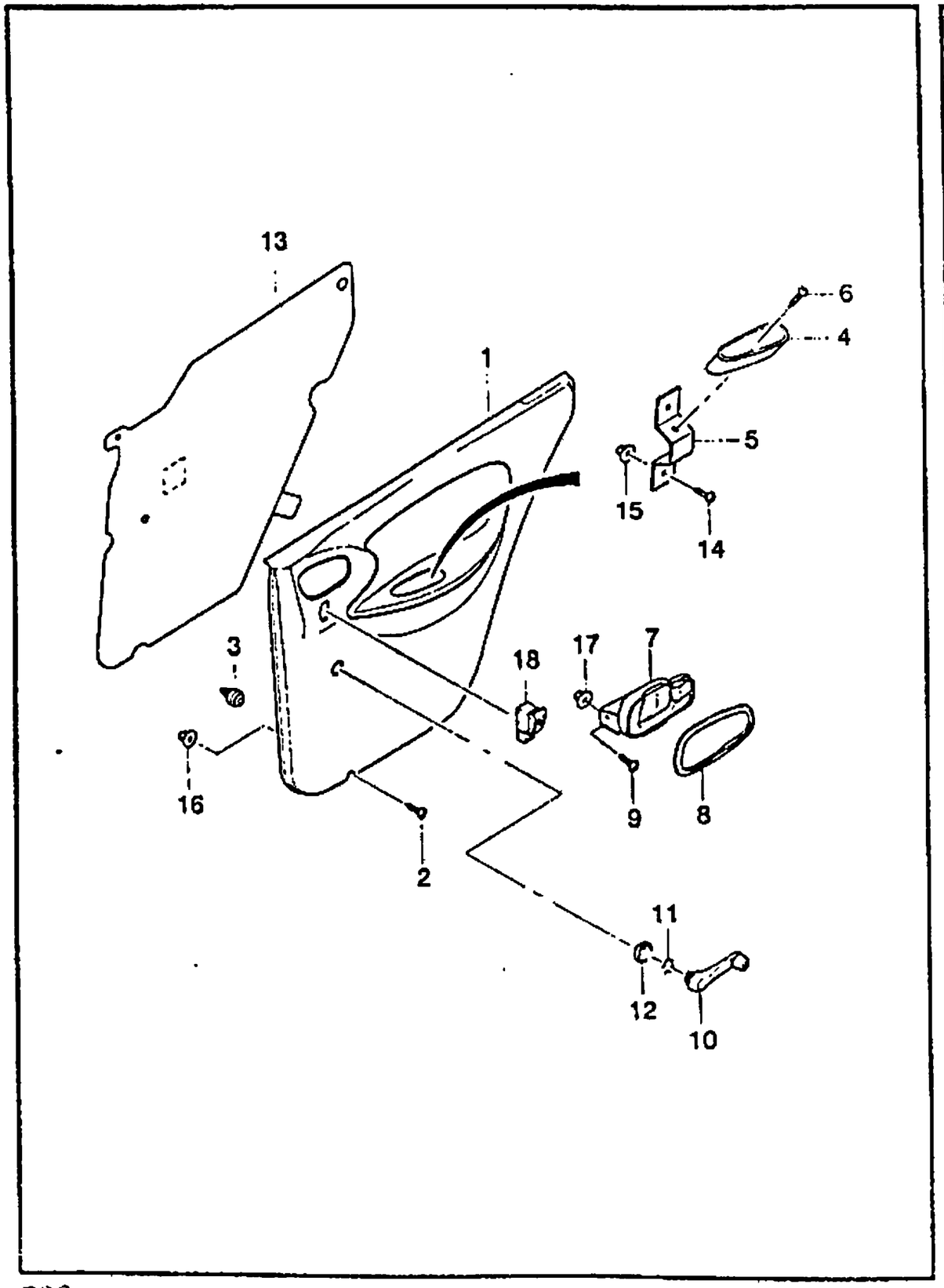

KEY NO. ITC	PART NO	MODEL ENG	MODEL T/A	BODY 4N	BODY 3H	BODY 5H	LEVEL S	LEVEL SE	LEVEL SX	OPTION	L/R	QTY	EFFECTIVE DATE FROM	EFFECTIVE DATE TO	REMARKS	P/CODE
[01]		(E)TRIM A-REAR DOOR (D)VERKLEIDUNG,HINTERTÜR									(F)GARNITURE-PORTE ARRIERE (S)ADORNO-PUERTA TRASERA					
96236171		.	.	B	.	B	S	.	.	&TD1&A30/A32	LH	1				D1
96236172		.	.	B	.	B	S	.	.	&TD1&A30/A32	RH	1				D2
96236175		.	.	B	.	B	O	S	S	&TD2&A30/A32	LH	1				D5
96236176		.	.	B	.	B	O	S	S	&TD2&A30/A32	RH	1				D6
96246592		.	.	B	.	B	.	O	O	&TD2&A31	LH	1				Q1
96246593		.	.	B	.	B	.	O	O	&TD2&A31	RH	1				Q2
[02]		(E)SCREW-TAPPING (D)SCHRAUBE									(F)VIS (S)TORNILLO					
03160-48165		.	.	B	.	B	S	S	S			4				
[03]		(E)CLIP (D)KLEMME									(F)ATTACHE (S)GRAPA					
09409-08301		.	.	B	.	B	S	S	S			12				
[04]		(E)HANDLE-DOOR POCKET (D)HENKEL									(F)POIGNEE (S)MANIJA					
96236165		.	.	B	.	B	S	.	.	&TD1		2				
96236166		.	.	B	.	B	O	S	S	&TD2		2				
[05]		(E)BRACKET-DOOR POCKET HANDL (D)TRÄGER									(F)SUPPORT (S)SOPORTE					
96304828		.	.	B	.	B	S	S	S			2				
[06]		(E)SCREW-TAPPING (D)SCHRAUBE									(F)VIS (S)TORNILLO					
03160-48165		.	.	B	.	B	S	S	S			2				
[07]		(E)HANDLE A-DOOR INSIDE (D)HENKEL									(F)POIGNEE (S)MANIJA					
96238351		.	.	B	.	B	S	S	S		LH	1				

ENG(ENGINE)	T/A(TRANSAXLE)	BODY TYPE
Y = 1.5SOHC 6 = 1.6DOHC . = COMMON	M = MANUAL T/A A = AUTOMATIC T/A . = COMMON	4 N = 4 DOOR NOTCHBACK 3 H = 3 DOOR HATCHBACK 5 H = 5 DOOR HATCHBACK

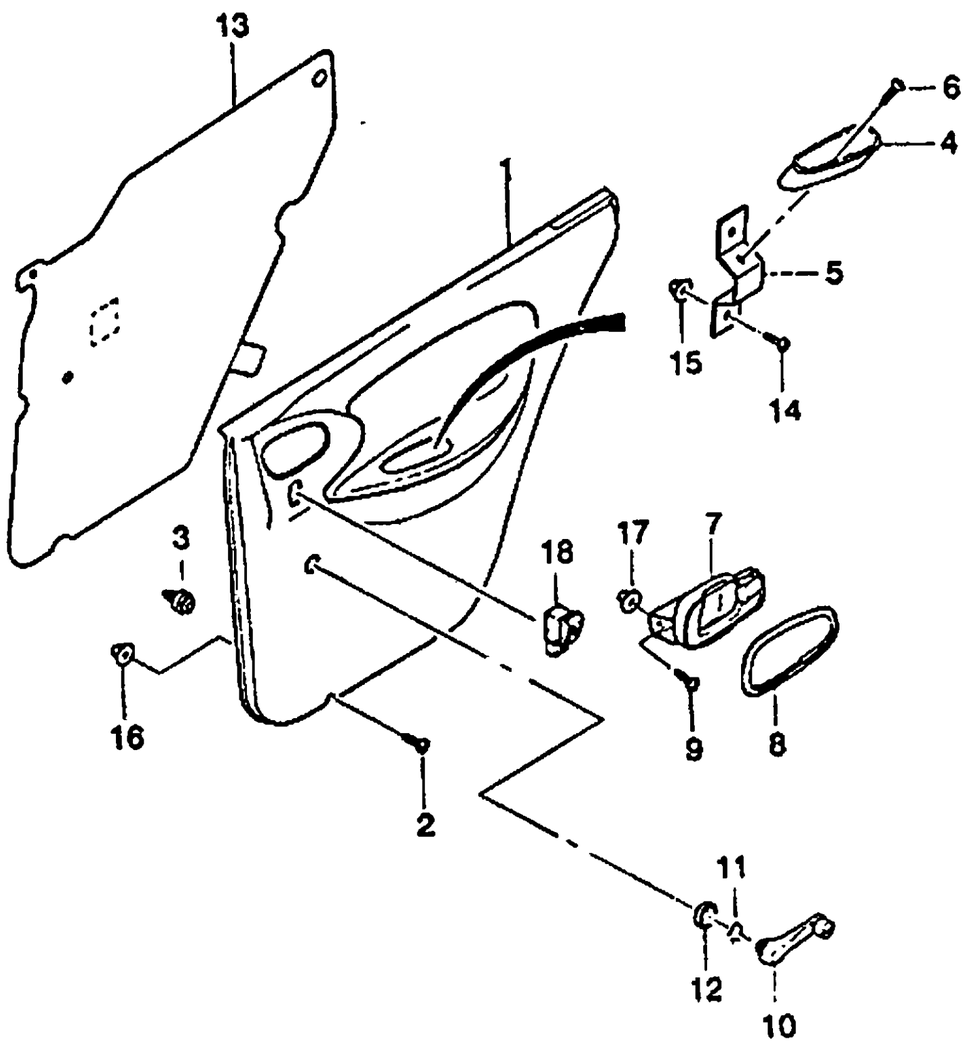

KEY NO.	PART NAME															
1TC	PART NO	MODEL								OPTION	L/R	QTY	EFFECTIVE DATE		REMARKS	P/CODE
		ENG	T/A	BODY			LEVEL						FROM	TO		
				4N	3H	5H	S	SE	SX							
	96238352	.	.	B	.	B	S	S	S		RH	1				
[08]	(E)ESCUTCHEON-INSIDE HANDLE (D)ESCHTCHEON										(F)ECUSSON (S)EMBELLECEDOR					
	96238359	.	.	B	.	B	S	S	S		LH	1				
	96238360	.	.	B	.	B	S	S	S		RH	1				
[09]	(E)SCREW-TAPPING (D)SCHRAUBE										(F)VIS (S)TORNILLO					
	03160-48165	.	.	B	.	B	S	S	S			2				
[10]	(E)CRANK A-WINDOW LIFTER (D)KURBEL,FENSTER HEBER										(F)MANIVELLE-SOULEVEUR (S)MANIVELA-LEVANTADOR					
	96238361	.	.	B	.	B	S	S	S	&A30/A32		2				
[11]	(E)RING (D)RING										(F)ANNEAU (S)ANILLO					
	09388-00001	.	.	B	.	B	S	S	S	&A30/A32		2				
[12]	(E)WASHER-WINDOW LIFTER CRAN (D)DICHTUNGSRING										(F)RONDELLE (S)ARANDELA					
	96238365	.	.	B	.	B	S	S	S	&A30/A32		2				
[13]	(E)SEAL-REAR DOOR TRIM (D)DICHTUNG										(F)JOINT (S)SELLO-ADORNO					
	96306640	.	.	B	.	B	S	S	S		LH	1				
	96304151	.	.	B	.	B	S	S	S		RH	1				
[14]	(E)SCREW-TAPPING (D)SCHRAUBE										(F)VIS (S)TORNILLO					
	03160-48165	.	.	B	.	B	S	S	S			4				
[15]	(E)NUT-SPEED (D)MUTTER										(F)ECROU (S)TUERCA					
	09148-04005	.	.	B	.	B	S	S	S			4				

ENG(ENGINE)	T/A(TRANSAXLE)	BODY TYPE
Y = 1.5SOHC 6 = 1.6DOHC . = COMMON	M = MANUAL T/A A = AUTOMATIC T/A . = COMMON	4 N = 4 DOOR NOTCHBACK 3 H = 3 DOOR HATCHBACK 5 H = 5 DOOR HATCHBACK

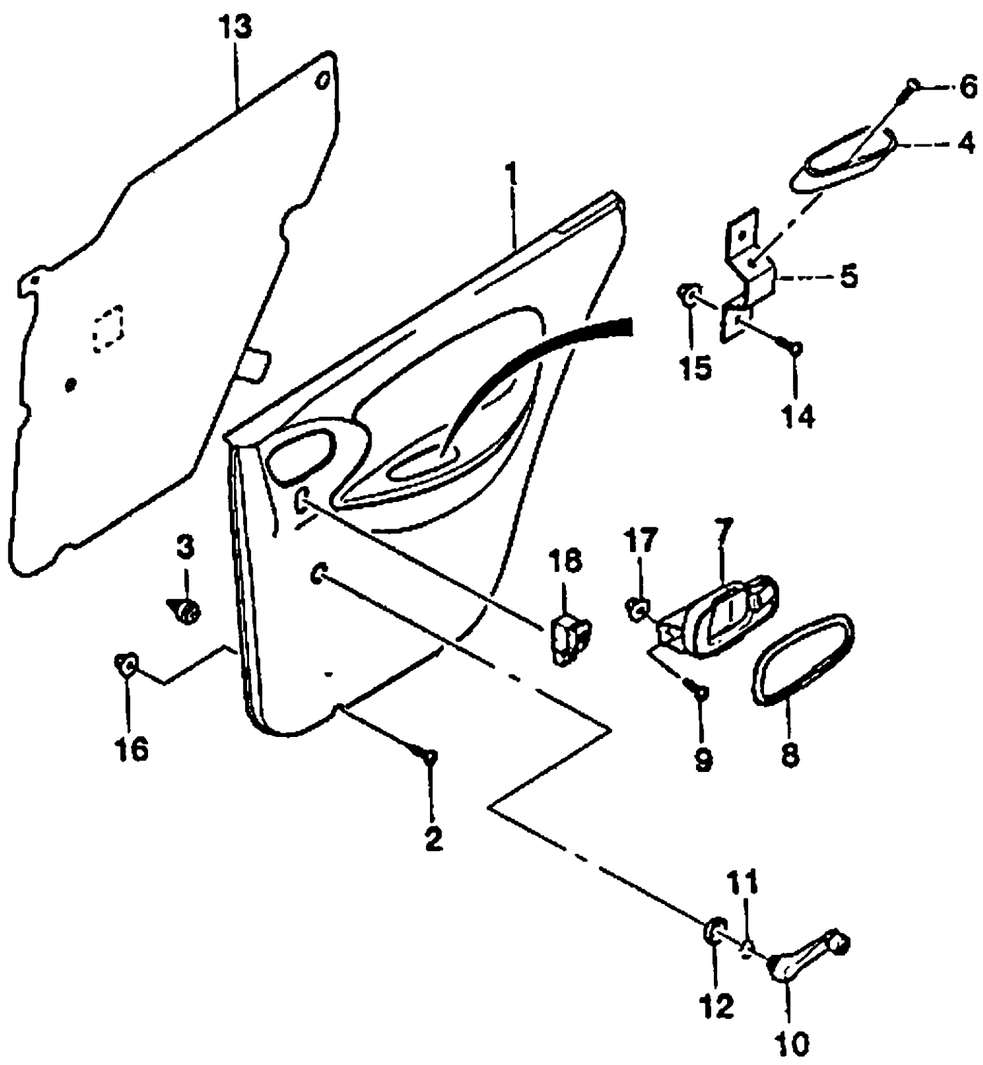

KEY NO.	PART NAME															
ITC	PART NO	MODEL								OPTION	L/R	QTY	EFFECTIVE DATE		REMARKS	P/CODE
		ENG	T/A	BODY			LEVEL						FROM	TO		
				4N	3H	5H	S	SE	SX							
[16]		(E)NUT-SPEED (D)MUTTER									(F)ECROU (S)TUERCA					
09148-04005		.	.	B	.	B	S	S	S		4					
[17]		(E)NUT-SPEED (D)MUTTER									(F)ECROU (S)TUERCA					
09148-04005		.	.	B	.	B	S	S	S		2					
[18]		(E)SWITCH A-POWER WDO (D)SCHALTER									(F)COMMUTATEUR (S)INTERRUPTOR					
96242533		.	.	B	.	B	.	.	O		LH	1				
96242534		.	.	B	.	B	.	.	O		RH	1				

ENG(ENGINE)	T/A(TRANSAXLE)	BODY TYPE
Y = 1.5SOHC 6 = 1.6DOHC . = COMMON	M = MANUAL T/A A = AUTOMATIC T/A . = COMMON	4 N = 4 DOOR NOTCHBACK 3 H = 3 DOOR HATCHBACK 5 H = 5 DOOR HATCHBACK

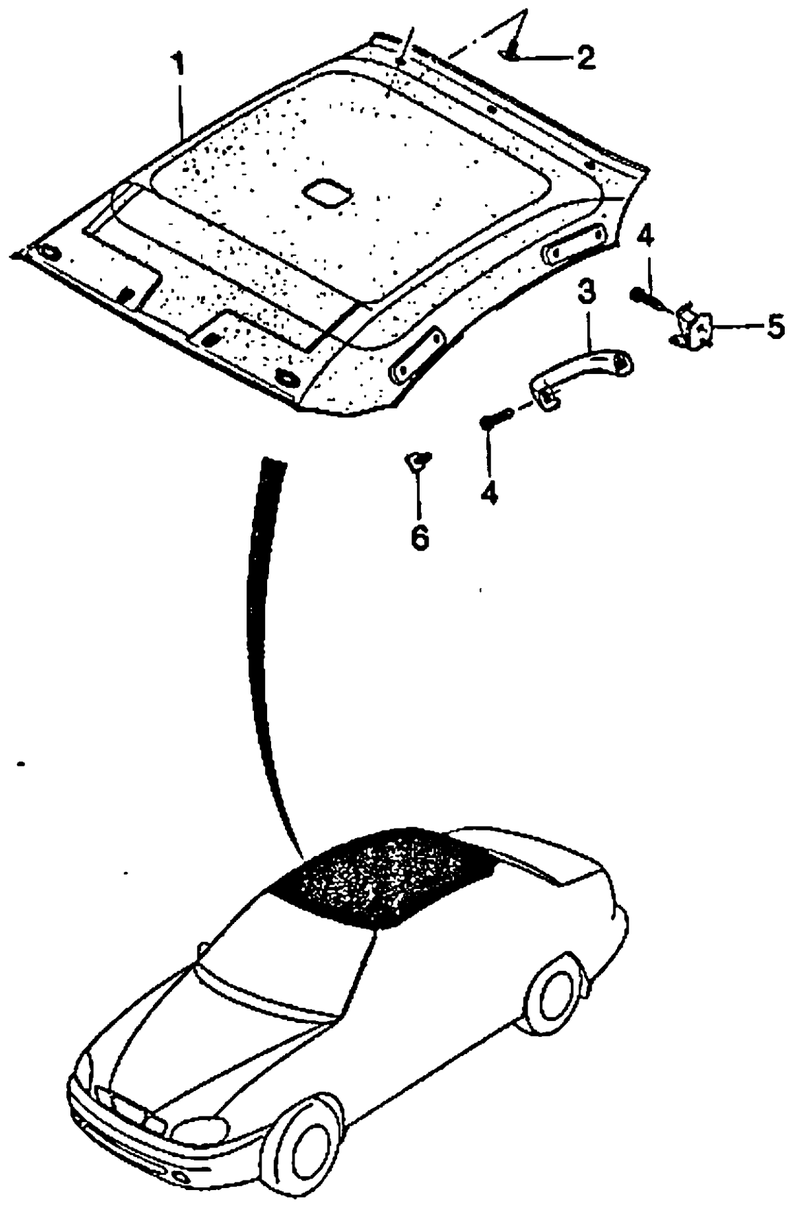

KEY NO.		PART NAME															
ITC	PART NO	MODEL								OPTION	L/R	QTY	EFFECTIVE DATE		REMARKS	P/CODE
		ENG	T/A	BODY			LEVEL						FROM	TO		
				4N	3H	5H	S	SE	SX							
	[01]	(E)HEADLINING (D)KOPF AUSKLEIDUNG									(F)GARNITURE (S)FORRO DE CABECERA					
	96236011	.	.	B	.	.	S	S	S	-CF6		1		970901		D2
O	96257410	.	.	B	.	.	S	S	S	-CF6		1	970901			E7
	96243596	.	.	B	.	.	O	O	O	&CF6		1		970901		D5
O	96257412	.	.	B	.	.	O	O	O	&CF6		1	970901			F7
	96236010	.	.	.	B	.	S	.	S	-CF6		1		970901		D1
O	96257406	.	.	.	B	.	S	.	S	-CF6		1	970901			C7
	96243595	.	.	.	B	.	O	.	O	&CF6		1		970901		D4
O	96257408	.	.	.	B	.	O	.	O	&CF6		1	970901			D7
	96236012	.	.	.	.	B	S	.	S	-CF6		1		970901		D3
O	96257414	.	.	.	.	B	S	.	S	-CF6		1	970901			H7
	96243597	.	.	.	.	B	O	.	O	&CF6		1		970901		D6
O	96257416	.	.	.	.	B	O	.	O	&CF6		1	970901			J7
	[02]	(E)CLIP (D)KLEMME									(F)ATTACHE (S)GRAPA					
	09409-07316	.	.	B	B	B	S	S	S			3				
	[03]	(E)HANDLE A (D)HENKEL									(F)POIGNEE (S)MANIJA					
	96238629	.	.	B	.	B	S	S	S			2		970901		
Y	96238629	.	.	B	.	B	S	S	S			3	970901			
	96238629	.	.	.	B	.	S	.	S			1				
	[04]	(E)SCREW (D)SCHRAUBE									(F)VIS (S)TORNILLO					
	09125-06004	.	.	B	.	B	S	S	S			5		970901		
Y	09125-06004	.	.	B	.	B	S	S	S			6	970901			

ENG(ENGINE)	T/A(TRANSAXLE)	BODY TYPE
Y = 1.5SOHC 6 = 1.6DOHC . = COMMON	M = MANUAL T/A A = AUTOMATIC T/A . = COMMON	4 N = 4 DOOR NOTCHBACK 3 H = 3 DOOR HATCHBACK 5 H = 5 DOOR HATCHBACK

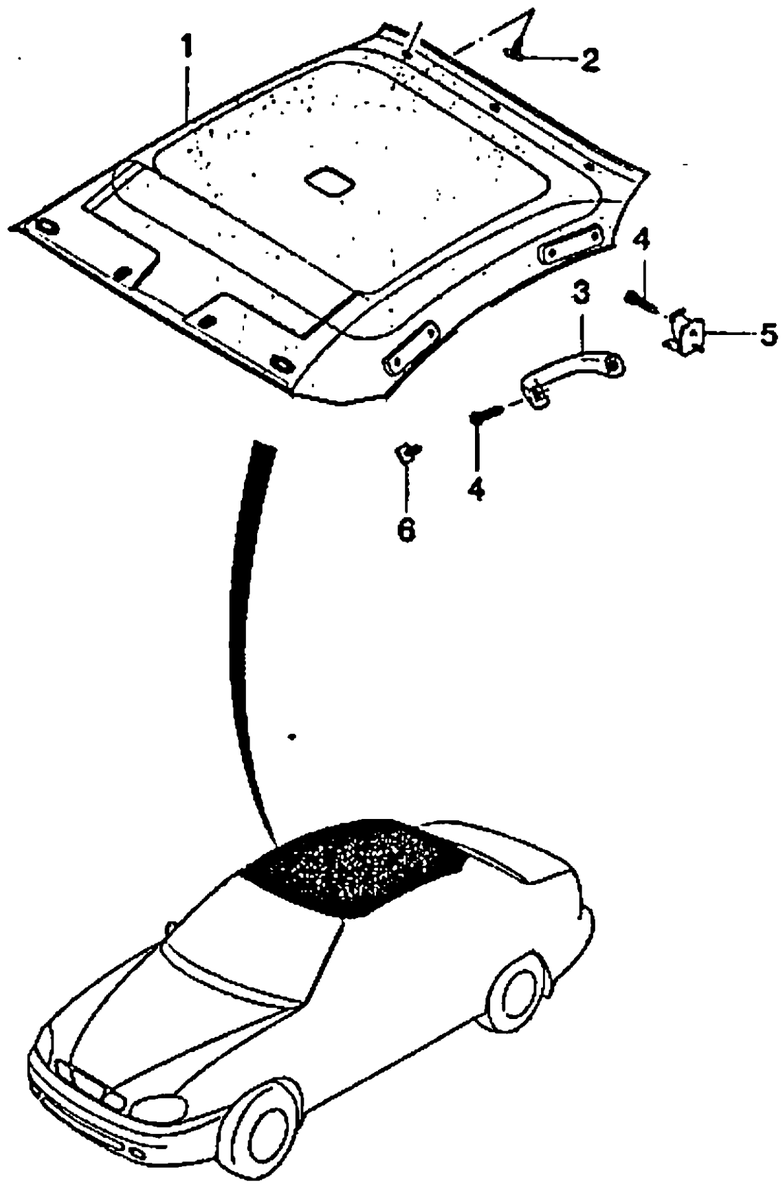

KEY NO.		PART NAME														
ITC	PART NO	MODEL								OPTION	L/R	QTY	EFFECTIVE DATE		REMARKS	P/CODE
		ENG	T/A	BODY			LEVEL						FROM	TO		
				4N	3H	5H	S	SE	SX							
	09125-06004	.	.	.	B	.	S	.	S			3				
	[05]	(E)HOOK-COAT (D)HAKEN										(F)CROCHET (S)PERCHA				
	96236801	.	.	B	.	B	S	S	S			1				
	96236801	.	.	.	B	.	S	.	S			1				
	[06]	(E)COVER-HANDLE (D)DECKEL										(F)COUVERCLE (S)CUBIERTA				
	96240529	.	.	B	B	B	S	S	S			3		970901		
Y	96240529	.	.	.	B	.	S	.	S			3	970901			
Y	96240529	.	.	B	.	B	S	S	S			2	970901			

ENG(ENGINE)	T/A(TRANSAXLE)	BODY TYPE
Y = 1.5SOHC 6 = 1.6DOHC . = COMMON	M = MANUAL T/A A = AUTOMATIC T/A . = COMMON	4 N = 4 DOOR NOTCHBACK 3 H = 3 DOOR HATCHBACK 5 H = 5 DOOR HATCHBACK

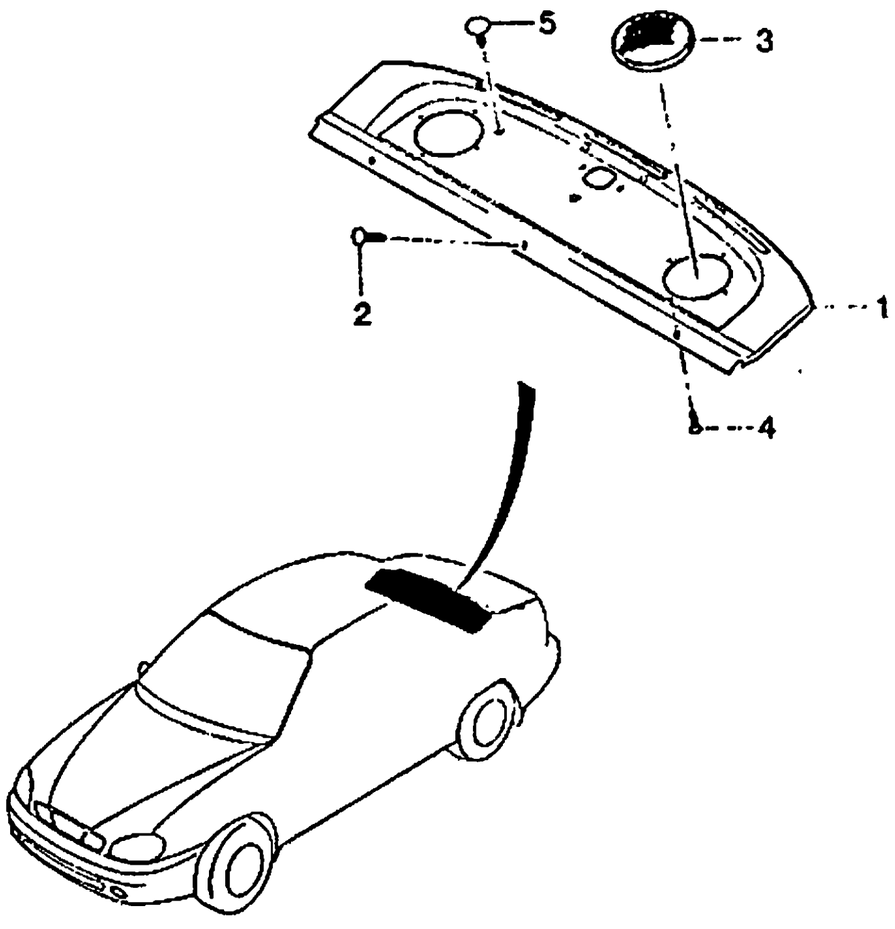

KEY NO. ITC	PART NO	MODEL ENG	T/A	BODY 4N	3H	5H	LEVEL S	SE	SX	OPTION	L/R	QTY	EFFECTIVE DATE FROM	TO	REMARKS	P/CODE
[01]	(E)SHELF A-BACK PANEL,UPPER (D)REGAL,HINTERE VERKLEIDUNG										(F)ETAGERE-PANNEAU ARRIERE (S)ESTANTE-PANEL TRASERO					
	96236082	.	.	B	.	.	S	S	.	-T93		1			WO/SPEAKER	E1
	96236083	.	.	B	.	.	O	O	S	-T93		1			W/SPEAKER	E2
	96236084	.	.	B	.	.	A	A	.	&T93		1			WO/SPEAKER	E3
	96236085	.	.	B	.	.	A	A	A	&T93		1			W/SPEAKER	E4
[02]	(E)CLIP (D)KLEMME										(F)ATTACHE (S)GRAPA					
	09409-08315	.	.	B	.	.	S	S	S			3				
[03]	(E)GRILLE A-SPEAKER,REAR (D)GITTER,LAUTSPRECHER										(F)GRILLE-HAUT-PARLEUR (S)REJA-ALTAVOZ					
	96236136	.	.	B	.	.	O	O	S			2				
[04]	(E)SCREW-TAPPING (D)SCHRAUBE										(F)VIS (S)TORNILLO					
	03111-29065	.	.	B	.	.	O	O	S			8				
[05]	(E)CLIP (D)KLEMME										(F)ATTACHE (S)GRAPA					
	09409-12003	.	.	B	.	.	S	S	S			3				

ENG(ENGINE)	T/A(TRANSAXLE)	BODY TYPE
Y = 1.5SOHC 6 = 1.6DOHC . = COMMON	M = MANUAL T/A A = AUTOMATIC T/A . = COMMON	4 N = 4 DOOR NOTCHBACK 3 H = 3 DOOR HATCHBACK 5 H = 5 DOOR HATCHBACK

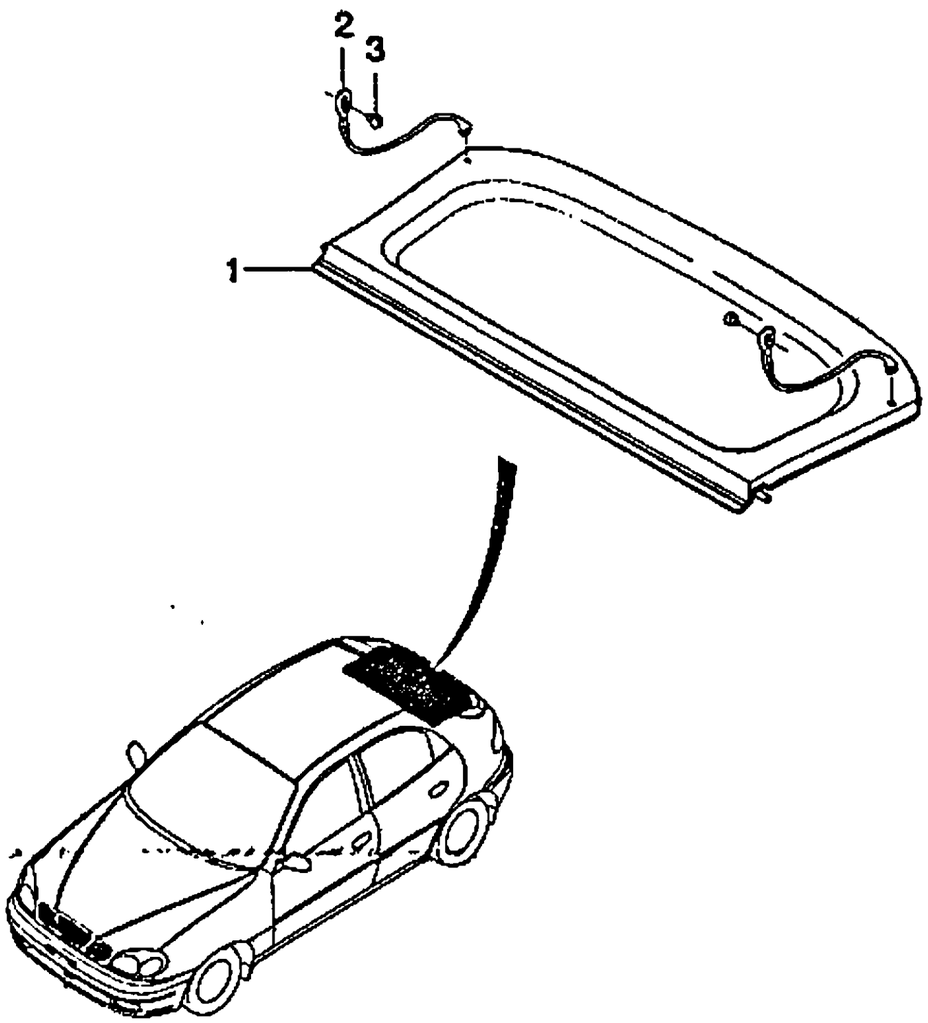

KEY NO. ITC	PART NO	MODEL ENG	T/A	BODY 4N	BODY 3H	BODY 5H	LEVEL S	LEVEL SE	LEVEL SX	OPTION	L/R	QTY	EFFECTIVE DATE FROM	EFFECTIVE DATE TO	REMARKS	PICODE
	[01]	(E)COVER A-LOAD COMPT.CENTER (D)DECKEL									(F)COUVERCLE (S)CUBIERTA					
	96236032	.	.	.	B	B	S	.	S	-T93		1			INCL. #2	F1
	96236033	.	.	.	B	B	A	.	A	&T93		1			INCL. #2	F2
	[02]	(E)STRAP-LOAD COMPART.COVER (D)BAND									(F)BRETELLE (S)BRIDA					
	90244194	.	.	.	B	B	S	.	S			2				
	[03]	(E)BUTTON-FIXING (D)KNOPF									(F)BOUTON (S)BOTON					
	90248700	.	.	.	B	B	S	.	S			2				

ENG(ENGINE)	T/A(TRANSAXLE)	BODY TYPE
Y = 1.5SOHC	M = MANUAL T/A	4 N = 4 DOOR NOTCHBACK
6 = 1.6DOHC	A = AUTOMATIC T/A	3 H = 3 DOOR HATCHBACK
. = COMMON	. = COMMON	5 H = 5 DOOR HATCHBACK

7330 FRONT PILLAR TRIM (4DOOR N/B)

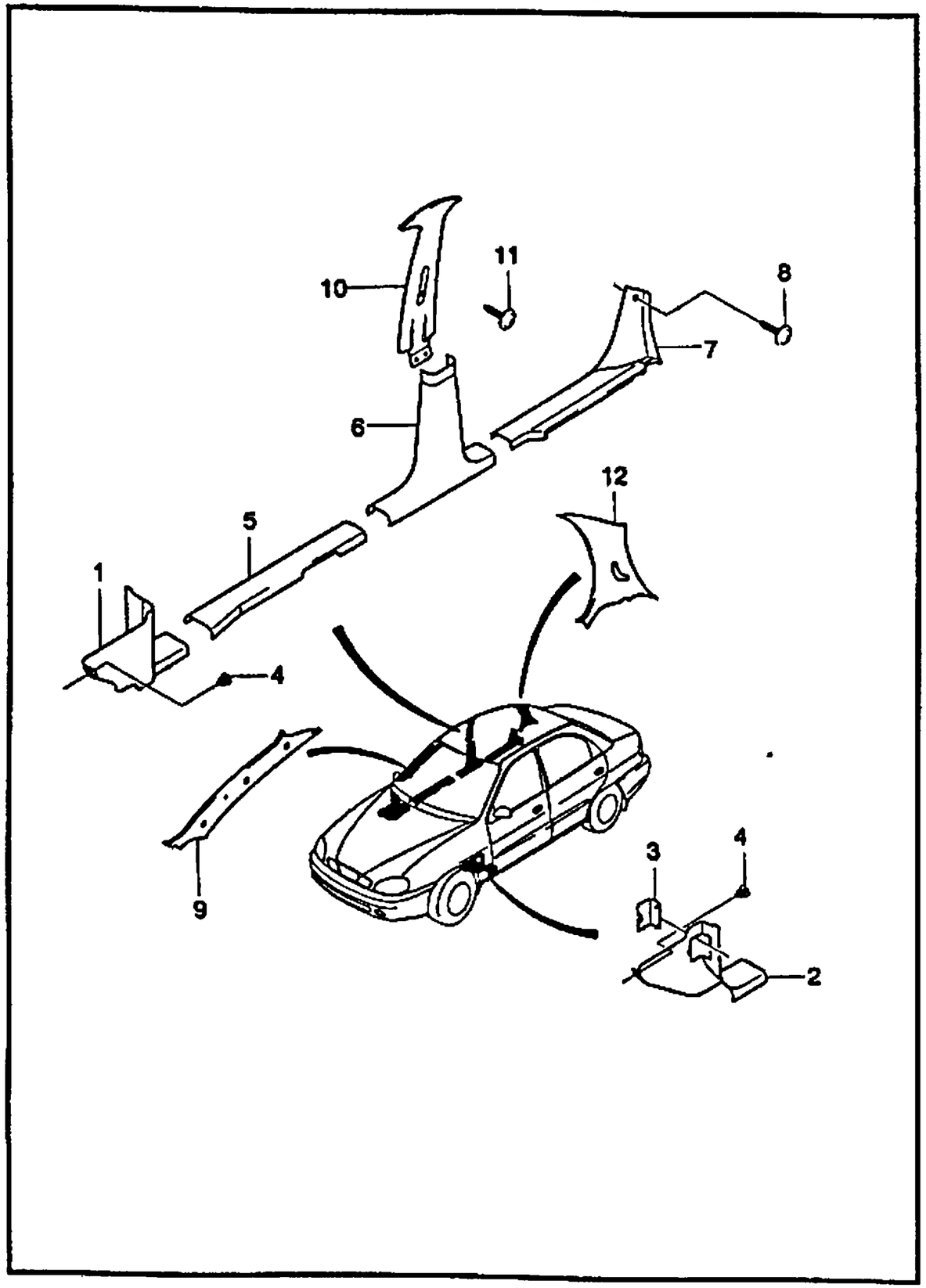

KEY NO. ITC	PART NO	MODEL ENG	T/A	BODY 4N	3H	5H	LEVEL S	SE	SX	OPTION	L/R	QTY	EFFECTIVE DATE FROM	TO	REMARKS	P/CODE
[01]		(E)TRIM A-SHROUD SIDE (D)VERKLEIDUNG,MANTEL SEITE									(F)GARNITURE (S)ADORNO-LADO DE CUBIERTA					
96235985		.	.	B	.	.	S	S	S		RH	1				
[02]		(E)TRIM A-SHROUD SIDE (D)VERKLEIDUNG,MANTEL SEITE									(F)GARNITURE (S)ADORNO-LADO DE CUBIERTA					
96235983		.	.	B	.	.	S	S	S		LH	1				
[03]		(E)COVER-SHROUD SIDE TRIM (D)DECKEL									(F)COUVERCLE (S)CUBIERTA					
96235988		.	.	B	.	.	S	S	S			1				
[04]		(E)CLIP (D)KLEMME									(F)ATTACHE (S)GRAPA					
09409-05311		.	.	B	.	.	S	S	S			2				
[05]		(E)COVER A-ROCKER PANEL,FRON (D)DECKEL									(F)COUVERCLE (S)CUBIERTA					
96235963		.	.	B	.	.	S	S	S		LH	1				
96235964		.	.	B	.	.	S	S	S		RH	1				
[06]		(E)TRIM-B PILLAR,LOWER (D)VERKLEIDUNG,B SÄULE,UNTEN									(F)GARNITURE-B PILIER,BAS (S)ADORNO-PILAR B,BAJO					
96236029		.	.	B	.	.	S	S	S		LH	1				
96236030		.	.	B	.	.	S	S	S		RH	1				
[07]		(E)COVER A-ROCKER PANEL,REAR (D)DECKEL									(F)COUVERCLE (S)CUBIERTA					
96235967		.	.	B	.	.	S	S	.	&AM6	LH	1				
96235968		.	.	B	.	.	S	S	.	&AM6	RH	1				
96235969		.	.	B	.	.	.	.	S	&AM9	LH	1				
96235969		.	.	B	.	.	A	.	A		LH	1	970709		FOR POLAND	
96235970		.	.	B	.	.	.	.	S	&AM9	RH	1				

ENG(ENGINE)	T/A(TRANSAXLE)	BODY TYPE
Y = 1.5SOHC 6 = 1.6DOHC . = COMMON	M = MANUAL T/A A = AUTOMATIC T/A . = COMMON	4 N = 4 DOOR NOTCHBACK 3 H = 3 DOOR HATCHBACK 5 H = 5 DOOR HATCHBACK

7330 FRONT PILLAR TRIM (4DOOR N/B)

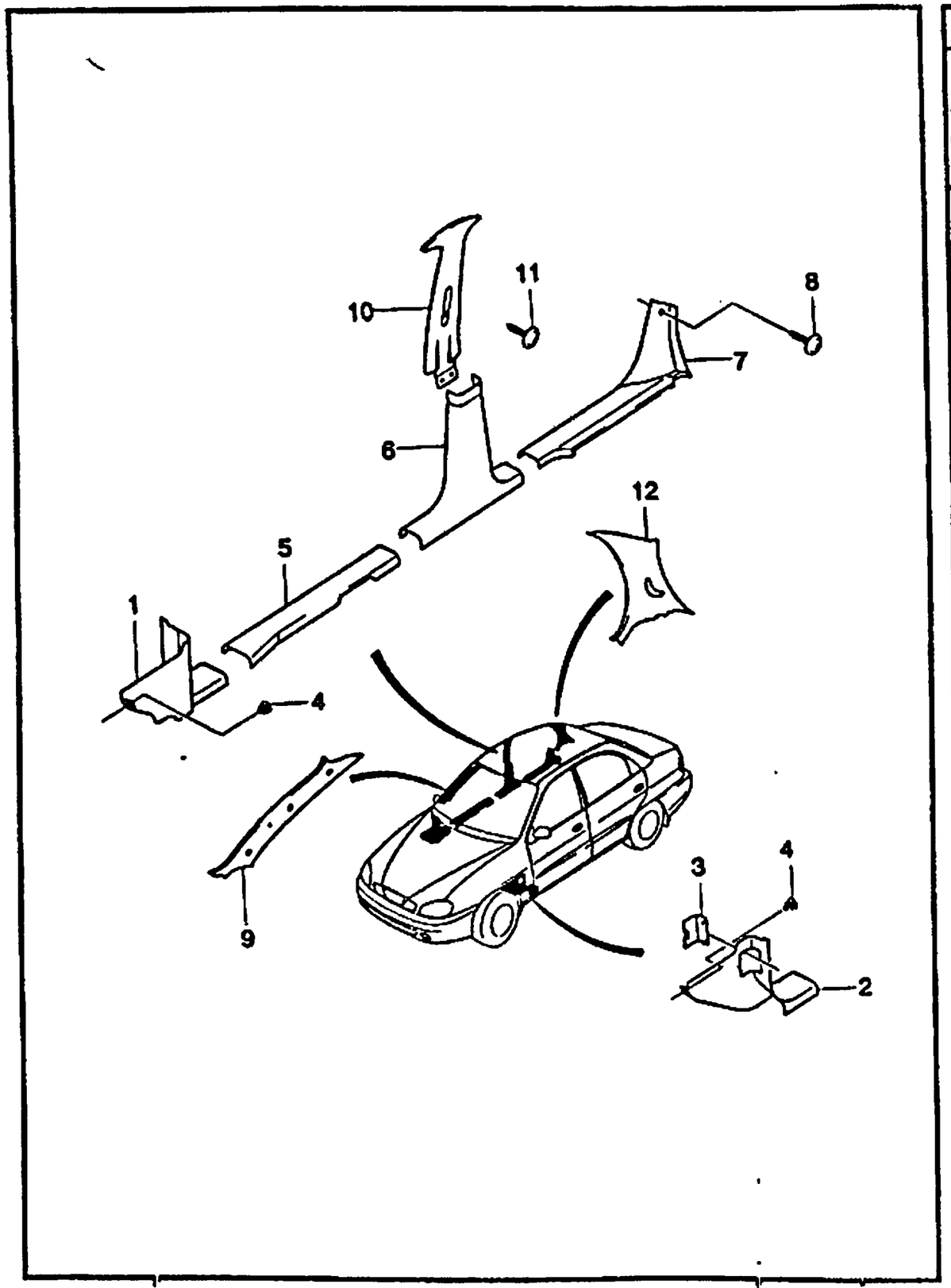

KEY NO. ITC	PART NO	MODEL ENG	T/A	BODY 4N	3H	5H	LEVEL S	SE	SX	OPTION	L/R	QTY	EFFECTIVE DATE FROM	TO	REMARKS	P/CODE
	96235970	.	.	B	.	.	A	.	A		RH	1	970709		FOR POLAND	
[08]	(E)SCREW-TAPPING (D)SCHRAUBE										(F)VIS (S)TORNILLO					
	03160-42135	.	.	B	.	.	S	S	.	&AM6		4				
	03160-42135	.	.	B	.	.	.	.	S	&AM9		2				
	03160-42135	.	.	B	.	.	A	.	A			2	970709		FOR POLAND	
[09]	(E)TRIM A-A PILLAR (D)VERKLEIDUNG,A SÄULE										(F)GARNITURE-A PILIER (S)ADORNO-PILAR					
	96235979	.	.	B	.	.	S	S	S		LH	1				
	96235980	.	.	B	.	.	S	S	S		RH	1				
[10]	(E)TRIM A-B PILLAR,UPPER (D)VERKLEIDUNG,B SÄULE,OBEN										(F)GARNITURE-B PILIER,HAUT (S)ADORNO-PILAR B,ALTO					
	96236015	.	.	B	.	.	S	.	.	-AAC	LH	1				B3
	96236016	.	.	B	.	.	S	.	.	-AAC	RH	1				B4
	96236019	.	.	B	.	.	.	S	S	&AAC	LH	1				B7
	96236020	.	.	B	.	.	.	S	S	&AAC	RH	1				B8
[11]	(E)SCREW-TAPPING (D)SCHRAUBE										(F)VIS (S)TORNILLO					
	03160-42163	.	.	B	.	.	S	S	S			4				
[12]	(E)TRIM A-QUARTER WINDOW (D)VERKLEIDUNG										(F)GARNITURE (S)ADORNO-VENTANA CUADRANTE					
	96236096	.	.	B	.	.	S	S	.	&AM6	LH	1				
	96236097	.	.	B	.	.	S	S	.	&AM6	RH	1				
	96236098	.	.	B	.	.	.	.	S	&AM9	LH	1				
	96236098	.	.	B	.	.	A	.	A		LH	1	970709		FOR POLAND	
	96236099	.	.	B	.	.	.	.	S	&AM9	RH	1				

ENG(ENGINE)	T/A(TRANSAXLE)	BODY TYPE
Y = 1.5SOHC	M = MANUAL T/A	4 N = 4 DOOR NOTCHBACK
6 = 1.6DOHC	A = AUTOMATIC T/A	3 H = 3 DOOR HATCHBACK
. = COMMON	. = COMMON	5 H = 5 DOOR HATCHBACK

7330 FRONT PILLAR TRIM (4DOOR N/B)

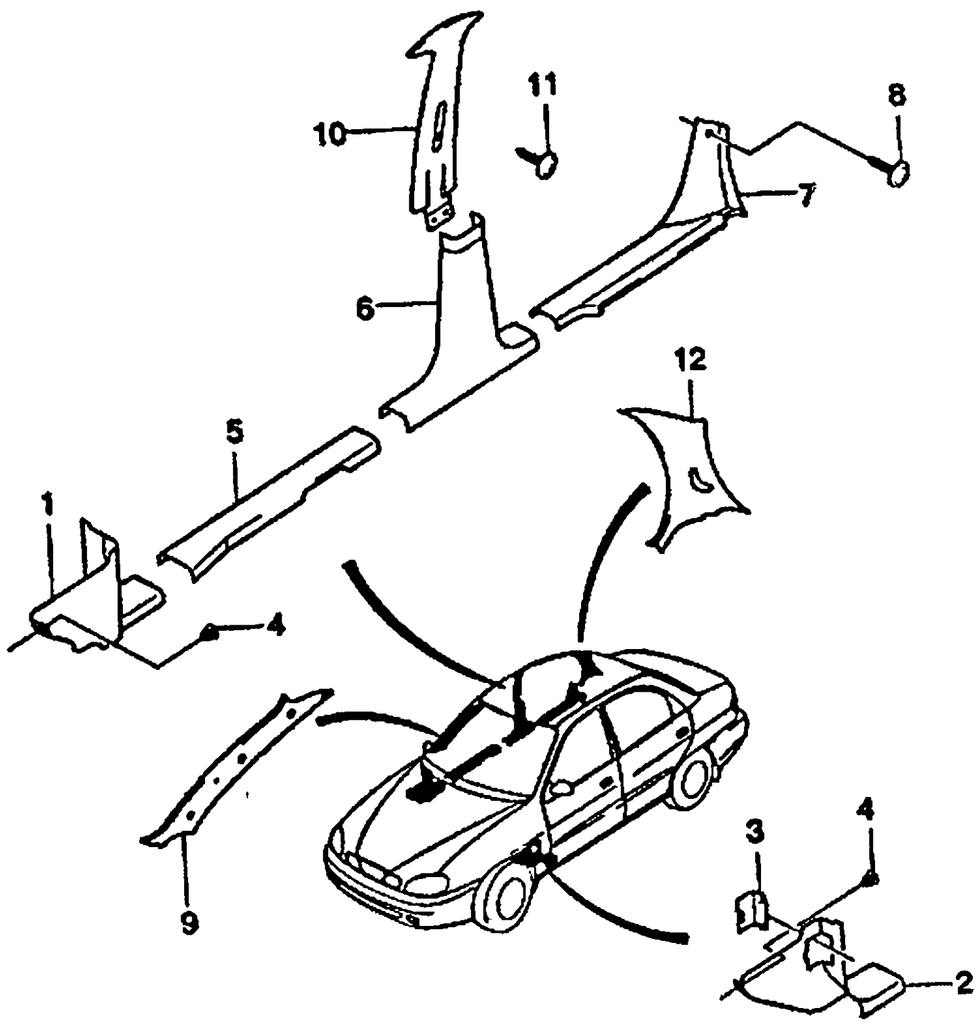

KEY NO.		PART NAME															
ITC	PART NO	MODEL								OPTION	L/R	QTY	EFFECTIVE DATE		REMARKS	P/CODE
		ENG	T/A	BODY			LEVEL						FROM	TO		
				4N	3H	5H	S	SE	SX							
	96236099	.	.	B	.	.	A	.	A		RH	1	970709		FOR POLAND	

ENG(ENGINE)	T/A(TRANSAXLE)	BODY TYPE
Y = 1.5SOHC 6 = 1.6DOHC . = COMMON	M = MANUAL T/A A = AUTOMATIC T/A . = COMMON	4 N = 4 DOOR NOTCHBACK 3 H = 3 DOOR HATCHBACK 5 H = 5 DOOR HATCHBACK

7331 FRONT PILLAR TRIM (5DOOR H/B)

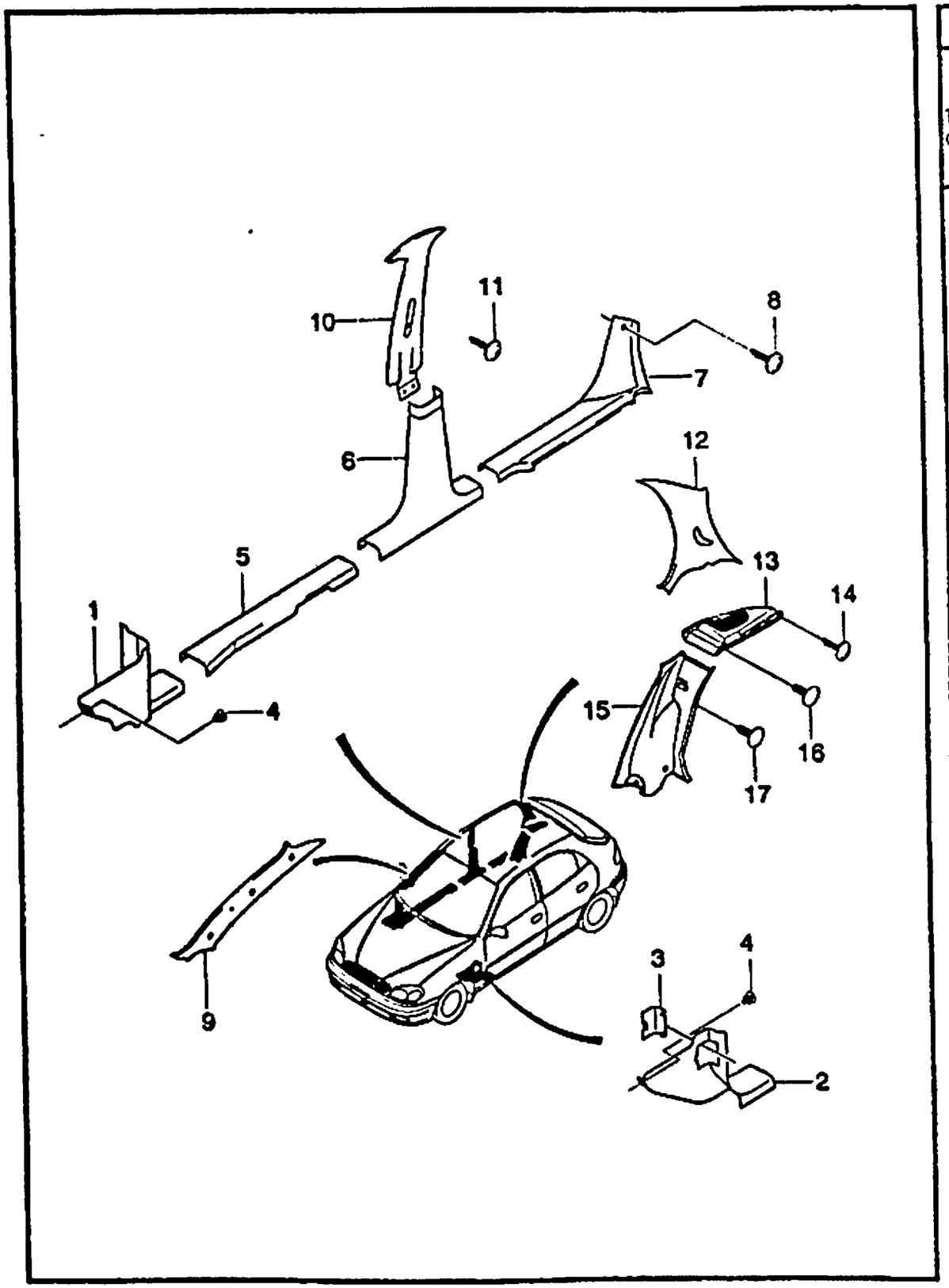

KEY NO.	PART NO	MODEL ENG	MODEL T/A	MODEL BODY 4N	MODEL BODY 3H	MODEL BODY 5H	MODEL LEVEL S	MODEL LEVEL SE	MODEL LEVEL SX	OPTION	L/R	QTY	EFFECTIVE DATE FROM	EFFECTIVE DATE TO	REMARKS	P/CODE
[01]		(E)TRIM A-SHROUD SIDE (D)VERKLEIDUNG,MANTEL SEITE									(F)GARNITURE (S)ADORNO-LADO DE CUBIERTA					
	96235985	.	.	.	.	B	S	.	S		RH	1				
[02]		(E)TRIM A-SHROUD SIDE (D)VERKLEIDUNG,MANTEL SEITE									(F)GARNITURE (S)ADORNO-LADO DE CUBIERTA					
	96235983	.	.	.	.	B	S	.	S		LH	1				
[03]		(E)COVER-SHROUD SIDE TRIM (D)DECKEL									(F)COUVERCLE (S)CUBIERTA					
	96235988	.	.	.	.	B	S	.	S			1				
[04]		(E)CLIP (D)KLEMME									(F)ATTACHE (S)GRAPA					
	09409-05311	.	.	.	.	B	S	.	S			2				
[05]		(E)COVER A-ROCKER PANEL FRON (D)DECKEL									(F)COUVERCLE (S)CUBIERTA					
	96235963	.	.	.	.	B	S	.	S		LH	1				
	96235964	.	.	.	.	B	S	.	S		RH	1				
[06]		(E)TRIM-B PILLAR,LOWER (D)VERKLEIDUNG,B SÄULE,UNTEN									(F)GARNITURE-B PILIER,BAS (S)ADORNO-PILAR B,BAJO					
	96236029	.	.	.	.	B	S	.	S		LH	1				
	96236030	.	.	.	.	B	S	.	S		RH	1				
[07]		(E)COVER A-ROCKER PANEL REAR (D)DECKEL									(F)COUVERCLE (S)CUBIERTA					
	96235969	.	.	.	.	B	S	.	S		LH	1				
	96235969	.	.	.	.	B	A	.	A		LH	1	970709		FOR POLAND	
	96235970	.	.	.	.	B	S	.	S		RH	1				
	96235970	.	.	.	.	B	A	.	A		RH	1	970709		FOR POLAND	
[08]		(E)SCREW-TAPPING (D)SCHRAUBE									(F)VIS (S)TORNILLO					

ENG(ENGINE)	T/A(TRANSAXLE)	BODY TYPE
Y = 1.5SOHC 6 = 1.6DOHC . = COMMON	M = MANUAL T/A A = AUTOMATIC T/A . = COMMON	4 N = 4 DOOR NOTCHBACK 3 H = 3 DOOR HATCHBACK 5 H = 5 DOOR HATCHBACK

7331 FRONT PILLAR TRIM (5DOOR H/B)

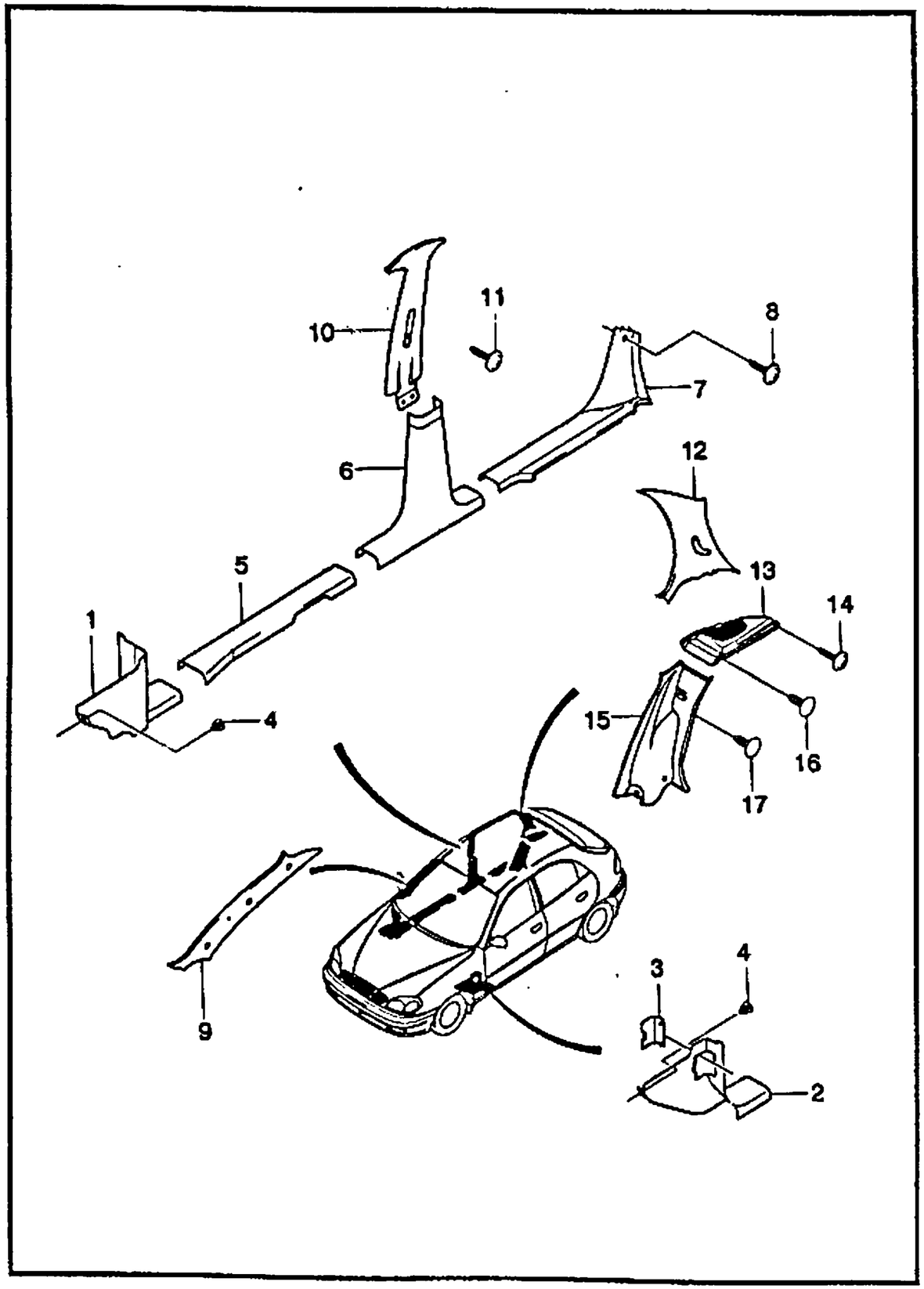

KEY NO. ITC	PART NO	MODEL ENG	T/A	BODY 4N	3H	5H	LEVEL S	SE	SX	OPTION	L/R	QTY	EFFECTIVE DATE FROM	TO	REMARKS	P/CODE
	03160-42135	.	.	.	.	B	S	.	S			2				
[09]	(E)TRIM A-A PILLAR (D)VERKLEIDUNG,A SÄULE										(F)GARNITURE-A PILIER (S)ADORNO-PILAR					
	96235979	.	.	.	.	B	S	.	S		LH	1				
	96235980	.	.	.	.	B	S	.	S		RH	1				
[10]	(E)TRIM A-B PILLAR,UPPER (D)VERKLEIDUNG,B SÄULE,OBEN										(F)GARNITURE-B PILIER,HAUT (S)ADORNO-PILAR B,ALTO					
	96236015	.	.	.	.	B	S	.	.	-AAC	LH	1				B3
	96236016	.	.	.	.	B	S	.	.	-AAC	RH	1				B4
	96236019	.	.	.	.	B	.	.	S	&AAC	LH	1				B7
	96236020	.	.	.	.	B	.	.	S	&AAC	RH	1				B8
[11]	(E)SCREW-TAPPING (D)SCHRAUBE										(F)VIS (S)TORNILLO					
	03160-42163	.	.	.	.	B	S	.	S			4				
[12]	(E)TRIM A-QUARTER WINDOW (D)VERKLEIDUNG										(F)GARNITURE (S)ADORNO-VENTANA CUADRANTE					
	96236108	.	.	.	.	B	S	.	S		LH	1				
	96236109	.	.	.	.	B	S	.	S		RH	1				
[13]	(E)COVER A-LOAD COMPART.SIDE (D)DECKEL,LADEFACH,SEITE										(F)COUVERCLE (S)CUBIERTA					
	96236110	.	.	.	.	B	S	.	S		LH	1				
	96236111	.	.	.	.	B	S	.	S		RH	1				
[14]	(E)SCREW-TAPPING (D)SCHRAUBE										(F)VIS (S)TORNILLO					
	03160-42135	.	.	.	.	B									NOT APPLIED	
	09136-04007	.	.	.	.	B	S	.	S			4	970701			
O	09136-04012	.	.	.	.	B	S	.	S			4	970701			

ENG(ENGINE)	T/A(TRANSAXLE)	BODY TYPE
Y = 1.5SOHC 6 = 1.6DOHC . = COMMON	M = MANUAL T/A A = AUTOMATIC T/A . = COMMON	4 N = 4 DOOR NOTCHBACK 3 H = 3 DOOR HATCHBACK 5 H = 5 DOOR HATCHBACK

7331 FRONT PILLAR TRIM (5DOOR H/B)

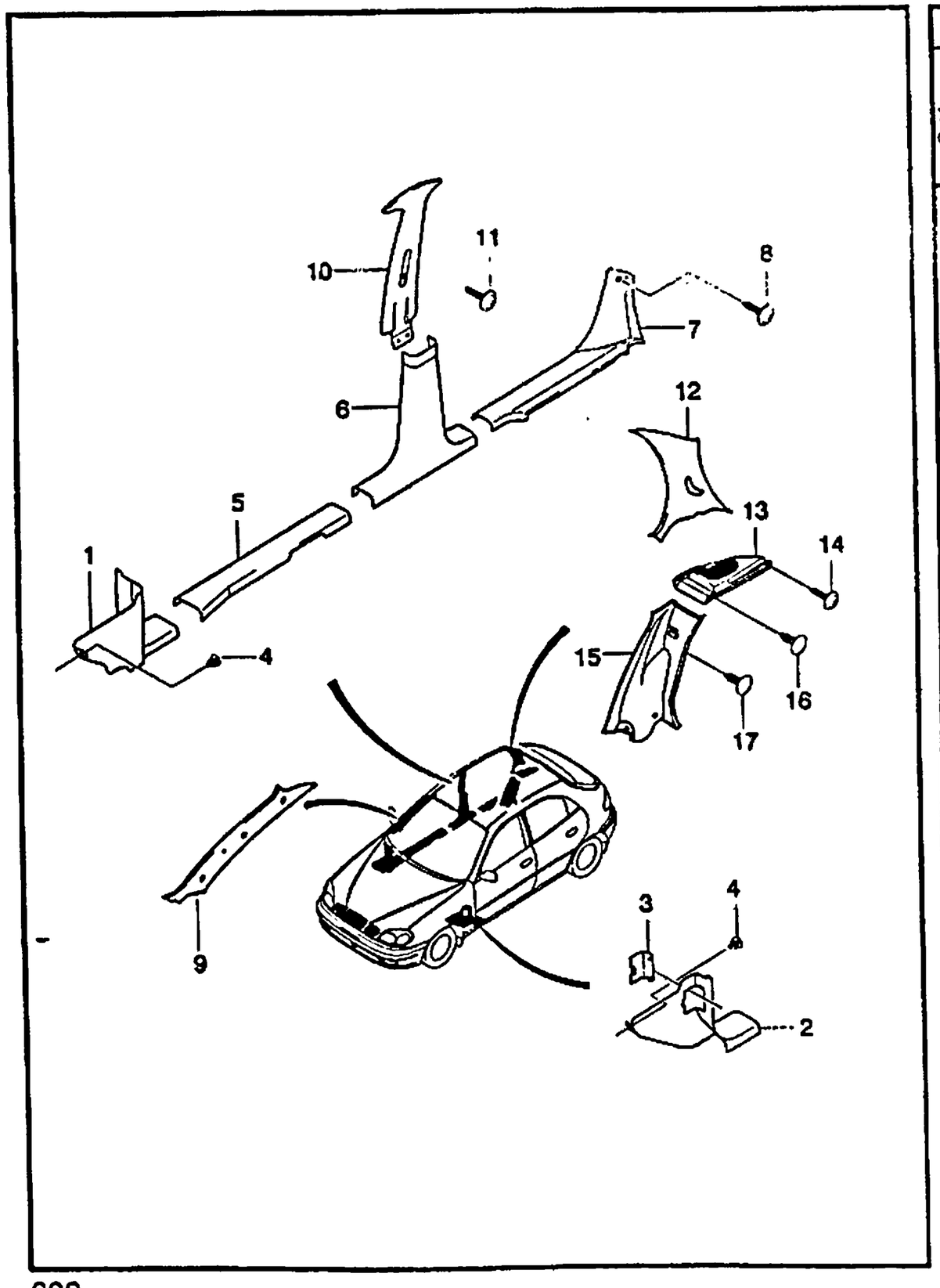

KEY NO.		PART NAME															
ITC	PART NO	MODEL								OPTION	L/R	QTY	EFFECTIVE DATE		REMARKS	P/CODE
		ENG	T/A	BODY			LEVEL						FROM	TO		
				4N	3H	5H		SE	SX							
	[15]	(E)TRIM A-FRONT,WHEELHOUSE (D)VERKLEIDUNG,RADGEHÄUSE									(F)GARNITURE-TIMONERIE,AVANT (S)ADORNO-ENGRANAJE,FR					
	96236038	.	.	.	.	B	S	.	S		LH	1				
	96236039	.	.	.	.	B	S	.	S		RH	1				
	[16]	(E)CLIP (D)KLEMME									(F)ATTACHE (S)GRAPA					
	09409-07325	.	.	.	.	B	S	.	S			4			NOT APPLIED	
	[17]	(E)CLIP (D)KLEMME									(F)ATTACHE (S)GRAPA					
	09409-07325	.	.	.	.	B	S	.	S			4				
	09409-07325	.	.	.	.	B	A	.	A			4	970709		FOR POLAND	

ENG(ENGINE)	T/A(TRANSAXLE)	BODY TYPE
Y = 1.5SOHC 6 = 1.6DOHC . = COMMON	M = MANUAL T/A A = AUTOMATIC T/A . = COMMON	4 N = 4 DOOR NOTCHBACK 3 H = 3 DOOR HATCHBACK 5 H = 5 DOOR HATCHBACK

7332 FRONT PILLAR TRIM (3DOOR H/B)

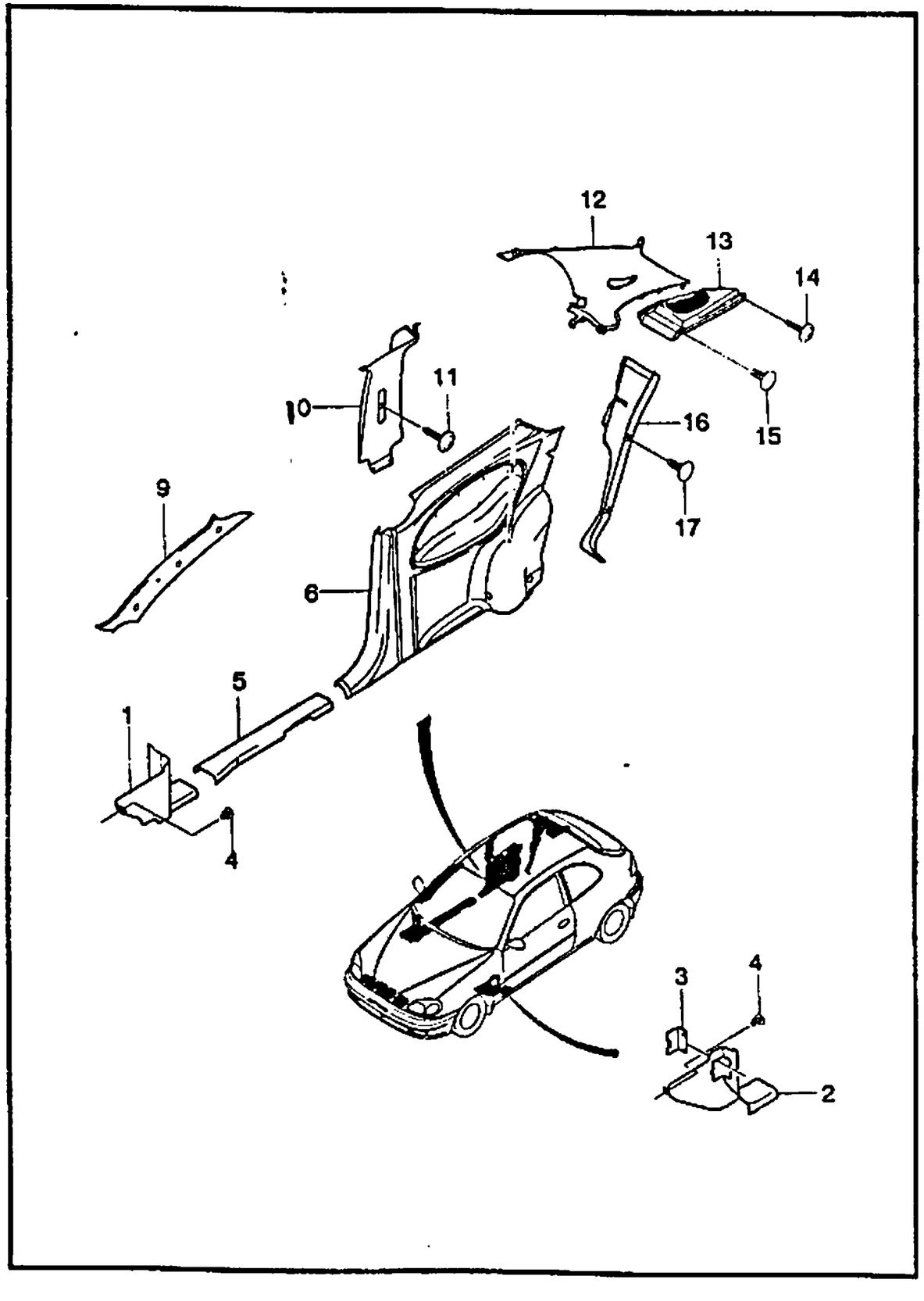

KEY NO. ITC	PART NO	MODEL ENG	T/A	BODY 4N	3H	5H	LEVEL S	SE	SX	OPTION	L/R	QTY	EFFECTIVE DATE FROM	TO	REMARKS	P/CODE
[01]		(E)TRIM A-SHROUD SIDE (D)VERKLEIDUNG,MANTEL SEITE									(F)GARNITURE (S)ADORNO-LADO DE CUBIERTA					
	96235985	.	.	.	B	.	S	.	S		RH	1				
[02]		(E)TRIM A-SHROUD SIDE (D)VERKLEIDUNG,MANTEL SEITE									(F)GARNITURE (S)ADORNO-LADO DE CUBIERTA					
	96235983	.	.	.	B	.	S	.	S		LH	1				
[03]		(E)COVER-SHROUD SIDE TRIM (D)DECKEL									(F)COUVERCLE (S)CUBIERTA					
	96235988	.	.	.	B	.	S	.	S			1				
[04]		(E)CLIP (D)KLEMME									(F)ATTACHE (S)GRAPA					
	09409-05311	.	.	.	B	.	S	.	S			2				
[05]		(E)COVER A-ROCKER PANEL (D)DECKEL									(F)COUVERCLE (S)CUBIERTA					
	96235975	.	.	.	B	.	S	.	S		LH	1				
	96235976	.	.	.	B	.	S	.	S		RH	1				
[06]		(E)TRIM A-FRONT SIDE PANEL (D)VERKLEIDUNG									(F)GARNITURE (S)ADORNO					
	96236067	.	.	.	B	.	S	.	.	&TD1	LH	1				K7
	96236068	.	.	.	B	.	S	.	.	&TD1	RH	1				K8
	96236057	.	.	.	B	.	O	.	S	&TD2	LH	1				K1
	96236058	.	.	.	B	.	O	.	S	&TD2	RH	1				K2
[10]		(E)TRIM A-B PILLAR,UPPER (D)VERKLEIDUNG,B SÄULE,OBEN									(F)GARNITURE-B PILIER,HAUT (S)ADORNO-PILAR B,ALTO					
	96236013	.	.	.	B	.	S	.	S		LH	1				B1
	96236014	.	.	.	B	.	S	.	S		RH	1				B2
[12]		(E)TRIM A-QUARTER WINDOW (D)VERKLEIDUNG									(F)GARNITURE (S)ADORNO-VENTANA CUADRANTE					

ENG(ENGINE)	T/A(TRANSAXLE)	BODY TYPE
Y = 1.5SOHC 6 = 1.6DOHC . = COMMON	M = MANUAL T/A A = AUTOMATIC T/A . = COMMON	4 N = 4 DOOR NOTCHBACK 3 H = 3 DOOR HATCHBACK 5 H = 5 DOOR HATCHBACK

7332 FRONT PILLAR TRIM (3DOOR H/B)

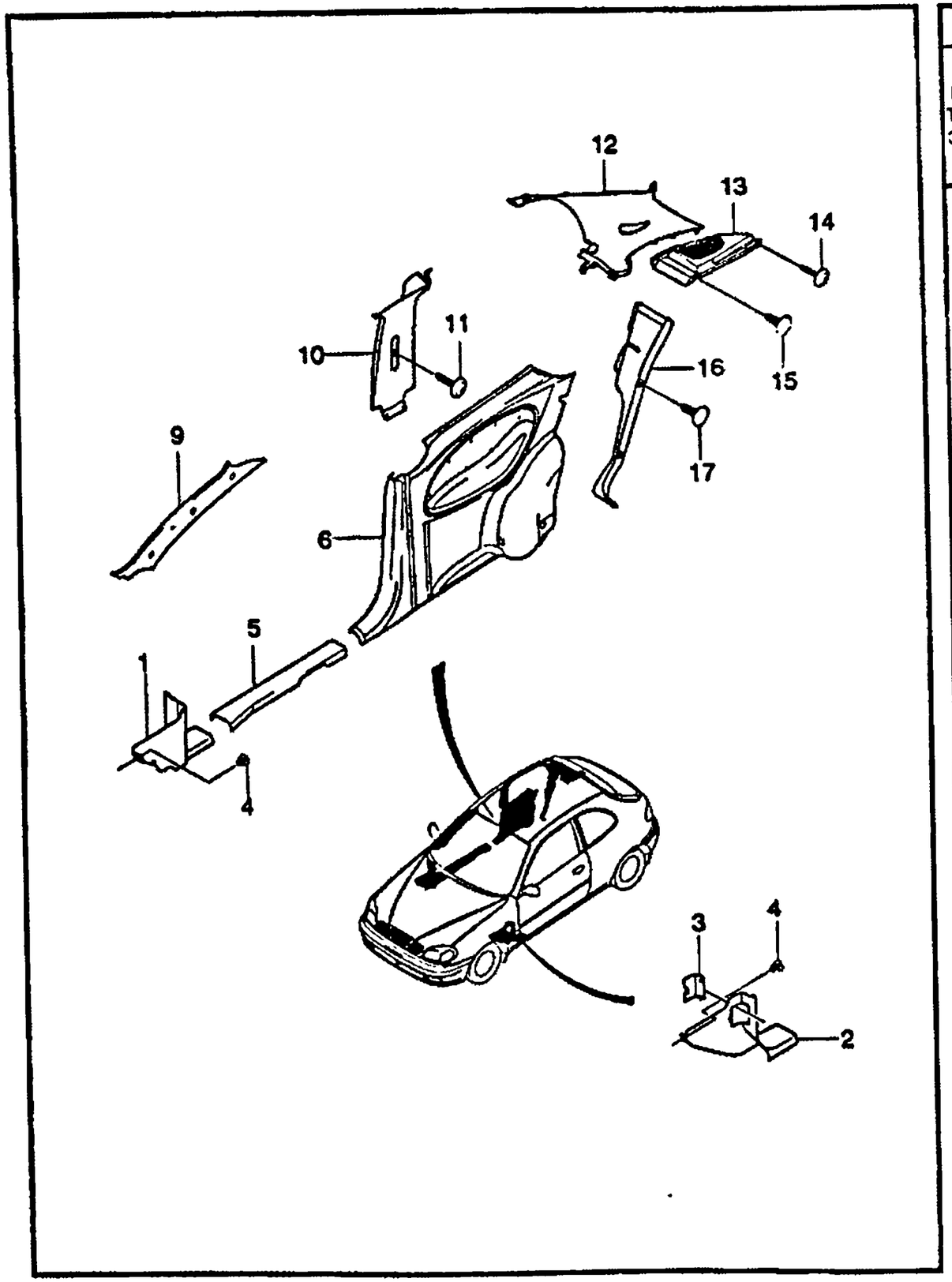

KEY NO. ITC	PART NO	MODEL ENG	MODEL T/A	MODEL BODY 4N	MODEL BODY 3H	MODEL BODY 5H	MODEL LEVEL S	MODEL LEVEL SE	MODEL LEVEL SX	OPTION	L/R	QTY	EFFECTIVE DATE FROM	EFFECTIVE DATE TO	REMARKS	PICODE
	96236094	.	.	.	B	.	S	.	S		LH	1				
	96236095	.	.	.	B	.	S	.	S		RH	1				
[13]	(E)COVER A-LOAD COMPART.SIDE (D)DECKEL,LADEFACH,SEITE										(F)COUVERCLE (S)CUBIERTA					
	96236110	.	.	.	B	.	S	.	S		LH	1				
	96236111	.	.	.	B	.	S	.	S		RH	1				
[14]	(E)SCREW-TAPPING (D)SCHRAUBE										(F)VIS (S)TORNILLO					
	03160-42135	.	.	.	B	.									NOT APPLIED	
	09136-04007	.	.	.	B	.	S	.	S			6		970701		
O	09136-04012	.	.	.	B	.	S	.	S			6	970701			
[15]	(E)CLIP (D)KLEMME										(F)ATTACHE (S)GRAPA					
	09409-07325	.	.	.	B	.									NOT APPLIED	
[16]	(E)TRIM A-FRONT,WHEELHOUSE (D)VERKLEIDUNG,RADGEHÄUSE										(F)GARNITURE-TIMONERIE,AVANT (S)ADORNO-ENGRANAJE,FR					
	96236040	.	.	.	B	.	S	.	S		LH	1				
	96236041	.	.	.	B	.	S	.	S		RH	1				
[17]	(E)CLIP (D)KLEMME										(F)ATTACHE (S)GRAPA					
	09409-07325	.	.	.	B	.	S	.	S			4				

ENG(ENGINE)	T/A(TRANSAXLE)	BODY TYPE
Y = 1.5SOHC 6 = 1.6DOHC . = COMMON	M = MANUAL T/A A = AUTOMATIC T/A . = COMMON	4 N = 4 DOOR NOTCHBACK 3 H = 3 DOOR HATCHBACK 5 H = 5 DOOR HATCHBACK

7340 REAR PILLAR TRIM (N/B)

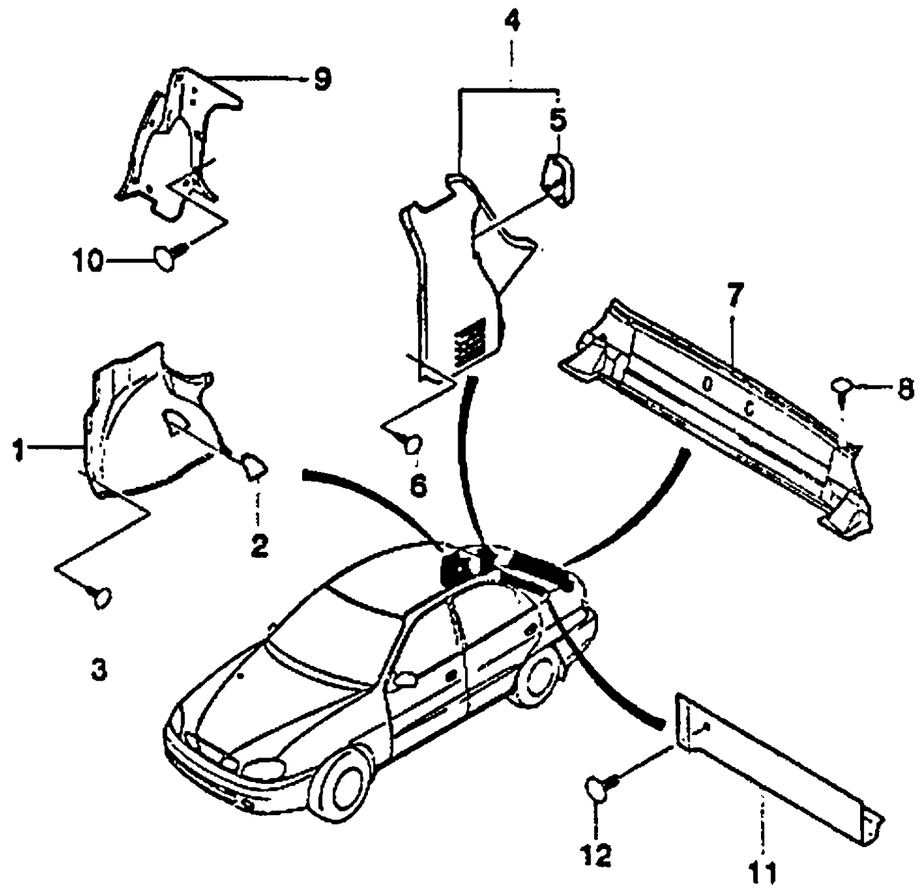

KEY NO. ITC	PART NO	MODEL ENG	MODEL T/A	BODY 4N	BODY 3H	BODY 5H	LEVEL S	LEVEL SE	LEVEL SX	OPTION	L/R	QTY	EFFECTIVE DATE FROM	EFFECTIVE DATE TO	REMARKS	PICODE
[01]		(E)TRIM A-WHEELHOUSE REAR (D)VERKLEIDUNG,RADGEHÄUSE									(F)GARNITURE (S)ADORNO-ENGRANAJE,RR					
96236047		.	.	B	.	.	S	S	S		LH	1				
96238285		.	.	B	.	.	S	S	S		RH	1				
[02]		(E)COVER-SHOCK ABSORBER,REAR (D)DECKEL									(F)COUVERTURE (S)CUBIERTA					
96237855		.	.	B	.	.	S	S	S			2				
[03]		(E)CLIP (D)KLEMME									(F)ATTACHE (S)GRAPA					
09409-07326		.	.	B	.	.	S	S	S			4				
[04]		(E)TRIM A-REAR SIDE PANEL (D)VERKLEIDUNG									(F)GARNITURE (S)ADORNO					
96236073		.	.	B	.	.	S	S	S		LH	1				
96236074		.	.	B	.	.	S	S	S		RH	1				
[05]		(E)COVER-TAIL LAMP (D)DECKEL									(F)COUVERTURE (S)CUBIERTA					
96236079		.	.	B	.	.	S	S	S		LH	1				
96236080		.	.	B	.	.	S	S	S		RH	1				
[06]		(E)CLIP (D)KLEMME									(F)ATTACHE (S)GRAPA					
09409-07326		.	.	B	.	.	S	S	S			8				
[07]		(E)COVER-BACK PANEL,LOWER (D)DECKEL									(F)COUVERTURE (S)CUBIERTA					
96236056		.	.	B	.	.	S	S	S			1				L2
[08]		(E)CLIP (D)KLEMME									(F)ATTACHE (S)GRAPA					
09409-07326		.	.	B	.	.	S	S	S			6	970509			
09409-07326		.	.	B	.	.	S	S	S			7	970509			

ENG(ENGINE)	T/A(TRANSAXLE)	BODY TYPE
Y = 1.5SOHC G = 1.6DOHC . = COMMON	M = MANUAL T/A A = AUTOMATIC T/A . = COMMON	4 N = 4 DOOR NOTCHBACK 3 H = 3 DOOR HATCHBACK 5 H = 5 DOOR HATCHBACK

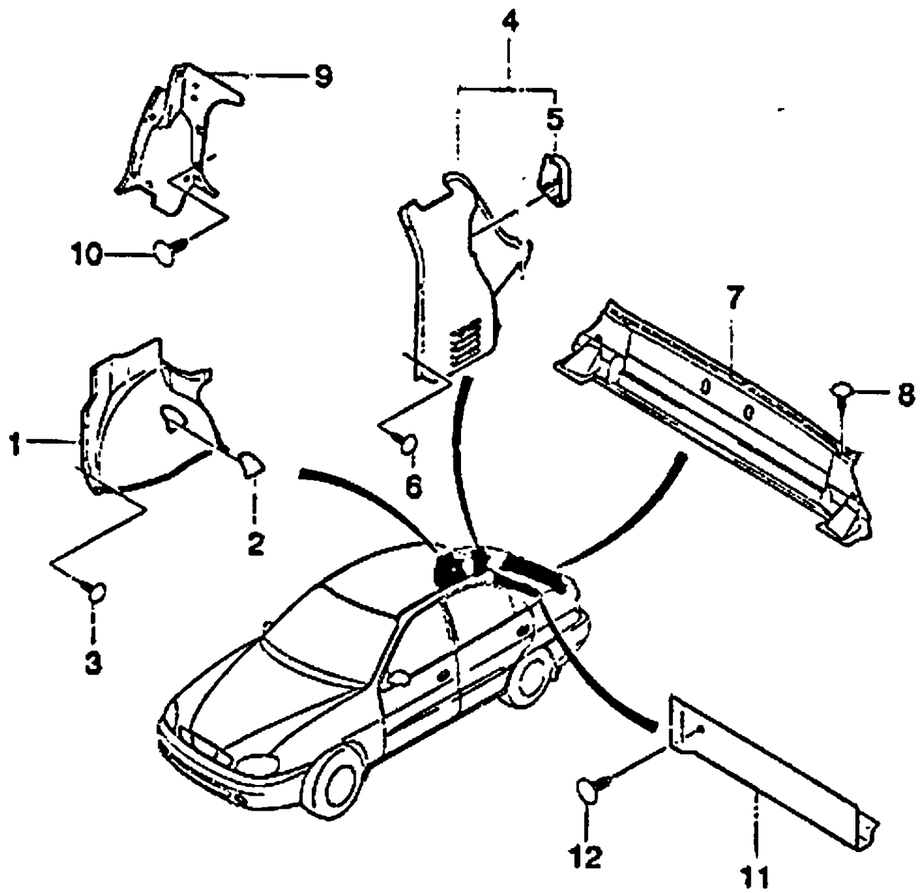

KEY NO. ITC	PART NO	MODEL ENG	T/A	BODY 4N	3H	5H	LEVEL S	SE	SX	OPTION	L/R	QTY	EFFECTIVE DATE FROM	TO	REMARKS	P/CODE
[09]		(E)COVER A-BACK PANEL,UPPER (D)DECKEL									(F)COUVERTURE (S)CUBIERTA					
	96236053	.	.	B	.	.	.	.	S			1				
	96236053	.	.	B	.	.	A	.	A			1	970709		FOR POLAND	
[10]		(E)CLIP (D)KLEMME									(F)ATTACHE (S)GRAPA					
	09409-07325	.	.	B	.	.	.	.	S			2				
	09409-07325	.	.	B	.	.	A	.	A			2	970709		FOR POLAND	
[11]		(E)TRIM A-FRONT,WHEELHOUSE (D)VERKLEIDUNG,RADGEHÄUSE									(F)GARNITURE-TIMONERIE,AVANT (S)ADORNO-ENGRANAJE,FR					
	96252543	.	.	B	.	.	.	.	S		LH	1				
	96252543	.	.	B	.	.	A	.	A		LH	1	970709		FOR POLAND	
	96252545	.	.	B	.	.	.	.	S	&AM9	RH	1				
	96252545	.	.	B	.	.	A	.	A		RH	1	970709		FOR POLAND	
[12]		(E)CLIP (D)KLEMME									(F)ATTACHE (S)GRAPA					
	09409-07325	.	.	B	.	.	S	S	.			4				

ENG(ENGINE)	T/A(TRANSAXLE)	BODY TYPE
Y = 1.5SOHC	M = MANUAL T/A	4 N = 4 DOOR NOTCHBACK
6 = 1.6DOHC	A = AUTOMATIC T/A	3 H = 3 DOOR HATCHBACK
. = COMMON	. = COMMON	5 H = 5 DOOR HATCHBACK

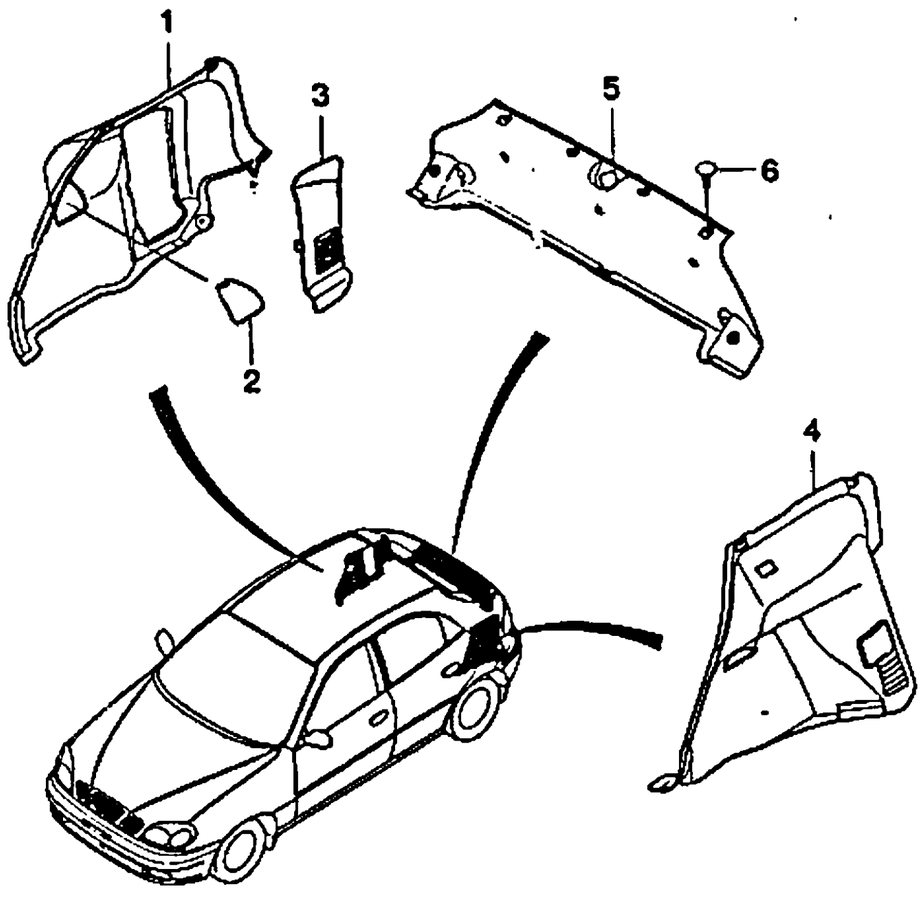

KEY NO. ITC	PART NO	MODEL ENG	T/A	BODY 4N	3H	5H	LEVEL S	SE	SX	OPTION	L/R	QTY	EFFECTIVE DATE FROM	TO	REMARKS	P/CODE
[01]		(E)TRIM A-REAR SIDE PANEL *(D)VERKLEIDUNG*									*(F)GARNITURE* *(S)ADORNO*					
96236071		.	.	.	B	B	S	.	S		LH	1			INCL #2.3	
[02]		(E)COVER-SHOCK ABSORBER,REAR *(D)DECKEL*									*(F)COUVERTURE* *(S)CUBIERTA*					
96237855		.	.	.	B	B	S	.	S			2				
[03]		(E)COVER-TRUNK JACK *(D)DECKEL*									*(F)COUVERTURE* *(S)CUBIERTA*					
96236081		.	.	.	B	B	S	.	S			1				
[04]		(E)TRIM A-REAR SIDE PANEL *(D)VERKLEIDUNG*									*(F)GARNITURE* *(S)ADORNO*					
96236072		.	.	.	B	B	S	.	S		RH	1				
[05]		(E)COVER-BACK PANEL,LOWER *(D)DECKEL*									*(F)COUVERTURE* *(S)CUBIERTA*					
96236055		.	.	.	B	B	S	.	S			1				L1
[06]		(E)CLIP *(D)KLEMME*									*(F)ATTACHE* *(S)GRAPA*					
09409-07326		.	.	.	B	B	S	.	S			6		970509		
09409-07326		.	.	.	B	B	S	.	S			7	970509			

ENG(ENGINE)	T/A(TRANSAXLE)	BODY TYPE
Y = 1.5SOHC 6 = 1.6DOHC . = COMMON	M = MANUAL T/A A = AUTOMATIC T/A . = COMMON	4 N = 4 DOOR NOTCHBACK 3 H = 3 DOOR HATCHBACK 5 H = 5 DOOR HATCHBACK

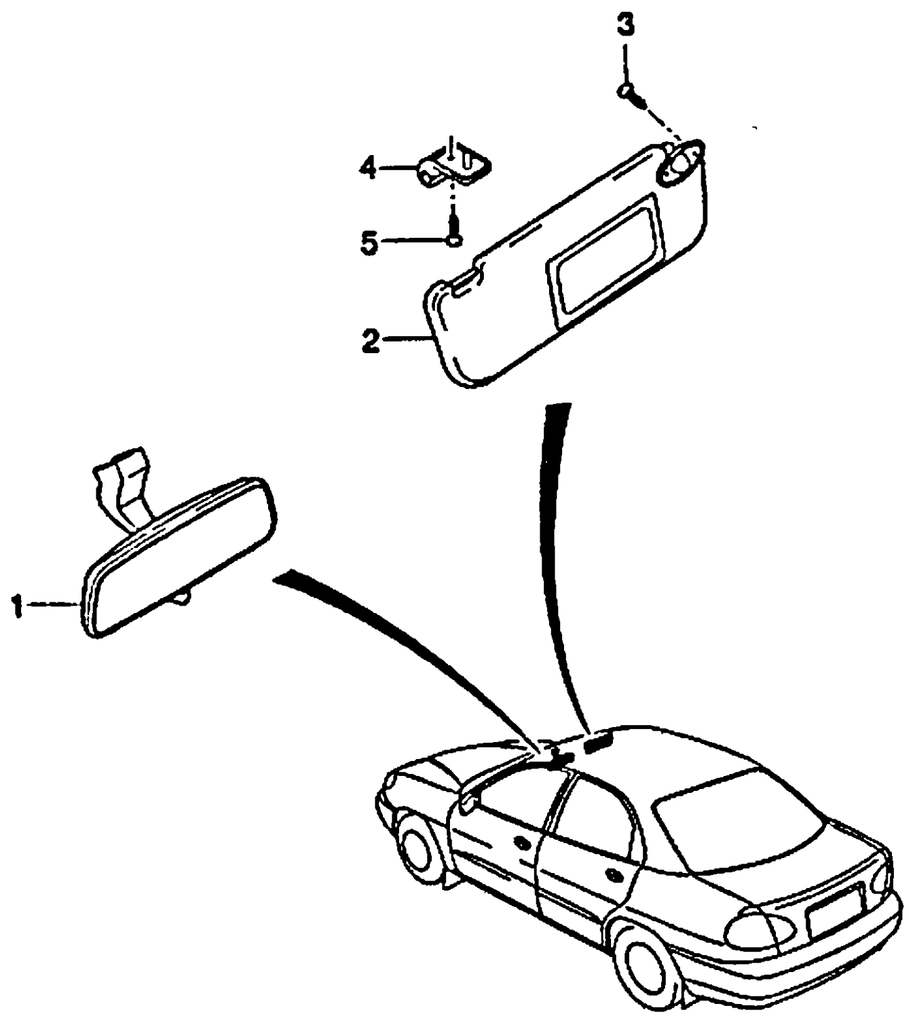

KEY NO. ITC	PART NO	MODEL ENG	T/A	BODY 4N	3H	5H	LEVEL S	SE	SX	OPTION	L/R	QTY	EFFECTIVE DATE FROM	TO	REMARKS	P/CODE
	[01]	(E)MIRROR A-INSIDE TILTABLE (D)SPIEGEL,VERSTELLBAR									(F)RETROVISEUR (S)ESPEJO-INCLINABLE					
	96226345	.	.	B	B	B	S	S	S			1				
	[02]	(E)SUNSHADE A (D)SONNENBLENDE									(F)PARE-SOLEIL (S)PARASOL					
	96235989	.	.	B	B	B	S	S	S	-ABF/AJ3		1			WO/MIRROR	M1
	96235995	.	.	B	B	B	.	O	O	&ABF/AJ3-VB4	LH	1		970508	WO/MIRROR	M3
N	96256547	.	.	B	B	B	.	O	O	&ABF/AJ3-VB4	LH	1	970508		WO/MIRROR	S2
	96235997	.	.	B	B	B	.	A	A	&ABF/AJ3&VB4	LH	1			WO/MIRROR	M4
	96235990	.	.	B	.	.	S	.	.	-ABF/AJ3	RH	1			WO/MIRROR	N1
	96235992	.	.	B	B	B	.	S	S	-ABF/AJ3	RH	1			W/MIRROR	N6
	96236004	.	.	B	B	B	.	O	O	&ABF-VB4	RH	1		970508	W/MIRROR	N8
N	96256551	.	.	B	B	B	.	O	O	&ABF-VB4	RH	1	970508		W/MIRROR	T2
	96236006	.	.	B	B	B	.	A	A	&ABF&VB4	RH	1			W/MIRROR	N9
	[03]	(E)SCREW-TAPPING (D)SCHRAUBE									(F)VIS (S)TORNILLO					
	03130-35198	.	.	B	B	B	S	S	S			4				
	[04]	(E)BRACKET-SUNSHADE (D)TRÄGER									(F)SUPPORT (S)SOPORTE					
	96236009	.	.	B	B	B	S	S	S			2				
	[05]	(E)SCREW-TAPPING (D)SCHRAUBE									(F)VIS (S)TORNILLO					
	03130-35198	.	.	B	B	B	S	S	S			2				

ENG(ENGINE)	T/A(TRANSAXLE)	BODY TYPE
Y = 1.5SOHC	M = MANUAL T/A	4 N = 4 DOOR NOTCHBACK
6 = 1.6DOHC	A = AUTOMATIC T/A	3 H = 3 DOOR HATCHBACK
. = COMMON	. = COMMON	5 H = 5 DOOR HATCHBACK

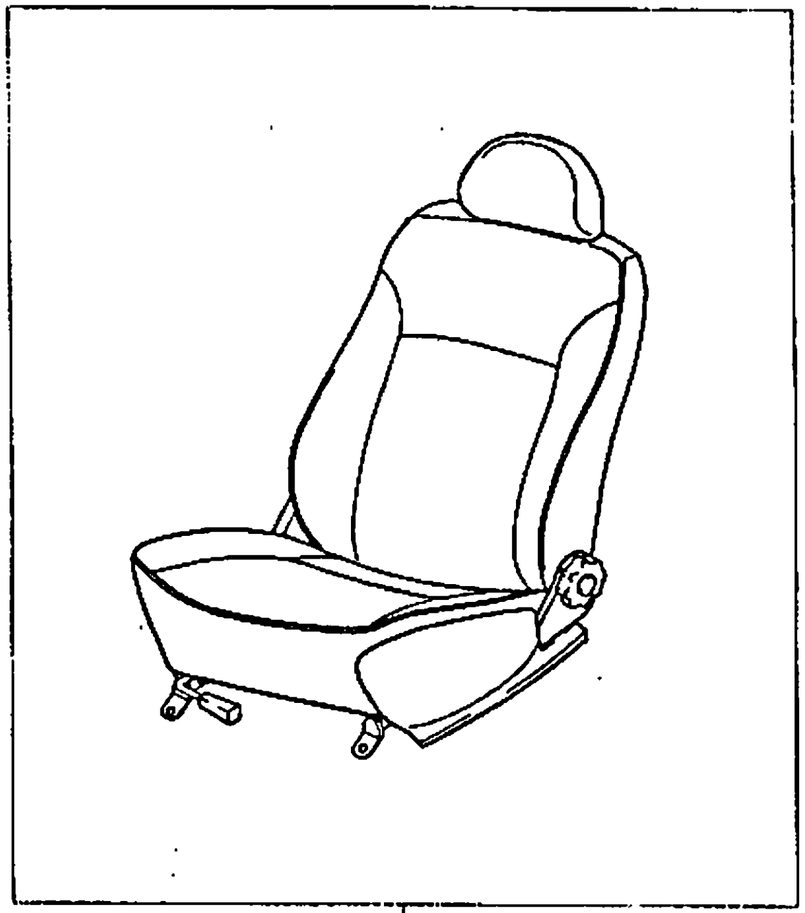

1

KEY NO. ITC	PART NO	MODEL ENG	MODEL T/A	BODY 4N	BODY 3H	BODY 5H	LEVEL S	LEVEL SE	LEVEL SX	OPTION	L/R	QTY	EFFECTIVE DATE FROM	EFFECTIVE DATE TO	REMARKS	P/CODE
	PART NAME															
[01]	(E)SEAT A-FRONT (D)SITZ,VORDER										(F)SIEGE-AVANT (S)ASIENTO-FRENTE					
96239283		.	.	B	.	B	S	.	.		LH	1				B6
96239284		.	.	B	.	B	S	.	.		RH	1				B7
96239281		.	.	B	.	B	O	S	S		LH	1				B4
96239282		.	.	B	.	B	O	S	S		RH	1				B5
96239279		.	.	.	B	.	S	.	.		LH	1				B2
96239280		.	.	.	B	.	S	.	.		RH	1				B3
96239277		.	.	.	B	.	O	.	S		LH	1				A9
96239278		.	.	.	B	.	O	.	S		RH	1				B1
96254867		.	.	B	.	B	A	A	A		LH	1	970709		FOR POLAND	
96254868		.	.	B	.	B	A	A	A		RH	1	970709		FOR POLAND	

ENG(ENGINE)	T/A(TRANSAXLE)	BODY TYPE
Y = 1.5SOHC	M = MANUAL T/A	4 N = 4 DOOR NOTCHBACK
6 = 1.6DOHC	A = AUTOMATIC T/A	3 H = 3 DOOR HATCHBACK
. = COMMON	. = COMMON	5 H = 5 DOOR HATCHBACK

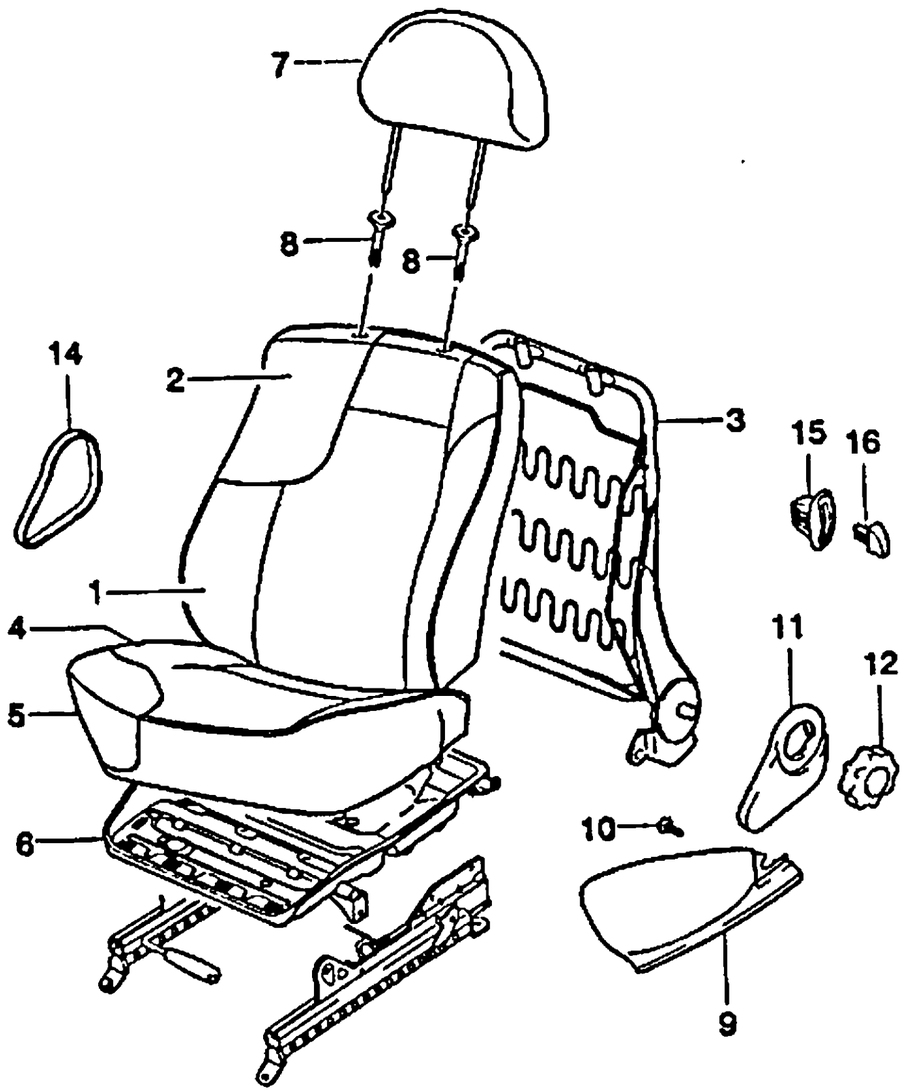

KEY NO. ITC	PART NO	MODEL ENG	MODEL T/A	MODEL BODY 4N	MODEL BODY 3H	MODEL BODY 5H	MODEL LEVEL S	MODEL LEVEL SE	MODEL LEVEL SX	OPTION	L/R	QTY	EFFECTIVE DATE FROM	EFFECTIVE DATE TO	REMARKS	P/CODE
	[01]	(E)COVERING-FRONT SEAT BACK (D)DECKEL									(F)COUVERTURE (S)CUBIERTA					
	96239314	.	.	B	B	B	S	.	.	&W6K		2				
	96239313	.	.	B	B	B	O	S	S	&W6E		2				
	[02]	(E)PAD-FRONT SEAT BACK (D)UNTERLAG									(F)PATIN (S)COJIN					
	96227651	.	.	B	B	B	S	S	S			2				
	[03]	(E)FRAME-FRONT SEAT BACK (D)RAHMEN									(F)CADRE (S)ARMADURA					
	96227653	.	.	B	.	B	S	S	S		LH	1				
	96227654	.	.	B	.	B	S	S	S		RH	1				
	96228641	.	.	.	B	.	S	.	S		LH	1				
	96228642	.	.	.	B	.	S	.	S		RH	1				
	[04]	(E)COVERING-FRT SEAT CUSHION (D)DECKEL									(F)COUVERTURE (S)CUBIERTA					
	96239316	.	.	B	B	B	S	.	.	&W6K		2				
	96239315	.	.	B	B	B	O	S	S	&W6E		2				
	[05]	(E)PAD-FRONT SEAT CUSHION (D)UNTERLAG									(F)PATIN (S)COJIN					
	96227652	.	.	B	B	B	S	S	S			2				
	[06]	(E)FRAME-FRONT SEAT CUSHION (D)RAHMEN									(F)CADRE (S)ARMADURA					
	96234775	.	.	B	B	B	S	S	S		LH	1				
	96234776	.	.	B	B	B	S	S	S		RH	1				
	[07]	(E)HEADREST A-FRONT SEAT (D)KOPFPOLSTER									(F)APPUI-TETE (S)APOYABRAZOS					
	96227633	.	.	B	B	B	S	.	.	&W6K		2				

ENG(ENGINE)	T/A(TRANSAXLE)	BODY TYPE
Y = 1.5SOHC 6 = 1.6DOHC . = COMMON	M = MANUAL T/A A = AUTOMATIC T/A . = COMMON	4 N = 4 DOOR NOTCHBACK 3 H = 3 DOOR HATCHBACK 5 H = 5 DOOR HATCHBACK

7520 FRONT SEAT PARTS

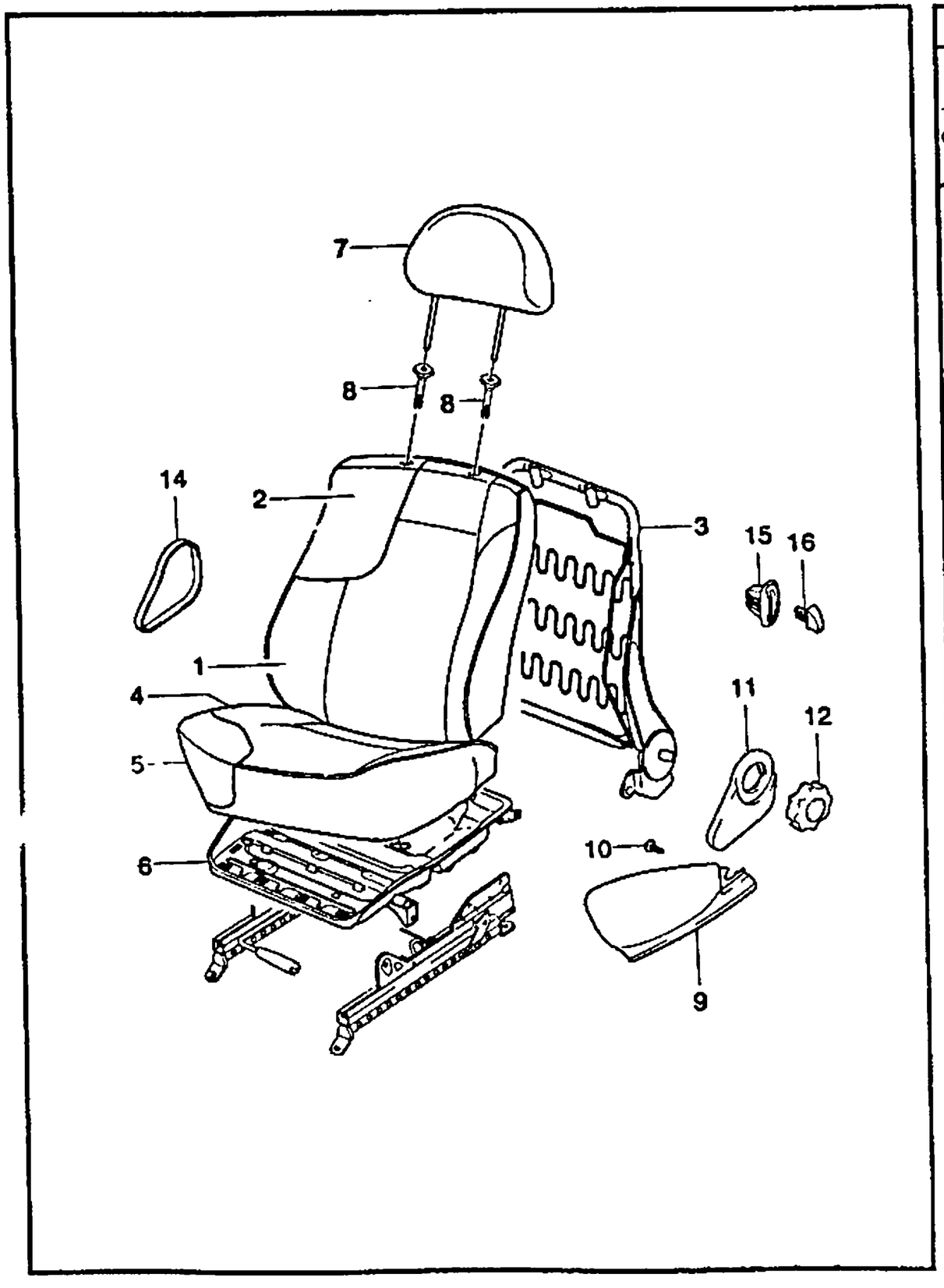

KEY NO. ITC	PART NO	MODEL ENG	T/A	BODY 4N	3H	5H	LEVEL S	SE	SX	OPTION	L/R	QTY	EFFECTIVE DATE FROM	TO	REMARKS	P/CODE
	96227632	.	.	B	B	B	O	S	S	&W6E		2				
[08]	(E)SLEEVE-HEADREST (D)HÜLSE,KOPFPOLSTER										(F)CHEMISE-APPUI-TETE (S)MANGA					
	96238404	.	.	B	B	B	S	S	S			2			W/LOCK	
	96238405	.	.	B	B	B	S	S	S			2			WO/LOCK	
[09]	(E)COVER-FRONT SEAT OTR,LWR (D)DECKEL										(F)COUVERTURE (S)CUBIERTA					
	96238397	.	.	B	B	B	S	S	S			LH 1				
	96238398	.	.	B	B	B	S	S	S			RH 1				
[10]	(E)SCREW-TAPPING (D)SCHRAUBE										(F)VIS (S)TORNILLO					
	03140-42229	.	.	B	B	B	S	S	S			4				
[11]	(E)COVER-FRONT SEAT OTR,UPR (D)DECKEL										(F)COUVERTURE (S)CUBIERTA					
	96238399	.	.	B	B	B	S	S	S			LH 1				
	96238400	.	.	B	B	B	S	S	S			RH 1				
[12]	(E)REGULATOR A-FRONT SEAT (D)REGULATOR										(F)REGULATEUR (S)REGULADOR					
	96238401	.	.	B	B	B	S	S	S			2				
[14]	(E)COVER-FRONT SEAT OTR,UPR (D)SCHRAUBE										(F)COUVERTURE (S)TORNILLO					
	96238395	.	.	B	B	B	S	S	S			LH 1				
	96238396	.	.	B	B	B	S	S	S			RH 1				
[15]	(E)COVER-SEAT BACK STOP (D)DECKEL										(F)CARTER (S)CUBIERTA					
	96238403	.	.	.	B	.	S	S	S			2				
[16]	(E)KNOB-LEVER,SEAT BACK STOP (D)KNOPF										(F)BOUTON (S)PERILLA					

ENG(ENGINE)	T/A(TRANSAXLE)	BODY TYPE
Y = 1.5SOHC 6 = 1.6DOHC . = COMMON	M = MANUAL T/A A = AUTOMATIC T/A . = COMMON	4 N = 4 DOOR NOTCHBACK 3 H = 3 DOOR HATCHBACK 5 H = 5 DOOR HATCHBACK

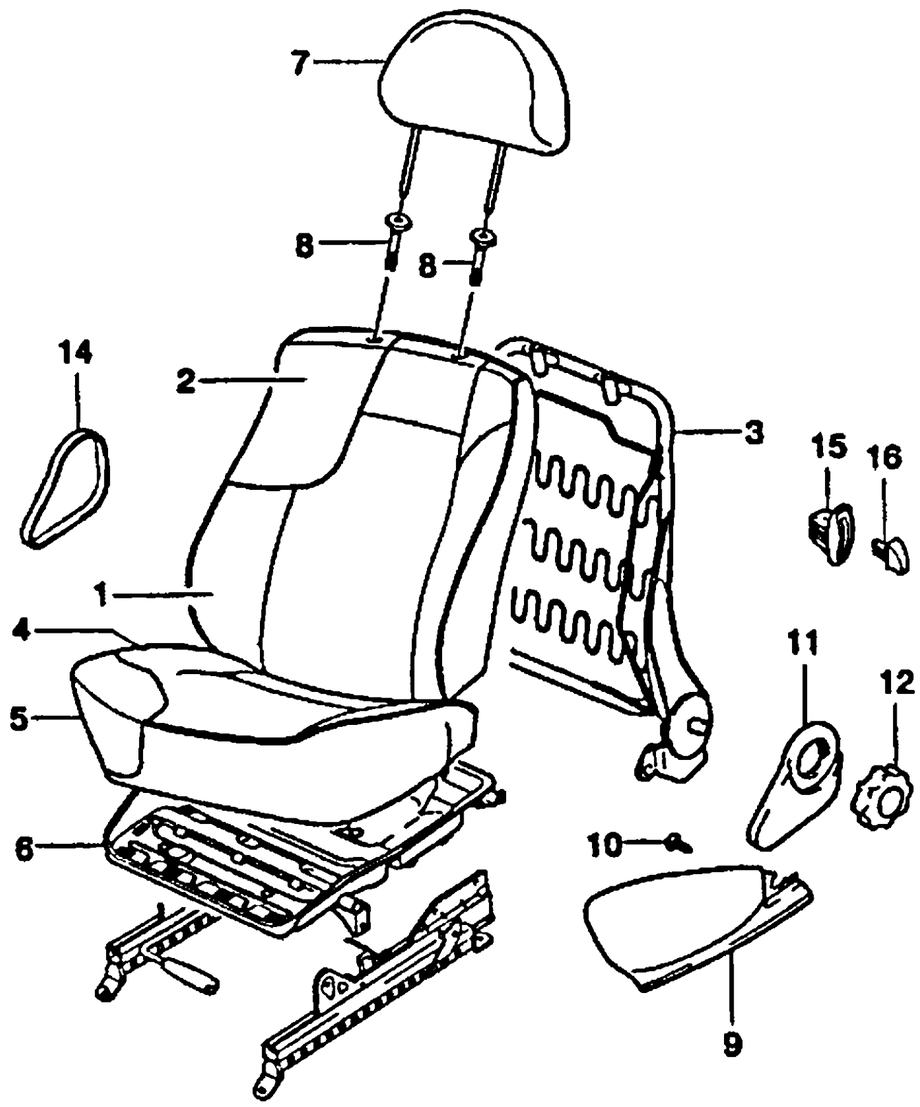

KEY NO.	PART NAME															
ITC	PART NO	MODEL								OPTION	L/R	QTY	EFFECTIVE DATE		REMARKS	P/CODE
		ENG	T/A	BODY			LEVEL						FROM	TO		
				4N	3H	5H	S	SE	SX							
	96238402	.	.	.	B	.	S	S	S			2				

ENG(ENGINE)	T/A(TRANSAXLE)	BODY TYPE
Y = 1.5SOHC	M = MANUAL T/A	4 N = 4 DOOR NOTCHBACK
6 = 1.6DOHC	A = AUTOMATIC T/A	3 H = 3 DOOR HATCHBACK
. = COMMON	. = COMMON	5 H = 5 DOOR HATCHBACK

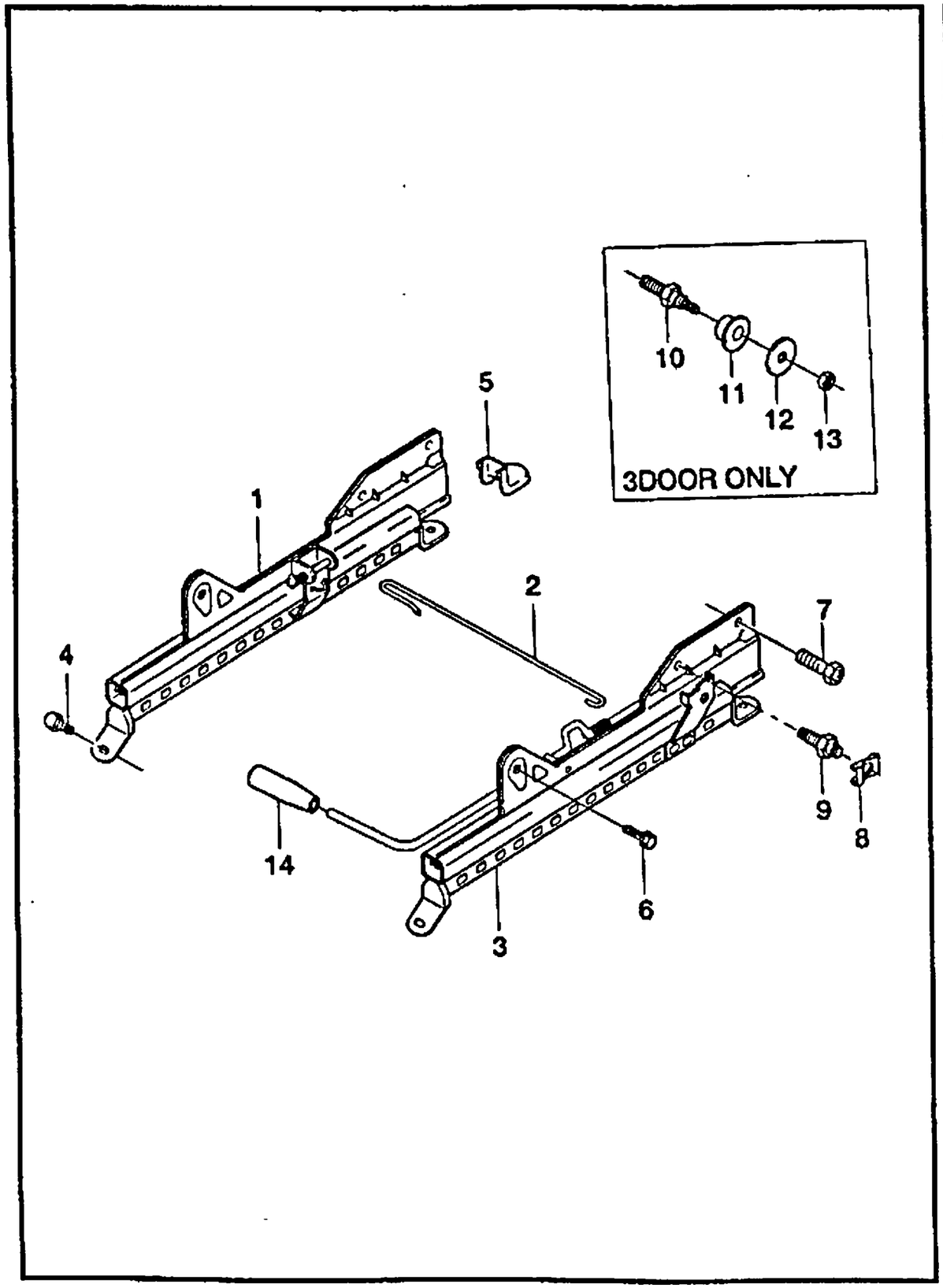

KEY NO. ITC	PART NO	PART NAME: MODEL ENG	T/A	BODY 4N	3H	5H	LEVEL S	SE	SX	OPTION	L/R	QTY	EFFECTIVE DATE FROM	TO	REMARKS	P/CODE
[01]		(E)RAIL A-GUIDE OUTER (D)SCHIENE,AUßEN FÜHRUNG									(F)RAIL-GUIDE EXTERNE (S)RIEL-GUIA EXTERNA					
96227634		.	.	B	B	B	S	S	S		LH	1				
96227635		.	.	B	B	B	S	S	S		RH	1				
[02]		(E)WIRE-SEAT ADJUSTER (D)VERDRAHTUNG,EINSTELLUNG									(F)CABLE-AJUSTEUR SIEGE (S)ALAMBRE					
96227657		.	.	B	B	B	S	S	S			2				
[03]		(E)RAIL A-GUIDE INNER (D)SCHIENE,INNEN FÜHRUNG									(F)RAIL-GUIDE INTERNE (S)RIEL-GUIA INTERNA					
96227636		.	.	B	B	B	S	S	S		LH	1				
96227637		.	.	B	B	B	S	S	S		RH	1				
[04]		(E)BOLT (D)SCHRAUBE									(F)BOULON (S)PERNO					
09116-08001		.	.	B	B	B	S	S	S			8			W/WASHER	
[05]		(E)END PIECE-FRONT SEAT,REAR (D)TEIL,END									(F)PIECE (S)PIEZA					
96238406		.	.	B	B	B	S	S	S			4				
[06]		(E)BOLT (D)SCHRAUBE									(F)BOULON (S)PERNO					
01127-08259		.	.	B	B	B	S	S	S			4				
[07]		(E)BOLT (D)SCHRAUBE									(F)BOULON (S)PERNO					
01107-10259		.	.	B	.	B	S	S	S			4				
[08]		(E)NUT-SPEED (D)MUTTER									(F)ECROU (S)TUERCA					
09148-10001		.	.	B	B	B	S	S	S			4				
[09]		(E)PIN-LOCKING FRONT SEAT (D)STIFT									(F)BROCHE (S)PASADOR					

ENG(ENGINE)	T/A(TRANSAXLE)	BODY TYPE
Y = 1.5SOHC 6 = 1.6DOHC . = COMMON	M = MANUAL T/A A = AUTOMATIC T/A . = COMMON	4 N = 4 DOOR NOTCHBACK 3 H = 3 DOOR HATCHBACK 5 H = 5 DOOR HATCHBACK

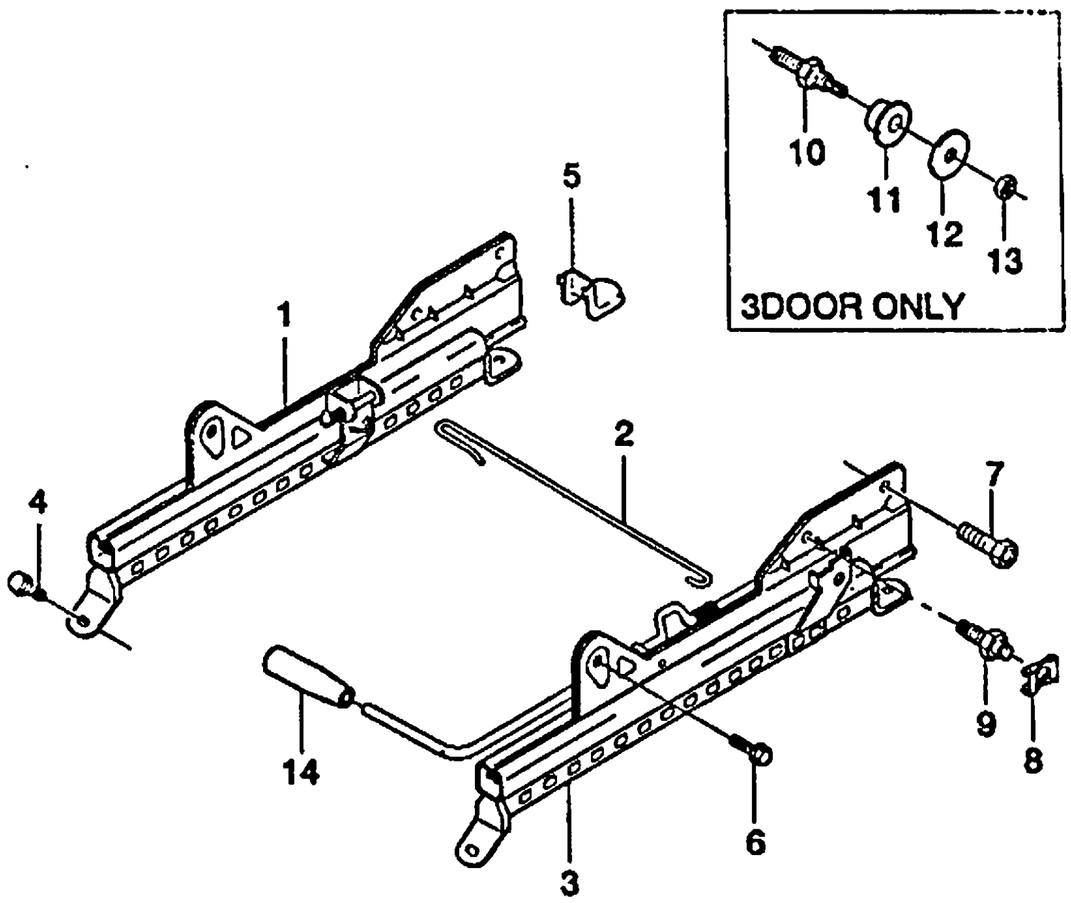

KEY NO.		PART NAME														
		MODEL														
				BODY			LEVEL									
ITC	PART NO	ENG	T/A	4N	3H	5H	S	SE	SX	OPTION	L/R	QTY	EFFECTIVE DATE FROM	EFFECTIVE DATE TO	REMARKS	PICODE
	96228645	.	.	B	B	B	S	S	S			4				
[10]	(E)BOLT-LOCKING FRONT SEAT (D)SCHRAUBE											(F)BOULON (S)PERNO				
	96228646	.	.	.	B	.	S	.	S			4				
[11]	(E)ROLLER-FRONT SEAT (D)LAUFROLLE											(F)ROULEAU (S)RODILLO				
	96228647	.	.	.	B	.	S	.	S			4				
[12]	(E)WASHER-PLAIN (D)DICHTUNGSRING											(F)RONDELLE (S)ARANDELA				
	09160-10006	.	.	.	B	.	S	.	S			4				
[13]	(E)NUT-HEXAGON (D)MUTTER											(F)ECROU (S)TUERCA				
	08310-21089	.	.	.	B	.	S	.	S			4				
[14]	(E)KNOB-ADJUSTER (D)KNOPF											(F)BOUTON (S)PERILLA				
	9401705	.	.	B	B	B	S	S	S			2				

ENG(ENGINE)	T/A(TRANSAXLE)	BODY TYPE
Y = 1.5SOHC 6 = 1.6DOHC . = COMMON	M = MANUAL T/A A = AUTOMATIC T/A . = COMMON	4 N = 4 DOOR NOTCHBACK 3 H = 3 DOOR HATCHBACK 5 H = 5 DOOR HATCHBACK

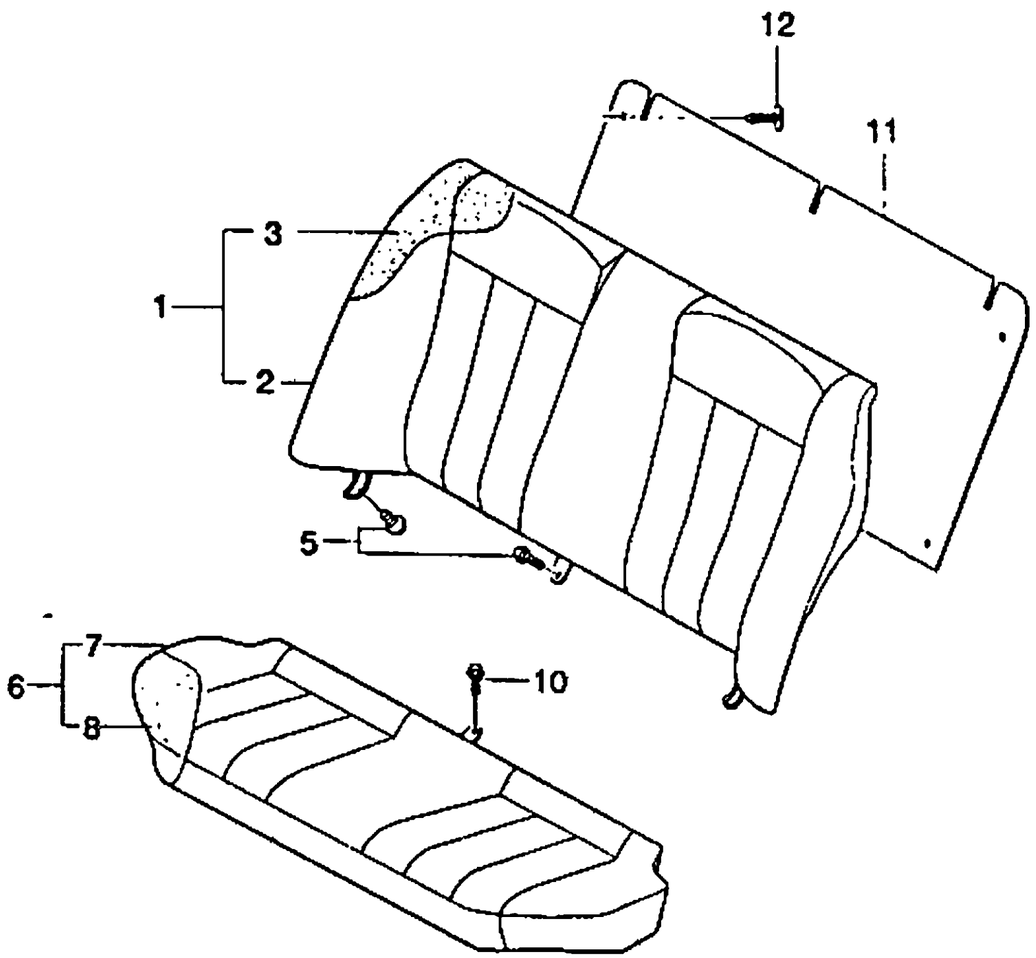

KEY NO. ITC	PART NO	MODEL ENG	T/A	BODY 4N	3H	5H	LEVEL S	SE	SX	OPTION	L/R	QTY	EFFECTIVE DATE FROM	TO	REMARKS	P/CODE
[01]		(E)BACK-REAR SEAT (D)SITZ									(F)SIEGE (S)ASIENTO					
	96239299	.	.	B	.	.	S	.	.	&W6K		1				Q1
	96239300	.	.	B	.	.	O	S	.	&W6E		1				Q2
[02]		(E)COVERING A-REAR SEAT BACK (D)DECKEL									(F)COUVERTURE (S)CUBIERTA					
	96239307	.	.	B	.	.	S	.	.	&W6K		1				
	96239308	.	.	B	.	.	O	S	.	&W6E		1				
[03]		(E)PAD A-REAR SEAT BACK (D)UNTERLAG									(F)PATIN (S)COJIN					
	96226019	.	.	B	.	.	S	S	.			1				
[05]		(E)BOLT (D)SCHRAUBE									(F)BOULON (S)PERNO					
	09116-08001	.	.	B	.	.	S	S	.			3			W/WASHER	
[06]		(E)CUSHION-REAR SEAT (D)POLSTER,SITZ,HINTER									(F)COUSSIN-SIEGE,ARRIERE (S)COJIN-ASIENTO,TRASERO					
	96239297	.	.	B	.	.	S	.	.	&W6K		1				P1
	96239298	.	.	B	.	.	O	S	.	&W6E		1				P2
[07]		(E)COVERING A-RR SEAT CUSHIO (D)DECKEL									(F)COUVERTURE (S)CUBIERTA					
	96239306	.	.	B	.	.	S	.	.	&W6K		1				
	96239305	.	.	B	.	.	O	S	.	&W6E		1				
[08]		(E)PAD A-REAR SEAT CUSHION (D)UNTERLAG									(F)PATIN (S)COJIN					
	96226016	.	.	B	.	.	S	S	.			1				
[10]		(E)BOLT (D)SCHRAUBE									(F)BOULON (S)PERNO					
	09116-08001	.	.	B	.	.	S	S	.			1			W/WASHER	

ENG(ENGINE)	T/A(TRANSAXLE)	BODY TYPE
Y = 1.5SOHC 6 = 1.6DOHC . = COMMON	M = MANUAL T/A A = AUTOMATIC T/A . = COMMON	4 N = 4 DOOR NOTCHBACK 3 H = 3 DOOR HATCHBACK 5 H = 5 DOOR HATCHBACK

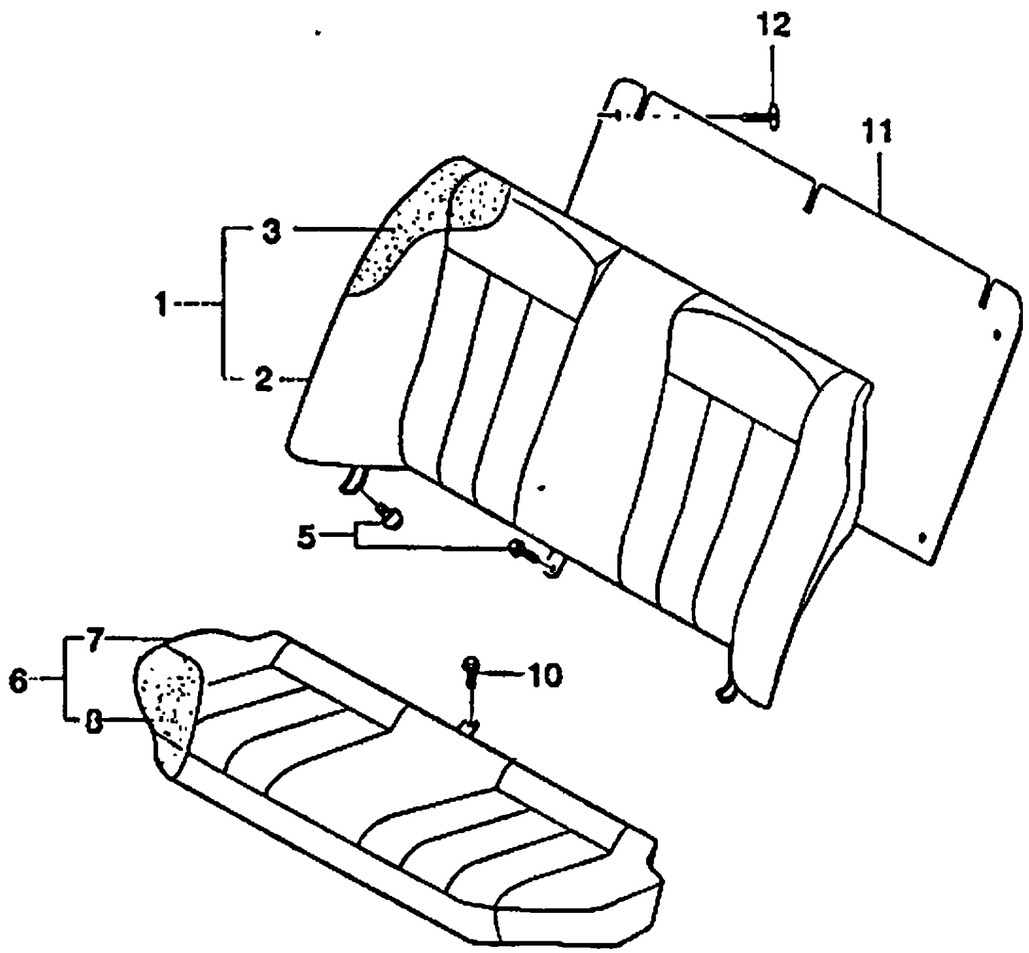

KEY NO.		PART NAME														
ITC	PART NO	MODEL								OPTION	L/R	QTY	EFFECTIVE DATE		REMARKS	P/CODE
		ENG	T/A	BODY			LEVEL						FROM	TO		
				4N	3H	5H	S	SE	SX							
[11]		(E)COVER-REAR SEAT BACK (D)DECKEL,STZRÜCKEN									(F)COUVERTURE (S)CUBIERTA					
	96236052	.	.	B	.	.	S	S	.			1				
[12]		(E)CLIP (D)KLEMME									(F)ATTACHE (S)GRAPA					
	09409-07330	.	.	B	.	.	S	S	.			4				

ENG(ENGINE)	T/A(TRANSAXLE)	BODY TYPE
Y = 1.5SOHC 6 = 1.6DOHC . = COMMON	M = MANUAL T/A A = AUTOMATIC T/A . = COMMON	4 N = 4 DOOR NOTCHBACK 3 H = 3 DOOR HATCHBACK 5 H = 5 DOOR HATCHBACK

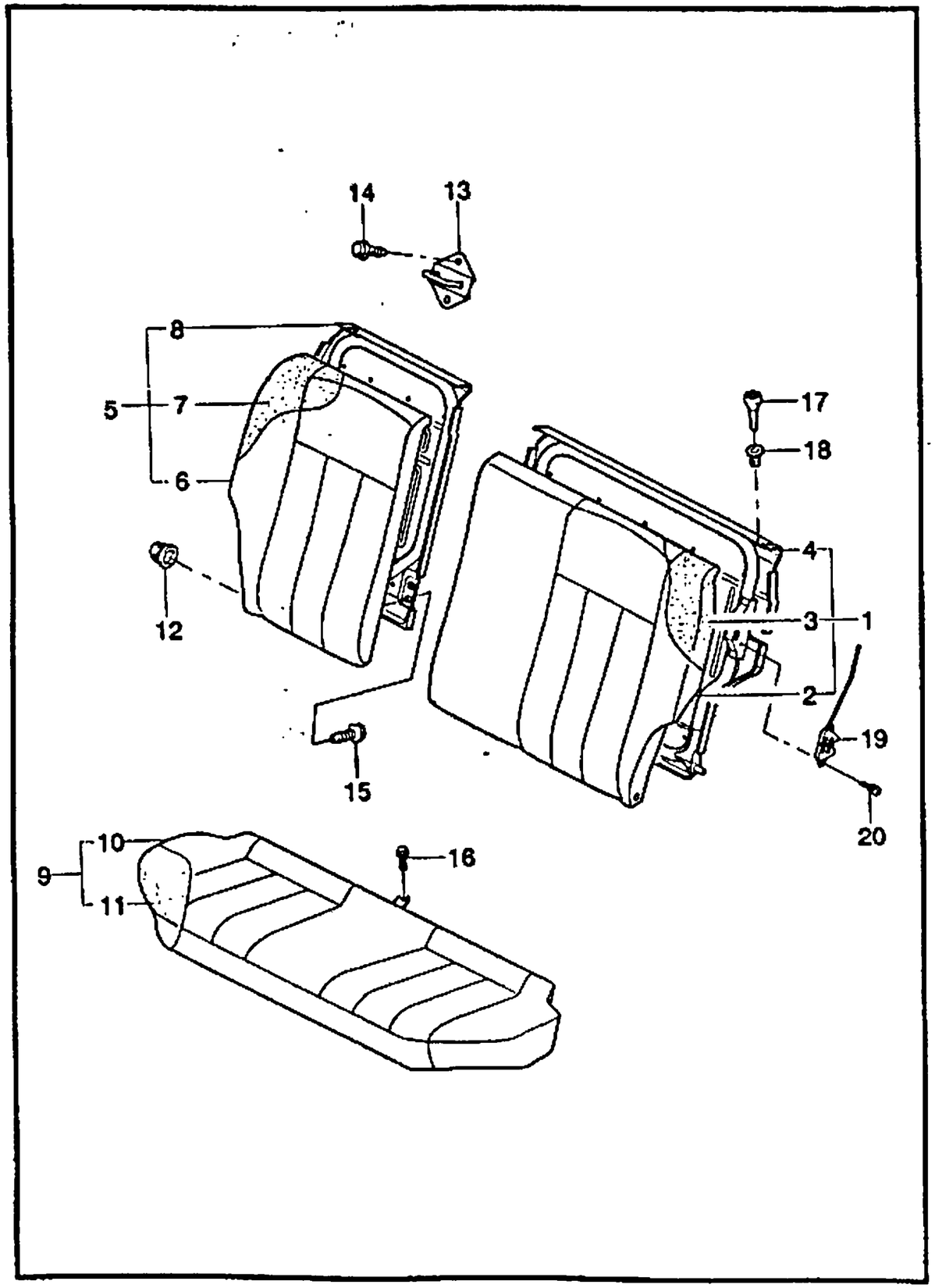

KEY NO. ITC	PART NO	MODEL ENG	MODEL T/A	MODEL BODY 4N	MODEL BODY 3H	MODEL BODY 5H	MODEL LEVEL S	MODEL LEVEL SE	MODEL LEVEL SX	OPTION	L/R	QTY	EFFECTIVE DATE FROM	EFFECTIVE DATE TO	REMARKS	P/CODE
	[01]	(E)BACK-REAR SEAT (D)SITZ									(F)SIEGE (S)ASIENTO					
	96239301	.	.	B	.	.	.	.	S	&W6E	LH	1				R1
	96239303	.	.	.	B	B	S	.	.	&W6K	LH	1				R3
	96239301	.	.	.	B	B	O	.	S	&W6E	LH	1				R1
	[02]	(E)COVERING A-REAR SEAT BACK (D)DECKEL									(F)COUVERTURE (S)CUBIERTA					
	96239311	.	.	B	.	.	O	.	S	&W6E	LH	1				
	96239309	.	.	.	B	B	S	.	.	&W6K	LH	1				
	96239311	.	.	.	B	B	O	.	S	&W6E	LH	1				
	[03]	(E)PAD A-REAR SEAT BACK (D)UNTERLAG									(F)PATIN (S)COJIN					
	96226024	.	.	B	.	.	.	.	S		LH	1				
	96226024	.	.	.	B	B	S	.	S		LH	1				
	[04]	(E)FRAME A-REAR SEAT BACK (D)RAHMEN									(F)CADRE (S)ARMADURA					
	96226030	.	.	B	.	.	.	.	S		LH	1				
	96226030	.	.	.	B	B	S	.	S		LH	1				
	[05]	(E)BACK-REAR SEAT (D)SITZ									(F)SIEGE (S)ASIENTO					
	96239302	.	.	B	.	.	.	.	S	&W6E	RH	1				R2
	96239304	.	.	.	B	B	S	.	.	&W6K	RH	1				R4
	96239302	.	.	.	B	B	O	.	S	&W6E	RH	1				R2
	[06]	(E)COVERING A-REAR SEAT BACK (D)DECKEL									(F)COUVERTURE (S)CUBIERTA					
	96239312	.	.	B	.	.	.	.	S	&W6E	RH	1				
	96239310	.	.	.	B	B	S	.	.	&W6K	RH	1				

ENG(ENGINE)	T/A(TRANSAXLE)	BODY TYPE
Y = 1.5SOHC 6 = 1.6DOHC . = COMMON	M = MANUAL T/A A = AUTOMATIC T/A . = COMMON	4 N = 4 DOOR NOTCHBACK 3 H = 3 DOOR HATCHBACK 5 H = 5 DOOR HATCHBACK

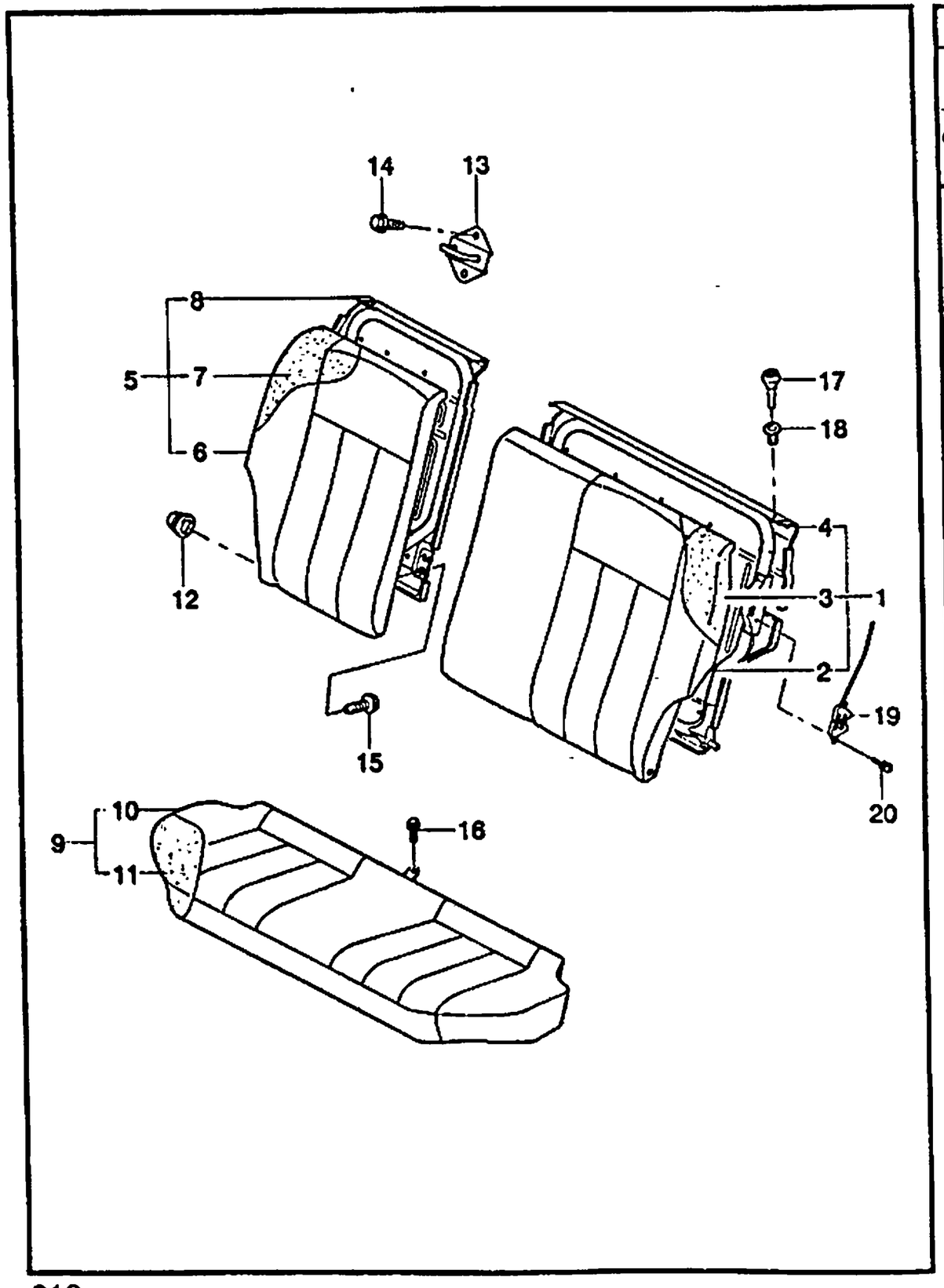

KEY NO. ITC	PART NO	MODEL ENG	T/A	BODY 4N	3H	5H	LEVEL S	SE	SX	OPTION	L/R	QTY	EFFECTIVE DATE FROM	TO	REMARKS	P/CODE
	96239312	.	.	.	B	B	O	.	S	&W6E	RH	1				
[07]	(E)PAD A-REAR SEAT BACK (D)UNTERLAG										(F)PATIN (S)COJIN					
	96226025	.	.	B	.	.	.	.	S		RH	1				
	96226025	.	.	.	B	B	S	.	S		RH	1				
[08]	(E)FRAME A-REAR SEAT BACK (D)RAHMEN										(F)CADRE (S)ARMADURA					
	96226031	.	.	B	.	.	.	.	S		RH	1				
	96226031	.	.	.	B	B	S	.	S		RH	1				
[09]	(E)CUSHION-REAR SEAT (D)POLSTER,SITZ,HINTER										(F)COUSSIN-SIEGE,ARRIERE (S)COJIN-ASIENTO,TRASERO					
	96239298	.	.	B	.	.	.	.	S	&W6E		1				P2
	96239297	.	.	.	B	B	S	.	.	&W6K		1				P1
	96239298	.	.	.	B	B	O	.	S	&W6E		1				P2
	96254874	.	.	.	.	B	O	.	S	&W6E		1	970709		FOR POLAND	P2
[10]	(E)COVERING A-RR SEAT CUSHIO (D)DECKEL										(F)COUVERTURE (S)CUBIERTA					
	96239305	.	.	B	.	.	.	.	S	&W6E		1				
	96239306	.	.	.	B	B	S	.	.	&W6K		1				
	96239305	.	.	.	B	B	O	.	S	&W6E		1				
[11]	(E)PAD A-REAR SEAT CUSHION (D)UNTERLAG										(F)PATIN (S)COJIN					
	96226016	.	.	B	.	.	.	.	S			1				
	96226016	.	.	.	B	B	S	.	S			1				
[12]	(E)BUSHING (D)LAGERFUTTER										(F)MANCHON (S)BUJE DE BOQUILLA					
	96216145	.	.	B	.	.	.	.	S			2				

ENG(ENGINE)	T/A(TRANSAXLE)	BODY TYPE
Y = 1.5SOHC 6 = 1.6DOHC . = COMMON	M = MANUAL T/A A = AUTOMATIC T/A . = COMMON	4 N = 4 DOOR NOTCHBACK 3 H = 3 DOOR HATCHBACK 5 H = 5 DOOR HATCHBACK

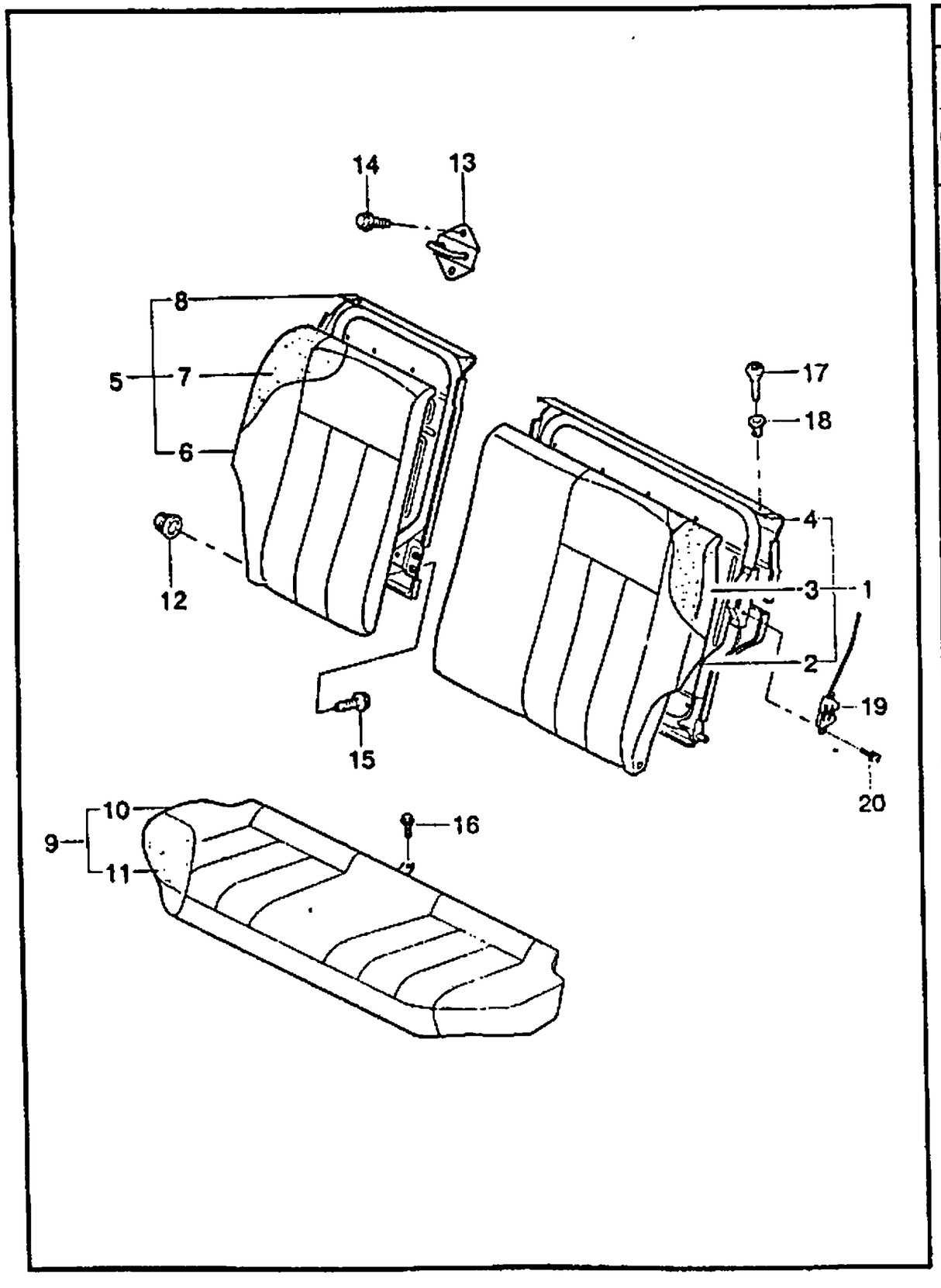

KEY NO. ITC	PART NO	MODEL ENG	T/A	BODY 4N	3H	5H	LEVEL S	SE	SX	OPTION	L/R	QTY	EFFECTIVE DATE FROM	TO	REMARKS	PICODE
	96216145	.	.	B	.	.	A	.	A			2	970709		FOR POLAND	
	96216145	.	.	.	B	B	S	.	S			2				
[13]	(E)STRIKER A (D)SCHLÄGER											(F)MARTEAU (S)HUELGUISTA				
	96303088	.	.	B	.	.	.	.	S			2				
	96303088	.	.	B	.	.	A	.	A			2	970709		FOR POLAND	
	96303088	.	.	.	.	B	A	.	A			2	970709		FOR POLAND	
	96303088	.	.	.	B	B	S	.	S			2				
[14]	(E)BOLT (D)SCHRAUBE											(F)BOULON (S)PERNO				
	09116-08001	.	.	B	.	.	.	.	S			4			W/WASHER	
	09116-08001	.	.	B	.	.	A	.	A			4	970709		FOR POLAND	
	09116-08001	.	.	.	B	B	S	.	S			4			W/WASHER	
[15]	(E)BOLT (D)SCHRAUBE											(F)BOULON (S)PERNO				
	09116-08001	.	.	B	.	.	.	.	S			4			W/WASHER	
	09116-08001	.	.	B	.	.	A	.	A			4	970709		FOR POLAND	
	09116-08001	.	.	.	B	B	S	.	S			4			W/WASHER	
[16]	(E)BOLT (D)SCHRAUBE											(F)BOULON (S)PERNO				
	09116-08001	.	.	B	.	.	.	.	S			1			W/WASHER	
	09116-08001	.	.	B	.	.	A	A	A			1	970709		FOR POLAND	
	09116-08001	.	.	.	B	B	S	.	S			1			W/WASHER	
[17]	(E)KNOB-REAR,SEAT BACK (D)KNOPF											(F)BOUTON (S)PERILLA				
	96238407	.	.	B	.	.	.	.	S			2				

ENG(ENGINE)	T/A(TRANSAXLE)	BODY TYPE
Y = 1.5SOHC 6 = 1.6DOHC . = COMMON	M = MANUAL T/A A = AUTOMATIC T/A . = COMMON	4 N = 4 DOOR NOTCHBACK 3 H = 3 DOOR HATCHBACK 5 H = 5 DOOR HATCHBACK

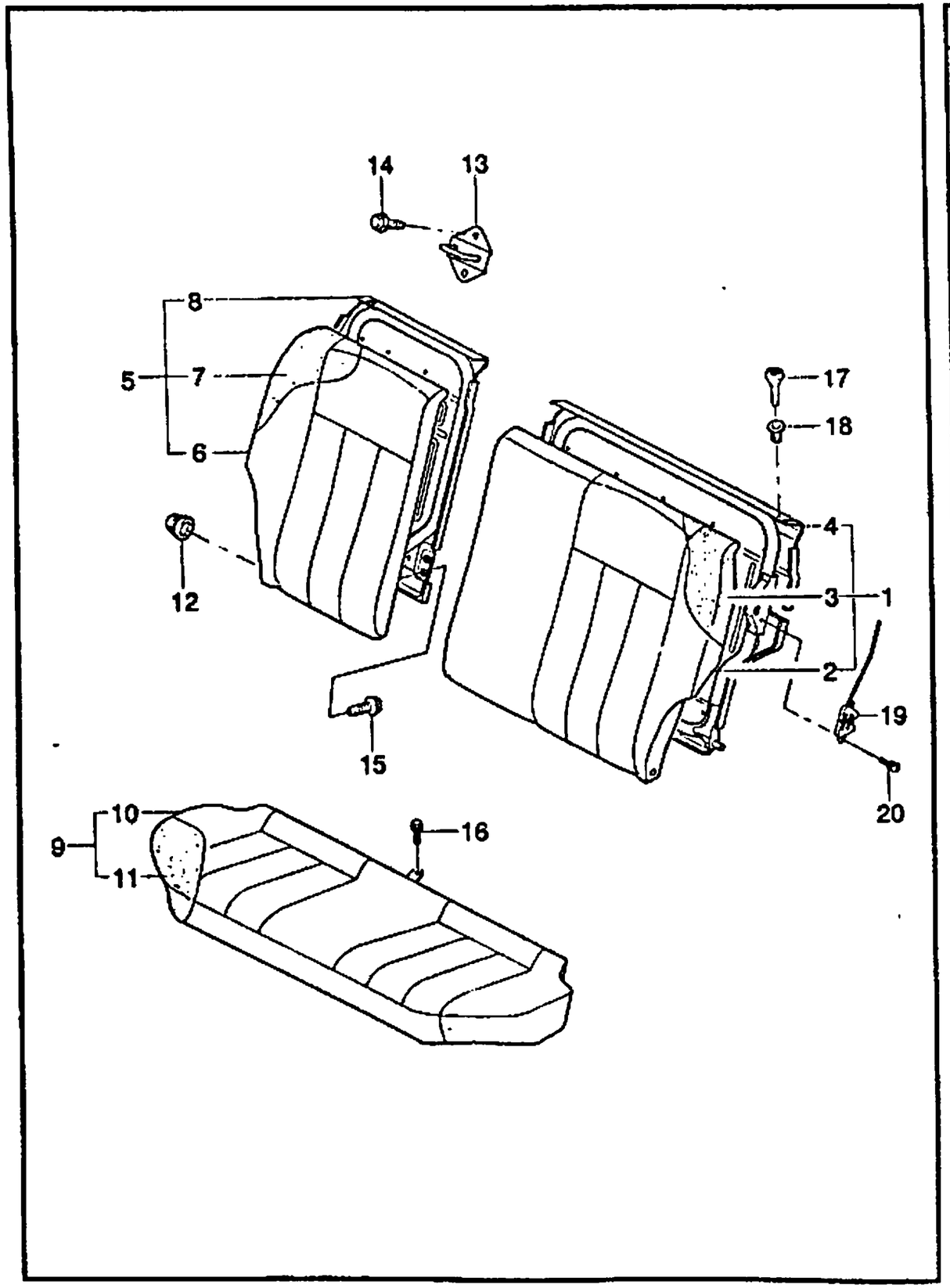

KEY NO. ITC	PART NO	MODEL ENG	MODEL T/A	MODEL BODY 4N	MODEL BODY 3H	MODEL BODY 5H	MODEL LEVEL S	MODEL LEVEL SE	MODEL LEVEL SX	OPTION	L/R	QTY	EFFECTIVE DATE FROM	EFFECTIVE DATE TO	REMARKS	P/CODE
	96238407	.	.	.	B	B	S	.	S			2				
[18]	(E)SLEEVE-REAR,SEAT BACK (D)HÜLSE											(F)CHEMISE (S)MANGA				
	96238408	.	.	B	.	.	.	.	S			2				
	96238408	.	.	.	B	B	S	.	S			2				
[19]	(E)LATCH A-REAR,SEAT BACK (D)VERSCHLUß											(F)LOQUET (S)PESTILLO				
	96226034	.	.	B	.	.	.	.	S		LH	1				
	96226035	.	.	.	B	B	S	.	S		RH	1				
	96226034	.	.	B	.	.	.	.	S		LH	1				
	96226035	.	.	.	B	B	S	.	S		RH	1				
[20]	(E)SCREW (D)SCHRAUBE											(F)VIS (S)TORNILLO				
	02116-76165	.	.	B	.	.	.	.	S			4				
	02116-76165	.	.	.	B	B	S	.	S			4				

ENG(ENGINE)	T/A(TRANSAXLE)	BODY TYPE
Y = 1.5SOHC 6 = 1.6DOHC . = COMMON	M = MANUAL T/A A = AUTOMATIC T/A . = COMMON	4 N = 4 DOOR NOTCHBACK 3 H = 3 DOOR HATCHBACK 5 H = 5 DOOR HATCHBACK

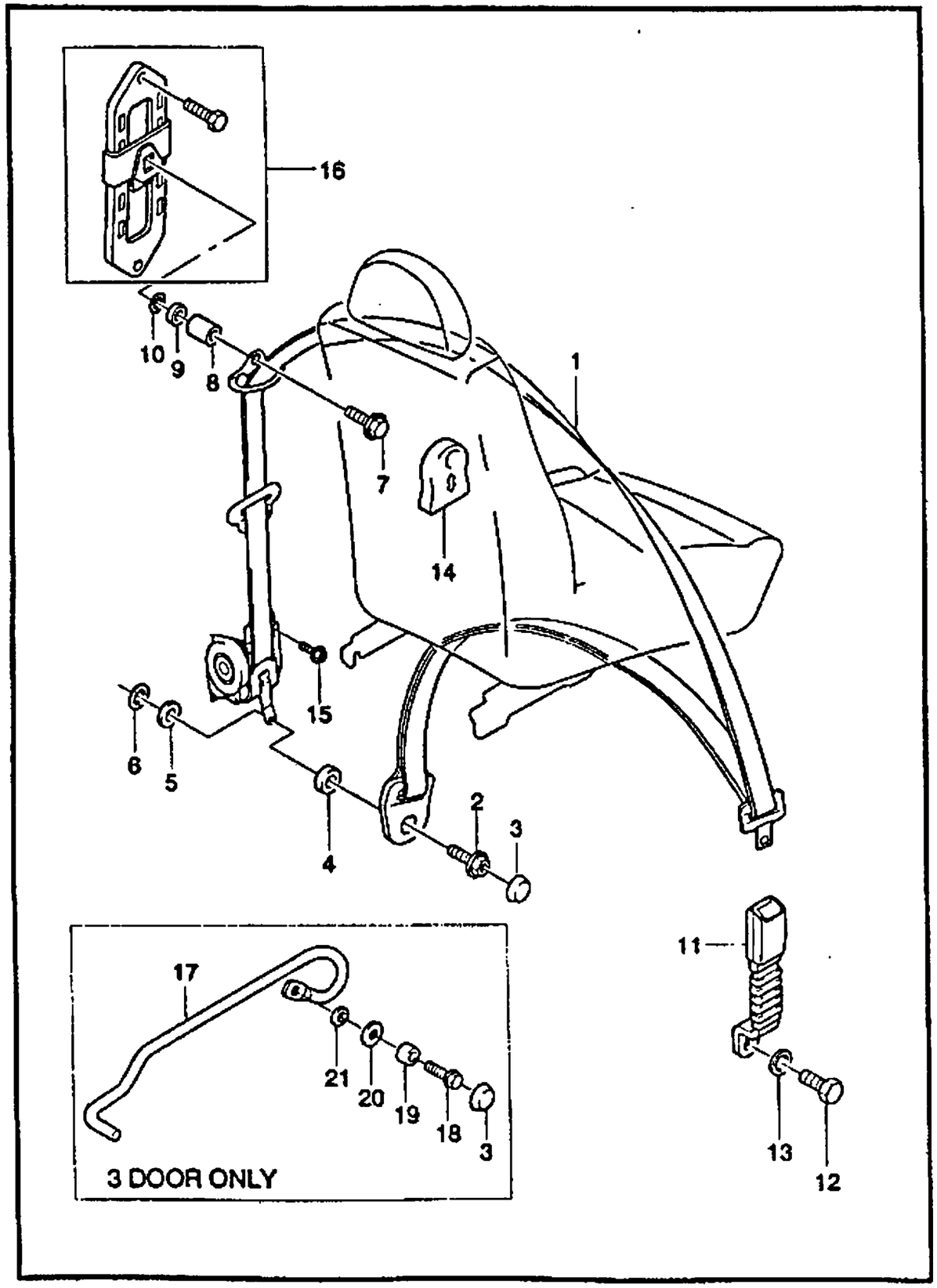

KEY NO.		PART NAME															
ITC	PART NO	MODEL								OPTION	L/R	QTY	EFFECTIVE DATE		REMARKS	P/CODE
		ENG	T/A	BODY 4N	BODY 3H	BODY 5H	LEVEL S	LEVEL SE	LEVEL SX				FROM	TO		
[01]		(E)BELT A-FRONT SEAT (D)SICHERHEITSGURT									(F)CEINTURE-SIEGE AVANT (S)CINTURON-ASIENTO					
	96243252	.	.	B	.	B	S	.	.	-SGS/ABF/AJ3	LH	1				4L
	96244251	.	.	B	.	B	S	.	.	-SGS/ABF	RH	1				4M
	96248299	.	.	B	.	B	.	S	S	-SGS/ABF/AJ3	LH	1				5A
	96248300	.	.	B	.	B	.	S	S	-SGS/AJ3	RH	1				5B
	96243253	.	.	B	.	B	.	O	O	&ABF/AJ3-SGS	LH	1			NOT APPLIED	4N
	96240897	.	.	B	.	B	.	O	O	&ABF/AJ3-SGS	LH	1				2A
	96243254	.	.	B	.	B	.	O	O	&ABF-SGS	RH	1			NOT APPLIED	4O
	96240898	.	.	B	.	B	.	O	O	&ABF-SGS	RH	1				1J
	96240890	.	.	B	.	B	A	.	.	&SGS	LH	1				1A
	96240891	.	.	B	.	B	A	.	.	&SGS	RH	1				1B
	96254475	.	.	B	.	B	.	A	A	&SGS	LH	1				7A
	96254476	.	.	B	.	B	.	A	A	&SGS	RH	1				7B
	96243258	.	.	.	B	.	S	.	.	-SGS	LH	1				4T
	96243259	.	.	.	B	.	S	.	.	-SGS	RH	1				4U
	96248297	.	.	.	B	.	.	.	S	-SGS /ABF/AJ3	LH	1				5C
	96248298	.	.	.	B	.	.	.	S	-SGS /ABF	RH	1				5D
	96240878	.	.	.	B	.	.	.	O	&ABF/AJ3-SGS	LH	1				1M
	96240879	.	.	.	B	.	.	.	O	&ABF-SGS	RH	1				1N
	96240886	.	.	.	B	.	A	.	.	&SGS	LH	1				1S
	96240887	.	.	.	B	.	A	.	.	&SGS	RH	1				1T
	96254469	.	.	.	B	.	.	.	A	&SGS	LH	1				7G
	96254470	.	.	.	B	.	.	.	A	&SGS	RH	1				7H

ENG(ENGINE)	T/A(TRANSAXLE)	BODY TYPE
Y = 1.5SOHC 6 = 1.6DOHC . = COMMON	M = MANUAL T/A A = AUTOMATIC T/A . = COMMON	4 N = 4 DOOR NOTCHBACK 3 H = 3 DOOR HATCHBACK 5 H = 5 DOOR HATCHBACK

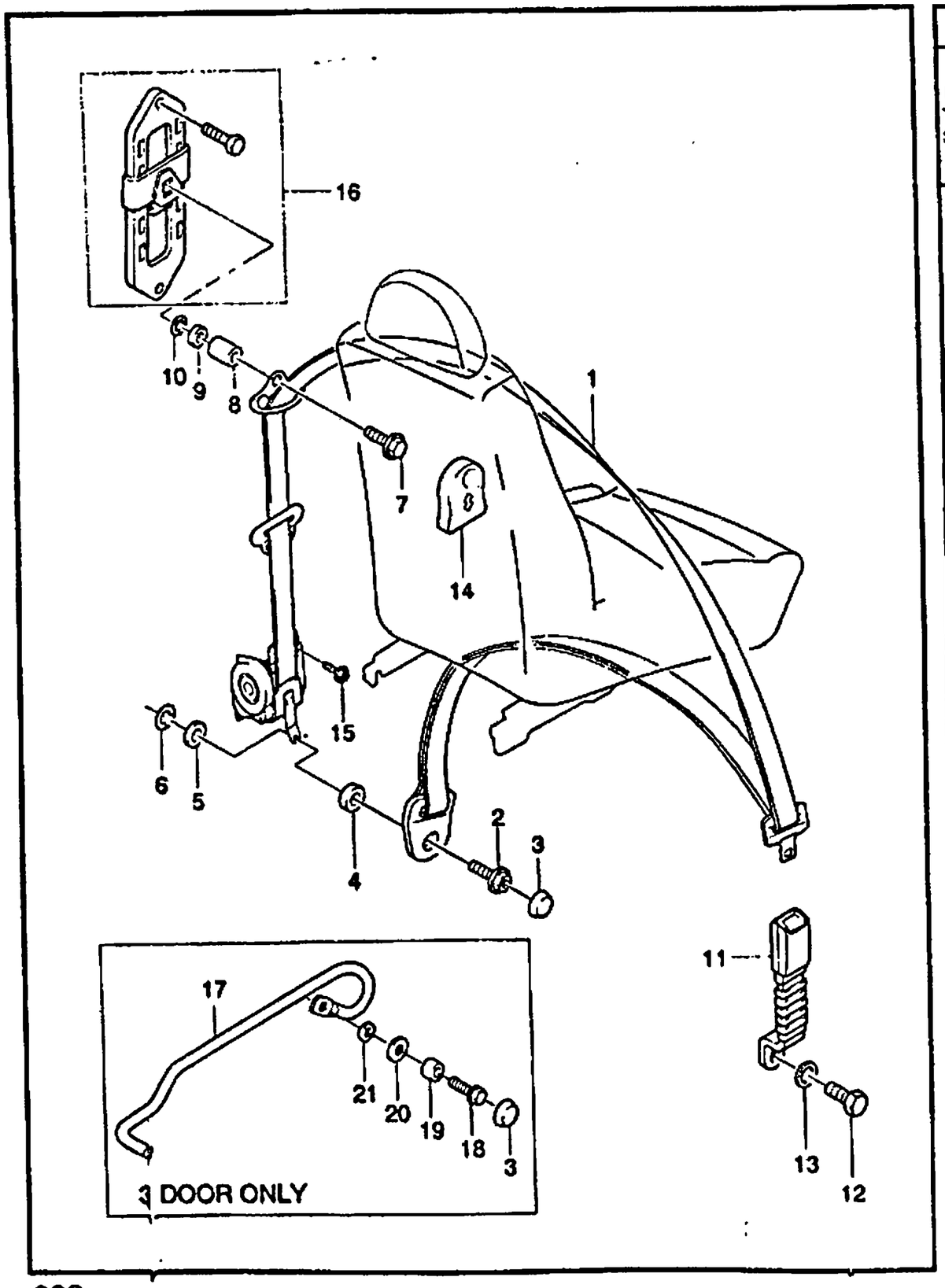

KEY NO. ITC	PART NO	MODEL ENG	T/A	BODY 4N	3H	5H	LEVEL S	SE	SX	OPTION	L/R	QTY	EFFECTIVE DATE FROM	TO	REMARKS	P/CODE
[02]		(E)BOLT (D)SCHRAUBE									(F)BOULON (S)PERNO					
	CPZ01580	.	.	B	.	B	S	S	S			2			L=42	
	CPZ03380	.	.	.	B	.	S	.	S			2			L=20	
[03]		(E)CAP-FRONT SEAT BELT BOLT (D)DECKEL									(F)CHAPEAU (S)TAPA					
	96236550	.	.	B	B	B	S	S	S			2				
[04]		(E)SPACER (D)DISTANZSTÜCK									(F)ENTRETOISE (S)ESPACIADOR					
	CPZ46090	.	.	B	.	B	S	S	S			2			Φ20,L=10	
[05]		(E)SPACER (D)DISTANZSTÜCK									(F)ENTRETOISE (S)ESPACIADOR					
	CPZ46040	.	.	B	.	B	S	S	S			2			Φ20,L=5	
[06]		(E)WASHER-TOOTH (D)DICHTUNGSRING									(F)RONDELLE-VERROU DE DENT (S)ARANDELA-CIERRE DE DIENTE					
	CPZ42010	.	.	B	B	B	S	S	S			2				
[07]		(E)BOLT (D)SCHRAUBE									(F)BOULON (S)PERNO					
	CPZ01420	.	.	B	B	B	S	.	.	-AAC		2			L=60	
	CPZ01470	.	.	B	B	B	.	S	S	&AAC		2			L=40	
[08]		(E)SPACER (D)DISTANZSTÜCK									(F)ENTRETOISE (S)ESPACIADOR					
	CPZ46020	.	.	B	B	B	S	.	.	-AAC		2			Φ20,L=20	
	CPZ46030	.	.	B	B	B	.	S	S	&AAC		2			Φ20,L=18	
[09]		(E)SPACER (D)DISTANZSTÜCK									(F)ENTRETOISE (S)ESPACIADOR					
	CPZ46350	.	.	B	B	B	S	.	.	-AAC		2			Φ20,L=13	

ENG(ENGINE)	T/A(TRANSAXLE)	BODY TYPE
Y = 1.5SOHC	M = MANUAL T/A	4 N = 4 DOOR NOTCHBACK
6 = 1.6DOHC	A = AUTOMATIC T/A	3 H = 3 DOOR HATCHBACK
. = COMMON	. = COMMON	5 H = 5 DOOR HATCHBACK

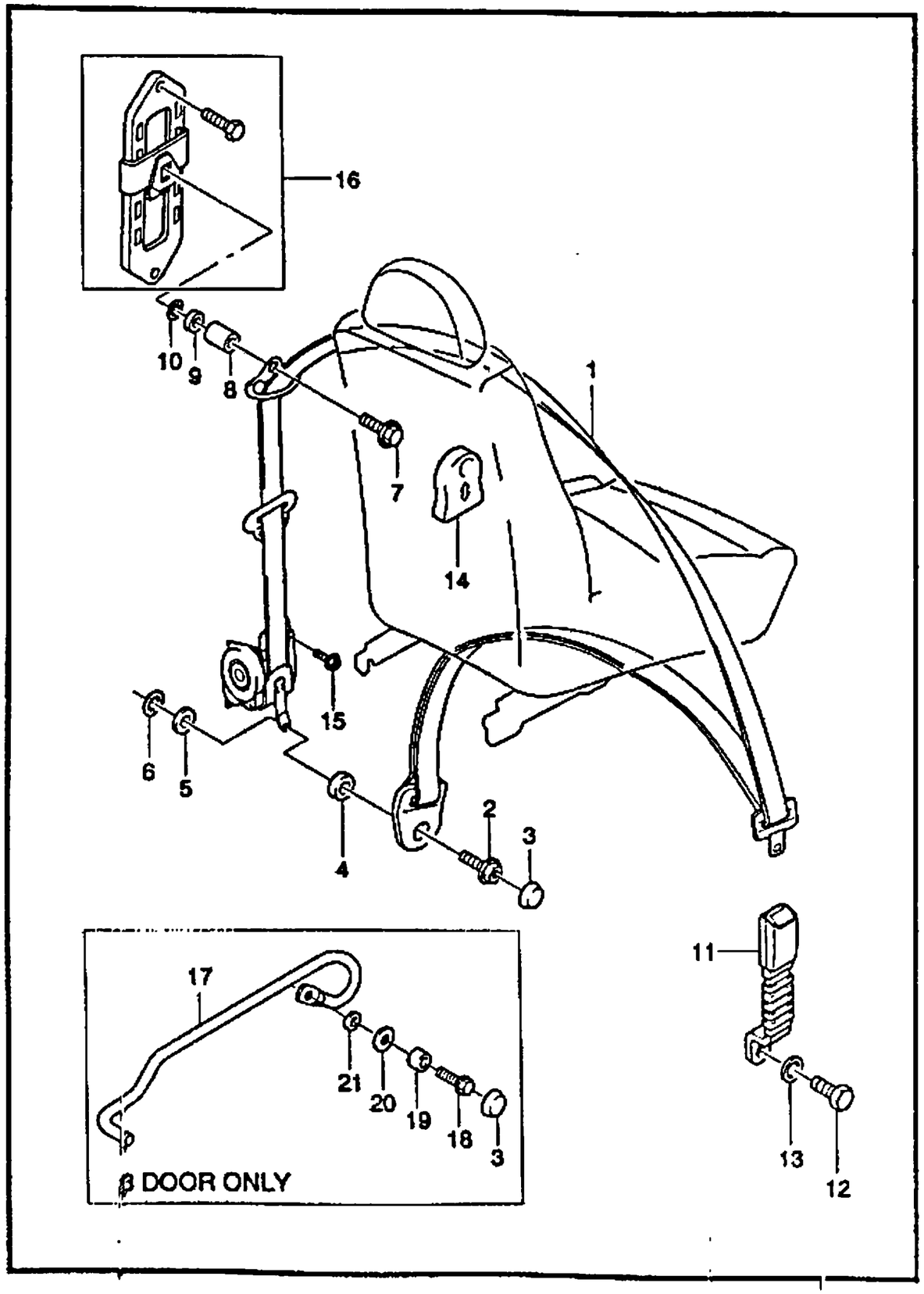

KEY NO. ITC	PART NO	PART NAME (E)/(D)/(F)/(S)	MODEL ENG	T/A	BODY 4N	3H	5H	LEVEL S	SE	SX	OPTION	L/R	QTY	EFFECTIVE DATE FROM	TO	REMARKS	P/CODE
[10]	CPZ42010	(E)WASHER-TOOTH (D)DICHTUNGSRING	.	.	B	B	B	S	S	S			2				
[11]	96236531	(E)BUCKLE A-FRONT SEAT BELT (D)SCHNALLE,SICHERHEITSGURT	.	.	B	B	B	S	S	S		LH	1				
	96236532		.	.	B	B	B	S	S	S		RH	1				
[12]	96190876	(E)BOLT (D)SCHRAUBE	.	.	B	B	B	S	S	S			2			7/16X22	
[13]	09162-17001	(E)WASHER-SPRING (D)DICHTUNGSRING	.	.	B	B	B	S	S	S			2				
[14]	CPF12130	(E)COVER-PILLAR (D)DECKEL	.	.	B	B	B	S	.	.	-AAC		2				
	CPF12120		.	.	B	B	B	.	S	S	&AAC		2				
[15]	09119-06023	(E)BOLT (D)SCHRAUBE	.	.	B	B	B	S	S	S			2	970901			
	Q 09119-06028		.	.	B	B	B	S	S	S			2	970901			
[16]	96190873	(E)ADJUSTER-SEAT BELT HEIGHT (D)EINSTELLVORRICHTUNG	.	.	B	B	B	A	S	S	&AAC		2				
[17]	96226306	(E)BAR-FRT SEAT BELT SLIDING (D)STANGE,SICHERHEITSGURT	.	.	.	B	.	S	.	S		LH	1				
	96226307		.	.	.	B	.	S	.	S		RH	1				

ENG(ENGINE)	T/A(TRANSAXLE)	BODY TYPE
Y = 1.5SOHC 6 = 1.6DOHC . = COMMON	M = MANUAL T/A A = AUTOMATIC T/A . = COMMON	4 N = 4 DOOR NOTCHBACK 3 H = 3 DOOR HATCHBACK 5 H = 5 DOOR HATCHBACK

7550 FRONT SEAT BELT

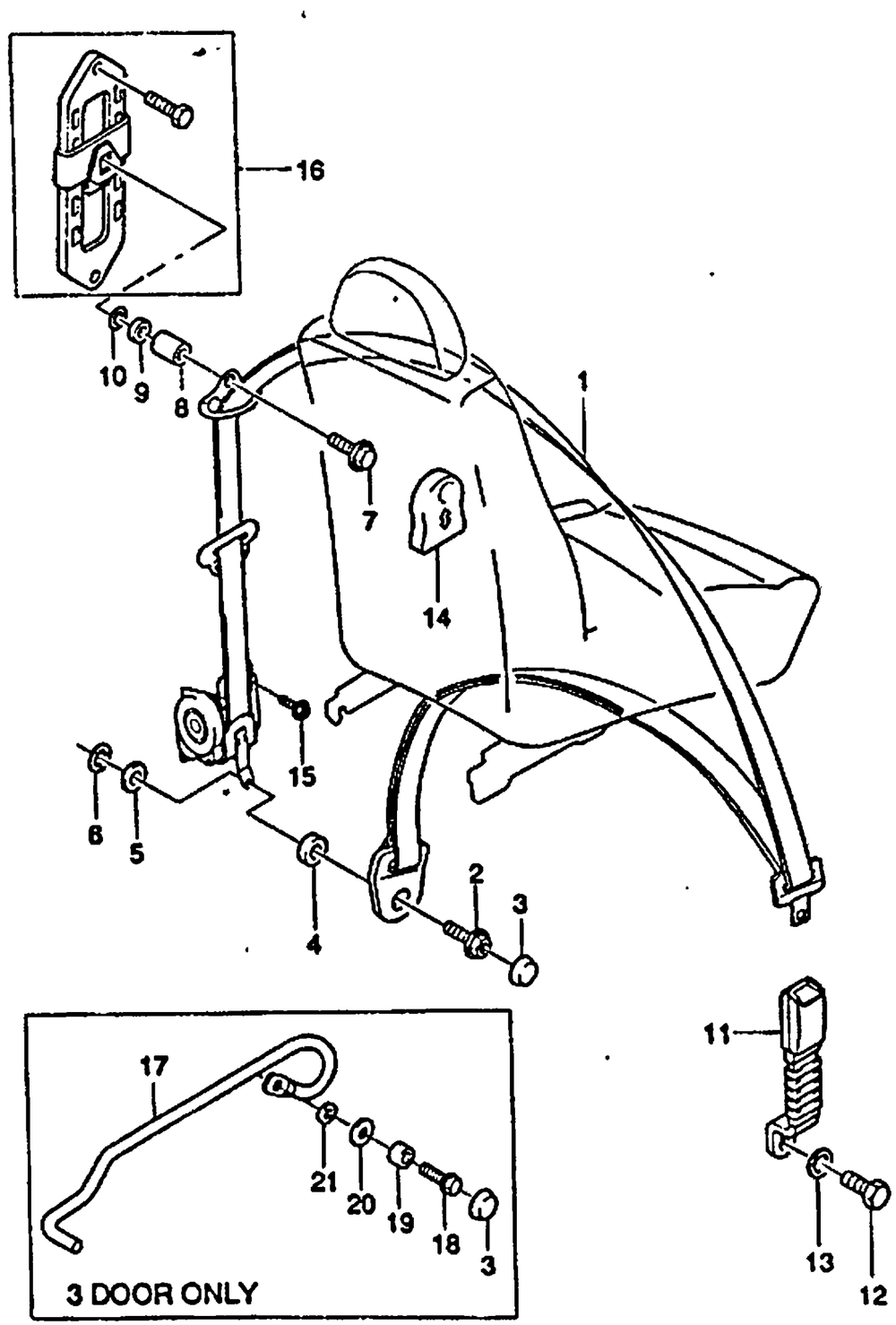

KEY NO. ITC	PART NO	MODEL ENG	MODEL T/A	MODEL BODY 4N	MODEL BODY 3H	MODEL BODY 5H	MODEL LEVEL S	MODEL LEVEL SE	MODEL LEVEL SX	OPTION	L/R	QTY	EFFECTIVE DATE FROM	EFFECTIVE DATE TO	REMARKS	P/CODE
	[18] 96238619	(E)BOLT (D)SCHRAUBE		.	.	B	.	S	.	S		(F)BOULON (S)PERNO 2			7/16	
	[19] 96238620	(E)SPACER (D)DISTANZSTÜCK		.	.	B	.	S	.	S		(F)ENTRETOISE (S)ESPACIADOR 2			Φ 20,L=14	
	[20] 96238621	(E)SPACER (D)DISTANZSTÜCK		.	.	B	.	S	.	S		(F)ENTRETOISE (S)ESPACIADOR 2			Φ 34,L=3.4	
	[21] 96238622	(E)SPACER (D)DISTANZSTÜCK		.	.	B	.	S	.	S		(F)ENTRETOISE (S)ESPACIADOR 2			Φ 20,L=4	

ENG(ENGINE)	T/A(TRANSAXLE)	BODY TYPE
Y = 1.5SOHC 6 = 1.6DOHC . = COMMON	M = MANUAL T/A A = AUTOMATIC T/A . = COMMON	4 N = 4 DOOR NOTCHBACK 3 H = 3 DOOR HATCHBACK 5 H = 5 DOOR HATCHBACK

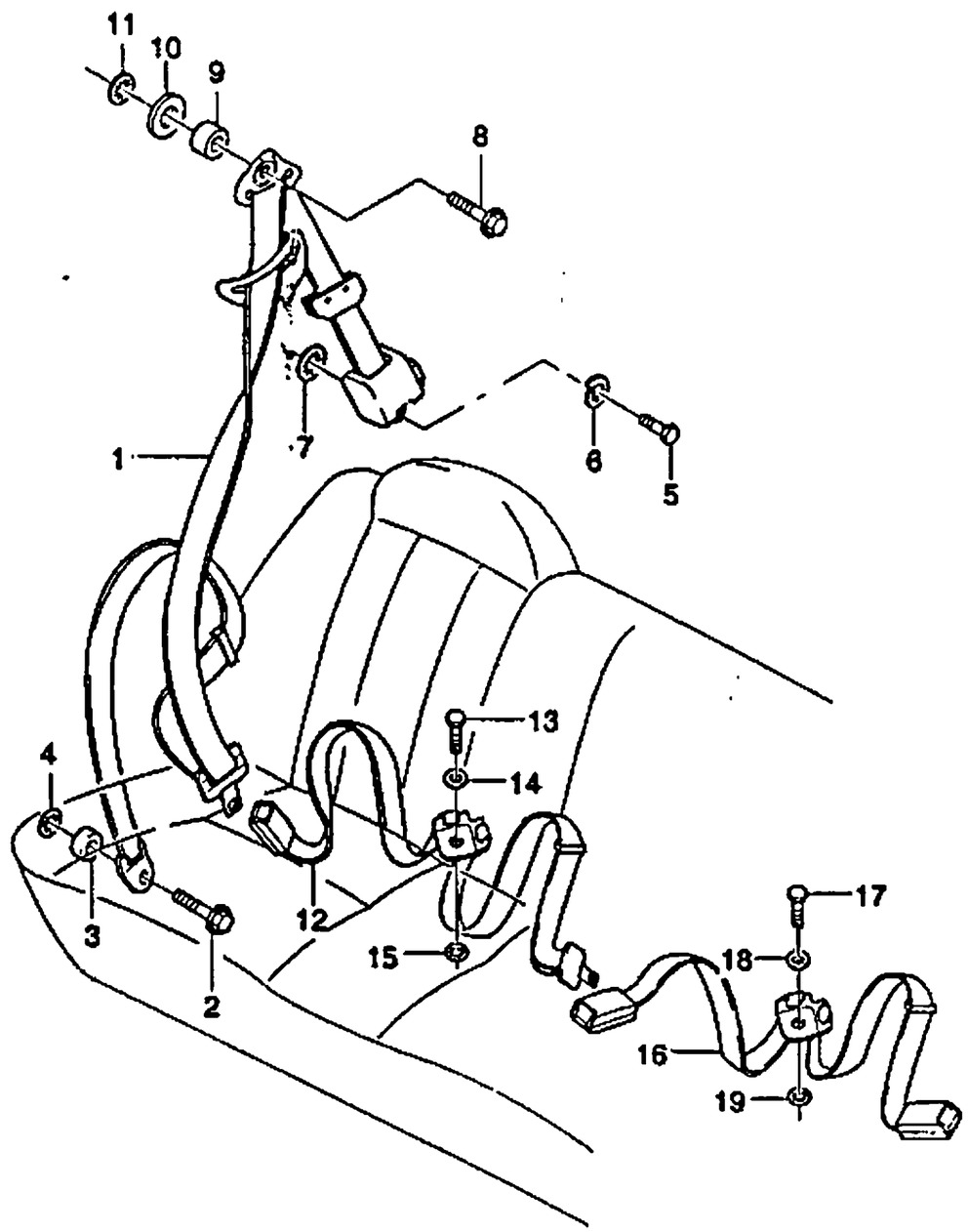

KEY NO. ITC	PART NO	MODEL ENG	MODEL T/A	MODEL BODY 4N	MODEL BODY 3H	MODEL BODY 5H	MODEL LEVEL S	MODEL LEVEL SE	MODEL LEVEL SX	OPTION	L/R	QTY	EFFECTIVE DATE FROM	EFFECTIVE DATE TO	REMARKS	P/CODE
[01]		(E)BELT A-REAR SEAT (D)SICHERHEITSGURT									(F)CEINTURE-SIEGE ARRIERE (S)CINTURON-ASIENTO TRASERO					
96240913		.	.	B	.	.	S	S	S	-SGS	LH	1				3C
96240914		.	.	B	.	.	S	S	S	-SGS	RH	1				3D
96240919		.	.	B	.	.	A	A	A	&SGS	LH	1				3E
96240920		.	.	B	.	.	A	A	A	&SGS	RH	1				3E
96240903		.	.	.	B	.	S	.	S	-SGS	LH	1				3M
96240904		.	.	.	B	.	S	.	S	-SGS	RH	1				3N
96240905		.	.	.	B	.	A	.	A	&SGS	LH	1				3O
96240906		.	.	.	B	.	A	.	A	&SGS	RH	1				3P
96242346		.	.	.	.	B	S	.	S	-SGS	LH	1				4C
96242348		.	.	.	.	B	S	.	S	-SGS	RH	1				4D
96242350		.	.	.	.	B	A	.	A	&SGS	LH	1				4E
96242352		.	.	.	.	B	A	.	A	&SGS	RH	1				4F
[02]		(E)BOLT (D)SCHRAUBE									(F)BOULON (S)PERNO					
CPZ01480		.	.	B	B	B	S	S	S			2			L=30	
[03]		(E)SPACER (D)DISTANZSTÜCK									(F)ENTRETOISE (S)ESPACIADOR					
CPZ46040		.	.	B	B	B	S	S	S			2			Φ20,L=5	
[04]		(E)WASHER-TOOTH (D)DICHTUNGSRING									(F)RONDELLE-VERROU DE DENT (S)ARANDELA-CIERRE DE DIENTE					
CPZ42010		.	.	B	B	B	S	S	S			2				
[05]		(E)BOLT (D)SCHRAUBE									(F)BOULON (S)PERNO					
CPZ03380		.	.	B	B	B	S	S	S			2			L=20	

ENG(ENGINE)	T/A(TRANSAXLE)	BODY TYPE
Y = 1.5SOHC 6 = 1.6DOHC . = COMMON	M = MANUAL T/A A = AUTOMATIC T/A . = COMMON	4 N = 4 DOOR NOTCHBACK 3 H = 3 DOOR HATCHBACK 5 H = 5 DOOR HATCHBACK

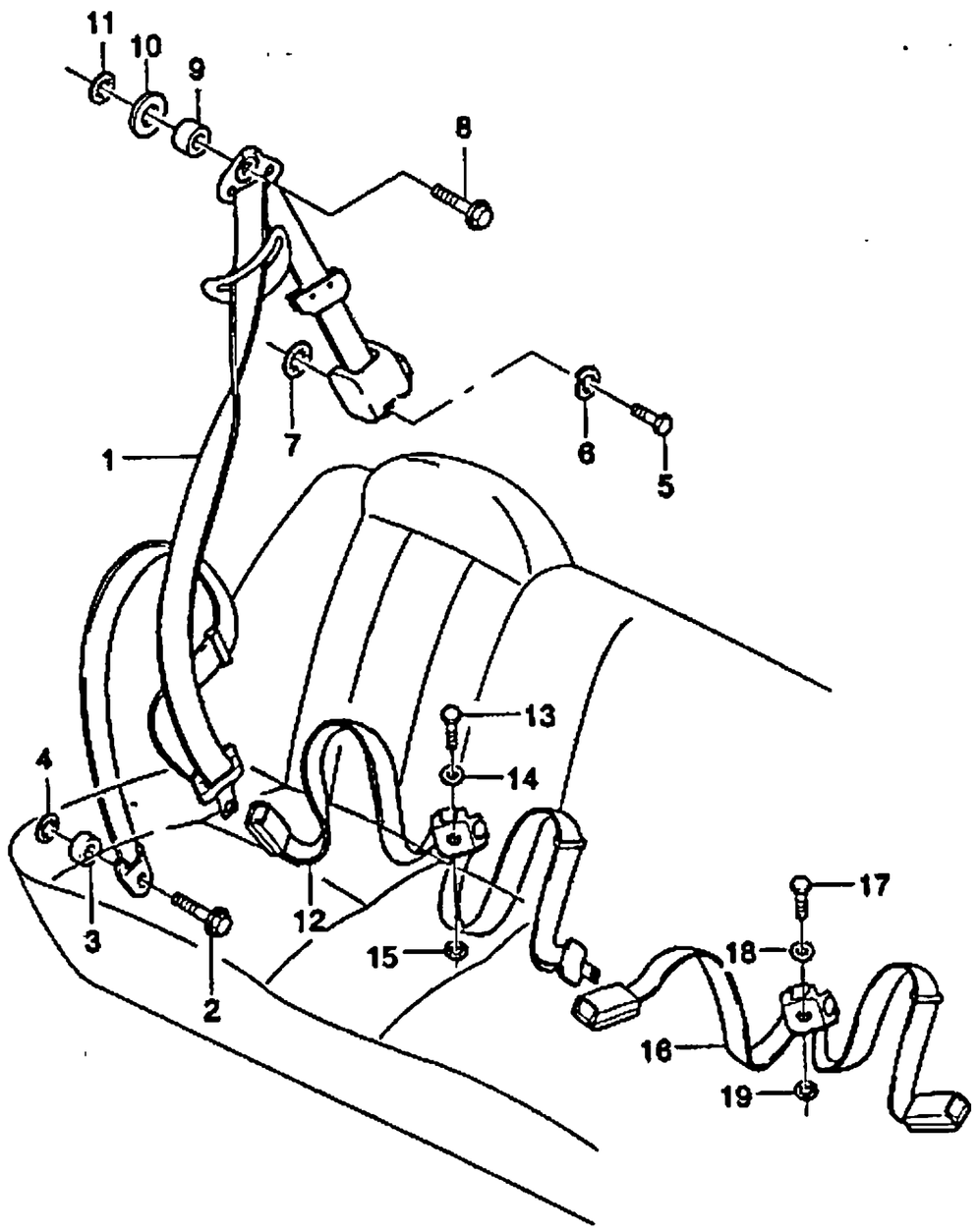

KEY NO. ITC	PART NO	MODEL ENG	MODEL T/A	MODEL BODY 4N	MODEL BODY 3H	MODEL BODY 5H	MODEL LEVEL S	MODEL LEVEL SE	MODEL LEVEL SX	OPTION	PART NAME	L/R	QTY	EFFECTIVE DATE FROM	EFFECTIVE DATE TO	REMARKS	PICODE
[06]		(E)WASHER-SPRING (D)DICHTUNGSRING									(F)RONDELLE (S)ARANDELA						
	CPZ41010	.	.	B	B	B	S	S	S				2				
[07]		(E)WASHER-TOOTH (D)DICHTUNGSRING									(F)RONDELLE-VERROU DE DENT (S)ARANDELA-CIERRE DE DIENTE						
	CPZ42010	.	.	B	B	B	S	S	S				2				
[08]		(E)BOLT (D)SCHRAUBE									(F)BOULON (S)PERNO						
	CPZ01650	.	.	B	B	B	S	S	S				2			L=32	
[09]		(E)SPACER (D)DISTANZSTÜCK									(F)ENTRETOISE (S)ESPACIADOR						
	CPZ46040	.	.	B	B	.	S	S	S				2			Φ20,L=5	
	CPZ46090	.	.	.	.	B	.	S	S				2			Φ20,L=10	
[10]		(E)SPACER (D)DISTANZSTÜCK									(F)ENTRETOISE (S)ESPACIADOR						
	CPZ43240	.	.	B	.	.	.	S	S				2			Φ33,L=2	
	CPZ43220	.	.	.	.	B	S	S	S				2			Φ26,L=3	
[11]		(E)WASHER-TOOTH (D)DICHTUNGSRING									(F)RONDELLE-VERROU DE DENT (S)ARANDELA-CIERRE DE DIENTE						
	CPZ42010	.	.	B	B	B	S	S	S				2				
[12]		(E)BELT A-RR SEAT,CTR PELVIS (D)SICHERHEITSGURT,MITTE									(F)CEINTURE-PELVIS CENTRE (S)CINTURON-CENTRO PELVIS						
	96240916	.	.	B	B	B	S	S	S	-SGS			1				3V
	96240918	.	.	B	B	B	A	A	A	&SGS			1				3X
[13]		(E)BOLT (D)SCHRAUBE									(F)BOULON (S)PERNO						
	CPZ03440	.	.	B	B	B	S	S	S				1			L=25	

ENG(ENGINE)	T/A(TRANSAXLE)	BODY TYPE
Y = 1.5SOHC 6 = 1.6DOHC . = COMMON	M = MANUAL T/A A = AUTOMATIC T/A . = COMMON	4 N = 4 DOOR NOTCHBACK 3 H = 3 DOOR HATCHBACK 5 H = 5 DOOR HATCHBACK

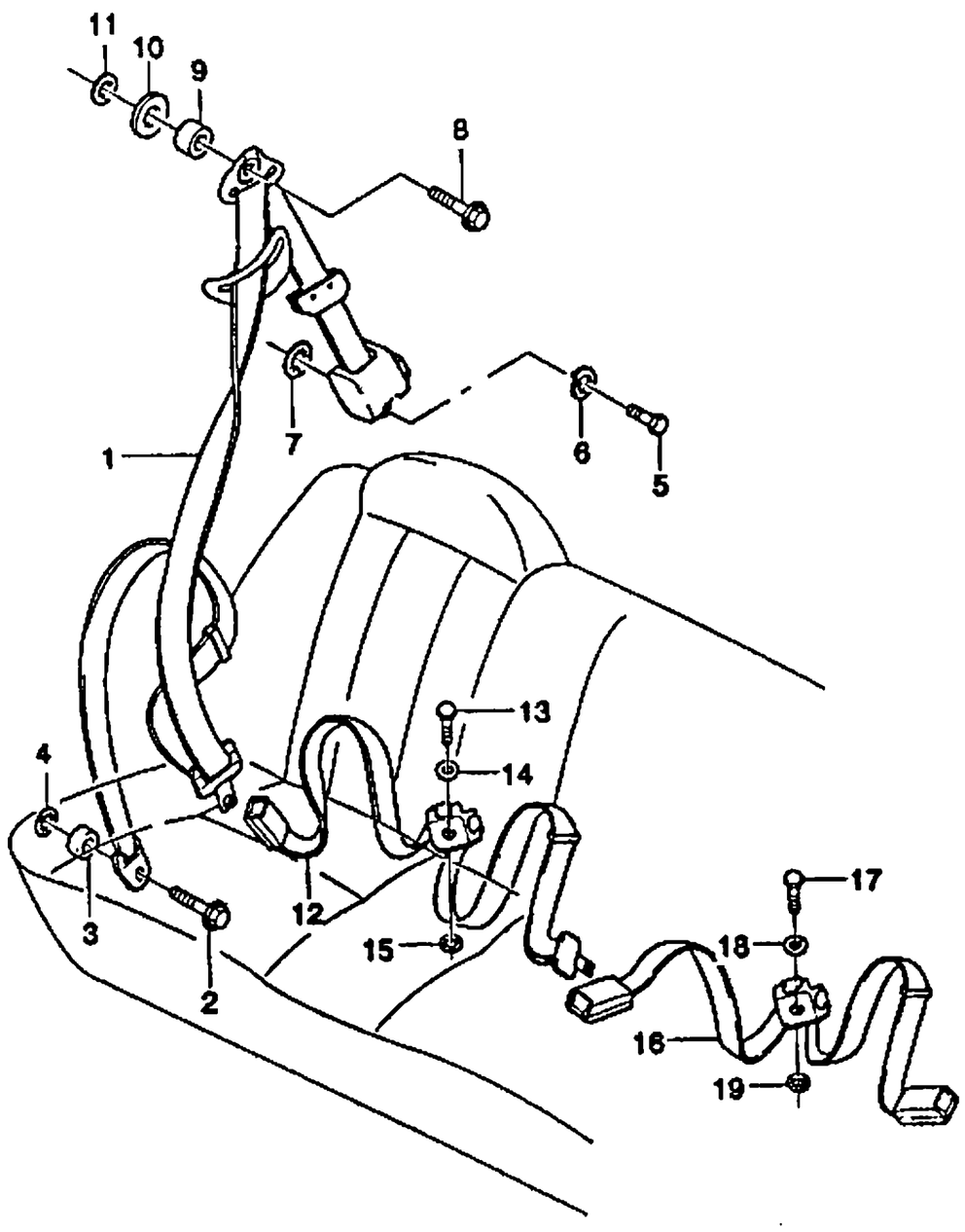

KEY NO. ITC	PART NO	PART NAME (MODEL: ENG / T/A / BODY 4N 3H 5H / LEVEL S SE SX)	OPTION	L/R	QTY	EFFECTIVE DATE FROM	EFFECTIVE DATE TO	REMARKS	P/CODE
[14]	CPZ43220	(E)SPACER (D)DISTANZSTÜCK . . B B B S S S		(F)ENTRETOISE (S)ESPACIADOR 1				Φ 26,L=3	
[15]	CPZ42010	(E)WASHER-TOOTH (D)DICHTUNGSRING . . B B B S S S		(F)RONDELLE-VERROU DE DENT (S)ARANDELA-CIERRE DE DIENTE 1					
[16]	96240908	(E)BUCKLE A-REAR SEAT BELT (D)SCHNALLE,SICHERHEITSGURT . . B B B S S S		(F)BOUCLE-CEINTURE SIEGE (S)HEBILLA-CINTURON 1					3T
[17]	CPZ03440	(E)BOLT (D)SCHRAUBE . . B B B S S S		(F)BOULON (S)PERNO 1				L=25	
[18]	CPZ43220	(E)SPACER (D)DISTANZSTÜCK . . B B B S S S		(F)ENTRETOISE (S)ESPACIADOR 1				Φ 26,L=3	
[19]	CPZ42010	(E)WASHER-TOOTH (D)DICHTUNGSRING . . B B B S S S		(F)RONDELLE-VERROU DE DENT (S)ARANDELA-CIERRE DE DIENTE 1					

ENG(ENGINE)	T/A(TRANSAXLE)	BODY TYPE
Y = 1.5SOHC 6 = 1.6DOHC . = COMMON	M = MANUAL T/A A = AUTOMATIC T/A . = COMMON	4 N = 4 DOOR NOTCHBACK 3 H = 3 DOOR HATCHBACK 5 H = 5 DOOR HATCHBACK

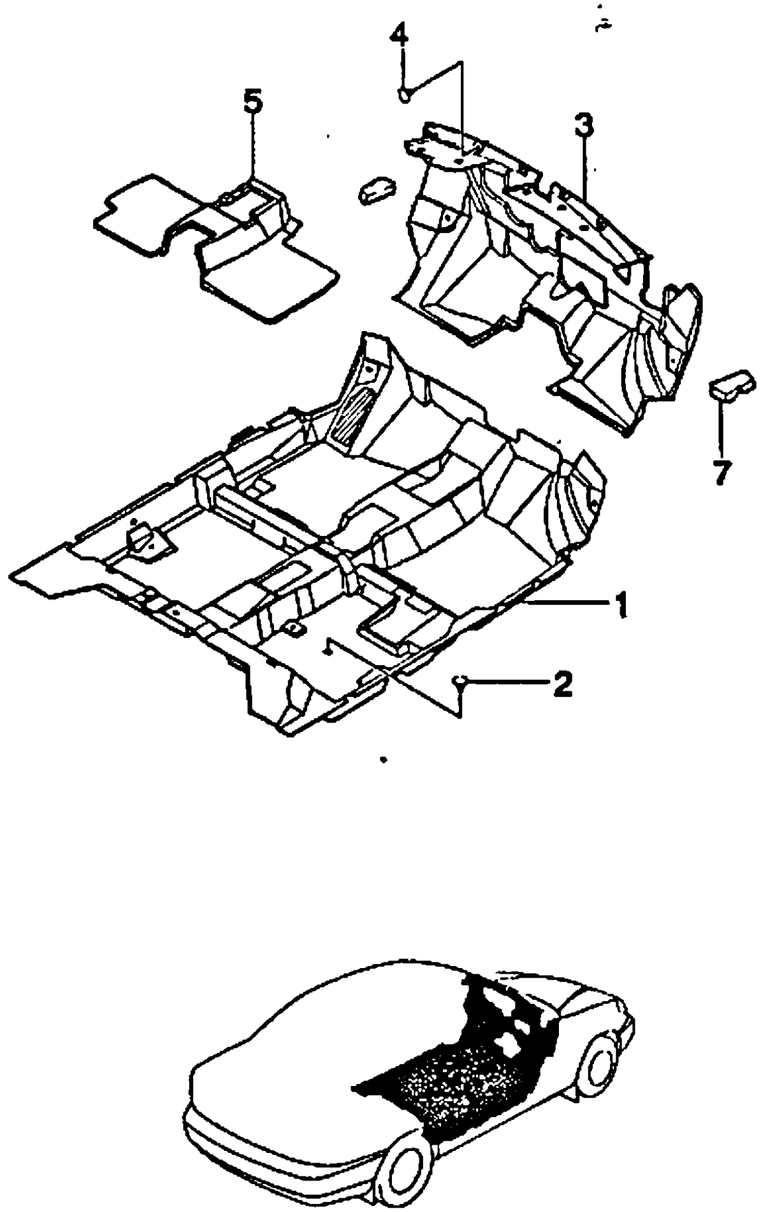

KEY NO. ITC	PART NO	MODEL ENG	T/A	BODY 4N	3H	5H	LEVEL S	SE	SX	OPTION	L/R	QTY	EFFECTIVE DATE FROM	TO	REMARKS	P/CODE
[01]	(E)LINING-FLOOR PANEL (D)AUSKLEIDUNG										(F)GARNITURE (S)FORRO-PANEL DEL PISO					
	96243418	.	.	B	.	B	S	S	S	-C35/V86		1				TR
	96252208	.	.	B	.	B	A	A	A	&V86-C35		1				TW
	96252204	.	.	B	.	B	A	A	A	&C35		1				TX
	96258916	.	.	B	.	B	A	A	A			1	970709		FOR POLAND	TQ
	96238378	.	.	.	B	.	S	.	S	-C35/V86		1				TM
	96252209	.	.	.	B	.	A	.	A	&V86-C35		1				TZ
	96252205	.	.	.	B	.	A	.	A	&C35		1				TY
[02]	(E)CLIP (D)KLEMME										(F)ATTACHE (S)GRAPA					
	09409-06325	.	.	B	B	B	S	S	S			1				
[03]	(E)INSULATION-DASH PANEL INR (D)ISOLIERUNG										(F)ISOLATION (S)AISLAMIENTO					
	96124011	.	.	B	B	B	S	S	S			1		970701		TQ
	96124011	Y	.	B	B	B	S	S	.			1	970701	970901		TQ
	96252017	6	.	B	B	B	.	.	S			1	970701	970901		TQ
	Y 96252017	.	.	B	B	B	S	S	S			1	970901			TQ
[04]	(E)CLIP (D)KLEMME										(F)ATTACHE (S)GRAPA					
	09409-05311	.	.	B	B	B	S	S	S			11				
[05]	(E)INSULATION-FLOOR PNL,FRT (D)ISOLIERUNG										(F)ISOLATION (S)AISLAMIENTO					
	96124012	.	.	B	B	B	S	S	S	-C35		1				TS
	96245052	.	.	B	B	B	A	A	A	&C35		1				TW
[07]	(E)INSULATION-FRT PILLAR,LWR (D)ISOLIERUNG										(F)ISOLATION (S)AISLAMIENTO					

ENG(ENGINE)	T/A(TRANSAXLE)	BODY TYPE
Y = 1.5SOHC 6 = 1.6DOHC . = COMMON	M = MANUAL T/A A = AUTOMATIC T/A . = COMMON	4 N = 4 DOOR NOTCHBACK 3 H = 3 DOOR HATCHBACK 5 H = 5 DOOR HATCHBACK

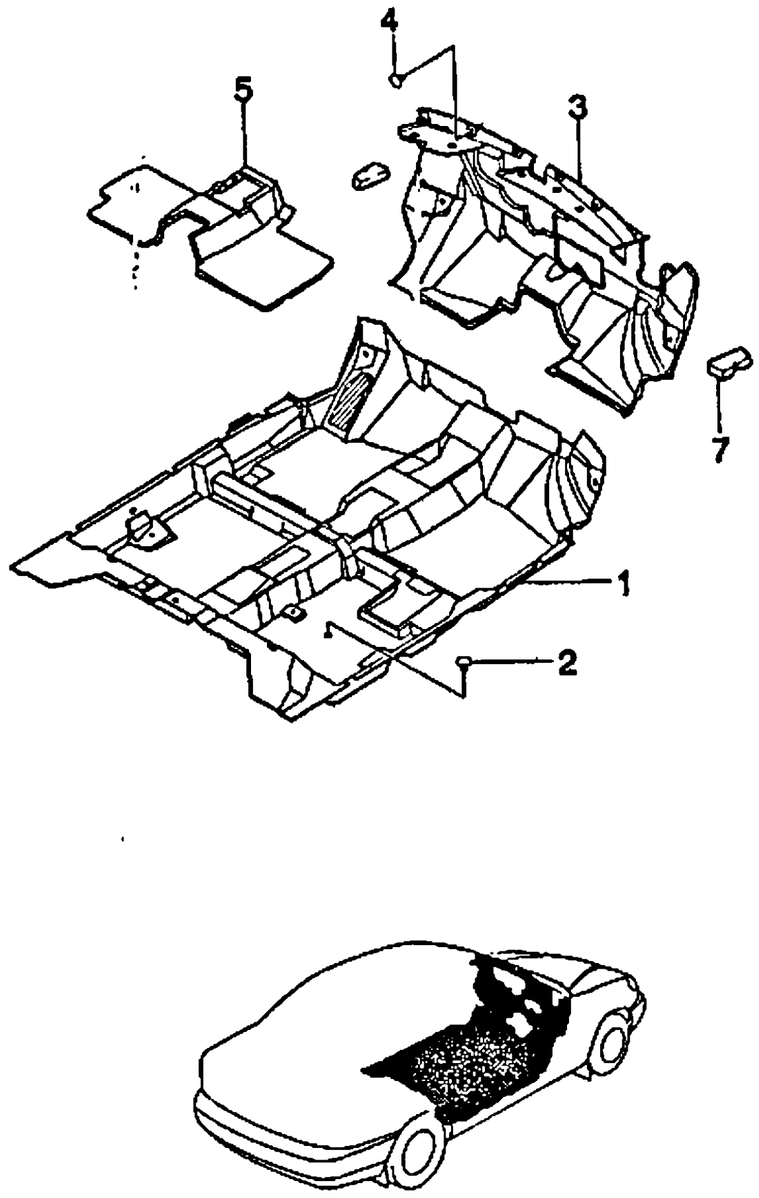

KEY NO.		PART NAME														
ITC	PART NO	MODEL							OPTION	L/R	QTY	EFFECTIVE DATE		REMARKS	P/CODE
		ENG	T/A	BODY			LEVEL					FROM	TO		
				4N	3H	5H	S	SE	SX						
	96245330	.	.	B	B	B	S	S	S		LH	1			
	96245331	.	.	B	B	B	S	S	S		RH	1			

ENG(ENGINE)	T/A(TRANSAXLE)	BODY TYPE
Y = 1.5SOHC 6 = 1.6DOHC . = COMMON	M = MANUAL T/A A = AUTOMATIC T/A . = COMMON	4 N = 4 DOOR NOTCHBACK 3 H = 3 DOOR HATCHBACK 5 H = 5 DOOR HATCHBACK

6F07

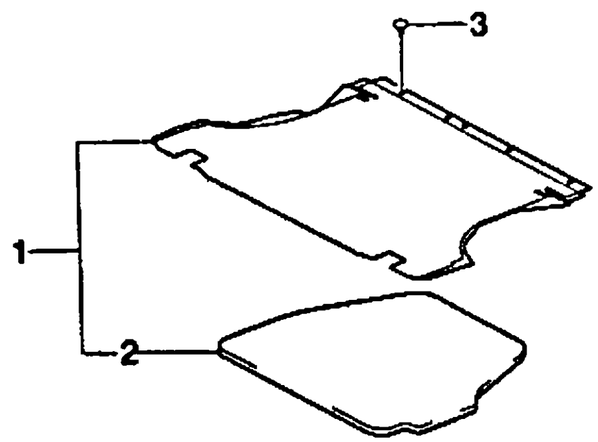

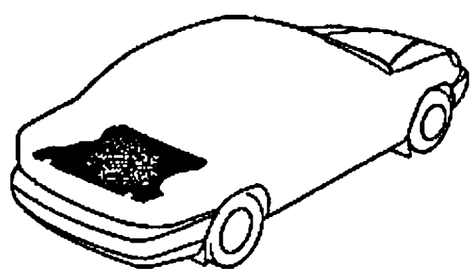

KEY NO. ITC	PART NO	MODEL ENG	T/A	BODY 4N	3H	5H	LEVEL S	SE	SX	OPTION	L/R	QTY	EFFECTIVE DATE FROM	TO	REMARKS	P/CODE
[01]		(E)MAT A-FLOOR PANEL,TRUNK (D)AUSKLEIDUNG									(F)GARNITURE (S)FORRO					
	96237863	.	.	B	.	.	S	.	.			1		970509	INCL #2	G8
O	96255259	.	.	B	.	.	S	.	.			1	970509	970901	INCL #2	R4
	96237867	.	.	B	.	.	O	S	.			1		970509	INCL #2	H5
O	96255265	.	.	B	.	.	O	S	.			1	970509	970901	INCL #2	S5
	96255265	.	.	B	.	.	S	S	.			1	970901		INCL #2	S5
	96237866	.	.	B	.	.	.	.	S			1		970509	INCL #2	H4
O	96255263	.	.	B	.	.	.	.	S			1	970509		INCL #2	S4
	96255263	.	.	B	.	.	A	.	A			1	970709		FOR POLAND	S4
	96237862	.	.	.	B	B	S	.	.			1		970509	INCL #2	G7
O	96255257	.	.	.	B	B	S	.	.			1	970509	970901	INCL #2	R3
	96237865	.	.	.	B	B	O	.	S			1		970509	INCL #2	H3
O	96255262	.	.	.	B	B	O	.	S			1	970509	970901	INCL #2	S3
	96255262	.	.	.	B	B	S	.	S			1	970901		INCL #2	S3
[02]		(E)BOARD-FLOOR PANEL,TRUNK (D)BODENVERKLEIDUNG									(F)GARNITURE (S)TABLON DE MALETERO					
	96303140	.	.	B	.	.	S	S	S			1		970509		
O	96255266	.	.	B	.	.	S	S	S			1	970509			
	96303005	.	.	.	B	B	S	.	S			1		970509		
	96255267	.	.	.	B	B	S	.	S			1	970509			
[03]		(E)PLUG (D)STÖPSEL									(F)BOUCHON (S)TAPON					
	09241-30003	.	.	B	B	B									NOT APPLIED	
	09409-07326	.	.	B	.	.	.	.	S	&AM9		5				

ENG(ENGINE)	T/A(TRANSAXLE)	BODY TYPE
Y = 1.5SOHC 6 = 1.6DOHC . = COMMON	M = MANUAL T/A A = AUTOMATIC T/A . = COMMON	4 N = 4 DOOR NOTCHBACK 3 H = 3 DOOR HATCHBACK 5 H = 5 DOOR HATCHBACK

7620 REAR FLOOR CARPET

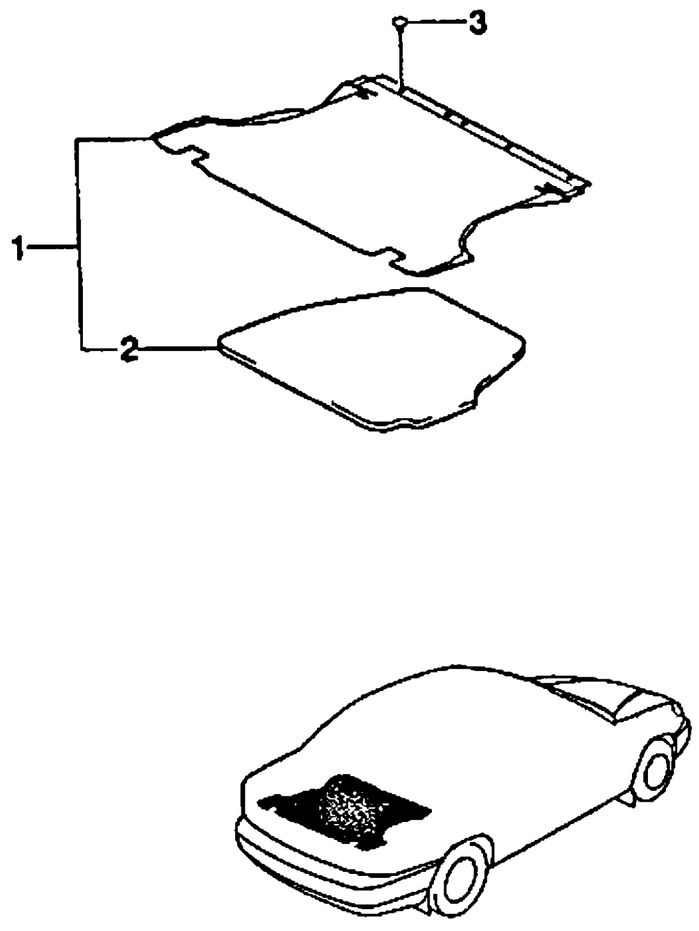

KEY NO. ITC	PART NO	MODEL ENG	T/A	BODY 4N	3H	5H	LEVEL S	SE	SX	OPTION	L/R	QTY	EFFECTIVE DATE FROM	TO	REMARKS	P/CODE
	09409-07326	.	.	B	.	.	A	.	A			5			FOR POLAND	
	09409-07326	.	.	.	B	B	S	.	S	&AMS		5				
	09409-07326	.	.	.	.	B	A	.	A			5			FOR POLAND	

ENG(ENGINE)	T/A(TRANSAXLE)	BODY TYPE
Y = 1.5SOHC	M = MANUAL T/A	4 N = 4 DOOR NOTCHBACK
6 = 1.6DOHC	A = AUTOMATIC T/A	3 H = 3 DOOR HATCHBACK
. = COMMON	. = COMMON	5 H = 5 DOOR HATCHBACK

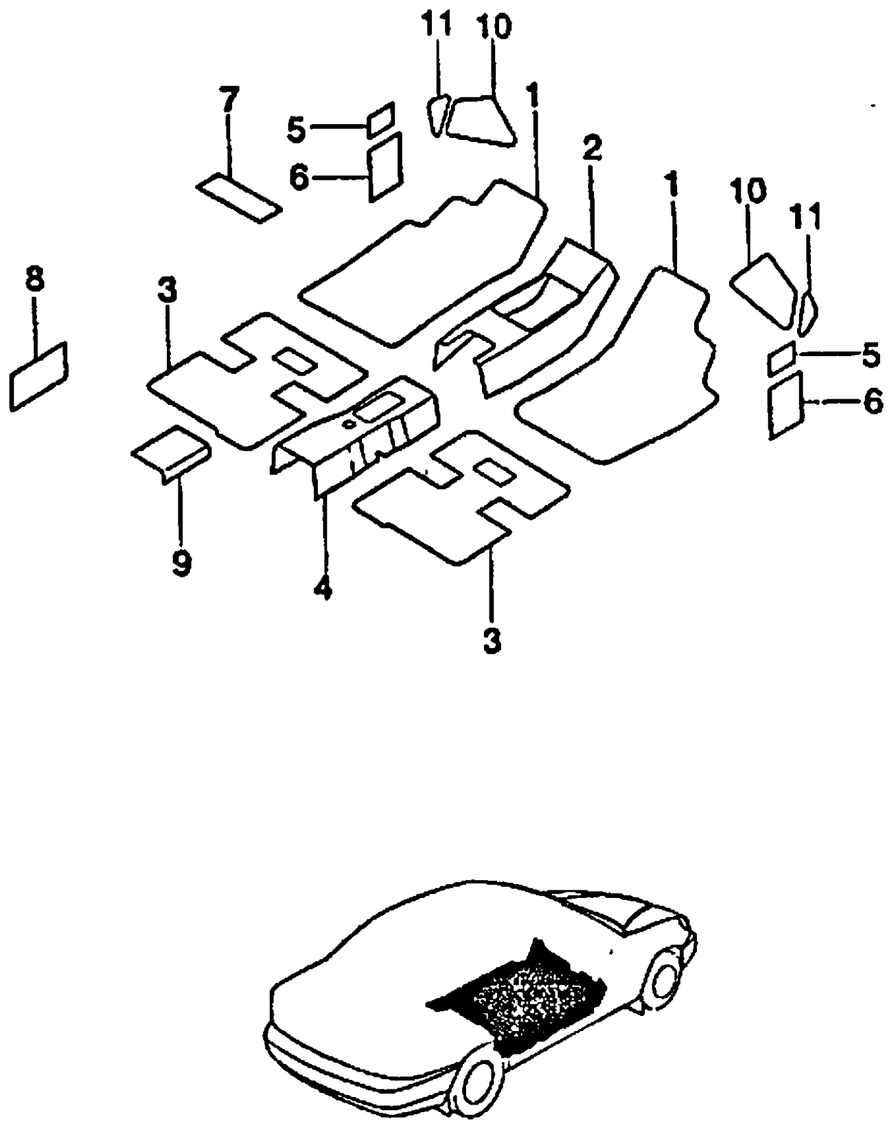

KEY NO. ITC	PART NO	MODEL ENG	T/A	BODY 4N	3H	5H	LEVEL S	SE	SX	OPTION	PART NAME	L/R	QTY	EFFECTIVE DATE FROM	TO	REMARKS	PICODE
[01]											(E)DEADENER-FLOOR PANEL,FRT (D)ENDSTOCK						(F)ASSOURDISSEUR (S)AMORTIGUADOR				
	96303091	.	.	B	B	B	S	S	S			LH	1				
	96303092	.	.	B	B	B	S	S	S			RH	1				
[02]											(E)DEADENER-FLOOR,FRT TUNNEL (D)ENDSTOCK						(F)ASSOURDISSEUR (S)AMORTIGUADOR				
	96303089	.	.	B	B	B	S	S	S				1				
[03]											(E)DEADENER-FLOOR PANEL,REAR (D)ENDSTOCK						(F)ASSOURDISSEUR (S)AMORTIGUADOR				
	96303093	.	.	B	B	B	S	S	S			LH	1				
	96303094	.	.	B	B	B	S	S	S			RH	1				
[04]											(E)DEADENER-FLOOR,RR TUNNEL (D)ENDSTOCK						(F)ASSOURDISSEUR (S)AMORTIGUADOR				
	96303090	.	.	B	B	B	S	S	S				1				
[05]											(E)DEADENER-FRT PILLAR UPPER (D)ENDSTOCK						(F)ASSOURDISSEUR (S)AMORTIGUADOR				
	96226902	.	.	B	B	B	S	S	S				2				
[06]											(E)DEADENER-FRT PILLAR,LOWER (D)ENDSTOCK						(F)ASSOURDISSEUR (S)AMORTIGUADOR				
	96226915	.	.	B	B	B	S	S	S				2				
[07]											(E)DEADENER-ROOF PANEL (D)ENDSTOCK						(F)ASSOURDISSEUR (S)AMORTIGUADOR				
	96229803	.	.	B	B	B	S	S	S				1				
[08]											(E)DEADENER-SIDE PANEL,TRUNK (D)ENDSTOCK						(F)ASSOURDISSEUR (S)AMORTIGUADOR				
	96243410	.	.	B	.	.	S	S	S				1				
[09]											(E)DEADENER-RR FLR TRUNK SID (D)ENDSTOCK						(F)ASSOURDISSEUR (S)AMORTIGUADOR				

ENG(ENGINE)	T/A(TRANSAXLE)	BODY TYPE
Y = 1.5SOHC 6 = 1.6DOHC . = COMMON	M = MANUAL T/A A = AUTOMATIC T/A . = COMMON	4 N = 4 DOOR NOTCHBACK 3 H = 3 DOOR HATCHBACK 5 H = 5 DOOR HATCHBACK

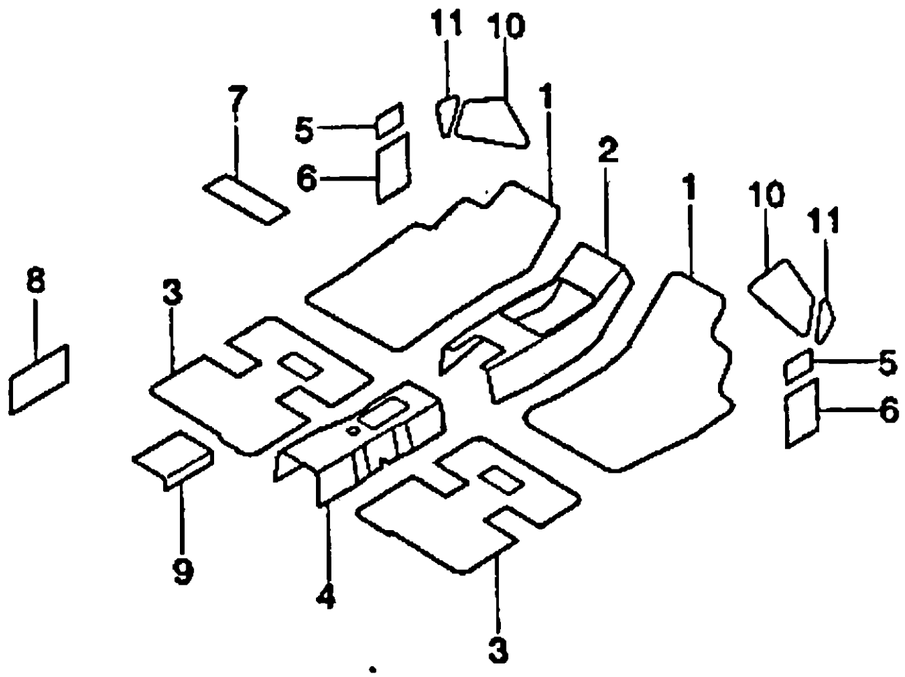

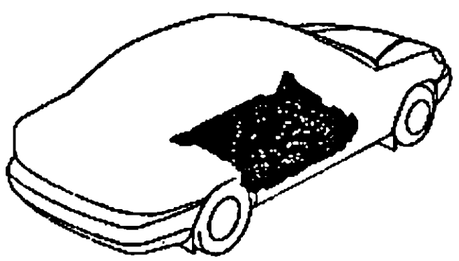

KEY NO. ITC	PART NO	MODEL ENG	MODEL T/A	BODY 4N	BODY 3H	BODY 5H	LEVEL S	LEVEL SE	LEVEL SX	OPTION	L/R	QTY	EFFECTIVE DATE FROM	EFFECTIVE DATE TO	REMARKS	PICODE
	96252517	.	.	B	.	.	S	S	S			1				
	96252749	.	.	.	B	B	S	.	S			1				
[10]	(E)DEADENER-FRT WHEEL HOUSIN (D)ENDSTÜCK										(F)ASSOURDISSEUR (S)AMORTIGUADOR					
	96238894	.	.	B	B	B	S	S	S		LH	2				
	96238896	.	.	B	B	B	S	S	S		RH	2				
[11]	(E)DEADENER-FRT PILLAR,SIDE (D)ENDSTÜCK										(F)ASSOURDISSEUR (S)AMORTIGUADOR					
	96226915	.	.	B	B	B	S	S	S			2				

ENG(ENGINE)	T/A(TRANSAXLE)	BODY TYPE
Y = 1.5SOHC 6 = 1.6DOHC . = COMMON	M = MANUAL T/A A = AUTOMATIC T/A . = COMMON	4 N = 4 DOOR NOTCHBACK 3 H = 3 DOOR HATCHBACK 5 H = 5 DOOR HATCHBACK

8 HEATER & AIR CONDITIONER

8110 AIR DISTRIBUTION
8210 MODULE-AIR CONDITIONER
8220 BLOWER
8230 EVAPORATOR
8310 CONDENSER A
8320 COMPRESSOR
8330 COMPRESSOR MOUNT
8340 AIR CONDITIONER HOSE & PIPE LINE(LHD)
8350 AIR CONDITIONER CONTROL SWITCH

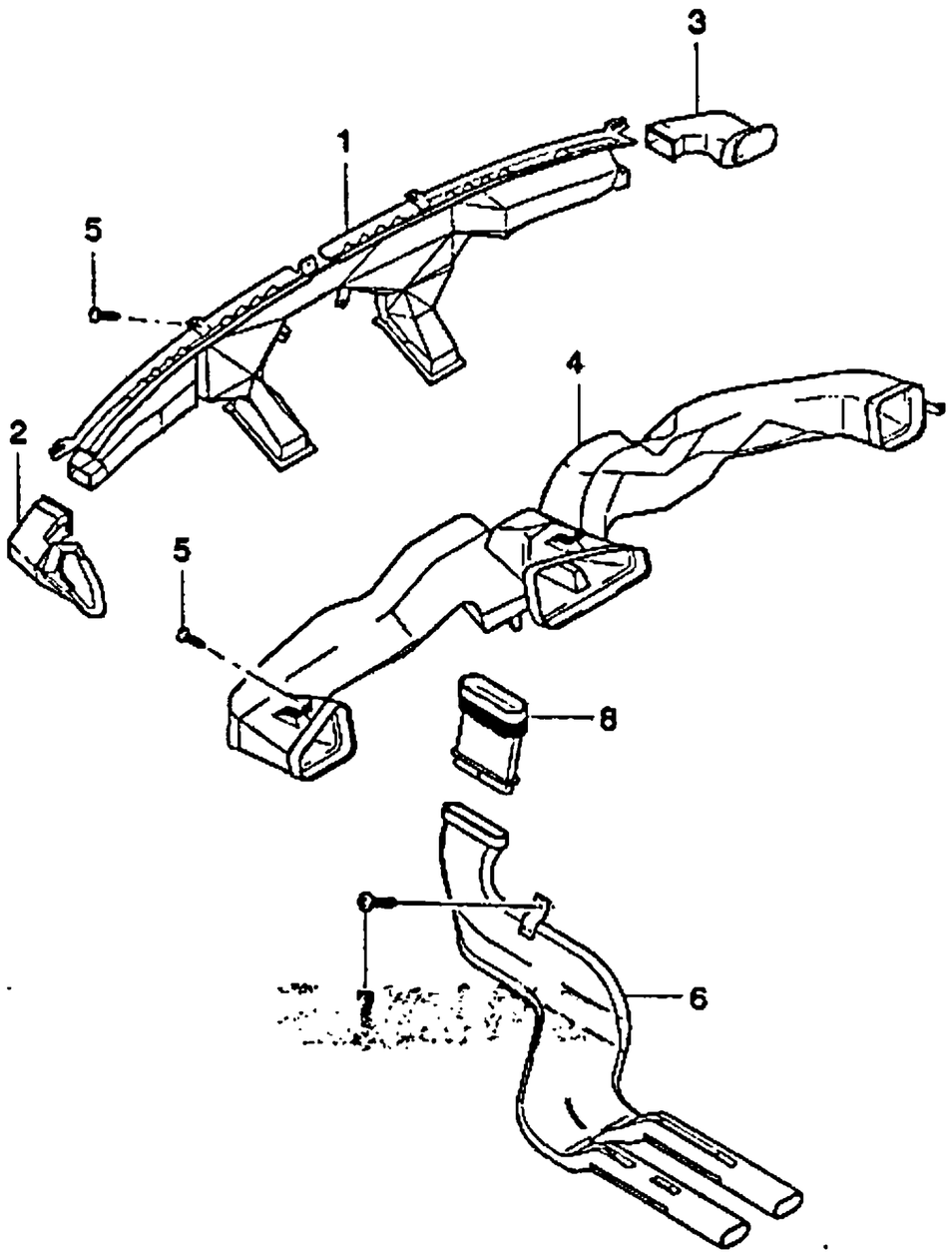

KEY NO. ITC	PART NO	MODEL ENG	T/A	BODY 4N	3H	5H	LEVEL S	SE	SX	OPTION	L/R	QTY	EFFECTIVE DATE FROM	TO	REMARKS	P/CODE
[01]		(E)DUCT A-INST PANEL UPR AIR (D)SCHACHT LUFTEINLAß									(F)CONDUIT-ENTREE D'AIR (S)CONDUCTO-ENTRADA DE AIRE					
	96252010	.	.	B	B	B	S	S	S			1				
[02]		(E)HOSE A-SIDE DEFROSTER (D)SCHLAUCH,ENTFROSTER									(F)TUYAU-DEGIVREUR (S)MANGUERA-DESCONGELADOR					
	96217063	.	.	B	B	B	S	S	S		LH	1				
[03]		(E)HOSE A-SIDE DEFROSTER (D)SCHLAUCH,ENTFROSTER									(F)TUYAU-DEGIVREUR (S)MANGUERA-DESCONGELADOR					
	96217064	.	.	B	B	B	S	S	S		RH	1				
[04]		(E)HOSE A-VENTILATION (D)SCHLAUCH,VENTILATOR									(F)TUYAU-VENTILATION (S)MANGUERA-VENTILACION					
	96304300	.	.	B	B	B	S	S	S			1				
[05]		(E)SCREW-TAPPING (D)SCHRAUBE									(F)VIS (S)TORNILLO					
	03240-48165	.	.	B	B	B	S	S	S			9		970401		
	Y 03160-48165	.	.	B	B	B	S	S	S			9	970401			
[06]		(E)DUCT A-LEG ROOM,REAR (D)SCHACHT									(F)CONDUIT (S)CONDUCTO					
	96235400	.	.	B	B	B	A	A	A	&C35	LH	1				
	96235401	.	.	B	B	B	A	A	A	&C35	RH	1				
[07]		(E)SCREW (D)SCHRAUBE									(F)VIS (S)TORNILLO					
	03151-55133	.	.	B	B	B	A	A	A	&C35		2				
[08]		(E)CONNECTOR A-AIR DISRIBUTOR (D)VERBINDUNG									(F)CONNECTEUR (S)CONECTOR					
	96251041	.	.	B	B	B	A	A	A	&C35	LH	1				
	96243680	.	.	B	B	B	A	A	A	&C35	RH	1				

ENG(ENGINE)	T/A(TRANSAXLE)	BODY TYPE
Y = 1.5SOHC 6 = 1.6DOHC . = COMMON	M = MANUAL T/A A = AUTOMATIC T/A . = COMMON	4 N = 4 DOOR NOTCHBACK 3 H = 3 DOOR HATCHBACK 5 H = 5 DOOR HATCHBACK

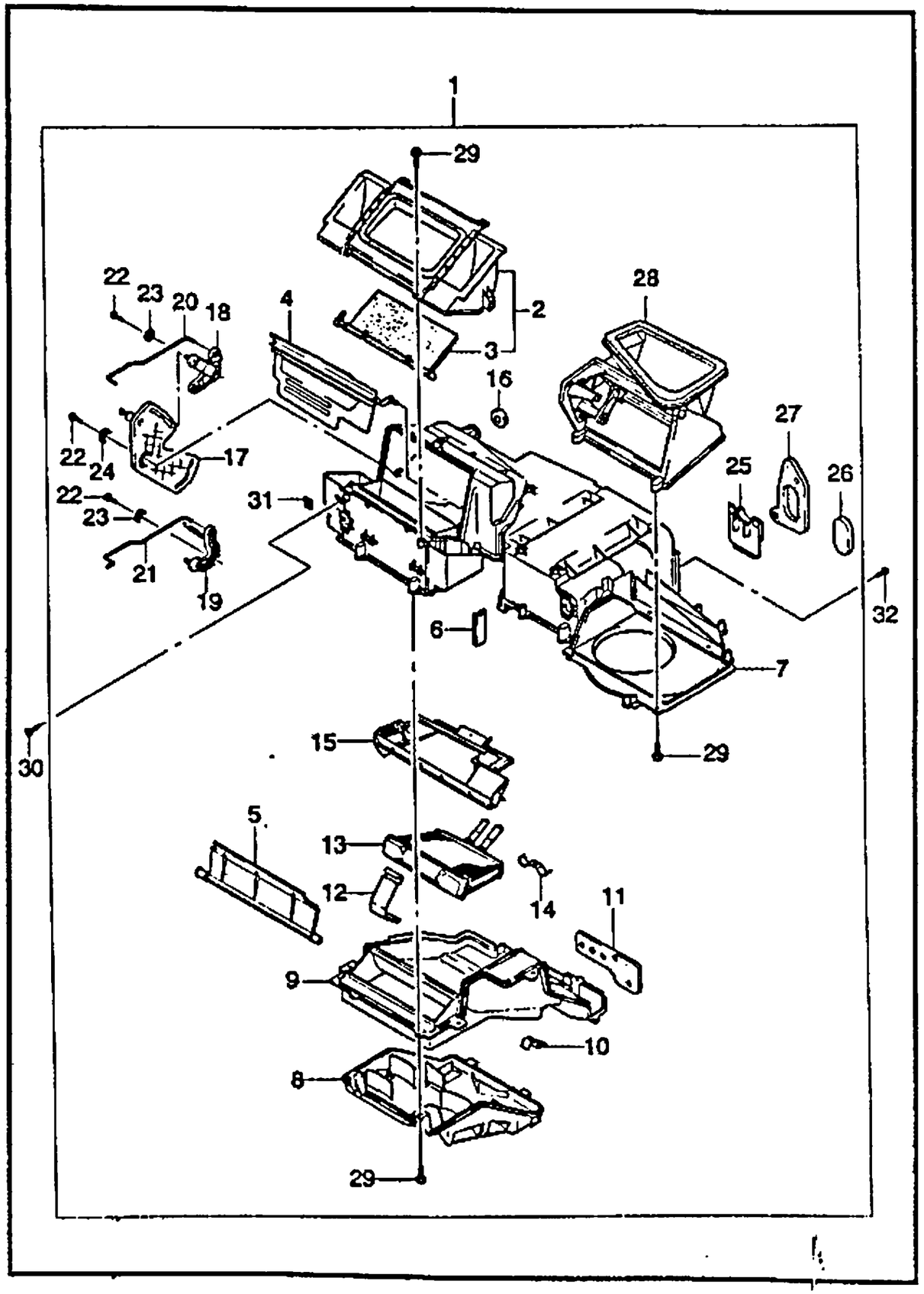

KEY NO. ITC	PART NO	MODEL ENG	T/A	BODY 4N	3H	5H	LEVEL S	SE	SX	OPTION	L/R	QTY	EFFECTIVE DATE FROM	TO	REMARKS	P/CODE
[01]		(E)MODULE-AIR CONDITIONER (D)KLIMAANLAGE									(F)CLIMATISEUR (S)ACONDICIONADOR DE AIRE					
	96251693	.	.	B	B	B	S	S	S	&C46-C35		1				NS
	96237889	.	.	B	B	B	A	A	A	&C46&C35		1				NC
	96241129	.	.	B	B	B	O	O	O	&C59/C60-C35		1				NE
	96241130	.	.	B	B	B	A	A	A	&C59/C60&C35		1				NF
[02]		(E)CASE A-DEFROSTER (D)KASTEN									(F)CARTER (S)CAJA					
	612418	.	.	B	B	B	S	S	S			1			INCL.#3	
[03]		(E)VALVE A-MODE (D)VENTIL									(F)SOUPAPE (S)VALVULA					
	611722	.	.	B	B	B	S	S	S			1				
[04]		(E)VALVE A-TEMPERATURE (D)VENTIL,TEMPERATUR									(F)SOUPAPE-TEMPERATURE (S)VALVULA-TEMPERATURA					
	612022	.	.	B	B	B	S	S	S			1				
[05]		(E)VALVE A-HEATER/DEFROSTER (D)VENTIL									(F)SOUPAPE (S)VALVULA					
	611723	.	.	B	B	B	S	S	S			1				
[06]		(E)CLIP-TEMP VALVE (D)KLEMME									(F)ATTACHE (S)GRAPA					
	611998	.	.	B	B	B	S	S	S			1				
[07]		(E)CASE A-UPPER (D)KASTEN									(F)CARTER (S)CAJA					
	612962	.	.	B	B	B	S	S	S	&C46		1				
	612098	.	.	B	B	B	O	O	O	&C59/C60		1				
[08]		(E)CASE-DISTRIBUTOR (D)KASTEN									(F)CARTER (S)CAJA					
	612116	.	.	B	B	B	S	S	S	-C35		1				

ENG(ENGINE)	T/A(TRANSAXLE)	BODY TYPE
Y = 1.5SOHC 6 = 1.6DOHC . = COMMON	M = MANUAL T/A A = AUTOMATIC T/A . = COMMON	4 N = 4 DOOR NOTCHBACK 3 H = 3 DOOR HATCHBACK 5 H = 5 DOOR HATCHBACK

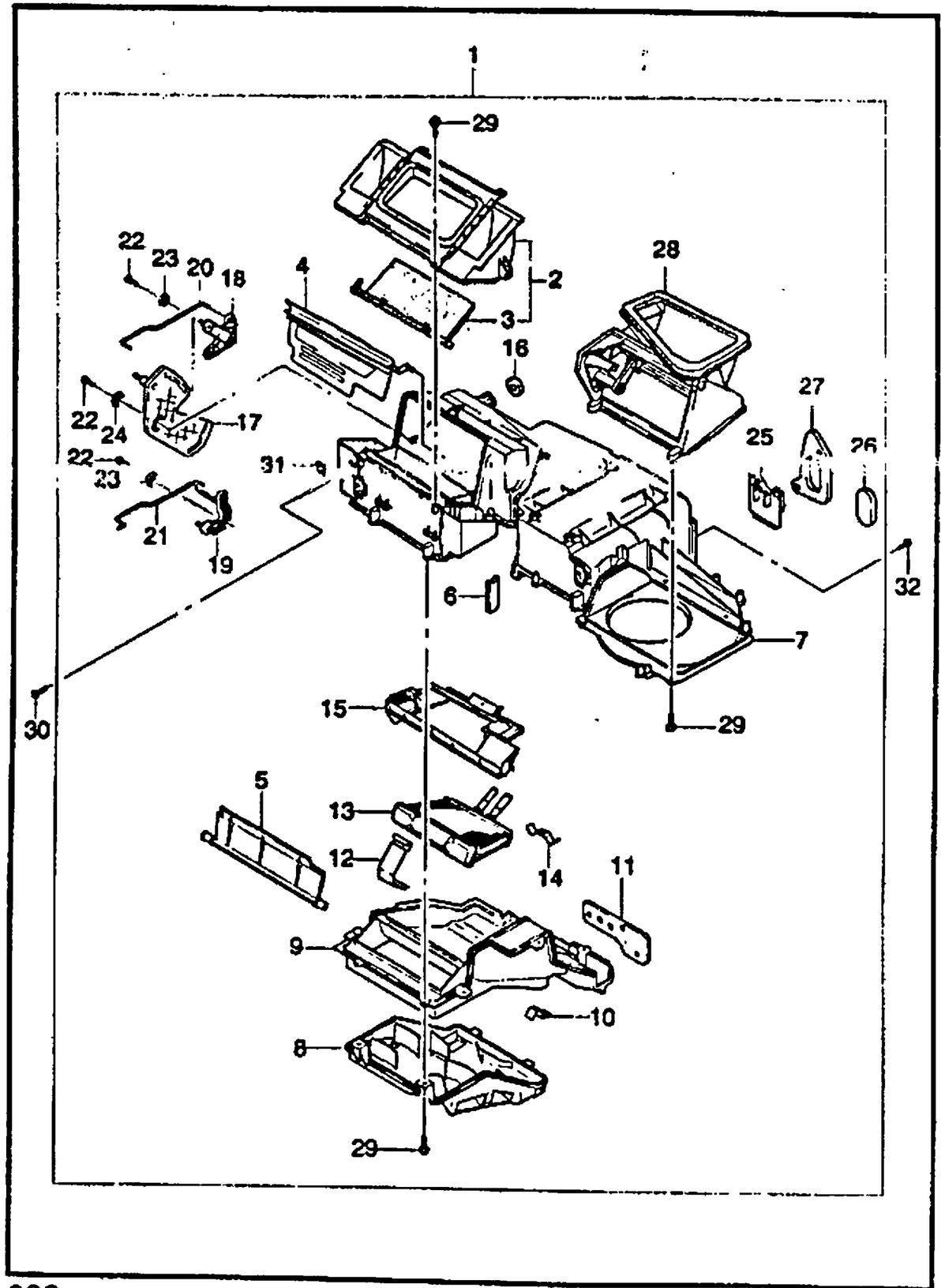

KEY NO. ITC	PART NO	MODEL ENG	T/A	BODY 4N	3H	5H	LEVEL S	SE	SX	OPTION	L/R	QTY	EFFECTIVE DATE FROM	TO	REMARKS	P/CODE
	612112	.	.	B	B	B	A	A	A	&C35		1				
[09]	(E)CASE- COVER (D)KASTEN										(F)CARTER (S)CAJA					
	612071	.	.	B	B	B	S	S	S			1				
[10]	(E)CLIP-RETAINING (D)KLEMME										(F)ATTACHE (S)GRAPA					
	611984	.	.	B	B	B	S	S	S			2				
[11]	(E)SEAL-HEATER PIPE (D)DICHTUNG										(F)JOINT D'ETANCHEITE (S)SELLO					
	612127	.	.	B	B	B	S	S	S			1				
[12]	(E)CLIP-TANK MOUNTING (D)KLEMME										(F)ATTACHE (S)GRAPA					
	611977	.	.	B	B	B	S	S	S			1				
[13]	(E)CORE-HEATER (D)GEHÄUSE HEIZUNG										(F)NOYAU-CHAUFFAGE (S)NUCLEO-CALENTADOR					
	96231949	.	.	B	B	B	S	S	S			1				
[14]	(E)BRACKET-PIPE MOUNTING (D)TRÄGER										(F)SUPPORT (S)SOPORTE					
	611980	.	.	B	B	B	S	S	S			1				
[15]	(E)CASE A-SHROUD (D)KASTEN										(F)CARTER (S)CAJA					
	612159	.	.	B	B	B	S	S	S			1				
[16]	(E)SEAL-DASH MOUNTING RING (D)DICHTUNG										(F)JOINT D'ETANCHEITE (S)SELLO					
	612961	.	.	B	B	B	S	S	S			1				
[17]	(E)LEVER-MAIN (D)HEBEL										(F)LEVIER (S)PALANCA					
	612108	.	.	B	B	B	S	S	S			1				

ENG(ENGINE)	T/A(TRANSAXLE)	BODY TYPE
Y = 1.5SOHC 5 = 1.6DOHC . = COMMON	M = MANUAL T/A A = AUTOMATIC T/A . = COMMON	4 N = 4 DOOR NOTCHBACK 3 H = 3 DOOR HATCHBACK 5 H = 5 DOOR HATCHBACK

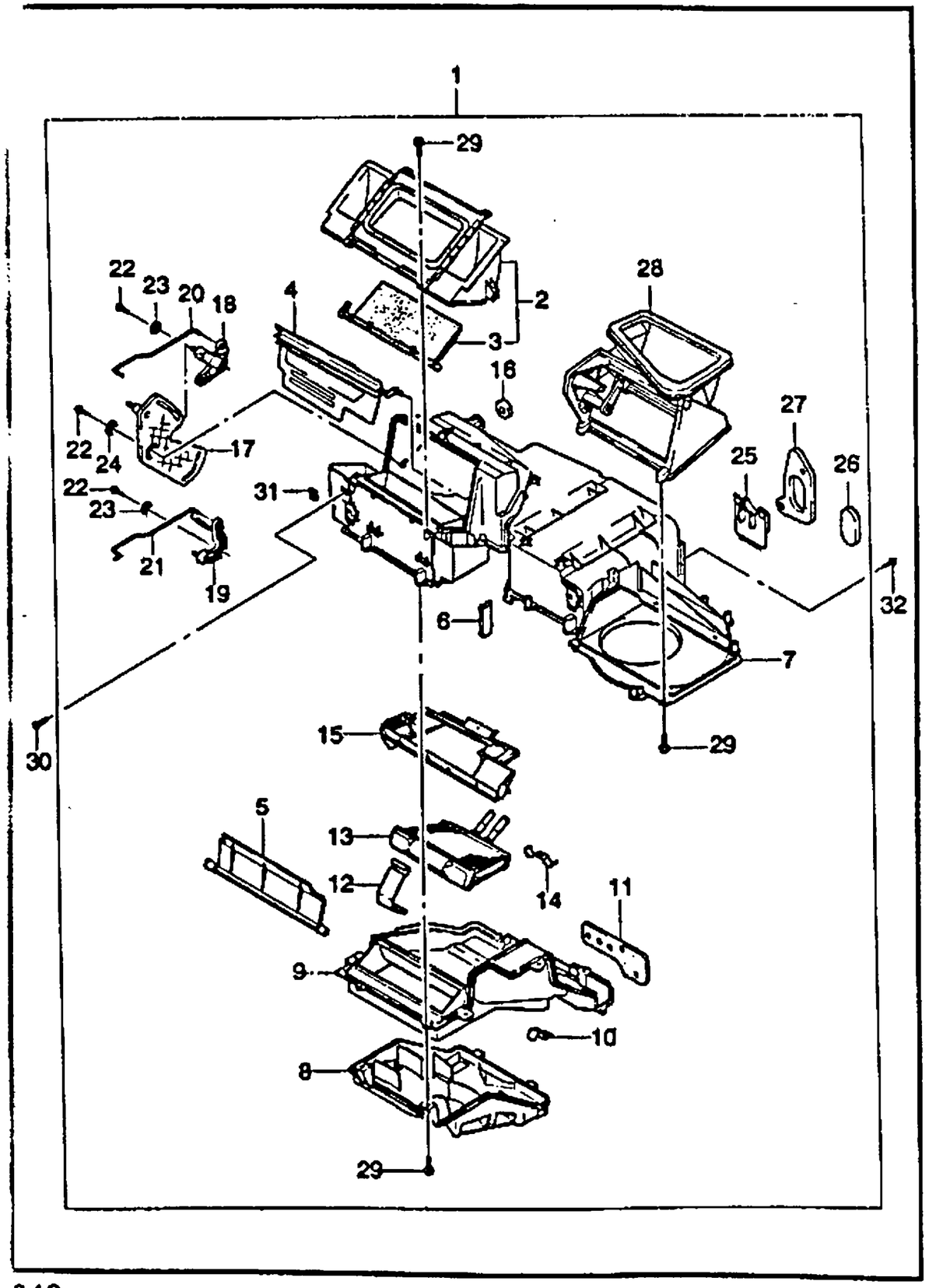

KEY NO. ITC	PART NO	MODEL ENG	T/A	BODY 4N	3H	5H	LEVEL S	SE	SX	OPTION	L/R	QTY	EFFECTIVE DATE FROM	TO	REMARKS	P/CODE
	612124	.	.	B	B	B	S	S	S			1				
[28]	(E)INLET-AIR (D)LUFTEINLAß										(F)ENTREE D'AIR (S)ENTRADA DE AIRE					
	612104	.	.	B	B	B	O	O	O	&C59/C60		1				
[29]	(E)SCREW (D)SCHRAUBE										(F)VIS (S)TORNILLO					
	611979	.	.	B	B	B	S	S	S			45				
[30]	(E)SCREW-TAPPING (D)SCHRAUBE										(F)VIS (S)TORNILLO					
	03160-48165	.	.	B	B	B	S	S	S			2				
[31]	(E)NUT-SPEED (D)MUTTER										(F)ECROU (S)TUERCA					
	03511-48042	.	.	B	B	B	S	S	S			2				
[32]	(E)SCREW (D)SCHRAUBE										(F)VIS (S)TORNILLO					
	09139-06003	.	.	B	B	B	S	S	S			5				

ENG(ENGINE)	T/A(TRANSAXLE)	BODY TYPE
Y = 1.5SOHC 6 = 1.6DOHC . = COMMON	M = MANUAL T/A A = AUTOMATIC T/A . = COMMON	4 N = 4 DOOR NOTCHBACK 3 H = 3 DOOR HATCHBACK 5 H = 5 DOOR HATCHBACK

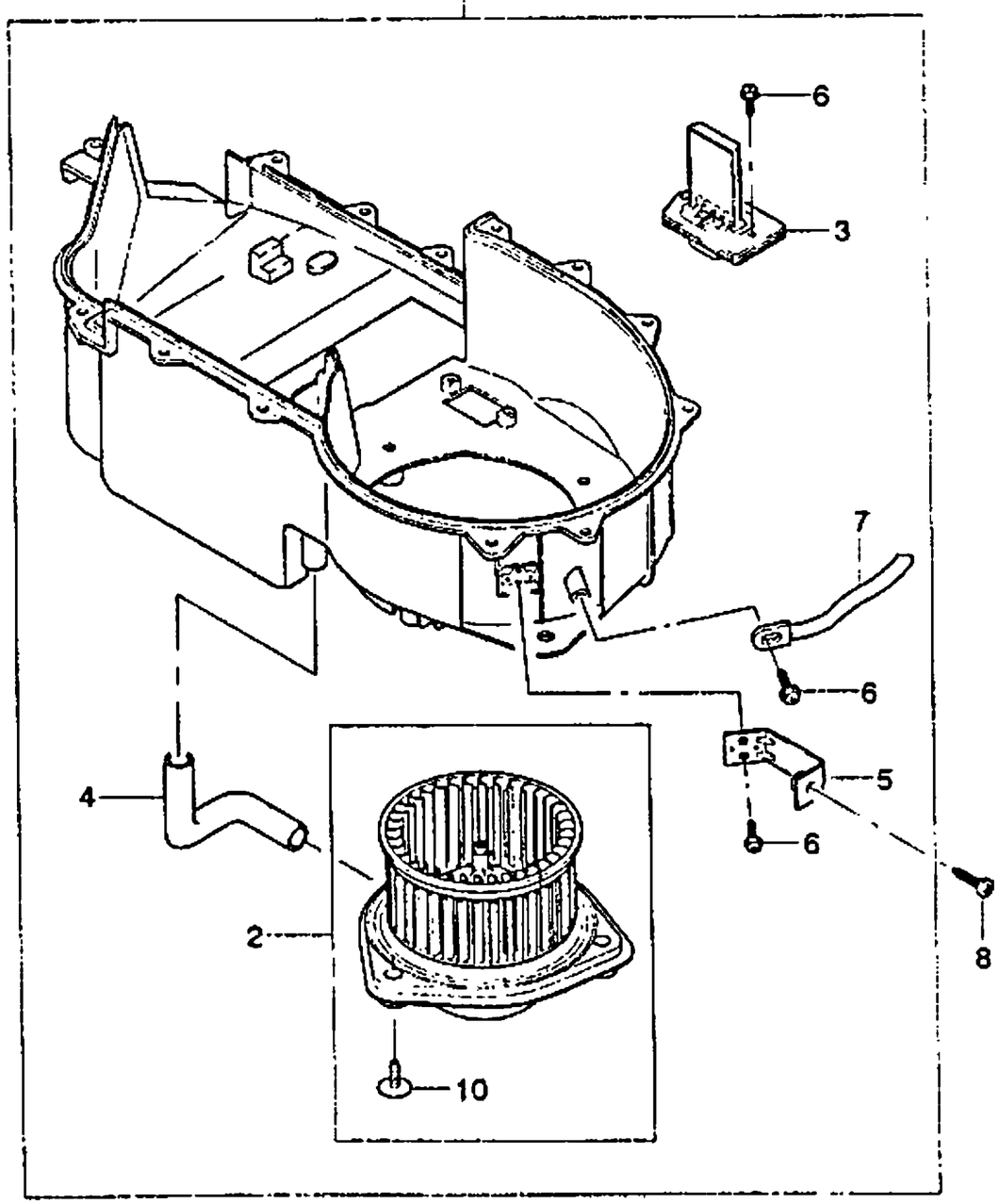

KEY NO. ITC	PART NO	MODEL ENG	T/A	BODY 4N	3H	5H	LEVEL S	SE	SX	OPTION	L/R	QTY	EFFECTIVE DATE FROM	TO	REMARKS	P/CODE
[01]		(E)CASE A -LOWER (D)KASTEN									(F)CARTER (S)CAJA					
	612982	.	.	B	B	B	S	S	S	&C46		1				
	612980	.	.	B	B	B	O	O	O	&C59/C60		1				
[02]		(E)MOTOR-BLOWER (D)MOTOR									(F)MOTEUR (S)MOTOR					
	96190671	.	.	B	B	B	S	S	S			1				
[03]		(E)RESISTOR (D)WIDERSTAND									(F)RESISTANCE (S)RESISTOR					
	96247452	.	.	B	B	B	S	S	S			1				
[04]		(E)TUBE-COOLING (D)ROHRLEITUNG									(F)TUYAU OU TUBE (S)TUBO					
	612030	.	.	B	B	B	S	S	S			1				
[05]		(E)BRACKET-LOWER (D)TRÄGER									(F)SUPPORT (S)SOPORTE					
	612207	.	.	B	B	B	S	S	S			1				
[06]		(E)SCREW (D)SCHRAUBE									(F)VIS (S)TORNILLO					
	611979	.	.	B	B	B	S	S	S			5				
[07]		(E)CLIP-LEAD WIRE (D)KLEMME									(F)ATTACHE (S)GRAPA					
	610452	.	.	B	B	B	S	S	S			1				
[08]		(E)SCREW (D)SCHRAUBE									(F)VIS (S)TORNILLO					
	02146-06123	.	.	B	B	B	S	S	S			1				
[09]		(E)COVER-MOTOR (D)DECKEL									(F)CARTER (S)CUBIERTA					
	612971	.	.	B	B	B	S	S	S			1			NOT APPLIED	

ENG(ENGINE)	T/A(TRANSAXLE)	BODY TYPE
Y = 1.5SOHC	M = MANUAL T/A	4 N = 4 DOOR NOTCHBACK
6 = 1.6DOHC	A = AUTOMATIC T/A	3 H = 3 DOOR HATCHBACK
. = COMMON	. = COMMON	5 H = 5 DOOR HATCHBACK

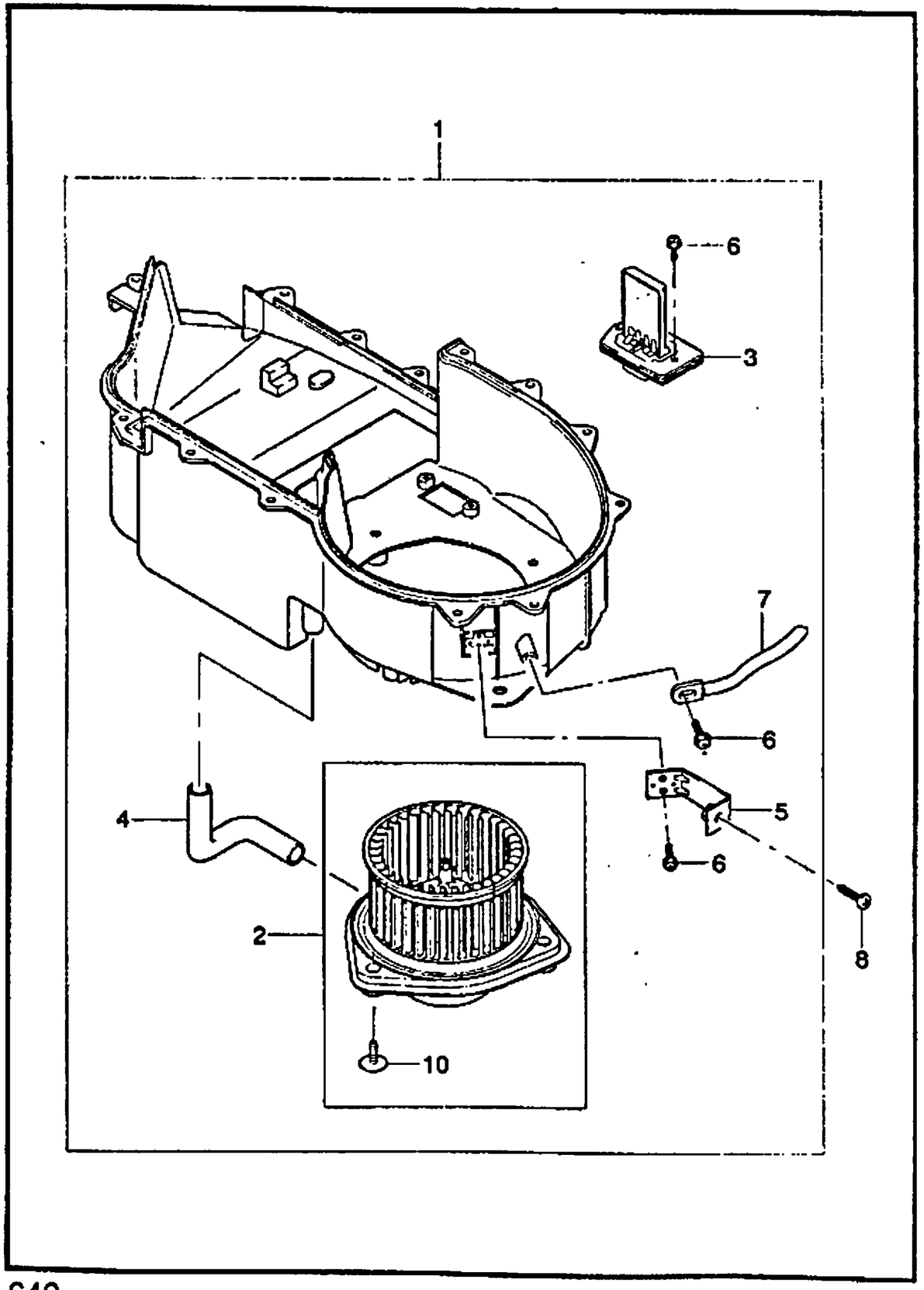

KEY NO. ITC	PART NO	MODEL ENG	T/A	BODY 4N	3H	5H	LEVEL S	SE	SX	OPTION	L/R	QTY	EFFECTIVE DATE FROM	TO	REMARKS	P/CODE
[10]	611983	(E)SCREW (D)SCHRAUBE	.	.	B	B	B	S	S	S		(F)VIS (S)TORNILLO	3			

ENG(ENGINE)	T/A(TRANSAXLE)	BODY TYPE
Y = 1.5SOHC 6 = 1.6DOHC . = COMMON	M = MANUAL T/A A = AUTOMATIC T/A . = COMMON	4 N = 4 DOOR NOTCHBACK 3 H = 3 DOOR HATCHBACK 5 H = 5 DOOR HATCHBACK

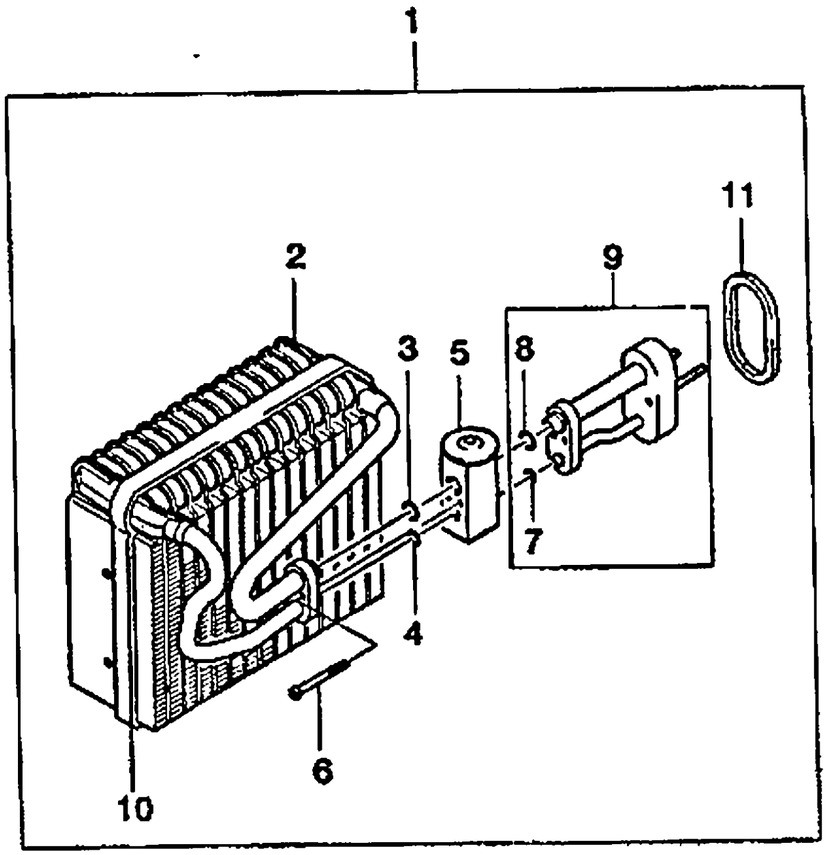

KEY NO. ITC	PART NO	MODEL ENG	T/A	BODY 4N	3H	5H	LEVEL S	SE	SX	OPTION	L/R	QTY	EFFECTIVE DATE FROM	TO	REMARKS	P/CODE	PART NAME
[01]		(E)EVAPORATER A (D)VERDAMPFER															(F)EVAPORATEUR (S)EVAPORADOR
[01]	612122	.	.	B	B	B	O	O	O	&C59/C60		1					
[02]		(E)CORE A-EVAPORATOR (D)GEHÄUSE VERDAMPFER															(F)NOYAU-EVAPORATEUR (S)NUCLEO-EVAPORADOR
[02]	612220	.	.	B	B	B	O	O	O	&C59/C60		1					
[03]		(E)O RING-EVAPORATOR OUTLET (D)O RING															(F)JOINT TORIQUE (S)ANILLO EN O
[03]	3094215	.	.	B	B	B	O	O	O	&C59/C60		1					
[04]		(E)O RING-EVAPORATOR INLET (D)O RING															(F)JOINT TORIQUE (S)ANILLO EN O
[04]	3094214	.	.	B	B	B	O	O	O	&C59/C60		1					
[05]		(E)VALVE-THERMOSTATIC EXPANS (D)VENTIL															(F)SOUPAPE (S)VALVULA
[05]	96190670	.	.	B	B	B	O	O	O	&C59/C60		1					
[06]		(E)BOLT (D)SCHRAUBE															(F)BOULON (S)PERNO
[06]	600098	.	.	B	B	B	O	O	O	&C59/C60		1					
[07]		(E)O RING-DASH INLET (D)O RING															(F)JOINT TORIQUE (S)ANILLO EN O
[07]	3093509	.	.	B	B	B	O	O	O	&C59/C60		1					
[08]		(E)O RING-DASH OUTLET (D)O RING															(F)JOINT TORIQUE (S)ANILLO EN O
[08]	3094215	.	.	B	B	B	O	O	O	&C59/C60		1					
[09]		(E)FITTING&PIPE A-IN/OUT (D)BEFESTIGUNG															(F)MONTAGE (S)TUBERIA ENTRADA-SALIDA
[09]	612210	.	.	B	B	B	O	O	O	&C59/C60		1					
[10]		(E)SEAL-EVAPORATOR (D)DICHTUNG															(F)JOINT (S)SELLO

ENG(ENGINE)	T/A(TRANSAXLE)	BODY TYPE
Y = 1.5SOHC 6 = 1.6DOHC . = COMMON	M = MANUAL T/A A = AUTOMATIC T/A . = COMMON	4 N = 4 DOOR NOTCHBACK 3 H = 3 DOOR HATCHBACK 5 H = 5 DOOR HATCHBACK

6K08

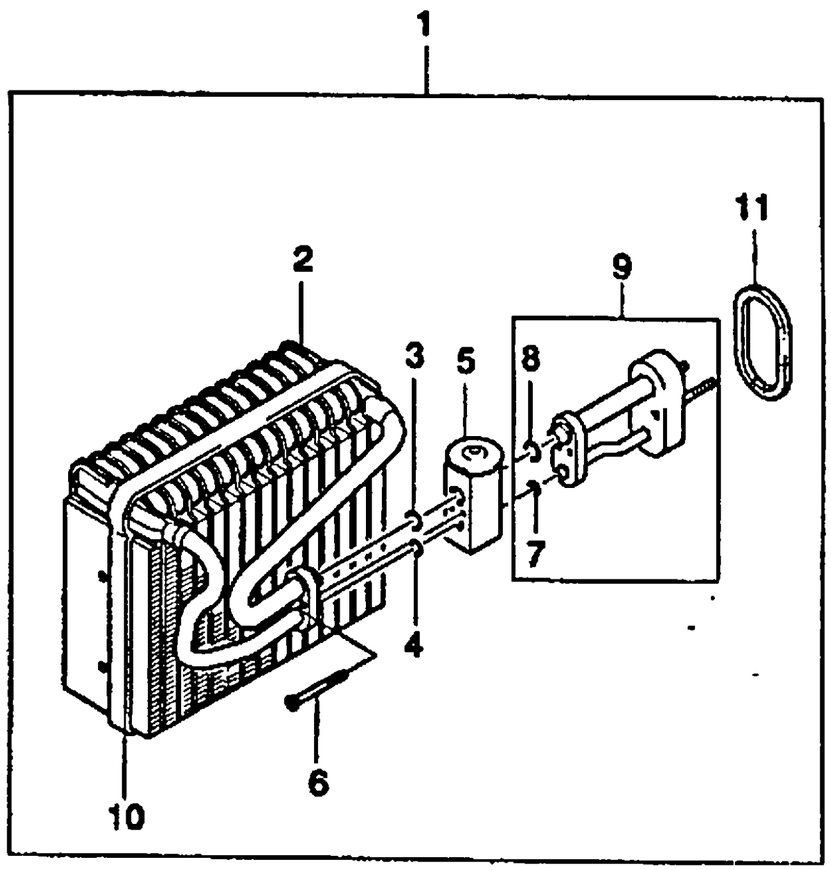

KEY NO.		PART NAME															
ITC	PART NO	MODEL								OPTION	L/R	QTY	EFFECTIVE DATE		REMARKS	P/CODE
		ENG	T/A	BODY			LEVEL						FROM	TO		
				4N	3H	5H	S	SE	SX							
	612054	.	.	B	B	B	O	O	O	&C59/C60		1				
	[11]	(E)SEAL-BLOCK (D)DICHTUNG									(F)JOINT (S)SELLO					
	612463	.	.	B	B	B	O	O	O	&C59/C60		1				

ENG(ENGINE)	T/A(TRANSAXLE)	BODY TYPE
Y = 1.5SOHC 6 = 1.6DOHC . = COMMON	M = MANUAL T/A A = AUTOMATIC T/A . = COMMON	4 N = 4 DOOR NOTCHBACK 3 H = 3 DOOR HATCHBACK 5 H = 5 DOOR HATCHBACK

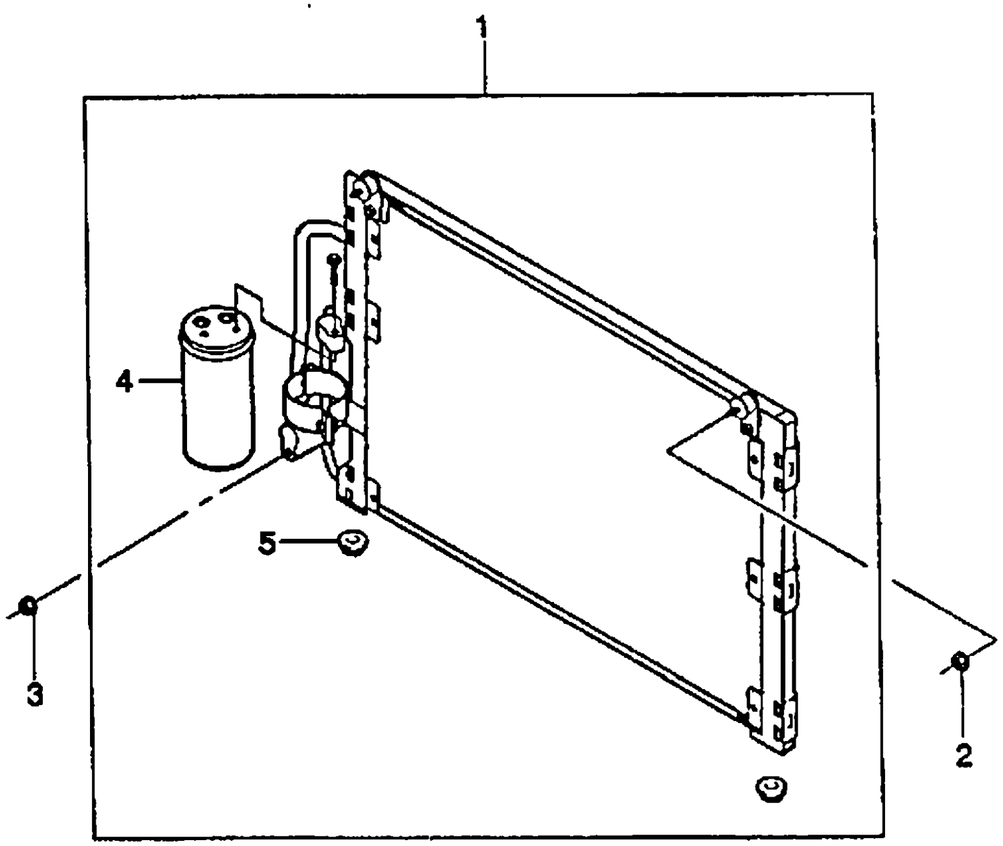

KEY NO. ITC	PART NO	MODEL ENG	T/A	BODY 4N	3H	5H	LEVEL S	SE	SX	OPTION	L/R	QTY	EFFECTIVE DATE FROM	TO	REMARKS	PICODE
[01]		(E)CONDENSER A (D)KONDENSATOR								.	(F)CONDENSATEUR (S)CONDENSADOR					
	96303204	.	.	B	B	B	O	O	O	&C60		1				K1
[02]		(E)NUT (D)MUTTER									(F)ECROU (S)TUERCA					
	09159-06011	.	.	B	B	B	O	O	O	&C60		2				
[03]		(E)NUT-HEXAGON (D)MUTTER									(F)ECROU (S)TUERCA					
	08310-12083	.	.	B	B	B	O	O	O	&C60		1				
[04]		(E)DRYER-RECEIVER (D)FILTERTROCKNER									(F)RECEVEUR SEC (S)BOTELLA SECADORA					
	96225633	.	.	B	B	B	O	O	O	&C60		1				
[05]		(E)GROMMET (D)ÖSE									(F)VIROLE (S)AISLANTE					
	09308-06006	.	.	B	B	B	O	O	O	&C60		2				

ENG(ENGINE)	T/A(TRANSAXLE)	BODY TYPE
Y = 1.5SOHC 6 = 1.6DOHC . = COMMON	M = MANUAL T/A A = AUTOMATIC T/A . = COMMON	4 N = 4 DOOR NOTCHBACK 3 H = 3 DOOR HATCHBACK 5 H = 5 DOOR HATCHBACK

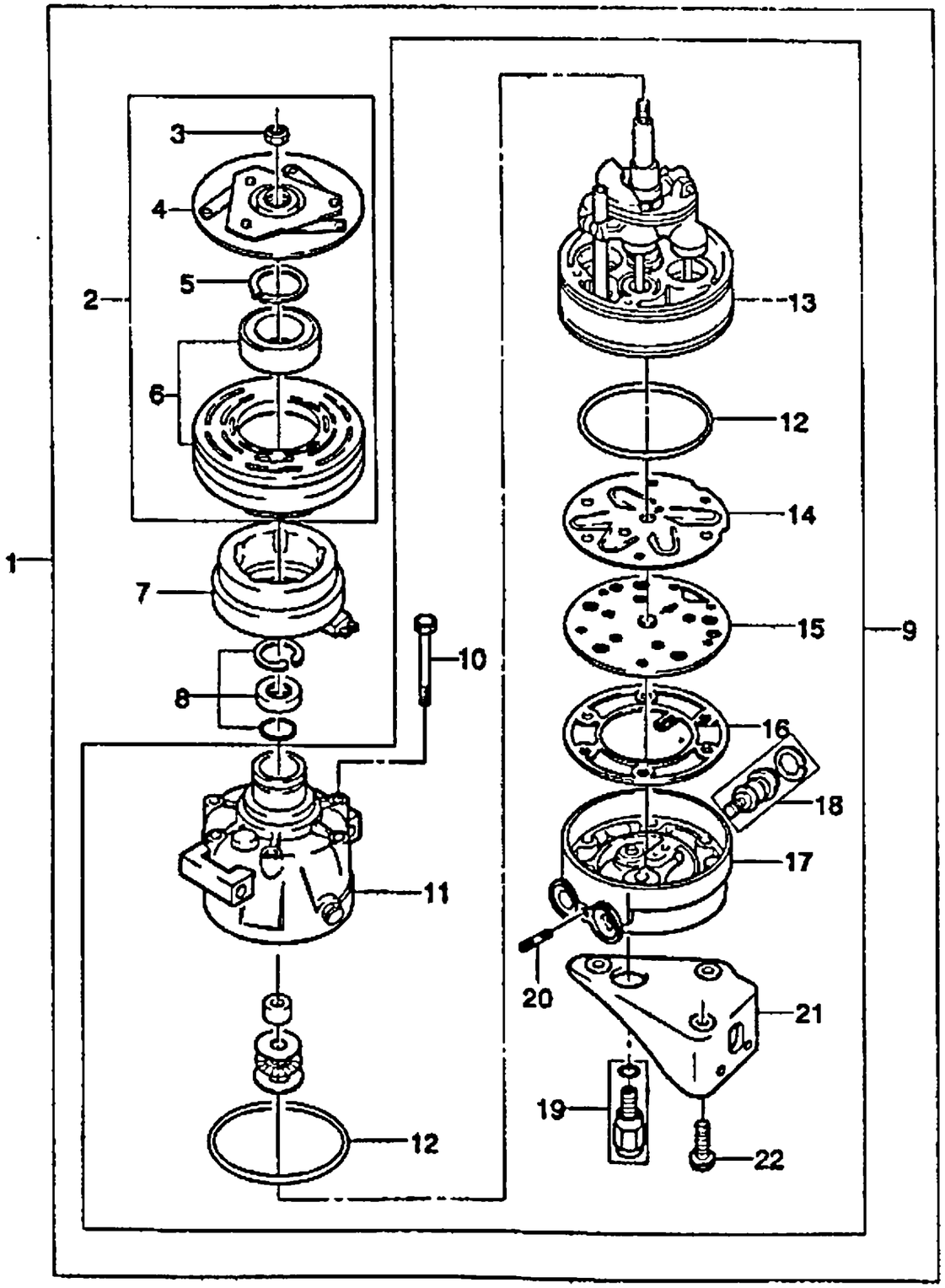

KEY NO. ITC	PART NO	MODEL ENG	MODEL T/A	MODEL BODY 4N	MODEL BODY 3H	MODEL BODY 5H	MODEL LEVEL S	MODEL LEVEL SE	MODEL LEVEL SX	OPTION	L/R	QTY	EFFECTIVE DATE FROM	EFFECTIVE DATE TO	REMARKS	P/CODE
	[01]	(E)COMPRESSOR A (D)KOMPRESSOR									(F)COMPRESSEUR (S)COMPRESOR					
	96245943	.	.	B	B	B	O	O	O	&C60		1		970715		KA
N	96255980	.	.	B	B	B	O	O	O	&C60		1	970715			KC
	[02]	(E)CLUTCH&PULLEY KIT (D)KUPPLUNG&ROLLE SATZ									(F)TROUSSE EMBRAYAGE&POULIE (S)EMBRAGUE-& POLEA,JUEGO					
	NP1072	.	.	B	B	B	O	O	O	&C60		1				
	[03]	(E)NUT (D)MUTTER									(F)ECROU (S)TUERCA					
	6557414	.	.	B	B	B	O	O	O	&C60		1				
	[04]	(E)DRIVE A-CLUTCH (D)ANTRIEB,KUPPLUNG									(F)ENTRAINEMENT-EMBRAYAGE (S)IMPULSADOR-EMBRAGUE					
	713402	.	.	B	B	B	O	O	O	&C60		1				
	[05]	(E)RING-RETAINING (D)RING,HALTER									(F)ANNEAU-DE RETENTION (S)ANILLO-RETENEDOR					
	6557617	.	.	B	B	B	O	O	O	&C60		1				
	[06]	(E)PULLEY&BEARING A (D)ROLLE&LAGER									(F)POULIE&ROULEMENT (S)POLEA Y COJINETE					
	713833	.	.	B	B	B	O	O	O	&C60		1				
	[07]	(E)COIL&HOUSING A (D)WICKLUNG&LAGER									(F)BOBINE&ROULEMENT (S)BOBINA Y COJINETE					
	714142	.	.	B	B	B	O	O	O	&C60		1				
	[08]	(E)LOCK&SLEEVE KIT (D)SCHLOß&HÜLSE SATZ									(F)TROUSSE VERROU&MANCHON (S)CERRADURA Y MANGA					
	713650	.	.	B	B	B	O	O	O	&C60		1				
	[09]	(E)COMPRESSOR SUB A (D)KOMPRESSOR UNTER									(F)COMPRESSEUR SUB (S)COMPRESOR SUB					
	714144	.	.	B	B	B	O	O	O	&C60		1				

ENG(ENGINE)	T/A(TRANSAXLE)	BODY TYPE
Y = 1.5SOHC	M = MANUAL T/A	4 N = 4 DOOR NOTCHBACK
6 = 1.6DOHC	A = AUTOMATIC T/A	3 H = 3 DOOR HATCHBACK
. = COMMON	. = COMMON	5 H = 5 DOOR HATCHBACK

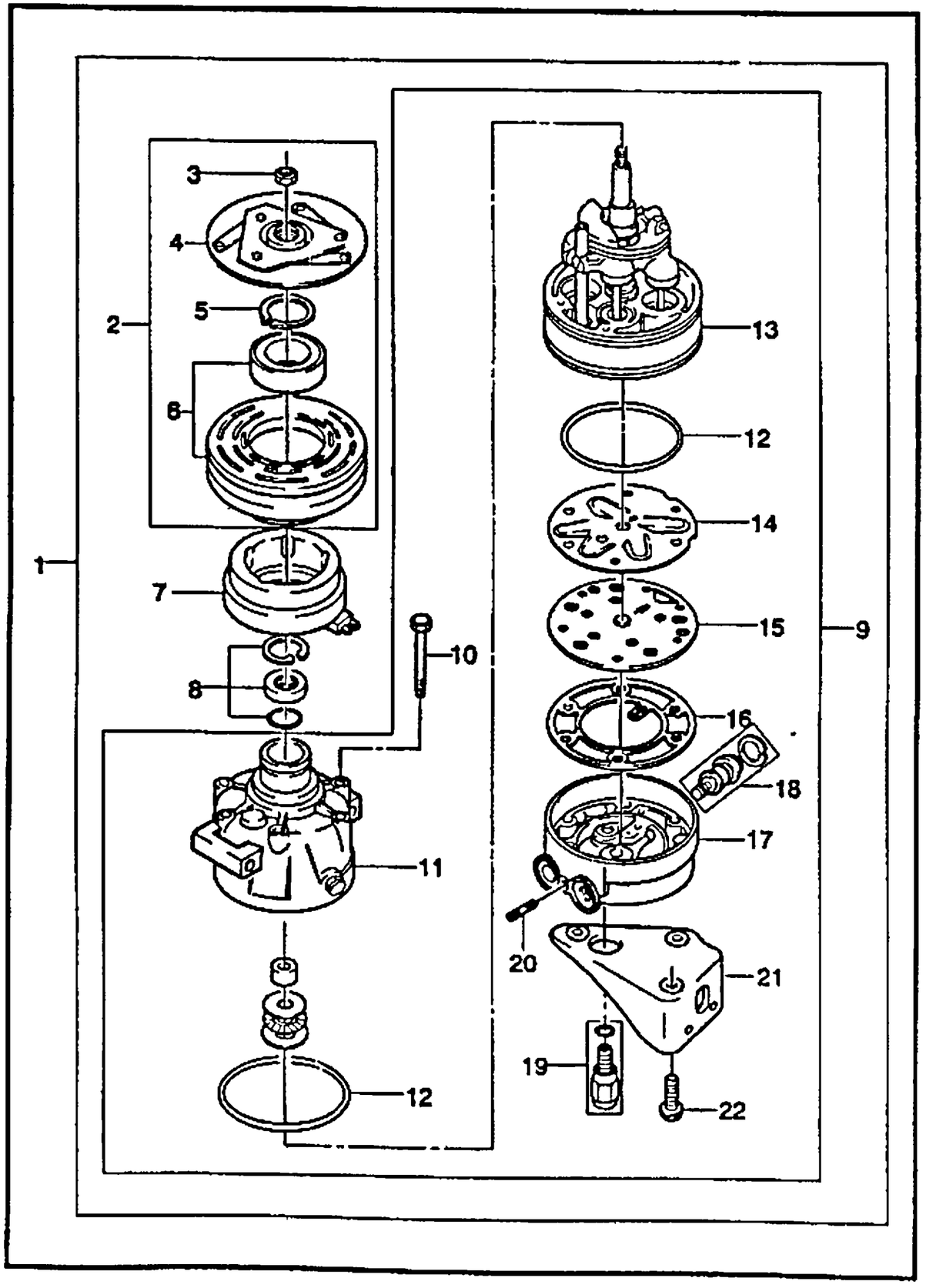

KEY NO.	PART NO	MODEL: ENG	T/A	BODY: 4N	3H	5H	LEVEL: S	SE	SX	OPTION	PART NAME	L/R	QTY	EFFECTIVE DATE FROM	TO	REMARKS	P/CODE
[10]	713247	.	.	B	B	B	O	O	O	&C60	(E)BOLT (D)SCHRAUBE		6				(F)BOULON (S)PERNO
[11]	N/S(9)										(E)HEAD-FRONT (D)KOPF,VORNE						(F)CULASSE-AVANT (S)CABEZA-FRENTE
[12]	6557662	.	.	B	B	B	O	O	O	&C60	(E)O RING-FRT HEAD CYLINDER (D)O RING,VORDERER KOPF		2				(F)JOINT TORIQUE (S)ANILLO EN O
[13]	N/S(9)										(E)CYLINDER-SHAFT&GUIDE PIN (D)ZYLINDER						(F)CYLINDRE-AXE&BROCHE GUIDE (S)CILINDRO
[14]	6559801	.	.	B	B	B	O	O	O	&C60	(E)REED-SUCTION (D)ROHR ANSAUGUNG		1				(F)ANCHE D'ASPIRATION (S)CAÑA-SUCCION
[15]	6553562	.	.	B	B	B	O	O	O	&C60	(E)PLATE-VALVE (D)PLATTE,VENTIL		1				(F)PLAQUE-SOUPAPE (S)PLACA-VALVULA
[16]	6559755	.	.	B	B	B	O	O	O	&C60	(E)GASKET-HEAD (D)DICHTUNG,KOPF		1				(F)JOINT-CULASSE (S)JUNTA-CABEZA
[17]	N/S(9)						O	O	O		(E)HEAD-REAR (D)KOPF,HINTER						(F)CULASSE-ARRIERE (S)CABEZA-TRASERA
[18]	5110156	.	.	B	B	B	O	O	O	&C60	(E)VALVE KIT-CONTROL (D)VENTIL SATZ,STEUERUNG		1				(F)TROUSSE DE SOUPAPE (S)JUEGO DE VALVULA-CONTROL
[19]											(E)VALVE-HIGH PRESSURE RELIF (D)VENTIL,HOCHDRUCK LÖSUNG						(F)SOUPAPE (S)VALVULA

ENG(ENGINE)	T/A(TRANSAXLE)	BODY TYPE
Y = 1.5SOHC 6 = 1.6DOHC . = COMMON	M = MANUAL T/A A = AUTOMATIC T/A . = COMMON	4 N = 4 DOOR NOTCHBACK 3 H = 3 DOOR HATCHBACK 5 H = 5 DOOR HATCHBACK

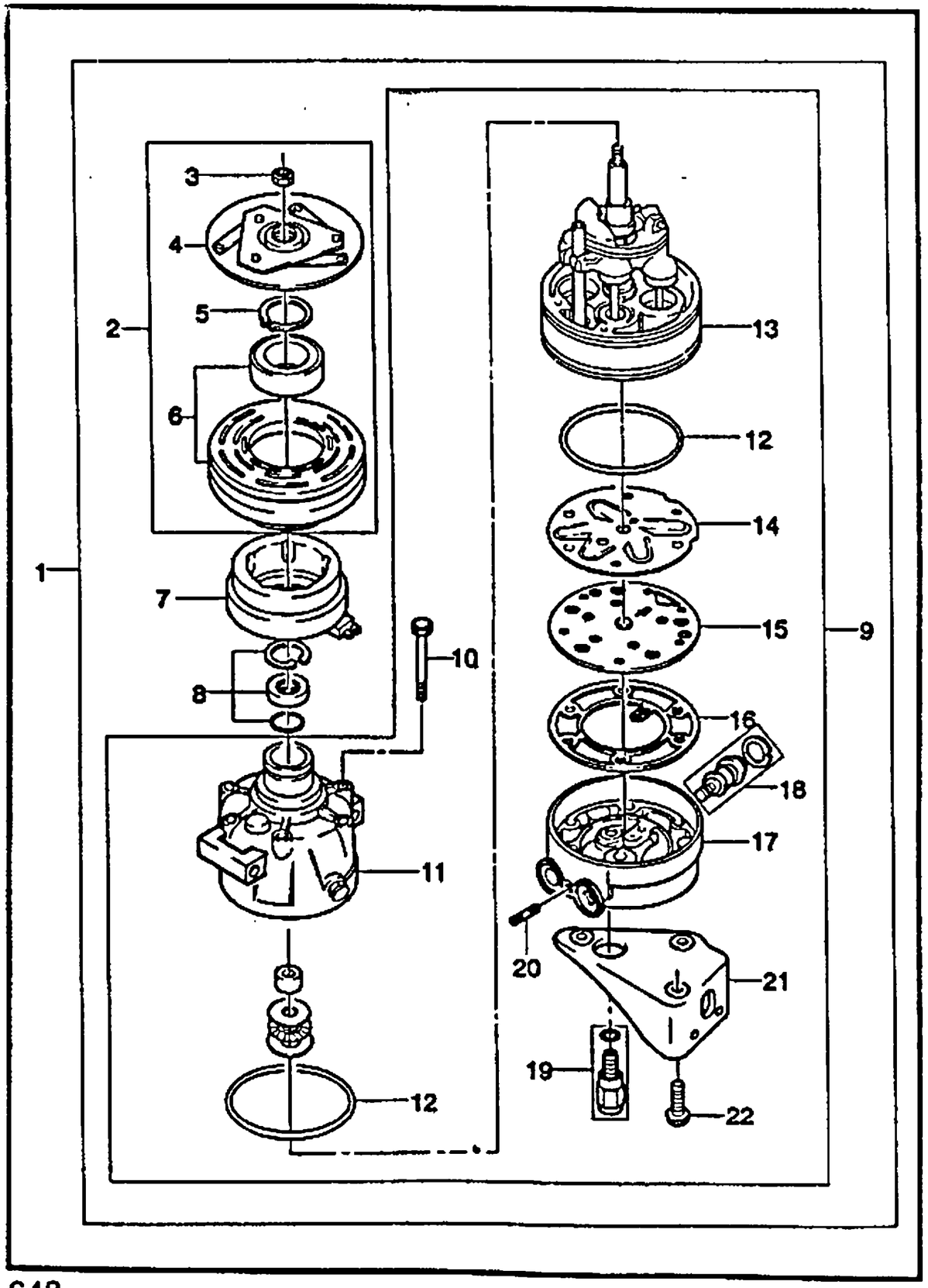

KEY NO. ITC	PART NO	MODEL ENG	MODEL T/A	MODEL BODY 4N	MODEL BODY 3H	MODEL BODY 5H	MODEL LEVEL S	MODEL LEVEL SE	MODEL LEVEL SX	OPTION	L/R	QTY	EFFECTIVE DATE FROM	EFFECTIVE DATE TO	REMARKS	PICODE
	6552743	.	.	B	B	B	O	O	O	&C60		1				
	[20]	(E)BOLT-STUD (D)STIFTSCHRAUBE									(F)BOULON-TETON (S)PERNO-ESPIGA					
	6558459	.	.	B	B	B	O	O	O	&C60		1				
	[21]	(E)BRACKET (D)TRÄGER									(F)SUPPORT (S)SOPORTE					
	96241910	.	.	B	B	B	O	O	O	&C60		1		970715		
	N 96255631	.	.	B	B	B	O	O	O	&C60		1	970715			
	[22]	(E)BOLT (D)SCHRAUBE									(F)BOULON (S)PERNO					
	713847	.	.	B	B	B	O	O	O	&C60		3				

ENG(ENGINE)	T/A(TRANSAXLE)	BODY TYPE
Y = 1.5SOHC 6 = 1.6DOHC . = COMMON	M = MANUAL T/A A = AUTOMATIC T/A . = COMMON	4 N = 4 DOOR NOTCHBACK 3 H = 3 DOOR HATCHBACK 5 H = 5 DOOR HATCHBACK

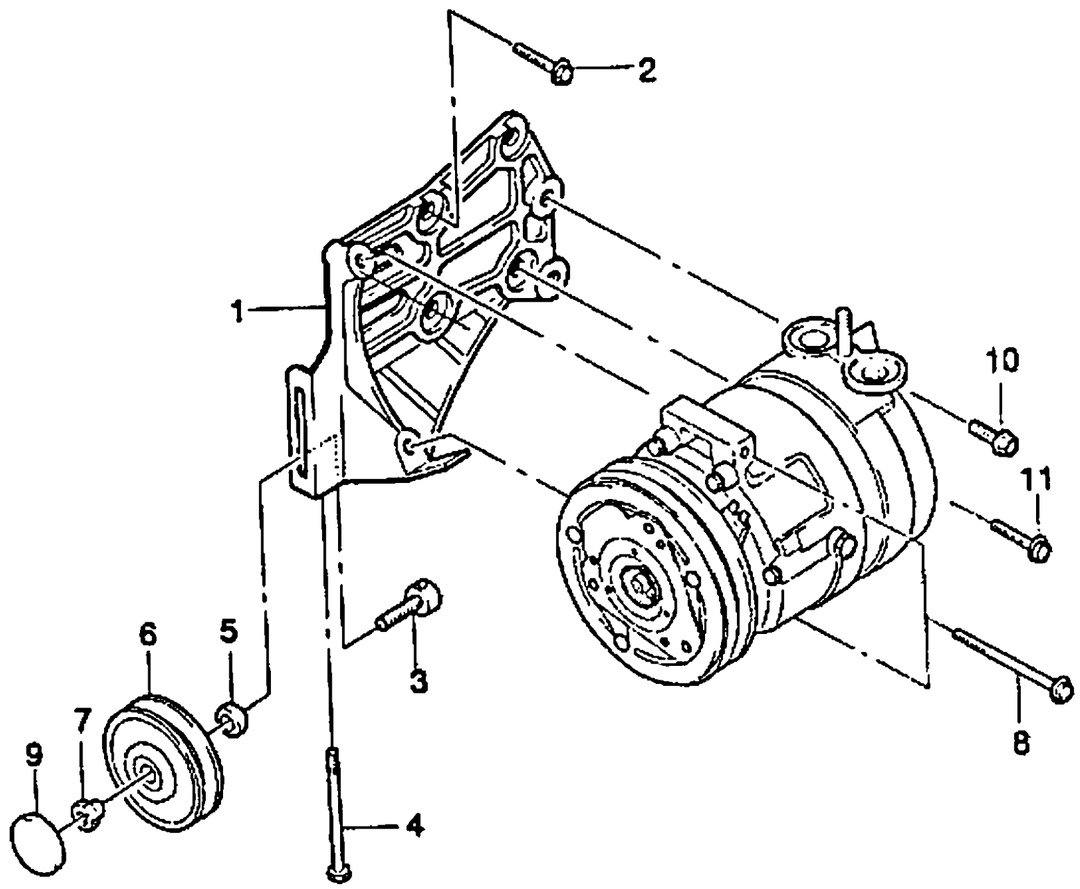

KEY NO. ITC	PART NO	MODEL ENG	T/A	BODY 4N	3H	5H	LEVEL S	SE	SX	OPTION	L/R	QTY	EFFECTIVE DATE FROM	TO	REMARKS	P/CODE
[01]		(E)BRACKET-COMPRESSOR MAIN (D)TRÄGER,KOMPRESSOR									(F)SUPPORT-COMPRESSEUR (S)SOPORTE-COMPRESOR					
	96352039	1	.	B	B	B	O	O	O	&C60		1		970715		
N	96352642	1	.	B	B	B	O	O	O	&C60		1	970715			
	96352038	6	.	B	B	B	.	.	O	&C60		1		970715		
N	96352641	6	.	B	B	B	.	.	O	&C60		1	970715			
[02]		(E)BOLT-HEXAGON FLANGE (D)SCHRAUBE									(F)BOULON (S)PERNO					
	09103-10040	.	.	B	B	B	O	O	O	&C60		4		970715		
	09103-10040	.	.	B	B	B	O	O	O	&C60		3	970715			
[03]		(E)PIECE-SLIDING (D)GLEIT-TEIL									(F)PIECE COULISSANTE (S)PIEZA DE DESLICE					
	96193361	.	.	B	B	B	O	O	O	&C60		1				
[04]		(E)BOLT-HEXAGON (D)SCHRAUBE									(F)BOULON (S)PERNO					
	09117-08013	.	.	B	B	B	O	O	O	&C60		1		970901		
O	09100-08008	.	.	B	B	B	O	O	O	&C60		1	970901			
[05]		(E)SPACER (D)DISTANZSTÜCK									(F)ENTRETOISE (S)ESPACIADOR					
	96209433	.	.	B	B	B	O	O	O	&C60		1				
[06]		(E)PULLEY A (D)ROLLE									(F)POULIE (S)POLEA					
	96208428	.	.	B	B	B	O	O	O	&C60		1				
[07]		(E)NUT (D)MUTTER									(F)ECROU (S)TUERCA					
	09159-10001	.	.	B	B	B	O	O	O	&C60		1				
[08]		(E)BOLT-HEXAGON FLANGE (D)SCHRAUBE									(F)BOULON (S)PERNO					

ENG(ENGINE)	T/A(TRANSAXLE)	BODY TYPE
Y = 1.5SOHC	M = MANUAL T/A	4 N = 4 DOOR NOTCHBACK
6 = 1.6DOHC	A = AUTOMATIC T/A	3 H = 3 DOOR HATCHBACK
. = COMMON	. = COMMON	5 H = 5 DOOR HATCHBACK

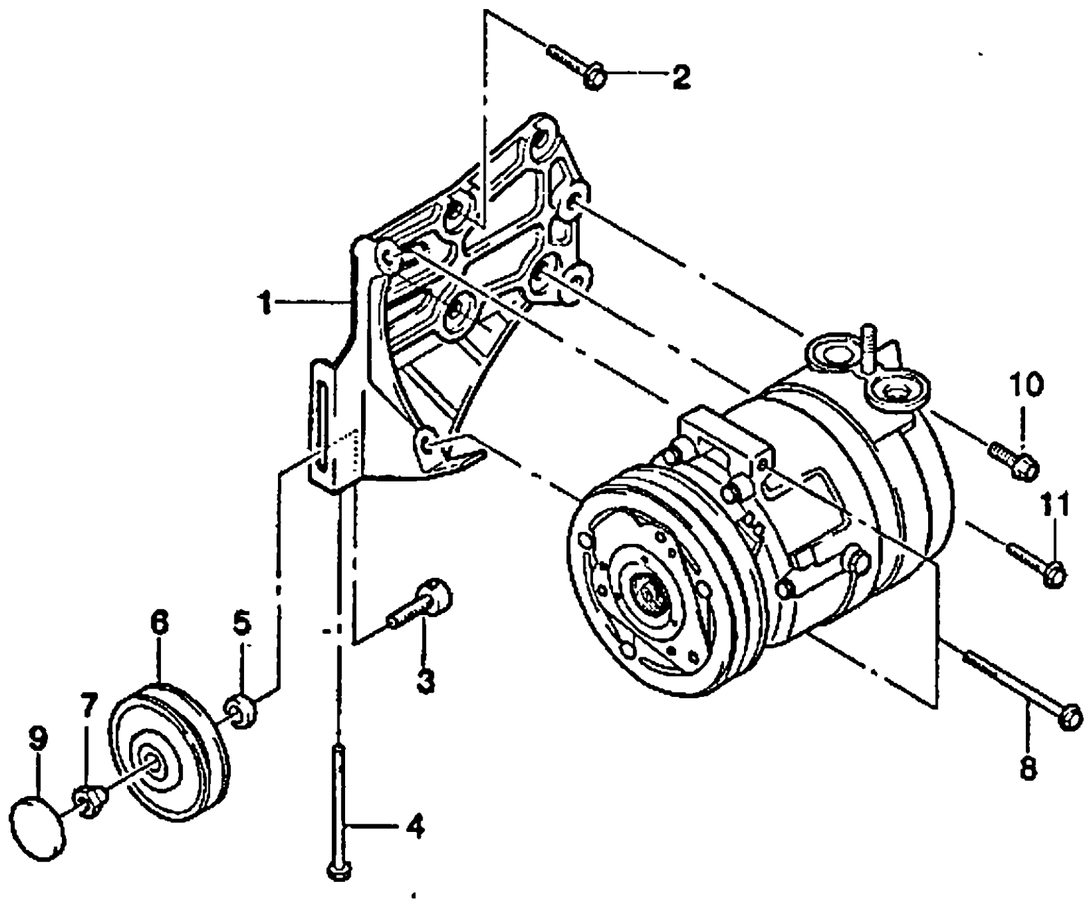

KEY NO.		PART NAME															
ITC	PART NO	MODEL								OPTION	L/R	QTY	EFFECTIVE DATE		REMARKS	P/CODE
		ENG	T/A	BODY			LEVEL						FROM	TO		
				4N	3H	5H	S	SE	SX							
	01517-08853	.	.	B	B	B	O	O	O	&C60		2				
[09]		(E)COVER-DUST (D)STAUBDECKEL										(F)COUVERTURE-POUSSIERE (S)CUBIERTA-POLVO				
	96187507	.	.	B	B	B	O	O	O	&C60		1				
[10]		(E)BOLT-HEXAGON FLANGE (D)SCHRAUBE										(F)BOULON (S)PERNO				
	09103-08032	.	.	B	B	B	O	O	O	&C60		2				
[11]		(E)BOLT-HEXAGON FLANGE (D)SCHRAUBE										(F)BOULON (S)PERNO				
	09103-10061	.	.	B	B	B	O	O	O	&C60		1				

ENG(ENGINE)	T/A(TRANSAXLE)	BODY TYPE
Y = 1.5SOHC 6 = 1.6DOHC . = COMMON	M = MANUAL T/A A = AUTOMATIC T/A . = COMMON	4 N = 4 DOOR NOTCHBACK 3 H = 3 DOOR HATCHBACK 5 H = 5 DOOR HATCHBACK

8350 AIR CONDITIONER CONTROL SWITCH

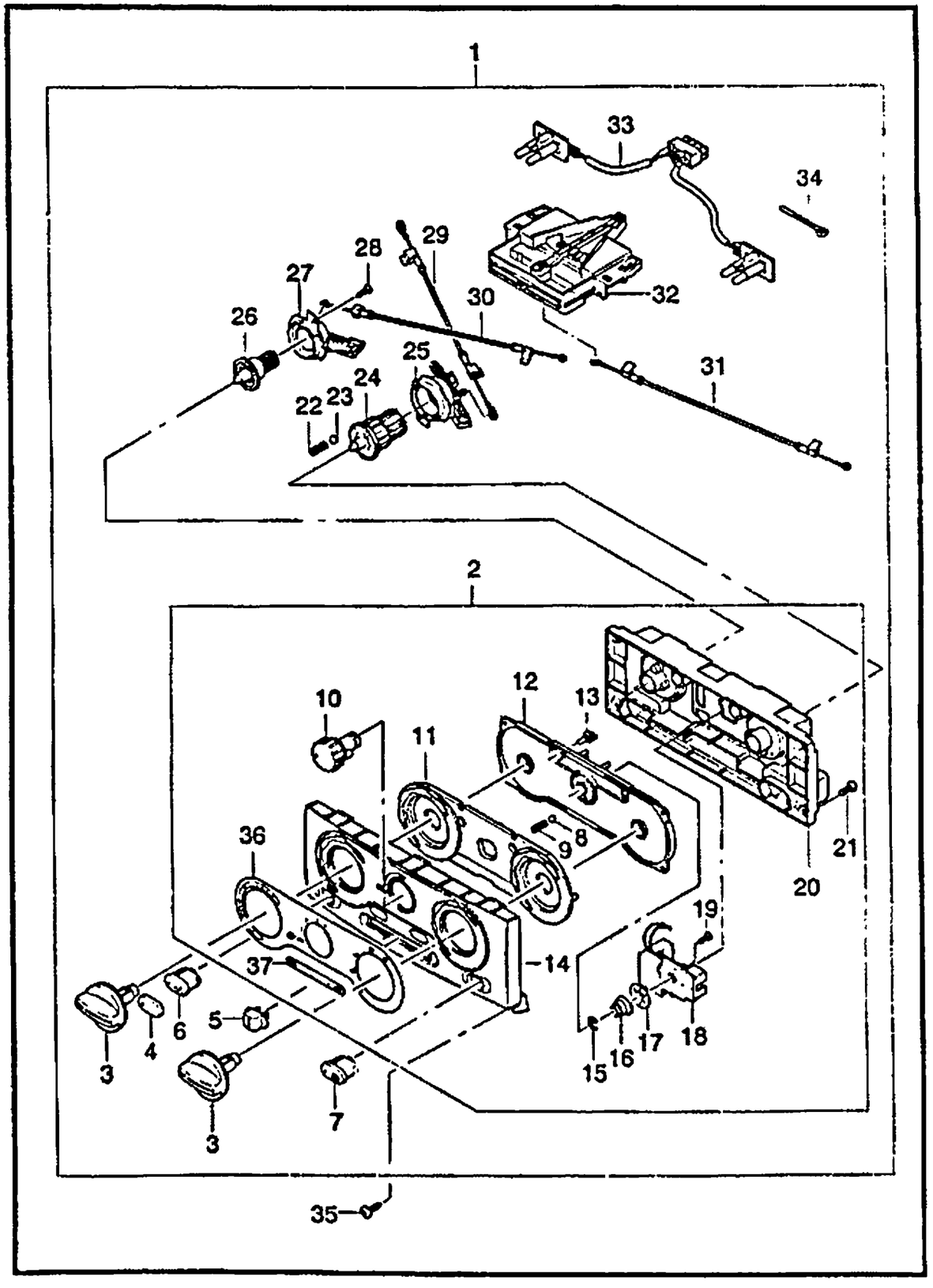

KEY NO. ITC	PART NO	MODEL ENG	T/A	BODY 4N	3H	5H	LEVEL S	SE	SX	OPTION	L/R	QTY	EFFECTIVE DATE FROM	TO	REMARKS	P/CODE
[01]		(E)SWITCH A-HEATER CONTROL (D)SCHALTER									(F)COMMUTATEUR (S)INTERRUPTOR					
	96242969	.	.	B	B	B	S	S	S	&C46		1				NJ
	96242970	.	.	B	B	B	O	O	O	&C59/C60		1				NK
[02]		(E)PANEL A -FRONT (D)VERKLEIDUNG,VORNE									(F)PANNEAU-AVANT (S)PANEL-FRENTE					
	759189	.	.	B	B	B	S	S	S			1				
[03]		(E)KNOB-TEMP.CONTROL (D)KNOPF									(F)BOUTON (S)PERILLA					
	759237	.	.	B	B	B	S	S	S			2				
[04]		(E)COVER-BLANK (D)DECKEL									(F)COUVERCLE (S)CUBIERTA					
	159264	.	.	B	B	B	S	S	S	&C46		1				
[05]		(E)KNOB-RECIRCULATION (D)KNOPF									(F)BOUTON (S)PERILLA					
	759203	.	.	B	B	B	S	S	S			1				
[06]		(E)BUTTON A (D)KNOPF									(F)BOUTON (S)BOTON					
	759198	.	.	B	B	B	O	O	O	&C59/C60		1				
[07]		(E)BUTTON-DEFROSTER (D)KNOPF									(F)BOUTON (S)BOTON					
	759199	.	.	B	B	B	S	S	S			1				
[08]		(E)BALL-DETENT (D)KUGEL									(F)BOULE (S)BOLA					
	159102	.	.	B	B	B	S	S	S			1				
[09]		(E)SPRING-BALL (D)FEDERUNG									(F)RESSORT (S)RESORTE					
	159245	.	.	B	B	B	S	S	S			1				

ENG(ENGINE)	T/A(TRANSAXLE)	BODY TYPE
Y = 1.5SOHC 6 = 1.6DOHC . = COMMON	M = MANUAL T/A A = AUTOMATIC T/A . = COMMON	4 N = 4 DOOR NOTCHBACK 3 H = 3 DOOR HATCHBACK 5 H = 5 DOOR HATCHBACK

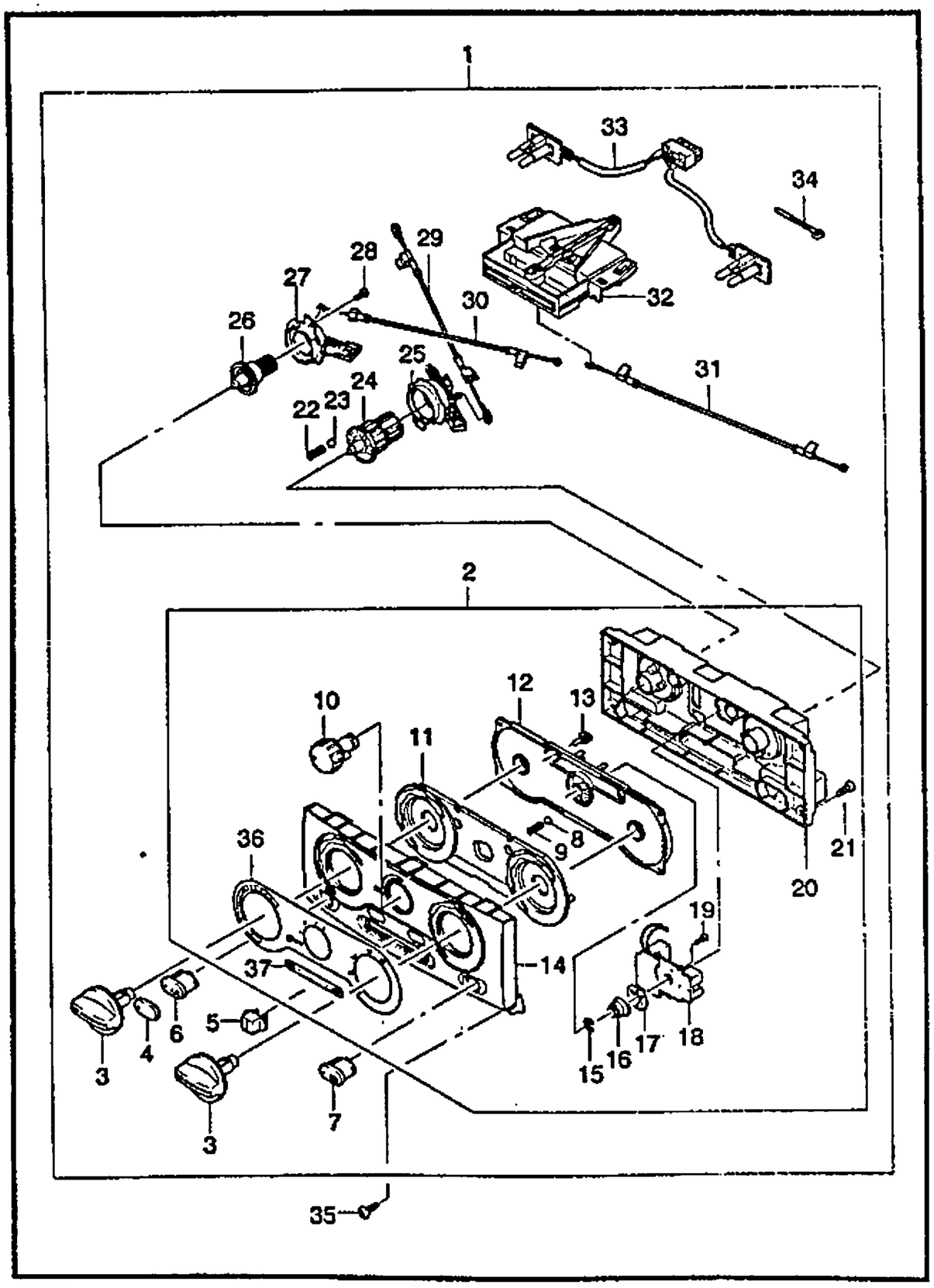

KEY NO. ITC	PART NO	MODEL ENG	MODEL T/A	MODEL BODY 4N	MODEL BODY 3H	MODEL BODY 5H	MODEL LEVEL S	MODEL LEVEL SE	MODEL LEVEL SX	OPTION	L/R	QTY	EFFECTIVE DATE FROM	EFFECTIVE DATE TO	REMARKS	P/CODE
[10]	759192	.	.	B	B	B	S	S	S			1			(E)KNOB-BLOWER CONTROL (D)KNOPF (F)BOUTON (S)PERILLA	
[11]	159241	.	.	B	B	B	S	S	S			1			(E)GUIDE-LIGHT (D)FÜHRING (F)GUIDE (S)GUIA	
[12]	759190	.	.	B	B	B	S	S	S			1			(E)BODY A-MAIN (D)KAROSSERIE (F)CORPS (S)CARROCERIA	
[13]	759191	.	.	B	B	B	S	S	S			2			(E)BULB A (D)BIRNE (F)AMPOULE (S)BOMBILLA	
[14]	159239	.	.	B	B	B	S	S	S			1			(E)COVER-FRONT (D)DECKEL (F)CARTER (S)CUBIERTA	
[15]	159114	.	.	B	B	B	S	S	S			1			(E)E-WASHER (D)DICHTUNGSRING (F)RONDELLE (S)ARANDELA	
[16]	159105	.	.	B	B	B	S	S	S			1			(E)SPRING-CONICAL (D)FEDERUNG (F)RESSORT (S)RESORTE	
[17]	159106	.	.	B	B	B	S	S	S			1			(E)CONTACTOR-MOVING (D)KONTAKTSTÜCK (F)CONTACTEUR (S)CONTACTO	
[18]	759194	.	.	B	B	B	S	S	S			1			(E)BOARD A-CIRCUIT (D)PALTINE (F)PLATINE (S)TABLA DE CIRCUITO	
[19]															(E)SCREW (D)SCHRAUBE (F)VIS (S)TORNILLO	

ENG(ENGINE)	T/A(TRANSAXLE)	BODY TYPE
Y = 1.5SOHC	M = MANUAL T/A	4 N = 4 DOOR NOTCHBACK
6 = 1.6DOHC	A = AUTOMATIC T/A	3 H = 3 DOOR HATCHBACK
. = COMMON	. = COMMON	5 H = 5 DOOR HATCHBACK

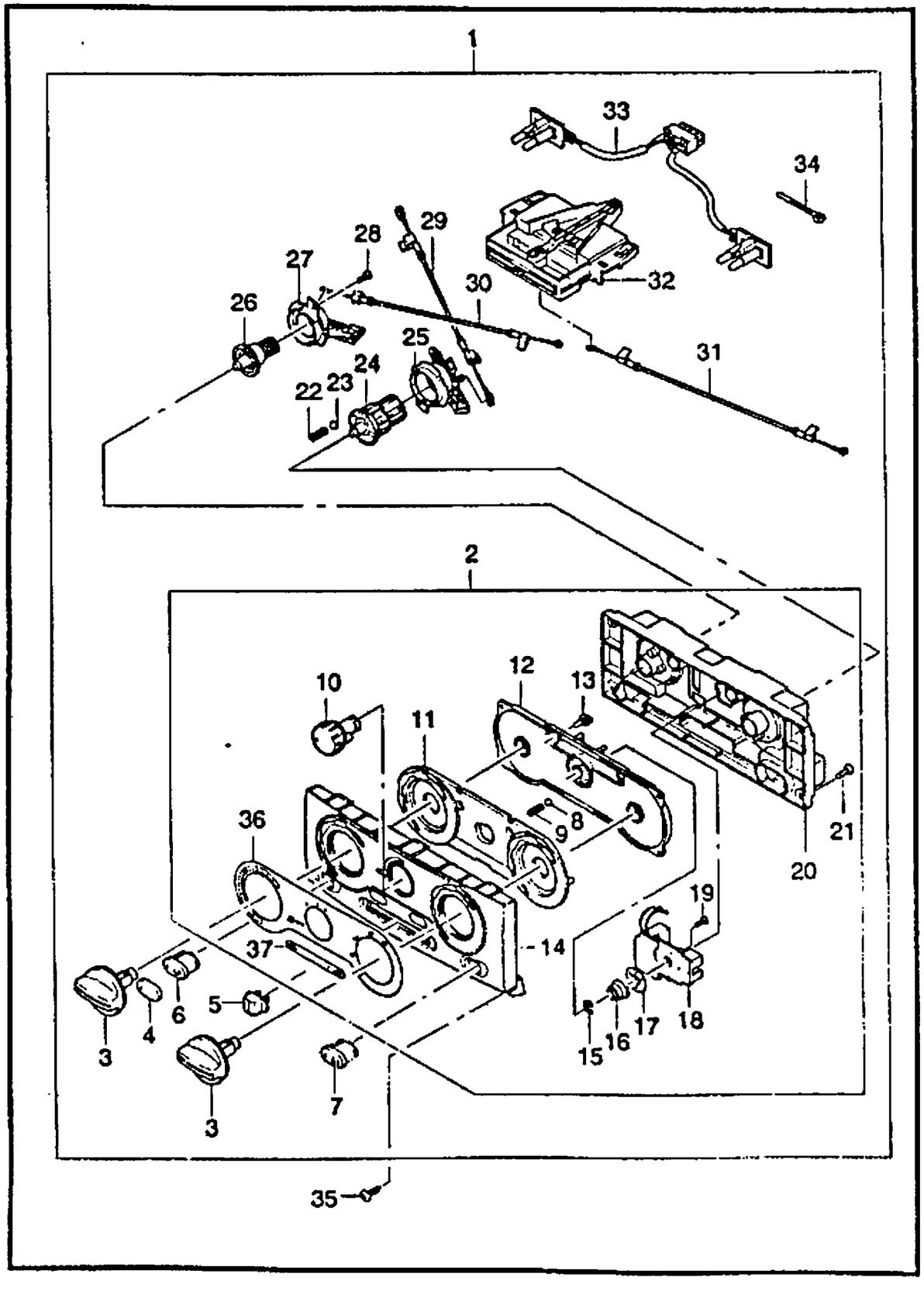

KEY NO. ITC	PART NO	MODEL ENG	T/A	BODY 4N	3H	5H	LEVEL S	SE	SX	PART NAME / OPTION	L/R	QTY	EFFECTIVE DATE FROM	TO	REMARKS	P/CODE
	155447	.	.	B	B	B	S	S	S			1				
[20]		(E)COVER-REAR (D)DECKEL									(F)CARTER (S)CUBIERTA					
	159233	.	.	B	B	B	S	S	S			1				
[21]		(E)SCREW-MOUNT'G (D)SCHRAUBE									(F)VIS (S)TORNILLO					
	159230	.	.	B	B	B	S	S	S			4				
[22]		(E)SPRING-BALL (D)FEDERUNG									(F)RESSORT (S)RESORTE					
	159245	.	.	B	B	B	S	S	S			2				
[23]		(E)BALL-DETENT (D)KUGEL									(F)BOULE (S)BOLA					
	159102	.	.	B	B	B	S	S	S			2				
[24]		(E)MODE-PINION (D)MODE,RITZEL									(F)PIGNON MODE (S)PINON					
	159246	.	.	B	B	B	S	S	S			1				
[25]		(E)RACK A- MODE (D)GESTELL									(F)CONTROLE MODE (S)REJILLA					
	759195	.	.	B	B	B	S	S	S			1				
[26]		(E)PINION-TEMPERATURE (D)RITZEL									(F)PIGNON (S)PIÑON					
	159103	.	.	B	B	B	S	S	S			1				
[27]		(E)RACK A -TEMPERATURE (D)GESTELL									(F)CONTROLE TEMPERATURE (S)REJILLA TEMPERATURA					
	759238	.	.	B	B	B	S	S	S			1				
[28]		(E)SCREW (D)SCHRAUBE									(F)VIS (S)TORNILLO					
	155424	.	.	B	B	B	S	S	S			4				

ENG(ENGINE)	T/A(TRANSAXLE)	BODY TYPE
Y = 1.5SOHC 6 = 1.6DOHC . = COMMON	M = MANUAL T/A A = AUTOMATIC T/A . = COMMON	4 N = 4 DOOR NOTCHBACK 3 H = 3 DOOR HATCHBACK 5 H = 5 DOOR HATCHBACK

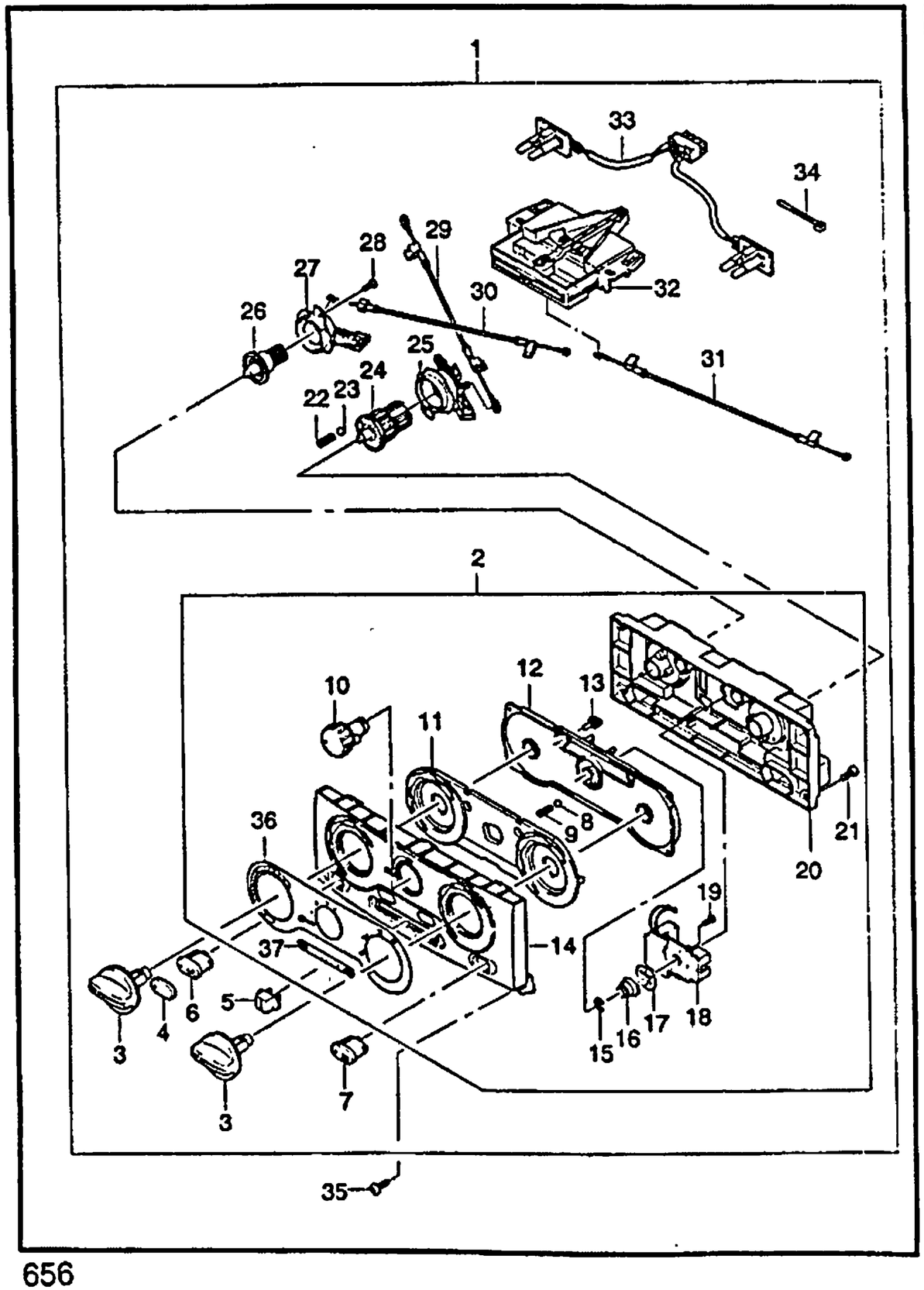

KEY NO. ITC	PART NO	MODEL ENG	MODEL T/A	MODEL BODY 4N	MODEL BODY 3H	MODEL BODY 5H	MODEL LEVEL S	MODEL LEVEL SE	MODEL LEVEL SX	OPTION	L/R	QTY	EFFECTIVE DATE FROM	EFFECTIVE DATE TO	REMARKS	P/CODE
[29]		(E)CABLE A-MODE (D)KABEL									(F)CABLE (S)CABLE					
	759205	.	.	B	B	B	S	S	S			1				
[30]		(E)CABLE A-TEMPERATURE (D)KABEL									(F)CABLE (S)CABLE					
	759204	.	.	B	B	B	S	S	S			1				
[31]		(E)CABLE A-RECIRCULATION (D)KABEL									(F)CABLE (S)CABLE					
	759206	.	.	B	B	B	S	S	S			1				
[32]		(E)SWITCH A-RECIRCULATION (D)SCHALTER									(F)COMMUTATEUR (S)INTERRUPTOR					
	759202	.	.	B	B	B	S	S	S			1				
[33]		(E)SWITCH A-PUSH (D)SCHALTER									(F)COMMUTATEUR (S)INTERRUPTOR					
	759264	.	.	B	B	B	S	S	S	&C46		1				
	759196A	.	.	B	B	B	O	O	O	&C59/C60		1				
[34]		(E)GRIP-WIRE (D)GRIFF									(F)POIGNEE (S)ASIDERO					
	159261	.	.	B	B	B	S	S	S			1				
[35]		(E)SCREW-TAPPING (D)SCHRAUBE									(F)VIS (S)TORNILLO					
	03110-48165	.	.	B	B	B	S	S	S			2				
[36]		(E)PLATE-SYMBOL (D)PLATTE									(F)PLAQUE (S)PLACA					
	159238	.	.	B	B	B	S	S	S			1				
[37]		(E)PLATE-RECIRCULAT. SYMBOL (D)PLATTE									(F)PLAQUE (S)PLACA					
	159240	.	.	B	B	B	S	S	S			1				

ENG(ENGINE)	T/A(TRANSAXLE)	BODY TYPE
Y = 1.5SOHC 6 = 1.6DOHC . = COMMON	M = MANUAL T/A A = AUTOMATIC T/A . = COMMON	4 N = 4 DOOR NOTCHBACK 3 H = 3 DOOR HATCHBACK 5 H = 5 DOOR HATCHBACK

9 O.V.M & ACCESSORY

9110 TOOL
9120 OIL & PAINT
9210 REAR SPOILER
9250 SUN ROOF
9260 SUN ROOF MOUNT

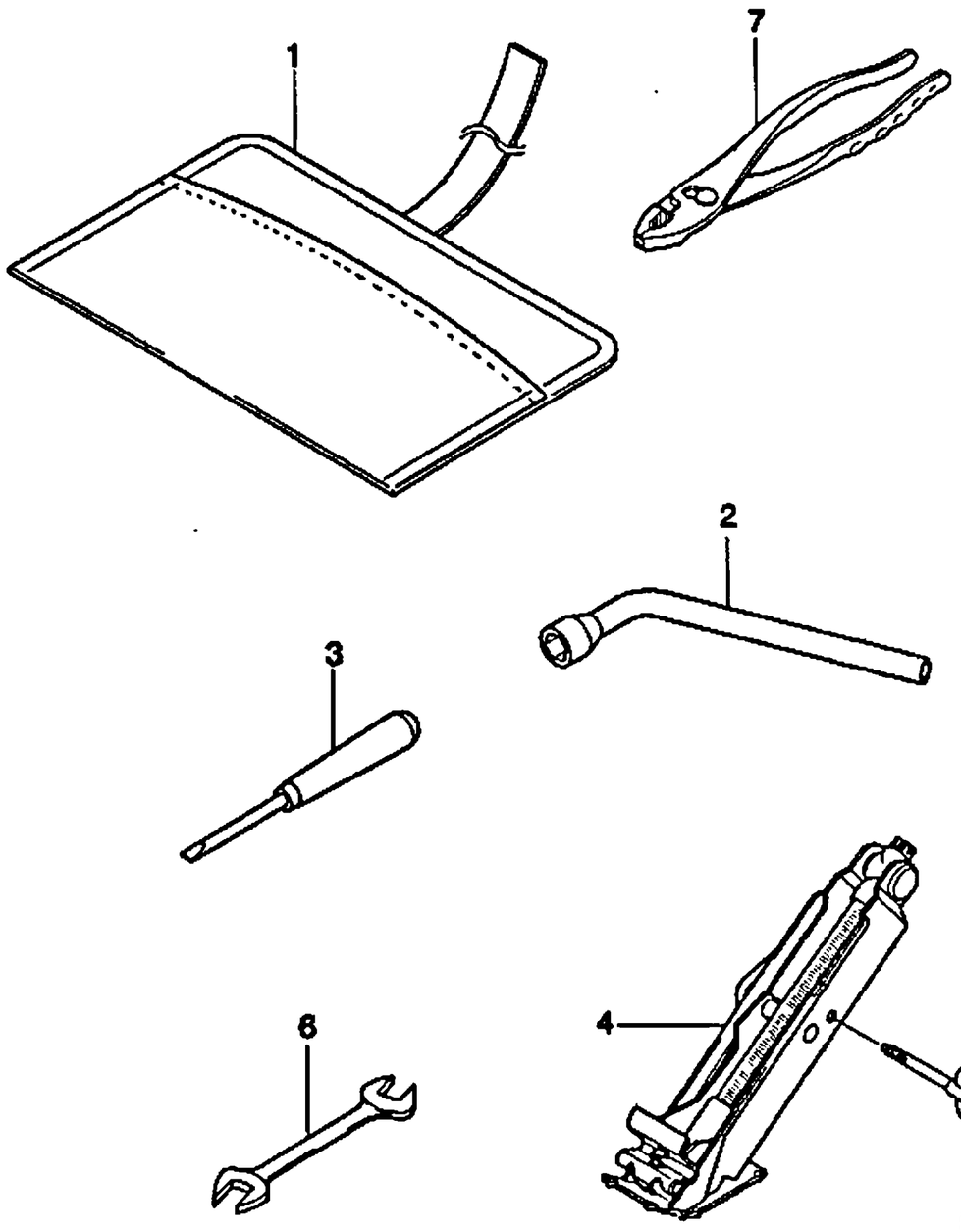

KEY NO. ITC	PART NO	MODEL ENG	T/A	BODY 4N	3H	5H	LEVEL S	SE	SX	OPTION	L/R	QTY	EFFECTIVE DATE FROM	TO	REMARKS	P/CODE	PART NAME
[01]	09811-00001	.	.	B	B	B	S	S	S			1					(E)BAG-TOOL (D)WERKZEUGKASTEN (F)TROUSSE A OUTILS (S)CAJA-DEPOSITO
[02]	09816-19002	.	.	B	B	B	S	S	S			1					(E)WRENCH-WHEEL NUT (D)SCHRAUBENSCHLÜßEL,RAD (F)CLE-ECROU DE ROUE (S)LLAVE-TUERCA DE LLANTA
[03]	09814-12001	.	.	B	B	B	S	S	S			1					(E)DRIVER-SCREW (D)SCHRAUBENZIEHER (F)CONDUCTEUR (S)IMPULSADOR-TORNILLO
[04]	90278524	.	.	B	B	B	S	S	S			1					(E)JACK A (D)STECKER (F)CRIC (S)GATO
[05]	96219681	.	.	B	B	B	S	S	S			1					(E)BOLT A-JACK WING (D)SCHRAUBE (F)BOULON (S)PERNO
[06]	09813-08001	.	.	B	B	B	S	S	S	-		1					(E)SPANNER (D)SCHRAUBENSCHLÜßEL (F)CLEF (S)LLAVE FIJA
[07]	09812-42001	.	.	B	B	B	S	S	S			1	970328				(E)PLIER (D)ZANGE (F)PINCE (S)ALICATE

ENG(ENGINE)	T/A(TRANSAXLE)	BODY TYPE
Y = 1.5SOHC 6 = 1.6DOHC . = COMMON	M = MANUAL T/A A = AUTOMATIC T/A . = COMMON	4 N = 4 DOOR NOTCHBACK 3 H = 3 DOOR HATCHBACK 5 H = 5 DOOR HATCHBACK

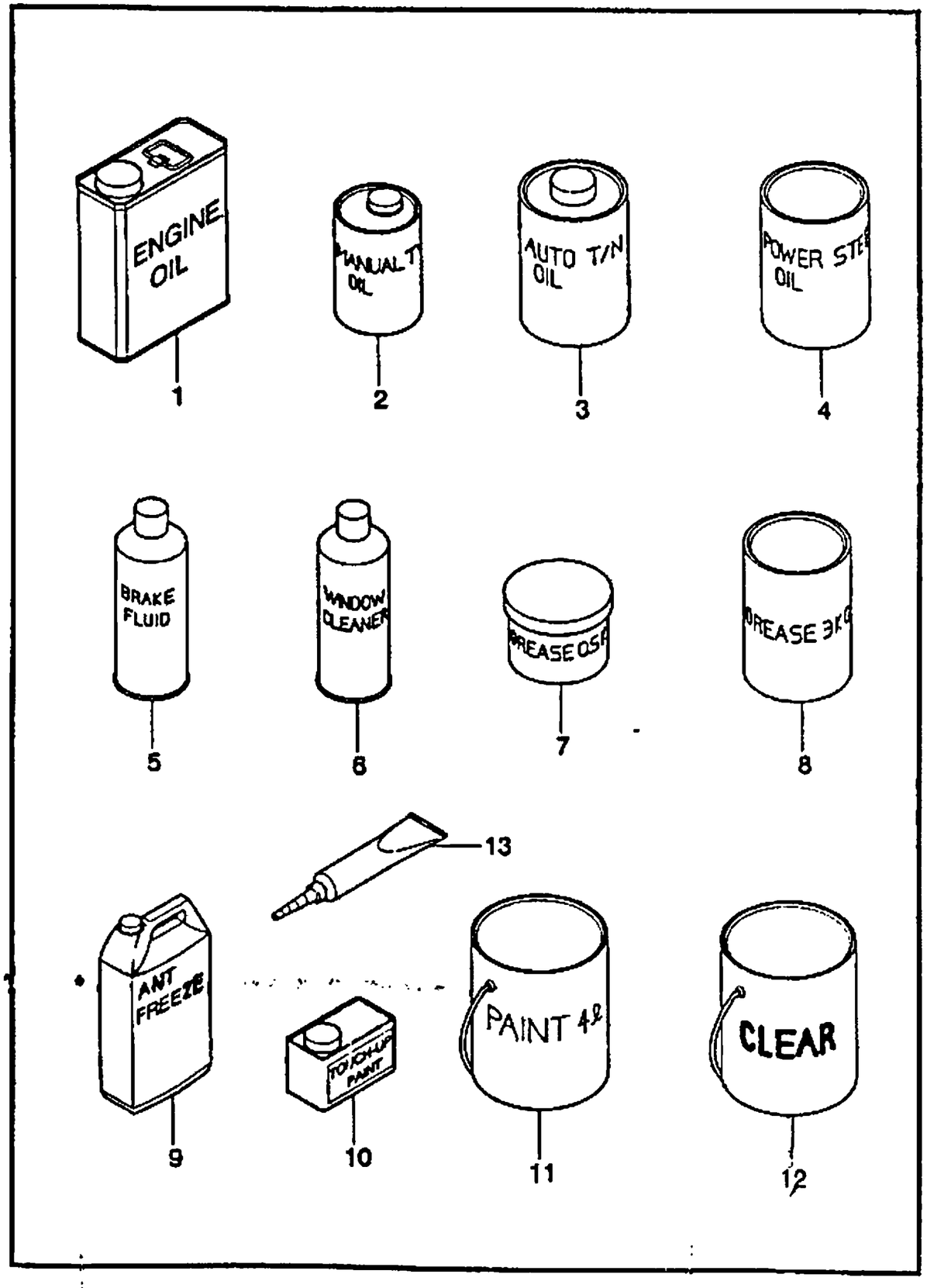

KEY NO.		PART NAME															
ITC	PART NO	MODEL								OPTION	L/R	QTY	EFFECTIVE DATE		REMARKS	P/CODE
		ENG	T/A	BODY			LEVEL						FROM	TO		
				4N	3H	5H	S	SE	SX							
[01]		(E)OIL-ENGINE (D)ÖL,MOTOR									(F)HUILE-MOTEUR (S)ACEITE-MOTOR					
	M-8045-1L	Y	.	B	B	B	S	S	S	-XCA		1			1L,10W30,SJ	
	M-8045-4L	Y	.	B	B	B	S	S	S	-XCA		1			4L,10W30,SJ	
	M-8044-1L	Y	.	B	B	B	A	A	A	&XCA		1			1L,5W30,SJ	
	M-8044-4L	Y	.	B	B	B	A	A	A	&XCA		1			4L,5W30,SJ	
	M-8044-1L	6	.	B	B	B	.	.	O	-XHA		1			1L,5W30,SJ	
	M-8044-4L	6	.	B	B	B	.	.	O	-XHA		1			4L,5W30,SJ	
	M-8045-1L	6	.	B	B	B	.	.	A	&XHA		1			1L,10W30,SJ	
	M-8045-4L	6	.	B	B	B	.	.	A	&XHA		1			4L,10W30,SJ	
	M-8045-1L	6	.	B	B	B	.	.	A	&KL9		1			1L,10W30,SJ	
	M-8045-4L	6	.	B	B	B	.	.	A	&KL9		1			4L,10W30,SJ	
[02]		(E)OIL-MANUAL TRANSAXLE (D)ÖL,MANUELLE GANGSCHALTUNG									(F)HUILE-TRANS MANUELLE (S)ACEITE-EJE TRANSVERSAL					
	M-8027-1L	.	.	B	B	B	S	S	S			1			1L	
[03]		(E)OIL-AUTOMATIC TRANSAXLE (D)ÖL,GANGSCHALTUNG									(F)HUILE-TRANS AUTOMATIQUE (S)ACEITE-EJE TRANSVERSAL					
	M-8039-1L	.	.	B	B	B	S	S	S			1			1L	
	M-8039-4L	.	.	B	B	B	S	S	S			1			4L	
[04]		(E)OIL-POWER STEERING (D)ÖL,KRAFTLENKUNG									(F)HUILE-DIRECTION ASSISTEE (S)ACEITE-SERVODIRECCION					
	M-8036-1L	.	.	B	B	B	S	S	S			1			1L	
[05]		(E)FLUID-BRAKE (D)FLÜSSIGKEIT,BREMSE									(F)LIQUIDE-FREIN (S)FLUIDO-FRENOS					
	05KGM4653M	.	.	B	B	B	S	S	S			1			0.5L	
	1KGM4653M	.	.	B	B	B	S	S	S			1			1L	

ENG(ENGINE)	T/A(TRANSAXLE)	BODY TYPE
Y = 1.5SOHC 6 = 1.6DOHC . = COMMON	M = MANUAL T/A A = AUTOMATIC T/A . = COMMON	4 N = 4 DOOR NOTCHBACK 3 H = 3 DOOR HATCHBACK 5 H = 5 DOOR HATCHBACK

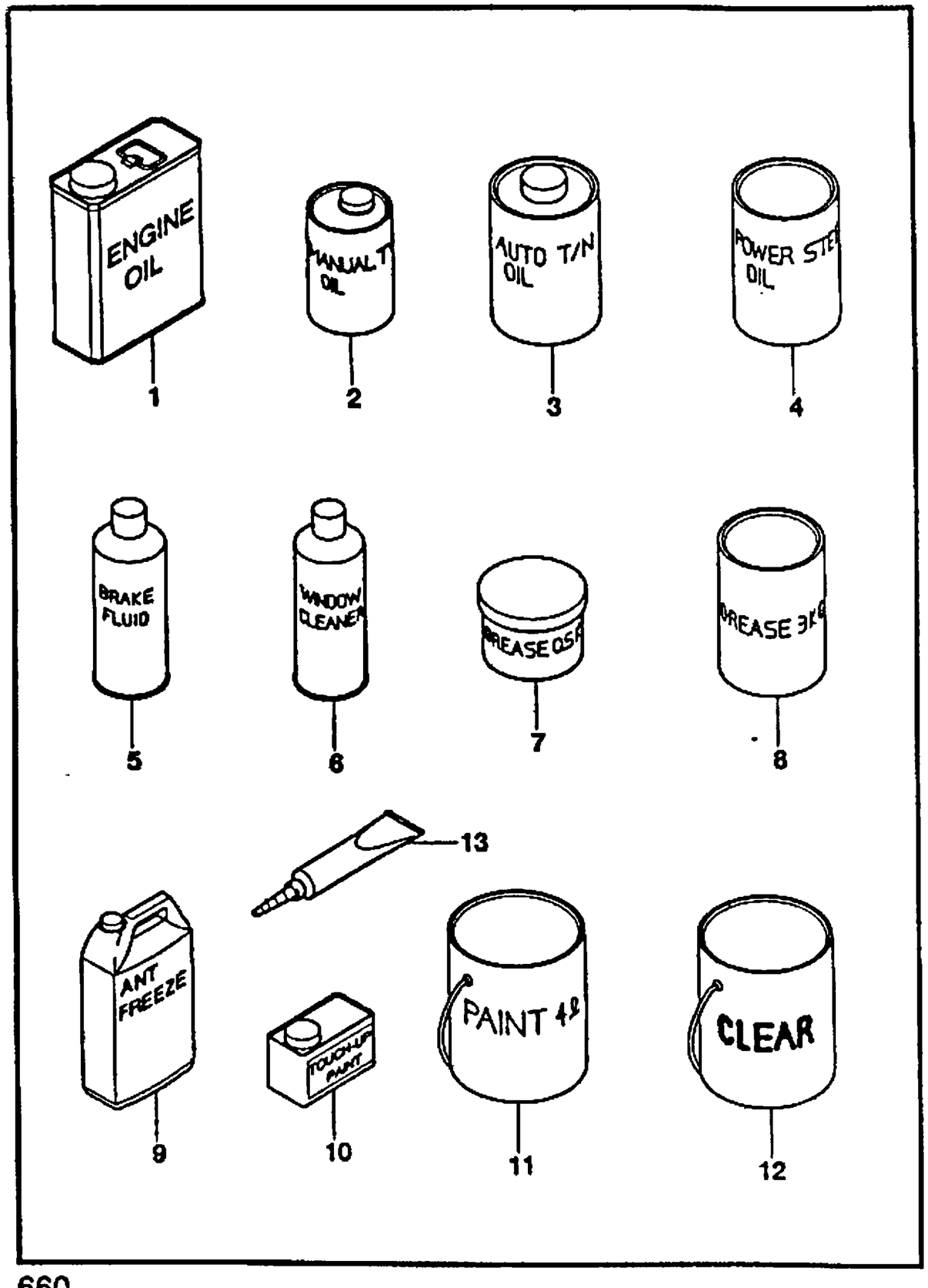

KEY NO.	PART NAME															
ITC	PART NO	MODEL								OPTION	L/R	QTY	EFFECTIVE DATE		REMARKS	P/CODE
		ENG	T/A	BODY			LEVEL						FROM	TO		
				4N	3H	5H	S	SE	SX							
[06]	(E)FLUID-WINDOW CLEANER (D)FLÜSSIGKEIT										(F)LIQUIDE-LAVE-GLACE (S)FLUIDO-LIMPIA PARABRISAS					
M-8206-1L	.	.	B	B	B	S	S	S	-XCA		1					
M-8209-1L	.	.	B	B	B	A	A	A	&XCA		1					
[07]	(E)GREASE (D)SCHMIERMITTEL										(F)GRAISSE (S)GRASA					
B0400625A	.	.	B	B	B	S	S	S			1				0.5 KG	
[08]	(E)GREASE (D)SCHMIERMITTEL										(F)GRAISSE (S)GRASA					
B0400625B	.	.	B	B	B	S	S	S			1				3 KG	
[09]	(E)ANTIFREEZE (D)GEFRIERSCHUTZMITTEL										(F)ANTIGEL (S)ANTICONGELANTE					
B0400240-4	.	.	B	B	B	S	S	S			1				4L	
[10]	(E)PAINT-TOUTCH UP (D)LACK,NACHLACKIEREN										(F)PEINTURE-RETOUCHES (S)PINTURA-RETOQUE					
A/L-11U-0.5L	.	.	B	B	B	S	S	S			1				0.5L	
A/L-21U-0.5L	.	.	B	B	B	O	O	O			1				0.5L	
A/L-27U-0.5L	.	.	B	B	B	O	O	O			1				0.5L	
A/L-42U-0.5L	.	.	B	B	B	O	O	O			1				0.5L	
A/L-43U-0.5L	.	.	B	B	B	O	O	O			1				0.5L	
A/L-73L-0.5L	.	.	B	B	B	O	O	O			1				0.5L	
A/L-74U-0.5L	.	.	B	B	B	O	O	O			1				0.5L	
A/L-81U-0.5L	.	.	B	B	B	O	O	O			1				0.5L	
A/L-83L-0.5L	.	.	B	B	B	O	O	O			1				0.5L	
A/L-92U-0.5L	.	.	B	B	B	O	O	O			1				0.5L	
[11]	(E)PAINT (D)LACK										(F)PEINTURE (S)PINTURA					

ENG(ENGINE)	T/A(TRANSAXLE)	BODY TYPE
Y = 1.5SOHC 6 = 1.6DOHC . = COMMON	M = MANUAL T/A A = AUTOMATIC T/A . = COMMON	4 N = 4 DOOR NOTCHBACK 3 H = 3 DOOR HATCHBACK 5 H = 5 DOOR HATCHBACK

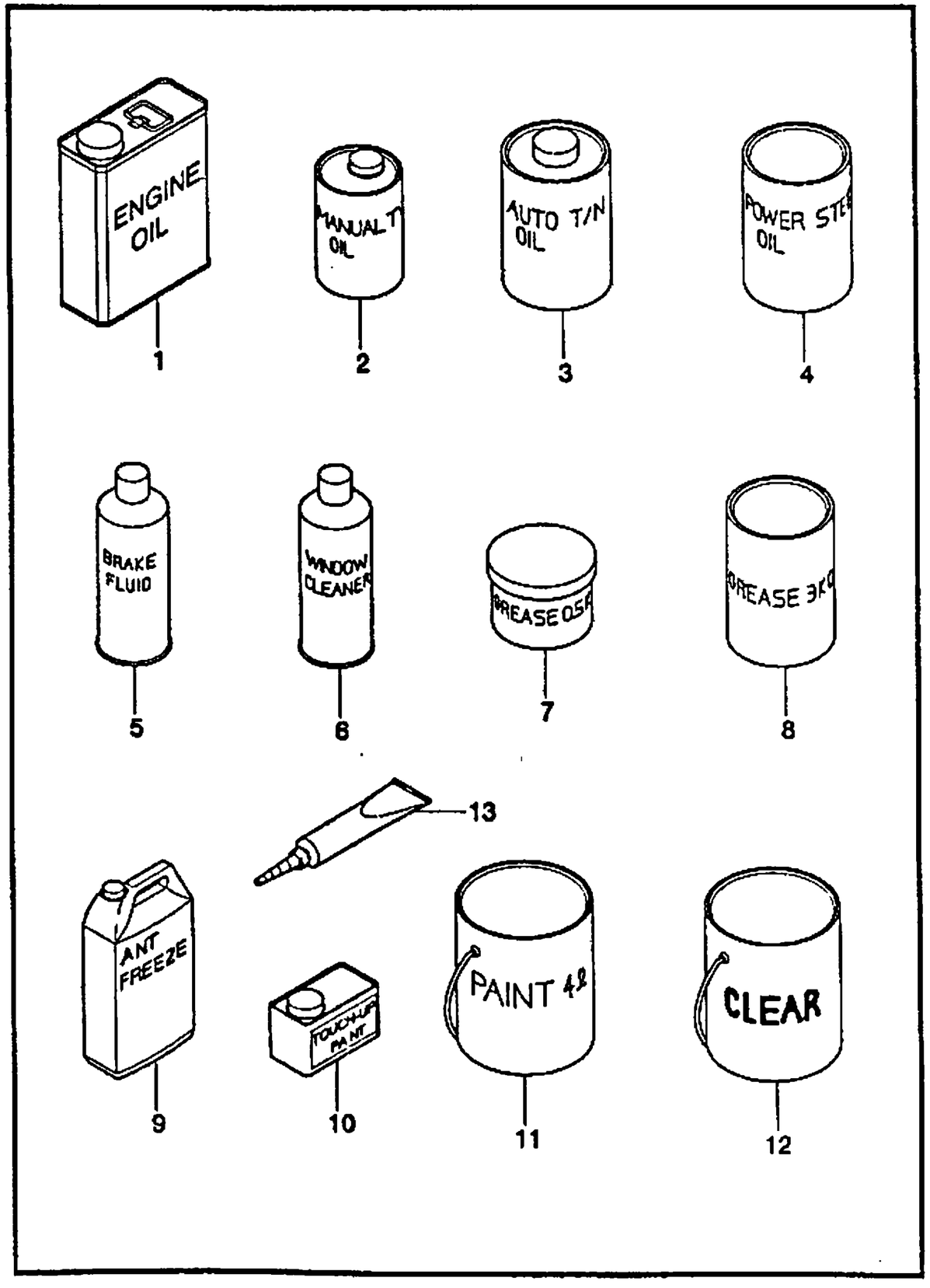

KEY NO.		PART NAME															
		MODEL											EFFECTIVE DATE				
				BODY			LEVEL										
ITC	PART NO	ENG	T/A	4N	3H	5H	S	SE	SX	OPTION	L/R	QTY	FROM	TO	REMARKS	P/CODE
	U/T-11U-4L	.	.	B	B	B	S	S	S			1			4L	
	B/C-21U-4L	.	.	B	B	B	O	O	O			1			4L	
	B/C-27U-4L	.	.	B	B	B	O	O	O			1			4L	
	B/C-42U-4L	.	.	B	B	B	O	O	O			1			4L	
	B/C-43U-4L	.	.	B	B	B	O	O	O			1			4L	
	U/T-73L-4L	.	.	B	B	B	O	O	O			1			4L	
	B/C-74U-4L	.	.	B	B	B	O	O	O			1			4L	
	B/C-81U-4L	.	.	B	B	B	O	O	O			1			4L	
	B/C-83L-4L	.	.	B	B	B	O	O	O			1			4L	
	B/C-92U-4L	.	.	B	B	B	O	O	O			1			4L	
	[12]	(E)CLEAR -VARNISH *(D)LACK*										*(F)PEINTURE* *(S)PINTURA*				
	U/T-CLR-4L	.	.	B	B	B	S	S	S			1			4L	
	[13]	(E)GASKET *(D)DICHTUNG*										*(F)JOINT* *(S)JUNTA*				
	S9120016	.	.	B	B	B	S	S	S			1			50ml	

ENG(ENGINE)	T/A(TRANSAXLE)	BODY TYPE
Y = 1.5SOHC 6 = 1.6DOHC . = COMMON	M = MANUAL T/A A = AUTOMATIC T/A . . = COMMON	4 N = 4 DOOR NOTCHBACK 3 H = 3 DOOR HATCHBACK 5 H = 5 DOOR HATCHBACK

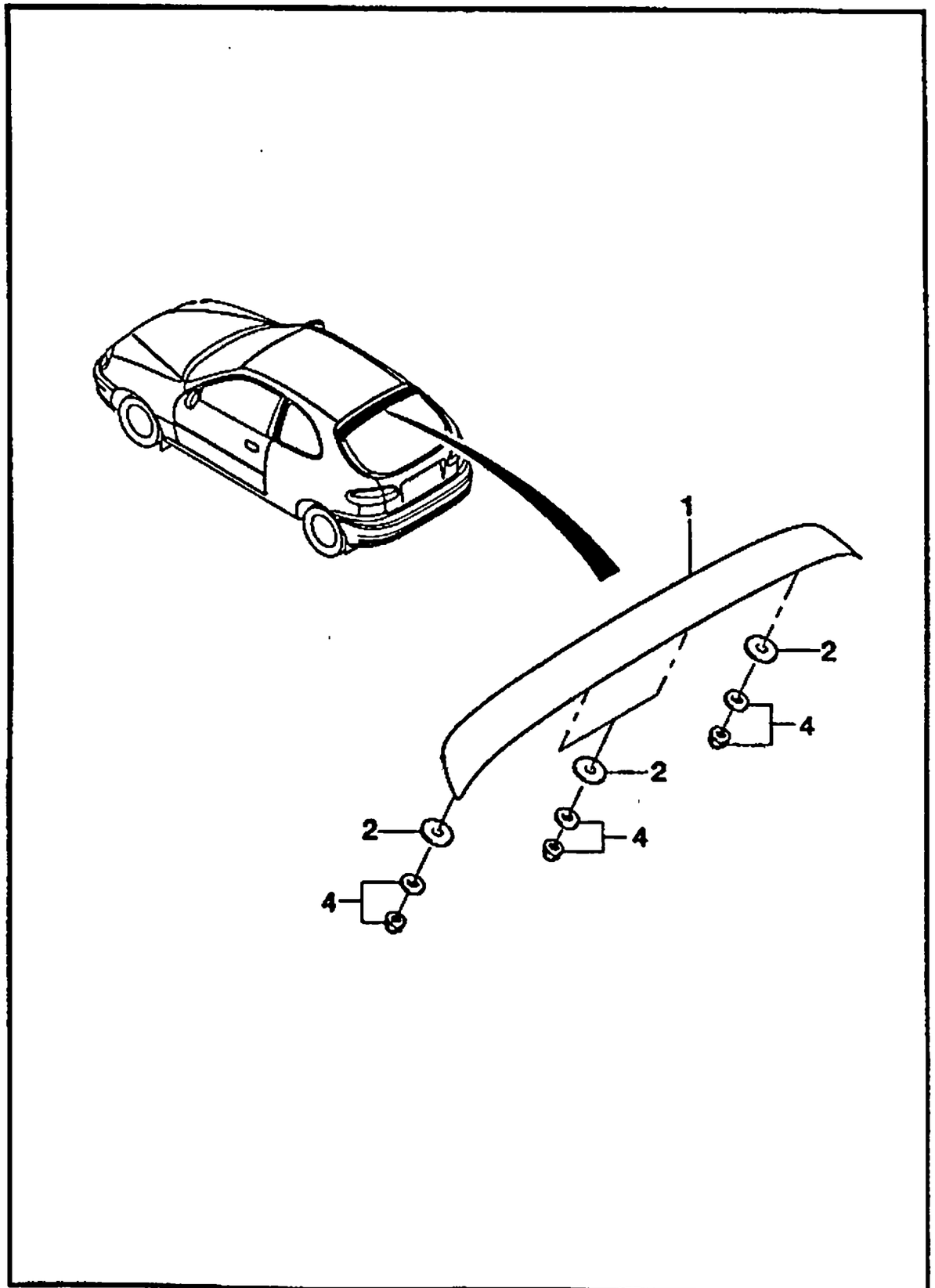

KEY NO.		PART NAME														
ITC	PART NO	MODEL								OPTION	L/R	QTY	EFFECTIVE DATE		REMARKS	PICODE
		ENG	T/A	BODY 4N	BODY 3H	BODY 5H	LEVEL S	LEVEL SE	LEVEL SX				FROM	TO		
[01]	96303489	(E)SPOILER A-REAR (D)SPOILER		.	.	.	B	B	O	. O	(F)SPOILER (S)SPOILER	1			INCL #2	
[02]	09308-05001	(E)GROMMET (D)ÖSE		.	.	.	B	B	O	. O	(F)VIROLE (S)AISLANTE	4				
[04]	09159-06101	(E)NUT (D)MUTTER		.	.	.	B	B	O	. O	(F)ECROU (S)TUERCA	4				

ENG(ENGINE)	T/A(TRANSAXLE)	BODY TYPE
Y = 1.5SOHC 6 = 1.6DOHC . = COMMON	M = MANUAL T/A A = AUTOMATIC T/A . = COMMON	4 N = 4 DOOR NOTCHBACK 3 H = 3 DOOR HATCHBACK 5 H = 5 DOOR HATCHBACK

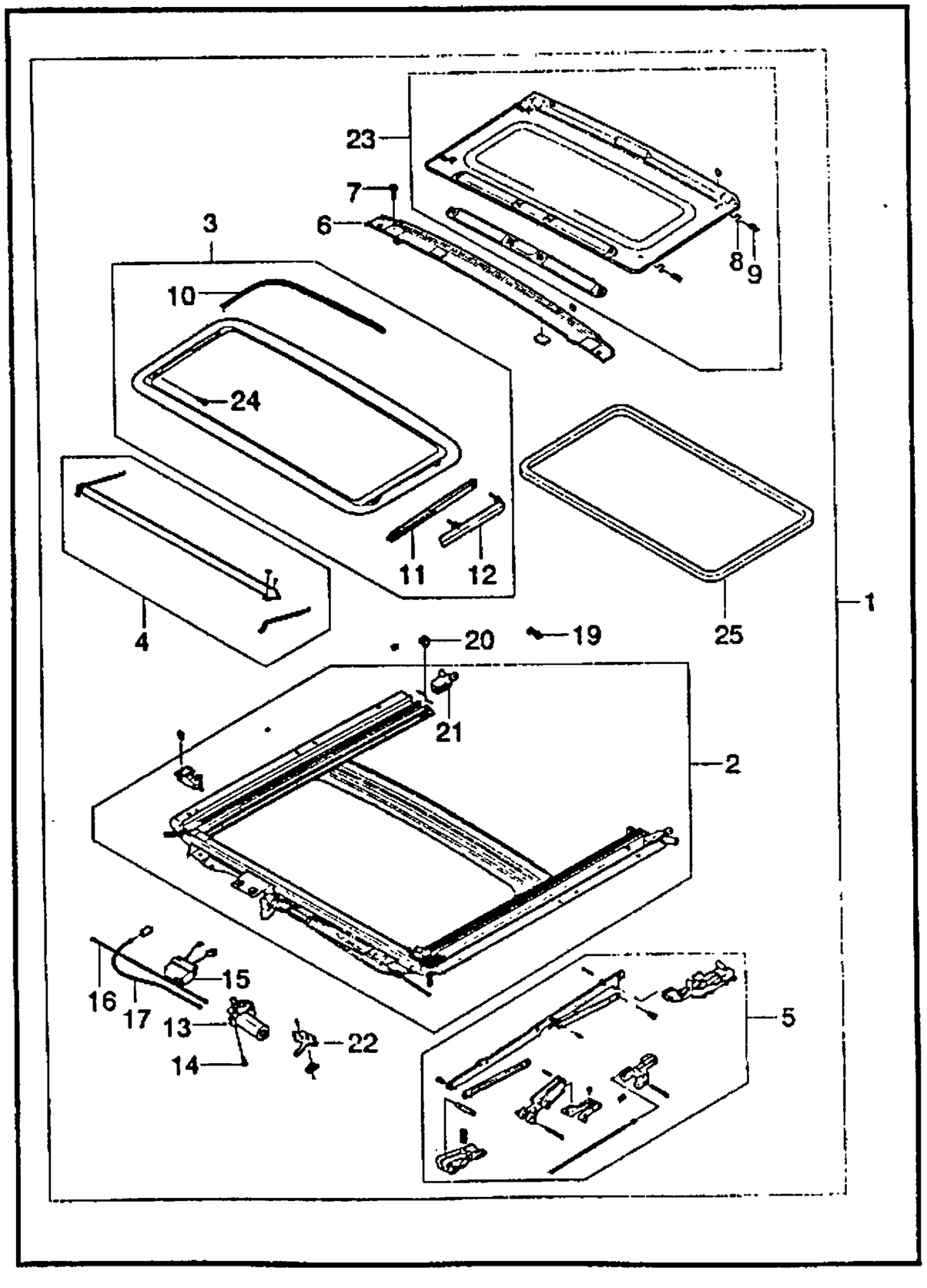

KEY NO. ITC	PART NO	PART NAME	MODEL ENG	T/A	BODY 4N	3H	5H	LEVEL S	SE	SX	OPTION	L/R	QTY	EFFECTIVE DATE FROM	TO	REMARKS	P/CODE
[01]	96240744	(E)ROOF A-SUN (D)DACH,SONNEN	.	.	B	B	B	O	O	O			1			(F)TOIT-OUVRANT (S)TECHO-SOLAR	
[02]	44044480	(E)FRAME A (D)RAHMEN	.	.	B	B	B	O	O	O			1			(F)CADRE (S)ARMADURA	
[03]	44044460	(E)PANEL A-GLASS (D)VERKLEIDUNG,GLAS	.	.	B	B	B	O	O	O			1			(F)PANNEAU-GLACE (S)PANEL-VIDRIO	
[04]	44044450	(E)DEFLECTOR-WIND (D)WINDSCHUTZ-FLÜGEL	.	.	B	B	B	O	O	O			1			(F)DEFLECTEUR-VENT (S)DEFLECTOR-VIENTO	
[05]	44044150	(E)MECHANISM (D)MECHANISMUS	.	.	B	B	B	O	O	O		LH	1			(F)MECANISME (S)MECANISMO	
	44044140		.	.	B	B	B	O	O	O		RH	1				
[06]	40109330	(E)CHANNEL-DRAIN (D)RILLE	.	.	B	B	B	O	O	O			1			(F)RAINURE (S)CANAL	
[07]	26158906	(E)SCREW (D)SCHRAUBE	.	.	B	B	B	O	O	O			2			(F)VIS (S)TORNILLO	
[08]	40329190	(E)SPRING-SLIDE BLOCK (D)FEDERUNG	.	.	B	B	B	O	O	O			4			(F)RESSORT (S)RESORTE	
[09]	42309630	(E)BLOCK-SLIDE (D)BLOCK	.	.	B	B	B	O	O	O			4			(F)BLOC (S)BLOQUE	

ENG(ENGINE)	T/A(TRANSAXLE)	BODY TYPE
Y = 1.5SOHC	M = MANUAL T/A	4 N = 4 DOOR NOTCHBACK
6 = 1.6DOHC	A = AUTOMATIC T/A	3 H = 3 DOOR HATCHBACK
. = COMMON	. = COMMON	5 H = 5 DOOR HATCHBACK

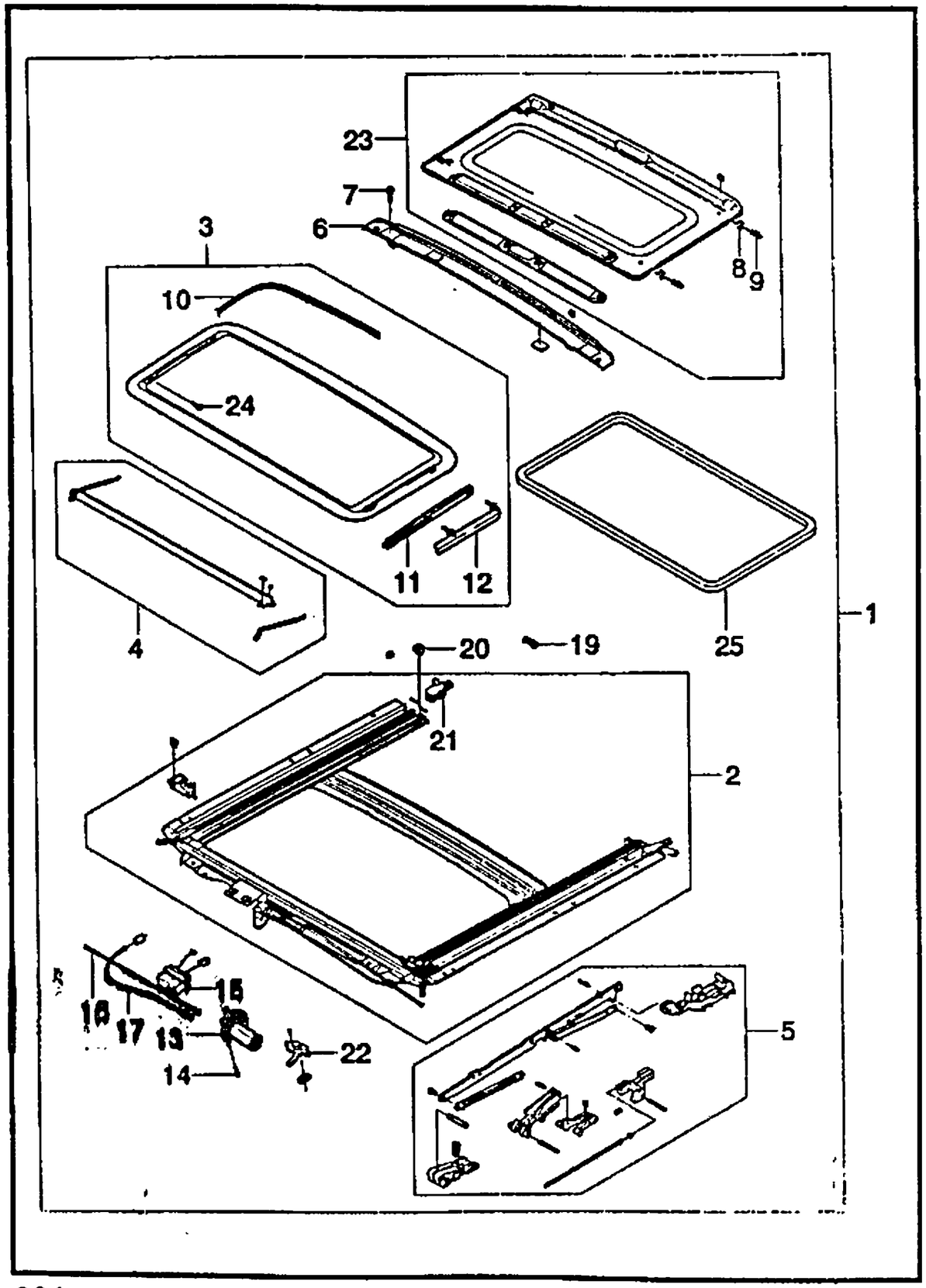

KEY NO. ITC	PART NO	MODEL ENG	T/A	BODY 4N	3H	5H	LEVEL S	SE	SX	OPTION	L/R	QTY	EFFECTIVE DATE FROM	TO	REMARKS	P/CODE
[10]		(E)SEAL-GLASS PANEL (D)DICHTUNG									(F)JOINT (S)SELLO					
	42309750	.	.	B	B	B	O	O	O			1				
[11]		(E)COVER-SIDE,INNER (D)DECKEL								1	(F)CARTER (S)CUBIERTA					
	42409250	.	.	B	B	B	O	O	O		LH	1				
	42409240	.	.	B	B	B	O	O	O		RH	1				
[12]		(E)COVER-SIDE,OUTER (D)DECKEL									(F)CARTER (S)CUBIERTA					
	42409230	.	.	B	B	B	O	O	O		LH	1				
	42409220	.	.	B	B	B	O	O	O		RH	1				
[13]		(E)MOTER & DRIVE GEAR A (D)MOTOR-SATZ									(F)ENSEMBLE MOTEUR (S)JUEGO DE MOTOR					
	44249122	.	.	B	B	B	O	O	O			1				
[14]		(E)SCREW (D)SCHRAUBE									(F)VIS (S)TORNILLO					
	22715316	.	.	B	B	B	O	O	O			3				
[15]		(E)BOX A-RELAY (D)RELAISKASTEN									(F)BOITE-RELAI (S)CAJA-RELEVADOR					
	44249340	.	.	B	B	B	O	O	O			1				
[16]		(E)TUBE-CABLE GUIDE (D)ROHRLEITUNG									(F)TUYAU OU TUBE (S)TUBO					
	42009662	.	.	B	B	B	O	O	O			2				
[17]		(E)TUBE-DRIVE (D)ROHRLEITUNG									(F)TUYAU OU TUBE (S)TUBO					
	40419390	.	.	B	B	B	O	O	O		LH	1				
	40419380	.	.	B	B	B	O	O	O		RH	1				

ENG(ENGINE)	T/A(TRANSAXLE)	BODY TYPE
Y = 1.5SOHC	M = MANUAL T/A	4 N = 4 DOOR NOTCHBACK
6 = 1.6DOHC	A = AUTOMATIC T/A	3 H = 3 DOOR HATCHBACK
. = COMMON	. = COMMON	5 H = 5 DOOR HATCHBACK

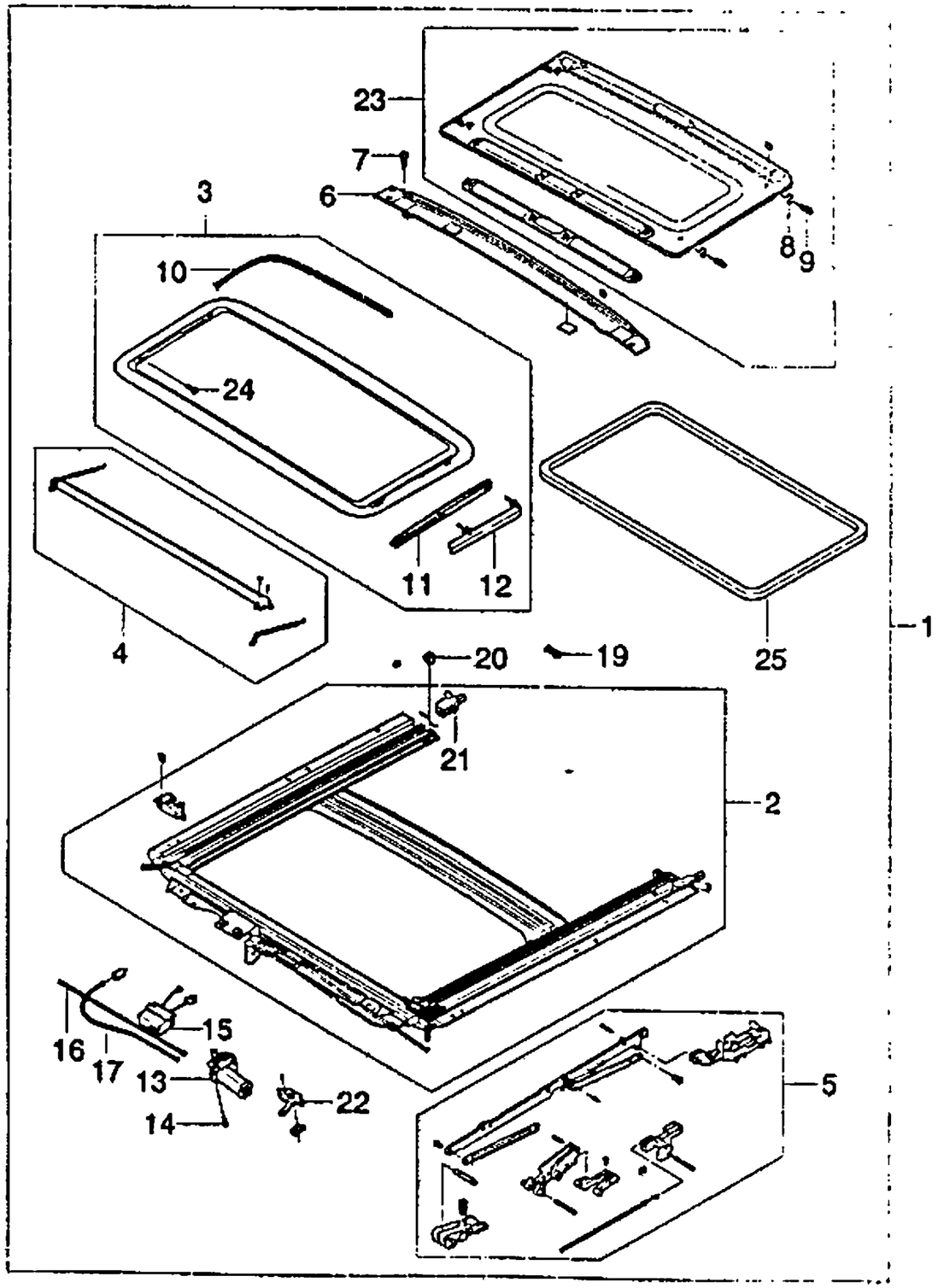

KEY NO. ITC	PART NO	MODEL ENG	T/A	BODY 4N	3H	5H	LEVEL S	SE	SX	OPTION	L/R	QTY	EFFECTIVE DATE FROM	TO	REMARKS	P/CODE
[19]		(E)PLUG-GUIDE,RR (D)STÖPSEL									(F)BOUCHON (S)TAPON					
	42109830	.	.	B	B	B	O	O	O		LH	1				
	42109840	.	.	B	B	B	O	O	O		RH	1				
[20]		(E)ARRETOIR OU BOUCHON (D)TAPON									(F)STÖPSEL (S)TAPON					
	42309710	.	.	B	B	B	O	O	O			2				
[21]		(E)DRAINAGE PIECE-RR (D)DRANÄGE HINTERE									(F)DRAINAGE-ARRIERE (S)DRENAJE-TRASERO					
	42409670	.	.	B	B	B	O	O	O		LH	1				
	42409680	.	.	B	B	B	O	O	O		RH	1				
[22]		(E)BRACKET (D)TRÄGER									(F)SUPPORT (S)SOPORTE					
	41109880	.	.	B	B	B	O	O	O			1				
[23]		(E)SUNSHADE A (D)SONNENBLENDE									(F)PARE-SOLEIL (S)PARASOL					
	44044470	.	.	B	B	B	O	O	O			1				
[24]		(E)BOLT (D)SCHRAUBE									(F)BOULON (S)PERNO					
	40429881	.	.	B	B	B	O	O	O			4				
[25]		(E)FINISHER-HEADLINER (D)FERTIGGESENK									(F)FINITION CARNITURE (S)COBERTOR					
	96245679	.	.	B	B	B	O	O	O			1				

ENG(ENGINE)	T/A(TRANSAXLE)	BODY TYPE
Y = 1.5SOHC 6 = 1.6DOHC . = COMMON	M = MANUAL T/A A = AUTOMATIC T/A . = COMMON	4 N = 4 DOOR NOTCHBACK 3 H = 3 DOOR HATCHBACK 5 H = 5 DOOR HATCHBACK

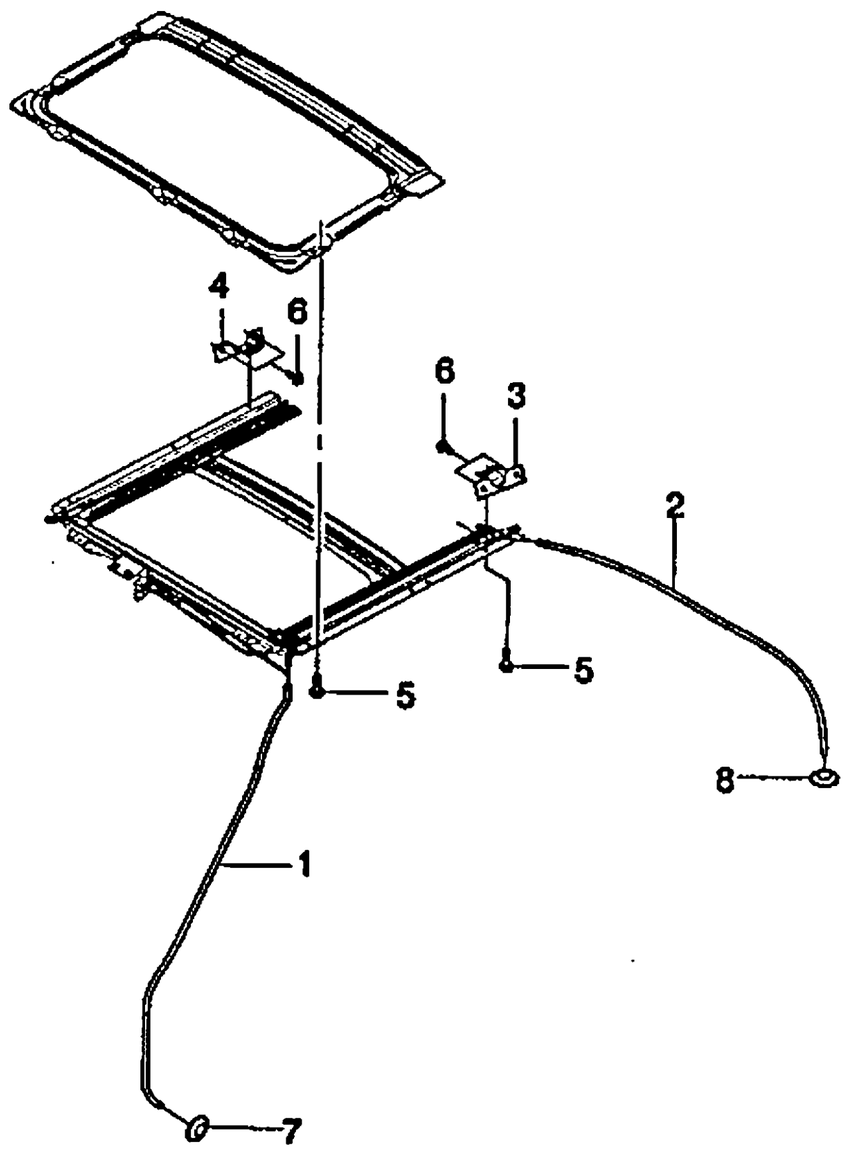

KEY NO. ITC	PART NO	MODEL ENG	T/A	BODY 4N	3H	5H	LEVEL S	SE	SX	OPTION	L/R	QTY	EFFECTIVE DATE FROM	TO	REMARKS	P/CODE
[01]		(E)TUBE-DRAIN (D)ROHRLEITUNG									(F)TUYAU OU TUBE (S)TUBO					
	96240751	.	.	B	B	B	O	O	O			2				
[02]		(E)TUBE-DRAIN (D)ROHRLEITUNG									(F)TUYAU OU TUBE (S)TUBO					
	96240752	.	.	B	.	.	O	O	O			2				
	96240753	.	.	.	B	B	O	.	O		LH	1				
	96252576	.	.	.	B	B	O	.	O		RH	1				
[03]		(E)BRACKET A-SUN ROOF (D)TRÄGER									(F)SUPPORT (S)SOPORTE					
	96240728	.	.	B	.	B	O	O	O		LH	1				
	96240732	.	.	.	B	.	O	.	O		LH	1				
[04]		(E)BRACKET A-SUN ROOF (D)TRÄGER									(F)SUPPORT (S)SOPORTE					
	96240729	.	.	B	.	B	O	O	O		RH	1				
	96240733	.	.	.	B	.	O	.	O		RH	1				
[05]		(E)BOLT (D)SCHRAUBE									(F)BOULON (S)PERNO					
	02717-06163	.	.	B	B	B	O	O	O			9		970403		
	Y 09118-06012	.	.	B	B	B	O	O	O			9	970403			
[06]		(E)BOLT (D)SCHRAUBE									(F)BOULON (S)PERNO					
	02717-06163	.	.	B	B	B	O	O	O			4				
[07]		(E)GROMMET-DRAIN TUBE,FRONT (D)ÖSE									(F)VIROLE (S)AISLANTE					
	96245671	.	.	B	B	B	O	O	O			2				
[08]		(E)GROMMET-DRAIN TUBE (D)ÖSE									(F)VIROLE (S)AISLANTE					

ENG(ENGINE)	T/A(TRANSAXLE)	BODY TYPE
Y = 1.5SOHC	M = MANUAL T/A	4 N = 4 DOOR NOTCHBACK
6 = 1.6DOHC	A = AUTOMATIC T/A	3 H = 3 DOOR HATCHBACK
. = COMMON	. = COMMON	5 H = 5 DOOR HATCHBACK

9260 SUN ROOF MOUNT

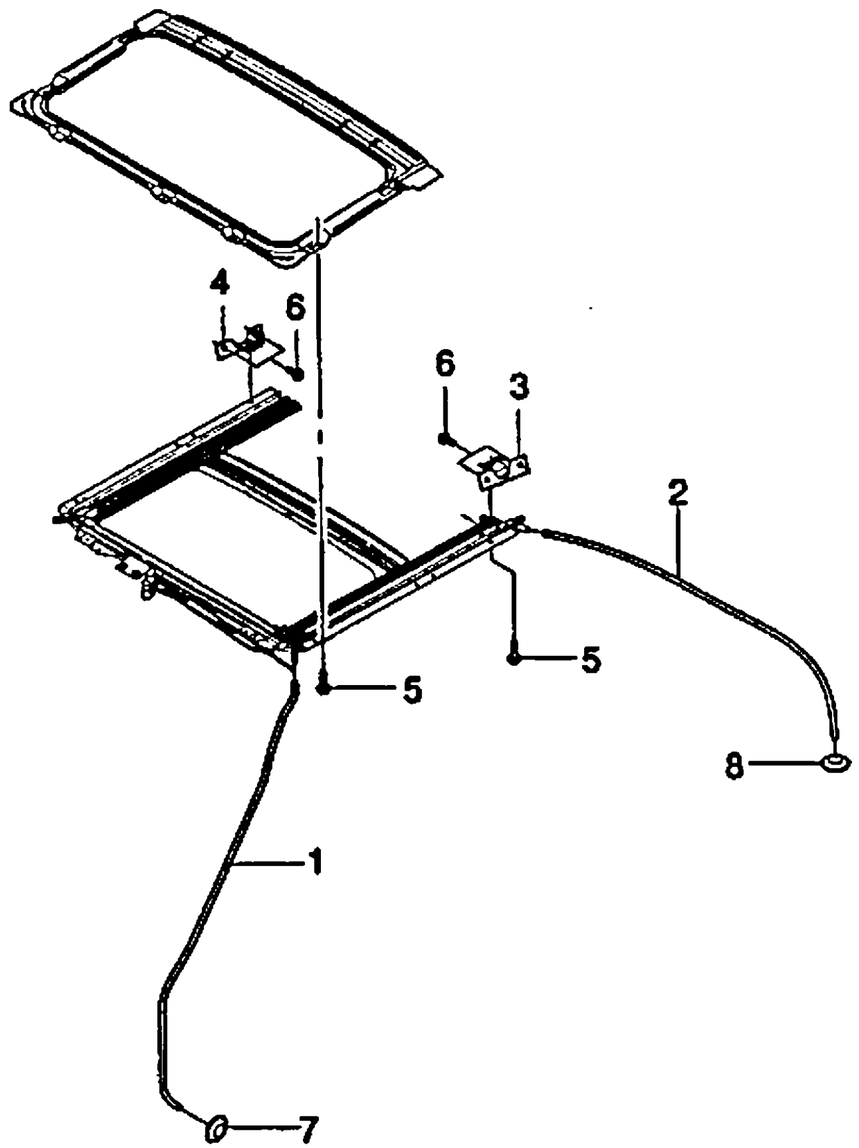

KEY NO.		PART NAME															
ITC	PART NO	MODEL								OPTION	L/R	QTY	EFFECTIVE DATE		REMARKS	P/CODE
		ENG	T/A	BODY			LEVEL						FROM	TO		
				4N	3H	5H	S	SE	SX							
	96239613	.	.	B	B	B	O	O	O			2				

ENG(ENGINE)	T/A(TRANSAXLE)	BODY TYPE
Y = 1.5SOHC 6 = 1.6DOHC . = COMMON	M = MANUAL T/A A = AUTOMATIC T/A . = COMMON	4 N = 4 DOOR NOTCHBACK 3 H = 3 DOOR HATCHBACK 5 H = 5 DOOR HATCHBACK