HYUNDAI

MATRIX

Shop Manual

FOREWORD

This shop manual is intended for use by service technicians of authorized Hyundai dealers to help them provide efficient and correct service and maintenance on Hyundai vehicle.

To ensure customer satisfaction with Hyundai products, proper service and maintenance by Hyundai technicians is essential. Consequently, it is important that service personnel fully understand the contents of this manual, which should be kept in a handy place for quick and easy reference.

All the contents of this manual, including photographs, drawings, and specifications, are the latest available at the time of printing. As modifications affecting service occur, dealers will be provided technical service bulletins or supplementary volumes. This manual should be kept carefully up-to date upon receipt of the new information.

Hyundai Motor Company reserves the right to make changes in design or to make additions to or improvements in its products without imposing any obligations upon itself to install them on its products previously manufactured.

This book may not be reproduced or copied, as a whole or as a part, without the written permission of the publisher.

MAR. 2001, Printed in Korea

CAUTION :
Severe engine and transaxle damage may result from the use of poor quality fuels and lubricants that do not meet Hyundai specifications. You must always use high quality fuels and lubricants that meet the specifications listed in the Recommended Lubricants and Capacities Chart on Page GI-12 in the General Information Section of the Shop Manual.

NOTE : Regarding the groups in small characters, refer to Electrical Troubleshooting Manual. (Pub. No : A17E-EG15A)

CONTENTS

TITLE	GROUP
General Information	GI
Engine Mechanical System [DOHC 1.8L]	EM
Engine Mechanical System [DOHC 1.6L]	EMA
Engine Electrical System	EE
Emissions Control System	EC
Fuel System	FL
Clutch System	CH
Transaxle/Transmission	TR
Driveshaft and Axle	DS
Suspension System	SS
Steering System	ST
Restraints System	RT
Brake System	BR
Body (Interior & Exterior)	BD
Body Electrical System	BE
Heating, Ventilation & Air Conditioning	HA
Electrical Troubleshooting Manual	ETM

General Information

GENERAL INFORMATION ..... GI -2

RECOMMENDED LUBRICANTS ..... GI -12

MAINTENANCE INFORMATION ..... GI -13

GENERAL INFORMATION

GENERAL EANC0010

HOW TO USE THIS MANUAL

This manual is divided into 21 sections. The first page of each section is marked with a black tab at the edge of the page. You can quickly find the first page of each section without looking through the whole table of contents.

Each section includes the essential removal, installation, adjustment and maintenance procedures for servicing all body styles. This information is correct at the time of publication.

An **INDEX** is provided on the first page of each section to guide you to the appropriate item.

TROUBLESHOOTING tables are included for each system to help you diagnose the system problem and find the cause. The repair for each possible cause is referred to in the remedy column to lead you to the solution quickly.

DEFINITION OF TERMS

STANDARD VALUE (SERVICE STANDARD)

Indicates the value used when a part or assembled item should be inspected, or the value to which a part or assembled item should be adjusted after reinstallation. It is given by a tolerance.

SERVICE LIMIT

Indicates the maximum or minimum value that a part or assembled item must meet when inspected. It is a value established beyond the standard value.

NOTE, WARNING , CAUTION, ABBREVIATION

NOTE

Information needed in reference to a repair service.

CAUTION

Information about an activity that could cause damage to the vehicle.

WARNING

Information about an activity that could cause injury or damage to the driver, occupants or repairman.

ABBREVIATIONS
DOHC : Double Over Head Camshaft

VEHICLE IDENTIFICATION NUMBER LOCATION

The vehicle identification number (VIN) is located on the right of the apron panel.

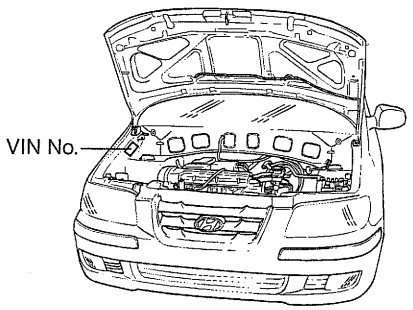

KANB001A

VEHICLE IDENTIFICATION NUMBER

The vehicle identification number consists of 17 digits.

K	M	H	P	N	8	3	D	P	1	U	0	0	0	0	0	1
1			2	3	4	5	6	7	8	9	10					

EANC001B

1. W.I.C. (World manufacturer's Identification Code)
   KMH - Hyundai Motor Company, Korea
2. Vehicle Line
   P : MATRIX
3. Model & Series
   L : Standard (L)
   M : Deluxe (GL)
   N : Super deluxe (GLS)
4. Body Type
   8 : WAGON
5. Restraint system
   3 - Driver side : A/ Belt + A/Bag, Passenger side : P/Belt
   4 - A/ Belt + A/ Bag (Driver side + Passenger side)
   5 - Depowered A/Bag

   NOTE

   A/Belt : Active belt
   P/Belt : Passive belt
   A/Bag : Air bag

6. Engine type
   C : G 1.6 I4
   D : G 1.8 I4
7. Driver side
   P : LHD (Left hand driver)
   R : RHD (Right hand driver)

8. Production year
   Y - 2000 Model Year 2 - 2002 Model Year
   1 - 2001 Model Year 3 - 2003 Model Year
9. Production plant
   U - Ulsan (Korea)
10. Vehicle production sequence number
    000001 - 999999

ENGINE IDENTIFICATION NUMBER LOCATION

The engine identification number is stamped on the right front side of the top edge of the cylinder block.

β - ENG

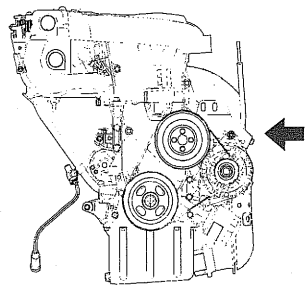

EKKA117D

α - ENG

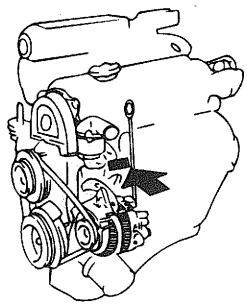

EADA010C

DESCRIPTION OF ENGINE IDENTIFICATION NUMBER

The engine identification number consists of 11 digits.

G	4	G	B	Y	0	0	0	0	0	1
1	2	3	4	5				6		

EANC001D

1. Engine fuel
   G - Gasoline
2. Engine range
   4 - In line 4 cycle 4 cylinder
3. Engine development order
   E - Alpha engine
   G - Beta engine
4. Engine capacity
   D - 1599 cc
   B - 1796 cc
5. Production year
   X - 1999
   Y - 2000
   1 - 2001
   2 - 2002
6. Engine production sequence number
   000001 - 999999

PROTECTION OF THE VEHICLE

Always be sure to cover fenders, seats, and floor areas before starting work.

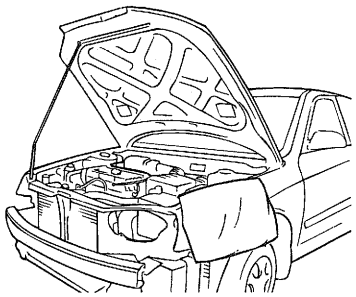

EAKA010B

⚠ ***CAUTION***

The support rod must be inserted into the hole near the edge of the hood whenever you inspect the engine compartment to prevent the hood from falling and causing passible injury.
Make sure that the support rod has been released prior to closing the hood. Always check to be sure the hood is firmly latched before driving the vehicle.

A WORD ABOUT SAFETY

The following precautions must be followed when jacking up the vehicle.

1. Block the wheels.
2. Place a jack under the specified jacking point.
3. Support the vehicle with safety stands (jack stands) Refer to the page GI-10.
4. Start the engine when engine compartment is clear.

PREPARATION OF TOOLS AND MEASURING EQUIPMENT

Be sure that all necessary tools and measuring equipment are available before starting work.

SPECIAL TOOLS

Use special tools when they are required.

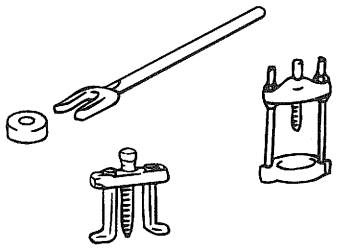

EAA9006A

REMOVAL OF PARTS

First find the cause of the problem and then determine whether removal or disassembly is required before starting the job.

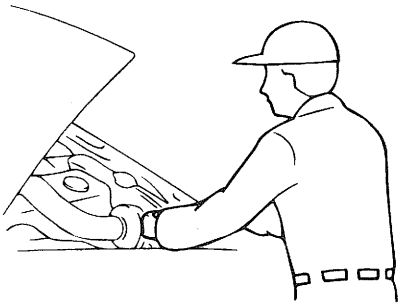

EADA010I

DISASSEMBLY

If the disassembly procedure is complex, requiring many parts to be disassembled, all parts should be disassembled in a way that will not affect their performance or external appearance.

1. **Inspection of parts**
   Each part, when removed, should be carefully inspected for malfunction, deformation, damage, and other problems.

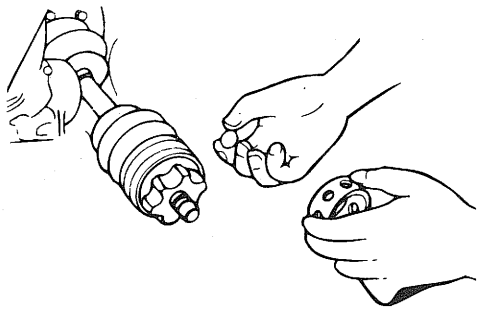

EADA010J

2. **Arrangement of parts**
   All disassembled parts should be carefully arranged for effective reassembly.
   Be sure to separate and correctly identify the parts to be replaced from those that will be used again.

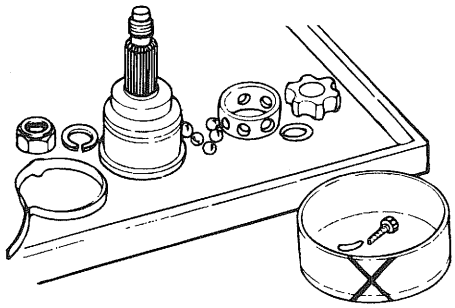

EAA9008B

3. **Cleaning parts for reuse**
   All parts to be used again should be carefully and thoroughly cleaned by an appropriate method.

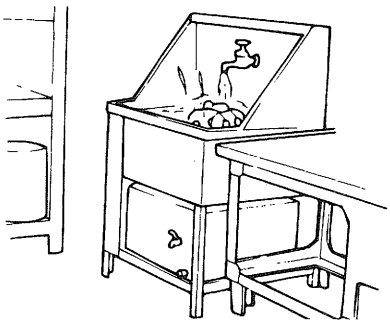

EADA010K

PARTS

When replacing parts, use HYUNDAI genuine parts.

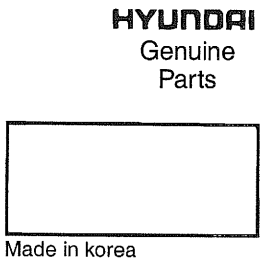

EADA010M

REPLACEMENT

Standard values, such as torques and certain adjustments, must be strictly observed in the reassembly of all parts.

If removed, the following parts should always be replaced with new ones.
1. Oil seals
2. Gaskets
3. O-rings
4. Lock washers
5. Cotter pins (split pins)
6. Plastic nuts

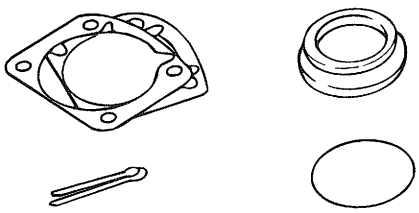

EADA010N

Depending on their location.
1. Sealant should be applied to gaskets.
2. Oil should be applied to the moving components of parts.
3. Specified oil or grease should be applied to the prescribed locations (oil seals, etc.) before assembly.

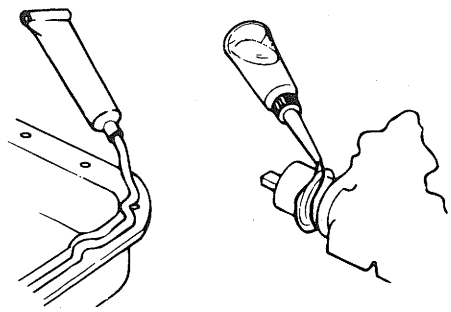

EADA010O

ADJUSTMENT

Use gauges and testers to adjust correctly the parts to standard values correctly.

ELECTRICAL SYSTEM

1. Be sure to disconnect the battery cable from the negative (-) terminal of the battery.
2. Never pull on the wires when disconnecting connectors.
3. Locking connectors will click when the connector is secure.
4. Handle sensors and relays carefully. Be careful not to drop them or hit them against other parts.

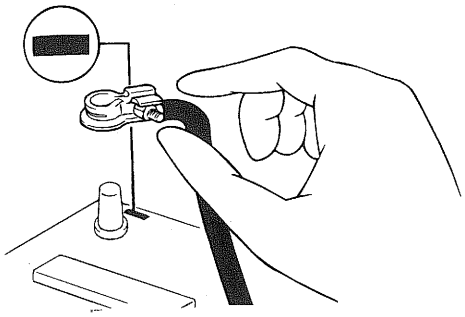

EAA9011A

RUBBER PARTS AND TUBES

Always prevent gasoline or oil from touching rubber parts or tubing.

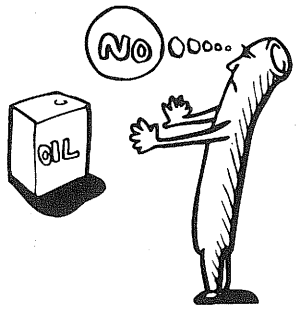

EADA010Q

MEASURING BODY DIMENSIONS

1. Basically, all measurements in this manual are taken with a tracking gauge.
2. When a measuring tape is used, check to be sure there is no elongation, twisting or bending
3. For measuring dimensions, both projected dimensions and actual-measurement dimensions are used in this manual.

DIMENSIONS PROJECTED

1. These are the dimensions measured when the measurement points are projected from the vehicle's surface, and are the reference dimensions used for body alterations.
2. If the length of the tracking gauge probes is adjustable, measure it by lengthening one of two probes as long as the different value in height of the two surfaces.

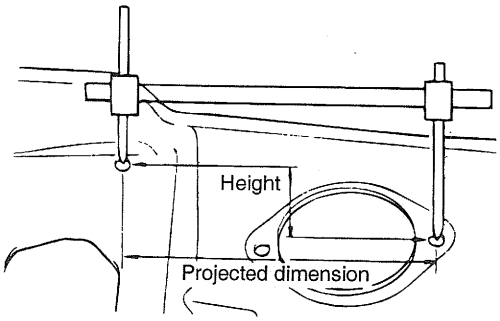

EADA011M

MEASURING ACTUAL DIMENSIONS

1. These dimensions indicate the actual linear distance between measurement points, and are used as the reference dimensions when a tracking gauge is used for measurement.
2. First adjust both probes to the same length (A=A') before measurement.

NOTE

Check the probes and gauge itself to make sure there is no free play.

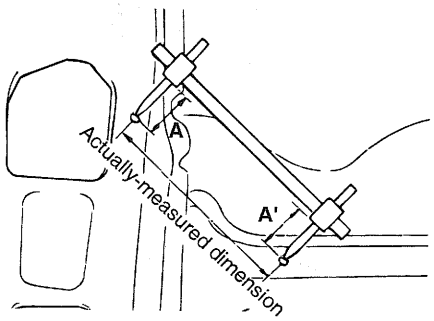

EADA011N

MEASUREMENT POINT

Measurements should be taken at the center of the hole.

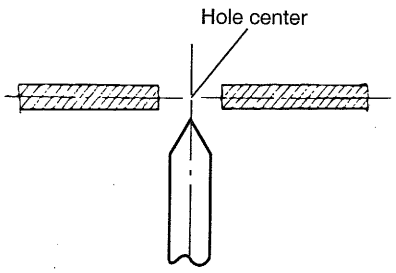

EADA011O

CHECKING CABLES AND WIRES

1. Check the terminal for tightness.
2. Check terminals and wires for corrosion from battery electrolyte, etc.
3. Check terminals and wires for open circuits.
4. Check wire insulation and coating for damage, cracks and degrading.
5. Check the conductive parts of terminals for contact with other metallic parts (vehicle body and other parts).
6. Check grounded parts to verify that there is complete continuity between their attaching bolt(s) and the vehicle's body.
7. Check for incorrect wiring.
8. Check that the wiring is so clamped to prevent contact with sharp corners of the vehicle body, etc. or hot parts (exhaust manifold, etc.)
9. Check that the wiring is clamped firmly to provide enough clearance from the fan pulley, fan belt and other rotating or moving parts.
10. Check that the wiring has a little space so that it can vibrate between fixed and moving parts such as the vehicle body and the engine.

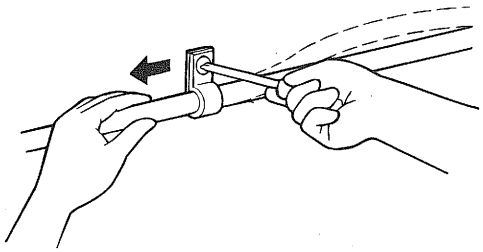

EADA011B

CHECKING FUSES

A blade type fuse has test taps provided to allow checking the fuse itself without removing it from the fuse block. The fuse is good if the test lamp lights up when one lead is connected to the test taps (one at a time) and the other lead is grounded. (Turn the ignition switch so that the fuse circuit becomes operative.)

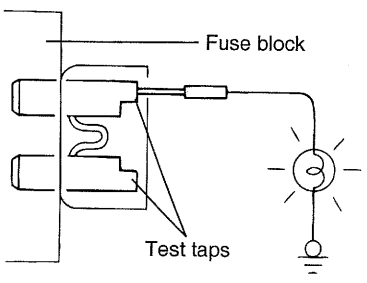

EAA9014B

SERVICING THE ELECTRICAL SYSTEM

1. Prior to servicing the electrical system, be sure to turn off the ignition switch and disconnect the battery ground cable.

NOTE

In the course of MFI or ELC system diagnosis, when the battery cable is removed, any diagnostic trouble code retained by the computer will be cleared. Therefore, if necessary, read the diagnostic codes before removing the battery cable.

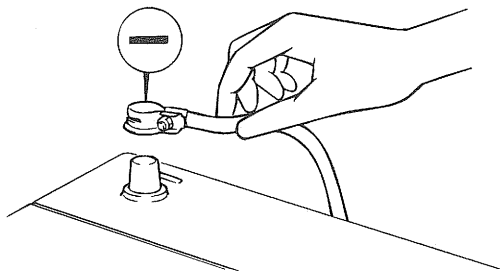

EADA011A

2. Attach the wiring harnesses with clamps so that there is no slack. However, for any harness which passes the engine or other vibrating parts of the vehicle, allow some slack within a range that does not allow the engine vibrations to cause the harness to come into contact with any of the surrounding parts, and then secure the harness by using a clamp.

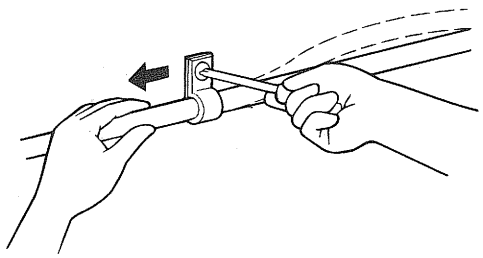

EADA011B

3. If any section of a wiring harness interferes with the edge of a part, or a corner, wrap the section of the harness with tape or something similar in order to protect it from damage.

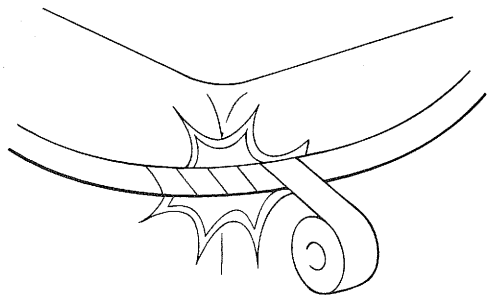

EADA011C

4. When installing any parts, be careful not to pinch or damage any of the wiring harnesses.

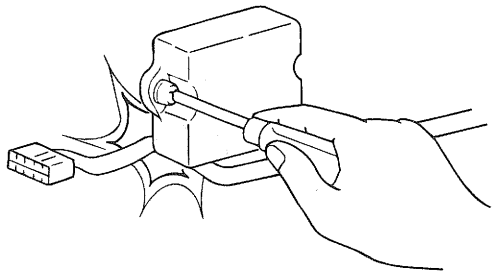

EADA011D

5. Never throw relays, sensors or electrical parts, or expose them to strong shock.

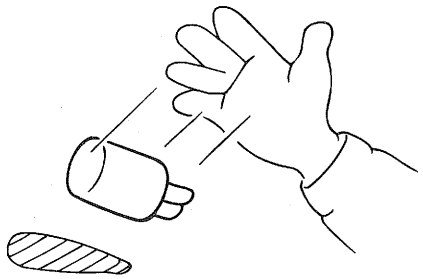

EADA011E

6. The electronic parts used in the computer, relays, etc. are readily damaged by heat. If there is a need for service operations that may cause the temperature to exceed 80°C (176°F), remove the electronic parts beforehand.

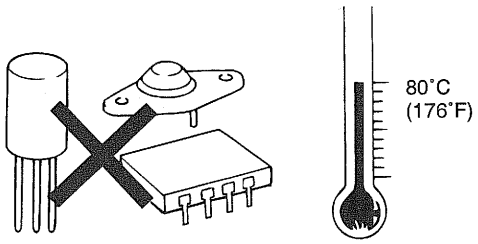

EADA011F

7. Loose connectors cause problems. Make sure that the connectors are always securely fastened.

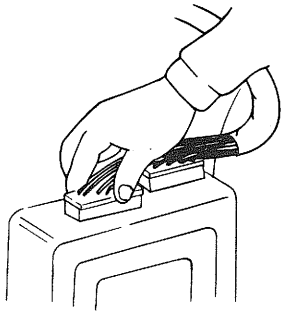

EADA011G

8. When disconnecting a connector, be sure to grip only the connector, not the wires.

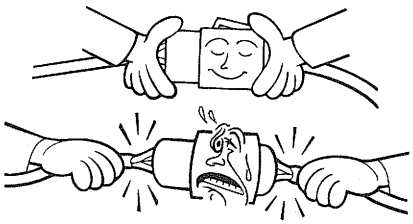

EADA011H

9. Disconnect connectors which have catches by pressing in the direction of the arrows shown the illustration.

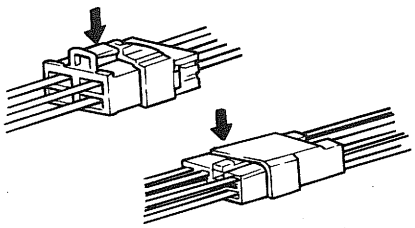

EADA011I

10. Connect connectors which have catches by inserting the connectors until they make a clicking sound.

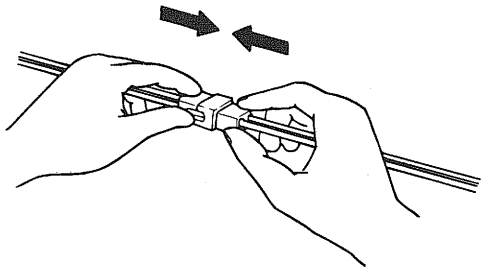

EADA011J

11. When using a circuit tester to check continuity or voltage on connector terminals, insert the test probe into the harness side. If the connector is a sealed connector, insert the test probe through the hole in the rubber cap until it contacts the terminal, being careful not to damage the insulation of the wires.

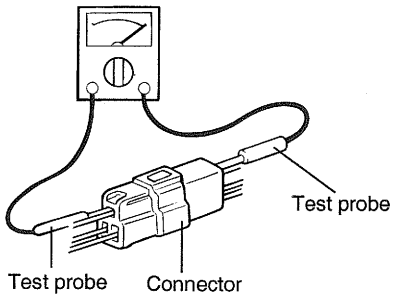

EADA011K

12. To avoid overloading the wiring, take the electrical current load of the optional equipment into consideration, and determine the appropriate wire size.

Norminal size	SAE gauge No.	Permissible current	
		In engine compartment	Other areas
0.3 mm²	AWG 22	-	5A
0.5 mm²	AWG20	7A	13A
0.85 mm²	AWG18	9A	17A
1.25 mm²	AWG16	12A	22A
2.0 mm²	AWG14	16A	30A
3.0 mm²	AWG12	21A	40A
5.0 mm²	AWG10	31A	54A

PRECAUTIONS FOR CATALYTIC CONVERTER

⚠ *CAUTION*

If a large amount of unburned gasoline flows into the converter, it may overheat and create a fire hazard. To prevent this, observe the following precautions and explain them to your customer.

1. Use only unleaded gasoline.
2. Do not run the engine while the car is at rest for a long time. Avoid running the engine at fast idle for more than 10 minutes and at idle speed for more than 20 minutes.
3. Avoid spark-jump tests. Do spark-jumps only when absolutely necessary. Perform this test as rapidly as possible and, while testing, never race the engine.
4. Do not measure engine compression for an extended time. Engine compression tests must be made as rapidly as possible.
5. Do not run the engine when the fuel tank is nearly empty. This may cause the engine to misfire and create an extra load on the converter.
6. Avoid coasting with the ignition turned off and during prolonged braking.
7. Do not dispose of a used catalytic converter together with parts contaminated with gasoline or oil.

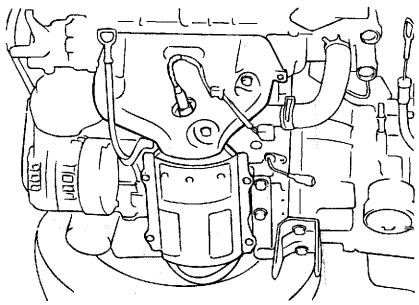

EAKA010E

SRS SYSTEM COMPONENTS INFORMATION

CUSTOMER CAUTIONS

Failure to carry out service operations in the correct sequence could cause the airbag system to be deployed unexpectedly during servicing, and a serious accident to occur. Further, if there is a mistake in servicing the airbag system, it is possible that the airbag may fail to operate when required. Before servicing (including removal or installation of parts, inspection or replacement), be sure to read the following items carefully, then follow the correct procedures described in the repair manual.

1. Work must be started approx. 30 seconds or longer after the ignition switch is turned to the LOCK position and the negative (-) battery cable is disconnected. (The airbag system is equipped with a back-up power source. If work is started within 30 seconds when disconnecting the negative (-) battery cable of the battery, the airbag may be operative.) When the negative (-) terminal cable is disconnected from the battery, the clock and audio systems memories will be erased. Before starting work, record the setting of the audio memory system. When work is finished, reset the audio system as before and adjust the clock.
2. Malfunction symptoms of the airbag system are difficult to confirm, so diagnostic codes become the most important source of information when troubleshooting. When troubleshooting the airbag system, always read the diagnostic trouble codes before disconnecting the battery.
3. Never use airbag parts from another vehicle. When replacing parts, replace them with new parts.
4. Never attempt to disassemble and repair the airbag modules, SRSCM, clock spring and Air-bag wiring harness in order to reuse it.
5. If the SRSCM or air-bag module have been dropped, or if there are cracks, dents or other defects in the case, bracket or connector, replace them with new ones.
6. After work on the airbag system is completed, reset the SRS SRI.

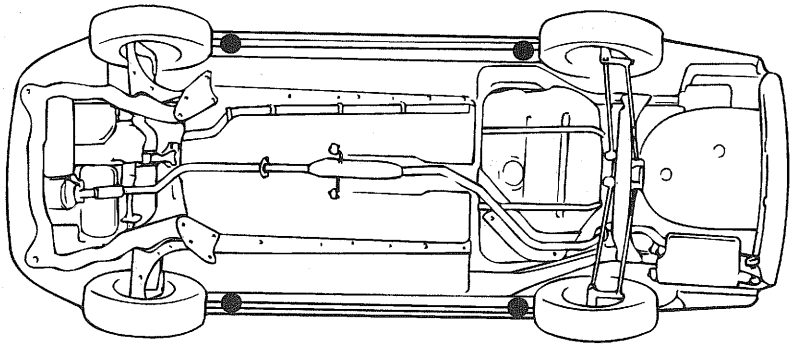

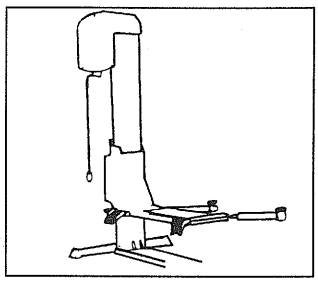

Single post lift

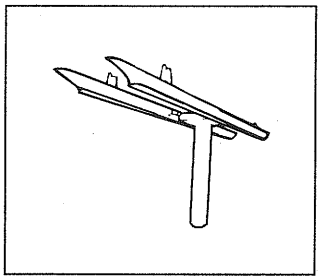

H bar lift

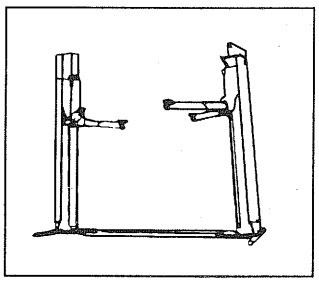

Double post lift

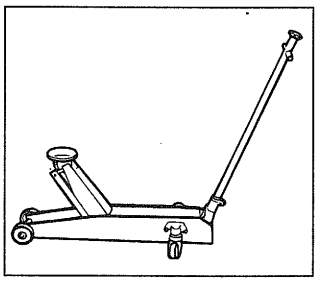

Floor jack

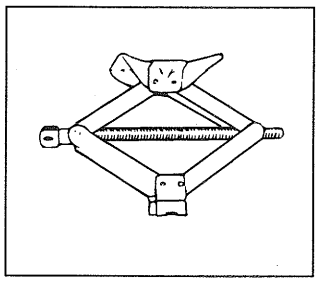

The jack provided with the vehicle

EAHA018A

⚠ *CAUTION*

1. *Never use a jack beneath the lateral rod or rear suspension assembly.*
2. *In order to prevent scarring the sub frame, place a piece of cloth on the jack's contact surface (to prevent corrosion caused by damage to the coating).*
3. *Never support a vehicle with only a jack. Always use safety stands.*
4. *Do not attempt to raise one entire side of the vehicle by placing a jack midway between the front and rear wheels. To do so could result in permanent damage to the body.*

TIGHTENING TORQUE TABLE OF STANDARD PARTS

Bolt nominal diameter (mm)	Pitch (mm)	Torque Nm (kg.cm, lb.ft)	
		Head Mark 4	Head Mark 7
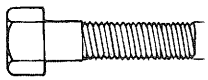 EADA010R	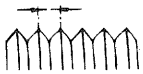 EADA010S	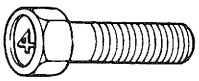 EADA010T	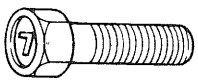 EADA010U
M5	0.8	3-4 (30-40, 2.2-2.9)	5-6 (50-60, 3.6-4.3)
M6	1.0	5-6 (50-60, 3.6-4.3)	9-11 (90-110, 6.5-8.0)
M8	1.25	12-15 (120-150, 9-11)	20-25 (200-250, 14.5-18.0)
M10	1.25	25-30 (250-300, 18-22)	30-50 (300-500, 22-36)
M12	1.25	35-45 (350-450, 25-33)	60-80 (600-800, 43-58)
M14	1.5	75-85(750-850,54-61)	120-140(1,200-1,400,85-100)
M16	1.5	110-130(1,100-1,300,80-94)	180-210(1,800-2,100, 130-150)
M18	1.5	160-180(1,600-1,800, 116-130)	260-300(2,600-3,000, 190-215)
M20	1.5	220-250 (2,200-2,500, 160-180)	360-420 (3,600-4,200,260-300)
M22	1.5	290-330 (2,900-3,300, 210-240)	480-550 (4,800-5,500,350-400)
M24	1.5	360-420 (3,600-4,200, 260-300)	610-700 (6,100-7,000, 440-505)

NOTE

1. *The torques shown in the table are standard values under the following conditions:*
   - *Nuts and bolts are made of galvanized steel bar.*
   - *Galvanized plain steel washers are inserted.*
   - *All nuts, bolts, and plain washers are dry.*

2. *The torques shown in the table are not applicable:*
   - *When spring washers, toothed washers and the like are inserted.*
   - *If plastic parts are fastened.*
   - *If self-tapping screws or self-locking nuts are used.*
   - *If threads and surfaces are coated with oil.*

3. *If you reduce the torques in the table to the percentage indicated below, under the following conditions, if will be the standard value.*
   - *If spring washers are used. : 85%*
   - *If threads and bearing surfaces are stained with oil. : 85%*

RECOMMENDED LUBRICANTS

RECOMMENDED LUBRICANTS EANC0020

Parts	Specifications	Remarks
Engine oil	API Classification SE Above	For further details, refer to SAE viscosity number
Manual transaxle	API classification GL-4	SAE grade number: SAE 75W/90
Automatic transaxle	GENUINE HYUNDAI transaxle oil, GENUINE DIAMOND ATF SP-II M	
Brake	DOT 3 or DOT 4	
Cooling system	High quality ethylene glycol	Concentration level 40% (tropical) Concentration level 50% (normal)
Power steering	PSF-3	
Transaxle linkage, parking brake cable mechanism, hood lock and hook, door latch, seat adjuster, trunk latch, door hinges, trunk hinges	Multipurpose grease NLGI grade #2	

M/EAST : Middle East, GEN.: General Areas
AUST.: Australia, EC : European Communities

LUBRICANTS CAPACITIES

liter (U.S. qts., Imp.qts.)

Description		Capacities	
		1.6 I4	1.8 I4
Engine oil	Oil pan	3.0 (3.17, 2.64)	3.7 (3.91, 3.2[illegible])
	Oil filter	0.3 (0.32, 0.26)	←
	Total	3.3 (3.49, 2.90)	4.0 (4.23, 3.52)
Cooling system		5.5 (5.81, 4.84)	6.0 (6.34, 5.28)
Manual transaxle		2.15 (2.27, 1.89)	←
Automatic transaxle		6.70 (7.08, 5.90)	7.8 (8.24, 6.86)
Power steering		0.75-0.80 (0.79-0.85)	←

MAINTENANCE INFORMATION

CHANGING ENGINE OIL EANC0030

1. If the engine is cold, run the engine until it reaches normal operating temperature.
2. Turn off the engine.
3. Remove the oil filler cap and drain plug. Drain the engine oil.
4. Tighten the drain plug to the specified torque.

Tightening torque
Oil pan drain plug :
35-45 N.m (350-450 kg.cm, 25-33 lb.ft)

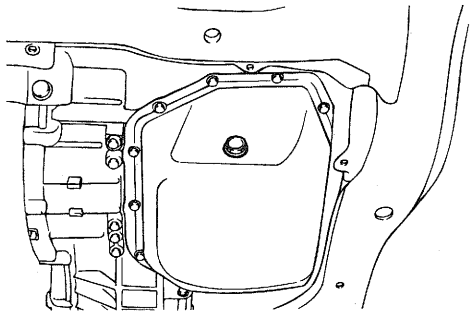

EAKA001A

NOTE

Whenever tightening the oil drain plug, use a new drain plug gasket.

5. Fill new engine oil through the oil filler cap opening.

NOTE

Do not overfill, this will cause oil aeration and loss of oil pressure.

6. Install the oil filler cap.
7. Start and run the engine.
8. Turn off the engine and then check the oil level. Add oil if necessary.

REPLACING THE ENGINE OIL FILTER

1. Use a filter wrench to remove the oil filter.
2. Before installing a new oil filter on the engine, apply clean engine oil to the surface of the rubber gasket.
3. Tighten the oil filter to the specified torque.

Tightening torque
Oil filter : 12 -16 N.m (120-160 kg.cm, 9-12 lb.ft)

4. Start and run the engine and check for engine oil leaks.
5. After turning off the engine, check the oil level and add oil as necessary.

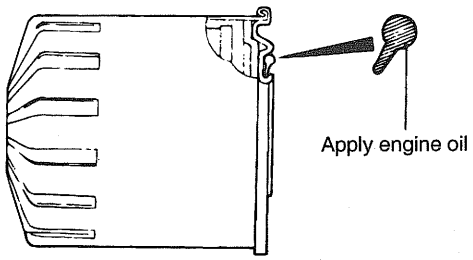

ECA9970B

REPLACING THE AIR CLEANER FILTER

The air cleaner filter will become dirty during use and the filtering efficiency will be substantially reduced. Replace with a new one as needed.

1. Disconnect the clip holding air cleaner filter cover.
2. Remove the air filter cover.

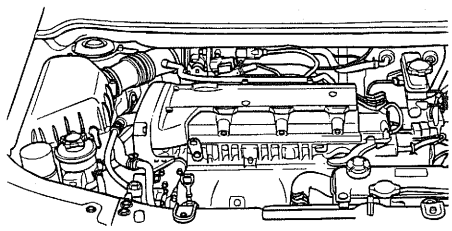

KDNB003C

3. Remove the air cleaner filter.
4. Install a new air cleaner filter and replace the air cleaner filter cover.

ADJUSTING BELT TENSION

Refer to EM and EMA-Sections.

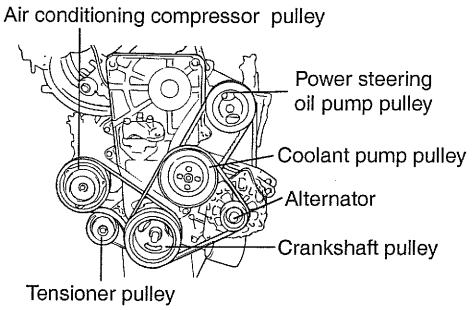

EAKA001B

COOLING SYSTEM

Check the cooling system for damaged hoses, loose or leaking connections, or other possible causes of coolant leaks.

ANTIFREEZE

The engine cooling system is provided with a mixture of 50% ethylene glycol anti-freeze and 50% water (For the vehicles of tropical area, the engine cooling system is provided with a mixture of 40% ethylene glycol anti-freeze and 60% water at the time of manufacture.)
Since the cylinder head and water pump body are made of aluminum alloy casting, be sure to use a 30 to 60% ethylene glycol antifreeze coolant to assure corrosion protection and freezing prevention.

CAUTION

If the concentration of the antifreeze is below 30%, the anticorrosion property will be adversely affected. In addition, if the concentration is above 60%, both the antifreeze and engine cooling properties will decrease, adversely affecting the engine. For these reasons, be sure to maintain the concentration level within the specified range.

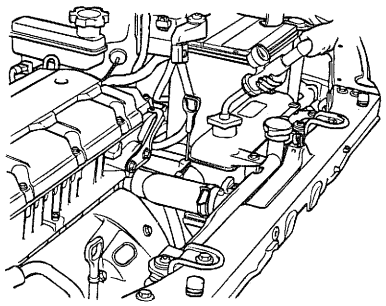

KDNB001D

MEASURING OF ANTIFREEZE CONCENTRATION

Run the engine until the coolant is fully mixed. Drain some coolant (antifreeze), and then measure the temperature and specific gravity of the coolant. Determine it's concentration and safe working temperature. If the coolant is short of antifreeze, add antifreeze to a concentration of 50%. (Tropical Areas : 40%)

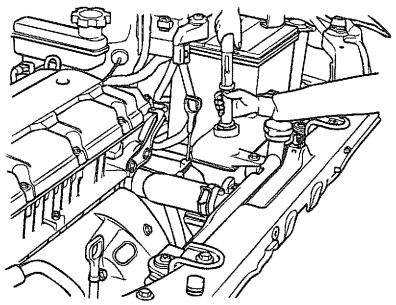

KDNB001E

REPLACING THE COOLANT

1. Set the temperature control lever to the hot position.
2. Remove the radiator cap.

CAUTION

Remove the cap slowly. The system is pressurized and the coolant may be hot. Do not open the cap when the engine is hot.

3. Loosen the drain plug to drain the coolant.
4. Drain the coolant from the reserve tank.
5. After draining the coolant, tighten the drain plug securely.
6. Fill the radiator with the coolant up to its filler neck.
7. Fill the reserve tank with coolant to the MAX. line.
8. Warm up the engine until the thermostat opens, remove the radiator cap and check the coolant level.
9. When the radiator is filled up to its filler neck, install the radiator cap securely.
10. Fill the reserve tank with coolant up to the "FULL" line.

REPLACING IGNITION CABLES

Ignition cables should be replaced periodically with new ones. After replacing, make sure that the ignition cables and terminals are properly connected and fully seated.

NOTE

When disconnecting an ignition cable, be sure to hold the cable cap. If the cable is disconnected by pulling on the cable alone, an open circuit might result.

REPLACING OXYGEN SENSOR

The oxygen sensor is a device which helps control the fuel mixture. If the oxygen sensor is damaged, the exhaust-gas cleaning efficiency as well as driveability deteriorates. Therefore, it should be replaced periodically with a new one.

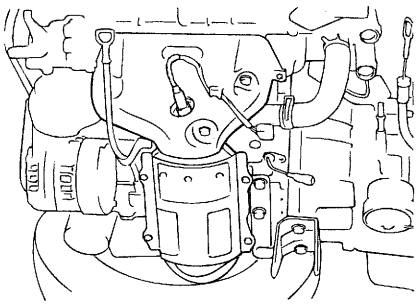

EAKA010E

MANUAL TRANSAXLE (INSPECT OIL LEVEL)

Inspect for leakage in each component and check the oil level by removing the filler plug. If the oil is contaminated, replace it with new oil.

1. With the vehicle parked on a level surface, remove the filler plug and make sure that the oil level is the same level as the plug hole.
2. Check that the transaxle oil is not dirty.

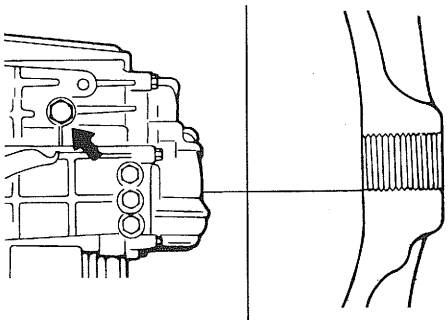

EAA9029A

TRANSAXLE OIL (REPLACE)

1. With the vehicle parked on a level surface, remove the magnetic plug to drain transaxle oil.
2. Replace the washer with a new one and reinstall the magnet plug.
3. Fill with transaxle oil (through the filler plug part) until the oil level is the same level as the plug hole.

INSPECTING STEERING LINKAGE

1. Check the steering wheel freeplay.

Maximum steering wheel freeplay : 30 mm (1.181 in.)

2. Check the steering linkage for looseness and damage
   a) Tie rod ends must not have excessive play.
   b) Dust seals and boots must not be damaged.
   c) Boot clamps must be not loose.

POWER STEERING FLUID LEVEL (INSPECT FLUID LEVEL)

1. Park the vehicle on a level surface, start the engine, and then turn the steering wheel several times to raise the temperature of the fluid to approximately 50°C (122°F).

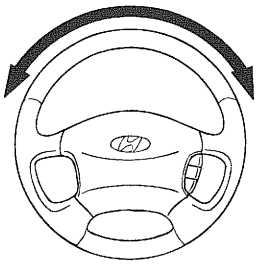

ECHA062A

2. With the engine idling, turn the wheel all the way to the left and right several times. Check the fluid in the oil reservoir for foaming, and its level. Replenish the fluid in the oil reservoir through the oil filter if necessary.

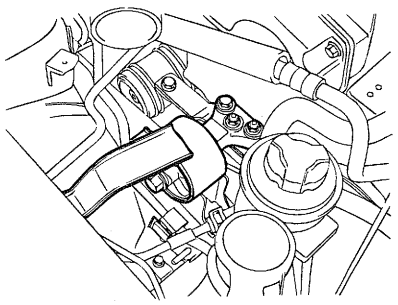

KDNB001B

POWER STEERING HOSES (CHECK FOR DETERIORATION OR LEAKS)

1. Check the hose connections for fluid leaks.
2. The power steering hoses should be replaced if there is severe surface cracking, pulling, scuffing or worn steps. Deterioration of the hoses could cause premature failure.

BALL JOINT AND STEERING LINKAGE SEALS, STEERING AND DRIVE SHAFT BOOTS

1. These components, which are permanently lubricated at the factory, do not require lubrication. Damaged seals and boots should be replaced to prevent leakage or contamination of the grease.

2. Inspect the dust covers and boots for proper sealing, leakage and damage. Replace them if defective.

INSPECTING BRAKE LINES

1. Check all brake lines and hoses for damage, wear, cracks, corrosion, leaks, bends, twists.
2. Check all clamps for tightness.
3. Check that the lines are clear of sharp edges, moving parts and the exhaust system.

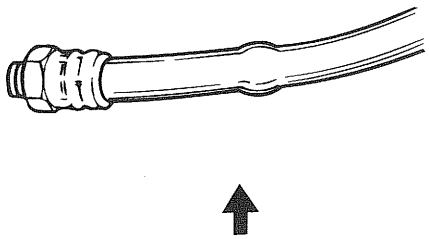

EAA9033A

FRONT DISC BRAKE PADS

Check for fluid contamination and wear. Always replace brake pads in complete sets.

NOTE

If a squealing or scraping noise occurs from the brake during driving, check if the pad wear indicator is contacting the disc, if it is, the brake pad should be replaced.

CAUTION

The pads for the right and left wheels should be replaced at the same time. Never split or intermix brake pad sets. All pads must be replaced as a complete set.

Thickness of pad lining [Limit] : 2.0 mm (0.079 in.)

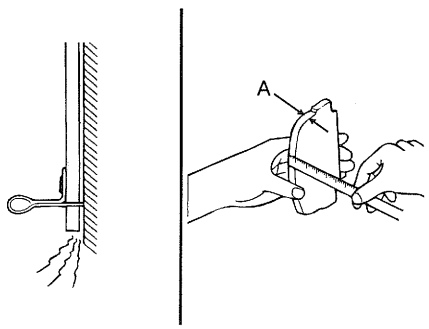

EAAC003A

REAR DRUM BRAKE LININGS AND REAR WHEEL CYLINDERS

1. Remove the brake drum and check the thickness of the brake shoe lining for wear. Check the automatic brake adjusting system by hand to see that it operates smoothly and gears are in proper mesh to each other. To assure smooth function, apply a very thin coat of grease to the friction surface of the adjuster and link shaft.
2. Inspect the wheel cylinder boots for fluid leaks. Visually check the boots for cuts, tears or heat cracks. (A small amount of fluid on the boot may not be a leak, but preservative fluid used at assembly.)

Checking the brake shoes for wear.

Thickness of lining [Limit] : 0.8 mm (0.031 in.)

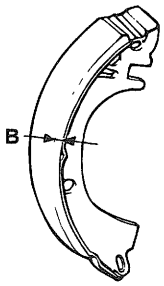

EAA9035A

CHECKING THE BRAKE FLUID LEVEL

1. Check the level of the brake fluid in the reserve tank of the master cylinder.
2. The level should be between the "MAX" and "MIN" mark.
3. If the level is lower than the "MIN" mark, add fresh brake fluid up to the "MAX" mark.

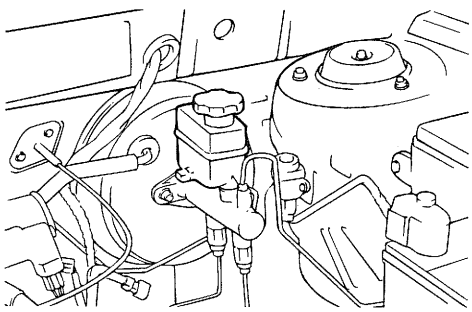

EDJA230A

CHANGING BRAKE FLUID

1. Refer to BR-Section for air-bleeding procedures.
2. Connect a vinyl tube to the bleeder screw of each wheel cylinder. Put the other end of the vinyl tube in a vessel for receiving the brake fluid.
3. With a vehicle equipped with ABS (Anti-lock Brake System), refer to the BR-section.

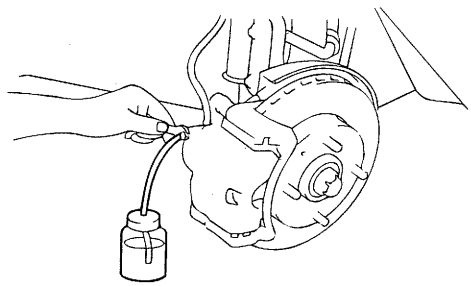

EAA9037A

4. Depress the brake pedal a few times. Then loosen the bleeder screw (with the brake pedal still depressed), and tighten it after the brake fluid stops flowing.
5. Repeat the above operation until air bubbles are not in the brake fluid.
6. Repeat these steps for the other cylinders.
7. Add fresh brake fluid up to the "MAX" level in the reserve tank.

Brake fluid : DOT 3 or DOT4

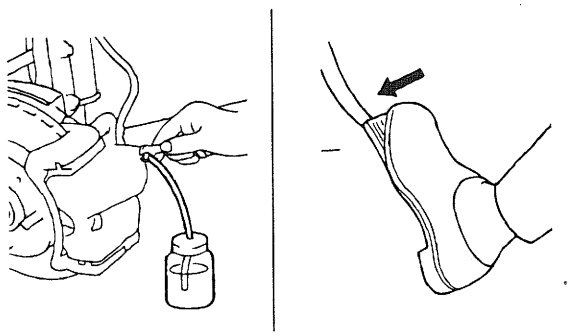

EAHA014B

CHECKING TIRE INFLATION PRESSURE

Check the tire inflation pressures as follows.

TIRE INFLATION PRESSURE (CHECK WITH TIRES COOL)

Tire size : 185/65 R 14, 195/55 R 15
Tire pressure : 2.1 kg/cm² (30 PSI)

ROAD TEST

Drive the vehicle and check for abnormal conditions.

1. Check oil, fluid, fuel, water and exhaust gas leaks.
2. Check free play of clutch pedal and brake pedal.
3. Check the operation of brake booster.
4. Check the operation of service brake and parking brake systems.
5. Check the stroke of parking brake lever.
6. Check the driveability of engine.
7. Check the condition of instruments, gauges, indicators, exterior lamps, heater and ventilators.
8. Check for abnormal noises from each part.

CHECKING COOLANT LEAK ECNC0110

1. Loosen the radiator cap.
2. Confirm that the coolant level is up to the filler neck.
3. Install a radiator cap tester to the radiator filler neck and apply 140 KPa (1.4 kg/cm², 20psi) pressure. Hold it for two minutes in that condition, while checking for leakage from the radiator, hoses or connections.

NOTE

1. Radiator coolant may be extremely hot. Do not open the system because hot, or scalding water could gush out causing personal injury. Allow the vehicle to cool before servicing this system.
2. Be sure to clean away any moisture from the places checked completely.
3. When the tester is removed, be careful not to spill any coolant from it.
4. Be careful, when installing and removing the tester and when testing, not to deform the filler neck of the radiator.

4. If there is leakage, repair or replace with the apropriate part.

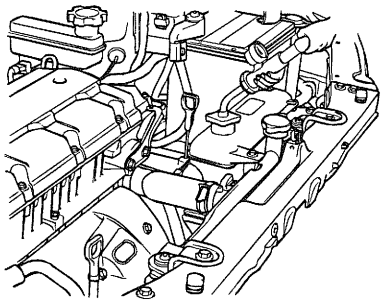

KDNB001D

RADIATOR CAP PRESSURE TEST

1. Use an adapter to attach the cap to the tester.
2. Increase the pressure until the gauge stops moving.

Main valve opening pressure :	
	83-110 kPa (0.83-1.1 kg/cm², 12-16 psi)
Vacuum valve opening pressure :	
	-7 kPa (-0.07 kg/cm², -1.0 psi)

3. Check that the pressure level is maintained at or above the limit.
4. Replace the radiator cap if the reading does not remain at or above the limit.

NOTE

Be sure that the cap is clean before testing, since rust or other foreign material on the cap seal will cause an incorrect reading.

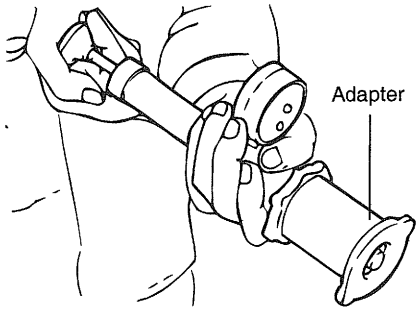

ECA9090A

SPECIFIC GRAVITY TEST ECNC0120

1. Measure the specific gravity of the coolant with a hydrometer.
2. Measure the coolant temperature and calculate the concentration from the relation between the specific gravity and temperature, using the following table for reference.

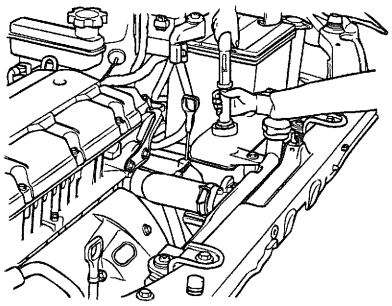

KDNB001E

RELATION BETWEEN COOLANT CONCENTRATION AND SPECIFIC GRAVITY

Coolant temperature °C (°F) and specific gravity					Freezing temperature °C (°F)	Safe operating temperature °C (°F)	Coolant concentration (Specific volume)
10 (50)	20 (68)	30 (86)	40 (104)	50 (122)			
1.054	1.050	1.046	1.042	1.036	-16 (3.2)	-11 (12.2)	30%
1.063	1.058	1.054	1.049	1.044	-20 (-4)	-15 (5)	35%
1.071	1.067	1.062	1.057	1.052	-25 (-13)	-20 (-4)	40%
1.079	1.074	1.069	1.064	1.058	-30 (-22)	-25 (-13)	45%
1.087	1.082	1.076	1.070	1.064	-36 (-32.8)	-31 (-23.8)	50%
1.095	1.090	1.084	1.077	1.070	-42 (-44)	-37 (-35)	55%
1.103	1.098	1.092	1.084	1.076	-50 (-58)	-45 (-49)	60%

Example

The safe operating temperature is -15°C (5°F) when the measured specific gravity is 1.058 at coolant temperature of 20°C (68°F)

⚠ ***CAUTION***

• If the concentration of the coolant is below 30%, its anti-corrosion properties will be adversely affected. • if the concentration is above 60%, both the anti-freeze and engine cooling property will decrease, affecting the engine adversely. For these reasons, be sure to maintain the concentration level within the specified range.
• Do not use together with another brand's product.

RECOMMENDED COOLANT

Antifreeze	Mixture ratio of anti freeze in coolant
ETHYLENE GLYCOL BASE FOR ALUMINUM	50% [Except tropical areas] 40% [Tropical areas]

CHECKING COMPRESSION PRESSURE ECKB0130

1. Before checking engine compression, check the engine oil level. Also check that the starter motor and battery are all in normal operating condition.
2. Start the engine and wait until engine coolant temperature reaches 80-95°C (176-205°F).
3. Turn off engine and disconnect the spark plug cables.
4. Remove the spark plugs.
5. Crank the engine to remove any foreign material in the cylinders.
6. Insert the compression gauge into the spark plug hole.
7. Depress the accelerator pedal to open the throttle fully.
8. Crank the engine and read the gauge.

Standard value : 1500kpa (15Kg/cm², 218 psi)

Limit : 1400kpa (14Kg/cm², 203 psi)

9. Repeat steps 6 to 8 over all cylinders, ensuring that the pressure differential for each of the cylinders is within the specified limit.

Limit : Max. 100 kpa (1.0 kg/cm² ,14 psi) between cylinders

10. If a cylinder's compression or pressure differential is outside the specification, add a small amount of oil through the spark plug hole, and repeat steps 6 to 9.
    1) If the addition of oil makes the compression to rise, it is likely that there may be wear between the piston ring and cylinder wall
    2) If compression remains the same, valve seizure, poor valve seating or a compression leak from the cylinder head gasket are all possible causes.

Tightening torque

Spark plug : 20-30 Nm (200-300 kg.cm, 14-22 lb.ft)

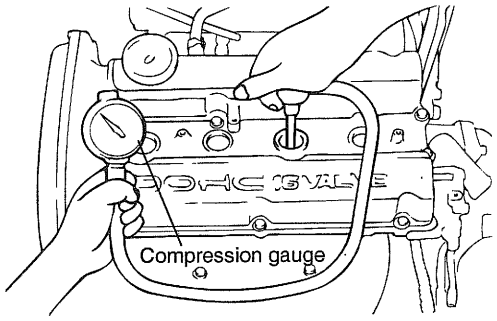

ECA9001A

ADJUSTING TIMING BELT TENSION ECNC0140

1. Lift the vehicle by using of jack.
2. Rotate the steering wheel counter-clockwise throughly.

   NOTE

   Do watch not to over load.

3. Remove the engine support bracket.

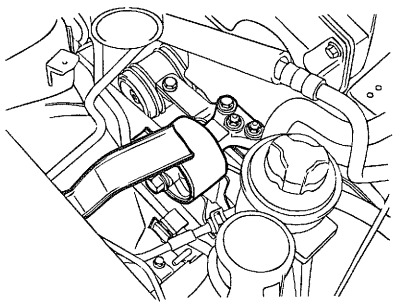

KDNB001B

4. Remove the water pump pulley.

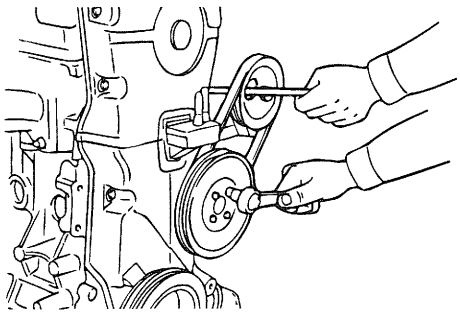

EDDA083A

5. Remove the timing belt upper cover.

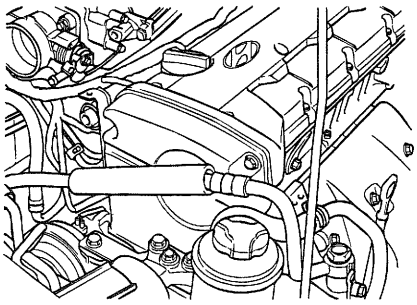

KDNB001C

6. Remove the spark plug.

7. Place the pistion of No. 1 cylinder to TDC of the compression stroke by rotating the crankshaft clockwise.

NOTE

Crankshaft is to be rotated clockwise. Otherwise, the tension is inadequately adjusted.

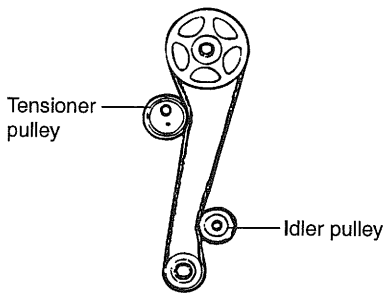

KDDA001B

8. Loose the tensioner bolt of pivot side and slot side.

9. Rotate the crankshaft clockwise as many as 2 teeth of sprocket.

NOTE

Set the exhaust valve rocker arm to upper position of cam in order to be the specified tension.

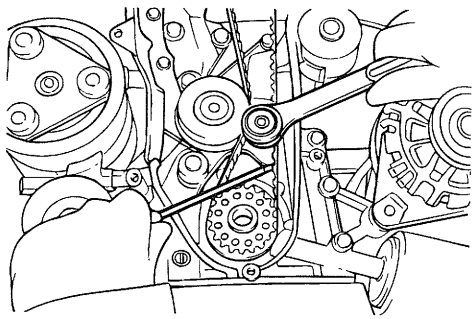

EDDA092A

10. Check that the teeth of sprocket and belt coincide with each other.

11. Tighten the bolt of slot side at first and then tighten the bolt of pivot side.

12. Install the timing belt tension.

13. Install the spark plug.

14. Install the timing belt upper cover.

15. Install the water pump pulley and engine mount.

ADJUSTING DRIVE BELT TENSION ECKB0150

1. Check that the belts are not damaged and are properly fit for the pulley grooves.

2. Apply 100 N (22 lbs.) force to the back and midway portion of the belt between the pulleys as shown in the illustration, measure the amount of deflection with a tension gauge.

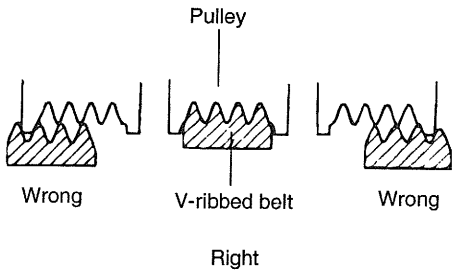

ECA9980A

CAUTION

1. When installing the V-ribbed belt, check that the V-ribs are properly aligned.

2. If noise or slippage is detected, check the belt for wear, damage, or breakage on the pulley contact surface, and check the pulley for scoring. Also check the degree that the belt is deflected.

STANDARD VALUE:

Items		Inspection	Adjustment	
			New	Used
For alternator	Deflection mm (in.)	5.1-6.0 (0.200-0.236)	4.0-4.4 (0.157-0.173)	5.1-5.7 (0.200-0.224)
	Tension N (lb)	350-500 (79-112)	650-750 (143-165)	400-500 (88-110)
For air conditioner	Deflection mm (in.)	8 (0.31)	5.0-5.5 (0.20-0.22)	6.0-7.0 (0.24-0.28)
	Tension N (lb)	250-500 (56-112)	470-570 (106-128)	320-400 (72-90)
For power steering	Deflection mm (in.)	6.0-9.0 (0.24-0.35)	-	-

NOTE

1. *The belt tension must be measured half - way between the specified pulleys.*
2. *When a new belt is installed, adjust the tension to the central value of the standard range indicated under "New" in the above table. Let the engine idle for 5 minutes or more, and check the standard value indicated under "Inspection."*
3. *When adjusting a belt which has been used or a belt installed newly after 5 minutes or more of operation, refer to the standard value indicated under "Used" in the above table.*
4. *Refer to the standard value indicated under "Inspection" for periodic inspections.*

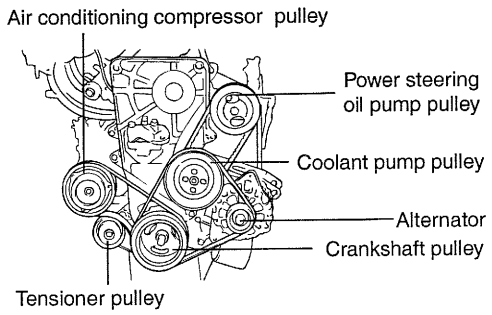

EAKA001B

TYPE A TENSION GAUGE

Do not let the dial section of the tension gauge contact other objects during measurement.

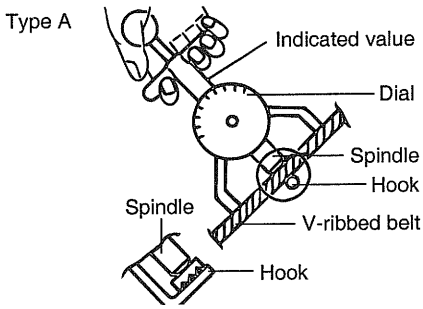

ECA9980C

TYPE B TENSION GAUGE

1. When measuring, turn the reset button in the direction of the arrow and set the gauge needle to the RESET position.
2. If the tension gauge is removed from the belt, the needle will still indicate the tension.Read the tension value after removing the gauge.

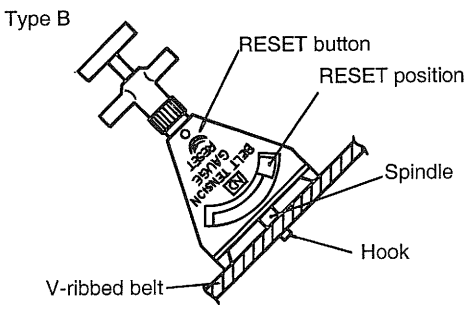

ECA9980D

ADJUSTING THE ALTERNATOR BELT

⚠ *CAUTION*

If the belt is too loose, it will cause noise or sudden wear.
If the belt is too tight, the engine coolant pump bearing or the alternator can get damaged.

1. Loosen the alternator nut "A" and the tension adjuster lock bolt "B".
2. Using the tension adjuster bolt, adjust the belt tension to the specification.
3. Tighten the adjuster lock bolt "B".
4. Tighten the alternator nut "A".
5. Check the tension or the deflection of belt, and readjust if necessary.

Tightening torque

Alternator support bolt and nut :

20-25 Nm (200-250 kg.cm, 14-18 lb.ft)

Alternator lock bolt B :

12-15 Nm (120-150 kg.cm, 9-11 lb.ft)

Alternator brace mounting bolt :

20-27 Nm (200-270 kg.cm, 15-20 lb.ft)

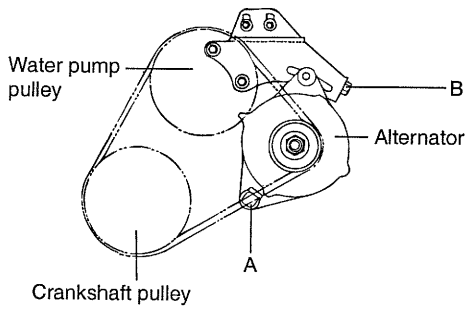

EDKA010C

CYLINDER BLOCK

CYLINDER BLOCK

COMPONENTS ECKB1000

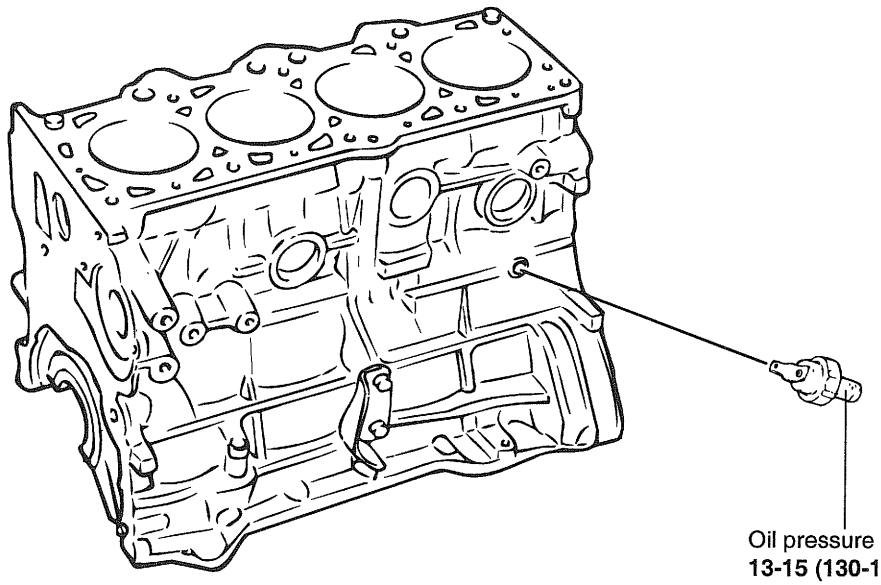

TORQUE : Nm (kg.cm, lb.ft)

V5EM104B

DISASSEMBLY ECKB1100

1. Remove the cylinder head, timing belt, front case, flywheel, pistons and crankshaft.
2. Remove the oil pressure switch.

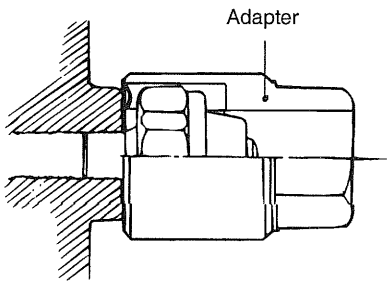

EDDA008A

INSPECTION ECKB1200

1. Check the engine block for scores, rust and corrosion. Also check for cracks or any other defects. Replace the block if defective.

2. Using a straight edge and feeler gauge, check the top surface of the block for warpage. Make sure that the surface is free from gasket chips or other foreign material.

Standard : 0.03 mm (0.0012 in.) or less

Limit : 0.1 mm (0.0039 in.) or less

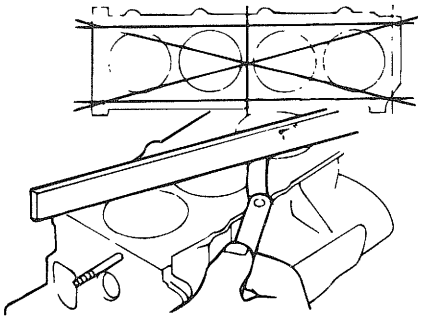

ECA9450B

3. Measure the cylinder bore with a cylinder gauge at three levels in the direction of A and B. If the cylinder bores show more than the specified out-of round or taper, or if the cylinder walls are badly scuffed or scored, the cylinder block should be rebored and honed. Now oversize pistons and rings must be fitted. The value of measuring points are as shown.

Cylinder I.D : 82 mm (3.228 in.)

Cylinder I.D taper : 0.01 mm (0.0004 in.) or less

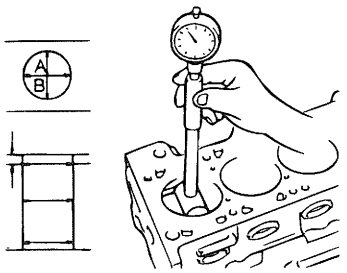

EDDA085B

4. If a cylinder ridge exists, cut away with a ridge reamer.

5. Oversize pistons are available in four sizes.

Piston service size and mark mm (in.)
0.25 (0.010) O.S. : 0.25
0.50 (0.020) O.S. : 0.50
0.75 (0.030) O.S. : 0.75
1.00 (0.039) O.S. : 1.00

6. When boring the cylinder bore to the oversize, maintain the specified clearance between the oversize piston and the bore, and make sure that all pistons used are the same oversize.

7. The standard measurment of the piston outside diameter is taken 47 mm (1.85 in.) from the top land of the piston.

Piston - to - cylinder clearance (To set limits to new parts) :

0.02 - 0.04 mm (0.0008 - 0.0016 in.)

8. For used parts, it is acceptable if the maximum clearance is 85μm or less.

ENGINE MOUNTS

COMPONENTS ECNC1300

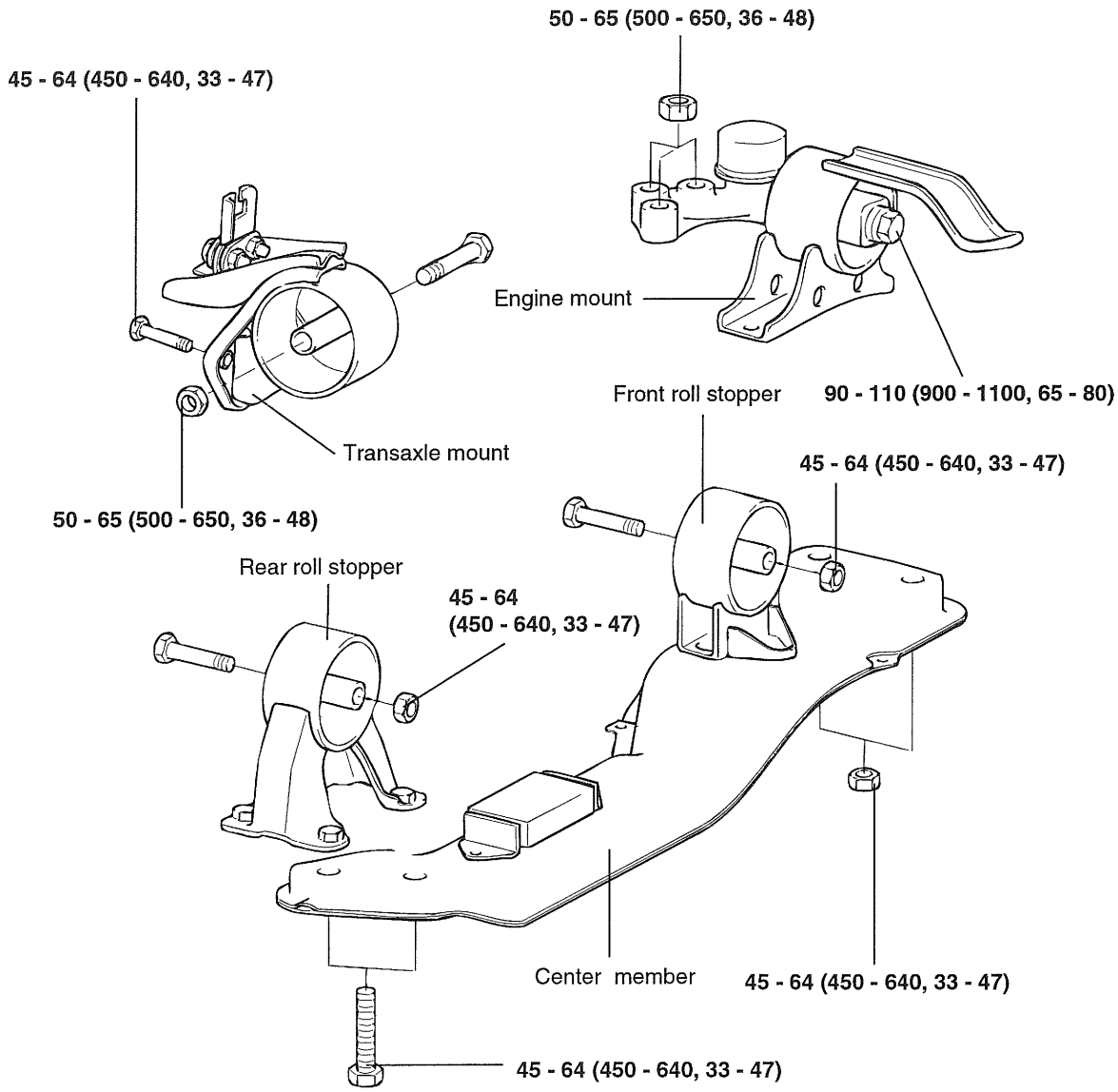

TORQUE : Nm (kg.cm, lb.ft)

EDNB002A

REMOVAL ECNC1400

1. Attach an engine hoist to the engine hooks, and raise the engine just enough so that there is no pressure on the insulators.

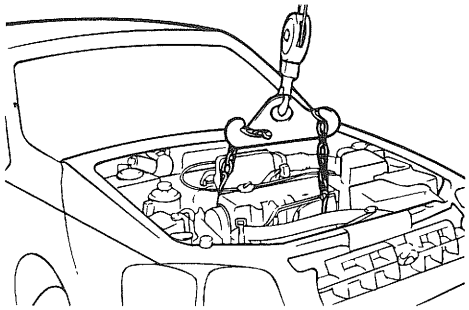

ECDA012A

ENGINE MOUNTING

1. Remove the engine mounting insulator bolts.
2. Remove the engine mounting bracket from the engine.

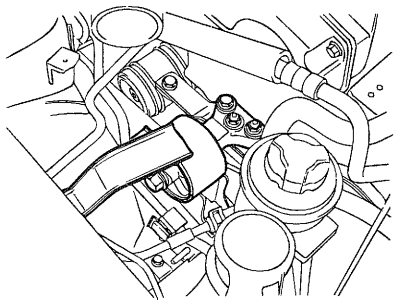

KDNB001B

TRANSMISSION MOUNTING

1. For vehicles with a 5-speed manual transmission, remove the select control valve.
2. Remove the transmission mounting bolt.

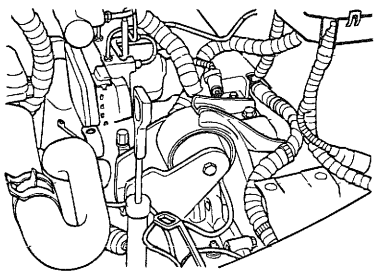

KDNB002B

3. Detach the cap from inside the right fender shield. Remove the transmission mounting bolts.
4. Remove the transmission bracket.

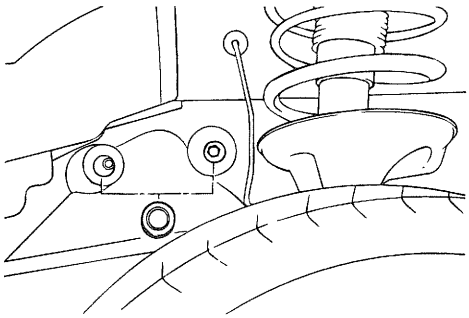

ECKA020B

FRONT ROLL STOPPER

1. Remove the front roll stopper bracket from the center member.

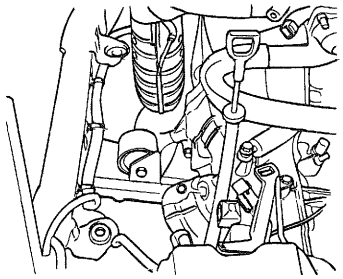

KDNB002C

REAR ROLL STOPPER

1. Remove the rear roll stopper from the center member.

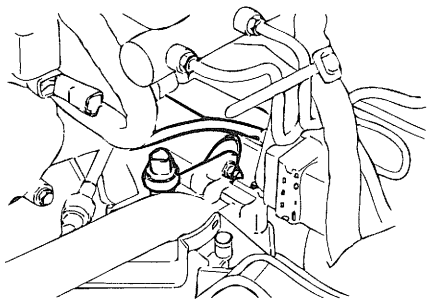

KDNB002D

ENGIN E AND TRANSAXLE ASSEMBLY

REMOVAL ECNC1600

1. Remove the battery.
2. Detach the air cleaner.

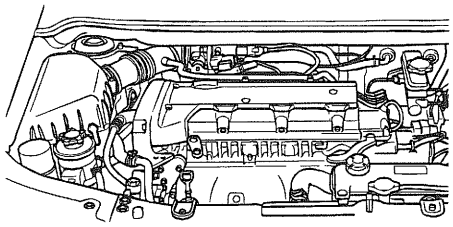

KDNB003C

3. Disconnect the connectors for the backup lamp switch and engine harness.
4. For vehicles with a 5-speed manual transmission, disconnect the select control valve connector.
5. Disconnect the connectors for the alternator harness and the oil pressure gauge wiring.
6. Drain the engine coolant.

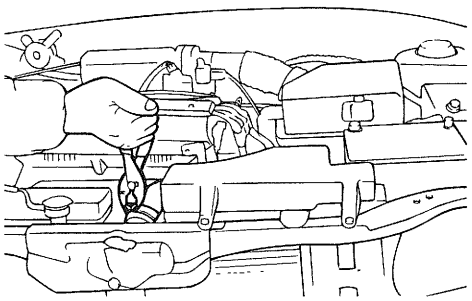

EDDA016B

NOTE

When disconnecting hoses, make identification marks to ensule they are reconnected correctly.

CAUTION

Be careful not to spill oil or fluid from hoses. Plug the openings to prevent foreign material from entering.

7. Disconnect the radiator upper and lower hoses on the engine side, then remove the radiator assembly.
8. Disconnect the engine ground.
9. Disconnect the brake booster vacum hose.
10. Remove the main fuel line, the return and vapor hoses from the engine side.
11. Disconnect the heater hoses (inlet and outlet) on the engine side.
12. Disconnect the accelerator cable at the engine side.
13. For vehicles with manual transmission, remove the control cable from the transmission.
14. For vehicles with automatic transmission, remove the control cable from the transmission.
15. Disconncet the speedometer cable from the transmission.
16. Disconncet the air conditioner compressor from the mounting bracket.

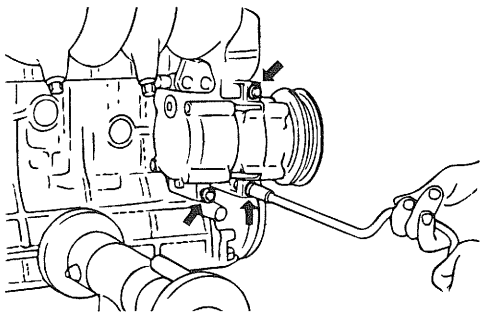

EDDA016C

17. Jack up the vehicle.
18. Drain the transmission oil (or fluid).

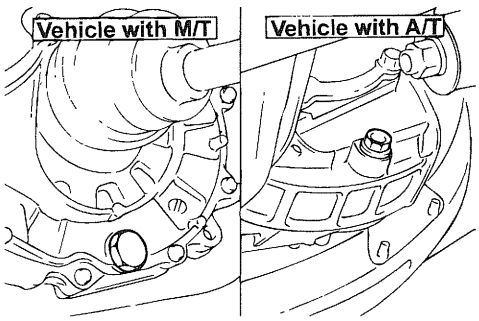

EDDA016D

19. Disconnect the front exhaust pipe from the manifold.

NOTE

Use wire to suspend the exhaust pipe from the bottom of the vehicle.

20. For vehicles with manual transmission, remove the shift control rod and extension rod.

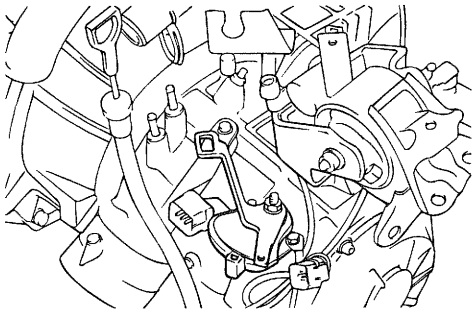

ECKA020G

21. Remove the lower arm ball joint bolts and the stabilizer bar at the point where it is mounted to the lower arm.

22. Remove the drive shafts from the transmission case.

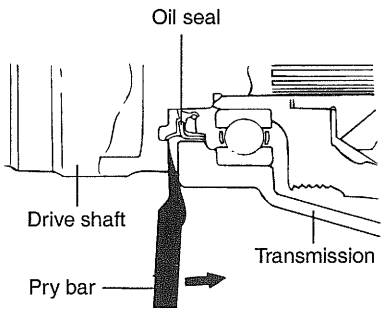

EDDA016E

⚠ ***CAUTION***

- ***Plug the axle holes of the transmission case to prevent entry of foreign material.***
- ***Install new circlips on the drive shafts when reassembling.***

23. Hang the lower arm and drive shaft from the body with wire.

24. Attach a chains or cables to the engine. Use an engine hoist or a chain hoist to slightly raise the engine (enough to support the engine's weight while processing with the following steps).

25. Remove the front roll stopper.

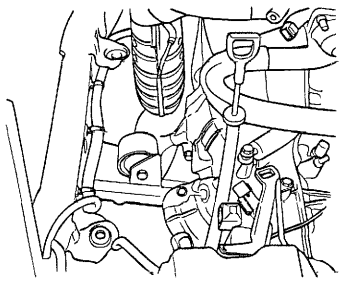

KDNB002C

26. Separate the rear roll stopper.

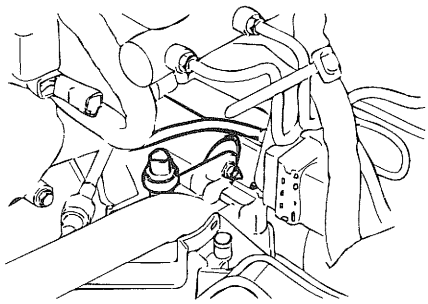

KDNB002D

27. Remove the engine mounting insulator bolts.

28. Remove the engine mounting bracket from the engine.

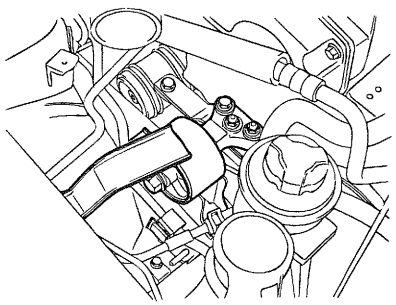

KDNB001B

29. Slowly raise the engine (to the extent that the weight of the engine and transmission assembly is not applied to the mounting portions) and temporarily hold it in the raised position.

⚠ ***CAUTION***

Check that all cables, hoses, harnesses, connectors etc. are disconnected from the engine.

30. Remove the caps from the inside of the right fender shield and remove the transaxle mount bracket bolts.

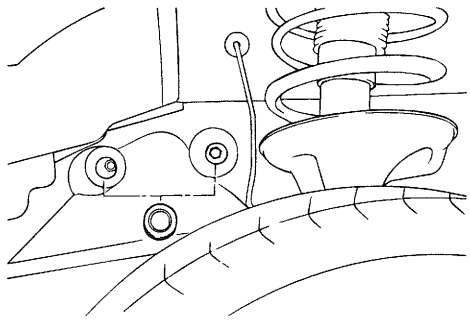

ECKA020B

31. While directing the transmission side downward, lift the engine and transmission assembly up and out of the vehicles.

MAIN MOVING SYSTEM

CAM SHAFT

COMPONENTS ECNC1700

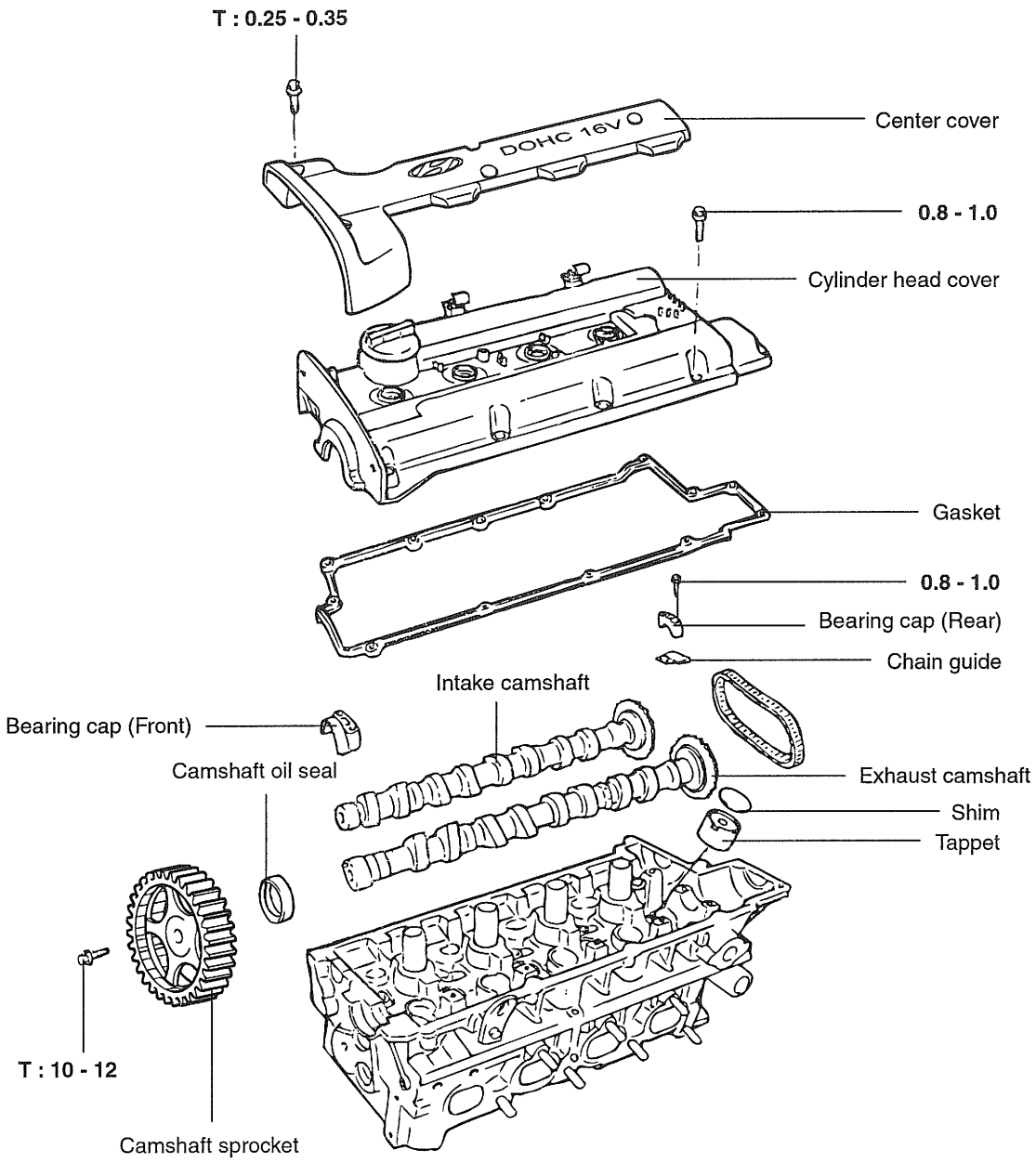

TORQUE : Nm (kg.cm,lb.ft)

EDNB004A

DISASSEMBLY ECKB1800

1. Disconnect the breather hose and the P.C.V. hose.
2. Remove the coolant pump pulley and crankshaft pulley.

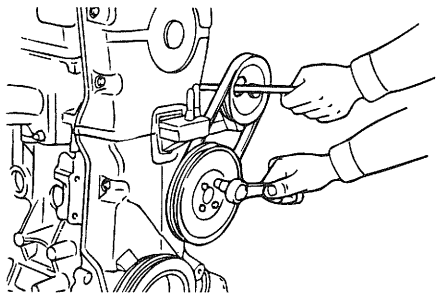

EDDA019A

3. Remove the timing belt cover.
4. Loosen the timing belt tensioner pulley and temporarily secure it.
5. Remove the timing belt from the camshaft sprocket.
6. Loosen the center cover bolts and then remove the center cover.
7. Remove the ignition coil assembly.
8. Loosen the cylinder head cover bolts and then remove the cylinder head cover.

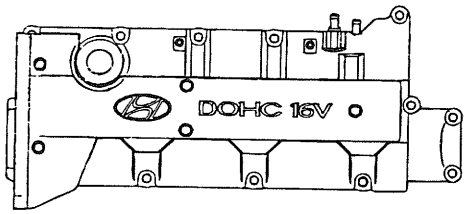

EDKB444C

9. Remove the camshaft sprocket.
10. Remove the camshaft bearing caps and timing chain.

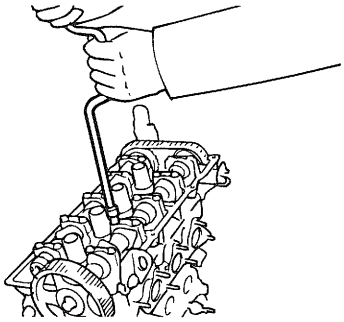

EDDA019C

11. Remove the camshaft.
12. Remove the mechanical tappets and shims.

NOTE

Arrange the mechanical tapets and shims in correct order.

INSPECTION ECKB1900

CAMSHAFT

1. Check the camshaft journals for wear. If the journals are badly worn, replace the camshaft.
2. Check the cam lobes for damage. If the lobe is damaged or worn excessively, replace the camshaft.

Cam height

[Standard value]

Intake : 44.820 mm (1.7646 in.)

Exhaust : 44.720 mm (1.7606 in.)

[Limit]

Intake : 44.720 mm (1.7606 in.)

Exhaust : 44.620 mm (1.7567 in.)

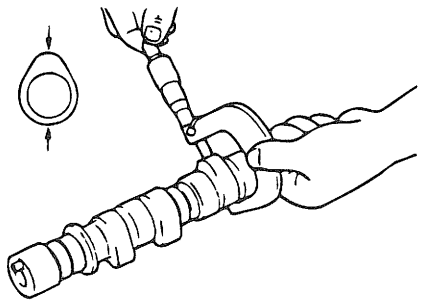

KDDA001D

3. Check the cam surface for abnormal wear or damage, and replace if necessary.
4. Check each bearing for damage. If the bearing surface is excessively damaged, replace the cylinder head assembly or camshaft bearing cap, as necessary.

Camshaft end play : 0.1 - 0.2 mm (0.004 - 0.008 in.)

CAMSHAFT OIL SEAL

1. Check the lips for wear. If the lip threads are worn, replace.
2. Check the oil seal lip contacting surface of the camshaft. If it is worn, replace the camshaft.

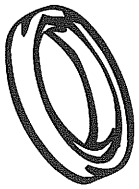

V5EM202A

MLA (MECHANICAL LASH ADJUSTER) ECNC2000

VALVE CLEARANCE INSPECTION AND ADJUSTMENT

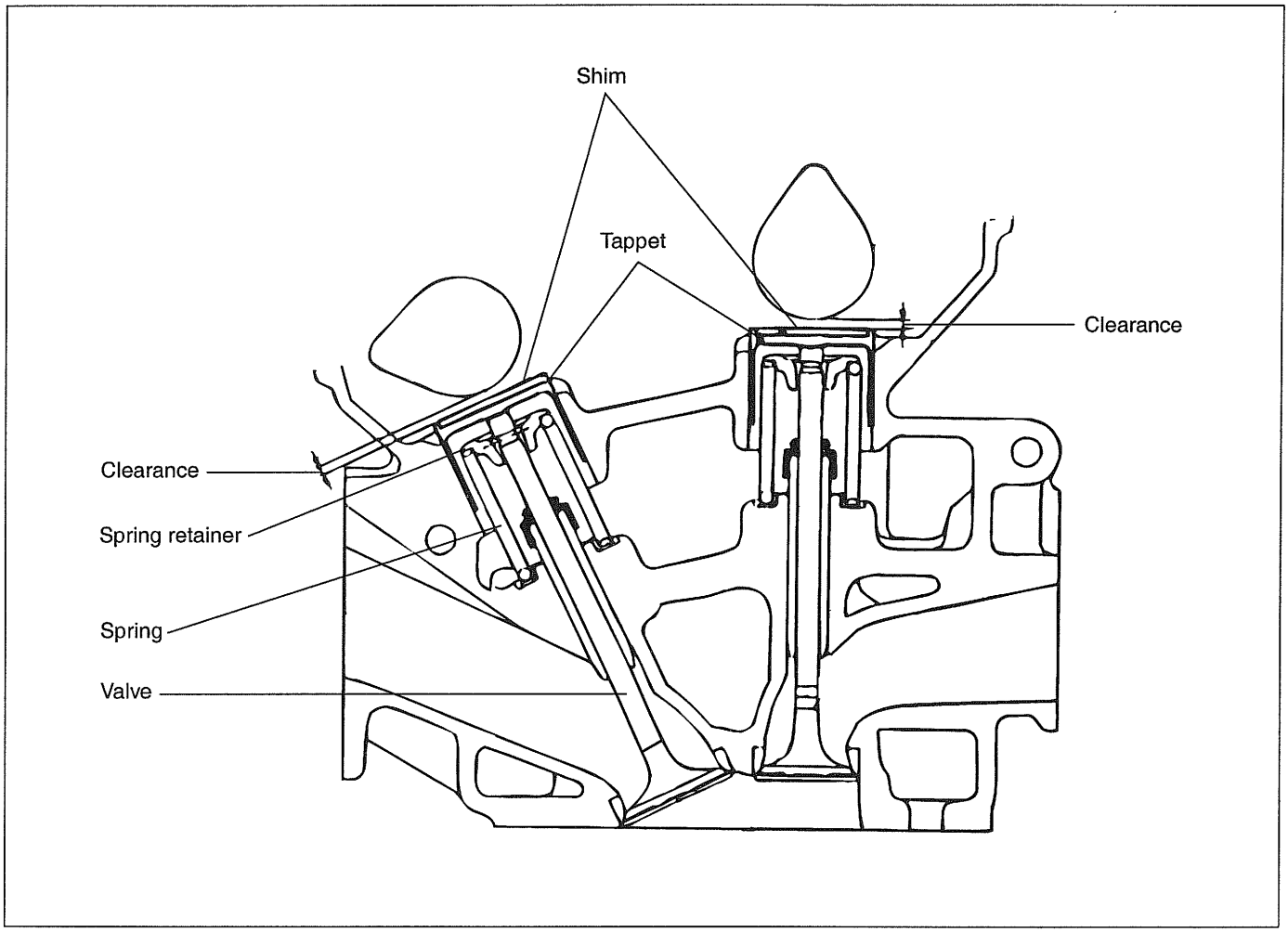

EDKB888A

NOTE

Inspect and adjust the valve clearance when the engine is cold (Engine coolant temperature : 20°C) and cylinder head is installed on the cylinder block.

1. Remove the engine cover.
2. Remove oil filler cap.

3. Remove the center cover bolts and then remove the center cover.

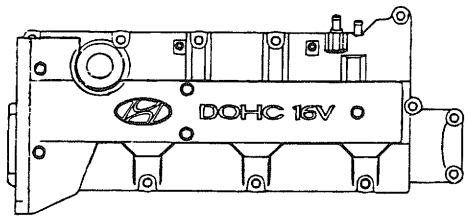

EDKB444C

4. Remove the upper timing belt cover

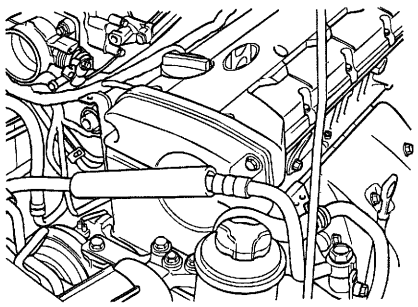

KDNB001C

a. Loosen the upper timing belt cover bolts and then remove the cover.

5. Remove the cylinder head cover.
   a. Disconnect the spark plug cables and do not pull on the spark plug cables by force.

NOTE

Pulling on or bending the cables may damage the conductor inside.

   b. Disconnect the P.C.V. hose and the breather hose from the cylinder head cover.
   c. Disconnect the accelerater cable from the cylinder head cover.
   d. Loosen the cylinder head cover bolts and then remove the cover and gasket.

6. Set No.1 cylinder to TDC/ compression.
   a. Turn the crankshaft pulley and align its groove with the timing mark "T" of the lower timing belt cover.

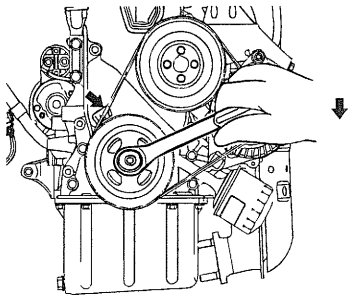

EDKB222A

   b. Check that the hole of the camshaft timing pulley is aligned with the timing mark of the bearing cap. If not, turn the crankshaft one revolution (360°)

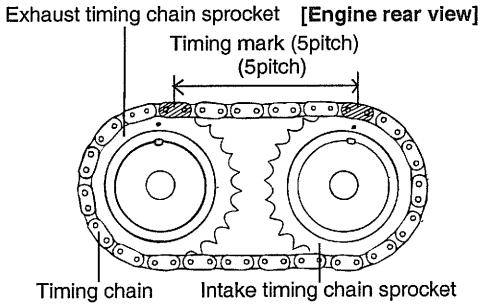

EDKA030B

7. Inspect the valve clearance.
   a. Check only the valves indicated as shown. [No.1 cylinder : TDC/Compression] measure the valve clearance
      - Using a thickness gauge, mesure the clearance between the tappet shim and the base circle of camshaft.
      - Record the out-of-specification valve clearance measurements. They will be used later to determine the required replacement adjusting shim.

Valve clearance (Engine coolant temperature : 20°C)

[Specification]

Intake : 0.20mm (0.0079 in.)

Exhaust : 0.28mm (0.0110 in.)

[Limit]

Intake : 0.12 - 0.28 mm (0.0047 - 0.0110 in.)

Exhaust : 0.20 - 0.36 mm (0.0079 - 0.0142 in.)

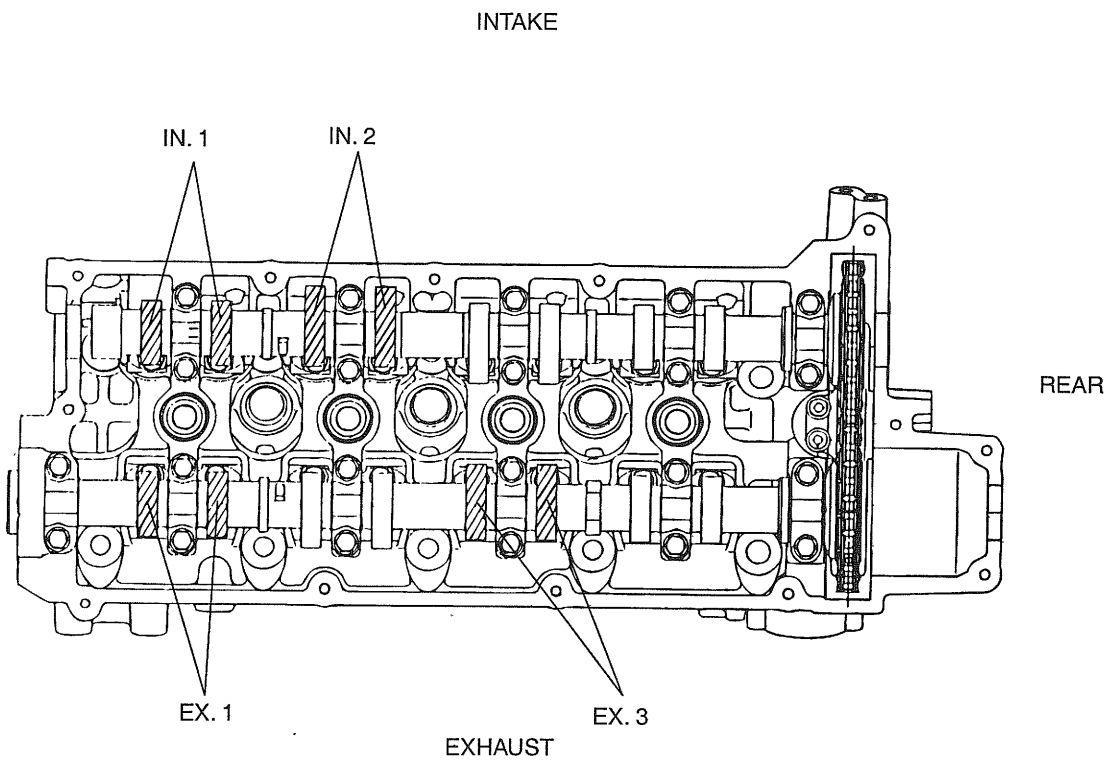

ADJUSTING VALVE AT NO. 1 TOP DEAD CENTER

EDKB888B

b. Turn the crankshaft pulley one revolution (360°) and align the groove with timing mark "T" of the lower timing belt cover.
c. Check only the valves indicated as shown. [NO.4 cylinder : TDC/compression]. Measure the valve clearance. (See procedure in step (1))

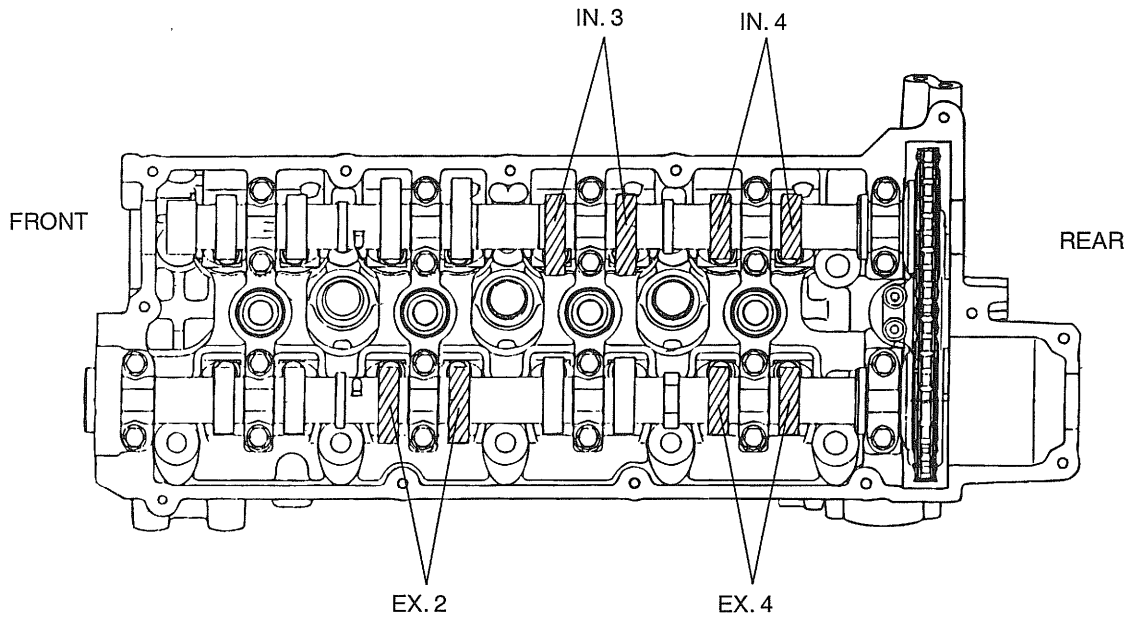

EXHAUST

ADJUSTING VALVE AT NO. 4 TOP DEAD CENTER

EDKB888C

8. Adjust the intake and exhaust valve clearance.
   a. Turn the crankshaft so that the cam lobe of the camshaft on the adjusting valve is upward.

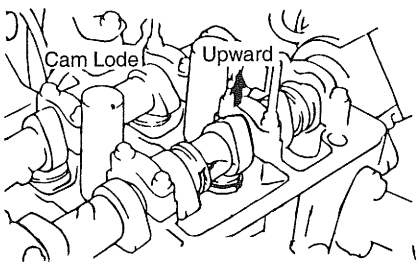

EDKB889A

   b. Using the special tool (09220 - 2D000), press down the valve lifter and place the stopper between the camshaft and valve lifter and remove the special tool.

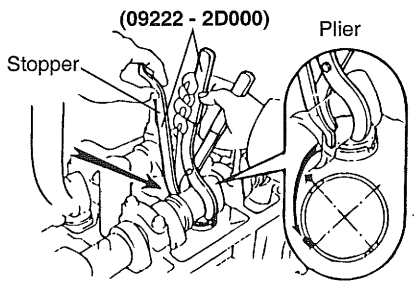

EDKB889B

c. Remove the adjusting shim with a small screw driver and magnet.

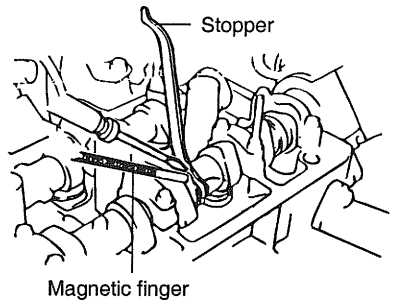

EDKB889C

d. Measure the thickness of the removed shim using a micrometer.

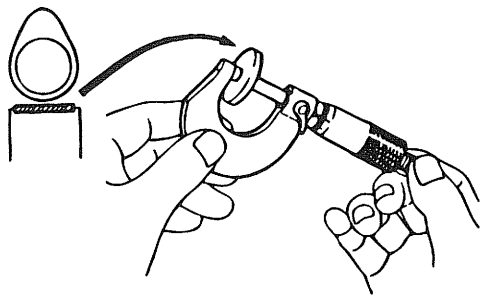

EDKB889D

e. Caculate the thickness of a new shim so that the valve clearance comes within the specified value.

Valve clearance (Engine coolant temperature : 20°C)

T : Thickness of removed shim

A : Measured valve clearance

N : Thickness of new shim

Intake : N = T + [A - 0.20 mm (0.0079 in.)]

Exhaust : N = T + [A - 0.28 mm (0.0110 in.)]

f. Select a new shim with a thickness as close as possible to the caculated value. [Refer to the Adjusting shim selection chart]

NOTE

Shims are available in 20 size increments of 0.04 mm (0.0016 in.) from 2.00 mm (0.079 in.) to 2.76 mm (0.1087 in.)

g. Place a new adjusting shim on the valve lifter.
h. Using the special tool (09220 - 2D000), press down the valve lifter and remove the stopper.
i. Recheck the valve clearance.

Valve clearance (Engine coolant temperature : 20°C)

[Specification]

Intake : 0.20 mm (0.0079 in.)

Exhaust : 0.28 mm (0.0110 in.)

[Limit] (After adjusting valve clearance)

Intake : 0.17 - 0.23 mm (0.0067 - 0.0091 in.)

Exhaust : 0.25 - 0.31 mm (0.0098 - 0.0122 in.)

Adjusting Shim Selection Chart (Intake)

| Measured clearance mm (in.) \ Installed shim thickness mm (in.) | | 2.00 (0.0787) | 2.02 (0.0795) | 2.04 (0.0803) | 2.06 (0.0811) | 2.08 (0.0819) | 2.10 (0.0827) | 2.11 (0.0831) | 2.12 (0.0835) | 2.13 (0.0839) | 2.14 (0.0843) | 2.15 (0.0846) | 2.16 (0.0850) | 2.17 (0.0854) | 2.18 (0.0858) | 2.19 (0.0862) | 2.20 (0.0866) | 2.21 (0.0870) | 2.22 (0.0874) | 2.23 (0.0878) | 2.24 (0.0882) | 2.25 (0.0886) | 2.26 (0.0890) | 2.27 (0.0894) | 2.28 (0.0898) | 2.29 (0.0902) | 2.30 (0.0906) | 2.31 (0.0909) | 2.32 (0.0913) | 2.33 (0.0917) | 2.34 (0.0921) | 2.35 (0.0925) | 2.36 (0.0929) | 2.37 (0.0933) | 2.38 (0.0937) | 2.39 (0.0941) | 2.40 (0.0945) | 2.41 (0.0949) | 2.42 (0.0953) | 2.43 (0.0957) | 2.44 (0.0961) | 2.45 (0.0965) | 2.46 (0.0969) | 2.47 (0.0972) | 2.48 (0.0976) | 2.49 (0.0980) | 2.50 (0.0984) | 2.51 (0.0988) | 2.52 (0.0992) | 2.53 (0.0996) | 2.54 (0.1000) | 2.55 (0.1008) | 2.58 (0.1016) | 2.6 (0.1024) | 2.62 (0.1031) | 2.64 (0.1039) | 2.66 (0.1047) | 2.68 (0.1055) | 2.70 (0.1063) | 2.72 (0.1071) | 2.74 (0.1079) | 2.76 (0.1087) |
|---|---|---

Adjusting Shim Selection Chart (Exhaust)

| Measured clearance mm (in.) \ Installed shim thickness mm (in.) | | 2.00 (0.0787) | 2.02 (0.0796) | 2.04 (0.0803) | 2.06 (0.0811) | 2.08 (0.0819) | 2.10 (0.0827) | 2.11 (0.0831) | 2.12 (0.0835) | 2.13 (0.0839) | 2.14 (0.0843) | 2.15 (0.0846) | 2.16 (0.0850) | 2.17 (0.0854) | 2.18 (0.0858) | 2.19 (0.0862) | 2.20 (0.0866) | 2.21 (0.0870) | 2.22 (0.0874) | 2.23 (0.0878) | 2.24 (0.0882) | 2.25 (0.0886) | 2.26 (0.0890) | 2.27 (0.0894) | 2.28 (0.0898) | 2.29 (0.0902) | 2.30 (0.0906) | 2.31 (0.0909) | 2.32 (0.0913) | 2.33 (0.0917) | 2.34 (0.0921) | 2.35 (0.0925) | 2.36 (0.0929) | 2.37 (0.0933) | 2.38 (0.0937) | 2.39 (0.0941) | 2.40 (0.0945) | 2.41 (0.0949) | 2.42 (0.0953) | 2.43 (0.0957) | 2.44 (0.0961) | 2.45 (0.0965) | 2.46 (0.0969) | 2.47 (0.0972) | 2.48 (0.0976) | 2.49 (0.0980) | 2.50 (0.0984) | 2.51 (0.0988) | 2.52 (0.0992) | 2.53 (0.0996) | 2.54 (0.1000) | 2.56 (0.1008) | 2.58 (0.1016) | 2.6 (0.1024) | 2.62 (0.1031) | 2.64 (0.1039) | 2.66 (0.1047) | 2.68 (0.1055) | 2.70 (0.1063) | 2.72 (0.1071) | 2.74 (0.1079) | 2.76 (0.1087) |
|---|---|---

INSTALLATION ECNC2100

1. Remove any sealant material on the cylinder head and cover.
2. Apply sealant (Loctite NO. 5999) to the cylinder head cover.

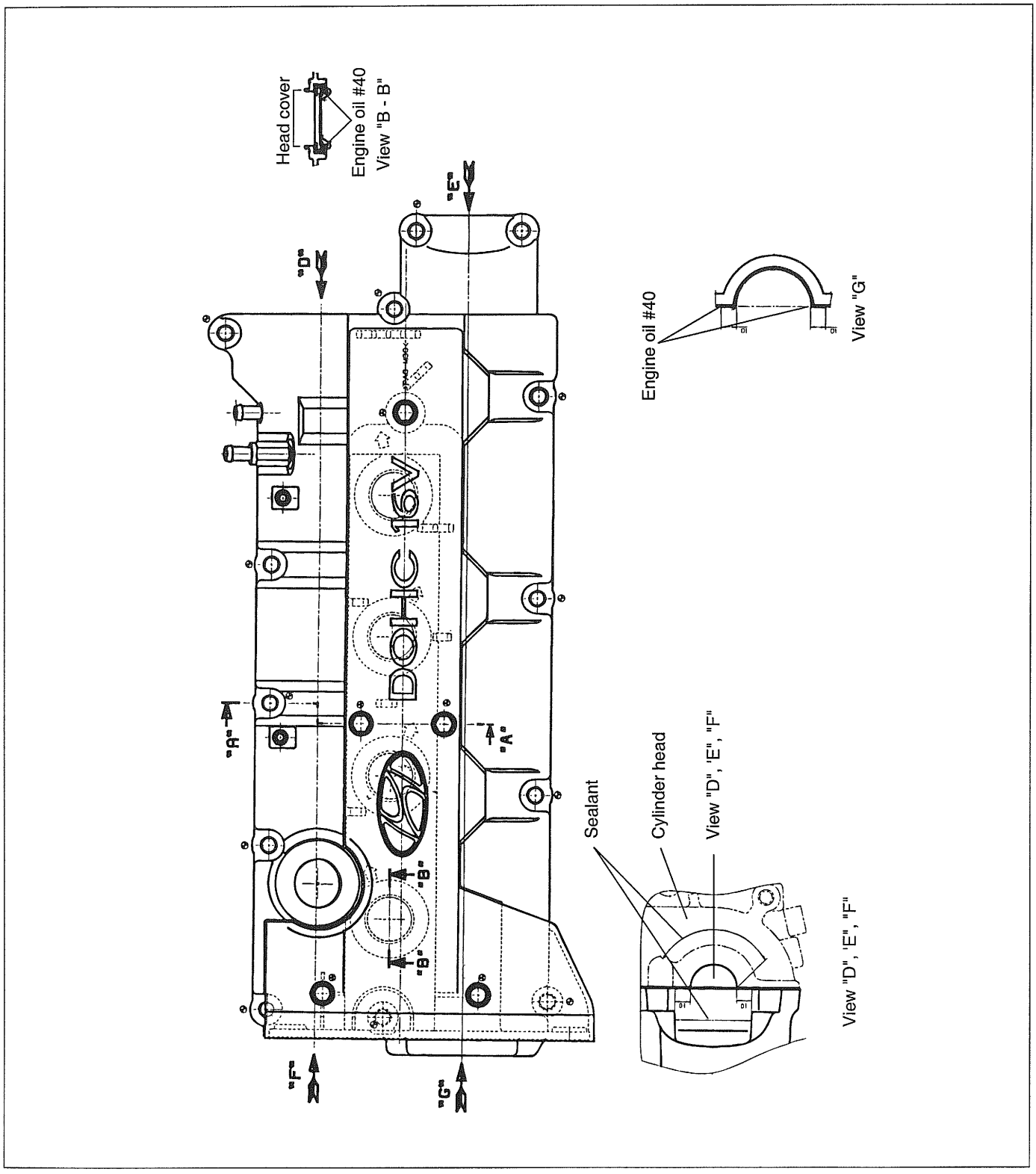

EDKB889E

3. Install the cylinder head cover.

Cylinder head cover : 8 - 10 Nm (80 - 100 kg.cm, 6 - 7 lb.ft)

4. Connect the accelerater cable.
5. Connect the PCV hose and the breather hose to the cylinder head cover.
6. Connect the spark plug calbes to the spark plugs.
7. Install the upper timing belt cover with the four bolts.

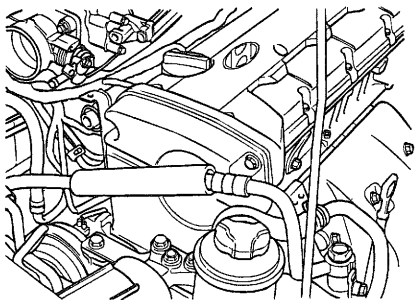

KDNB001C

8. Install the center cover with the five bolts.

Center cover : 2.5 - 3.5 Nm (25 - 35 kg.cm, 2 - 3 lb.ft)

9. Install the oil filler cap.

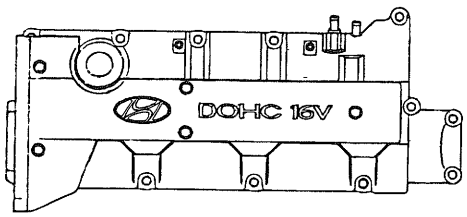

EDKB444C

10. Install the engine cover.

CHAIN GUIDE

1. Check the chain guide for bend, crack or damage, Replace if necessary.
2. Check the rubber part of chain guide for abnormal wear.
   Replace if necessary.

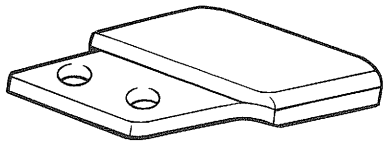

EDKB888F

TIMING CHAIN

Check the bushing and plate of the timing chain for wear. Replace if it is worn severely.

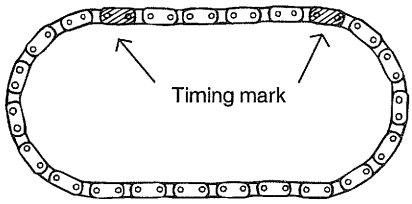

EDKA030A

REASSEMBLY ECKB2200

1. Install the mechanical tappets and shims.

   NOTE

   The mechanical tappets and shims must be reinstalled in their original position.

2. Align the camshaft timing chain with the intake timing chain sprocket and exhaust timing chain sprocket as shown.

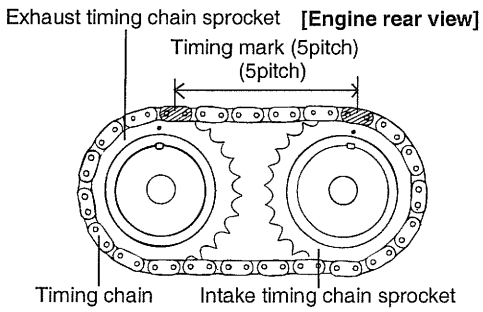

EDKA030B

3. Install the camshaft after lubricating the camshaft journal with engine oil.

4. Install the bearing caps. The markings on the caps are for intake/exhaust identification.
   I : Intake camshaft
   E : Exhaust camshaft

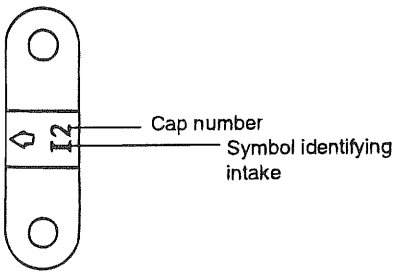

EDDA021C

5. Tighten the bearing caps to the specified torque in two or three steps as shown.

Tightening torque

Bearing cap bolt :

14 - 15 Nm (140 - 150 kg.cm, 10 - 11 lb.ft)

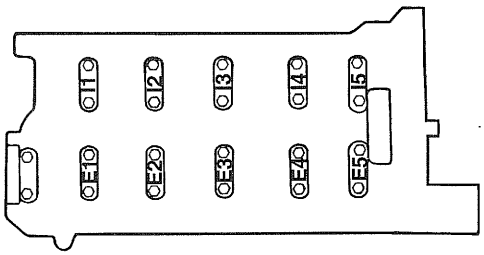

EDKB444D

6. Using the special tool, camshaft oil seal installer (09221-21000), press the camshaft oil seal. Be sure to apply engine oil to the oil seal lips. Insert the oil seal along the camshaft front end and install by driving the installer with a hammer to 8.5 mm (0.3346 in.) depth from the front end face of the camshaft.

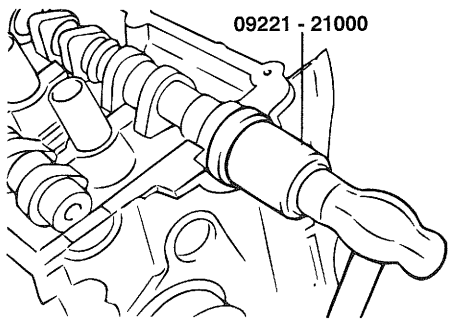

EDDA021E

7. Install the camshaft sprocket to the specified torque.

Tightening torque

Camshaft sprocket bolt :

100 - 120 Nm (1000 - 1200 kg.cm, 74 - 89 lb.ft)

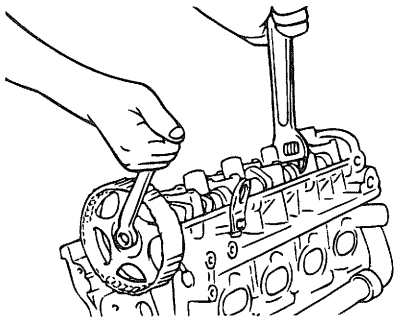

EDDA021F

8. Align the camshaft sprocket and crankshaft sprocket timing marks. Place the piston of the NO. 1 cylinder to top dead center on the compression stroke.

9. Install the cylinder head cover.

Tightening torque

Cylinder head cover bolts :

8 - 10 Nm (80 - 100 kg.cm, 6 - 7 lb.ft)

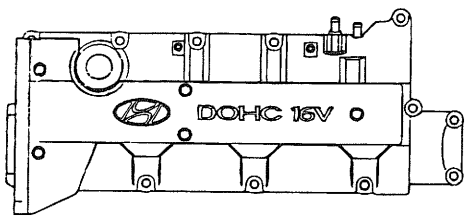

EDKB444C

10. Install the spark plug cables, ignition coil assembly and cylinder head center cover.

11. Install the timing belt and then tighten the timing belt tensioner pylley.

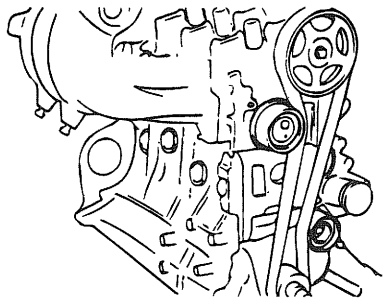

KDDA001K

12. Install the timing belt cover.

Timing belt cover :
8 - 10 Nm (80 - 100 kg.cm, 6 - 7 lb.ft)

13. Install the coolant pump pulley and crankshaft pulley.

CRANK SHAFT

COMPONENTS ECKB2300

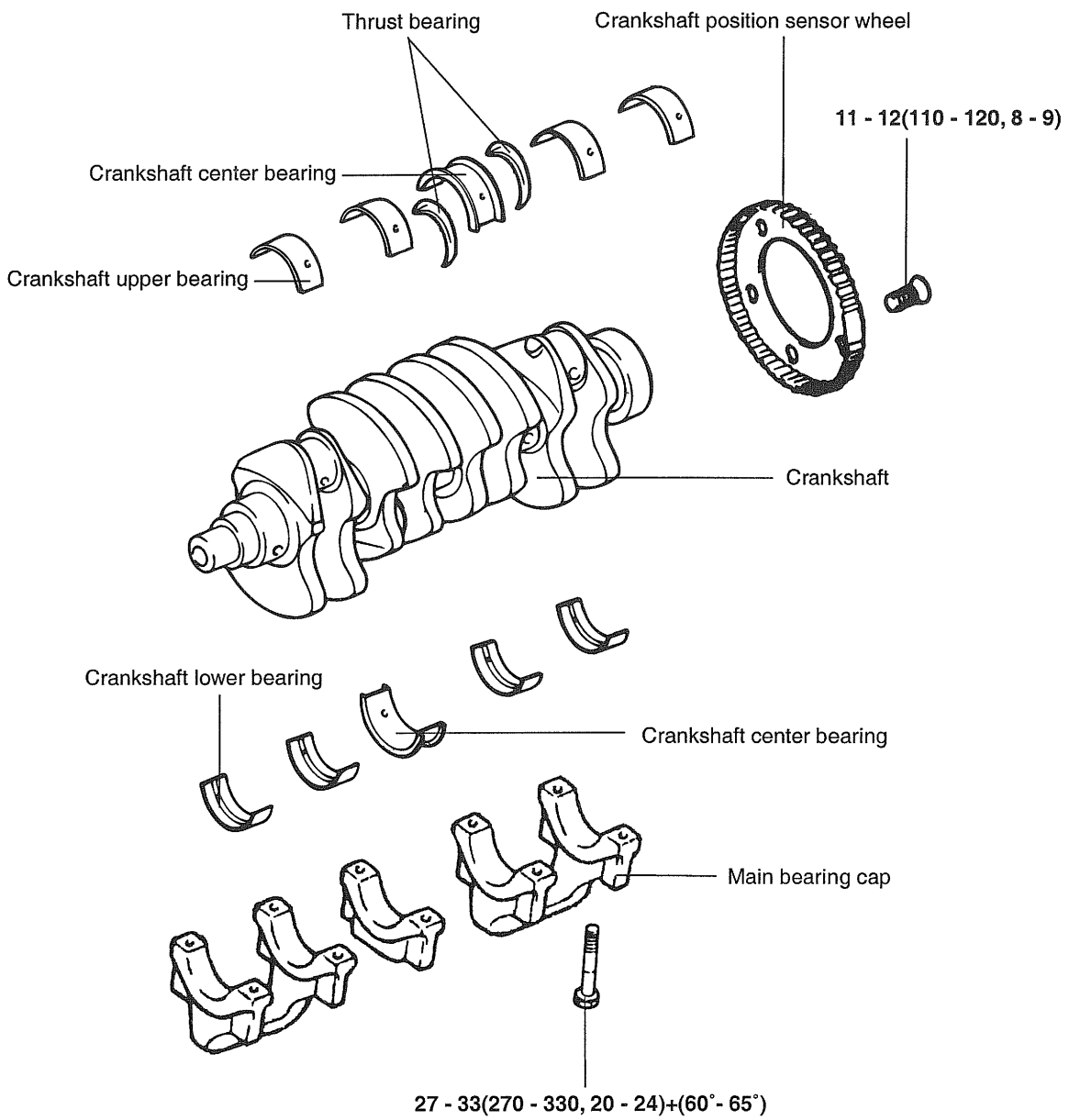

TORQUE : Nm (kg.cm, lb.ft)

EDKB444E

DISASSEMBLY ECKB2400

1. Remove the timing belt, front case, flywheel, cylinder head assembly and oil pan. For details, refer to the respective chapters.
2. Remove the rear plate and the rear oil seal.
3. Remove the connecting rod caps.

   NOTE

   Put the main bearing caps in order of their original position and direction for easier reassembly.

4. Remove the main bearing caps and remove crankshaft cramkshaft. Keep the bearings in order by cap number.
5. Remove the crankshaft position sensor wheel.

INSPECTION ECKB2500

CRANKSHAFT

1. Check the crankshaft journals and pins for damage, uneven wear and crack. Also check oil holes for clogging. Correct or replace any defective part.
2. Inspect the crankshaft journal for taper and out - of - round.

Standard value

Crankshaft journal O.D. : 57 mm (2.2440 in.)

Crankshaft pin O.D. : 45 mm (1.7717 in.)

Crankshaft journal, pin out-of-round and taper
0.01 mm : (0.0004 in.) or less

MAIN BEARINGS AND CONNECTING ROD BEARINGS

Visually inspect each bearing for peeling, melting, seizure and improper contact. Replace the defective bearings.

OIL CLEARANCE MEASUREMENT

1. Measure the diameter of crankshaft journal and pin.
2. Measure the diameter of crankshaft bore and connecting rod bore.
3. Measure the thickness of crankshaft bearing and connecting rod bearing.
4. Measure the clearance by the value that subtract the diameter of journal and pin and the thickness of bearing from the diameter of bore.

Main bearing oil clearance :

0.028 - 0.048 mm (0.0011 - 0.0019 in.)

Connecting rod bearing oil clearance

(To set limits to new parts) :

0.024 - 0.044 mm (0.0009 - 0.0017 in.)

OIL SEAL

Check front and rear oil seals for damage or worn lips. Replace any defective seal.

BEARING CAPS

After installing the bearing caps, make sure that the crankshaft turns smoothly and the end play is correct. If the end play exceeds the service limit, replace the crankshaft bearing.

Standard value : 0.06 - 0.26 mm (0.0023 - 0.010 in.)

Limit : 0.30 mm (0.0118 in.)

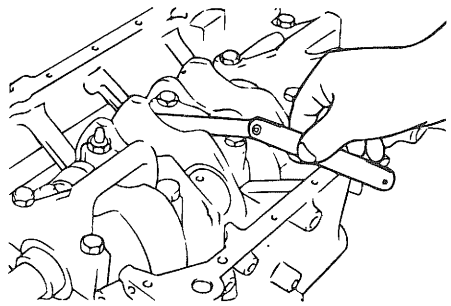

V5EM208A

SENSOR WHEEL

1. Remove the crankshaft sensor wheel.
2. Check the crankshaft sensor wheel for damage, crack and wear. Replace if necessary.
3. Check the clearance between crankshaft sensor wheel and crank position sensor with a depth gauge.

Standard value :

Clearance between crankshaft sensor wheel and crank position sensor :

0.5 - 1.1 mm (0.020 - 0.043 in.)

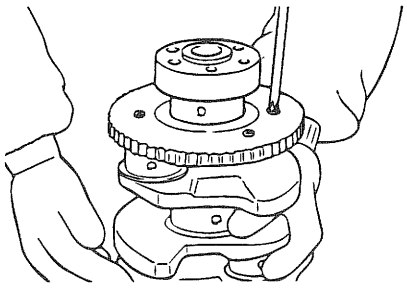

EDDA028C

NOTE

- *Measure the depth of the top of the sensor wheel tooth and the cylinder block mounting surface.*
- *Measure the difference between sensor length and depth.*
- *Sensor length is the distance between the end of sensor and inner point of contacting face.*

REASSEMBLY ECKB2600

1. Install the upper main bearing inserts in the cylinder block.
   When reusing the main bearings, remember to install them by referring to the location marks made when disassembling.
2. Install the crankshaft. Apply engine oil to the journals.
3. Install bearing caps and tighten the cap bolts to the specified torque in the sequence of the center, No.2, No.4 front and rear caps. Cap bolts should be tightened evenly in from 2 to 3 stages before they are tightened to the specified torque. The caps should be installed with the arrow mark directed toward the crank pulley side of engine. Cap numbers must be correct.

Tightening torque

Main bearing cap bolt :

27-33 Nm (270 - 330 kg.cm, 20 - 24lb.ft)+(60° - 65°)

Connecting rod cap bolt :

50-53 Nm (500 - 530 kg.cm, 37 - 39 lb.ft)

4. Make certain that the crankshaft turns freely and has the proper clearance between the center main bearing thrust flange and the connecting rod big end bearing.

Standard value

Crankshaft end play :

0.06 - 0.260 mm (0.0024 - 0.0102)

Connecting rod end play :

0.10 - 0.25 m.m (0.0039 - 0.0098 in.)

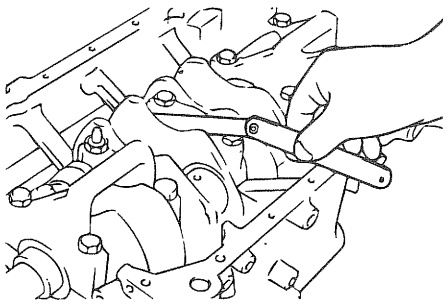

V5EM208A

5. Using the special tool, crankshaft rear oil seal installer (09231 - 21000) as shown, install the oil seal in the crankshaft rear oil seal case. Press fit the oil seal being careful not to align it wrong.

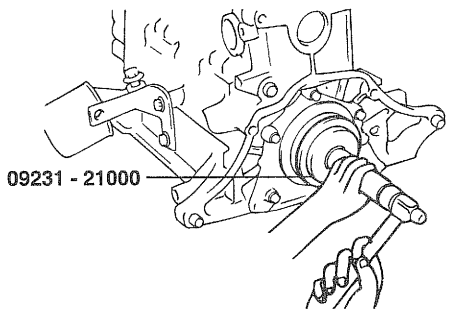

EDDA029B

6. Install the rear plate and tighten the bolts.
7. Install the connecting rod caps.
8. Install the flywheel, front case, oil pan and timing belt. For further details, refer to the respective chapters.

FLY WHEEL

COMPONENTS ECKB2700

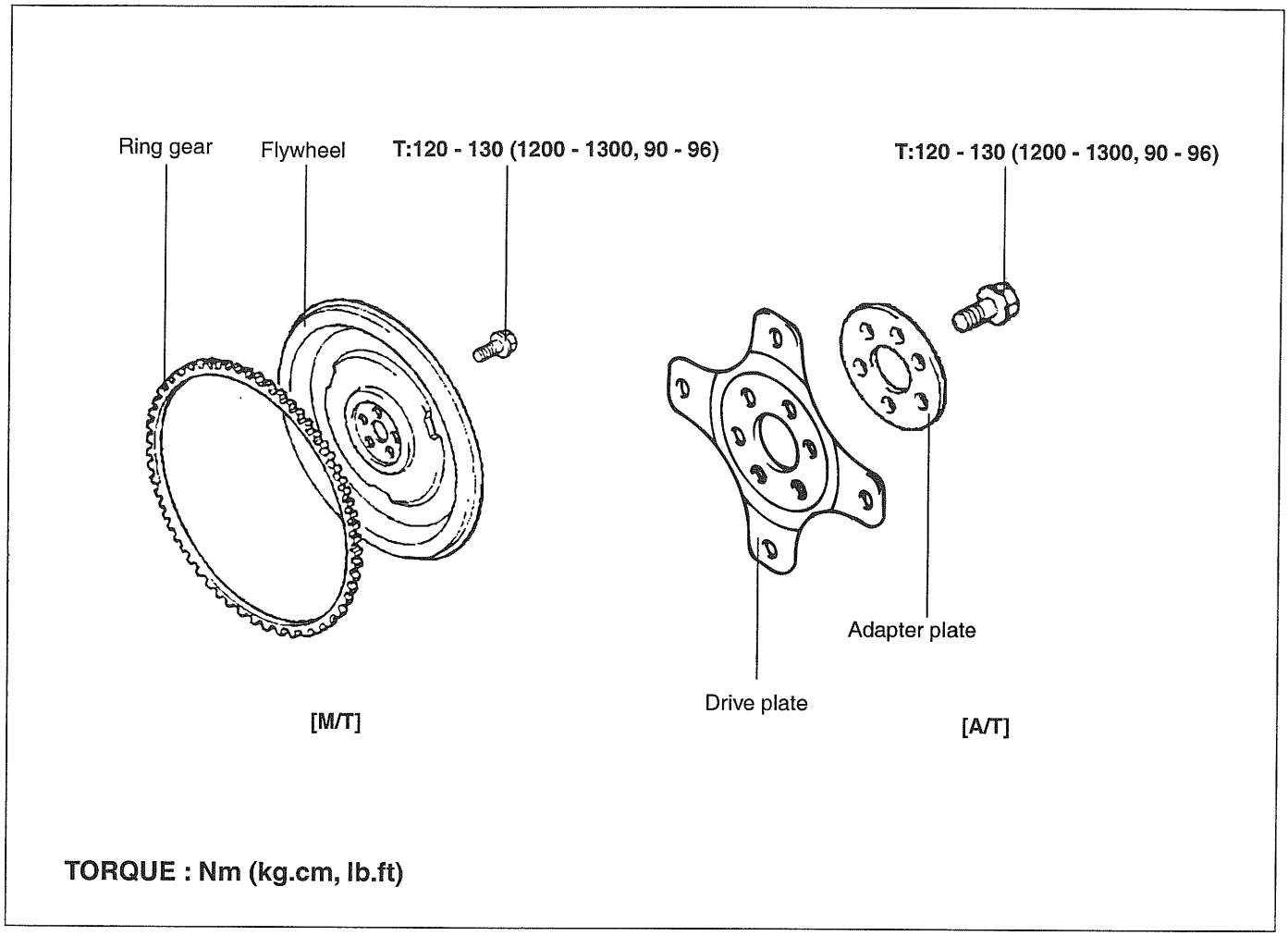

EDKA999B

M/T : Manual Transmission Vehicles
A/T : Automatic Transmission Vehicles

DISASSEMBLY ECKB2800

1. Remove the transmission and clutch.
2. Remove the flywheel.

INSPECTION ECKB2900

1. Check the clutch disc contacting surface of the flywheel for damage and wear. Replace the flywheel if excessively damaged or worn.
2. Check the clutch disc contacting surface of the flywheel for runout.

Standard value

Flywheel run - out : 0.1 mm (0.004 in.)

3. Check the ring gear for damage, crack and wear, and replace if necessary.

REASSEMBLY ECKB3000

Install the flywheel assembly and tighten the bolts to the specified torque.

Tightening torque

Flywheel bolt :

120-130 Nm (12000-1300 kg.cm, 90-96 lb.ft)

PISTON

COMPONENTS ECKB3100

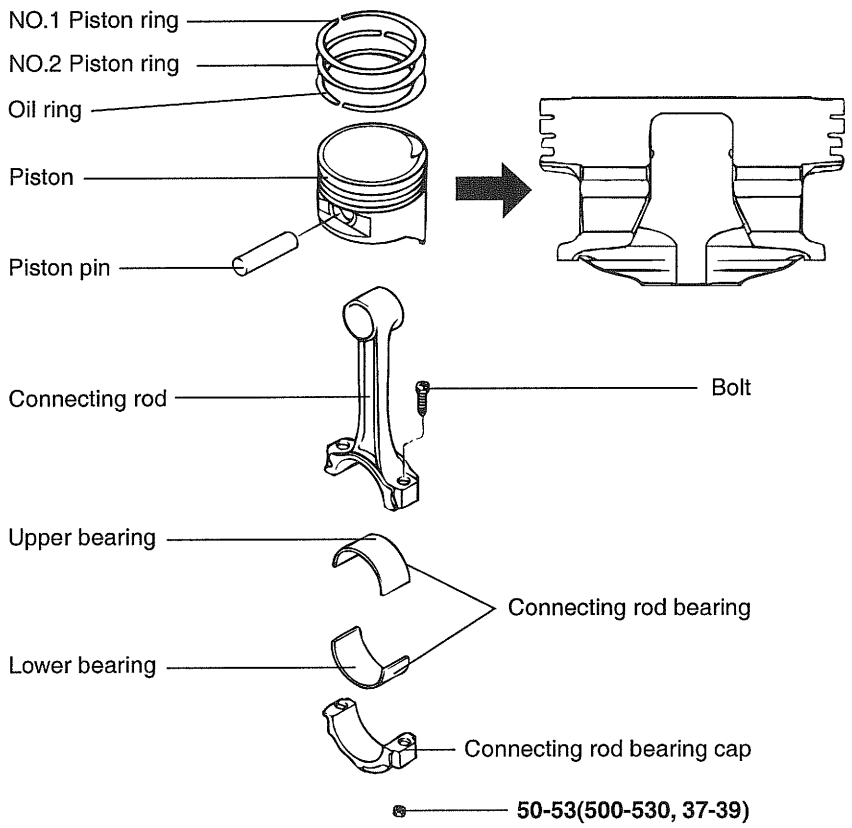

TORQUE : Nm (kg.cm, lb.ft)

EDKA999A

DISASSEMBLY ECKB3200

CONNECTING ROD CAP

⚠ ***CAUTION***

Keep the bearings in order with their corresponding connecting rods (according to cylinder numbers) for proper reassembly.

1. Remove the connecting rod cap bolts, then remove the caps and the big end lower bearing.
2. Push each piston connecting rod assembly toward the top of the cylinder.

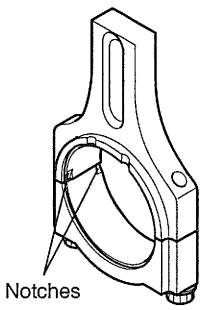

KFW3049A

DISASSEMBLY AND REASSEMLY OF THE PISTON PIN

1. Using the special tools (09234-33001) and (09234-33002), disassemble and reassemble the piston and connecting rod.

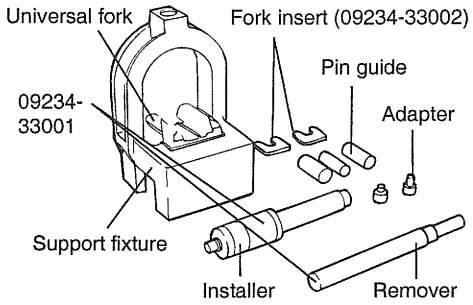

ECA9361A

2. The piston pin is press fit into the rod little end, and the piston floats on the pin.

3. The tool consists of a support fixture with fork inserts, guides, adapters, an installer and a remover. The piston is supported in the support fixture while the pin is being installed or removed. Guides help position the pin as it is installed or removed, while the rod is supported by fork inserts.

4. To remove the pin from the piston, place the piston in the support fixture with the rod resting on the fork inserts. Pass the remove tool through the top of the support fixture and use it to press out the pin.

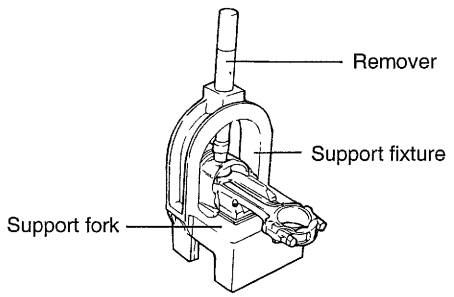

EDA9048A

5. To install a new pin, the proper fork inserts must be in place to support the rod.

6. Position the rod inside the piston. Insert the proper pin guide through one side of the piston and through the rod. Hand tap the pin guide so it is held by the piston. Insert the new pin into the piston from the other side and set the assembly into the support fixture with the pin guide facing down.

NOTE

The pin guide should be centered on the connecting rod through the piston. If assembled correctly, the pin guide will sit exactly under the center of the hole in the tool's arch, and rest evenly on the fork inserts. If the wrong size pin guide is used, the piston and pin will not line up with the support fixture.

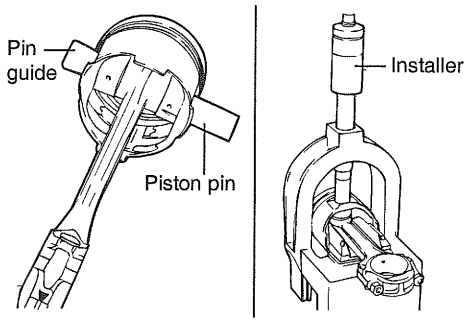

ECA9361C

7. Insert the installer tool through the hole in the arch of the support fixture and use a hydraulic press to force the piston pin through the rod little end. Continue pressing until the pin guide falls free and the installer tool seats against the top of the arch.

CAUTION

Do not exceed 350 - 1350 kgf of force when the installing tool seats against the top of the arch.

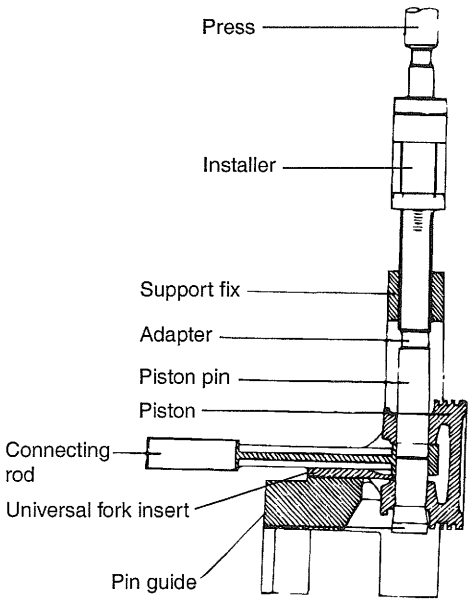

HEW20A55

INSPECTION ECNC3300

PISTONS AND PISTON PINS

1. Check each piston for scuffing, scoring, wear and other defects. Replace any piston that is defective.
2. Check each piston ring for breakage, damage and abnormal wear. Replace the defective rings. When the piston requires replacement, its rings should also be replaced.
3. Check that the piston pin fits in the piston pin hole. Replace any piston and pin assembly that is defective. The piston pin must be smoothly pressed by hand into the pin hole (at room temperature)

PISTONS RINGS

1. Measure the piston ring side clearance. If the measured value exceeds the service limit, insert a new ring in the ring groove to measure the side clearance. If the clearance still exceeds the service limit, replace the piston and rings together. If it is less than the service limit, replace only the piston rings only.

Piston ring side clearance

No. 1 : 0.04-0.08 mm (0.0016-0.0031 in.)

No. 2 : 0.03-0.07 mm (0.0012-0.0028 in.)

Limit

No. 1 : 0.1 mm (0.004 in.)

No. 2 : 0.1 mm (0.004 in.)

2. To measure the piston ring end gap, insert a piston ring into the cylinder bore. Position the ring at right angles to the cylinder wall by gently pressing it down with a piston. Measure the gap with a feeler gauge. If the gap exceeds the service limit, replace the piston ring.

Piston ring end gap

[Standard]

No. 1 : 0.23-0.38 mm (0.0091-0.0150 in.)

No. 2 : 0.45-0.60 mm (0.0177 - 0.0236 in.)

Oil ring : 0.20 - 0.60 mm (0.0079 - 0.0236 in.)

[Limit]

No. 1, 2 oil ring : 1.0 mm (0.039 in.)

3. When replacing the ring without correcting the cylinder bore, check the gap with the ring situated at the low part of cylinder that is less worn out.

PISTON RING SERVICE SIZE AND MARK

Standard	None
0.25 mm (0.010 in.) O.S.	25
0.25 mm (0.010 in.) O.S.	50
0.75 mm (0.030 in.) O.S.	75
1.00 mm (0.039 in.) O.S.	100

NOTE

The mark can be found on the upper side of the ring next to the end.

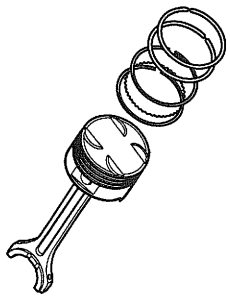

KFW3037C

CONNECTING RODS

1. When the connecting rod cap is installed, make sure that the cylinder numbers match. (marked on rod end cap at disassembly) When a new connecting rod is installed, make sure that the notches holding the bearing in place are on the same side.
2. Replace the connecting rod if it is damaged at either end of the thrust faces. If it has a stratified wear in, or if the surface of the inside diameter of the small end is severely rough, replace the rod.

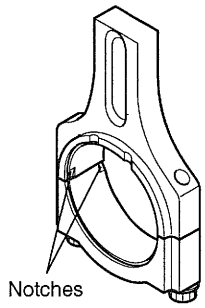

KFW3049A

REASSEMBLY ECNC3400

1. Install the spacer.

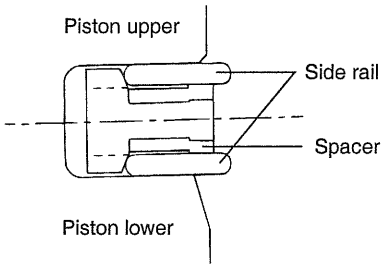

ECA9082A

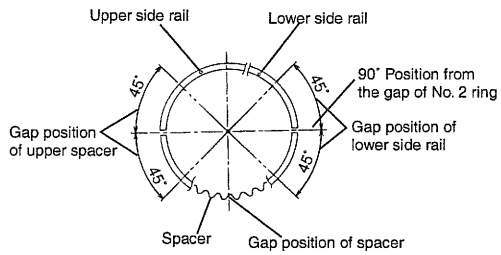

EDJA490A

2. Install the upper side rail. To install the side rail, first put one end of the side rail between the piston ring groove and spacer, hold it firmly, and press down with a finger on the portion to be inserted into the groove (as illustrated).

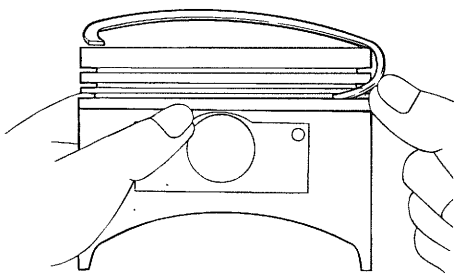

ECA9380B

⚠ ***CAUTION***

Do not use a piston ring expander when installing side rail.

3. Install the lower side rail using the same procedure described in Step 2.

4. Apply engine oil around the piston and piston grooves.

5. Using a piston ring expander, install the No.2 piston ring.

6. Install the No. 1 piston ring.

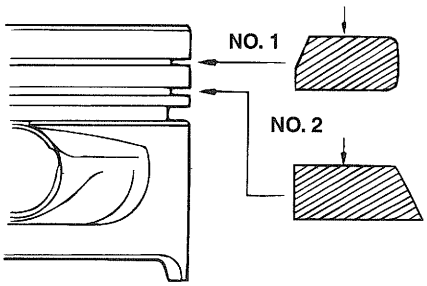

ECKB340A

7. Position each piston ring end gap as far away from its neighboring gaps as possible. Make sure that the gaps are not positioned in the thrust and pin directions.

8. Hold the piston rings firmly with a piston ring compressor as they are inserted into cylinder.

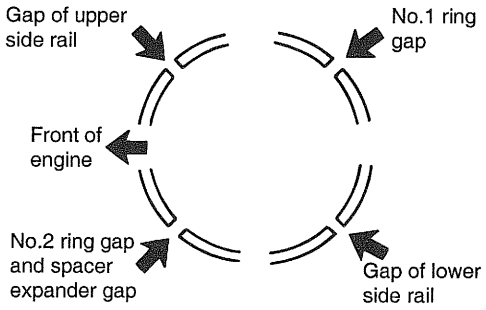

ECA9380D

9. Install the upper main bearings in the cylinder block.

10. Install the lower main bearings in the main bearing caps.

11. Make sure that the front mark of the piston and the front mark (identification mark) of the connecting rod are directed toward the front of the engine.

12. When a new connecting rod is installed, make sure that the notches for holding the bearing in place are on the same side.

13. When assembling, bolts should be fastened by the angle - torque controlled method as the following.

    1) Apply oil to the thread of nuts and spot areas.

    2) Tighten the connecting rod bolt.

Tightening torque

Connecting rod cap nut :

50-53 Nm (500-530 kg.cm, 36-39 lb.ft)

⚠ *CAUTION*

After removing the connecting rod bolt, do not use it again.
When using a new bolt, do not tighten the bolt more than 3 times.

14. Check the connecting rod side clearance.

Connecting rod side clearance
Standard : 0.10-0.25 mm (0.0039-0.0098 in.)
Limit : 0.4 mm (0.0157 in.)

15. Install the oil screen.
16. Install the oil pan.
17. Install the cylinder head.

COOLING SYSTEM

ENGINE COOLANT HOSE/PIPES

COOLING SYSTEM DIAGRAM ECKB3500

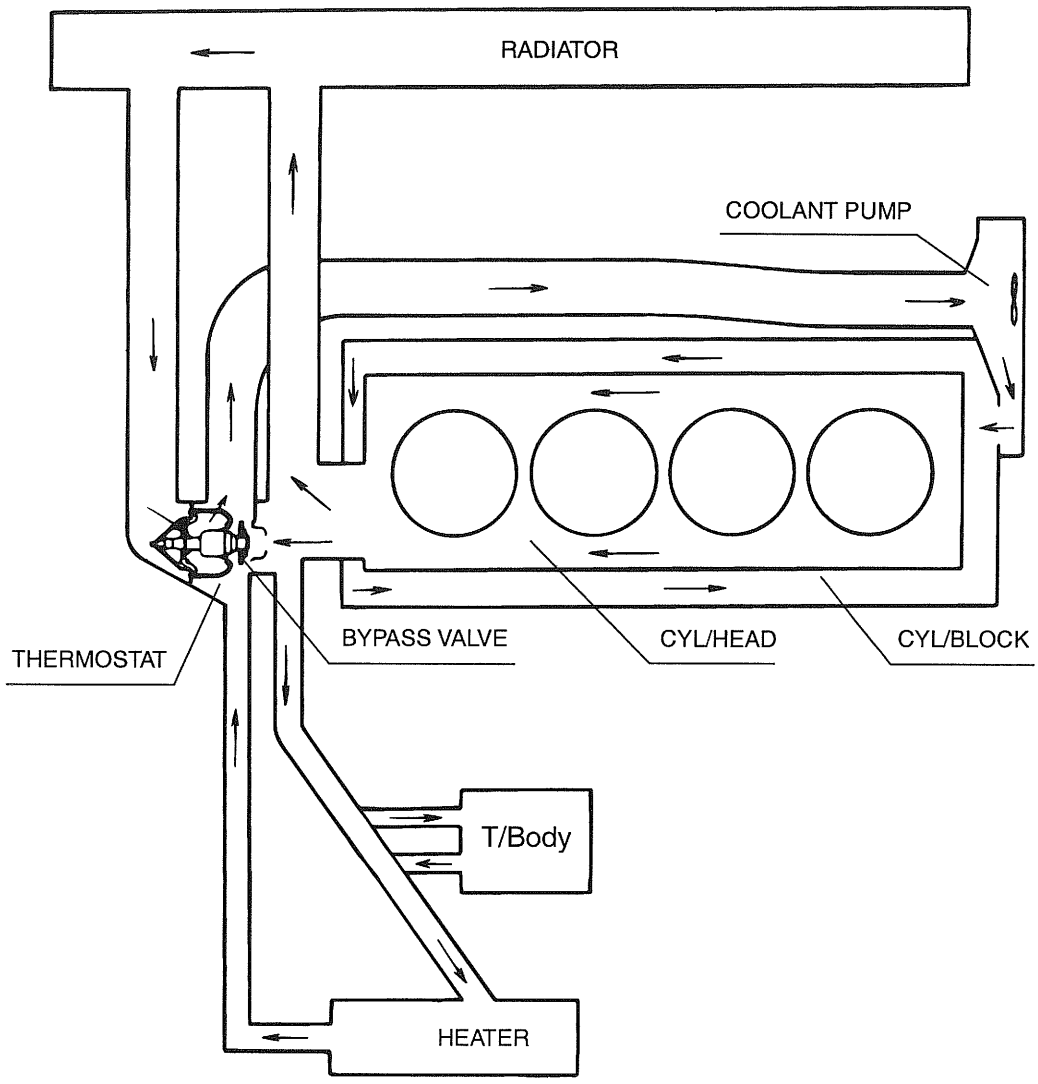

EDKB444F

COMPONENTS ECKB3600

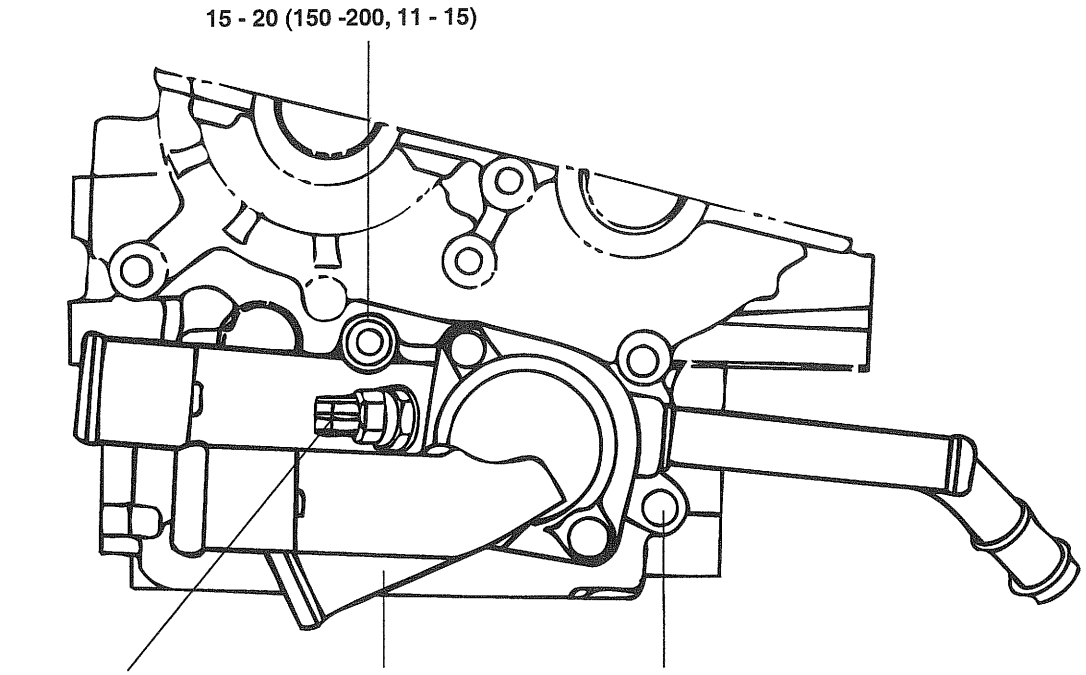

TORQUE : Nm (kg.cm, lb.ft)

EDKA050A

INSPECTION ECKB3700

Check the coolant pipe and hoses for cracks, damage, or restrictions.

Replace if necessary.

REASSEMBLY ECKB3800

Fit an O - ring in the groove provided at the coolant inlet pipe end, wet the O - ring with coolant and insert the coolant inlet pipe.

NOTE

- *Do not apply oil or grease to the coolant pipe O - ring.*
- *Keep the coolant pipe connections free from sand, dust, etc.*
- *Insert the coolant pipe fully into the coolant pump.*
- *Do not reuse O - ring. Replace it with a new one.*

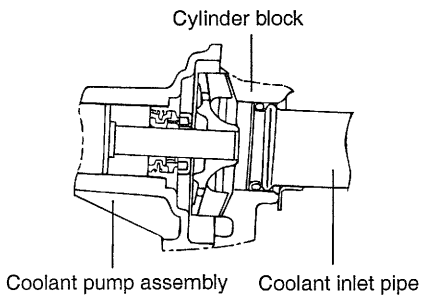

ECKA040A

ENGINE COOLANT PUMP

COMPONENTS ECKB3900

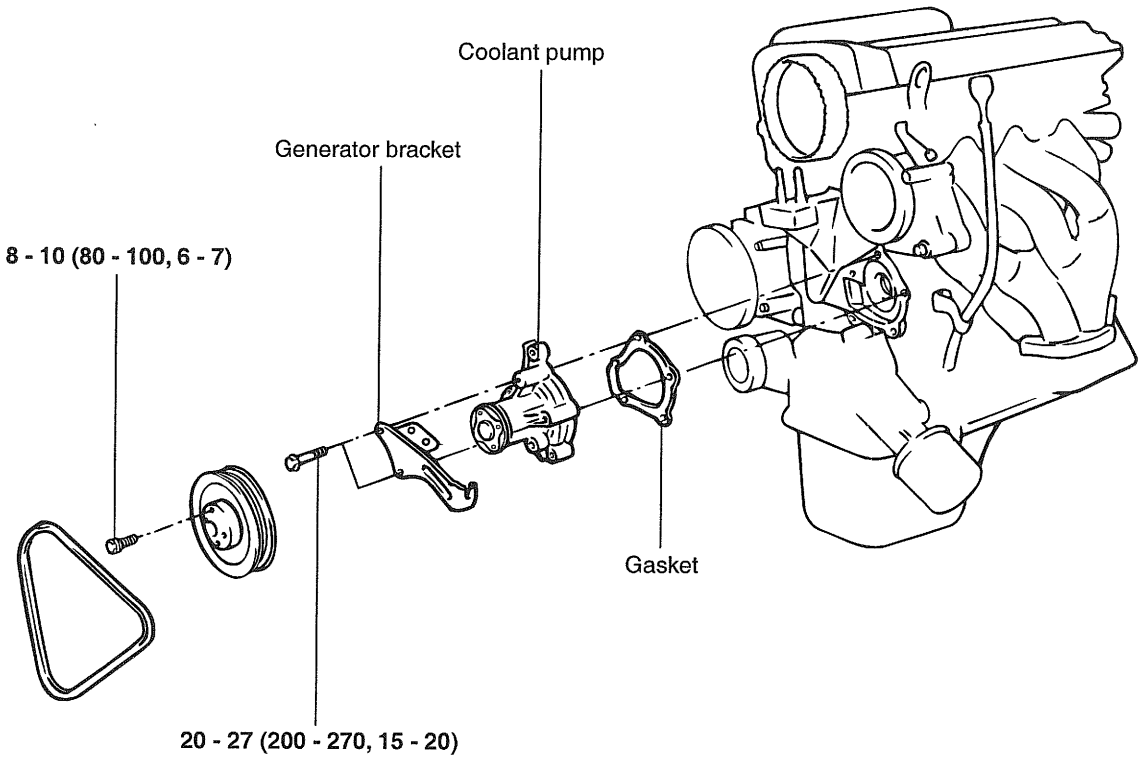

TORQUE : Nm (kg.cm, lb.ft)

EDKB046A

DISASSEMBLY ECKB4000

1. Drain the coolant and disconnect the coolant inlet pipe connection hose from the coolant pump.
2. Remove the drive belt and engine coolant pump pulley.
3. Remove the timing belt covers and the timing belt idler.
4. Remove the coolant pump mounting bolts, then remove the alternator brace.
5. Remove the coolant pump assembly from the cylinder block.

INSPECTION ECKB4100

1. Check each part for cracks, damage or wear, and replace the coolant pump assembly if necessary.
2. Check the bearing for damage, abnormal noise and sluggish rotation, and replace the coolant pump assembly if necessary.
3. Check for coolant leakage. If coolant leaks the seal is defective. Replace the coolant pump assembly.

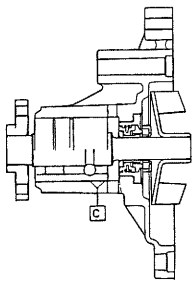

EDKB051A

REASSEMBLY ECKB4200

1. Clean the gasket surfaces of the coolant pump body and the cylinder block.
2. Install a new coolant pump gasket to the coolant pump and tighten the bolts to the specified torque.

Tightening torque

Coolant pump to cylinder block :

20-27 Nm (200-270 kg.cm, 15-20 lb.ft)

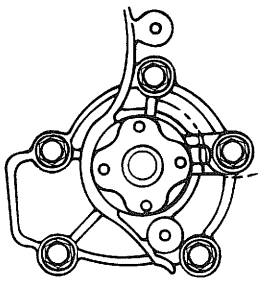

EDKB050B

3. Install the timing tensioner and timing belt. Adjust the timing belt tension.
4. Install the timing belt covers.
5. Install the coolant pump pulley and drive belt, and then adjust the belt tension.
6. Refill the system with clean coolant.
7. Run the engine and check for leaks.

RADIATOR

COMPONENTS ECNC4300

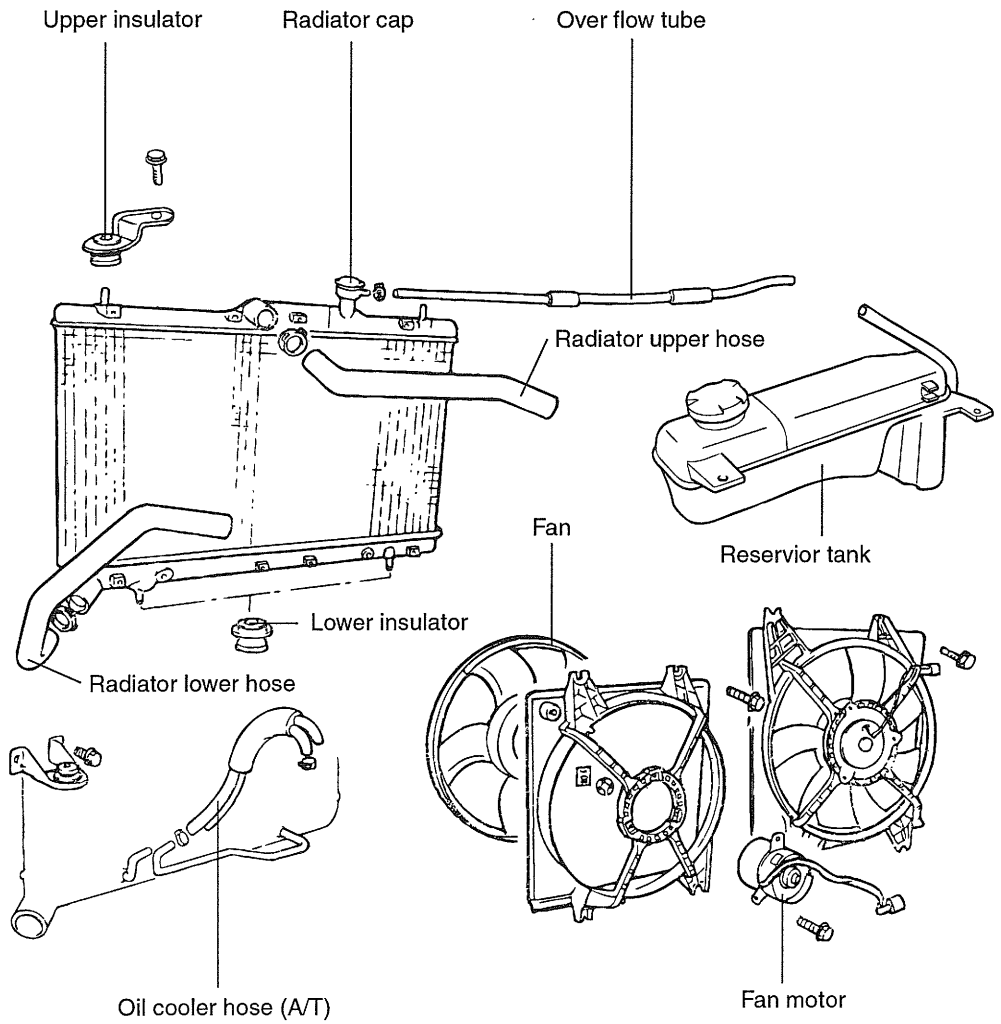

EDNB005A

DISASSEMBLY ECKB4400

1. Disconnect the radiator fan motor connector.
2. Set the temperature control switch to the hot position.

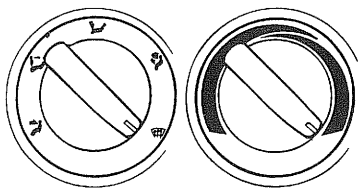

ECDA063A

3. Loosen the radiator drain plug to drain coolant.
4. Disconnect the upper and lower hose and overflow tube.
5. For vehicles with automatic transmission, disconnect the oil cooler hoses from the automatic transmission.

   ⚠ ***CAUTION***

   Plug the ends of the oil cooler hoses and the automatic transmission fittings to prevent transmission fluid from spilling out and foreign material from entering.

6. Remove the radiator mounting bolts.
7. Remove the radiator and the fan motor together.
8. Remove the fan motor from the radiator.

INSPECTION ECKB4500

1. Check the radiator for bent, broken or plugged fins.
2. Check the radiator for corrosion,damage, rust or scale.
3. Check the radiator hoses for crack, damage or deterioration.
4. Check the reservoir tank for damage.
5. Check the radiator cap spring for damage.
6. Test the pressure of the cap using a machine for checking a cooling system.
7. Check the radiator cap seal for crack or damage.

RADIATOR FAN MOTOR

1. Check that the radiator fan rotates when battery voltage is applied to the terminals.

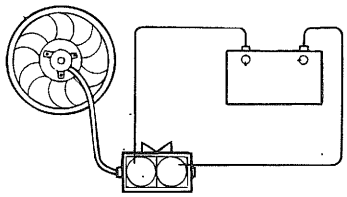

ECDA064A

2. Check that abnormal noises are not produced while the motor is turning.

REASSEMBLY ECKB4600

1. Fill the radiator and reservoir tank with clean coolant mixture.
2. Run the engine until the thermostat opens, and then stop the engine.
3. Remove the radiator cap, and add coolant up to the filler neck of the radiator, and then fill the reservoir tank to the upper level. Replace the radiator cap.
4. Check that there are no leaks from the radiator, hoses or connections.

RADIATOR CAP

COMPONENTS ECKB4700

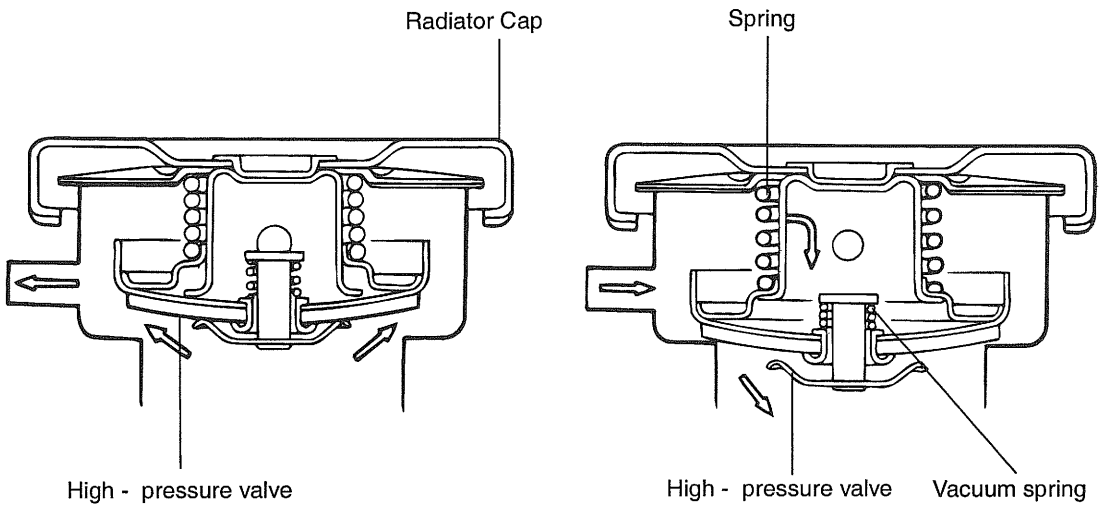

When the pressure is peduced to the specified level [81.4 - 1.8 Kpa (0.83 - 1.1 kg/cm, 11.8 - 15.6 psi)]

When the pressure is peduced to the specified level [-6.86 Kpa (- 0.07 kg/cm, -1.00 psi)]

ECDA066A

INSPECTION ECKB4800

1. Check the radiator cap for damage, cracks and deterioration.

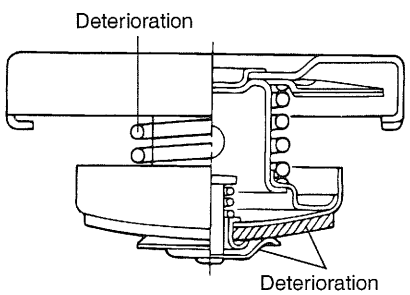

ECDA068A

2. Attach a radiator cap tester to the radiator.
3. Pump the tester until the pointer stabilizes.
4. If the pointer stays constant for 10 sec. at a point exceeding the service limit, the radiator cap is good.

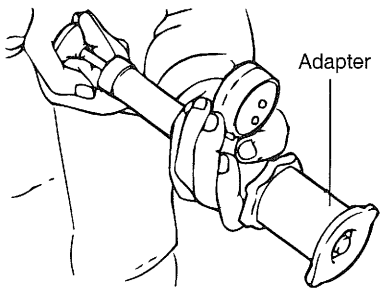

ECDA068B

THERMOSTAT

COMPONENTS ECKB4900

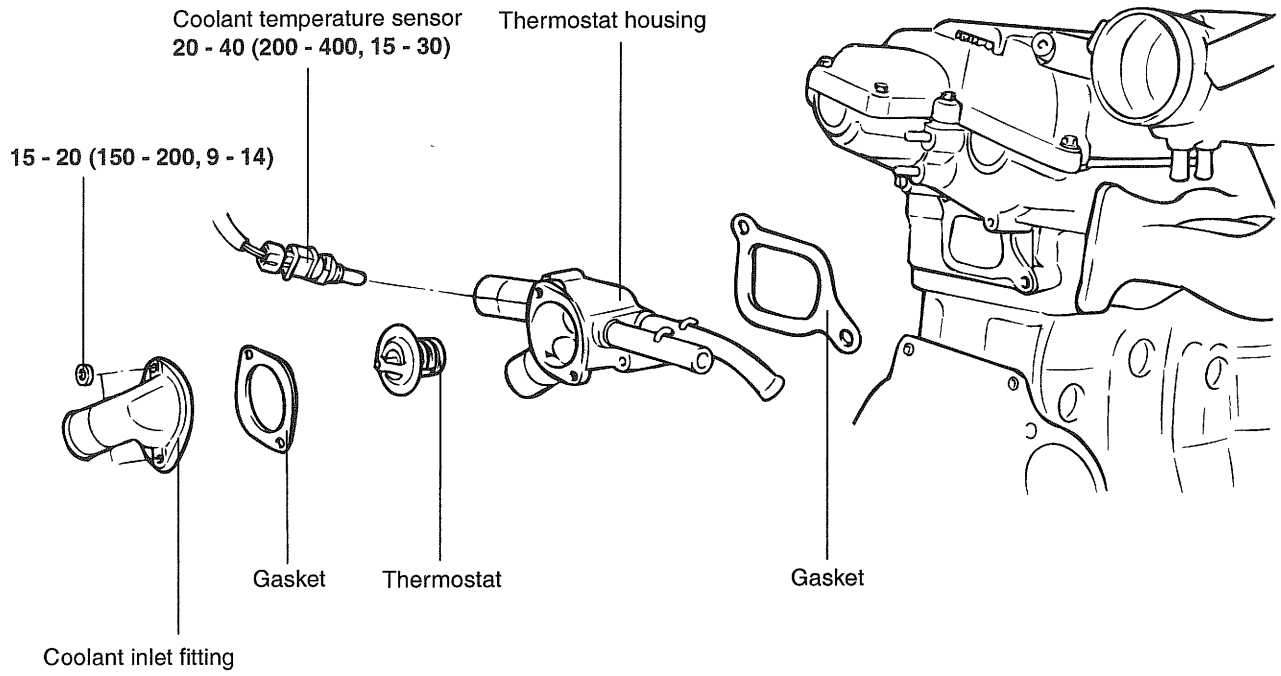

TORQUE : Nm (kg.cm, lb.ft)

ECKB040D

DISASSEMBLY AND INSPECTION ECNC5000

1. Drain the coolant so its level is below thermostat.
2. Remove the inlet fitting and gasket.
3. Remove the thermostat.
4. Immerse thermostat in hot coolant to check proper valve opening temperature. Replace if necessary.

Valve opening temperature : 82 °C(177 °F)

Full opening temperature : 95 °C(205 °F)

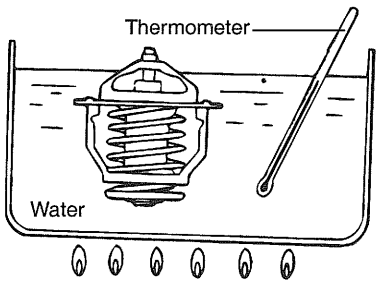

ECDA070A

COOLANT TEMPERATURE SENSOR

1. Heat the sensor by submerging it in hot engine coolant.
2. Check that the resistance is within the specified range.

Resistance

At : 20 °C(68 °F) : 2.31 - 2.59 kΩ

REASSEMBLY ECKB5100

1. Check that the flange of the thermostat is correctly seated in the socket of the thermostat housing.
2. Install a new gasket and the coolant inlet fitting.
3. Refill the system with clean coolant.

Tightening torque

Coolant temperature sensor :

20 - 40 Nm (200 - 400 kg.cm, 15 - 30 lb.ft)

LUBRICATION SYSTEM

OIL PUMP

COMPONENTS ECKB5200

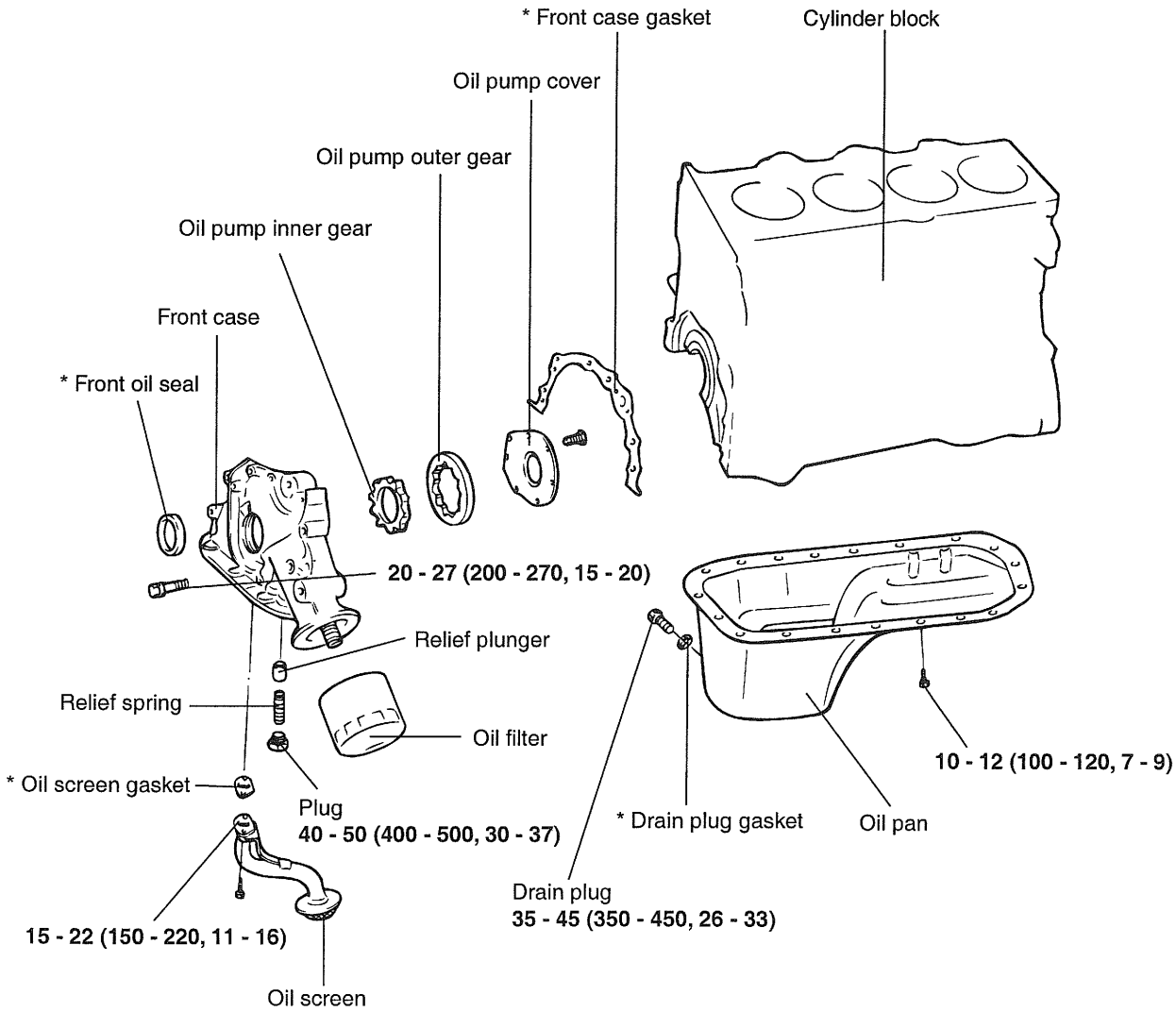

*** Replace the gasket and seal with new ones after removal.**

TORQUE : Nm (kg.cm, lb.ft)

EDDA012A

DISASSEMBLY ECKB5300

1. Remove the timing belt.
2. Remove all the oil pan bolts.
3. Remove the oil pan.
4. Remove the oil screen.
5. Remove the front case assembly.

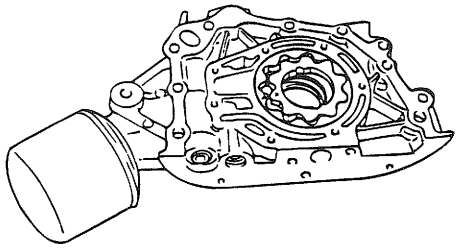

ECDA020A

6. Remove the oil pump cover.
7. Remove the inner and outer gears from the front case. The matching marks on the inner and outer gears indicate the direction of installation.
8. Remove all the oil pan bolts.

INSPECTION ECKB5400

FRONT CASE

1. Check the front case for cracks or damage. Replace as necessary.
2. Check the front oil seal for worn or damaged lips. Replace if defective.

OIL PAN AND OIL SCREEN

1. Check the oil pan for failure, damage or cracks. Replace if defective.
2. Check the oil screen for failure, damage and cracks and replace if defective.

FRONT CASE AND OIL PUMP COVER

Check the surfaces contacting gears for damage or worn.

OIL PUMP GEARS

1. Check the gear tooth surfaces for wear or damage.
2. Measure the clearance between the outer gear and the front case.

Body clearance : 0.12 - 0.185 mm (0.0047- 0.0073 in.)
Tip clearance : 0.025 - 0.069 mm (0.0010 - 0.0027 in.)
Side clearance
Outer gear : 0.04 - 0.09 mm (0.0016 - 0.0035 in.)
Inner gear : 0.04 - 0.085 mm (0.0016 - 0.0033 in.)

[Body clearance]

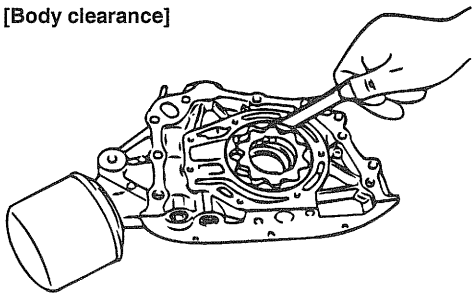

EDDA066A

3. Check the tip clearance on the pump roter.

[Tip clearance]

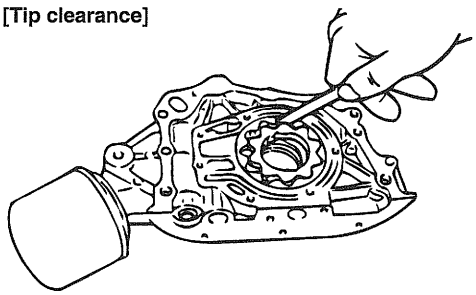

EDDA066B

[Side clearance]

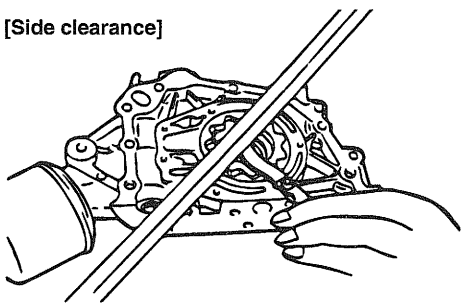

A5EM048C

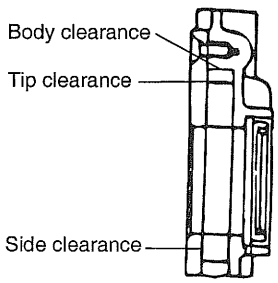

EDDA066D

RELIEF VALVE AND SPRING

1. Check sliding condition of the relief valve inserted in the front case.
2. Inspect for a distorted or broken relief valve spring.

Standard value

Free height : 43.8 mm (1.724 in.)

Load : 3.7 kg/40.1 mm (8.14 lb/1.579 in.)

OIL PRESSURE SWITCH

1. Use an ohmmeter to check the continuity between the terminal and the body. If there is no continuity, replace the oil pressure switch.

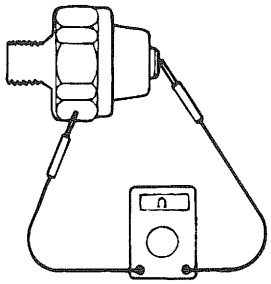

EDDA061A

2. Check the continuity between the terminal and the body when the fine wire is pushed. If there is continuity even when the fine wire is pushed, replace the switch.
3. If there is no continuity when a 50 kPa (7 psi) vacuum is applied through the oil hole, the switch is operating properly.

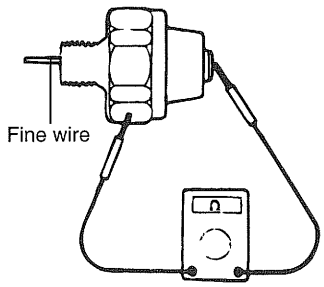

EDDA061B

4. Check for an air leaks, the diaphragm is broken. Replace the switch.

REASSEMBLY ECKB5500

OIL PUMP

1. Install the outer and inner gears into the front case. Make sure that the inner and outer gears are installed in the same direction as shown.
2. Install the oil pump cover and tighten the bolts to the specified torque. After the bolts have been tightened, check to ensure that the gear turns smoothly.

Tightening torque

Oil pump cover bolt : 6-9 Nm (60-90 kg.cm, 4-7 lb.ft)

3. Install the relief valve and spring. Tighten the plug to the specified torque. Apply engine oil to the relief valve.

Tightening torque

Relief valve plug : 400-500 kg.cm, 30-37 lb.ft

[Body clearance]

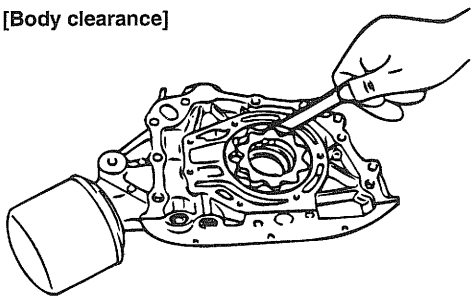

EDDA066A

FRONT CASE

1. Install the front case assembly with a new gasket, and tighten the bolts to the specified torque.

Tightening torque :

20 - 27 Nm (200 - 270 kg.cm, 15 - 20 lb.ft)

Length
A : 25 mm (0.98 in.)
B : 20 mm (0.79 in.)
C : 45 mm (1.77 in.)
D : 38 mm (1.50 in.)

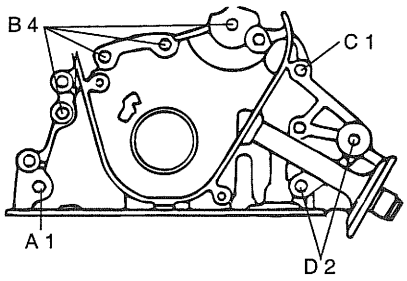

KDDA001N

OIL SEAL

1. Using the special tool, Crankshaft oil seal guide (09214 - 32100), install the oil seal.

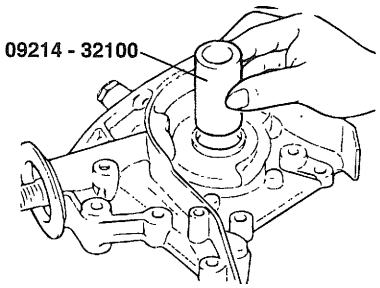

ECDA018B

2. Using the special tool, Crankshaft front oil seal installer (09214-32000), install the oil seal.

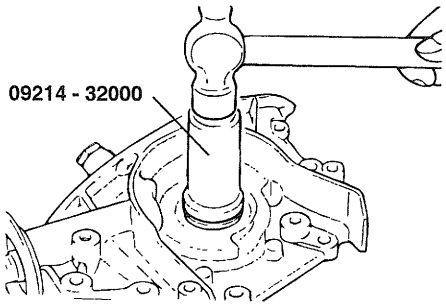

ECDA018C

3. Install the oil screen.
4. Clean both gasket surfaces of the oil pan and the cylinder block.
5. Apply sealant into the groove of the oil pan flange as shown.

⚠ ***CAUTION***

- ***Apply sealant approx. 4mm (0.16 in.) in thickness.***
- ***After application of sealant, do not exceed 15 minutes before installing the oil pan.***

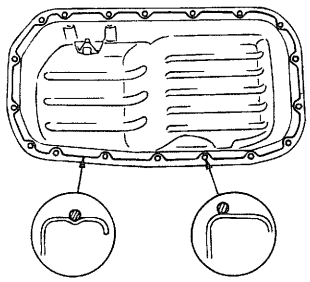

ECDA018D

6. Install the oil pan and tighten the bolts to the specified torque.

Tightening torque

Oil pan bolt : 10-12 Nm (100-120 kg.cm, 7-9 lb.ft)

INTAKE AND EXHAUST SYSTEM

EXHAUST MANIFOLD

COMPONENTS ECKB5600

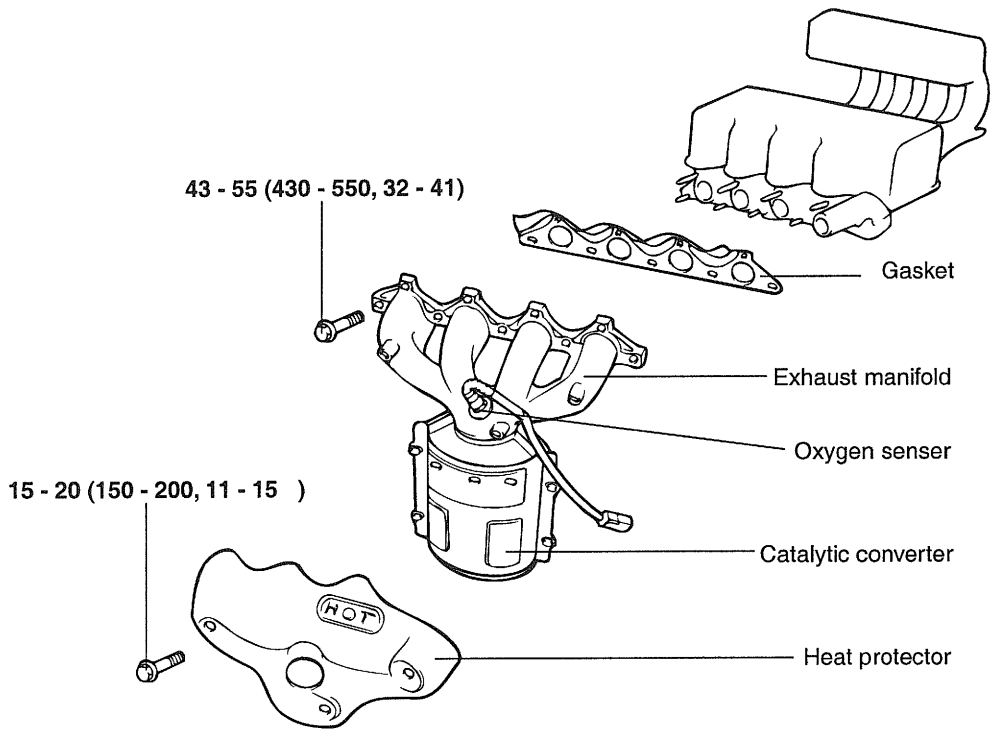

*** Replace the lock nuts with new ones after removal.**

TORQUE : Nm (kg.cm, lb.ft)

ECKA050A

DISASSEMBLY ECKB5700

1. Remove the exhaust manifold heat protector.
2. Remove the exhaust manifold assembly from the cylinder head.
3. Remove the exhaust manifold gasket.

INSPECTION ECKB5800

EXHAUST MANIFOLD

1. Check for damage or cracking.
2. Check for damage or cracking of welding between exhaust manifold and converter.

REASSEMBLY ECKB5900

Install the exhaust manifold in the reverse order of removal.

⚠ ***CAUTION***

Replace the exhaust manifold gasket and lock nut when reassembling.

INTAKE MANIFOLD

COMPONENTS ECNC6000

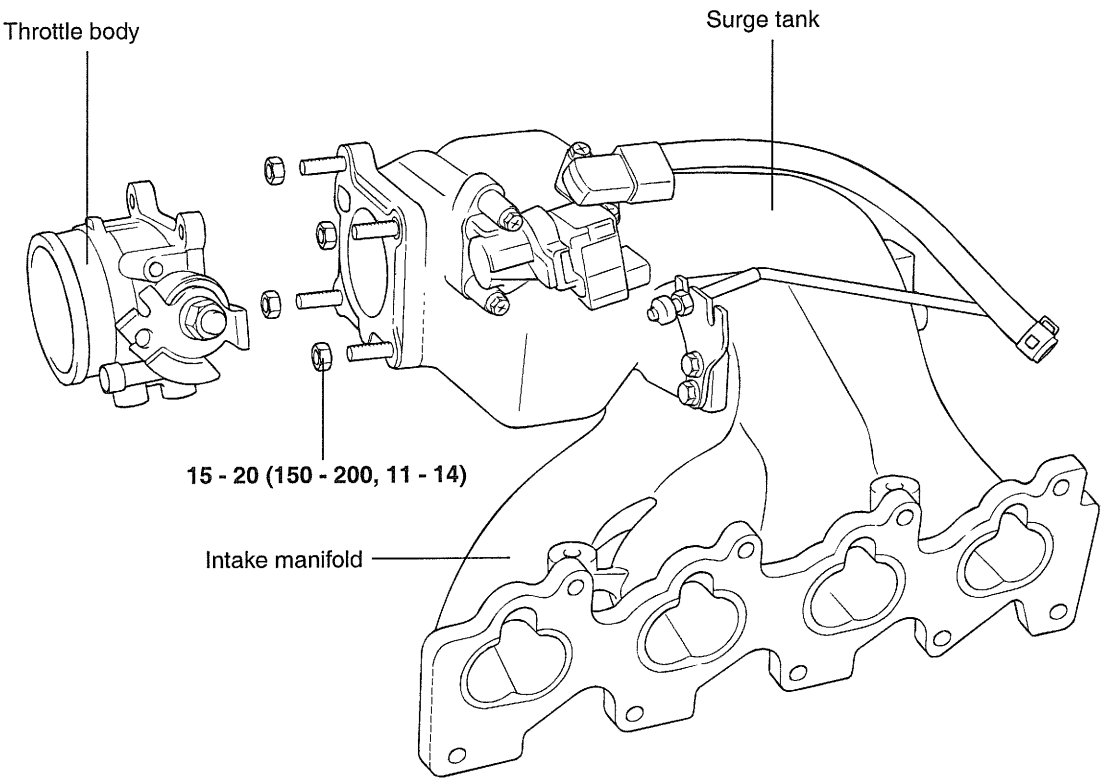

TORQUE : Nm (kg.cm, lb.ft)

EDNB006A

REMOVAL ECNC6100

1. Remove the engine cover.

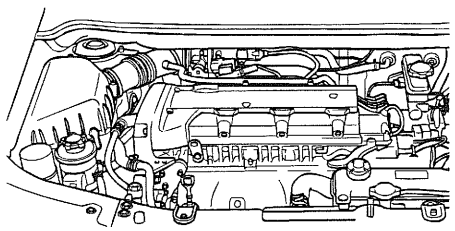

KDNB003C

2. Remove the intake air hose connected to the throttle body.

3. Remove the accelerator cable.
4. Remove the P.C.V. hose and brake booster vacuum hoses.
5. Disconnect the vacuum hose connections, ISA and TPS connector.

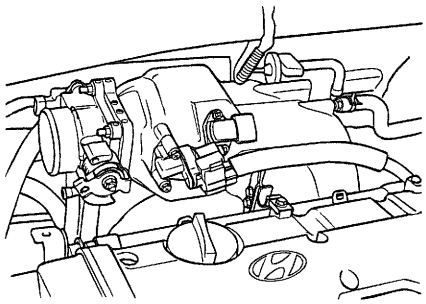

KDNB006B

6. Disconnect the high pressure fuel hose connection after relieving pressure in the fuel rail to prevent fuel from spilling.
7. Remove the intake manifold.
8. Remove the intake manifold assembly and gasket.
9. Disconnect the fuel injector harness connector.
10. Remove the delivery pipe with the fuel injectors.

⚠ ***CAUTION***

Be careful not to drop the injectors when removing the delivery pipe.

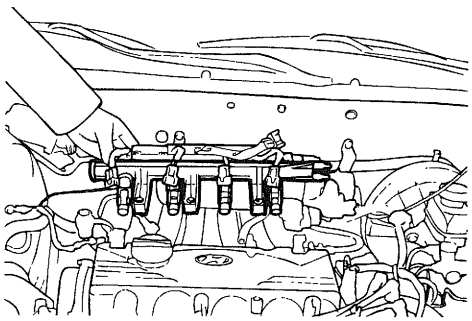

ECDA088B

INSPECTION ECKB6200

INTAKE MANIFOLD

Check the parts for damage or cracking.

AIR HOSE

Check for damage or cracking of any part.

INSTALLATION ECKB6300

1. Replace the intake manifold gasket and install the intake manifold.

⚠ ***CAUTION***

Be careful not to drop the injectors when removing the delivery pipe.

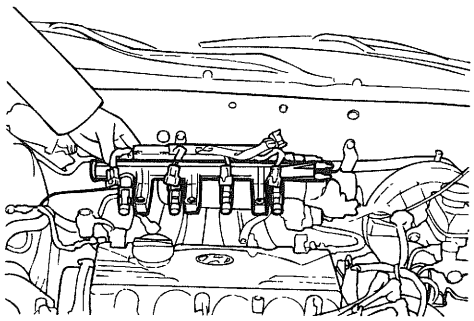

ECDA088B

2. Install the delivery pipe with the fuel injectors.
3. Connect the fuel injector harmess connector.
4. Install the intake manifold stay.
5. Connect the high pressure fuel hose connection.
6. Install the P.C.V hose and brake booster vacuum hose.
7. Install the intake air hose to the throttle body.
8. Install the accelorator cable.
9. Connect the ISA and TPS wire harness connector.

MUFFLER

COMPONENTS ECNC6400

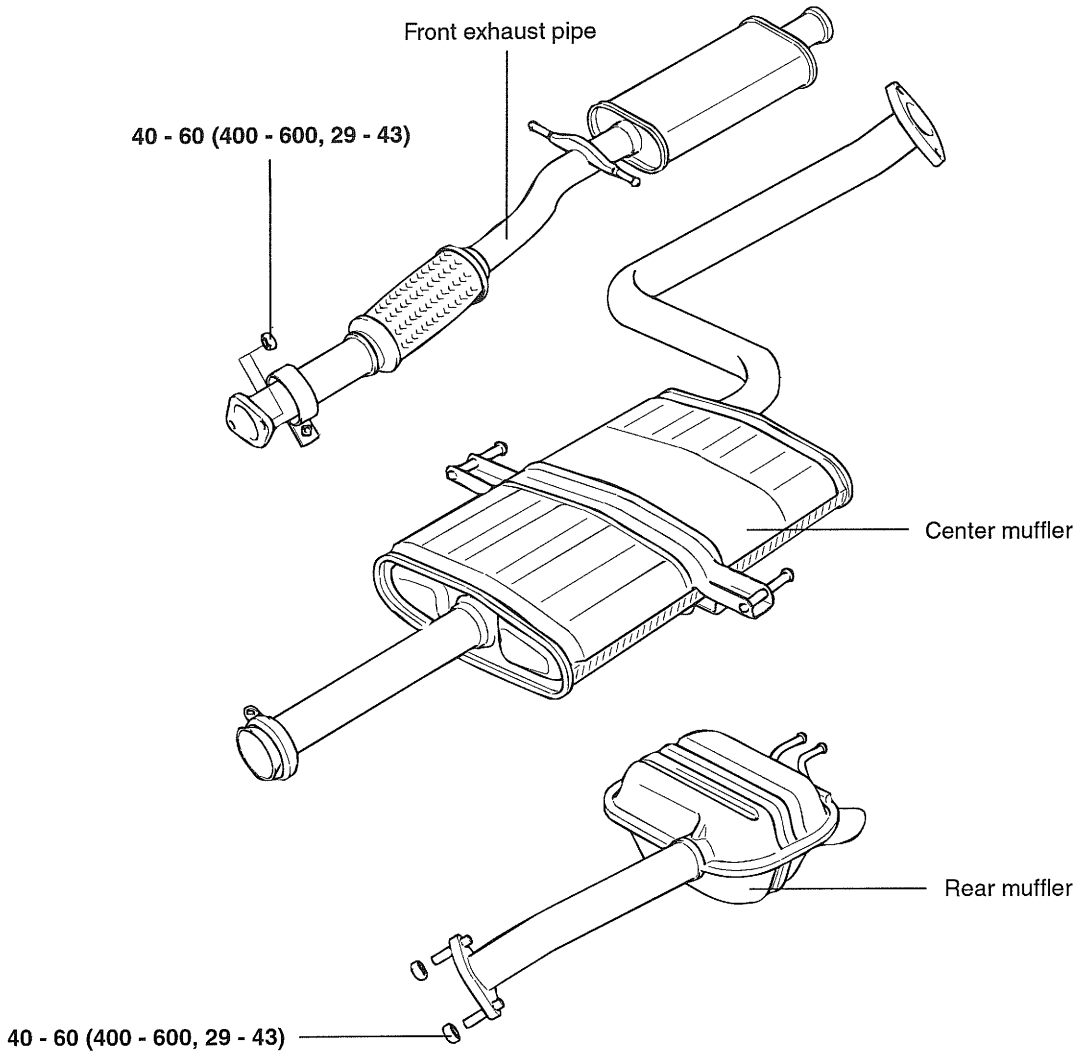

TORQUE : Nm (kg.cm, lb.ft)

EDNB007A

REMOVAL ECNC6500

REAR MUFFLER

⚠ *CAUTION*

Before removing or inspecting the exhaust system, ensure that the exhaust system is cool.

1. Disconnect the rear muffler from the center muffler.
2. Remove the rubber hangers and remove the rear muffler.

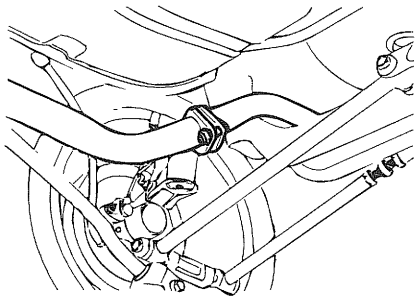

KDNB007C

CENTER MUFFLER

1. Remove the center muffler assembly from the rear muffler and front exhaust pipe.

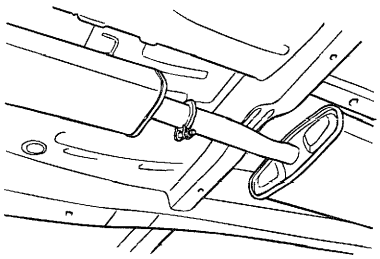

KDNB007B

2. Remove the rubber hanger, then remove the center muffler.

FRONT EXHAUST PIPE

1. Remove the front exhaust pipe clamp bolts. and remove the front exhaust pipe nuts from the catalytic converter.
2. Remove the front exhaust pipe and center muffler bolt.

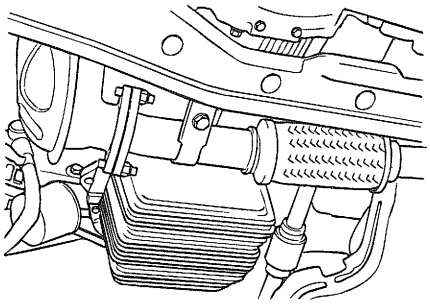

KDNB003B

INSTALLATION ECNC6600

1. Temporarily install the front exhaust pipe, the center exhaust pipe, and the rear muffler, in that order.
2. Tighten the parts securely. Make sure there is no interference with any body components.

AIR CLEANER (ACL)

COMPONENTS ECNC6700

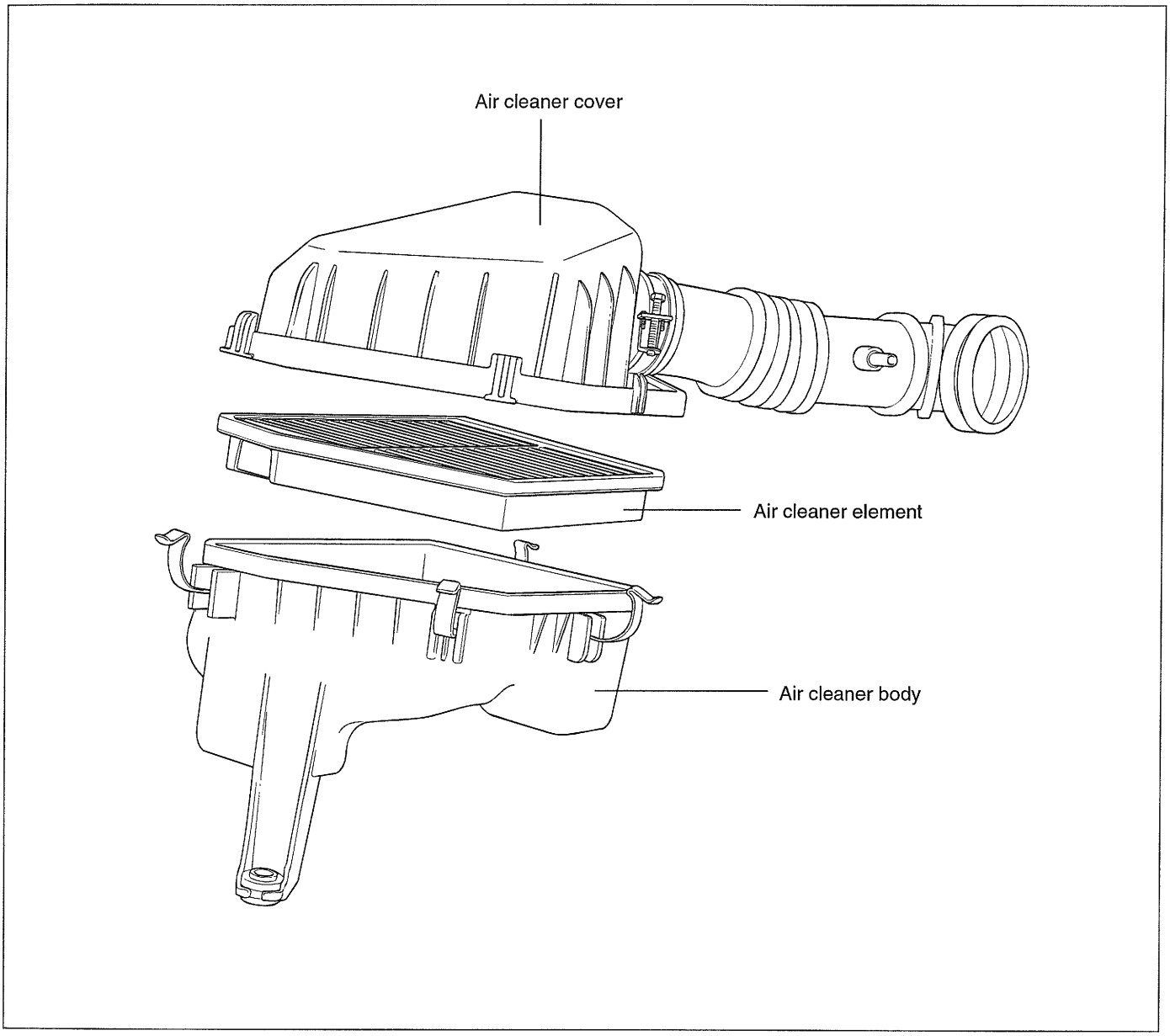

EDNB008A

REMOVAL ECNC6800

1. Remove the air duct connected to the air cleaner.
2. Remove the air intake hose at the air cleaner side.
3. Remove the air cleaner cover and filter.
4. Remove the air cleaner mounting bolts and remove the air cleaner.

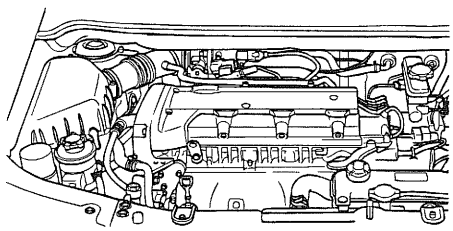

KDNB003C

INSPECTION ECKB6900

1. Check the air cleaner body, cover, or filter for distortion, corrosion or damage.
2. Check the air duct for damage.
3. Check the resonator for distortion or damage.

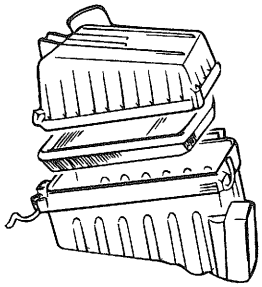

ECKA060B

4. Check the air cleaner filter for restriction, contamination or damage. If the filter is slightly restricted, remove the dust and other contaminants by blowing compressed air from the upper side through the filter.

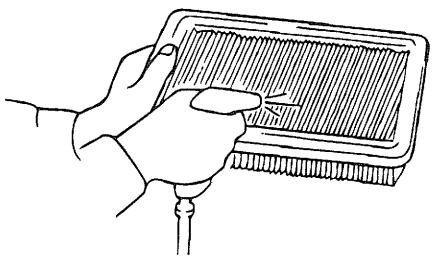

EDDA080B

5. Check the air cleaner housing for restrictions, contamination or damage.

INSTALLATION ECKB7000

Install the air cleaner assembly following the reverse order of removal.

CYLINDER HEAD ASSEMBLY

CYLINDER HEAD

COMPONENTS ECKB7100

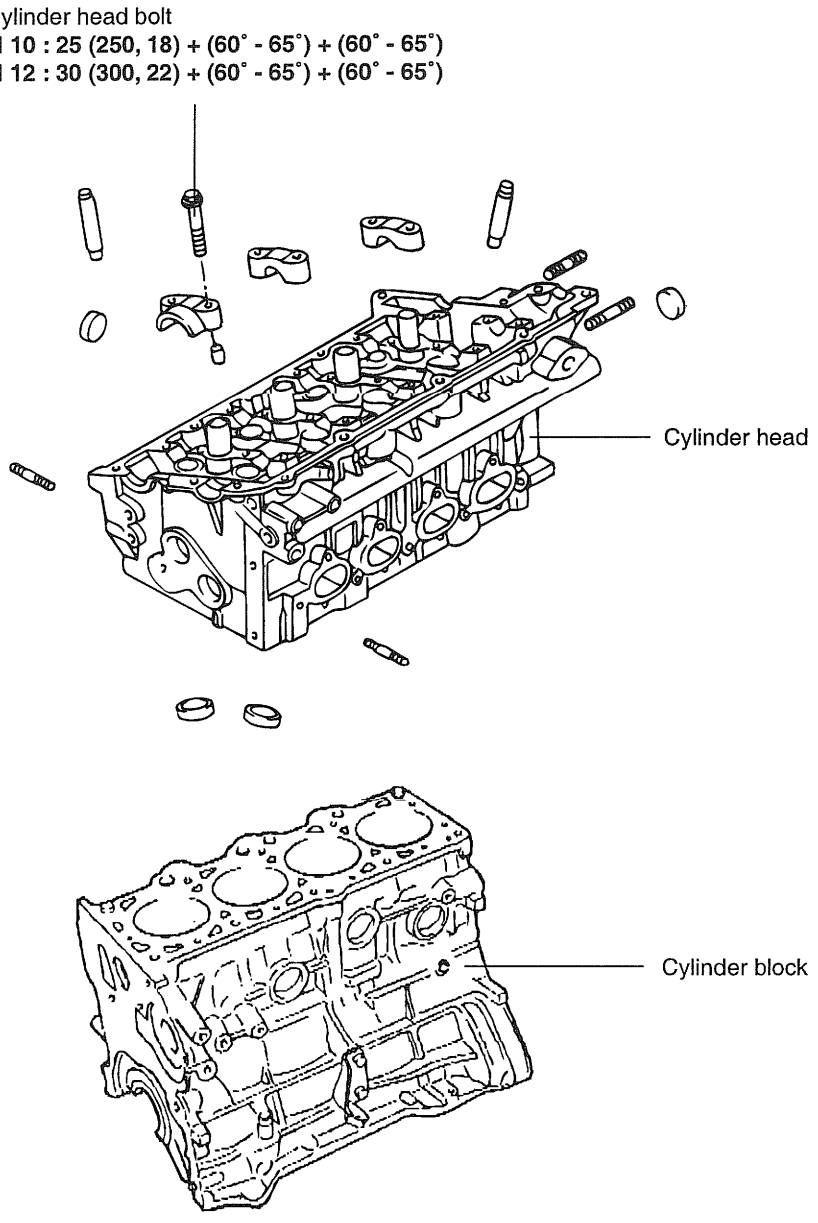

TORQUE : Nm (kg.cm, lb.ft)

EDKB050E

VALVES

COMPONENTS ECKB7200

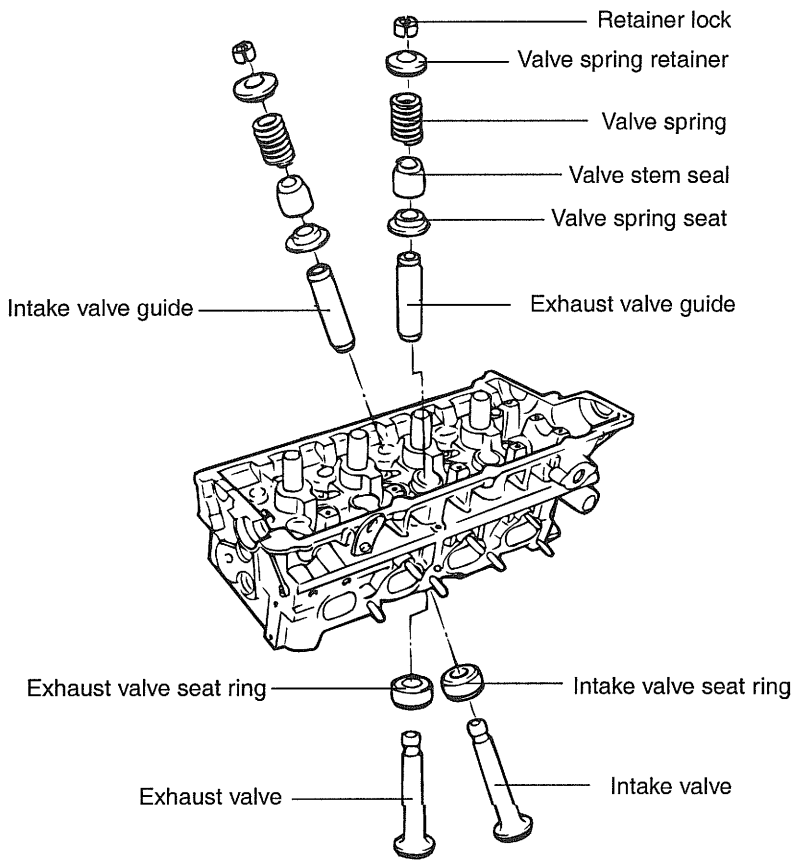

TORQUE : Nm (kg.cm, lb.ft)

***Replace the seal with new one after removal**

EDKB050D

DISASSEMBLY ECKB7300

1. Using a special tool (09221- 32001, 09221 - 11000), remove the cylinder head bolts in the order shown in the illustration.

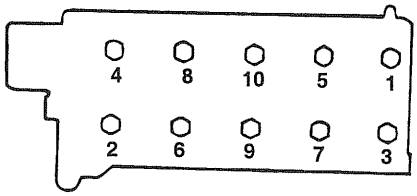

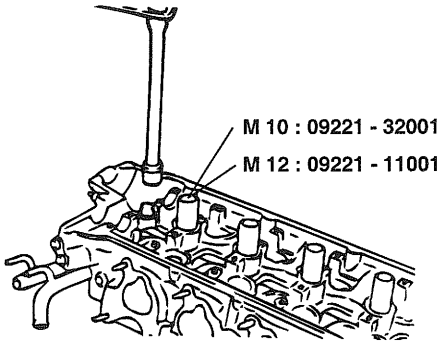

KDDB001L

2. Using the special tool (09222 - 28000, 09222 - 28100), remove the valve spring retainer lock. Next remove the spring retainer, valve spring, spring seat and valve.

NOTE

Arrange these parts so that they can be reinstalled in their original positions.

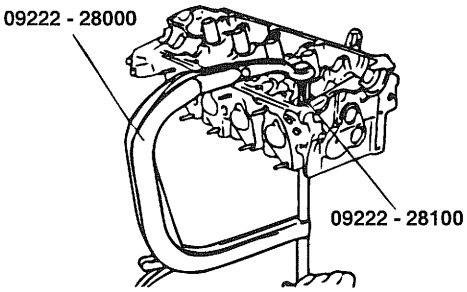

EDKB444G

3. Remove the valve stem seals with pliers (09222 - 29000).

NOTE

Do not reuse the valve stem seals.

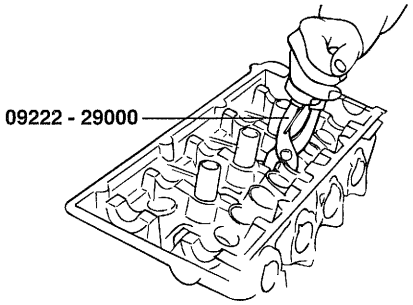

EDDA088B

INSPECTION ECKB7400

1. Check the cylinder head for crack, damage and coolant leakage. If cracked, replace the cylinder head.

2. Remove scale, sealing compound and carbon deposits completely. After cleaning the oil passages, apply compressed air to verify that the passages are not clogged.

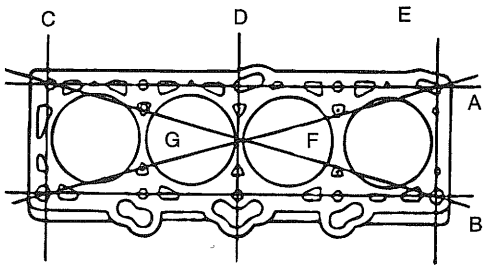

EDKB444H

3. Check the cylinder head surface for flatness in the direction as shown in the illustration. If flatness exceeds the service limit in any direction, either replace the cylinder head or machine the cylinder head matching surface lightly.

Flatness of cylinder head gasket surface
Standard : Less than 0.03mm (0.0012 in.)
Limit : 0.06 mm (0.0024 in.)

VALVES

1. Using a wire brush, clean the valve thoroughly.

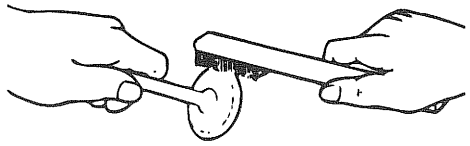

ECA9281A

2. Check each valve for wear, damage and distortion of the head and the stem at B Position. Replace if necessary. If stem end, A, is hollowed out or worn, resurface as necessary. This correction must be limited to a minimum. Also resurface the valve face.
   Replace the valve if the margin has decreased to less than the service limit.

Margin

[Standard]

Intake : 1.15 mm(0.0453 in.)

Exhaust : 1.35 mm(0.0531 in.)

[Limit]

Intake : 0.8 mm(0.0315 in.)

Exhaust : 1.0mm(0.040 in.)

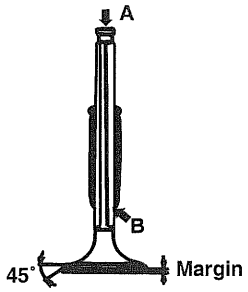

ECA9281B

VALVE SPRINGS

1. Check the free height of each valve spring. If they exceed the service limit, replace the springs.

2. Using a square, test the squareness of each spring. If a spring is excessively out-of-square, replace it.

Valve spring

[Standard]

Free height : 48.86 mm(1.9236 in.)

Load : 18.3kg / 39 mm (40.0 kg / 30.5mm)

Out - of - square : 1.5° or less

[Limit]

Free height : - 1.0 mm(- 0.0394 in.)

Out - of - square : 3°

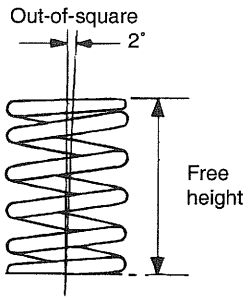

ECA9281C

VALVE GUIDES

Check the valve stem-to-guide clearance. If the clearance exceeds the service limit, replace the valve guide.

Valve stem-to-guide clearance

[Standard]

Intake : 0.02-0.05 mm(0.0008-0.0020 in.)

Exhaust : 0.035-0.065mm(0.0014 - 0.0026 in.)

[Limit]

Intake : 0.1 mm (0.0040 in)

Exhaust : 0.13 mm (0.0051 in.)

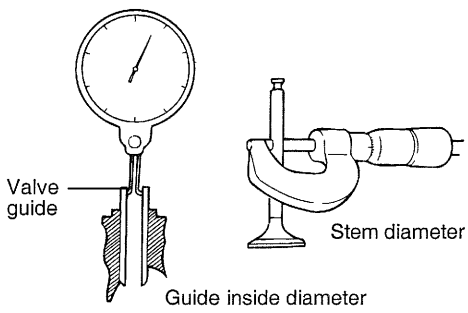

ECA9281D

RECONDITIONING VALVE SEAT

Check the valve seat for overheating and unequal contact with the valve face. Recondition or replace the seat if necessary. Before reconditioning the seat, check the valve guide for wear. If the valve guide is worn, replace it and then recondition the seat. Recondition the valve seat with a valve seat grinder or cutter. The valve seat contact width should be within specificatons and centered on the valve face. After reconditioning, the valve and valve seat should be lapped lightly with a lapping compound.

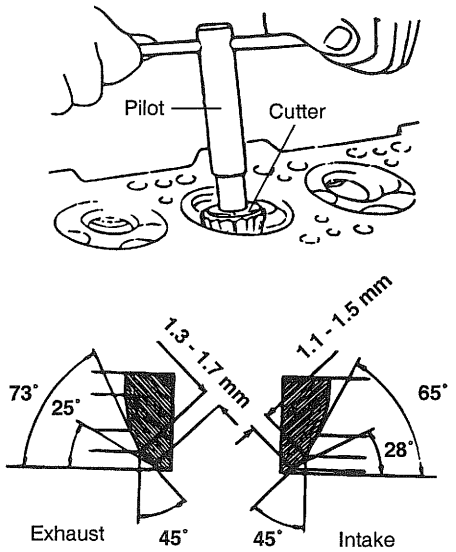

EDKB444I

REPLACING THE VALVE SEAT RING

1. Cut away the inner face of the valve seat to reduce the wall thickness.

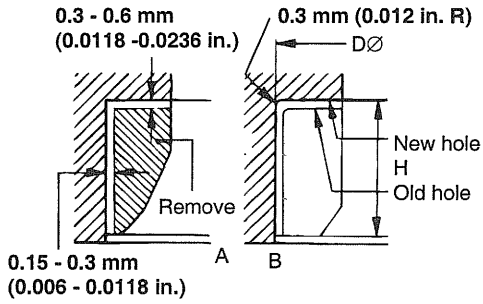

ECA9281F

2. Enlarge the diameter of the valve seat so that it matches the specified oversize hole diameter of the new valve seat ring.
3. Heat the cylinder head to about 250°C (480°F) and press - fit an oversize seat ring for the bore in the cylinder head.
4. Using lapping compound, lap the valve to the new seat.

Valve seat contact width
Intake : 1.1 - 1.5 mm (0.0433 - 0.0590 in.)
Exhaust : 1.3 - 1.7 mm (0.0512 - 0.0670 in.)

VALVE SEAT INSERT OVERSIZES

Description	Size mm (in.)	Size mark	Seat ring height H mm(in.)	Oversize hole diameter I.D. mm(in.)
Intake valve Seat ring	0.3 (0.012) O.S. 0.6 (0.024) O.S.	30 60	7.5-7.7 (0.295-0.303) 7.8-8.0 (0.307-0.315)	33.300-33.325 (1.3110-1.3120) 33.600-33.625 (1.3228-1.3238)
Exhaust valve Seat ring	0.3 (0.012) O.S. 0.6 (0.024) O.S	30 60	7.9-8.1 (0.311-0.319) 8.2-8.4 (0.323-0.331)	28.800-28.821 (1.1339-1.1347) 29.100-29.121 (1.1457-1.1465)

REPLACING VALVE GUIDE

1. Using the special tool (09221 - 22000 A/B), withdraw the old valve guide toward the bottom of cylinder head.
2. Recondition the valve guide hole so that it can match the newly press-fitted oversize valve guide.

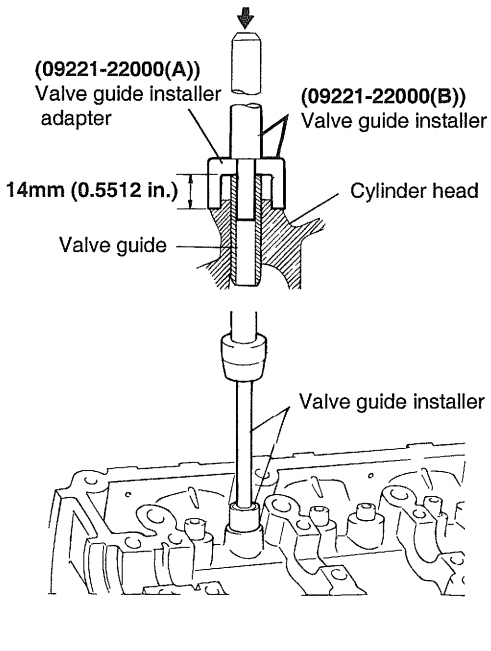

ECDA109C

3. Using the special tool (09221-22000 A/B), press-fit the valve guide. The valve guide must be press-fitted from the upper side of the cylinder head. Keep in mind that the intake and exhaust valve guides are different in length.

NOTE

Do not install a valve guide unless it is oversize.

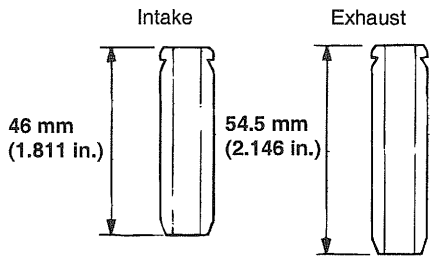

ECA9281H

4. After the valve guide is press-fitted, insert a new valve and check for proper stem - to - guide clearance.
5. After the valve guide is replaced, check that the valve is seated properly. Recondition the valve seats as necessary.

VALVE GUIDE OVERSIZES

Over size mm (in.)	Size mark	Oversize valve guide hole size mm (in.)
0.05(0.002)	5	11.05-11.068 (0.4350-0.4357)
0.25 (0.010)	25	11.25-11.268 (0.4429-0.4436)
0.50 (0.020)	50	11.50-11.518 (0.4528-0.4535)

REASSEMBLY ECKB7500

NOTE

1. *Clean each part before assembly.*
2. *Apply engine oil to the sliding and rotating parts.*

1. Install the spring seats.
Using a special tool (09222 - 22001), tap the seal in position lightly.

NOTE

- *Do not reuse old valve stem seals.*
- *Incorrect installation of the seal could result in oil leakage past the valve guides.*

2. Apply engine oil to each valve. Insert the valve into the valve guide. Avoid pushing the valve into the seal by force. After inserting the valve, check that it moves smoothly.

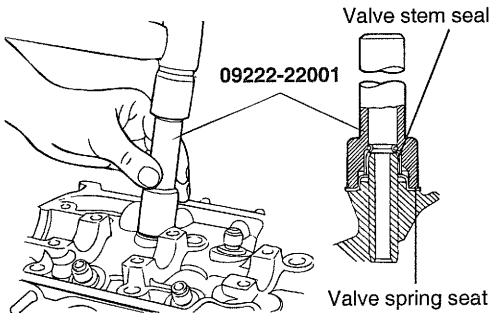

ECHA930A

3. Place valve springs so that the side coated with enamel faces toward the valve spring retainer and then install the retainer.

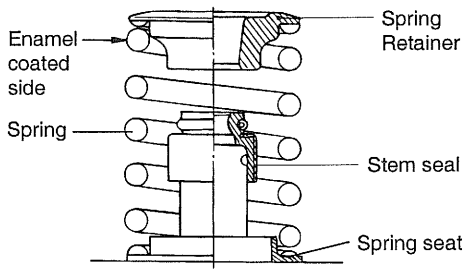

ECA9290B

4. Using the special tool (09222 - 28000, 09222 - 28100), compress the spring and install the retainer locks. After installing the valves, ensure that the retainer locks are correctly in place before releasing the valve spring compressor.

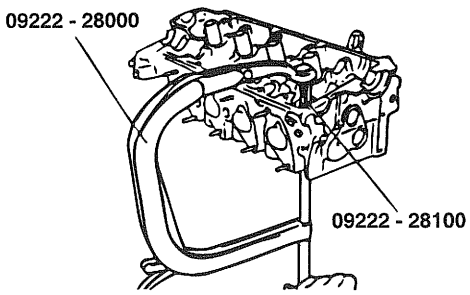

EDKB444G

NOTE

When the spring is compressed, Check that the valve stem seal is not pressed against the bottom of the retainer.

5. Clean both gasket surfaces of the cylinder block and cylinder head.

6. Verify the identification marks on the cylinder head gasket.

7. Install the gasket so that the surface with the identification mark faces toward the cylinder head.

8. Tighten the bolts to the specified torque in the sequence shown below.

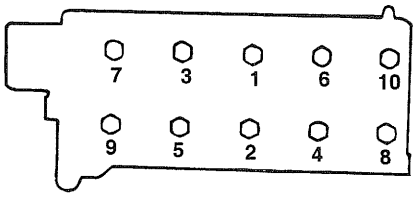

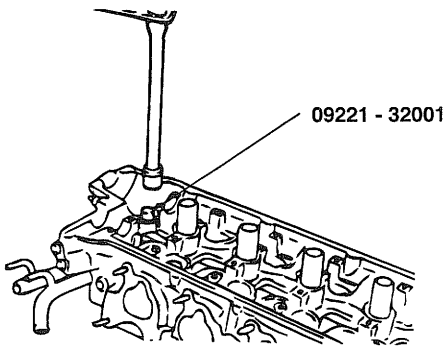

KDDA001L

Cylinder head bolt

M10 :

25 Nm (250 kg.cm, 18 lb.ft)+(60°- 65°)+(60°- 65°)

M12 :

30 Nm (300 kg.cm, 22 lb.ft)+(60°- 65°)+(60°- 65°)

TIMING SYSTEM

TIMING BELT

COMPONENTS ECNC7600

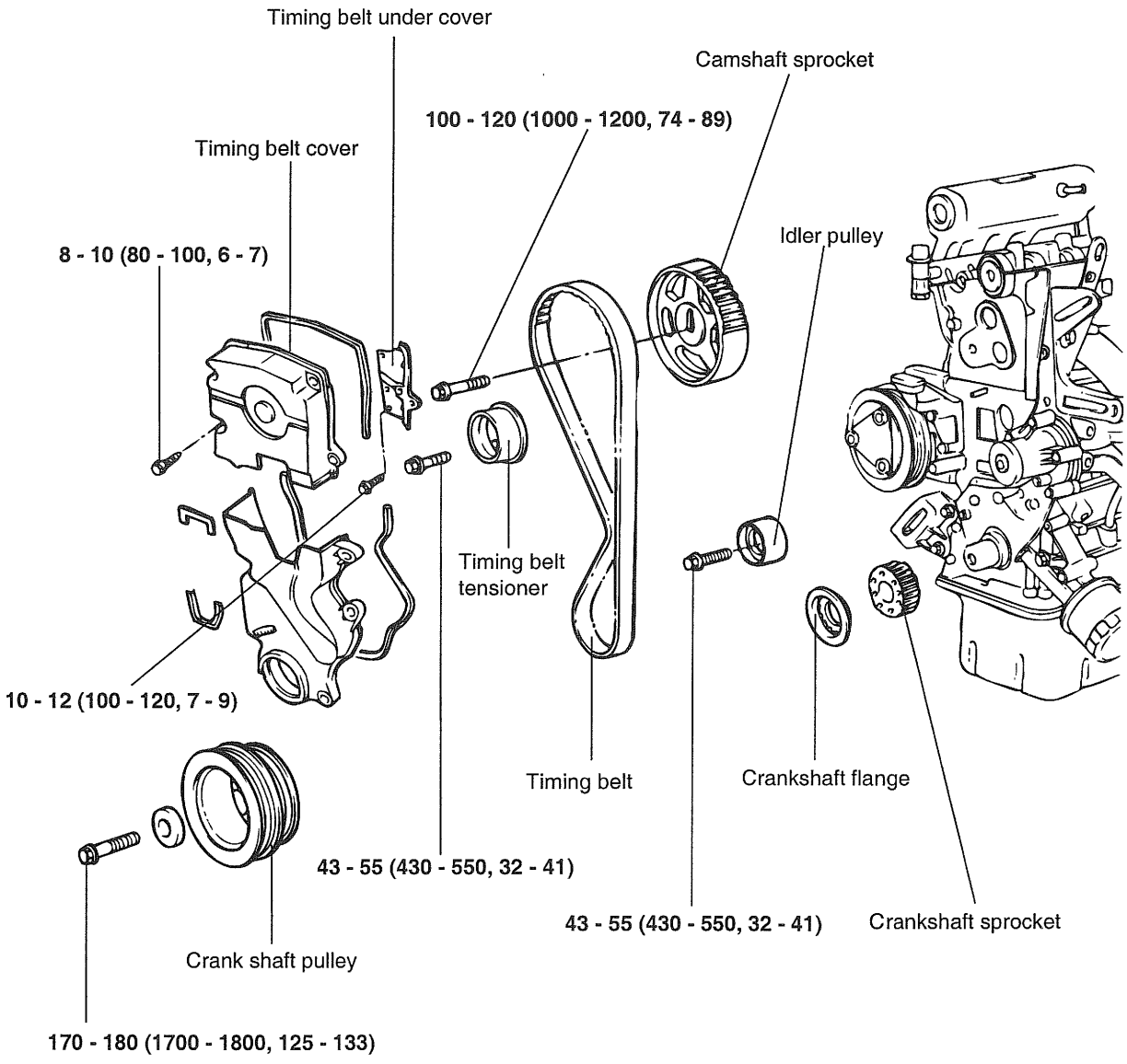

TORQUE : Nm (kg.cm, lb.ft)

B6EM010A

DISASSEMBLY ECKB7700

1. Remove the crankshaft pulley, coolant pump pulley and drive belt.
2. Remove the alternator bolt.
3. Remove the coolant pump pulley and belt.

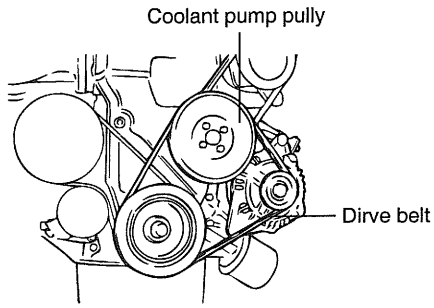

V5EM701A

4. Remove the crankshaft pulley.
5. Remove the timing belt cover.

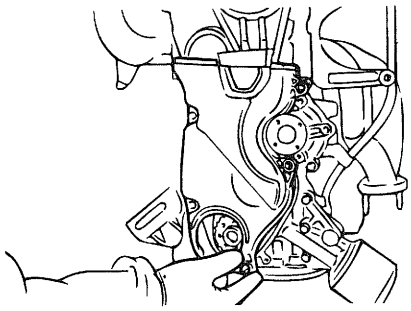

V5EM701B

6. Remove the timing belt tensioner pulley.

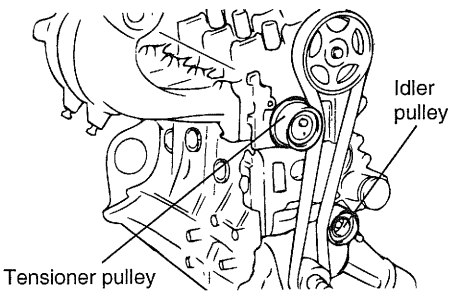

V5EM701C

NOTE

If the timing belt is reused, make an arrow indicating the turning direction (or the front of the engine) to make sure that the belt is reinstalled in the same direction as before.

7. Remove the timing belt.

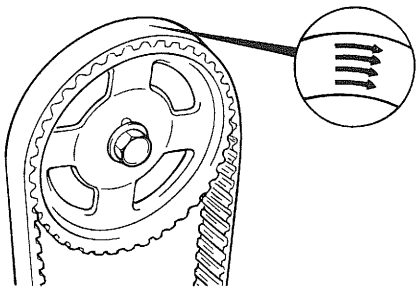

ECDA121B

8. Remove the idler pulley.
9. Remove the camshaft sprocket.

NOTE

Be careful not to damage the cylinder head with the wrench.

10. Remove the crankshaft sprocket from crankshaft.

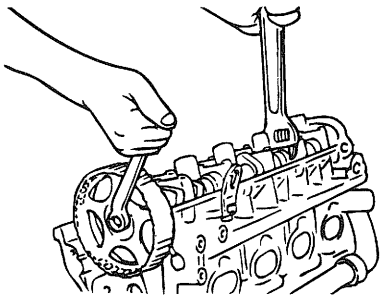

KDDA001C

INSPECTION ECNB7900

SPROCKETS, TENSIONER PULLEY, AND IDLER PULLEY.

1. Check the camshaft sproket, crankshaft sprocket, tensioner pulley, and idler pulley for abnormal wear, cracks, or damage. Replace as necessary.
2. Inspect the tensioner pulley and the idler pulley for easy and smooth rotation and check for play or noise. Replace as necessary.
3. Replace the pulley if there is a grease leak from its bearing.

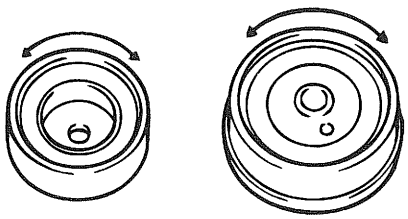

EDDA093A

TIMING BELT

1. Check the belt for oil or dust deposits. Replace, if necessary.
   Small deposits should be wiped away with a dry cloth or paper. Do not clean with solvent.
2. When the engine is overhauled or belt tension adjusted, check the belt carefully. If any of the following flaws are evident, replace the belt.

NOTE

- *Do not bend, twist or turn the timing belt inside out.*
- *Do not allow the timing belt to come into contact with oil, water and steam.*

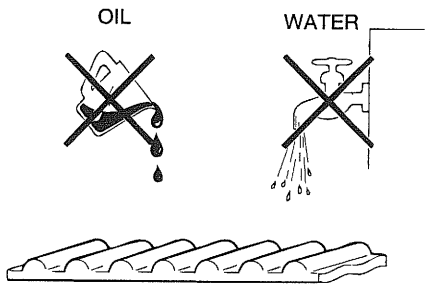

ECA9200A

Description	Flaw conditions
1. Hardened back surface of rubber	Back surface is glossy, non-elastic and so hard that, when your fingernail is pressed into it, no mark is produced. 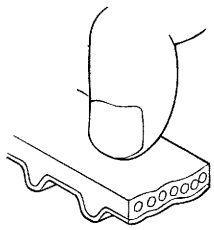 ECA9200B
2. Cracked back surface of rubber	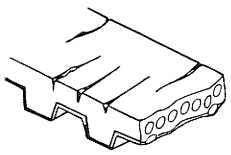 ECA9200Y

Description	Flaw conditions
3. Cracked or separating canvas	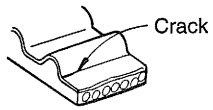 ECA9200I 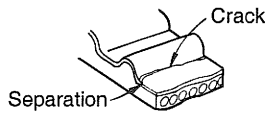 ECA9200J 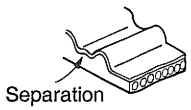 ECA9200K
4. Badly worn teeth (initial stage)	Tooth flank shows canvas on the load side (Fluffy canvas fibers, rubber changed into white color and unclear canvas texture) 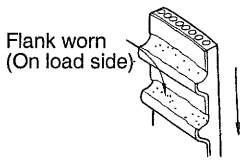 ECA9200C
5. Badly worn teeth (last stage)	Tooth flank worn and rubber exposed on load side (tooth width reduced) 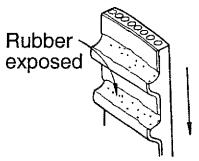 ECA9200D
6. Cracked tooth bottom	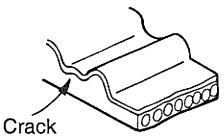 ECA9200E
7. Missing tooth	 ECA9200F
8. Badly worn side of belt	

Description	Flaw conditions
NOTE *Normal belt should have a precisely cut side as if cut by a sharp knife*	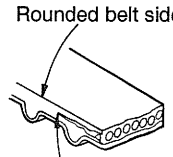 ECA9200G
9. Cracked side of belt	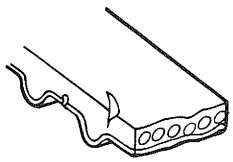 ECA9200H

REASSEMBLY ECNC8100

1. Install damper pulley flange and crankshaft sprocket as shown. Pay close attention to their mounting direction.

Tightening Torque

Camshaft sprocket bolt :

170-180 Nm (1700-1800 kg.cm, 125-133 lb.ft)

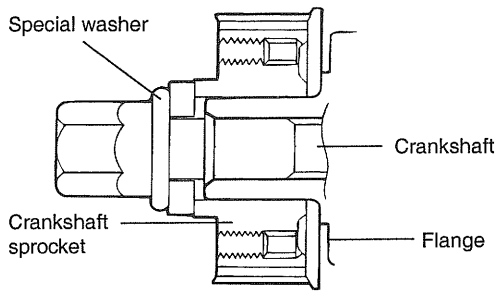

ECNC094B

2. Install the camshaft sprocket and tighten the bolt to the specified torque.

Tightening torque

Camshaft sprocket bolt :

100-120 Nm (1000-1200 kg.cm, 74-89 lb.ft)

3. Align the timing marks of the camshaft sprocket and crankshaft sprocket with the No. 1 piston placed at top dead center and its compression stroke.

4. Install the timing belt tensioner and idler pulley.

5. Install the timing belt on the camshaft.

NOTE

When the timing belt is installed on the camshaft sprocket, make sure that the tension side is tightened by pushing the timing belt tensioner pulley toward the water pump.

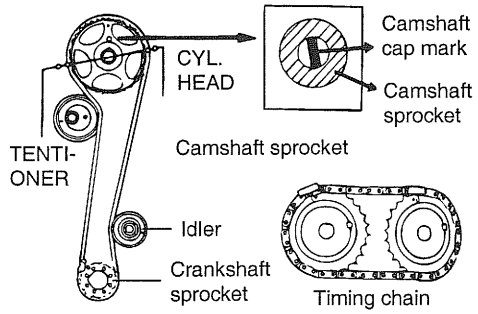

V5EM702B

6. Turn the crankshaft two turns in the operating direction (clockwise) and realign camkshaft sprocket timing mark.

CAUTION

Do not turn the crankshaft in a counterclockwise direction. The crankshaft should be turned smoothly.

Tightening torque

Tensioner and idler pulley installing bolt :

43-55 Nm (430-550 kg.cm, 32-41 lb.ft)

7. Recheck the belt tension. When the tension side of timing belt is pushed horizontally with a moderate force [approx. 2kg (20N, 5lb)], the timing belt cog end sags in approx. 4-6 mm (0.16 - 0.24 in.)

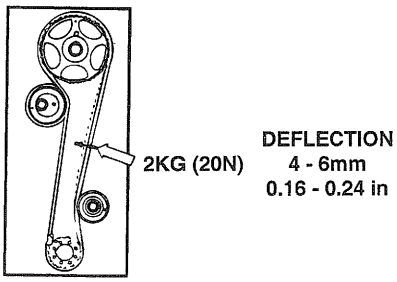

V5EM702E

8. Install the timing belt cover.

Tightening torque

Timing belt cover bolt :

8-10 Nm (80-100 kg.cm, 6-7 lb.ft)

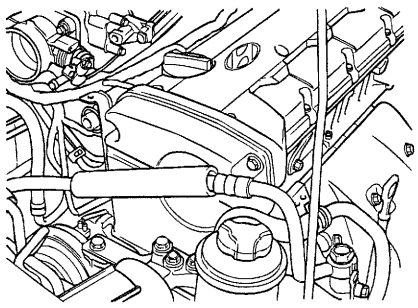

KDNB001C

9. Install the crankshaft pulley. Make sure that the crankshaft sprocket pin fits the small hole in the pulley.

10. Install the coolant pump pulley.

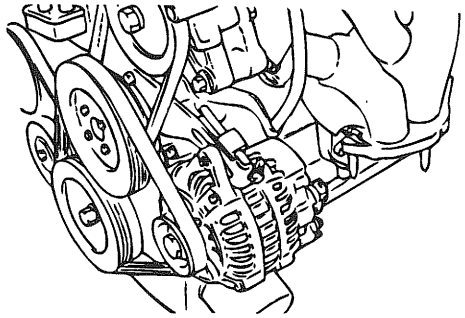

EDDA094G

11. Install the drive belt and adjust the belt tension.

Engine Mechanical System [DOHC 1.6L]

GENERAL ..... EMA - 2

CYLINDER BLOCK ..... EMA -21

MAIN MOVING SYSTEM ..... EMA -27

COOLING SYSTEM ..... EMA -41

LUBRICATION SYSTEM ..... EMA -50

INTAKE AND EXHAUST SYSTEM ..... EMA -54

CYLINDER HEAD ASSEMBLY ..... EMA -62

TIMING SYSTEM ..... EMA -69

GENERAL

SPECIFICATION EDNC0010

Description	Specification	Limit
General		
Type	In-line, Double Over Head Camshaft	
Number of cylinders	4	
Bore	76.5mm (3.0118 in)	
Stroke	87mm (3.4252 in)	
Total displacement	1599 cc (97.54 cu.in)	
Compression ratio	10	
Firing order	1-3-4-2	
Valve timing		
Intake valve		
Opens (BTDC)	5°	
Closes (ABDC)	35°	
Exhaust valve		
Opens (BBDC)	43°	
Closes (ATDC)	5°	
Valve overlap	10°	
Cylinder head		
Flatness of cylinder head surface	Max. 0.03mm (0.0012 in.)	0.1 mm (0.0039in.)
Flatness of mainfold mounting surface	0.15mm (0.0059 in.)	0.2mm (0.008in.)
Oversize rework dimension of valve seat hole		
Intake		
0.3mm (0.012 in.) O.S.	30.7-30.721 mm (1.2087- 1.2095 in.)	
0.6mm (0.024 in.) O.S.	40.0-40.021 mm (1.5748- 1.5756 in.)	
Exhaust		
0.3mm (0.012 in.) O.S.	27.3-27.321mm (1.0748- 1.0756 in.)	
0.6mm (0.024 in.) O.S	27.6-27.621mm (1.0866- 1.0874 in.)	
Oversize rework dimensions of valve		
Guide hole		
0.05mm (0.002 in.) O.S.	11.05-11.068mm (0.435-0.4357 in.)	
0.25mm (0.010 in.) O.S.	11.25-11.268mm (0.443-0.4436 in.)	
0.50mm (0.020 in.) O.S.	11.50-11.518mm (0.453-0.4535 in.)	
Camshaft		
Camlobe height		
Intake	43.4484mm (1.7106 in.)	42.9484mm (1.6909in.)
Exhaust	43.8489mm (1.7263 in.)	43.3489mm (1.7.66in.)
Joumal O.D	ø27mm (1.0630 in.)	
Bearing oil clearance	0.035- 0.072mm (0.0014- 0.0028 in.)	
End play	0.1- 0.2mm (0.004- 0.008 in.)	

Description	Specification	Limit
Valve		
Valve length		
Intake	91.7mm (3.6102 in.)	
Exhaust	92.3mm (3.6339 in.)	
Stem O.D.		
Intake	5.955- 5.97mm (0.2344- 0.2350 in.)	
Exhaust	5.935- 5.95mm (0.2337- 0.2343 in.)	
Face angle thickness of valve head (Margin)		
Intake	1.1mm (0.0433 in.)	0.8mm (0.031in.)
Exhaust	1.3mm (0.0512 in.)	1.0mm (0.039in.)
Valve stem to valve guide clearance		
Intake	0.03- 0.06mm (0.0012- 0.0024 in.)	0.10mm (0.0039in.)
Exhaust	0.05-0.08mm (0.0020- 0.0031 in.)	0.15mm (0.0059in.)
Valve guide		
Installed dimension O.D.		
Intake	12.8mm (0.504 in.)	
Exhaust	12.8mm (0.504 in.)	
Service size	0.05, 0.25, 0.50mm (0.002, 0.010, 0.020 in.) oversize	
Valve seat		
Width of seat contact		
Intake	0.8-1.2mm (0.031-0.047 in.)	
Exhaust	1.3-1.7mm (0.051-0.066 in.)	
Seat angle	45°	
Oversize	0.3, 0.6mm (0.012, 0.024 in.) oversize	
Valve spring		
Free length	44.00mm (1.7323 in.)	
Load	21.6kg/ 35mm (47.6lb/1.3780 in.) 45.1kg/ 27.2mm (99.4lb/1.709 in.)	
Squareness	1.5° or less	
Cylinder block		
Cylinder bore	76.50-76.53mm (3.0118-3.0130 in.)	
Out- of- round and taper of cylinder bore	Less than 0.01mm (0.0004 in.)	
Clearance with piston	0.025-0.045mm (0.0009-0.0017 in.)	
Piston		
O.D.	76.465 - 76.495mm (3.0104 - 3.0116 in.)	
Service size	0.25, 0.50, 0.75, 1.00mm (0.010, 0.020, 0.030, 0.039 in.) oversize	
Piston ring		
Side clearance		
No. 1	0.04-0.085mm (0.0015-0.0033 in.)	0.1mm (0.004in.)
No. 2	0.04-0.085mm (0.0015-0.0033 in.)	0.1mm (0.004in.)
Endgap		
No. 1	0.20-0.35mm (0.0079- 0.0138 in.)	1.0mm (0.039in.)
No. 2	0.30-0.45mm (0.0118-0.0177 in.)	1.0mm (0.039in.)
Oil ring side rail	0.2-0.7mm (0.0078- 0.0275 in.)	1.0mm (0.039in.)
Service size	0.25, 0.50, 0.75, 1.00mm (0.010, 0.020, 0,030, 0.039 in.) noversize	

Description	Specification	Limit
Connecting rod Bend Twist Connecting rod big end to crankshaft side clearance Connecting rod bearing oil clearance Undersize	 0.05mm (0.0020 in.) or less 0.1mm (0.0039 in.) or less 0.100-0.250mm (0.0039-0.0098 in.) 0.018-0.036mm (0.0007-0.0014 in.) 0.25, 0.50, 0.75mm (0.010, 0.020, 0.030 in.)	 0.4mm (0.0157in.)
Crankshaft Pin O.D. Journal O.D. Bend Out- of- round, taper of journal and pin End play	 45 mm (1.77 in.) 50 mm (1.97 in.) 0.03 mm (0.0012 in.) or less 0.005 mm (0.0002 in.) or less 0.05- 0.175 mm (0.0019- 0.0068 in.)	
Undersize rework dimension of pin 0.25mm (0.010 in.) 0.50mm (0.20 in.) 0.75mm (0.030 in.)	 44.725- 44.74mm (1.7608- 1.7614 in.) 44.475-44.49mm (1.7509- 1.7516 in.) 44.225-44.24mm (1.7411- 1.7417 in.)	
Undersize rework dimension of journal 0.25mm (0.010 in.) 0.50mm (0.20 in.) 0.75mm (0.030 in.)	 49.727- 49.742mm (1.9577-1.9583 in.) 49.477- 49.492mm (1.9479-1.9485 in.) 49.227- 49.242mm (1.9380-1.9386 in.)	
Flywheel Runout	 0.1mm (0.0039 in.)	 0.13mm (0.0051in.)
Oil pump Clearance between outer circumference and front case (body clearance) Front case tip clearance Side clearance Inner gear Outer gear	 0.12- 0.18mm (0.0047-0.0070 in.) 0.025-0.069mm (0.001-0.0027 in.) 0.04-0.085mm (0.0016-0.0033 in.) 0.06- 0.11mm (0.0024-0.0043 in.)	
Engine oil pressure Engine at idle [Oil temperature is 90 to 100°C (194 to 215°F)]	 147KPa (1.5 kg/ cm², 21.33psi)	
Relief spring Free height Load	 46.6mm (1.8346 in.) 6.1kg at 40.1mm (13.42lb/ 1.578 in.)	
Cooling method	Water-cooled, pressurized, forced circulation with electrical fan	
Coolant Quantity Radiator Type	 6 liter Pressurized corrugated fin type	
Radiator cap Main valve opening pressure Vacuum valve opening pressure	 81.4-108 kpa (11.8-15.6 psi.,0.83-1.1kg/cm²) -6.86 kpa (-1.00 psi, -0.07 kg/cm² or less	
Coolant pump	Centrifugal type impeller	

Description	Specification	Limit
Thermostat Type Valve opening temperature Full-opening temperature	 Wax pellet type with jiggle valve 82°C (180°F) 95°C (203°F)	
Engine coolant temperature sensor Type Resistance	 Heat-sensitive thermistor type 2.31-2.59k Ω at 20°C(68°F) 146.9-147.3 Ω at 110°C(230°F)	
Air cleaner Type Element	 Dry type Un woven cloth type	
Exhaust pipe Muffler Suspension system	 Expansion resonance type Rubber hangers	

NOTE

O.D. = Outer Diameter
I.D. = Inner Diameter
O.S. = Oversize Diameter
U.S. = Undersize Diameter

TIGHTENING TORQUE EDNC0020

Item	Nm	Kg.cm	lb.ft
Cylinder Block			
Front engine support bracket bolt and nut	45 - 55	450 - 550	33 - 41
Engine suppot bracket stay bolt	45 - 55	450 - 550	33 - 41
Oil pressure switch	13 - 15	130 - 150	10 - 11
Cylinder head			
Cylinder head bolt	30+(90°)+Release all bolts+30+(90°)	300+(90°)+Release all bolts+300+(90°)	22+(90°)+Release all bolts+22+(90°)
Intake manifold bolts or nuts	15 - 20	150 - 200	11 - 15
Exhaust manifold nut	25 - 30	250 - 300	18 - 22
Cylinder head cover bolt	8 - 10	80 - 100	6 - 7
Camshaft bearing cap bolt	12 - 14	120 - 140	9 - 10
Rear plate bolt	32 - 35	320 - 350	24 - 26
Main Moving system			
Connecting rod cap nut	32 - 35	320 - 350	24 - 26
Crankshaft bearing cap bolt	55 - 60	550 - 600	41 - 44
Fly wheel M/T bolt	120 - 130	1200 - 1300	89 - 96
Drive plate A/T bolt	120 - 130	1200 - 1300	89 - 96
Timing system			
Crankshaft pulley bolt	140 - 150	1400 - 1500	103 - 111
Camshaft sprocket bolt	80 - 100	800 - 1000	59 - 74
Timing belt tensioner bolt	20 - 27	200 - 270	15 - 20
Timing belt idle bolt	43 - 55	430 - 550	32 - 41
Timing belt cover bolt	8 - 10	80 - 100	6 - 7
Front case bolt	20 - 27	200 - 270	15 - 20
Engine Mounting			
Right mounting insulator (large) nut	90 - 110	900 - 1100	66 - 81
Right mounting insulator (small) nut	45 - 64	450 - 640	33 - 47
Right mounting bracket to engine nuts and bolts	50 - 65	500 - 650	37 - 48
Transmission mount insulator nut	50 - 65	500 - 650	37 - 48
Transmission insulator bracket to side member bolts	45 - 64	450 - 640	33 - 47
Rear roll stopper insulator nut	45 - 64	450 - 640	33 - 47
Rear roll stopper bracket sub frame bolts	45 - 64	450 - 640	33 - 47
Front roll stopper insulator nut	45 - 64	450 - 640	33 - 47
Front roll stopper bracket to sub frame bolts	45 - 64	450 - 640	33 - 47
Oil filter	12 - 16	120 - 160	9 - 12
Oil pan bolts	10 - 12	100 - 120	7 - 9
Oil pan drain plug	35 - 45	350 - 450	25 - 33
Oil screen bolts	15 - 22	150 - 220	11 - 16

Item	Nm	Kg.cm	lb.ft
Alternator support bolt and nut	20 - 25	200 - 250	15 - 18
Alternator lock bolt	12 - 15	120 - 150	9 - 11
Alternator brace mounting bolt	20 - 27	200 - 270	15 - 20
Coolant pump pulley	8 - 10	80 - 100	6 - 7
Coolant pump bolt	12 - 15	120 - 150	9 - 11
Collant temperature sensor	25 - 30	250 - 300	18 - 22
Coolant inlet fitting bolt	17 - 20	170 - 200	13 - 14
Thermostat housing bolt	15 - 20	150 - 200	11 - 14
Intake and Exhaust system			
Air cleaner body mounting bolts	8 - 10	80 - 100	6 - 7
Resonator mounting bolts	4 - 6	40 - 60	3 - 4
Intake manifold to cylinder head nuts and bolts	15 - 20	150 - 200	11 - 14
Surge tank stay to cylinder block bolts	18 - 25	180 - 250	13 - 18
Throttle body to surge tank bolts	15 - 20	150 - 200	11 - 14
Exhaust manifold to cylinder head nuts	25 - 30	250 - 300	18 - 22
Exhaust manifold cover to exhaust manifold bolts	15 - 20	150 - 200	11 - 14
Oxygen sensor to exhaust manifold	50 - 60	500 - 600	37 - 44
Front exhaust pipe to exhaust manifold nuts	30 - 40	300 - 400	22 - 30
Front exhaust pipe bracket bolts	30 - 40	300 - 400	22 - 30
Front exhaust pipe to catalytic converter bolts	40 - 60	400 - 600	30 - 44

SERVICE STANDARD EDDA0030

Standard value	
Antifreeze	Mixture ratio of anti-freeze in coolant
ETHYLENE GLYCOL BASE FOR ALUMINUM	50 %

SPECIAL TOOLS EDKB0040

Tool (Number and name)	Illustration	Use
Crankshaft front oil seal installer (09214-21000)	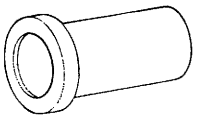 ECKA010C	Installation of the front oil seal
Crankshaft front oil seal guide (09214-21100)	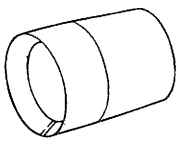 ECKA010D	Guide of oil seal
Camshaft oil seal installer (09221-21000)	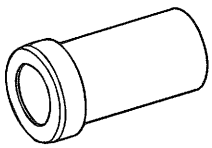 EDDA005B	Installation of the camshaft oil seal
Valve guide installer (09221-22000)	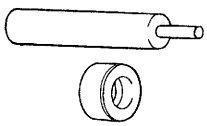 ECKA010B	Removal and installation of valve guides
Valve stem oil seal installer (09222-22001)	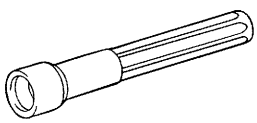 ECKA010A	Installation of valve stem oil seals
Valve spring compressor (09222-28000) Valve spring compressor holder (09222-28000)	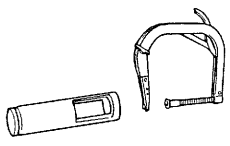 J20-008F	Removal and installation of intake and exhaust valves

Tool (Number and name)	Illustration	Use
Valve stem seal remover 09222-29000	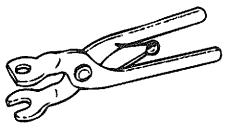 EDDA005J	Removal of valve stem seal
Crankshaft rear oil seal installer (09231-21000)	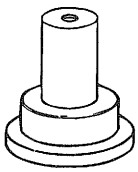 EDDA005F	Installation of engine real oil seal and crankshaft rear oil seal
Piston pin remover and installer kit (09234-33001)	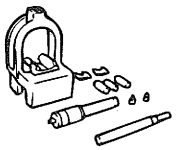 EDDA005G	Removal and installation of piston pin (Use with 09234-33003)
Piston pin setting tool insert (09234-33002)	 EDDA005H	Removal and installation of piston pin (Use with 09234-33001)

TROUBLESHOOTING EDKB0050

Symptom	Probable cause	Remedy
Low compression	Blown cylinder head gasket Worn or damaged piston rings Worn piston or cylinder Worn or damaged valve seat	Replace gasket Replace rings Repair or replace piston and/or cylinder block Repair or replace valve and/or seat ring
Low oil pressure	Low engine oil level Faulty oil pressure switch Clogged oil filter Worn oil pump gears or cover Thin or diluted engine oil Oil relief valve stuck (open) Excessive bearing clearance	Check engine oil level Replace Replace Replace Change and determine cause Repair Replace
High oil pressure	Oil relief valve stuck (closed)	Repair
Excessive engine vibration	Loose engine roll stopper (front, rear) Loose transaxle mount bracket Loose engine mount bracket Loose center member Broken transaxle mount insulator Broken engine mount insulator Broken engine roll stopper insulator	Re-tighten Re-tighten Re-tighten Re-tighten Replace Replace Replace
Noisy valves	Thin or diluted engine oil (low oil pressure) Worn or damaged valve stem or valve guide HLA abnormal operation	Change Replace Speed the engine up (for venting) or Replace the HLA
Connecting rod and/or main bearing noise	Insufficient oil supply Thin or diluted engine oil Excessive bearing clearance	Check engine oil level Change and determine cause Replace
Timing belt noise	Incorrect belt tension	Adjust belt tension
Low coolant level	Leakage of coolant 1. Heater or radiator hose 2. Faulty radiator cap 3. Thermostat housing 4. Radiator 5. Engine coolant pump	 Repair or replace parts Tighten or replace clamps Replace gasket or housing Repair or replace Replace parts
Clogged radiator	Foreign material in coolant	Replace coolant
Abnormally high coolant temperature	Faulty thermostat Faulty radiator cap Restricted flow in cooling system Loose or missing drive belt Faulty water pump Faulty electric fan Insufficient coolant	Replace parts Replace parts Clear restriction or replace parts Adjust or replace Replace Repair or replace Refill coolant
Abnormally low coolant temperature	Faulty thermostat Faulty temperature sensor wiring	Replace Repair or replace
Inoperative electrical cooling fan	Damaged thermo sensor, electrical motor, radiator fan relay and wiring, fuse	Replace or repair

Symptom	Probable cause	Remedy
Exhaust gas leakage	Loose connections Broken pipe or muffler	Retighten Repair or replace
Abnormal noise	Detached baffle plate in muffler Broken rubber hanger Pipe or muffler contacting vehicle body Broken pipe or muffler	Replace Replace Correct Repair or replace

MAINTENCE EDKB0060

CHECKING ENGINE OIL

1. Position the vehicle on a level surface.
2. Warm up the engine.

> **NOTE**
> *If a vehicle has been out of service for a prolonged period of time, warm up the engine for approximately 20 minutes.*

3. Turn off the engine, and wait 2 or 3 minutes, then check the oil level.
4. Check that the engine oil level is within the level range indicated on the oil dipstick If the oil level is found to have fallen to the lower limit (the L mark), refill to the "F" mark.

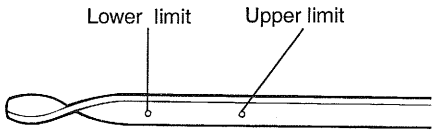

ECDA001A

> **NOTE**
> *When refilling, use the same type of engine oil.*

5. Check that the oil is not dirty or contaminated with coolant or gasoline, and that it has the proper viscosity.

CHANGING ENGINE OIL

> **CAUTION**
> ***Be careful not to burn yourself, as the engine oil is hot.***

1. Run the engine until it reaches normal operating temperature.
2. Turn off the engine
3. Remove the oil filler cap and the drain plug (on the oil pan). Drain the engine oil.

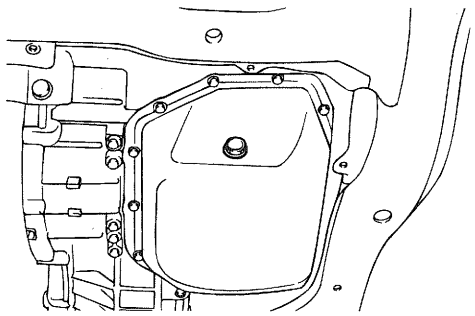

EAKA001A

4. Install and tighten the drain plug to the specified torque.

Tightening torque

Drain plug : 35-45Nm (350-450kg.cm, 24-33lb.ft)

5. Fill the crankcase with fresh engine oil through the oil filler cap opening.

Drain and Refill Without oil filter :

3.0liter (3.17U.S.qts, 2.64 Imp.qts.)

Drain and Refill With oil filter :

3.3liter (3.48U.S.qts., 2.90 Imp.qts.)

6. Install the oil filler cap.
7. Start and run the engine.
8. Turn off the engine and then check the oil level. Add oil if necessary.

EDKB0070

FILTER SELECTION

All Hyundai engines are equipped with a high quality, disposable oil filter. This filter is recommended as a replacement filter on all vehicles. The quality of replacement filters varies considerably. Only high quality filters should be used to assure the most efficient service. Make sure that the rubber gasket from the old oil filter is completely removed from the contact surface on the engine block before installing the new filter.

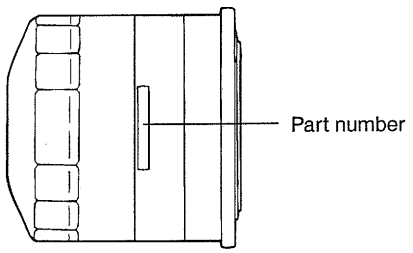

EDDA063A

PROCEDURE FOR REPLACING THE OIL FILTER

⚠ ***CAUTION***

Be careful not to burn yourself, as the engine and engine oil are hot.

1. Use a filter wrench to remove the oil filter.
2. Before installing the new oil filter on the engine, apply clean engine oil to the surface of the rubber gasket.

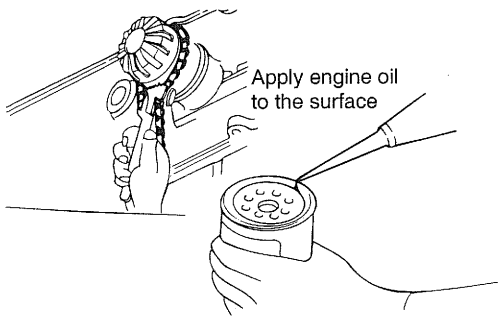

EDDA063B

3. Tighten the oil filter to the specified torque.

Tightening torgue
Oil filter : 12 - 16 Nm (120 - 160 kg.cm, 9 - 12 lb.ft)

4. Run the engine to check for engine oil leaks.
5. After turning off the engine, check the oil level and add oil as necessary.

SELECTION OF ENGINE OIL ECHA0600

Recommended API classification: SD OR ABOVE SE OR ABOVE [For EC.]

Recommended SAE viscosity grades:

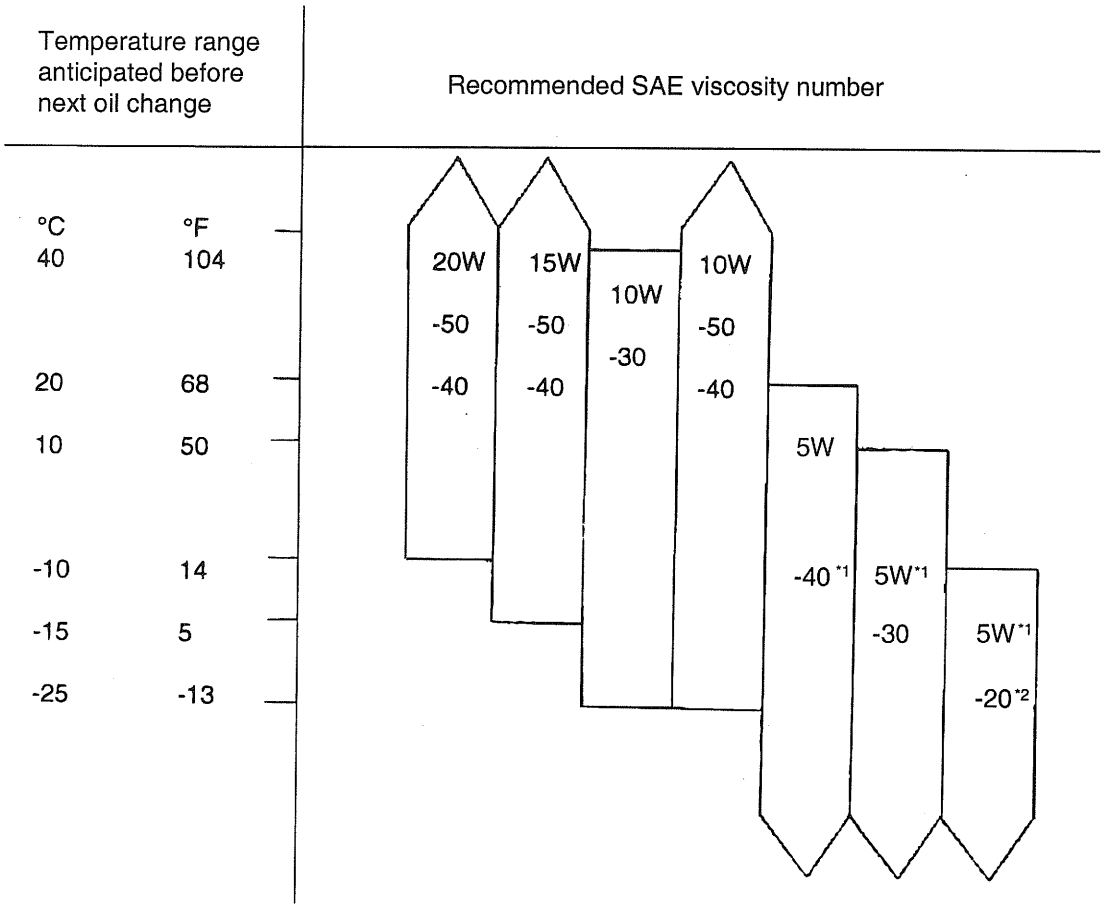

***1 Restricted by driving condition and environment.**
***2 Not recommended for sustained high speed vehicle operation**

EDA9990B

NOTE

For best performance and maximum protection of all types of operation, select only those lubricants which:

1. *Satisfy the requirements of the API classification.*
2. *Have proper SAE grade number for expected ambient temperature range.*

Lubricant that does not have both an SAE grade number and an API service classification on the container should not be used.

CHECKING COOLANT LEAK ECNC0110

1. Loosen the radiator cap.
2. Confirm that the coolant level is up to the filler neck.
3. Install a radiator cap tester to the radiator filler neck and apply 140 KPa (1.4 kg/cm², 20psi) pressure. Hold it for two minutes in that condition, while checking for leakage from the radiator, hoses or connections.

NOTE

1. Radiator coolant may be extremely hot. Do not open the system because hot, or scalding water could gush out causing personal injury. Allow the vehicle to cool before servicing this system.
2. Be sure to clean away any moisture from the places checked completely.
3. When the tester is removed, be careful not to spill any coolant from it.
4. Be careful, when installing and removing the tester and when testing, not to deform the filler neck of the radiator.

4. If there is leakage, repair or replace with the apropriate part.

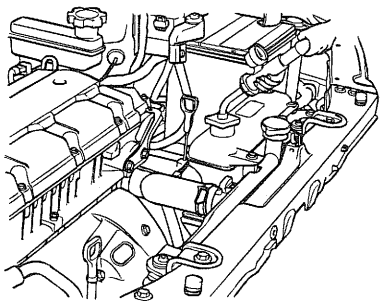

KDNB001D

RADIATOR CAP PRESSURE TEST

1. Use an adapter to attach the cap to the tester.
2. Increase the pressure until the gauge stops moving.

Main valve opening pressure :

83-110 kPa (0.83-1.1 kg/cm², 12-16 psi)

Vacuum valve opening pressure :

-7 kPa (-0.07 kg/cm², -1.0 psi)

3. Check that the pressure level is maintained at or above the limit.
4. Replace the radiator cap if the reading does not remain at or above the limit.

NOTE

Be sure that the cap is clean before testing, since rust or other foreign material on the cap seal will cause an incorrect reading.

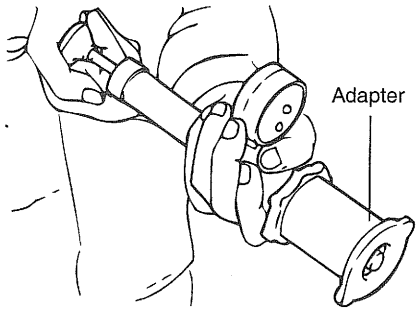

ECA9090A

SPECIFIC GRAVITY TEST ECNC0120

1. Measure the specific gravity of the coolant with a hydrometer.
2. Measure the coolant temperature and calculate the concentration from the relation between the specific gravity and temperature, using the following table for reference.

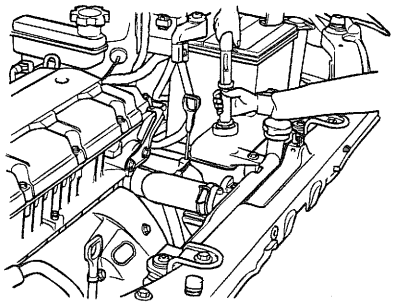

KDNB001E

RELATION BETWEEN COOLANT CONCENTRATION AND SPECIFIC GRAVITY

Coolant temperature °C (°F) and specific gravity					Freezing temperature °C (°F)	Safe operating temperature °C (°F)	Coolant concentration (Specific volume)
10 (50)	20 (68)	30 (86)	40 (104)	50 (122)			
1.054	1.050	1.046	1.042	1.036	-16 (3.2)	-11 (12.2)	30%
1.063	1.058	1.054	1.049	1.044	-20 (-4)	-15 (5)	35%
1.071	1.067	1.062	1.057	1.052	-25 (-13)	-20 (-4)	40%
1.079	1.074	1.069	1.064	1.058	-30 (-22)	-25 (-13)	45%
1.087	1.082	1.076	1.070	1.064	-36 (-32.8)	-31 (-23.8)	50%
1.095	1.090	1.084	1.077	1.070	-42 (-44)	-37 (-35)	55%
1.103	1.098	1.092	1.084	1.076	-50 (-58)	-45 (-49)	60%

Example

The safe operating temperature is -15°C (5°F) when the measured specific gravity is 1.058 at coolant temperature of 20°C (68°F)

⚠ ***CAUTION***

• If the concentration of the coolant is below 30%, its anti-corrosion properties will be adversely affected. • if the concentration is above 60%, both the anti-freeze and engine cooling property will decrease, affecting the engine adversely. For these reasons, be sure to maintain the concentration level within the specified range.
• Do not use together with another brand's product.

RECOMMENDED COOLANT

Antifreeze	Mixture ratio of anti freeze in coolant
ETHYLENE GLYCOL BASE FOR ALUMINUM	50% [Except tropical areas] 40% [Tropical areas]

CHECKING COMPRESSION PRESSURE ECKB0130

1. Before checking engine compression, check the engine oil level. Also check that the starter motor and battery are all in normal operating condition.
2. Start the engine and wait until engine coolant temperature reaches 80-95°C (176-205°F).
3. Turn off engine and disconnect the spark plug cables.
4. Remove the spark plugs.
5. Crank the engine to remove any foreign material in the cylinders.
6. Insert the compression gauge into the spark plug hole.
7. Depress the accelerator pedal to open the throttle fully.
8. Crank the engine and read the gauge.

Standard value : 1500kpa (15Kg/cm², 218 psi)
Limit : 1400kpa (14Kg/cm², 203 psi)

9. Repeat steps 6 to 8 over all cylinders, ensuring that the pressure differential for each of the cylinders is within the specified limit.

Limit :	Max. 100 kpa (1.0 kg/cm² ,14 psi) between cylinders

10. If a cylinder's compression or pressure differential is outside the specification, add a small amount of oil through the spark plug hole, and repeat steps 6 to 9.
    1) If the addition of oil makes the compression to rise, it is likely that there may be wear between the piston ring and cylinder wall
    2) If compression remains the same, valve seizure, poor valve seating or a compression leak from the cylinder head gasket are all possible causes.

Tightening torque

Spark plug : 20-30 Nm (200-300 kg.cm, 14-22 lb.ft)

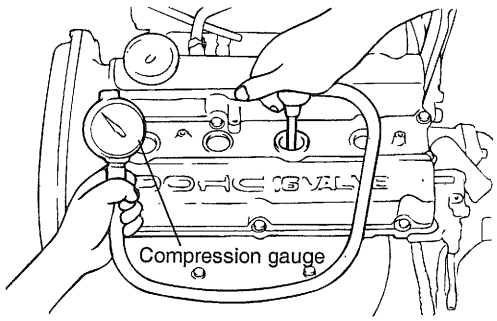

ECA9001A

ADJUSTING TIMING BELT TENSION EDNC0140

1. Lift the vehicle by using of jack.
2. Rotate the steering wheel counter-clockwise throughly.

   NOTE
   Do watch not to over load.

3. Remove the engine support bracket.

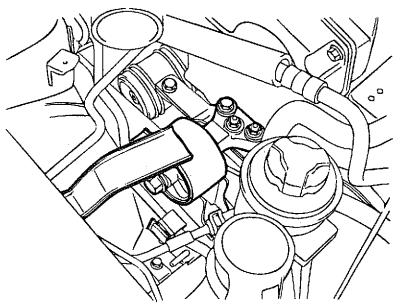

KDNB001B

4. Remove the water pump pulley.
5. Remove the timing belt upper cover.

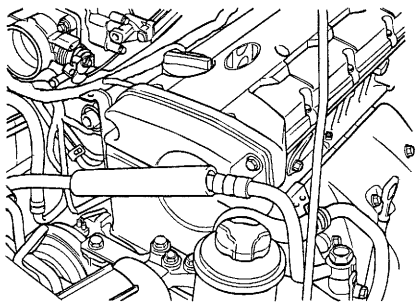

KDNB001C

6. Remove the spark plug.

7. Place the pistion of No. 1 cylinder to TDC of the compression stroke by rotating the crankshaft clockwise.

NOTE

Crankshaft is to be rotated clockwise otherwise, the tension is inadequately adjusted.

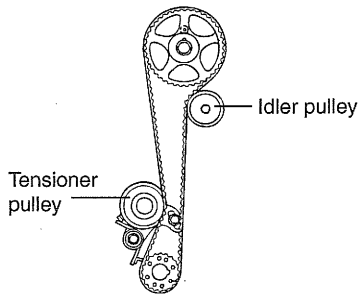

EDDB091A

8. Loosen the tensioner bolt of pivot side and slotside.

9. Rotate the crankshaft clockwise as many as 2 teeth of sprocket.

NOTE

Set the exhaust valve rocker arm to upper position of cam in order to be the specified tension.

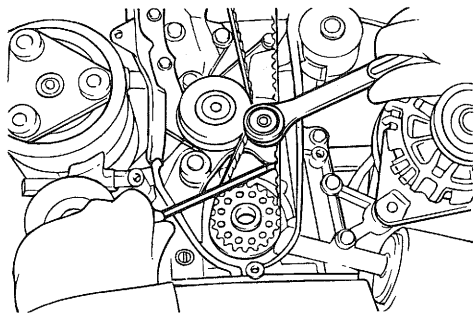

EDDA092A

10. Check that the teeth of sprocket and belt coincide with each other.

11. Tighten the bolt of slot side of first and then tighten the bolt of pivot side.

12. Install the timing belt tension.

13. Install the spark plug.

14. Install the timing belt upper cover.

15. Install the water pump pulley and engine support bracket.

ADJUSTING DRIVE BELT TENSION EDKB0130

1. Check that the belts are not damaged and are properly fit for the pulley grooves.

2. Apply 100 N (22 lbs.) force to the back and midway portion of the belt between the pulleys as shown in the illustration, measure the amount of deflection with a tension gauge.

CAUTION

1. ***When installing the V-ribbed belt, check that the V-ribs are properly aligned.***
2. ***If noise or slippage is detected, check the belt for wear, damage, or breakage on the pulley contact surface, and check the pulley for scoring. Also check the amount that the belt is deflected.***

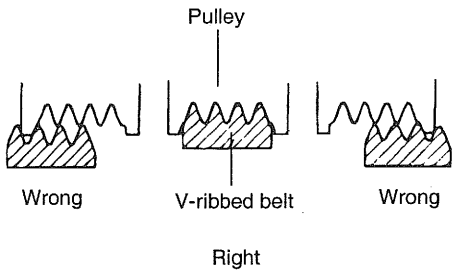

ECA9980A

STANDARD VALUE:

Items		Inspection	Adjustment	
			New	Used
For alternator	Deflection mm (in.)	5.1-6.0 (0.200-0.236)	4.0-4.4 (0.157-0.173)	5.1-5.7 (0.200-0.224)
	Tension N (lb)	350-500 (79-112)	650-750 (143-165)	400-500 (88-110)
For air conditioner	Deflection mm (in.)	8 (0.31)	5.0-5.5 (0.20-0.22)	6.0-7.0 (0.24-0.28)
	Tension N (lb)	250-500 (56-112)	470-570 (106-128)	320-400 (72-90)
For power steering	Deflection mm (in.)	6.0-9.0 (0.24-0.35)	-	-

NOTE

1. *The belt tension must be measured half - way between the specified pulleys.*
2. *When a new belt is installed, adjust the tension to the central value of the standard range indicated under "New" in the above table. Let the engine idle for 5 minutes or more, and check the standard value indicated under "Inspection."*
3. *When adjusting a belt which has been used,or newly installed, after 5 minutes or more of operation, refer to the standard value indicated under "Used" in the above table.*
4. *Refer to the standard value indicated under "Inspection" for periodic inspections.*

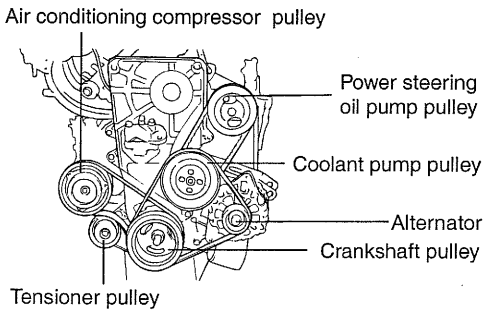

EAKA001B

TYPE A TENSION GAUGE

Do not let the dial section of the tension gauge contact other objects during measurement.

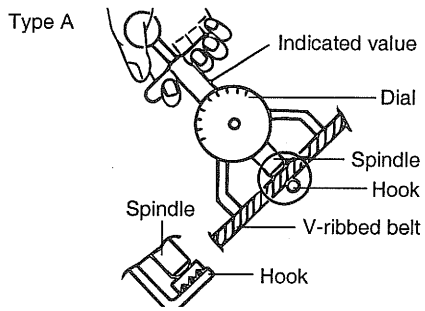

ECA9980C

TYPE B TENSION GAUGE

1. When measuring, turn the reset button in the direction of the arrow and set the gauge needle to the RESET position.
2. If the tension gauge is removed from the belt, the needle will still indicate the tension. Read the tension value after removing the gauge.

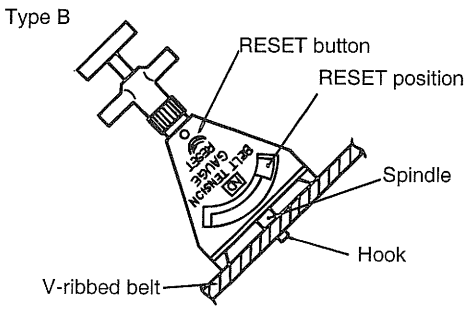

ECA9980D

ADJUSTING THE ALTERNATOR BELT

⚠ *CAUTION*

If the belt is too loose, it will cause noise or sudden wear.
If the belt is too tight, the engine coolant pump bearing or the alternator can get damaged.

1. Loosen the alternator nut "A" and the tension adjuster lock bolt "B".
2. Using the tension adjuster bolt, adjust the belt tension to the specification.
3. Tighten the adjuster lock bolt "B".
4. Tighten the alternator nut "A".
5. Check the tension or the deflection of belt, readjust if necessary.

Tightening torque

Alternator support bolt and nut :

20-25 Nm (200-250 kg.cm, 14-18 lb.ft)

Alternator lock bolt B :

12-15 Nm (120-150 kg.cm, 9-11 lb.ft)

Alternator brace mounting bolt :

20-27 Nm (200-270 kg.cm, 15-20 lb.ft)

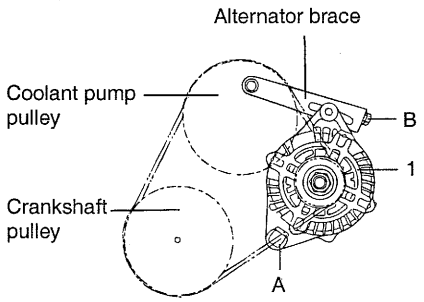

ECKA010H

CYLINDER BLOCK

CYLINDER BLOCK

COMPONENTS ECKB1000

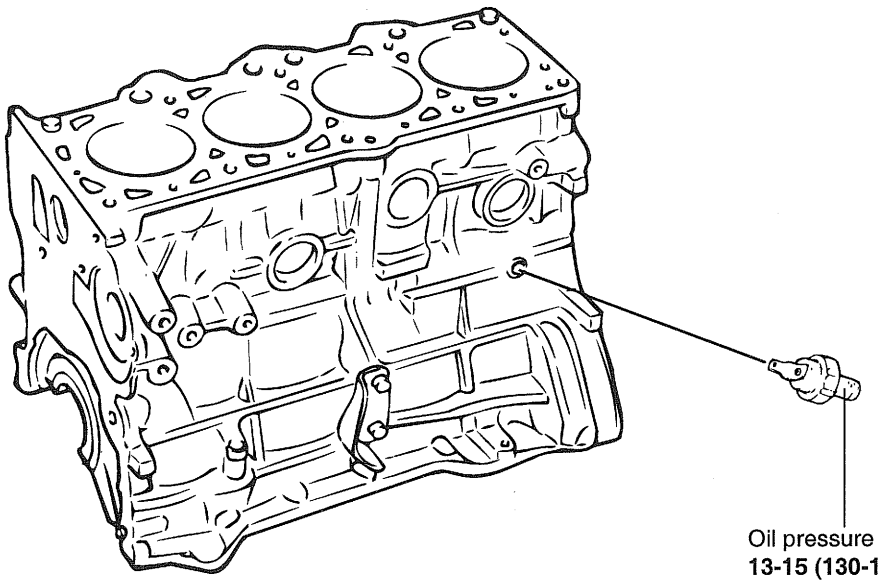

TORQUE : Nm (kg.cm, lb.ft)

V5EM104B

DISASSEMBLY ECKB1100

1. Remove the cylinder head, timing belt, front case, flywheel, pistons and crankshaft.
2. Remove the oil pressure switch.

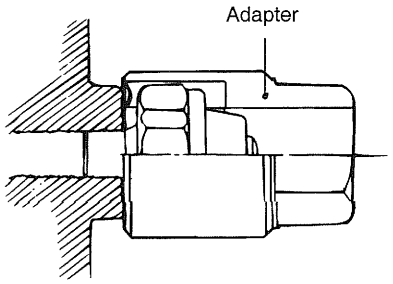

EDDA008A

CYLINDER BLOCK EDKB1200

1. Check the engine block for scores, rust and corrosion. Also check for cracks or any other defects. Replace the block if defective.

2. Using a straight edge and feeler gauge, check the top surface of the block for warpage. Make sure that the surface is free from gasket chips or other foreign material.

Standard : 0.03 mm (0.0012 in.) or less

Limit : 0.15 mm (0.0059 in.) or less

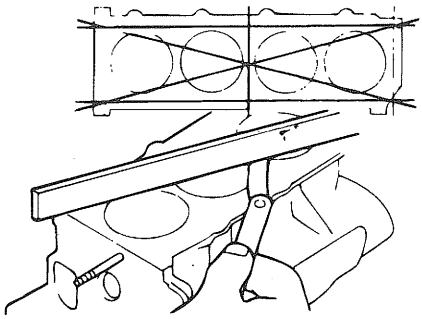

ECA9450B

3. Measure the cylinder bore with a cylinder gauge at three levels in the direction of A and B. If the cylinder bores show more than the specified out-of-round or taper or if the cylinder walls are badly scuffed or scored, the cylinder block should be rebored and honed. Oversize pistons and rings must be fitted.

Cylinder I.D : 76.5 - 76.53 mm (3.0118 - 3.0130 in.)

Cylinder I.D taper : 0.01 mm (0.0004 in.) or less

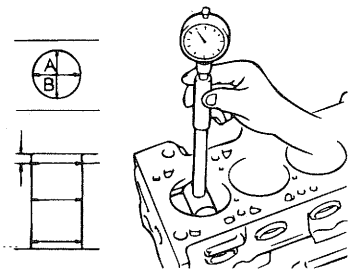

EDDA085B

4. If a cylinder ridge exists, cut away with a ridge reamer.

5. Oversize pistons are available in four sizes.

Piston service size and mark mm (in.)

0.25 (0.010) O.S. : 0.25

0.50 (0.020) O.S. : 0.50

0.75 (0.030) O.S. : 0.75

1.00 (0.039) O.S. : 1.00

6. When boring the cylinder to the oversize, maintain the specified clearance between the oversize piston and the bore, and make sure that all pistons used are the same oversize.
The standard measurment of the piston's outside diameter is taken 47 mm (1.85 in.) from the top land of the piston.

Piston - to - cylinder clearance :

0.025 - 0.045 mm (0.0010 - 0.0018 in.)

ENGINE MOUNTS

COMPONENTS ECNC1300

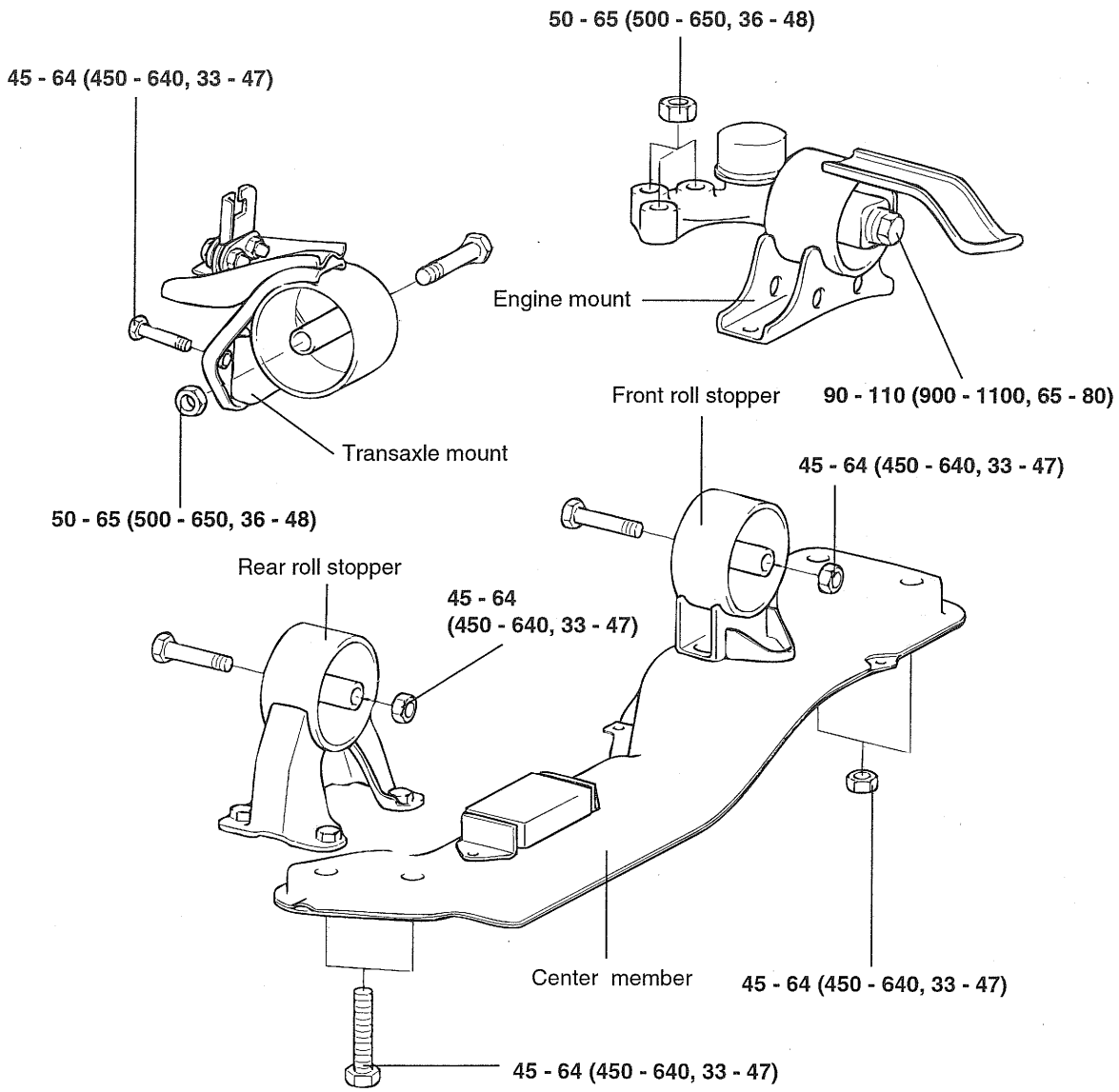

TORQUE : Nm (kg.cm, lb.ft)

EDNB002A

REMOVAL ECNC1400

1. Attach an engine hoist to the engine hooks, and raise the engine just enough so that there is no pressure on the insulators.

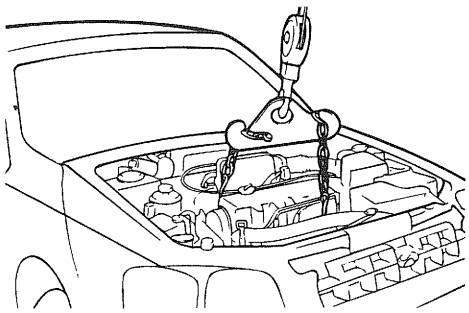

ECDA012A

ENGINE MOUNTING

1. Remove the engine mounting insulator bolts.
2. Remove the engine mounting bracket from the engine.

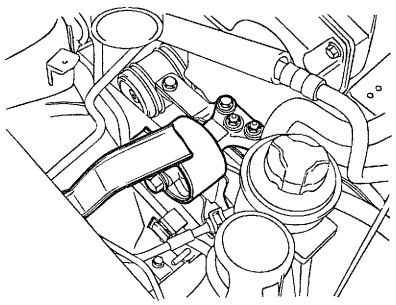

KDNB001B

TRANSMISSION MOUNTING

1. For vehicles with a 5-speed manual transmission, remove the select control valve.
2. Remove the transmission mounting bolt.

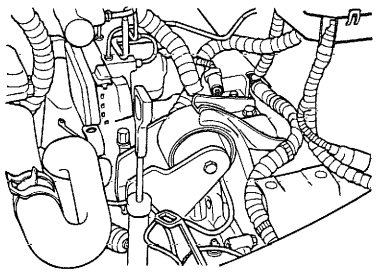

KDNB002B

3. Detach the cap from inside the right fender shield. Remove the transmission mounting bolts.
4. Remove the transmission bracket.

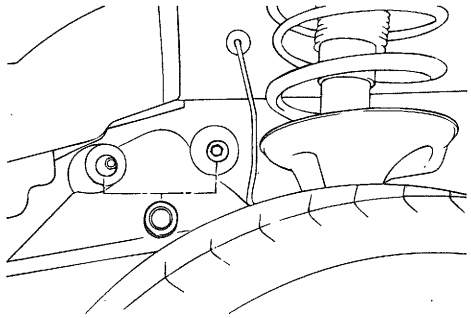

ECKA020B

FRONT ROLL STOPPER

1. Remove the front roll stopper bracket from the center member.

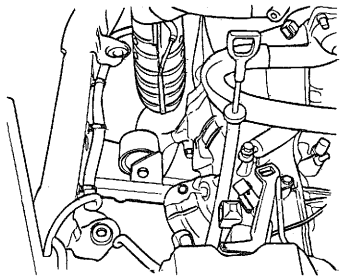

KDNB002C

REAR ROLL STOPPER

1. Remove the rear roll stopper from the center member.

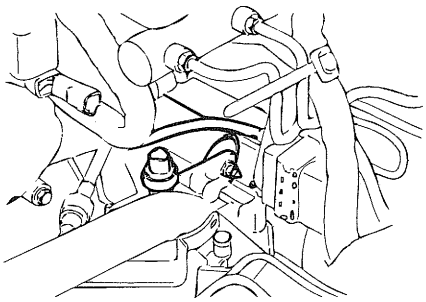

KDNB002D

ENGINE AND TRANSAXLE ASSEMBLY

REMOVAL ECNC1600

1. Remove the battery.
2. Detach the air cleaner.

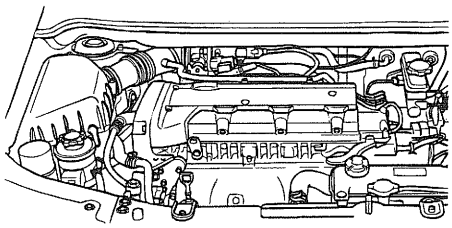

KDNB003C

3. Disconnect the connectors for the backup lamp switch and engine harness.
4. For vehicles with a 5-speed manual transmission, disconnect the select control valve connector.
5. Disconnect the connectors for the alternator harness and the oil pressure gauge wiring.
6. Drain the engine coolant.

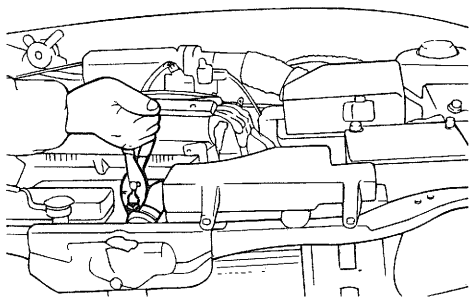

EDDA016B

NOTE

When disconnecting hoses, make identification marks to ensule they are reconnected correctly.

CAUTION

Be careful not to spill oil or fluid from hoses. Plug the openings to prevent foreign material from entering.

7. Disconnect the radiator upper and lower hoses on the engine side, then remove the radiator assembly.
8. Disconnect the engine ground.
9. Disconnect the brake booster vacum hose.
10. Remove the main fuel line, the return and vapor hoses from the engine side.
11. Disconnect the heater hoses (inlet and outlet) on the engine side.
12. Disconnect the accelerator cable at the engine side.
13. For vehicles with manual transmission, remove the control cable from the transmission.
14. For vehicles with automatic transmission, remove the control cable from the transmission.
15. Disconncet the speedometer cable from the transmission.
16. Disconncet the air conditioner compressor from the mounting bracket.

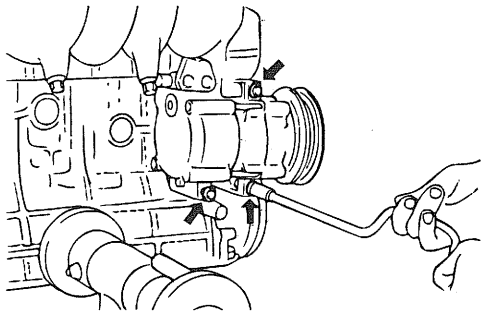

EDDA016C

17. Jack up the vehicle.
18. Drain the transmission oil (or fluid).

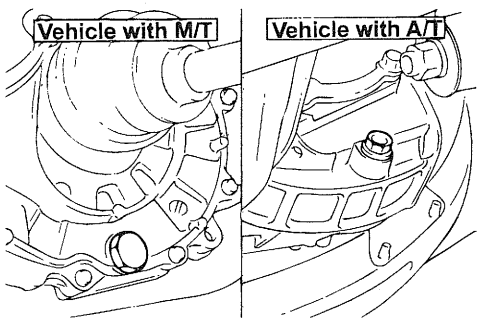

EDDA016D

19. Disconnect the front exhaust pipe from the manifold.

NOTE

Use wire to suspend the exhaust pipe from the bottom of the vehicle.

20. For vehicles with manual transmission, remove the shift control rod and extension rod.

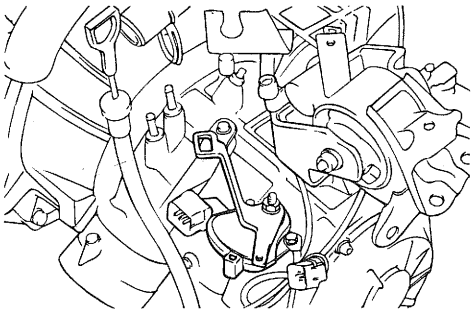

ECKA020G

21. Remove the lower arm ball joint bolts and the stabilizer bar at the point where it is mounted to the lower arm.

22. Remove the drive shafts from the transmission case.

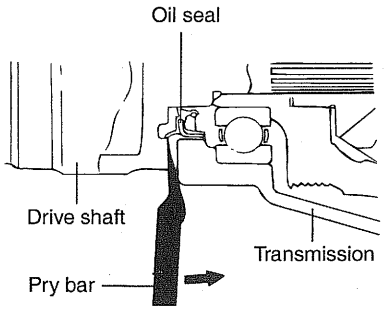

EDDA016E

⚠ ***CAUTION***

- ***Plug the axle holes of the transmission case to prevent entry of foreign material.***
- ***Install new circlips on the drive shafts when reassembling.***

23. Hang the lower arm and drive shaft from the body with wire.

24. Attach a chains or cables to the engine. Use an engine hoist or a chain hoist to slightly raise the engine (enough to support the engine's weight while processing with the following steps).

25. Remove the front roll stopper.

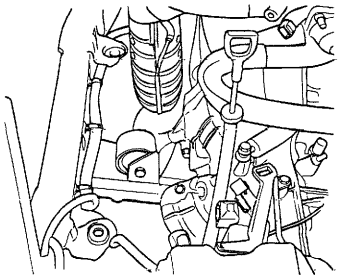

KDNB002C

26. Separate the rear roll stopper.

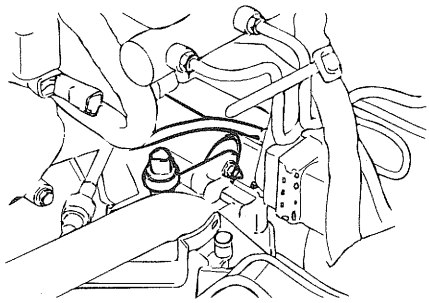

KDNB002D

27. Remove the engine mounting insulator bolts.

28. Remove the engine mounting bracket from the engine.

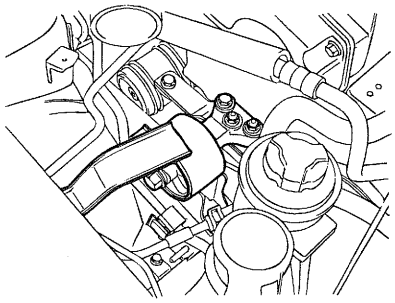

KDNB001B

29. Slowly raise the engine (to the extent that the weight of the engine and transmission assembly is not applied to the mounting portions) and temporarily hold it in the raised position.

⚠ ***CAUTION***

Check that all cables, hoses, harnesses, connectors etc. are disconnected from the engine.

30. Remove the caps from the inside of the right fender shield and remove the transaxle mount bracket bolts.

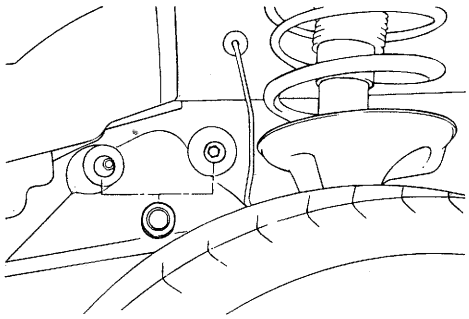

ECKA020B

31. While directing the transmission side downward, lift the engine and transmission assembly up and out of the vehicles.

MAIN MOVING SYSTEM

CAM SHAFT

COMPONENTS EDDA0180

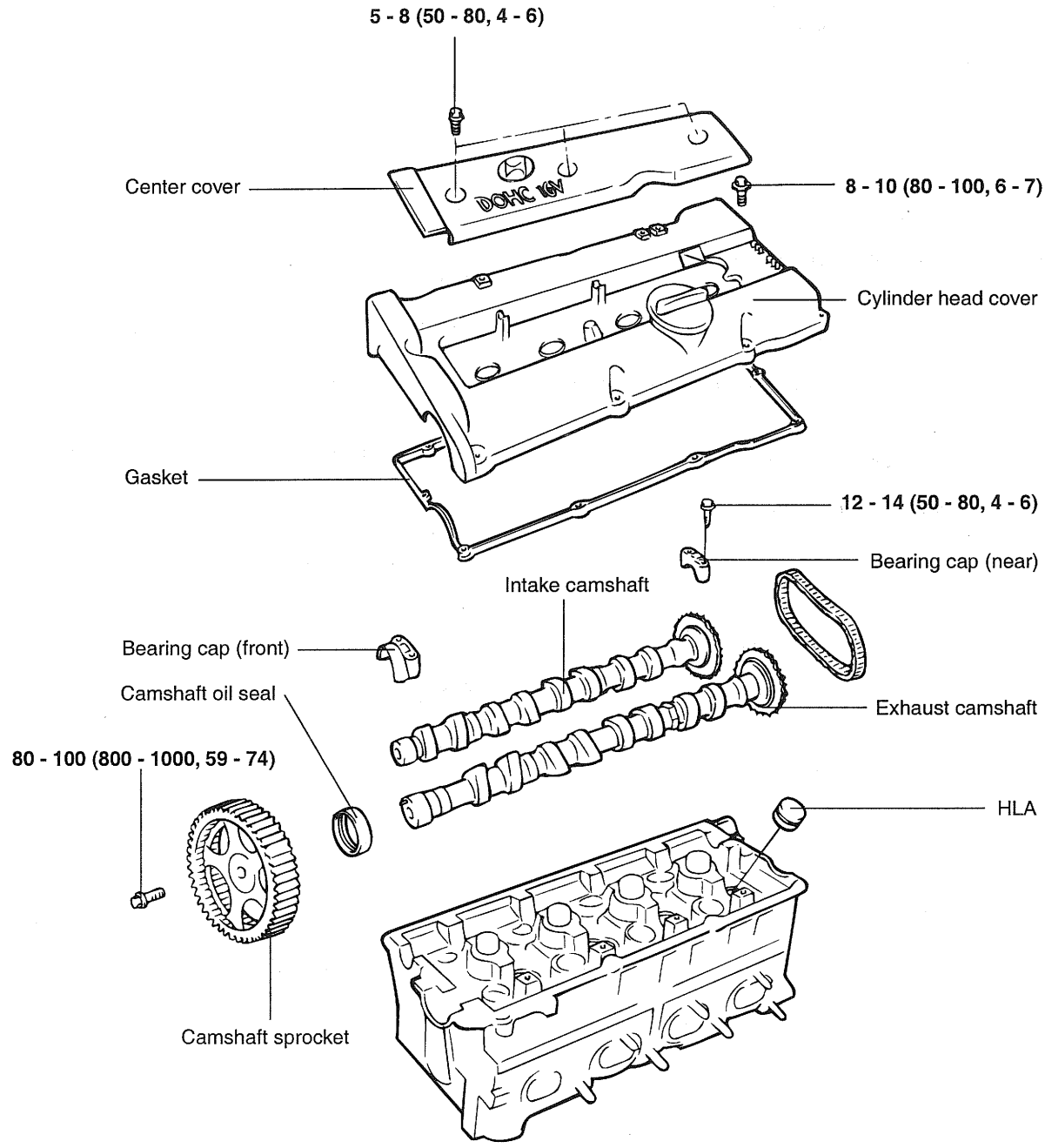

TORQUE : N.m (kg.cm, lb.ft)

EDDA018A

DISASSEMBLY ECKB1800

1. Disconnect the breather hose and the P.C.V. hose.
2. Remove the coolant pump pulley and crankshaft pulley.

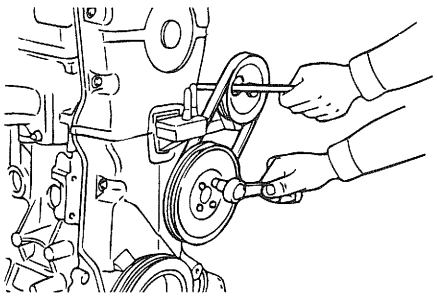

EDDA019A

3. Remove the timing belt cover.
4. Loosen the timing belt tensioner pulley and temporarily secure it.
5. Remove the timing belt from the camshaft sprocket.
6. Loosen the center cover bolts and then remove the center cover.
7. Remove the ignition coil assembly.
8. Loosen the cylinder head cover bolts and then remove the cylinder head cover.

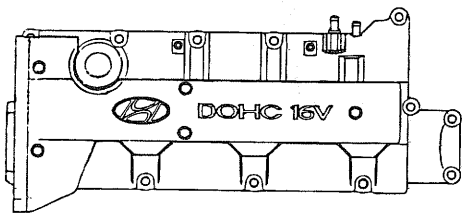

EDKB444C

9. Remove the camshaft sprocket.
10. Remove the camshaft bearing caps and timing chain.

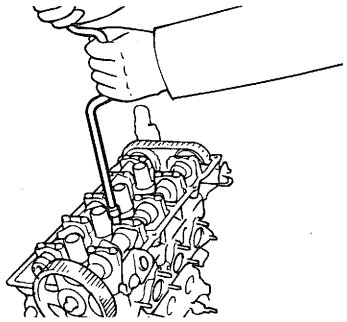

EDDA019C

11. Remove the camshaft.
12. Remove the mechanical tappets and shims.

> **NOTE**
> *Arrange the mechanical tapets and shims in correct order.*

INSPECTION EDKB1900

CAMSHAFTS

1. Check the camshaft journals for wear. If the journals are badly worn, replace the camshaft.
2. Check the cam lobes for damage. If the lobe is damaged or worn excessively, replace the camshaft.

Standard value	
Intake	43.4484 mm (1.7106 in.)
Exhaust	43.8489 mm (1.7263 in.)
Limit	
Intake	42.9484 mm (1.6909 in.)
Exhaust	43.3489 mm (1.7066 in.)

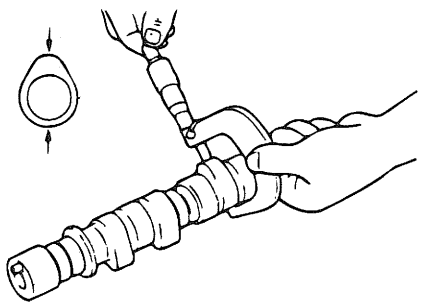

KDDA001D

3. Check the cam surface for abnormal wear or damage, and replace if necessary.

4. Check each bearing for damage. If the bearing surface is excessively damaged, replace the cylinder head assembly or camshaft bearing cap, as necessary.

Camshaft end play : 0.1-0.15mm(0.0039-0.0059 in.)

OIL SEAL

1. Check the lips for wear. If the lip threads are worn, replace.
2. Check the oil seal lip contacting surface of the camshaft. If it is worn, replace the camshaft.

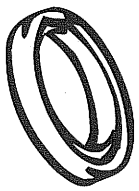

V5EM202A

HLA (HYDRAULIC LASH ADJUSTER)

With the HLA filled with engine oil, hold A and press B by hand. If B moves, replace the HLA.

For other specific trouleshooting regarding HLA, refer to the table below.

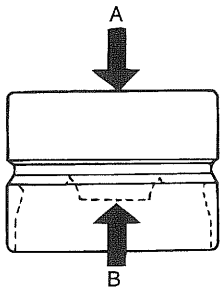

EDDA020B

Problem	Possible cause	Action
Temporary noise on starting a cold engine	Normal	This noise will disappear after the oil in the engine has reached normal pressure.
Continuous noise when engine is running after sitting more than 48 hours.	Oil leakage of the high pressure chamber on HLA,allowing air to get in.	Noise will disappear within 15 minutes when engine runs at 2000-3000 rpm If it doesn't disappear,refer to item 7 below
Continuous noise when engine is first started after rebuilding cylinder head.	Insufficient oil in cylinder head oil gallery.	
Continuous noise when engine is running after excessive cranking.	Oil drain out of the high-pressure chamber in HLA, allowing air to get in. Insufficient oil in HLA,	
Continuous noise when engine is running after changing HLA.		⚠ ***CAUTION*** ***Do not run engine at a speed higher than 3000 rpm as this may damage HLA.***
Continuous noise during idle after high speed running.	Engine oil level too high or too low.	Check oil level. Drain or add oil as necessary.
	Excessive amount of air in the oil at high engine speed.	Check oil supply system
	Deteriorated oil	Check oil quality. If deteriorated, replace with specified type and amount of oil.

Problem	Possible cause	Action
Noise continuous for more than 15 minutes.	Low oil pressure	Check oil pressure and oil supply system of each part of engine.
	Faulty HLA.	Remove the cylinder head cover and press down on the HLA by hand. If it moves, replace HLA. ⚠ ***CAUTION*** ***Be careful of hot HLA.***

TIMING CHAIN

Check the bushing and plate of timing chain for wear. Replace if wear is severe.

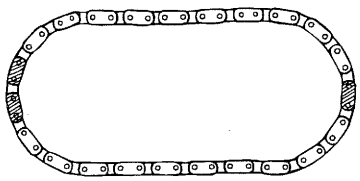

EDDA020C

REASSEMBLY EDNC2200

1. Install the HLA.
2. Align the camshaft timing chain with intake timing chain sprocket and exhaust timing chain sprocket as shown.

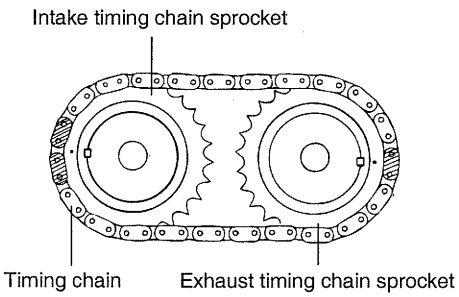

EDDA021A

3. Install the camshaft after lubricating the camshaft journals with engine oil.

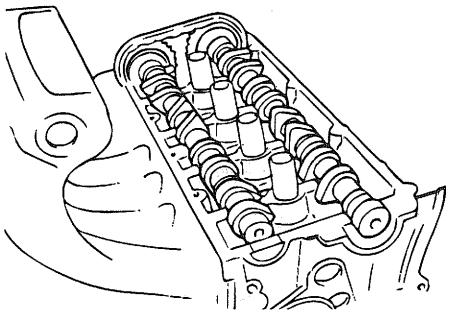

EDDA021B

4. Install the bearing caps. The markings on the caps are for intake/exhaust identification.

   I: Intake camshaft

   E: Exhaust camshaft

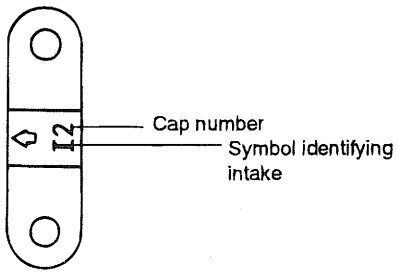

EDDA021C

5. Tighten the bearing caps to the specified torque in two or three steps as shown.

Tightening torque

Bearing cap bolt. :

12 - 14Nm (120 - 140kg.cm, 9 - 10lb.ft)

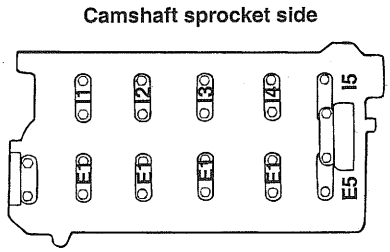

EDDA021D

6. Using the special tool, camshaft oil seal installer (09221-21000), press fit the camshaft oil seal. Be sure to apply engine oil to the oil seal lip. Insert the oil seal along the camshaft front end and install by driving the installer with a hammer until the oil seal is fully seated.

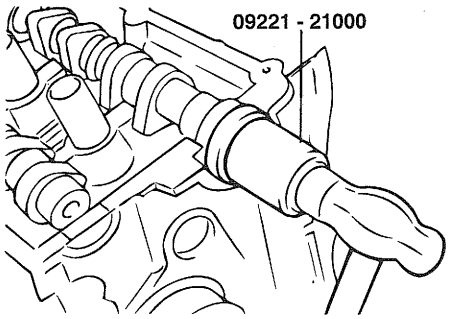

EDDA021E

7. Install the camshaft sprocket bolts to the specified torque.

Tightening torque

Camshaft sprocket bolt :

80 - 100Nm (800 - 1000kg.cm, 59 - 74lb.ft)

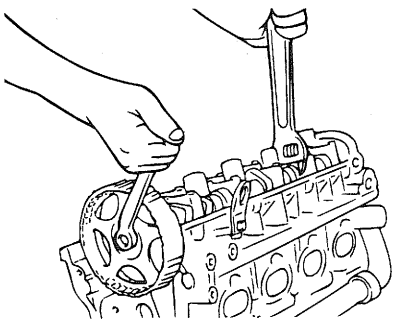

EDDA021F

8. Align the camshaft sprocket and crankshaft sprocket timing marks. Place the piston in the No.1 cylinder to top dead center on the compression stroke.

9. Install the cylinder head cover.

Tightening torque

Cylinder head cover bolts :

8-10Nm (80-100kg.cm, 6-7lb.ft)

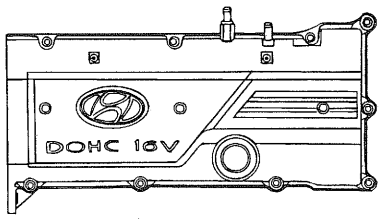

ECKA030A

10. Install the spark plug cables, ignition coil assembly and cylinder head center cover.

11. Install the timing belt and then tighten the timing belt tensioner pulley.

12. Install the timing belt cover.

Tightening torque

Timing belt cover : 8-10Nm (80-100kg.cm, 6-7lb.ft)

13. Install the coolant pump pulley and crankshaft pulley

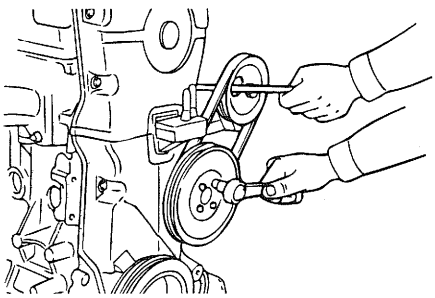

EDDA019A

CRANK SHAFT

COMPONENTS EDDA0260

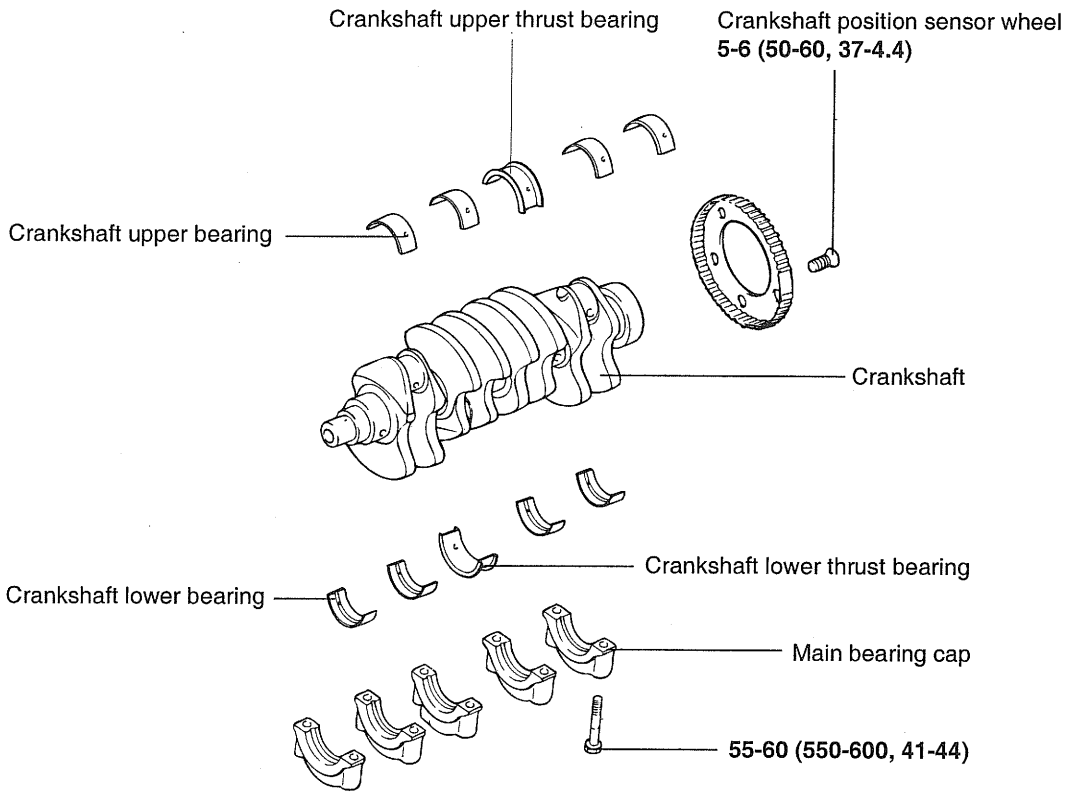

TORQUE : Nm (kg.cm, lb.ft)

ECDA031A

DISASSEMBLY EDKB2400

1. Remove the timing belt, front case, flywheel, cylinder head assembly and oil pan. For details, refer to the respective chapters.
2. Remove the rear plate and the rear oil seal.
3. Remove the connecting rod caps.
4. Remove the main bearing caps and remove the crankshaft.
5. Remove the crankshaft position sensor wheel.

⚠ ***CAUTION***

Mark the main bearing caps to permit reassembly in the original position and direction.

INSPECTION EDKB2500

CRANKSHAFT

1. Check the crankshaft journals and pins for damage, uneven wear, and cracks. Also check oil holes for clogging. Correct or replace any defective part.
2. Inspect the crankshaft journal for taper and out - of - round.

Standard value

Crankshaft journal O.D : 50mm (1.9685 in.)

Crankshaft pin O.D : 45mm (1.7717 in.)

Crankshaft journal, pin out-of-roundness and taper :

0.005 mm (0.0002 in.) or less

MAIN BEARINGS AND CONNECTING ROD BEARINGS

1. Visually inspect each bearing for peeling, melting, seizure, and improper contact. Replace the defective bearings.

OIL CLEARANCE MEASUREMENT

1. Measure the diameter of the crankshaft journal and pin.
2. Measure the diameter of the crankshaft bore and connecting rod bore.
3. Measure the thickness of the crankshaft bearing and connecting rod bearing.
4. Measure the clearance by the value that subtract the diameter of journal and pin and the thickness of bearing from the diameter of bore.

Connecting rod bearing oil clearance :

0.018 - 0.036 mm (0.0007 - 0.0014 in.)

Crankshaft main bearing oil clearance

NO.1, 2, 4, 5 : 0.022-0.040mm (0.0009-0.0018 in.)

NO.3 : 0.028-0.046 mm (0.0011-0.0018 in.)

OIL SEAL

1. Check front and rear oil seals for damage or wear. Replace any seal that is defective.

CRANKSHAFT SENSOR WHEEL

1. Remove the sensor wheel
2. Check the sensor wheel for damage, cracks and wear, and replace if necessary.
3. Check the clearance between the sensor wheel and the crank position sensor with a depth gage.

Standard value

Clearance between sensor wheel and crank position sensor : 0.5 - 1.1 mm (0.020 - 0.043 in.)

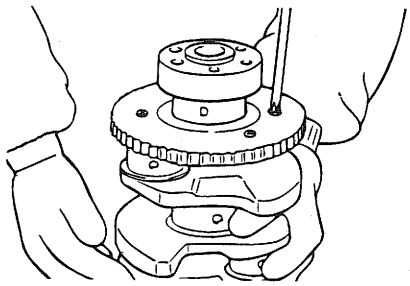

EDDA028C

NOTE

1. *Measure the depth of the top of sensor wheel tooth and the cylinder block mounting block.*
2. *Measure the difference between sensor length and depth.*
3. *Sensor length is the distance between the end of the sensor and the inner point of the contacting face.*

REASSEMBLY EDKB2600

1. Install the upper main bearing inserts in the cylinder block.

   When reusing the main bearings, remember to install them by referring to the location marks made at the time of disassembly.

2. Install the crankshaft. Apply engine oil to the journals.

3. Install bearing caps and tighten cap bolts to the specified torque in the following sequence; center, No.2, No.4, front, and rear caps.
   Cap bolts should be tightened evenly in 2 to 3 stages before they are tightened to the specified torque.
   The caps should be installed with the arrow mark directed toward the crank pulley side of engine. Cap numbers must be correct.

Tightening torque

Main bearing cap bolt. :

55-60Nm (550-600kg.cm, 41-44lb.ft)

Connecting rod cap bolt :

32-35Nm (320-350kg.cm, 24-26lb.ft)

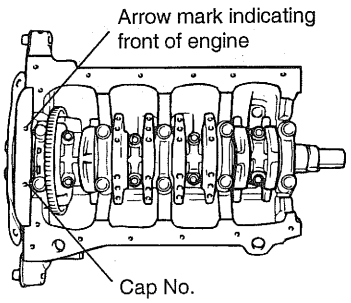

ECDA034A

4. Make certain that the crankshaft turns freely and has the proper clearance between the center main bearing thrust flange and the connecting rod big end bearing.

Standard value:

Crankshaft end play :

0.05-0.175mm (0.0019-0.0068 in.)

5. Install the oil seal in the crankshaft rear oil seal case. Use the Special Tool, Crankshaft Rear Oil Seal Installer (09231 - 21000) as shown. Press fit the oil seal all the way in, being careful not to misalign it.

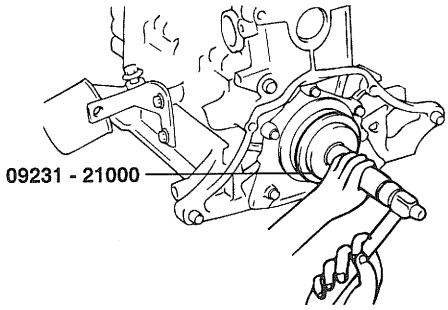

EDDA029B

6. Install the rear plate and tighten the bolts.

7. Install the connecting rod caps.

8. Install the flywheel, front case, oil pan and timing belt. For further details, refer to the respective chapters.

FLY WHEEL

COMPONENTS EDNC2700

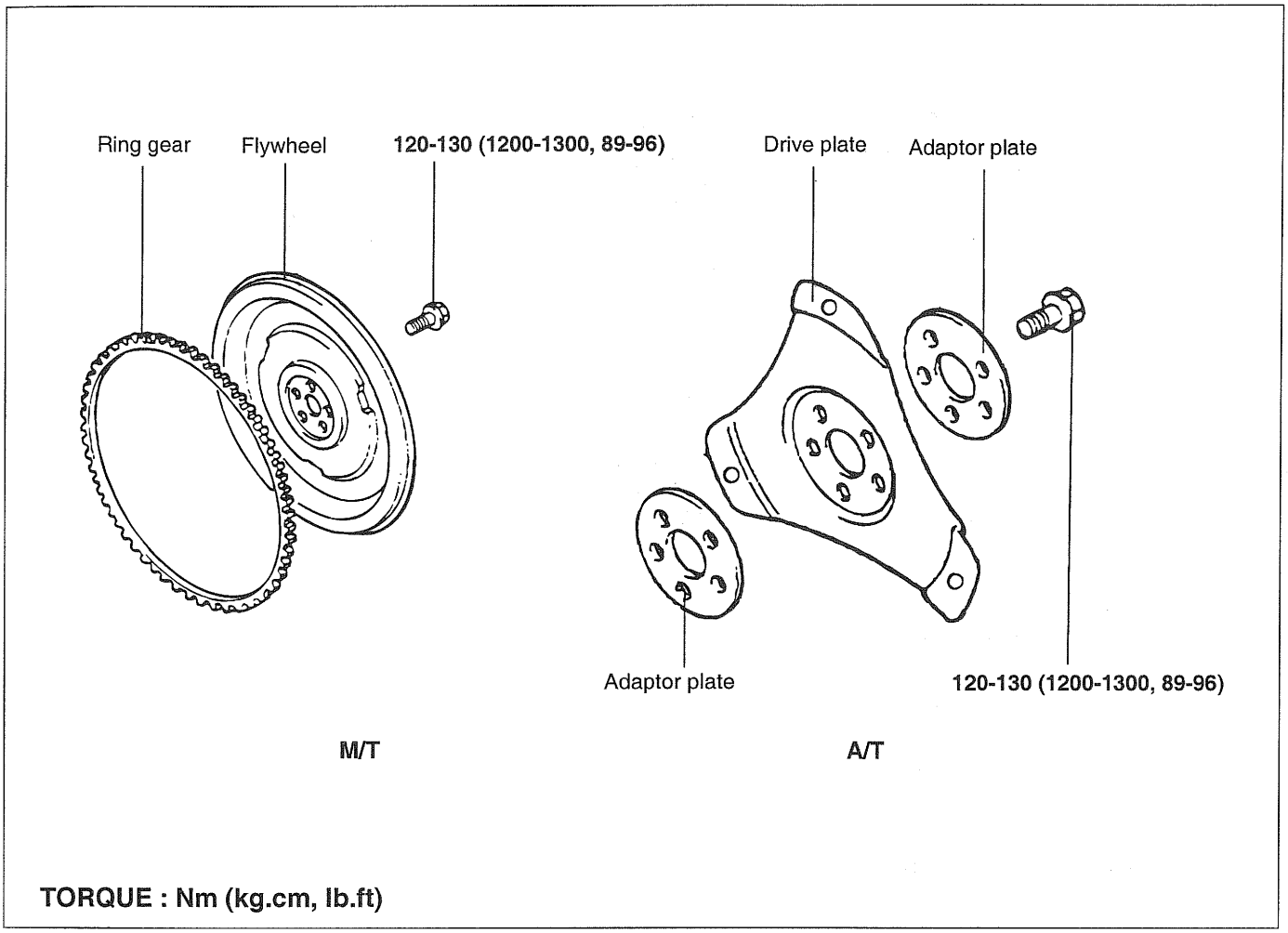

EDDA030A

M/T : Manual Transmission Vehicles

A/T : Automatic Transmission Vehicles

DISASSEMBLY EDKB2800

1. Remove the Transmission and clutch.
2. Remove the flywheel.

INSPECTION EDDA0320

1. Check the clutch disc contacting surface of the flywheel for damage and wear. Replace the flywheel if excessively damaged or worn.
2. Check the clutch disc contacting surface of the flywheel for runout.

Standard value
Flywheel run-out : 0.1mm (0.0039 in.)

3. Check the ring gear for damage, cracks, and wear, and replace if necessary.

REASSEMBLY EDDA0330

1. Install the flywheel assembly and tighten the bolts to the specified torque.

Tightening torque
Flywheel bolt :
120-130Nm (1200-1300kg.cm, 89-96lb.ft)

PISTON

COMPONENTS EDKB3100

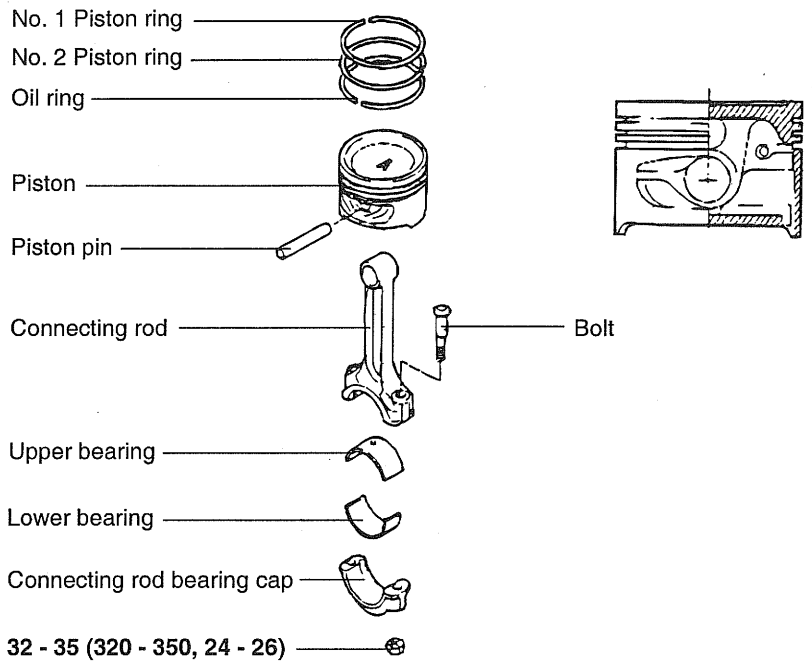

TORQUE : Nm (kg.cm, lb.ft)

EDDA034A

DISASSEMBLY EDKB3200

CONNECTING ROD CAP

⚠ ***CAUTION***

Keep the bearings in order with their corresponding connecting rods (according to cylinder numbers) for proper reassembly.

1. Remove the connecting rod cap bolts, then remove the caps and the big end lower bearing.
2. Push each piston connecting rod assembly toward the top of the cylinder.

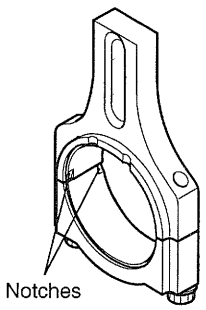

KFW3049A

DISASSEMBLY AND REASSEMLY OF THE PISTON PIN

1. Using the special tools (09234-33001) and (09234-33002), disassemble and reassemble the piston and connecting rod.

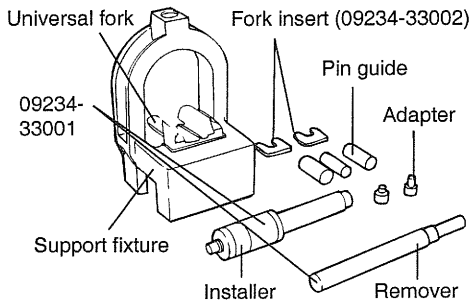

ECA9361A

2. The piston pin is press fit into the rod little end, and the piston floats on the pin.

3. The tool consists of a support fixture with fork inserts, guides, adapters, an installer and a remover. The piston is supported in the support fixture while the pin is being installed or removed. Guides help position the pin as it is installed or removed, while the rod is supported by fork inserts.

4. To remove the pin from the piston, place the piston in the support fixture with the rod resting on the fork inserts. Pass the remove tool through the top of the support fixture and use it to press out the pin.

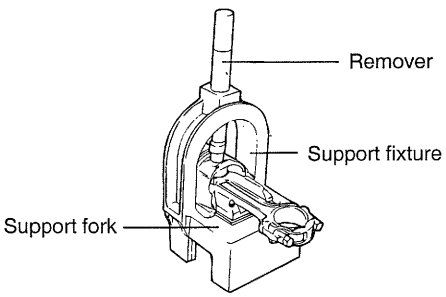

EDA9048A

5. To install a new pin, the proper fork inserts must be in place to support the rod.

6. Position the rod inside the piston. Insert the proper pin guide through one side of the piston and through the rod. Hand tap the pin guide so it is held by the piston. Insert the new pin into the piston from the other side and set the assembly into the support fixture with the pin guide facing down.

NOTE

The pin guide should be centered on the connecting rod through the piston. If assembled correctly, the pin guide will sit exactly under the center of the hole in the tool's arch, and rest evenly on the fork inserts. If the wrong size pin guide is used, the piston and pin will not line up with the support fixture.

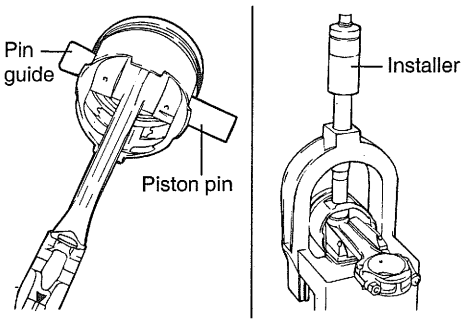

ECA9361C

7. Insert the installer tool through the hole in the arch of the support fixture and use an hydraulic press to force the piston pin through the rod little end. Continue pressing until the pin guide falls free and the installer tool seats against the top of the arch.

CAUTION

Do not exceed 1250 ± 500 kg (2765 ± 1102 lb) of force when the installing tool seats against the top of the arch.

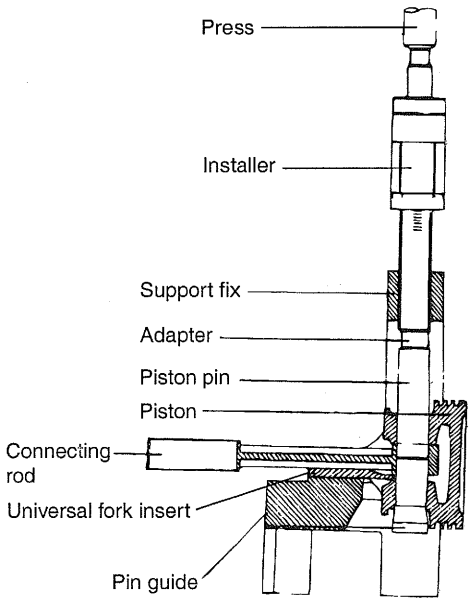

HEW20A55

INSPECTION EDKB3300

PISTONS AND PISTON PINS

1. Check each piston for scuffing, scoring, wear and other defects. Replace any piston that is defective.
2. Check each piston ring for breakage, damage and abnormal wear. Replace the defective rings. When the piston requires replacement, its rings should also be replaced.
3. Check that the piston pin fits in the piston pin hole. Replace any piston and pin assembly that is defective. The piston pin must be smoothly pressed by hand into the pin hole (at room temperature).

PISTON RINGS

1. Measure the piston ring side clearance. If the measured value exceeds the service limit, insert a new ring in the ring groove to measure the side clearance. If the clearance still exceeds the service limit, replace the piston and rings together. If it is less than the service limit, replace the piston rings only.

Piston ring side clearance
No.1 : 0.04-0.085 mm (0.0016-0.0033 in.)
No.2 : 0.04-0.085 mm (0.0016-0.0033 in.)
[Limit]
No.1 : 0.1 mm (0.004 in.)
No.2 : 0.1 mm (0.004 in.)

2. To measure the piston ring end gap, insert a piston ring into the cylinder bore. Position the ring at right angles in the cylinder wall by gently pressing it down with a piston. Measure the gap with a feeler gauge. If the gap exceeds the service limit, replace the piston ring.

Piston ring end gap
[Standard dimensions]
No.1 : 0.20-0.35 mm (0.0079 - 0.0138 in.)
No.2 : 0.30-0.45 mm (0.0118 - 0.0177 in.)
Oil ring side rail : 0.2-0.7 mm (0.0079-0.0276)
[Limit]
No.1, No.2 : .1.0 mm (0.039 in.)
Oil ring side rail : 1.0 mm (0.039 in)

When replacing the ring without correcting the cylinder bore, check the gap with the ring situated at the low part of cylinder that is less worn out.

Piston ring service size and mark	
standard	None
0.25mm (0.010 in.) O.S	25
0.50mm (0.020 in.) O.S	50
0.75mm (0.030 in.) O.S	75
1.00mm (0.039 in.) O.S	100

NOTE

The mark can be found on the upper side of the ring next to the end.

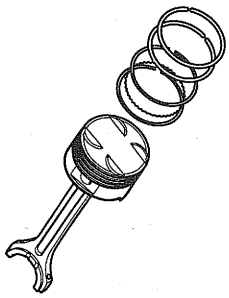

KFW3037C

CONNECTING RODS

1. When the connecting rod cap is installed, make sure that the cylinder numbers, marked on rod end cap at disassembly, match. When a new connecting rod is installed, make sure that the notches holding the bearing in place are on the same side.
2. Replace the connecting rod if it is damaged at either end of the thrust faces. If it has a stratified wear in, or if the surface of the inside diameter of the small end is severely rough, replace the rod.

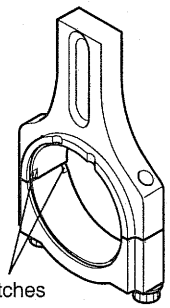

KFW3049A

REASSEMBLY EDKB3400

1. Install the spacer.

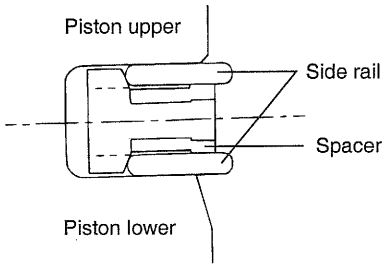

ECA9082A

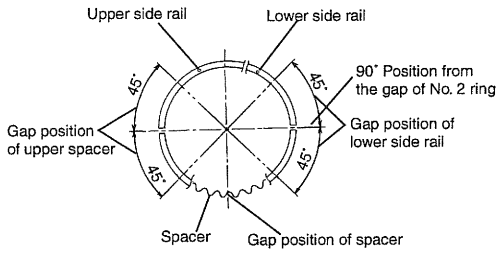

EDJA490A

2. Install the upper side rail. To install the side rail, first put one end of the side rail between the piston ring groove and spacer, hold it firmly, and press down with a finger on the portion to be inserted into the groove (as illustrated).

⚠ ***CAUTION***

Do not use a piston ring expander when installing side rail.

3. Install the lower side rail by the same procedure described in Step 2.

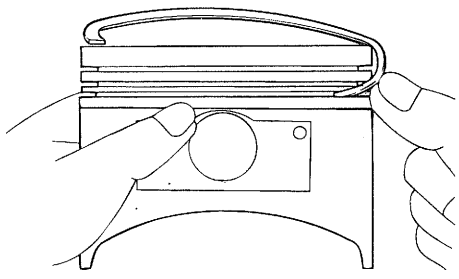

ECA9380B

4. Apply engine oil around the piston and piston grooves.

5. Using a piston ring expander, install the No.2 piston ring.

6. Install the No. 1 piston ring.

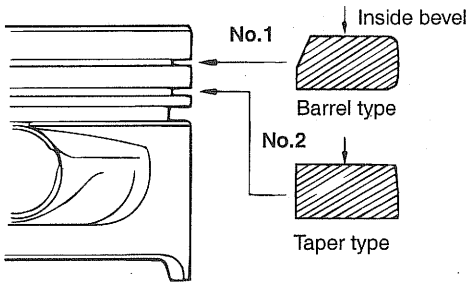

EDDA037B

7. Position each piston ring end gap as far away from its neighboring gaps as possible. Make sure that the gaps are not positioned in the thrust and pin directions.

8. Hold the piston rings firmly with a piston ring compressor as they are inserted into cylinder.

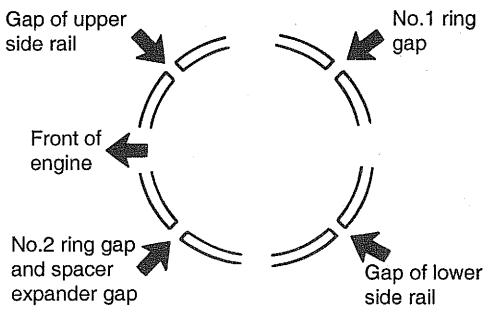

ECA9380D

9. Install the upper main bearings in the cylinder block.

10. Install the lower main bearings in the main bearing caps.

11. Make sure that the front mark of the piston and the front mark (identification mark) of the connecting rod are directed toward the front of the engine.

12. When a new connecting rod is installed, make sure that the notches for holding the bearing in place are on the same side.

13. When assembling, bolts should be fastened by the angle - torque controlled method as the following.

    1) Apply oil to the thread of nuts and spot areas.

    2) Tighten the connecting rod bolt.

Tightening torque

Connecting rod cap nut :

32-35 Nm (320-350 kg.cm, 24-26 lb.ft)

⚠ ***CAUTION***

After removing the connecting rod bolt, do not use if again.
When using a new bolt, do not tighten the bolt more than 3 times.

14. Check the connecting rod side clearance.

Connecting rod side clearance

Standard : 0.10-0.25 mm (0.0039-0.0098 in.)

Limit : 0.4 mm (0.0157 in.)

15. Install the oil screen.

16. Install the oil pan

17. Install the cylinder head.

COOLING SYSTEM

ENGINE COOLANT HOSE/PIPES

COOLING SYSTEM EDKB3500

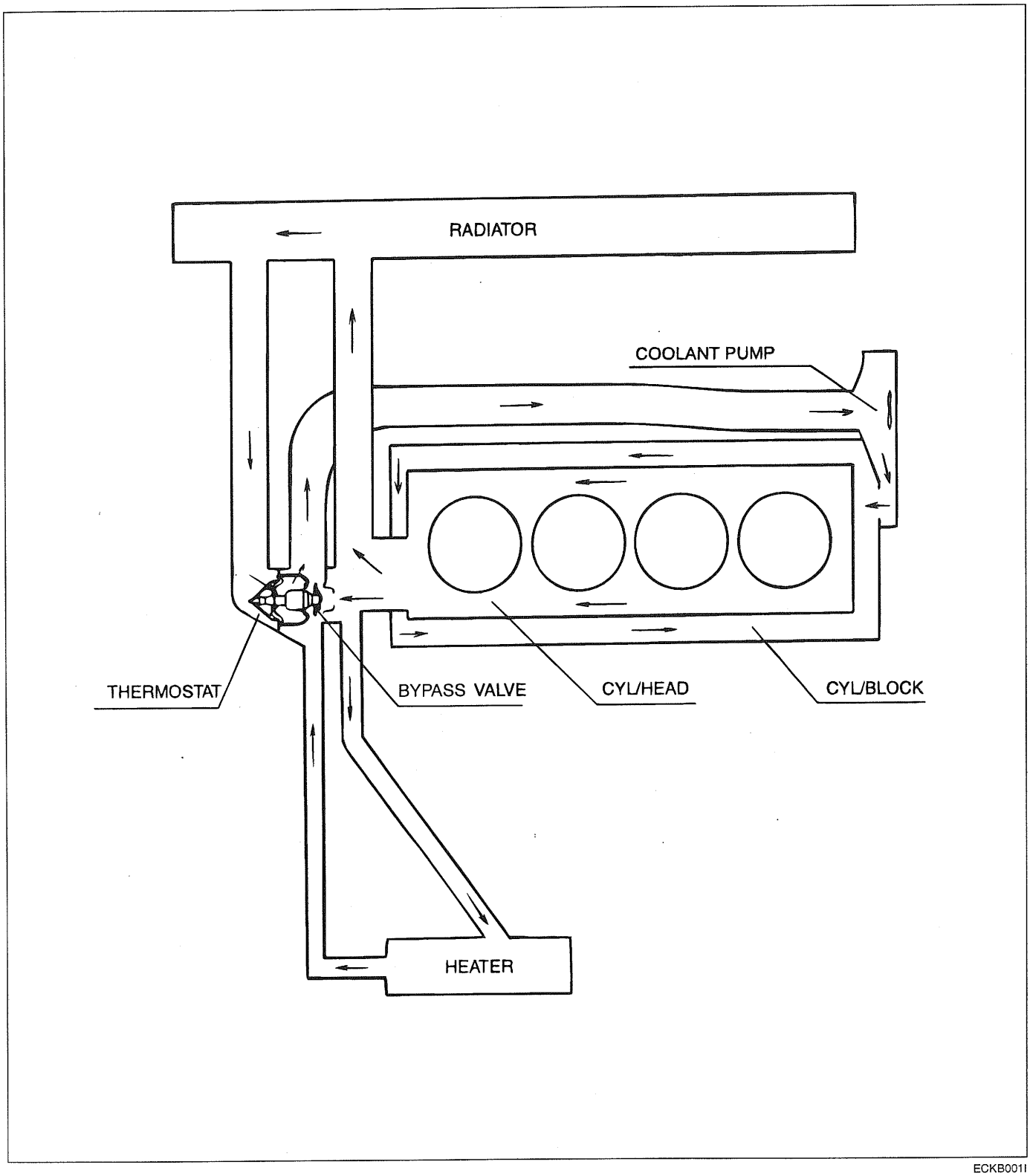

ECKB0011

COMPONENTS EDDA0430

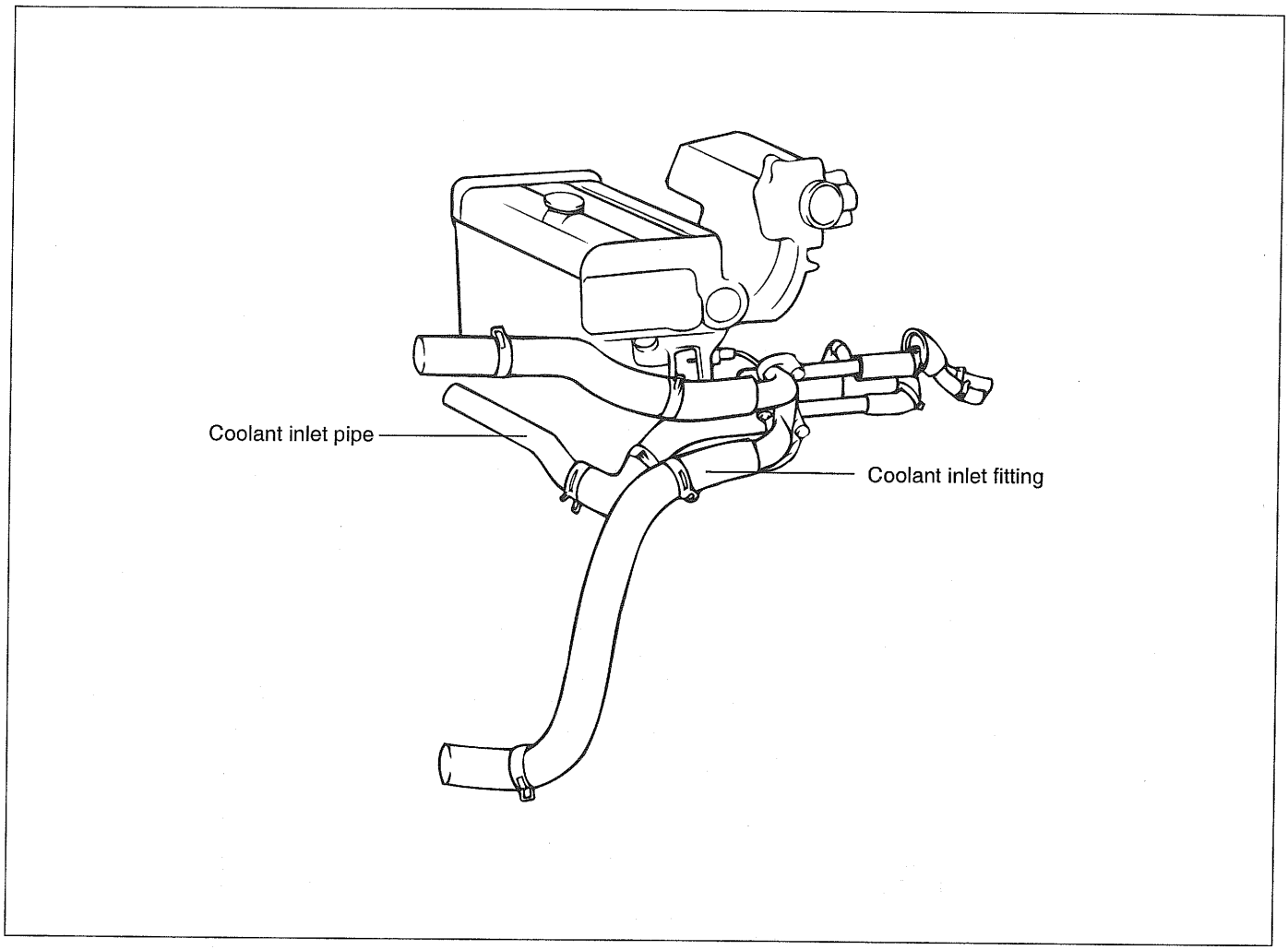

EDDA043A

INSPECTION EDDA0440

Check the coolant pipe and hoses for cracks, damage, or restrictions.

Replace if necessary.

REASSEMBLY EDKB3800

1. Fit on O-ring in the groove provided at the coolant inlet pipe end, wet the O-ring with coolant and insert the coolant inlet pipe.

NOTE

1. *Do not apply oil or grease to the coolant pipe O-ring.*
2. *Keep the coolant pipe connections free of sand, dust, etc.*
3. *Insert the coolant pipe fully into the cylinder block.*
4. *Do not reuse the O-ring. Replace it with a new part.*

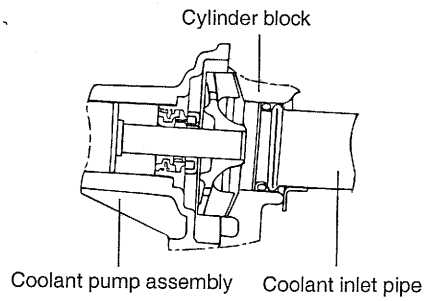

ECKA040A

ENGINE COOLANT PUMP

COMPONENTS EDKB3900

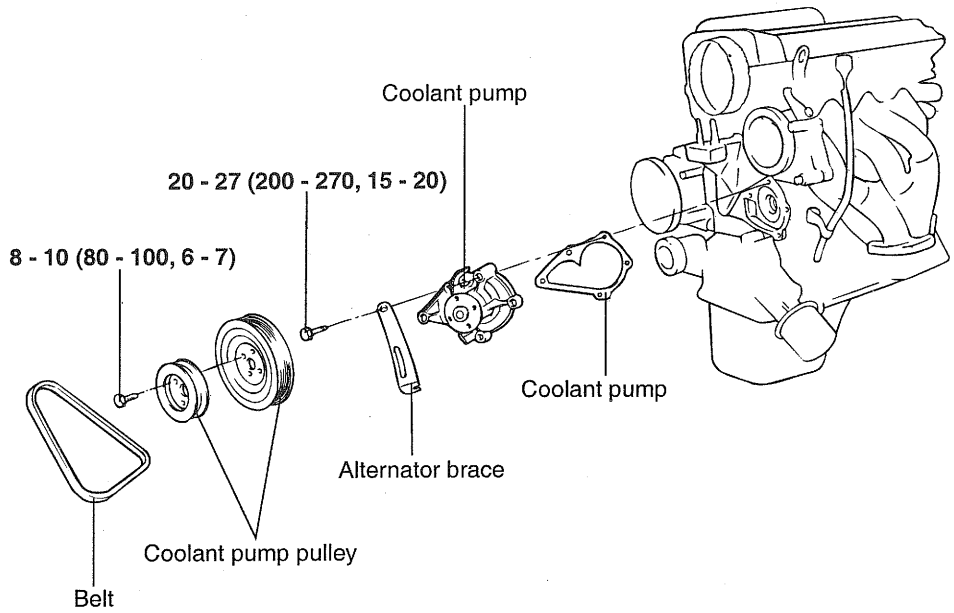

TORQUE : Nm (kg.cm, lb.ft)

EDDA046A

DISASSEMBLY EDKB4000

1. Drain the coolant and disconnect the coolant inlet pipe connection hose from the coolant pump.
2. Remove the drive belt and engine coolant pump pulley.
3. Remove the timing belt covers and the timing belt idler.
4. Remove the coolant pump mounting bolts, then remove the alternator brace.
5. Remove the coolant pump assembly from the cylinder block.

INSPECTION EDKB4100

1. Check each part for cracks, damage or wear, and replace the coolant pump assembly if necessary.
2. Check the bearing for damage, abnormal noise and sluggish rotation, and replace the coolant pump assembly if necessary.
3. Check for coolant leakage. If coolant leaks then the seal is defective. Replace the coolant pump assembly.

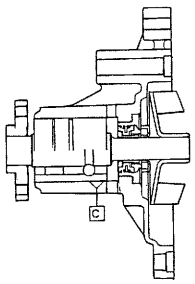

EDKB051A

REASSEMBLY EDKB4200

1. Clean the gasket surfaces of the coolant pump body and the cylinder block.
2. Install a new coolant pump gasket to the coolant pump and tighten the bolts to the specified torque.

Tightening torque

Coolant pump to cylinder block :

A : 12-15Nm (120-150kg.cm, 9-11lb.ft)

B : 20-27Nm (200-270kg.cm, 15-20 lb.ft)

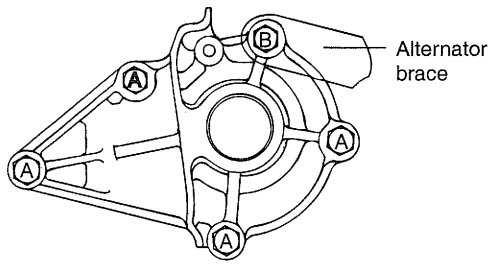

ECKA040B

3. Install the timing tensioner and timing belt. Adjust the timing belt tension.
4. Install the timing belt covers.
5. Install the coolant pump pulley and drive belt, and then adjust the belt tension.
6. Refill the system with clean coolant.
7. Run the engine and check for leaks.

RADIATOR

COMPONENTS ECNC4300

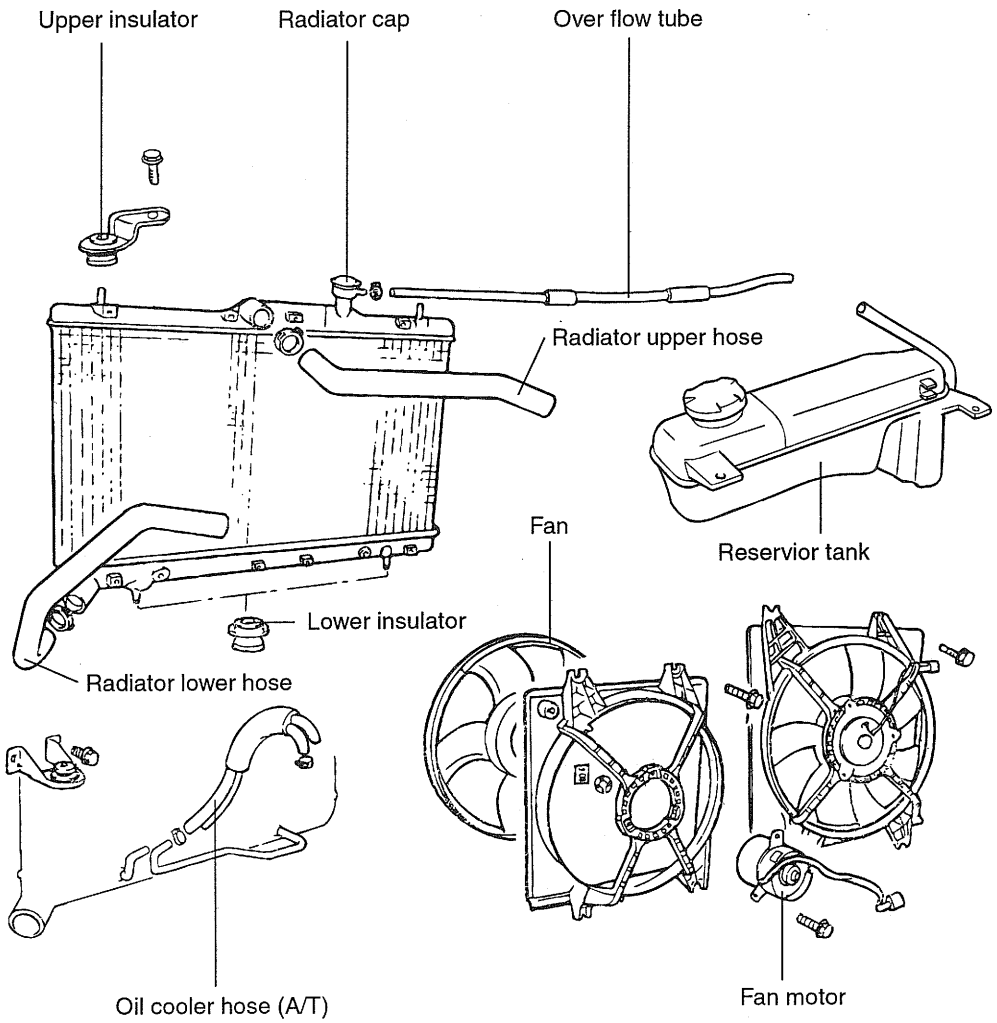

EDNB005A

DISASSEMBLY EDKB4400

1. Disconnect the radiator fan motor connector.
2. Set the temperature of the heater control to the hot position.

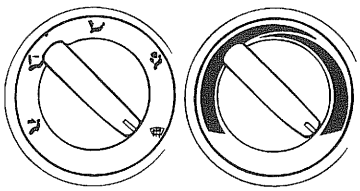

ECDA063A

3. Loosen the radiator drain plug to drain coolant.
4. Disconnect the upper and lower hose and overflow tube.
5. For vehicles with automatic transmission, disconnect the oil cooler hoses from the automatic transmission.

⚠ ***CAUTION***

Plug the ends of the oil cooler hoses and the automatic transmission fittings to prevent transmission fluid from spilling out and foreign material from entering.

6. Remove the radiator mounting bolts.
7. Remove the radiator together with the fan motor.
8. Remove the fan motor from the radiator.

INSPECTION EDKB4500

1. Check the radiator for bent, broken or plugged fins.
2. Check the radiator for corrosion, damage, rust or scale.
3. Check the radiator hoses for cracks, damage or deterioration.
4. Check the reservoir tank for damage.
5. Check the radiator cap spring for damage.
6. Test the pressure of the cap using a cooling system checker
7. Check the radiator cap seal for cracks or damage.

RADIATOR FAN MOTOR

1. Check that the radiator fan rotates when the battery voltage is applied to the terminals.

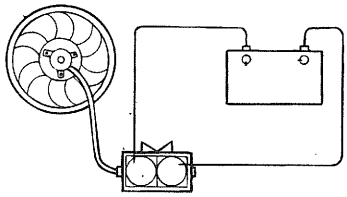

ECDA064A

2. Check that abnormal noises are not produced while the motor is turning.

REASSEMBLY EDDA0530

1. Fill the radiator and reservoir tank with clean coolant mixture.
2. Run the engine until the thermostat opens, and then stop the engine.
3. Remove the radiator cap, and add coolant up to the filler neck of the radiator, and then fill the reservoir tank to the upper level. Replace the radiator cap.
4. Check that there are no leaks from the radiator, hoses or connections.

RADIATOR CAP

COMPONENTS ECKB4700

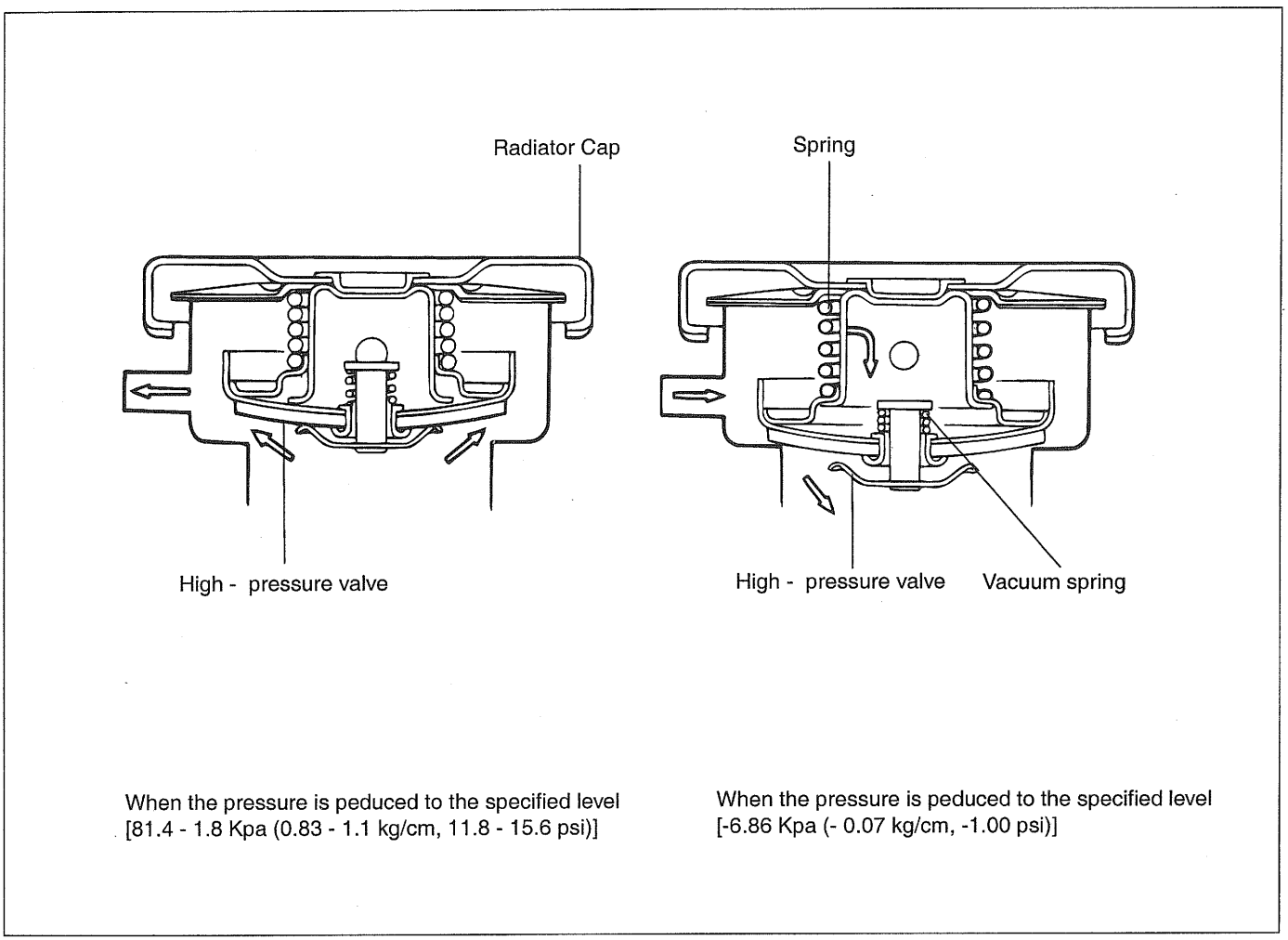

ECDA066A

INSPECTION ECKB4800

1. Check the radiator cap for damage, cracks and deterioration.

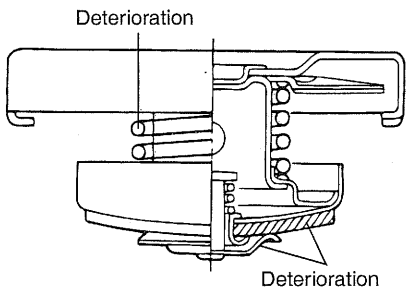

ECDA068A

2. Attach a radiator cap tester to the radiator.
3. Pump the tester until the pointer stabilizes.
4. If the pointer stays constant for 10 sec. at a point exceeding the service limit, the radiator cap is good.

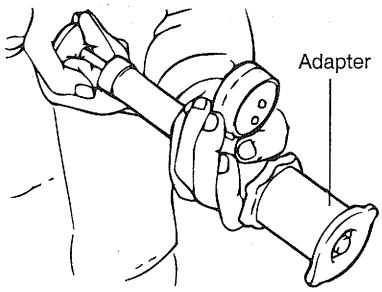

ECDA068B

THERMOSTAT

COMPONENTS ECKB4900

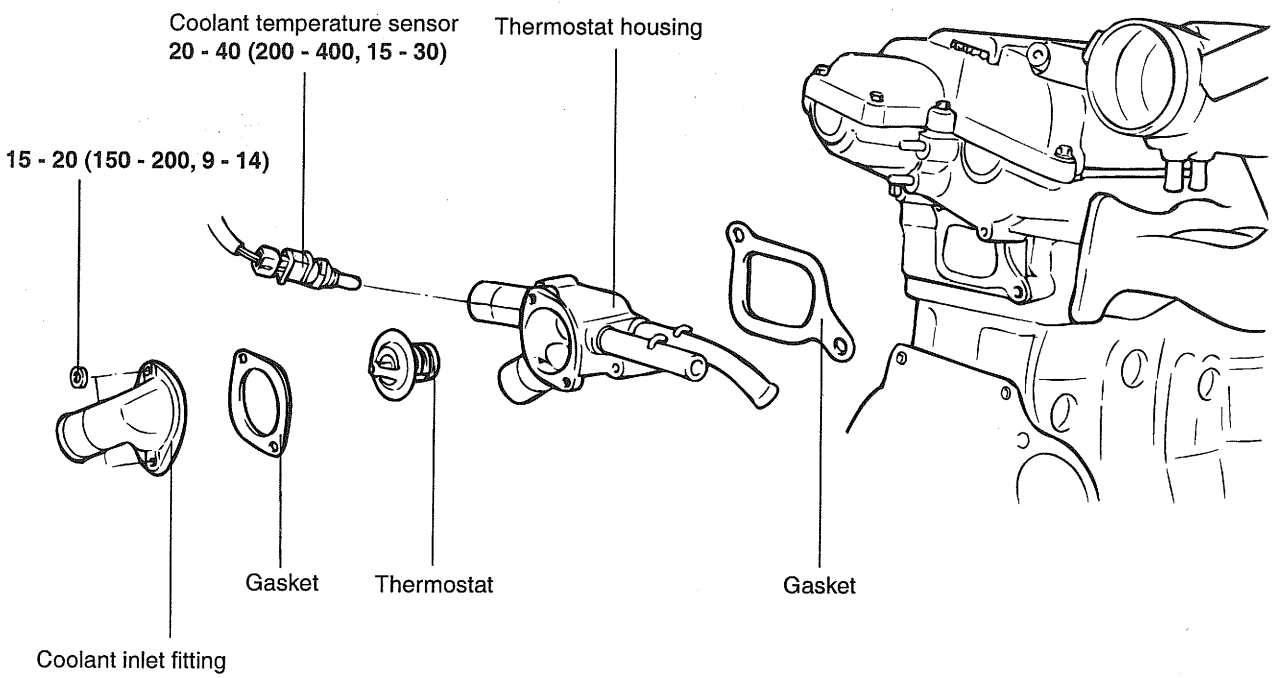

TORQUE : Nm (kg.cm, lb.ft)

ECKB040D

DISASSEMBLY AND INSPECTION ECNC5000

1. Drain the coolant so its level is below thermostat.
2. Remove the inlet fitting and gasket.
3. Remove the thermostat.
4. Immerse thermostat in hot coolant to check proper valve opening temperature. Replace if necessary.

Valve opening temperature : 82 °C(177 °F)
Full opening temperature : 95 °C(205 °F)

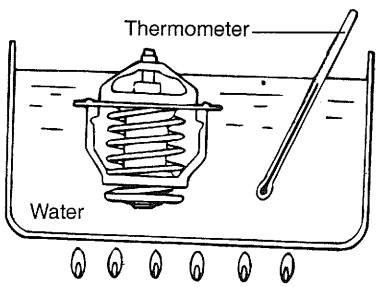

ECDA070A

COOLANT TEMPERATURE SENSOR

1. Heat the sensor by submerging it in hot engine coolant.
2. Check that the resistance is within the specified range.

Resistance

At : 20 °C(68 °F) : 2.31 - 2.59 kΩ

REASSEMBLY ECKB5100

1. Check that the flange of the thermostat is correctly seated in the socket of the thermostat housing.
2. Install a new gasket and the coolant inlet fitting.
3. Refill the system with clean coolant.

Tightening torque

Coolant temperature sensor :

20 - 40 Nm (200 - 400 kg.cm, 15 - 30 lb.ft)

LUBRICATION SYSTEM

OIL PUMP

COMPONENTS ECKB5200

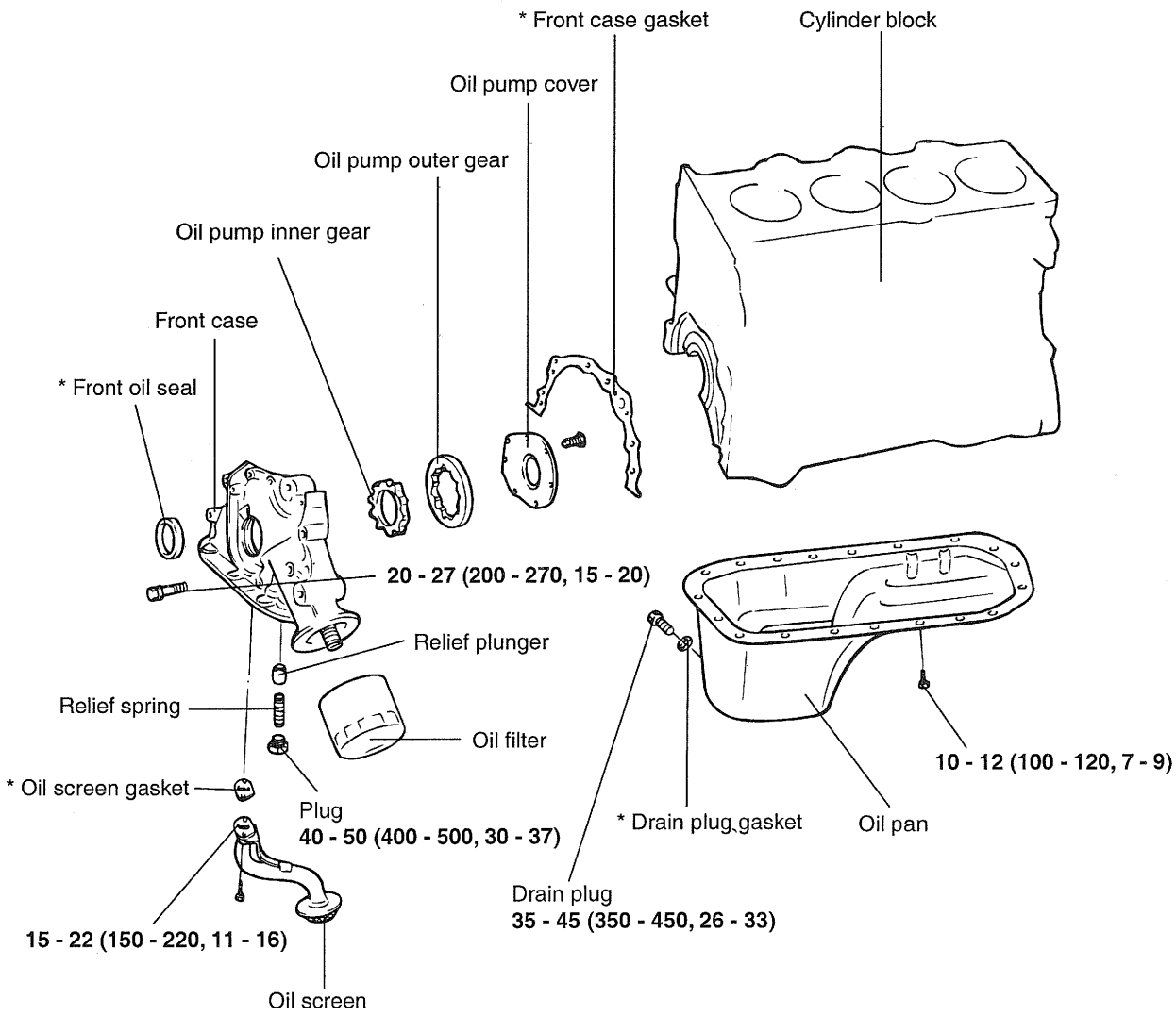

*** Replace the gasket and seal with new ones after removal.**

TORQUE : Nm (kg.cm, lb.ft)

EDDA012A

DISASSEMBLY ECKB5300

1. Remove the timing belt.
2. Remove all the oil pan bolts.
3. Remove the oil pan.
4. Remove the oil screen.
5. Remove the front case assembly.

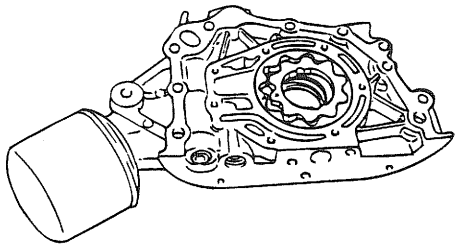

ECDA020A

6. Remove the oil pump cover.
7. Remove the inner and outer gears from the front case. The matching marks on the inner and outer gears indicate the direction of installation.
8. Remove all the oil pan bolts.

INSPECTION EDKB5400

FRONT CASE

1. Check the front case for cracks or damage. Replace as necessary.
2. Check the front oil seal for worn or damaged lips. Replace if defective.

OIL PAN AND OIL SCREEN

1. Check the oil pan for failure, damage or cracks. Replace if defective.
2. Check the oil screen for failure, damage and cracks and replace if defective.

FRONT CASE AND OIL PUMP COVER

Check the surfaces contacting the gears for damage or wear.

OIL PUMP GEARS

1. Check the gear tooth surfaces for wear or damage.
2. Measure the clearance between outer gear and front case.

Body clearance : 0.12 - 0.185 mm (0.0047- 0.0073 in.)
Tip clearance : 0.025 - 0.069 mm (0.0010- 0.0027 in.)
Side clearance Outer gear : 0.04 - 0.09 mm (0.0016- 0.0035 in.) Inner gear : 0.04 - 0.085 mm (0.0016- 0.0033 in.)

[Body clearance]

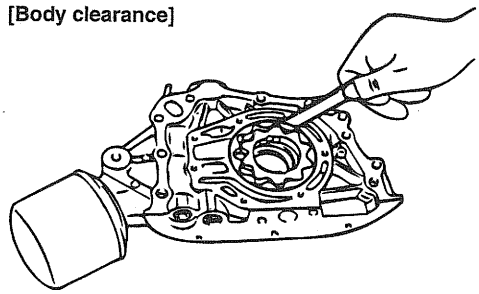

EDDA066A

3. Check the tip clearance on the pump roter.

[Tip clearance]

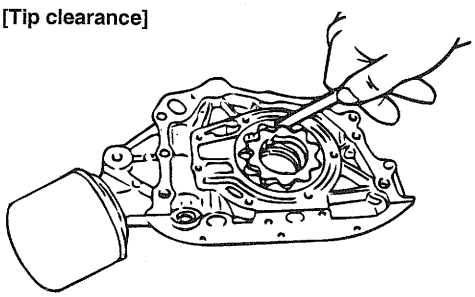

EDDA066B

[Side clearance]

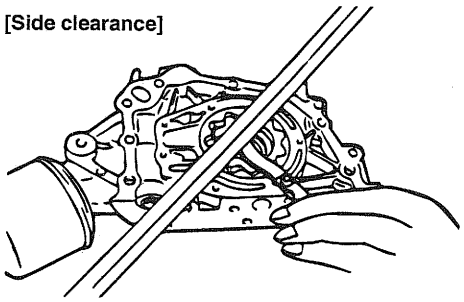

A5EM048C

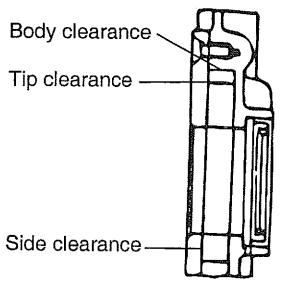

EDDA066D

RELIEF VALVE AND SPRING

1. Check sliding condition of the relief valve inserted in the front case.
2. Inspect for distorted or broken relief valve spring.

Standard value

Free height : 46.6 mm (1.8346 in.)

Load : 6.1 kg/40.1 mm (13.42 lb/1.578 in.)

OIL PRESSURE SWITCH

1. Use an ohmmeter to check the continuity between the terminal and the body. If there is no continuity, replace the oil pressure switch.

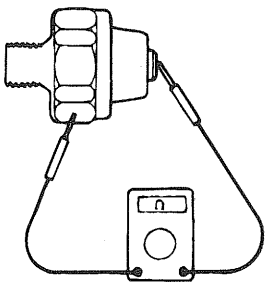

EDDA061A

2. Check the continuity between the terminal and the body when the fine wire is pushed. If there is continuity even when the fine wire is pushed, replace the switch.
3. If there is no continuity when a 50 kPa (7 psi) vacuum is applied through the oil hole, the switch is operating properly.
   Check for air leaks. If air does leak, the diaphragm is broken. Replace the switch.

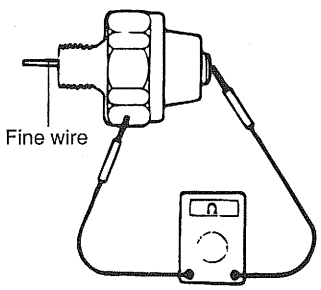

EDDA061B

REASSEMBLY EDKB5500

OIL PUMP

1. Install the outer and inner gears into the front case. Make sure that the inner and outer gears are installed in the same direction as shown.
2. Install the oil pump cover and tighten the bolts to the specified torque. After the bolts have been tightened, check to ensure that the gear turns smoothly.

Tightening torque

Oil pump cover bolt : 8-12 Nm (80-120 kg.cm, 6-9 lb.ft)

3. Install the relief valve and spring. Tighten the plug to the specified torque. Apply engine oil to the relief valve.

Relief valve plug :

40-50 Nm (400-500 kg.cm, 30-37 lb.ft)

[Body clearance]

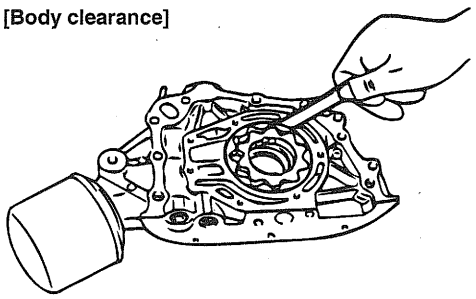

EDDA066A

FRONT CASE

1. Install the front case assembly with a new gasket, and tighten the bolts to the specified torque.

Tightening torque :

20 - 27 N.m (200 - 270 kg.cm, 15 - 20 lb.ft)

Length
A : 30 mm (1.18 in.)
B : 45 mm (1.77 in.)
C : 60 mm (2.36 in.)
D : 22 mm (0.89 in.)

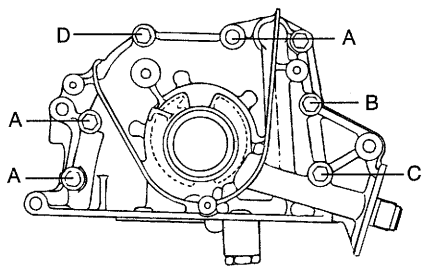

ECKA020E

OIL SEAL

1. Using the special tool, Crankshaft oil seal guide(09214 - 21100), install the oil seal.

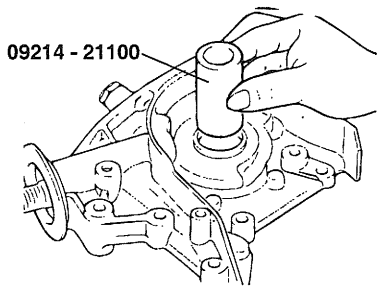

EDDA018B

2. Using the special tool, Crankshaft front oil seal installer (09214-21000), install the oil seal.

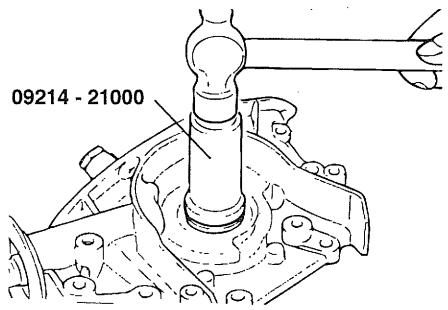

EDDA018C

3. Install the oil screen.
4. Clean both gasket surfaces of the oil pan and the cylinder block.
5. Apply sealant into the groove of the oil pan flange as shown.

⚠ ***CAUTION***

- ***Apply sealant approx. 4mm (0.16 in.) in thickness.***
- ***After application of sealant, do not exceed 15 minutes before installing the oil pan.***

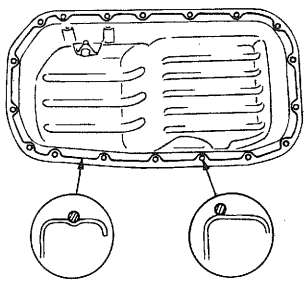

ECDA018D

6. Install the oil pan and tighten the bolts to the specified torque.

Tightening torque

Oil pan bolt : 10-12 Nm (100-120 kg.cm, 7-9 lb.ft)

INTAKE AND EXHAUST SYSTEM

EXHAUST MANIFOLD

COMPONENTS ECKB5600

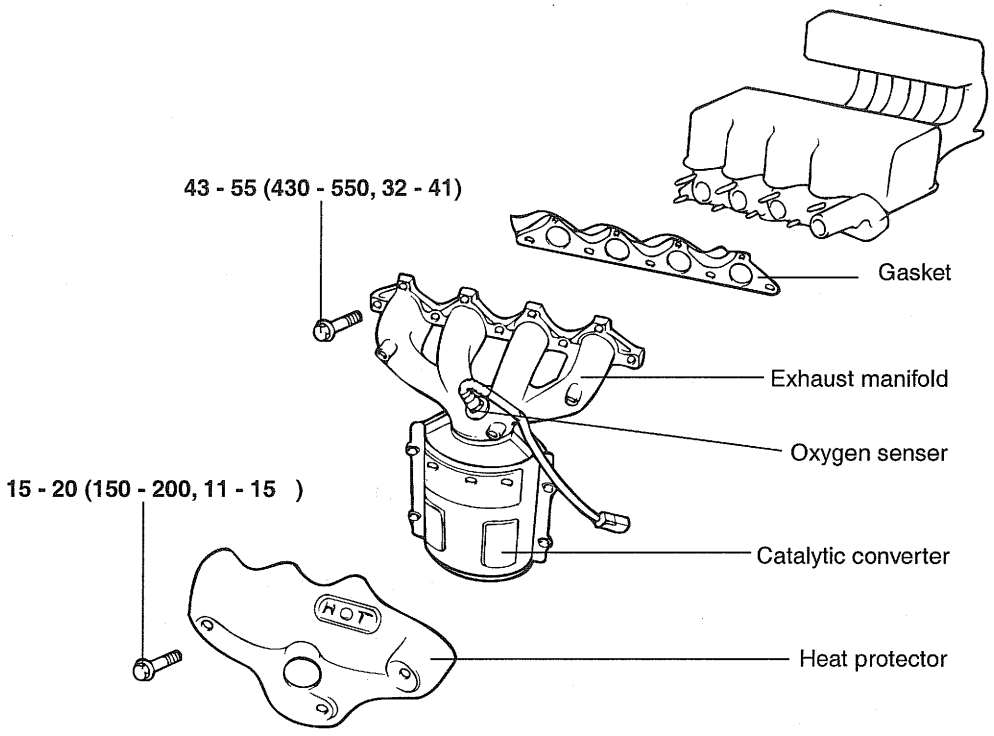

*** Replace the lock nuts with new ones after removal.**

TORQUE : Nm (kg.cm, lb.ft)

ECKA050A

DISASSEMBLY ECKB5700

1. Remove the exhaust manifold heat protector.
2. Remove the exhaust manifold assembly from the cylinder head.
3. Remove the exhaust manifold gasket.

INSPECTION ECKB5800

EXHAUST MANIFOLD

1. Check for damage or cracking.
2. Check for damage or cracking of welding between exhaust manifold and converter.

REASSEMBLY ECKB5900

Install the exhaust manifold in the reverse order of removal.

⚠ *CAUTION*

Replace the exhaust manifold gasket and lock nut when reassembling.

INTAKE MANIFOLD

COMPONENTS ECNC6000

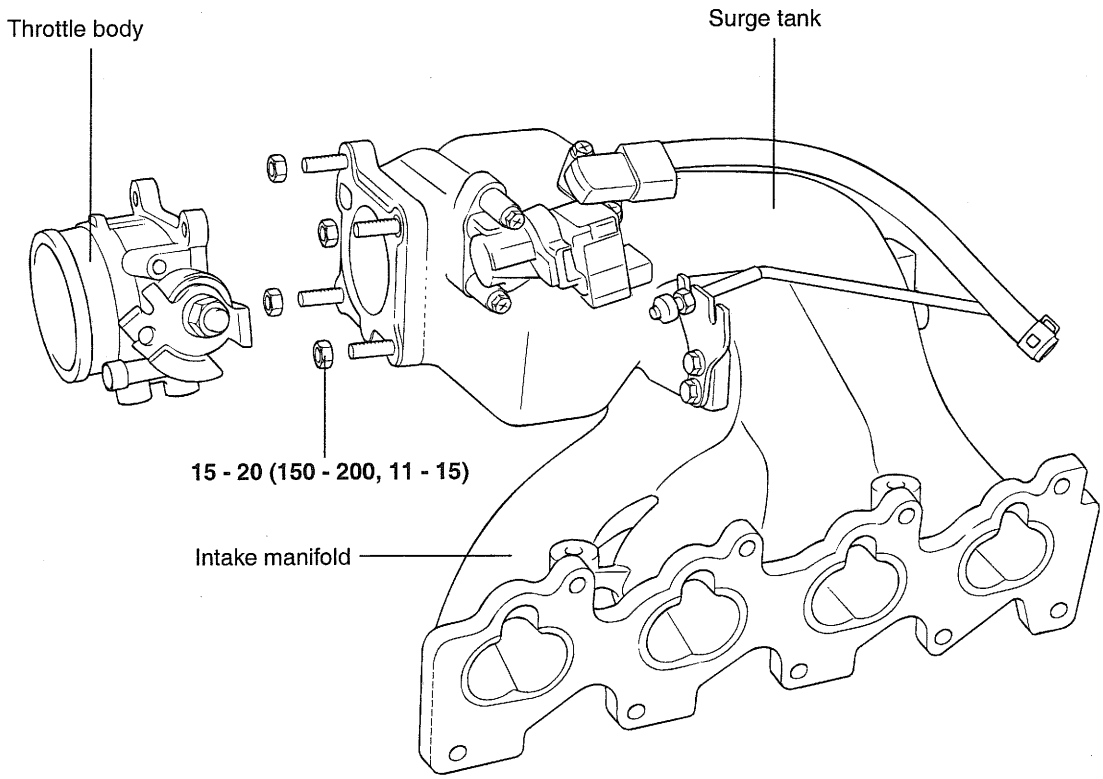

TORQUE : Nm (kg.cm, lb.ft)

EDNB006A

REMOVAL ECNC6100

1. Remove the engine cover.

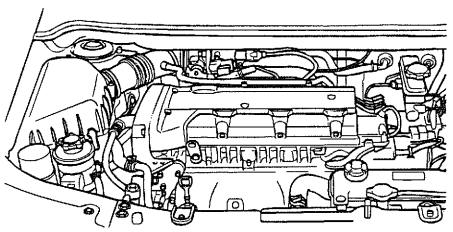

KDNB003C

2. Remove the intake air hose connected to the throttle body.

3. Remove the accelerator cable.
4. Remove the P.C.V. hose and brake booster vacuum hoses.
5. Disconnect the vacuum hose connections, ISA and TPS connector.

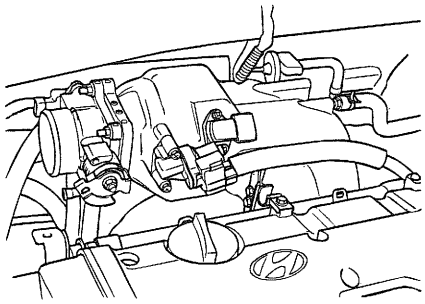

KDNB006B

6. Disconnect the high pressure fuel hose connection after relieving pressure in the fuel rail to prevent fuel from spilling.
7. Remove the intake manifold.
8. Remove the intake manifold assembly and gasket.
9. Disconnect the fuel injector harness connector.
10. Remove the delivery pipe with the fuel injectors.

⚠ ***CAUTION***

Be careful not to drop the injectors when removing the delivery pipe.

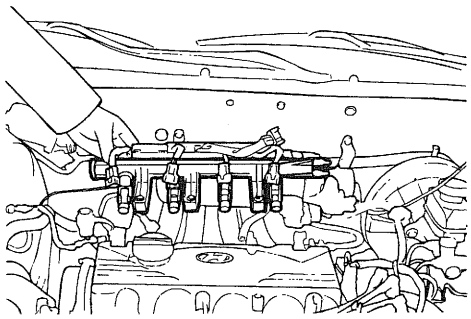

ECDA088B

INSPECTION ECKB6200

INTAKE MANIFOLD

Check the parts for damage or cracking.

AIR HOSE

Check for damage or cracking of any part.

INSTALLATION ECKB6300

1. Replace the intake manifold gasket and install the intake manifold.

⚠ ***CAUTION***

Be careful not to drop the injectors when removing the delivery pipe.

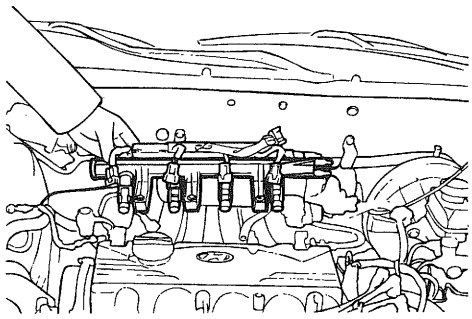

ECDA088B

2. Install the delivery pipe with the fuel injectors.
3. Connect the fuel injector harmess connector.
4. Install the intake manifold stay.
5. Connect the high pressure fuel hose connection.
6. Install the P.C.V hose and brake booster vacuum hose.
7. Install the intake air hose to the throttle body.
8. Install the accelorator cable.
9. Connect the ISA and TPS wire harness connector.

MUFFLER

COMPONENTS ECNC6400

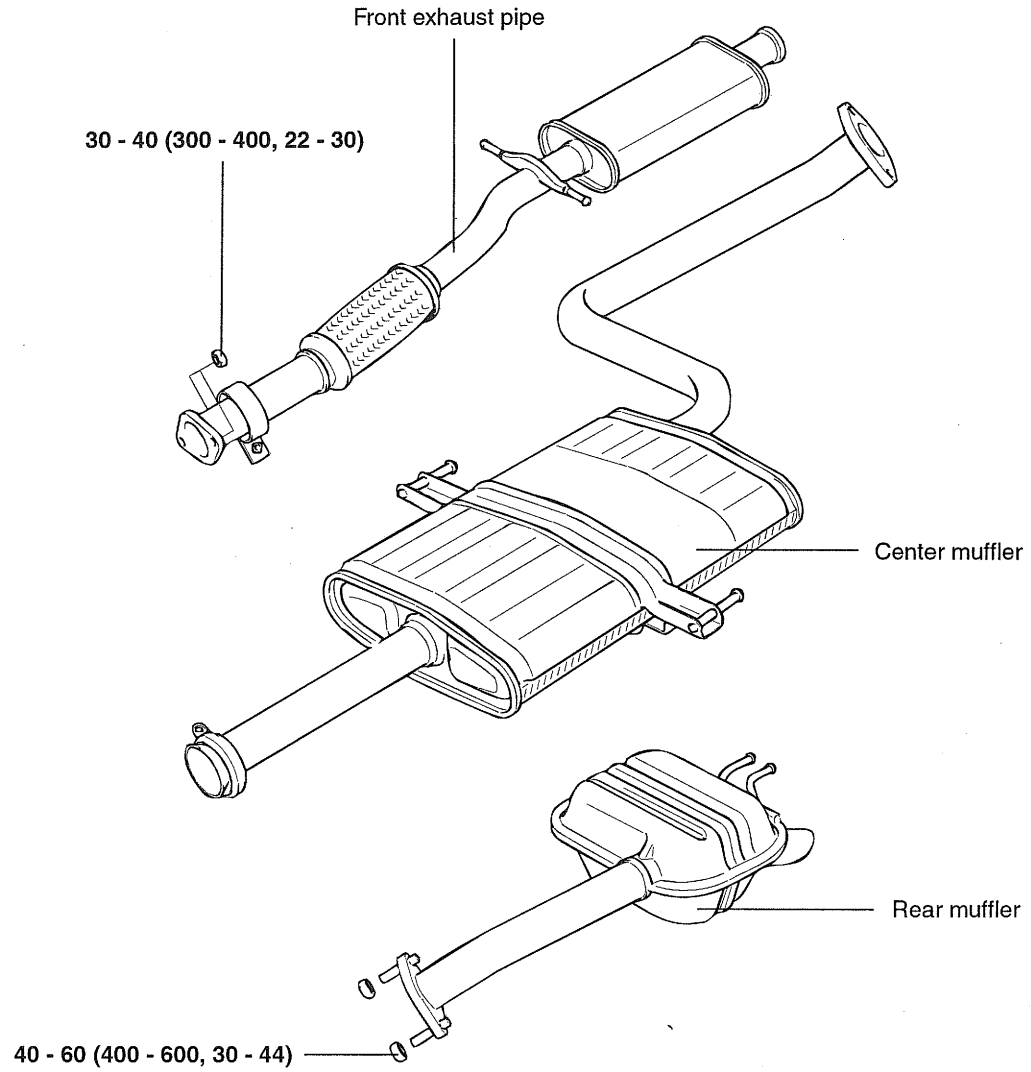

TORQUE : Nm (kg.cm, lb.ft)

EDNB007A

REMOVAL ECNC6500

REAR MUFFLER

CAUTION

Before removing or inspecting the exhaust system, ensure that the exhaust system is cool.

1. Disconnect the rear muffler from the center muffler.
2. Remove the rubber hangers and remove the rear muffler.

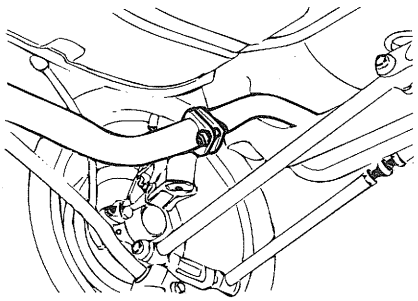

KDNB007C

CENTER MUFFLER

1. Remove the center muffler assembly from the rear muffler and front exhaust pipe.

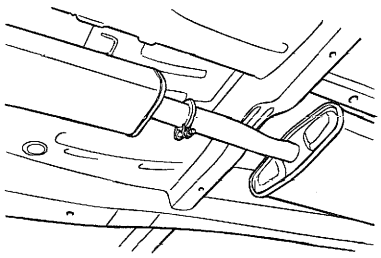

KDNB007B

2. Remove the rubber hanger, then remove the center muffler.

FRONT EXHAUST PIPE

1. Remove the front exhaust pipe clamp bolts. and remove the front exhaust pipe nuts from the catalytic converter.
2. Remove the front exhaust pipe and center muffler bolt.

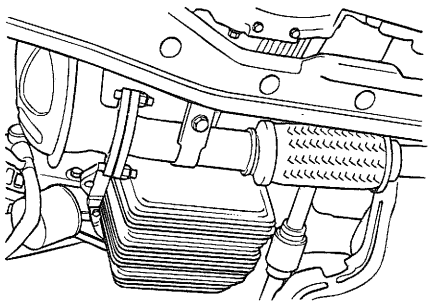

KDNB003B

INSTALLATION ECNC6600

1. Temporarily install the front exhaust pipe, the center exhaust pipe, and the rear muffler, in that order.
2. Tighten the parts securely. Make sure there is no interference with any body components.

AIR CLEANER (ACL)

COMPONENTS ECNC6700

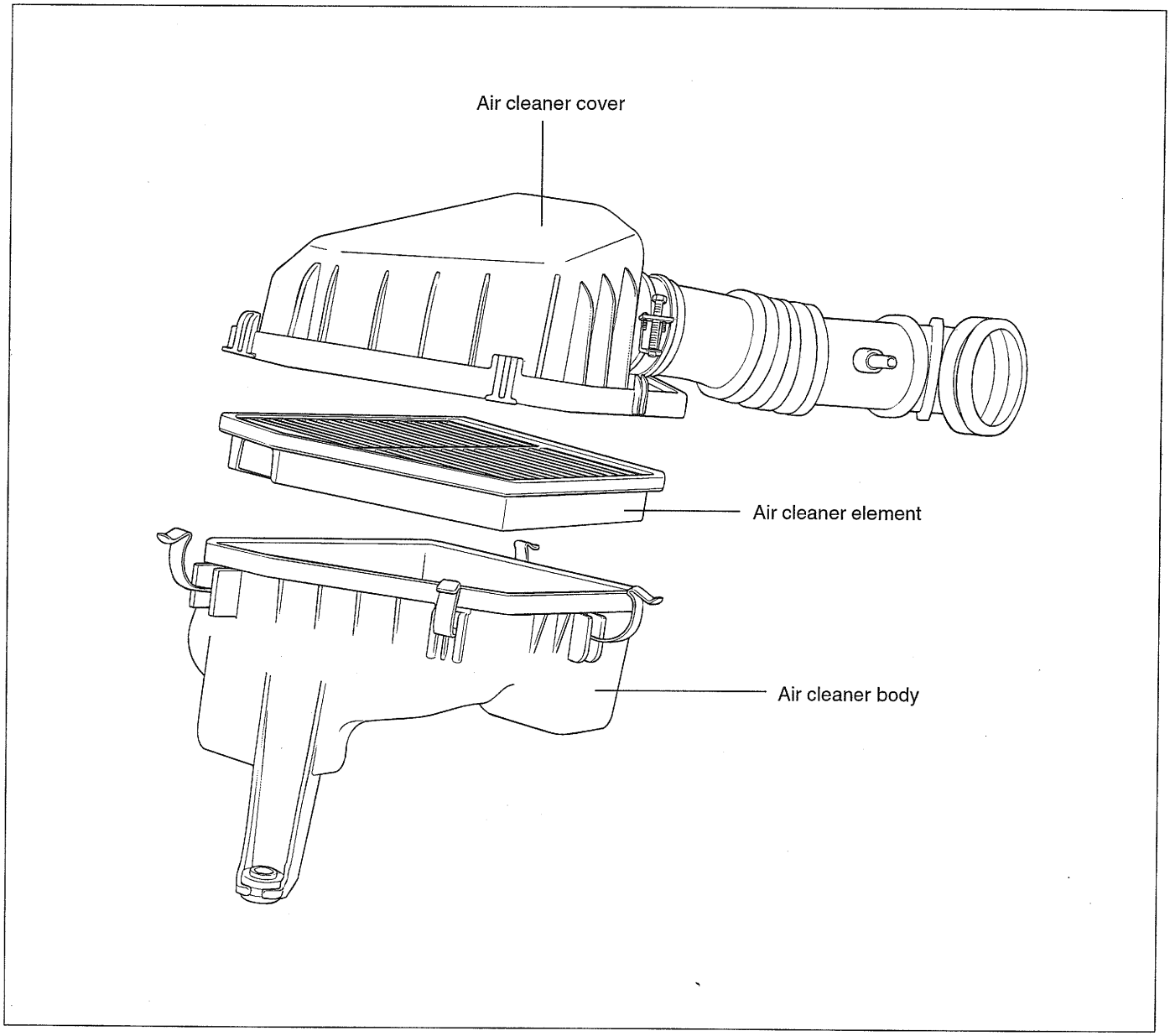

EDNB008A

REMOVAL ECNC6800

1. Remove the air duct connected to the air cleaner.
2. Remove the air intake hose at the air cleaner side.
3. Remove the air cleaner cover and filter.
4. Remove the air cleaner mounting bolts and remove the air cleaner.

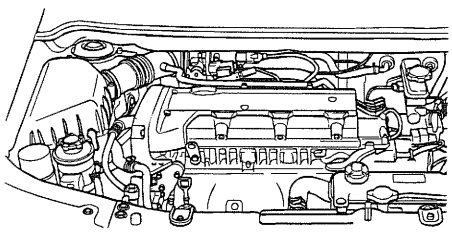

KDNB003C

INSPECTION ECKB6900

1. Check the air cleaner body, cover, or filter for distortion, corrosion or damage.
2. Check the air duct for damage.
3. Check the resonator for distortion or damage.

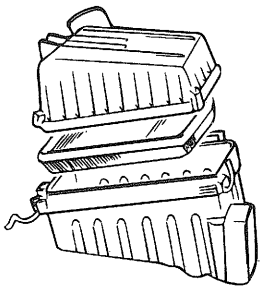

ECKA060B

4. Check the air cleaner filter for restriction, contamination or damage. If the filter is slightly restricted, remove the dust and other contaminants by blowing compressed air from the upper side through the filter.

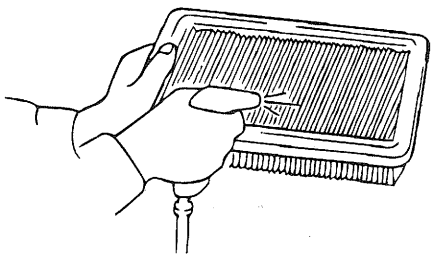

EDDA080B

5. Check the air cleaner housing for restrictions, contamination or damage.

INSTALLATION ECKB7000

Install the air cleaner assembly following the reverse order of removal.

CYLINDER HEAD ASSEMBLY

CYLINDER HEAD

COMPONENTS EDNC7100

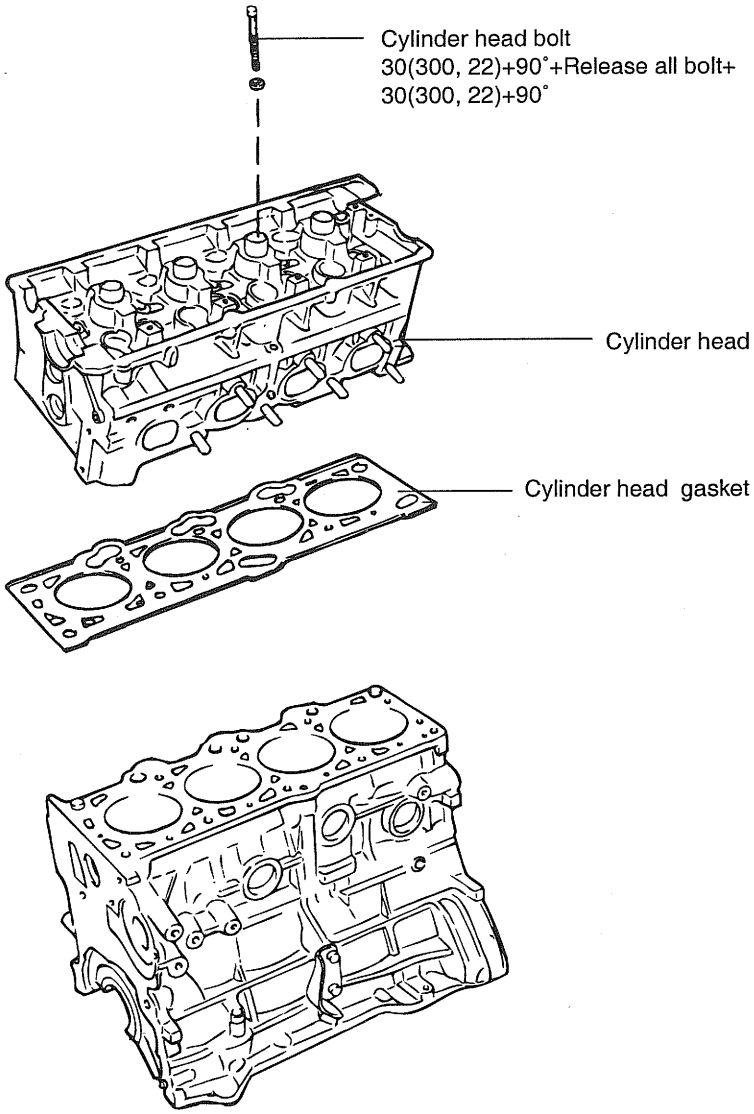

TORQUE : Nm (kg.cm, lb.ft)

EDNC777A

COMPONENTS ECKB7200

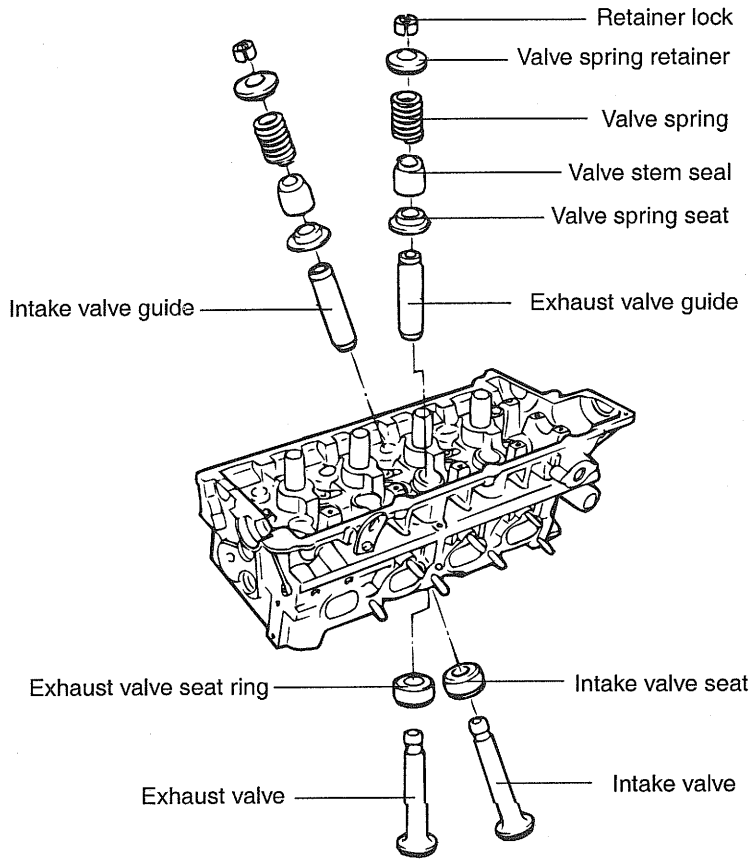

TORQUE : Nm (kg.cm, lb.ft)

***Replace the seal with new one after removal**

EDKB050D

DISASSEMBLY EDNC7300

1. Using a special tool (09221-32001), remove the cylinder head bolts in the order shown in the illustration.

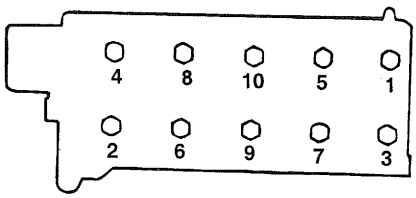

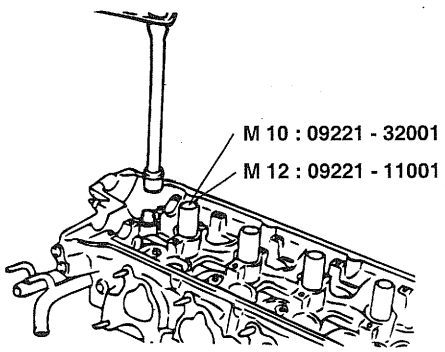

KDDB001L

2. Using the special tool (09222-28000, 09222-28100), remove the valve retainer lock. Next remove the spring retainer, valve spring, spring seat and valve.

NOTE

Arrange these parts so that they can be reinstalled in their original positions.

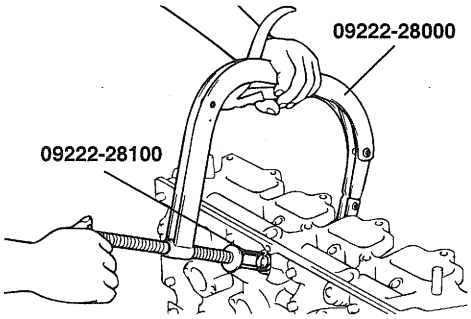

ECHA910B

3. Remove the valve stem seals with pliers.

NOTE

Do not reuse the valve stem seals.

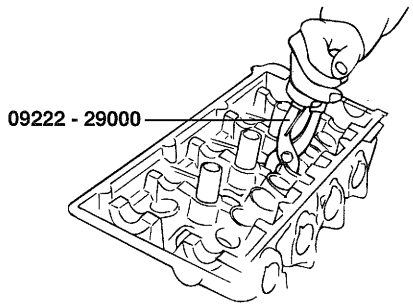

EDDA088B

INSPECTION EDKB7400

CYLINDER HEAD

1. Check the cylinder head for cracks, damage and coolant leakage. If cracked, replace the cylinder head.

2. Remove scale, sealing compound and carbon deposits completely. After cleaning the oil passages, apply compressed air to verify that the passages are not clogged.

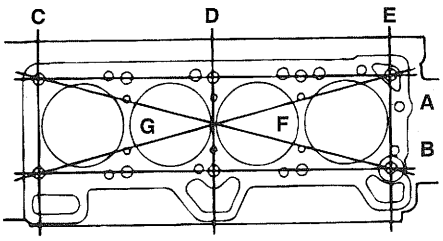

EDDA084A

3. Check the cylinder head surface for flatness in the direction as shown in the illustration. If flatness exceeds the service limit in any direction, either replace the cylinder head or machine the cylinder head matching surface lightly.

Flatness of cylinder head gasket surface
Standard : Less than 0.03mm(0.0012 in.)
Limit : 0.2 mm (0.008 in.)

VALVES

1. Using a wire brush, clean the valve thoroughly.

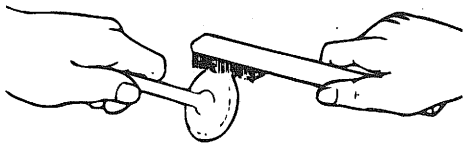

ECA9281A

2. Check each valve for wear, damage and distortion of the head and the stem at B Position. Replace, if necessary. If stem end, A, is hollowed out or worn, resurface as necessary. This correction must be limited to a minimum. Also resurface the valve face.
Replace the valve if the margin has decreased to less than the service limit.

Margin
[Standard]
Intake : 1.1 mm (0.043 in.)
Exhaust : 1.3 mm (0.051 in.)
[Limit]
Intake : 0.8 mm (0.028 in.)
Exhaust : 1.0 mm (0.040 in.)

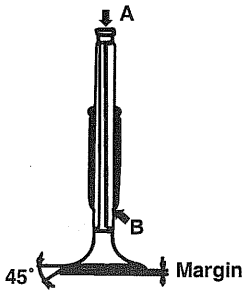

ECA9281B

VALVE SPRINGS

1. Check the free height of each valve spring. If they exceed the service limit, replace the springs.
2. Using a square, test the squareness of each spring. If a spring is excessively out-of-square, replace it.

Valve spring

[Standard]

Free height : 44 mm (1.7323 in.)

Load :

21.6kg/35 mm (47.6 lb/1.0709 in.)

45.1 kg/27.2 mm (16 lb/1.0709 in.)

Out of square : 1.5° or less 100

[Limit]

Free height : - 1.0 mm (- 0.039 in.)

Out of square : 4°

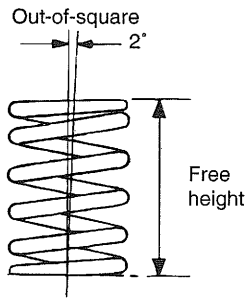

ECA9281C

VALVE GUIDES

Check the valve stem-to-guide clearance. If the clearance exceeds the service limit, replace the valve guide with the next oversize part.

Valve stem-to-guide clearance

[Standard]

Intake : 0.03-0.06 mm (0.0012 -0.0024 in.)

Exhaust : 0.05-0.08 mm (0.0020-0.0031 in.)

[Limit]

Intake : 0.1mm(0.0040 in)

Exhaust : 0.15mm(0.0059 in.)

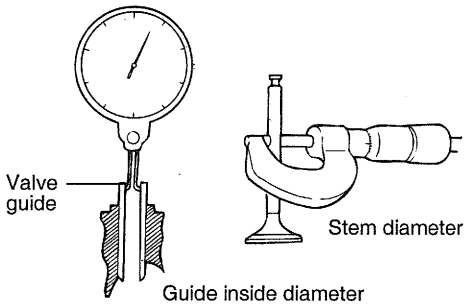

ECA9281D

RECONDITIONING VALVE SEAT

Check the valve seat for overheating and unequal contact with the valve face. Recondition or replace the seat if necessary. Before reconditioning the seat, check the valve guide for wear. If the valve guide is worn, replace it and then recondition the seat. Recondition the valve seat with a valve seat grinder or cutter. The valve seat contact width should be within specificatons and centered on the valve face. After reconditioning, the valve and valve seat should be lapped lightly with a lapping compound.

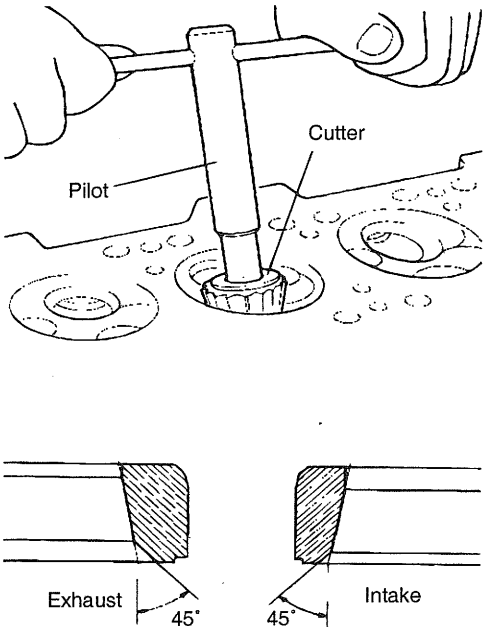

ECHA920B

REPLACING THE VALVE SEAT RING

1. Cut away the inner face of the valve seat to reduce the wall thickness.

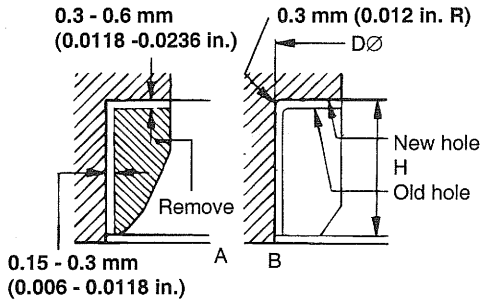

ECA9281F

2. Enlarge the diameter of the valve seat so that it matches the specified oversize hole diameter of the new valve seat ring.
3. Heat the cylinder head to about 250°C (480°F) and press - fit an oversize seat ring for the bore in the cylinder head.
4. Using lapping compound, lap the valve to the new seat.

Valve seat contact width

Intake : 0.8 - 1.2 mm (0.0315 - 0.0472 in.)

Exhaust : 1.3 - 1.7 mm (0.0512 - 0.0670 in.)

VALVE SEAT INSERT OVERSIZES

Description	Size mm (in.)	Size mark	Seat ring height H mm(in.)	Oversize hole diameter I.D. mm(in.)
Intake valve	0.3 (0.012) O.S.	30	5.1-5.3 (0.2008-0.2087)	30.7-30.721 (1.2087-1.2095)
Seat ring	0.6 (0.024) O.S.	60	5.4-5.6 (0.2126-0.2205)	31.0-31.021 (1.2205-1.2213)
Exhaust valve	0.3 (0.012) O.S.	30	6.2-6.4 (0.2441-0.2520)	27.3-27.321 (1.0748-1.0756)
Seat ring	0.6 (0.024) O.S	60	6.5-6.7 (0.2560-0.2638)	27.6-27.621 (1.0866-1.0874)

REPLACING VALVE GUIDE

1. Using the special tool (09221-22000 A/B), withdraw the old valve guide toward the bottom of cylinder head.

2. Recondition the valve guide hole so that it can match the newly press-fitted oversize valve guide.

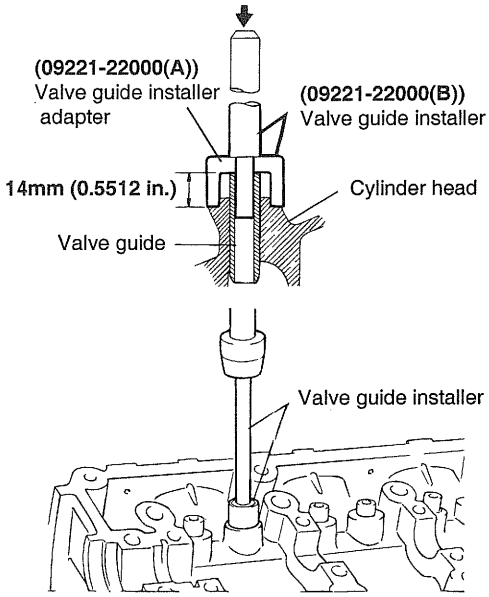

ECDA109C

3. Using the special tool (09221-22000 A/B), press-fit the valve guide. The valve guide must be press-fitted from the upper side of the cylinder head.

4. After the valve guide is press-fitted, insert a new valve and check for proper the clearance.

5. After the valve guide is replaced, check that the valve is seated properly. Recondition the valve seats as necessary.

VALVE GUIDE OVERSIZES

Over size mm (in.)	Size mark	Oversize valve guide hole size mm (in.)
0.05(0.002)	5	11.05-11.068 (0.4350-0.4357)
0.25 (0.010)	25	11.25-11.268 (0.4429-0.4436)
0.50 (0.020)	50	11.50-11.518 (0.4528-0.4535)

VALVES

REASSEMBLY EDNC7500

NOTE

1. *Clean each part before assembly.*
2. *Apply engine oil to the sliding and rotating parts.*

1. Install the spring seats.
   Using a special tool (09222-22001), tap the seal in position lightly.

NOTE

- *Do not reuse old valve stem seals.*
- *Incorrect installation of the seal could result in oil leakage past the valve guides.*

2. Apply engine oil to each valve. Insert the valve into the valve guide. Avoid pushing the valve into the seal by force. After inserting the valve, check that it moves smoothly.

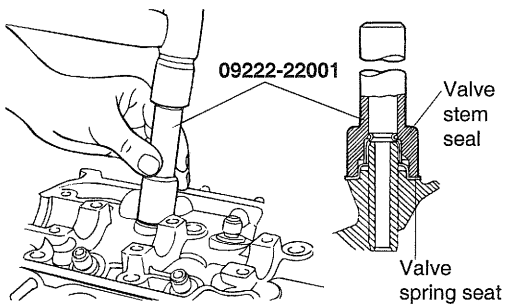

ECHB930A

3. Place valve springs so that the side coated with enamel faces toward the valve spring retainer and then install the retainer.

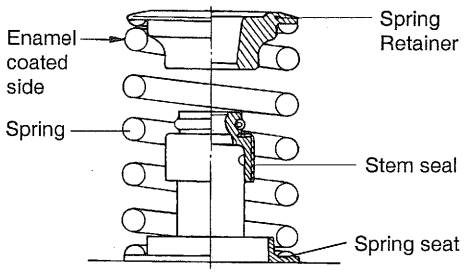

ECA9290B

4. Using the special tool (09222-28000, 09222-28100), compress the spring and install the retainer locks. After installing the valves, ensure that the retainer locks are correctly in place before releasing the valve spring compressor.

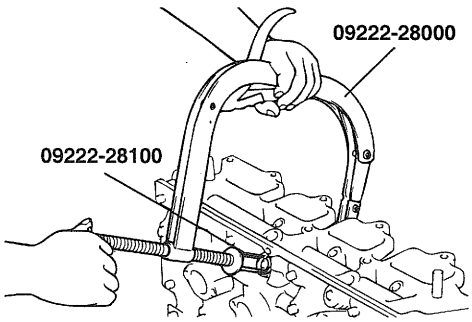

ECHA910B

NOTE

When the spring is compressed, Check that the valve stem seal is not pressed against the bottom of the retainer.

5. Clean both gasket surfaces of the cylinder block and cylinder head.

6. Verify the identification marks on the cylinder head gasket.

7. Install the gasket so that the surface with the identification mark faces toward the cylinder head.

8. Tighten the bolts to the specified torque in the sequenec shown.

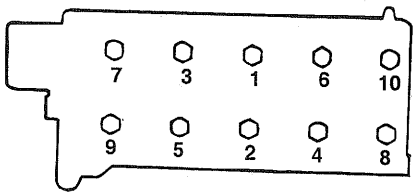

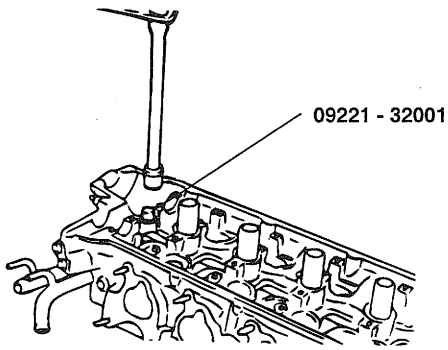

KDDA001L

Cylinder head bolt :

30 Nm (300 kg.cm, 22 lb.ft)+90°+Release all bolt
+ 30 Nm (300kg.cm, 22 lb.ft) + 75°

TIMING SYSTEM

TIMING SYSTEM

COMPONENTS EDDA0910

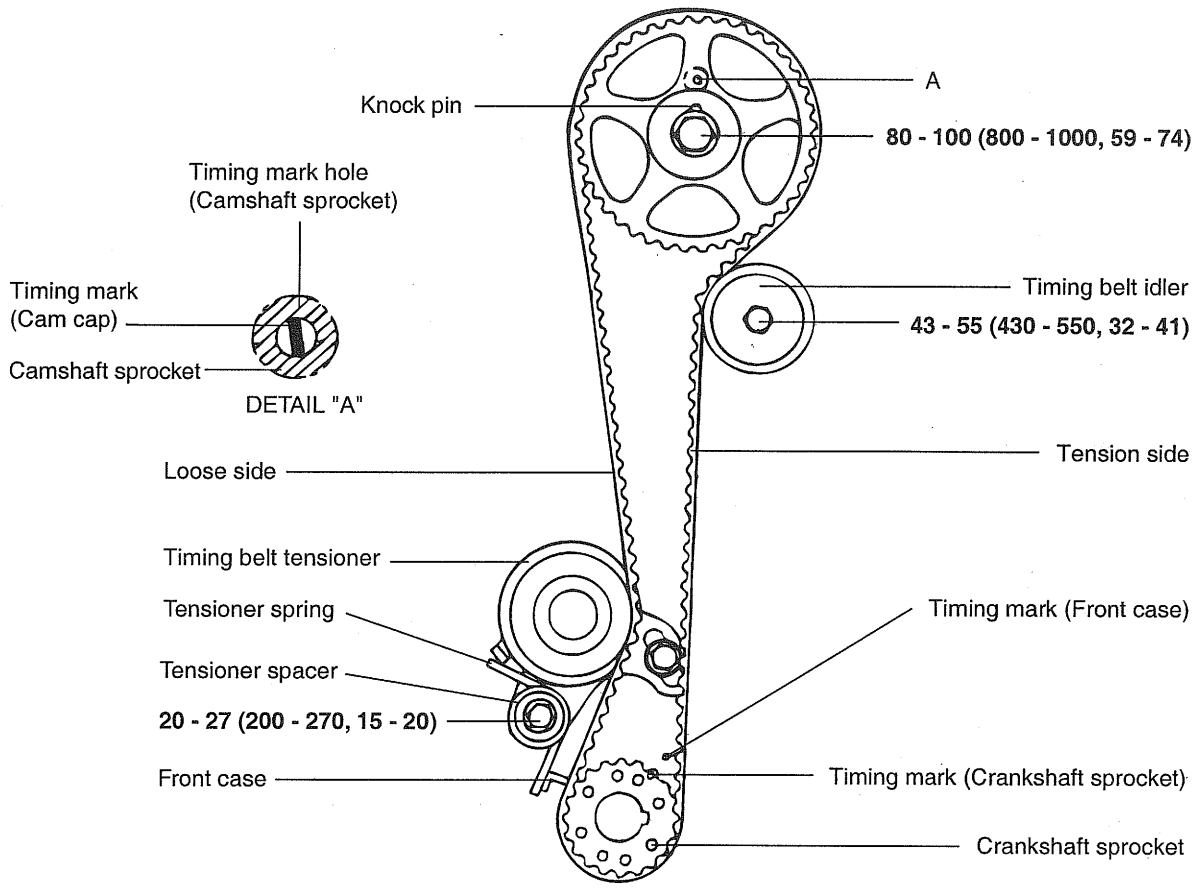

TORQUE : Nm (kg.cm, lb.ft)

EDDA091A

DISASSEMBLY EDKB7700

1. Loosen the coolant pump pulley bolt.
2. Loosen the alternator bolt.
3. Remove the coolant pump pulley and belt.
4. Remove the crankshaft pulley.
5. Remove the timing belt cover.

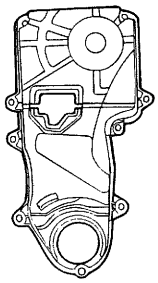

EDDA094F

6. Move the timing belt tensioner pulley toward the coolant pump and temporarily secure it.
7. Remove the camshaft from the camshaft sprocket.
8. Remove the camshaft sprocket.
9. Remove the timing belt.

NOTE

If the timing belt is reused, mark with an arrow to indicate direction of rotation (on the front of the engine) to make sure that the belt is reinstalled in the same direction as before.

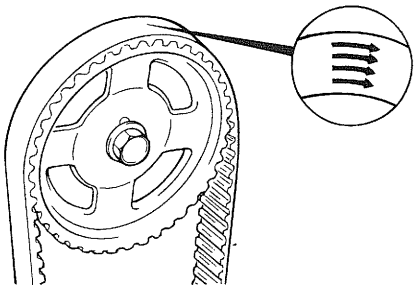

ECDA121B

10. Remove the crankshaft sprocket bolts. Remove the crankshaft sprocket and flange.
11. Remove the timing belt tensioner.

INSPECTION EDKB7800

SPROCKETS TENSIONER PULLEY, AND IDLER PULLEY

1. Check the camshaft sporcket, crankshaft sprocket, tensioner pulley, and idler pulley for abnormal wear, cracks, or damage.
   Replace as necessary.
2. Inspect the tensioner pulley and the idler pulley for easy and smooth rotation and check for play or noise.
   Replace as necessary.
3. Replace the pulley if there is a grease leak from its bearing.

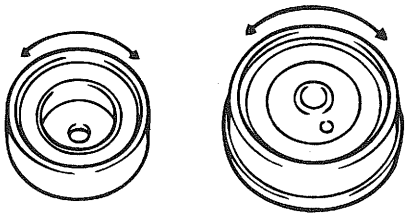

ECKA070A

TIMING BELT

1. Check the belt for oil or dust deposits. Replace, if necessary. Small deposits should be wiped away with a dry cloth or paper. Do not clean with solvent.
2. When the engine is overhauled or belt tension adjusted, check the belt carefully. If any of the following flaws are evident, replace the belt with a new one.

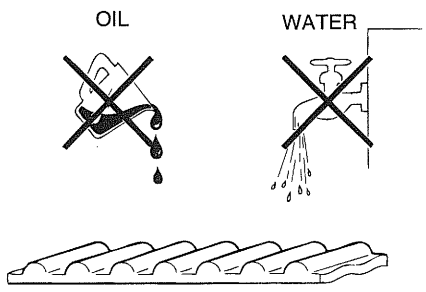

EDDA093B

Description	Flaw conditions
1. Hardened back surface • Back surface is glossy, non-elastic and so hard that when your fingernail is pressed into it, no mark is produced.	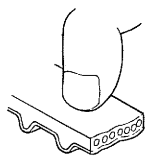 EDDA093C
2. Cracked back surface rubber	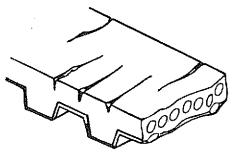 EDDA093D
3. Cracked or separating canvas	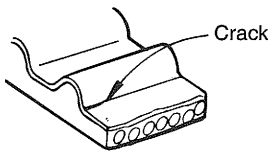 EDDA093E 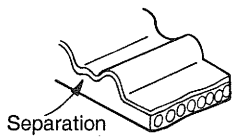 EDDA093F 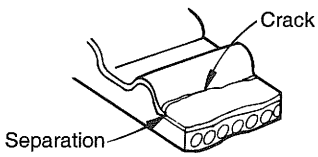 EDDA093G
4. Badly worn teeth (initial stages) • Canvas on load side of tooth flank worn (Fluffy canvas fibers, rubber gone and color changed to white, and unclear canvas texture)	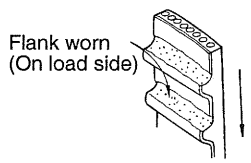 EDDA093H
5. Badly worn teeth (last stage) • Canvas on load side of tooth flank worn down and rubber exposed (tooth width reduced)	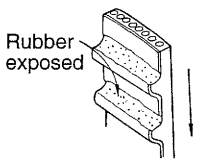 EDDA093I
6. Cracked tooth bottom	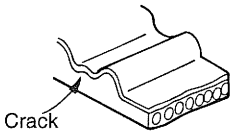 EDDA093J

Description	Flaw conditions
7. Missing tooth	Tooth missing and canvas fiber exposed  EDDA093K
8. Side of belt badly worn **NOTE** *Normal belt should have precisely cut sides as if cut by a sharp knife.*	
9. Side of belt cracked	

REASSEMBLY EDNC7900

1. Install the flange and crankshaft sprocket as shown. Pay close attention to their mounting directions.

Tightening torque

Crankshaft sprocket bolt :

140-150Nm (1400-1500kg.cm, 103-111lb.ft)

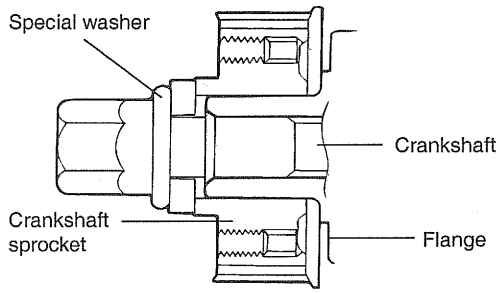

ECNC094B

2. Install the camshaft sprocket and tighten the bolt to the specified torque.

Tightening torque

Camshaft sprocket bolt :

80-100Nm (800-1000kg.cm, 59-74lb.ft)

3. Install the idler and tighten the idler bolt to the specified torque.

Tightening torque

Idler bolt : 43-55Nm (430-550kg.cm, 32-41lb.ft)

4. Align the timing marks of the camshaft sprocket and crankshaft sprocket, with the No.1 piston placed at top dead center on its compression stroke.

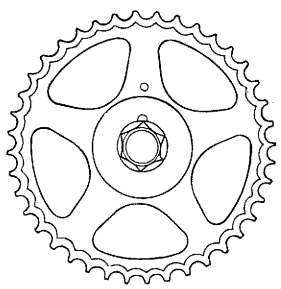

ECDA125B

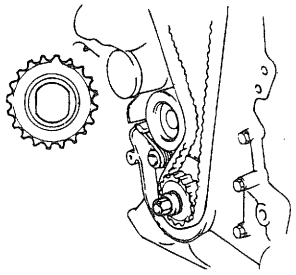

EDDA094B

5. To install the timing belt tensioner, first mount the tensioner, spring, and spacer. Temporarily tighten the bolts. Next, temporarily tighten the tensioner long hole side washer and bolts. Install the bottom end of the spring against the front case as shown in the illustration.

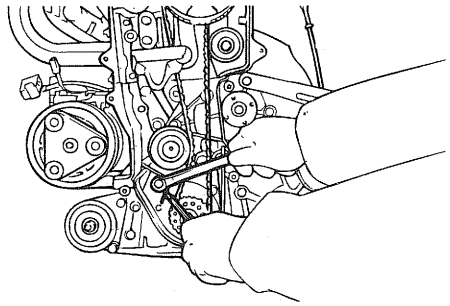

EDDA094C

6. Secure the tensioner, positioned towards the water pump.
7. Install the timing belt on the crankshaft sprocket.
8. Install the timing belt on the camshaft sprocket. When the timing belt is installed on the camshaft sprocket, make sure that the tension side is tight. Then, check to ensure that when the tension side is tightened by turning the camshaft sprocket in a reverse direction and all timing marks are in line.

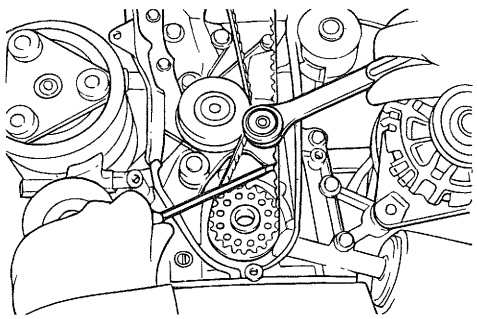

EDDA092A

9. Tighten the tensioner bolts.

10. Turn the crankshaft two turns in its operating direction (clock-wise) and realign the camshaft sprocket timing mark with the top dead center position.

Tightening torque

Tensioner attaching bolt :

20-27Nm (200-270kg.cm, 15-20lb.ft)

11. Then recheck the belt tension. Verify that when the tensioner and the tension side of the timing belt are pushed in horizontally with a moderate force [approx. 49N (11lb)], the timing belt cog end is aprox. $\frac{1}{2}$ of the tensioner monting bolt head radius (across flats) away from the bolt head center.

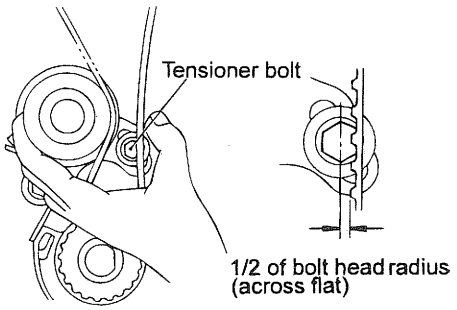

EDDA094E

12. Install the timing belt cover.

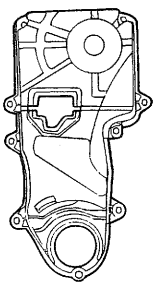

EDDA094F

Tightening torque

Timing belt cover bolt :

8-10Nm (80-100kg.cm, 6-7 lb.ft)

13. Install the crankshaft pulley. Make sure that the crankshaft sprocket pin fits the small hole in the pulley.

Tightening torque

Crankshaft pulley bolt :

140-150 Nm (1400-1500kg.cm, 103-111lb.ft)

14. Install the fan belt and adjust the belt tension.

15. Install the water pump pulley

16. Install V-belt and adjust the belt tension.

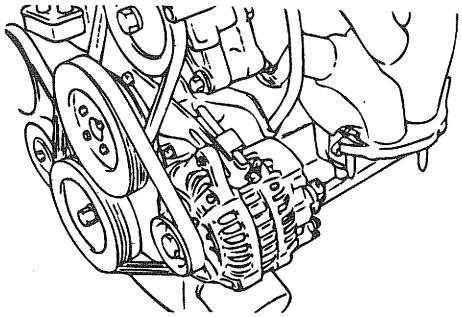

EDDA094G

Engine Electrical System

GENERAL ..... EE -2

IGNITION SYSTEM (DOHC) ..... EE -4

CHARGING SYSTEM ..... EE -10

STARTING SYSTEM ..... EE -28

GENERAL

SPECIFICATIONS EBNC0010

IGNITION COIL

Type	Mold dual coil
Primary coil resistance	0.5 ± 0.05Ω
Secondary coil resistance	12.1 ± 1.8kΩ

SPARK PLUG

Type	UNLEADED	LEADED
NGK	BKR5ES-11	BKR5ES
Champion	RC10YC4	RC10YC
Plug gap mm (in.)	1.0-1.1 (0.039-0.043)	0.7-0.8 (0.028-0.032)

STARTER MOTOR

Type	Reduction drive (with planetary gear)
Rated output	12V 0.9 kW, 1.2 kW
Rated time	30 sec.
No-load characteristics	
Terminal voltage	11.5V
Amperage	90A or less
Maximum speed	6,600 rpm or more
No. of pinion teeth	8
Pinion gap mm (in.)	0.5-2 (0.0197-0.079)

GENERATOR

Type	Battery voltage sensing
Rated output	13.5V 75A, 90A
Voltage regulator type	Electronic built-in type
Regulator setting voltage	14.4 ± 0.3V
Temperature compensation	-10 ± 3mV/°C

BATTERY

Type	MF 45Ah	MF 60Ah
Ampere hours (5HR)	36 Ah or more	48 Ah or more
Ampere hours (20HR)	45 Ah or more	60 Ah or more
Cold cranking [at -17.8°C (0°F)]	380A or more	550A or more
Reserve capacity	80 min.	92 min.
Specific gravity [at 25°C (77°F)]	1.280 ± 0.01	1.280 ± 0.01

NOTE
COLD CRANKING AMPERAGE is the amperage that the battery can delivery for 30 seconds and maintain a terminal voltage of 7.2 volts or greater at a specified temperature.
RESERVE CAPACITY RATING is the amount of time a battery can deliver 25A and maintain a minimum terminal voltage of 10.5 volts at 26.7°C (80°F).

IGNITION SYSTEM (DOHC)

GENERAL INFORMATION EBKB0150

Ignition timing is controlled by the electronic control ignition timing system. The standard reference ignition timing data for the engine operating conditions are pre-programmed in the memory of the engine control module (ECM).

The engine operating conditions (speed, load, warm-up condition, etc.) are detected by the various sensors. Based on these sensor signals and the ignition timing data, signals to interrupt the primary current are sent to the ECM. The ignition coil is activated, and timing is controlled.

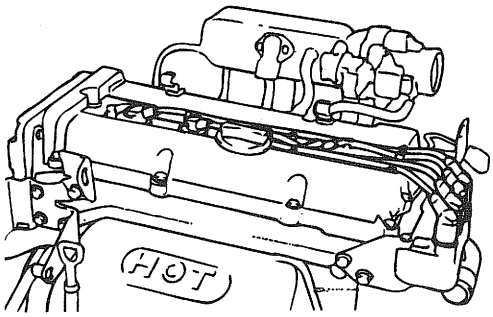

EBDA015A

TROUBLESHOOTING

Trouble condition	Probable cause	Remedy
Engine cranks, but will not start or is hard to start.	Ignition coil faulty	Replace ignition coil
	High tension cable faulty	Replace high tension cable
	Spark plugs faulty	Replace plugs
	Incorrect immobilizer system	Adjust
	Ignition wiring disconnected or broken	Inspect and replace
Rough idle or stalling	Spark plugs faulty	Replace plugs
	Ignition wiring faulty	Replace wiring
	Ignition coil faulty	Replace ignition coil
	High tension cord faulty	Replace high tension cord
Engine hesitates/poor acceleration	Spark plugs faulty	Replace plugs
	Ignition wiring faulty	Replace wiring
Poor fuel economy	Spark plugs faulty	Replace plugs

IGNITION SWITCH EBKB0050

INSPECTION

1. Remove the connector located under the steering column.
2. Check for continuity between terminals.

Position	Key	Ignition switch 1	2	3	4	5	6	Key lock solenoid 1	2
LOCK	Removed								
	Inserted								
ACC		○	—	○				○	— ○
ON1		○	—	○	—	—	○		
START					○	—	○		

NOTE

○—○ **indicates that there is continuity between the terminals.**

EBDA005A

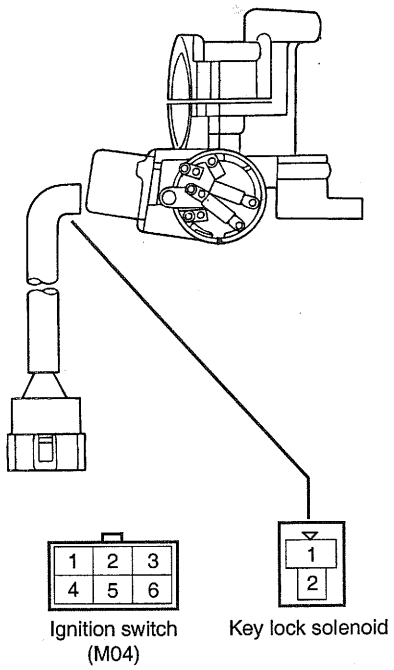

EBKB005A

IGNITION COILS EBKB0170

CHECKING IGNITION COILS

1. Measure the primary coil resistance between terminals 1 and 2 of connectors C18-2 and C68-1 (the coils at the No.1 and No.4 cylinder sides) of the ignition coil, and between terminals 1 and 2 of connectors C18-1 and C68-2 (the coils at the No.2 and No.3 cylinder sides).
   Standard value : 0.5 ± 0.05kΩ

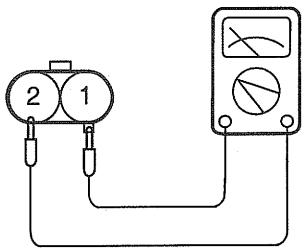

EBKB017A

2. Measure the secondary coil resistance between the high-voltage terminal for the No.1 and No.4 cylinders, and between the high-voltage terminals for the No.2 and No.3 cylinders.
   Standard value : 12.1 ± 1.8kΩ

⚠ ***CAUTION***

When measuring the resistance of the secondary coil, be sure to disconnect the ignition coil connector.

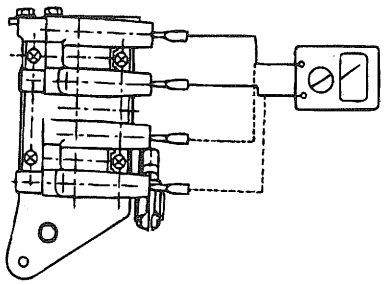

EBDA017B

INSPECTION AND CLEANING OF SPARK PLUGS EBDA0190

1. Disconnect the spark plug cables from the spark plugs.

   NOTE

   When removing the spark plug cable, pull on the spark plug cable boot (not the cable), as it may be damaged.

2. Using a spark plug socket, remove all spark plugs from the cylinder head.

   CAUTION

   Be careful that no contaminants enter through the spark plug holes.

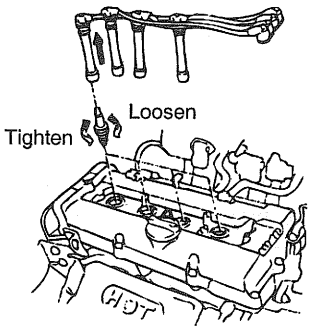

EBDA019A

3. Check the spark plugs for the following :
   1) Broken insulator
   2) Worn electrode
   3) Carbon deposits
   4) Damaged or broken gasket
   5) Condition of the porcelain insulator at the tip of the spark plug

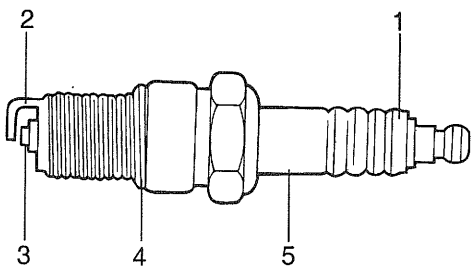

EBDA009B

4. Check the spark plug gap using a wire gap gauge, and adjust if necessary.

Standard value :

1.0-1.1 mm (0.039-0.043 in.)

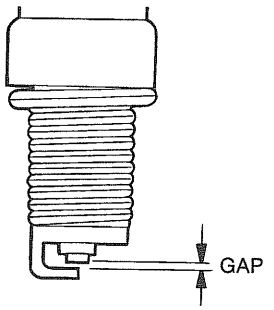

EBDA009C

5. Re- insert the spark plug and tighten to the specified torque.
   If it is over torqued, damage to the threads of the cylinder head may result.

Tightening torque :

20-30 Nm (204-306 kg.cm, 15-21 lb.ft)

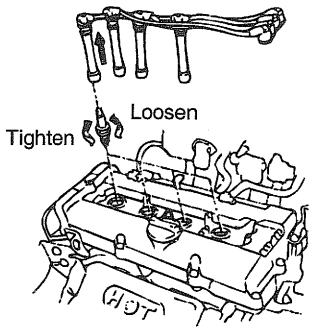

EBDA019A

ANALYZING SPARK PLUGS

Engine conditions can be analyzed by examining the tip deposits near the electrode.

Condition	Dark deposits	White deposits
Description	• Fuel mixture too rich • Low air intake	• Fuel mixture too lean • Advanced ignition timing • Insufficient plug tightening

SPARK PLUG TEST (WHEN ENGINE CAN BE CRANKED)

Connect the spark plug cable. Ground the outer electrode (main body), and crank the engine. In the atmosphere, only short sparks are produced because of the small discharge gap. If the spark plug is good, however, sparks will occur in the discharge gap (between the electrodes). In

a defective spark plug, no sparks will occur because of a leak through the insulation.

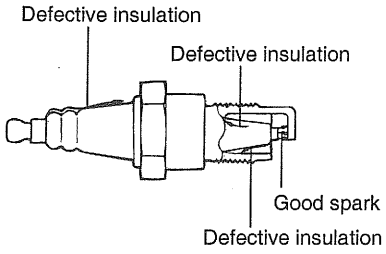

EBDA019E

CHECKING SPARK PLUG CABLES

1. Check the cap and outer shell for cracks.
2. Measure the resistance

Spark plug cable				
CYLINDER	No.1	No.2	No.3	No.4
LENGTH (mm)	605	545	450	370
RESIS-TANCE (BOUGI)Ω	2.71-4.07	2.44-3.66	2.02-3.02	1.66-2.49
RESIS-TANCE (R16AIPS)Ω	6.05-12.71	5.45-11.45	4.50-9.45	3.70-7.77

NOTE

Resistance should not be higher than 10KΩ per foot of cable. If resistance is higher, replace the cable.

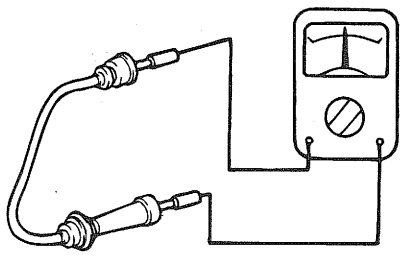

EBDA019F

COMPONENT EBNC0230

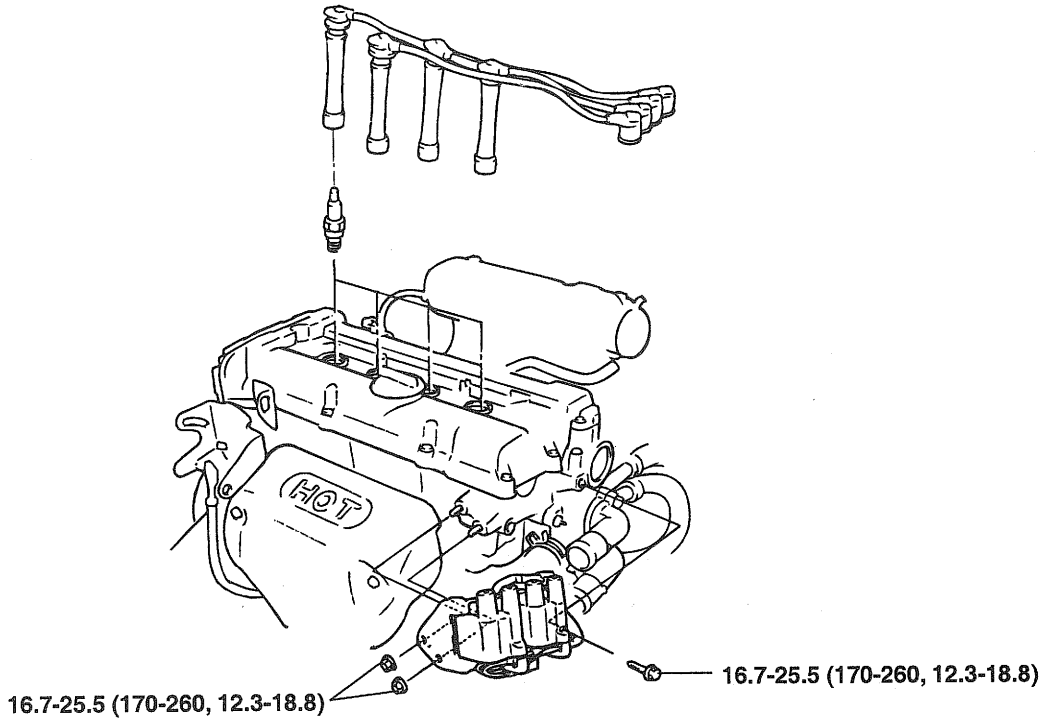

TORQUE : Nm (kg.cm, lb.ft)

EBDA023A

REMOVAL EBNC0240

1. Remove the ignition fuse (Fusible link-F (30A)).
2. Remove the rocker cover.
3. Disconnect the lead wire and spark plug cable.
4. Remove the ignition coil mounting bolt and remove the ignition coil assembly.
5. Installation is the reverse order of removal.

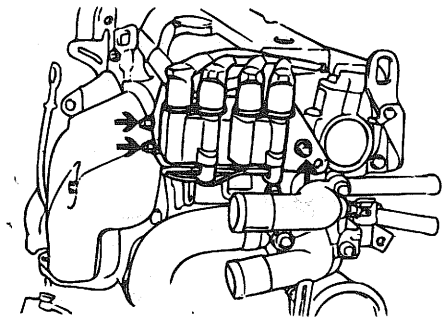

EBDA023B

INSTALLATION SPARK PLUG CABLE EBNC0250

Improper arrangement of spark plug cables will induce a voltage between the cables, causing misfire and develop a surge in acceleration during high-speed operation.

Therefore, be careful to arrange the spark plug cables properly.

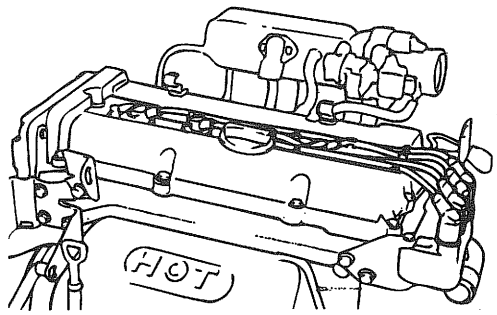

EBDA023C

CHARGING SYSTEM

GENERAL INFORMATION EBNC0260

The charging system includes a battery, a generator with a built-in regulator, and the charging indicator light and wire. The generator has six built-in diodes (three positive and three negative), each rectifying an AC current to DC current. Therefore, the DC current appears at generator "B" terminal.

In addition, the charging voltage of the generator is regulated by the battery voltage detection system. The main components of the generator are the rotor, stator, rectifier, capacitor brushes, bearings and drive belt pulley. The brush holder contains a built-in electronic voltage regulator.

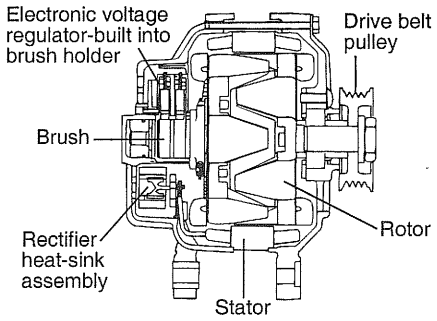

EBDA024A

EBNC0270

TROUBLESHOOTING

Trouble condition	Probable cause	Remedy
Charging warning indicator does not light with ignition switch "ON" and engine off	Fuse blown	Check fuses
	Light burned out	Replace light
	Wiring connection loose	Tighten loose connections
	Electronic voltage regulator faulty	Replace voltage regulator
Charging warning indicator does not go out with engine runing. (Battery requires fequent recharging)	Drive belt loose or worn	Adjust tension or replace cables
	Battery cables loose, corroded or worn	Repair or replace cables
	Fuse blown	Check fuses
	Fusible link blown	Replace fusible link
	Electronic voltage regulator or generator faulty	Test generator
	Wiring faulty	Repair wiring.
Discharged battery	Drive belt loose or worn	Adjust tension or replace drive belt
	Wiring connection loose or open circuit	Tighten loose connection or repair wiring
	Fusible link blown	Replace fusible link
	Warning indicator and pre-excitation resistor faulty	Replace components
	Poor grounding	Repair
	Electronic voltage regulator or generator faulty	Test generator
	Battery life	Replace battery
Overcharging	Electronic voltage regulator faulty	Replace voltage regulator
	Voltage sensing wire faulty	Repair wire

CIRCUIT DIAGRAM FOR CHARGING SYSTEM EBNC0280

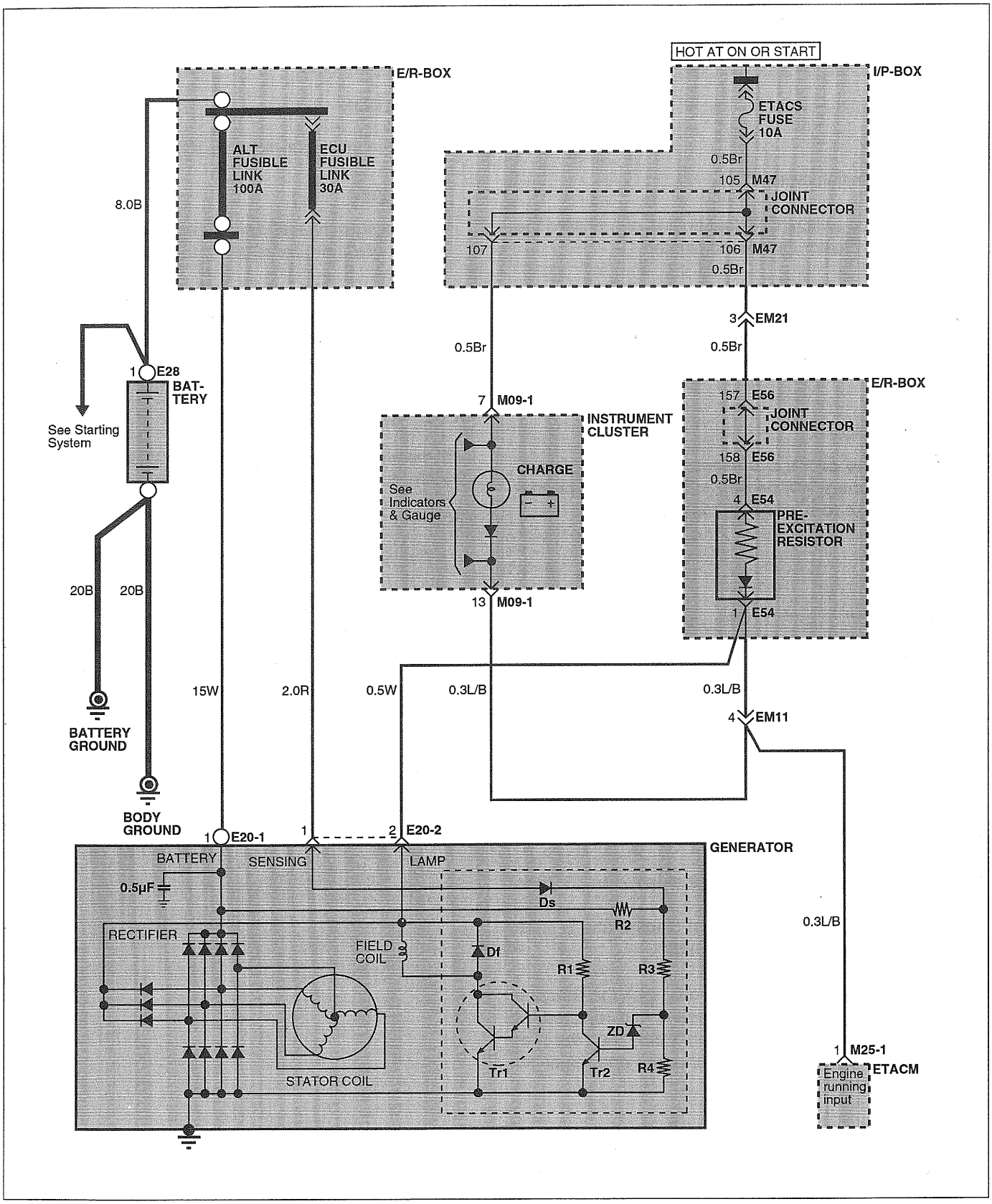

E2FC009A

INSPECTION OF CHARGING SYSTEM EBDA0270

CHECKING POWER SOURCE CIRCUIT

The field coil excites the stator coil, which generates charging current.

TEST

1. Turn the ignition switch "ON".
2. With ignition switch "ON" (but engine off), ensure the charging indicator lamp is illuminated.
3. Disconnect the pre-excitation resistor connector. Connect an ohmmeter between terminals 1 and 3 (component side). Connect the (+) lead wire of the ohmmeter to terminal 3 and the (-) lead wire to terminal 1.

⚠ CAUTION

If the leads of the ohmmeter are not connected properly, there will be no reading on the ohmmeter. Be sure to connect the leads correctly.

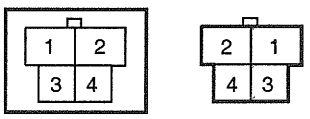

COMPONENTS SIDE HARNESS SIDE

EBDA027A

RESULT

1. If there is continuity throughout steps 2 and 3, then the circuit is OK.
   If there is continuity throughout steps 2 and 3, then the circuit, not the battery, is faulty.
2. If continuity is absent in step 2 only, then the charging indicator circuit should be checked and repaired. If continuity is absent during step 3 only then the pre-excitation register should be checked and replaced. (Refer to the circuit diagram).

NOTE

If continuity is absent in only one of steps 2 and 3, then the system is working normally. However, the individual circuit should be repaired for more reliable system operation.

VOLTAGE DROP TEST OF GENERATOR OUTPUT WIRE EBDA0290

This test determines if the wiring between the generator "B" terminal and the battery (+) terminal is good by the voltage drop method.

PREPARATION

1. Turn the ignition switch to "OFF."

   NOTE

   To identify connection problems, be sure not to disturb either of the two terminals or their connections during this test.

2. Connect a digital voltmeter between the generator "B" terminal and battery (+) terminal. Connect the (+) lead wire of the voltmeter to the "B" terminal and the (-) lead wire to the battery (+) terminal.

CONDITIONS FOR TESTING

With the engine running and headlamps, blower motor etc. ON, check the reading on the voltmeter.

RESULT

1. The voltmeter should read a standard 0.3V.
2. If the reading is above 0.3V, poor wiring should be suspected.
   Check wiring from generator 'B' terminal through the fusible link to the battery (+) terminal.
   Check for loose wiring or color change from an overheated harness. Correct and check again.
3. On completion of the test, set the engine at idle. Then turn off the headlamps, blower motor etc., and ignition.

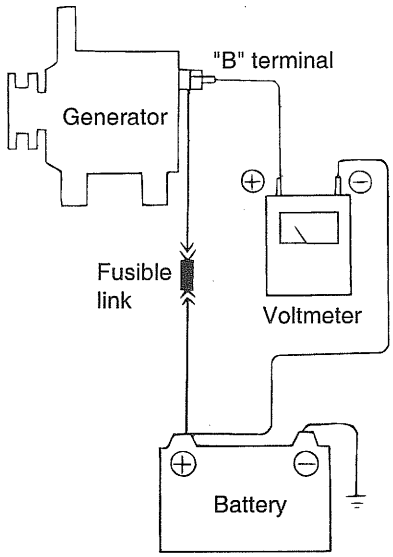

EBDA029A

OUTPUT CURRENT TEST EBDA0310

This test determines if the generator gives an output current that is equivalent to the nominal output.

PREPARATION

1. Prior to the test, check the following items and correct as necessary.

   1) Check if that the battery installed in the vehicle is in good condition. For details, see "BATTERY".

   NOTE

   The battery that is used to test the output current should be one that has been partially discharged. With a fully charged battery, the test may not be conducted correctly due to an insufficient load.

   2) Check the tension of the generator drive belt. See "COOLING".

2. Turn the ignition switch to "OFF".

3. Disconnect the battery ground cable.

4. Disconnect the generator output wire from the generator "B" terminal.

5. Connect a DC ammeter (0 to 100A) in series between the "B" terminal and the disconnected output wire. Be sure to connect the (-) lead wire of the ammeter to the disconnected output wire.

NOTE

Tighten each connection securely, as a heavy current will flow. Do not rely on clips.

6. Connect a voltmeter (0 to 20V) between the "B" terminal and ground. Connect the (+) lead wire to the generator "B" terminal and (-) lead wire to a good ground.

7. Attach an engine tachometer and connect the battery ground cable.

8. Leave the engine hood open.

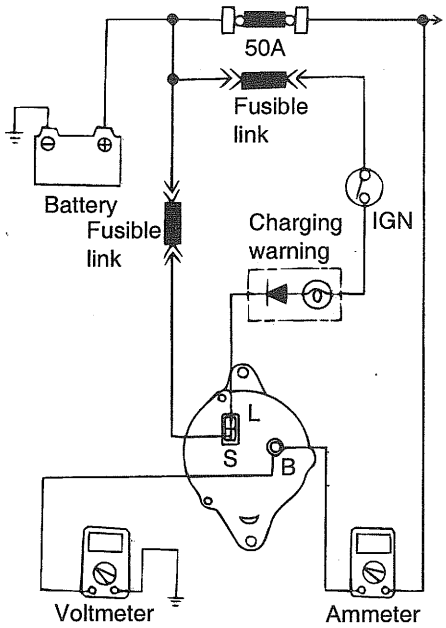

EBDA031A

TEST

1. Check to see that the voltmeter reads the same value as the battery voltage. If the voltmeter reads 0V, an open circuit in the wire between the generator "B" terminal and battery (-) terminal, a blown fusible link or poor ground is suspected.

2. Start the engine and turn the headlights on.

3. Set the headlights to high beam and the heater blower switch to HIGH, quickly increase the engine speed to 2,500 rpm and read the maximum output current value indicated by the ammeter.

NOTE

After the engine starts, the charging current quickly drops. Therefore, the above operation must be done quickly to read the maximum current value correctly.

RESULT

1. The ammeter reading must be higher than the limit value. If it is lower but the generator output wire is in good condition, remove the generator from the vehicle and test it.

Limit value	
52.5 A min.	75A generator
63.0 A min.	90A generator

NOTE

1. *The nominal output current value is shown on the nameplate affixed to the generator body.*
2. *The output current value changes with the electrical load and the temperature of the generator itself. Therefore, the nominal output current may not be obtained. In such case, keep the headlights on to discharge the battery, or use the lights of another vehicle to increase the electrical load. The nominal output current may not be obtained if the temperature of the generator itself or ambient temperature is too high. In such a case, reduce the temperature before testing again.*

2. Upon completion of the output current test, lower the engine speed to idle and turn off the ignition switch.
3. Disconnect the battery ground cable.
4. Remove the ammeter and voltmeter and the engine tachometer.
5. Connect the generator output wire to the generator "B" terminal.
6. Connect the battery ground cable.

REGULATED VOLTAGE TEST EBDA0330

The purpose of this test is to check that the electronic voltage regulator controls the voltage correctly.

PREPARATION

1. Prior to the test, check the following items and correct if necessary.
   1) Check that the battery installed in the vehicle is fully charged. For battery checking method, see the "BATTERY" section.
   2) Check the generator drive belt tension. For belt tension check, see section, "COOLING."
2. Turn ignition switch to "OFF."
3. Disconnect the battery ground cable.
4. Connect a digital voltmeter between the "S(L)" terminal of the generator and ground.
   Connect the (+) lead of the voltmeter to the "S(L)" terminal of the generator. Connect the (-) lead to a good ground or the battery (-) terminal.
5. Disconnect the generator output wire from the generator "B" terminal.
6. Connect a DC ammeter (0 to 100A) in series between the "B" terminal and the disconnected output wire. Connect the (-) lead wire of the ammeter to the disconnected output wire.
7. Attach the engine tachometer and connect the battery ground cable.

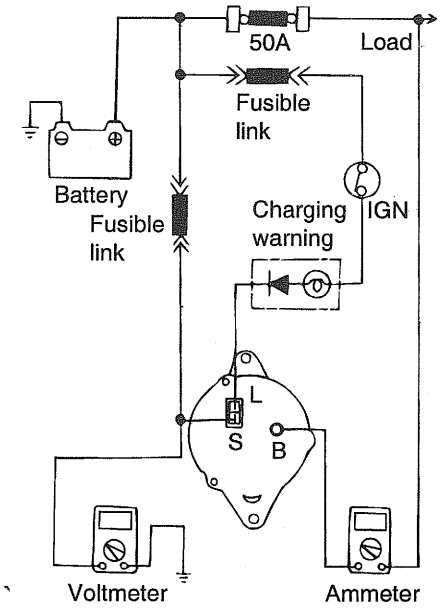

EBDA033A

TEST

1. Turn on the ignition switch and check to see that the voltmeter indicates the following value.
   Voltage : Battery voltage
   If it reads 0V, there is an open circuit in the wire between the generator "S(L)" terminal and the battery and the battery (+), or the fusible link is blown.
2. Start the engine. Keep all lights and accessories off.
3. Run the engine at a speed of about 2,500 rpm and read the voltmeter when the generator output current drops to 10A or less.

RESULT

1. If the voltmeter reading agrees with the value listed in the Regulating Voltage Table below, the voltage regulator is functioning correctly. If the reading is other than the standard value, the voltage regulator or the generator is faulty.

REGULATING VOLTAGE TABLE

Voltage regulator ambient temperature °C(°F)	Regulating voltage V	
	75A generator	90A generator
-20 (-4)	14.2-15.4	14.3-15.2
20 (68)	13.9-14.9	14.1-14.7
60 (140)	13.4-14.6	13.5-14.4
80 (176)	13.1-14.5	13.3-14.3

2. Upon completion of the test, reduce the engine speed to idle, and turn off the ignition switch.
3. Disconnect the battery ground cable.
4. Remove the voltmeter, ammeter, and the engine tachometer.
5. Connect the generator output wire to the generator "B" terminal.
6. Reconnect the battery ground cable.

GENERATOR EBNC0350

COMPONENTS

75A

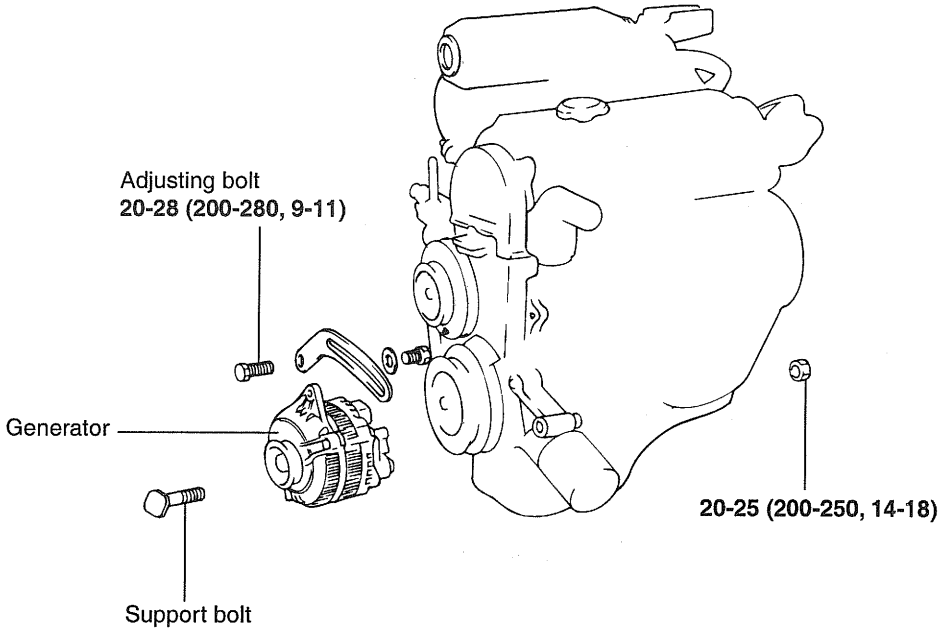

90A

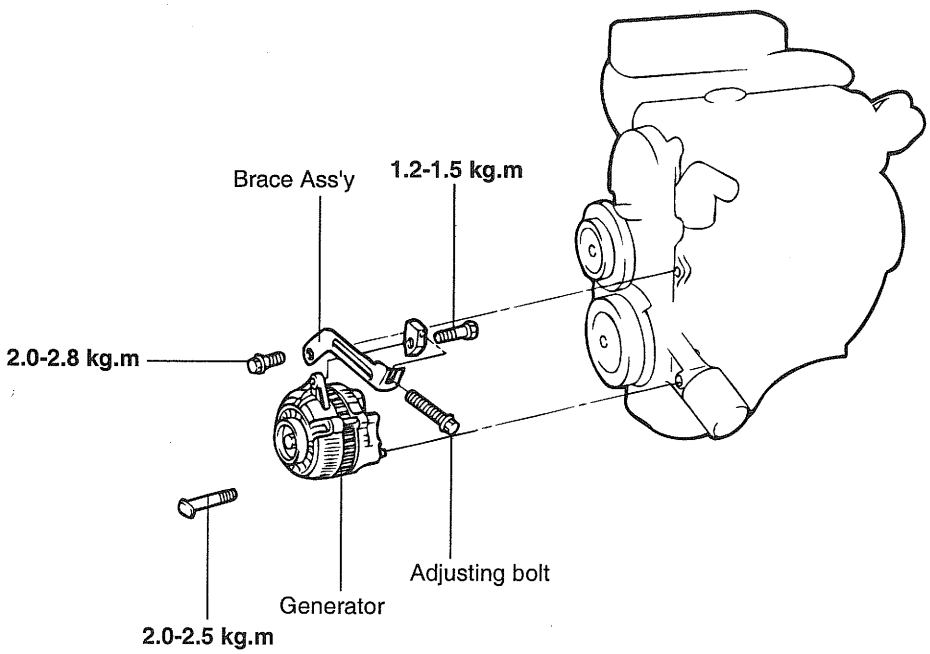

TORQUE : Nm (kg.cm, lb.ft)

EBDA035A

REMOVAL EBNC0360

1. Disconnect the negative(-) terminal from the battery and disconnect the radiator fan connector and condenser fan connector.

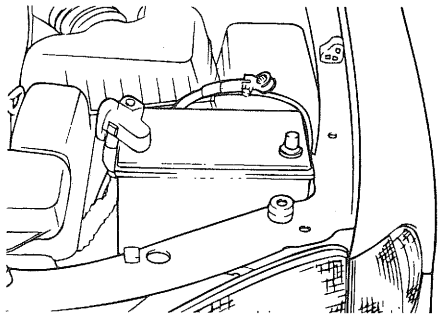

EBDA035B

2. Remove the radiator mounting bolts

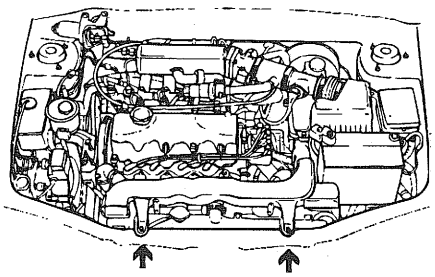

EBDA035C

3. Loosen the belt tension adjusting bolt and remove the mounting bolt.
Then, raise the vehicle.

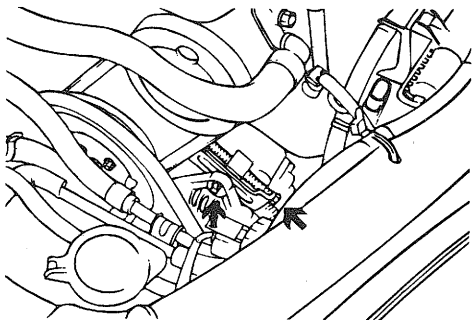

EBDA035D

4. Disconnect the generator connector and remove the B+ terminal cable.

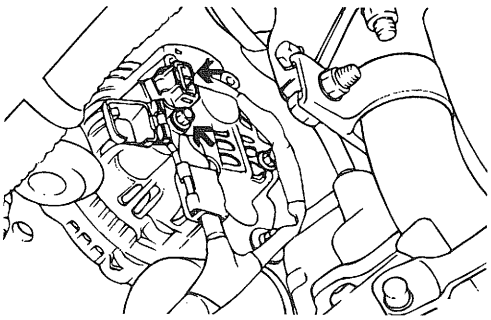

EBDA035E

5. Remove the belt and detach the generator mounting bolt and nut.
Then, remove the generator assembly while raising the radiator.

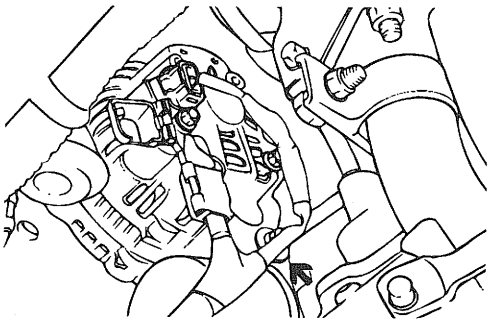

EBDA035F

COMPONENTS EBNC0370

<75A>

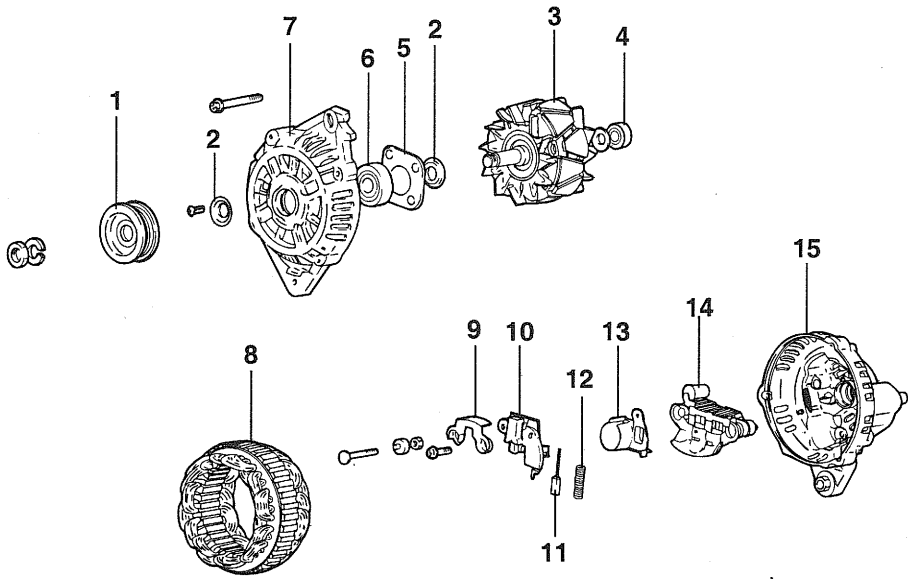

<90A>

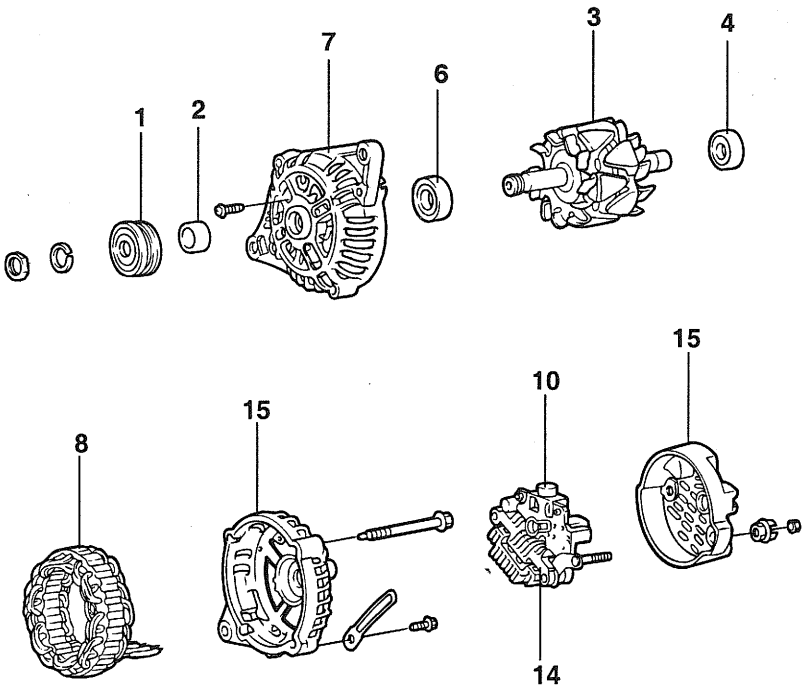

1. Pulley
2. Seal
3. Rotor assembly
4. Rear bearing
5. Bearing retainer
6. Front bearing
7. Front bracket
8. Stator
9. Plate
10. Voltage regulator and brush holder
11. Brush
12. Brush spring
13. Slinger
14. Rectifier
15. Rear bracket

EBDA037A

DISASSEMBLY (75A) EBNC0380

1. Remove the three through bolts.
2. Insert a flat screwdriver between the front bracket and stator core, and pry downward.

⚠ CAUTION

1. Do not insert the screwdriver too deeply, as there is a danger of damaging the stator coil.
2. The rear cover may be hard to remove because a ring is used to lock the outer race of the rear bearing. To facilitate removal of the rear cover, heat the bearing box section with a 200-watt soldering iron.
Do not use a heat gun, as it may damage the diode assembly.

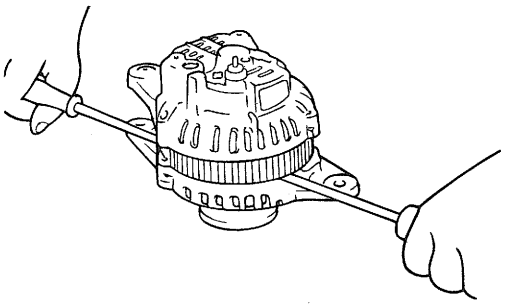

EBDA037B

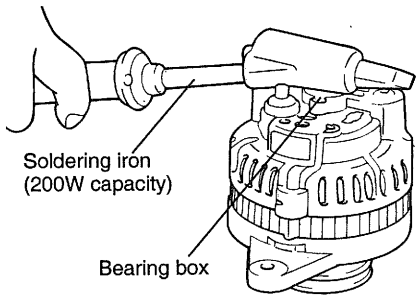

EBDA037C

3. Secure the rotor in a vise with the pulley side up.

⚠ CAUTION

Be careful that the vise jaws do not damage the rotor.

4. Remove the pulley nut, then remove the spring washer, then the pulley, and then the spacer.
5. Remove the front bracket and two seals.
6. Remove the rotor from the vise.
7. Remove the brush holder screws, rectifier screws, and nut from the B terminal.
8. Remove the stator assembly from the rear bracket.
9. Detach the slinger from the brush holder.
10. When the stator is to be removed, unsolder the three stator leads to the main diodes on the rectifier.

⚠ CAUTION

1. When soldering or unsoldering, be careful not to heat the diodes for too long.
2. Be careful that excessive force is not exerted on the leads of the diodes.

11. When separating the rectifier from the brush holder, unsolder the two plates that are soldered to the rectifier

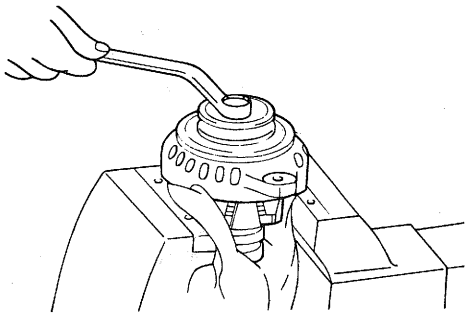

EBDA037D

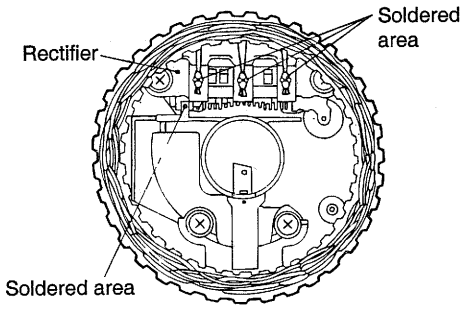

EBDA037E

INSPECTION (75A) EBDA0390

ROTOR

1. Check the rotor coil for continuity. Check to make sure that there is continuity between the slip rings. If resistance is extremely low, it means that there is a short. If there is no continuity or if there is a short circuit, replace the rotor assembly.
   Resistance value : Approx. 3.1Ω

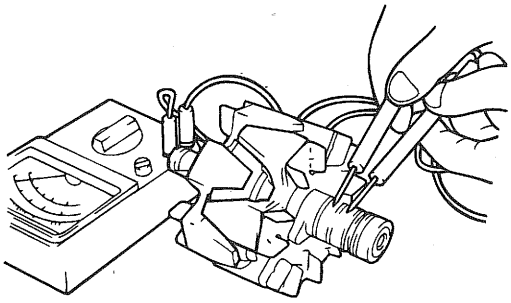

EBDA039A

2. Check the rotor coil for ground. Check to make sure that there is no continuity between the slip ring and the core.
   If there is continuity, replace the rotor assembly.

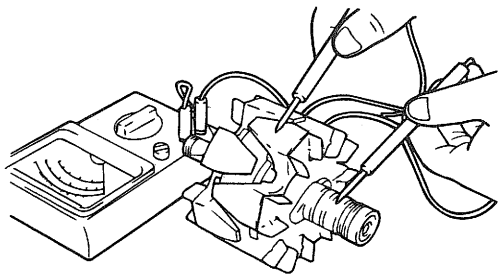

EBDA039B

STATOR

1. Make a continuity check on the stator coil. Check to make sure that there is continuity between the coil leads.
   If there is no continuity, replace the stator assembly.

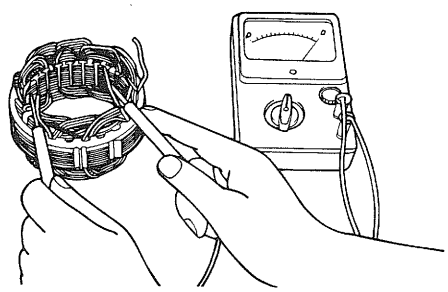

EBDA039C

2. Check the coil for grounding. Check to make sure that there is no continuity between the coil and the core. If there is continuity, replace the stator assembly.

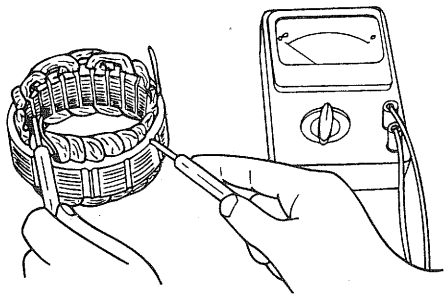

EBDA039D

RECTIFIERS

POSITIVE RECTIFIER TEST

Check for continuity between the positive rectifier and stator coil lead connection terminal with an ohmmeter. The ohmmeter should read continuity in only one direction. If there is continuity in both directions, a diode is shorted.

Replace the rectifier assembly.

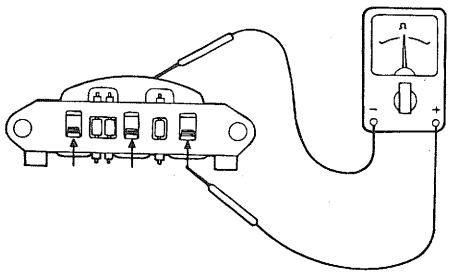

EBDA039E

NEGATIVE RECTIFIER TEST

Check for continuity between the negative rectifier and the stator coil lead connection terminal. The ohmmeter should read continuity in only one direction. If there is continuity in both directions, a diode is shorted, and the rectifier assembly must be replaced.

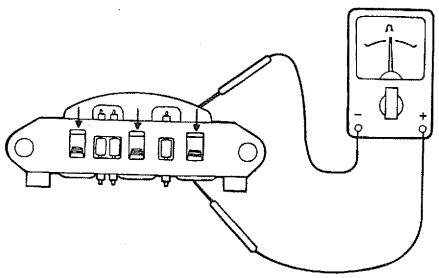

EBDA039F

DIODE TRIO TEST

Check the three diodes for continuity by connecting an ohmmeter to both ends of each diode. Each diode should have continuity in only one direction.

If continuity is present in both directions, a diode is defective and the heatsink assembly must be replaced.

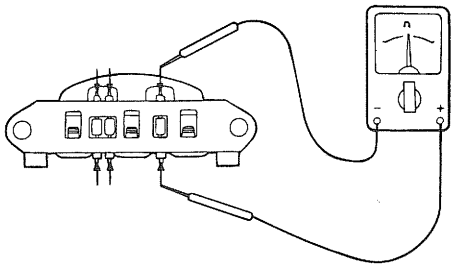

EBDA039G

BRUSH REPLACEMENT

Replace the brushes if they are worn to the limit line.

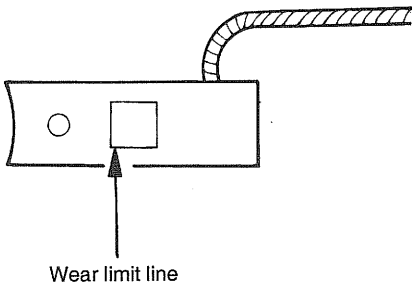

EBDA039H

1. Unsolder the pigtail and remove the old brush and spring.

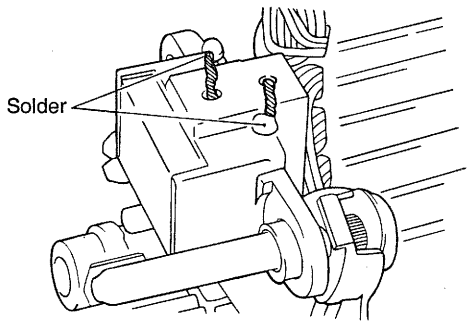

EBDA039I

2. Install the brush spring and a new brush in the brush holder.
3. Insert the brush so that there is a space of 2 to 3 mm (0.079 to 0.118 in.) between the limit line and the end of the brush holder.
4. Solder the pigtail to the brush holder.

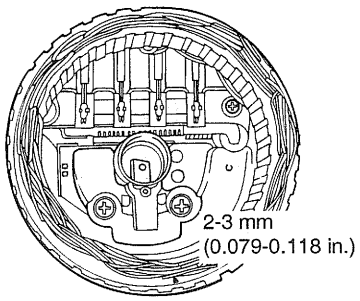

EBDA039J

INSPECTION (90A) EBDA0410

1. Remove the nut from the "B" terminal, and rear cover.
2. When the stator is to be removed, unsolder the four stator leads to the main diodes on the rectifier.

NOTE

1. *When soldering or unsoldering, be careful to make sure that the heat of the soldering iron is not transmitted to the diodes for a long period.*
2. *Be careful that excessive force is not exerted on the leads of the diodes.*

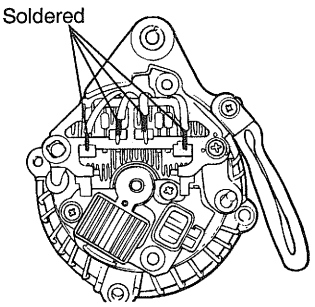

EBDA041A

3. Remove the stator assembly from the rear bracket.
4. Remove the brush holder and the rectifier.
5. Remove the four through bolts.
6. Insert a flat screwdriver between the front bracket and stator core, and pry downward.

NOTE

1. *Do not insert the screwdriver too deeply, as there is a danger of damaging the stator coil.*
2. *The rear cover may be hard to remove because a ring is used to lock the outer race of the rear bearing. To facilitate removal of the rear cover, heat just the bearing box section with a 200-watt soldering iron. Do not use a heat gun, as it may damage the diode assembly.*

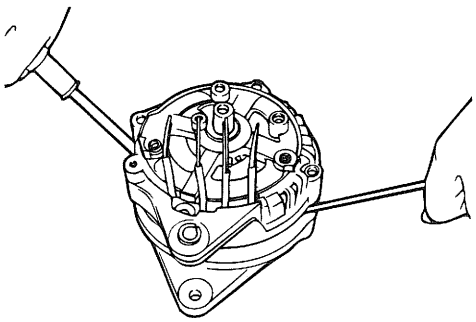

EBDA041B

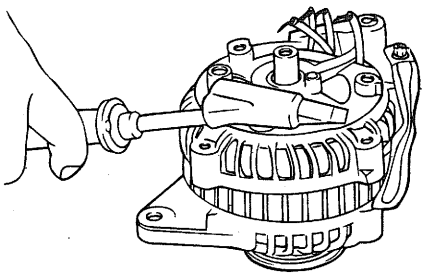

EBDA041C

7. Secure the rotor in a vise with the pulley side up.

   NOTE

   Be careful that the vise jaws do not damage the rotor.

8. Remove the pulley nut, then remove the spring washer, then the pulley, and then the spacer.
9. Remove the front bracket and seals.
10. Remove the rotor from the vise.

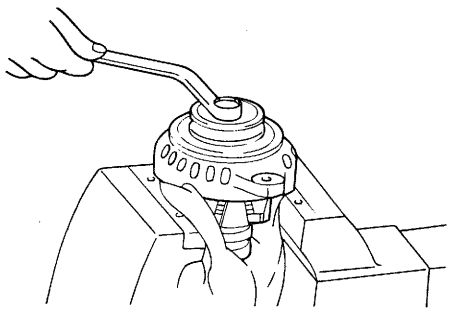

EBDA041D

11. When separating the rectifier from the brush holder, unsolder the two plates soldered to the rectifier.

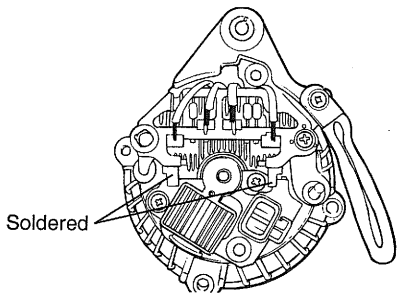

EBDA041E

INSPECTION (90A) EBDA0430

ROTOR

1. Check the rotor coil for continuity. Check to make sure that there is continuity between the slip rings. If resistance is extremely low, it means that there is a short. If there is no continuity or if there is a short circuit, replace the rotor assembly.

   Resistance value : Approx. 3.1Ω

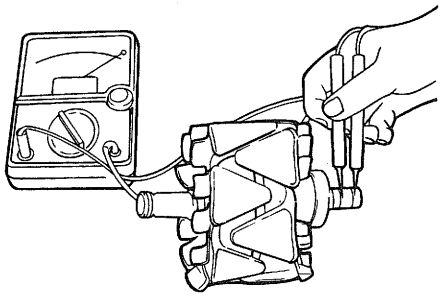

EBDA043A

2. Check the rotor coil for ground. Check to make sure that there is no continuity between the slip ring and the core.
   If there is continuity, replace the rotor assembly.

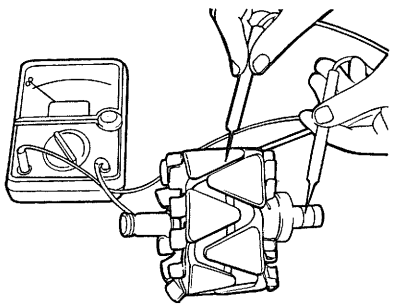

EBDA043B

STATOR

1. Make a continuity check on the stator coil. Check to make sure that there is continuity between the coil leads.
   If there is no continuity, replace the stator assembly.

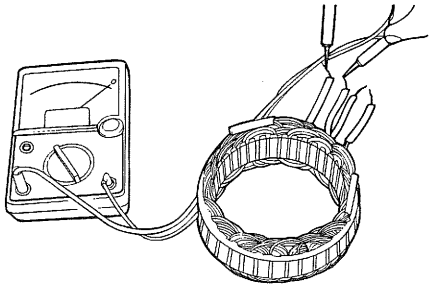

EBDA043C

2. Check the coil for grounding. Check to make sure that there is no continuity between the coil and the core. If there is continuity, replace the stator assembly.

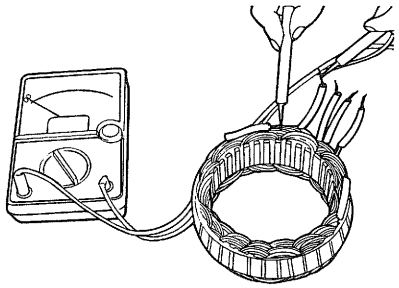

EBDA043D

RECTIFIERS

POSITIVE RECTIFIER TEST

Check for continuity between the positive rectifier and stator coil lead connection terminal with an ohmmeter. The ohmmeter should read continuity in only one direction. If there is continuity in both directions, a diode is shorted.

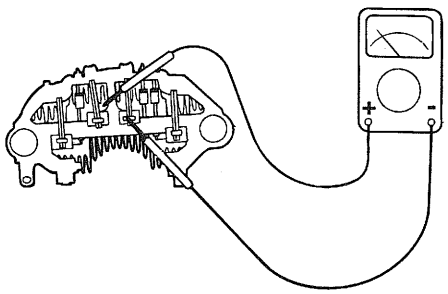

EBDA043E

NEGATIVE RECTIFIER TEST

Check for continuity between the negative rectifier and the stator coil lead connection terminal. The ohmmeter should read continuity in only one direction. If there is continuity in both directions, a diode is shorted, and the rectifier assembly must be replaced.

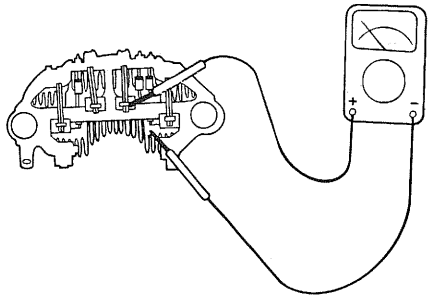

EBDA043F

DIODE TRIO TEST

Check the three diodes for continuity by connecting an ohmmeter to both ends of each diode. Each diode should have continuity in only one direction.

If continuity is present in both directions, a diode is defective and the heatsink assembly must be replaced.

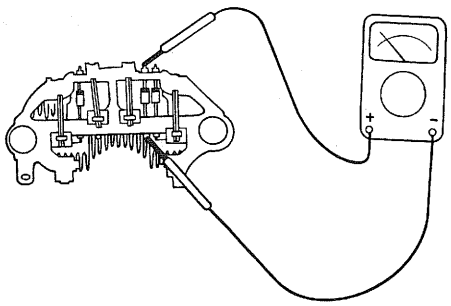

EBDA043G

REASSEMBLY EBDA0450

Reassembly is the reverse procedure of disassembly. Pay attention to the following:

Before the rotor is attached to the rear bracket, insert a wire through the small hole in the rear bracket to lock the brush. After the rotor has been installed, the wire can be removed.

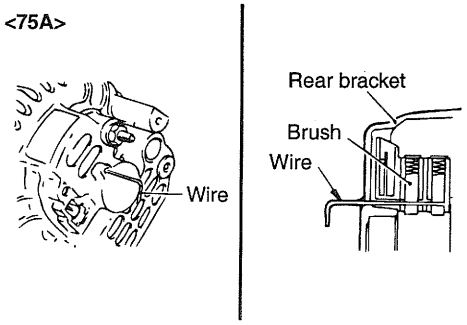

EBDA045A

<90A>

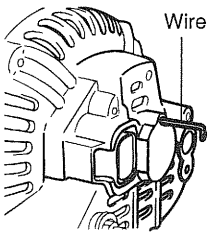

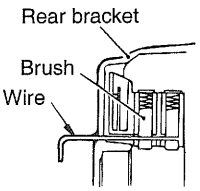

EBDA045B

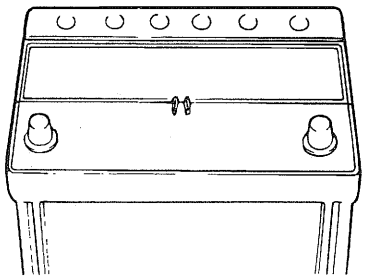

EBDA049A

INSTALLATION EBDA0470

1. Position the generator and insert the support bolt. (Do not attach the nut.)
2. Push the generator forward and determine how many spacers (thickness : 0.198mm) should be inserted between the front leg of the generator and the front case (space "A" in the illustration).
   (There should be enough spacers so that they do not fall out when you let go of them.)
3. Insert the spacers (space "A" in the illustration), attach the nut, and complete the installation.

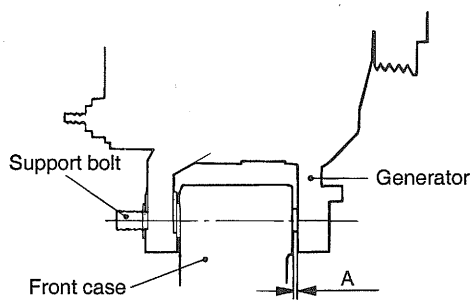

EBDA047A

BATTERY EBDA0490

1. The maintenance-free battery is, as the name implies, totally maintenance free and has no removable battery cell caps.
2. Water never needs to be added to the maintenance-free battery.
3. The battery is completely sealed, except for small vent holes in the cover.

BATTERY VISUAL INSPECTION (1)

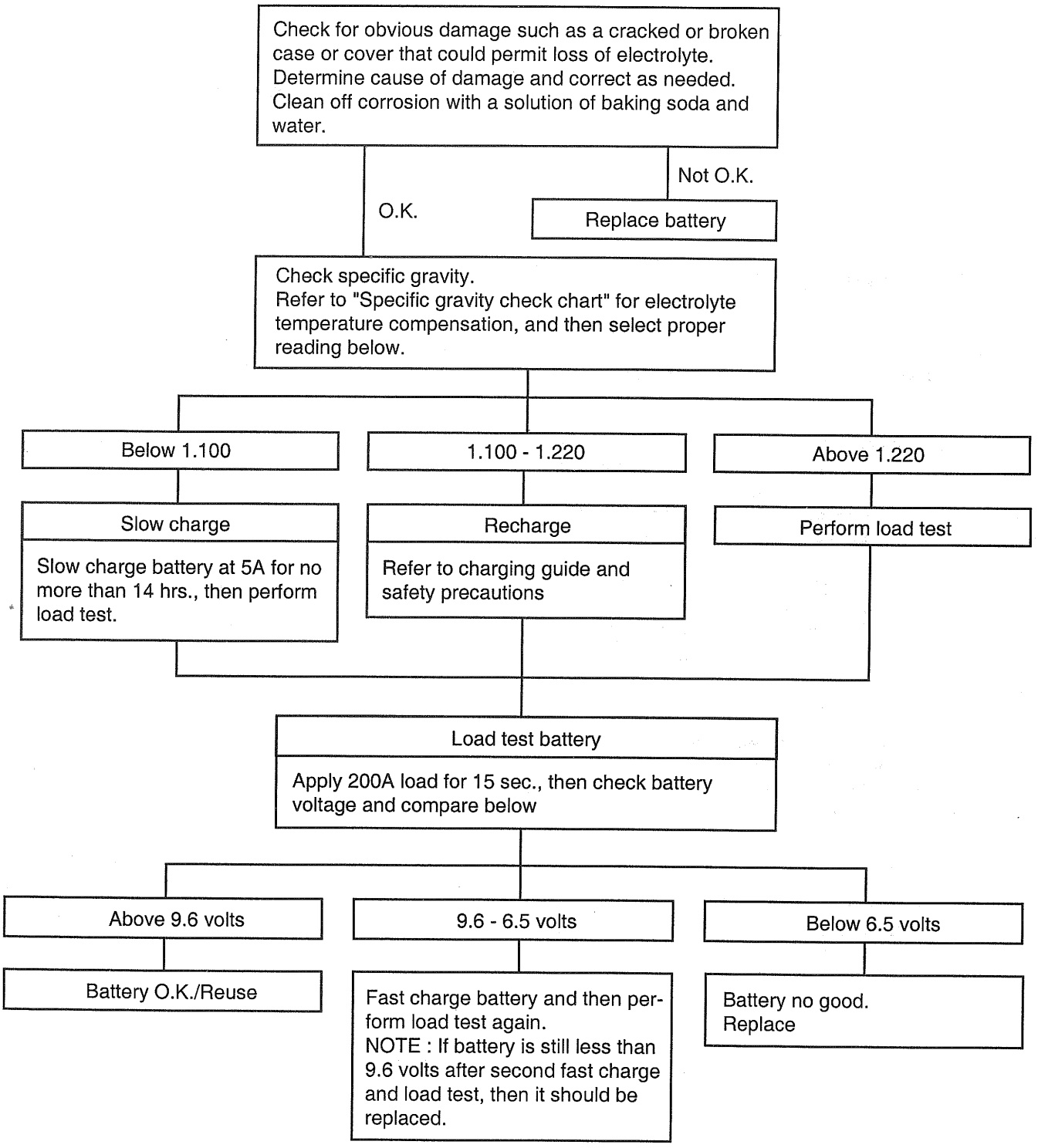

EBDA049B

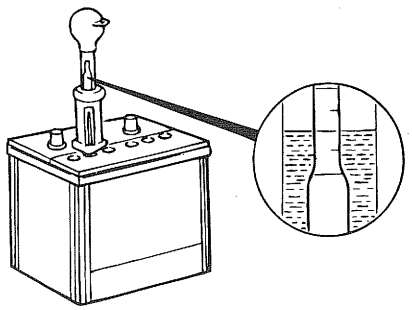

EBDA049D

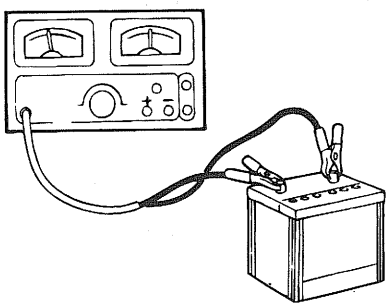

EBDA049E

SPECIFIC GRAVITY CHECK CHART EBDA0510

The specific gravity of battery electrolyte changes with temperature. Heat thins the solution and lowers the specific gravity. Cold thickens the solution and raises the specific gravity.

A fully charged battery should have a specific gravity between 1.260 and 1.280, with the electrolyte temperature at 26.7°C. The specific gravity reading must be corrected by adding 4 points (.004) for each 5.56°C above 26.7°C or subtracting 4 points for every 5.56°C below 26.7°C.

For example : The hydrometer reading is 1.280, and the electrolyte temperature reading is 5.56°C. According to the chart below, the specific gravity must be lowered by 0.028 points. The true corrected reading is 1.252.

1.280 - 0.028 = 1.252

You should never take a hydrometer reading immediately after water has been added. The water and electrolyte must be mixed by either charging for a few minutes at a low rate or by allowing the battery to sit for an hour.

⚠ ***CAUTION***

A difference of 50 points (0.050) or more between one or more cells indicates a defective battery. It should be replaced.

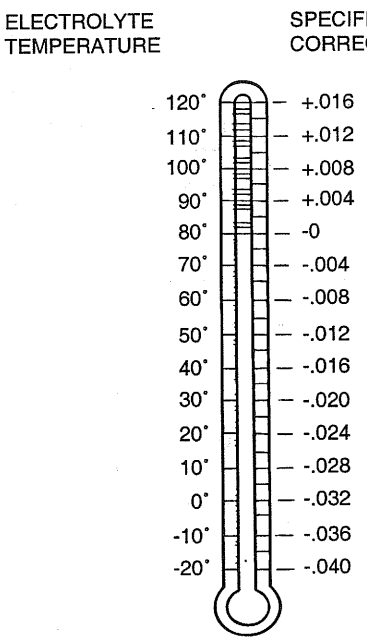

EBDA051A

BATTERY CHARGE RATE EBDA0530

Specific gravity	Charge method	
	Slow charge (5A)	Fast charge (20A)
Below 1.100	14 hours	4 hours
100 - 1.130	12 hours	3 hours
130 - 1.160	10 hours	2.5 hours
160 - 1.190	8 hours	2.0 hours
190 - 1.220	6 hours	1.5 hours
Above 1.220	4 hours	1.0 hour

BATTERY VISUAL INSPECTION (2) EBDA0550

1. Make sure ignition switch is in the Off position and all accessories are Off.
2. Disconnect the battery cables (negative first).
3. Remove the battery from the vehicle.

⚠ ***CAUTION***

Care should be taken in the event that the battery case is cracked or leaking, to protect your skin from the electrolyte. A suitable pair of rubber gloves (not household type) should be worn when removing the battery.

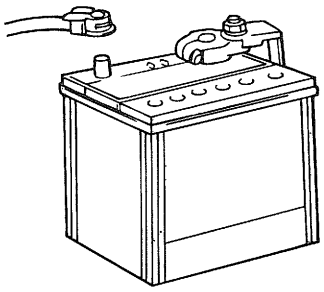

EBDA055A

4. Inspect the battery carrier for damage caused by the loss of acid from the battery. If acid damage is present, it will be necessary to clean the area with a solution of clean, warm water and baking soda. Scrub the area with a stiff brush and wipe off with a cloth moistened with baking soda and water.
5. Clean the top of the battery with the same solution as described in step 4.
6. Inspect the battery case, and cover, for cracks. If cracks are present, the battery must be replaced.
7. Clean the battery posts with a suitable battery post cleaner.
8. Clean the inside surface of the terminal clamps with a suitable battery terminal cleaning tool. Replace damaged or frayed cables and broken terminal clamps.
9. Install the battery in the vehicle.
10. Connect the cable terminals to the battery post, making sure the top of the terminals are flush with the top of the post.
11. Tighten the terminal nut securely.
12. Coat all connections with light mineral grease after tightening.

⚠ ***CAUTION***

When batteries are being charged, an explosive gas forms beneath the cover of each cell. Do not smoke near batteries being charged or which have recently been charged. Do not break live circuits at the terminals of the batteries being charged. A spark will occur where the circuit is broken. Keep all flames away from an open battery.

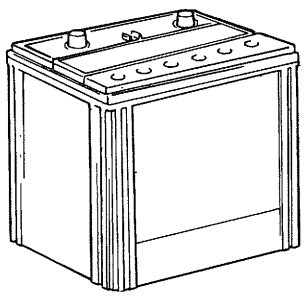

EBDA055B

STARTING SYSTEM

GENERAL INFORMATION EBDA0570

The starting system includes the battery, starter motor, solenoid switch, ignition switch, inhibitor switch (A/T only), connection wires and the battery cables.

When the ignition key is turned to the start position, current flows and energizes the starter motor's solenoid coil. The solenoid plunger and clutch shift lever are activated, and the clutch pinion engages the ring gear. The contacts close and the starter motor cranks.

In order to prevent damage caused by excessive rotation of the starter armature when the engine starts, the clutch pinion gear overruns.

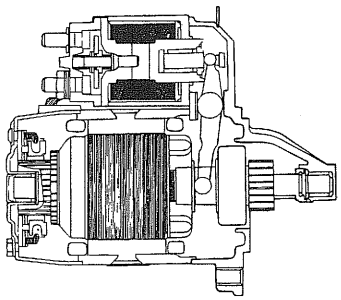

EBDA057A

TROUBLESHOOTING

Trouble condition	Probable cause	Remedy
Engine will not crank	Battery charge low	Charge or replace battery
	Battery cables loose, corroded or worn	Repair or replace cables
	Transaxle range switch faulty (Vehicle with automatic transaxle only)	Adjust or replace switch
	Fusible link blown	Replace fusible link
	Starter motor faulty	Repair starter motor
	Ignition switch faulty	Replace ignition switch
Engine cranks slowly	Battery charge low	Charge or replace battery
	Battery cables loose, corroded or worn	Inspect wiring and fix
	Starter motor faulty	Repair starter motor
Starter keeps running	Starter motor faulty	Repair starter motor
	Ignition wiring faulty	Repair or replace
Starter spins but engine will not crank	Short in wiring	Repair wiring
	Pinion gear teeth broken or starter motor faulty	Repair starter motor
	Ring gear teeth broken	Replace flywheel ring gear or torque converter

CIRCUIT DIAGRAM FOR STARTING SYSTEM EBNC0580

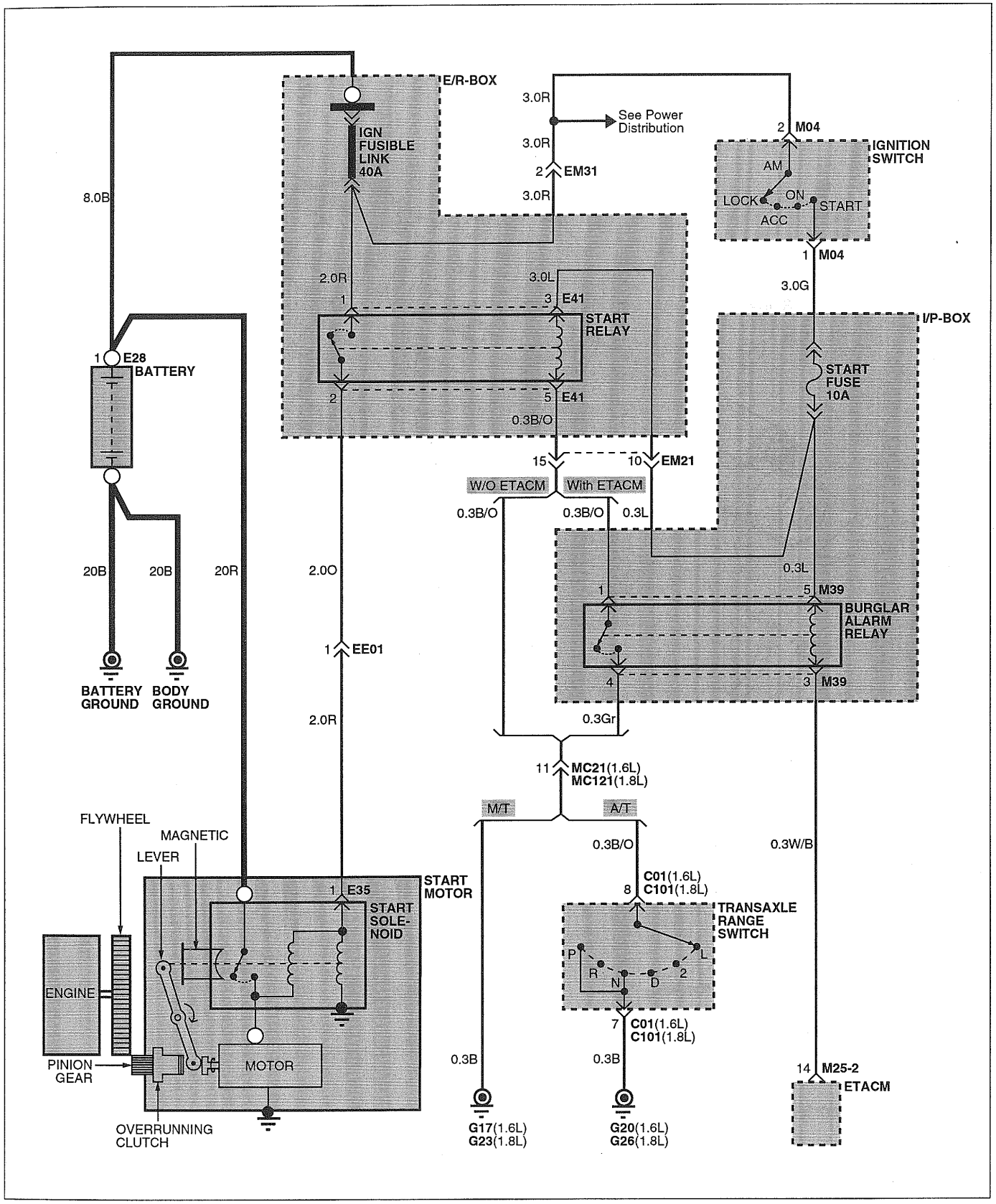

E2FC008A

COMPONENT EBNC0590

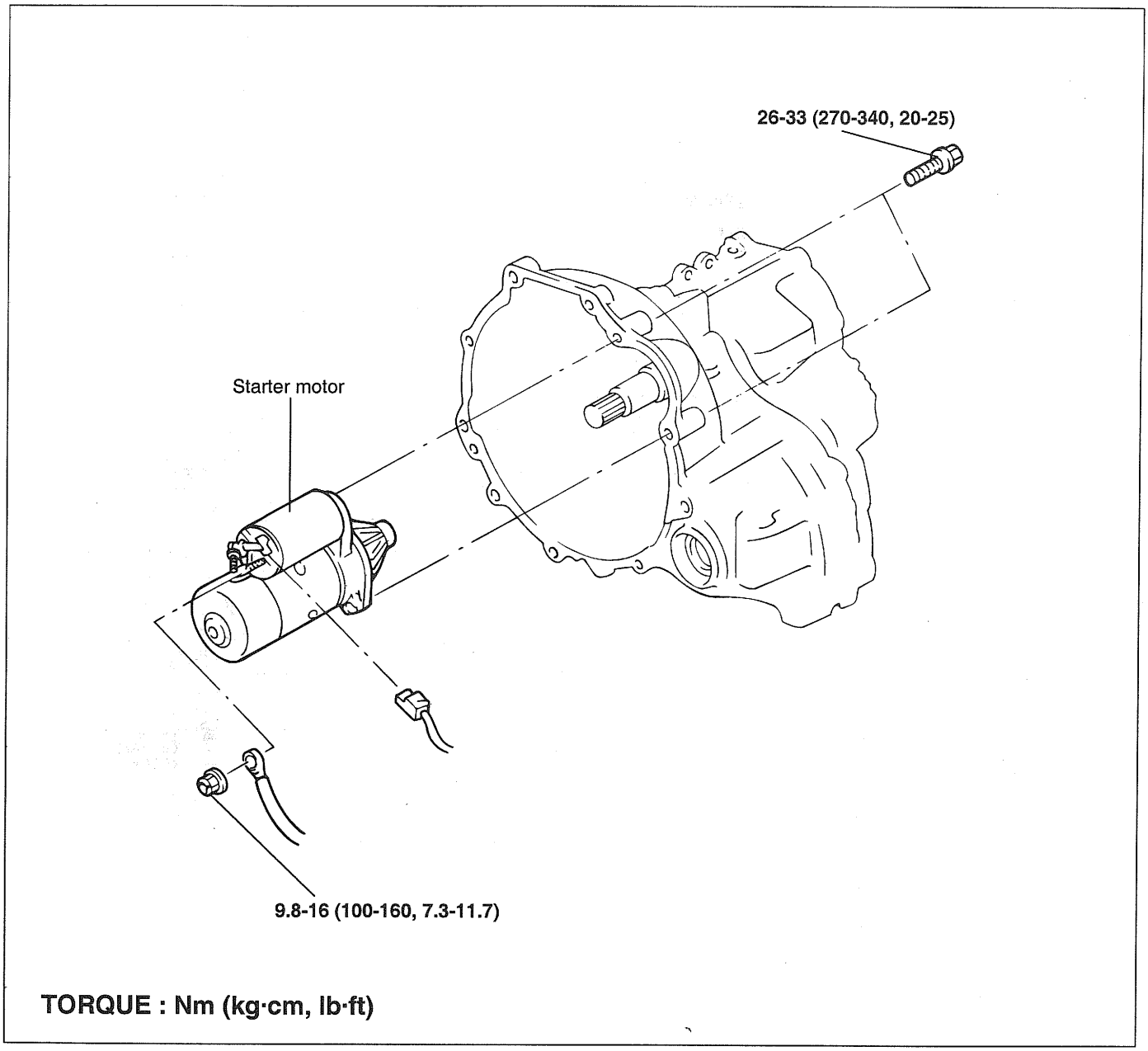

EBDA059A

REMOVAL EBNC0600

1. Disconnect the battery ground cable.
2. Remove the speedometer cable and the shift cable.
3. Disconnect the starter motor connector and terminal.
4. Remove the starter motor assembly.
5. Installation is the reverse order of removal.

COMPONENTS EBNC0610

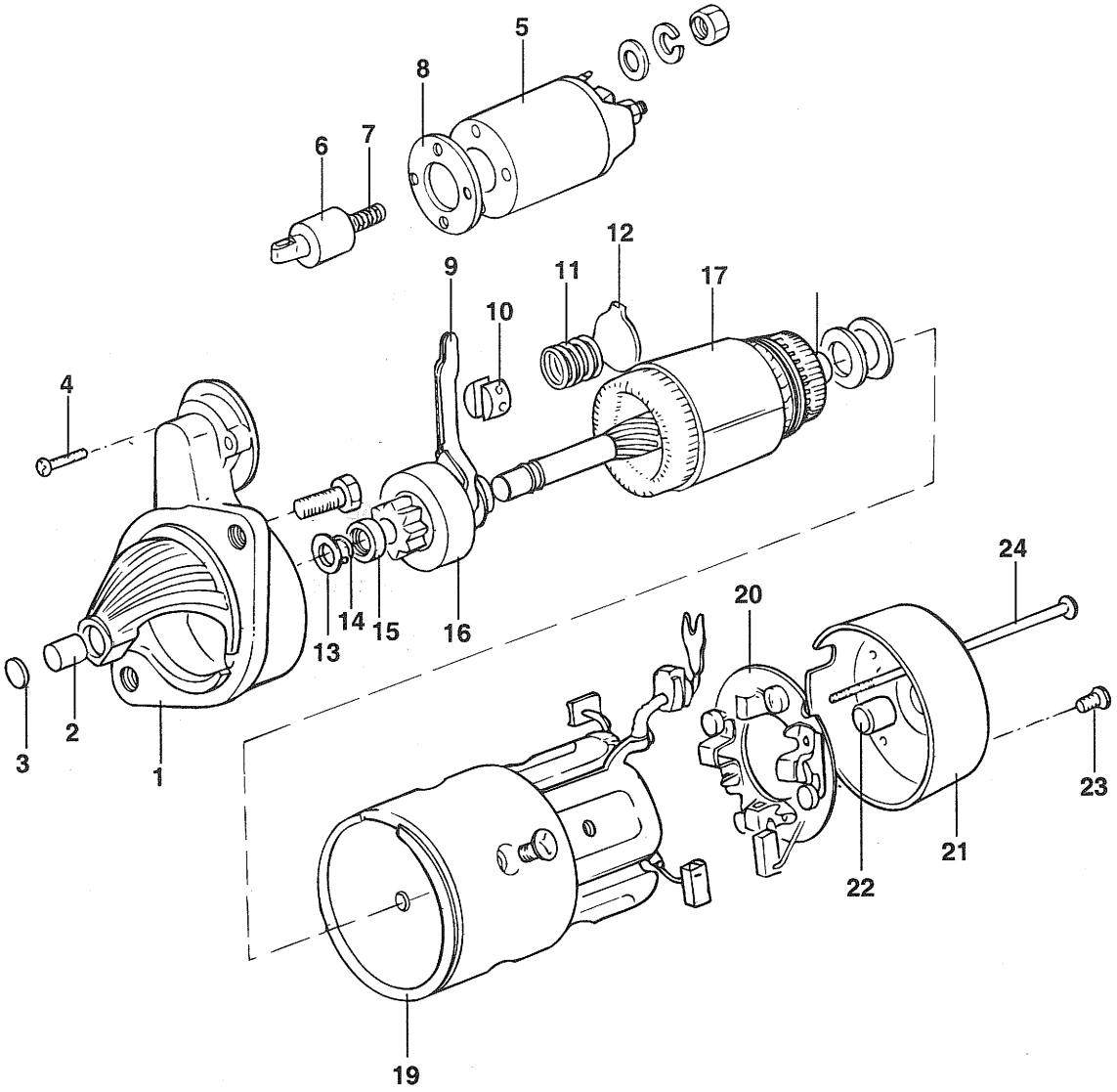

1. Front bracket
2. Front bushing
3. Cap
4. Screw
5. Solenoid
6. Plunger
7. Spring
8. Packing
9. Lever
10. Holder
11. Spring
12. Packing
13. Washer
14. Stop ring
15. Stopper
16. ORC (Overrunning clutch)
17. Armature
18. Washer
19. Yoke ass'y
20. Plate ass'y
21. Rear cover
22. Rear bushing
23. Screw
24. Bolt

EBDA061A

ADJUSTMENT EBNC0620

PINION GAP

1. Disconnect the wire from the M-terminal.
2. Connect a 12V battery between the S-terminal and the M-terminal.
3. Set the switch to "ON", and the pinion will move out.

> ⚠ ***CAUTION***
>
> ***This test must be performed quickly (in less than 10 seconds) to prevent the coil from burning.***

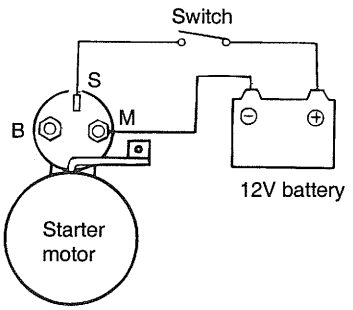

EBDA061B

4. Check the pinion to stopper clearance (pinion gap) with a feeler gauge. If the pinion gap is out of specification, adjust by adding or removing washers between the solenoid and the front bracket.
PINION GAP : 0.5–2.0 mm (0.0197–0.079 in.)

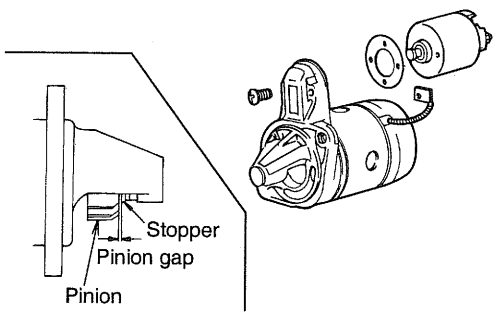

EBDA061C

SOLENOID PULL-IN TEST

1. Disconnect the connector from the M-terminal.
2. Connect a 12V battery between the S-terminal and M-terminal.

> ⚠ ***CAUTION***
>
> ***This test must be performed quickly (in less than 10 seconds) to prevent the coil from burning.***

3. If the pinion moves out, the pull-in coil is good. If it doesn't, replace the solenoid.

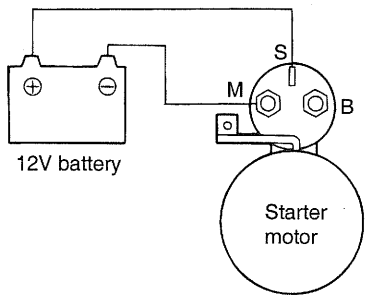

EBDA061D

SOLENOID HOLD-IN TEST

1. Disconnect the connector from the M-terminal.
2. Connect a 12V battery between the S-terminal and the body.

> ⚠ ***CAUTION***
>
> ***This test must be performed quickly (in less than 10 seconds) to prevent the coil from burning.***

3. If the pinion remains out, everything is in order. If the pinion moves in, the hold-in circuit is open. Replace the magnetic switch.

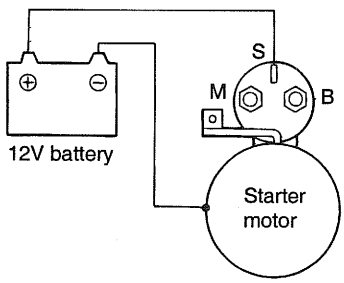

EBDA061E

SOLENOID RETURN TEST

1. Disconnect the connector from the M-terminal.
2. Connect a 12V battery between the M-terminal and the body.

> ⚠ ***CAUTION***
>
> ***This test must be performed quickly (in less than 10 seconds) to prevent the coil from burning.***

3. Pull out the pinion and then release it. If the pinion returns quickly to its original position, everything is in order. If it doesn't, replace the solenoid

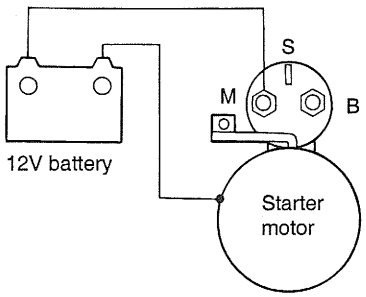

EBDA061F

PERFORMANCE TEST (NO-LOAD)

1. Make the no-load circuit test as shown.
2. After adjusting the rheostat until the battery voltage shown on the voltmeter reads 11.5 volts, confirm that the maximum amperage draw is within the specifications and that the starter motor turns smoothly and freely.
   CURRENT : 60A or less

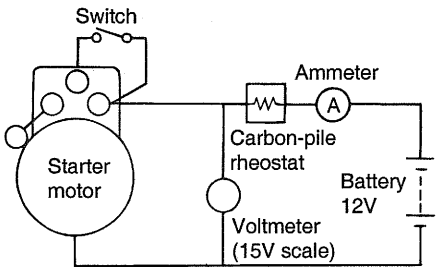

EBDA061G

DISASSEMBLY EBDA0630

To remove the overrunning clutch from the armature shaft, the stop ring must be removed.

Move the stop ring toward the pinion and remove the snap ring. Now the stop ring can be removed from the shaft.

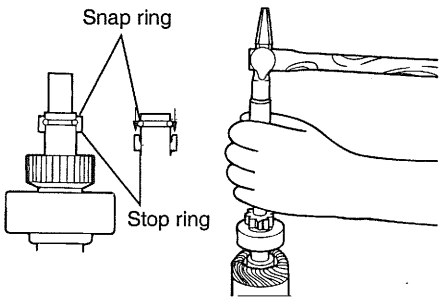

EBDA063A

INSPECTION (AFTER DISASSEMBLY) EBDA0650

ARMATURE COIL GROUND TEST

Using an ohmmeter, check to make sure that there is no continuity between the commutator and the armature coil core. If there is continuity, replace the armature assembly.

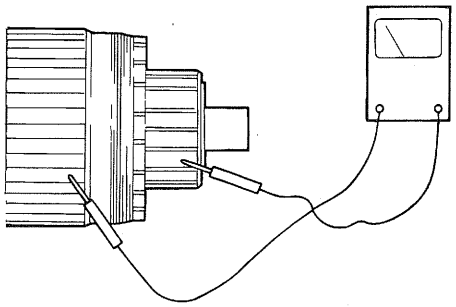

EBDA065A

ARMATURE COIL SHORT-CIRCUIT TEST

Test the armature coil in a growler. Replace the coil if there are signs of a short. If the blade attached to the core vibrates while the core is turned, the armature is shorted.

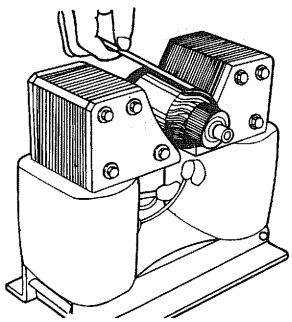

EBDA065B

ARMATURE COIL OPEN-CIRCUIT TEST

Using an ohmmeter, check for continuity between the commutator segments. If there is no continuity, the commutator segments are open. Replace the armature assembly.

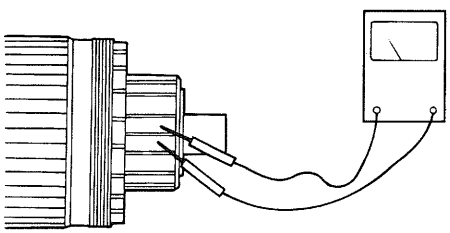

EBDA065C

FIELD COIL OPEN-CIRCUIT TEST

Using an ohmmeter, check the field coil for continuity. If there is no continuity, the field coil is open. Replace the field coil assembly.

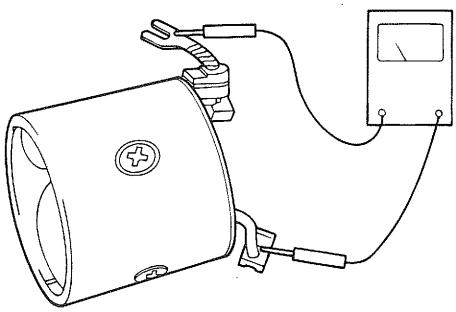

EBDA065D

FIELD COIL GROUND TEST

With the field coil mounted to the yoke, check for continuity between the field coil and the yoke using an ohmmeter. If there is continuity, replace the field coil.

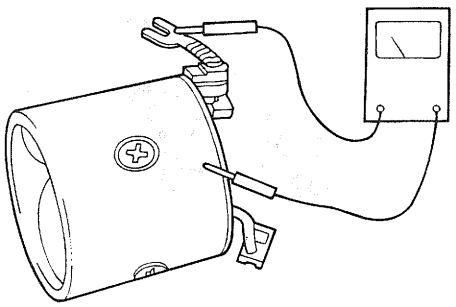

EBDA065E

BRUSH

A brush worn down to the wear limit line should be replaced.

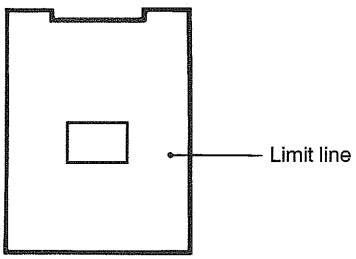

EBDA065F

BRUSH HOLDER

Check for continuity between the (+) side brush holder and brush holder base. If there is continuity, replace the holder assembly.

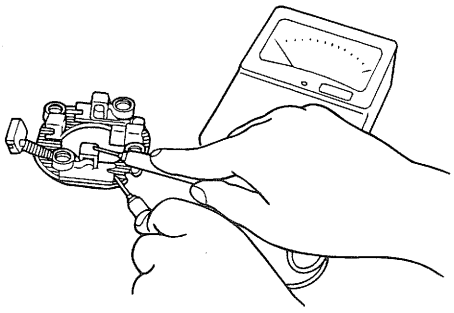

EBDA065G

OVERRUNNING CLUTCH

Inspect the pinion and spline teeth for wear or damage. Replace if damaged. Also inspect the flywheel ring gear for damage.

Rotate the pinion. It should turn freely in a clockwise direction, and lock when turned counterclockwise.

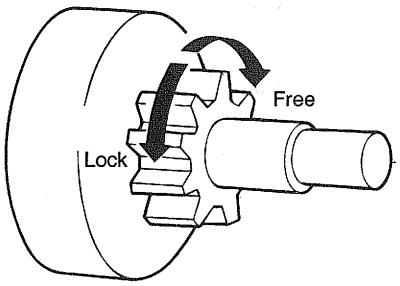

EBDA065H

BRUSH REPLACEMENT

1. Remove the worn brush while taking care not to damage the pigtail.
2. Sand the pigtail end with sandpaper to ensure a good soldering joint.
3. Solder the end of the pigtail.

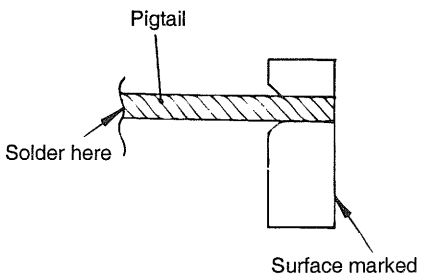

EBDA065I

REAR BRACKET BUSHING REPLACEMENT

1. Before the bushing is removed, measure and record the pressed-in position (depth) of the bushing.

2. The bushing can be removed by the use of a puller as shown in the illustration.

3. Press a new bushing in, up to the position recorded under Step. 1.

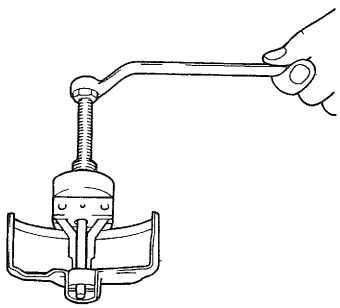

EBDA065J

REASSEMBLY EBDA0670

1. Install the overrunning clutch to the front end of the armature shaft.

2. Install the stop ring and the snap ring from the front end of the armature shaft. Push the stop ring all the way toward the snap ring.

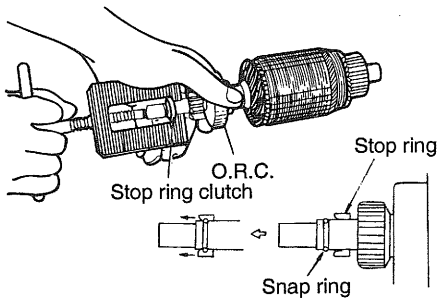

EBDA067A

3. When the lever is mounted on the front bracket, pay attention to its direction. If it is mounted in a reverse direction, the pinion will remain in an outward position and fail to operate properly.

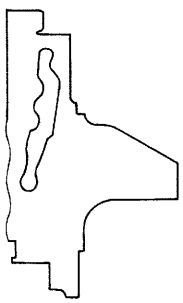

EBDA067B

INSPECTION OF CLUTCH START SYSTEM (IGNITION LOCK SYSTEM) EBDA0690

CHECK CLUTCH PEDAL

Check that pedal height, pedal freeplay and clutch pedal clevis pin play are correct. (Refer to CH group)

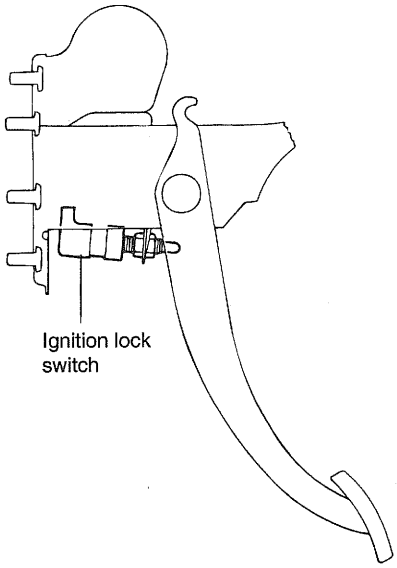

EBDA069A

CHECK STARTER RELAY EBDA0710

Remove the starter relay and check continuity between the terminals. If the continuity is not as specified, replace the relay.

Terminal / Condition	S1 (1)	S2 (3)	L (2)	B (4)
When de-energized	○	○		
When energized	○	○	○	○

EBDA071B

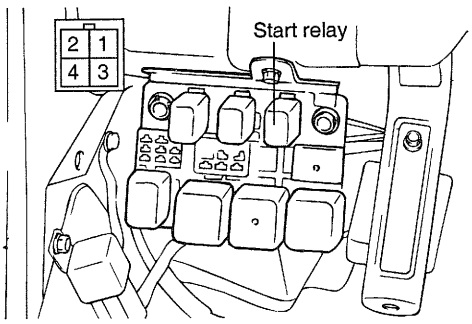

EBDA071A

CHECK IGNITION LOCK SWITCH EBDA0730

Check for continuity between terminals.

Terminal / Condition	1	2
Pushed	○	○
Free		

EBDA073B

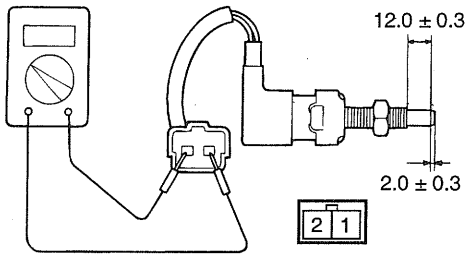

EBDA073A

Emissions Control System

GENERAL ..... EC - 2

CRANKCASE EMISSION CONTROL SYSTEM ..... EC -11

EVAPORATIVE EMISSION CONTROL SYSTEM ..... EC -14

EXHAUST EMISSION CONTROL SYSTEM ..... EC -18

GENERAL

SPECIFICATIONS EEDA0010

Components	Function	Remarks
Crankcase Emission System Positive Crankcase Ventilation (PCV) valve	HC reduction	Variable flow rate type
Evaporative Emission System Evaporative emission canister EVAP Canister Purge Solenoid Valve	HC reduction	Duty control solenoid valve
Exhaust Emission System MFI system (air-fuel mixtrue control device) Three-way catalytic converter	CO, HC, NOx reduction CO, HC, NOx reduction	Heated oxygen sensor feedback type Monolithic type

MFI : Multiport Fuel Injection
EVAP : Evaporative Emission

SERVICE STANDARD

Evaporative emission canister purge solenoid valve Coil resistance	26 Ω [at 20°C (68°F)]

TIGHTENING TORQUE

	Nm	kg.cm	lb.ft
Positive Crankcase Ventilation Valve	8-12	80-120	6-8

TROUBLESHOOTING

Symptom	Probable cause	Remedy
Engine will not start or hard to start	Vacuum hose disconnected or damaged Malfunction of the EVAP Canister Purge Solenoid Valve	Repair or replace Repair or replace
Rough idle or engine stalls	Vacuum hose disconnected or damaged Malfunction of the PCV valve. Malfunction of the evaporative emission canister purge system	Repair or replace Replace Check the system; if there is a problem, check related components parts
Excessive oil consumption	Positive crankcase ventilation line clogged	Check positive crankcase ventilation system

EMISSION CONTROLS LOCATION [1.6 I4] EEND0050

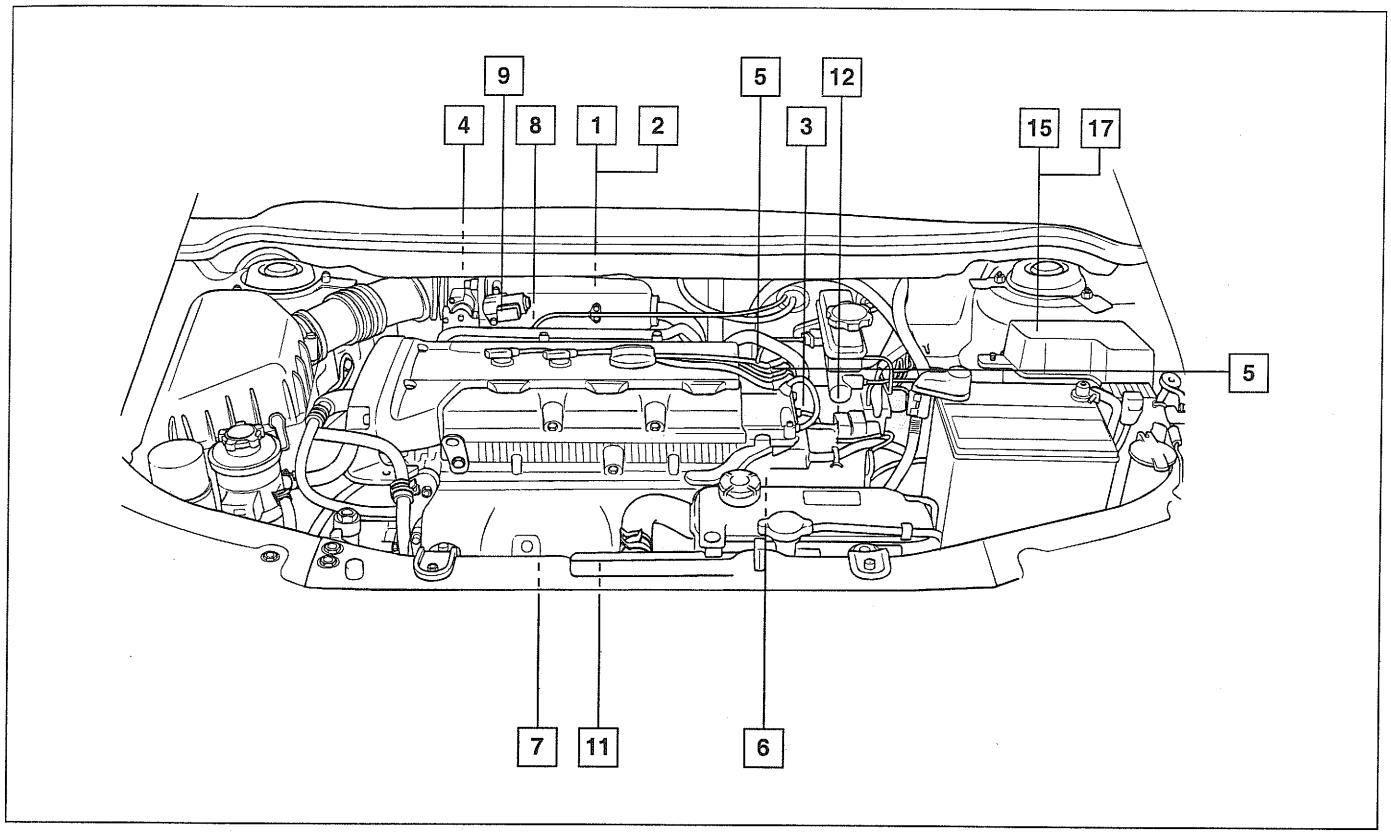

KENB002A

EMISSION CONTROLS LOCATION [1.8 I4]

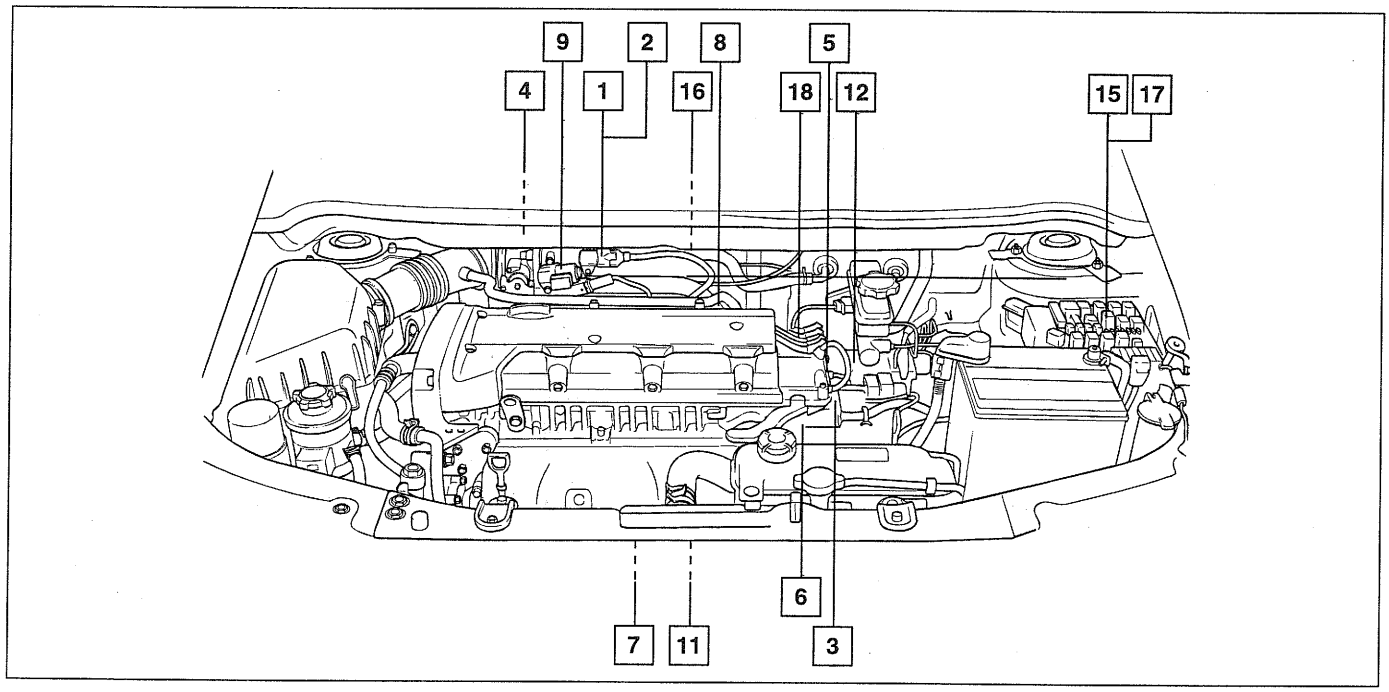

KENB002B

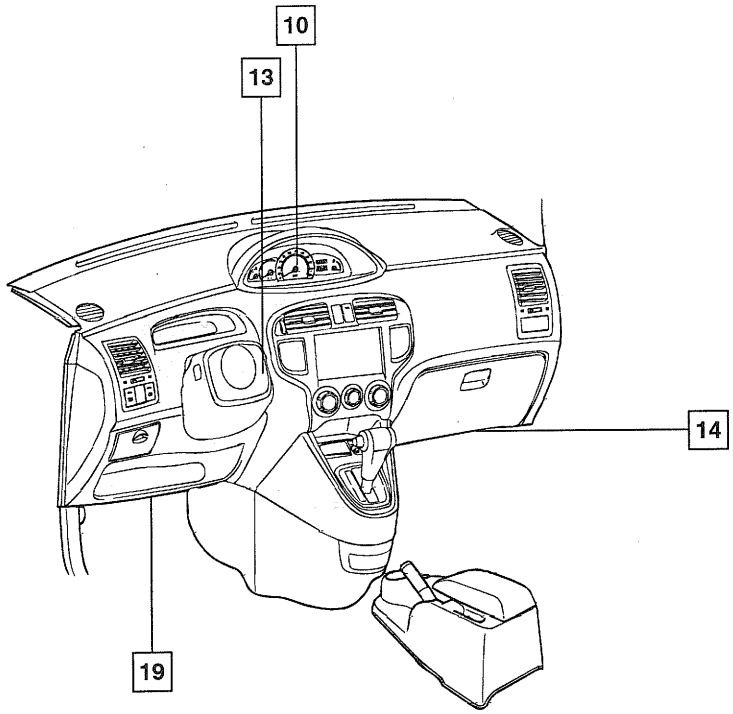

1 Manifold Absolute Pressure (MAP) Sensor
2 Intake Air Temp. (IAT) Sensor
3 Engine Coolant Temp. (ECT) Sensor
4 Throttle Position Sensor (TPS)
5 Camshaft Position Sensor (CMP)
6 Crankshaft Position Sensor (CKP)
7 Heated Oxygen Sensor
8 Injector
9 Idle Speed Actuator (ISA)
10 Vehicle Speed Sensor (VSS)
11 Knock Sensor
12 Inhibitor Switch
13 Ignition Switch
14 ECM
15 Air Conditioner Relay
16 Purge Control Solenoid Valve (PCSV)
17 Control Relay
18 Ignition Coil
19 Data Link Connector (DLC)

EEND005A

1 2 4 9

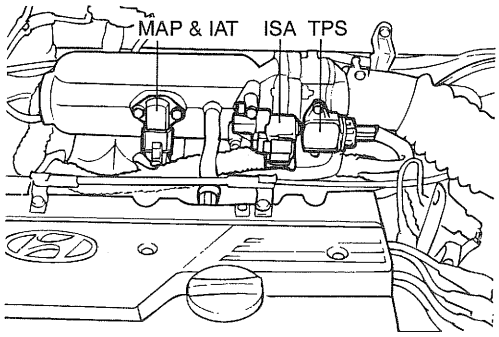

EFDA301L

3

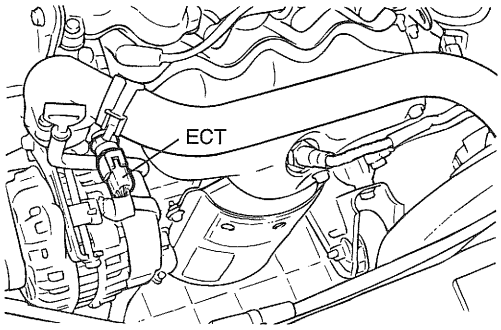

EFDA301D

5 18

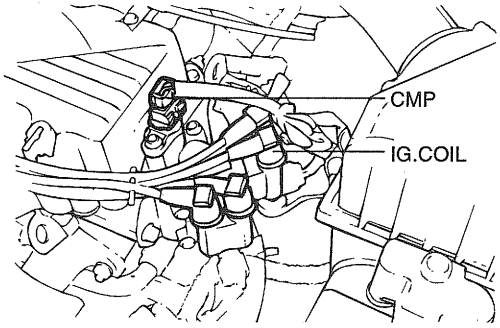

EFKB301E

6

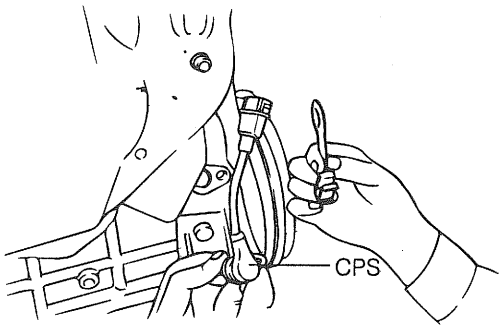

EFDA701E

7

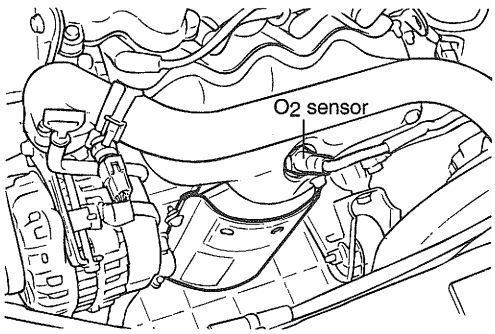

EFDA301K

8

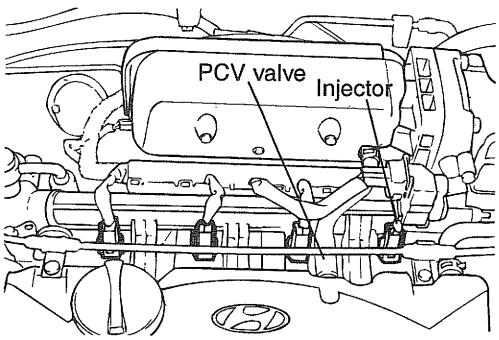

EEDA105B

11

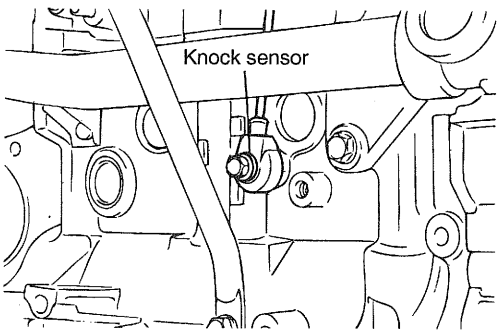

EFDA701C

12

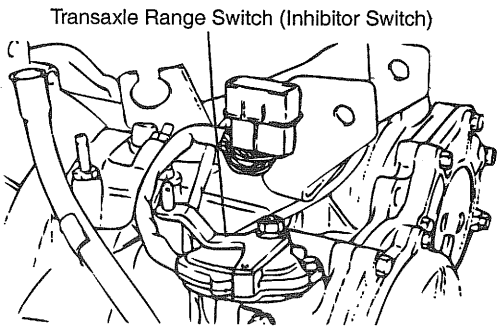

EFDA701D

14

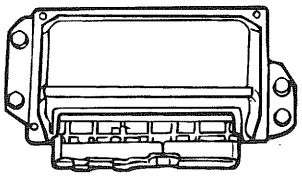

EFDA301H

15 17

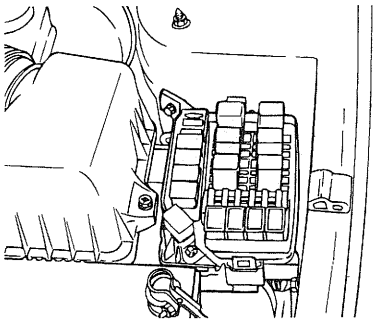

EFDA735A

16

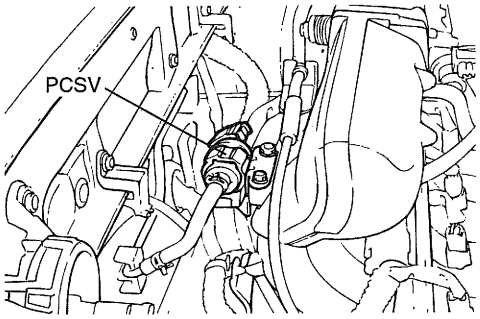

EEDA204A

19

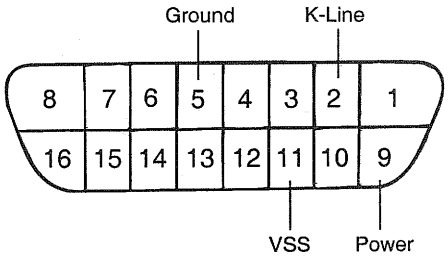

V5FL006B

Fuel System

GENERAL ..... FL -2

MFI CONTROL SYSTEM ..... FL -19

FUEL DELIVERY SYSTEM ..... FL -67

TROUBLESHOOTING FOR DTC ..... FL -77

GENERAL

SPECIFICATIONS EFNC0010

Items	Specifications
Engine Management System (ECM)	Bosch for the 1.6L I4, and Siemens for the 1.8L.
Fuel tank Capacity Return system Fuel filter F/Pressure regulator Regulator pressure Fuel pump	 55 lit. (14.5 U.S. gal., 12.1 Imp.gal.) Returnless High pressure type (built in F/Pump Assembly) Built in F/Pump Assembly 350 kpa (3.5 kg/cm², 49.8 psi) Electrical, in-tank type
Input sensors Manifold Absolute Pressure (MAP) sensor Type Output voltage Throttle body Throttle Position Sensor (TPS) Resistance Output voltage at curb idle Knock sensor Intake Air Temperature sensor (IAT Sensor) Resistance Engine Coolant Temperature sensor (ECT Sensor) Resistance Heated Oxygen Sensor (HO2S) Output voltage (V) Vehicle Speed Sensor Camshaft Position Sensor (CMP Sensor) Output voltage (V) Crankshaft Position Sensor (CKP Sensor) Output frequency (Hz) Acceleration sensor	 Piezo-Resistivity type 0 - 5V Variable resister type 0.7 - 3.0 kΩ 0.1 - 0.875V Piezoelectric type Thermistor type (built in MAP sensor) 2.0 - 3.0 kΩ at 20°C (68°F) Thermistor type 1.0 - 4.0kΩ at 20°C (68°F) 0.24 - 0.40kΩ at 80°C (176°F) Zirconia sensor (Heated) 0 - 1V Wheel speed sensor Hall effect sensor 0 - 5V Magnetic inductive type Idle rpm : 600 - 900Hz 3000 rpm : 2700 - 3300Hz Piezoelectric type
Output actuators Injector type Number Coil resistance (Ω) EVAP Canister Purge solenoid valve Resistance Idle Speed Control actuator (ISC Actuator) Type Control frequency (Hz)	 Electromagnetic type 4 15.9 ± 0.35Ω Duty type 26Ω Double coil type 100Hz

SERVICE STANDARD

Items	1.6L	1.8L
Basic idle rpm	800 ± 100 (N,A/C OFF)	750 ± 100 (N,A/C OFF)
Ignition timing (°) — BTDC	5° ± 5°	7° ± 5°

SEALANT

Engine coolant temperature sensor assembly Engine coolant temperature sender	LOCTITE 962T or equivalent Three bond No.2310 or equivalent

TIGHTENING TORQUE

Items	Nm	Kg.cm	lb.ft
Delivery pipe installation bolts	10 - 15	100 - 150	7 - 11
Heated oxygen sensor	50 - 60	500 - 600	37 - 44
Crankshaft position sensor installation bolts	9 - 11	90 - 110	7 - 8
Knock sensor installation bolt	16 - 25	160 - 250	12 - 18
Engine coolant temperature sensor	15 - 20	150 - 200	11 - 15
Throttle position sensor installation bolts	1.5 - 2.5	15 - 25	1.1 - 1.8
Throttle body to surge tank bolts	15 - 20	150 - 200	11 - 15

SPECIAL TOOLS EFDA0030

Tool (Number and name)	Illustration	Application
09353-24100 Fuel pressure gauge & hose	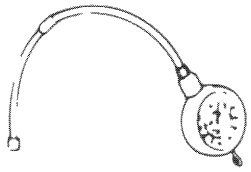 EFDA003A	Connection of fuel pressure gauge to delivery pipe for measurement of fuel pressure.
09353-38000 Fuel pressure gauge adaptor	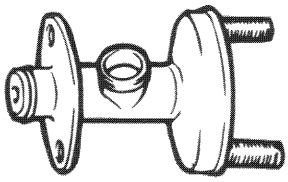 EFDA003B	
09353-24000 Fuel pressure gauge connector	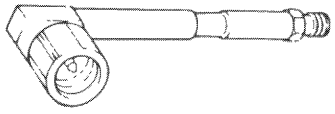 EFDA003C	

BASIC TROUBLESHOOTING EFDA0050

When checking for engine trouble, it is important to start with an inspection of the basic systems. If one of the following conditions exists; (A) engine start failure, (B) unstable idling or (C) poor acceleration, begin by checking the following basic systems:

1. Power supply
   - Battery
   - Fusible link
   - Fuse

2. Body ground
3. Fuel supply
   - Fuel line
   - Fuel filter
   - Fuel pump

4. Ignition system
   - Spark plug
   - High-tension cable
   - Ignition coil

5. Emission control system
   - PCV system
   - Vacuum leak

6. Others
   - Ignition timing
   - Idle speed

Trouble with the MFI system is often caused by poor contact of the harness connectors. It is important to check all harness connectors and verify that they are securely connected.

TROUBLESHOOTING GUIDE CHART EFDA0070

Main Symptoms / Sub-Symptoms / Check points	STARTING							Poor Idling					Poor Driving	
	Unable to start			Difficult to start										
	Engine does not turn over	Starter runs but engine does not turn over	Incomplete combustion	Engine turns over	Always	When the engine is cold	When the engine is hot	Incorrect fast idle	High idle speed	Low idle speed	Rough idling	Engine hesitates or accelerates poorly	Surging	Knocking
Starter relay	1													
Starter	2	2		1										
Park/Neutral SW [A/T] or Clutch start SW [M/T]	3													
Flywheel [M/T] or Drive plate [A/T]		4												
Mass air flow sensor circuit			3							3	10	7		
Idle speed control actuator			4		3	3	3	3	3	2	7			2
Fuel pressure regulator			5		5	5	5				4	11	1	
ECT sensor circuit			6		4	1	1	2	2	1	2	8	6	
Compression			7		8						8	5		
Piston rings			8		9						9			
Ignition timing					10						11	14		
Timing mark			9								12			
Injectors			10		13	8	8		7	4	13	15	4	
PCM			11		14	9	9	4	8	5	14	16	5	
A/C circuit				2					6					
Connecting rod bearing				3										
Crankshaft bearing				4										
Fuel quality					1	2	2				1	3	3	
Spark plugs					2						3	4	2	
Fuel pump					6	6	6				5	12		
Fuel lines					7	7	7				6	13		
Ignition circuit			2		11									3
Intake air temp. sensor circuit					12	4	4		4			9		1
Accelerator pedal link								1	1					
TP Sensor circuit									5			6		
Cylinder head											15			
Clutch [M/T]												1		
Brakes not releasing properly												2		
Oxygen sensor circuit												10		
Crankshaft position sensor		3												
Battery voltage		1	1											

EFDA007A

Main Symptoms / Sub-Symptoms / Check points	Engine Stalls				Others			Refueling
	Soon after starting	After accelerator pedal is depressed	After accelerator pedal is released	During A/C ON	Excessive fuel consumption	Engine overheats	Engine too cool	Hard to refuel Overflowing spit-Back
Fuel quality	1							
Fuel pressure regulator	2	4			2			
Fuel pump	3							
Fuel lines	4	5						
ISC actuator	5		1	2				
MAF sensor circuit	6	1	2		13			
ECT sensor circuit	7				11			
Injectors	8	6			10			
ECM	9	7	3	3	17			
TP Sensor circuit		2			12			
Spark plug		3			6	8		
A/C circuit				1	14			
Fuel leakage					1			
Accelerator pedal link					3			
Clutch [M/T]					4			
Brakes drag when pedal released					5			
Compression					7			
Piston ring					8			
Ignition timing					9			
Oxygen sensor circuit					15			
Intake air temp. sensor circuit					16			
Coolant leakage						1		
Cooling fan						2	1	
Thermo switch						3		
Radiator and radiator cap						4	2	
Thermostat						5		
Timing belt						6		
Engine coolant pump						7		
Oil pump						9		
Cylinder head						10		
Cylinder block						11		
ECT sender						12	3	
Crankshaft position sensor	11	8	4	4				
Fill vent valve hose-clogging								1
Canister fillter-Contamination								2
Fuel shut off valve-operation								3

EFDA007B

NOTE

The number herein means the check order.

SERVICE ADJUSTMENT PROCEDURES EFNC0090

IDLE SPEED

NOTE

Before adjusting, check that the spark plugs, injectors, idle speed control actuator (ISC actuator), compression etc. are normal.

CHECK CONDITIONS

- Engine coolant temperature is 80 to 95°C (176 to 205°F).
- Lights, electric cooling fan and all accessories are off.
- Transaxle is in neutral ("P" or "N" range for A/T vehicles).
- Steering wheel is in a straight forward position (Vehicles with power steering).

1. Install a tachometer to the primary coil side or connect the scan tool to the data link connector.
2. Start and run the engine at curb idle speed.
3. Run the engine for more than 5 seconds at an engine speed of 2,000 to 3,000 rpm.
   Then, run the engine at idle for 2 minutes.
4. Read the idling rpm.

Idle speed	1.6L : 800 ± 100 rpm 1.8L : 750 ± 100 rpm

FUEL PUMP OPERATING CHECK EFDA0110

1. Turn the ignition switch OFF.
2. Apply battery voltage to the fuel pump drive connector to check that the pump operates.

NOTE

The fuel pump is an in-tank type and its operation is hard to hear without removing the fuel tank cap.

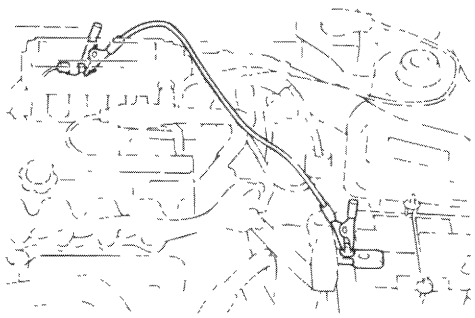

EFDA011A

3. Pinch the hose to check that fuel pressure is felt.

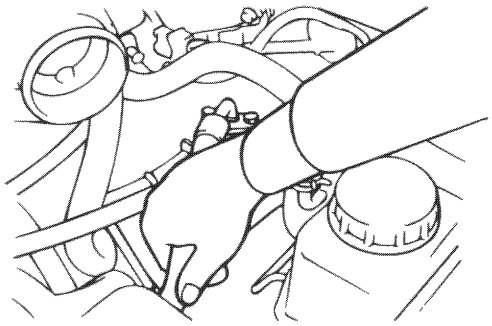

EFDA011B

FUEL PRESSURE TEST EFKB0130

1. Press the two taps under the rear seat and raise the seat, then detach the inspection panel of the fuel pump.

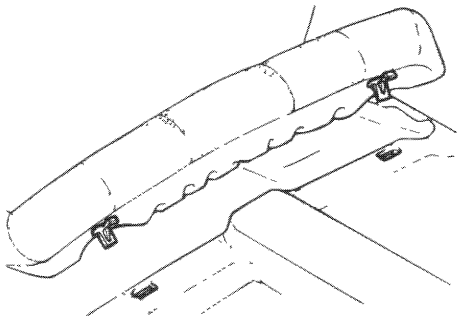

EFDA013A

2. To reduce the internal pressure of the fuel lines and hoses, first start the engine with the fuel pump disconnected and wait until it stops by itself.

NOTE

Be sure to reduce the fuel pressure before disconnecting the fuel main pipe and hose, otherwise fuel will spill out.

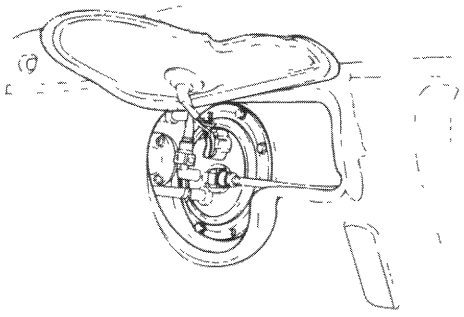

EFKB013B

3. Disconnect the battery negative (-) terminal and then connect the fuel pump harness connector.

4. Using the fuel pressure gauge adapter (09353-24000, 09353-24100, 09353-38000), install the fuel-pressure gauge to the fuel delivery pipe. Tighten the bolt to the specified torque.

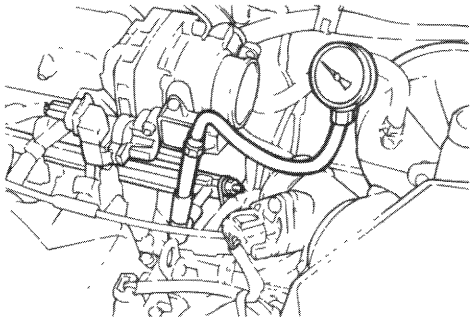

EFDA013C

Tightening Torque
Fuel pressure gauge to fuel delivery pipe:
25 - 35Nm (250 - 350 kg.cm, 18 - 26 lb.ft)

5. Connect the battery's negative (-) terminal.
6. Apply battery voltage to the terminal for the pump drive and activate the fuel pump. Then, with fuel pressure applied, check that there is no fuel leak from the pressure gauge or connections.
7. Start the engine and let it idle.
8. Measure the fuel pressure.

Standard value : 350 kPa (3.5 kg/cm², 49.8 psi)

9. If the result of the measurements made in steps (7) and (8) are not within the standard value, use the table below to determine the probable cause, and make the necessary repairs.

Condition	Probable cause	Remedy
Fuel pressure too low	a. Clogged fuel filter. b. Fuel leak on the fuel-pressure regulator that is assembled on fuel pump, caused by poor seating of the fuel-pressure regulator.	a. Replace fuel filter. b. Repair the leak or replace the fuel pump.
Fuel pressure too high	a. Sticking fuel-pressure regulator.	a. Repair the leak or replace the fuel pump.

10. Stop the engine and check for a change in the fuel pressure gauge reading, which should hold for approximately 5 minutes. If the gauge indication drops, observe the rate of drop. Determine and remove the causes according to the following table.

Condition	Probable cause	Remedy
Fuel pressure drops slowly after engine is stopped	a. Injector leak	a. Replace injector
Fuel pressure drops immediately after engine is stopped	a. The check valve within the fuel pump is open	a. Replace fuel pump

11. Reduce the pressure in the fuel line.
12. Disconnect the hose and the gauge.

⚠ ***CAUTION***

Cover the hose connection with a shop towel to prevent splashing of fuel caused by residual fuel pressure in the fuel line.

13. Replace the O-ring at the end of the hose.
14. Connect the fuel hose to the delivery pipe and tighten to the specified torque.
15. Check for fuel leaks.

FUEL FILTER REPLACEMENT EFKB0230

1. Reduce the internal pressure of the fuel lines and hoses by completing the following operations.
   - After removing the rear seat cushion, disconnect the fuel pump harness.
   - Start the engine. Allow it to stop by itself, then turn the ignition switch OFF.
   - Disconnect the battery negative (-) terminal.
   - Connect the fuel pump harness connector.

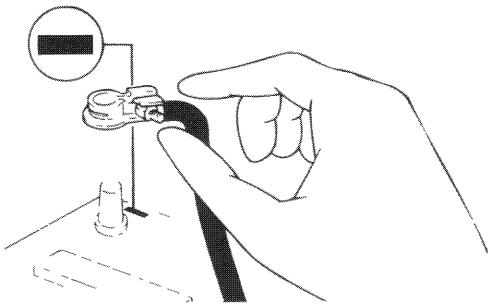

EFDA023A

2. Remove the eye bolts while holding the fuel filter nuts securely.

   ⚠ ***CAUTION***

   Cover the fuel filter with a shop towel to avoid residual gasoline from splashing.

3. Remove the fuel filter mounting bolts, then remove the fuel filter from the fuel filter clamp.

4. After replacing the fuel filter, check for fuel leaks.

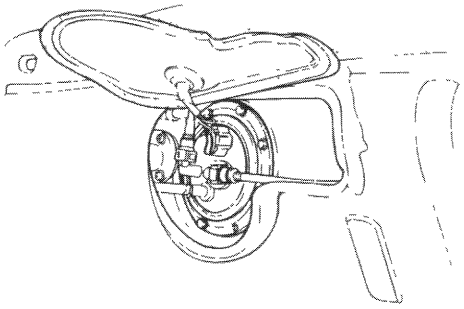

EFKB013B

OVERFILL LIMITER (TWO-WAY VALVE) REPLACEMENT EFDA0250

1. Disconnect the vapor hoses, and then remove the overfill limiter.

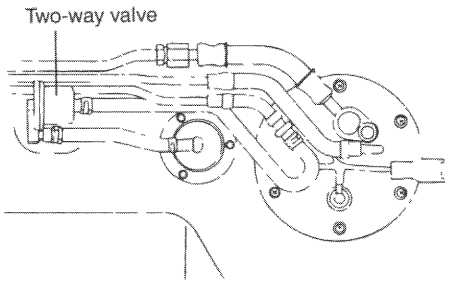

EFDA025A

2. Connect the overfill limiter in the correct direction.

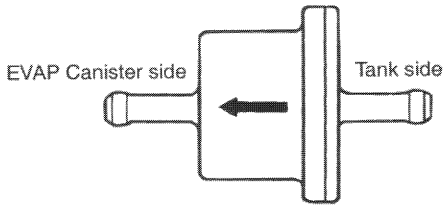

EFDA025B

FUEL SENDER REPLACEMENT EFDA0270

1. Remove the fuel tank cap to lower the fuel tank's internal pressure.

2. Remove the fuel sender installation screws, then remove the fuel sender from the fuel tank.

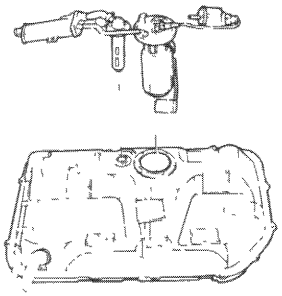

EFDA112A

MFI SYSTEM INSPECTION EFNC0150

If the MFI system components (sensors, ECM, injector, etc.) fail, interruption to the fuel supply or failure to supply the proper amount of fuel for various engine operating conditions will result. The following situations may be encountered.

1. Engine is hard to start or does not start at all.
2. Unstable idle.
3. Poor driveability

If any of the above conditions are noted, first perform a routine diagnosis that includes basic engine checks (ignition system malfunction, incorrect engine adjustment, etc.). Then, inspect the MFI system components with the HI-SCAN (Pro).

NOTE

- *Before removing or installing any part, read the diagnostic trouble codes and then disconnect the battery negative (-) terminal.*
- *Before disconnecting the cable from battery terminal, turn the ignition switch to OFF. Removal or connection of the battery cable during engine operation or while the ignition switch is ON could cause damage to the ECM.*
- *The control harnesses between the ECM and heated oxygen sensor are shielded with the shielded ground wires to the body in order to prevent the influence of ignition noises and radio interference. When the shielded wire is faulty, the control harness must be replaced.*
- *When checking the generator for the charging state, do not disconnect the battery '+' terminal to prevent the ECM from damage due to the voltage.*
- *When charging the battery with the external charger, disconnect the vehicle side battery terminals to prevent damage to the ECM.*

MALFUNCTION INDICATOR LAMP (MIL)

[EOBD]

A malfunction indicator lamp illuminates to notify the driver that there is a problem with the vehicle. However, the MIL will go off automatically after 3 subsequent sequential driving cycles without the same malfunction. Immediately after the ignition switch is turned on (ON position - do not start), the MIL will illuminate continuously to indicate that the MIL operates normally.

Faults with the following items will illuminate the MIL

- Catalyst
- Fuel system
- Manifold Absolute Pressure Sensor
- Intake Air Temperature Sensor
- Engine Coolant Temperature Sensor
- Throttle Position Sensor
- Upstream Oxygen Sensor
- Downstream Oxygen Sensor Heater
- Downstream Oxygen Sensor
- Upstream Oxygen Sensor Heater
- Injector
- Misfire
- Crankshaft Position Sensor
- Camshaft Position Sensor
- Evaporative Emission Control System
- Vehicle Speed Sensor
- Idle Control Valve
- Power Supply
- ECM
- MT/AT Encoding
- Acceleration Sensor
- MIL-on Request Signal
- Power Stage

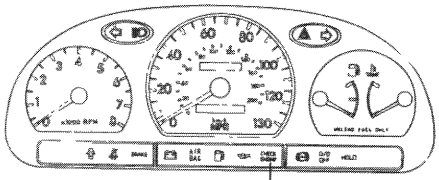

Malfunction indicator lamp

EFDA015A

[NON-EOBD]

A malfunction indicator lamp illuminates to notify the driver that there is a problem with the vehicle. However, the MIL will go off automatically after 3 subsequent sequential driving cycles without the same malfunction. Immediately after the ignition switch is turned on (ON position - do not start), the MIL will illuminate continuously to indicate that the MIL operates normally.

Faults with the following items will illuminate the MIL

- Heated oxygen sensor (HO2S)
- Manifold absolute pressure sensor (MAP sensor)
- Throttle position sensor (TP Sensor)
- Engine coolant temperature sensor (ECT Sensor)
- Idle speed control actuator (ISC Actuator)
- Injectors
- ECM

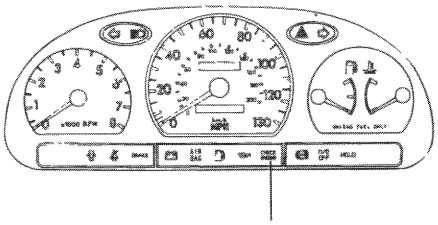

EFDA015A

[INSPECTION]

1. After turning ON the ignition key, ensure that the light illuminates for about 5 seconds and then goes out.
2. If the light does not illuminate, check for an open circuit in the harness, a blown fuse or a blown bulb.

SELF-DIAGNOSIS

The ECM monitors the input/output signals (some signals at all times and the others under specified conditions). When the ECM detects an irregularity, it records the diagnostic trouble code, and outputs the signal to the Data Link connector. The diagnosis results can be read with the MIL or HI-SCAN (Pro). Diagnostic Trouble Codes (DTC) will remain in the ECM as long as battery power is maintained. The diagnostic trouble codes will, however, be erased when the battery terminal or the engine control module (ECM) connector is disconnected, or by the HI-SCAN (Pro).

NOTE

If a sensor connector is disconnected with the ignition switch turned on, the diagnostic trouble code (DTC) is recorded. In this case, disconnect the battery negative terminal (-) for 15 seconds or more, and the diagnosis memory will be erased.

THE RELATION BETWEEN DTC AND DRIVING PATTERN IN EOBD SYSTEM EFNC0170

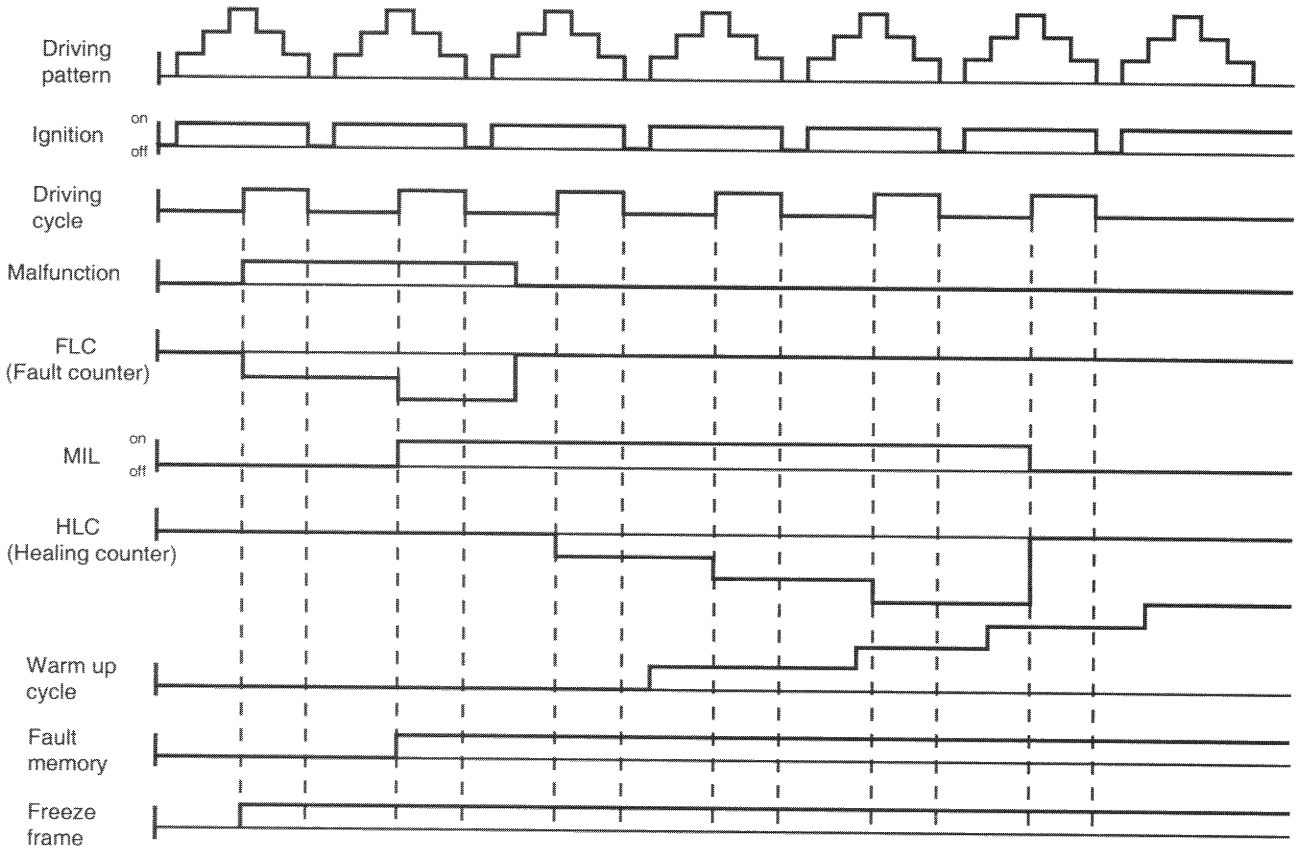

EFDA017A

1. When the same malfunction is detected and maintained during two sequential driving cycles, the MIL will automatically illuminate.
2. The MIL will go off automatically if no fault is detected after 3 sequential driving cycles.
3. A Diagnostic Trouble Code(DTC) is recorded in ECM memory when a malfunction is detected after two sequential driving cycles. The MIL will illuminate when the malfunction is detected on the second driving cycle.
   If a misfire is detected, a DTC will be recorded, and the MIL will illuminate, immediately after a fault is first detected.
4. A diagnostic Trouble Code(DTC) will automatically erase from ECM memory if the same malfunction is not detected for 40 driving cycles.

NOTE

- *A "warm-up cycle" means sufficient vehicle operation such that the coolant temperature has risen by at least 40 degrees Fahrenheit from engine starting and reaches a minimum temperature of 160 degress Fahrenheit.*
- *A "driving cycle" consists of engine startup, vehicle operation beyond the beginning of closed loop operation.*

INSPECTION CHART FOR DIAGNOSTIC TROUBLE CODES (1.6 I4, EOBD) EFNC0190

DTC NO.	CONTENT	Memory	MIL
P0030	HO2S Heater Current Malfunction (Bank 1, Sensor 1)	O	O
P0031	HO2S Heater Circuit Low (Bank 1, Sensor 1)	O	O
P0032	HO2S Heater Circuit High (Bank 1, Sensor 1)	O	O
P0036	HO2S Heater Circuit Malfunction (Bank 1, Sensor 2)	O	X
P0037	HO2S Heater Circuit Low (Bank 1, Sensor 2)	O	O
P0038	HO2S Heater Circuit High (Bank 1, Sensor 2)	O	O
P0106	MAP Sensor Rationality	O	O
P0107	MAP Sensor Range Check Low	O	O
P0108	MAP Sensor Range Check High	O	O
P0112	Intake Air Temperature Circuit Low Input	O	O
P0113	Intake Air Temperature Circuit High Input	O	O
P0116	Engine Coolant Temperature Sensor Circuit Range/Performance Problem	O	O
P0117	Engine Coolant Temperature Circuit Low Input	O	O
P0118	Engine Coolant Temperature Circuit High Input	O	O
P0121	Throttle Position Sensor Circuit Range/Performance Problem	O	X
P0122	Throttle Position Sensor Circuit Low Input	O	O
P0123	Throttle Position Sensor Circuit High Input	O	O
P0130	O2 Sensor Circuit Malfunction	O	O
P0131	HO2S Circuit Low Input (Bank 1, Sensor 1)	O	O
P0132	HO2S Circuit High Input (Bank 1, Sensor 1)	O	O
P0133	HO2S Circuit Slow Responsive (Bank 1, Sensor 1)	O	O
P0134	O2 Sensor Circuit No Activity Detected	O	O
P0136	O2 Sensor Circuit Malfunction	O	O
P0137	HO2S Circuit Low Input (Bank 1, Sensor 2)	O	O
P0138	HO2S Circuit Low Input (Bank 1, Sensor 2)	O	O
P0140	HO2 Range Check	O	O
P0171	Fuel System Too Lean (Bank 1)	O	O
P0172	Fuel System Too Rich (Bank 1)	O	O
P0230	Fuel Pump Circuit Malfunction	O	X
P0261	Injector Circuit Low Input (Cylinder -1)	O	O
P0264	Injector Circuit Low Input (Cylinder -2)	O	O
P0267	Injector Circuit Low Input (Cylinder -3)	O	O
P0270	Injector Circuit Low Input (Cylinder -4)	O	O
P0262	Injector Circuit High Input (Cylinder -1)	O	O
P0265	Injector Circuit High Input (Cylinder -2)	O	O
P0268	Injector Circuit High Input (Cylinder -3)	O	O

DTC NO.	CONTENT	Memory	MIL
P0271	Injector Circuit High Input (Cylinder -4)	O	O
P0300	Random Misfire Detected	O	O
P0301	Misfire Detected (Cylinder -1)	O	O
P0302	Misfire Detected (Cylinder -2)	O	O
P0303	Misfire Detected (Cylinder -3)	O	O
P0304	Misfire Detected (Cylinder -4)	O	O
P0325	Knock Sensor Circuit Malfunction (Bank 1)	O	X
P0335	Crankshaft Position Sensor Circuit Malfunction	O	O
P0336	Crankshaft Position Sensor Circuit Range Random	O	O
P0340	Camshaft Position Sensor Circuit Malfunction	O	O
P0420	Main catalyst efficiency deterioration (Bank 1)	O	O
P0444	EVAP Emission Control System Purge Control Valve Circuit Open	O	O
P0445	EVAP Emission Control System Purge Control Valve Circuit Shorted	O	O
P0501	Vehicle Speed Sensor Range/Performance	O	O
P0506	Idle Control System Rpm Lower than Expected	O	O
P0507	Idle Control System rpm Higher than Expected	O	O
P0562	System Voltage Low	O	O
P0563	System Voltage High	O	O
P0600	CAN Communication Error	O	O
P0605	Internal CONTROL module ROM error	O	X
P1307	Acceleration Sensor Malfunction	O	O
P1308	Acceleration Sensor Signal Check Low	O	O
P1309	Acceleration Sensor Signal Check High	O	O
P1505	Idle Charge Actuator Signal Low of Coil #1	O	O
P1506	Idle Charge Actuator Signal High of Coil #1	O	O
P1507	Idle Charge Actuator Signal Low of Coil #2	O	O
P1508	Idle Charge Actuator Signal High of Coil #2	O	O
P1529	TCU Request for MIL ON/Freeze Frame to ECU via CAN	O	O
P1586	Encoding Signal Circuit Not Rational	O	O
P1610	Immobilizer SMATRA Error	O	X
P1693	MIL Request Line Check	O	O
P1801	Immobilizer Transponder Error	O	X
P1802	Immobilizer Antena Error	O	X
P1803	Engine ECM Signal Error	O	X
P1805	EEPROM Error	O	X

INSPECTION CHART FOR DIAGNOSTIC TROUBLE CODES (1.6 I4, NON-EOBD) EFNC0210

DTC NO.	CONTENT	Memory	MIL
P0031	HO2S Heater Circuit Low (Bank 1, Sensor 1)	O	X
P0032	HO2S Heater Circuit High (Bank 1, Sensor 1)	O	X
P0107	MAP Sensor Range Check Low	O	O
P0108	MAP Sensor Range Check High	O	O
P0112	Intake Air Temperature Circuit Low Input	O	X
P0113	Intake Air Temperature Circuit High Input	O	X
P0116	Engine Coolant Temperature Sensor Circuit Range/Performance Problem	O	X
P0117	Engine Coolant Temperature Circuit Low Input	O	O
P0118	Engine Coolant Temperature Circuit High Input	O	O
P0121	Throttle Position Sensor Circuit Range/Performance Problem	O	X
P0122	Throttle Position Sensor Circuit Low Input	O	O
P0123	Throttle Position Sensor Circuit High Input	O	O
P0130	O2 Sensor Circuit Malfunction	O	X
P0131	HO2S Circuit Low Input (Bank 1, Sensor 1)	O	X
P0132	HO2S Circuit High Input (Bank 1, Sensor 1)	O	X
P0133	HO2S Circuit Slow Responsive (Bank 1, Sensor 1)	O	X
P0134	O2 Sensor Circuit No Activity Detected	O	X
P0171	Fuel System Too Lean (Bank 1)	O	X
P0172	Fuel System Too Rich (Bank 1)	O	X
P0230	Fuel Pump Circuit Malfunction	O	X
P0261	Injector Circuit Low Input (Cylinder -1)	O	O
P0264	Injector Circuit Low Input (Cylinder -2)	O	O
P0267	Injector Circuit Low Input (Cylinder -3)	O	O
P0270	Injector Circuit Low Input (Cylinder -4)	O	O
P0262	Injector Circuit High Input (Cylinder -1)	O	O
P0265	Injector Circuit High Input (Cylinder -2)	O	O
P0268	Injector Circuit High Input (Cylinder -3)	O	O
P0271	Injector Circuit High Input (Cylinder -4)	O	O
P0325	Knock Sensor Circuit Malfunction (Bank 1)	O	X
P0335	Crankshaft Position Sensor Circuit Malfunction	O	X
P0336	Crankshaft Position Sensor Circuit Range Random	O	X
P0340	Camshaft Position Sensor Circuit Malfunction	O	X
P0501	Vehicle Speed Sensor Range/Performance	O	X
P0506	Idle Control System Rpm Lower than Expected	O	X
P0507	Idle Control System rpm Higher than Expected	O	X

DTC NO.	CONTENT	Memory	MIL
P0562	System Voltage Low	O	X
P0563	System Voltage High	O	X
P0600	CAN Communication Error	O	X
P0605	Internal CONTROL module ROM error	O	X
P1505	Idle Charge Actuator Signal Low of Coil #1	O	O
P1506	Idle Charge Actuator Signal High of Coil #1	O	O
P1507	Idle Charge Actuator Signal Low of Coil #2	O	O
P1508	Idle Charge Actuator Signal High of Coil #2	O	O
P1586	Encoding Signal Circuit Not Rational	O	X

INSPECTION CHART FOR DIAGNOSTIC TROUBLE CODES (1.8 I4, EOBD) EFNC0230

DTC NO.	CONTENT	Memory	MIL
P0030	O2 Sensor Heater Circuit Malfunction (Bank 1 Sensor 1) - Plausibility Check	O	O
P0036	O2 Sensor Heater Circuit Malfunction (Bank 1 Sensor 2) - Plausibility Check	O	O
P0105	Manifold Absolute Pressure Circuit Malfunction	O	O
P0106	Manifold Absolute Pressure Circuit Range/Performance Problem	O	X
P0110	Intake Air Temperature Circuit Malfunction	O	O
P0115	Engine Coolant Temperature Circuit Malfunction	O	O
P0116	Engine Coolant Temperature Circuit Range/Performance	O	O
P0120	Throttle Position Circuit Malfunction	O	O
P0121	Throttle Position Circuit Range/Performance problem	O	X
P0125	Insufficient Coolant Temperature For Closed Loop Fuel Control	O	O
P0130	O2 Sensor Circuit Malfunction (Bank 1 Sensor 1)	O	O
P0132	O2 Sensor Circuit High Voltage (Bank 1 Sensor 1)	O	O
P0133	O2 Sensor Circuit Slow Response (Bank 1 Sensor 1)	O	O
P0139	O2 Sensor Circuit Slow Response (Bank 1 Sensor 2)	O	O
P0134	O2 Sensor Circuit No Activity Detected (Bank 1 Sensor 1)	O	X
P0135	O2 Sensor Heater Circuit Malfunction (Bank 1 Sensor 1) - Electrical Check	O	O
P0136	O2 Sensor Circuit Malfunction (Bank 1 Sensor 2)	O	O
P0140	O2 Sensor Circuit No Activity Detected (Bank 1 Sensor 2)	O	X
P0141	O2 Sensor Heater Circuit Malfunction (Bank 1 Sensor 2) - Electrical Check	O	O
P0170	Fuel Trim Malfunction (Bank 1)	O	O
P0201	Cylinder 1 - Injector Circuit Malfunction	O	O
P0202	Cylinder 2 - Injector Circuit Malfunction	O	O

DTC NO.	CONTENT	Memory	MIL
P0203	Cylinder 3 - Injector Circuit Malfunction	O	O
P0204	Cylinder 4 - Injector Circuit Malfunction	O	O
P0230	Fuel Pump Circuit Malfunction	O	X
P0300	Multiple Cylinder Misfire Detected	O	O
P0301	Cylinder 1 - Misfire Detected	O	O
P0302	Cylinder 2 - Misfire Detected	O	O
P0303	Cylinder 3 - Misfire Detected	O	O
P0304	Cylinder 4 - Misfire Detected	O	O
P0325	Knock Sensor 1 Circuit Malfunction	O	X
P0335	Crankshaft Position Sensor Circuit Malfunction	O	O
P0340	Camshaft Position Sensor (CMP Sensor) Circuit Malfunction	O	O
P0422	Catalyst System Efficiency Below Threshold (Bank 1)	O	O
P0443	Purge Control Valve Circuit Malfunction	O	O
P0501	Vehicle Speed Sensor Range/Performance	O	O
P0506	Idle Control System RPM Lower Than Expected	O	X
P0507	Idle Control System RPM Higher Than Expected	O	X
P0560	Battery Voltage Low	O	X
P0600	Serial Communication Link Malfunction	O	O
P0605	ECM - Selftest Failed	O	X
P1166	O2 Sensor - Controller Adaption Diagnosis Malfunction (Bank 1)	O	O
P1184	O2 Sensor No Activity Detected (Bank 1 Sensor 2)	O	O
P1372	Segment Time Acquisition Incorrect	O	O
P1502	Open Wire Magnetic Wheel Speed Sensor	O	O
P1515	Idle Speed Actuator Command Signal Incorrect (Coil 1)	O	O
P1516	Idle Speed Actuator Command Signal Incorrect (Coil 2)	O	O
P1529	TCU Request for MIL On/Freeze Frame to ECM via CAN	O	O
P1602	Serial Communication Problem With TCU (TIMEOUT)	O	O
(P1610)	Anti - Theft Device - Communication Error	O	X
(P1800)	Anti - Theft Device - Smatra Antenna Fault	O	X
(P1801)	Anti - Theft Device - Smatra Transponder Error	O	X
(P1803)	Anti - Theft Device - Invalid Request	O	X
(P1805)	Anti - Theft Device - Inconsistent Data	O	X

DTCs in ( ) are only applicable to Immobilizer Vehicle.

INSPECTION CHART FOR DIAGNOSTIC TROUBLE CODES (1.8 I4, NON-EOBD) EFNC0240

DTC NO.	CONTENT	Memory	MIL
P0105	Manifold Absolute Pressure Circuit Malfunction	O	O
P0110	Intake Air Temperature Circuit Malfunction	O	X
P0115	Engine Coolant Temperature Circuit Malfunction	O	O
P0116	Engine Coolant Temperature Circuit Range/Performance	O	O
P0120	Throttle/Pedal Position Circuit Malfunction	O	O
P0130	O2 Sensor Circuit Malfunction (Bank 1 Sensor 1)	O	X
P0132	O2 Sensor Circuit High Voltage (Bank 1 Sensor 1)	O	X
P0134	O2 Sensor Circuit No Activity Detected (Bank 1 Sensor 1)	O	X
P0135	O2 Sensor Heater Circuit Malfunction (Bank 1 Sensor 1)	O	X
P0201	Cylinder 1 - Injector Circuit Malfunction	O	O
P0202	Cylinder 2 - Injector Circuit Malfunction	O	O
P0203	Cylinder 3 - Injector Circuit Malfunction	O	O
P0204	Cylinder 4 - Injector Circuit Malfunction	O	O
P0230	Fuel Pump Circuit Malfunction	O	X
P0325	Knock Sensor 1 Circuit Malfunction	O	X
P0335	Crankshaft Position Sensor Circuit Malfunction	O	X
P0340	Camshaft Position Sensor (TDC Sensor) Circuit Malfunction	O	X
P0501	Vehicle Speed Sensor Range/Performance	O	X
P0560	System Voltage	O	X
P0605	ECM - Selftest failed	O	X
P1515	Idle Speed Actuator Command Signal Incorrect (Coil 1)	O	O
P1516	Idle Speed Actuator Command Signal Incorrect (Coil 2)	O	O
P1602	Serial Communication Problem With TCU (TIMEOUT)	O	X
P1610	Anti - Theft Device - Communication Error	O	X
P1800	Anti - Theft Device - Smatra Antenna Fault	O	X
P1801	Anti - Theft Device - Smatra Transponder Error	O	X
P1803	Anti - Theft Device - Invalid Request	O	X
P1805	Anti - Theft Device - Inconsistent Data	O	X

MFI CONTROL SYSTEM

LOCATION OF MFI COMPONENTS EFNC0250

<1.6 I4>

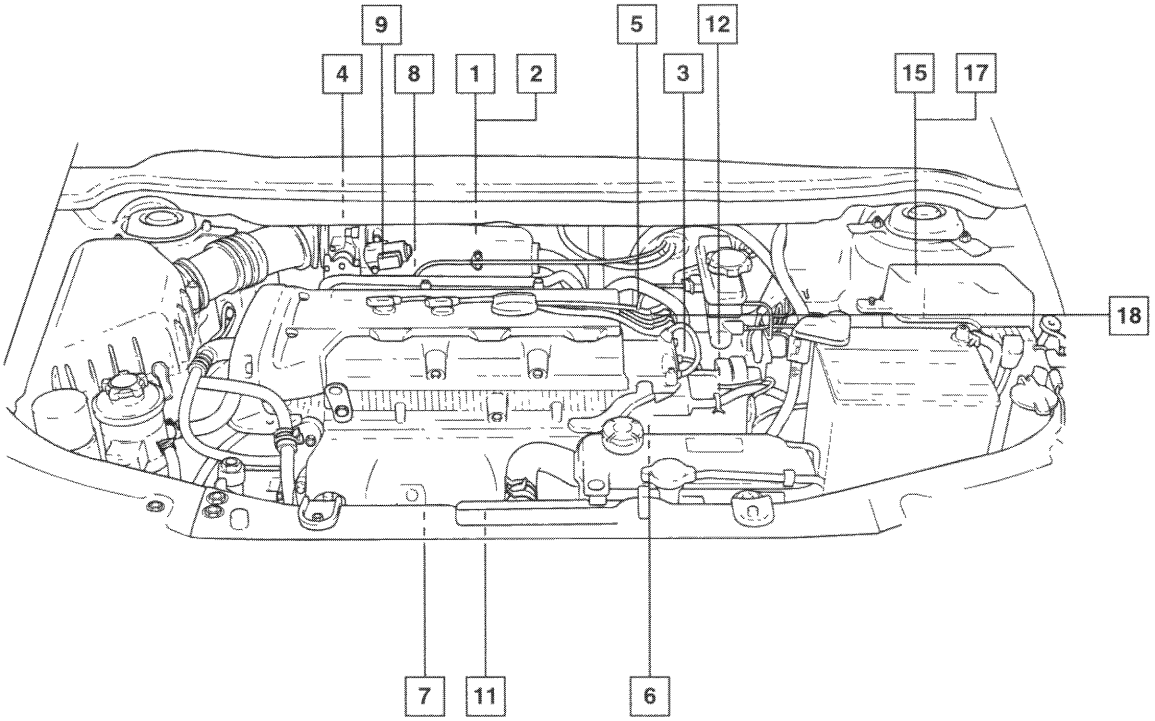

<1.8 I4>

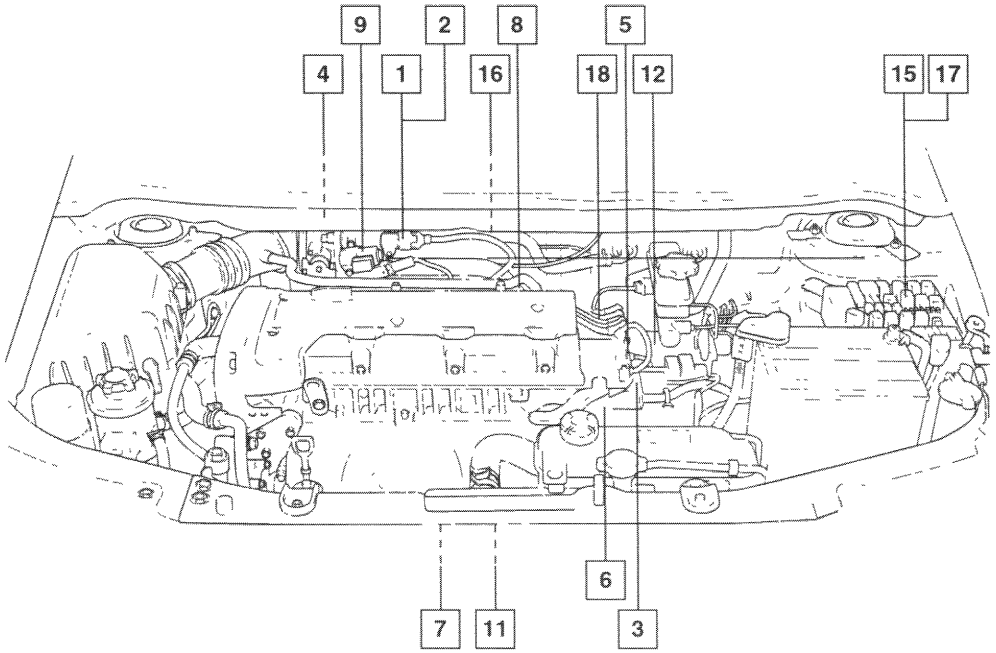

KENB002A/KENB002B

EFNC025A

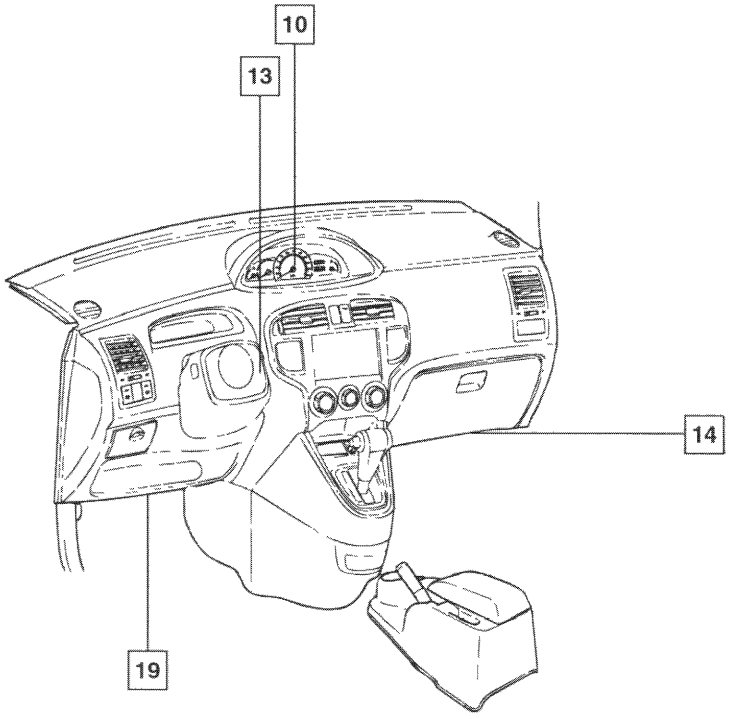

1 Manifold Absolute Pressure(MAP) Sensor
2 Intake Air Temp.(IAT) Sensor
3 Engine Coolant Temp.(ECT) Sensor
4 Throttle Position Sensor (TPS)
5 Camshaft Position Sensor (CMP)
6 Crankshaft Position Sensor (CKP)
7 Heated Oxygen Sensor
8 Injector
9 Idle Speed Actuator (ISA)
10 Vehicle Speed Sensor (VSS)
11 Knock Sensor
12 Inhibitor Switch
13 Ignition Switch
14 ECM
15 Air Conditioner Relay
16 Purge Control Soenoid Valve (PCSV)
17 Control Relay
18 Ignition Coil
19 Data Link Connector (DLC)

KENB002C

EFNC025B

1 2 4 9

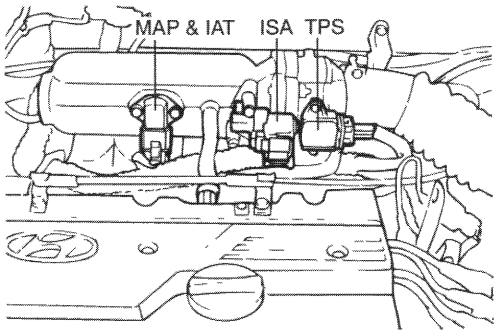

EFDA301L

3

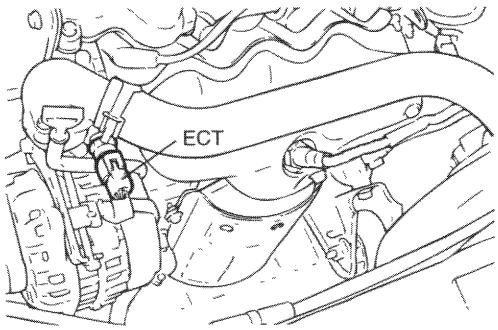

EFDA301D

5 18

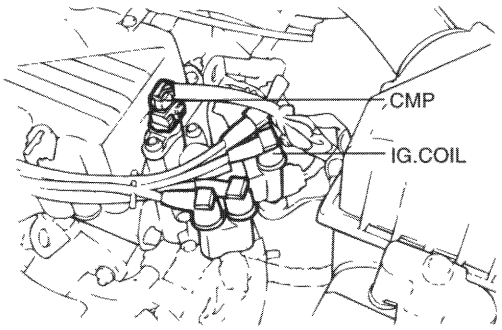

EFKB301E

6

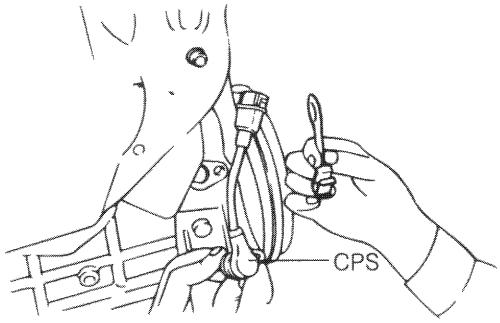

EFDA701E

7

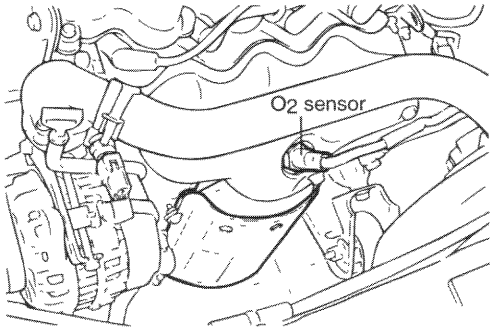

EFDA301K

8

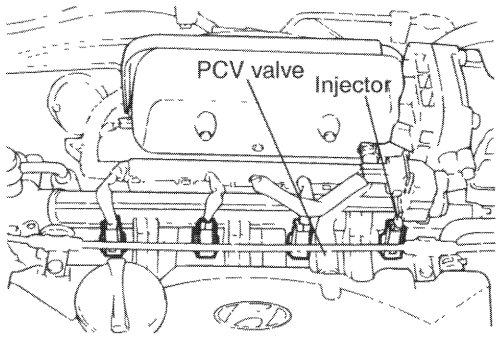

EEDA105B

11

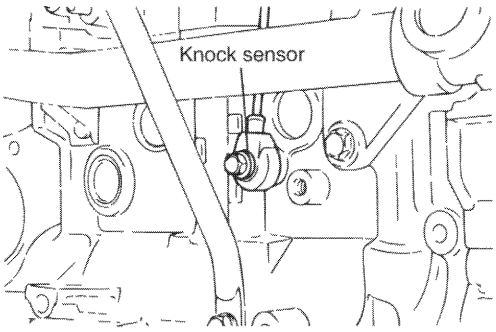

EFDA701C

12

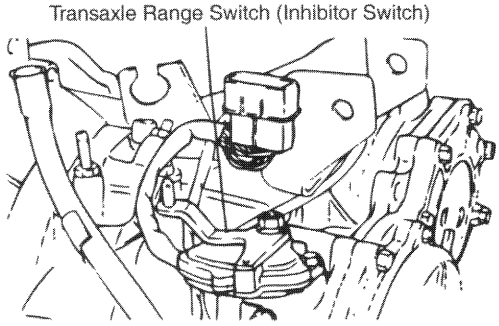

EFDA701D

14

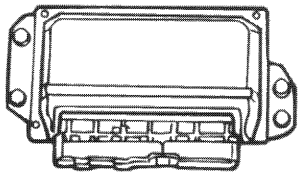

EFDA301H

15 17

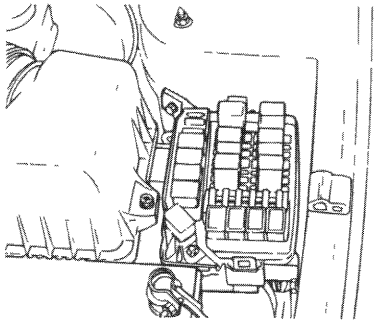

EFDA735A

16

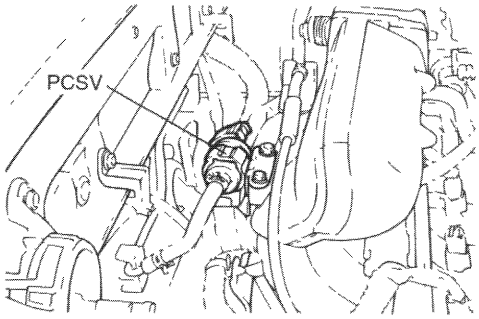

EEDA204A

19

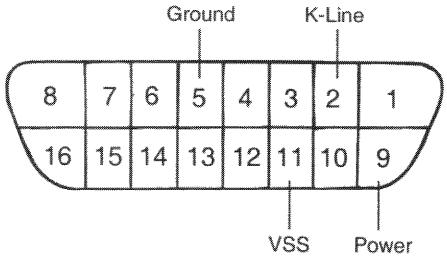

V5FL006B

ECM PIN NUMBER CONFIGURATION

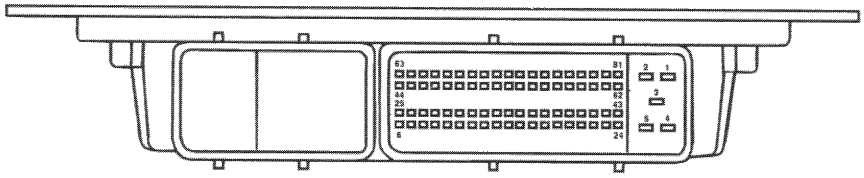

ECM HARNESS PIN NUMBER CONFIGURATION

1	2	81	80	79	78	77	76	75	74	73	72	71	70	69	68	67	66	65	64	63
	3	62	61	60	59	58	57	56	55	54	53	52	51	50	49	48	47	46	45	44
		43	42	41	40	39	38	37	36	35	34	33	32	31	30	29	28	27	26	25
4	5	24	23	22	21	20	19	18	17	16	15	14	13	12	11	10	9	8	7	6

EFDA301Q

MANIFOLD ABSOLUTE PRESSURE SENSOR (MAP SENSOR) EFNC0270

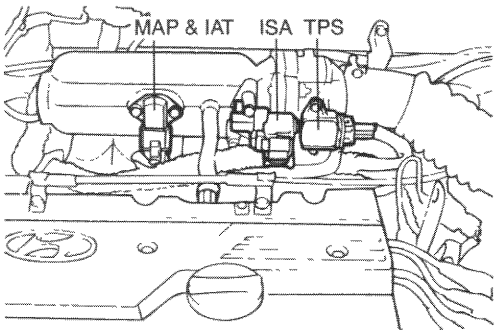

EFDA301L

The manifold absolute pressure (MAP) sensor is a pressure sensitive variable resistor. It measures changes in the intake manifold pressure which result from engine load and speed changes, and converts this to a voltage output. The MAP sensor is also used to measure barometric pressure at start up, and under certain conditions, allows the ECM to automatically adjust for different altitudes. The ECM supplies 5 volts to the MAP sensor and monitors the voltage on a signal line. The sensor provides a path to ground through its variable resistor. The MAP sensor input affects fuel delivery and ignition timing controls in the ECM.

CIRCUIT DIAGRAM

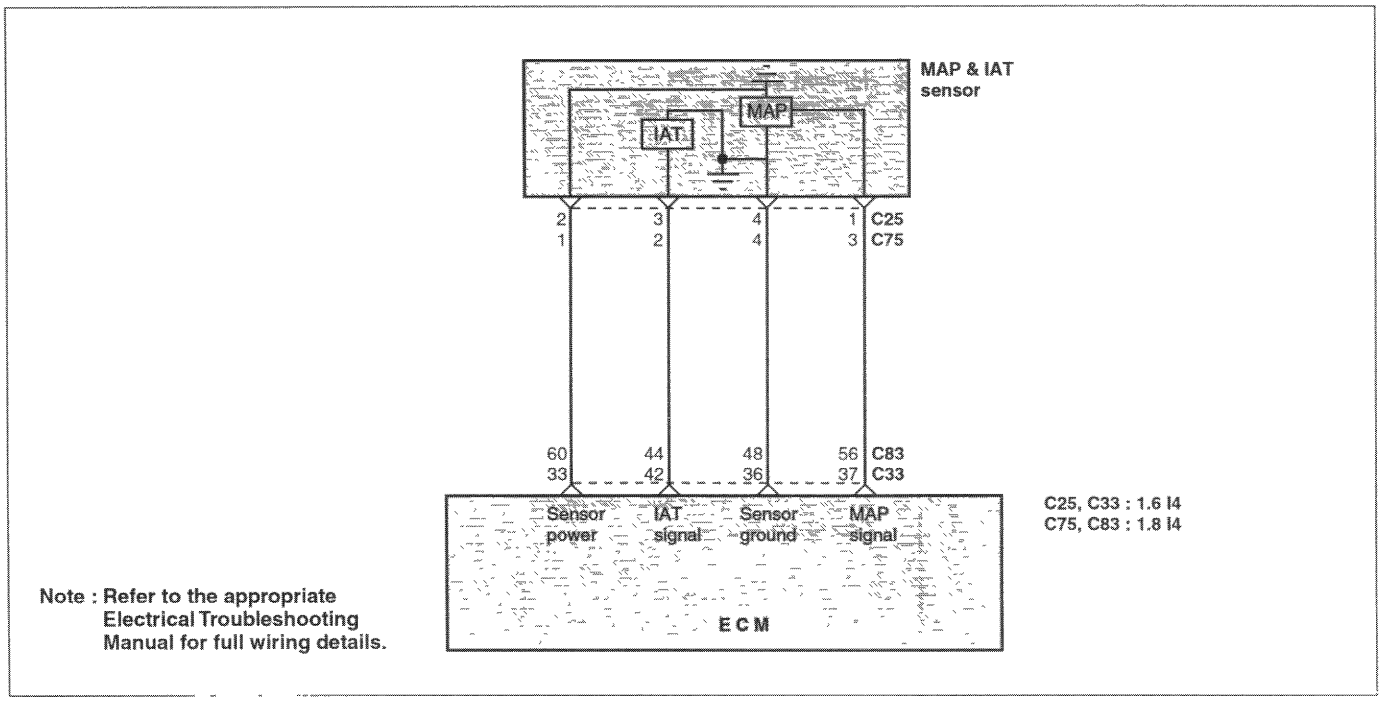

E-FNC027A

TROUBLESHOOTING HINTS

The MIL (Malfunction Indicator Lamp) is ON or the DTC (Diagnostic Trouble Code) is displayed on the HI-SCAN (Pro) under the following conditions;

1. When the manifold pressure is 118mb or lower for 0.1 second after turning the ignition key ON.
2. When the manifold pressure is 118mb or lower while the RPM is below 1980rpm.
3. When the manifold pressure is 986mb or higher and the rpm is 2400rpm or more while the accelerator pedal is released (such as when a vehicle is moving down on a sloping road).

USING HI-SCAN (PRO)

Check item	Data display	Check conditions	Engine state	Test specification
MAP sensor	Intake manifold pressure	• Engine coolant temperature: 80 to 95° (176 to 205°F) • Lamps, electric cooling fan, accessory units: ALL OFF • Transaxle: Neutral (P range for vehicle with A/T) • Steering wheel: Neutral	IG. KEY "ON"	850 - 1024 mb
			Idle	260 - 400 mb

HARNESS INSPECTION PROCEDURES

1

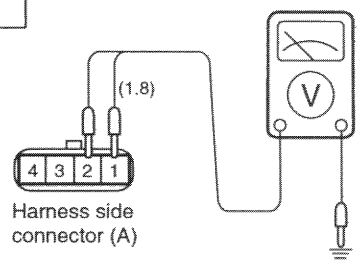

Measure the power supply voltage.
- o Connector : Disconnected
- o Ignition switch : ON
- o Voltage (V) : 4.8 - 5.2V

OK ⇨ 2

NG ⇨ Repair the harness.

EFNC027B

2

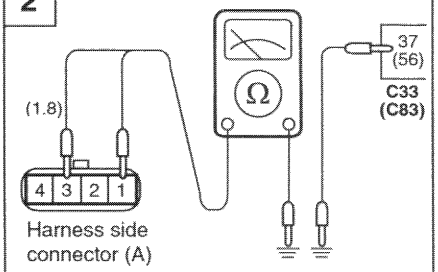

Check for an open-circuit, or a short-circuit to ground between the engine control module and the mass air flow sensor.
- o MAP sensor circuit : Disconnected
- o Engine control module connector : Disconnected

OK ⇨ 3

NG ⇨ Repair the harness.

EFNC027C

3

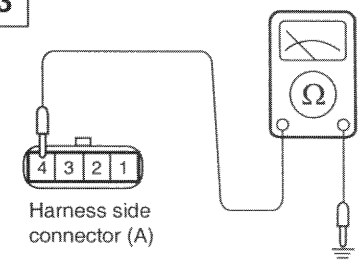

Check for continuity of the ground circuit.
- o Connector : Disconnected

OK ⇨ **END!**

NG ⇨ Repair the harness.

EFDA707C

SENSOR INSPECTION

1. Measure the voltage between terminals 1 and 4 of the MAP sensor connectors.
   Terminal 4 : MAP sensor ground
   Terminal 1 : MAP sensor output

Engine state	Test specification
Ignition SW. ON.	4 - 5V
At idle	0.5 - 2.0V

2. If the voltage deviates from the standard value, replace the MAP sensor assembly.

INTAKE AIR TEMPERATURE SENSOR (IAT SENSOR) EFNC0290

The intake air temperature sensor (IAT Sensor), built in to the MAP sensor, is a resistor-based sensor detect the intake air temperature. According to the intake air temperature information from the sensor, the ECM will control the necessary amount of fuel injection.

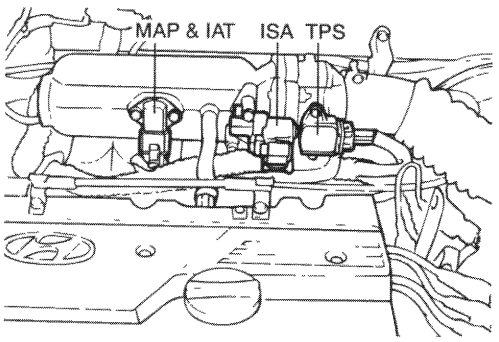

EFDA301L

CIRCUIT DIAGRAM

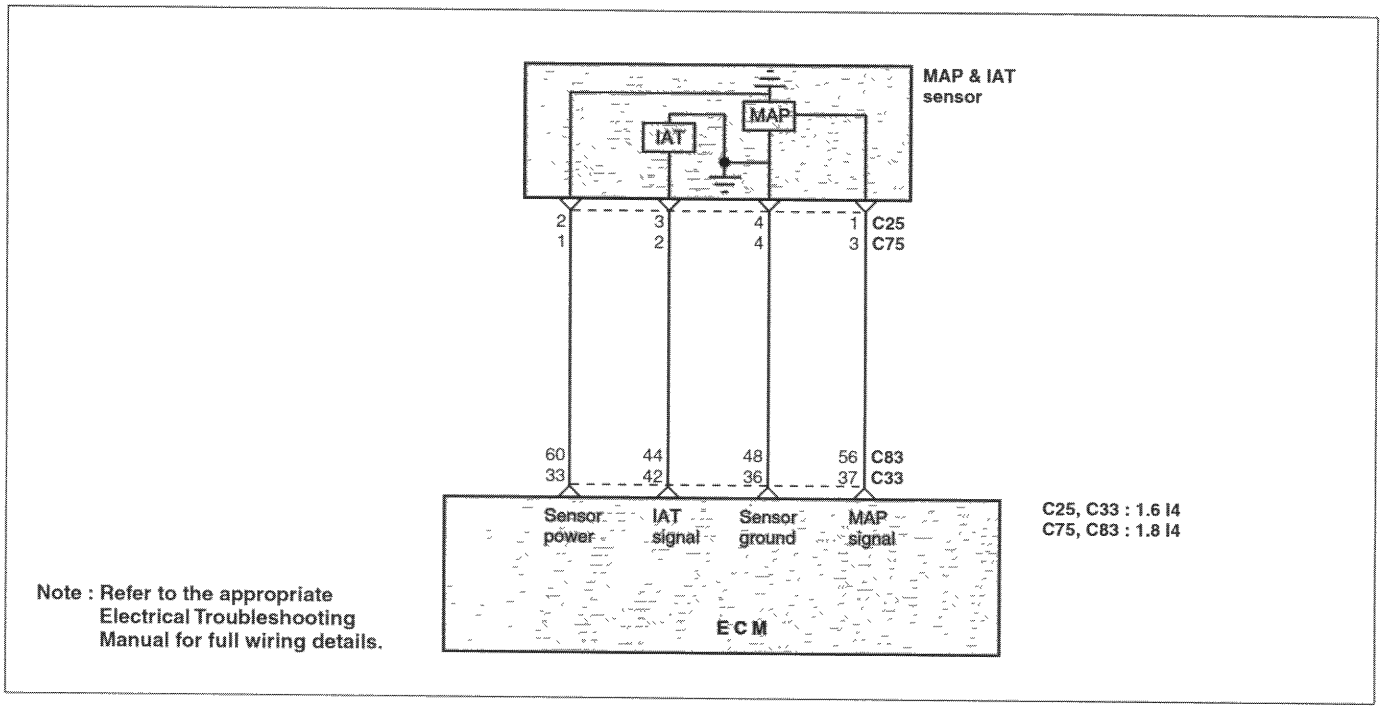

EFNC027A

TROUBLESHOOTING HINTS

The MIL is ON or the DTC is displayed on the HI-SCAN (Pro) under the following condition;

- When the intake air temperature is detected below –40°C or higher than 120°C.

USING HI-SCAN (PRO)

Check item	Data display	Check conditions	Engine state	Test specification
Intake air temperature sensor	Air temperature	Ignition switch : ON or engine running	When -20°C (-40°F)	-20°C
			When 0°C (32°F)	0°C
			When 20°C (68°F)	20°C
			When 40°C (104°F)	40°C
			When 80°C (176°F)	80°C

HARNESS INSPECTION PROCEDURES

1	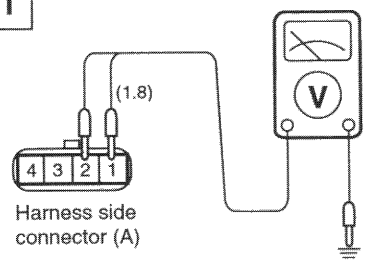	Measure the power supply voltage of the IAT Sensor. o Connector : Disconnected o Ignition switch : ON o Voltage : 4.8 - 5.2V	**OK** ⇨ 2 **NG** ⇨ Repair the harness.

EFNC029B

2	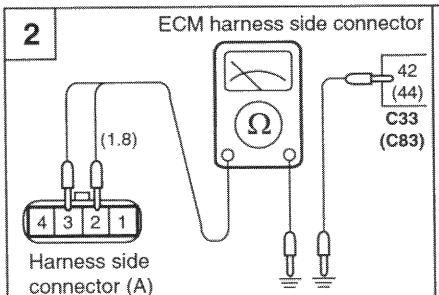	Check for an open-circuit, or a short-circuit to ground between the engine control module and the IAT sensor. o ECM connector : Disconnected o IAT sensor connector : Disconnected	**OK** ⇨ **END!** **NG** ⇨ Repair the harness.

EFNC029C

SENSOR INSPECTION

1. Using a multimeter, measure the IAT sensor resistance between terminals 3 and 4.

IG.SW.ON	Temperature °C (°F)	Output voltage (Ω)
	0 (32)	4.5 - 7.5Ω
	20 (68)	2.0 - 3.0Ω
	40 (104)	0.7 - 1.6Ω
	80 (176)	0.2 - 0.4Ω

2. If the resistance deviates from the standard value, replace the intake air temperature sensor assembly.

ENGINE COOLANT TEMPERATURE SENSOR (ECT SENSOR) EFNC0310

The engine coolant temperature sensor, located in the engine coolant passage of the cylinder head. It detects the engine coolant temperature and relays signals to the ECM. It employs a thermistor which is sensitive to changes in temperature. The electric resistance of a thermistor decreases in response to temperature rise. The ECM judges engine coolant temperature by the sensor output voltage and provides optimum fuel enrichment when the engine is cold.

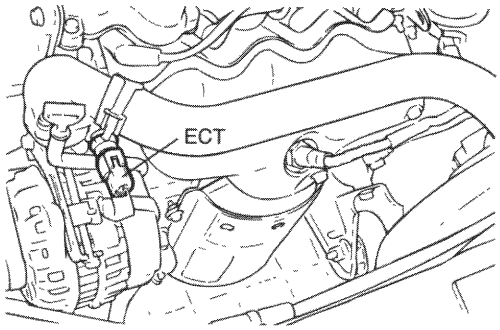

EFDA301D

CIRCUIT DIAGRAM

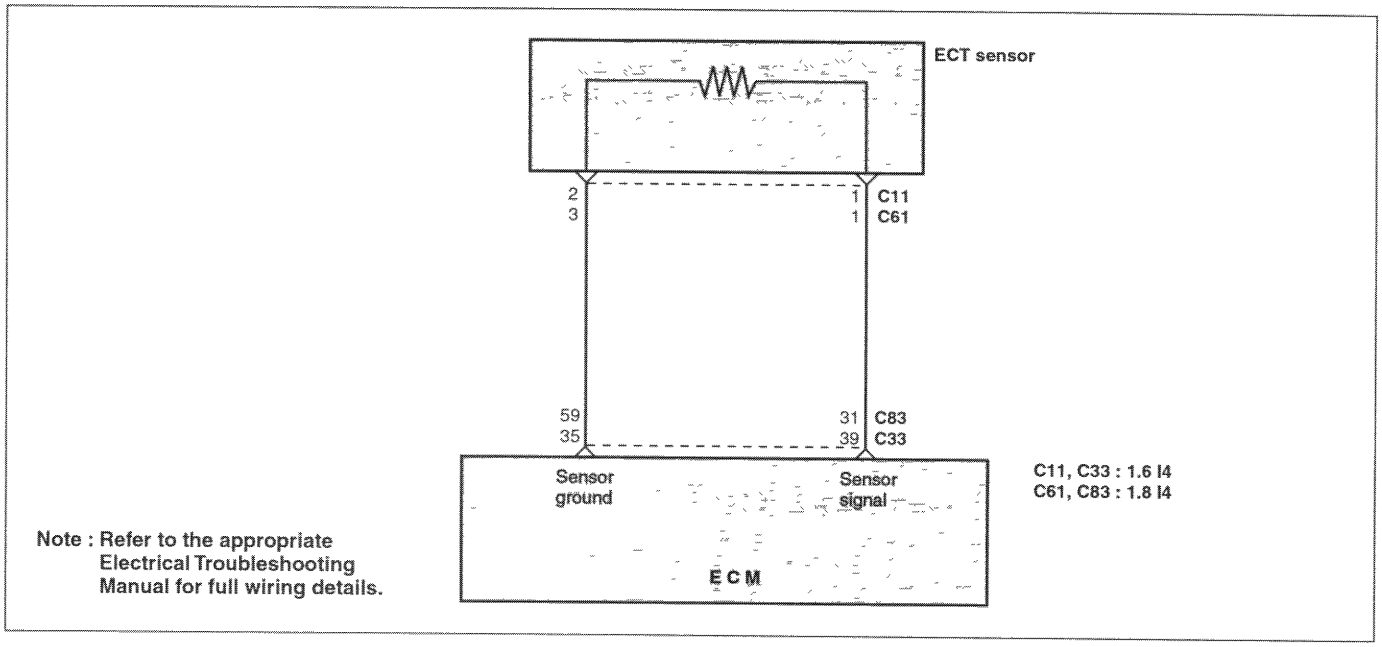

EFNC031A

USING HI-SCAN (PRO)

Check item	Data display	Check conditions	Engine state	Test specification
Engine coolant temperature sensor	Sensor temperature	Ignition switch : ON or engine running	When -20°C (-40°F)	-20°C
			When 0°C (32°F)	0°C
			When 20°C (68°F)	20°C
			When 40°C (104°F)	40°C
			When 80°C (176°F)	80°C

USING VOLTMETER

Check item	Engine state	Test specification
Engine coolant temperature sensor output voltage	When 0°C	3.7 - 4.3V
	When 20°C	3.2 - 3.6V
	When 40°C	2.4 - 3.0V
	When 80°C	1 - 1.5V

HARNESS INSPECTION PROCEDURES

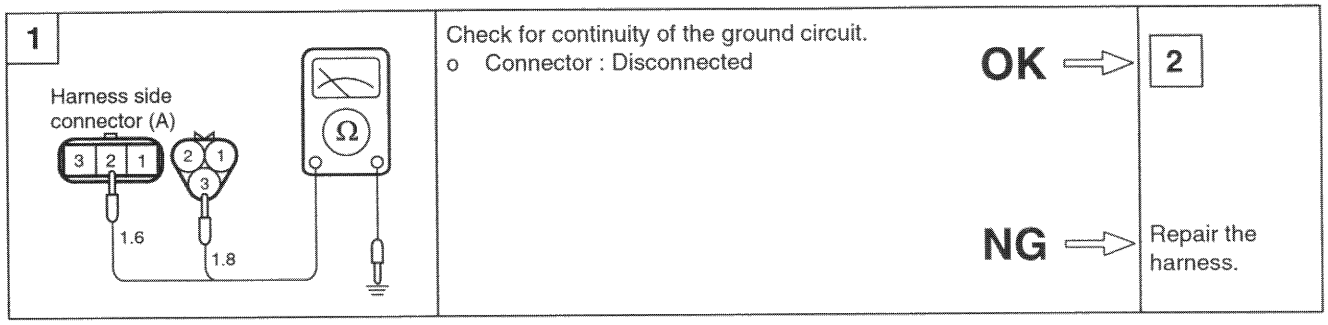

EFNC031B

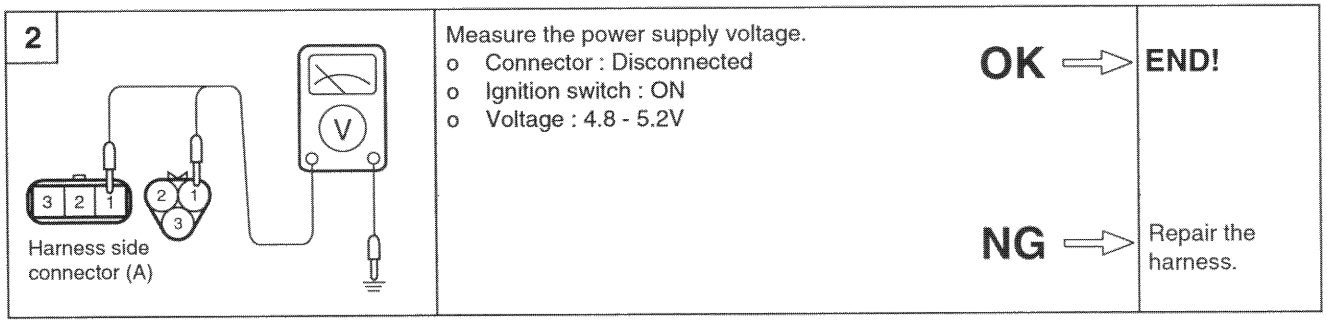

EFNC031C

SENSOR INSPECTION

1. Remove the engine coolant temperature sensor from the intake manifold.
2. With the temperature sensing portion of the engine coolant temperature sensor immersed in hot water, check resistance.

Temperature °C (°F)	Output voltage (kΩ)
-30 (-22)	22.22 - 31.78
-10 (14)	8.16 - 10.74
0 (32)	5.18 - 6.60
20 (68)	2.27 - 2.73
40 (104)	1.059 - 1.281
60 (140)	0.538 - 0.650
80 (176)	0.298 - 0.322
90 (194)	0.219 - 0.243

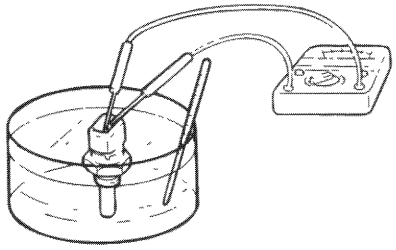

EFDA711C

3. If the resistance deviates from the standard value greatly, replace the sensor.

INSTALLATION

1. Apply sealant LOCTITE 962T or equivalent to threaded portion.
2. Install engine coolant temperature sensor and tighten it to specified torque.

Tightening torque
Engine coolant temperature sensor :
15-20Nm (150-200 kg.cm, 11-15 lb.ft)

3. Connect the harness connector securely.

THROTTLE POSITION SENSOR (TPS) EFNC0330

The TP Sensor is a rotating type variable resistor that rotates with the throttle body's throttle shaft to sense the throttle valve angle. As the throttle shaft rotates, the throttle angle of the TP Sensor changes and the ECM detects the throttle valve opening based on the TPS output voltage.

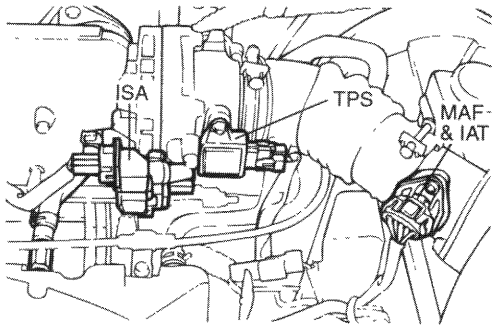

EFDA301C

CIRCUIT DIAGRAM

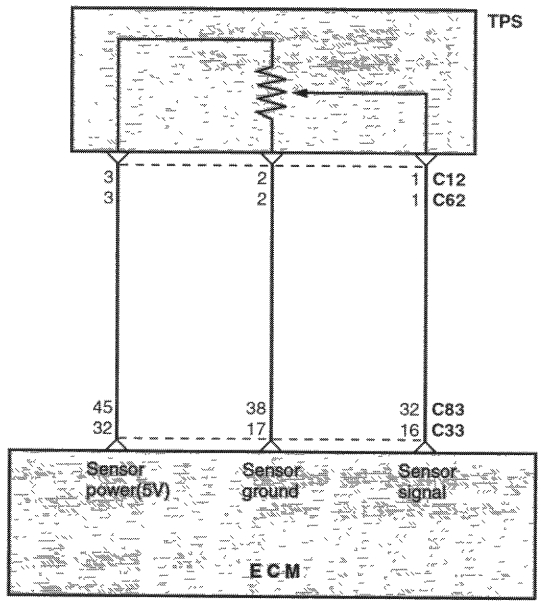

Note : Refer to the appropriate Electrical Troubleshooting Manual for full wiring details.

EFNC033A

TROUBLESHOOTING HINTS

1. The TPS signal is important for the control of automatic transaxles. Shift shock and other trouble may occur if the sensor is faulty.
2. If engine idle or acceleration is abnormal, check the TPS connector. (When the TPS connector is not connected properly, the current data on HI-SCAN (Pro) can show that the idle state remains off, although the accelerator pedal is released. This results in the improper idle or acceleration.)
3. Input voltage from throttle position sensor is below 0.1V or above 4.7V when ignition switch is turned on.

USING VOLTMETER OR HI-SCAN (PRO)

Check item	Check condition	Test specification
Throttle position sensor output voltage	At idle rpm	0.1 - 0.875V
	Wide open throttle	4.25 - 4.8V

HARNESS INSPECTION PROCEDURES

1 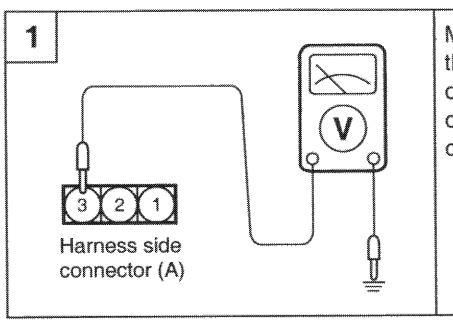	Measure the power supply voltage of the throttle position sensor. o Connector : Disconnected o Ignition switch : ON o Voltage : 4.8 - 5.2V	OK ⇒ NG ⇒	2 Repair the harness.

EFDA713A

2 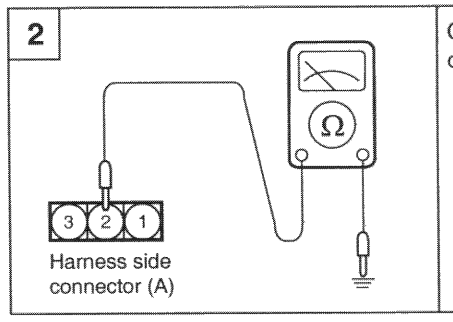	Check for continuity of the ground circuit. o Connector : Disconnected	OK ⇒ NG ⇒	3 Repair the harness.

EFDA713B

3 ECM harness side connector 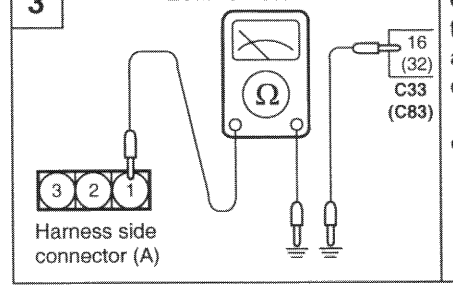	Check for an open-circuit, or a short-circuit to ground between the engine control module and the throttle position sensor. o Throttle position sensor connector: Disconnected o Engine control module connector: Disconnected	OK ⇒ NG ⇒	END! Repair the harness. (A1-C33:16) (A1-C83:32)

EFKB713C

SENSOR INSPECTION

1. Disconnect the throttle position sensor connector.
2. Measure the resistance between terminals 2 (sensor ground) and terminal 3 (sensor power).

Standard value : 0.7 - 3.0 kΩ

3. Connect an analog ohmmeter between terminals 2 (sensor ground) and terminal 3 (sensor output).
4. Operate the throttle valve slowly from the idle position to the full open position, and check that the resistance changes smoothly in proportion with the throttle valve opening angle.
5. If the resistance is out of specification, or fails to change smoothly, replace the throttle position sensor.

Tightening torque
Throttle position sensor :
1.5-2.5Nm (15-25kg.cm, 1.1-1.8 lb.ft)

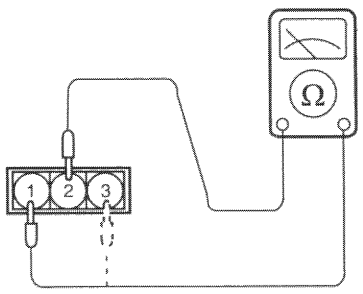

EFDA713D

CAMSHAFT POSITION SENSOR (CMP SENSOR) EFNC0350

The camshaft position sensor (CMP Sensor) senses the TDC point of No.1 cylinder on its compression stroke. Its signal is fed to the ECM to be used to determine the sequence of fuel injection.

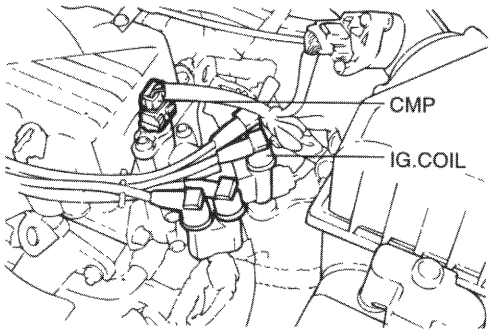

EFDA301E

CIRCUIT DIAGRAM

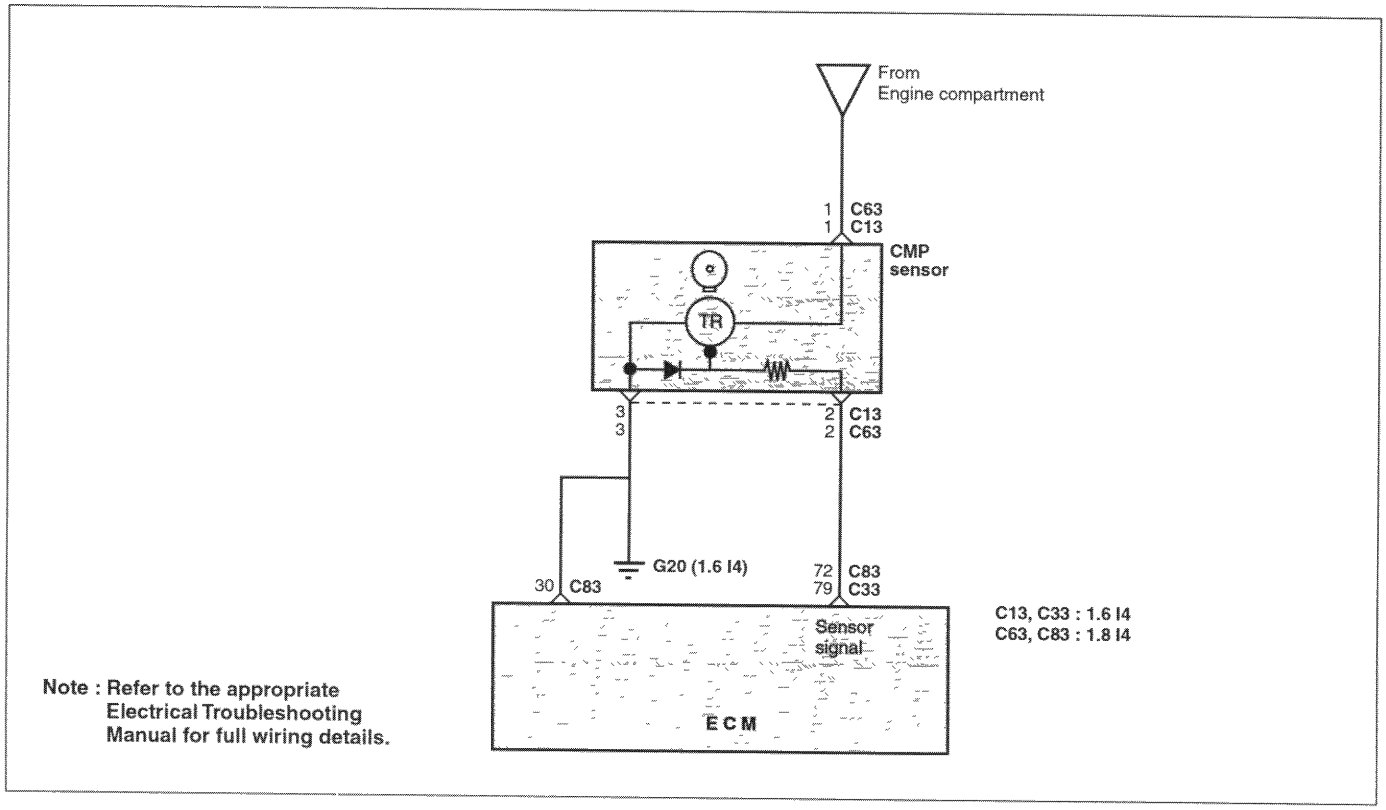

EFNC035A

USING VOLTMETER

Check item	Check condition	Test specification
Camshaft position sensor output voltage	At idle rpm	0 - 5V
	3000 rpm	0 - 5V

HARNESS INSPECTION PROCEDURES

1 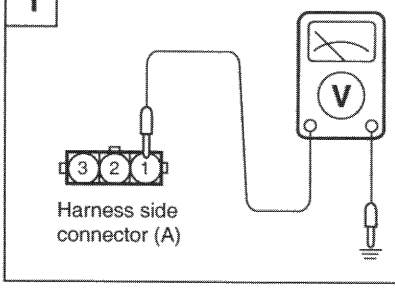	Measure the power supply voltage. o Connector : Disconnected o Ignition switch : ON o Voltage (V) : Battery voltage	OK ⇨ NG ⇨	2 Repair the harness

EFDA715A

2 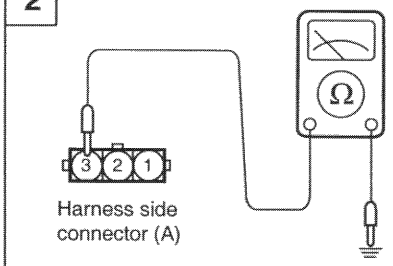	Check for continuity of the ground circuit. o Connector : Disconnected	OK ⇨ NG ⇨	3 Repair the harness.

EFDA715B

3 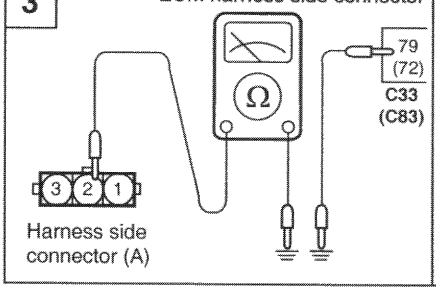	Check for an open-circuit, or a short-circuit to ground between the engine control module and the camshaft position sensor. o Camshaft position sensor connector: Disconnected o Engine control module connector: Disconnected	OK ⇨ NG ⇨	END! Repair the harness. (A2-C33:79) (A2-C83:72)

EFKB715C

CRANKSHAFT POSITION SENSOR (CKP SENSOR) EFNC0370

The crankshaft position sensor, consisted of a magnet and coil, is located next to flywheel. The voltage signal from this crankshaft position sensor is relayed to the ECM to indicate engine RPM and the position of the crankshaft.

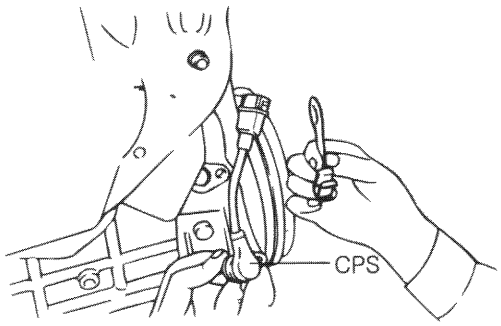

EFDA701E

CIRCUIT DIAGRAM

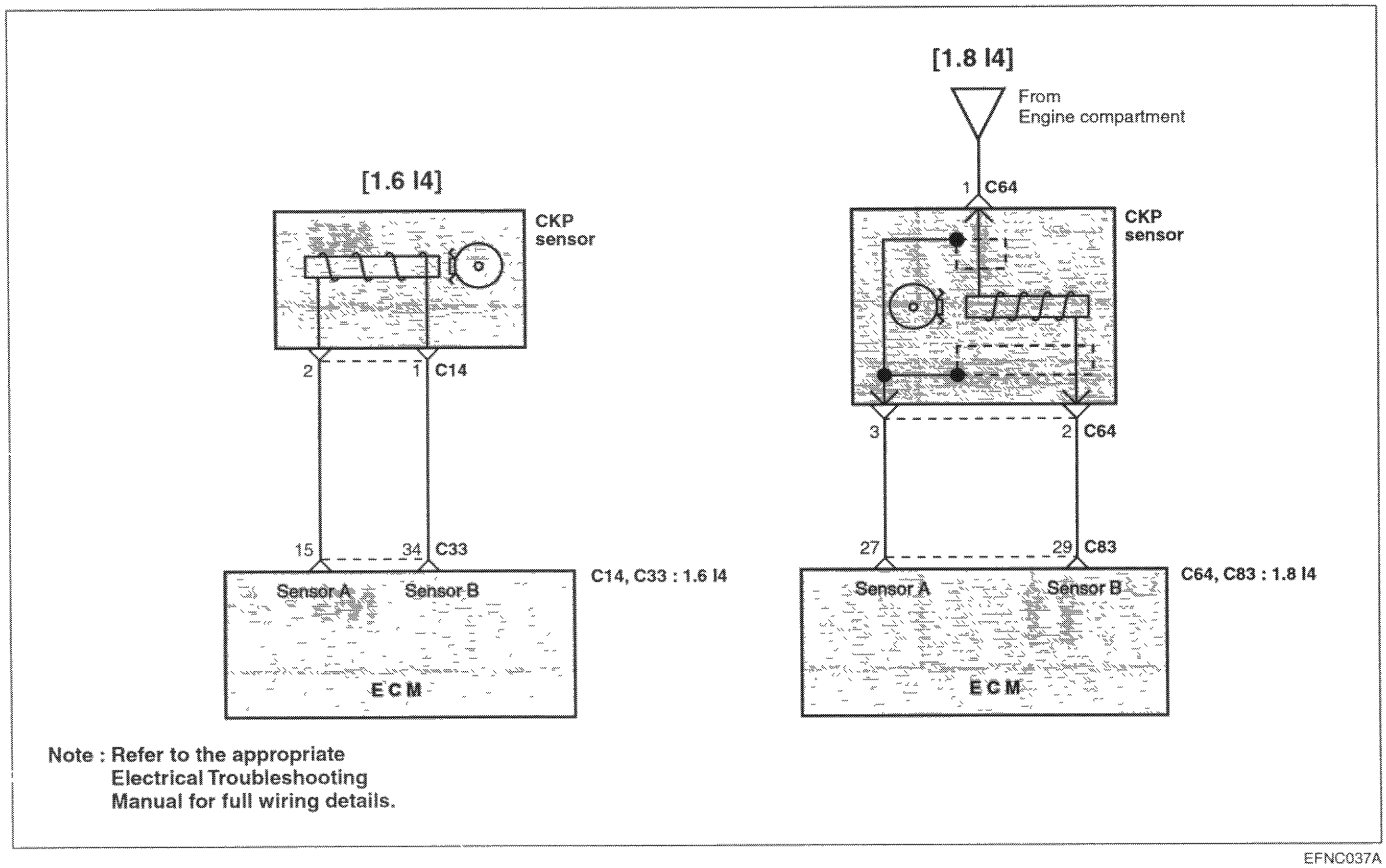

EFNC037A

HARNESS INSPECTION PROCEDURES [1.6 I4]

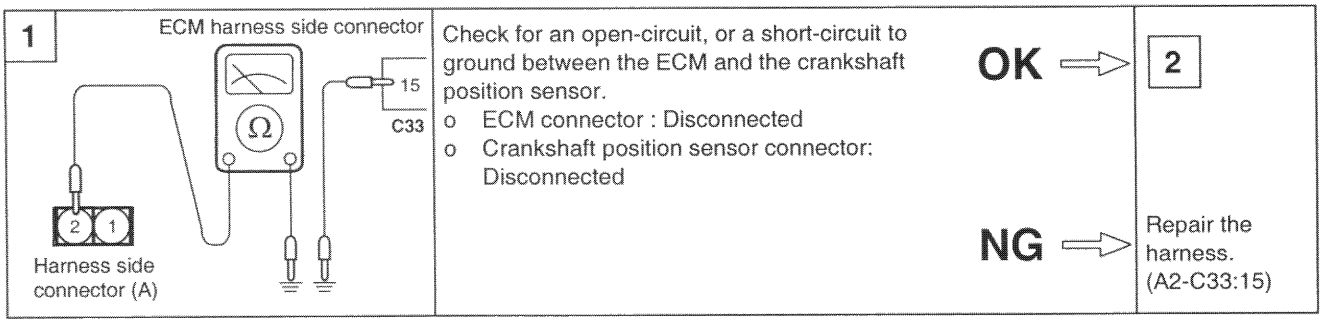

EFKB717A

2 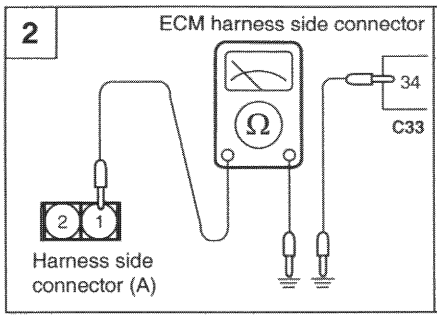	Check for an open-circuit, or a short-circuit to ground between the ECM and the crankshaft position sensor. o ECM connector : Disconnected o Crankshaft position sensor connector: Disconnected	OK ⇒	END!
		NG ⇒	Repair the harness. (A1-C33:34)

EFKB717B

HARNESS INSPECTION PROCEDURES [1.8 I4]

1 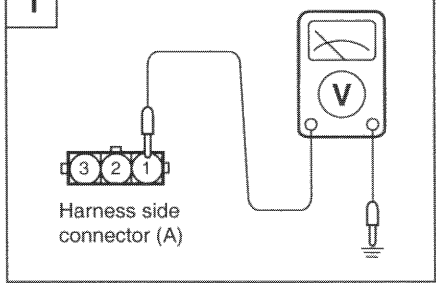	Measure the power supply voltage. o Connector : Disconnected o Ignition switch : ON o Voltage (V) : Battery voltage	OK ⇒	2
		NG ⇒	Repair the harness

EFDA715A

2 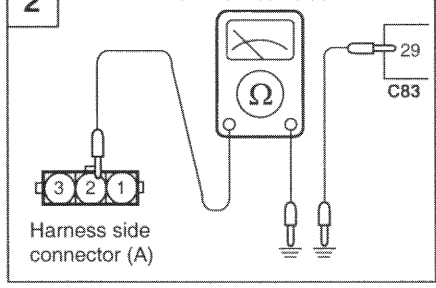	Check for an open-circuit, or a short-circuit to ground between the engine control module and the crankshaft position sensor. o Crankshaft position sensor connector: Disconnected o Engine control module connector: Disconnected	OK ⇒	3
		NG ⇒	Repair the harness. (A2-C83:29)

EFKB717D

3 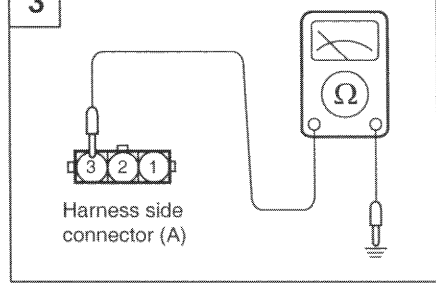	Check for continuity of the ground circuit. o Connector : Disconnected	OK ⇒	END!
		NG ⇒	Repair the harness.

EFKB717E

SENSOR INSPECTION [1.6 I4]

1. Disconnect the crankshaft position sensor connector.
2. Measure the resistance between terminals 1 and 2.

Standard value : 0.486-0.594 kΩ at 20°C (68°F)

3. If the resistance deviates far from the standard value, replace the sensor.

Standard value
Clearance between the crankshaft position sensor and crankshaft position sensor wheel :

0.5-1.5 mm (0.020-0.059 in.)

Tightening torque
Crankshaft position sensor :
9-11 Nm (90-110 kg.cm, 6.6-8.1 lb.ft)

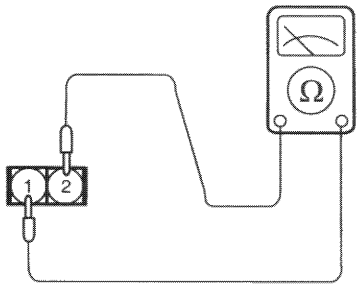

EFDA717C

HEATED OXYGEN SENSOR (HO2S)-SINGLE HO2S EFNC0390

The heated oxygen sensor senses the oxygen concentration in the exhaust gas, then converts it into a voltage and then sends this to the ECM. The heated oxygen sensor gives an output of about 800mV when the air fuel ratio is richer than the theoretical ratio and output of about 100mV when the ratio is leaner (higher oxygen concentration in exhaust gas.) The ECM controls fuel injection based on this signal so that the air fuel ratio is maintained at the theoretical ratio.

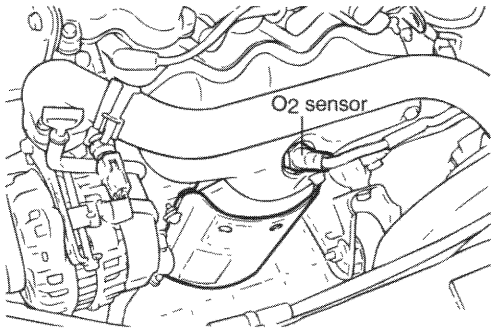

EFDA301K

CIRCUIT DIAGRAM

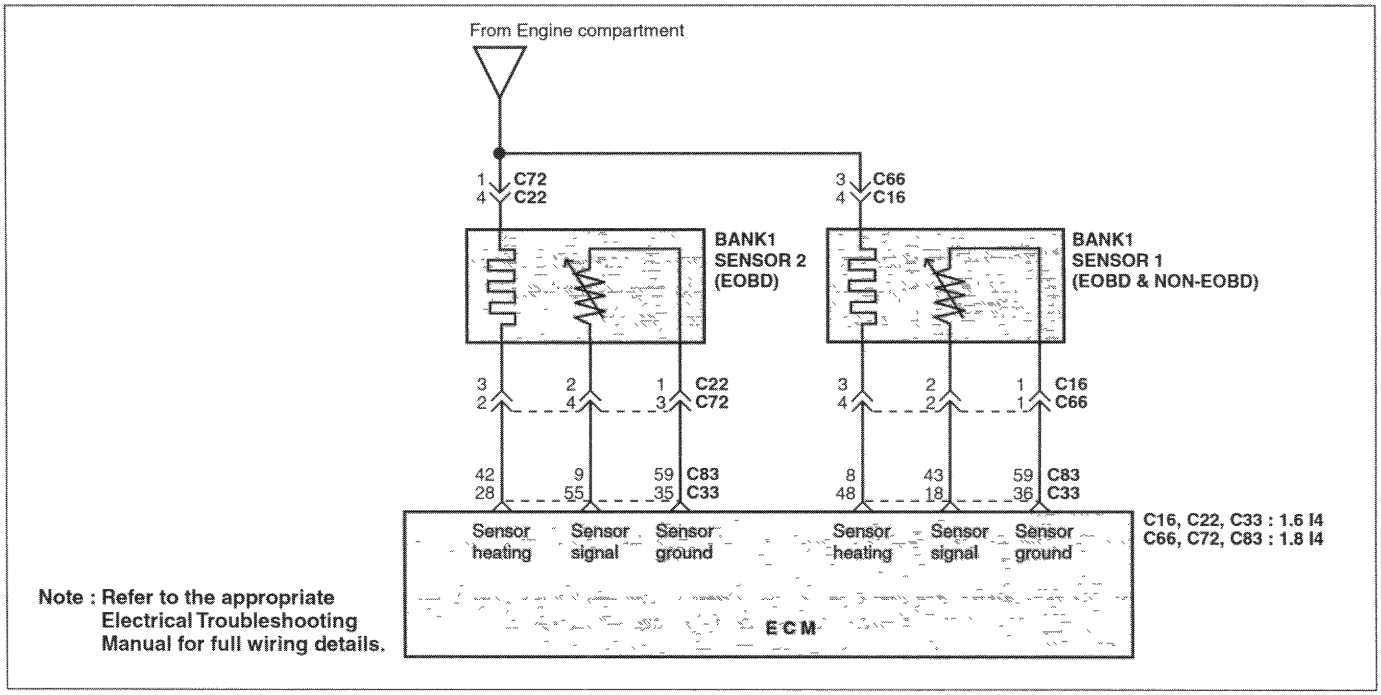

EFNC039A

TROUBLESHOOTING HINTS

1. If the heated oxygen sensor is defective, abnormally high emissions may occur.
2. If the heated oxygen sensor check is normal but the sensor output voltage is out of specification, check for the following items related to the air fuel ratio control system:
   - Faulty injector.
   - Air leaks in the intake manifold.
   - Faulty mass air flow sensor, purge valve and engine coolant temperature sensor.
   - Wiring connection problem.

USING VOLTMETER/HI-SCAN (PRO)

Check item	Check condition	Engine condition	Test specification
Heated oxygen sensor output voltage	Warm-up	When decelerating suddenly from 4,000 rpm	A. 200mV or lower
		When engine is suddenly raced	B. 600-1,000mV

NOTE

If you release the accelerator pedal suddenly after engine running about 4000 rpm, fuel supply will stop for short period and the O_2 sensor service data in the HI-SCAN (Pro) will display values 200mV or lower. When you suddenly press on the accelerator pedal down, the voltage will reach 600-1000mV. When you let the engine idle again, the voltage will fluctuate between 200mV or lower and 600-1000mV. In this case, the O_2 sensor can be determined as good.

HARNESS INSPECTION PROCEDURES [1.6 I4]

1

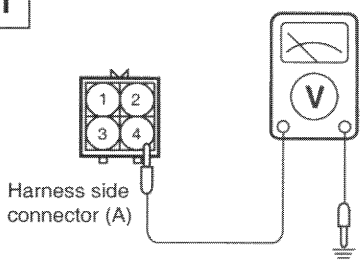

Measure the power supply voltage of the heated oxygen sensor.
- Connector : Disconnected
- Ignition switch : ON
- Voltage (V) : Battery voltage

OK ⇒ 2

NG ⇒ Repair the harness

EFDA719A

2

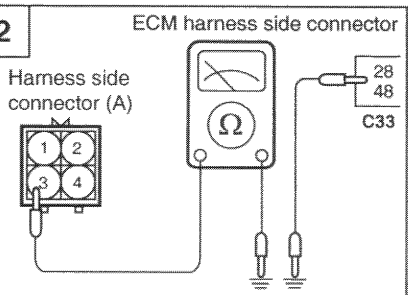

Check for an open-circuit, or a short-circuit to ground between the engine control module and the heated oxygen sensor.
- Heated oxygen sensor connector: Disconnected
- ECM connector : Disconnected

OK ⇒ 3

NG ⇒ Repair the harness.
(A3-C33:28)
(A3-C33:48)

EFKB719B

3

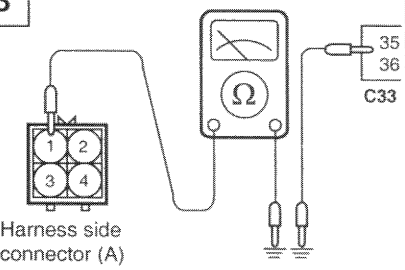

Check for continuity to ground circuit.
- Connector : Disconnected

OK ⇒ 4

NG ⇒ Repair the harness.
(A1-C33:35)
(A1-C33:36)

EFKB719C

4

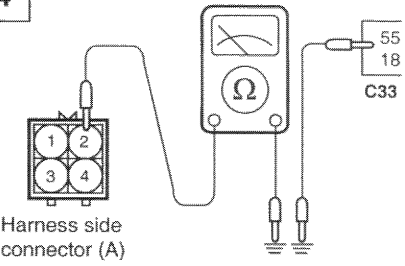

Check for an open circuit, or a short circuit to ground between the ECM and oxygen sensor.
- Oxygen sensor connector : Disconnected
- ECM connector : Disconnected

OK ⇒ END!

NG ⇒ Repair the harness.
(A2-C33:55)
(A2-C33:18)

EFKB719D

HARNESS INSPECTION PROCEDURES [1.8 I4]

1

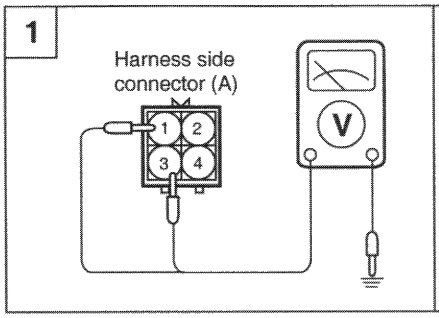

Measure the power supply voltage of the heated oxygen sensor.
- Connector : Disconnected
- Ignition switch : ON
- Voltage (V) : Battery voltage

OK ⇒ 2

NG ⇒ Repair the harness.

EFKB719E

2

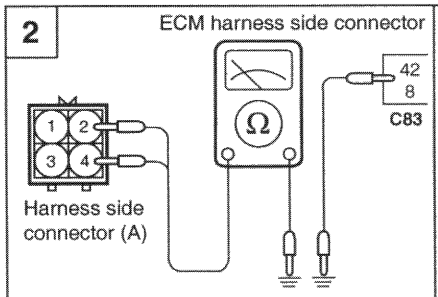

Check for an open-circuit, or a short-circuit to ground between the engine control module and the heated oxygen sensor.
- Heated oxygen sensor connector: Disconnected
- ECM connector : Disconnected

OK ⇒ 3

NG ⇒ Repair the harness.
(A2-C83:42)
(A4-C83:8)

EFKB719F

3

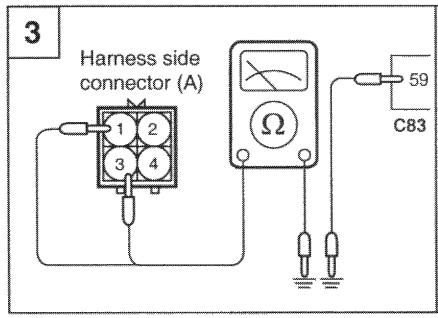

Check for continuity to ground circuit.
- Connector : Disconnected

OK ⇒ 4

NG ⇒ Repair the harness.
(A3-C83:59)
(A1-C83:59)

EFKB719G

4

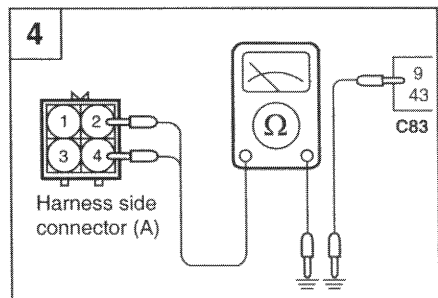

Check for an open circuit, or a short circuit to ground between the ECM and oxygen sensor.
- Oxygen sensor connector : Disconnected
- ECM connector : Disconnected

OK ⇒ END!

NG ⇒ Repair the harness.
(A4-C83:9)
(A2-C83:43)

EFKB719H

SENSOR INSPECTION

Tightening torque
Heated oxygen sensor :
50-60 Nm (500-600 kg.cm, 37-44 lb.ft)

NOTE

1. *Before checking, warm up the engine until the engine coolant temperature reaches 80 to 95°C (176 to 205°F).*
2. *Use an accurate digital voltmeter.*

Replace the oxygen sensor if there is a malfunction.

INJECTORS EFNC0410

The injectors inject fuel according to signals from the ECM. The volume of fuel injected by the injector is determined by the time during which the solenoid valve is energized (Pulse width).

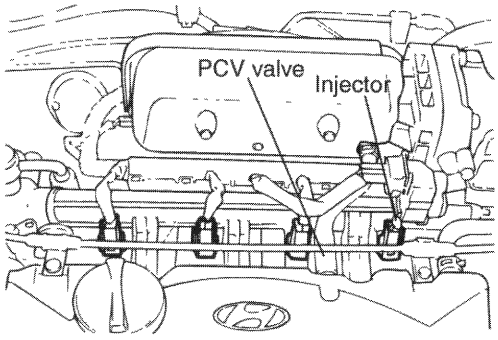

EEDA105B

CIRCUIT DIAGRAM

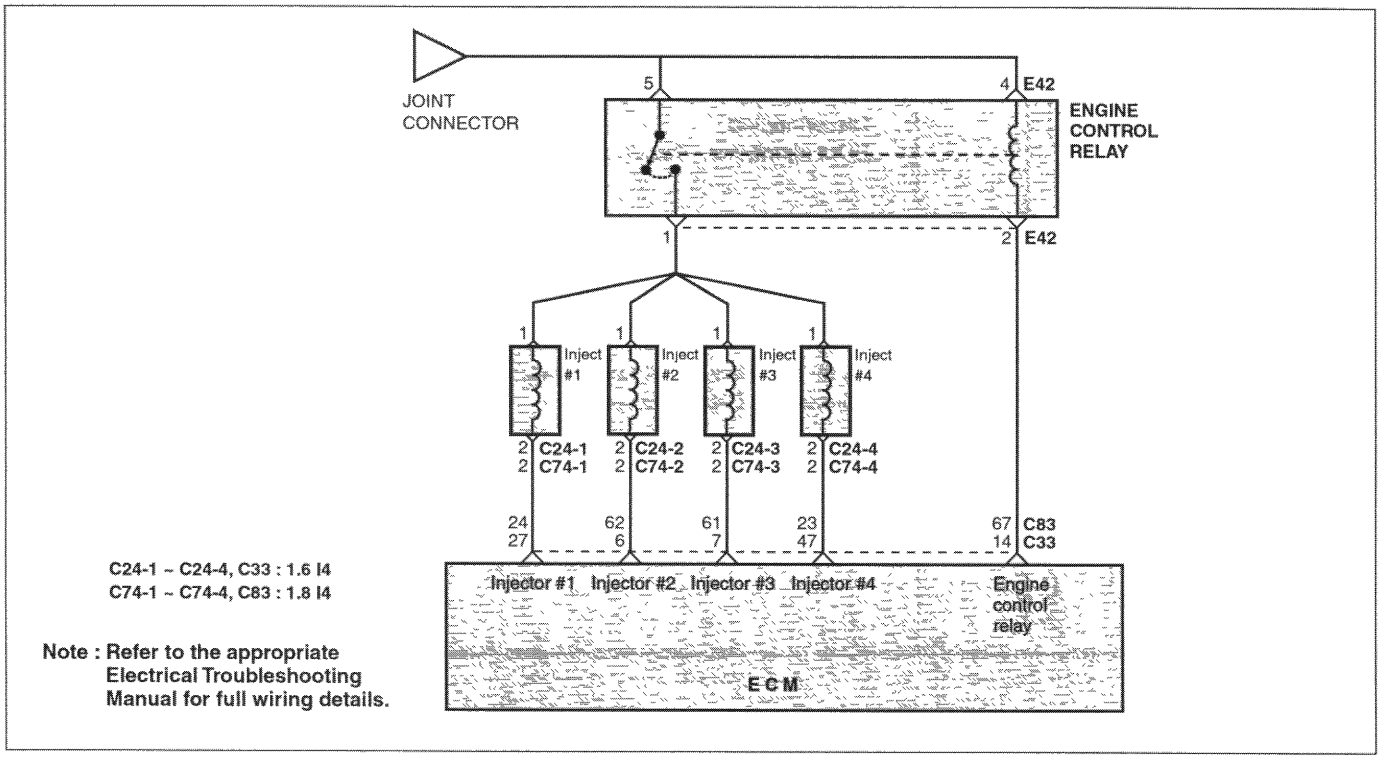

EFNC041A

TROUBLESHOOTING HINTS

1. If the engine is difficult to start when it is hot, check for low fuel pressure and injector leaks.
2. If the injector does not operate when the engine is cranked, then check the following:
   - Faulty power supply circuit to the ECM or faulty ground circuit.
   - Faulty MFI control relay.
   - Faulty crankshaft position sensor or camshaft position sensor.
3. If engine idle remains unchanged when fuel injection to the cylinders is cut one after another, check for the following items about such cylinder:
   - Injector and harness.
   - Spark plug and high tension cable.
   - Compression pressure.
4. If the injection system is OK but the injector's pulse width is out of specification, check for the following items:
   - Poor combustion in the cylinder (faulty spark plug, ignition coil, compression pressure, etc.)
5. The MIL is on or the DTC is displayed on the HI-SCAN (Pro) under the following condition:
   - When the injector itself is faulty

USING HI-SCAN (PRO)

Check item	Data display	Check conditions	Engine state	Test specification
Throttle position sensor	Throttle angle	• Engine coolant temperature: 80 to 95°C (176 to 205°F) • Lamps, electric cooling fan, accessory units: ALL OFF • Transaxle : Neutral (P range for vehicle with A/T) • Steering wheel : Neutral	Idle rpm	1.5 - 4.5 ms
			2000 rpm	
			3000 rpm	
			Racing	Increasing

Check item	Check condition	HI-SCAN (Pro) display	Type
Injector • Actuator test	Start the engine	01. No.1 Injector	Activate
		02. No.2 Injector	Activate
		03. No.3 Injector	Activate
		04. No.4 Injector	Activate

HARNESS INSPECTION PROCEDURES

1

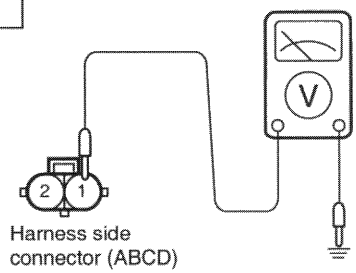

Measure the power supply voltage of the injector.
- o Connector : Disconnected
- o Ignition switch : ON
- o Voltage (V) : Battery voltage

OK ⇒ 2

NG ⇒ Repair the harness.

EFDA721A

2

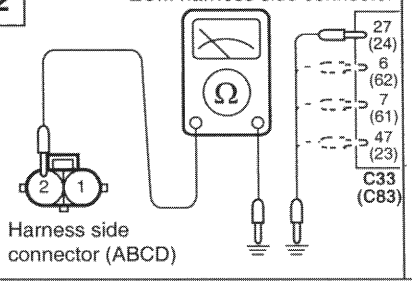

Check for an open-circuit, or a short-circuit to ground between the engine control module and the injector.
- o ECM connector : Disconnected
- o Injector connector : Disconnected

OK ⇒ **END!**

NG ⇒ Repair the harness.

EFKB721B

INJECTOR INSPECTION

OPERATION CHECK

Using a HI-SCAN (Pro):

- Activate the fuel injectors in sequence.
- Check the pulse width of the injectors.

Operation Sound Check

1. Using a stethoscope, check the injectors for a clicking sound at idle. Check that the sound is produced at shorter intervals as the engine speed increases.

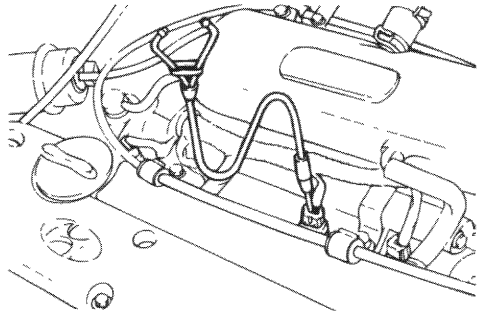

EFDA721C

NOTE

Ensure that the sound from an adjacent injector is not being transmitted along the delivery pipe to an inoperative injector.

2. If a stethoscope is not available, check the injector operation with your finger.
   If no vibrations are felt, check the wiring connector, injector, or injection signal from ECM.

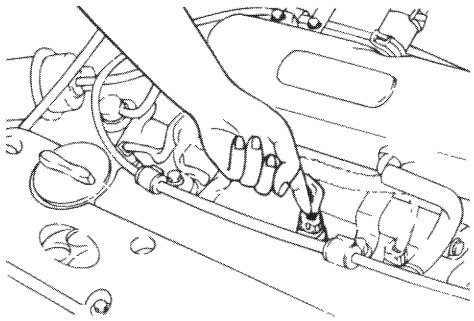

EFDA721D

Resistance Measurement Between Terminals

1. Disconnect the connector at the injector and measure the resistance between the two terminals.

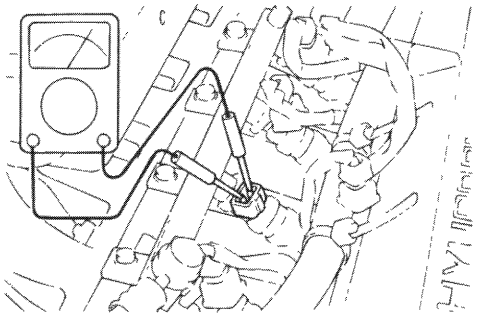

EFDA721E

Standard value : 15.9 ± 0.35 Ω [at 20°C (68°F)]

2. Re-connect the connector to the injector.

IDLE SPEED CONTROL ACTUATOR (ISC ACTUATOR) EFNC0430

The idle speed actuator is a double coil type driven by separate driver stages in the ECM. Depending on the pulse duty factor, the equilibrium of the magnetic forces of the two coils will result in different angles of the motor. A bypass hose line is positioned, in parallel to the throttle valve where the idle speed actuator is inserted.

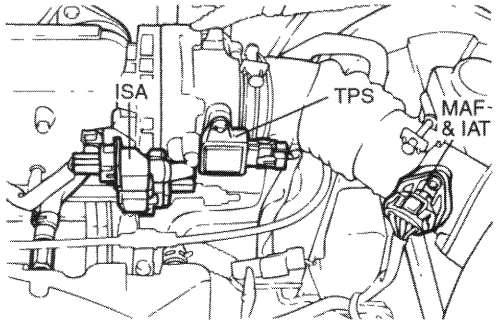

EFDA301C

CIRCUIT DIAGRAM

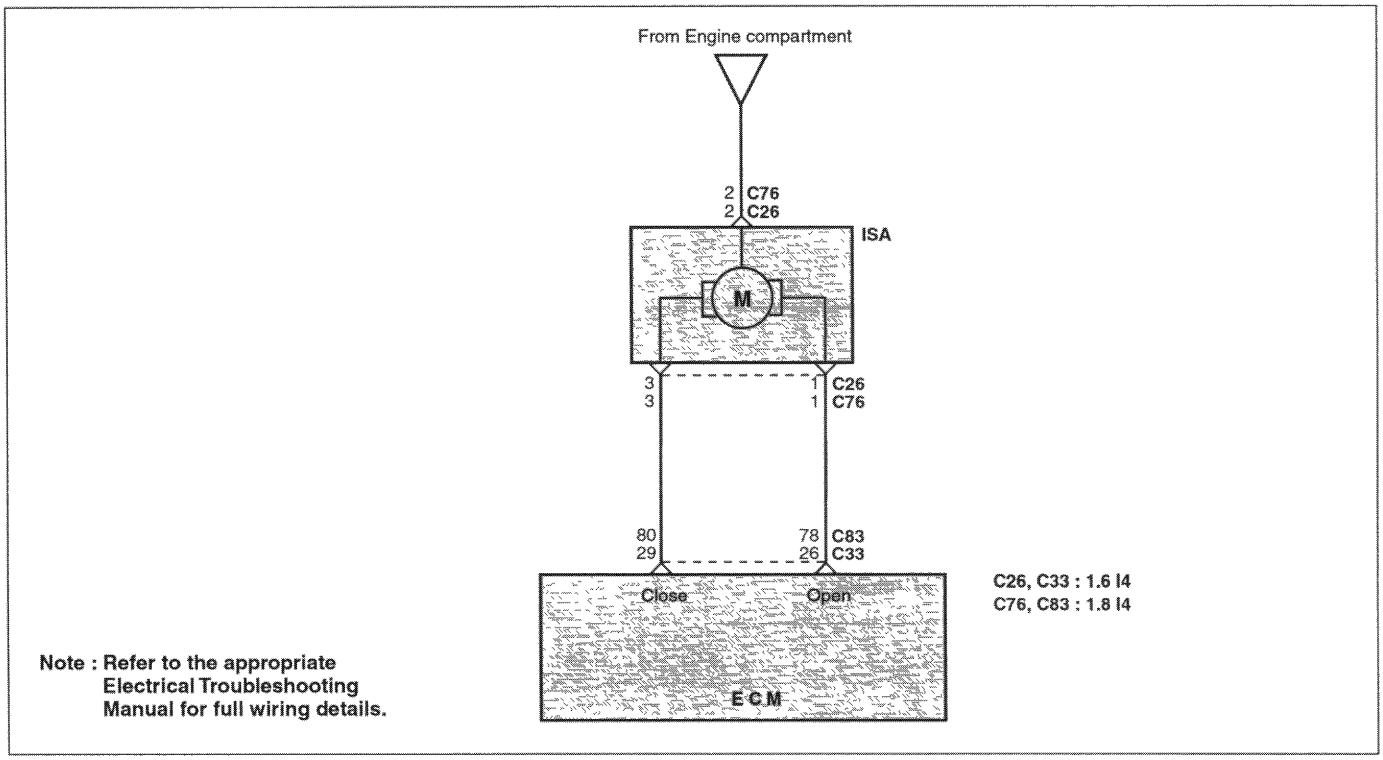

EFNC043A

TROUBLESHOOTING HINTS

Open or short circuit is observed in the idle air control system when ignition switch is turned on.

USING HI-SCAN (PRO)

Check item	Check condition	ISA condition	Test specification
Idle speed control actuator • Actuator test	Start the engine	ON	Activate

HARNESS INSPECTION PROCEDURES

1 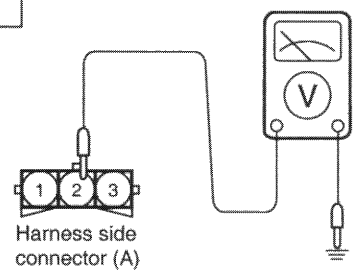	Measure the power supply voltage of the injector. o Connector : Disconnected o Ignition switch : ON o Voltage (V) : Battery voltage	OK ⇨ NG ⇨	2 Repair the harness.

EFDA723A

2 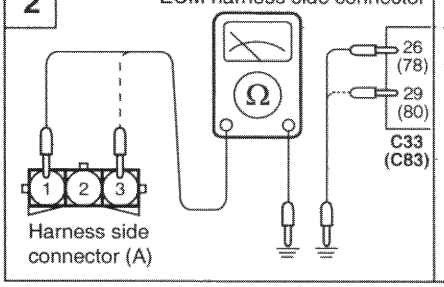	Check for an open-circuit, or a short-circuit to ground between the ECM and the idle speed control actuator. o ECM connector : Disconnected o Idle speed actuator connector: Disconnected	OK ⇨ NG ⇨	END! Repair the harness. (A1-C33:26, C83:78) (A3-C33 29, C83 80)

EFKB723B

ACTUATOR INSPECTION

Resistance Measurement Between terminals

1. Disconnect the connector at the idle speed control actuator.
2. Measure the resistance between terminals.

Standard value

Terminal 1 and 2 : 10.5 - 14Ω
Terminal 2 and 3 : 10 - 12.5Ω [at 20°C (68°F)]

3. Connect the connector to the idle speed control actuator.

VEHICLE SPEED SENSOR EFNC0450

The vehicle speed sensor is a reed switch that is built into the speedometer. The sensor converts the transaxle gear revolutions into a pulse signal which is sent to the ECM.

CIRCUIT DIAGRAM

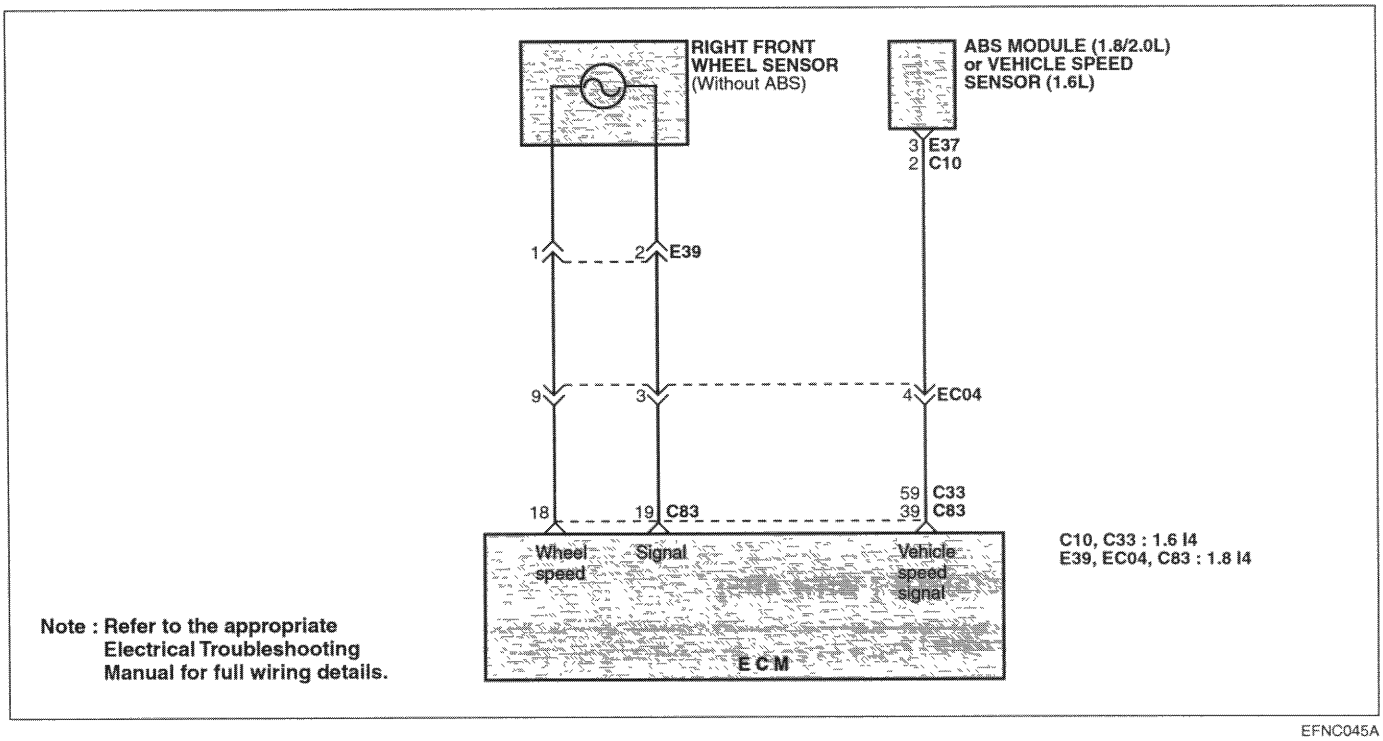

EFNC045A

TROUBLESHOOTING HINTS

If there is an open or short circuit in the vehicle speed sensor signal circuit, the engine may stall when the vehicle decelerates to a stop.

HARNESS INSPECTION PROCEDURES [1.8 I4 WITHOUT ABS]

1 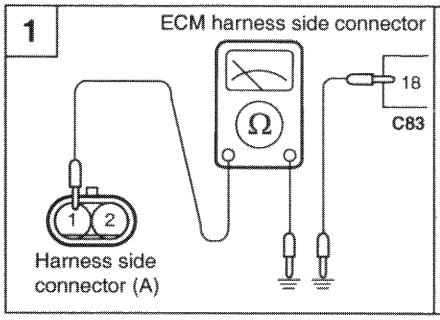	Check for an open-circuit, or a short-circuit to ground between the ECM and wheel speed sensor. o ECM connector : Disconnected o Wheel speed sensor connector: Disconnected	OK ⇨	2
		NG ⇨	Repair the harness. (A1-C83:18)

EFKB725B

2 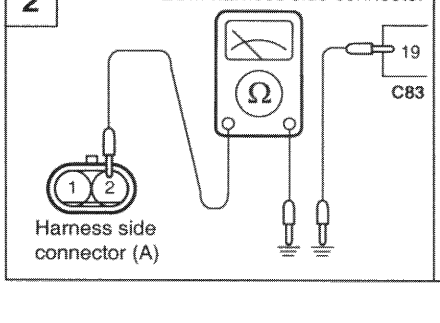	Check for an open-circuit, or a short-circuit to ground between the ECM and wheel speed sensor. o ECM connector : Disconnected o Wheel speed sensor connector: Disconnected	OK ⇨	END!
		NG ⇨	Repair the harness. (A2-C83:19)

EFKB725C

HARNESS INSPECTION PROCEDURES [WITH ABS]

1 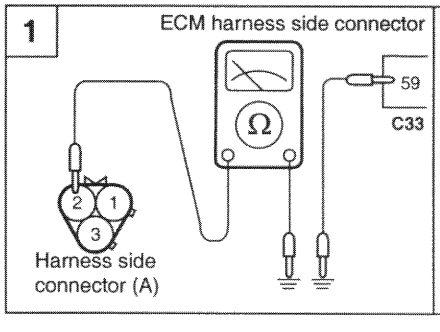	Check for an open-circuit, or a short-circuit to ground between the ECM and wheel speed sensor. o ECM connector : Disconnected o Wheel speed sensor connector: Disconnected	OK ⇨	END!
		NG ⇨	Repair the harness. (A2-C33:59)

EFKB725D

KNOCK SENSOR EFNC0470

The knock sensor is attached to the side of the cylinder block to sense engine knocking. A knocking vibration from the cylinder block is applied as pressure to the piezoelectric element. This vibrational pressure is then converted into a voltage signal which is relayed to the ECM. If engine knocking occurs, ignition timing is retarded to suppress it.

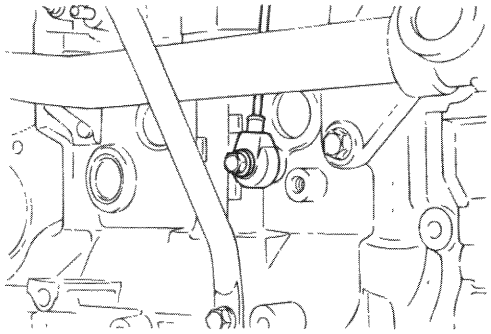

EFDA727A

CIRCUIT DIAGRAM

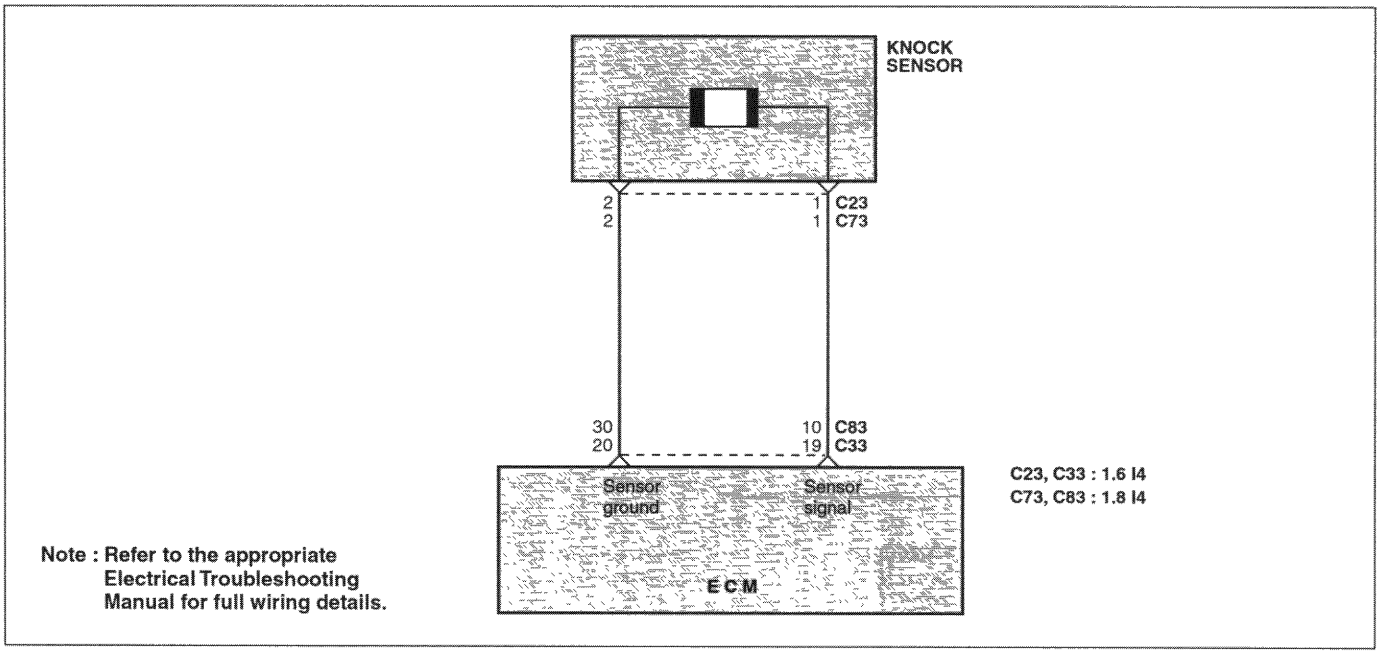

EFNC047A

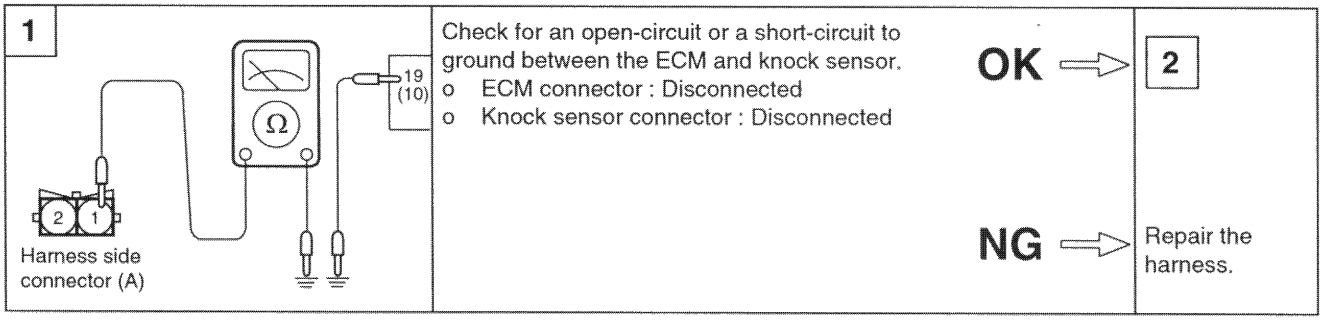

EFNC047B

2 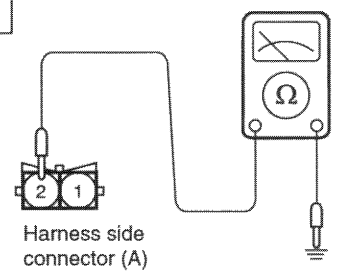 Harness side connector (A)	Check for an open-circuit or a short-circuit to ground between the ECM and knock sensor. o ECM connector : Disconnected o Knock sensor connector : Disconnected	OK ⇨	END!
		NG ⇨	Repair the harness.

EFNC047C

SENSOR INSPECTION

1. Disconnect the knock sensor connector and measure resistance between terminals 1 and 2.

Standard value : about 5MΩ [at 20° (68°F)]

2. If the resistance is continuous, replace the knock sensor.

Tightening torque
Knock sensor :
16-25 Nm (160-240 kg.cm, 11.8-18.4 lb.ft)

3. Measure the capacitance between terminals 1 and 2.

Standard value : 800 - 1600 pF

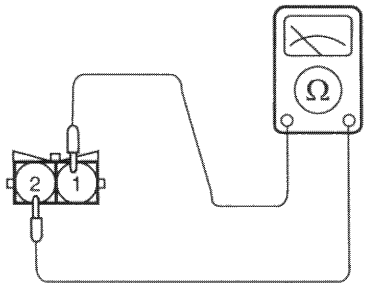

EFDA727D

IGNITION SWITCH-ST AND TRANSAXLE RANGE (TR) SWITCH (A/T) EFKB7290

When the ignition switch is set to the ST position, battery voltage is applied through the ignition switch and TR switch to the ECM. If the selector lever is not in P or the N position, battery voltage will not reach the ECM. Based on this signal, the ECM determines the automatic transaxle load and drives the idle speed control actuator to maintain optimum idle speed.

Transaxle Range Switch (Inhibitor Switch)

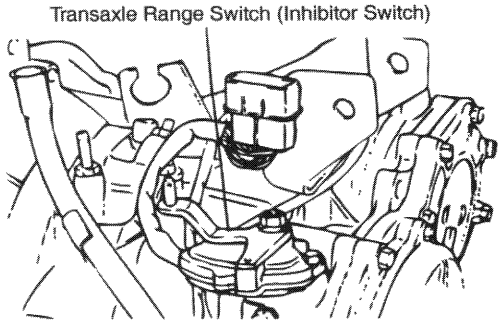

EFDA701D

CIRCUIT DIAGRAM

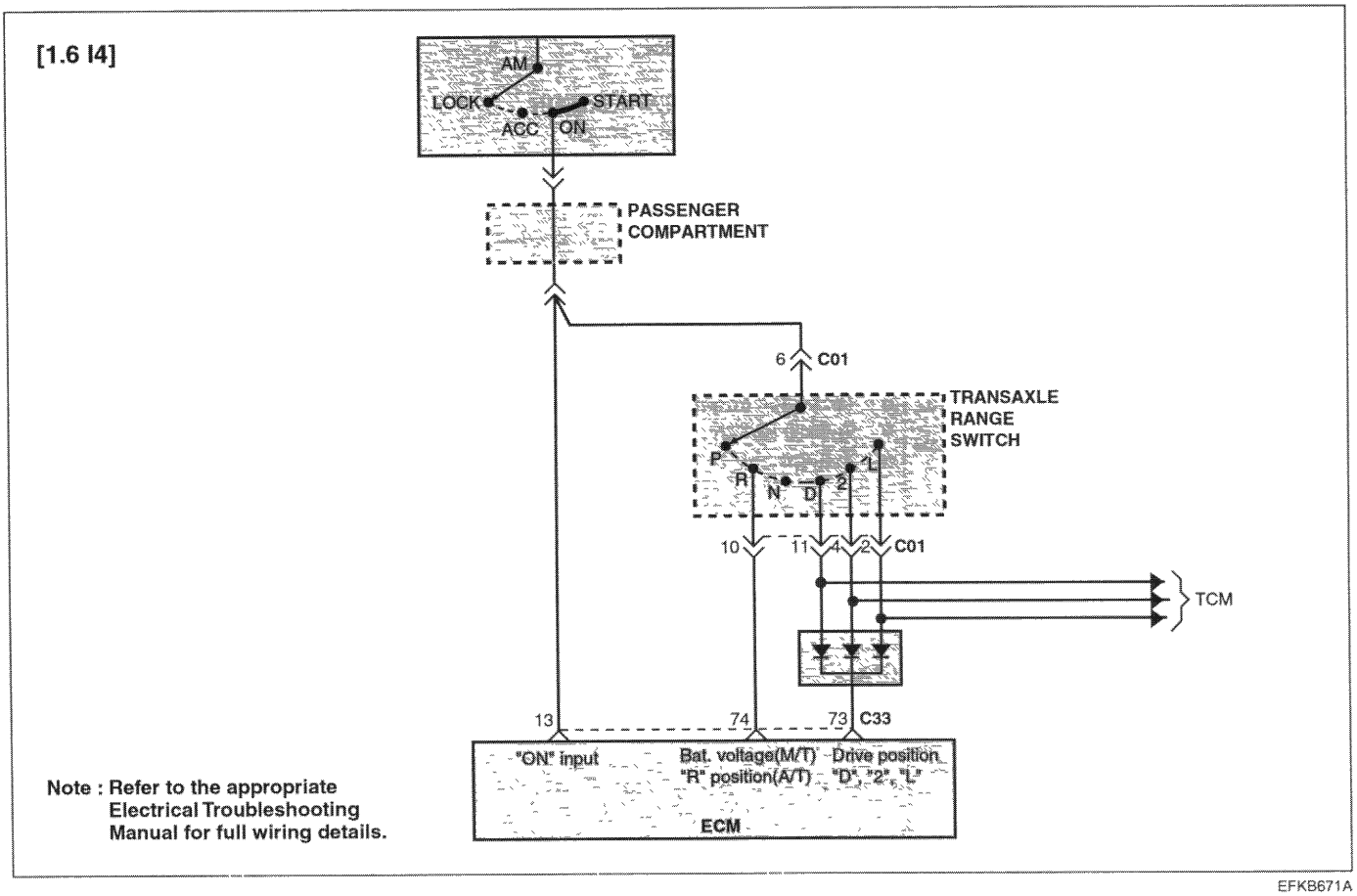

EFKB671A

TROUBLESHOOTING HINTS

If the park/neutral position switch harness check is normal but the switch output is abnormal, check the control cable adjustment.

USING HI-SCAN (PRO)

Check item	Data Display	Check condition	Engine state	Test specification
Crank Signal	Switch state (ON/OFF)	Ignition SW : ON	Stop	OFF
			Cranking	ON
TR Switch	Shift lever position	Ignition SW : ON	P or N	P or N
			Others	Others

HARNESS INSPECTION PROCEDURES

1

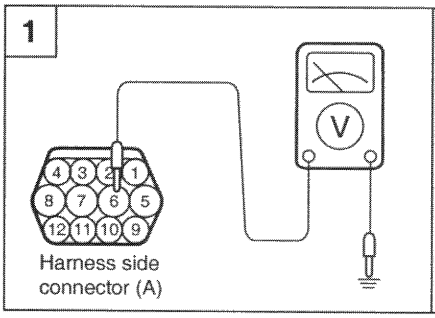

Measure the power supply voltage of the Transaxle range switch.
- o ECM connector : Disconnected
- o TR switch connector : Disconnected
- o Ignition switch : START and ON
- o Voltage (V) : Battery voltage

OK ⇒ 2

NG ⇒ Check the power supply circuit.

EFKB729B

2

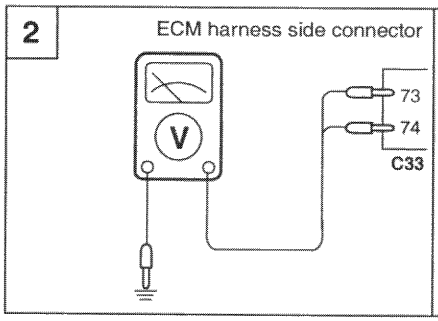

Measure the input voltage of engine control module.
- o ECM connector : Disconnected
- o TR switch connector : Connected
- o Ignition switch : START
- o Voltage : 8V or more

OK ⇒ 3

NG ⇒ Repair the harness.

EFKB729C

3

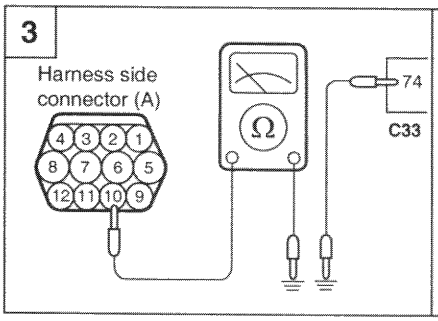

Check for continuity of the ground circuit between ECM and Transaxle Range Connector.

OK ⇒ 4

NG ⇒ Repair the harness. (A10-C33:74)

EFKB729D

4

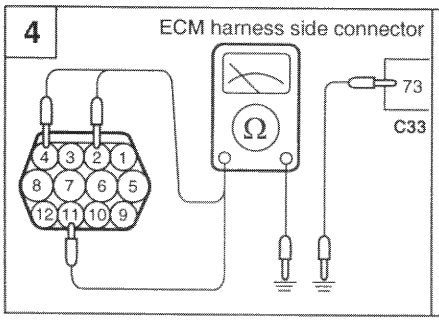

Check for continuity of the ground circuit between ECM and Transaxle Range Connector.

OK ⇒ **END!**

NG ⇒ Repair the harness. (A2,A4,A11-C33·73)

EFKB729E

IGNITION SWITCH-ST (M/T) EFKB7310

The ignition switch-ST inputs a high signal to the ECM while the engine is cranking. The ECM controls fuel injection, etc, at engine start-up based on this signal.

CIRCUIT DIAGRAM

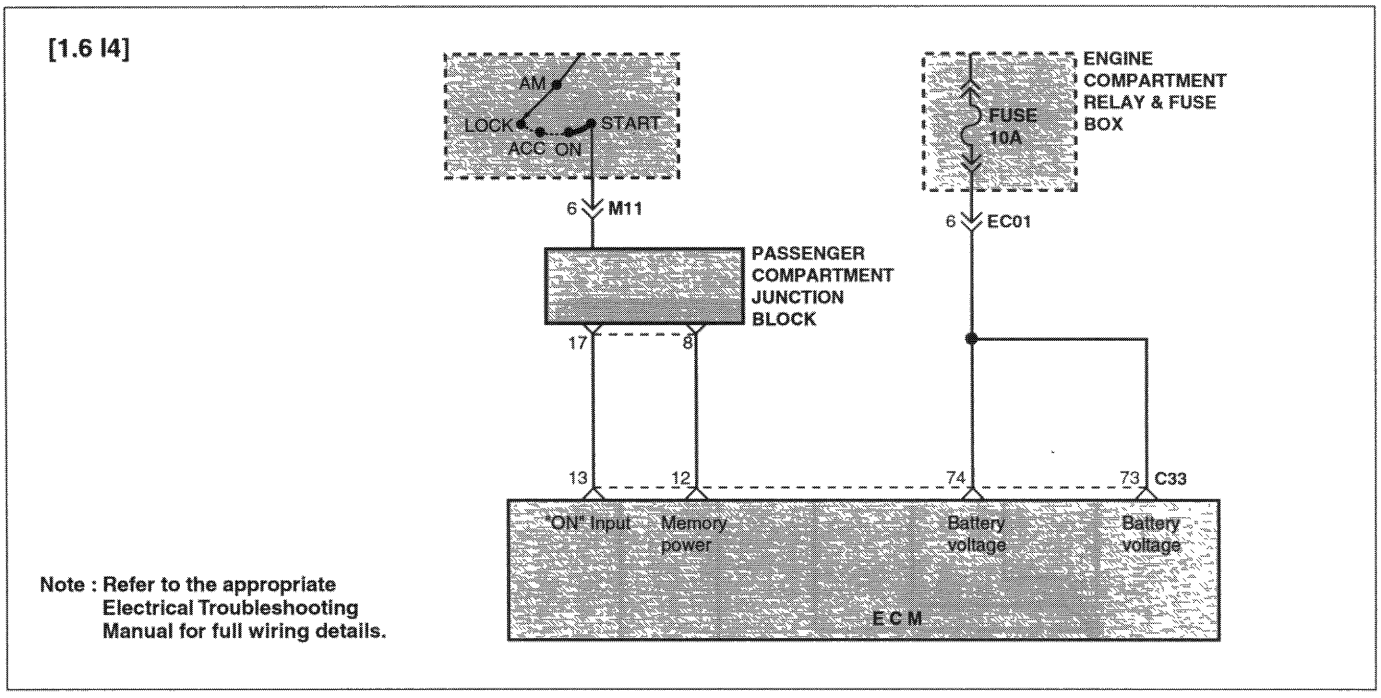

EFKB672A

HARNESS INSPECTION PROCEDURE

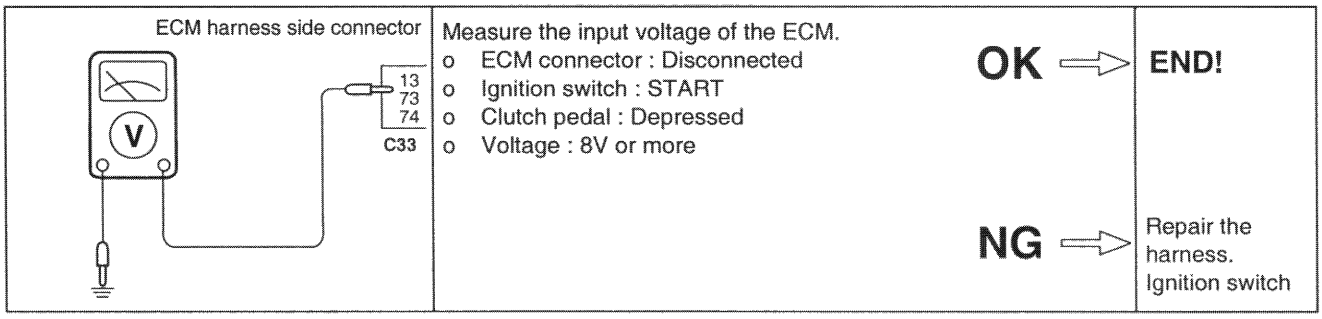

EFKB731A

ENGINE CONTROL MODULE (ECM)-POWER GROUND EFNC0530

Check the ground condition of the engine control module.

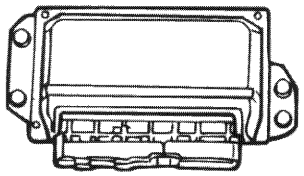

EFDA301H

CIRCUIT DIAGRAM

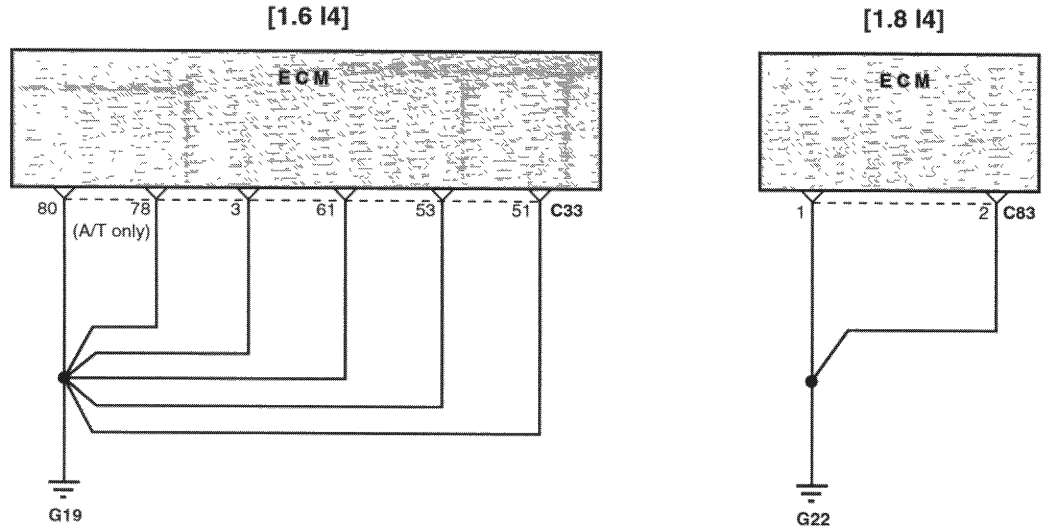

Note : Refer to the appropriate Electrical Troubleshooting Manual for full wiring details.

EFNC053A

HARNESS INSPECTION PROCEDURE [1.6 I4]

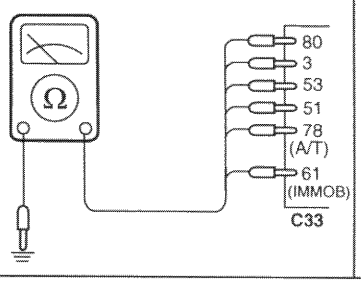

Check for continuity of the ground circuit.
o ECM connector : Disconnected

OK ⇨ **END!**

NG ⇨ Repair the harness.

EFKB733A

HARNESS INSPECTION PROCEDURE [1.8 I4]

ECM harness side connector 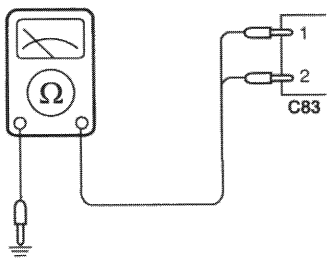	Check for continuity of the ground circuit. o ECM connector : Disconnected	OK ⇨	END!
		NG ⇨	Repair the harness.

EFKB733B

AIR CONDITIONING SWITCH AND RELAY EFNC0550

The air conditioning switch relays battery voltage to the ECM when the air conditioning is turned on. When the air conditioning ON signal is input, the ECM drives the ISC Actuator and turns ON the ignition power transistor. Then, the air conditioning power relay coil is energized to turn on the relay switch, which activates the compressor magnetic clutch.

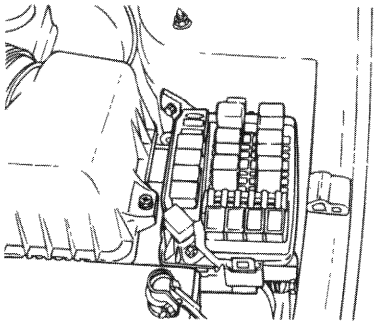

EFDA735A

CIRCUIT DIAGRAM

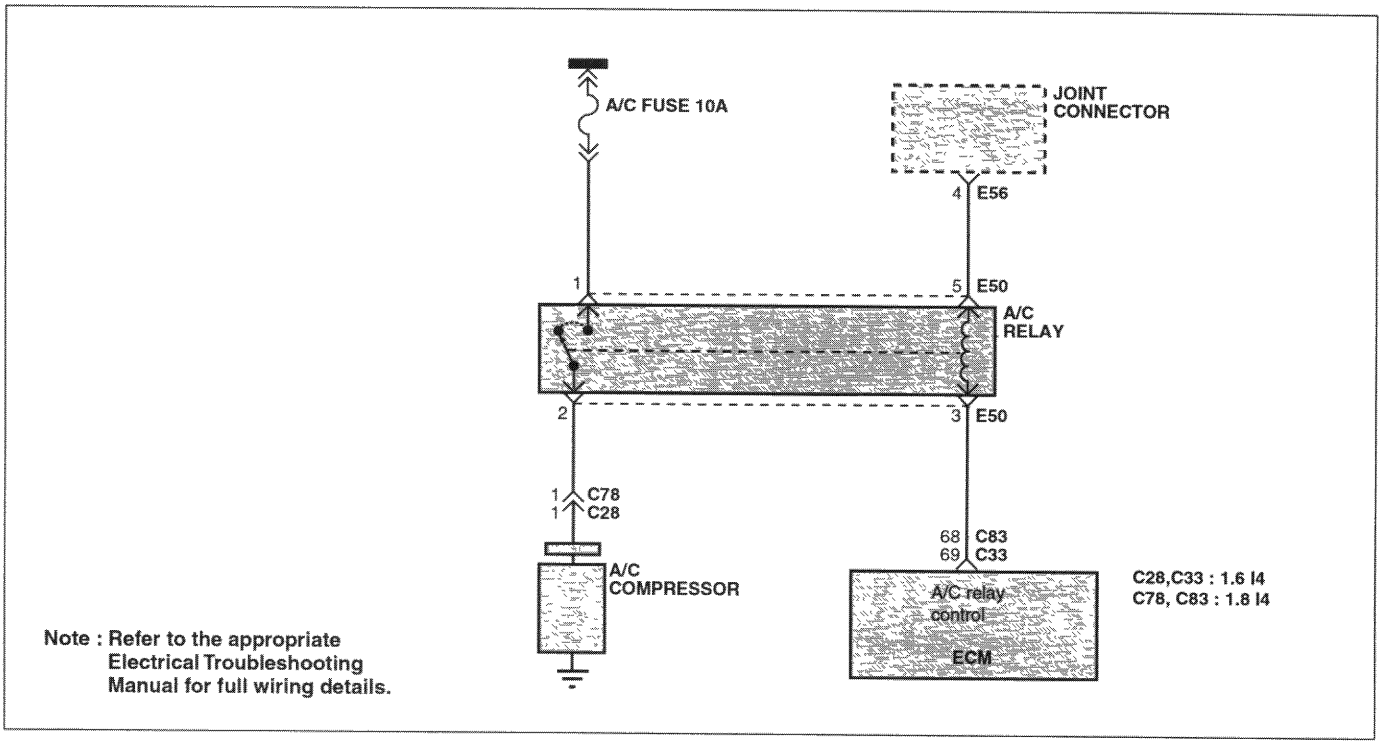

EFNC055A

USING HI-SCAN (PRO)

Check item	Data Display	Check condition	Air conditioning switch	Normal indicator
Air conditioning switch	Switch state (ON/OFF)	Engine: Idling (air compressor is running when air conditioning switch is ON)	OFF	OFF
			ON	ON
Air conditioning compressor	Air conditioning compressor	Engine: Idling after warm-up	OFF	OFF (compressor clutch non-activation)
			ON	ON

HARNESS INSPECTION PROCEDURE

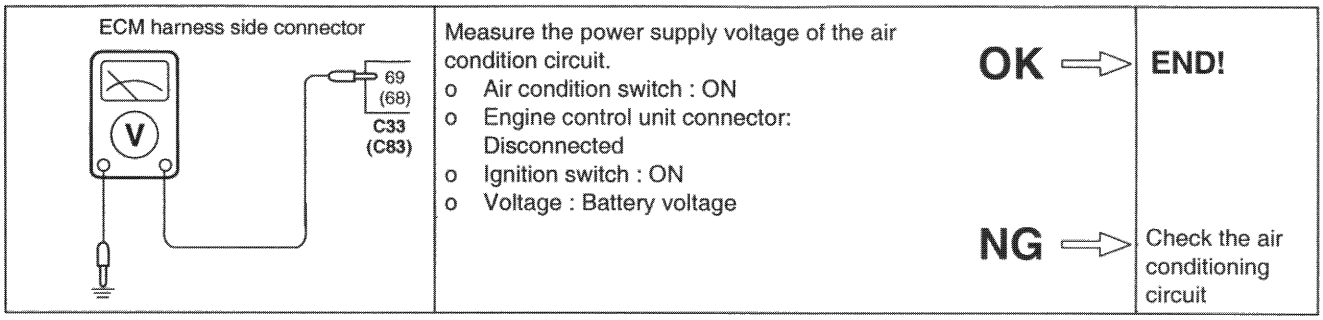

EFKB735B

AIR CONDITIONING INSPECTION

Refer to GROUP-HA service adjustment procedures.

EVAPORATIVE EMISSION CANISTER PURGE SOLENOID VALVE EFNC0570

The evaporative emission canister purge solenoid valve is a duty control type, which controls the flow of purge air from the evaporative emission canister.

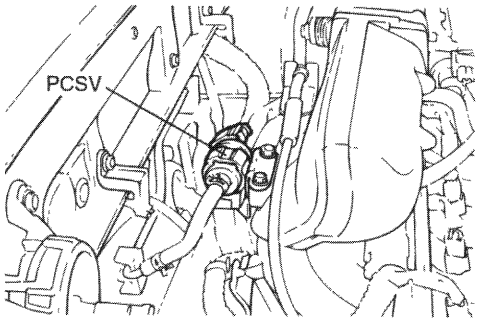

EEDA204A

CIRCUIT DIAGRAM

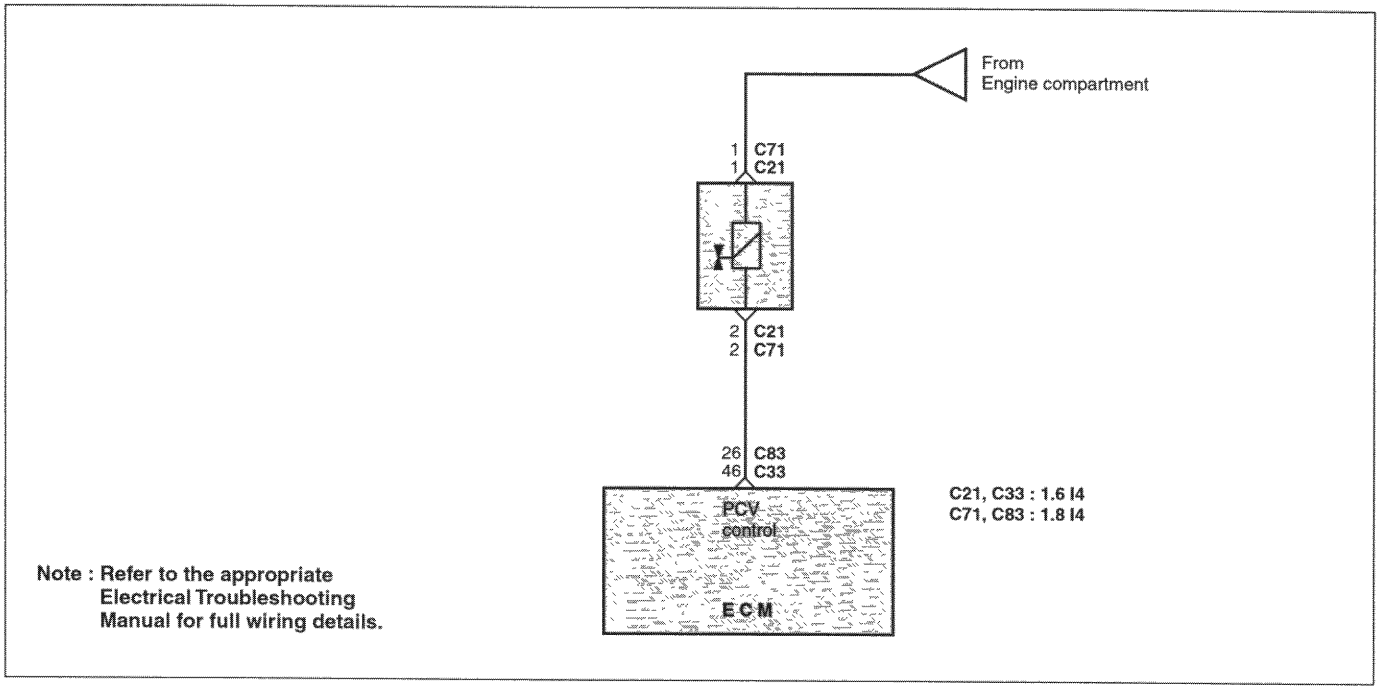

EFNC057A

USING HI-SCAN (PRO)

Check item	Check condition	HI-SCAN (Pro) display	Type
Evaporative emission canister purge solenoid valve • Actuator test	Start the engine	PURGE VALVE	Activate

HARNESS INSPECTION PROCEDURES

1 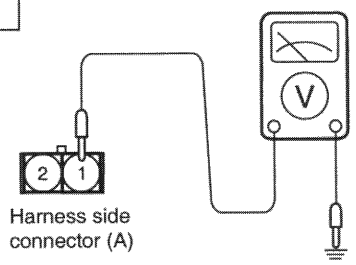 Harness side connector (A)	Measure the power supply voltage. o Connector : Disconnected o Ignition switch : ON o Voltage : Battery voltage	OK ⇨	2
		NG ⇨	Repair the harness.

EFDA737A

2 ECM harness side connector 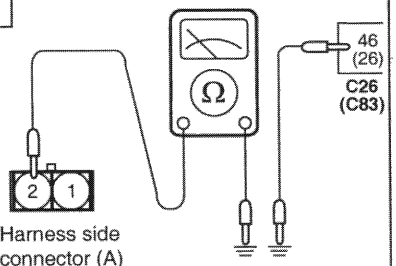 Harness side connector (A)	Check for an open-circuit, or a short-circuit to ground between the evaporative emission canister purge solenoid valve and the engine control module. o Engine control module connector : Disconnected o Evaporative emission canister purge solenoid valve connector : Disconnected	OK ⇨	END!
		NG ⇨	Repair the harness. (A2-C33:46) (A2-C83:26)

EFKB737B

ACTUATOR INSPECTION

Refer to GROUP EC-Evaporative Emission System.

MFI CONTROL RELAY EFNC0590

When the ignition switch is on, battery power is supplied to the ECM, the injectors, the mass air flow sensor, etc. While the ignition switch is turned on, current flows from the ignition switch through the current relay coil to ground.

CIRCUIT DIAGRAM

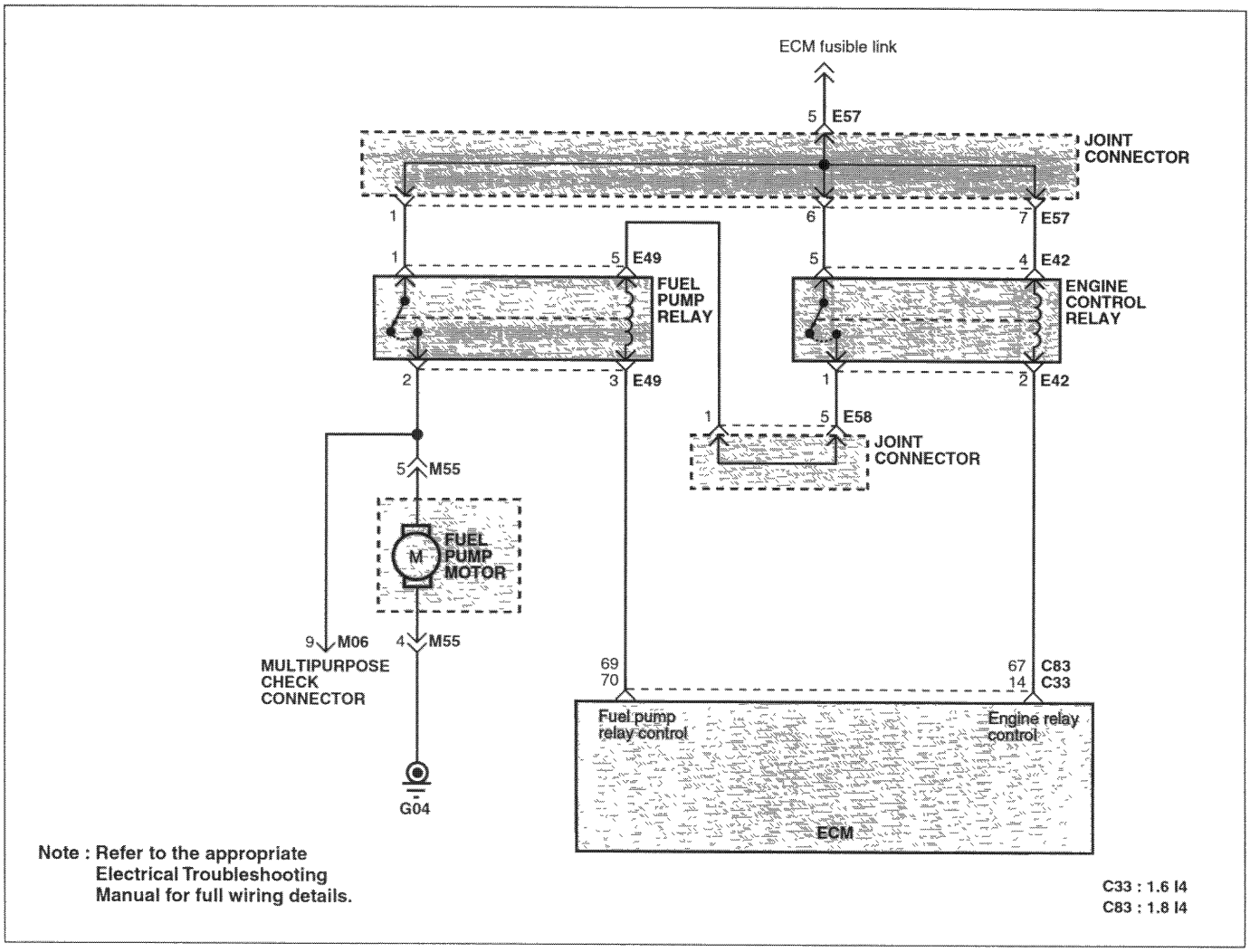

EFNC059A

HARNESS INSPECTION PROCEDURES

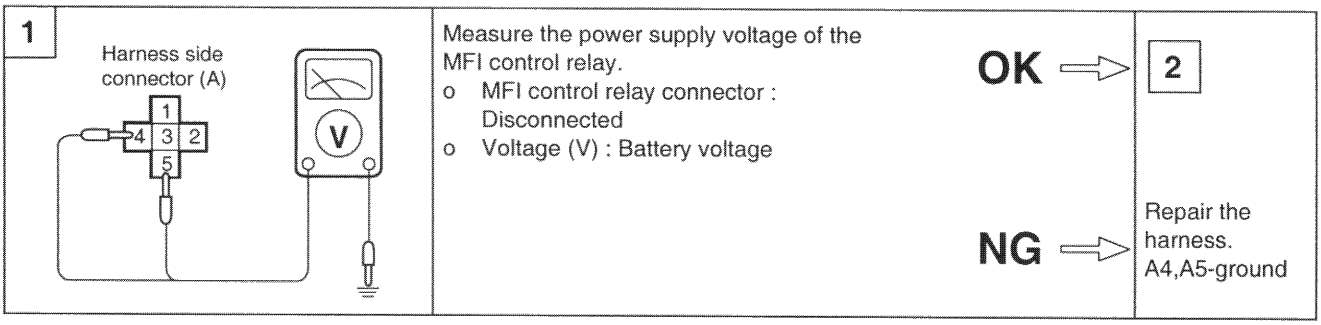

EFKB739A

2 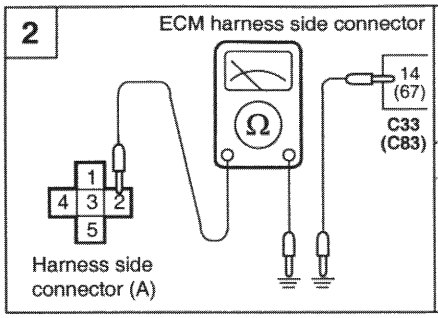	Check for open-circuit or short-circuit to ground between the engine control module and the MFI contro relay. o ECM connector : Disconnected o MFI control relay : Disconnected	**OK** ⇨	**END!**
		NG ⇨	Repair the harness. (A2-C33:14) (A2-C83:67)

EFKB739B

MFI CONTROL RELAY INSPECTION

1. Check the continuity of relay contacts between terminals 5 (+) and 1 (-).

Relay coil (between terminal 5 & 1)	Continuity
When de-energized	No
When energized	Yes

Relay coil (between terminal 5 & 3)	Continuity
When de-energized	No
When energized	Yes

2. If faulty, replace the MFI control relay.

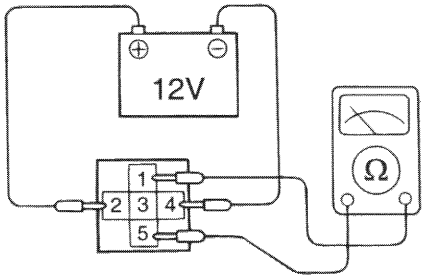

EFDA739C

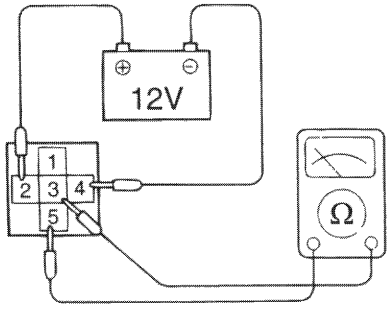

EFDA739D

IGNITION COIL EFNC0610

When the ignition power transistor is turned ON by a signal from the ECM, the ECM sends a signal to the ignition coil, then the primary current is shut off and a high voltage is induced in the secondary coil.

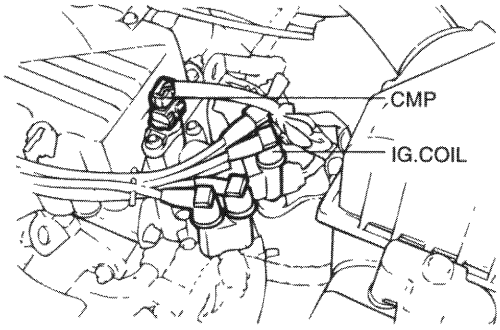

EFKB301E

CIRCUIT DIAGRAM

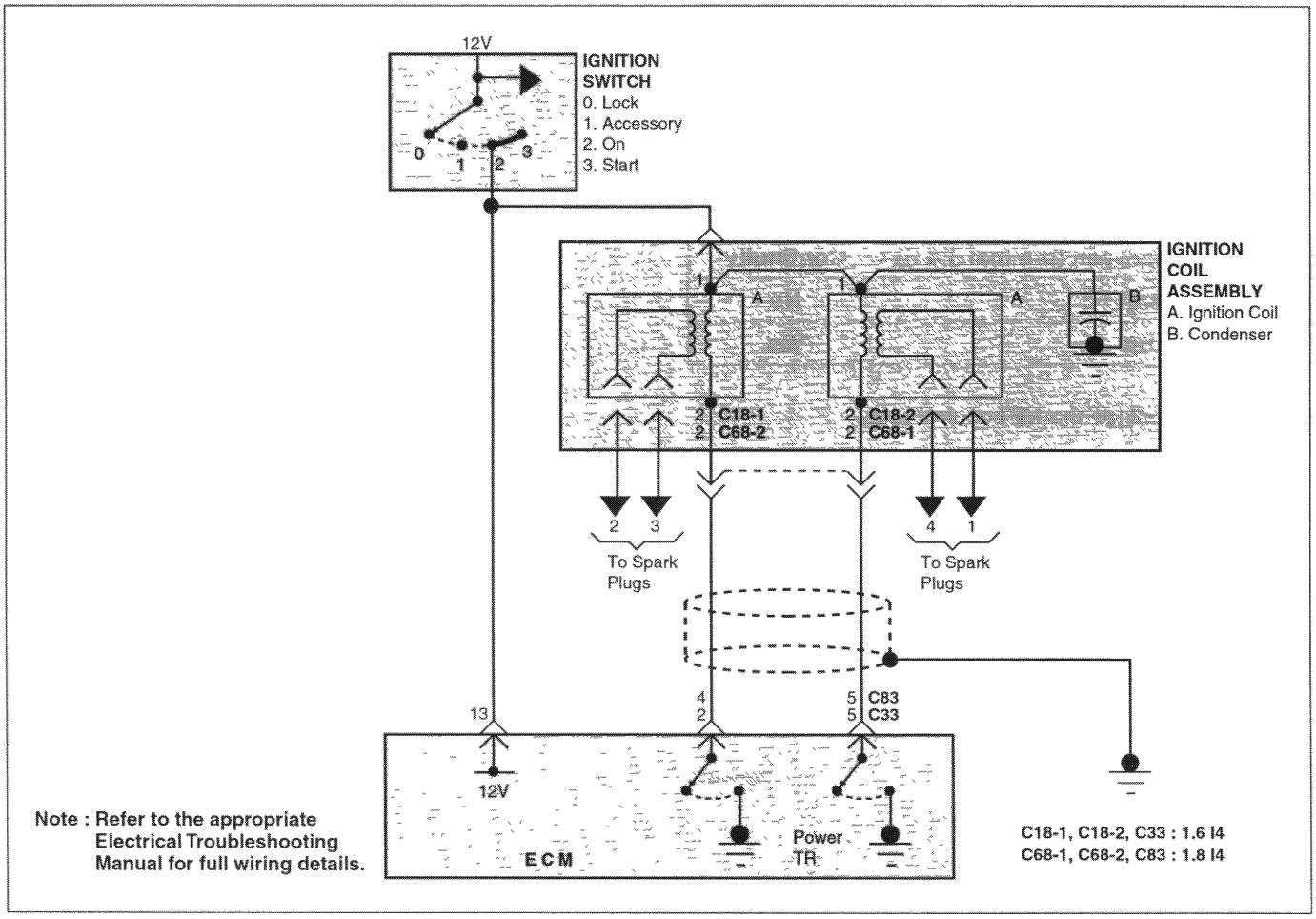

Note : Refer to the appropriate Electrical Troubleshooting Manual for full wiring details.

EFNC061A

HARNESS INSPECTION PROCEDURES

1 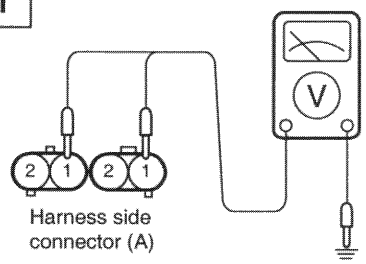	Measure the power supply voltage of the ignition coil. o Connector : Disconnected o Ignition switch : ON o Voltage (V) : Battery voltage	OK ⇨ NG ⇨	2 Repair the harness. (A1-ground)

EFDA741A

2 ECM harness side connector 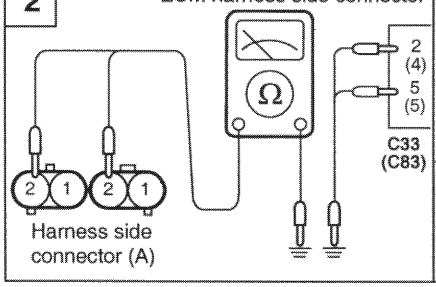	Check for an open-circuit, or a short-circuit to ground between the ignition coil and the engine control module. o Engine control module connector: Disconnected o Power transistor connector: Disconnected	OK ⇨ NG ⇨	END! Repair the harness. (A2-C33:2,5) (A2-C83:4,5)

EFKB741B

FUEL PUMP EFNC0630

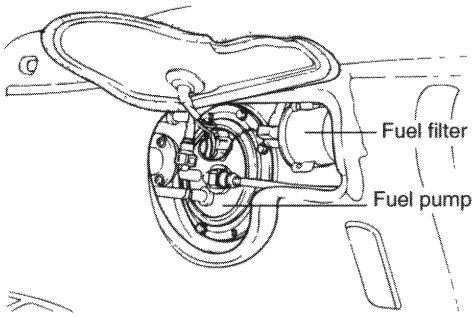

EFDA013B

CIRCUIT DIAGRAM

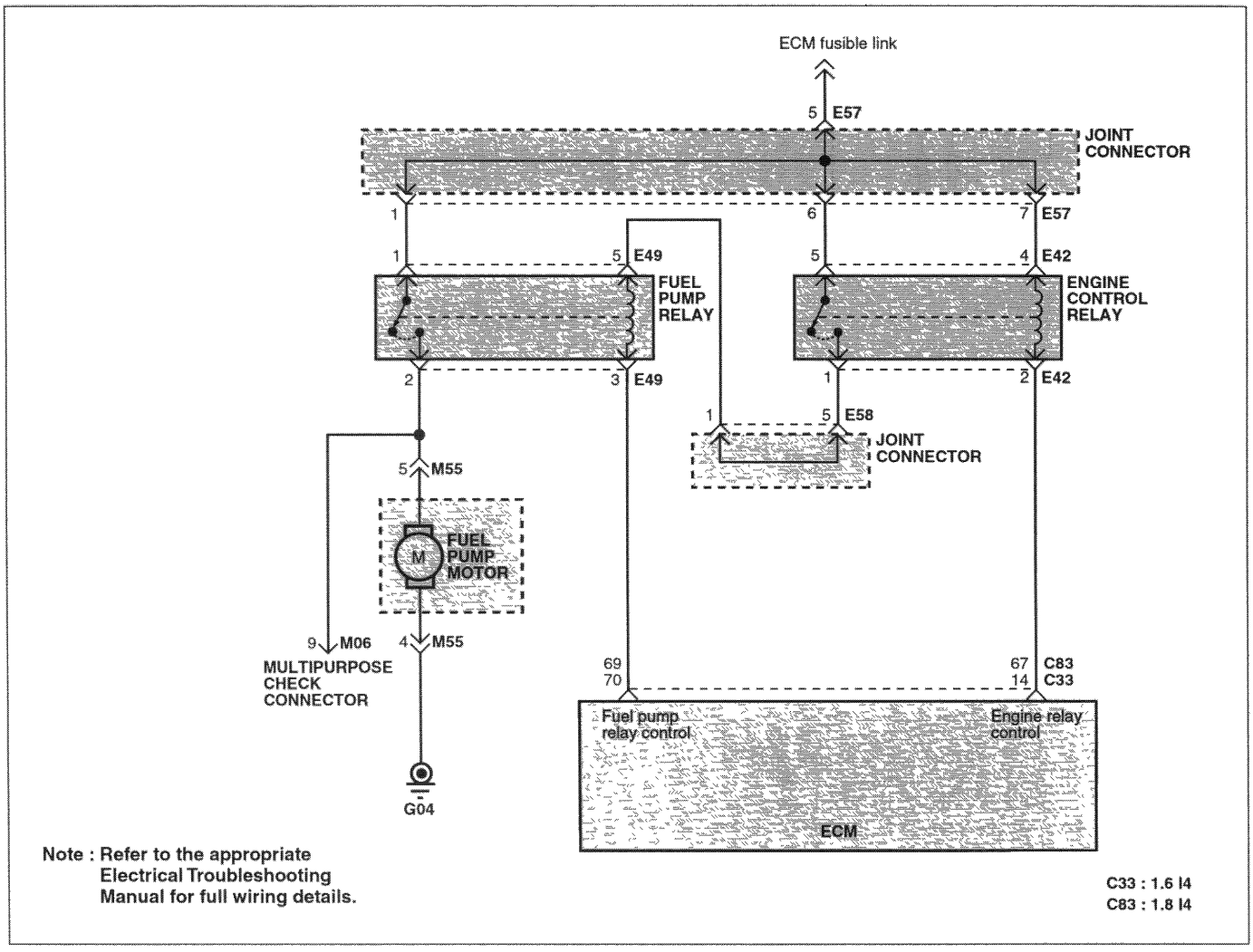

EFNC059A

HARNESS INSPECTION PROCEDURES

1

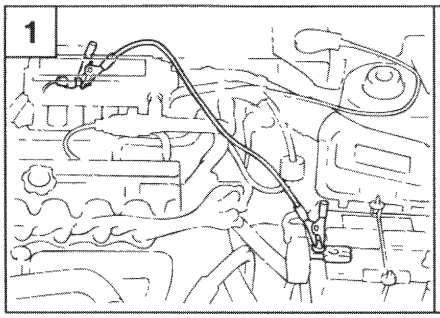

Check the fuel pump.
o Apply battery voltage to the checking terminal and operate the pump.

OK ⇨ 4

NG ⇨ 2

EFDA743A

2

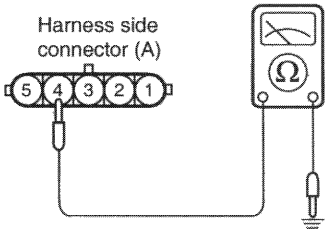

Check the ground circuit of the fuel pump.
o Connector : Disconnected

OK ⇨ 3

NG ⇨ Repair the harness. (A4-ground)

EFKB743B

3

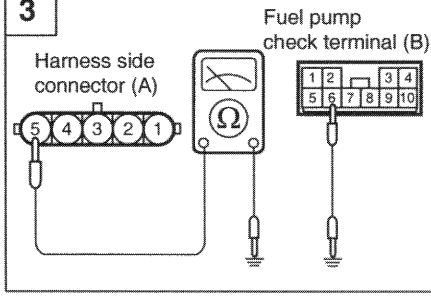

Check for continuity between the fuel pump and the check terminal.
o Connector : Disconnected

OK ⇨ 4

NG ⇨ Repair the harness. (A5-B6)

EFKB743C

4

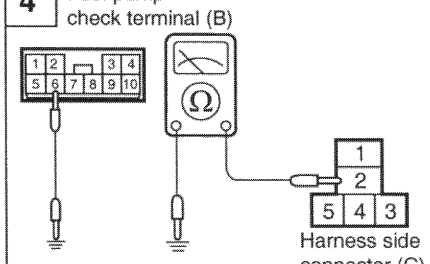

Check for continuity between the check terminal and the fuel pump control relay terminal.
o Control relay connector : Disconnected

OK ⇨ 5

NG ⇨ Repair the harness. (B6-C2)

EFKB743D

5	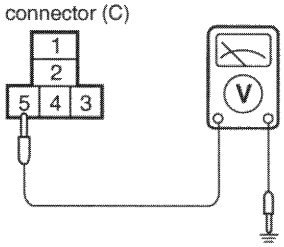	Measure the power supply voltage of the control relay. o Control relay connector : Disconnected o Ignition switch : START o Voltage (V) : System voltage	**OK** ⇨ 6 **NG** ⇨ Repair the harness. (C5-ground)

EFKB743E

6	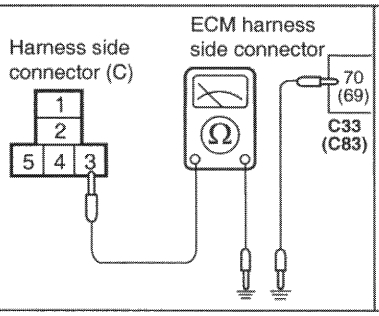	Check for an open-circuit or a short-circuit to ground between the control relay and the ECM. o Control relay connector : Disconnected o ECM connector : Disconnected	**OK** ⇨ **END!** **NG** ⇨ Repair the harness. (C3-C33:70) (C3-C83:69)

EFKB743F

ACCELERATION SENSOR EFKB7450

The acceleration sensor is used to sense rough road conditions. The sensor's signal is used by the Engine Control Module (ECM) to prevent wrongful misfire detection.

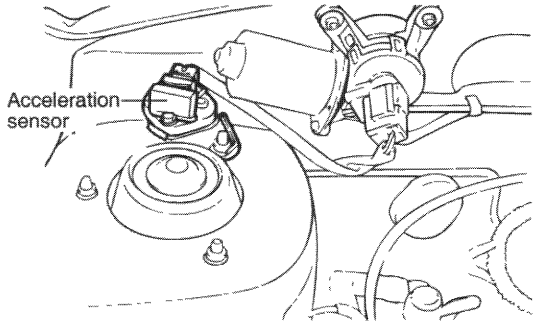

EFDA301J

CIRCUIT DIAGRAM

[1.6 I4]

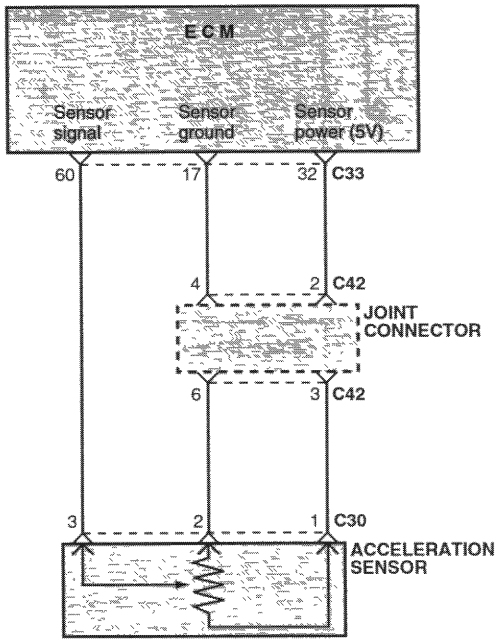

Note : Refer to the appropriate Electrical Troubleshooting Manual for full wiring details.

EFKB557A

USING VOLTMETER

Check item	Check condition	Test specification
Acceleration sensor output voltage	While idling	2.3 - 2.7V
	While driving	1.5 - 3.5V

HARNESS INSPECTION PROCEDURES

1

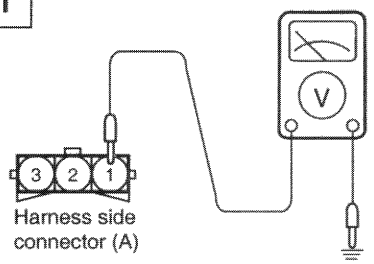

Measure the sensor voltage(5V) of the acceleration sensor.
- o Sensor connector : Disconnected
- o ECM connector : Connected

OK ⇒ **2**

NG ⇒ Repair the harness. (A1-ground)

EFKB745A

2

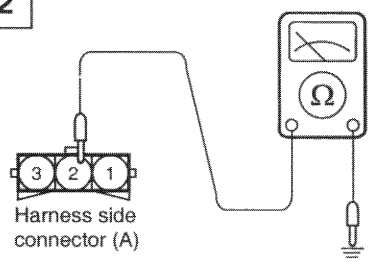

Check for continuity of the ground circuit.
- o Connector : Disconnected

OK ⇒ **3**

NG ⇒ Repair the harness. (A2-ground)

EFKB745B

3

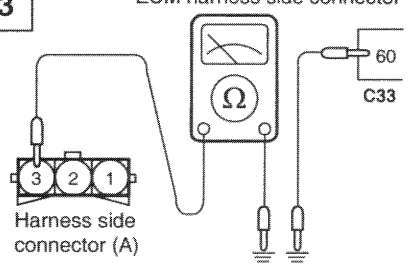

Check for an open-circuit, or a short-circuit to ground between the engine module and the acceleration sensor.
- o Acceleration sensor connector: Disconnected
- o Engine control module connector Disconnected

OK ⇒ **END!**

NG ⇒ Repair the harness. (A3-C33:60)

EFKB745C

FUEL DELIVERY SYSTEM

INJECTOR EFKB8010

COMPONENTS

[1.6 I4]

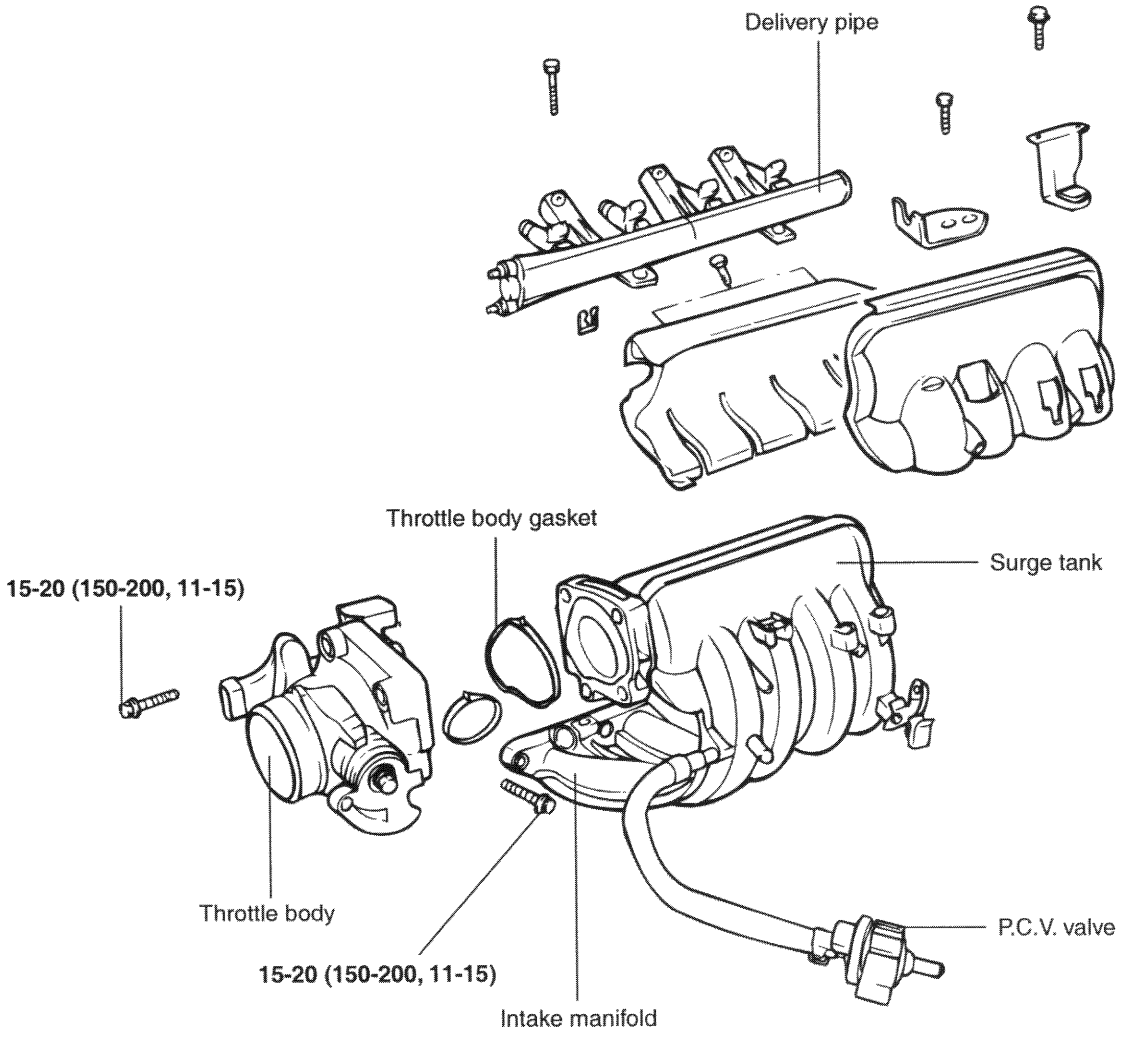

TORQUE : Nm (kg·cm, lb·ft)

EFKB801A

[1.8/2.0 I4]

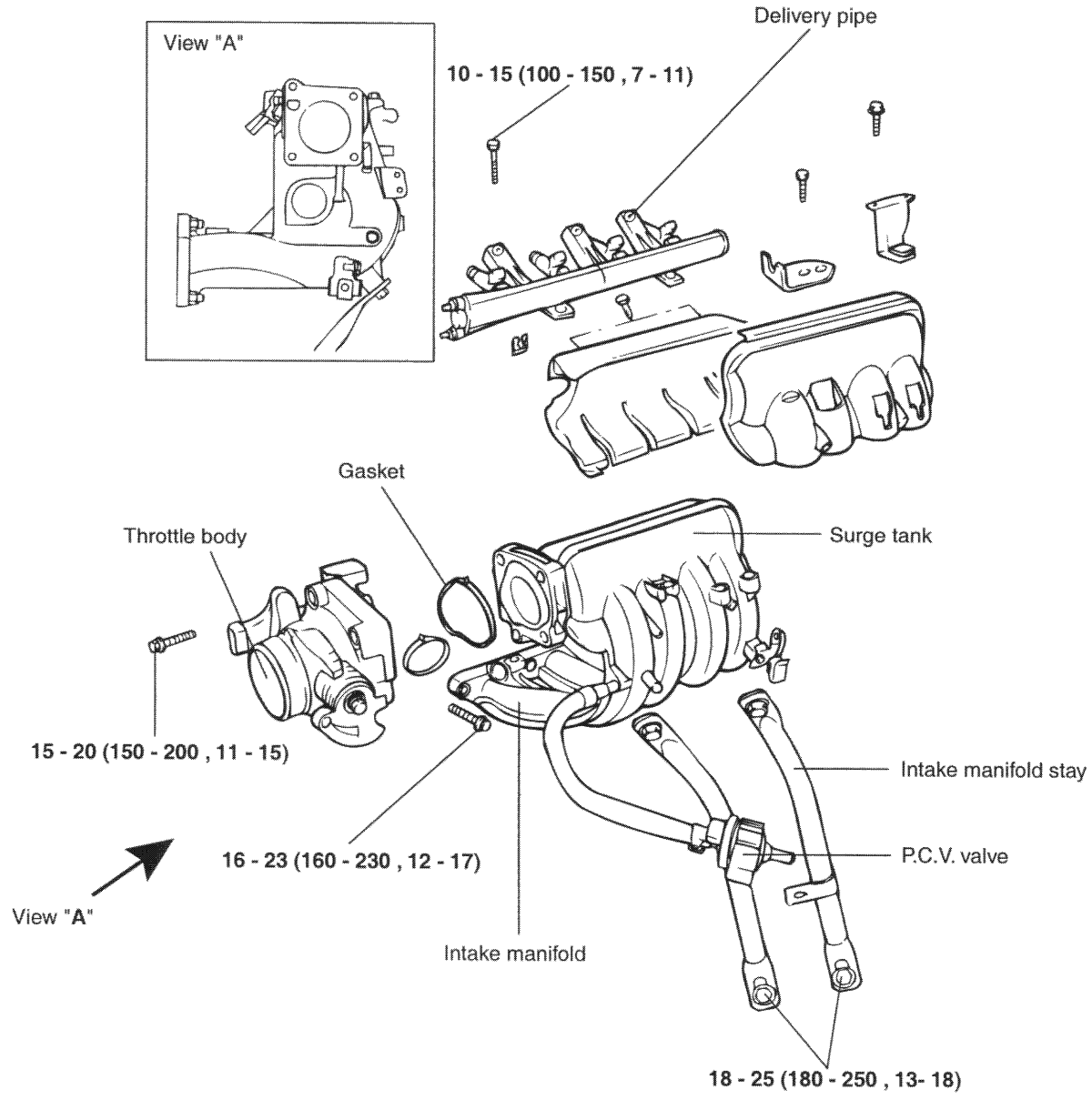

TORQUE : Nm (kg·cm, lb·ft)

EDKA050C

EFKB801B

REMOVAL EFDA8030

1. Release residual pressure from the fuel line to prevent fuel from spilling.

> ⚠ ***CAUTION***
>
> ***Cover the hose connection with rags to prevent splashing of fuel that could be caused by residual pressure in the fuel line.***

2. Remove the delivery pipe with the fuel injectors.

> ⚠ ***CAUTION***
>
> ***1. Be careful not to drop any injectors when removing the delivery pipe.***
> ***2. Be aware that fuel may flow out when removing the injector.***

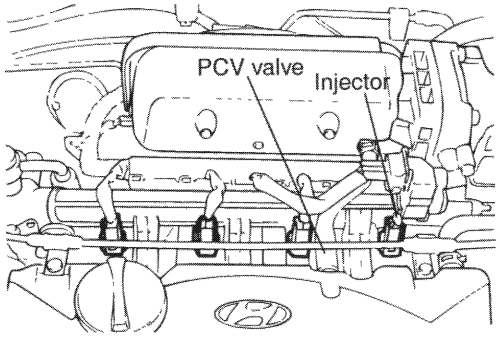

EEDA105B

INSPECTION EFDA8050

1. Measure the resistance of the injectors between the terminals using an ohmmeter.

Resistance : 15.9 ± 0.35Ω [at 20°C (68°F)]

2. If the resistance is not within specifications, replace the injector.

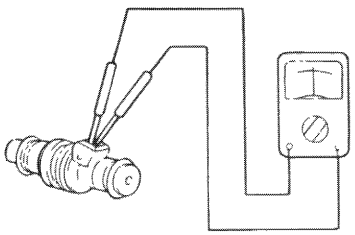

EFDA805A

INSTALLATION EFDA8070

1. Install a new grommet and O-ring to the injector.
2. Apply a coating of solvent, spindle oil or gasoline to the O-ring of the injector.

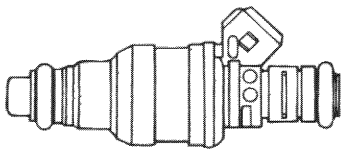

EFDA807A

3. While turning the injector to the left and right, fit it on to the delivery pipe.
4. Be sure the injector turns smoothly.

> ***NOTE***
>
> *If it does turn smoothly, the O-ring may be jammed: Remove the injector and re-insert it into the delivery pipe and recheck.*

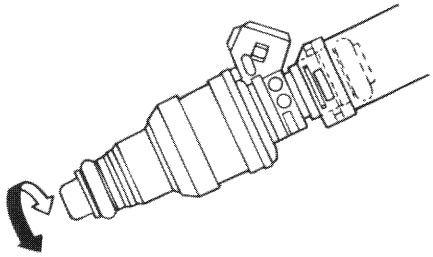

EFDA807B

THROTTLE BODY EFDA8090

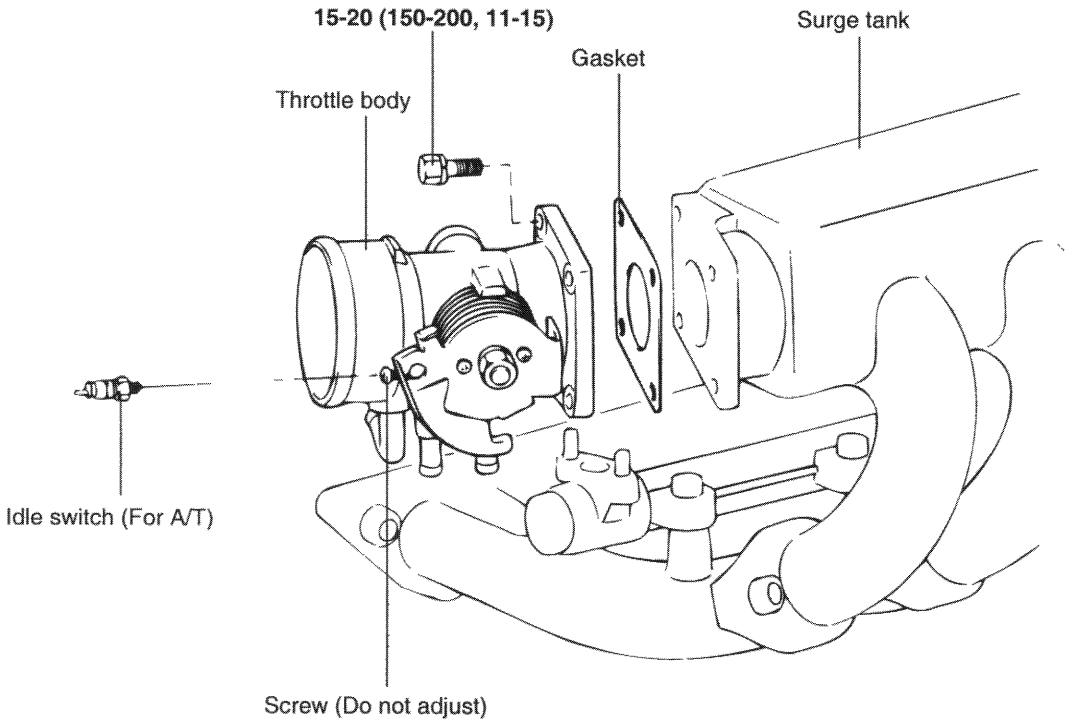

TORQUE : Nm (kg·cm, lb·ft)

EFDA809A

REMOVAL EFDA8110

CAUTION

The throttle valve must not be removed.

Remove the throttle position sensor.

NOTE

Except when necessary for replacement, the throttle position sensor must not be removed.

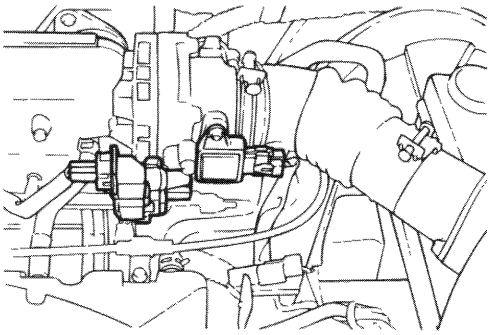

EFDA301M

INSPECTION EFDA8130

1. Check the throttle body for cracks.
2. Check for restriction in the vacuum port or passage.
3. Check for interference when moving the accelerator cable.

⚠ ***CAUTION***

- ***Throttle valve set screw was adjusted in the production line with the air volume (0.516 ± 5% g/sec) during idling. So please DO NOT ADJUST IT voluntarily.***
- ***When the idle rpm is out of specification, check the relevant sensors and their input or output value first.***
- ***The throttle body does not need to be cleaned because carbon in throttle body does not affect the system's operation at all.***

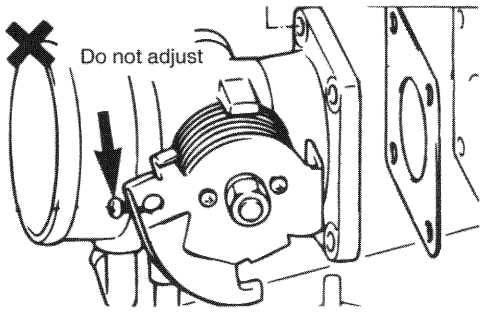

EFDA813A

FUEL TANK EFDA8150

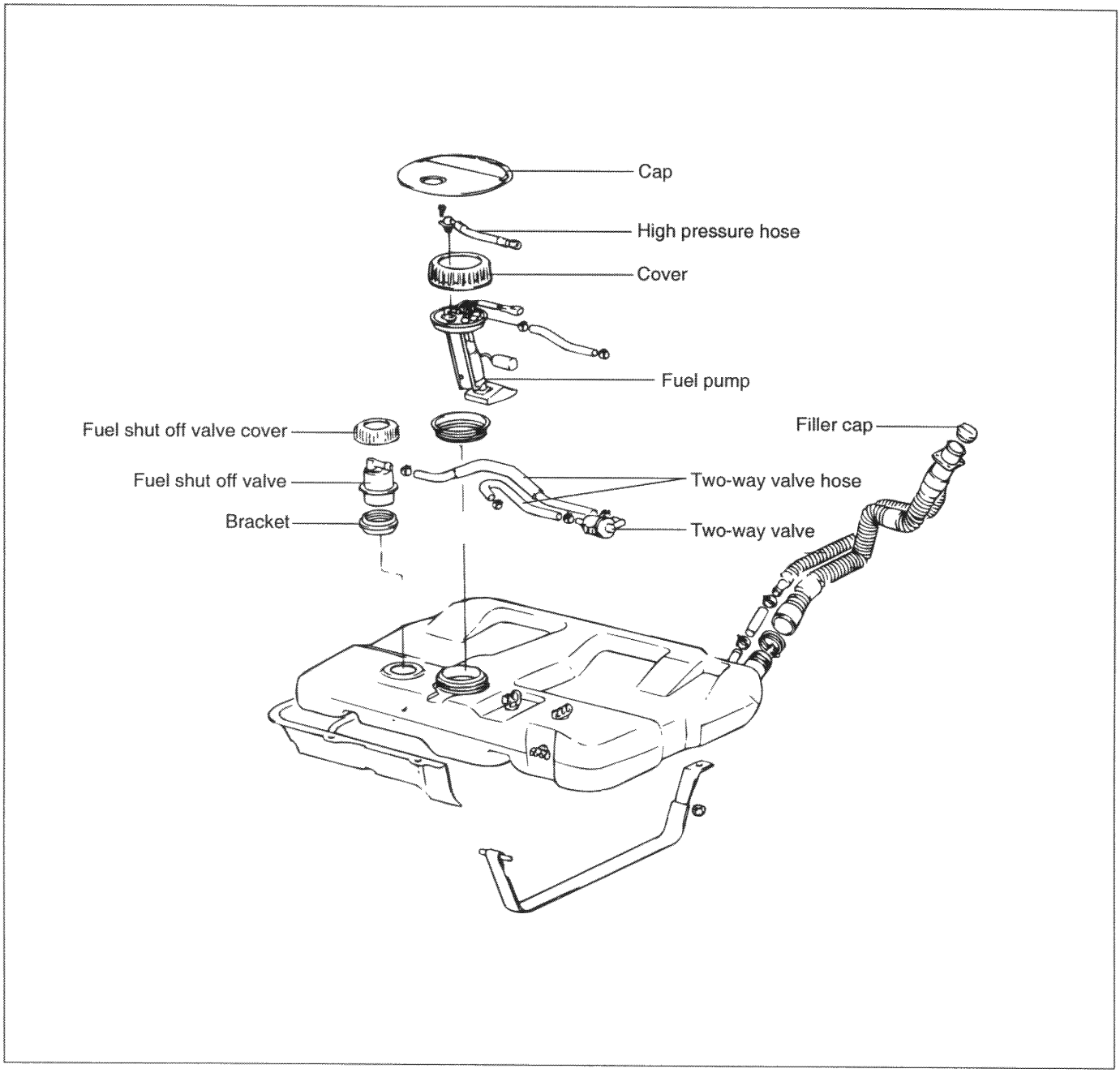

EFDA815A

REMOVAL EFKB8170

1. Press the two taps under the rear seat and raise the seat, then detach the inspection panel of the fuel pump.

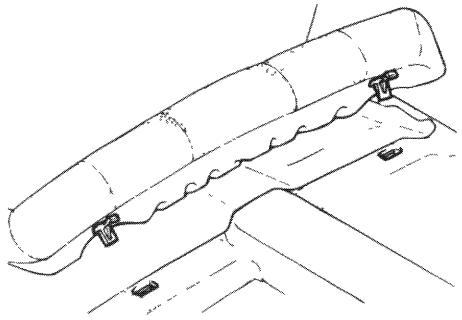

EFDA013A

2. To reduce the internal pressure of the fuel lines and hoses, first start the engine with the fuel pump disconnected and wait until it stops by itself.

   NOTE

   Be sure to reduce the fuel pressure before disconnecting the fuel main pipe and hose. Otherwise fuel will spill out.

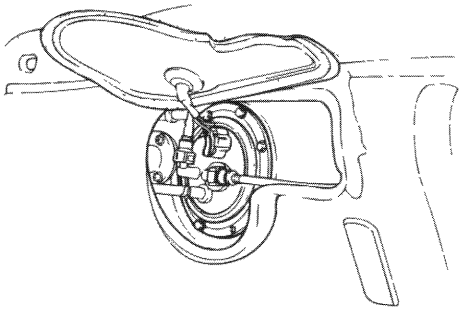

EFKB013B

3. Disconnect the battery cable from the negative (-) terminal of the battery.

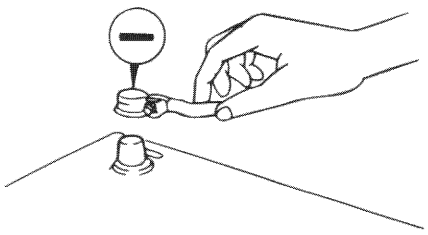

EFDA817B

4. Disconnect the high pressure hose from the fuel filter output side, and disconnect the tap for static electricity.

   CAUTION

   Cover the hose connection with a shop tower to prevent splashing of fuel that could be caused by residual pressure in the fuel line.

5. Lift up the vehicle.

6. Detach the fuel filler hose and leveling hose.

7. Support the fuel tank with a jack.

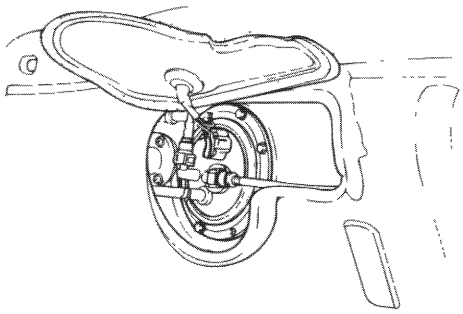

EFKB013B

8. Remove the fuel tank bands.

9. Remove the fuel tank.

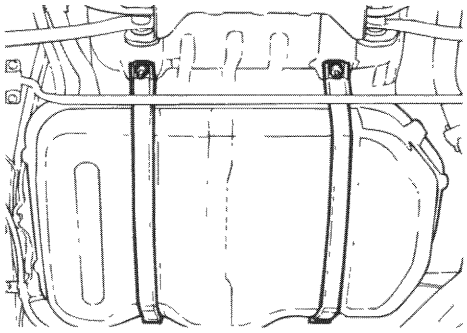

EFDA817C

INSPECTION EFDA8190

1. Check the hoses and the pipes for cracks or damage.
2. Check the fuel tank cap for proper operation.
3. Check the fuel tank for deformation, corrosion or cracking.
4. Check the inside of the fuel tank for dirt or foreign material.
5. Check the in-tank fuel filter for damage or restriction.
6. Test the two-way valve for proper operation.

7. To check the two-way valve, lightly blow into the inlet and outlet. If air passes through after slight resistance, then the valve is good.

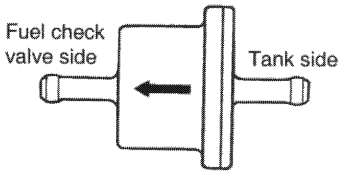

EFDA819A

INSTALLATION EFKB8210

1. Confirm that the pad is fully bonded to the fuel tank, and install the fuel tank by tightening the self-locking nuts.

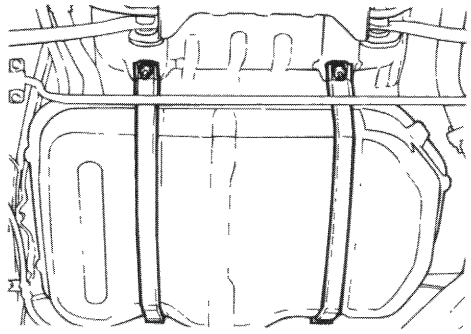

EFDA817C

2. Connect the leveling hose to the tank and the filler neck. Install approximately 40mm (1.6 in.).

3. When connecting the filler hose, the end with the shorter straight pipe should be connected to the tank side.

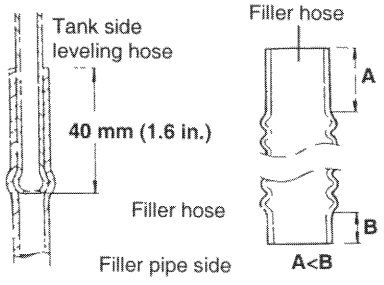

EFDA821A

4. Connect the vapor hose. When attaching the vapor hose to the line, be sure that the hose is attached as shown in the illustration.

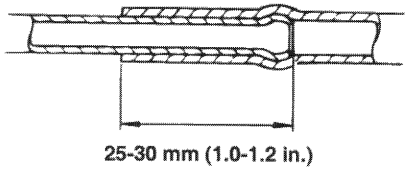

EFDA821B

5. Connect the high pressure hose to the fuel pump. Be careful that the fuel hose does not twist.

6. Connect the electrical fuel pump connector.

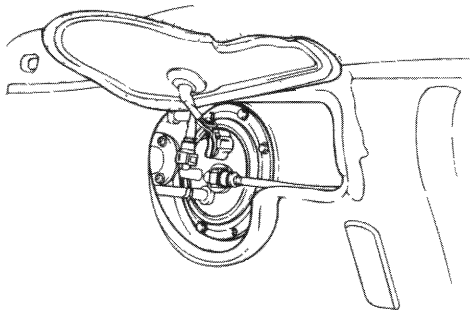

EFKB013B

ENGINE CONTROL EFDA8310

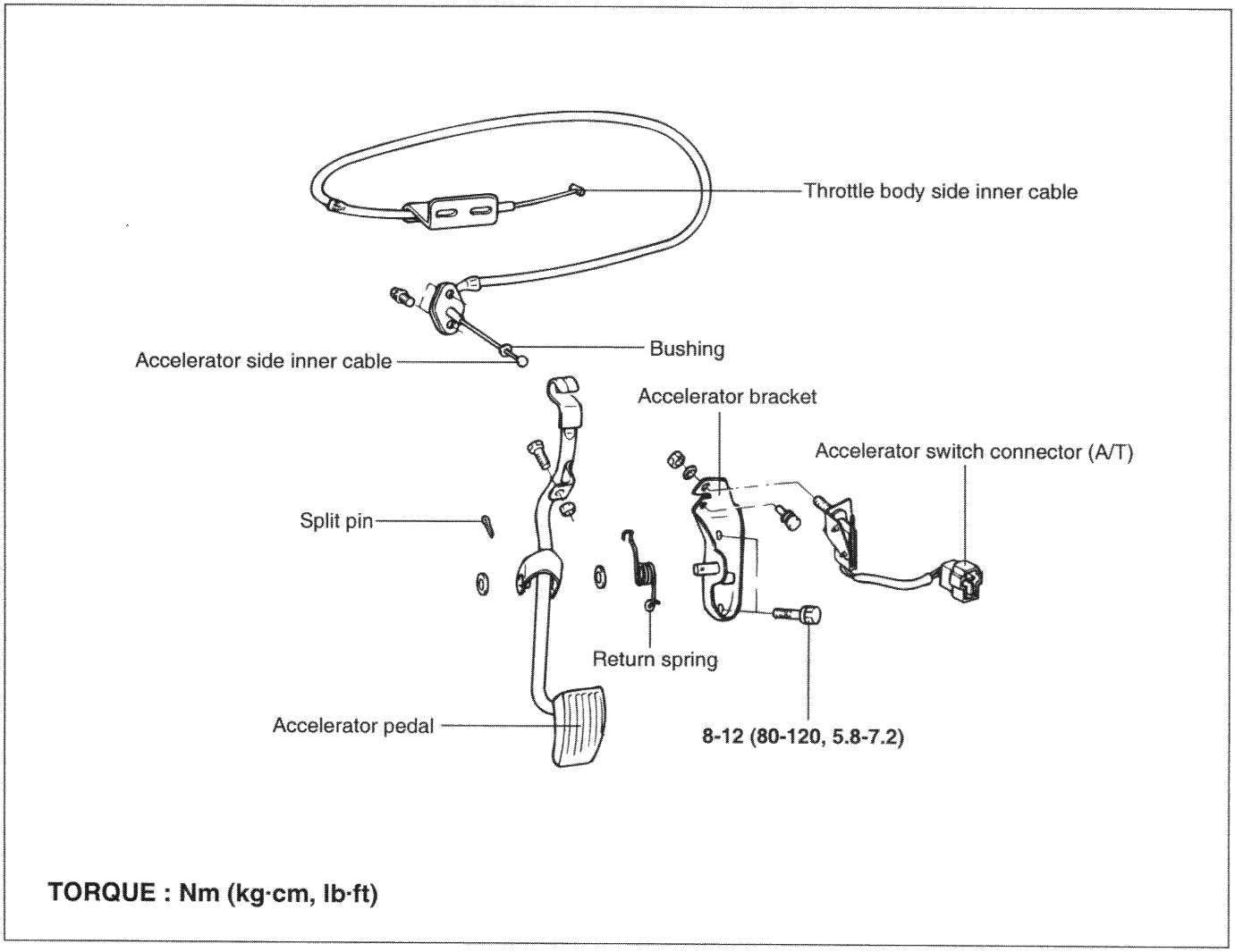

EFDA831A

REMOVAL EFDA8330

1. Remove the bushing and inner cable of the accelerator arm side.

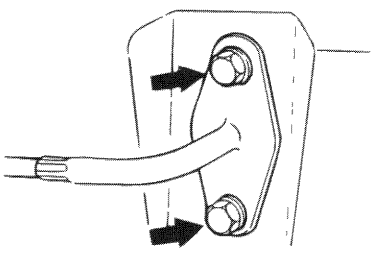

EFDA833A

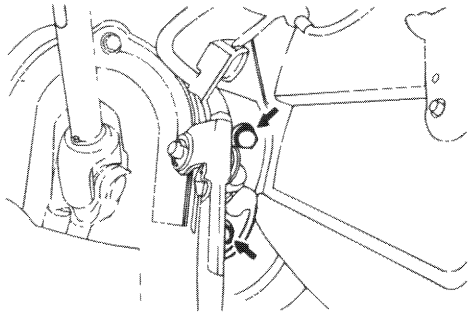

EFDA833B

2. After disconnecting the accelerator switch connector, loosen the bolts of the accelerator arm bracket and remove.

INSTALLATION EFDA8370

1. When installing the return spring and accelerator arm, apply multi-purpose grease around each moving point of the accelerator arm.

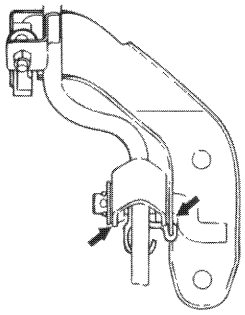

EFDA837A

2. Apply sealant to the bolt mounting hole, and tighten the accelerator arm bracket.

Tightening torque
Accelerator arm bracket bolts :

8-12Nm (80-120 kg.cm, 5.8-7.2 lb.ft)

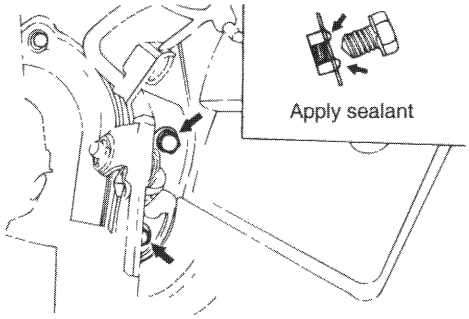

EFDA837B

3. Securely install the resin bushing of the accelerator cable on the end of the accelerator arm.

4. Apply multipurpose grease around the cable end.

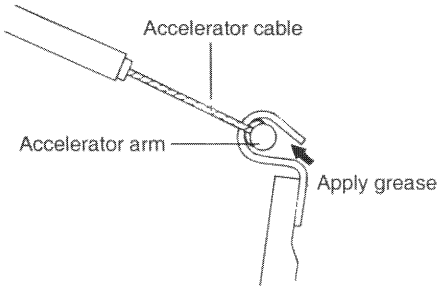

EFDA837C

INSPECTION EFDA8350

1. Check the inner and outer cable for damage.
2. Check the cable for smooth movement.
3. Check the accelerator arm for deformation.
4. Check the return spring for deterioration.
5. Check the connection of the bushing to end metal fitting.
6. Check that the accelerator switch operates properly.

TROUBLESHOOTING FOR DTC

DIAGNOSTIC ITEM EFKB5020

DTC	Diagnostic item
P0105	Manifold Absolute Pressure Sensor Circuit Malfunction
P0106	Manifold Absolute Pressure Sensor Circuit Range/Performance Problem
P0107	Manifold Absolute Pressure Sensor Range Check Low
P0108	Manifold Absolute Pressure Sensor Range Check High

DESCRIPTION

The Manifold Absolute Pressure(MAP) sensor is essentially a strain gauge used to measure the pressure in the surge tank. Inside the sensor is a metal diaphragm with a small wire attached. The diaphragm flexes according to changes in pressure. When the diaphragm flexes, the wire attached to it stretches, changing the resistance of the wire. The Engine control Module (ECM) applies five volts to the MAP sensor and measures the voltage drop across the sensor. Sensor output is in volts and as pressure decreases, the voltage drop across the sensor increases. Since the MAP sensor is used as an air flow sensor, the sensor signal is an important input. The ECM uses the information to determine fuel amount and ignition timing.

FAILURE CONDITIONS

The MAP sensor outputs a voltage which corresponds to the pressure in the surge tank. The ECM checks whether this voltage is within a specified range. The ECM will set P0105 and the Malfunction Indicator Lamp (MIL) will turn on if the MAP sensor output voltage has continued to be 4.5V or higher — corresponding to a surge tank pressure of 114kPa (17psi) or higher — for 4 sec. or to be 1.95V or lower — corresponding to a surge tank pressure of 50kPa (7.4psi) or lower — for 4 sec.

CIRCUIT DIAGRAM

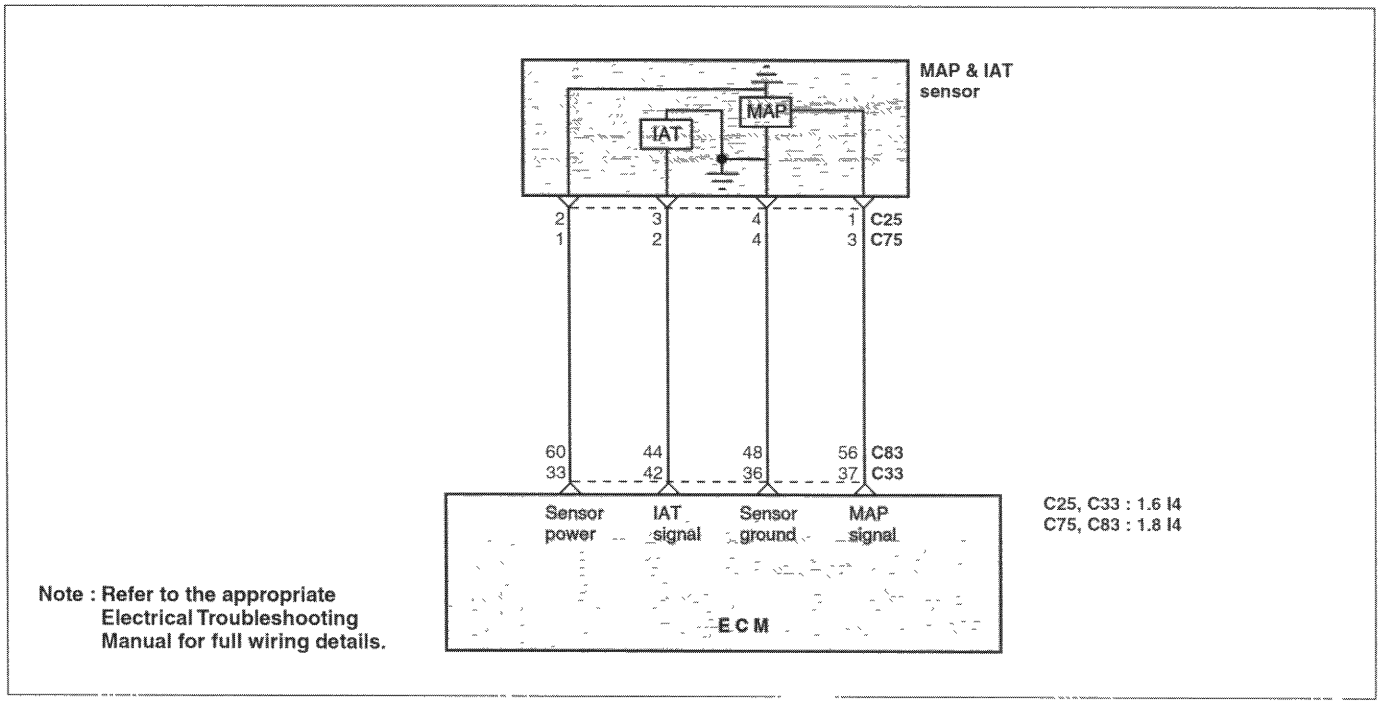

EFNC027A

TEST PROCEDURE

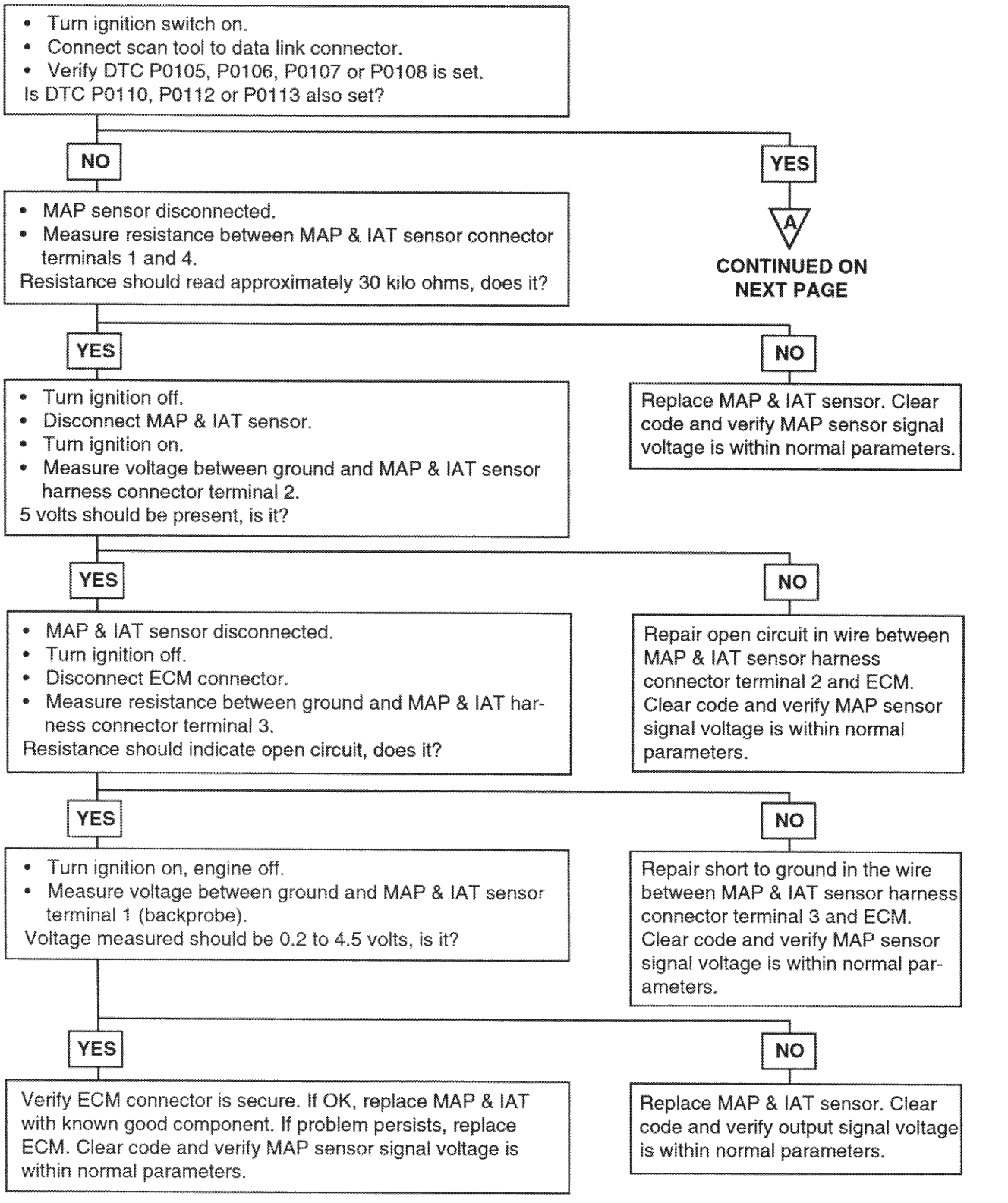

EFNC502B

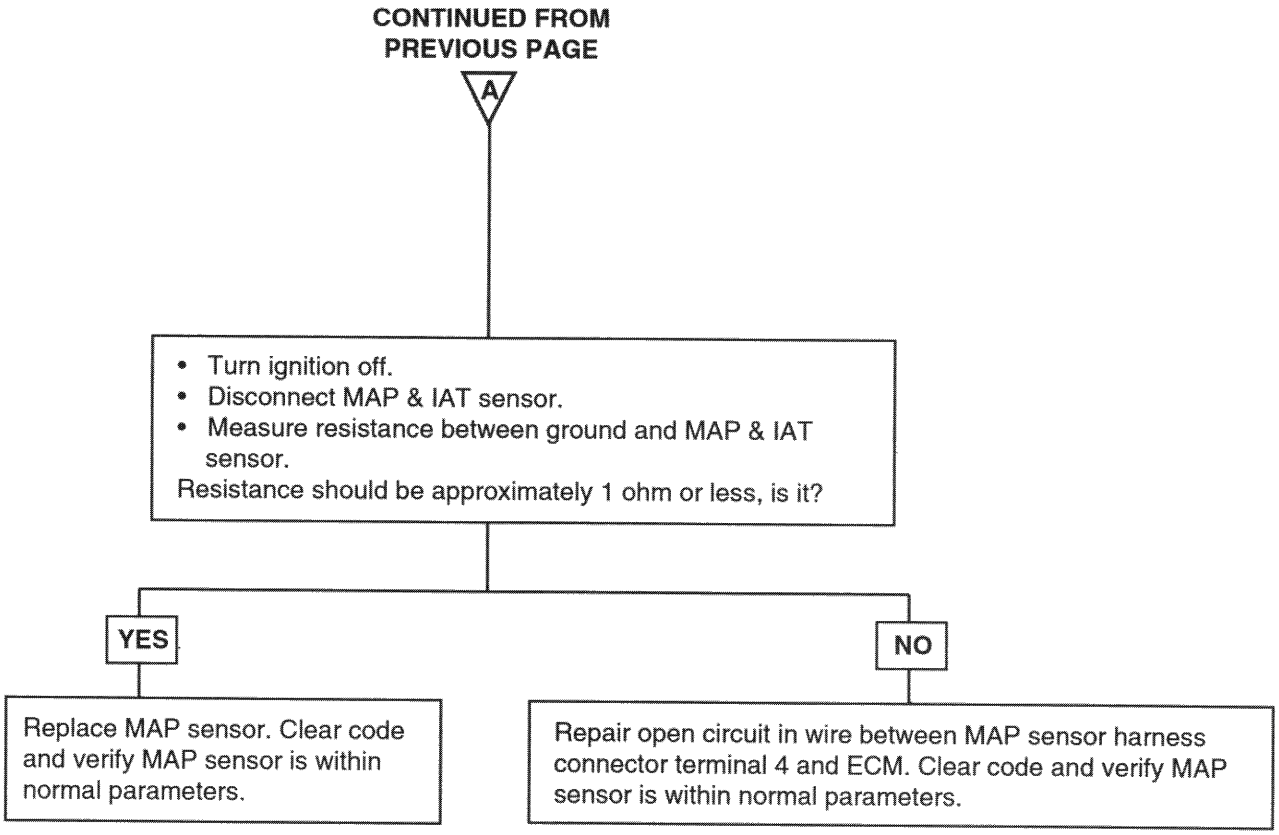
CONTINUED FROM PREVIOUS PAGE
A
• Turn ignition off.
• Disconnect MAP & IAT sensor.
• Measure resistance between ground and MAP & IAT sensor.
Resistance should be approximately 1 ohm or less, is it?
YES
NO
Replace MAP sensor. Clear code and verify MAP sensor is within normal parameters.
Repair open circuit in wire between MAP sensor harness connector terminal 4 and ECM. Clear code and verify MAP sensor is within normal parameters.

EFNC5060

DTC	Diagnostic item
P0110	Intake Air Temperature Circuit Malfunction
P0112	Intake Air Temperature Low Input
P0113	Intake Air Temperature High Input

DESCRIPTION

The Intake Air Temperature (IAT) sensor is built in to the MAF sensor. The IAT sensor is a variable resistor whose resistance changes as the temperature of the air flowing through the air intake changes. The Engine Control Module (ECM) uses the IAT sensor input to adjust fuel injector pulse width. When the temperature sensed is cold, the ECM enriches fuel mixture by increasing injector pulse width; as the air warms, the injector pulse width time is shortened.

FAILURE CONDITIONS

The ECM will set P0112 and the Malfunction Indicator Lamp (MIL) will turn on if the IAT sensor indicates a temperature lower than -49°F (-45°C) for 0.2 seconds during two driving cycles. This check is made after the engine has run for 4 minutes and 10 seconds and then idles for 30 seconds (with no fuel cut-off during a coast-down). This code indicates a lower than expected temperature is being read by the IAT sensor or ECM after the engine has been warmed up.

CIRCUIT DIAGRAM

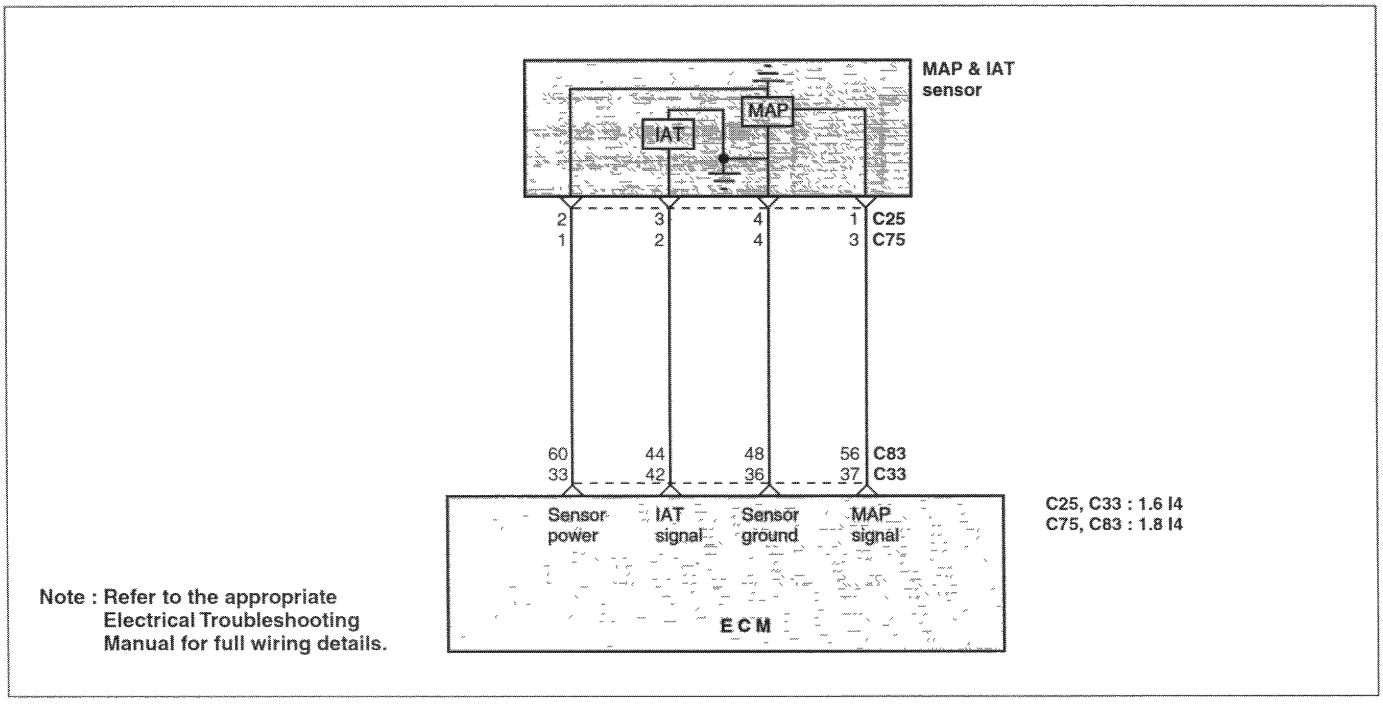

EFNC027A

TEST PROCEDURE

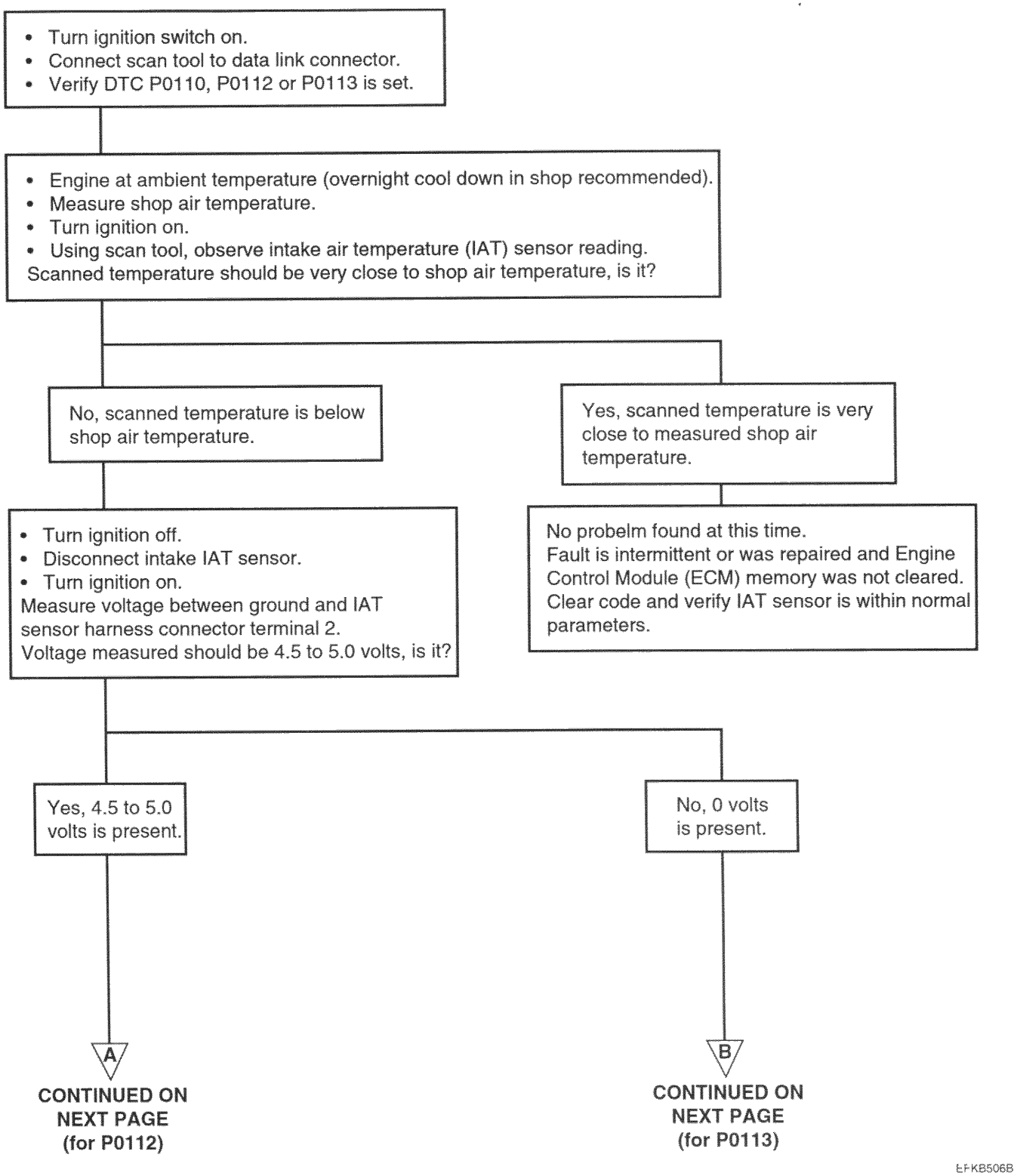

EFKB506B

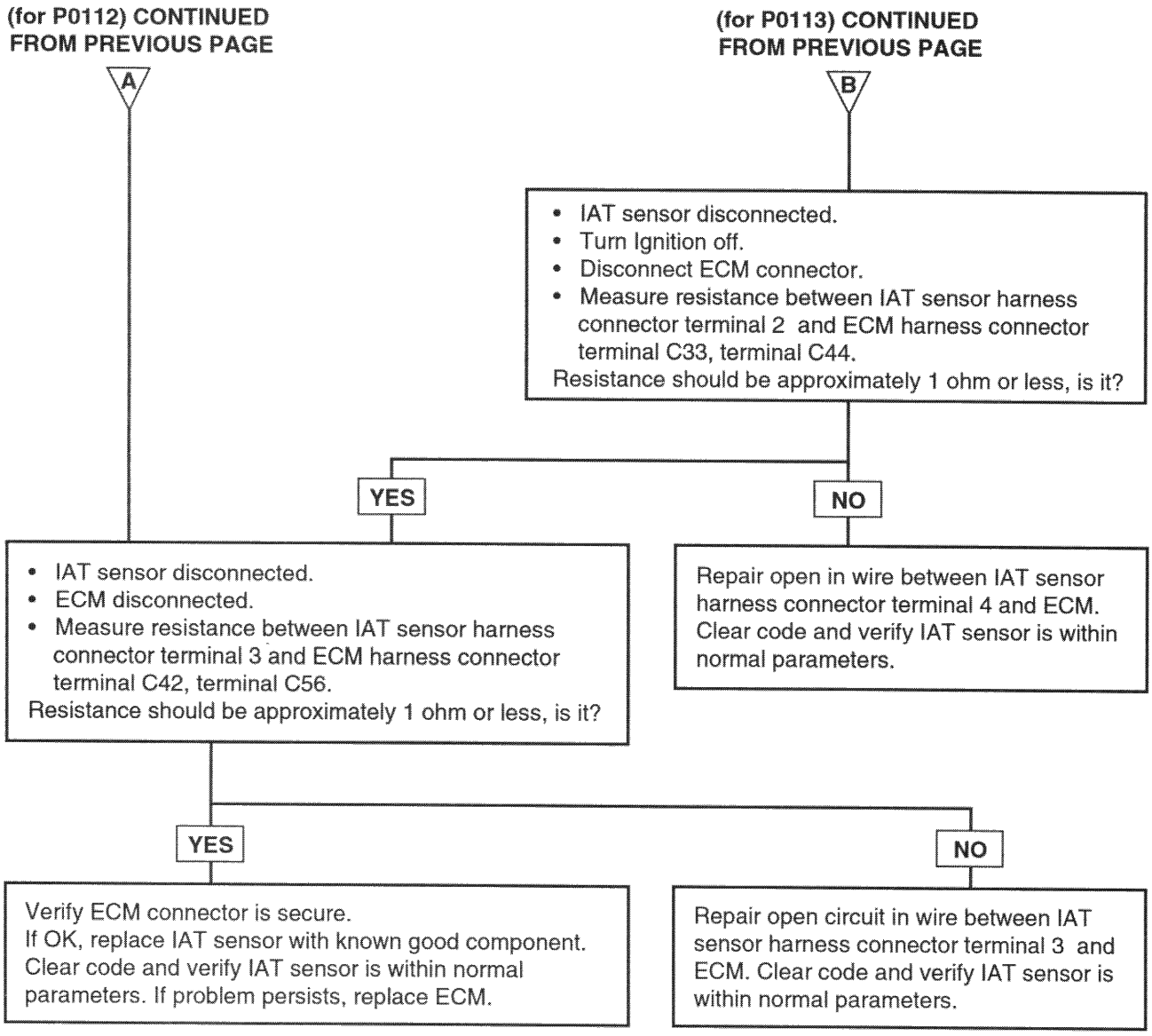
(for P0112) CONTINUED FROM PREVIOUS PAGE
A
(for P0113) CONTINUED FROM PREVIOUS PAGE
B
• IAT sensor disconnected.
• Turn Ignition off.
• Disconnect ECM connector.
• Measure resistance between IAT sensor harness connector terminal 2 and ECM harness connector terminal C33, terminal C44.
Resistance should be approximately 1 ohm or less, is it?
YES
NO
• IAT sensor disconnected.
• ECM disconnected.
• Measure resistance between IAT sensor harness connector terminal 3 and ECM harness connector terminal C42, terminal C56.
Resistance should be approximately 1 ohm or less, is it?
Repair open in wire between IAT sensor harness connector terminal 4 and ECM. Clear code and verify IAT sensor is within normal parameters.
YES
NO
Verify ECM connector is secure.
If OK, replace IAT sensor with known good component. Clear code and verify IAT sensor is within normal parameters. If problem persists, replace ECM.
Repair open circuit in wire between IAT sensor harness connector terminal 3 and ECM. Clear code and verify IAT sensor is within normal parameters.

EFKB506C

EFNC5110

DTC	Diagnostic item
P0115	Engine Coolant Temperature Circuit Malfunction
P0116	Engine Coolant Temperature Circuit Range/Performance
P0117	Engine Coolant Temperature Low Input
P0118	Engine Coolant Temperature High Input

DESCRIPTION

The Engine Coolant Temperature (ECT) sensor is located in the coolant passage of the cylinder head. The ECT sensor is a variable resistor whose resistance changes as the temperature of the engine coolant flowing past the sensor changes. When coolant temperature is low, sensor resistance is high; when coolant temperature is high, sensor resistance is low.
The Engine Control Module (ECM) checks ECT sensor voltage and uses the information to adjust fuel injector pulse width and ignition timing. When the temperature sensed is very cold, the ECM enriches the fuel mixture and advances ignition timing. As coolant temperature rises, the ECM reduces the amount of enrichment and timing advance.

FAILURE CONDITIONS

The ECM will set P0116 and the Malfunction Indicator Lamp (MIL) will turn on if the ECT sensor's actual performance curve falls more than 68°F (20°C) below the ECM's model curve (based on fuel delivery, ambient air temperature and engine running time) for 0.2 seconds during two driving cycles. This code indicates uncharacteristic engine temperature performance being read by the ECT sensor or ECM.
The ECM will set P0117 and the Malfunction Indicator Lamp (MIL) will turn on if the ECT sensor reports a temperature below -49°F (-45°C) for 0.2 seconds during two driving cycles. The ECM will set P0118 and the Malfunction Indicator Lamp (MIL) will turn on if the ECT sensor reports a temperature above 284°F (140°C) for 0.2 seconds during two driving cycles.

NOTE

The ECT sensor resistance varies with temperature as follows:

- 5900 ohms @ 32°F (0°C).
- 2500 ohms @ 68°F (20°C).
- 300 ohms @ 176°F (80°C).

CIRCUIT DIAGRAM

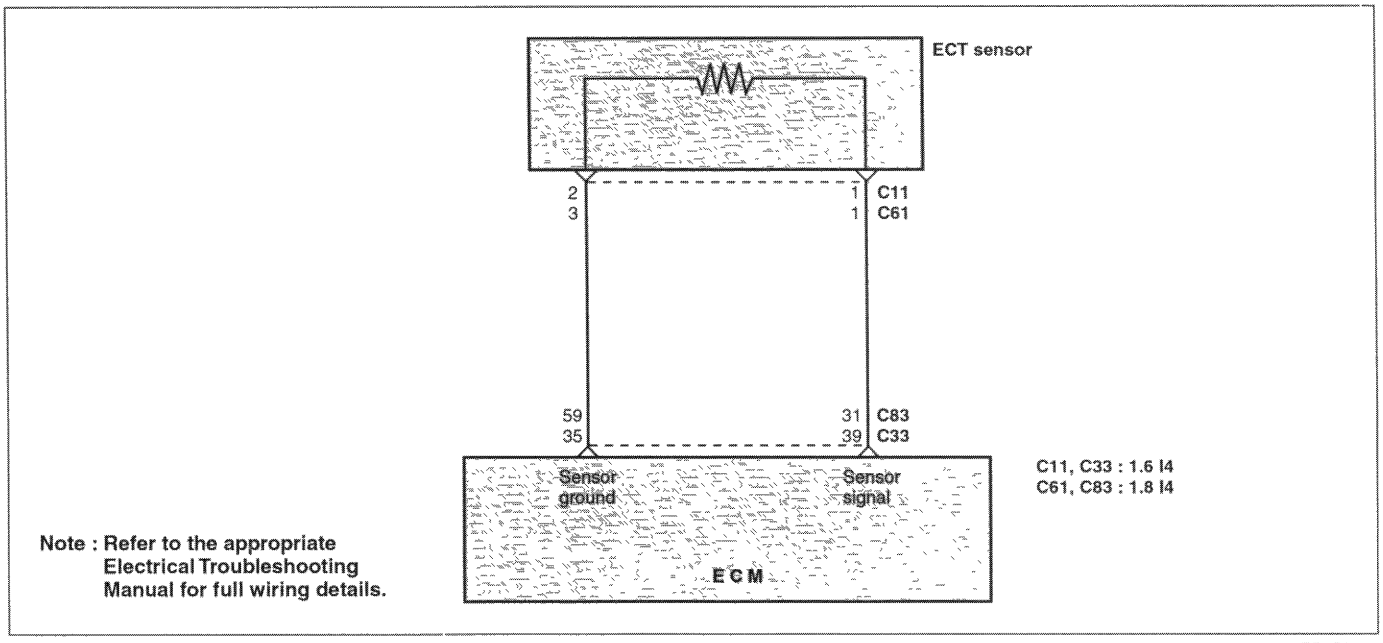

EFNC031A

TEST PROCEDURE

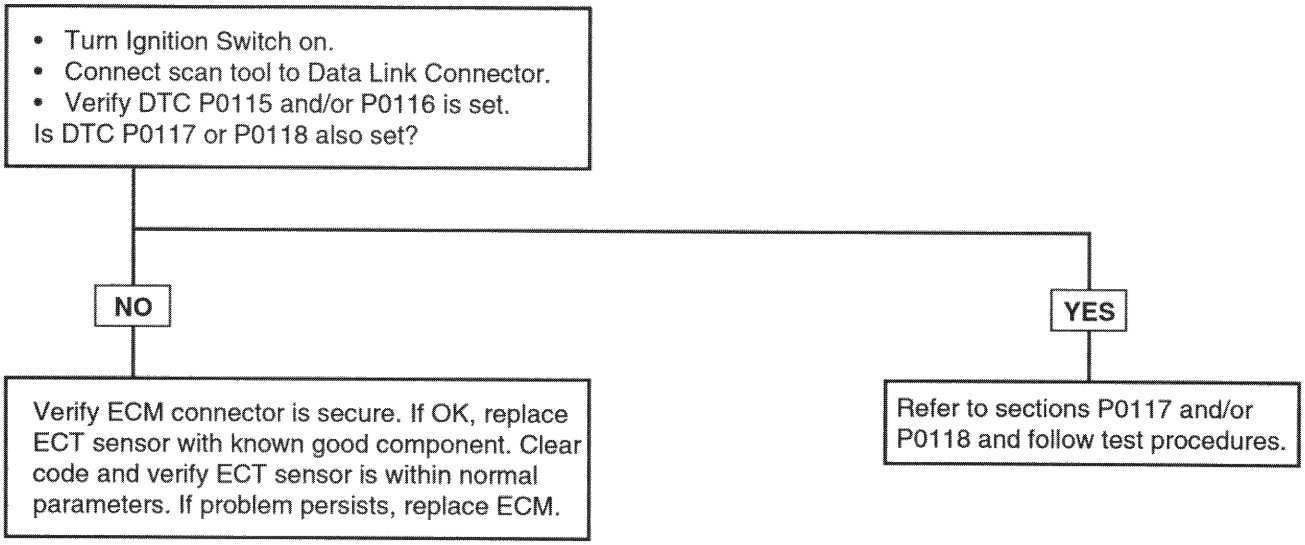

EFKB511B

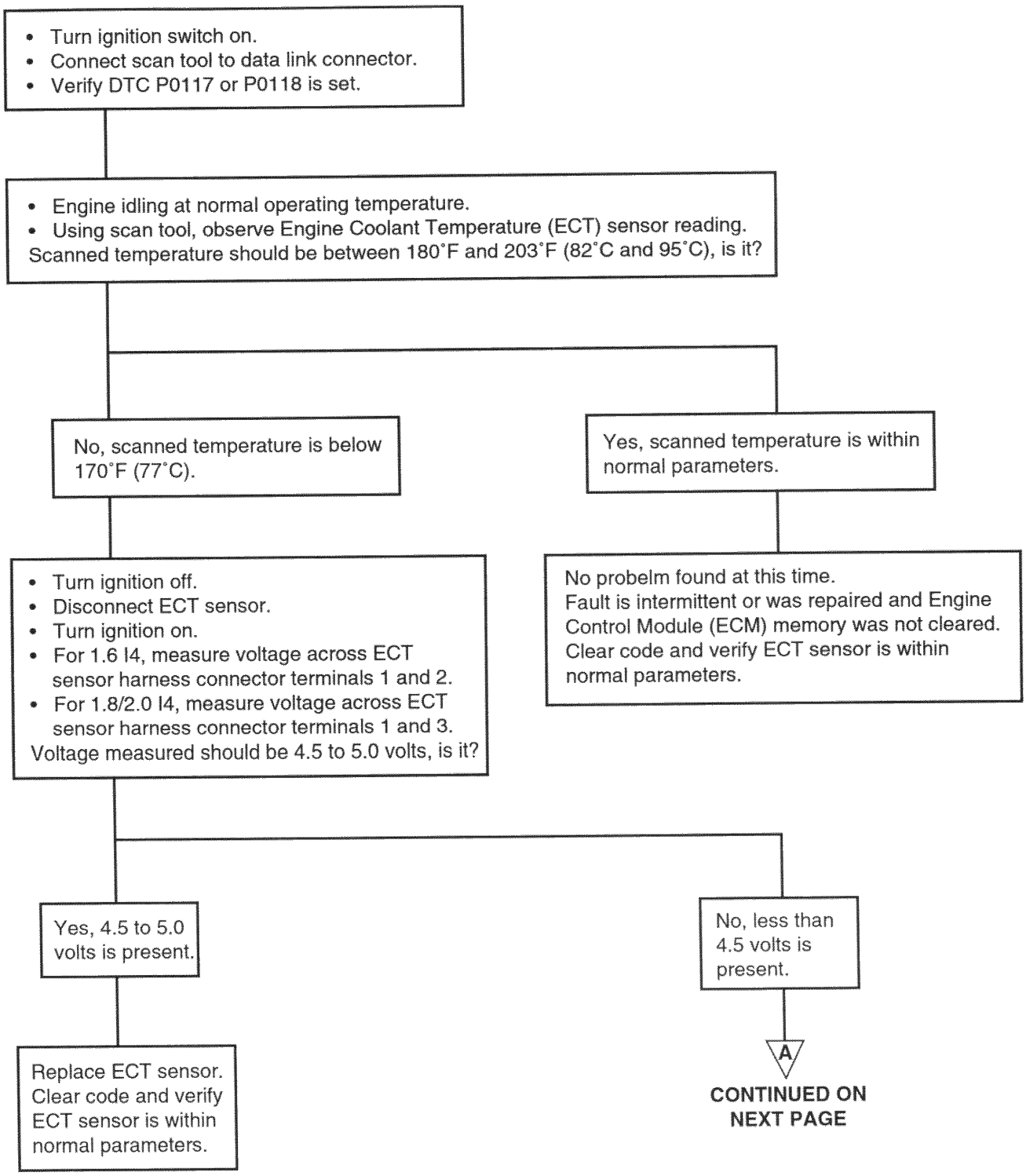
• Turn ignition switch on.
• Connect scan tool to data link connector.
• Verify DTC P0117 or P0118 is set.
• Engine idling at normal operating temperature.
• Using scan tool, observe Engine Coolant Temperature (ECT) sensor reading.
Scanned temperature should be between 180°F and 203°F (82°C and 95°C), is it?
No, scanned temperature is below 170°F (77°C).
Yes, scanned temperature is within normal parameters.
• Turn ignition off.
• Disconnect ECT sensor.
• Turn ignition on.
• For 1.6 I4, measure voltage across ECT sensor harness connector terminals 1 and 2.
• For 1.8/2.0 I4, measure voltage across ECT sensor harness connector terminals 1 and 3.
Voltage measured should be 4.5 to 5.0 volts, is it?
No probelm found at this time.
Fault is intermittent or was repaired and Engine Control Module (ECM) memory was not cleared.
Clear code and verify ECT sensor is within normal parameters.
Yes, 4.5 to 5.0 volts is present.
No, less than 4.5 volts is present.
Replace ECT sensor.
Clear code and verify ECT sensor is within normal parameters.
A
CONTINUED ON NEXT PAGE

EFNC511C

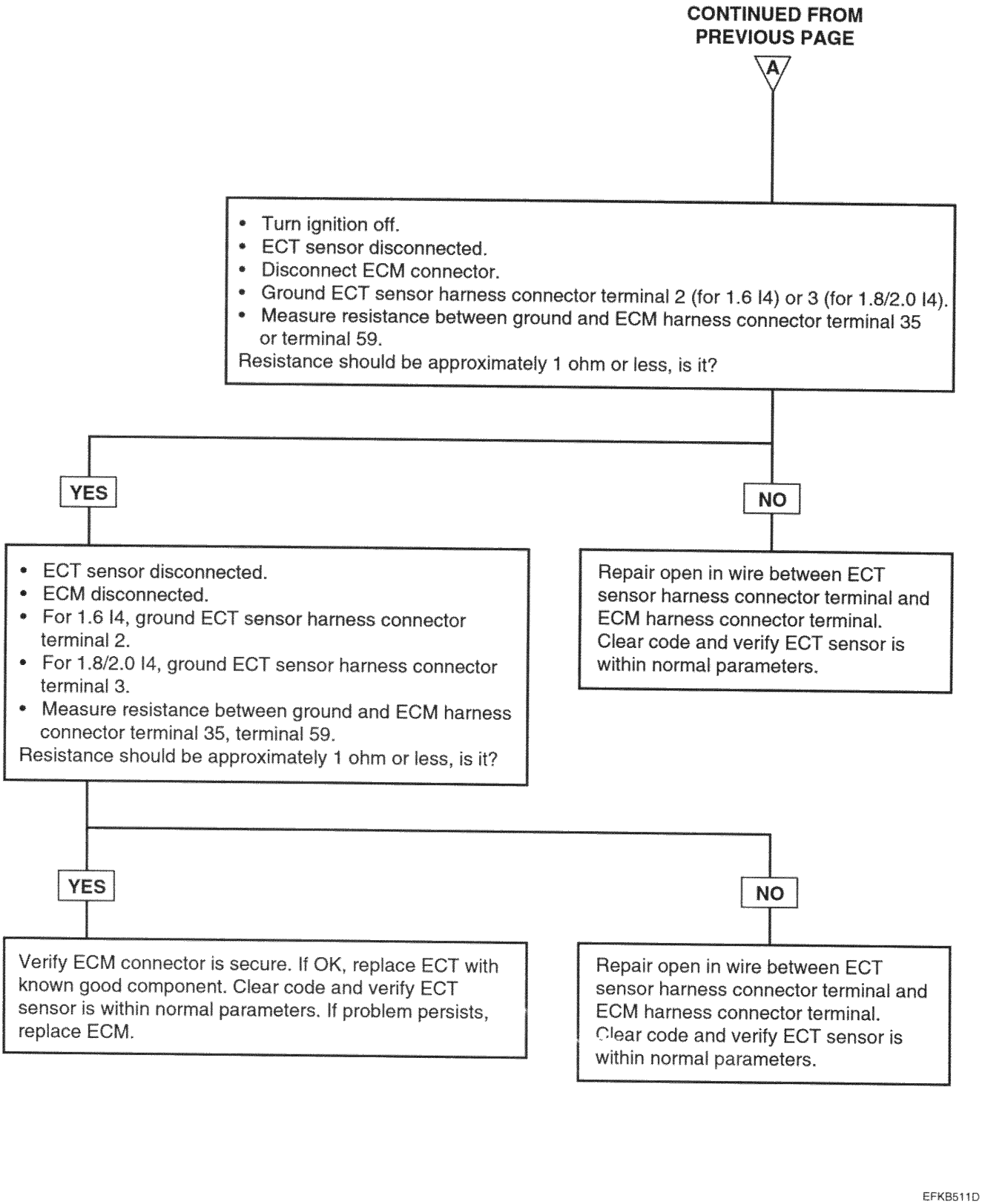
CONTINUED FROM PREVIOUS PAGE
A
• Turn ignition off.
• ECT sensor disconnected.
• Disconnect ECM connector.
• Ground ECT sensor harness connector terminal 2 (for 1.6 I4) or 3 (for 1.8/2.0 I4).
• Measure resistance between ground and ECM harness connector terminal 35 or terminal 59.
Resistance should be approximately 1 ohm or less, is it?
YES
NO
• ECT sensor disconnected.
• ECM disconnected.
• For 1.6 I4, ground ECT sensor harness connector terminal 2.
• For 1.8/2.0 I4, ground ECT sensor harness connector terminal 3.
• Measure resistance between ground and ECM harness connector terminal 35, terminal 59.
Resistance should be approximately 1 ohm or less, is it?
Repair open in wire between ECT sensor harness connector terminal and ECM harness connector terminal. Clear code and verify ECT sensor is within normal parameters.
YES
NO
Verify ECM connector is secure. If OK, replace ECT with known good component. Clear code and verify ECT sensor is within normal parameters. If problem persists, replace ECM.
Repair open in wire between ECT sensor harness connector terminal and ECM harness connector terminal. Clear code and verify ECT sensor is within normal parameters.

EFKB511D

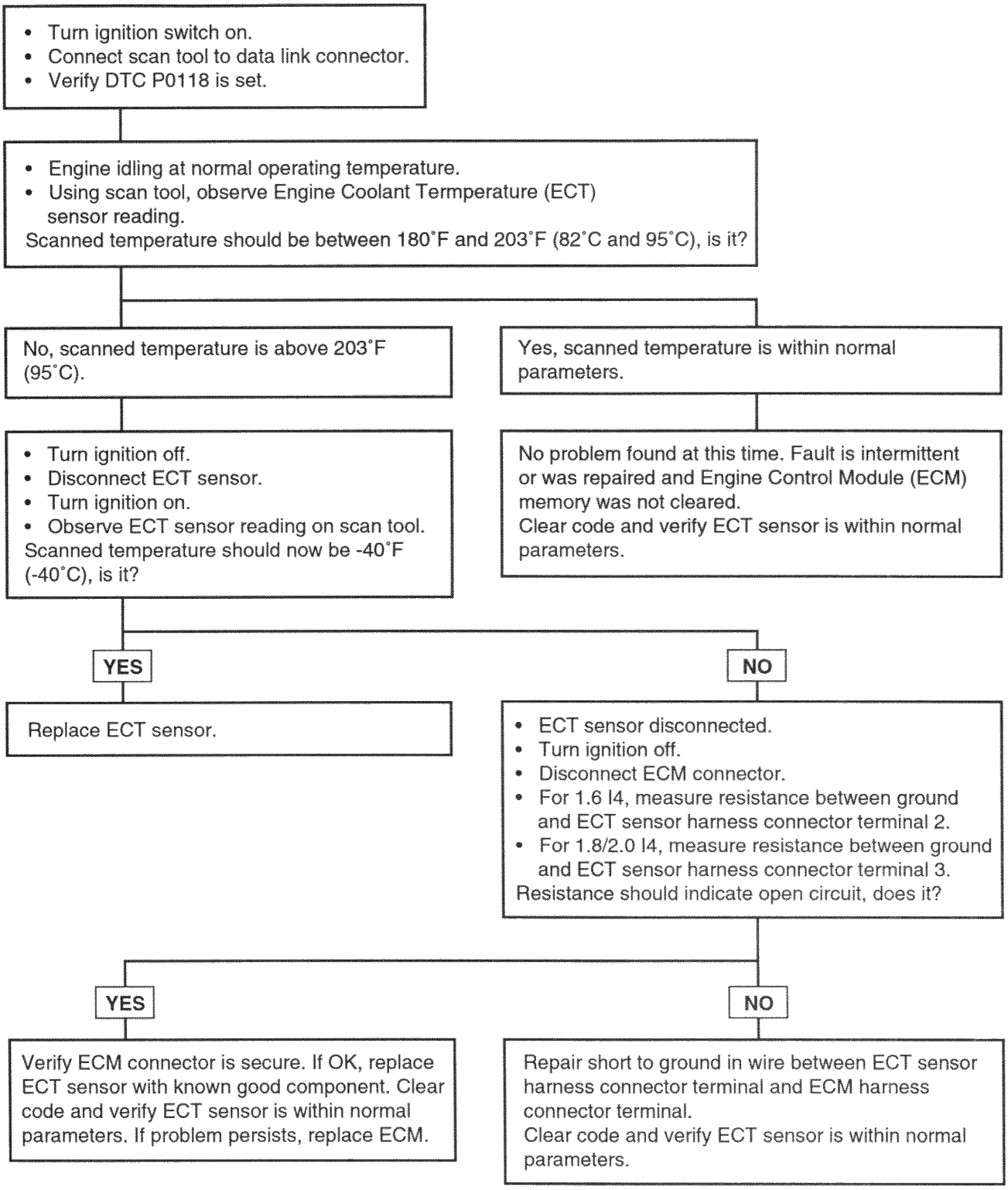
• Turn ignition switch on.
• Connect scan tool to data link connector.
• Verify DTC P0118 is set.
• Engine idling at normal operating temperature.
• Using scan tool, observe Engine Coolant Termperature (ECT) sensor reading.
Scanned temperature should be between 180˚F and 203˚F (82˚C and 95˚C), is it?
No, scanned temperature is above 203˚F (95˚C).
Yes, scanned temperature is within normal parameters.
• Turn ignition off.
• Disconnect ECT sensor.
• Turn ignition on.
• Observe ECT sensor reading on scan tool.
Scanned temperature should now be -40˚F (-40˚C), is it?
No problem found at this time. Fault is intermittent or was repaired and Engine Control Module (ECM) memory was not cleared.
Clear code and verify ECT sensor is within normal parameters.
YES
NO
Replace ECT sensor.
• ECT sensor disconnected.
• Turn ignition off.
• Disconnect ECM connector.
• For 1.6 I4, measure resistance between ground and ECT sensor harness connector terminal 2.
• For 1.8/2.0 I4, measure resistance between ground and ECT sensor harness connector terminal 3.
Resistance should indicate open circuit, does it?
YES
NO
Verify ECM connector is secure. If OK, replace ECT sensor with known good component. Clear code and verify ECT sensor is within normal parameters. If problem persists, replace ECM.
Repair short to ground in wire between ECT sensor harness connector terminal and ECM harness connector terminal.
Clear code and verify ECT sensor is within normal parameters.

EFKB511E

EFNC5160

DTC	Diagnostic item
P0120	Throttle Position Circuit Malfunction
P0121	Throttle Position Circuit Range/Performance Problem
P0122	TPS Circuit Low Input
P0123	TPS Circuit High Input

DESCRIPTION

The Throttle Position Sensor (TPS) mounts on the side of the throttle body and is connected to the throttle valve shaft. The TPS is a variable resistor (potentiometer) whose resistance changes according to throttle valve shaft position. During acceleration, the TPS resistance decreases; during deceleration, the TPS resistance increases.
The Engine Control Module (ECM) applies a reference voltage to the TPS and then measures the voltage that is present on the TPS signal circuit. The ECM uses the TPS signal to adjust timing and injector pulse width. The TPS signal along with the MAF sensor signal is used by the ECM to calculate engine load.

FAILURE CONDITIONS

The ECM will set P0121 and the Malfunction Indicator Lamp (MIL) will turn on if the engine load indicated by the Throttle Position (TP) sensor and the Manifold Absolute Pressure (MAP) sensor are different. This code indicates that the throttle position and air flow readings by the TP and MAP sensor, or ECM, do not result in the expected engine load value.
The ECM will set P0122 and the Malfunction Indicator Lamp (MIL) will turn on if the throttle angle is reported as less than 2.1 degrees for more than 0.2 seconds during 2-driving cycles. This code indicates an unusually low throttle position angle being read by the TP sensor or ECM.
The ECM will set P0123 and the Malfunction Indicator Lamp (MIL) will turn on if the throttle angle is reported as greater than 105.4 degrees for 0.2 seconds during 2-driving cycles. This code indicates an unusually high throttle position angle being read by the TP sensor or ECM.

NOTE

The standard resistance value between terminals 2 and 3 of the throttle position sensor is 1600-2500 ohms.

CIRCUIT DIAGRAM

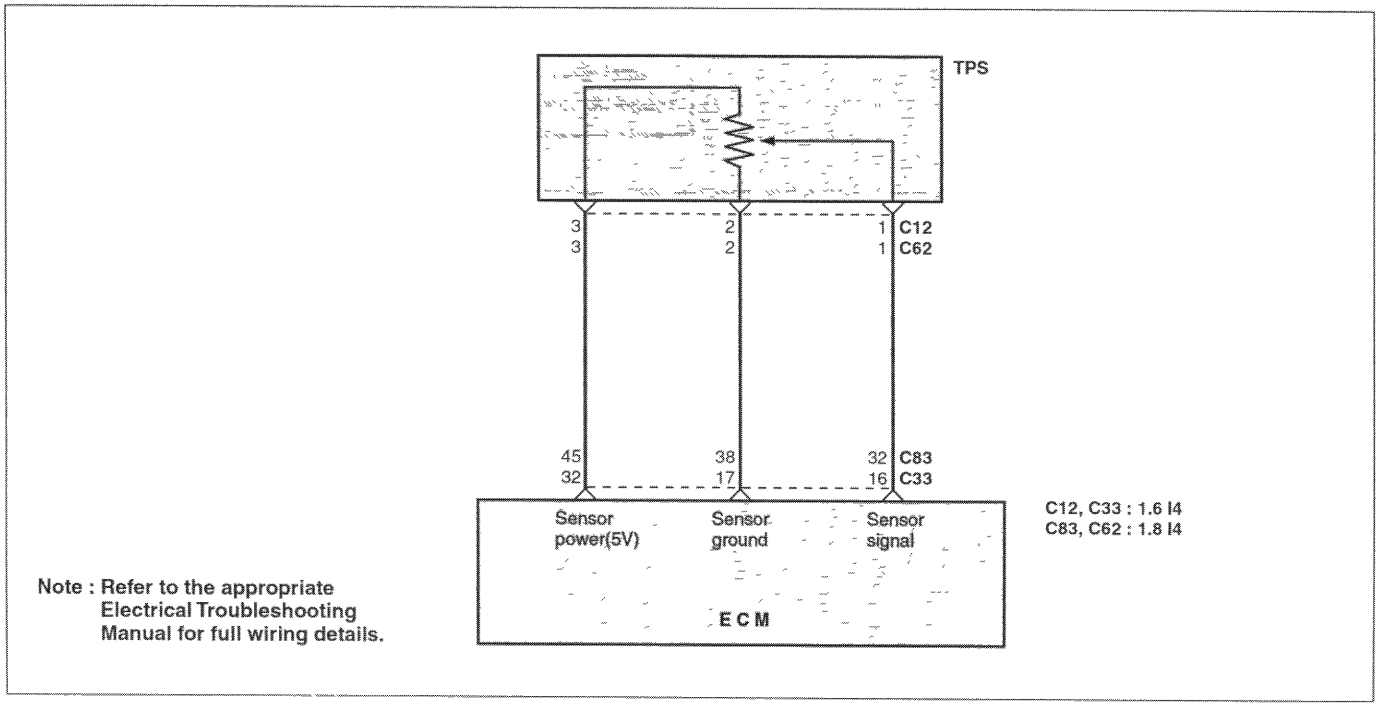

EFNC033A

TEST PROCEDURE

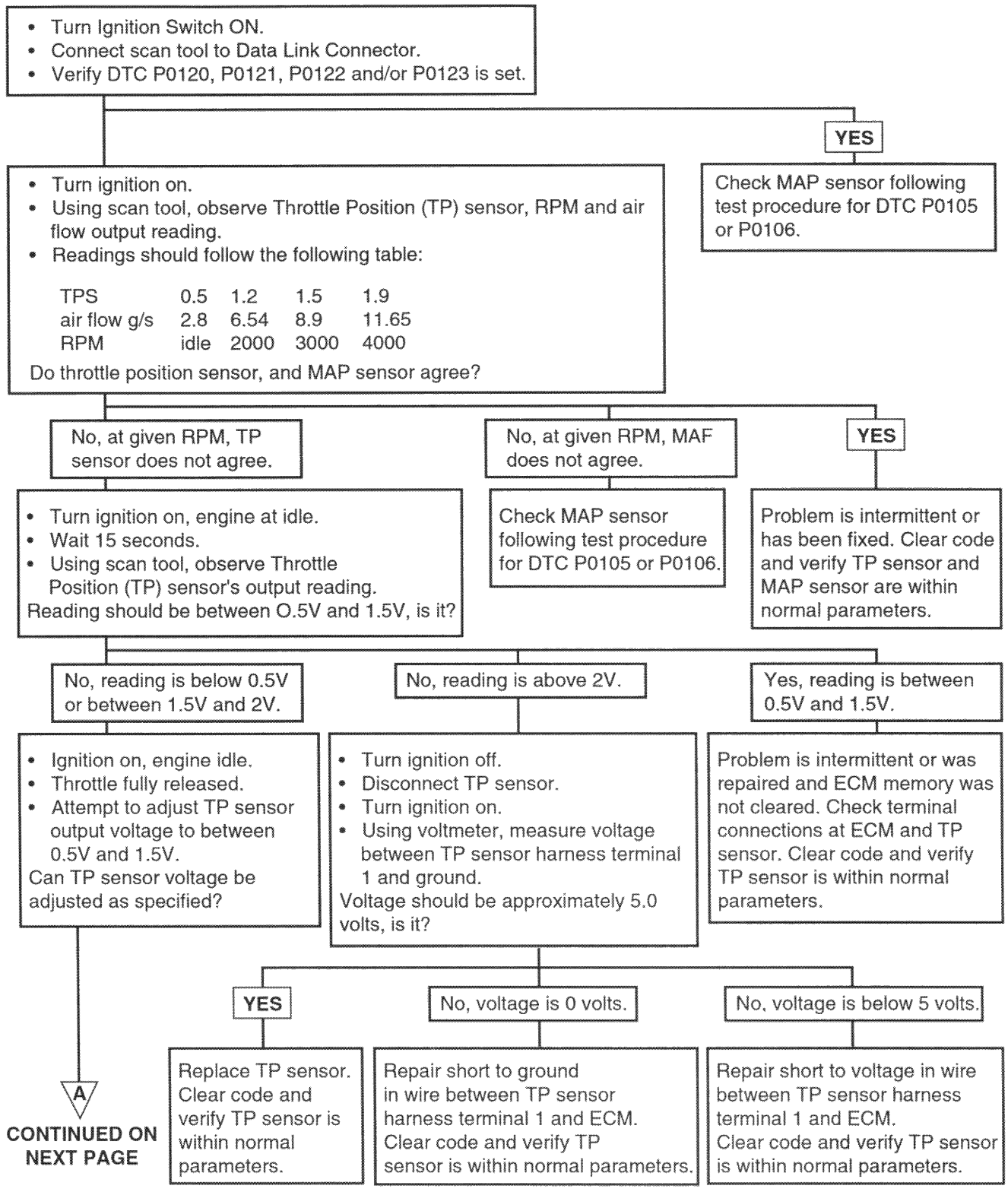

EFKB516B

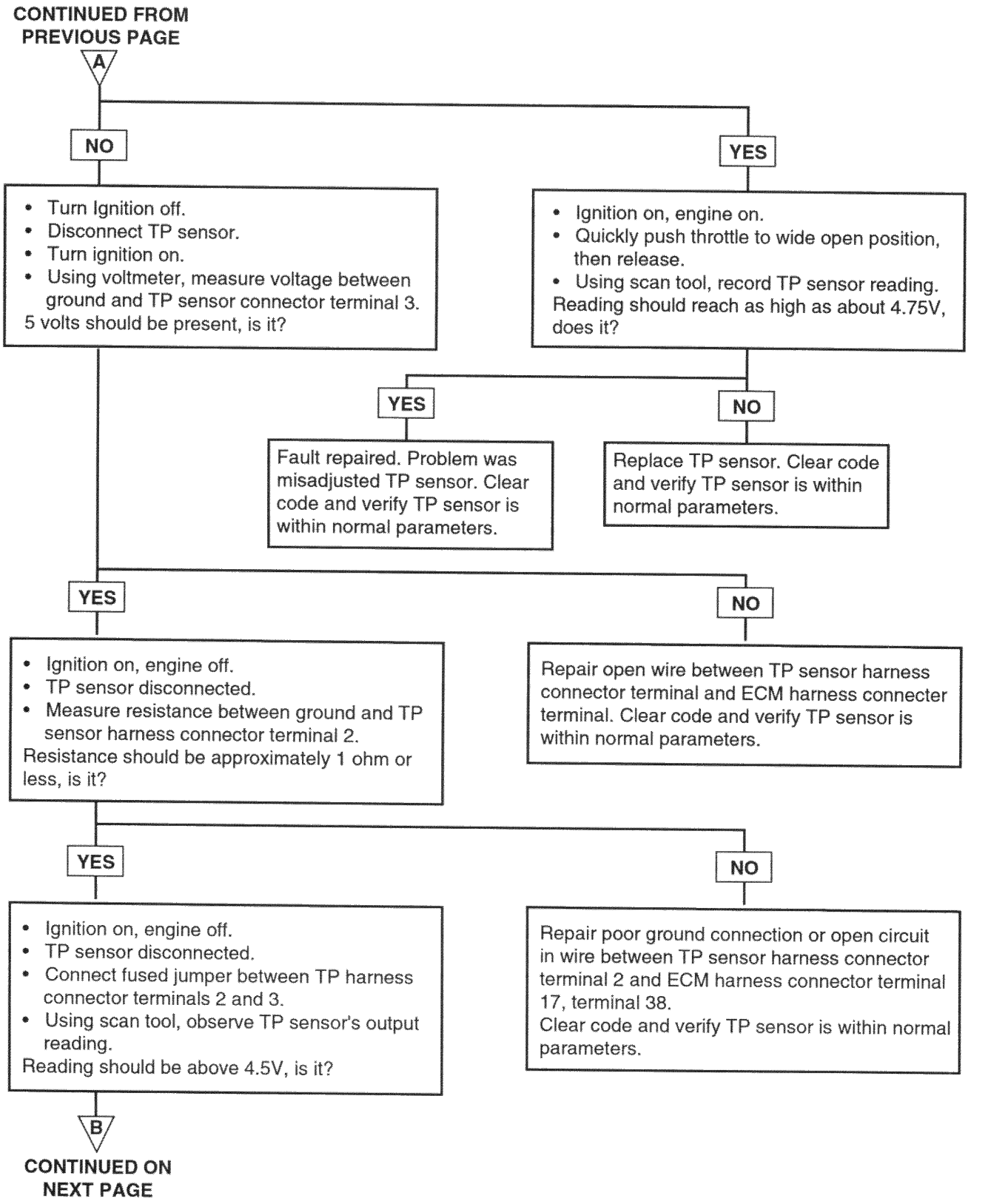
CONTINUED FROM PREVIOUS PAGE
A
NO
YES
• Turn Ignition off.
• Disconnect TP sensor.
• Turn ignition on.
• Using voltmeter, measure voltage between ground and TP sensor connector terminal 3.
5 volts should be present, is it?
• Ignition on, engine on.
• Quickly push throttle to wide open position, then release.
• Using scan tool, record TP sensor reading.
Reading should reach as high as about 4.75V, does it?
YES
NO
Fault repaired. Problem was misadjusted TP sensor. Clear code and verify TP sensor is within normal parameters.
Replace TP sensor. Clear code and verify TP sensor is within normal parameters.
YES
NO
• Ignition on, engine off.
• TP sensor disconnected.
• Measure resistance between ground and TP sensor harness connector terminal 2.
Resistance should be approximately 1 ohm or less, is it?
Repair open wire between TP sensor harness connector terminal and ECM harness connecter terminal. Clear code and verify TP sensor is within normal parameters.
YES
NO
• Ignition on, engine off.
• TP sensor disconnected.
• Connect fused jumper between TP harness connector terminals 2 and 3.
• Using scan tool, observe TP sensor's output reading.
Reading should be above 4.5V, is it?
Repair poor ground connection or open circuit in wire between TP sensor harness connector terminal 2 and ECM harness connector terminal 17, terminal 38.
Clear code and verify TP sensor is within normal parameters.
B
CONTINUED ON NEXT PAGE

EFKB516C

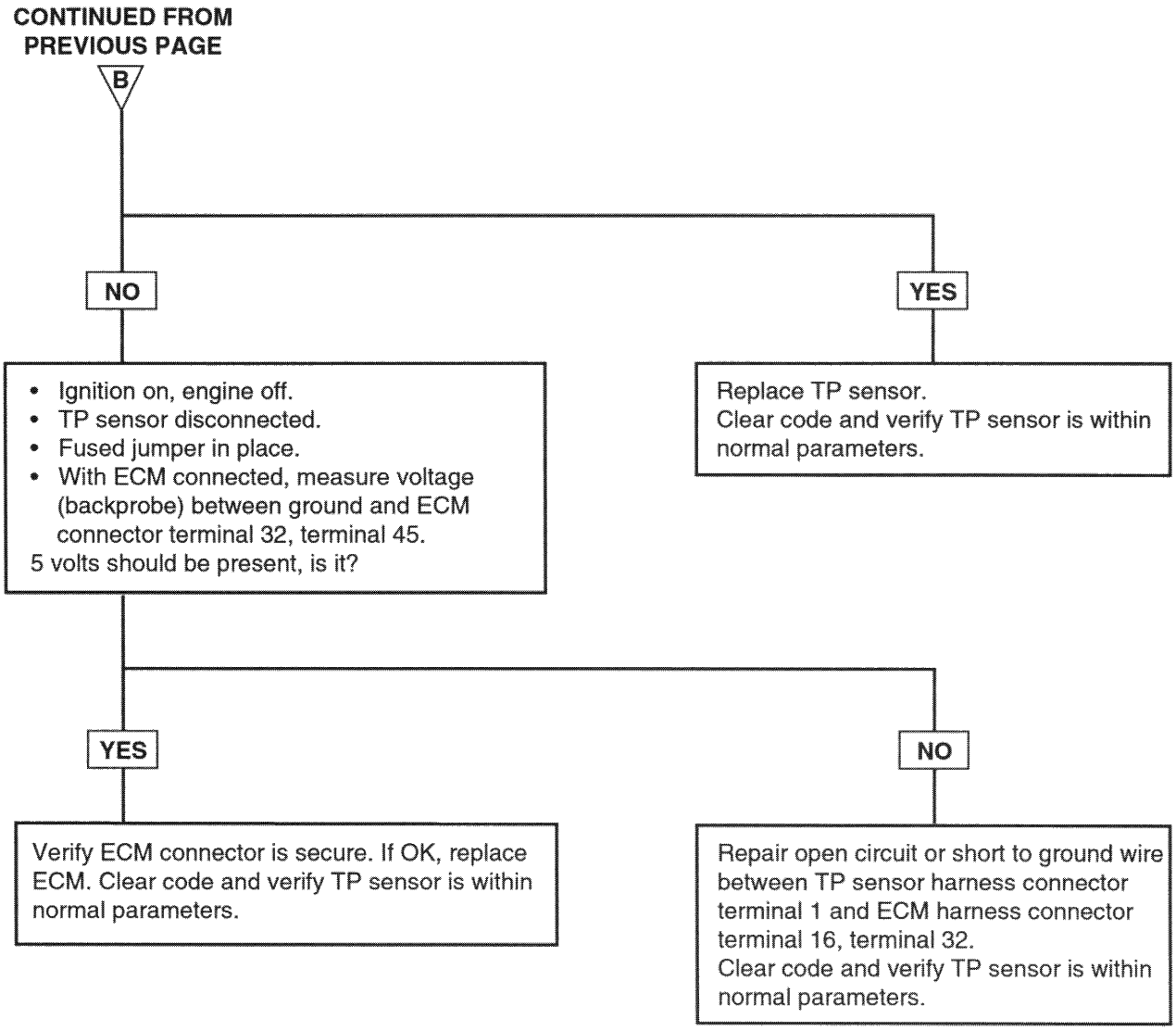
CONTINUED FROM PREVIOUS PAGE
B
NO
YES
• Ignition on, engine off.
• TP sensor disconnected.
• Fused jumper in place.
• With ECM connected, measure voltage (backprobe) between ground and ECM connector terminal 32, terminal 45.
5 volts should be present, is it?
Replace TP sensor.
Clear code and verify TP sensor is within normal parameters.
YES
NO
Verify ECM connector is secure. If OK, replace ECM. Clear code and verify TP sensor is within normal parameters.
Repair open circuit or short to ground wire between TP sensor harness connector terminal 1 and ECM harness connector terminal 16, terminal 32.
Clear code and verify TP sensor is within normal parameters.

EFKB516D

EFNC5210

DTC	Diagnostic item
P0130	Oxygen Sensor Circuit Malfunction (Bank1, Sensor1)
P0136	Oxygen Sensor Circuit Malfunction (Bank1, Sensor2)
P0139	Oxygen Sensor Circuit Slow Response (Bank1, Sensor2)

DESCRIPTION

The Engine Control Module (ECM) uses oxygen sensor signals to maintain the air fuel mixture at the ratio resulting in optimum fuel economy and reduced emissions. The amount of oxygen in the exhaust gases indicates, to the front oxygen sensor, whether the air fuel mixture being supplied to the engine cylinders is rich or lean. The readings of the rear oxygen sensor are used to indicate the efficiency of the catalytic converter. The ECM calculates catalytic converter efficiency by comparing the rear oxygen sensor signal to the front oxygen sensor signal.
A normal oxygen sensor signal will constantly fluctuate above and below 500 mV, with the front oxygen sensor signal frequency of at least 5Hz at 2500 RPM. Due to the effect of the catalytic converter, the rear oxygen sensor signal frequency will be lower than the front oxygen sensor signal frequency. If the rear oxygen sensor signal coincides with the front oxygen sensor signal a large percentage of the time, this indicates a loss in efficiency of the catalytic converter or a malfunction within the fuel system.

FAILURE CONDITIONS

[FOR P0130]

After the engine runs, the ECM checks the front oxygen sensor once per driving cycle for 5 sec. If during two driving cycles the front oxygen sensor's output is not between 0 millivolts and +380 millivolts while the rear oxygen sensor's output is greater than 350 millivolts, the ECM will set a code and the MIL will turn on. This code indicates uncharacteristic operation of the front oxygen sensor being read by the ECM.

[FOR P0136]

After the system is in closed-loop operation and the engine has run for 3 minutes, the ECM checks the rear oxygen sensor's output. If during two driving cycles the rear oxygen sensor's output is not between 400 millivolts and 500 millivolts, the ECM will set a code and the MIL will turn on. This code indicates an uncharacteristic reading by the rear oxygen sensor or ECM after the engine has been warmed and run for 3 minutes.

CIRCUIT DIAGRAM

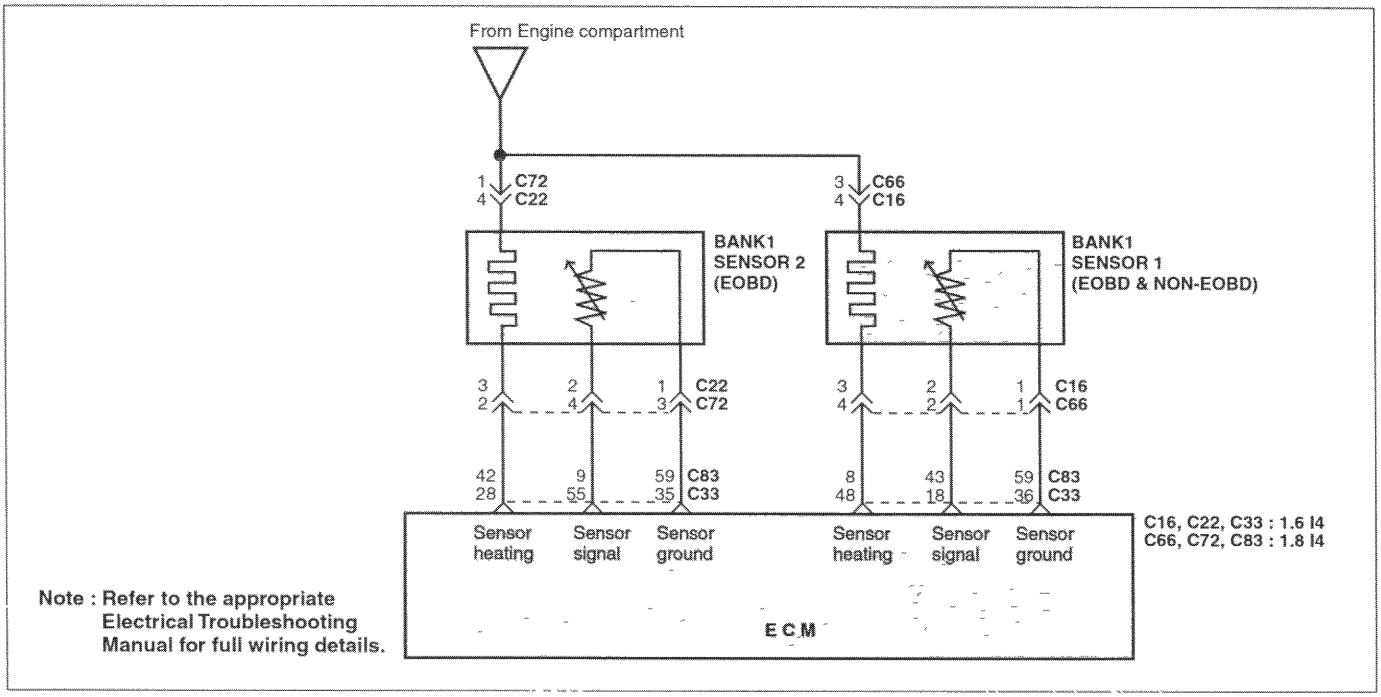

EFNC039A

TEST PROCEDURE

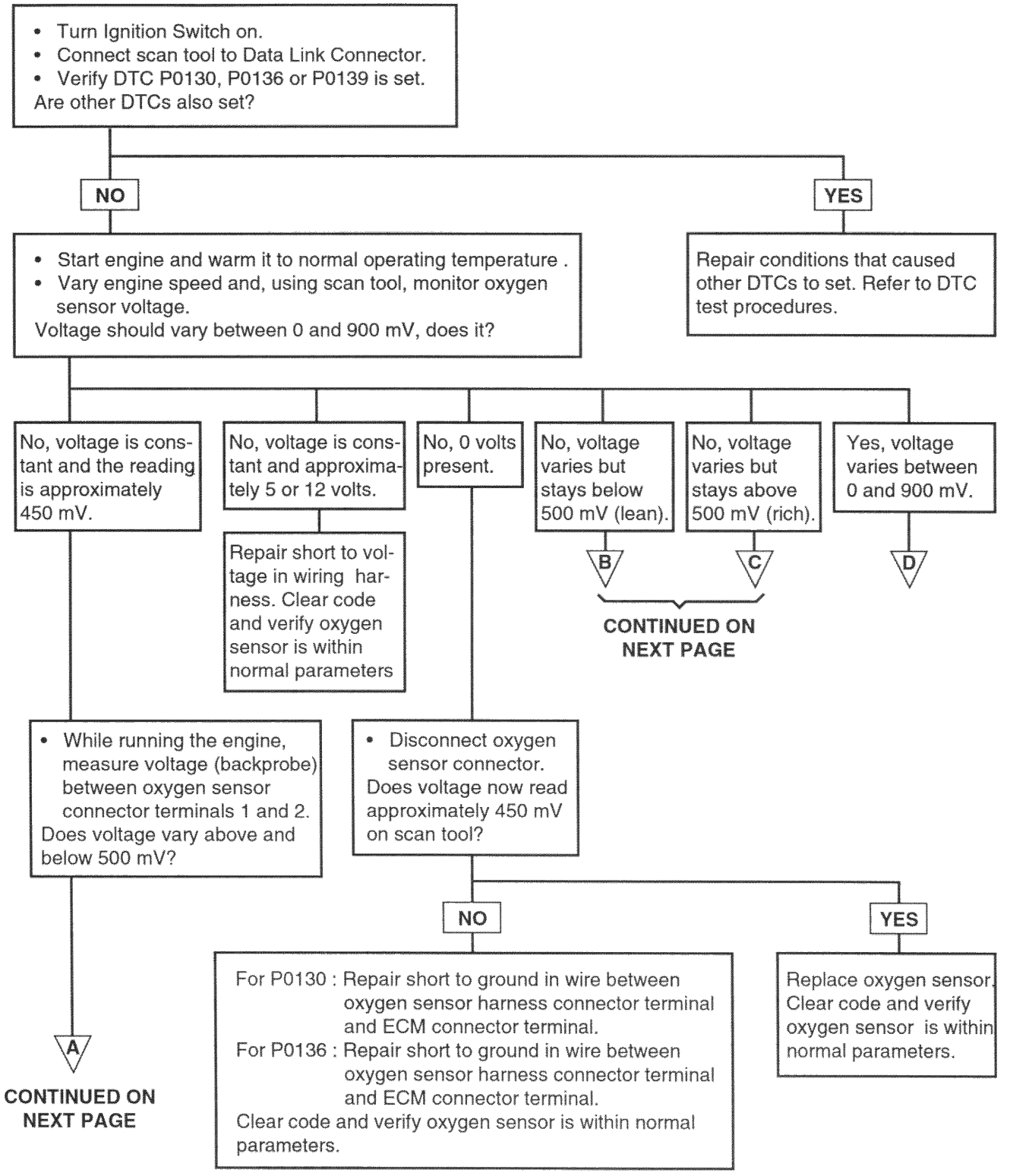

EFNC531B

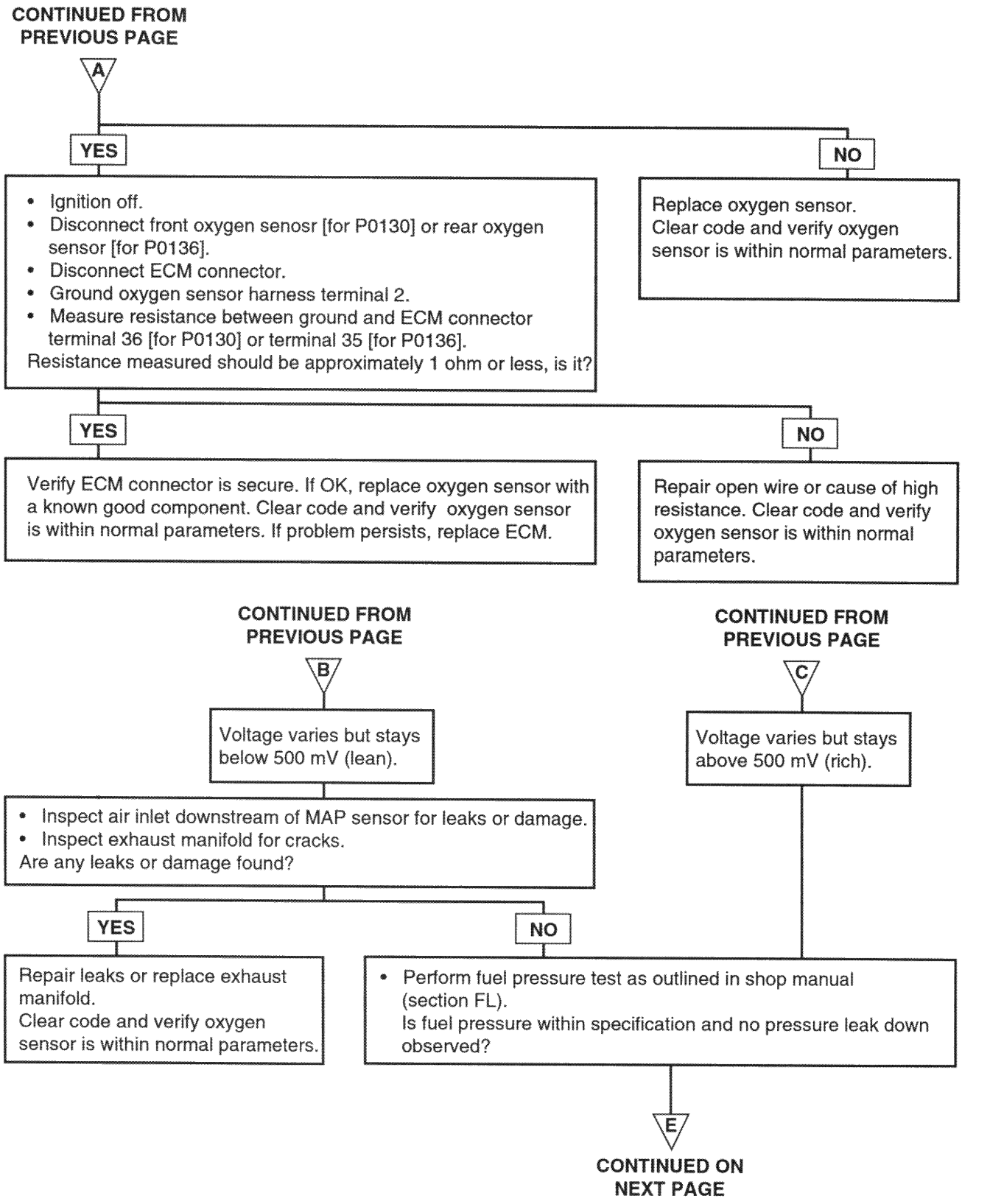
CONTINUED FROM PREVIOUS PAGE
A
YES
NO
• Ignition off.
• Disconnect front oxygen senosr [for P0130] or rear oxygen sensor [for P0136].
• Disconnect ECM connector.
• Ground oxygen sensor harness terminal 2.
• Measure resistance between ground and ECM connector terminal 36 [for P0130] or terminal 35 [for P0136].
Resistance measured should be approximately 1 ohm or less, is it?
Replace oxygen sensor.
Clear code and verify oxygen sensor is within normal parameters.
YES
NO
Verify ECM connector is secure. If OK, replace oxygen sensor with a known good component. Clear code and verify oxygen sensor is within normal parameters. If problem persists, replace ECM.
Repair open wire or cause of high resistance. Clear code and verify oxygen sensor is within normal parameters.
CONTINUED FROM PREVIOUS PAGE
B
Voltage varies but stays below 500 mV (lean).
CONTINUED FROM PREVIOUS PAGE
C
Voltage varies but stays above 500 mV (rich).
• Inspect air inlet downstream of MAP sensor for leaks or damage.
• Inspect exhaust manifold for cracks.
Are any leaks or damage found?
YES
NO
Repair leaks or replace exhaust manifold.
Clear code and verify oxygen sensor is within normal parameters.
• Perform fuel pressure test as outlined in shop manual (section FL).
Is fuel pressure within specification and no pressure leak down observed?
E
CONTINUED ON NEXT PAGE

EFKB521C

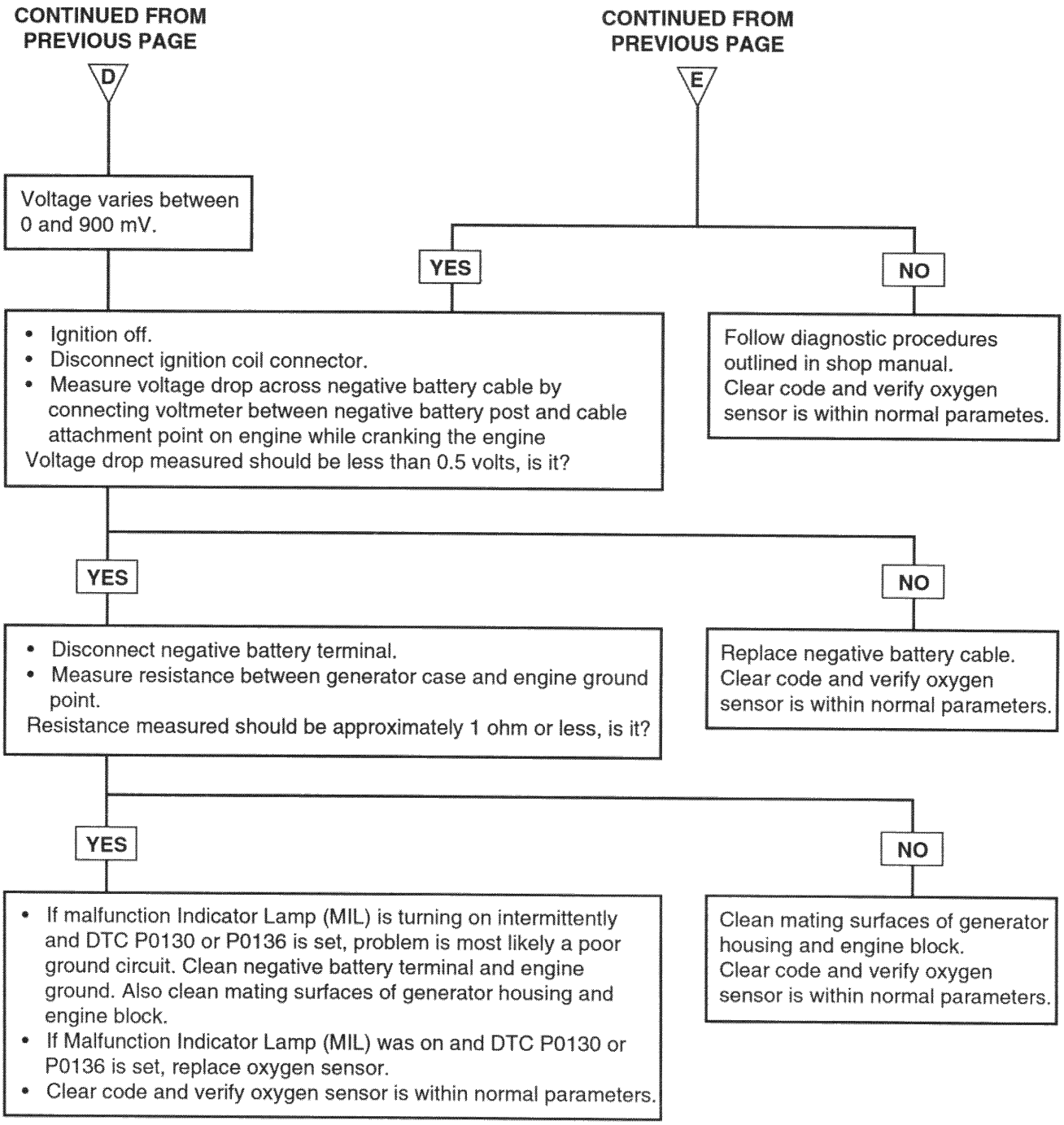
CONTINUED FROM PREVIOUS PAGE
D
Voltage varies between 0 and 900 mV.
CONTINUED FROM PREVIOUS PAGE
E
YES
NO
• Ignition off.
• Disconnect ignition coil connector.
• Measure voltage drop across negative battery cable by connecting voltmeter between negative battery post and cable attachment point on engine while cranking the engine
Voltage drop measured should be less than 0.5 volts, is it?
Follow diagnostic procedures outlined in shop manual.
Clear code and verify oxygen sensor is within normal parametes.
YES
NO
• Disconnect negative battery terminal.
• Measure resistance between generator case and engine ground point.
Resistance measured should be approximately 1 ohm or less, is it?
Replace negative battery cable.
Clear code and verify oxygen sensor is within normal parameters.
YES
NO
• If malfunction Indicator Lamp (MIL) is turning on intermittently and DTC P0130 or P0136 is set, problem is most likely a poor ground circuit. Clean negative battery terminal and engine ground. Also clean mating surfaces of generator housing and engine block.
• If Malfunction Indicator Lamp (MIL) was on and DTC P0130 or P0136 is set, replace oxygen sensor.
• Clear code and verify oxygen sensor is within normal parameters.
Clean mating surfaces of generator housing and engine block.
Clear code and verify oxygen sensor is within normal parameters.

EFDA521D

EFNC5260

DTC	Diagnostic item
P0131	Oxygen Sensor circuit Low Voltage (Bank1, Sensor1)
P0137	Oxygen Sensor circuit Low Voltage (Bank1, Sensor2)

DESCRIPTION

Refer to DTC P0130 & P0136.

FAILURE CONDITIONS

[FOR P0131]

After the Front Oxygen Sensor Heater is on for 3 minutes, the ECM continuously measures the front oxygen sensor's output in 0.5 second intervals. If during two driving cycles the front oxygen sensor's output falls below 50 millivolts for 0.5 seconds, the ECM will set P0131 and the MIL will turn on. This code indicates an unusually lean fuel air mixture being read by the front oxygen sensor or ECM.

[FOR P0137]

After the system is in closed-loop operation and the engine has run for 3 minutes, the ECM checks the rear oxygen sensor's output for 0.5 seconds. If during 2 driving cycles the rear oxygen sensor's output falls below 50 millivolts, the ECM will set P0137 and the MIL will turn on. This code indicates an extremely low voltage reading by the rear oxygen sensor or ECM.

CIRCUIT DIAGRAM

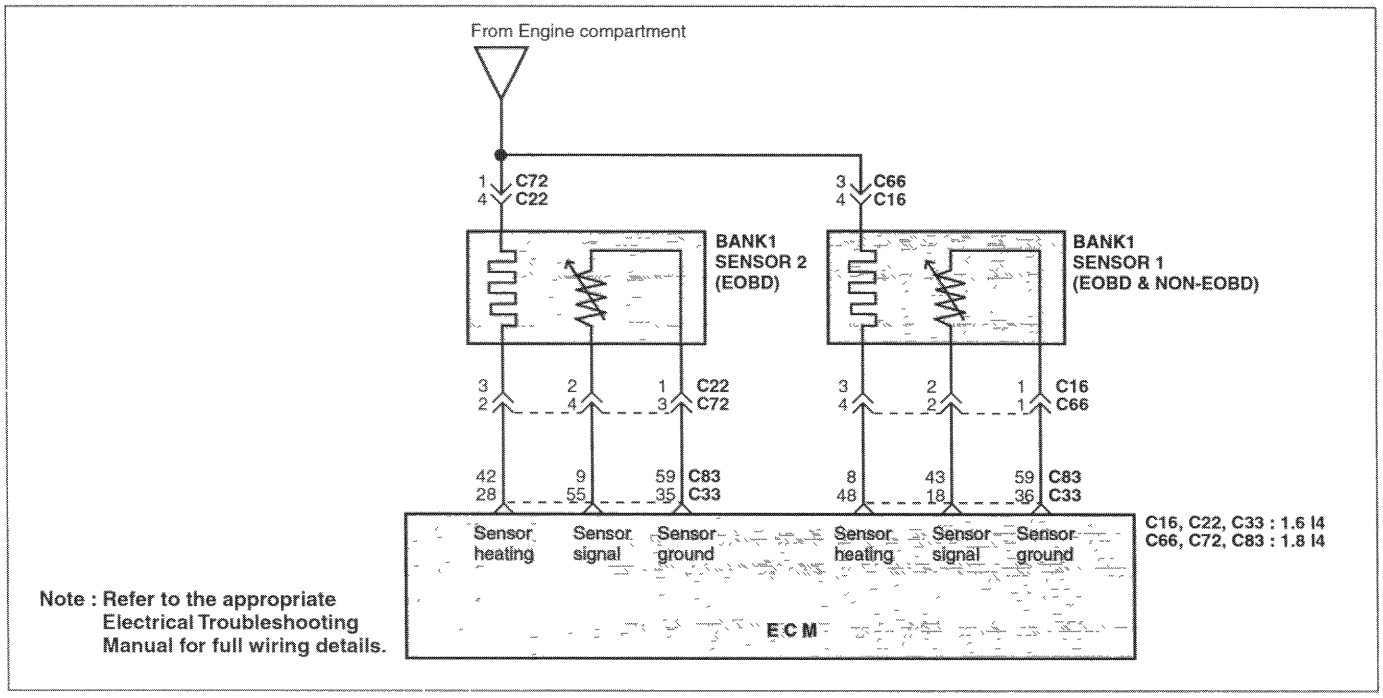

EFNC039A

TEST PROCEDURE

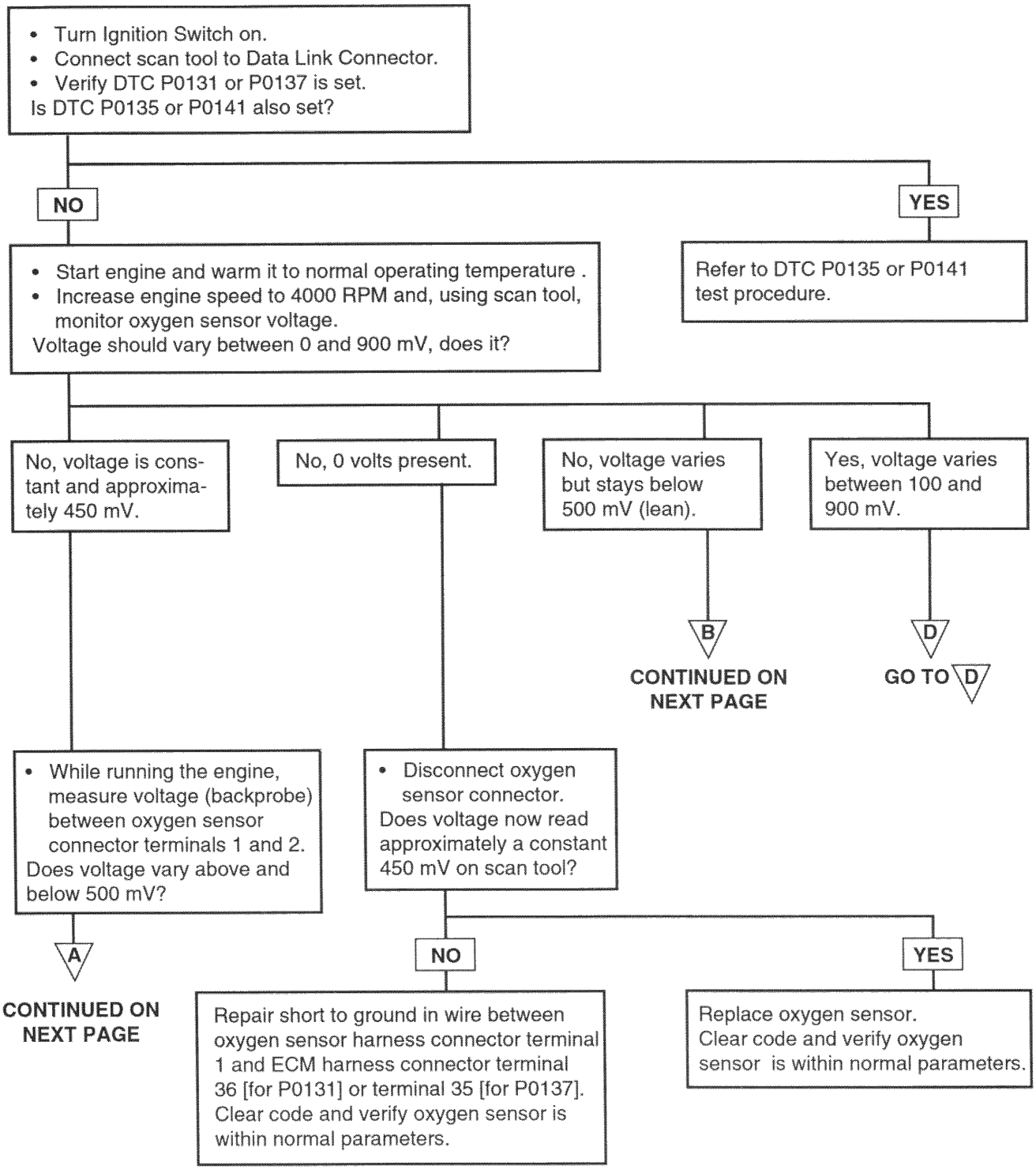

EFDA526B

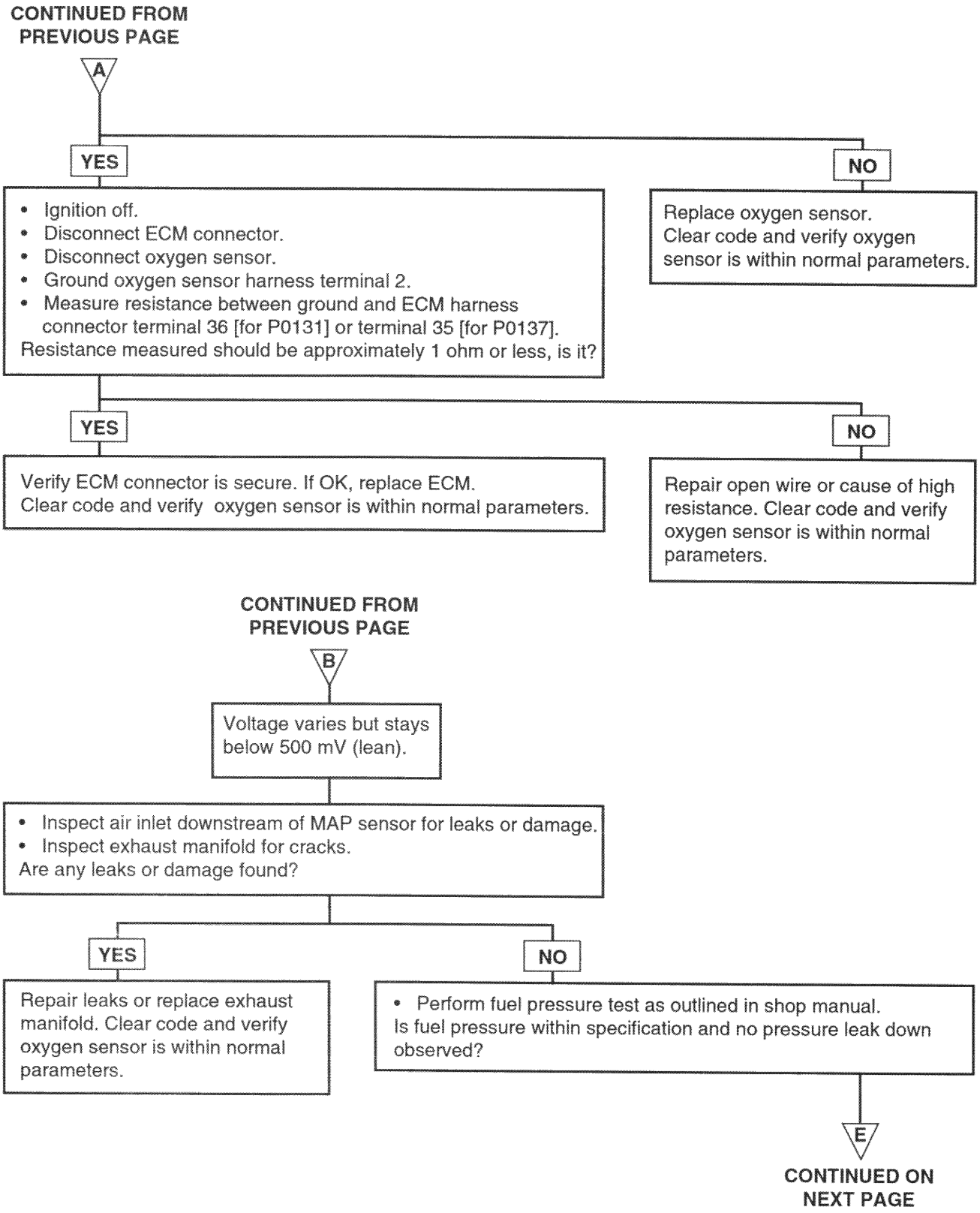
CONTINUED FROM PREVIOUS PAGE
A
YES
NO
• Ignition off.
• Disconnect ECM connector.
• Disconnect oxygen sensor.
• Ground oxygen sensor harness terminal 2.
• Measure resistance between ground and ECM harness connector terminal 36 [for P0131] or terminal 35 [for P0137].
Resistance measured should be approximately 1 ohm or less, is it?
Replace oxygen sensor. Clear code and verify oxygen sensor is within normal parameters.
YES
NO
Verify ECM connector is secure. If OK, replace ECM. Clear code and verify oxygen sensor is within normal parameters.
Repair open wire or cause of high resistance. Clear code and verify oxygen sensor is within normal parameters.
CONTINUED FROM PREVIOUS PAGE
B
Voltage varies but stays below 500 mV (lean).
• Inspect air inlet downstream of MAP sensor for leaks or damage.
• Inspect exhaust manifold for cracks.
Are any leaks or damage found?
YES
NO
Repair leaks or replace exhaust manifold. Clear code and verify oxygen sensor is within normal parameters.
• Perform fuel pressure test as outlined in shop manual.
Is fuel pressure within specification and no pressure leak down observed?
E
CONTINUED ON NEXT PAGE

EFKB526C

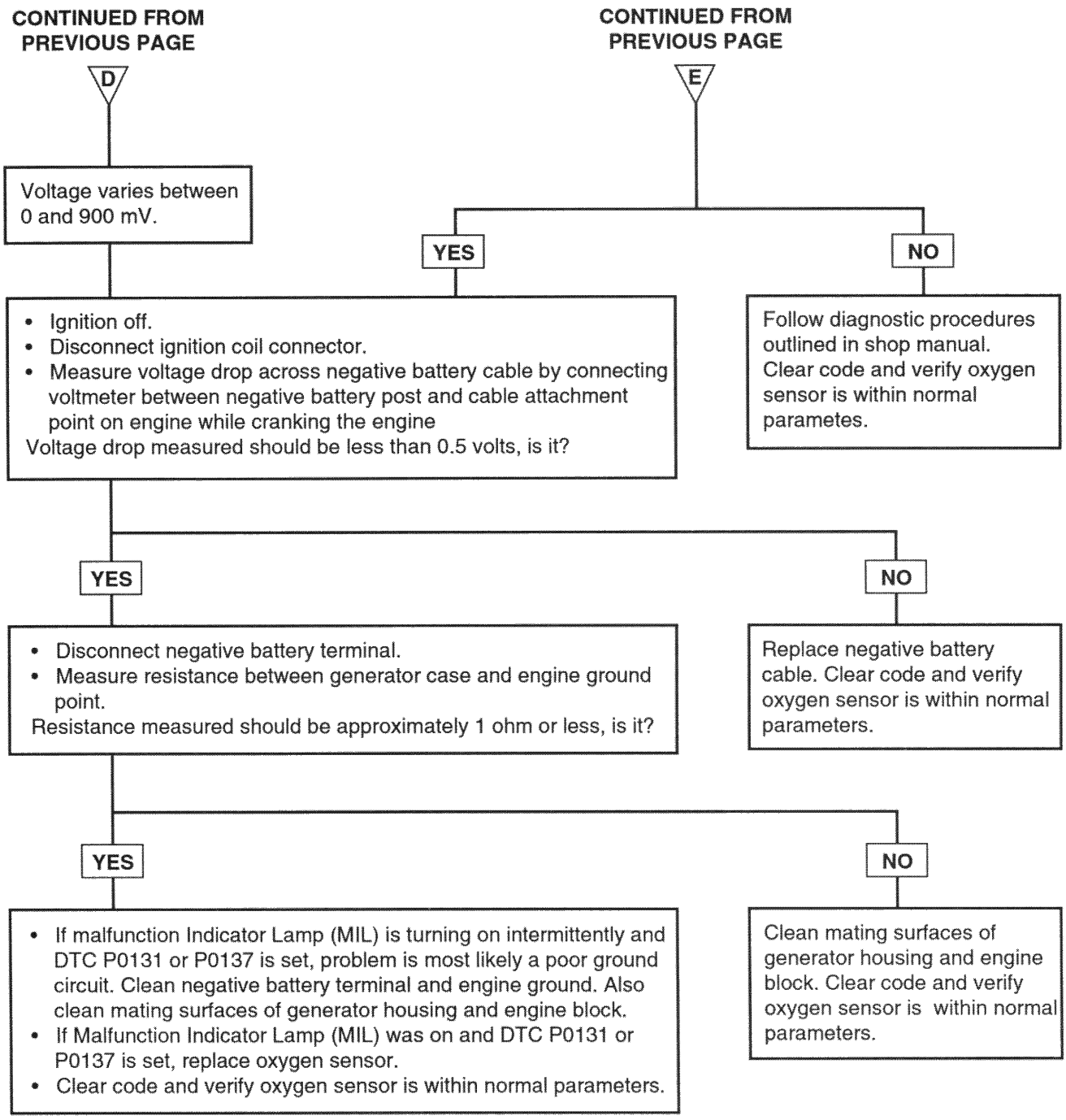
CONTINUED FROM PREVIOUS PAGE
D
Voltage varies between 0 and 900 mV.
CONTINUED FROM PREVIOUS PAGE
E
YES
NO
• Ignition off.
• Disconnect ignition coil connector.
• Measure voltage drop across negative battery cable by connecting voltmeter between negative battery post and cable attachment point on engine while cranking the engine
Voltage drop measured should be less than 0.5 volts, is it?
Follow diagnostic procedures outlined in shop manual. Clear code and verify oxygen sensor is within normal parametes.
YES
NO
• Disconnect negative battery terminal.
• Measure resistance between generator case and engine ground point.
Resistance measured should be approximately 1 ohm or less, is it?
Replace negative battery cable. Clear code and verify oxygen sensor is within normal parameters.
YES
NO
• If malfunction Indicator Lamp (MIL) is turning on intermittently and DTC P0131 or P0137 is set, problem is most likely a poor ground circuit. Clean negative battery terminal and engine ground. Also clean mating surfaces of generator housing and engine block.
• If Malfunction Indicator Lamp (MIL) was on and DTC P0131 or P0137 is set, replace oxygen sensor.
• Clear code and verify oxygen sensor is within normal parameters.
Clean mating surfaces of generator housing and engine block. Clear code and verify oxygen sensor is within normal parameters.

EFDA526D

EFNC5310

DTC	Diagnostic item
P0132	Oxygen Sensor Circuit High Voltage (Bank1, Sensor1)
P0138	Oxygen Sensor Circuit High Voltage (Bank1, Sensor2)

DESCRIPTION

Refer to DTC P0130 & P0136.

FAILURE CONDITIONS

[FOR P0132]

After the Front Oxygen Sensor Heater has been on for 3 minutes, the ECM continuously measures the front oxygen sensor's output in 0.5 second intervals. If during two driving cycles the front oxygen sensor's output exceeds 1.058 volts for 0.5 seconds, the ECM will set P0132 and the MIL will turn on. This code indicates an extremely rich air fuel mixture being read by the front oxygen sensor or ECM.

[FOR P0138]

After the system is in closed-loop operation and the engine has run for 3 minutes, the ECM checks the rear oxygen sensor for 0.5 seconds. If during two driving cycles the rear oxygen sensor's output is greater than 1.058 volts, the ECM will set P0138 and the MIL will turn on. This code indicates an extremely high voltage reading by the rear oxygen sensor or ECM.

CIRCUIT DIAGRAM

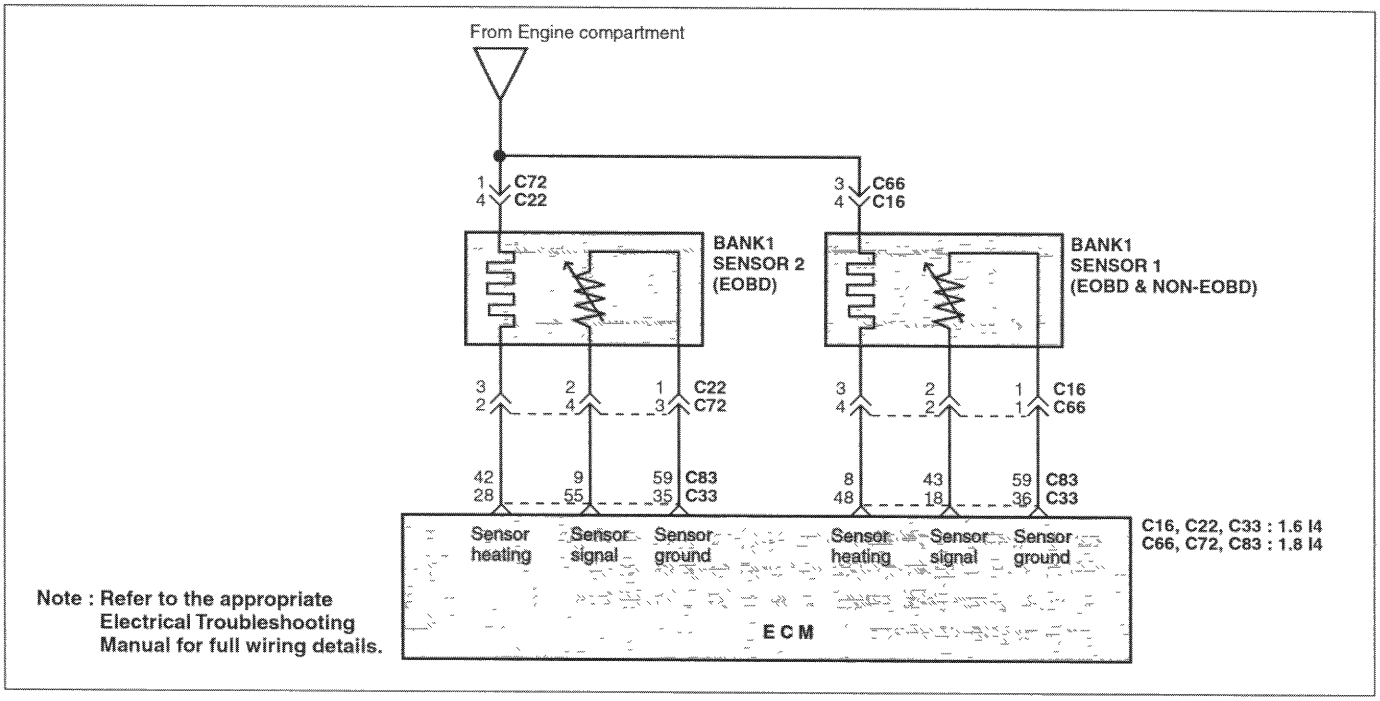

EFNC039A

TEST PROCEDURE

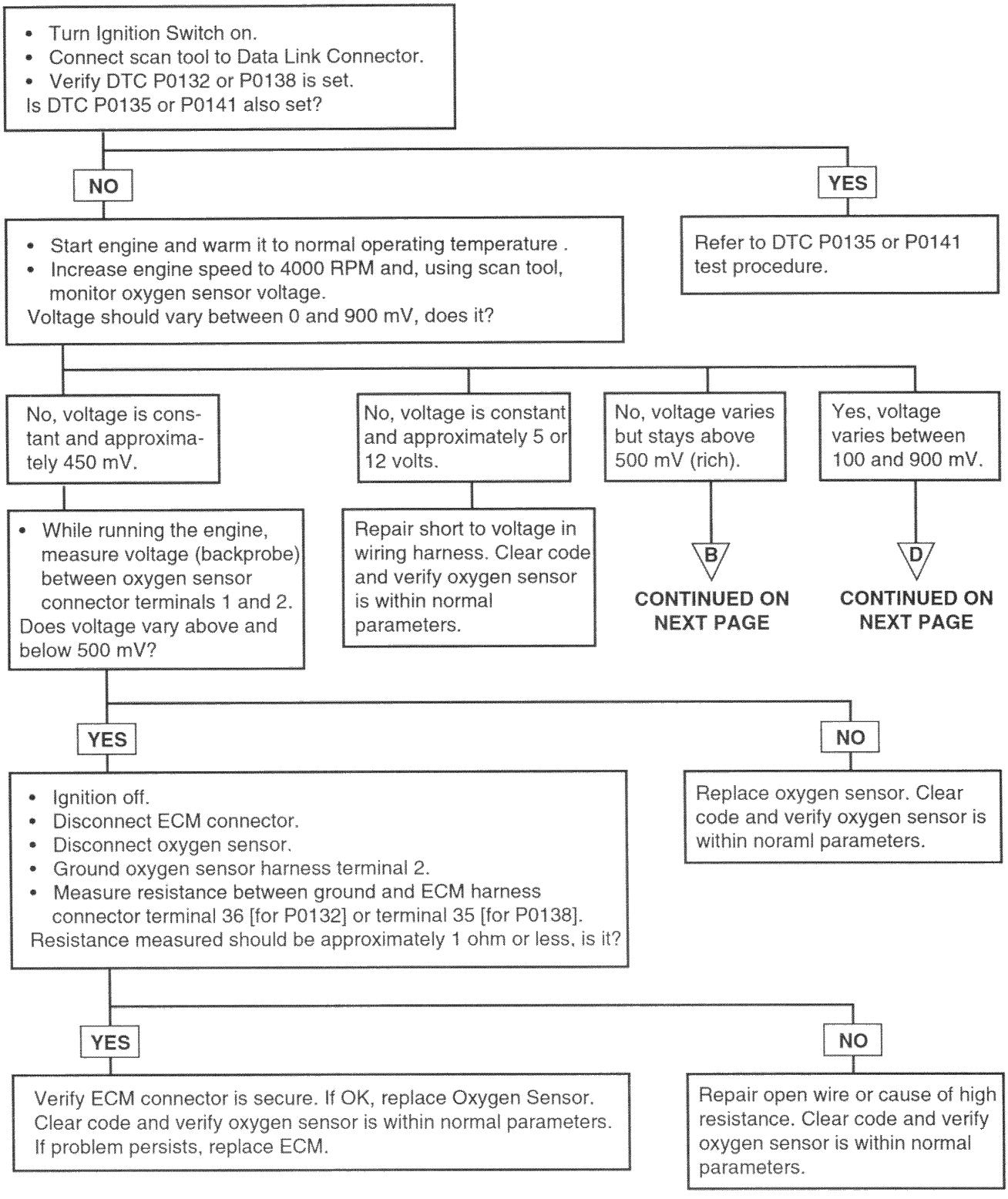

EFDA531B

CONTINUED FROM PREVIOUS PAGE

D

Voltage varies between 0 and 900 mV.

CONTINUED FROM PREVIOUS PAGE

B

Voltage varies but stays above 500 mV (rich).

- Perform fuel pressure test as outlined in shop manual.

Is fuel pressure within specification and no pressure leak down observed?

YES

NO

Follow diagnostic procedures outlined in shop manual. Clear code and verify oxygen sensor is within normal parametes.

- Ignition off.
- Disconnect ignition coil connector.
- Measure voltage drop across negative battery cable by connecting voltmeter between negative battery post and cable attachment point on engine while cranking the engine

Voltage drop measured should be less than 0.5 volts, is it?

YES

NO

Replace negative battery cable. Clear code and verify oxygen sensor is within normal parameters.

- Disconnect negative battery terminal.
- Measure resistance between generator case and engine ground point.

Resistance measured should be approximately 1 ohm or less, is it?

YES

NO

Clean mating surfaces of generator housing and engine block. Clear code and verify oxygen sensor is within normal parameters.

- If malfunction Indicator Lamp (MIL) is turning on intermittently and DTC P0132 or P0138 is set, problem is most likely a poor ground circuit. Clean negative battery terminal and engine ground. Also clean mating surfaces of generator housing and engine block.
- If Malfunction Indicator Lamp (MIL) was on and DTC P0132 or P0138 is set, replace oxygen sensor.
- Clear code and verify oxygen sensor is within normal parameters.

EFDA531C

EFNC5360

DTC	Diagnostic item
P0133	Oxygen Sensor Circuit Slow Response (Bank1, Sensor1)
P0134	Oxygen Sensor Circuit Inactive (Bank1, Sensor1)
P0140	Oxygen Sensor Circuit Inactive (Bank1, Sensor2)

DESCRIPTION

Refer to DTC P0130 & P0136.

FAILURE CONDITIONS

[FOR P0133]

The ECM will set P0133 and the MIL will turn on if the ECM does not sense the following conditions during two driving cycles:

1. Over a period of 2 minutes, the ECM must sense a fuel compensation factor greater 85% or less than 95%:
2. The ECM must make some correction in the air/fuel ratio when:
   - Engine RPM is between 1600 and 3200 RPM.
   - Engine load range is between 1.35 and 3.4 milliseconds.
   - Catalyst temperature is above 372°C (702°F).
   - System is in closed loop.

This code indicates the engine air fuel ratio is not being adjusted by the front oxygen sensor signal or the ECM as expected to do so, or not adjusted as often as expected to do so once the engine is warmed or under normal engine use.

[FOR P0134]

After the engine runs for 3 minutes, the ECM checks the front oxygen sensor. If during 2 driving cycles the front oxygen sensor's output voltage is not between 400 and 600 millivolts for 5 seconds, the ECM will set a code and the MIL will turn on. This code indicates the front oxygen sensor is not active within the expected range once the engine has been warmed.

CIRCUIT DIAGRAM

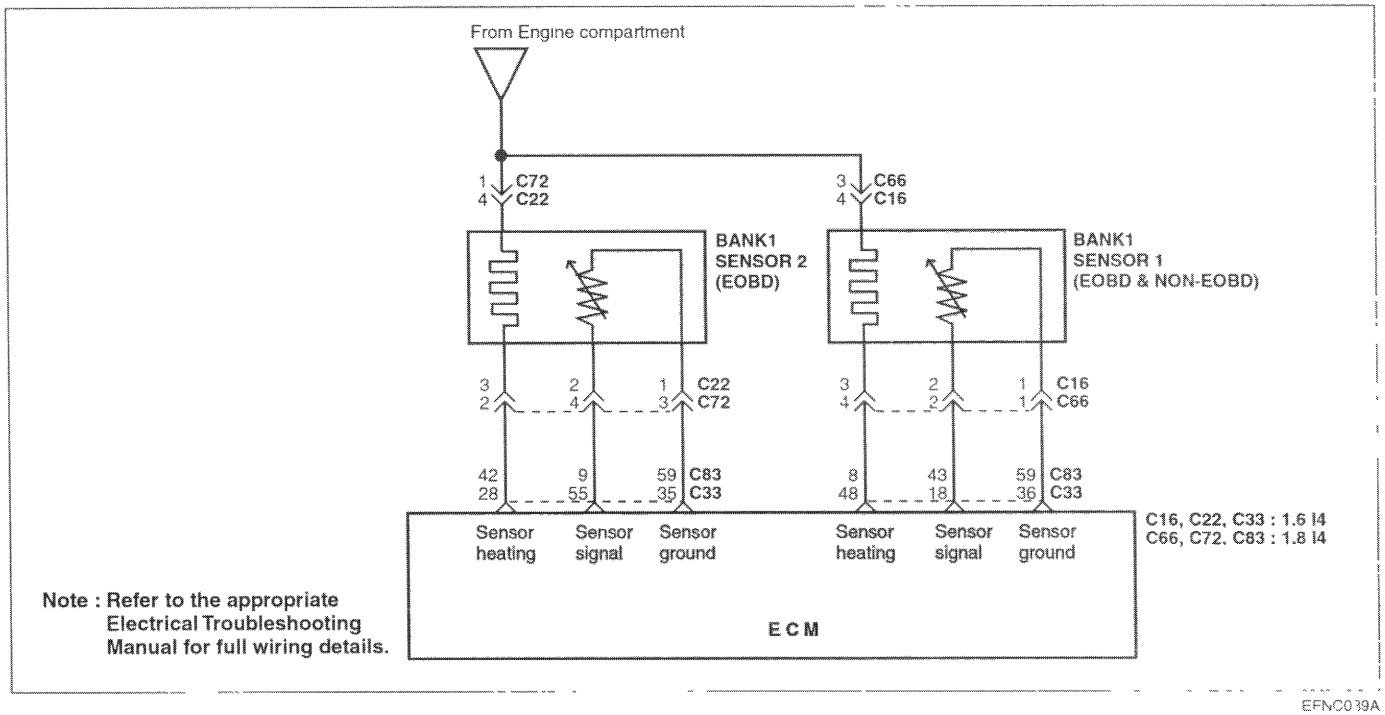

EFNC039A

TEST PROCEDURE

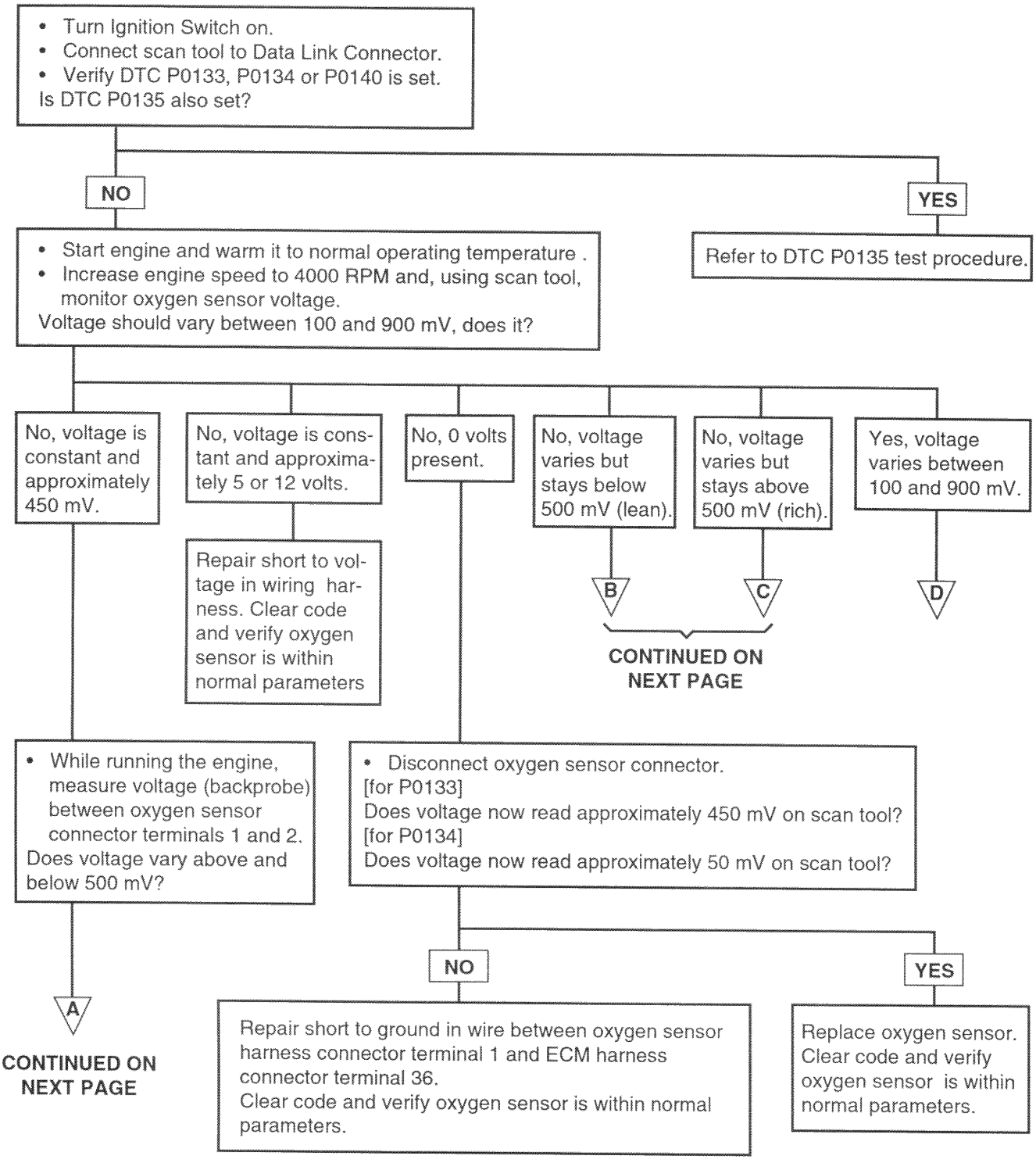

EFNC536B

CONTINUED FROM PREVIOUS PAGE

A

YES

- Ignition off.
- Disconnect ECM connector.
- Disconnect front oxygen sensor.
- Ground front oxygen sensor harness terminal 2.
- Measure resistance between ground and ECM harness connector terminal 36.

Resistance measured should be approximately 1 ohm or less, is it?

NO

Replace oxygen sensor.
Clear code and verify oxygen sensor is within normal parameters.

YES

Verify ECM connector is secure. If OK, replace front oxygen sensor with known good component. Clear code and verify oxygen sensor is within normal parameters. If problem persists, replace ECM.

NO

Repair open circuit in wire or cause of high resistance. Clear code and verify oxygen sensor is within normal parameters.

CONTINUED FROM PREVIOUS PAGE

B

Voltage varies but stays below 500 mV (lean).

- Inspect air inlet downstream of MAP sensor for leaks or damage.
- Inspect exhaust manifold for cracks.

Are any leaks or damage found?

YES

Repair leaks or replace exhaust manifold. Clear code and verify oxygen sensor is within normal parameters.

CONTINUED FROM PREVIOUS PAGE

C

Voltage varies but stays above 500 mV (rich).

NO

- Perform fuel pressure test as outlined in shop manual.

Is fuel pressure within specification and no pressure leak down observed?

E

CONTINUED ON NEXT PAGE

EFKB5360

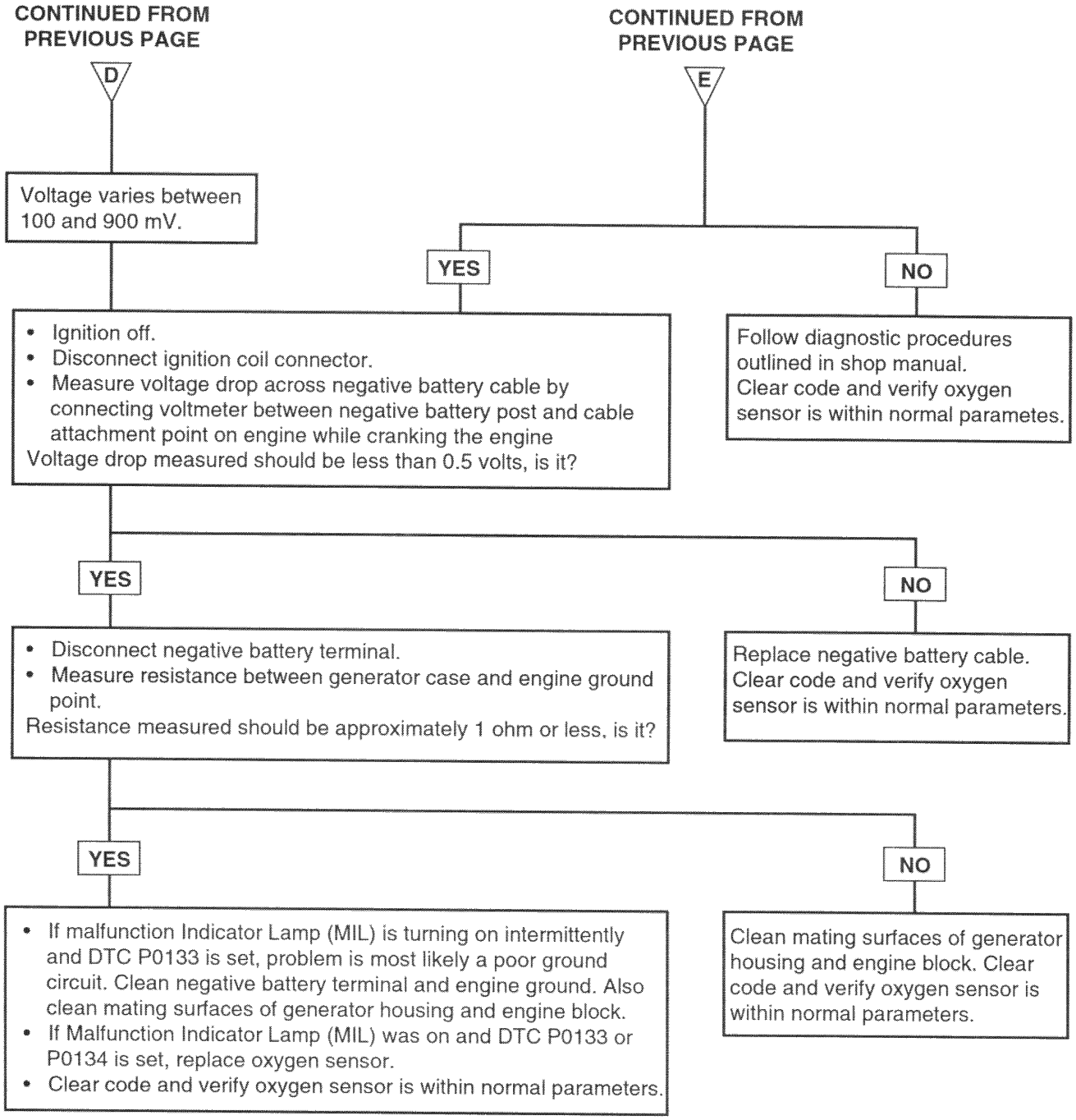
CONTINUED FROM PREVIOUS PAGE
D
Voltage varies between 100 and 900 mV.
CONTINUED FROM PREVIOUS PAGE
E
YES
NO
• Ignition off.
• Disconnect ignition coil connector.
• Measure voltage drop across negative battery cable by connecting voltmeter between negative battery post and cable attachment point on engine while cranking the engine
Voltage drop measured should be less than 0.5 volts, is it?
Follow diagnostic procedures outlined in shop manual. Clear code and verify oxygen sensor is within normal parametes.
YES
NO
• Disconnect negative battery terminal.
• Measure resistance between generator case and engine ground point.
Resistance measured should be approximately 1 ohm or less, is it?
Replace negative battery cable. Clear code and verify oxygen sensor is within normal parameters.
YES
NO
• If malfunction Indicator Lamp (MIL) is turning on intermittently and DTC P0133 is set, problem is most likely a poor ground circuit. Clean negative battery terminal and engine ground. Also clean mating surfaces of generator housing and engine block.
• If Malfunction Indicator Lamp (MIL) was on and DTC P0133 or P0134 is set, replace oxygen sensor.
• Clear code and verify oxygen sensor is within normal parameters.
Clean mating surfaces of generator housing and engine block. Clear code and verify oxygen sensor is within normal parameters.

EFDA536D

EFNC5370

DTC	Diagnostic item
P0030	Oxygen Sensor Heater Circuit Malfunction (Bank1, Sensor1) - Plausibility check
P0031	Oxygen Sensor Heater Check (Bank1, Sensor1) - Low
P0032	Oxygen Sensor Heater Check (Bank1, Sensor1) - High
P0036	Oxygen Sensor Heater Circuit Malfunction (Bank1, Sensor2) - Plausibility check
P0037	Oxygen Sensor Heater Check (Bank1, Sensor2) - Low
P0038	Oxygen Sensor Heater Check (Bank1, Sensor2) - High

DESCRIPTION

Refer to DTC P0130 & P0136.

FAILURE CONDITIONS

[FOR P0030, P0031, P0032]

After the engine runs for 3 minutes, the ECM checks the front oxygen sensor heater circuit. If during two driving cycles the front oxygen sensor's heater resistance is less than 4.6 ohms or greater than 19.5 ohms, the ECM will set P0135 and MIL will turn on. This code indicates an unusually high or low resistance of the heater circuit being read by the front oxygen sensor or ECM.

[FOR P0036, P0037, P0038]

After the engine runs for 2 minutes, the ECM checks the rear oxygen sensor heater circuit. If during two driving cycles the rear oxygen sensor's heater resistance is less than 4.5 ohms or greater than 19.5 ohms, the ECM will set P0141 and MIL will turn on. This code indicates an unusually high or low heater circuit resistance reading by the rear oxygen sensor or ECM.

CIRCUIT DIAGRAM

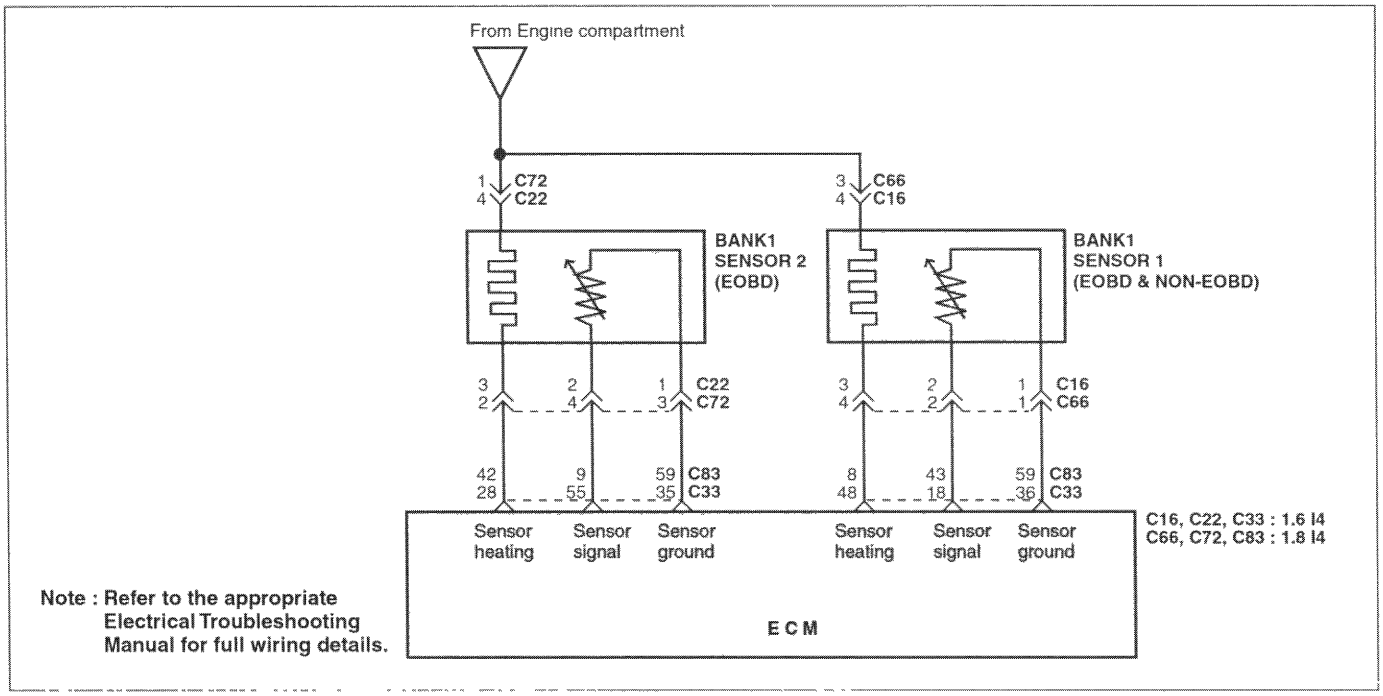

EFNC039A

TEST PROCEDURE

- Turn ignition switch on.
- Connect scan tool to data link connector.
- Verify DTC P0030, P0031, P0032, P0036, P0037 or P0038 is set.

- Disconnect front [for P0030, P0031, P0032] or rear [for P0036, P0037, P0038] oxygen sensor.
- Start engine.
- Measure voltage between oxygen sensor harness connector terminal 4 for 1.6 I4 and terminal 3 or terminal 1 for 1.8/2.0 I4.

Voltage should between 12 and 16 volts, is it?

YES

- Turn ignition switch off.
- Disconnect front [for P0030, P0031, P0032] or rear [for P0036, P0037, P0038] oxygen sensor.
- ECM disconnected.
- Ground front [for P0030, P0031, P0032] or rear [for P0036, P0037, P0038] oxygen sensor harness terminal.
- Measure resistance between ground and ECM harness terminal 36 [for P0030, P0031, P0032] or terminal 35 [for P0036, P0037, P0038].

Resistance should be approximately 1 ohm or less, is it?

YES

- Ignition switch off.
- Disconnect front [for P0030, P0031, P0032] or rear [for P0036, P0037, P0038] oxygen sensor.
- Measure resistance between ground and oxygen sensor harness connector terminal.

Resistance should indicate an open circuit, does it?

A

CONTINUED ON NEXT PAGE

NO

Repair open or shourt to ground in wire between engine compartment and oxygen sensor harness connector terminal.
Clear code and verify oxygen sensor is within normal parameters.

NO

Repair open in wire between oxygen sensor harness connector termial and ECM harness connector terminal 35. [for P0030, P0031, P0032] or terminal 35 [for P0036, P0037, P0038].
Clear code and verify oxygen sensor is within normal parameters.

EFNC537B

CONTINUED FROM PREVIOUS PAGE

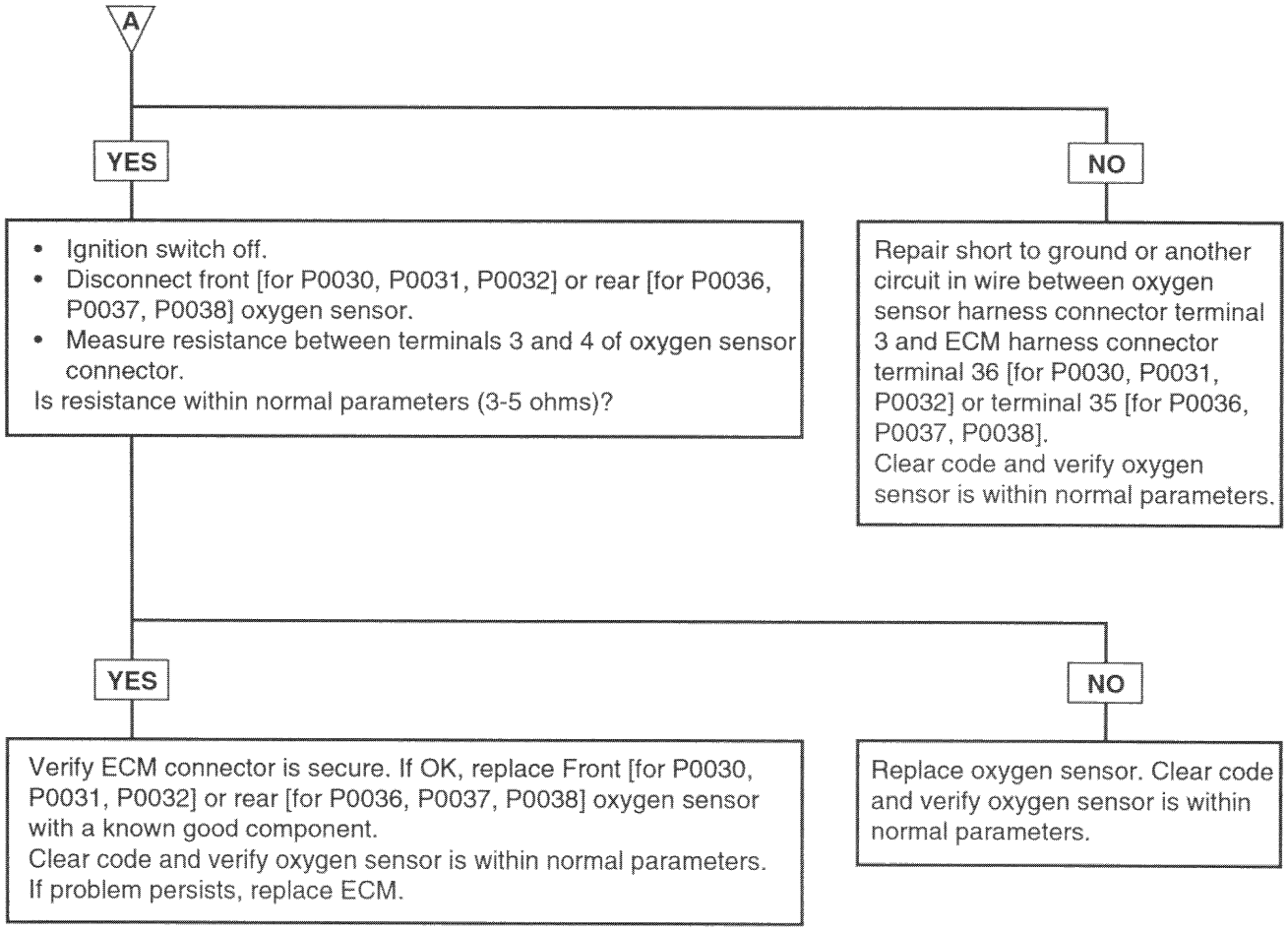

EFNC5410

DTC	Diagnostic item
P0201	Injector Circuit Malfunction - Cylinder 1.
P0202	Injector Circuit Malfunction - Cylinder 2.
P0203	Injector Circuit Malfunction - Cylinder 3.
P0204	Injector Circuit Malfunction - Cylinder 4.
P0261	Injector Circuit Low Input - Cylinder 1.
P0262	Injector Circuit High Input - Cylinder 1.
P0264	Injector Circuit Low Input - Cylinder 2.
P0265	Injector Circuit High Input - Cylinder 2.
P0267	Injector Circuit Low Input - Cylinder 3.
P0268	Injector Circuit High Input - Cylinder 3.
P0270	Injector Circuit Low Input - Cylinder 4.
P0271	Injector Circuit High Input - Cylinder 4.

DESCRIPTION

The fuel injectors are solenoid operated valves. When a fuel injector solenoid is energized (pulsed) the injector needle valve opens, allowing pressurized fuel to pass through the injector and mix with air entering the engine. The Engine Control Module (ECM) controls injector timing and pulse width. The ECM pulses the fuel injectors based on information provided by its network of engine sensors. The ECM uses the crankshaft position sensor to determine when to pulse the injectors. Engine coolant temperature, intake air temperature, air flow, and throttle position data are all used by the ECM to calculate injector pulse width.

The ECM also uses its network of sensors to determine whether all injectors should be pulsed at the same time (simultaneous injection) or each injector should be pulsed individually (sequential injection). Sequential injection is almost always used during normal engine operation. Simultaneous injection may be used when the engine is being cranked.

FAILURE CONDITIONS

The ECM will set a code and the MIL will turn on if an open circuit or short to ground is detected in the fuel injector circuit during two driving cycles.

CIRCUIT DIAGRAM

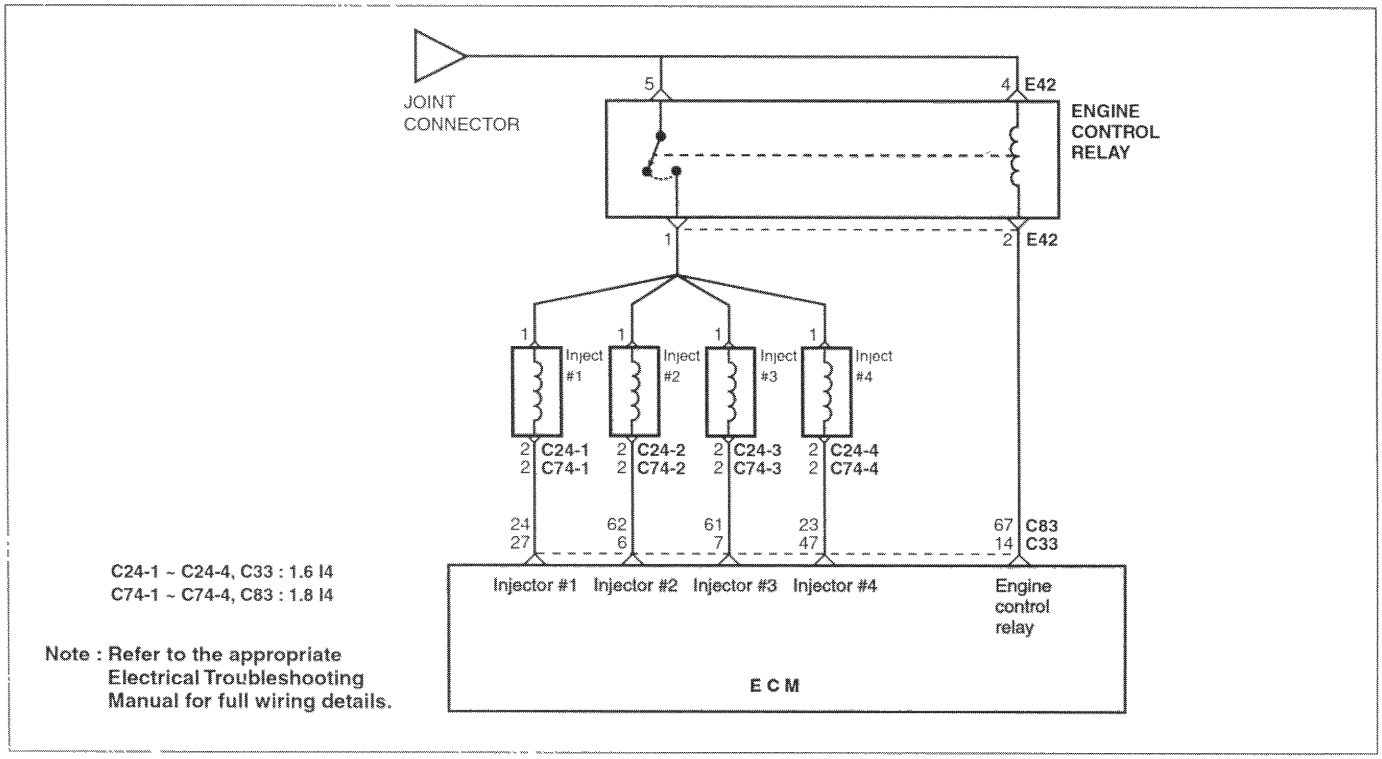

EFNC041A

TEST PROCEDURE

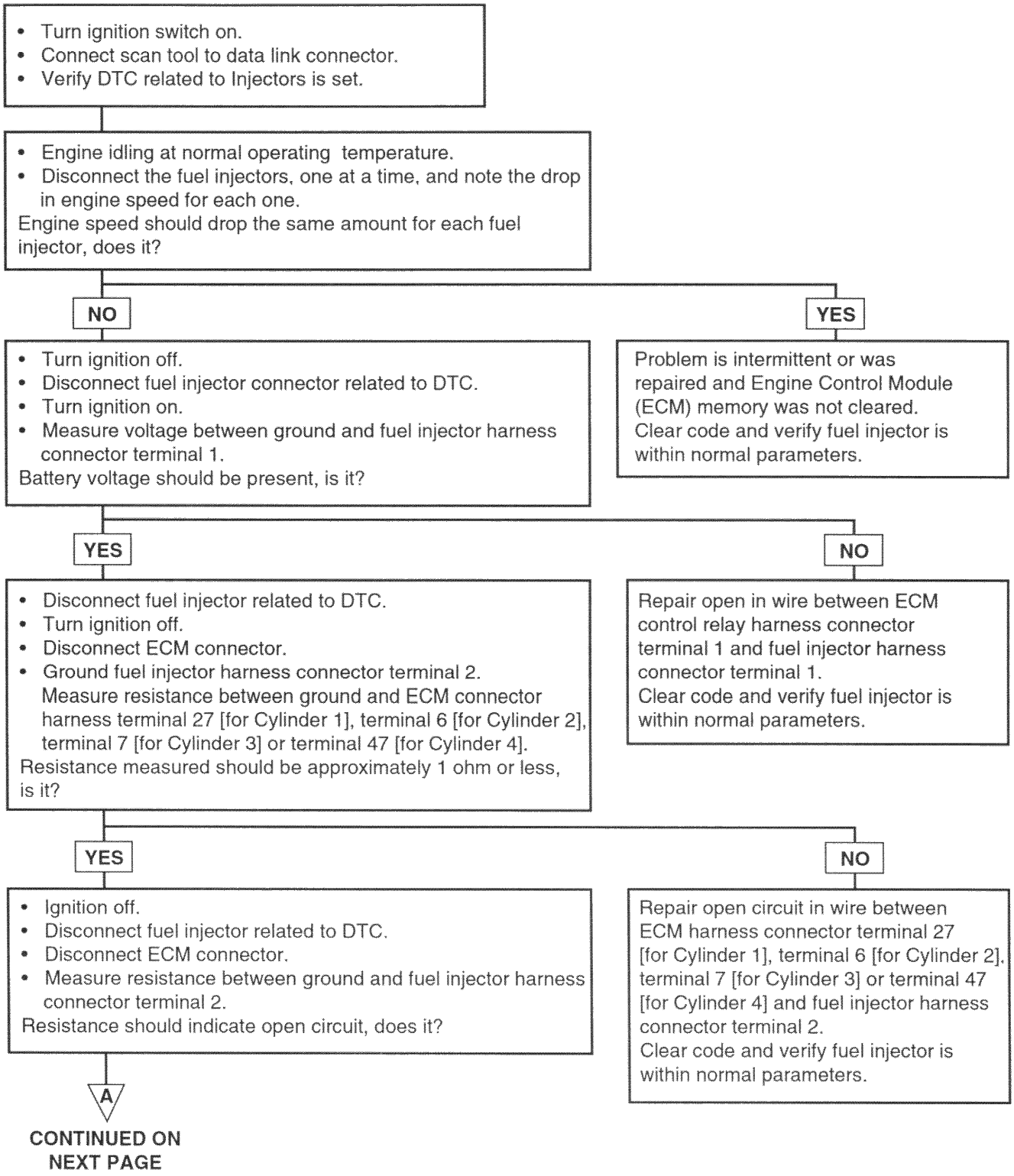

CONTINUED ON NEXT PAGE

EFNC541B

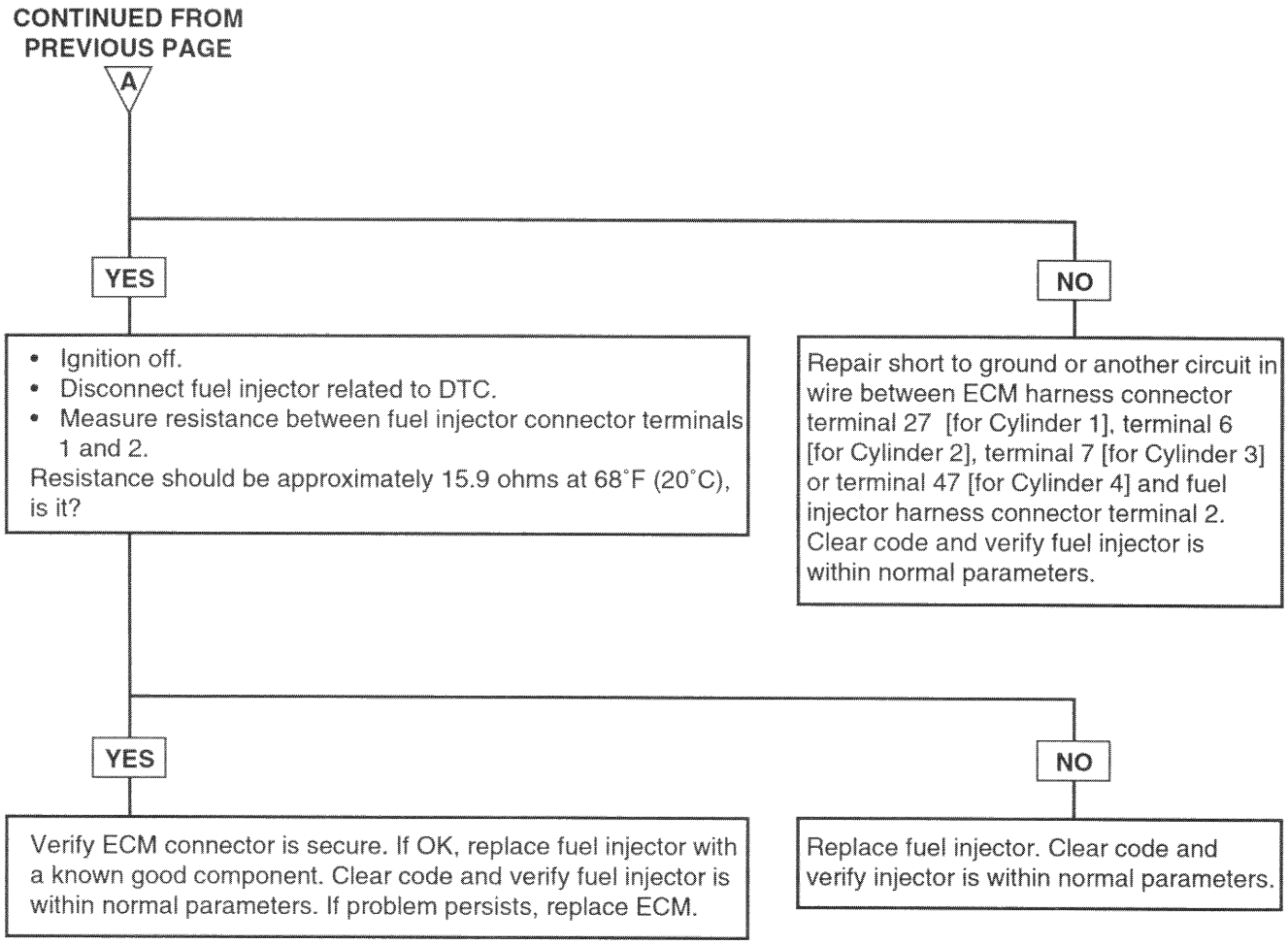
CONTINUED FROM PREVIOUS PAGE
A
YES
NO
• Ignition off.
• Disconnect fuel injector related to DTC.
• Measure resistance between fuel injector connector terminals 1 and 2.
Resistance should be approximately 15.9 ohms at 68°F (20°C), is it?
Repair short to ground or another circuit in wire between ECM harness connector terminal 27 [for Cylinder 1], terminal 6 [for Cylinder 2], terminal 7 [for Cylinder 3] or terminal 47 [for Cylinder 4] and fuel injector harness connector terminal 2. Clear code and verify fuel injector is within normal parameters.
YES
NO
Verify ECM connector is secure. If OK, replace fuel injector with a known good component. Clear code and verify fuel injector is within normal parameters. If problem persists, replace ECM.
Replace fuel injector. Clear code and verify injector is within normal parameters.

EFNC541C

EFNC5460

DTC	Diagnostic item
P0300	Random Misfire Detected

DESCRIPTION

With the ignition switch at ON or START, voltage is applied to the ignition coil. The ignition coil consists of two coils. High tension leads go to each cylinder from the ignition coil. The ignition coil fires two spark plugs on every power stroke (the cylinder under compression and the cylinder on the exhaust stroke). Coil number one fires cylinders 1 and 4. Coil number two fires cylinders 2 and 3.
The Engine Control Module (ECM) provides a switching circuit to ground for energizing the primary ignition coils. The ECM uses the crankshaft position sensor signal to time the energizing of the coil. When a primary ignition coil is energized and de-energized, the secondary coil produces a high voltage spike across the attached spark plugs.

FAILURE CONDITIONS

The ECM will set P0300 and the MIL will turn on if 2 misfires per 100 revolutions are detected during two driving cycles. The misfire rate is measured every 200 revolutions when the following conditions are met:

- Speed change is less than 1000 rpm per second.
- Engine speed is between 600 and 4000 RPM.
- Engine load is greater than 2 milliseconds.
- No fuel cut-off.
- Starter is not engaged.
- Vehicle on smooth road (acceleration sensor reports less than 0.3 g acceleration).

If the misfire rate increases to between 5%-25% per 200 revolutions, there is danger of catalyst damage and the MIL will flash off and on. The catalyst temperature could exceed 3542°F (1950°C) if the misfire rate increases enough. This code indicates a problem with cylinder ignition being read by the ECM.

CIRCUIT DIAGRAM

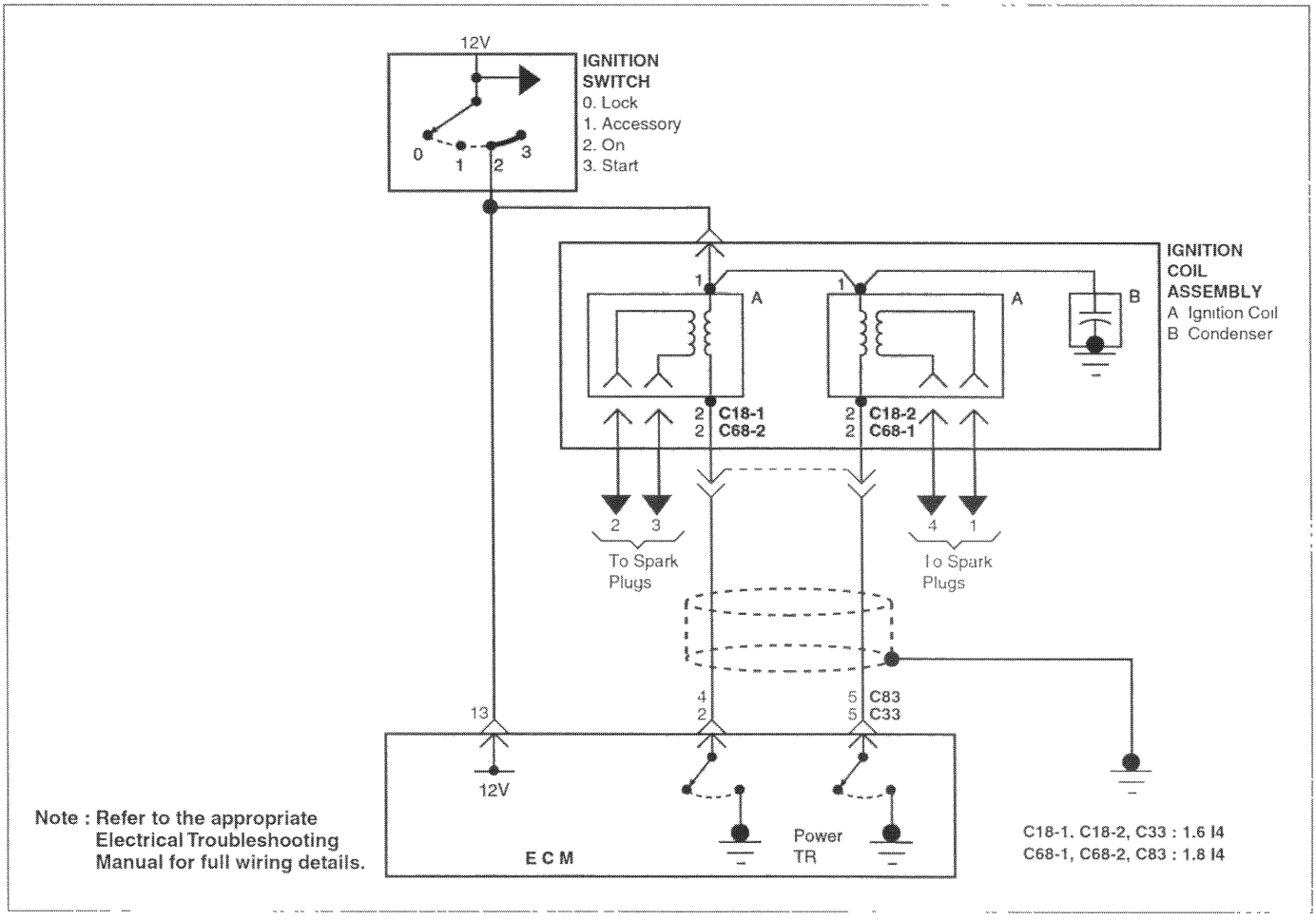

EFNC061A

TEST PROCEDURE

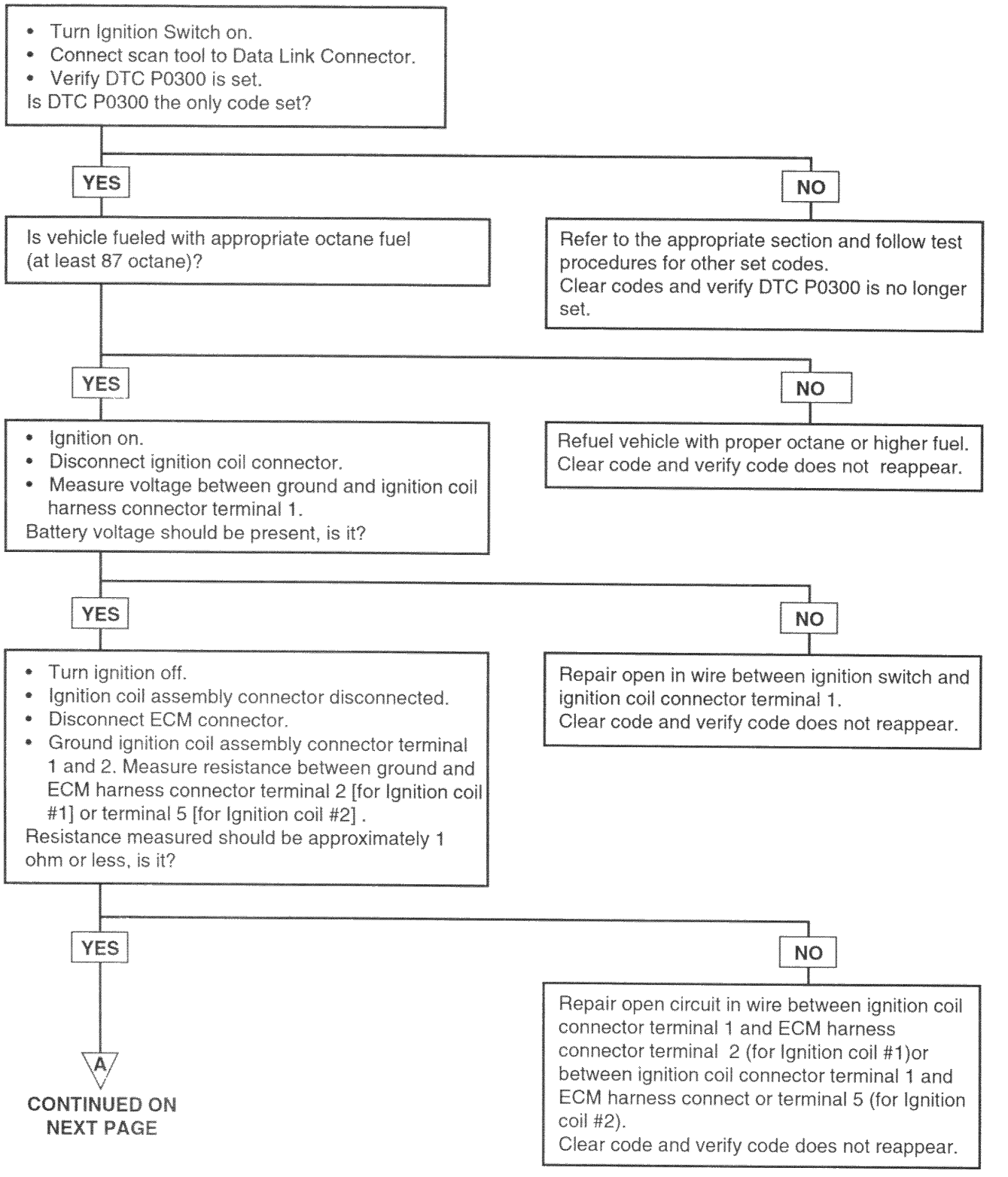

EFKB546B

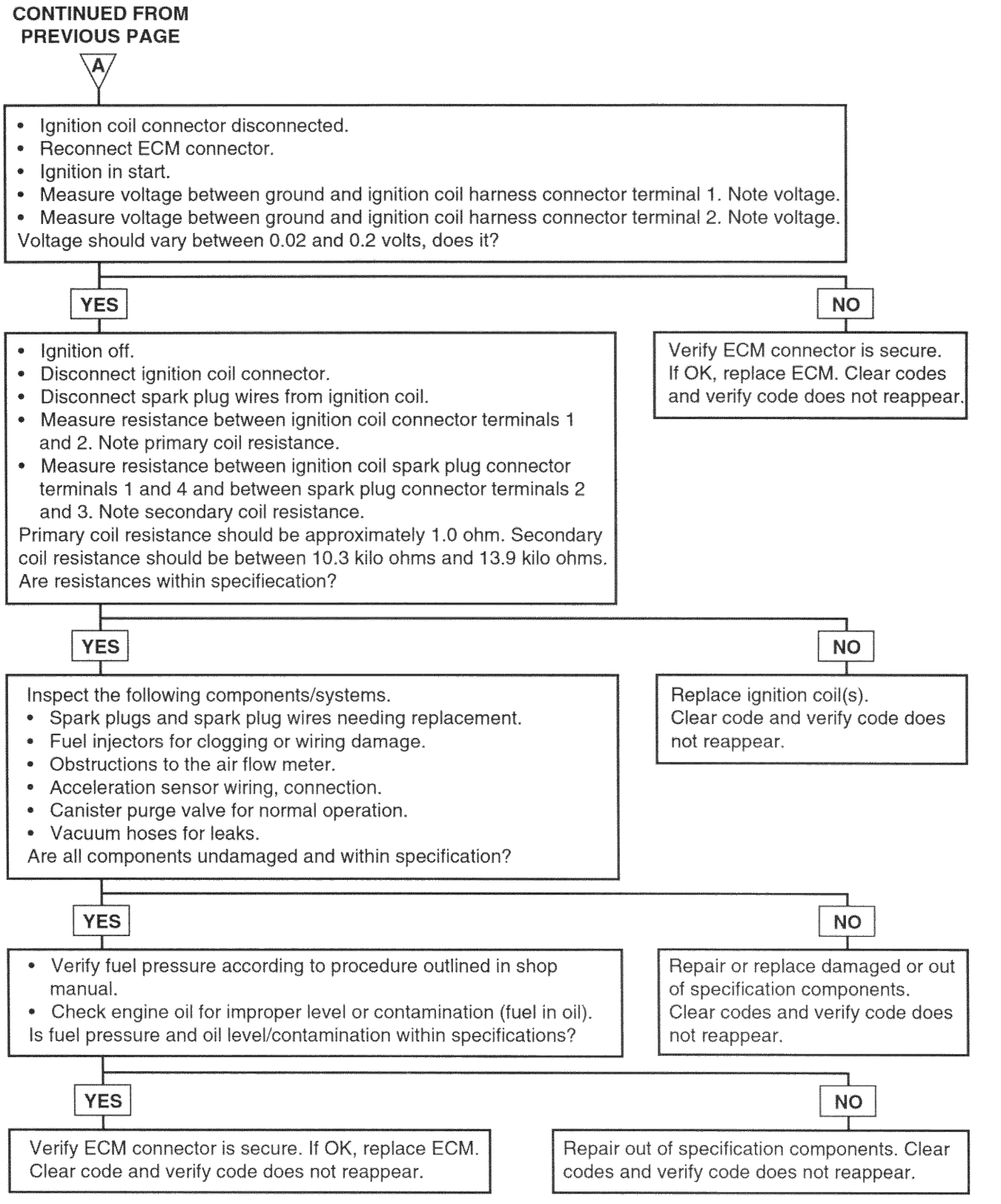
CONTINUED FROM PREVIOUS PAGE
A
• Ignition coil connector disconnected.
• Reconnect ECM connector.
• Ignition in start.
• Measure voltage between ground and ignition coil harness connector terminal 1. Note voltage.
• Measure voltage between ground and ignition coil harness connector terminal 2. Note voltage.
Voltage should vary between 0.02 and 0.2 volts, does it?
YES
NO
• Ignition off.
• Disconnect ignition coil connector.
• Disconnect spark plug wires from ignition coil.
• Measure resistance between ignition coil connector terminals 1 and 2. Note primary coil resistance.
• Measure resistance between ignition coil spark plug connector terminals 1 and 4 and between spark plug connector terminals 2 and 3. Note secondary coil resistance.
Primary coil resistance should be approximately 1.0 ohm. Secondary coil resistance should be between 10.3 kilo ohms and 13.9 kilo ohms. Are resistances within specifiecation?
Verify ECM connector is secure. If OK, replace ECM. Clear codes and verify code does not reappear.
YES
NO
Inspect the following components/systems.
• Spark plugs and spark plug wires needing replacement.
• Fuel injectors for clogging or wiring damage.
• Obstructions to the air flow meter.
• Acceleration sensor wiring, connection.
• Canister purge valve for normal operation.
• Vacuum hoses for leaks.
Are all components undamaged and within specification?
Replace ignition coil(s). Clear code and verify code does not reappear.
YES
NO
• Verify fuel pressure according to procedure outlined in shop manual.
• Check engine oil for improper level or contamination (fuel in oil).
Is fuel pressure and oil level/contamination within specifications?
Repair or replace damaged or out of specification components. Clear codes and verify code does not reappear.
YES
NO
Verify ECM connector is secure. If OK, replace ECM. Clear code and verify code does not reappear.
Repair out of specification components. Clear codes and verify code does not reappear.

EFDA546C

EFNC5510

DTC	Diagnostic item
P0301	Cylinder 1 Misfire Detected
P0302	Cylinder 2 Misfire Detected
P0303	Cylinder 3 Misfire Detected
P0304	Cylinder 4 Misfire Detected

DESCRIPTION

Refer to DTC P0300.

FAILURE CONDITIONS

The ECM will set P0301, P0302, P0303 or P0304 and the MIL will turn on if 2 misfires per 100 revolutions are detected during two driving cycles. The misfire rate is measured every 200 revolutions when the following conditions are met:

- Speed change is less than 1000 rpm per second.
- Engine speed is between 600 and 4000 RPM.
- Engine load is greater than 2 milliseconds.
- No fuel cut-off.
- Starter is not engaged.
- Vehicle on smooth road (acceleration sensor reports less than 0.3 g acceleration).

If the misfire rate increases to between 5%-25% per 200 revolutions, there is danger of catalyst damage and the MIL will flash off and on. The catalyst temperature could exceed 3542°F (1950°C) if the misfire rate increases enough. This code indicates a problem with cylinder ignition being read by the ECM.

CIRCUIT DIAGRAM

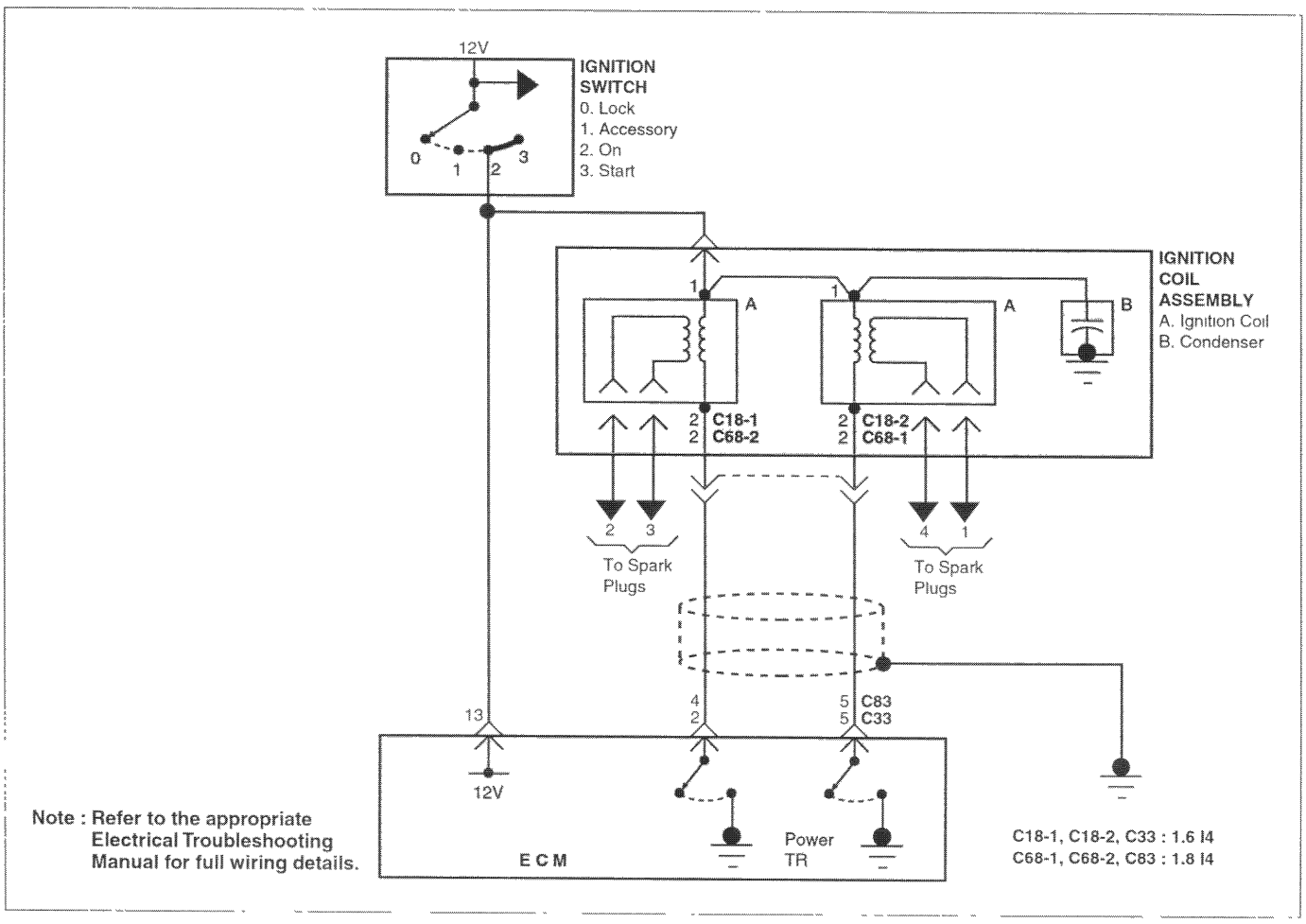

EFNC061A

TEST PROCEDURE

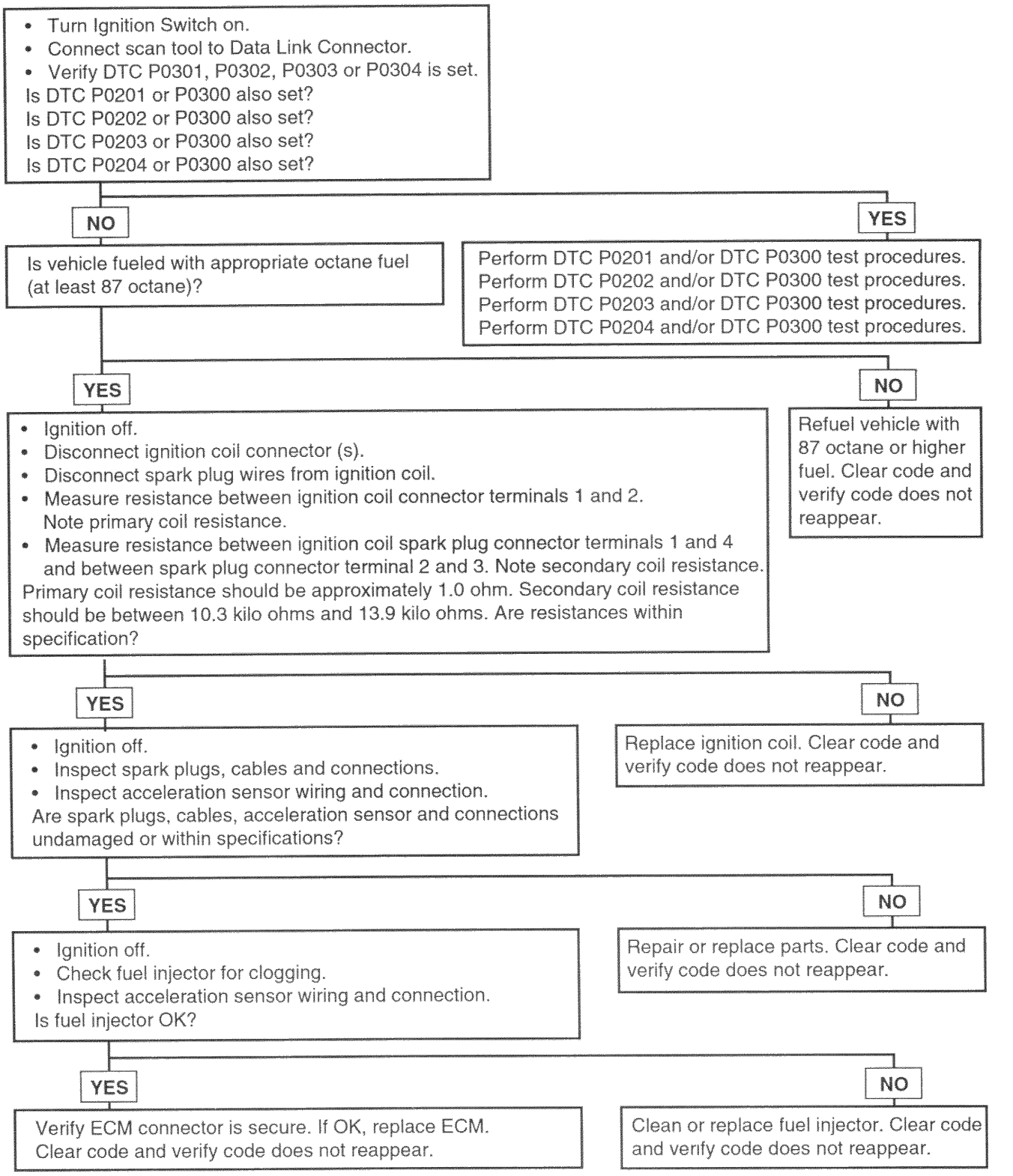

EFDA551B

EFNC5560

DTC	Diagnostic item
P0325	Knock Sensor Circuit Malfunction

DESCRIPTION

The knock sensor is attached to the cylinder block and senses engine knocking. A knocking vibration from the cylinder block is applied as pressure to the sensor's piezo-electric element. This vibration pressure is then converted into a voltage signal. The Engine Control Module (ECM) uses this signal to suppress knocking by retarding ignition timing.

FAILURE CONDITIONS

The ECM will set a code (Malfunction Indicator Lamp will Not turn on) if during two driving cycles the knock sensor's output voltage falls below 650 millivolts during a 4 second check when the following conditions are met:

- Starter is not engaged.
- Engine speed is above 3000 RPM.
- Engine coolant temperature is above 104°F (40°C).
- Engine load is greater than 2.5 milliseconds.

This code indicates an unexpected vibration is being read by the knock sensor or ECM under normal engine operation.

CIRCUIT DIAGRAM

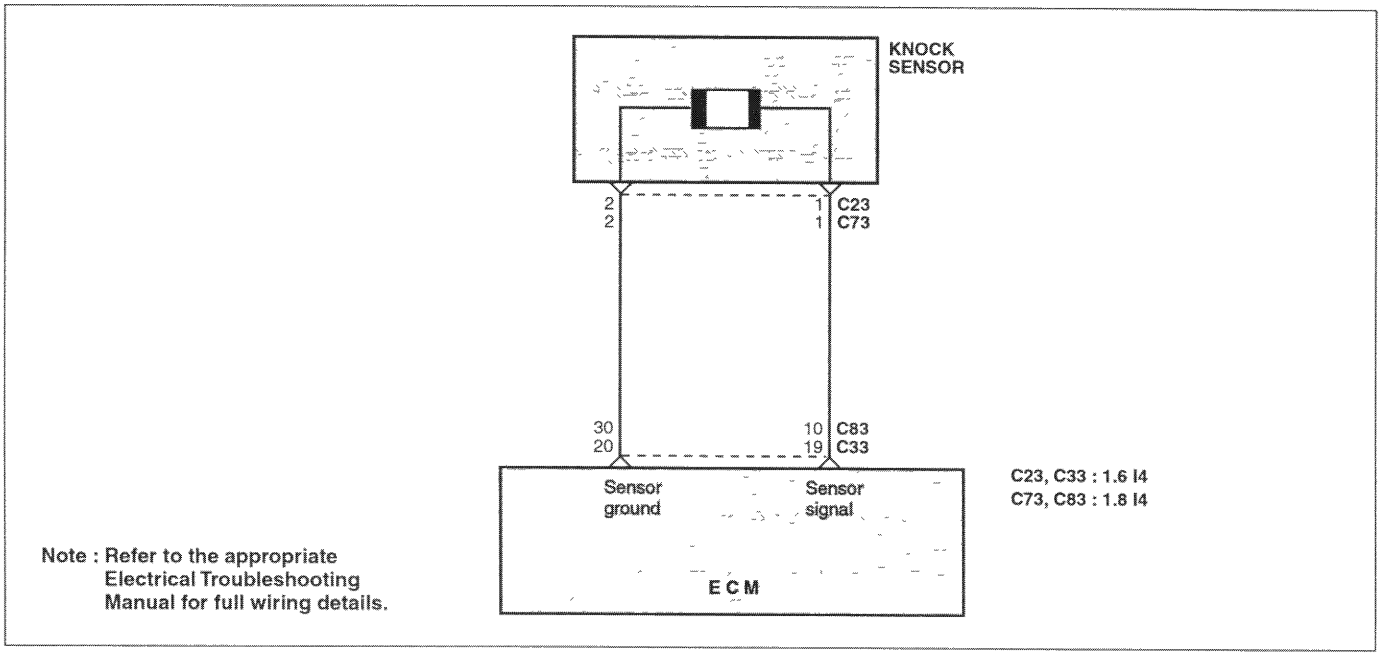

EFNC047A

TEST PROCEDURE

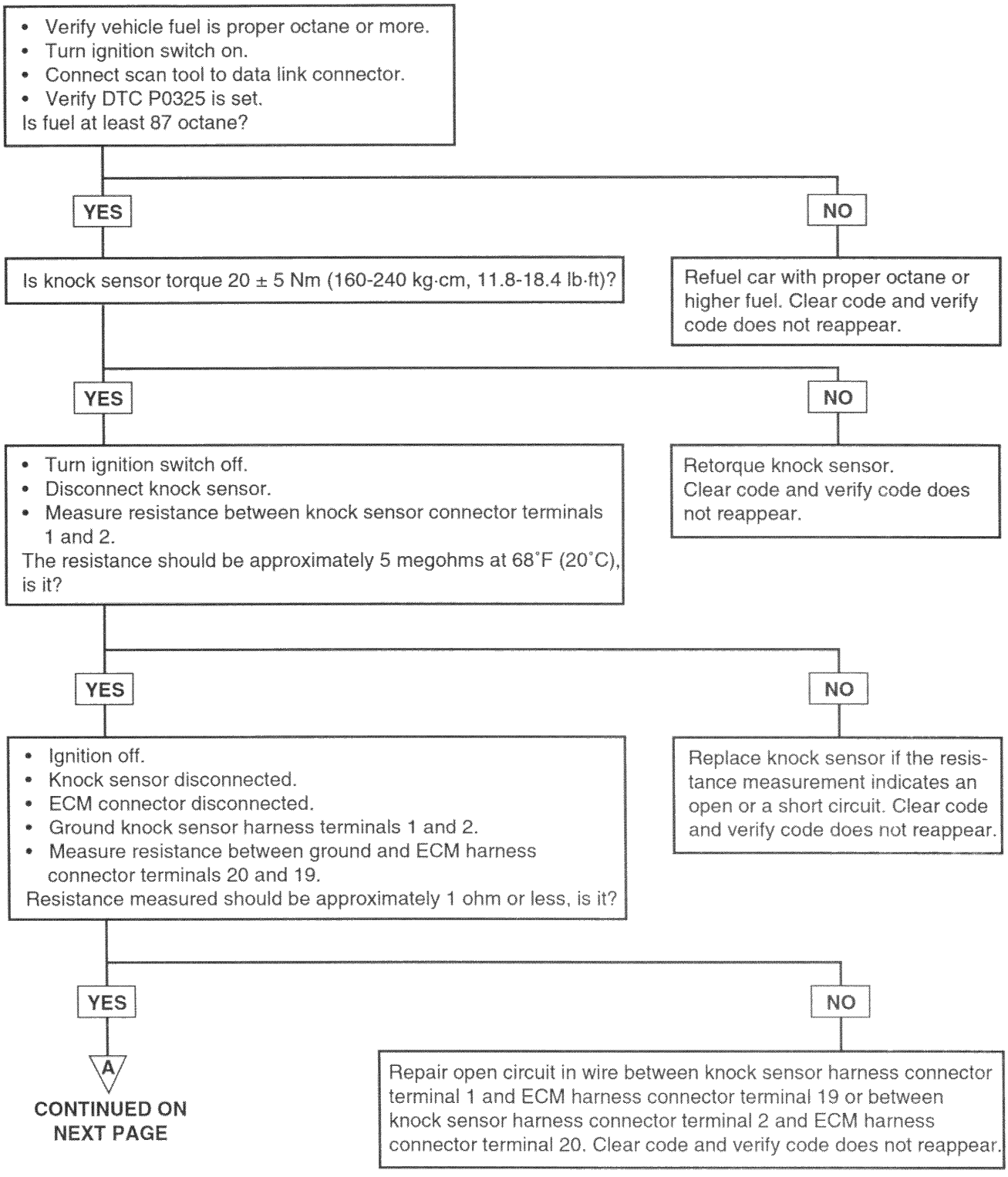

EFNC5b6B

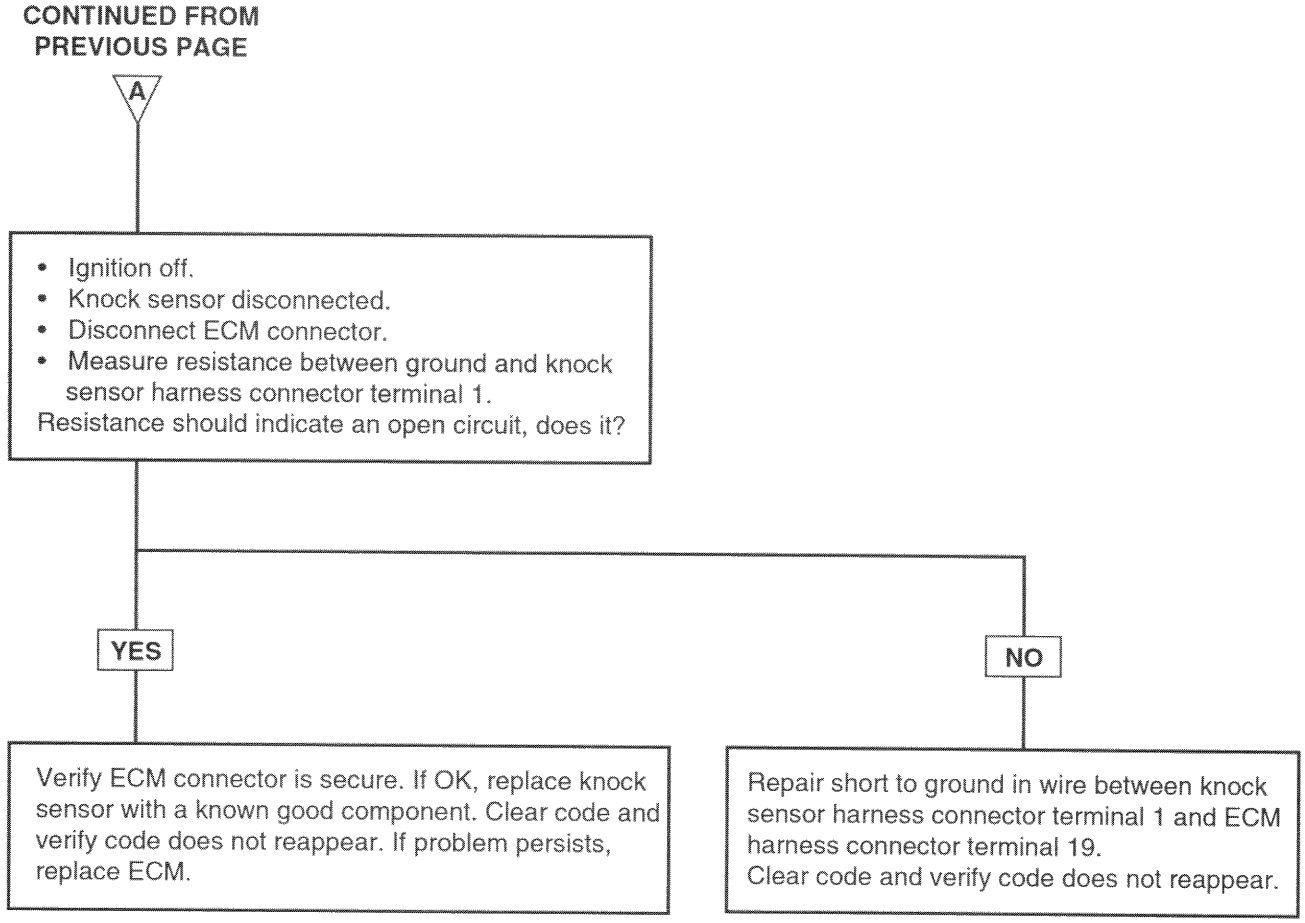
CONTINUED FROM PREVIOUS PAGE
A
• Ignition off.
• Knock sensor disconnected.
• Disconnect ECM connector.
• Measure resistance between ground and knock sensor harness connector terminal 1.
Resistance should indicate an open circuit, does it?
YES
NO
Verify ECM connector is secure. If OK, replace knock sensor with a known good component. Clear code and verify code does not reappear. If problem persists, replace ECM.
Repair short to ground in wire between knock sensor harness connector terminal 1 and ECM harness connector terminal 19.
Clear code and verify code does not reappear.

EFNC5610

DTC	Diagnostic item
P0335	Crankshaft Position Sensor Circuit Malfunction
P0336	Crankshaft Position Sensor Circuit Out of Range

DESCRIPTION

The Crankshaft Position (CKP) sensor consists of a magnet and coil located next to the flywheel. The sensing wheel teeth are used by the CKP sensor to generate a signal. The voltage signal from CKP sensor allows the Engine Control Module (ECM) to determine engine RPM and crankshaft position.

FAILURE CONDITIONS

[FOR P0335]

The ECM will set P0335 and the MIL will turn on if the CKP signal voltage remains at 0.0 volts with the starter engaged for 4 seconds or 8 revolutions and the Camshaft Position (CMP) sensor signal indicating engine rotation This check is made every time the engine starts. This code indicates no crankshaft signal is being read by the CKP sensor or the ECM while a CMP sensor signal verifies engine rotation.

[FOR P0336]

The ECM will set P0336 and the MIL will turn on immediately if the CKP sensor signal does not indicate the two missing teeth in exactly the same position on the tone wheel during two successive engine revolutions. This check is made for 5 seconds when the engine is running above 2000 RPM. This code indicates a problem with the crankshaft being read by the CKP sensor or ECM.

CIRCUIT DIAGRAM

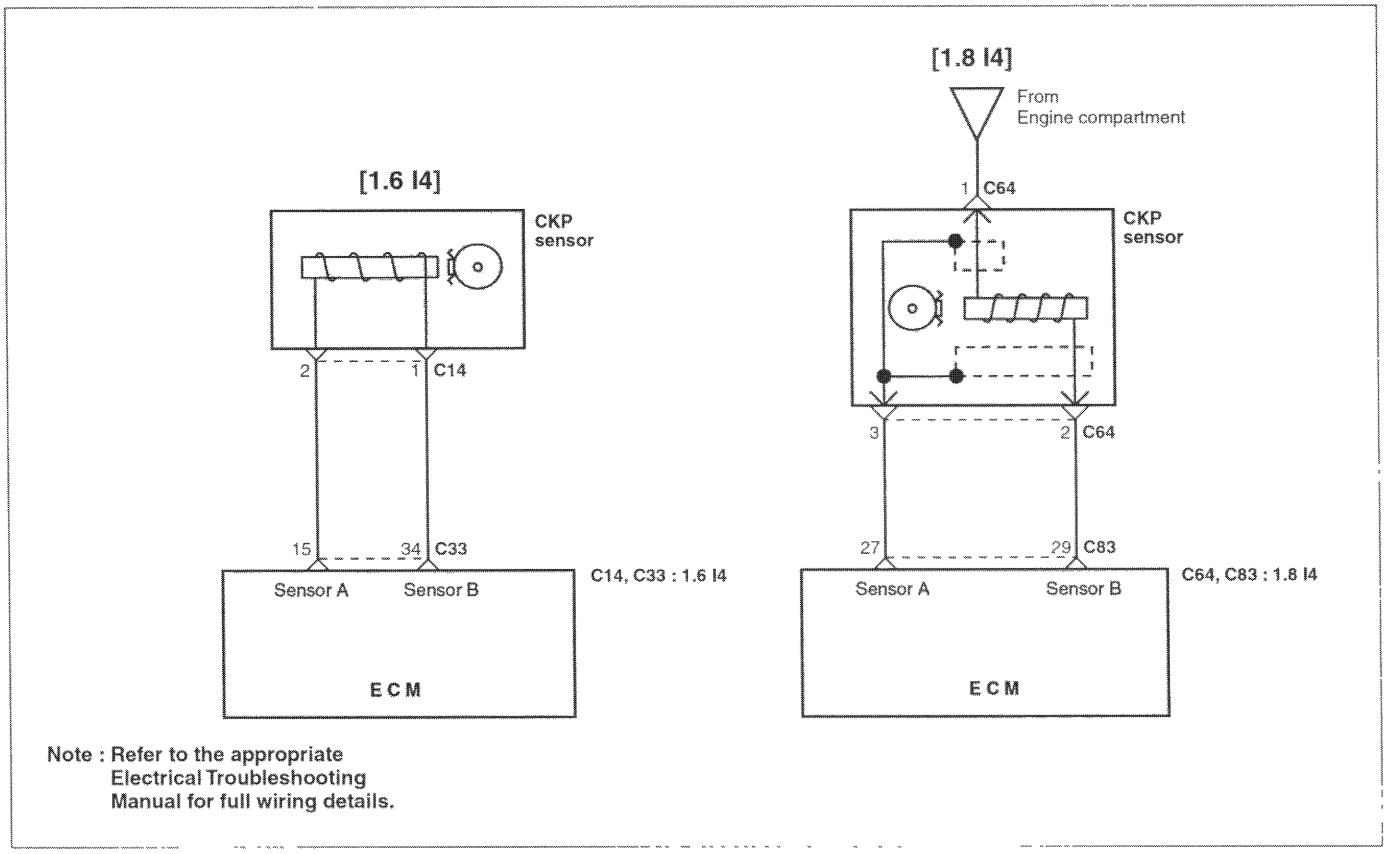

EFNC057A

TEST PROCEDURE

- Turn ignition switch on.
- Connect scan tool to data link connector.
- Verify DTC P0335 or P0336 is set.

- Turn ignition switch off.
- Disconnect Crankshaft Position (CKP) sensor.
- Measure resistance between CKP sensor connector terminals 2 and 1.

The resistance should be between 486 and 594 ohms at 68°F (20°C), is it?

YES

- Ignition off.
- CKP sensor disconnected.
- ECM connector disconnected.
- Measure resistance between ground and both CKP sensor harness connector terminals 2 and 1.

The resistance between both terminals and ground should indicate an open circuit, does it?

NO

Replace CKP sensor.
Clear code and verify CKP sensor is within normal parameters.

YES

- Ignition off.
- CKP sensor disconnected.
- ECM connector disconnected.
- Ground CKP sensor harness connector terminals 1 and 2. Measure resistance between ground and ECM harness connector terminals 15 and 34. Note resistance value.

Resistance measured should be approximately 1 ohm or less, is it?

NO

Repair short to ground in wire between CKP sensor harness terminal 1 and ECM harness connector terminal 34 or between CKP terminal 2 and ECM terminal 15.
Clear code and verify code does not reappear.

YES

Verify ECM connector is secure. If OK, replace CKP sensor with known good component. Clear code and verify code does not reappear.
If problem persists, replace ECM.

NO

Repair open circuit in wire between CKP sensor harness terminal 1 and ECM harness connector terminal 34 or between CKP terminal 2 and ECM terminal 15. Clear code and verify code does not reappear.

EFKB561B

EFNC5660

DTC	Diagnostic item
P0340	Camshaft Position Sensor Circuit Malfunction

DESCRIPTION

The Camshaft Position (CMP) sensor senses the Top Dead Center (TDC) point of the #1 cylinder in the compression stroke. The CMP sensor signal allows the Engine Control Module (ECM) to determine the fuel injector sequence starting point.

FAILURE CONDITIONS

The ECM will set P0340 and the Malfunction Indicator Lamp (MIL) will turn on if during two driving cycles there is more than one CMP sensor signal during two engine revolutions when the engine speed is above 600 RPM. This code indicates unexpected camshaft position readings by the CMP sensor or ECM when the engine is rotating.

CIRCUIT DIAGRAM

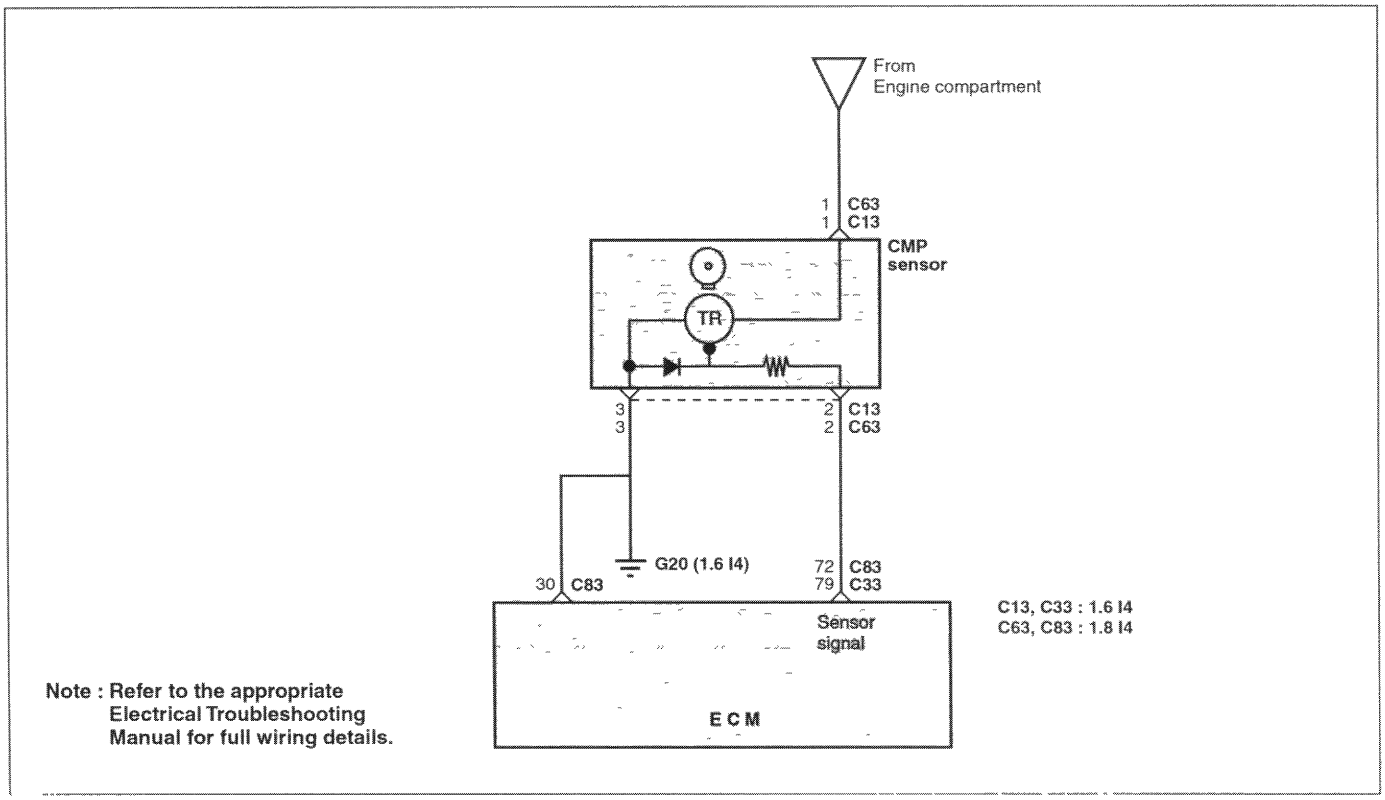

EFNC035A

TEST PROCEDURE

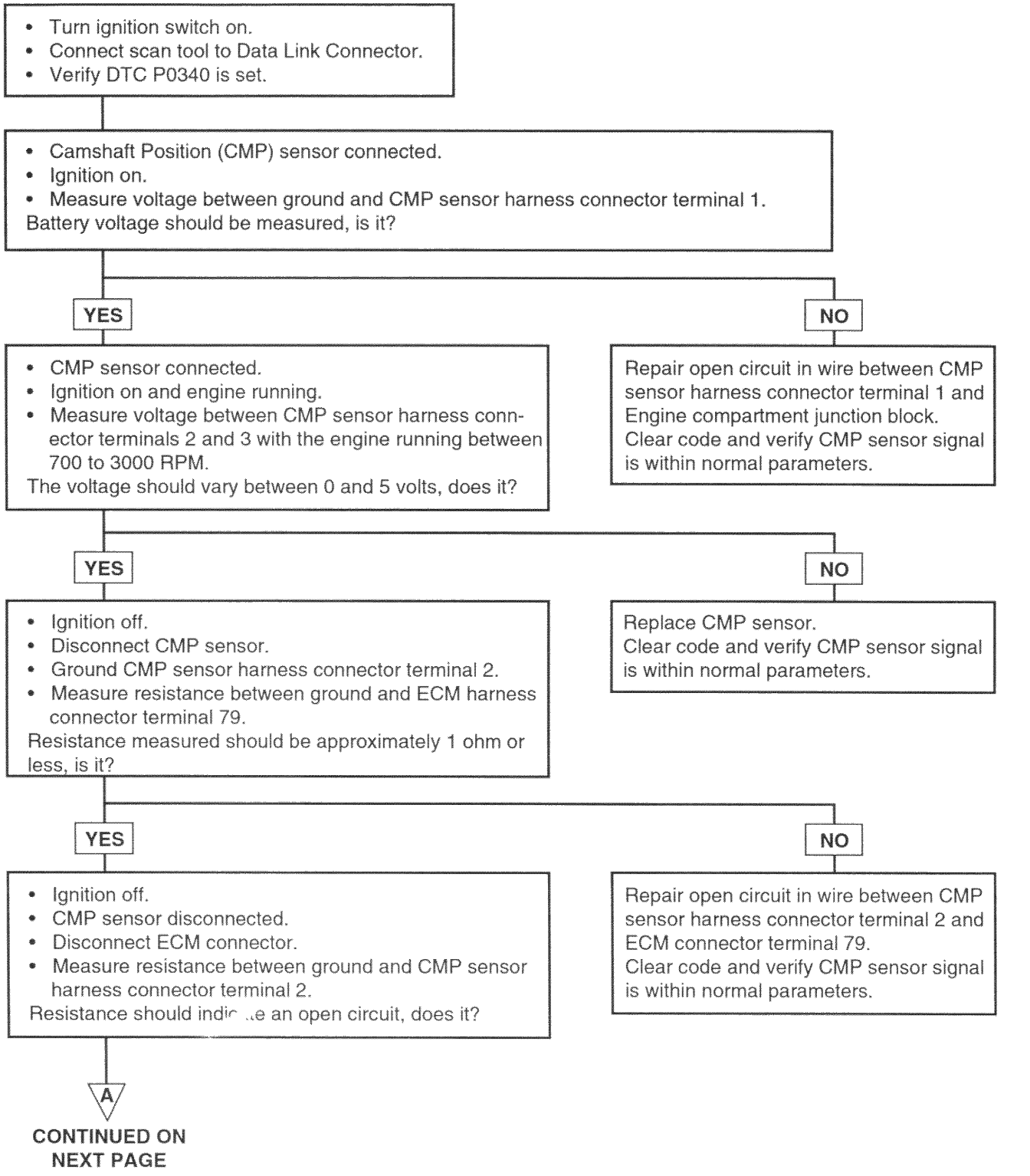

CONTINUED ON NEXT PAGE

EFNC566B

CONTINUED FROM PREVIOUS PAGE

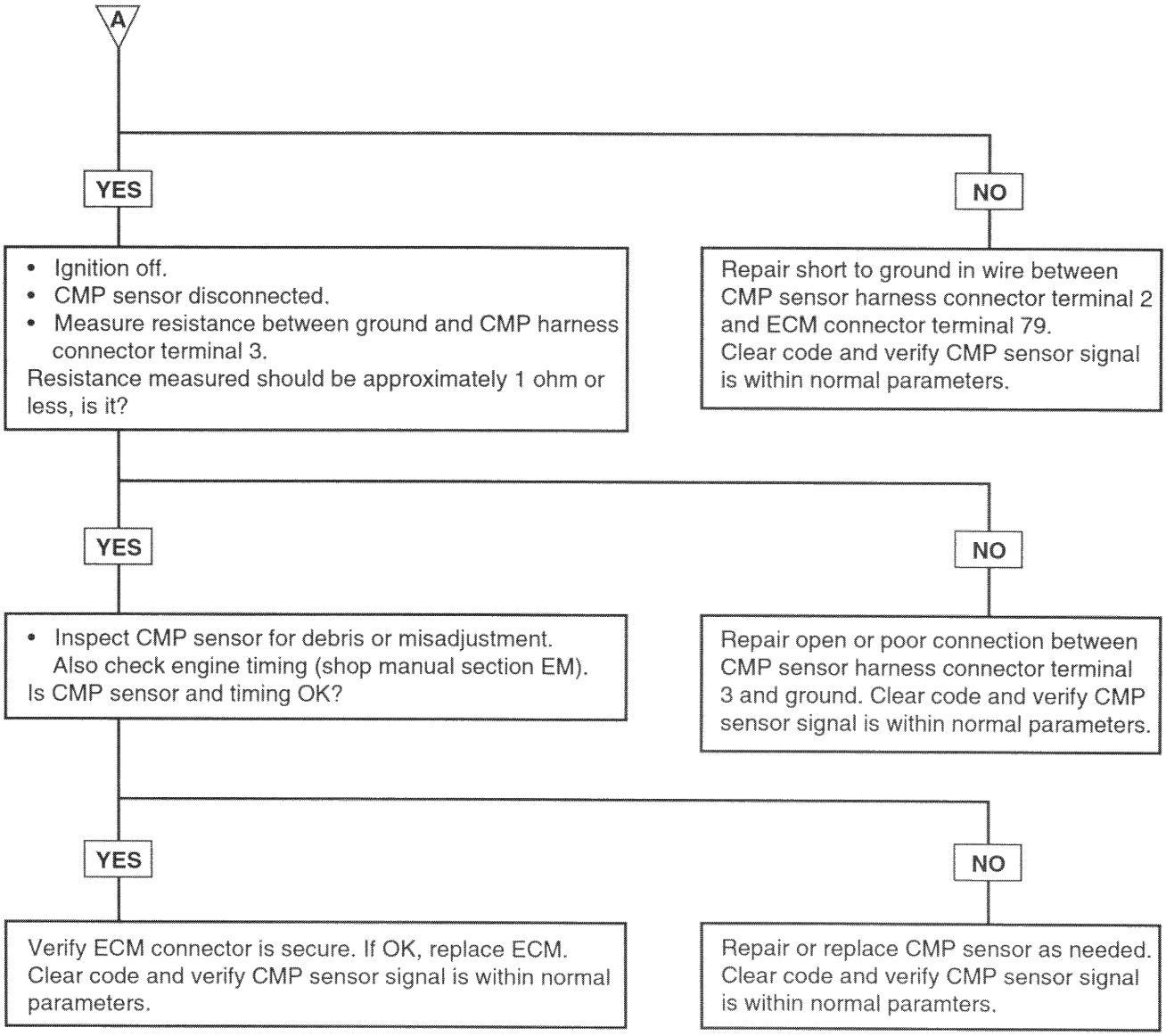

FKB566C

EFNC5710

DTC	Diagnostic item
P0420, P0422	Catalyst efficiency Low

DESCRIPTION

The catalyst's efficiency is demonstrated in its ability to oxidize CO and HC emissions. The Engine Control Module (ECM) compares the output signals of the front and rear oxygen sensors to determine whether the output of the rear sensor is beginning to match the output of the front oxygen sensor. As the catalyst wears, the rear oxygen sensor's signal trace begins to match the front oxygen sensor's signal trace. That is because the catalyst becomes saturated with oxygen and cannot use the oxygen to convert HC and CO into H2O and CO2 with the same efficiency as when it was new. A completely worn catalyst shows a 100% match between front and rear sensor outputs.

FAILURE CONDITIONS

The efficiency of the catalytic converter is measured by comparing the activity of the front and rear oxygen sensors. The ECM will set a code and the Malfunction Indicator Lamp (MIL) will turn on if the front and rear oxygen sensor signals match more than 60% of the time in two of four 170 second monitoring periods during two driving cycles. The measurements are taken when the following conditions are met:

1. The ECM is operating in closed loop.
2. The engine speed is between 1800 and 3200 PRM.
3. The catalyst temperature is above 702°F (372°C).
4. The canister purge function is greater than 0.9.
5. The vehicle is not shifting gears.
6. The engine load is between 1.4 milliseconds and 4.5 milliseconds.

This code indicates that the catalytic converter has been found to have a low efficiency according to the readings of the front and rear oxygen sensors.

TEST PROCEDURE

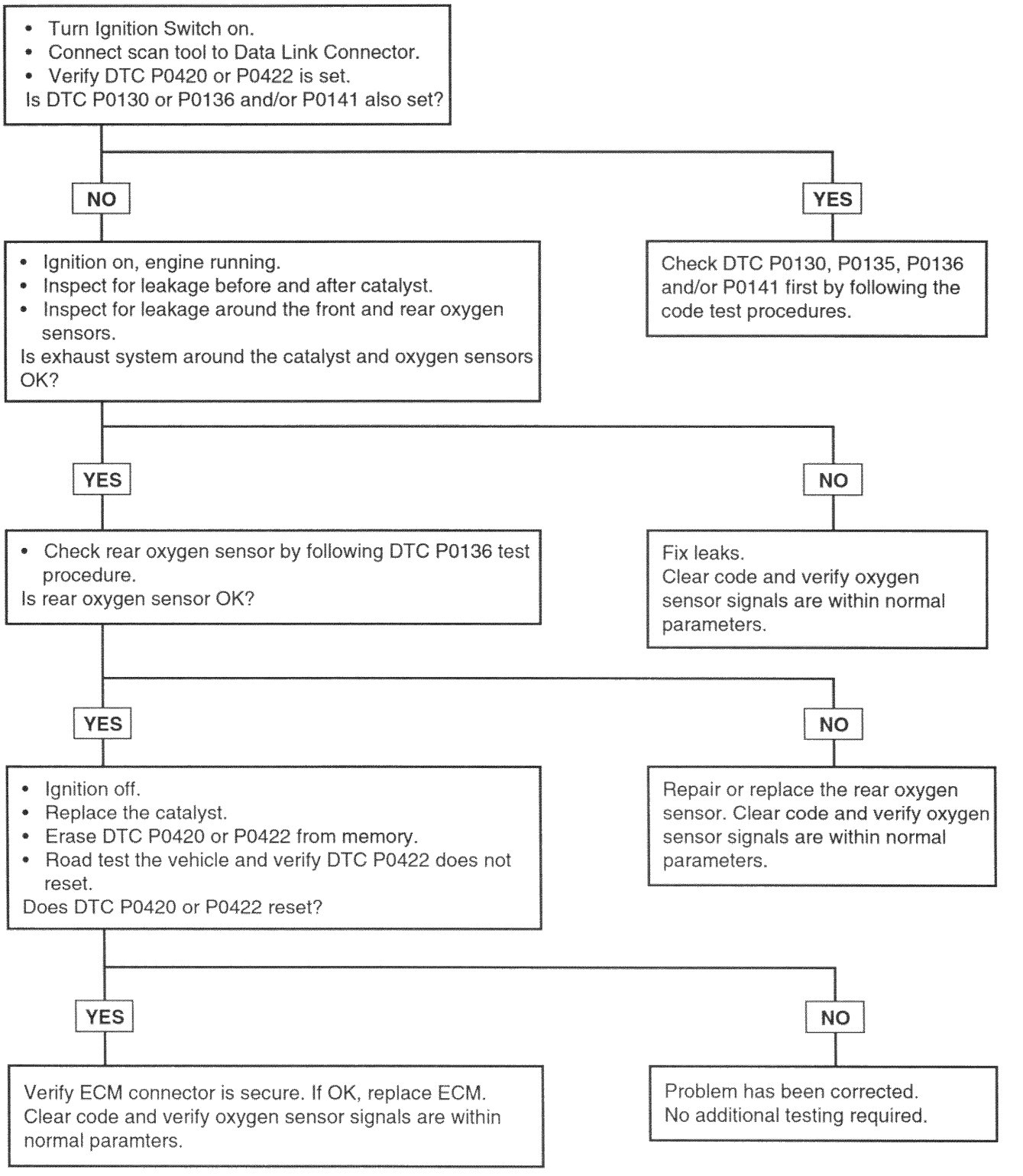

EFNC571B

EFNC5760

DTC	Diagnostic item
P0443	Purge Control Solenoid Valve Circuit Malfunction
P0444	Purge Control Solenoid Valve Circuit Open
P0445	Purge Control Solenoid Valve Circuit Shorted

DESCRIPTION

The Purge Control Solenoid Valve is part of the Evaporative Emission Control System. The solenoid controls purge air from the evaporative emission canister.

FAILURE CONDITIONS

The ECM will set P0444 and the MIL will turn on if an open circuit is detected in the driver stage of the purge control solenoid circuit during two driving cycles.
The ECM will set P0445 and the MIL will turn on if a short circuit is detected in the driver stage of the purge control solenoid circuit during two driving cycles.

CIRCUIT DIAGRAM

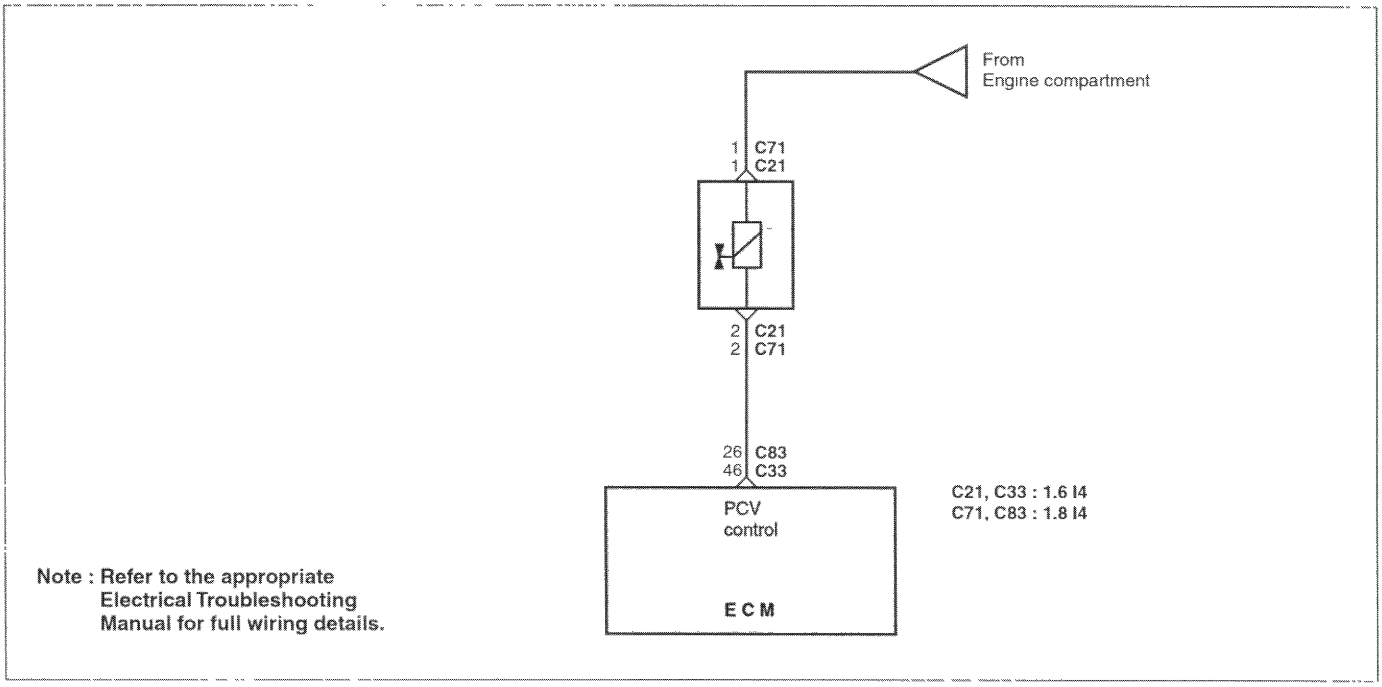

EFNC057A

TEST PROCEDURE

- Turn ignition switch on.
- Connect scan tool to data link connector.
- Verify DTC P0443, P0444 or P0445 is set.

- Turn ignition off.
- Disconnect the purge control solenoid valve connector.
- Turn ignition on.
- Measure voltage between ground and the purge control solenoid valve harness connector terminal 1.

Battery voltage should be present, is it?

YES

- Purge control solenoid valve disconnected.
- Disconnect ECM connector.
- Turn ignition off.
- Ground purge control solenoid valve harness connector terminal 2.
- Measure resistance between ground and ECM harness connector terminal 46.

Resistance measured should be approximatley 1 ohm or less, is it?

YES

- Ignition off.
- Purge control solenoid valve disconnected.
- Disconnect ECM connector.
- Measure resistance between ground and purge control solenoid valve harness connector terminal 2.

Resistance should indicate an open circuit, does it?

YES

- Ignition off.
- Purge control solenoid valve disconnected.
- Measure resistance between the purge control solenoid valve connector terminals 1 and 2.

Resistance should be approximately 26 ohms, is it?

YES

Verify ECM connector is secure. If OK, replace purge control solenoid valve with a known good component. Clear code and verify purge control solenoid valve is within normal parameters. If problem persists, replace ECM.

NO

Repair open or short to ground in wire between Engine compartment junction block and purge control solenoid valve connector terminal 1.
Clear code and verify code does not reappear.

NO

Repair open in wire between ECM connector terminal 46 and purge control solenoid valve connector terminal 2. Clear code and verify code does not reappear.

NO

Repair short to ground or another circuit in the between ECM connector terminal 46 and purge control solenoid valve connector terminal 2. Clear code and verify code does not reappear.

NO

Replace purge control solenoid valve. Clear code and verify purge control solenoid valve is within normal parameters.

EFKB5763

EFNC5810

DTC	Diagnostic item
P0501	Vehicle Speed Sensor Malfunction

DESCRIPTION

The Vehicle Speed Sensor is a wheel speed sensor that is built near the wheel disc. The sensor converts the transaxle gear revolutions of the disc into a pulse signal which is sent to the ECM.

FAILURE CONDITIONS

The ECM will set a code and the Malfunction Indicator Lamp (MIL) will turn on if there is no vehicle speed sensor output signal for 20 seconds during two driving cycles when the following conditions are met:

CIRCUIT DIAGRAM

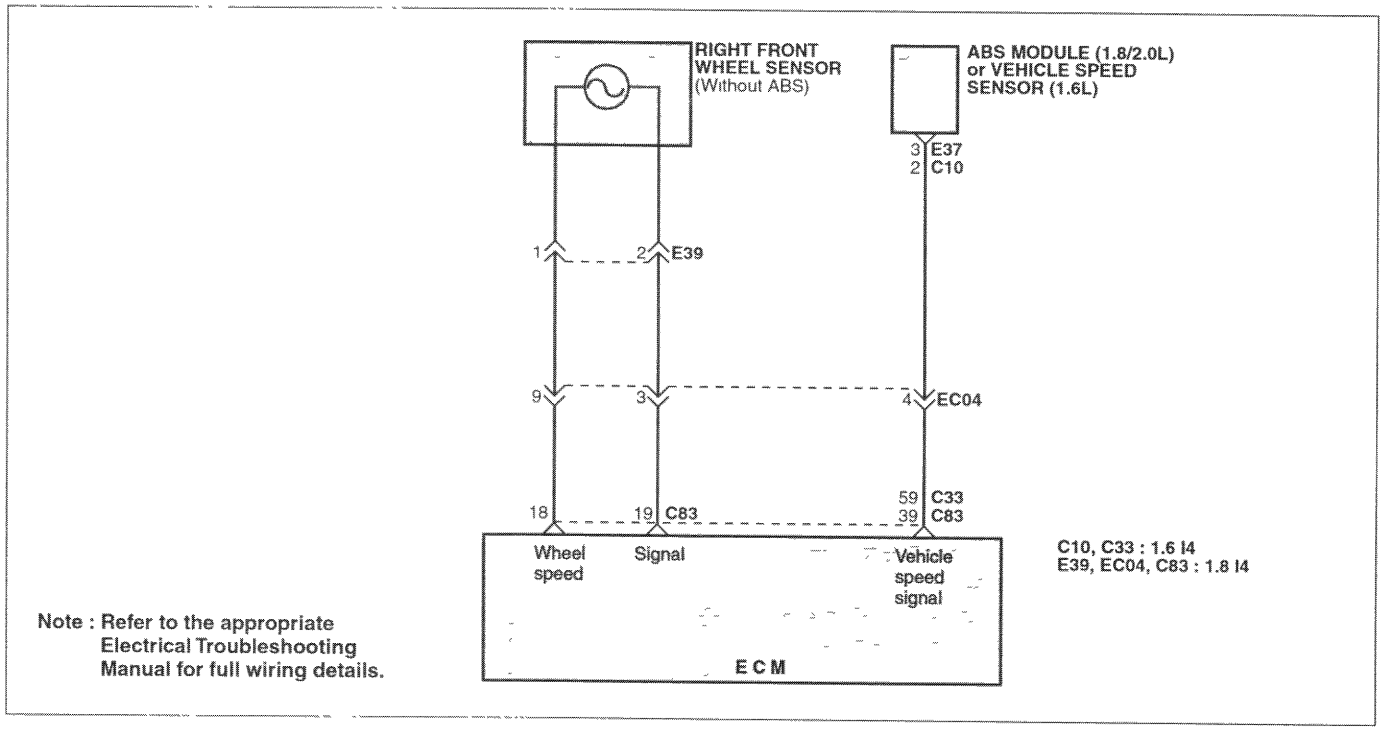

EFNC045A

TEST PROCEDURE

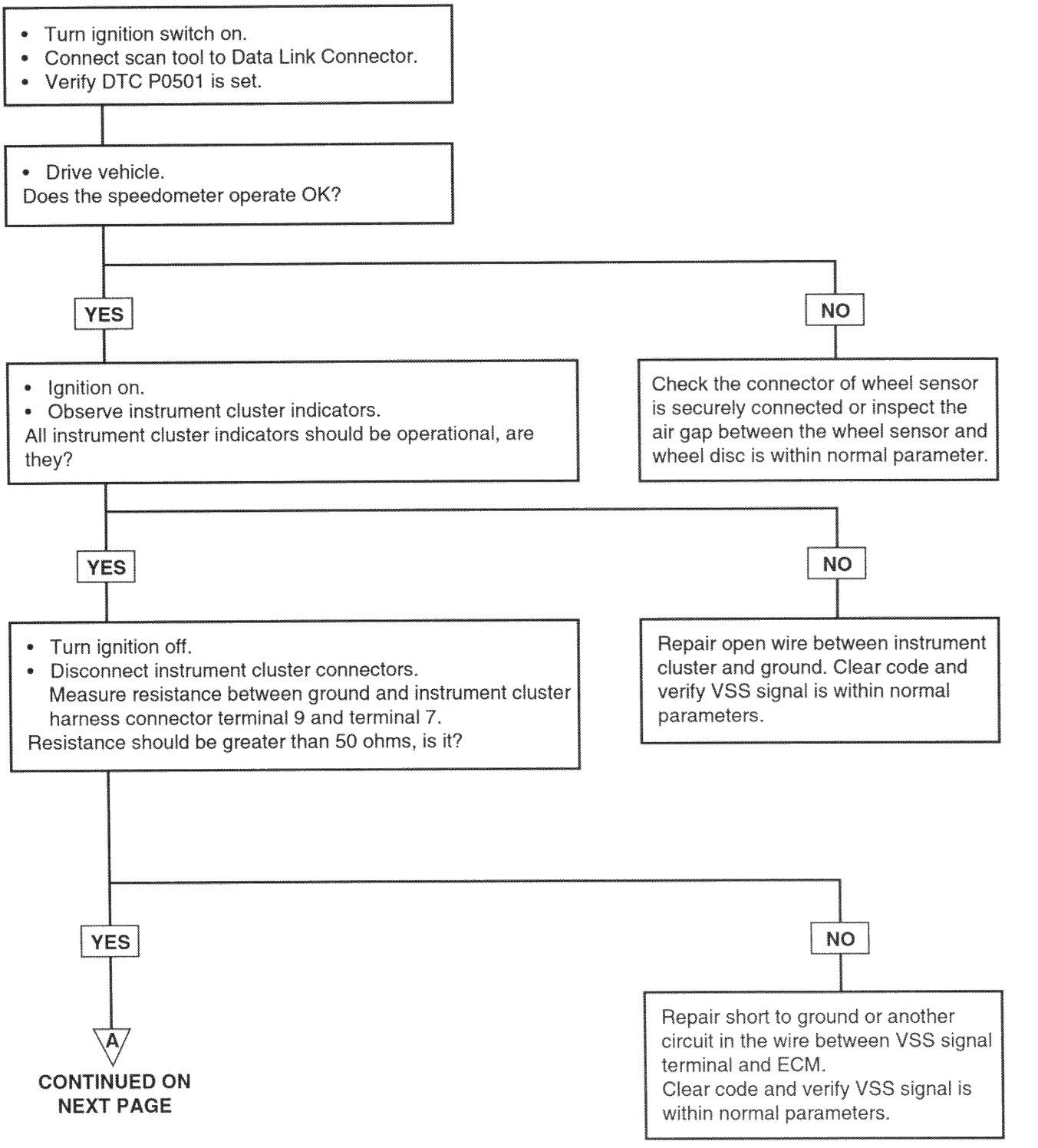

EFKB581B

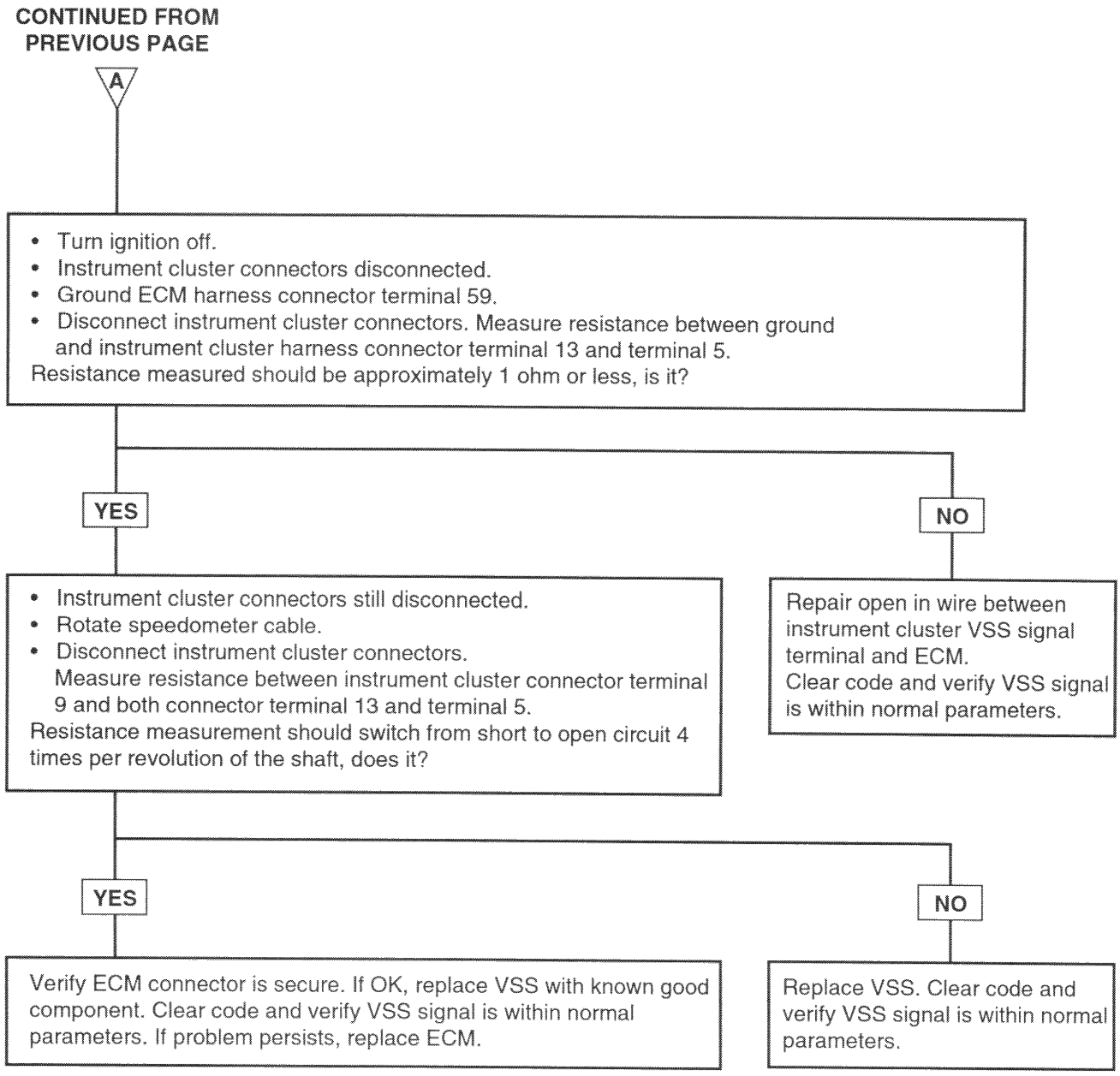
CONTINUED FROM PREVIOUS PAGE
A
• Turn ignition off.
• Instrument cluster connectors disconnected.
• Ground ECM harness connector terminal 59.
• Disconnect instrument cluster connectors. Measure resistance between ground and instrument cluster harness connector terminal 13 and terminal 5.
Resistance measured should be approximately 1 ohm or less, is it?
YES
NO
• Instrument cluster connectors still disconnected.
• Rotate speedometer cable.
• Disconnect instrument cluster connectors. Measure resistance between instrument cluster connector terminal 9 and both connector terminal 13 and terminal 5.
Resistance measurement should switch from short to open circuit 4 times per revolution of the shaft, does it?
Repair open in wire between instrument cluster VSS signal terminal and ECM.
Clear code and verify VSS signal is within normal parameters.
YES
NO
Verify ECM connector is secure. If OK, replace VSS with known good component. Clear code and verify VSS signal is within normal parameters. If problem persists, replace ECM.
Replace VSS. Clear code and verify VSS signal is within normal parameters.

EFKB581C

EFNC5860

DTC	Diagnostic item
P0506 P0507	Idle RPM Lower Than Expected Idle PRM Higher Than Expected

DESCRIPTION

The Idle Speed Control (ISC) actuator has two coils that are driven by separate ECM driver stages. Depending on the pulse duty factor, the equilibrium of the magnetic forces of the two coils will result in different directions for the magnetic forces of the two coils which will result in different positions for the actuator. In parallel to the throttle valve, a bypass hose line is arranged where the ISC actuator is inserted.

FAILURE CONDITIONS

The ECM will set P0506 or P0507 and the MIL will turn on if for 15 seconds the ISC actuator driver circuit values and engine idle speed are not in agreement with values stored in the ECM during two driving cycles when the following conditions are met:

1. The ISC actuator passes idle air at a rate above 4.1 g/s. [for P0506] or 1.7 g/s [for P0507].
2. Engine speed deviation is below 200 RPM.
3. Vehicle speed is zero.
4. Engine coolant temperature is above 167°F (75°C).

This code indicates the idle speed control actuator and the engine do not agree with the ECM on the idle speed value.

CIRCUIT DIAGRAM

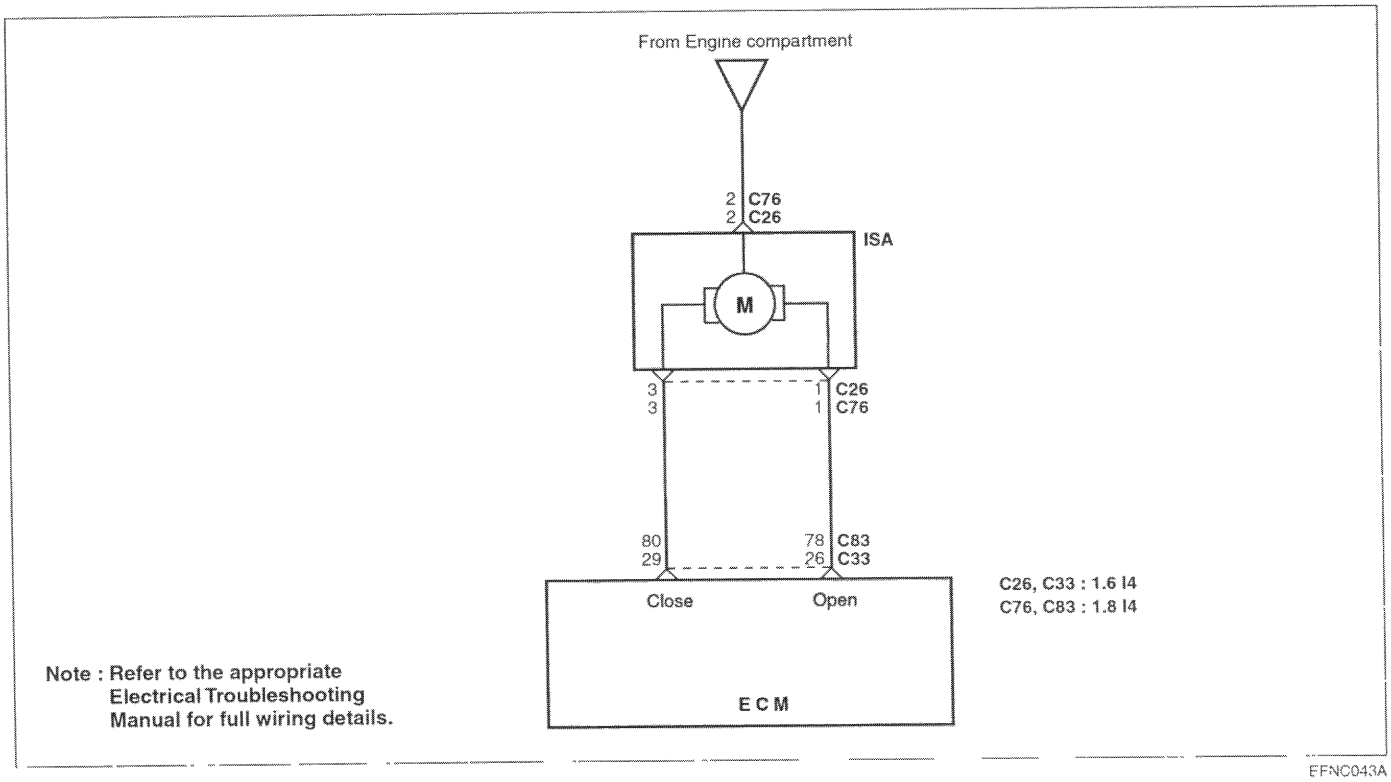

EFNC043A

TEST PROCEDURE

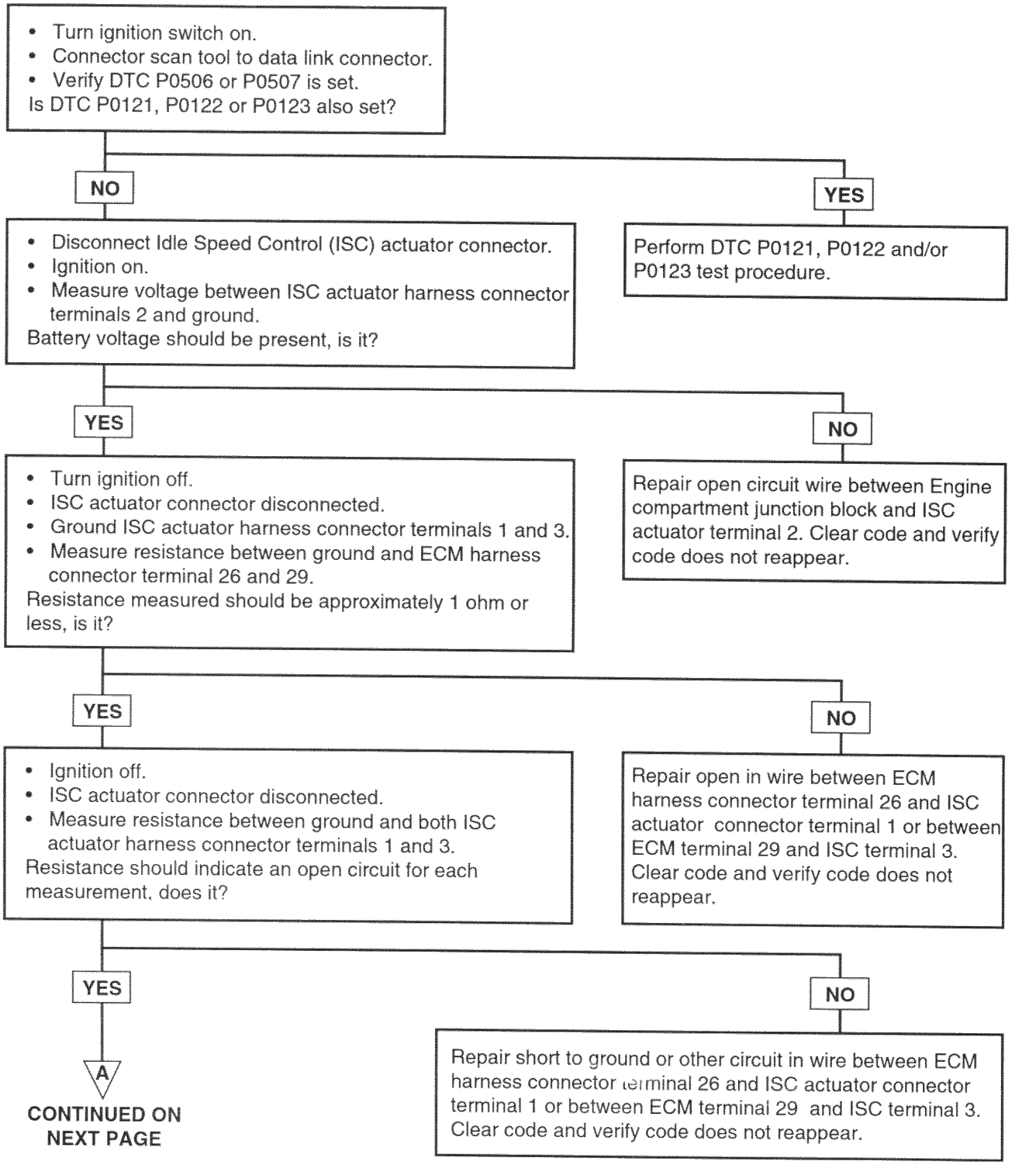

EFKB586B

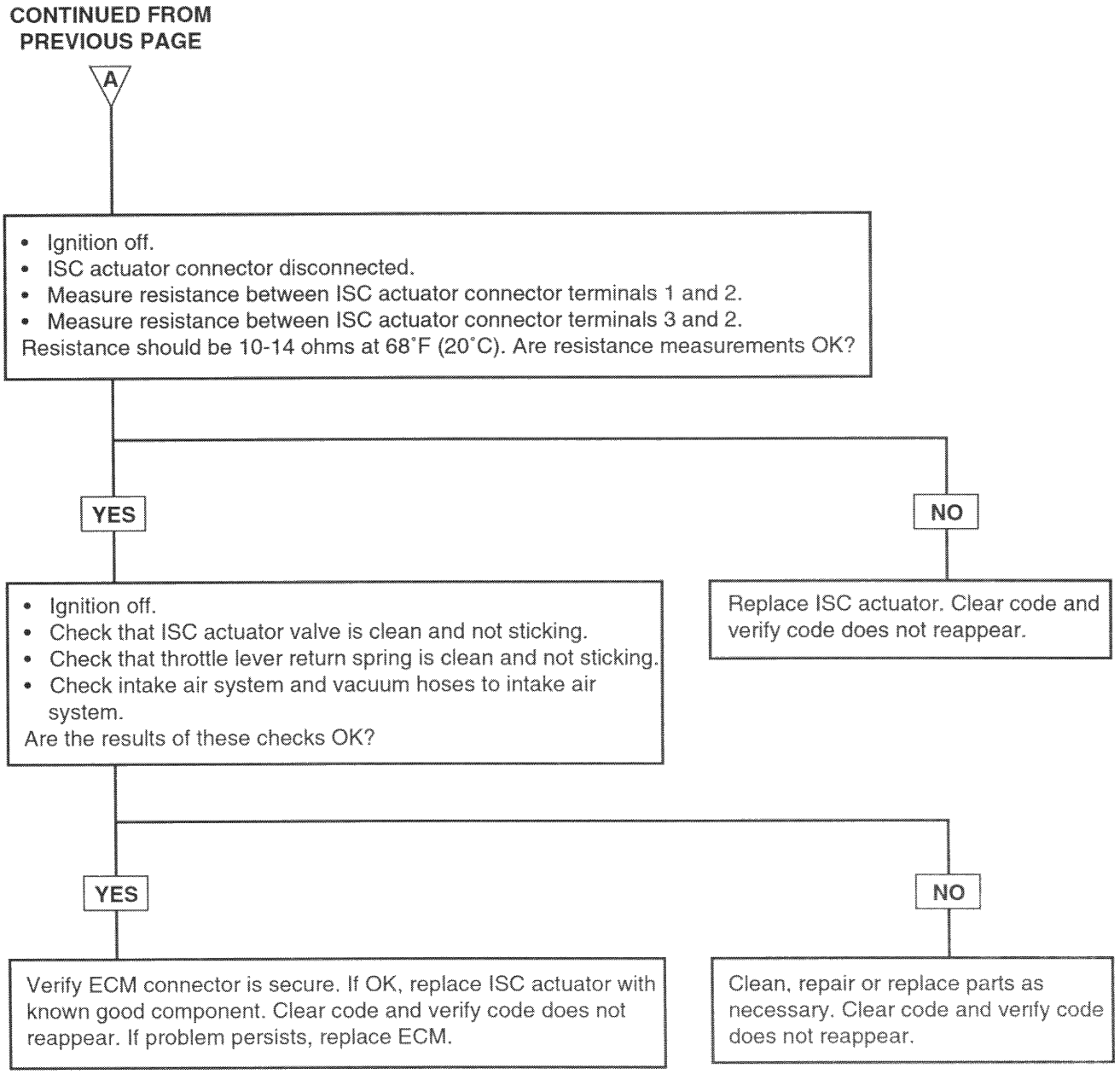
CONTINUED FROM PREVIOUS PAGE
A
• Ignition off.
• ISC actuator connector disconnected.
• Measure resistance between ISC actuator connector terminals 1 and 2.
• Measure resistance between ISC actuator connector terminals 3 and 2.
Resistance should be 10-14 ohms at 68°F (20°C). Are resistance measurements OK?
YES
NO
• Ignition off.
• Check that ISC actuator valve is clean and not sticking.
• Check that throttle lever return spring is clean and not sticking.
• Check intake air system and vacuum hoses to intake air system.
Are the results of these checks OK?
Replace ISC actuator. Clear code and verify code does not reappear.
YES
NO
Verify ECM connector is secure. If OK, replace ISC actuator with known good component. Clear code and verify code does not reappear. If problem persists, replace ECM.
Clean, repair or replace parts as necessary. Clear code and verify code does not reappear.

DA586C

EFNC5910

DTC	Diagnostic item
P0170	Fuel Trim Malfunction
P0171	Fuel System Too Lean
P0172	Fuel System Too Rich

DESCRIPTION

The air/fuel control system, in addition to a number of sensors, includes the following components and systems:

- Intake air system.
- Exhaust system.
- Evaporative emissions control system (includes purge control solenoid valve).
- Fuel injectors.
- Fuel pressure regulator.
- Fuel pump.

For the air/fuel ratio to be within limits, all of the sensors, components and systems associated with the air/fuel control system must function within normal parameters.

FAILURE CONDITIONS

[FOR LONG-TERM FUEL TRIM]

The ECM will set a code and the Malfunction Indicator Lamp (MIL) will turn on if the long-term multiplicative value is less than 77% for 30 seconds [for P0172] or if the long-term fuel trim value goes to 10% to 15% lean [for P0171] for 30 seconds during two driving cycles when the following conditions are met:

1. Engine load exceeds 1.8 milliseconds.
2. ECM is in closed loop operation [for P0172].
3. Engine coolant temperature is above 158°F (70°C).
4. Canister purge system is not operating.
5. Mass air flow is less than or 5.5 g/s.
6. Engine speed is below 1000 RPM [for P0171].

[FOR SHORT-TERM FUEL TRIM]

The ECM will set a code and the Malfunction Indicator Lamp (MIL) will turn on if the short-term fuel trim value goes 10% to 15% rich [for P1123] or if the short-term fuel trim additive value is less than 0.4 milliseconds, or 10% to 15% lean [for P1124] for 30 seconds during two driving cycles when the following conditions are met:

1. ECM is in closed loop operation.
2. Engine speed is below 1000 RPM.
3. Engine coolant temperature is above 158°F (70°C).
4. Canister purge system is not operating.
5. Mass air flow is less than 7.5 g/s [for P1123] or 5.5 g/s [for P1124].

TEST PROCEDURE

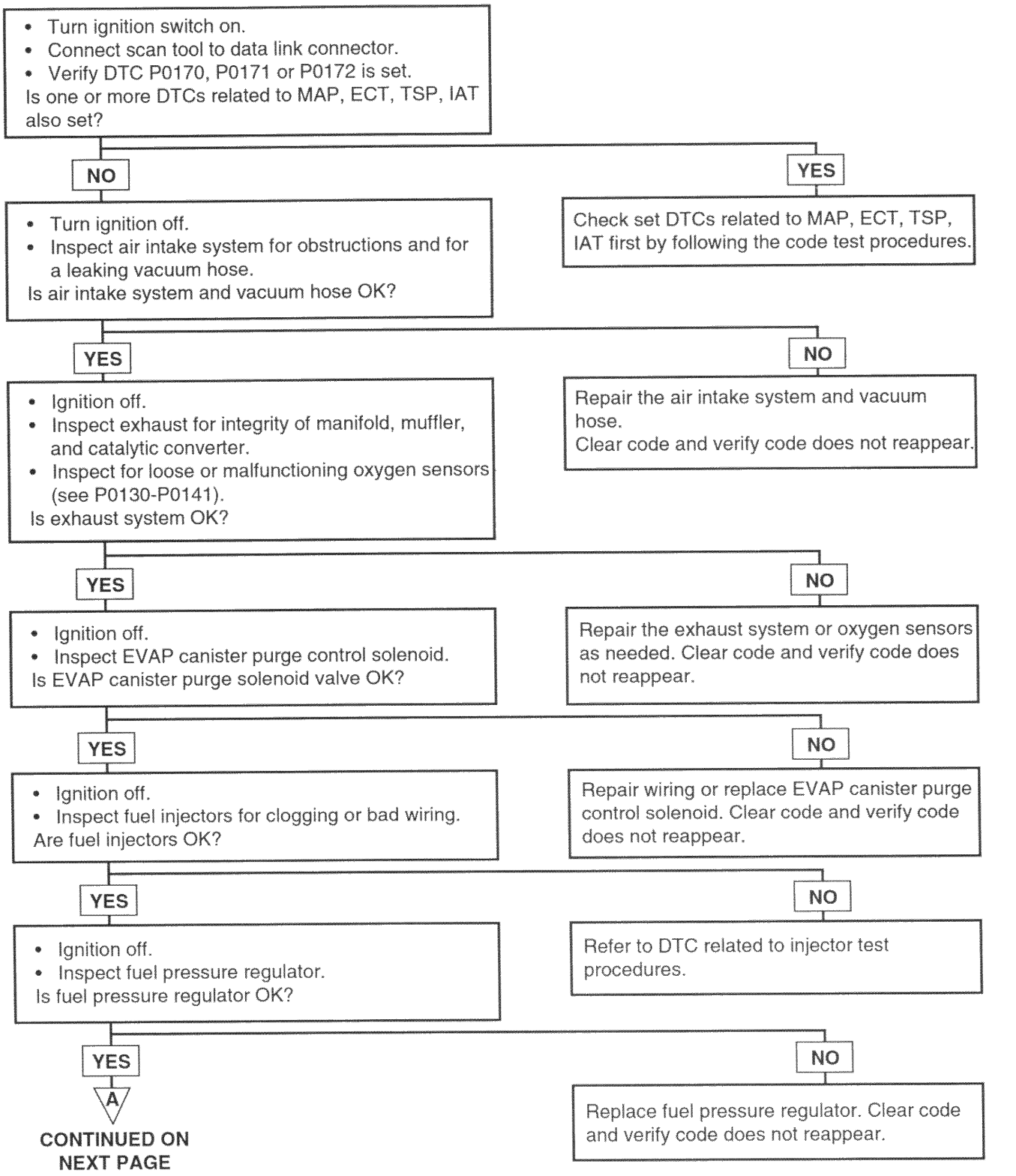

EFNC591B

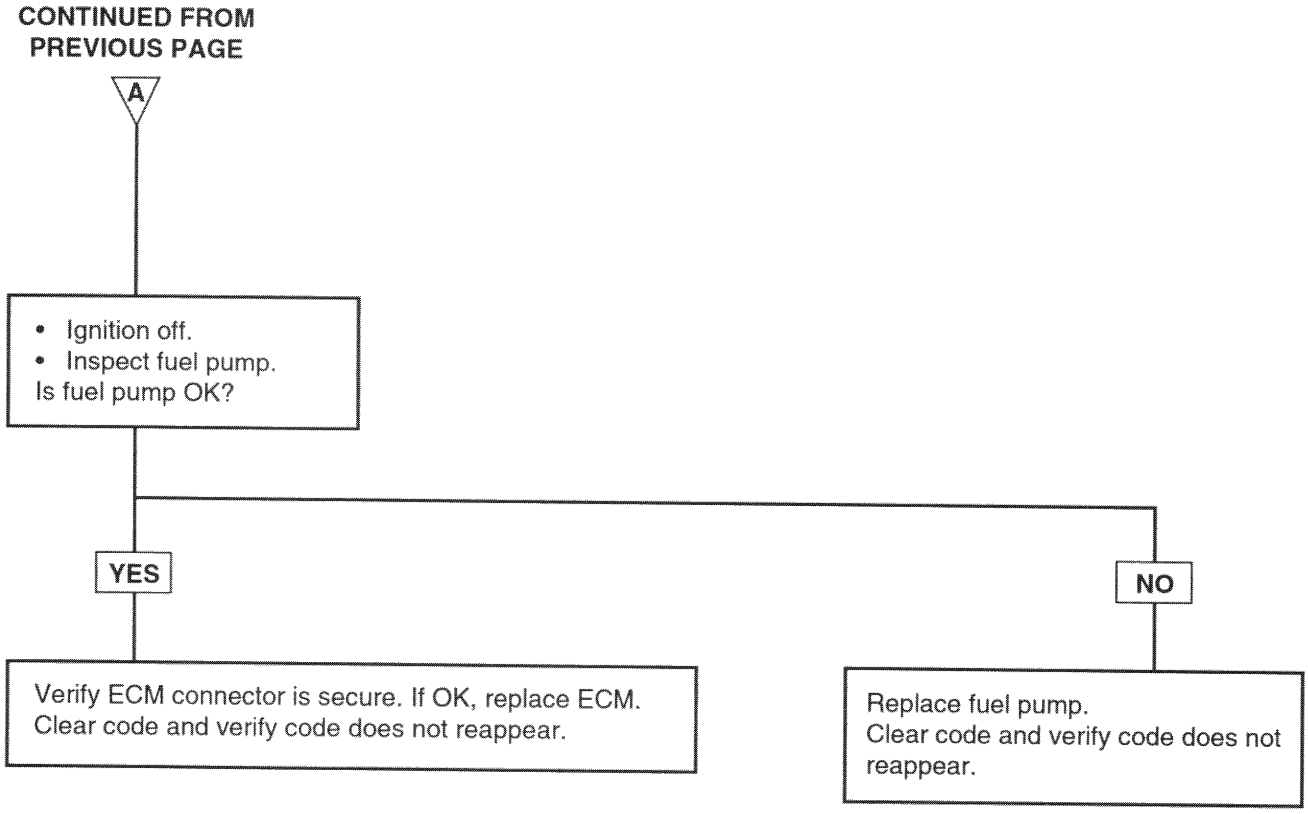
CONTINUED FROM PREVIOUS PAGE
A
• Ignition off.
• Inspect fuel pump.
Is fuel pump OK?
YES
NO
Verify ECM connector is secure. If OK, replace ECM.
Clear code and verify code does not reappear.
Replace fuel pump.
Clear code and verify code does not reappear.

EFDA591C

EFNC5960

DTC	Diagnostic item
P1515	Idle Speed Actuator Command Signal Incorrect (Coil 1)
P1516	Idle Speed Actuator Command Signal Incorrect (Coil 2)

DESCRIPTION

The Idle Speed Control (ISC) actuator has two coils that are driven by separate ECM driver stages. Depending on the pulse duty factor, the equilibrium of the magnetic forces of the two coils will result in different directions for the magnetic forces of the two coils which will result in different positions for the actuator. In parallel to the throttle valve, a bypass hose line is arranged where the ISC actuator is inserted.

FAILURE CONDITIONS

The ECM will set a code and the MIL will turn on if ISC actuator's opening coil driver stage [for P1515] or closing coil driver stage [for P1516] is shorted to battery voltage during two driving cycles.

CIRCUIT DIAGRAM

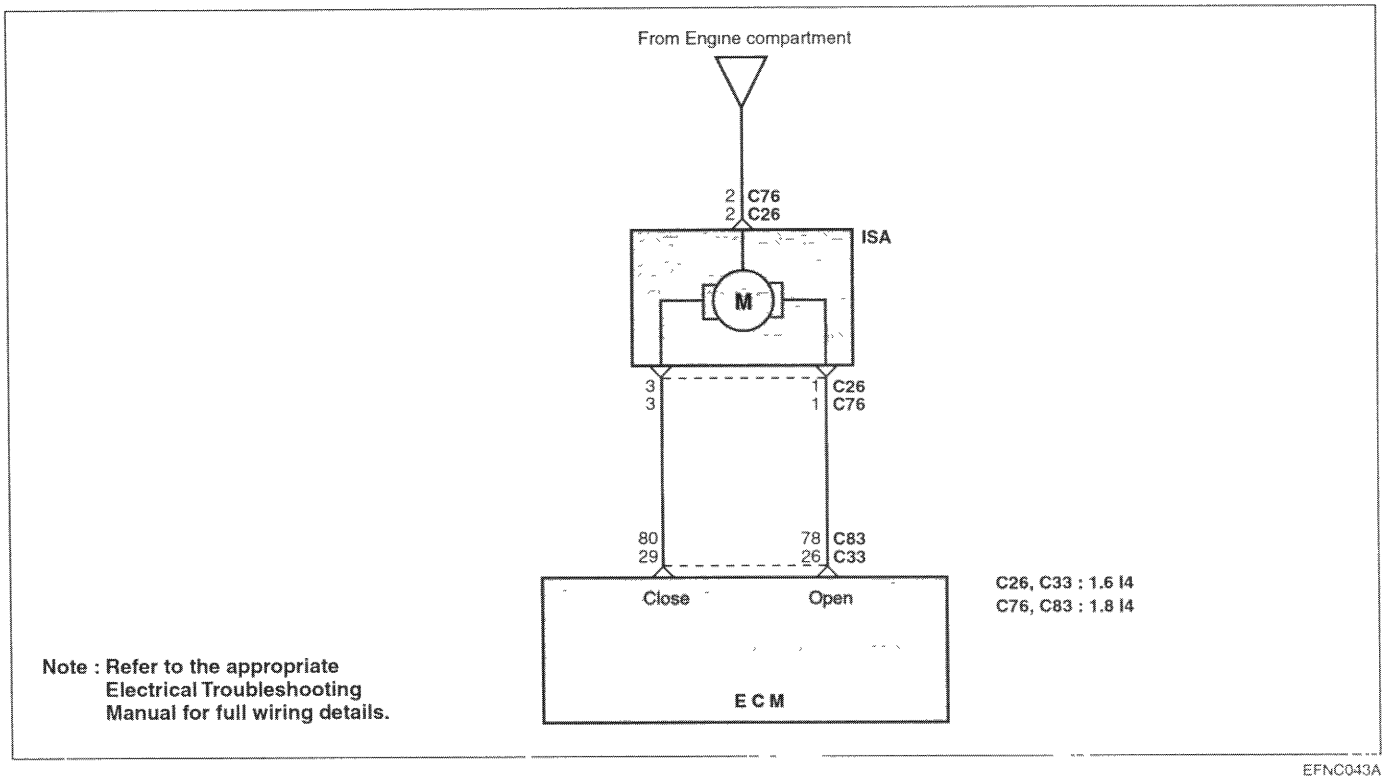

EFNC043A

TEST PROCEDURE

- Turn ignition switch on.
- Connector scan tool to data link connector.
- Verify DTC P1515 or P1516 is set.

- Disconnect Idle Speed Control (ISC) actuator connector.
- Ignition on.
- Measure voltage between ISC actuator harness connector terminals 2 and ground.

Battery voltage should be present, is it?

YES

- Ignition on.
- ISC actuator connector disconnected.
- Measure voltage between ground and ISC actuator harness connector terminal 1.
- Measure voltage between ground and ISC actuator harness connector terminal 3.

Both voltage measurements should be less than 0.5 volts, are they?

YES

- Ignition off.
- ISC actuator connector disconnected.
- Measure resistance between ISC actuator connector terminals 1 and 2.
- Measure resistance between ISC actuator connector terminals 2 and 3.

Resistance should be 10-14 ohms at 68˚F (20˚C).
Are resistance measurements OK?

YES

Verify ECM connector is secure.
If OK, replace ISC actuator with known good component.
Clear code and verify code does not reappear.
If problem persists, replace ECM.

NO

Repair open wire between Engine compartment junction block and ISC actuator harness connector terminal 2. Clear code and verify code does not reappear.

NO

Repair open circuit in wire between ECM harness connector terminal 29 and ISC actuator connector terminal 3 or between ECM terminal 26 and ISC terminal 1. Clear code and verify code does not reappear.

NO

Replace ISC actuator. Clear code and verify code does not reappear.

EFNC596B

EFNC6010

DTC	Diagnostic item
P1505	Idle Charge Actuator Signal Low of Coil #1
P1506	Idle Charge Actuator Signal High of Coil #1
P1507	Idle Charge Actuator Signal Low of Coil #2
P1508	Idle Charge Actuator Signal High of Coil #2

DESCRIPTION

The Idle Speed Control (ISC) actuator has two coils that are driven by separate ECM driver stages. Depending on the pulse duty factor, the equilibrium of the magnetic forces of the two coils will result in different directions for the magnetic forces of the two coils which will result in different positions for the actuator. In parallel to the throttle valve, a bypass hose line is arranged where the ISC actuator is inserted.

FAILURE CONDITIONS

The ECM will set a code and the MIL will turn on if ISC actuator's opening coil driver stage or closing coil driver stage is open or shorted to ground during two driving cycles.

CIRCUIT DIAGRAM

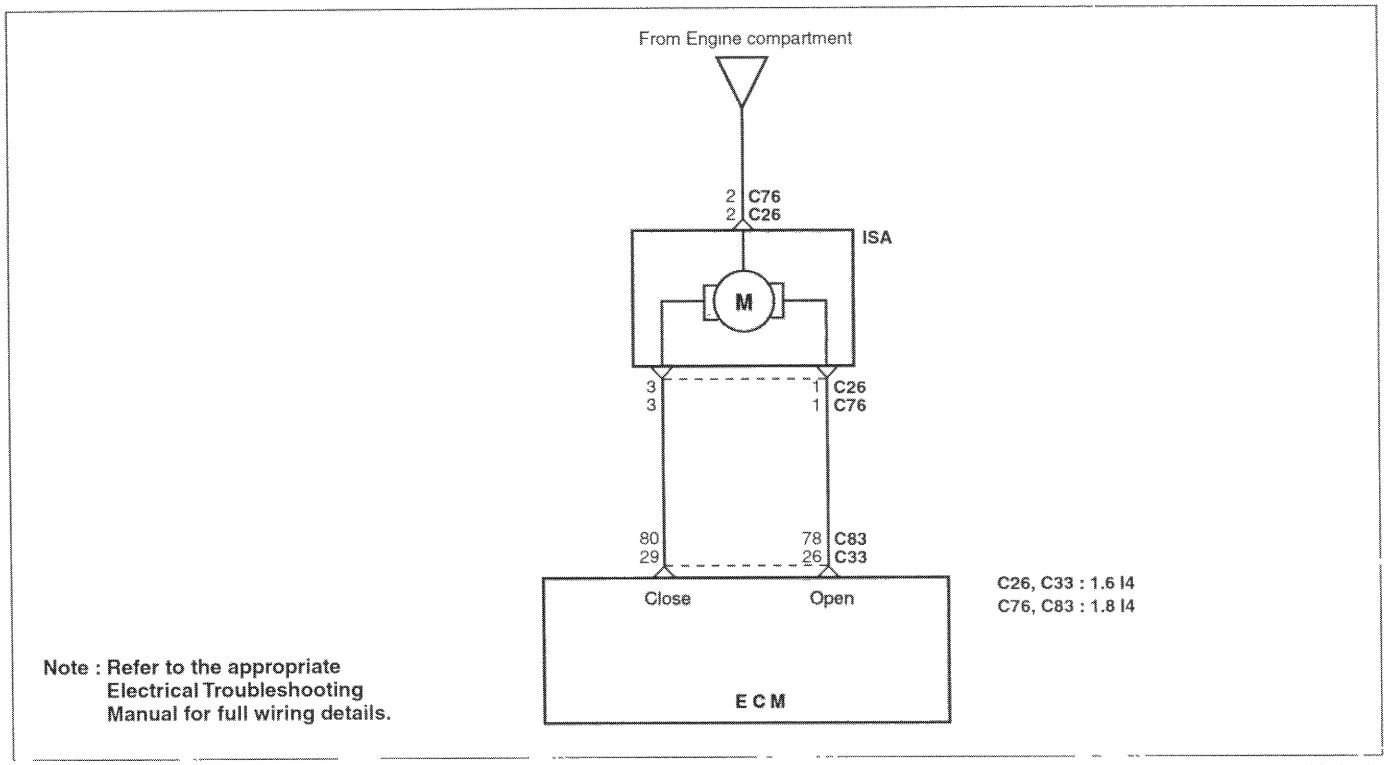

EFNC043A

TEST PROCEDURE

- Turn ignition switch on.
- Connector scan tool to data link connector.
- Verify DTC P1505, P1506, P1507 or P1508 is set.

- Disconnect Idle Speed Control (ISC) actuator connector.
- Ignition on.
- Measure voltage between ISC actuator harness connector terminals 2 and ground.

Battery voltage should be present, is it?

YES

- Turn ignition off.
- ISC actuator connector disconnected.
- ECM connector disconnected.
- Ground ISC actuator harness connector terminal 1 or terminal 3.
- Measure resistance between ground and ECM harness connector terminal 26 or terminal 29.

Resistance measured should be approximately 1 ohm or less, is it?

YES

- Ignition off.
- ISC actuator connector disconnected.
- ECM connector disconnected.
- Measure resistance between ground and ISC actuator harness connector terminals 1 or terminal 3.

Resistance should indicate an open circuit, does it?

YES

- Ignition off.
- ISC actuator connector disconnected.
- Measure resistance between ISC actuator connector terminal 1 and 2.
- Measure resistance between ISC actuator connector terminal 2 and 3.

Resistance should be 10-14 ohms at 68˚F (20˚C). Are resistance measurements OK?

YES

Verify ECM connector is secure. If OK, replace ISC actuator with known good component. Clear code and verify code not reappear. If problem persists, replace ECM.

NO

Repair open wire between Engine compartment junction block and ISC actuator terminal 2.
Clear code and verify code does not reappear.

NO

Repair open in wire between ECM harness connector terminal 26 or terminal 29 and ISC actuator connector terminal 1 or terminal 3.
Clear code and verify code does not reappear.

NO

Repair short to ground in wire between ECM harness connector terminal 26 or terminal 29 and ISC actuator connector terminal 1 or terminal 3.
Clear code and verify code does not reappear.

NO

Replace ISC actuator. Clear code and verify code does not reappear.

EFNC601B

EFNC6060

DTC	Diagnostic item
P1307	Acceleration Sensor Circuit Rationality
P1308	Acceleration Sensor Signal Check Low
P1309	Acceleration Sensor Signal Check High

DESCRIPTION

The acceleration sensor is used to sense rough road conditions. The sensor's signal is used by the Engine Control Module (ECM) to prevent wrongful misfire detection.

FAILURE CONDITIONS

[FOR P1308, P1309]

The ECM will set a code and the MIL will turn on if the acceleration sensor signal is less than 1.5 or greater than 3.5 volts during two driving cycles. This code indicates an extremely rough or smooth road being sensed by the acceleration sensor or ECM.

[FOR P1307]

The ECM will set a code and the MIL will turn on if the acceleration sensor signal indicates an acceleration of 0.3g or greater when the vehicle speed is zero during two driving cycles. This code indicates some type of bump being read, with the car speed at zero, by the acceleration sensor or ECM.

CIRCUIT DIAGRAM

[1.6 I4]

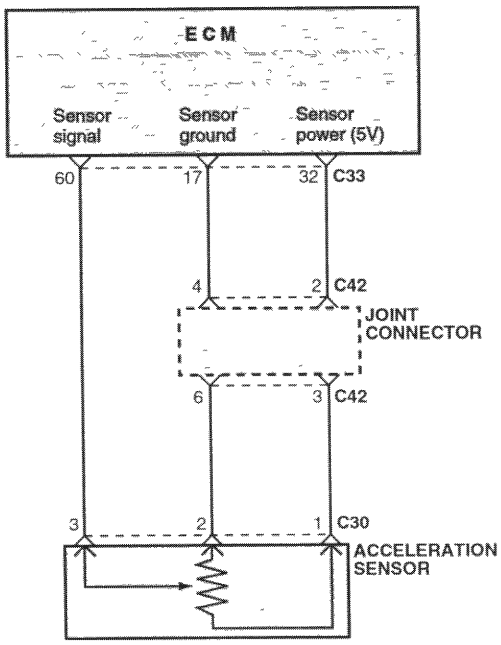

Note : Refer to the appropriate Electrical Troubleshooting Manual for full wiring details.

EFKB557A

TEST PROCEDURE

- Turn ignition switch on.
- Connect scan tool to data link connector.
- Verify DTC P1307, P1308 or P1309 is set.

- Disconnect acceleration sensor.
- Ignition on.
- Measure voltage between ground and acceleration sensor harness connector terminal 1.

Voltage should be approximately 5 volts, is it?

YES

- Turn ignition off.
- Acceleration sensor disconnected.
- Measure resistance between ground and acceleration sensor harness connector terminal 2.

Resistance measured should be approximately 1 ohm or less, is it?

YES

- Ignition off.
- Acceleration sensor disconnected.
- Disconnect ECM.
- Ground acceleration sensor harness connector terminal 3. Measure resistance between ground and ECM harness connector terminal 60.

Resistance measured should be approximately 1 ohm or less, is it?

YES

- Ignition off.
- Acceleration sensor disconnected.
- ECM disconnected.
- Measure resistance between ground and acceleration sensor harness connector terminal 3.

Resistance should indicate an open circuit, does it?

A

CONTINUED ON NEXT PAGE

NO

Repair open in wire between ECM connector terminal 32 and acceleration sensor terminal 1.
Clear code and verify acceleration sensor is within normal parameters.

NO

Repair open in wire between ECM connector terminal 17 and acceleration sensor terminal 2.
Clear code and verify acceleration sensor is within normal parameters.

NO

Repair open in wire between ECM connector terminal 60 and acceleration sensor terminal 3.
Clear code and verify acceleration sensor is within normal parameters.

EFNC606B

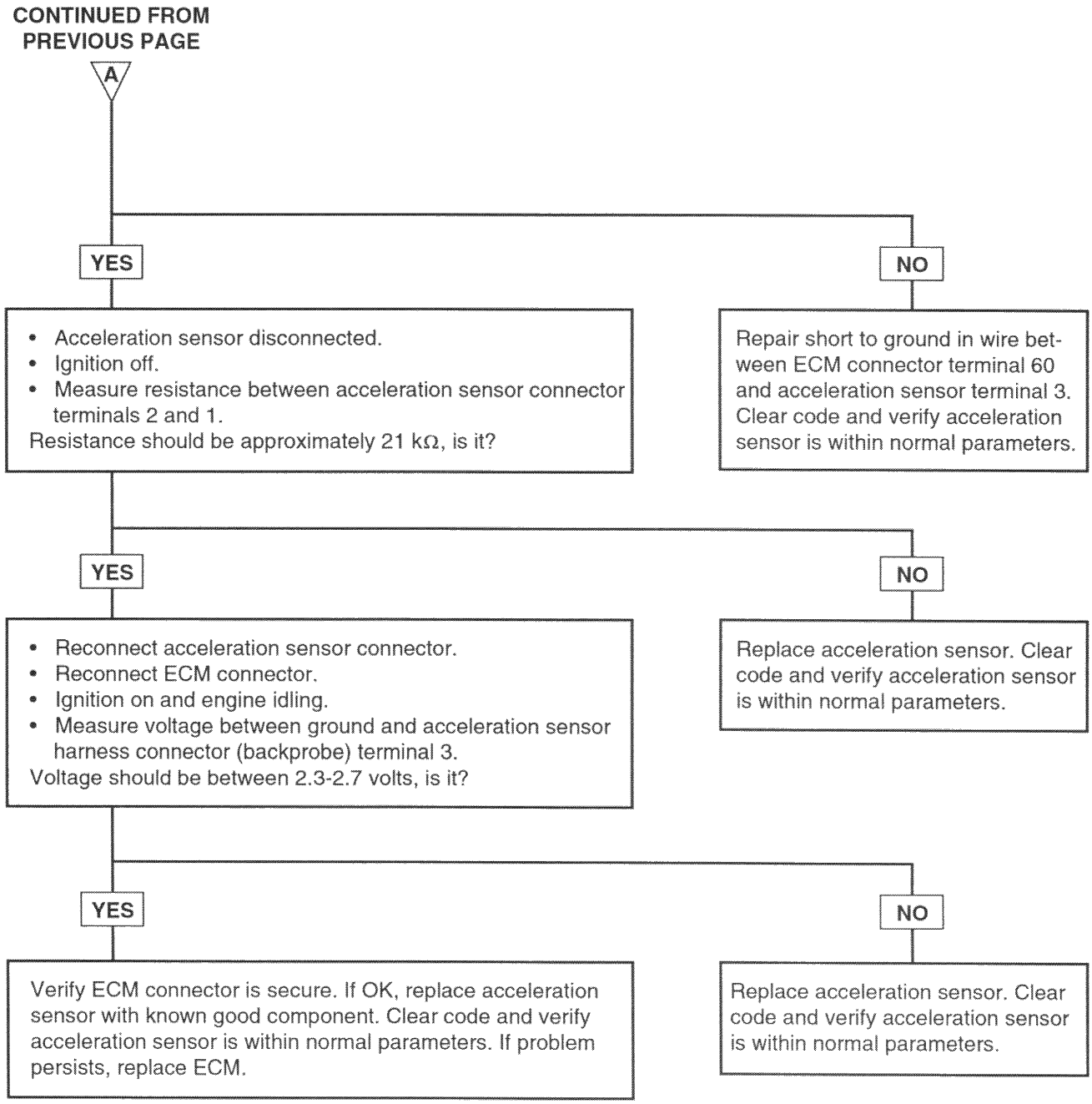
CONTINUED FROM PREVIOUS PAGE
A
YES
NO
• Acceleration sensor disconnected.
• Ignition off.
• Measure resistance between acceleration sensor connector terminals 2 and 1.
Resistance should be approximately 21 kΩ, is it?
Repair short to ground in wire between ECM connector terminal 60 and acceleration sensor terminal 3. Clear code and verify acceleration sensor is within normal parameters.
YES
NO
• Reconnect acceleration sensor connector.
• Reconnect ECM connector.
• Ignition on and engine idling.
• Measure voltage between ground and acceleration sensor harness connector (backprobe) terminal 3.
Voltage should be between 2.3-2.7 volts, is it?
Replace acceleration sensor. Clear code and verify acceleration sensor is within normal parameters.
YES
NO
Verify ECM connector is secure. If OK, replace acceleration sensor with known good component. Clear code and verify acceleration sensor is within normal parameters. If problem persists, replace ECM.
Replace acceleration sensor. Clear code and verify acceleration sensor is within normal parameters.

EFKB606C

Clutch System

GENERAL ..... CH -2

CLUTCH SYSTEM ..... CH -6

GENERAL

SPECIFICATIONS EOKB1010

Clutch operating method	Hydraulic type
Clutch disc	
Type	Single dry with diaphragm.
Facing diameter (Outside x Inside) mm (in.)	215 x 145 (8.5 x 5.7)
Clutch cover assembly	
Type	Diaphragm spring strap
Clutch release cylinder	
* I.D. mm (in.)	20.64 (0.81)
Clutch master cylinder	
* I.D. mm (in.)	15.87(0.62)

* I.D. : Inside Diameter

SERVICE STANDARD EONC0020

Clutch disc thickness [When free]	8.5 ± 0.3
Clutch pedal free play	6-13 (0.24-0.52)
Clutch pedal height	182.7 (7.3)
Clutch pedal stroke	140 (5.6)
Limit	
Clutch disc rivet sink	1.1 mm (0.044 in.)
Diaphragm spring end height difference	0.5 mm (0.02 in.)
Clutch release cylinder clearance to piston	0.15 mm (0.006 in.)
Clutch master cylinder clearance to piston	0.15 mm (0.006 in.)

Unit : mm (inch)

TIGHTENING TORQUE EONC0030

Item	Nm	kg.cm	lb.ft
Clutch pedal to pedal support member	17-26	170-260	13-18
Clutch pedal support member to master cylinder	17-26	170-260	13-18
Clutch tube flare nut	13-17	130-170	9-13
Clutch tube bracket	4-6	40-60	3-4
Reservoir band	5-7	50-70	3-5
Clutch release cylinder	15-22	150-220	11-16
Clutch release cylinder union bolt	20-25	200-250	15-18
Clutch cover assembly	15-22	150-220	11-16

LUBRICANTS EONC0040

Items	Specified lubricants	Quantity
Contact surface of release bearing and fulcrum of clutch release fork	CASMOLY L9508	As required
Inner surface of clutch release bearing	CASMOLY L9508	As required
Inner surface of clutch release cylinder and outer circumference of piston and cup	Brake fluid DOT3 or DOT4	As required
Inner surface of clutch disc spline	CASMOLY L9508	As required
Inner surface of clutch master cylinder and outer circumference of piston assembly	Brake fluid DOT3 or DOT4	As required
Clutch master cylinder push rod, clevis pin and washer	Wheel bearing grease SAE J310a, NLGI No.2	As required
Clutch pedal shaft and bushings	SAE J310a, Chassis grease, NLGI-No.1	As required
Contact portion of release fork to release cylinder push rod	CASMOLY L9508	As required
Input shaft spline	CASMOLY L9508	As required

SPECIAL TOOLS EODA0050

Tool (Number and name)	Illustration	Use
09411-25000 Clutch disc guide	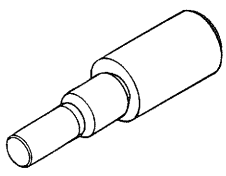 EODA003A	Installation of the clutch disc

TROUBLESHOOTING EODA0060

Symptom		Probable cause	Remedy
Clutch slipping • Car will not respond to engine speed during acceleration • Insufficient vehicle speed • Lack of power during uphill driving		Insufficient clutch pedal free play	Adjust
		Clogged hydraulic system	Correct or replace parts
		Excessive wear of clutch disc facing	Replace
		Hardened clutch disc facing, or oil on surface	Replace
		Damaged pressure plate or flywheel	Replace
		Weak or broken pressure spring	Replace
Difficult gear shifting (gear noise during shifting)		Excessive pedal free play	Adjust
		Hydraulic system fluid leaks, air trapping or clogging	Repair or replace parts
		Unusual wear or corrosion of clutch disc spline	Replace
		Excessive vibration (distortion) of clutch disc	Replace
Clutch noisy	When clutch is not used	Insufficient play of clutch pedal	Adjust
		Excessive wear of clutch disc facing	Replace
	A noise is heard after clutch is disengaged	Unusual wear and/or damage of release bearing	Replace
	A noise is heard when clutch is disengaged	Insuffcient grease on the sliding surface of bearing sleeve	Repair
		Improperly installed clutch assembly or bearing	Repair
	A noise is heard when car is suddenly rolled with clutch partially engaged	Damaged pilot bushing	Replace
Difficult to depress clutch pedal		Insufficient lubrication of clutch pedal	Repair
		Insufficient lubrication of the clutch disc spline	Repair
		Insufficient lubrication of the clutch release lever shaft	Repair
		Insufficient lubrication of front bearing retainer	Repair
Difficult to shift gear or cannot shift at all		Excessive clutch pedal free play excessive	Adjust pedal free play
		Clutch release cylinder faulty	Repair release cylinder
		Clutch disc out of true, runout is excessive or lining broken	Inspect clutch disc
		Spline on input shaft or clutch disc dirty or burred	Repair as necessary
		Clutch pressure plate faulty	Replace clutch cover
Clutch slips		Clutch pedal free play insufficient	Adjust pedal free play
		Clogged hydraulic system	Repair or replace parts
		Clutch disc lining oily or worn out	Inspect clutch disc
		Pressure plate faulty	Replace clutch cover
		Release fork binding	Inspect release fork

Symptom	Probable cause	Remedy
Clutch grabs/chatters	Clutch disc lining oily or worn out	Inspect clutch disc
	Pressure plate faulty	Replace clutch cover
	Clutch diaphragm spring bent	Replace clutch cover
	Worn or broken torsion spring	Replace clutch disc
	Engine mounts loose	Repair as necessary
Clutch noisy	Damaged clutch pedal bushing	Replace clutch pedal bushing
	Loose part inside housing	Repair as necessary
	Release bearing worn or dirty	Replace release bearing
	Release fork or linkage sticks	Repair as necessary

CLUTCH SYSTEM

EONB0070

BLEEDING

Whenever the clutch tube, the clutch hose, and/or the clutch master cylinder have been removed, or if the clutch pedal is spongy, bleed the system.

> ⚠ ***CAUTION***
>
> ***Use the specified fluid. Avoid mixing different brands of fluid. Specified fluid : SAE J1703 (DOT3 or DOT4).***

1. Loosen the bleeder screw at the clutch release cylinder.
2. Push the clutch pedal down slowly until all is expelled.
3. Hold the clutch pedal down until the bleeder is retightened.
4. Refill the clutch master cylinder with the specified fluid.

> ⚠ ***CAUTION***
>
> ***The rapidly-repeated operation of the clutch pedal in B-C range may cause the release cylinder's position to be forced out from the release cylinder body during air bleeding. Repress the clutch pedal after it returns to the "A" point completely.***

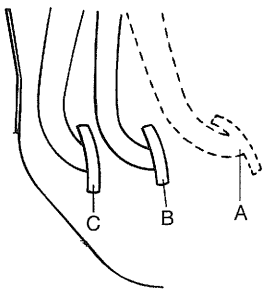

EODA007C

CLUTCH COVER AND DISC

COMPONENTS EODA0280

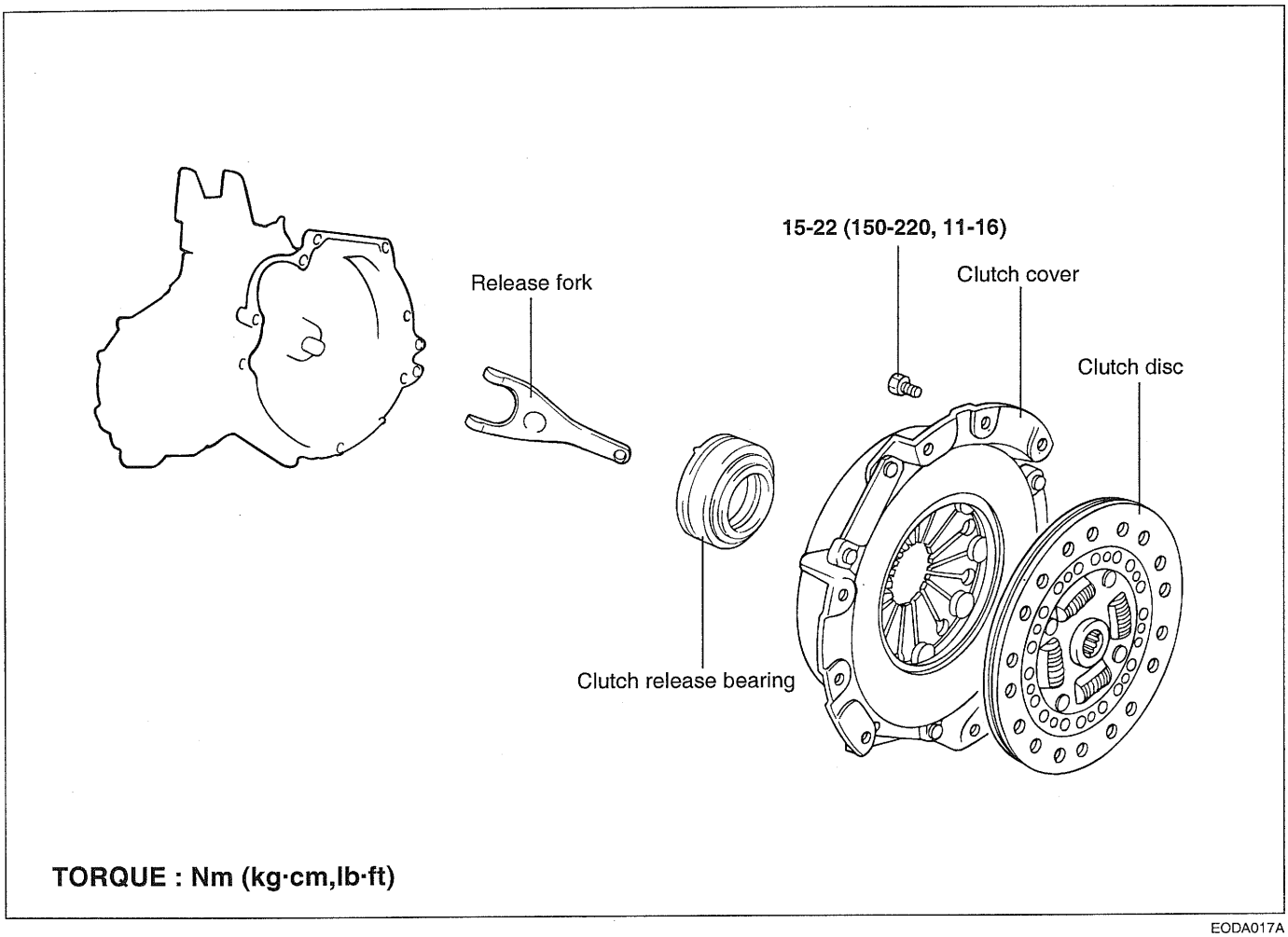

TORQUE : Nm (kg·cm,lb·ft)

EODA017A

REMOVAL EODA1290

1. Drain the clutch fluid and transaxle gear oil.
2. Remove the transaxle assembly.
3. Insert the special tool (09411-25000) in the clutch disc to prevent the disc from falling.
4. Loosen the bolts that attach the clutch cover to the flywheel in a star pattern.
5. Loosen the bolts in succession, one or two turns at a time, to avoid bending the cover flange.

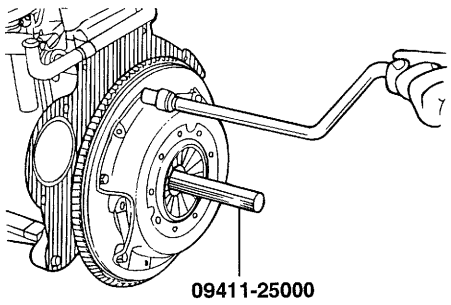

EODA117B

⚠ ***CAUTION***

DO NOT clean the clutch disc or release bearing with cleaning solvent.

INSPECTION EODA0300

CLUTCH COVER ASSEMBLY

1. Check the diaphragm spring end for wear and uneven height.
   Replace if wear is evident or height difference exceeds the limit.

Limit : 0.5 mm (0.012 in.)

2. Check the pressure plate surface for wear, cracks and color change.
3. Check the rivets for looseness and replace the clutch cover assembly if necessary.

CLUTCH DISC

1. Check the clutch facing for loose rivets, uneven contact, deterioration due to seizure, adhesion of oil, or grease, and replace the clutch disc if defective.
2. Measure the rivet sink and replace the clutch disc if it is out of specification

Limit : 1.1 mm (0.044 in.)

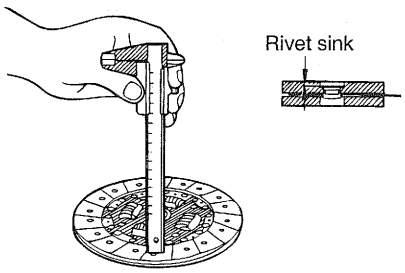

EODA018A

3. Check for torsion spring play and damage and if defective, replace the clutch disc.
4. Clean the splines on the input shaft and install the clutch disc.
   If the disc does not slide smoothly or if play is excessive, replace the clutch disc and/or the input shaft.

CLUTCH RELEASE BEARING

⚠ ***CAUTION***

The release bearing is packed with grease. Do not use cleaning solvent or oil.

1. Check the bearing for seizure, damage or abnormal noise. Also check the diaphragm spring contacting points for wear.
2. Replace the bearing if the release fork contacting points are worn abnormally.

CLUTCH RELEASE FORK

If there is abnormal wear at the point of contact with the bearing, replace the release fork assembly.

INSTALLATION EONC1310

1. Apply multipurpose grease to the release bearing contact surfaces and the release cylinder contact surface of the clutch release fork assembly.

⚠ ***CAUTION***

When installing the clutch, apply grease to each part, but be careful not to apply excessive grease. It can cause clutch slippage and judder.

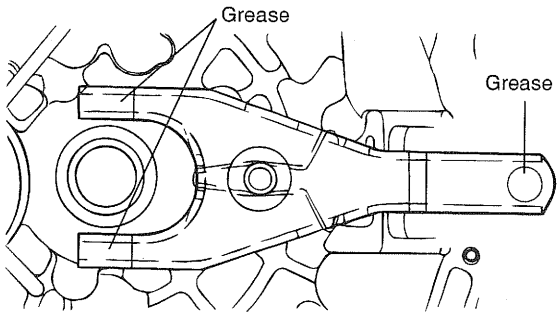

EODA019B

2. Apply multipurpose grease into the groove of the release bearing.

Grease : CASMOLY L9508

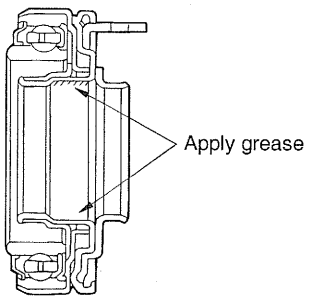

EODA019A

3. Apply multipurpose grease to the clutch release lever fulcrum contact surface of the clutch release fork assembly.

Grease : CASMOLY L9508

4. Clean the surfaces of the flywheel and pressure plate thoroughly with fine sandpaper or crocus cloth, and make certain that all oil or grease has been removed.

5. Apply a small amount of multipurpose grease to the clutch disc splines and input shaft splines.

Grease : CASMOLY L9508

⚠ ***CAUTION***

Do not apply more grease than necessary. Too much grease could cause clutch slip or judder.

6. Using the special tool (09411–25000), install the clutch disc to the flywheel. When installing the clutch disc, be sure that the surface having the manufactures stamp is towards the pressure plate side.

7. Install the the clutch cover assembly onto the flywheel and install the six (6) bolts through the clutch cover into the flywheel.

8. Diagonally tighten the bolts 15–22 Nm (150–220 kg.cm, 11–15 lb.ft).
Tighten the bolts by one or two turns at a time, in succession, to avoid bending the cover flange.

9. Remove the special tool.

10. Install the transaxle.

11. Adjust the clutch pedal free-play.

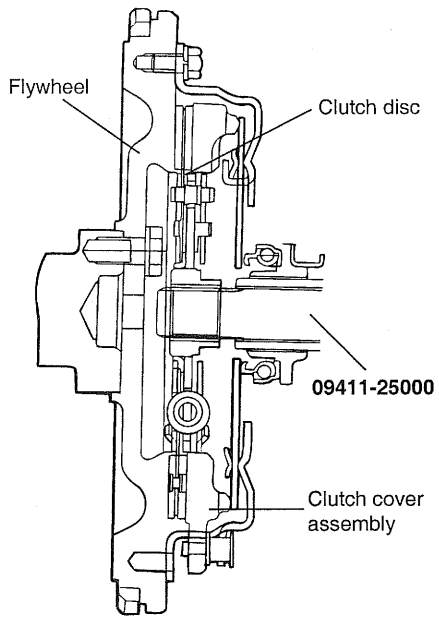

EODA120A

CLUTCH MASTER CYLINDER

COMPONENTS EONB0170

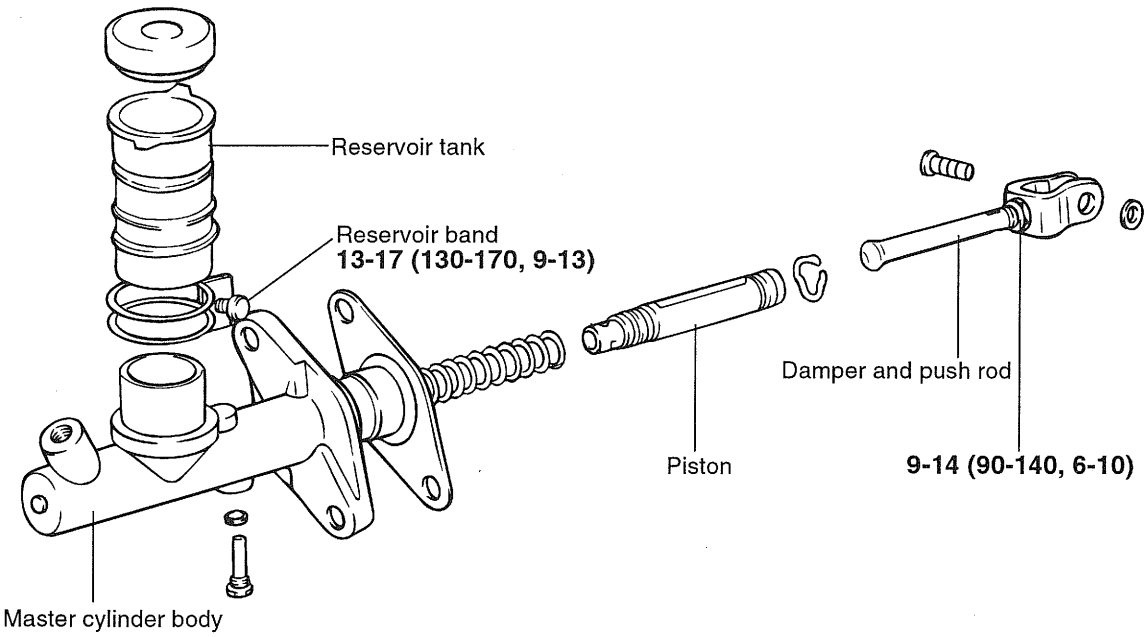

TORQUE : Nm (kg·cm, lb·ft)

EONB017A

DISASSEMBLY EODA0180

1. Remove the reservoir band, reservoir tank and reservoir cap.
2. Remove the piston stop ring.
3. Pull out the push rod and piston assembly.

NOTE

Be careful not to damage the master cylinder body and piston assembly.

INSPECTION EONC0190

1. Check the inside of the cylinder body for rust, pitting or scoring.
2. Check the piston cup for wear or distortion.
3. Check the piston for rust, pitting or scoring.
4. Check the clutch tube line for obstructions.
5. Measure the clutch master cylinder inside diameter with a cylinder gauge, and the piston outside diameter with a micrometer.

NOTE

Measure the inside diameter of the clutch master cylinder in three places (bottom, middle, and top), in perpendicular directions.

6. If the clutch master cylinder-to-piston clearance exceeds the limit, replace the master cylinder and/or piston assembly.

Limit : 0.15 mm (0.006 in.)

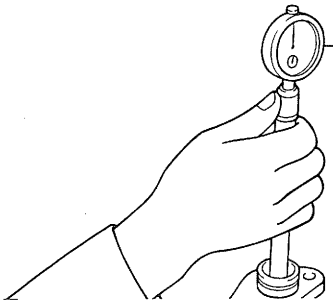

EODA014A

REASSEMBLY EONC0200

1. Apply the specified fluid to the inner surface of the cylinder body and to the outside of the piston assembly.

Specified fluid : BRAKE FLUID DOT 3 or DOT4

2. Install the piston assembly.
3. Install the piston stop ring.
4. Install the push rod assembly.

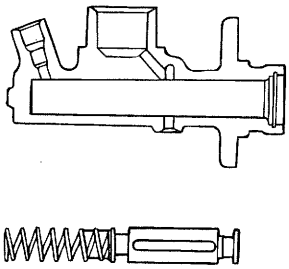

EODA014B

5. Install the reservoir band, reservoir tank and reservoir cap.

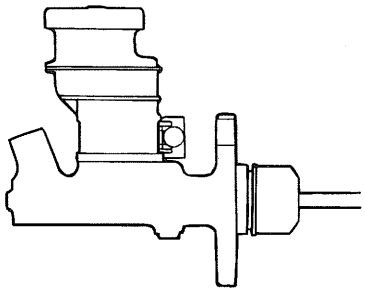

EODA014C

CLUTCH PEDAL

SERVICE ADJUSTMENT PROCEDURE EONC0070

CLUTCH PEDAL INSPECTION AND ADJUSTMENT

1. Measure the clutch pedal height (from the face of the pedal pad to the floorboard).

Standard value :

(A) 182.7 mm (7.3 in.)

Clutch pedal clevis pin play

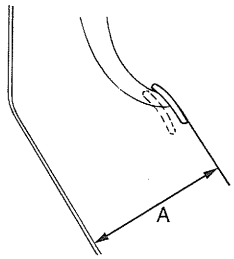

EONC007A

2. If the clutch pedal height is not within the standard value range, adjust as follows :
   - Turn and adjust the bolt, then secure by tightening the lock nut.

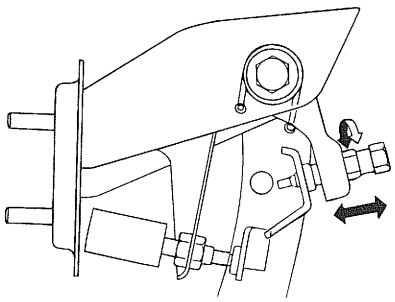

EODA006B

NOTE

After the adjustment, tighten the bolt until it reaches the pedal stopper, and then tighten the lock nut.

   - Turn the push rod to agree with the standard value and then secure the push rod with the lock nut.

CAUTION

When adjusting the clutch pedal height be careful not to push the push rod toward the master cylinder.

3. After completing the adjustments, check that the clutch pedal free play (measured at the face of the pedal pad) is within the standard value ranges.

Standard value :

(B) 6-13 mm (0.24-0.52 in.)

4. If the clutch pedal free play do not meet with the standard values, it may be the result of either air in the hydraulic system or a faulty clutch master cylinder. Bleed the air or disassemble and inspect the master cylinder or clutch.

Clutch pedal free play

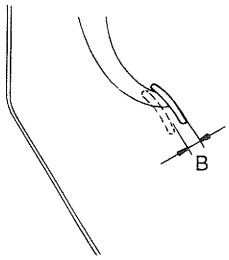

EONC007B

COMPONENTS EONC0080

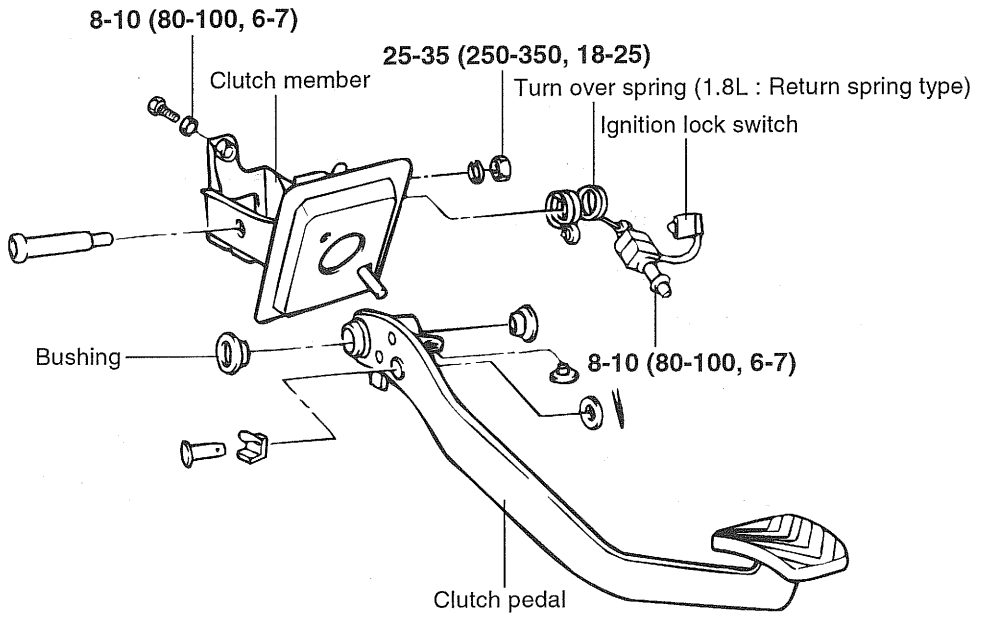

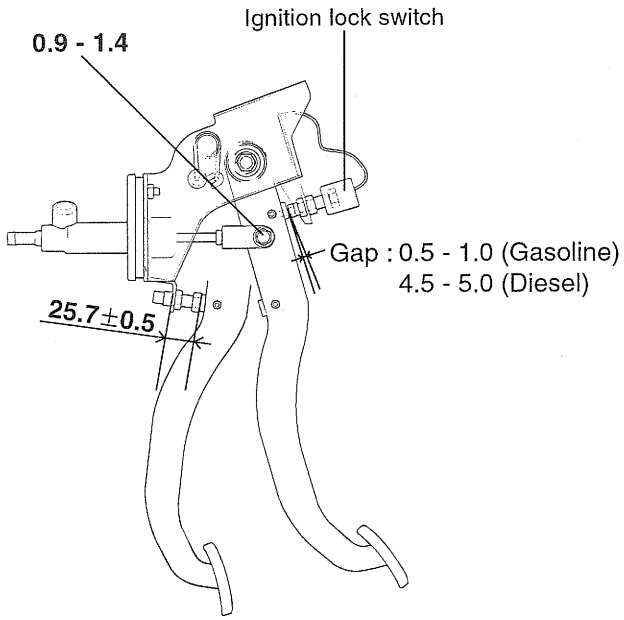

TORQUE : Nm (kg·cm, lb·ft)

EONC008A

REMOVAL EONC0090

1. Remove the cotter pin, washer.
2. Remove the clutch pedal mounting bolt.

INSPECTION EONC0100

1. Check the clutch pedal shaft and bushing for wear.
2. Check the clutch pedal for bending or distortion.
3. Check the return spring for damage or deterioration.
4. Check the clutch pedal pad for damage or wear.

IGNITION LOCK SWITCH INSPECTION

Check for continuity between terminals.

Terminal / Condition	1	2
Pushed	○	○
Free		

EODA009A

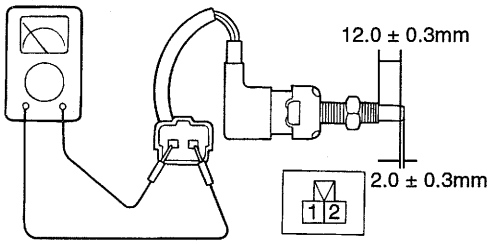

EONC010A

INSTALLATION EONC0110

1. Apply to the multi-purpose grease the bushing.

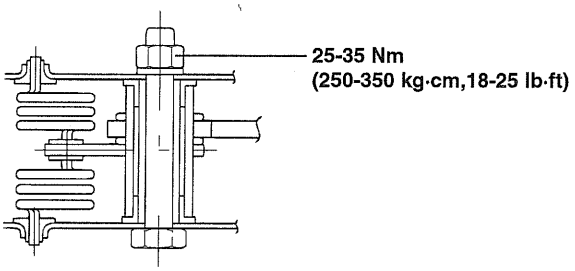

<Gasoline>

EONC011A

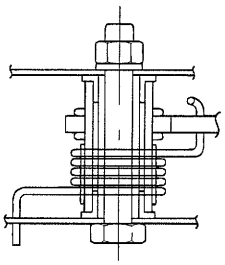

<Diesel>

EONC011B

2. Install the bolt and nut.

CLUTCH RELEASE CYLINDER

COMPONENTS EODA0210

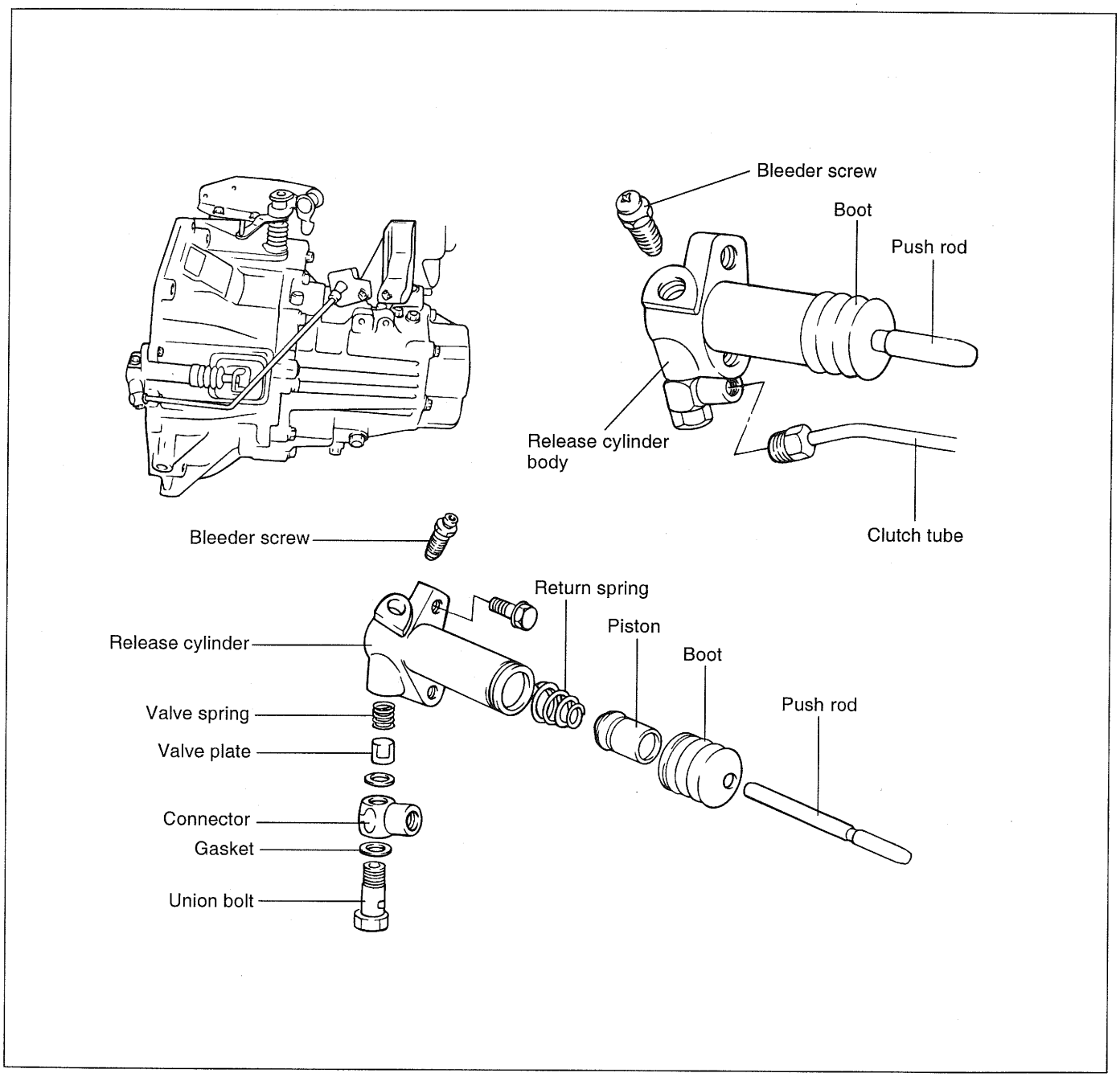

EODA015A

REMOVAL EODA0220

1. Disconnect the clutch tube.
2. Remove the clutch release cylinder mounting bolt.

INSPECTION EODA0230

1. Check the clutch release cylinder for fluid leakage.
2. Check the clutch release cylinder boots for damage.

DISASSEMBLY EODA0240

1. Remove the clutch hose, valve plate, spring, push rod and boot.
2. Remove any dirt from the piston bore opening of the release cylinder.
3. Remove the piston from the release cylinder using compressed air.

⚠ ***CAUTION***

1. ***Cover the release cylinder with rags to prevent the piston from popping out and causing injury.***
2. ***Apply compressed air slowly to prevent the fluid from splashing in your eyes or on your skin.***

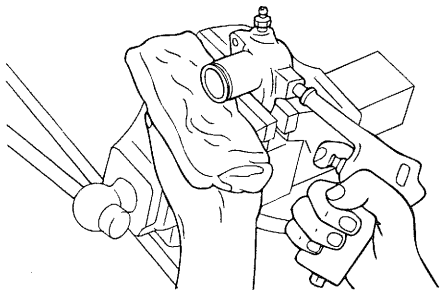

EODA016A

INSPECTION EODA0250

1. Check the clutch release cylinder for fluid leakage.
2. Check the clutch release cylinder boots for damage.
3. Check the release cylinder bore for rust and damage.
4. Measure the release cylinder bore at three locations (bottom, middle and top) with a cylinder gauge and replace the release cylinder assembly if the bore-to-piston clearance exceeds the limit.

Limit : 0.15 mm (0.006 in.)

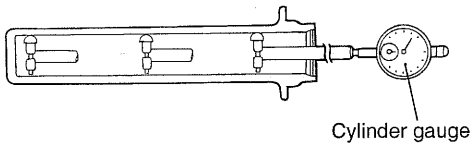

EODA016B

REASSEMBLY EODA0260

1. Apply specified brake fluid to the release cylinder bore and the outer surface of the piston and piston cup, and push the piston cup assembly into the cylinder.

Use the specified fluid : Brake fluid DOT 3

2. Install the valve plate, push rod and boot.

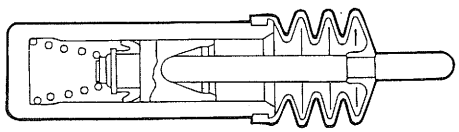

EODA016C

INSTALLATION EODA1270

1. Coat the clevis pin with the specified grease.

Specified grease : CASMOLY L9508

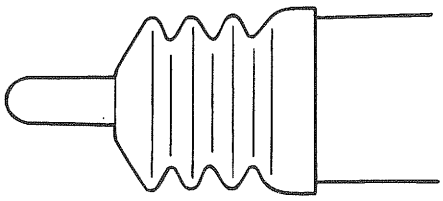

EODA016D

2. Install the clutch release cylinder, and the clutch tube.

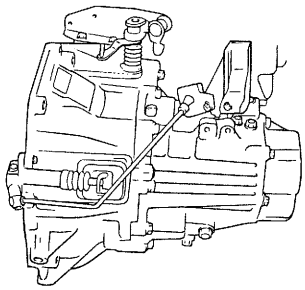

EODA011A

Transaxle/ Transmission

GENERAL ..... TR -2

AUTOMATIC TRANSAXLE SYSTEM ..... TR -5

MANUAL TRANSAXLE SYSTEM ..... TR -108

NOTE : Overhaul procedures for manual transaxle and automatic transaxle are given in spearate manual.

GENERAL

SPECIFICATIONS(M/T) EMNB0010

Model	M5BF2	
Type	Forward 5 speed, reverse 1 speed	
Gear ratio	1.6 DOHC	1.8 DOHC
First	3.615	3.615
Second	2.053	2.053
Third	1.393	1.393
Fourth	1.061	1.061
Fifth	0.837	0.837
Reverse	3.250	3.250
Final gear ratio	4.294	4.056

SERVICE SPECIFICATIONS(M/T) EMNB0020

Item	End play
Input shaft rear bearing end play	0.01L - 0.09L
Output shaft bearing end play	0.05T - 0.10T
Differential bearing end play	0.15T - 0.20T
Differential pinion end play	0.025L - 0.15L
Input shaft front bearing end play	0.01L - 0.12L

SPECIAL TOOLS(M/T) EMAB0050

Tool (Number and Name)	Illustration	Use
09200-38001 Engine support fixture	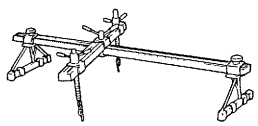 D0038001	Removal and installation of transaxle assembly

TROUBLESHOOTING(M/T) EMAC0060

Symptom	Probable cause	Remedy
Vibration, noise	Loose or damaged transaxle and engine mounts Inadequate shaft end play Worn or damaged gears Inadequate grade of oil Low oil level Inadequate engine idle speed	Tighten or replace mounts Correct end play Replace gears Replace with specified oil Replenish Adjust idle speed
Oil leakage	Broken or damaged, oil seal or O-ring	Replace oil seal or O-ring

Symptom	Probable cause	Remedy
Hard shift	Faulty control cable Poor contact or wear of synchronizer ring and gear cone Weakened synchronizer spring Inadequate grade of oil	Replace control cable Correct or replace Replace synchronizer spring Replace with specified oil
Jumps out of gear	Worn gear shift fork or broken poppet spring Synchronizer hub-to-sleeve spline clearance too large	Replace shift fork or poppet spring Replace synchronizer hub and sleeve

SPECIFICATIONS(A/T) EKNB0010

Item	A4AF3	A4BF2
Torque converter type	3-element, 1-stage, 2-phase type	
Transaxle type	4-speed forward, 1-speed reverse	
Engine displacement	1.6 D	1.8 D
Gear ratio 1st 2nd 3rd 4th	 2.846 1.581 1.000 0.685	 ← ← ← ←
Reverse	2.176	←
Final gear ratio	4.381	4.345
End play (mm) Front clutch snap ring Rear clutch snap ring End clutch snap ring Low and reverse brake snap ring	 0.5 ± 0.1 0.8 ± 0.1 0.5 ± 0.1 0.675 - 0.987	 0.7 ± 0.1 1.0 ± 0.1 0.7 ± 0.1 0.975 - 1.287

SPECIAL TOOLS(A/T) EKAB0060

Tool (Number and name)	Illustration	Use
09200-38001 Engine support fixture	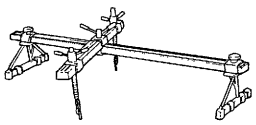 D0038001	Removal and installation of transaxle
09452-21001 Oil pressure gauge adapter	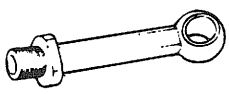 EKAA006A	Measurement of the oil pressure. (use with 09452-21500 and 09452-21002)

Tool (Number and name)	Illustration	Use
09452-21002 Oil pressure gauge adapter	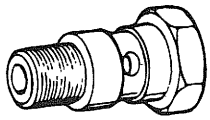 EKAA006B	Measurement of the oil pressure. (use with 09452-21500 and 09452-21001)
09452-21500 Oil pressure gauge	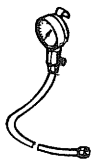 EKAA006C	Measurement of the oil pressure. (use with 09452-21002 and 09452-21002)

AUTOMATIC TRANSAXLE SYSTEM

TROUBLESHOOTING(A/T) EKNB0020

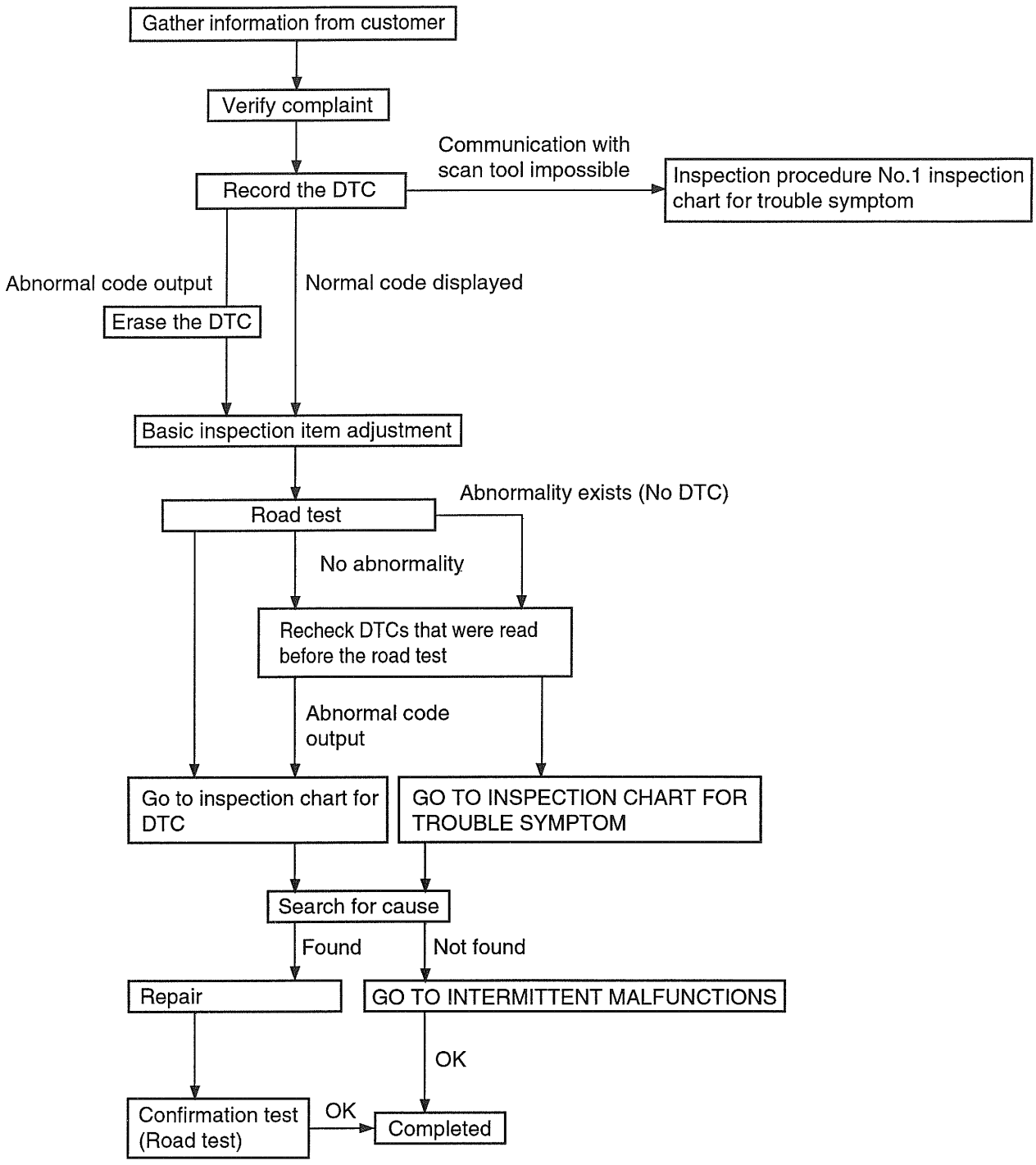

EKFA102A

ROAD TEST EKKB1030

Procedure	Conditions	Operation	Judgement value	Inspection item	Inspection procedure if there is an abnormality
1	Ignition switch : ON Engine stopped	Overdrive switch 1. ON 2. OFF	1. OD 2. OD-OFF	Overdrive switch	Overdrive switch system
2	Ignition switch : ST Engine : Stopped	Starting test with lever in P or N range	Starting should be possible	Starting possible or impossible	Starting impossible (will not crank)
3	Warming up	Drive for 15 minutes or more so that the automatic transmision fluid temperature becomes 70-110°C	Gradually rises to 70-110°C	Oil temperature sensor	Codes - P0712, P0713 Oil temperature sensor system
4	Engine : Idling Selector lever : N	Accelerator pedal 1. Fully closed 2. Depressed 3. Fully open (for at least 2 seconds)	1. 2-18% 2. Gradually rises from (1) 3. 80-100%	TPS	Code - P1703 TPS system
		Selector lever operation 1. N⇒D shift 2. N⇒D shift	Should be no abnormal shifting shocks Time lag should be within 2 seconds	Malfunction when starting	Engine stalling during shifting
					Shocks when changing from N to D and long lag time
					Shocks when changing from N to R and long lag time
					Shocks when changing from N to D, N to R and long lag time
	Engine : Idling (Vehicle stopped) Selector lever position : D	Selector lever operation 1. N⇒D 2. N⇒R shift	Should be no abnormal shifting shocks Time lag should be within 2 seconds	Driving impossible	Does not move forward
					Does not move (forward or reverse)

Procedure	Conditions	Operation	Judgement value	Inspection item	Inspection procedure if there is an abnormality
5	Engine : Idling (Vehicle stopped) Selector lever position : D	Accelerator pedal 1. Fully closed 2. Depressed [Driving at 5km/h (3.1 mph)]	1. 75-90% 2. 100%	Pressure control solenoid valve (PCSV) - A,B	Code P0745, P0765 - Pressure control solenoid valve system
		Accelerator pedal 1. Fully closed 2. Depressed	1. C 2. 1	Shift control solenoid valve A (SCSV-A)	Code P0750 - Shift control solenoid valve A system
				Shift control solenoid valve B (SCSV-B)	Code P0755 - Shift control solenoid valve B system
				Shift control solenoid valve C (SCSV-C)	Code P0760 - Shift control solenoid valve C system
			1. 600-900 rpm	Ignition signal	Code P0727 - Engine speed signal system

Procedure	Conditions	Operation	Judgement value	Inspection item	Inspection procedure if there is an abnormality
6	Selector lever position : D Overdrive : OFF	Engine 1. Idling (vehicle stopped) 2. Driving at 10 km/h 3. Driving at constant speed of 50 km/h (31 mph) (20 seconds or more) 4. Driving at constant speed of 40 km/h (25 mph) with selector lever in 2 range 5. Driving at constant speed of 70 km/h (43 mph) with selector lever in D range	1. C 2. 1 3. 3 4. 2	Shift control solenoid valve A (SCSV-A)	Code - P0750 Shift control solenoid valve A system
				Shift control solenoid valve B (SCSV-B)	Code - P0755 Shift control solenoid valve B system
				Shift control solenoid valve C (SCSV-C)	Code P0760 - Shift control solenoid valve C system
			1. OFF 2. ON 3. ON 4. OFF	Kickdown servo switch	Code P1709 -Kickdown servo switch system
			1. 0 km/h 2. 10 km/h 3. 50 km/h 4. 40 km/h	Vehicle speed sensor	Vehicle speed sensor system
			(3) 1,500-2,000 rpm	Pulse generator A (PG-A)	Code P0717-Pulse generator A system
			(3) 1,500-2,000 rpm	Pulse generator B (PG-B)	Code P0722-Pulse generator B system
			(3) 100-300 rpm (5) 0-10 rpm	Torque converter clutch solenoid	Code P0743-Torque converter clutch solenoid
			(5) TCCS Duty : 40-85	Torque converter clutch solenoid	Code P0743-Torque converter clutch solenoid
			For (3) and (5), acceleration should be smooth with no abnormal vibration	Malfunction while driving	Poor acceleration
					Vibration
7	Selector lever position : D Overdrive : ON	Engine (1) Driving at constant speed of 50 km/h (31 mph) (20 seconds or more)	(1) 3 speed gear (1) 1,500-2,000 rpm	Shift control solenoid valve A (SCSV-A)	Code P0750-Shift control solenoid valve A system
				Shift control solenoid valve B (SCSV-B)	Code P0755-Shift control solenoid valve B system
				Shift control solenoid valve C (SCSV-C)	Code P0760 - Shift control solenoid valve C system
				Pulse generator A (PG-A)	Code P0717-Pulse generator A system
				Pulse generator B (PG-B)	Code P0722-Pulse generator B system

Procedure	Conditions	Operation	Judgement value	Inspection item	Inspection procedure if there is an abnormality
8	Selector lever position : D Overdrive : ON	1. Accelerate to 4th gear at TPS output of 1.5V (opening angle 30%) 2. Slowly decelerate to a standstill. 3. Accelerate to 4th gea at TPS output of 2.5V (opening angle 50%). 4. At 50 km/h (31 mph) in 4th gear, turn overdrive OFF. 5. At 50 km/h (31 mph) in 3rd gear, move selector lever to 2 range. 6. At 20 km/h (12 mph) in 2 range, move selector lever to L range.	For (1),(2) and (3) should match the specified output shaft speed (vehicle speed), and there should be no abnormal shocks. For (4),(5) and (6), down shifting should be made immediately after operation.	Malfunction when shifting	Shocks and flare shifts
				Displaced shifting points	All points
				Does not shift	No fail-safe codes
					Code P0717-Pulse generator A system
					Code P0722-Pulse generator B system
					Code P0750-Shift control solenoid valve A system
					Code P0755-Shift control solenoid valve B system
					Code P0760 - Shift control solenoid valve C system
					Code P0745, P0765-Pressure control solenoid valve system
					Code P0731-1st gear incorrect ratio.
					Code P0732-2nd gear incorrect ratio.
					Code P0733-3rd gear incorrect ratio.
					Code P0734-4th gear incorrect ratio.

INSPECTION CHART FOR DIAGNOSTIC TROUBLE CODES EKNB1040

DTC NO	Diagnosis items	Trouble area (Remedy)	MIL
P1703	Throttle position sensor	• Check the throttle sensor connector • Check throttle position sensor itself • Check the throttle position sensor wiring harness • Check the wiring between ECM and throttle position sensor • Adjust throttle position sensor	O
P0712	Fluid temperature sensor -short circuit-	• Fluid temperature sensor connector inspection • Fluid temperature sensor inspection • Fluid temperature sensor wiring harness inspection	O
P0713	Fluid temperature sensor -open circuit-		
P1709	Kickdown servo switch -open circuit-	• Check the kicdown servo switch connector • Check the kicdown servo switch • Check the kicdown servo switch wiring harness	X
	Kickdown servo switch -short circuit-		
P0727	Engine speed signal -open circuit-	• Check the ignition pulse signal line • Check the wiring between ECM and ignition system	O
P0717	Pulse generator A -open circuit-	• Check the pulse generator A and pulse generator B • Check the vehicle speed reed switch (for chattering) • Check the pulse generator A and B wiring harness	O
P0722	Pulse generator B -open circuit-		
P0750	Shift control solenoid valve A	• Check the solenoid valve connector • Check the shift control solenoid valve A • Check the shift control solenoid valve A wiring harness	O
P0755	Shift control solenoid valve B	• Check the solenoid valve connector • Check the shift control solenoid valve B • Check the shift control solenoid valve A wiring harness	O
P0760	Shift control solenoid valve C	• Check the solenoid valve connector • Check the shift control solenoid valve C • Check the shift control solenoid valve A wiring harness	O
P0707	Transaxle range switch -open circuit-	• Check the transaxle range switch connector and harness	O
P0708	Transaxle range switch -short circuit-		
P0745	Pressure control solenoid-A valve open circuit	• Check the pressure control solenoid valve • Check the pressure control solenoid valve wiring harness	O
P0765	Pressure control solenoid-B valve short circuit		

DTC NO	Diagnosis items	Trouble area (Remedy)	MIL
P0743	Damper clutch control solenoid	• Inspectiond of solenoid valve connector • Individual inspection of damper clutch control solenoid valve • Check the damper clutch control solenoid valve wiring harness • Check the TCM • Inspection of damper clutch hydraulic system	X
P1744	Damper clutch -Abnormal vibration		X
P0731	First gear system -Malfunction-	• Check the pulse generator A and pulse generator B connector • Check the one way clutch or rear clutch • Check the pulse generator wiring harness	O
P0732	Second gear system -Malfunction-		
P0733	Third gear system -Malfunction-	• Check the rear clutch or control system • Check the pulse generator A and pulse generator B connector • Check the front clutch slippage or control system • Check the pulse generator wiring harness • Check the rear clutch slippage or control system	O
P0734	Fourth gear system -Malfunction-	• Check the pulse generator A and pulse generator B connector • Kickdown brake slippage • Check the end clutch or control system • Check the pulse generator wiring harness	O

FAIL-SAFE ITEM

DTC NO	Description	Fail-safe	Note (Relation to diagnostic trouble code)
P0717	Open-circuited pulse generator A	Locked in third (D) or second (2, L) gear	When code P0717 is generated fourth time
P0722	Open-circuited pulse generator B	Locked in third (D) or second (2,L) gear	When code P0722 is generated fourth time
P0750	Open-circuited or shorted shift control solenoid valve A	Lock in third gear	When code P0750 is generated fourth time
P0755	Open-circuited or shorted shift control solenoid valve B	Lock in third gear	When code P0755 is generated fourth time
P0760	Open-circuited or shorted shift control solenoid valve C	Lock in third gear	When code P0760 is generated fourth time
P0745 P0765	Open-circuited shorted pressure control solenoid valve	Lock in third (D) or second (2,L)	When codes P0745 or P0765 are generated fourth time
P0731 P0732 P0733 P0734	Gear shifting does not match the engine speed	Lock in third (D) or second (2,L)	When either codes P0731, P0732, P0733 or P0734 are generated fourth time

INSPECTION PROCEDURES FOR DIAGNOSTIC TROUBLE CODES EKDA0050

P1703

DTC NO	DIAGNOSTIC ITEM
P1703	THROTTLE POSITION SENSOR

DESCRIPTION

- Shift timing
- Detect operating area of damper clutch
- Detect throttle position to control fluid pressure during a shift

TROUBLESHOOTING FLOW

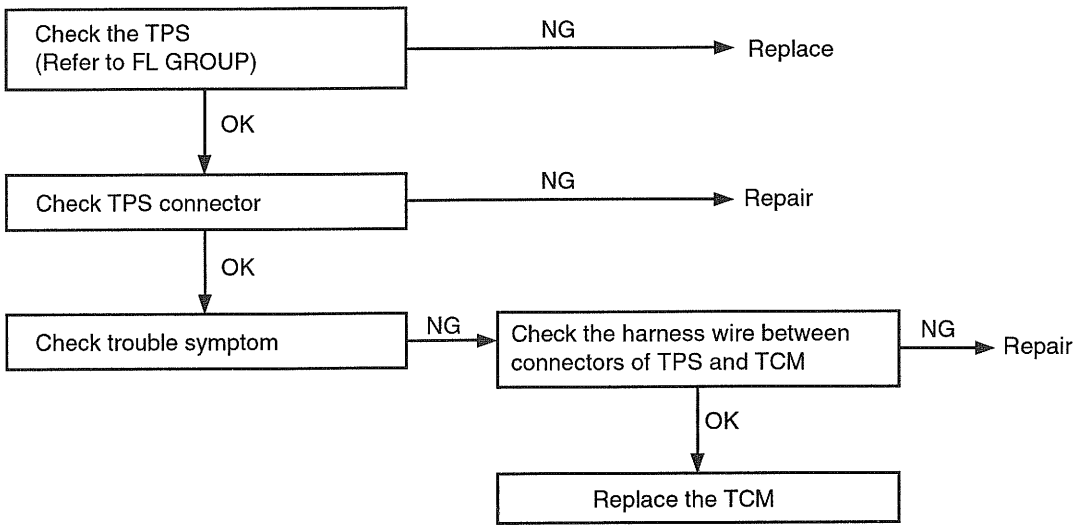

EKDA005A

DIAGNOSTIC ITEM EKKB1060

P0712/P0713

DTC NO	DIAGNOSTIC ITEM	
P0712	FLUID (OIL) TEMPERATURE SENSOR SYSTEM	Short to ground side
P0713	FLUID (OIL) TEMPERATURE SENSOR SYSTEM	Open

TROUBLESHOOTING GUIDE

Detection condition	Possible cause	Check item
• 10 minutes after engine speed > 1000 rpm • 10 minutes after pulse generator B > 1000 rpm • Low temperature side output voltage > 4.3 V <SYMPTOM> • Shift shock • Power shift pattern will not be available	Malfunction : • Fluid temperature sensor • TCM	• Fluid temperature sensor • Harness & connector

CIRCUIT DIAGRAM

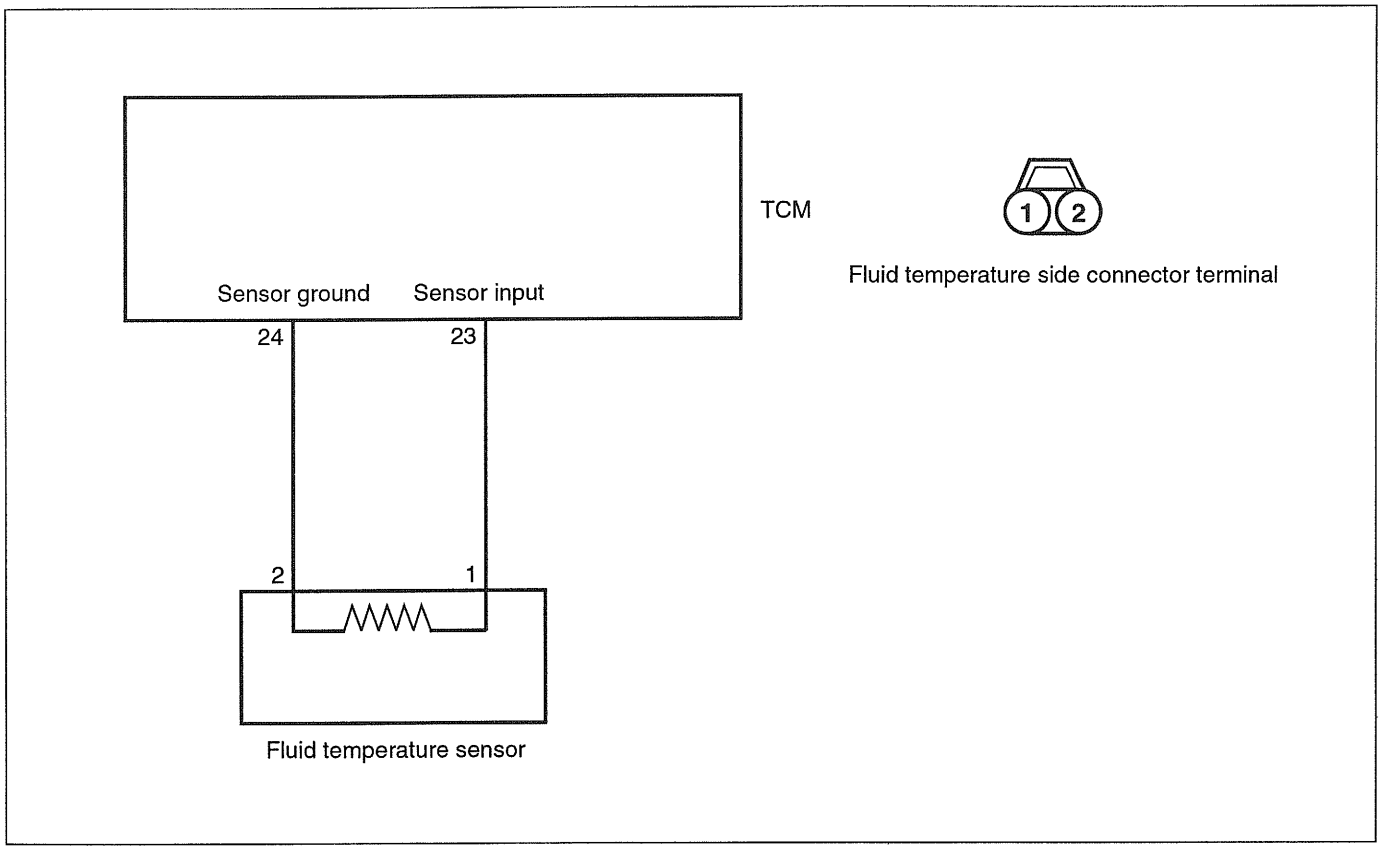

EKFA106A

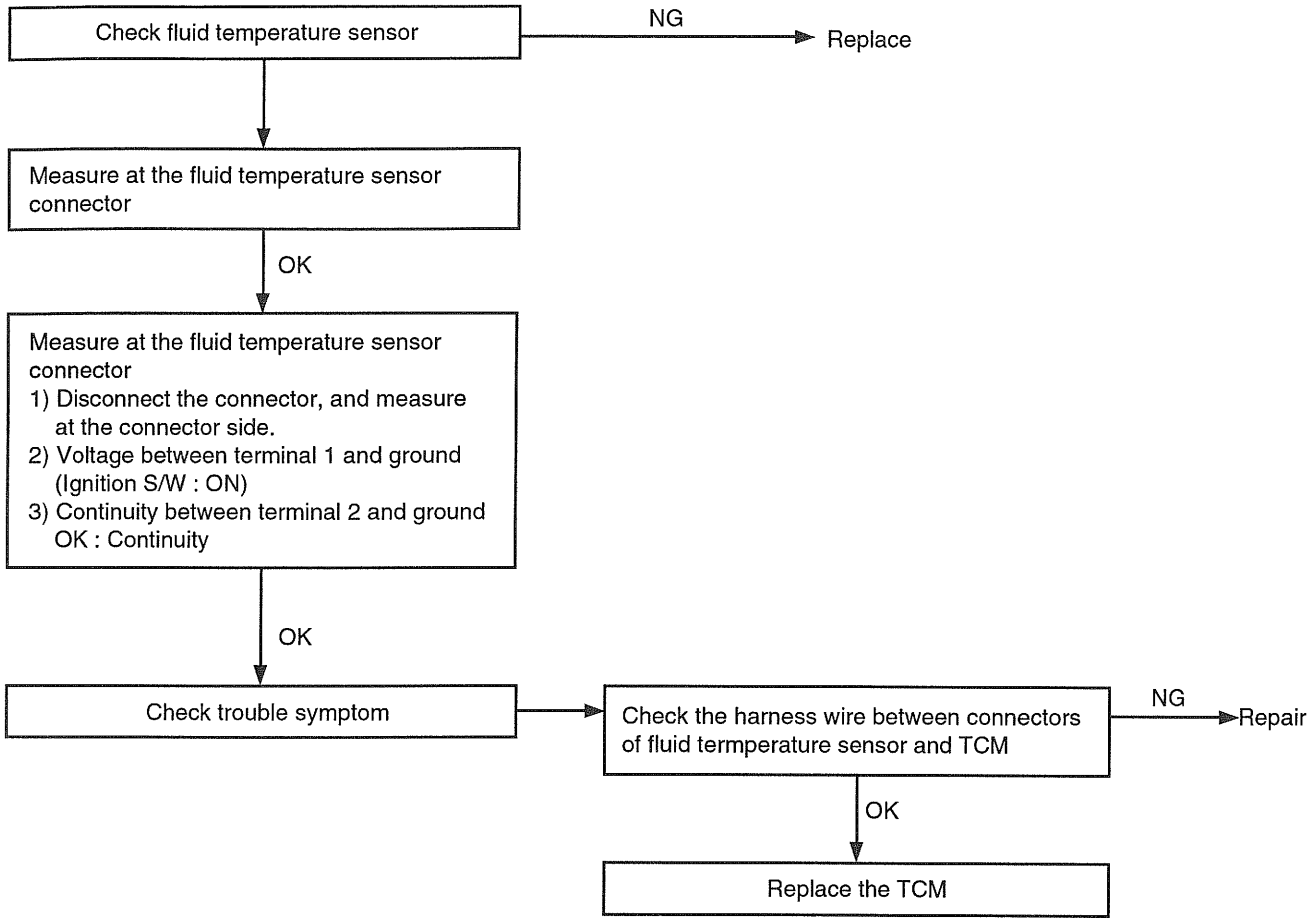
Check fluid temperature sensor
NG
Replace
Measure at the fluid temperature sensor connector
OK
Measure at the fluid temperature sensor connector
1) Disconnect the connector, and measure at the connector side.
2) Voltage between terminal 1 and ground (Ignition S/W : ON)
3) Continuity between terminal 2 and ground OK : Continuity
OK
Check trouble symptom
Check the harness wire between connectors of fluid termperature sensor and TCM
NG
Repair
OK
Replace the TCM

EKDA006B

DIAGNOSTIC ITEM EKNB0070

P1709

DTC NO	DIAGNOSTIC ITEM	
P1709	KICK DOWN SERVO SWITCH	- Open, short circuit -

DESCRIPTION

- Detects the point of time when K/D band starts operation to control fluid pressure when K/D band operates.

TROUBLESHOOTING GUIDE

Detection condition	Possible cause	Check item
• 1st or 3rd gear signal is present for more than 5 sec. • Transfer shaft speed is greater than 900rpm • Fluid temperature is above 60°C • TCM receives an "OFF" signal from K/D servo s/w	• Malfunction of K/D servo s/w • Malfunction of connector • Malfunction of TCM	• Harness & connnector • K/D servo s/w • K/D servo assembly
«SYMPTOM» • Shift shock is experienced as transaxle shifts into 2nd and 4th gears.		

CIRCUIT DIAGRAM

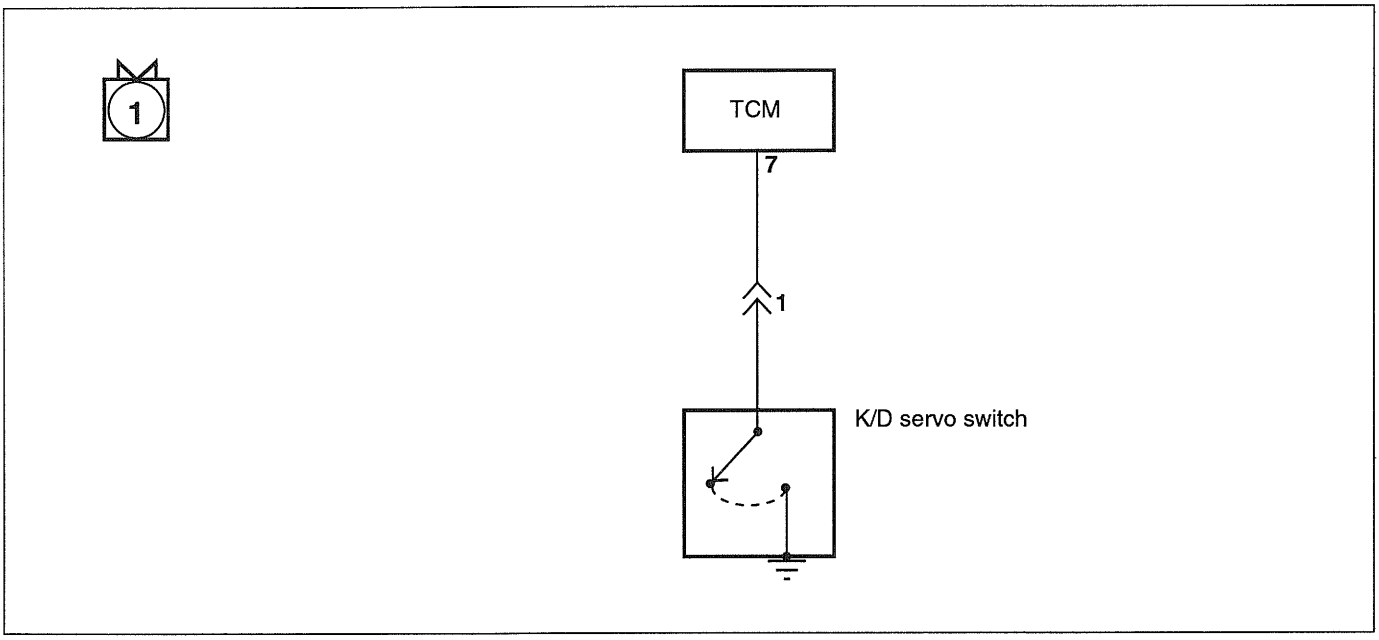

EKNB007A

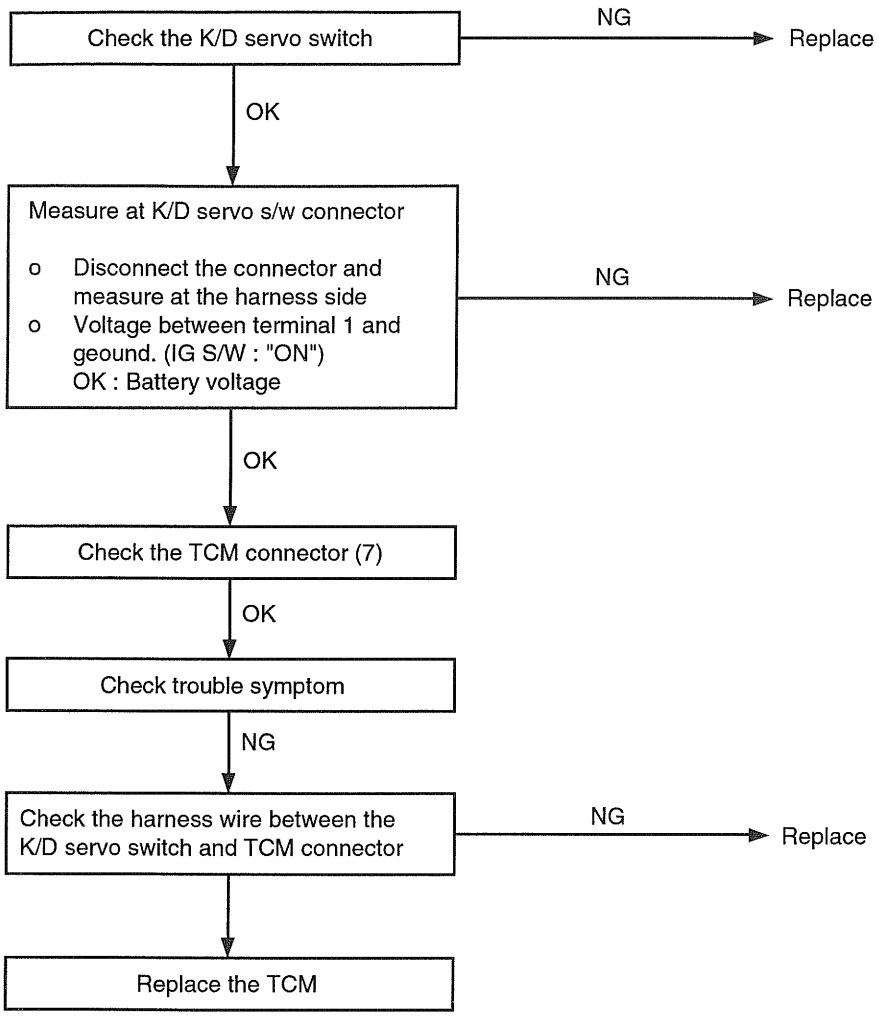
Check the K/D servo switch
NG
Replace
OK
Measure at K/D servo s/w connector
o Disconnect the connector and measure at the harness side
o Voltage between terminal 1 and geound. (IG S/W : "ON")
OK : Battery voltage
NG
Replace
OK
Check the TCM connector (7)
OK
Check trouble symptom
NG
Check the harness wire between the K/D servo switch and TCM connector
NG
Replace
Replace the TCM

EKDA007B

DIAGNOSTIC ITEM EKDA0080

P0727

DTC NO	DIAGNOSTIC ITEM	
P0727	ENGINE SPEED SIGNAL	- Open, short circuit -

DESCRIPTION

- Calculates damper clutch slip.
- Detects engine speed to control fluid pressure during a shift.

TROUBLESHOOTING GUIDE

Detection condition	Possible cause	Check item
• Engine speed > 1,500 rpm • Transaxle range : D, 2 or L • TCM does not receive an ignition pulse	• Malfunction of ECM • Malfunction of connector • Malfunction of TCM	• Harness & connector • ECM
«SYMPTOM» • Abnormal operation of the damper clutch system • Excessive fuel consumption		

DIAGNOSTIC ITEM EKNB0090

P0717

DTC NO	DIAGNOSTIC ITEM	
P0717	PULSE GENERATOR A	- Open, short circuit -

DESCRIPTION

- Detects non-operating area of damper clutch
- Detects turbine RPM for control of fluid pressure during a shift

TROUBLESHOOTING FLOW

Detection condition	Possible cause	Check item
• Vehicle speed sensor speed > 30 km/h • Transaxle range : D, 2 or L • Engine speed > 3,000 rpm • Shift position ; 2nd, 3rd or 4th gear	• Malfunction of PG-A • Malfunction of connector • Malfunction of TCM • Malfunction of end clutch retainer	• Harness & connector
«SYMPTOM» • Shift shock during 2nd and 4th gear shifting • When code P0717 is generated, automatic transaxle hold in 3rd gear ("D" range) or 2nd gear ("2", "L" range). • Codes P0731, P0732, P0733 and P0734 may also be set.		

TROUBLESHOOTING GUIDE

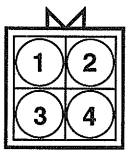

Pulse generator side connector terminals

1-2 : PG-A
3-4 : PG-B

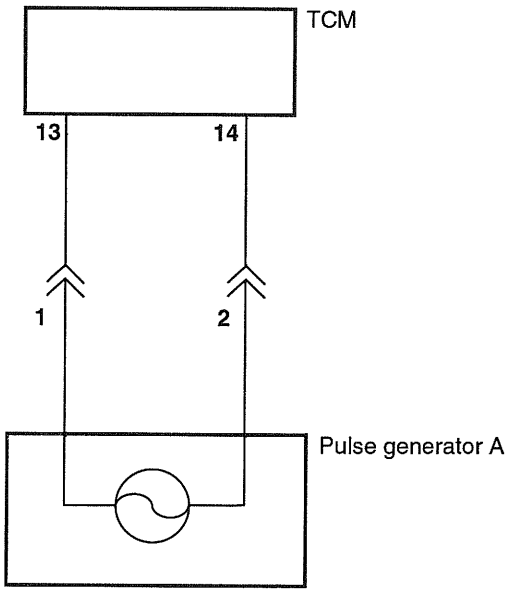

EKNB009A

TROUBLESHOOTING FLOW

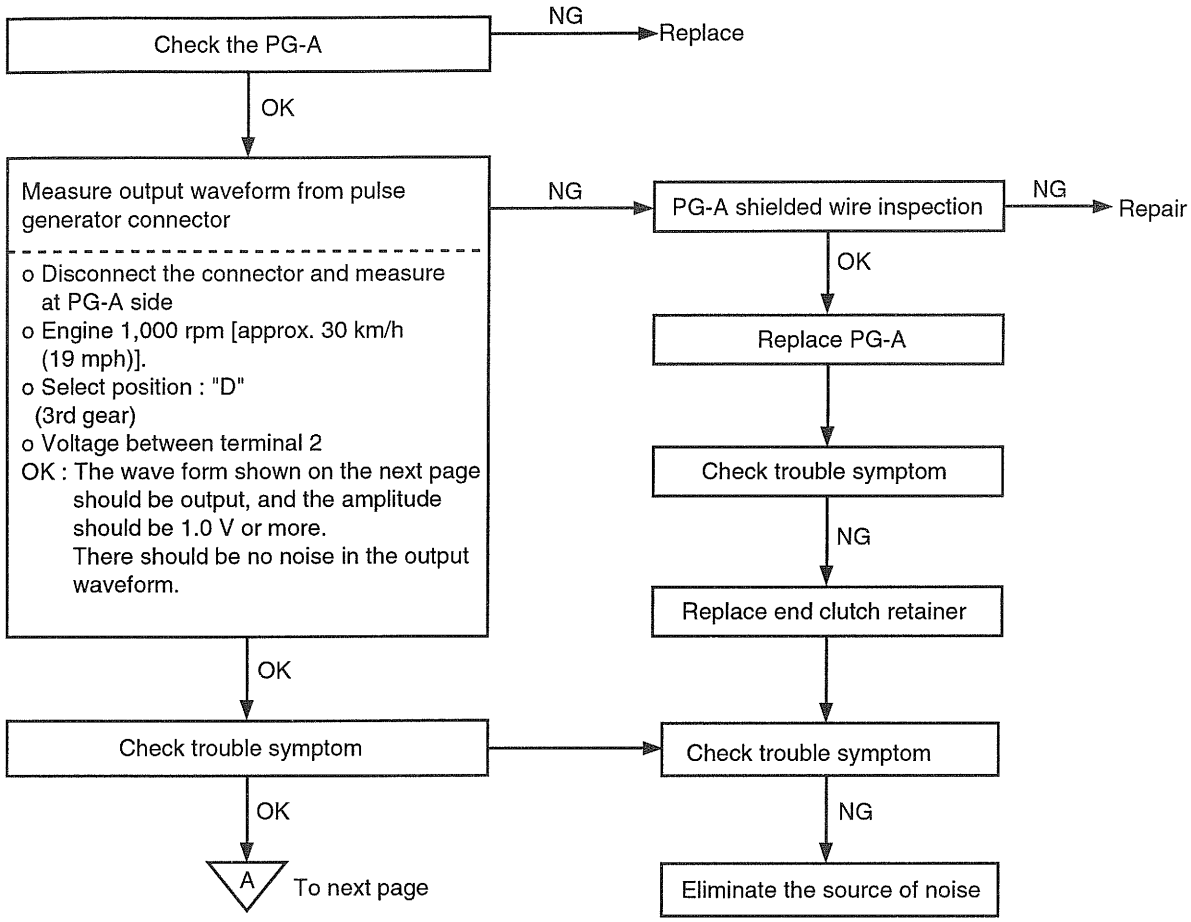

EKDA009B

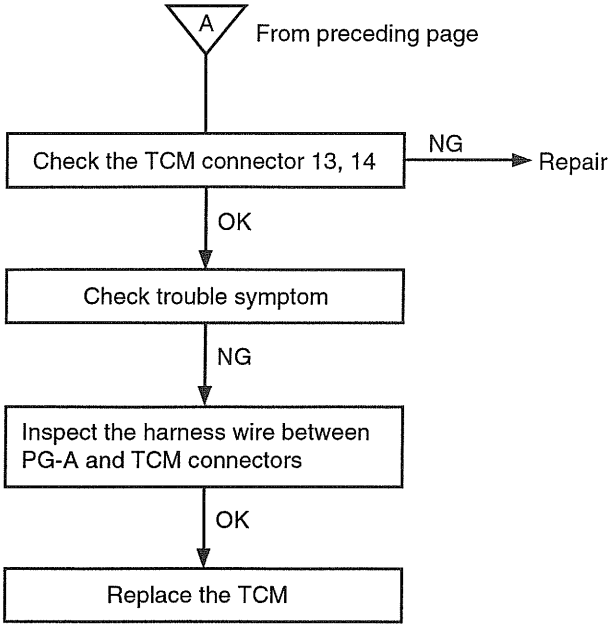
A
From preceding page
Check the TCM connector 13, 14
NG
Repair
OK
Check trouble symptom
NG
Inspect the harness wire between PG-A and TCM connectors
OK
Replace the TCM

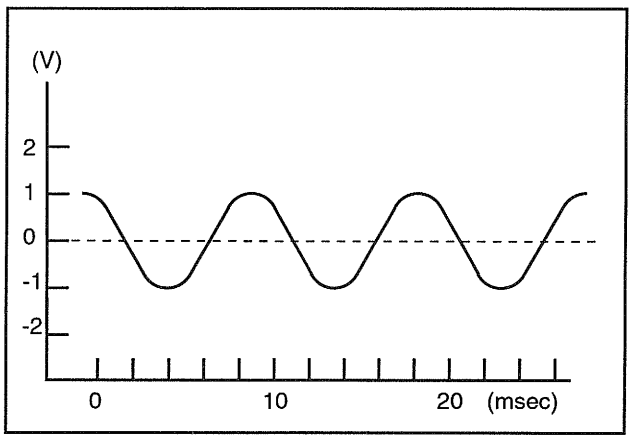
(V)
2
1
0
-1
-2
0
10
20
(msec)

EKNB009B

DIAGNOSTIC ITEM EKNB1100

P0722

DTC NO	DIAGNOSTIC ITEM	
P0722	PULSE GENERATOR B	- Open, short-

DESCRIPTION

- Detects number of revolutions of the transfer driven gear to monitor vehicle speed.

TROUBLESHOOTING FLOW

Detection condition	Possible cause	Check item
• Vehicle speed sensor speed > 30 km/h • Engine speed > 3,000 rpm • Shift position ; 2nd, 3rd or 4th gear	• Malfunction of PG-B • Malfunction of connector • Malfunction of TCM • Malfunction of transfer driven gear	• Open in PG-B circuit • Malfunction of PG-B • Noise in signal (Poor or defective shielding) • Chattering of vehicle speed sensor
«SYMPTOM» • Shift shock during 2nd and 4th gear shifting • When fail -safe code P0722 is generated, automatic transaxle will hold in 3rd gear (D) or 2nd gear (2,L) • Codes P0731, P0732, P0733 and P0734 may also be set		

CIRCUIT DIAGRAM

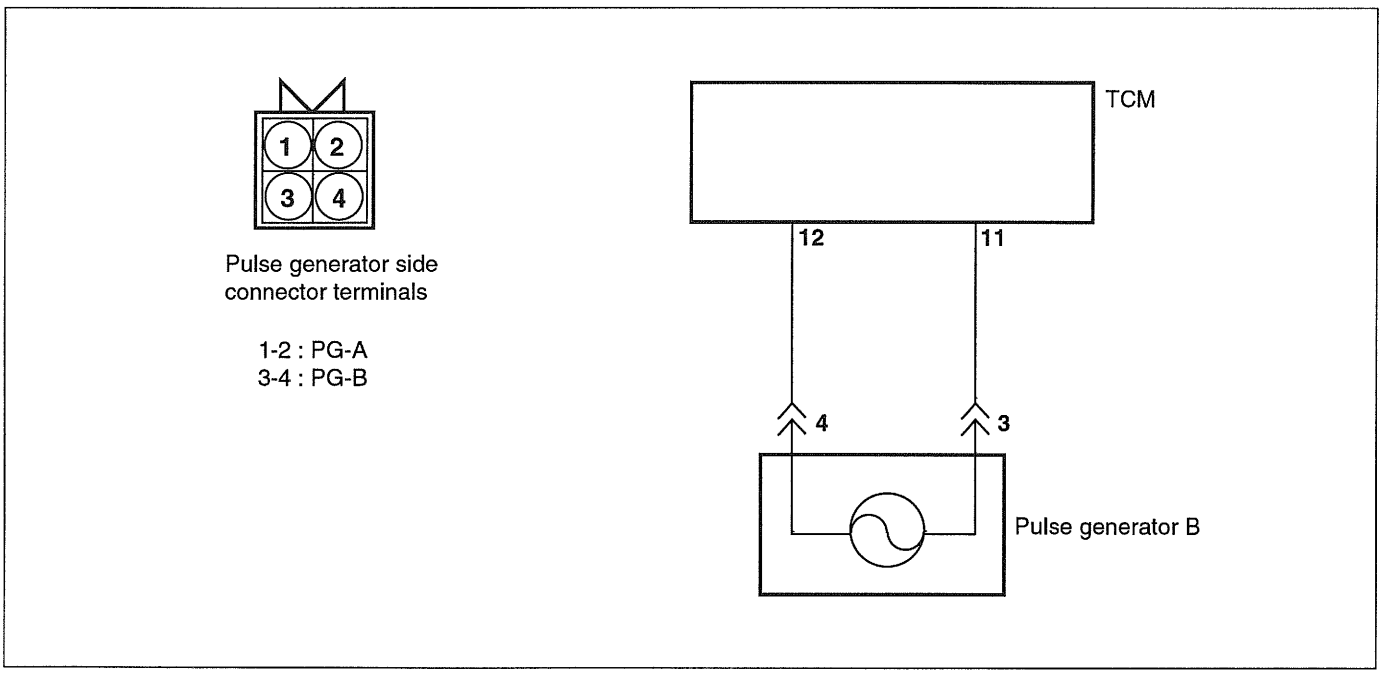

EKFA110A

TROUBLESHOOTING FLOW

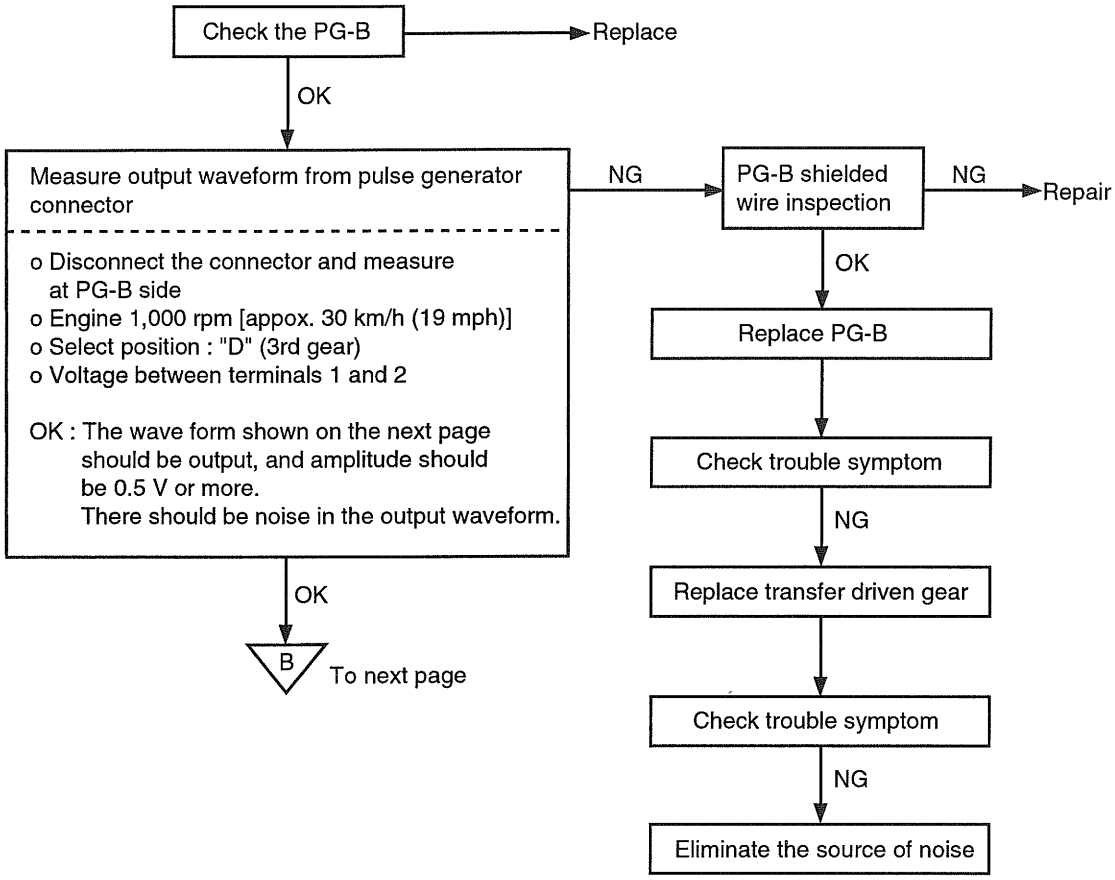

EKDA010B

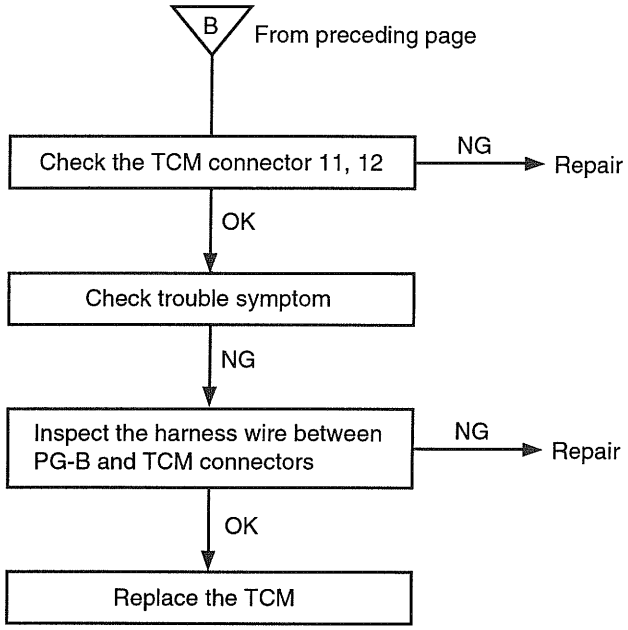
B
From preceding page
Check the TCM connector 11, 12
NG
Repair
OK
Check trouble symptom
NG
Inspect the harness wire between PG-B and TCM connectors
NG
Repair
OK
Replace the TCM

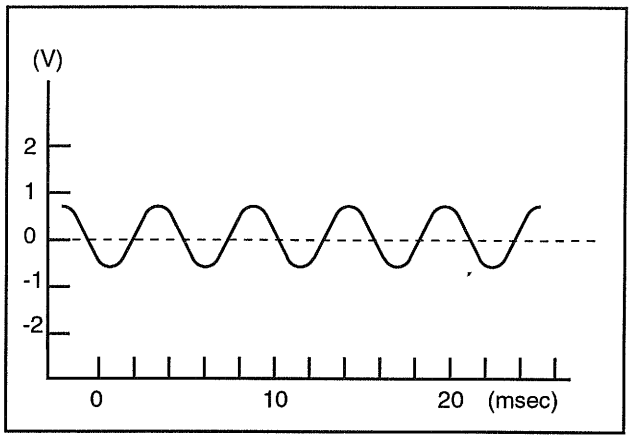
(V)
2
1
0
-1
-2
0
10
20
(msec)

EKFA110C

DIAGNOSTIC ITEM EKNB0110

P0750

DTC NO	DIAGNOSTIC ITEM	
P0750	SHIFT CONTROL SOLENOID VALVE A	- Open -, - Short circuit -

DESCRIPTION

- Control fluid pressure that is acting on the shift control valve (SCV) through ON/OFF signals from the TCM to control shifting.

TROUBLESHOOTING FLOW

Detection condition	Possible cause	Check item
• IG S/W "ON" or start release • TCM senses an open/short in the SCSV-A	• Malfunction of PG-A • Malfunction of connector • Malfunction of TCM	• Open/short in SCSV-A circuit • Malfunction of SCSV-A
«SYMPTOM» • Automatic transaxle will hold 3rd gear when code P0750 is generated.		

TROUBLESHOOTING FLOW

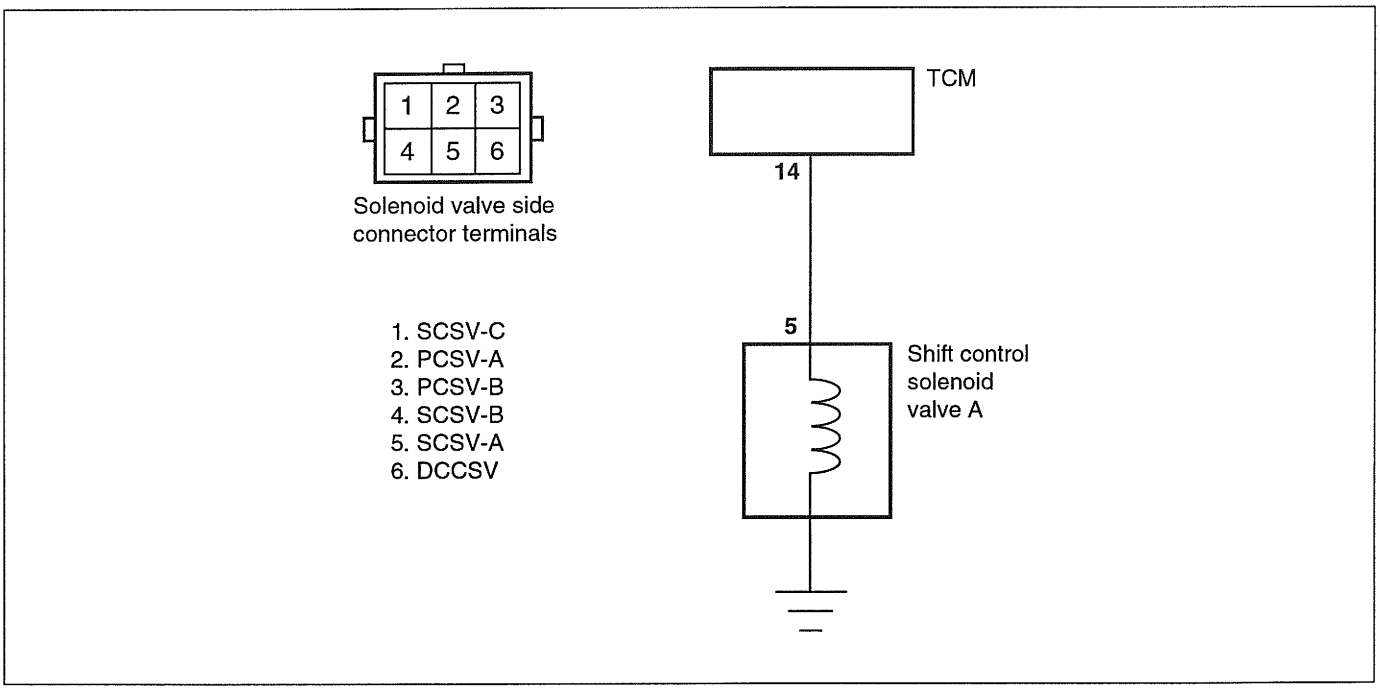

EKNB011A

TROUBLESHOOTING FLOW

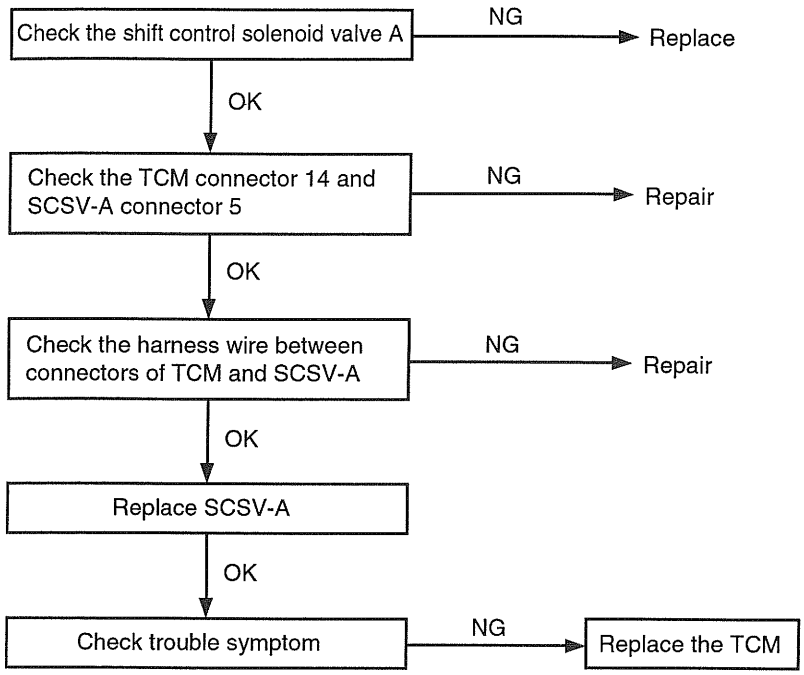

EKNB011B

DIAGNOSTIC ITEM EKNB0120

P0755

DTC NO	DIAGNOSTIC ITEM	
P0755	SHIFT CONTROL SOLENOID VALVE B	- Open -, - Short circuit -

DESCRIPTION

- Controls fluid pressure that is acting on the shift control valve (SCV) through ON/OFF signals from the TCM to control shifting.
- If resistance value of SCSV-B is too high or low, P0755 is output. (open or short circuit).

TROUBLESHOOTING FLOW

Detection condition	Possible cause	Check item
• IG S/W "ON" or start release • TCM senses an open/short in the SCSV-B	• Malfunction of SCSV-B • Malfunction of connector • Malfunction of TCM	• Open/short in SCSV-B circuit • Malfunction of SCSV-B
«SYMPTOM» • Automatic transaxle will hold 3rd gear when code P0755 is generated.		

CIRCUIT DIAGRAM

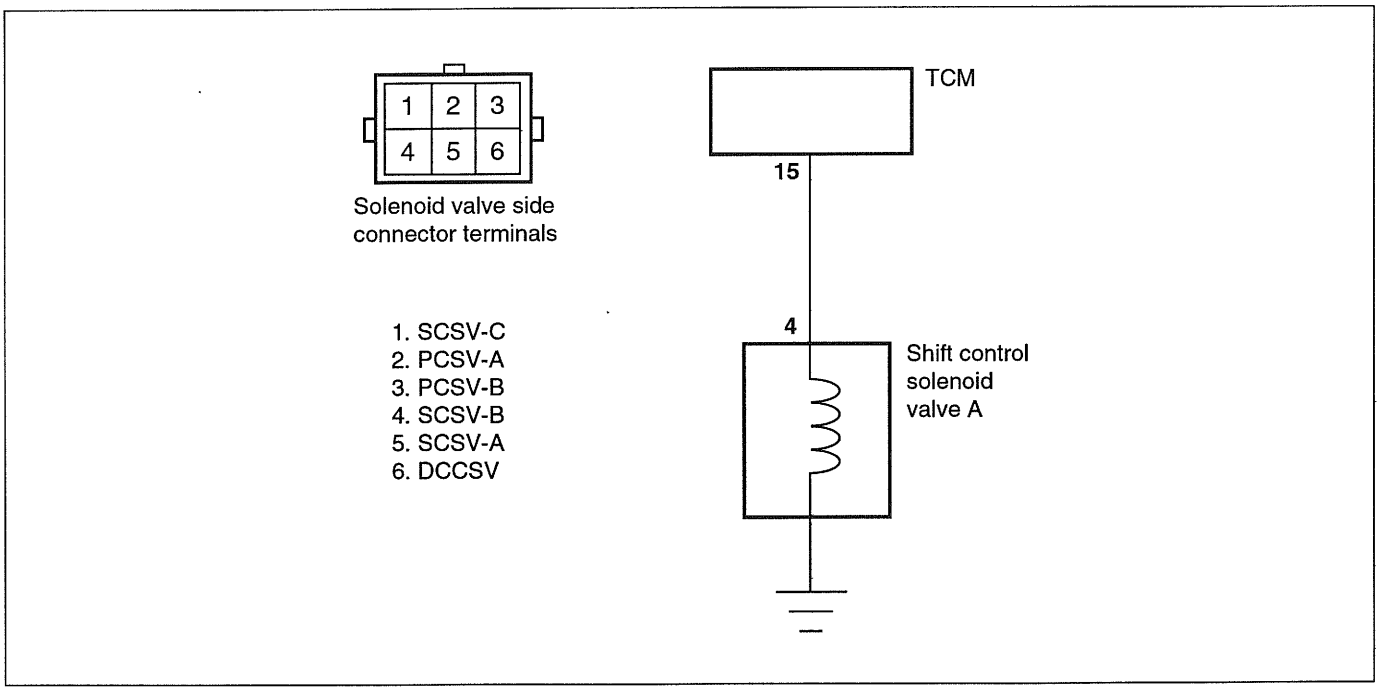

EKNB012A

TROUBLESHOOTING FLOW

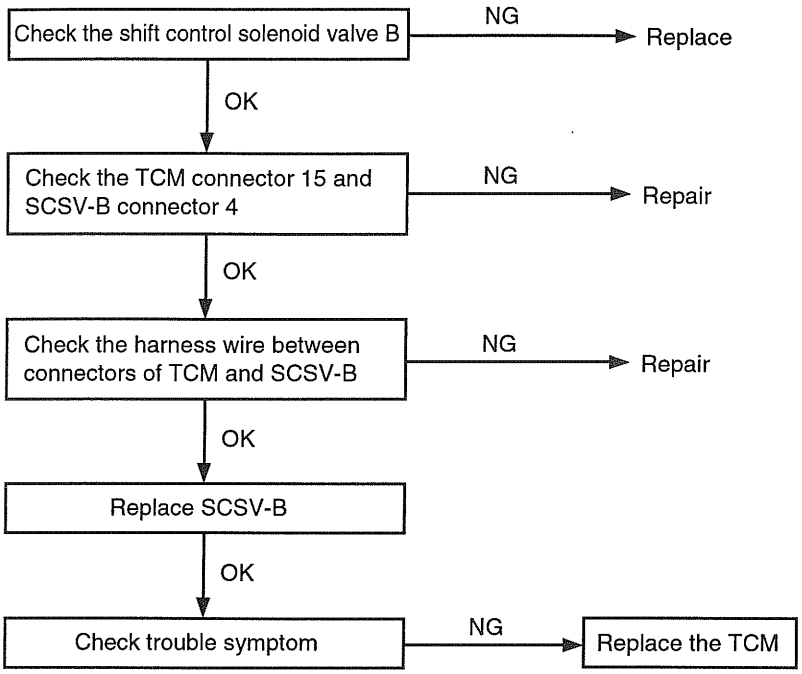

EKNB012B

DIAGNOSTIC ITEM EKNB0130

P0760

DTC NO	DIAGNOSTIC ITEM	
P0760	SHIFT CONTROL SOLENOID VALVE C	- Open -, - Short circuit -

DESCRIPTION

- Controls fluid pressure that is acting on the control switch valve (CSV) through ON/OFF signals from the TCM to control shifting.
- If resistance value of SCSV-C is high, P0760 is output. (open circuit).

TROUBLESHOOTING FLOW

Detection condition	Possible cause	Check item
• IG S/W "ON" or start release • TCM senses an open/short in the SCSV-C	• Malfunction of SCSV-C • Malfunction of connector • Malfunction of TCM	• Open/short in SCSV-C circuit • Malfunction of SCSV-C
«SYMPTOM» • Automatic transaxle will hold 3rd gear when code P0760 generated		

CIRCUIT DIAGRAM

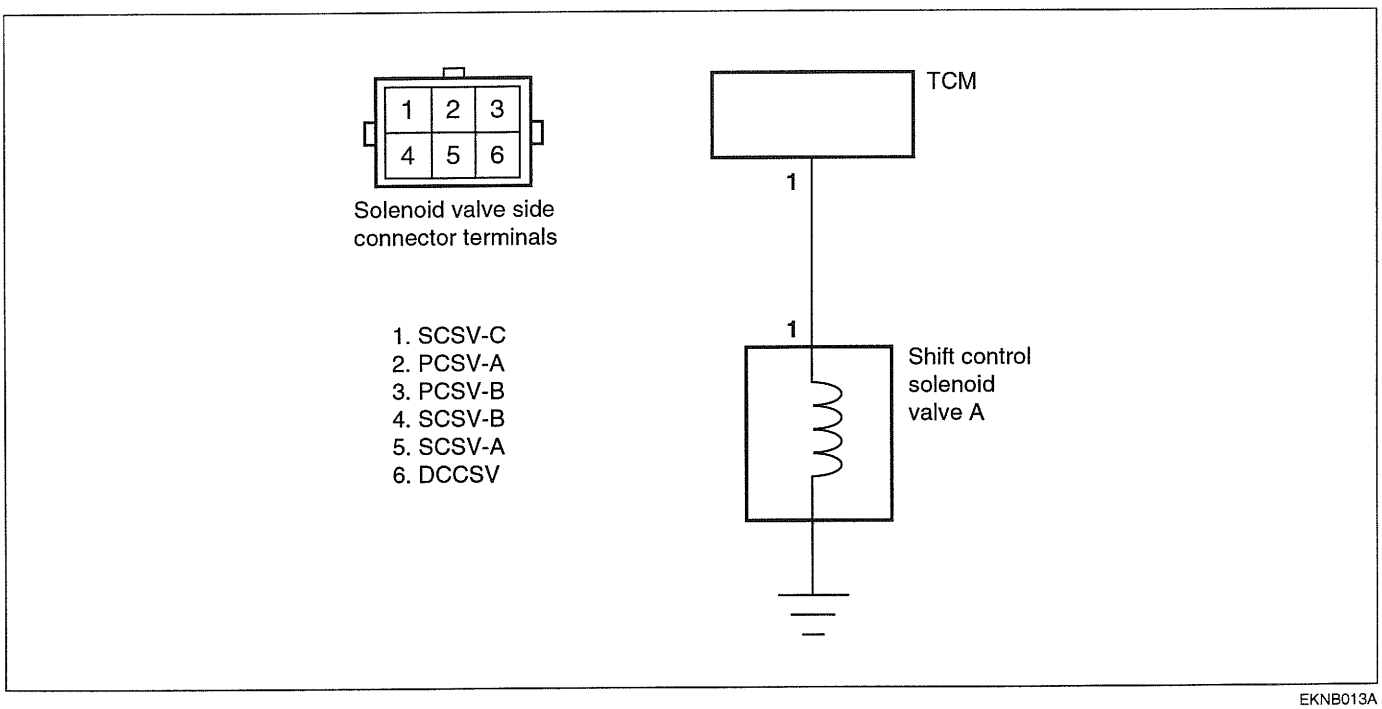

EKNB013A

TROUBLESHOOTING FLOW

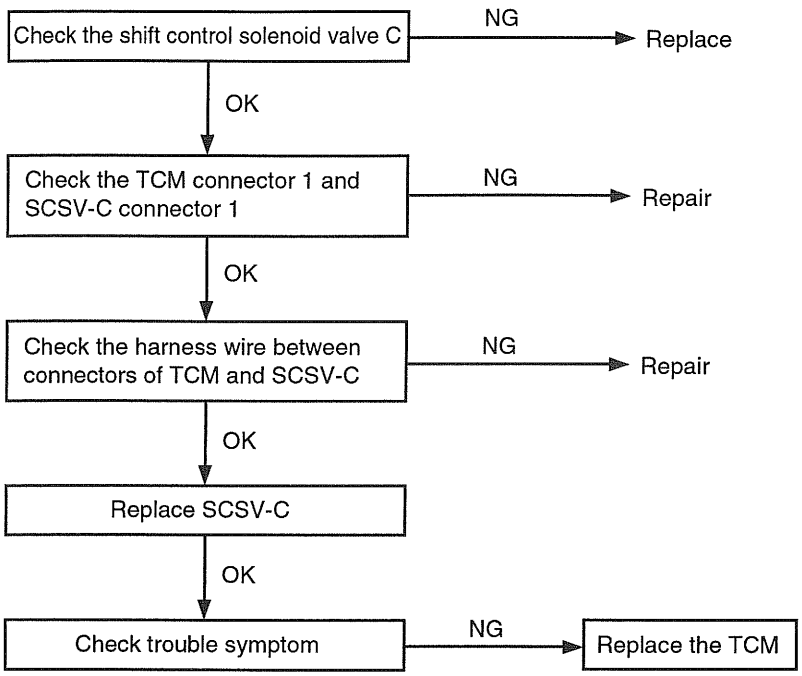

EKNB013B

DIAGNOSTIC ITEM EKNB0140

P0745

DTC NO	DIAGNOSTIC ITEM	
P0745	PRESSURE CONTROL SOLENOID VALVE -A	- Open -, - Short circuit -

DESCRIPTION

- Controls fluid pressure that is acting on the pressure control valve-A (PCV-A) through Pulse Width Modulation signals from the TCM to control pressure during a shift.

TROUBLESHOOTING FLOW

Detection condition	Possible cause	Check item
• IG S/W "ON" or start release • TCM senses an open • Short in the PCSV-A circuit	• Malfunction of PCSV-A • Malfunction of connector • Malfunction of TCM	• Open/short in PCSV-A circuit • Malfunction of PCSV-A
«SYMPTOM» • Shock felt as transaxle is engaged • Shift shock is felt as transaxle shifts through gears • Abrupt increase of engine rpm • When code P0745 is generated for the 4th time, automatic transaxle will hold 3rd gear (D) or 2nd gear (2,L)		

CIRCUIT DIAGRAM

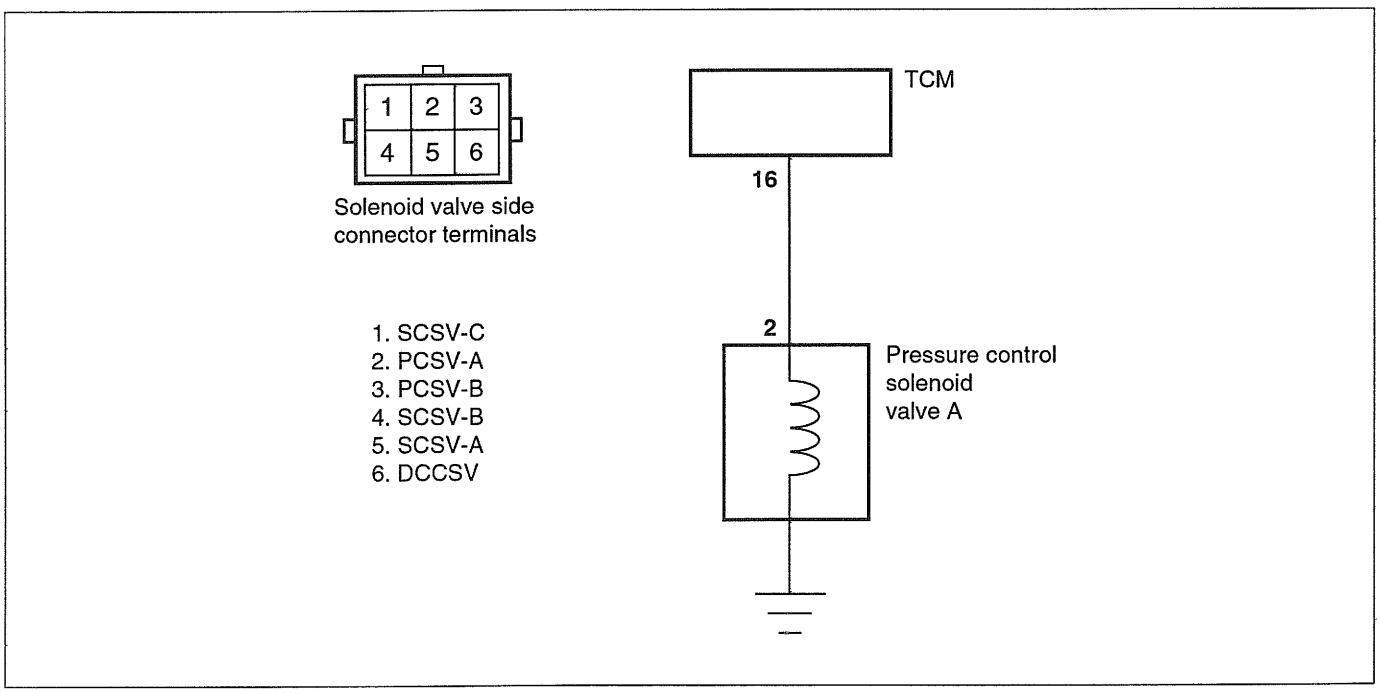

EKNB014A

TROUBLESHOOTING FLOW

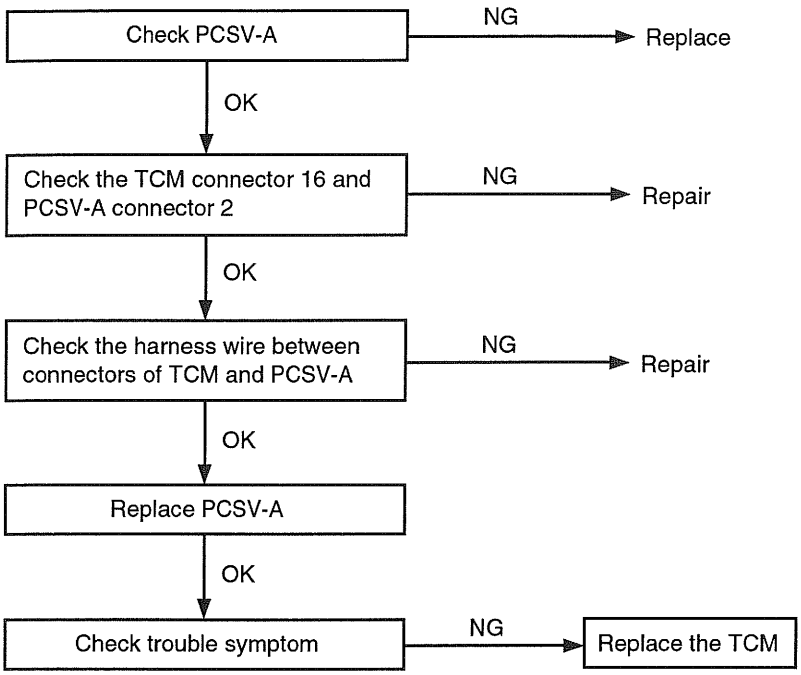

EKNB014B

DIAGNOSTIC ITEM EKKB1150

P0765

DTC NO	DIAGNOSTIC ITEM	
P0765	PRESSURE CONTROL SOLENOID VALVE-B	- Open -, - Short circuit -

DESCRIPTION

- Controls fluid pressure that is acting on the pressure control valve-B (PCV-B) through Pulse Width Modulation signals from the TCM to control pressure during a shift.

TROUBLESHOOTING FLOW

Detection condition	Possible cause	Check item
• IG S/W "ON" or start release • TCM senses an open • Short in the PCSV-B circuit	• Malfunction of PCSV-B • Malfunction of connector • Malfunction of TCM	• Open/short in PCSV-B circuit • Malfunction of PCSV-B
«SYMPTOM» • Shock felt as transaxle is engaged • Shift shock is felt as transaxle shifts through gears • Abrupt increase of engine rpm • When code P0765 is generated for the 4th time, automatic transaxle will hold 3rd gear (D) or 2nd gear (2,L)		

CIRCUIT DIAGRAM

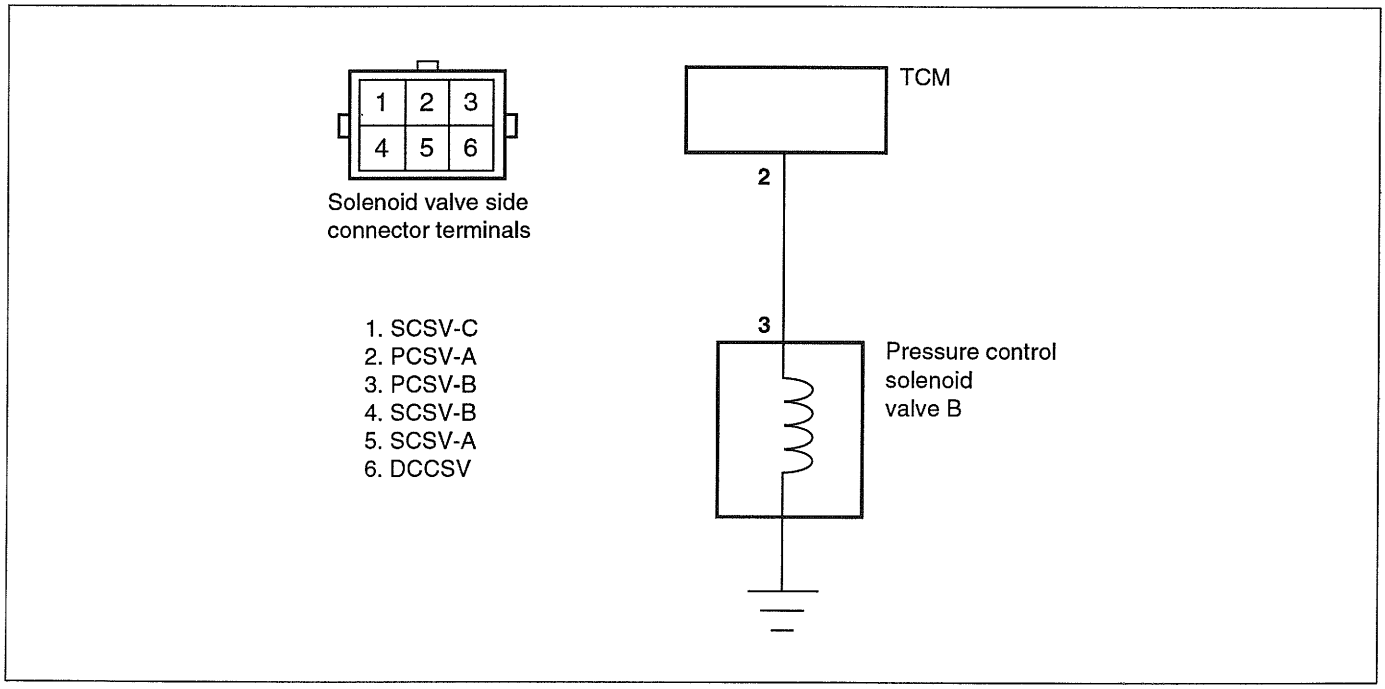

EKNB115A

TROUBLESHOOTING FLOW

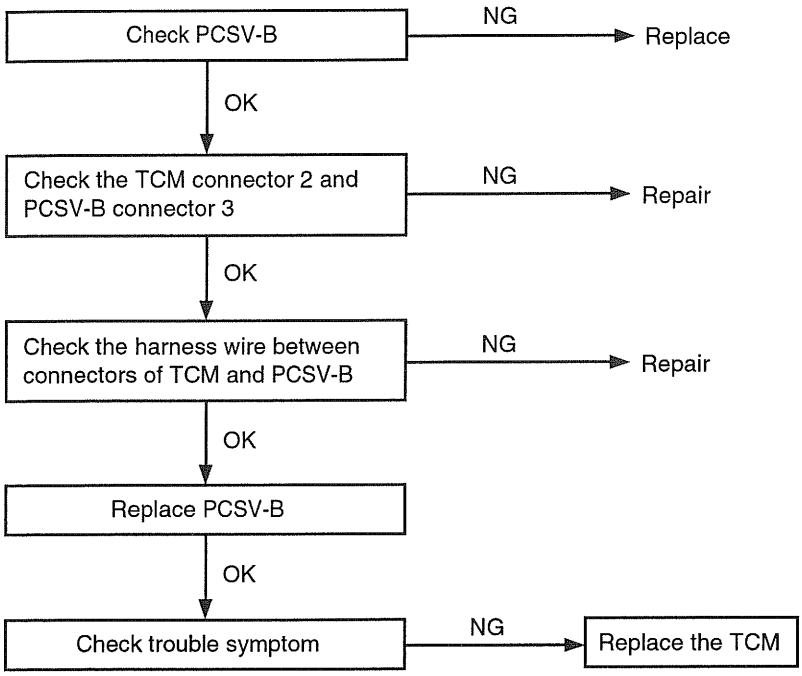

EKNB115B

DIAGNOSTIC ITEM EKNB0160

P0743/P0740

DTC NO	DIAGNOSTIC ITEM	
P0743	DAMPER CLUTCH CONTROL SOLENOID VALVE	- Open, short circuit -
P0740	DAMPER CLUTCH SYSTEM	- Stuck on -

DESCRIPTION

- Controls fluid pressure that is acting on the damper clutch control valve through Pulse Width Modulation signals from the TCM to control the operation of the damper clutch.
- If damper clutch solenoid drive duty continues at 100% for 4 sec. or more, there is an abnormality in the damper clutch control system at DTC P0740 is output.

TROUBLESHOOTING FLOW

Detection condition	Possible cause	Check item
• IG S/W "ON" or start release • TCM senses an open • Short in DCCSV circuit	• Malfunction of DCCSV • Malfunction of connector • Malfunction of TCM	• Open/short in DCCSV circuit • Malfunction of DCCSV
«SYMPTOM» • Excessive fuel consumption • Poor performance		

TROUBLESHOOTING FLOW

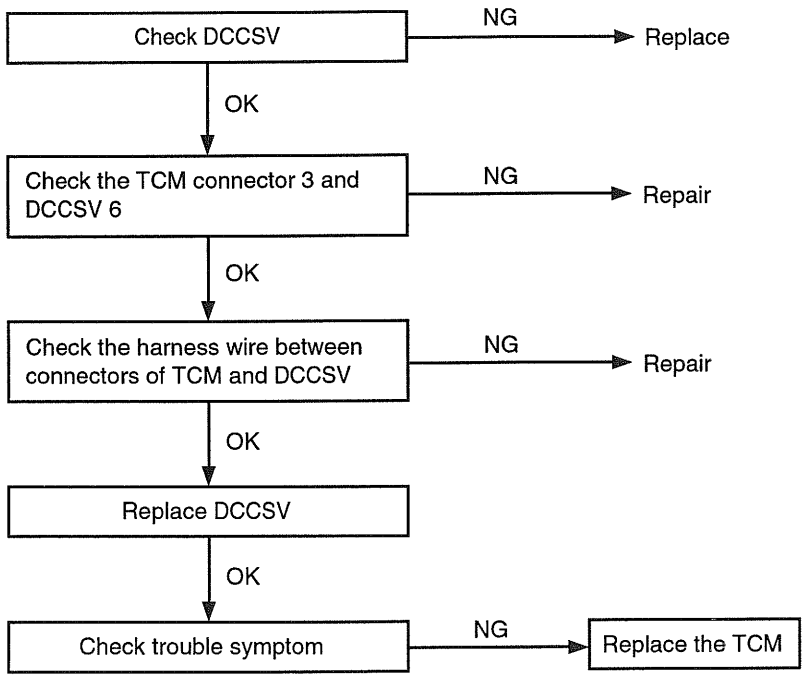

EKNB016A

DIAGNOSTIC ITEM EKNB1170

P0731

DTC NO	DIAGNOSTIC ITEM	
P0731	FIRST GEAR INCORRECT RATIO	- MALFUNCTION -

DESCRIPTION

- If the value resulting from driving the PG-A output (input shaft rotation speed) by the 1st gear ratio does not match the PG-B output (output shaft rotation speed) after 1st gear is engaged, DTC P0731 is output.

TROUBLESHOOTING FLOW

Detection condition	Possible cause	Check item
• Engine speed > 400 rpm • Transfer shaft speed > 900 rpm • Fluid temperature > 60°C • TCM senses a signal that does not fall into the preprogrammed parameters	Malfunction ; • PG-A or PG-B • Transfer driven gear • Rear clutch • One-way clutch	• Malfunction of pulse generator circuit • Rear clutch slippage • One-way clutch slippage
«SYMPTOM» • Automatic transaxle will hold 3rd gear (D) or 2nd gear (2,L) • Code P0717 or P0722 may also be set (pulse generator codes)		

TROUBLESHOOTING FLOW

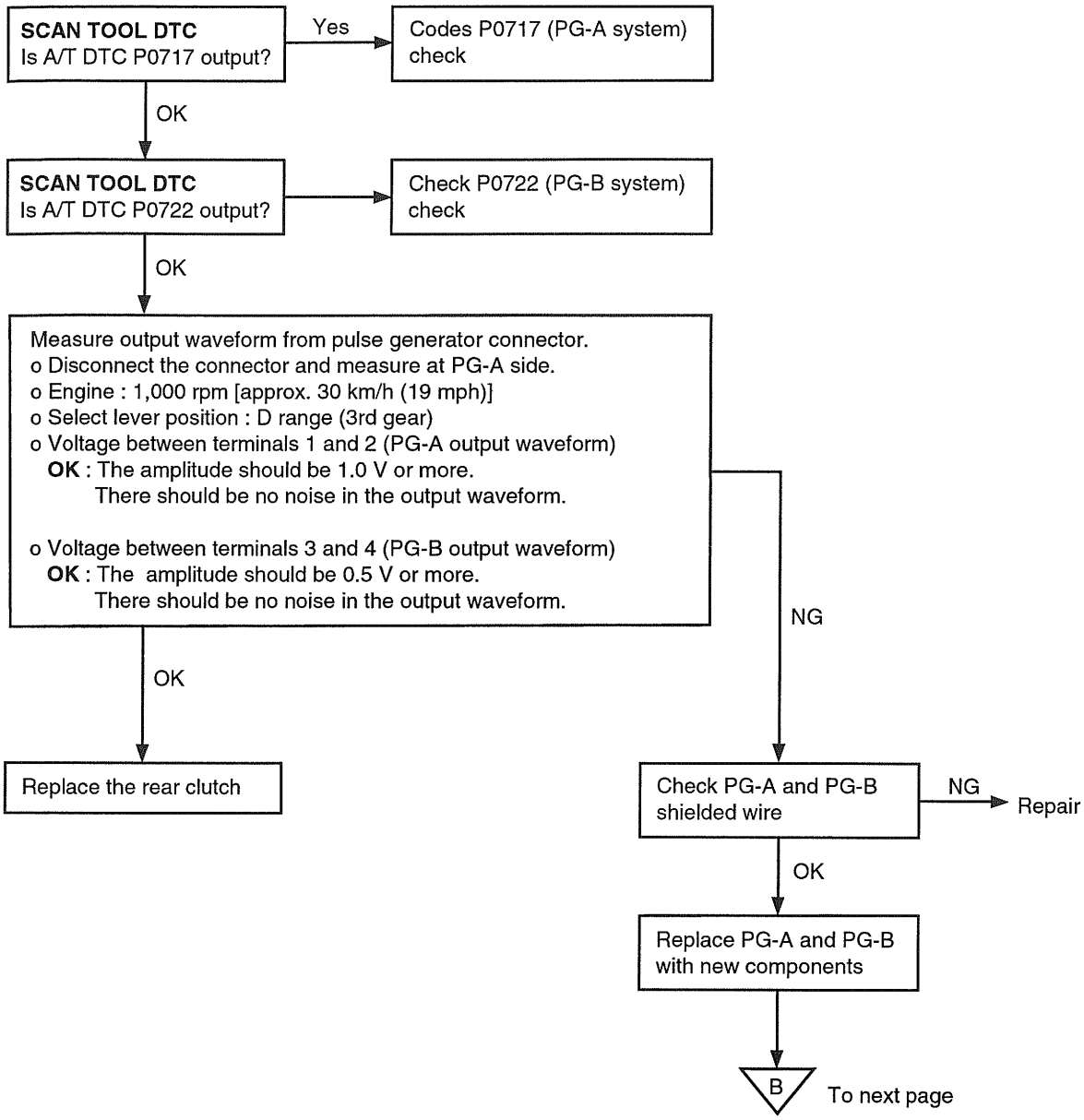

EKDA017A

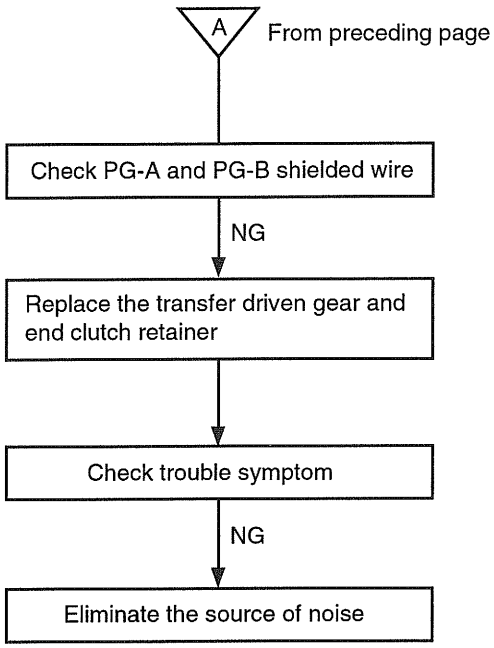
A
From preceding page
Check PG-A and PG-B shielded wire
NG
Replace the transfer driven gear and end clutch retainer
Check trouble symptom
NG
Eliminate the source of noise

EKDA017B

DIAGNOSTIC ITEM EKNB1180

P0732

DTC NO	DIAGNOSTIC ITEM	
P0732	SECOND GEAR SYSTEM	MALFUNCTION

DESCRIPTION

- If the value resulting from driving the PG-A output (input shaft rotation speed) by the 2nd gear ratio does not match the PG-B output (output shaft rotation speed) after 2nd gear is engaged, DTC P0732 is output.

TROUBLESHOOTING GUIDE

Detection condition	Possible cause	Check item
• If the value resulting from driving the PG-A output (input shaft rotation speed) by the 2nd gear ratio does not match the PG-B output (output shaft rotation speed) after 2nd gear is engaged, DTC P0732 is output	Malfunction ; • PG-A or PG-B • Transfer driven gear • Rear clutch • Kickdown brake	• Malfunction of pulse generator circuit • Rear clutch slippage • Kickdown brake slippage
«SYMPTOM» • Automatic transaxle will hold in 3rd gear (D) or 2nd gear (2,L)		

TROUBLESHOOTING FLOW

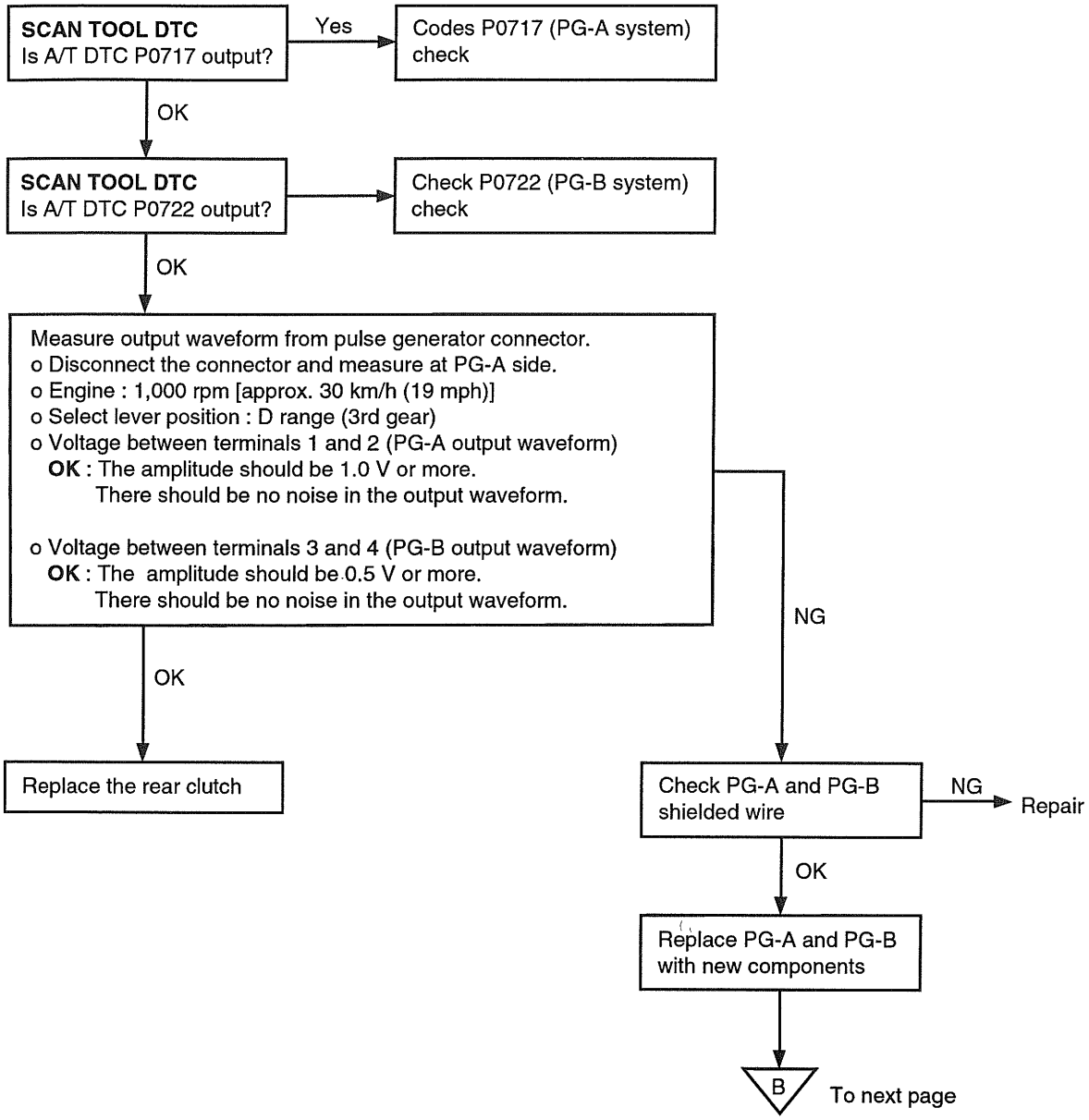

EKDA017A

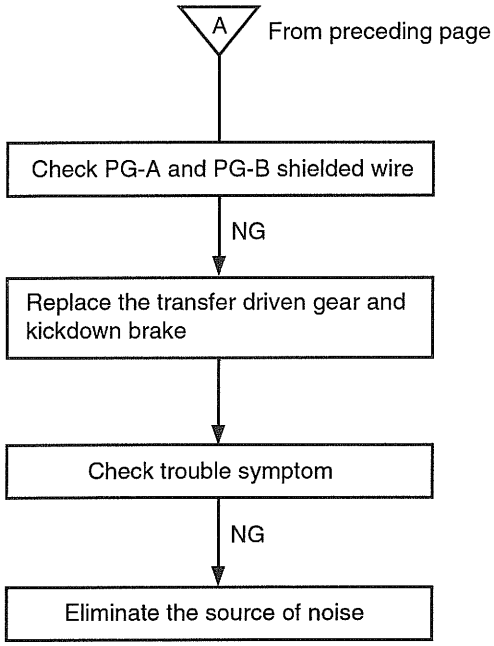
A
From preceding page
Check PG-A and PG-B shielded wire
NG
Replace the transfer driven gear and kickdown brake
Check trouble symptom
NG
Eliminate the source of noise

EKNB118A

DIAGNOSTIC ITEM EKNB1190

P0733

DTC NO	DIAGNOSTIC ITEM	
P0733	THIRD GEAR SYSTEM	- MALFUNCTION -

DESCRIPTION

- If the value resulting from driving the PG-A output (input shaft rotation speed) by the 3rd gear ratio does not match the PG-B output (output shaft rotation speed) after 3rd gear is engaged, DTC P0733 is output.

TROUBLESHOOTING GUIDE

Detection condition	Possible cause	Check item
• Engine speed > 400 rpm • Transfer shaft speed > 900 rpm • Fluid temperature > 60°C • TCM senses a signal that does not fall into the preprogrammed parameters	Malfunction : • PG-A or PG-B • Transfer driven gear • End clutch retainer • Front clutch	• Malfunction of pulse generator circuit • Rear clutch slippage • Front clutch slippage
«SYMPTOM» • Automatic transaxle will hold 3rd gear (D) or 2nd gear (2,L) when code P0731, P0732, P0733,P0734 is output • Code P0717 or P0722 may also be set (pulse generator codes)		

TROUBLESHOOTING FLOW

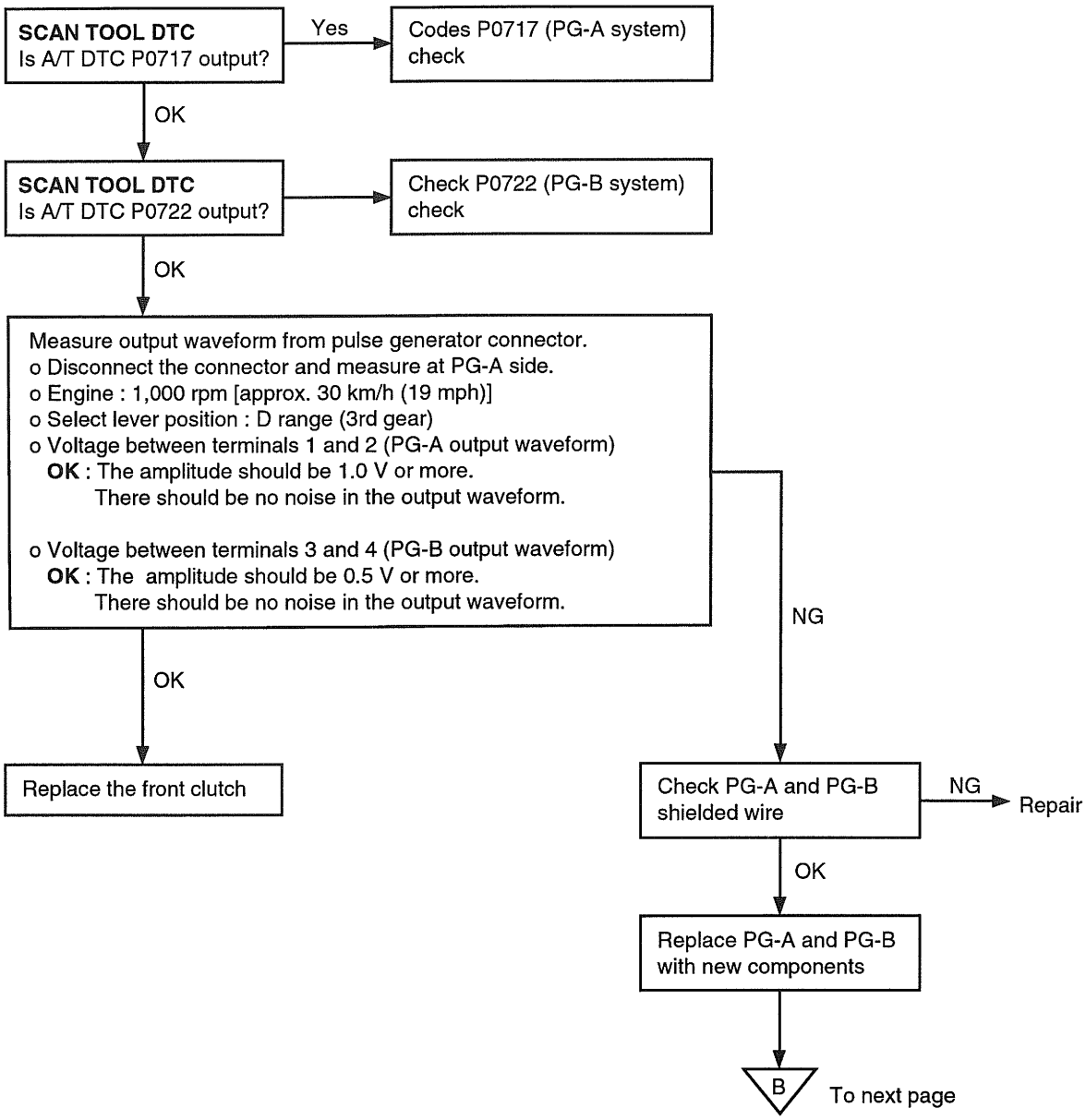

EKNB119A

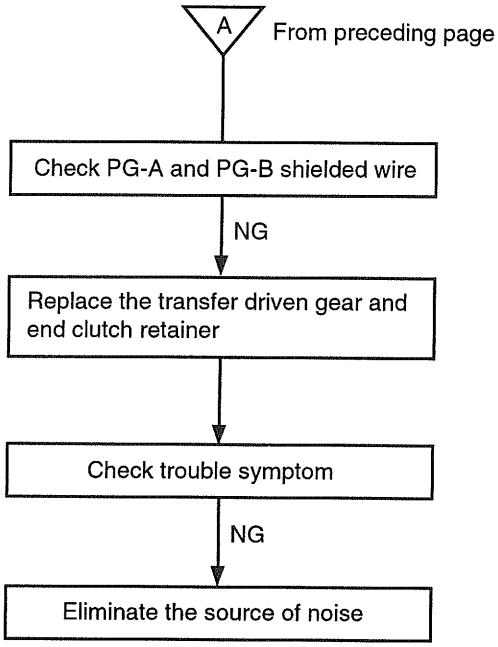
A
From preceding page
Check PG-A and PG-B shielded wire
NG
Replace the transfer driven gear and end clutch retainer
Check trouble symptom
NG
Eliminate the source of noise

EKDA017B

DIAGNOSTIC ITEM EKNB1200

P0734

DTC NO	DIAGNOSTIC ITEM	
P0734	FOURTH GEAR SYSTEM	- MALFUNCTION -

DESCRIPTION

- If the value resulting from driving the PG-A output (input shaft rotation speed) by the 4th gear ratio does not match the PG-B output (output shaft rotation speed) after 4th gear is engaged, DTC P0734 is output.

TROUBLESHOOTING GUIDE

Detection condition	Possible cause	Check item
• Engine speed > 400 rpm • Transfer shaft speed > 900 rpm • Fluid temperture > 60°C • TCM senses a signal that does not fall into the preprogrammed parameters.	Malfunction : • PG-B • Transfer driven gear • End clutch retainer • Kickdown brake • End clutch	• Malfunction of pulse generator circuit • Kickdown brake slippage
«SYMPTOM» • Automatic transaxle will hold in 3rd gear (D) or 2nd gear (2,L) when code P0731, P0732, P0733, P0734 is output. • Code P0717 or P0722 may also be set (pulse generator codes).		

TROUBLESHOOTING FLOW

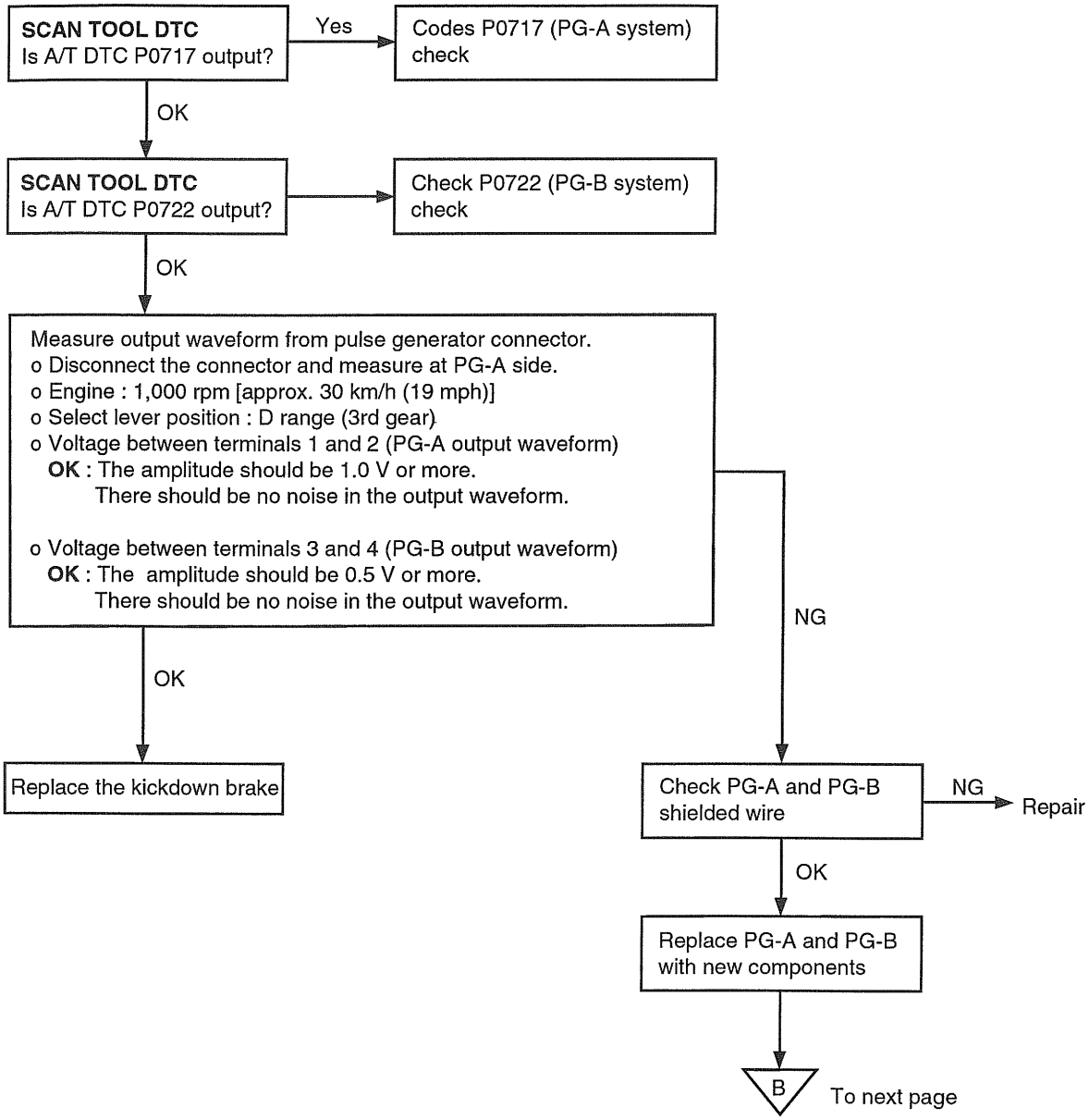

EKNB121A

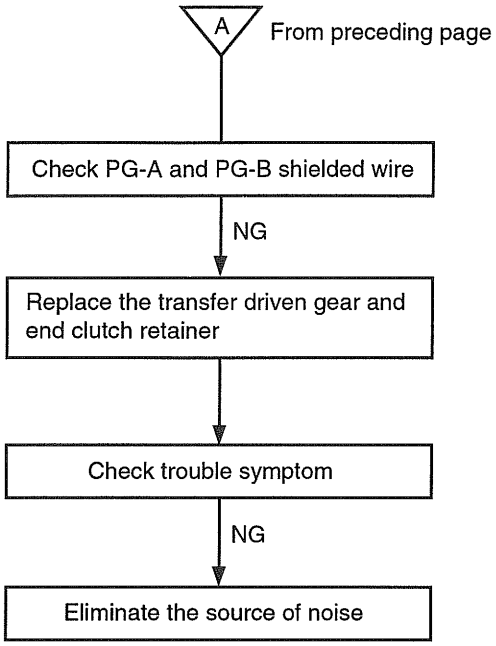
A
From preceding page
Check PG-A and PG-B shielded wire
NG
Replace the transfer driven gear and end clutch retainer
Check trouble symptom
NG
Eliminate the source of noise

EKDA017B

INSPECTION CHART FOR TROUBLE SYMPTOMS EKNB1210

Trouble symptom		Inspection procedure No.	Reference page
Communication with scan tool is not possible		1	
Driving impossible	Starting impossible (will not crank)	2	
	Does not move forward	3	
	Does not back-up	4	
	Does not move (forward or reverse)	5	
Malfunction when starting	Engine stalling during shifting	6	
	Shocks when shifting from N to D and long lag time	7	
	Shocks when shifting from N to R and long lag time	8	
	Shocks when shifting from N to D,N to R and long lag	9	
Malfunction when shifting	Shocks when shifting from N to R and long lag time	10	
Early, late shift points	Shocks when shifting from N to D, N to R and long lag	11	
	Shocks and flare shift	12	
Does not shift	All points	13	
Malfunction while driving	Some points (poor acceleration)	14	
	Vibration	15	
	Poor acceleration	16	

INSPECTION PROCEDURE 1

Communication with scan tool is not possible	Possible cause
If communiction with the scan tool is not possible, the cause may be a defective diagnosis line or TCM is not functioning	• Malfunction of diagnosis line • Malfunction of TCM power supply circuit • Malfunction of TCM ground circuit • Malfunction of TCM

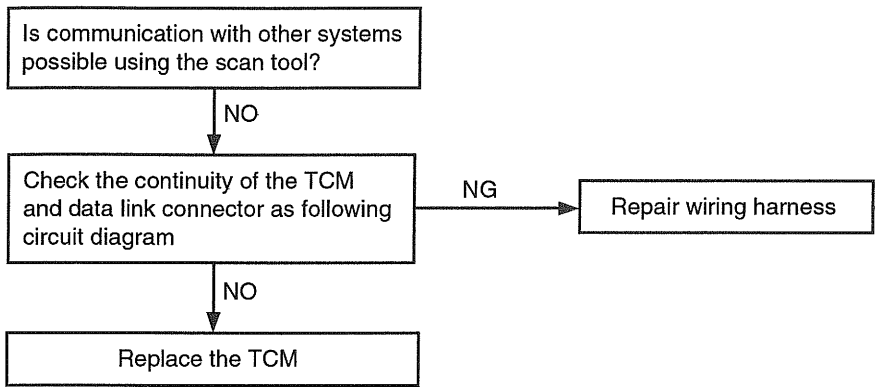

EKDA021A

CIRCUIT DIAGRAM

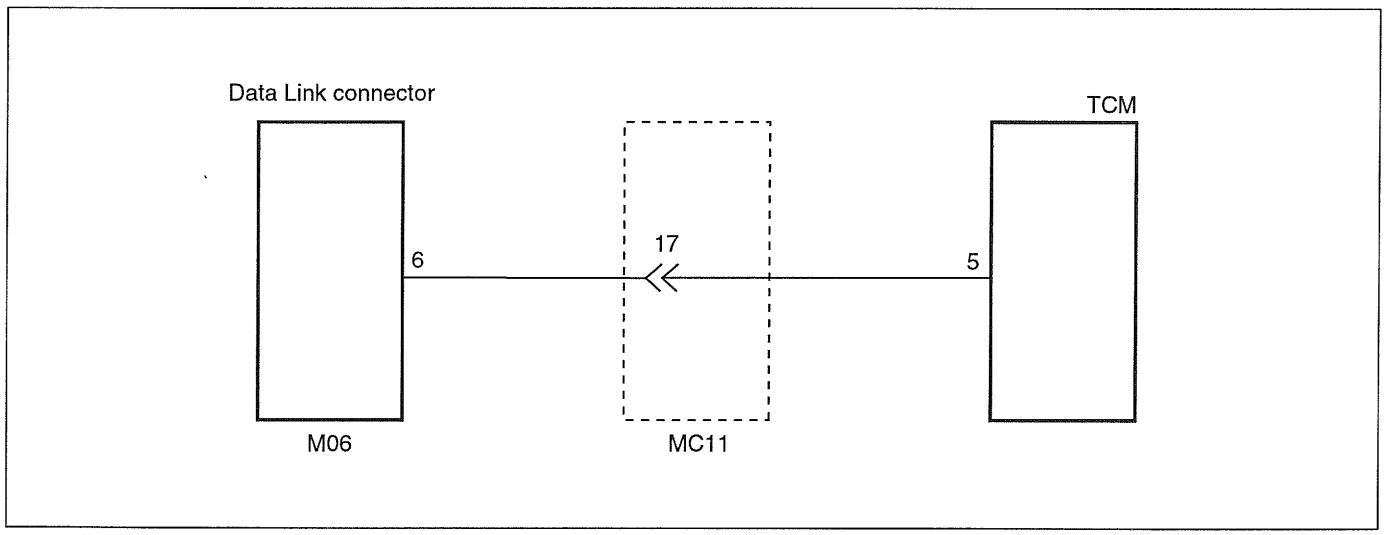

EKNB121B

INSPECTION PROCEDURE 2

Starting Impossible (will not crank)	Possible cause
Starting is not possible when the selector lever is in P or N range. In such cases, the cause may be a defective engine system, torque converter or oil pump	• Malfunction of the engine system • Malfunction of the oil pump • Malfunction of the torque converter

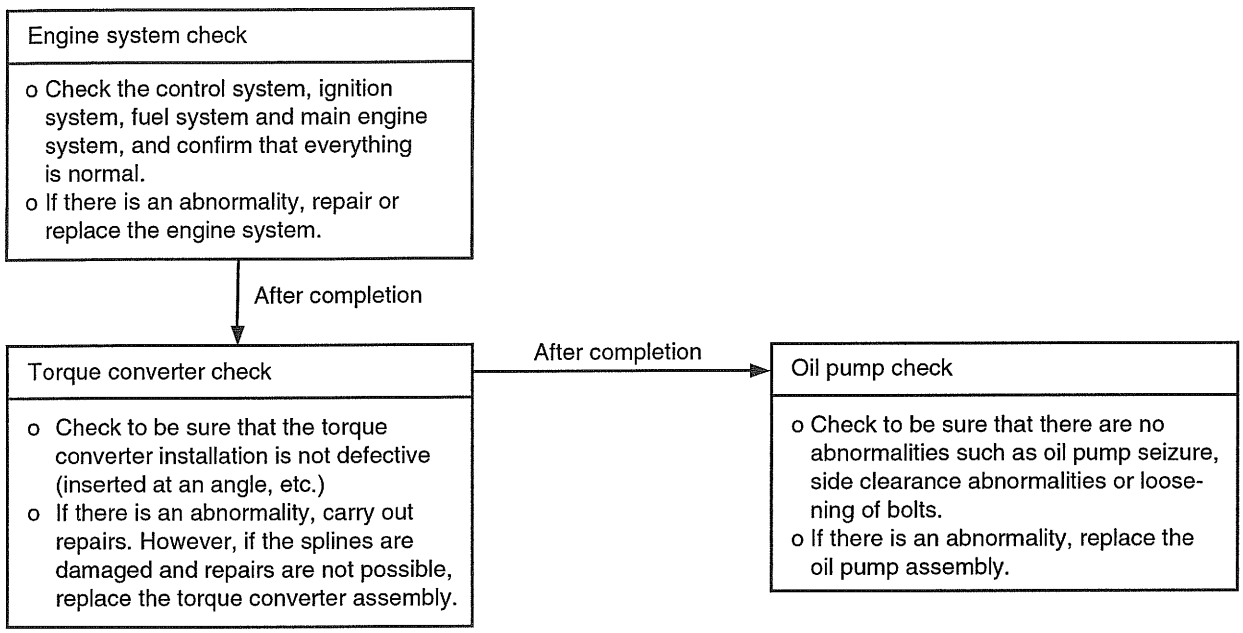

EKDA021C

INSPECTION PROCEDURE 3

Does not move forward	Possible cause
When the engine is idling, the vehicle does not move forward even if the selector lever is shifted from N to D, 2 or L range. In such cases, the cause may be abnormal line pressure, or a defective rear clutch or one-way clutch.	• Abnormal line pressure • Malfunction of rear clutch • Malfunction of one-way clutch • Malfunction of valve body

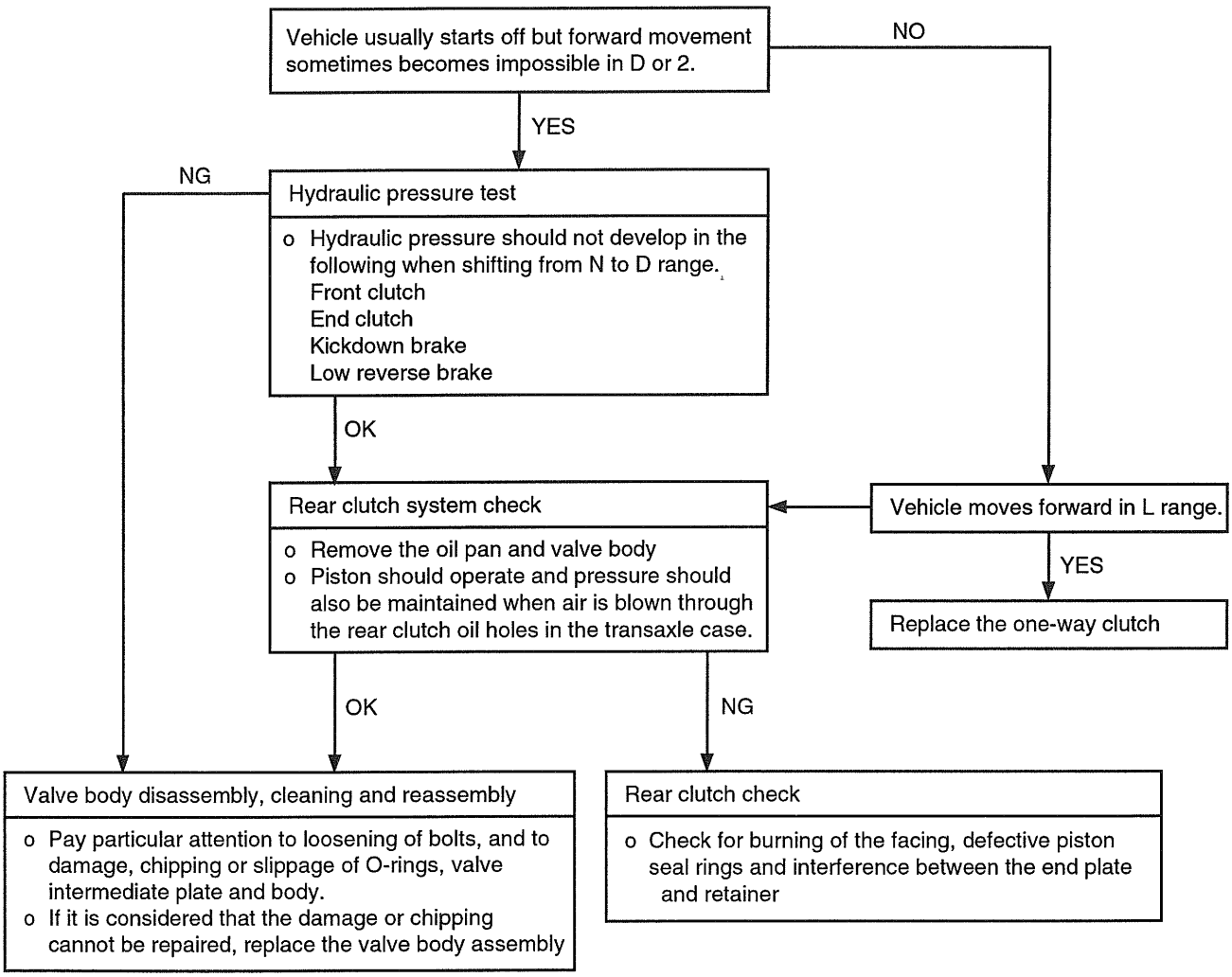

EKDA021D

INSPECTION PROCEDURE 4

Does not move back-up	Possible cause
When the engine is idling, the vehicle does not back-up even if the selector lever is shifted from N to R range. In such cases, the cause may be abnormal pressure in the low reverse brake or front clutch, or a defective low reverse brake or front clutch.	• Abnormal low reverse brake pressure • Abnormal front clutch pressure • Malfunction of front clutch • Malfunction of low reverse brake • Malfunction of valve body

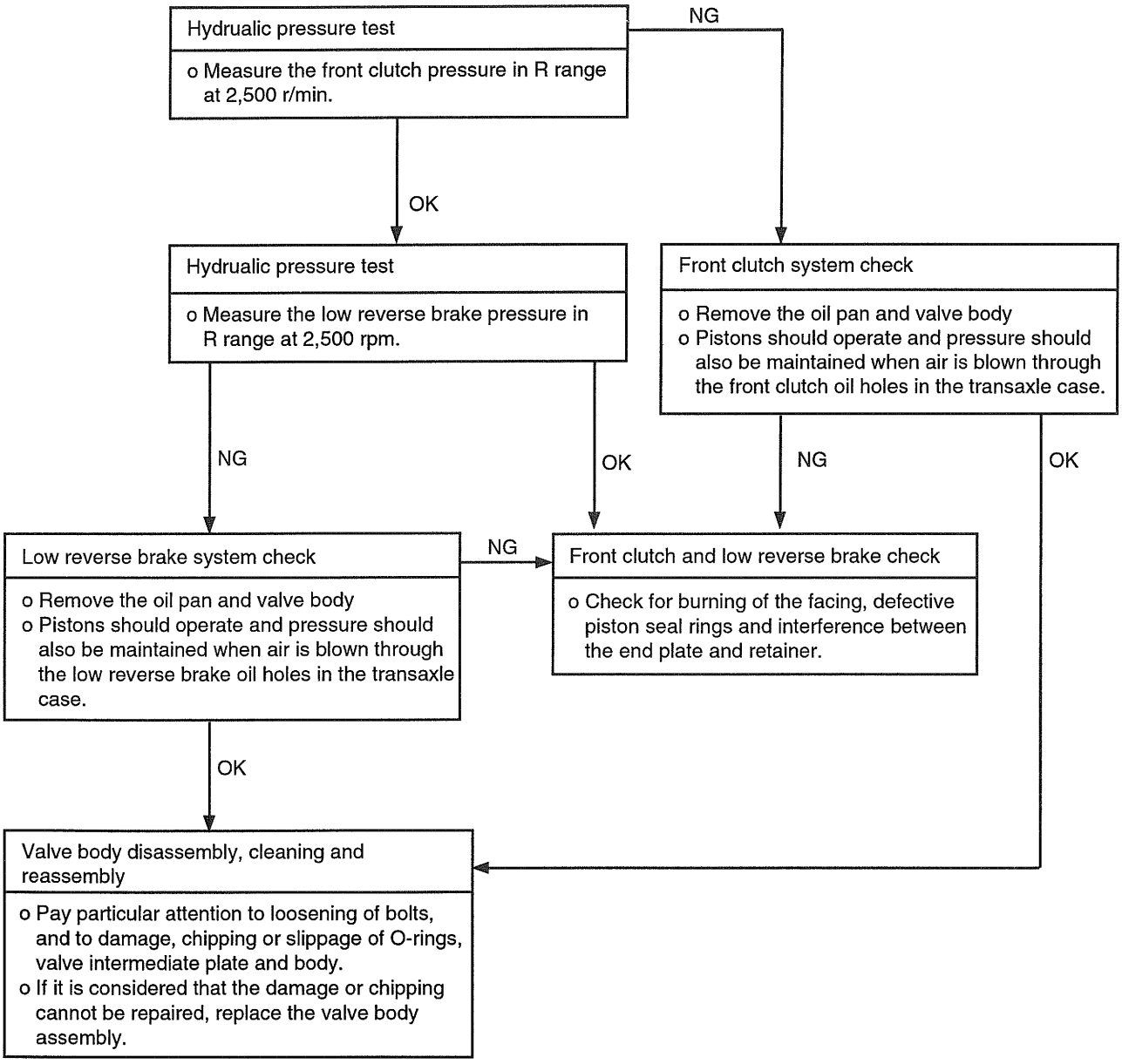

EKFA121E

INSPECTION PROCEDURE 5

Does not move (forward or reverse)	Possible cause
When the engine is idling, the vehicle does not move forward or reverse even if the selector lever is shifted from N to D, 2, L or R range. In such cases, the cause may be abnormal reducing pressure, or a defective oil pump or power train.	• Abnormal reducing pressure • Malfunction of power train • Malfunctin of oil pump • Malfunction of valve body

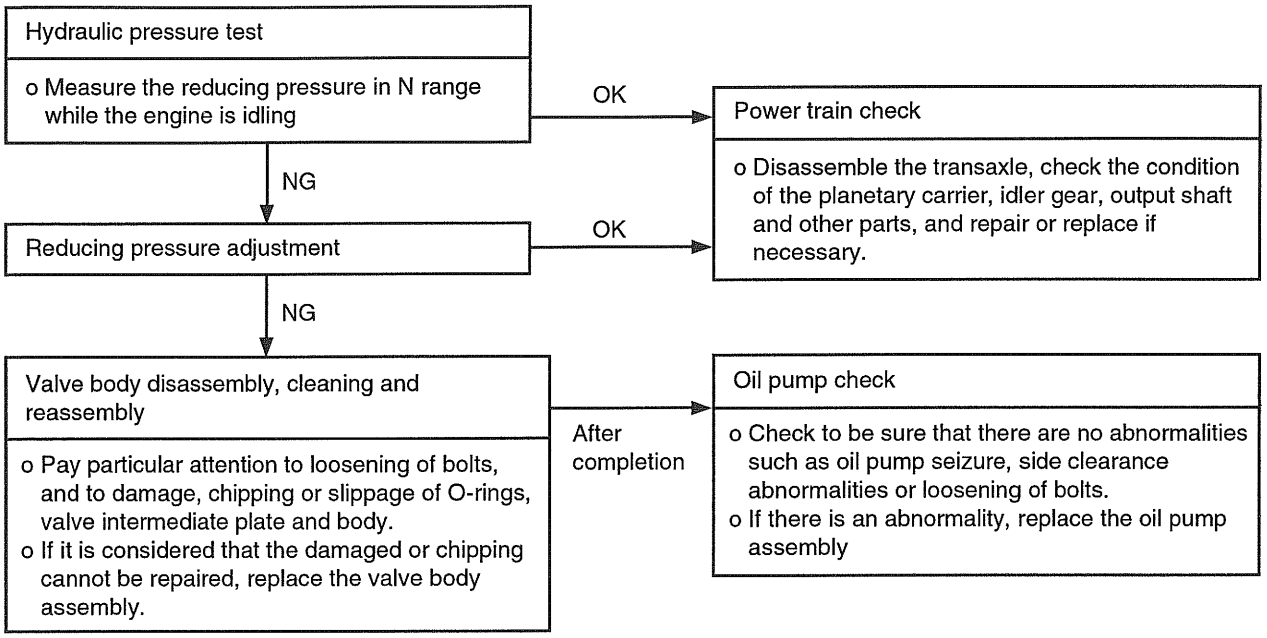

EKFA121F

INSPECTION PROCEDURE 6

Engine stalling during shifting	Possible cause
When the engine is idling, the engine stalls when the selector lever is shifted from N to D, 2, L or R range. In such cases, the cause may be a defective engine system or damper clutch control solenoid valve	• Malfunction of engine system • Malfunction of torque converter clutch solenoid • Malfunction of valve body • Malfunction of torque converter

Engine system check

o Check the control system, ignition system, fuel system and main engine system, and confirm that everything is normal.
o If there is an abnormality, repair or replace the engine system.

After completion

Solenoid valve connector check

o Check to be sure that there is no water in the connector.
o Check to be sure that none of the terminals are shorted to each other.

After completion

Torque converter clutch solenoid check

o Check to be sure that the valve is not sticking due to foreign materials packed inside solenoid.
o If there is an abnormality, replace the solenoid valve assembly.

After completion

Transaxle cooling system check

o Check for plugged cooler lines.
o Check for plugged oil cooler.

After completion

Valve body disassembly, cleaning and reassembly

o Pay particular attention to loosening of bolts, and to damage, chipping or slippage of O-rings, valve intermediate plate and body.
o If it is considered that the damage or chipping cannot be repaired, replace the valve body assembly.

After completion

Torque converter check

o Check to be sure that there is no sticking due to separation from the damper clutch.
o If there is an abnormality, replace the torque converter assembly.

EKDA021G

INSPECTION PROCEDURE 7

Shocks when shifting from N to D and long lag time	Possible cause
When the engine is idling, abnormal shocks or a lag time of 2 seconds or more occur when the selector lever is shifted from N to D range. In such case, the cause may be a defective rear clutch or valve body	• Malfunction of rear clutch • Malfunction of valve body • Malfunction of closed throttle position switch

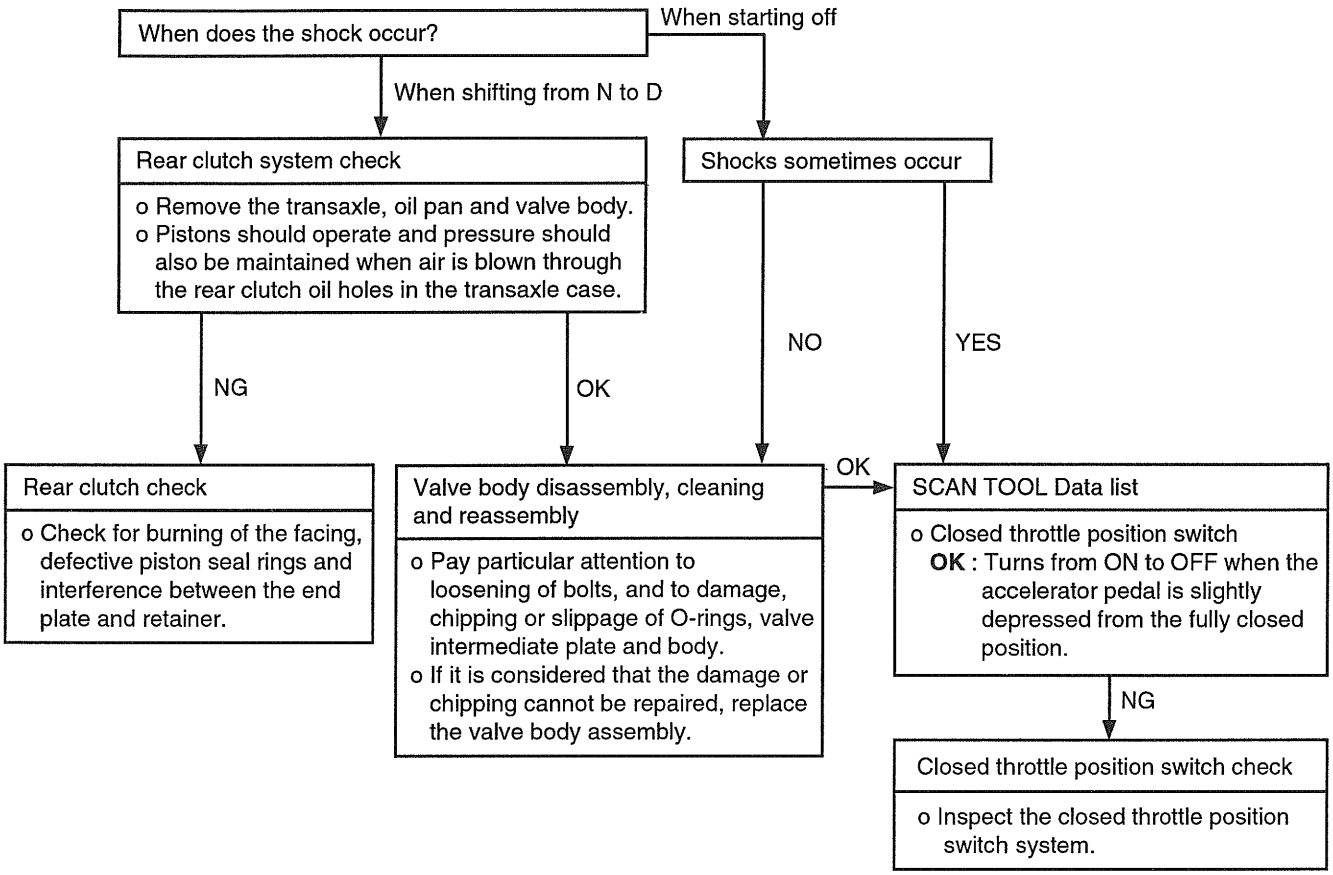

EKNB121C

INSPECTION PROCEDURE 8

Shocks when shifting from N to R and long lag time	Possible cause
When the engine is idling, abnormal shocks or a lag time of 2 seconds or more occurs when the selector lever is shifted from N to R range. In such cases, the cause may be abnormal low reverse brake or front clutch pressure, or a defective low reverse brake or front clutch.	• Abnormal front clutch pressure • Abnormal low reverse brake pressure • Malfunction of front clutch • Malfunction of low reverse brake • Malfuntion of valve body

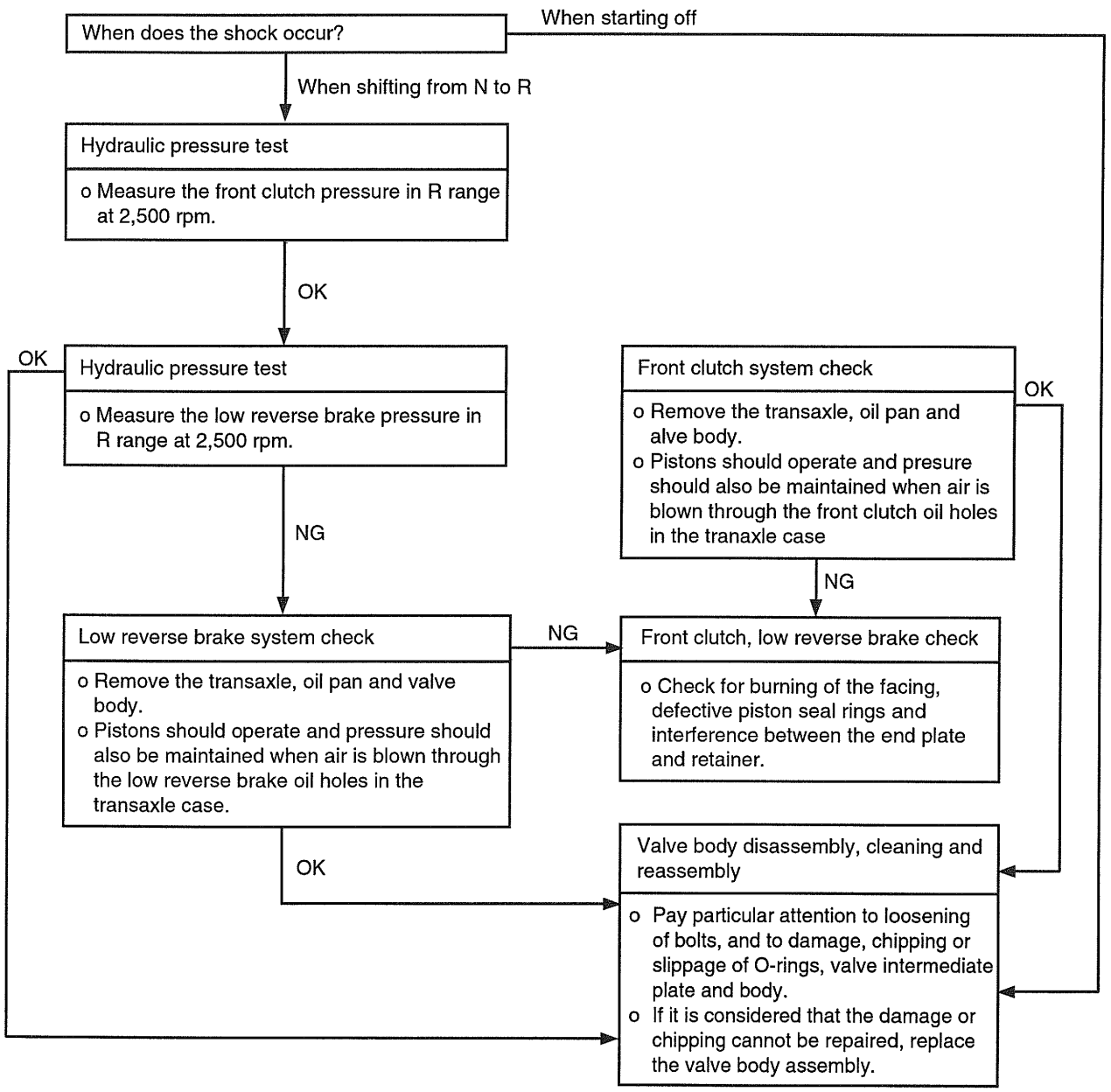

EKFA121I

INSPECTION PROCEDURE 9

Shocks when shifting from N to D,N to R and long lag time	Possible cause
When the engine is idling, abnormal shocks or a lag time of 2 seconds or more occur when the selector lever is shifted from N to D range and s from N to R range. In such cases, the cause may be abnormal reducing pressure or a defective oil pump.	• Abnormal reducing pressure • Malfunction of oil pump • Malfunction of valve body

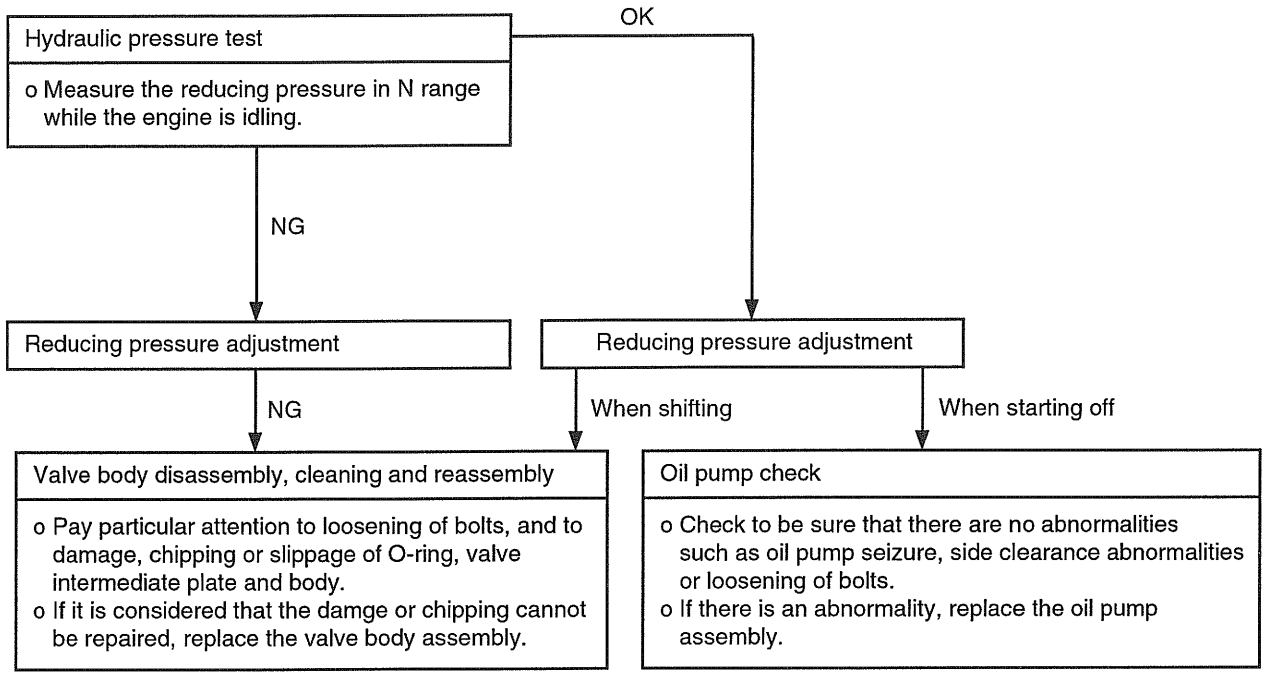

EKFA121J

INSPECTION PROCEDURE 10

Shocks and flare shifts	Probable cause
Shocks occur when driving due to upshifting or downshifting. In addition, the engine speed during shifting increases abnormally in comparison to normal shifting. In such cases, the cause is probably abnormal reducing pressure or a defective kickdown servo switch.	• Malfunction of kickdown servo switch • Abnormal reducing pressure Malfunction of valve body • Malfunction of closed throttle position switch • Malfunction of pressure control solenoid valve • Malfunction of clutches and brakes

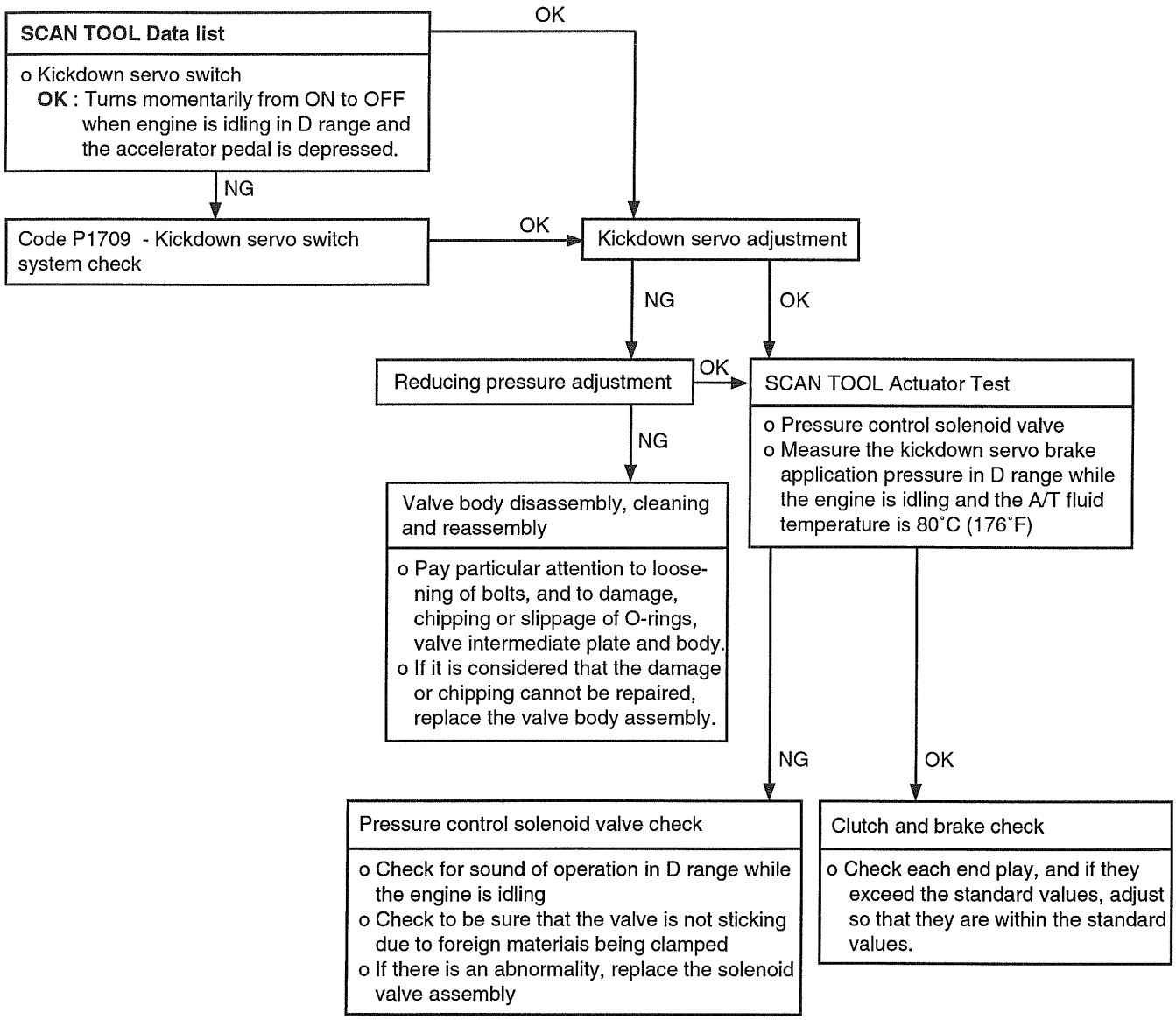

EKKB121B

INSPECTION PROCEDURE 11

All points (Early, late shifting points)	Possible cause
All shift points occurs early, late while driving. In such cases, the cause may be a defective pulse generator B (PG-B) or shift control solenoid valve A or B (SCSV-A, B).	• Malfunction of pulse generator B (PG-B) • Malfunction of shift control solenoid valve A or B (SCSV-A, B) • Malfunction of TCM • Abnormal reducing pressure or kickdown servo brake application pressure • Malfunction of clutches and brake

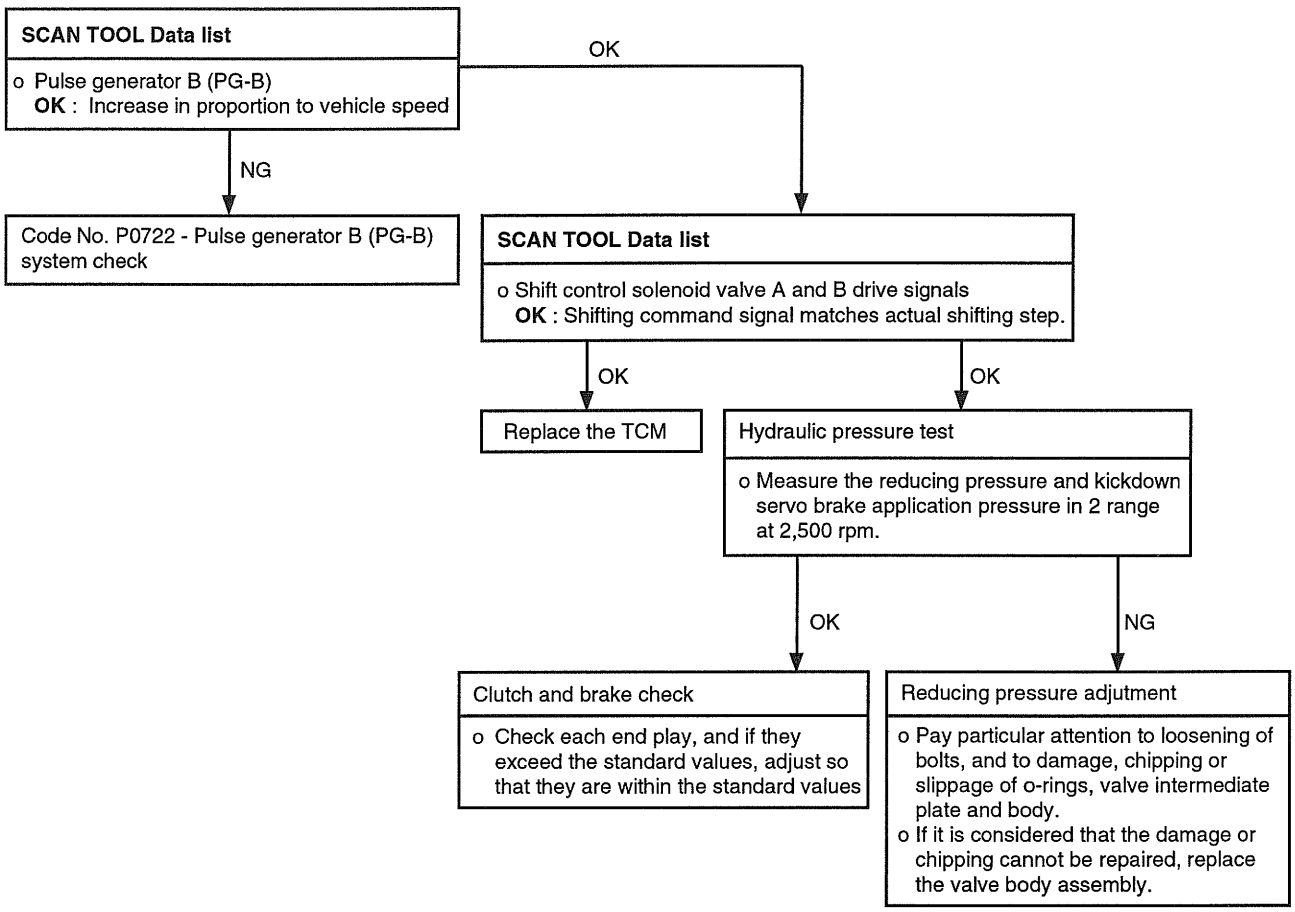

EKFA121L

INSPECTION PROCEDURE 12

Some points (Early, late shifting points)	Possible cause
Some shift points occurs early, late while driving. In such cases, the cause may be a defective valve body, or it is phenomenon related to control and is not an abnormality.	• Malfunction of valve body

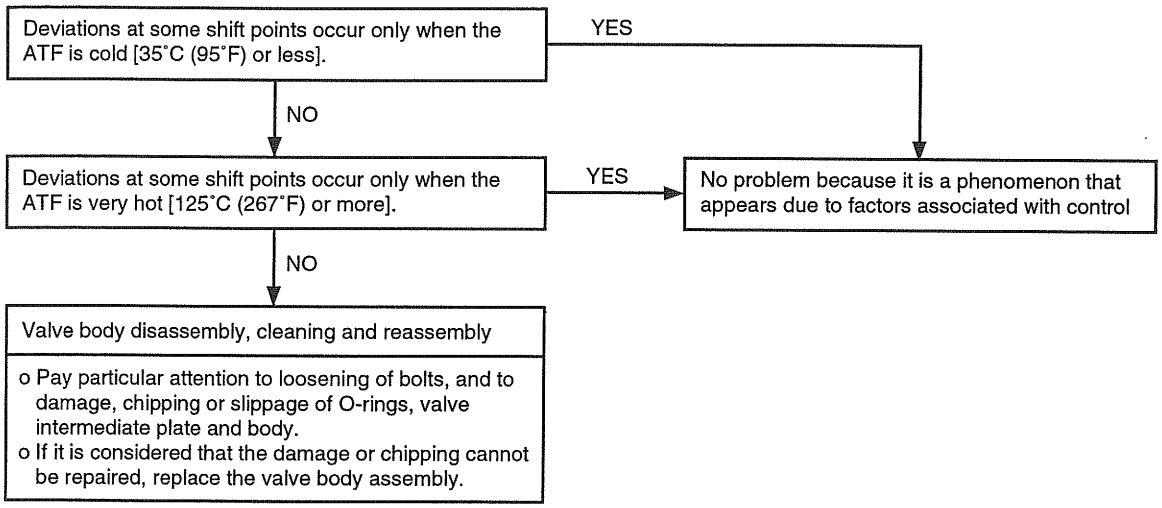

EKDA021M

INSPECTION PROCEDURE 13

Does not shift	Possible cause
Shifting does not occur while driving, and no fail-safe codes are output. In such cases, the cause may be a defective overdrive switch or parking switch.	• Malfunction of overdrive switch • Malfunction of parking position switch • Malfunction of power supply circuit • Malfunction of TCM

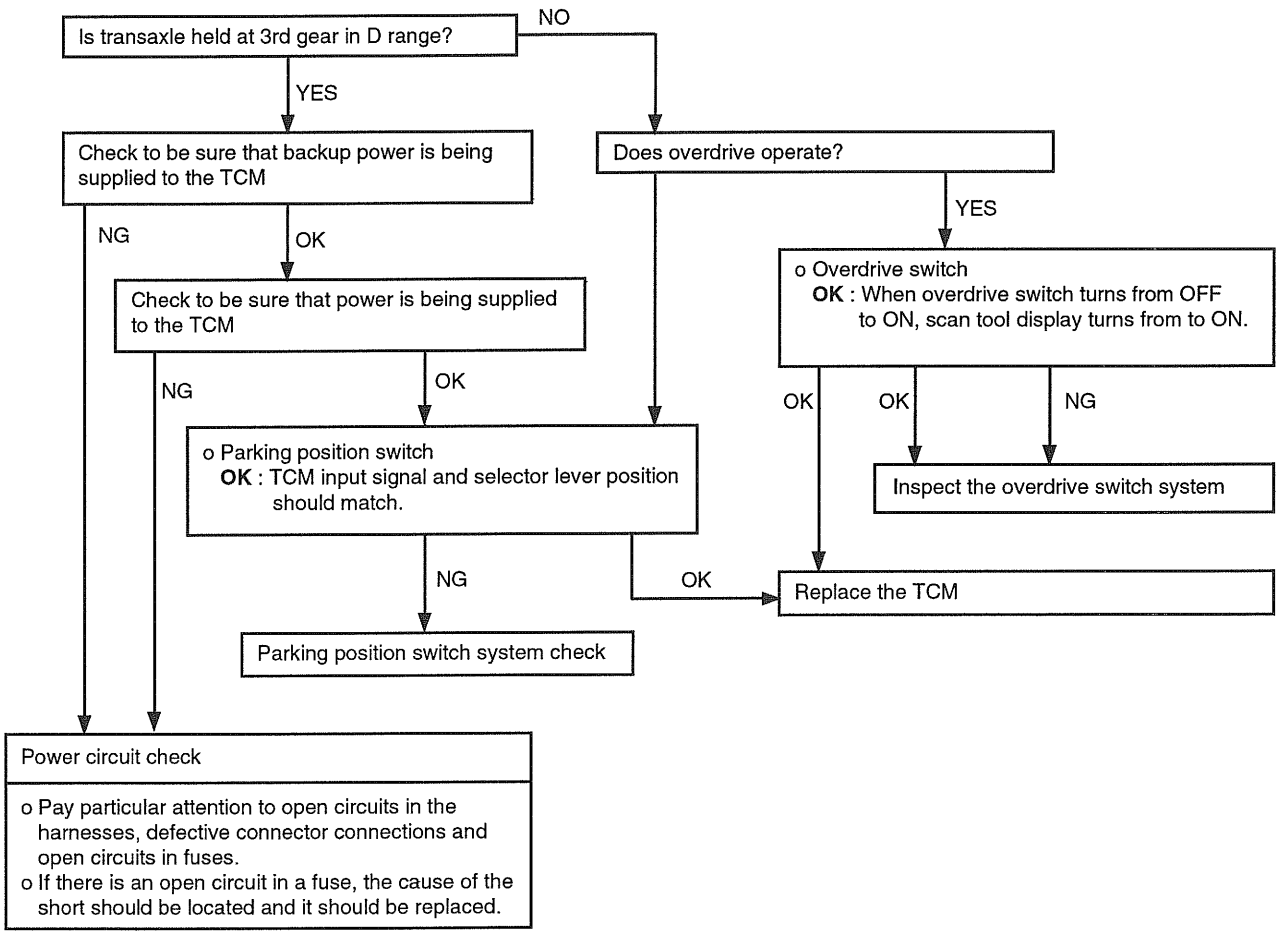

EKNB121D

INSPECTION PROCEDURE 14

Poor acceleration	Possible cause
While driving, acceleration is poor even if downshifting is performed. In such cases, the cause may be a defective clutch or brake, or a defective engine system.	• Malfunction of clutch and brakes • Malfunction of engine system

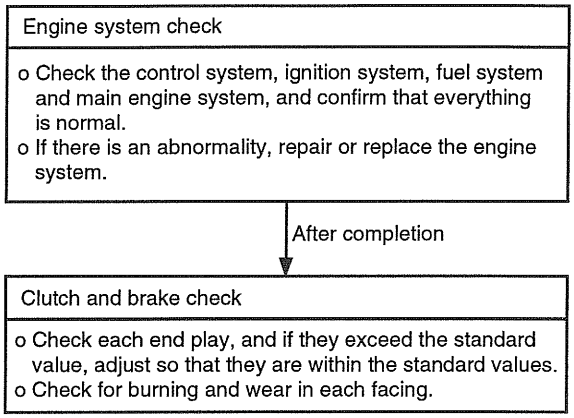

EKDA021O

INSPECTION PROCEDURE 15

Vibration	Possible cause
Vibration occurs when driving at constant speed or when accelerating in top range. In such case, the cause may be abnormal torque converter clutch pressure or a defective torque converter.	• Abnormal torque converter clutch pressure • Malfunction of engine system • Malfunction of torque converter • Malfunction of valve body

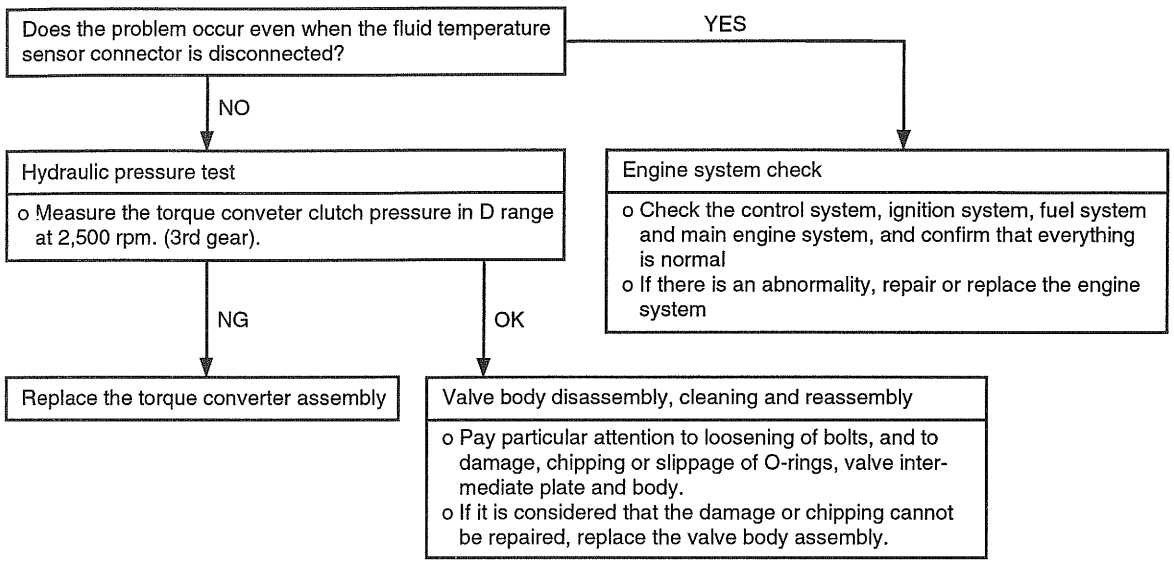

EKFA121P

INSPECTION PROCEDURE 16

Overdrive switch system	Possible cause
In cases such as the above, the cause may be a defective overdrive switch circuit or defective ignition switch circuit.	• Malfunction of overdrive switch • Malfunction of connector • Malfunction of ignition switch • Malfunction of TCM

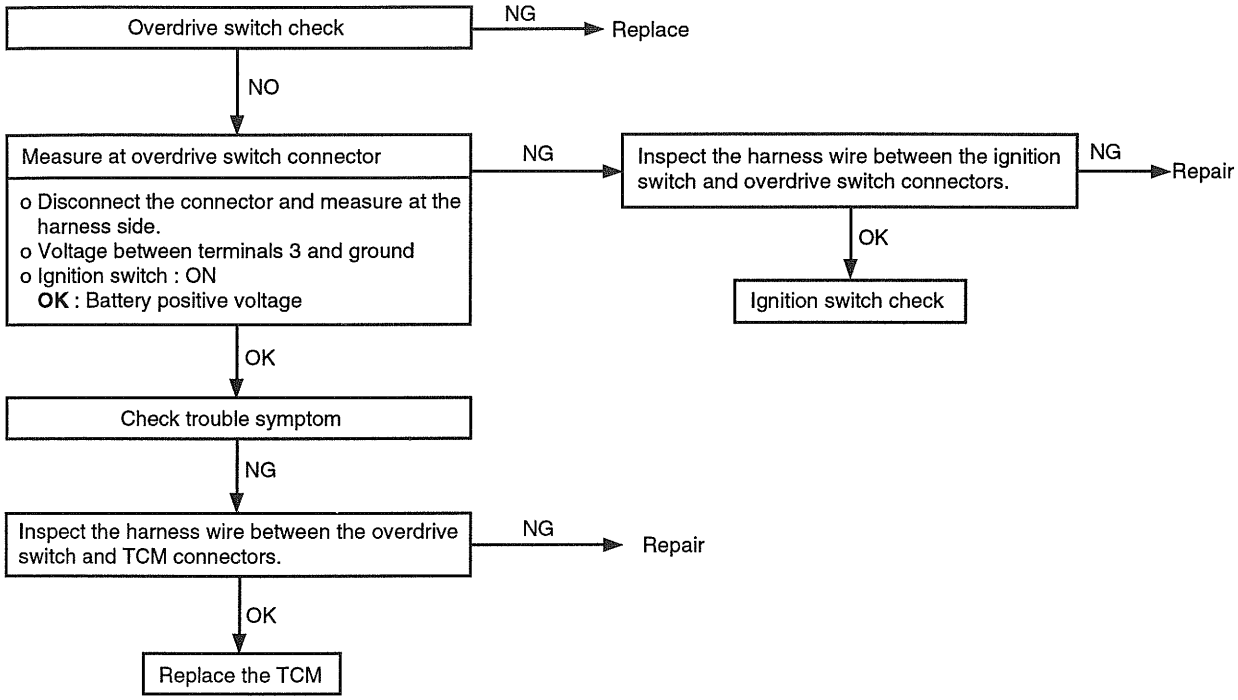

EKDA021Q

OBTAINING DIAGNOSTIC TROUBLE CODES EKNB0220

[USING HI-SCAN PRO]

1. Turn the ignition switch OFF.
2. Connect the Hi-Scan Pro to the data link connector on the coin box.
3. Turn the ignition switch ON.
4. Use the Hi-Scan Pro to check the diagnostic trouble code.
5. Repair the faulty part from the diagnosis chart.
6. Erase the diagnostic trouble code.
7. Disconnect the Hi-Scan Pro.

MALFUNCTION INDICATOR LIGHT (MIL)

An on-board diagnostic light comes on to notify the driver that there is problems in the vehicle. However, when an irregular state returns to normal, the malfunction indicator light will go out automatically after 3 driving cycles that have no same fault. Immediately after the ignition switch is turned on, the malfunction indicator light operates normally. (See FL-section)

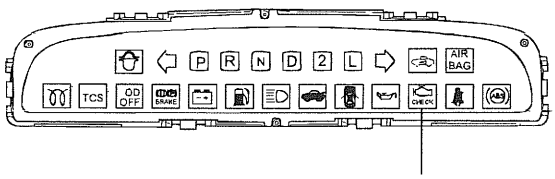

Malfunction indicator lamp

EKNB022A

THE FOLLOWING ITEMS WILL BE INDICATED BY THE MIL.

- Fluid temperature sensor
- Pulse generator A (PG-A)
- Pulse generator B (PG-B)
- Shift control solenoid valve A (SCSV-A)
- Shift control solenoid valve B (SCSV-B)
- Shift control solenoid valve C (SCSV-C)
- Pressure control solenoid valve (PCSV-A)
- Pressure control solenoid valve B (PCSV-B)
- Damper clutch solenoid valve (DCCSV)
- Shift stage synchronize
- Ignition pulse
- Throttle position sensor
- Transaxle range switch
- Engine torque down permission line

SERVICE DATA (WHEN A HI-SCAN PRO IS USED) EKNB0230

Diagnosis items	Checking procedures		Checking items (Remedy)
	Check conditions	Normal value	
Throttle position sensor (TPS)	Accelerator pedal fully released	2-18%	• TPS or circuit harness if no change occurs • TPS or accelerator pedal cable if gradual change is not noted
	Press accelerator pedal slowly	Varies with accelerator opening	
	Accelerator pedal pressed to floor	80-100%	
Fluid temperature sensor	Cold engine (before starting)	Equivalent to outside air temperature	• Fluid temperature sensor or circuit harness
	While warming up engine	Gradual increase	
	After warming up engine	70-110°C	
Kickdown servo switch	L range : Idling	ON	• Kickdown servo misadjusted • Kickdown servo switch or circuit harness • Kickdown servo
	D range : First or third gear	ON	
	D range : Second or fourth gear	OFF	
Engine speed	P range : Idling Accelerator pedal : Fully closed	600-900 rpm	• Ignition system • Ignition signal pick-up circuit harness
	P range : Idling Accelerator pedal : depressed	Gradually rised from the value	
Air conditioning relay signals	P range : Idle, air conditioning ON	ON	• Air conditioning power relay circuit harness
	P range : Idle, air conditioning OFF	OFF	
Shift position	1st speed : 10km/h	First	• TCM • Transaxle range switch system • TPS system
	2nd speed : 30km/h	Second	
	3rd speed : 50km/h	Third	
	4th speed : 80km/h	Fourth	
Pulse generator A	D range (OD OFF) : driving at 50 km/h (31 mph) in third gear	1,500-2,000 rpm	• Pulse generator A or circuit harness • Pulse generator A shielded wire • Incoming noise from outside
	D range (OD ON) : driving at 80 km/h (50 mph) in fourth gear	1,700-2,000 rpm	
Pulse generator B	D range (OD OFF) : driving at 50 km/h (31 mph) in third gear	1,500-2,000 rpm	• Pulse generator B or circuit harness • Pulse generator B shielded wire • Incoming noise from outside
	D range (OD ON) : driving at 80 km/h (50 mph) in fourth gear	1,500-2,000 rpm	

Diagnosis items	Checking procedures		Checking items (Remedy)
	Check conditions	Normal value	
Overdrive switch	• Ignition switch : ON • Engine : stopped • Overdrive switch is turned ON	OD-ON	• Overdrive switch or circuit harness
	• Ignition switch : ON • Engine : stopped • Overdrive switch is turned OFF	OD-OFF	
Transaxle range switch	Shift selector lever to P range	P	• Transaxle range switch misadjusted • Transaxle range switch or circuit harness • Manual control cable • If selector lever is inoperative, check shift lock mechanism
	Shift selector lever to R range	R	
	Shift selector lever to N range	N	
	Shift selector lever to D range	D	
	Shift selector lever to 2 range	2	
	Shift selector lever to L range	L	
Vehicle speed sensor	Keep vehicle stopped	0 km/h	• Vehicle speed sensor if high speed signal is delivered while vehicle is stopping • In other cases, vehicle speed sensor or circuit harness
	Driving at 40 km/h (25 mph) in 2 range	40 km/h (25 mph)	
	Driving at 50 km/h (31 mph) in D range, OD OFF	50 km/h (31 mph)	
PCSV-A duty	D range : Idling	75-90%	• When accelerator pedal is slightly pressed while idling in D range, duty should become 100% • TCM • TPS system
	D range : first gear	100 %	
PCSV-B duty	D range : Idling	0%	• TCM • TPS system
	D range : first gear	0%	
Torque converter slip amount	D range : third gear, 70km/h, OD OFF	0-50 rpm	• Torque converter • Ignition signal wire or pulse generator A system • Inappropriate transaxle fluid pressure • Torque converter control solenoid valve
DCCSV duty	D range : third gear, 70km/h, OD OFF	40-85%	• TCM • TPS system • Pulse generator A system • Torque converter control solenoid valve

ELEMENTS IN USE IN EACH GEAR EKKB0240

Select or lever position	Overdrive control switch	Shifting gear	Engine start	Parking Mechanism	Clutch				Brake	
					C1	C2	C3	OWC	B1	B2
P	-	Neutral	Possible	O						
R	-	Reverse	-		O					O
N	-	Neutral	Possible							
D	ON	First				O		O		
		Second				O			O	
		Third			O	O	O			
		Fourth					O		O	
D	OFF	First				O		O		
		Second				O			O	
		Third			O	O	O			
2	-	First				O		O		
		Second				O			O	
L	-	First				O				O

C1 : Front clutch
C2 : Rear clutch
C3 : End clutch
OWC : One way clutch
B1 : Kickdown brake
B2 : Low & reverse brake

INSPECTION OF ELECTRONIC CONTROL SYSTEM COMPONENTS EKNB0250

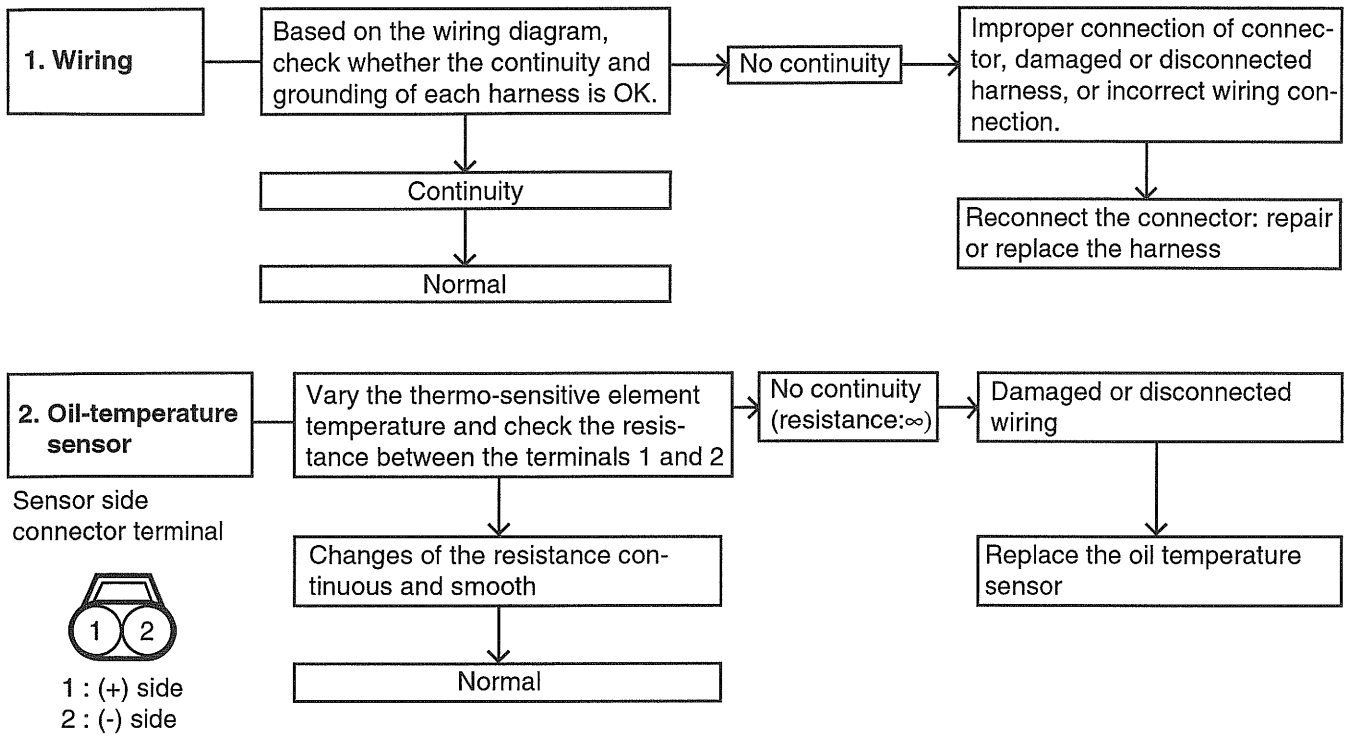

EKFA125A

3. Pulse generator A or B

1-2 : Pulse generator A
3-4 : Pulse generator B

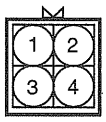

Check the resistance between terminals 1 and 2, 3 and 4.

- Resistance : very low or very high → Short-circuit, or damaged or disconnected wiring → Replace the pulse generator.
- 215-275 Ω/20°C (68°F) → Normal

4. Pulse generator A or B (check by using an oscillscope)

Oscilloscope wave form

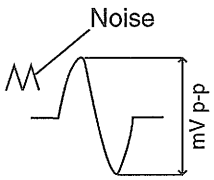

Connect the pulse generator and body harness, and connect an oscilloscope. Check on a chassis dynamoter or with the front wheels raised.

With the selector lever at the "L" position and the engine running at 1,000 rpm, check the voltage waveform between terminals 1 and 2.

- Very low voltage → Incorrect installation of the pulse generator, or malfunction of the pulse generator. → Correct the installation condition, or replace the pulse generator.
- Noise in the waveform → Improper grounding of the pulse generator circuit's shielded wiring → Replace the pulse generator.
- 1,000 mVp-p or higher

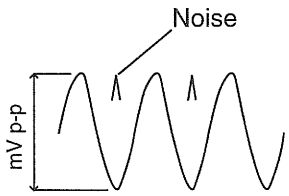

With the selector lever at the "L" position and the engine running at 1,000 rpm, check the voltage waveform between terminals 3 and 4.

- Very low voltage → Incorrect installation of the pulse generator, or malfunction of the pulse generator. → Correct the installation condition, or replace the pulse generator.
- Noise in the waveform → Incorrect grounding of the pulse generator circuit's shielded wiring → Replace the pulse generator.
- 500 mVp-p or higher → Normal

EKFA125B

5. Pressure control solenoid valve (PCSV-A,B)

Solenoid valve side connector terminal

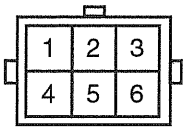

1. SCSV-C
2. PCSV-A
3. PCSV-B
4. SCSV-B
5. SCSV-A
6. DCCSV

Check the resistance between terminal 2, 3 of the solenoid valve connector and the transaxle case.

→ Resistance : too low or too high → Short-circuit, or damaged or disconnected wiring → Replace the PCSV-A,B

2.9 ± 0.3 Ω/20˚C (68˚F)

Connect 12V between the transaxle case and terminal 2, 3; switch ON and OFF and check for operation noise.

→ No operation noise. (Stroke : 0.3 mm (0.012 in.) or less) → Foreign materiall caught between the valve and guide → Replace the PCSV-A,B

Noise exists

Normal

6. Shift-control solenoid valve (SCSV) A, B, C

Solenoid valve side connector terminal

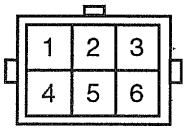

1. SCSV-C
2. PCSV-A
3. PCSV-B
4. SCSV-B
5. SCSV-A
6. DCCSV

Check the resistance between terminal 1, 4 or 5 of the solenoid valve connector and transaxle case.

→ Resistance : too low or too high → Short-circuit, of damaged or disconnected wiring → Replace the SCSV.

22.3 ± 1.5 Ω/20˚C (68˚F)

Connect 12V between the trans axle case and terminal 1, 4 or 5; switch ON and OFF and check for operation noise of the solenoid valve, and check the valve stroke.

→ No operation noise. (stroke : 0.25 mm (0.010 in. or less) → Residue accumulated in valve and core. → Replace the SCSV.

Noise exists

Normal

EKNB025A

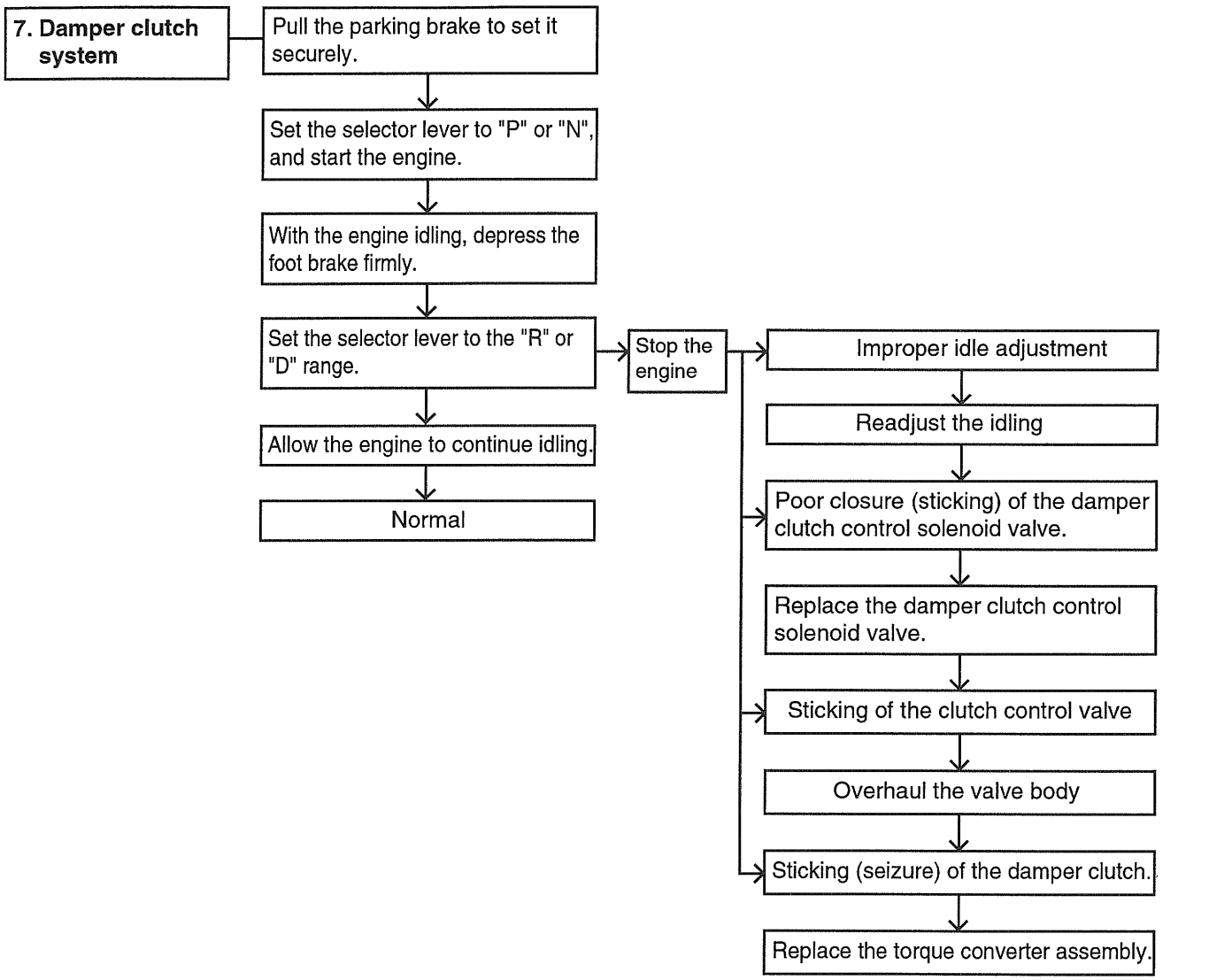
7. Damper clutch system
Pull the parking brake to set it securely.
Set the selector lever to "P" or "N", and start the engine.
With the engine idling, depress the foot brake firmly.
Set the selector lever to the "R" or "D" range.
Allow the engine to continue idling.
Normal
Stop the engine
Improper idle adjustment
Readjust the idling
Poor closure (sticking) of the damper clutch control solenoid valve.
Replace the damper clutch control solenoid valve.
Sticking of the clutch control valve
Overhaul the valve body
Sticking (seizure) of the damper clutch.
Replace the torque converter assembly.

EKDA025D

8. Damper clutch control solenoid valve (DCCSV)

Solenoid valve side connector terminal

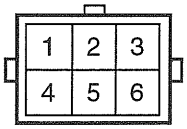

1. SCSV-C
2. PCSV-A
3. PCSV-B
4. SCSV-B
5. SCSV-A
6. DCCSV

Check the resistance between terminal 6 of the solenoid valve connector and the transaxle case.

Standard value : 3Ω/20˚C

Resistance ; too low or too high

Short-circuit, damaged or disconnected wiring

Replace the DCCSV

Connect 12V between the transaxle case and terminal 6 ; switch ON and OFF and check for operation noise.

Noise exists

Normal

No operation noise. Check for sticking. * (Valve stroke : 0.3 mm (0.012 in. or less)

*Sticking is usually at the release side.

Short-circuit, damaged or disconnected wiring.

Replace the DCCSV

EKNB025B

9. Transaxle range switch

Switch side connector terminal

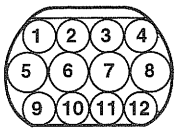

In the "P" range, check for continuity between teminals 8 and 7, and terminals 6 and 9.

Continuity exists

In the "R" range, check for continuity between terminals 6 and 10, and terminals 3 and 5.

Continuity exists

In the "N" range, check for between terminals 7 and 8, and terminals 6 and 12.

Continuity exists

In the "D' range, check for continuity between terminals 6 and 11.

Continuity exists

In the "2" range, check for continuity between terminals 6 and 4.

Continuity exists

In the "L" range, check for continuity between terminal 2 and 6.

Continuity exists

Normal

No continuity → Poor contact, damaged or disconnected wiring → Replace the transaxle range switch

EKFA125F

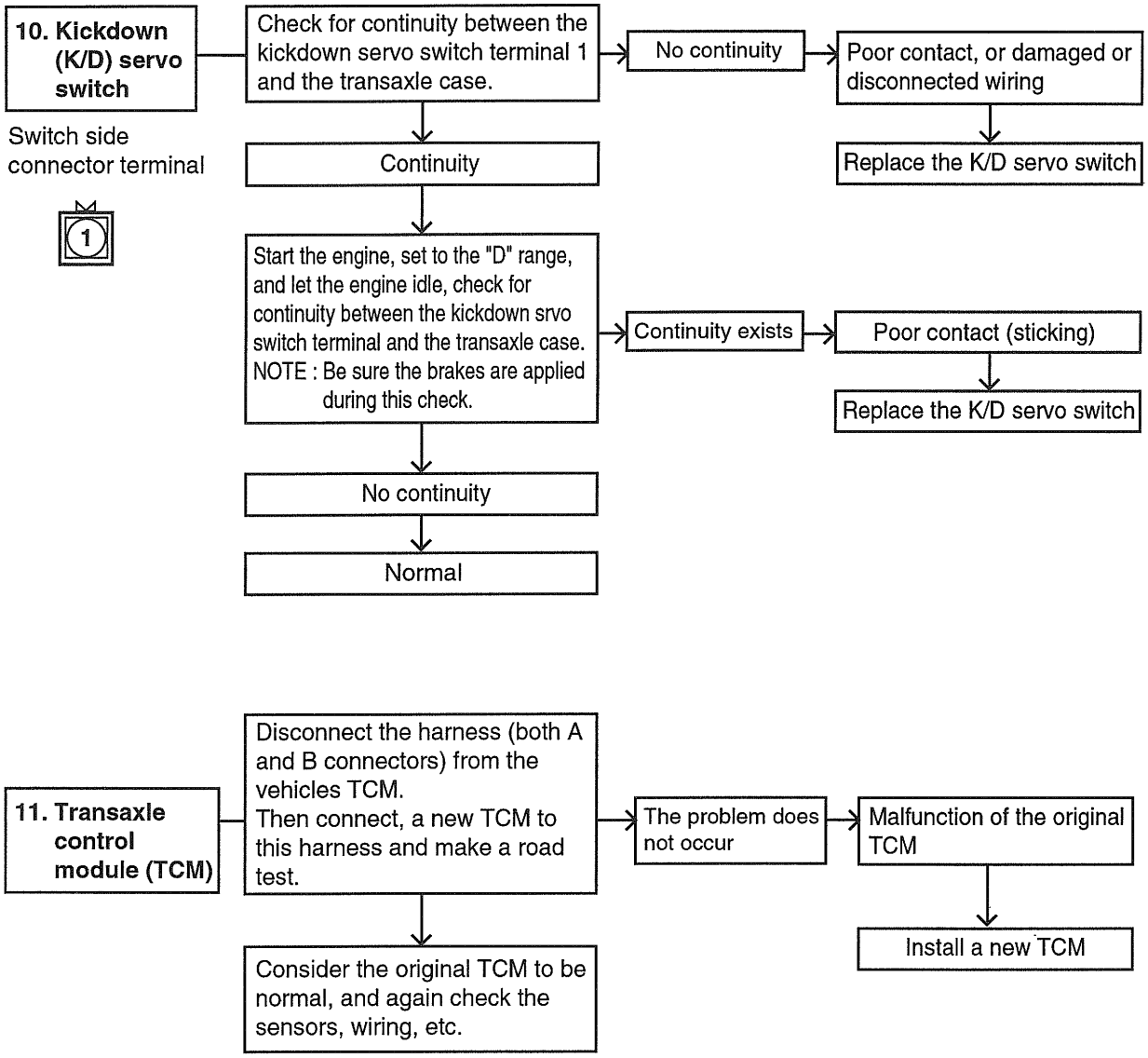
10. Kickdown (K/D) servo switch
Switch side connector terminal
1
Check for continuity between the kickdown servo switch terminal 1 and the transaxle case.
No continuity
Poor contact, or damaged or disconnected wiring
Replace the K/D servo switch
Continuity
Start the engine, set to the "D" range, and let the engine idle, check for continuity between the kickdown srvo switch terminal and the transaxle case.
NOTE : Be sure the brakes are applied during this check.
Continuity exists
Poor contact (sticking)
Replace the K/D servo switch
No continuity
Normal
11. Transaxle control module (TCM)
Disconnect the harness (both A and B connectors) from the vehicles TCM.
Then connect, a new TCM to this harness and make a road test.
The problem does not occur
Malfunction of the original TCM
Install a new TCM
Consider the original TCM to be normal, and again check the sensors, wiring, etc.

EKDA025G

OIL PRESSURE TESTS EKNB0260

1. Completely warm up the transaxle.
2. Raise the front of the vehicle so that the front wheels can be rotated.
3. Connect an engine tachometer and place it in a position where it's easy to see.
4. Attach the special oil-pressure gauge (09452-21500) and the adapter (09452-21002) to each oil-pressure outlet port.
   When the reverse pressure is to be tested, the 3,000 kpa (400 psi) type of gauge should be used.

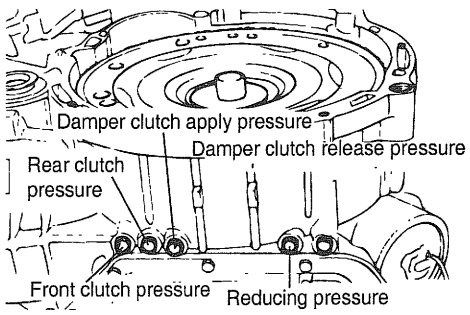

EKDA026A

5. Measure the oil pressure under various conditions. check to be sure that the measured results are within the standard value range shown in the "Standard oil pressure table" below. If the oil pressure is not within the specified range, check and repair as described in the section "Preliminary Steps if oil Pressure Is Not Normal" on the next page.

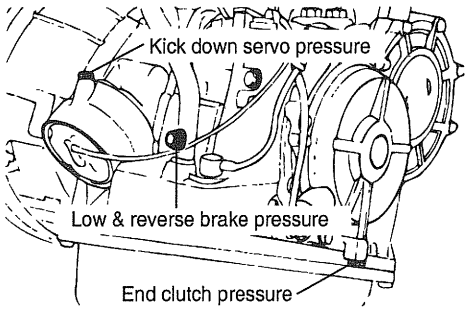

EKDA026B

STANDARD OIL PRESSURE TABLE

No.	Conditions				Standard oil pressure kPa (psi)							
	Selector lever position	(Reference) vehicle speed km/h (mph)	Engine speed rpm	Shift position	1 Reducing pressure	2 Kickdown brake pressure	3 Front Clutch pressure	4 End clutch pressure	5 Low-reverse brake pressure	6 Damper clutch pressure (Apply)	7 Damper clutch release pressure (Release)	8 Rear clutch pressure
1	N	0 (0)	Idling	Neutral	400-440 (58-63)	-	-	-	-	-	-	-
2	D	0 (0)	Idling	2nd gear	↑	58-147 (8-21)	-	-	-	-	-	-
3	D (SW-ON)	110 (68)	2,500 Approx	4th gear	↑	637-695 (92-100)	-	650-710 (94-102)	-	637-793 (92-114)	-	833-911 (120-132)
4	D (SW-OFF)	75 (47)	2,500 Approx	3rd gear	↑	840-900 (122-130)	813-872 (117-126)	833-911 (120-132)	-	↑	-	833-911 (120-132)
5	2	50 (31)	2,500 Approx	2nd gear	↑	840-900 (122-130)	-	-	-	↑	-	833-911 (120-132)
6	L	0 (0)	2,500 Approx	1st gear	↑	-	-	-	235-294 (34-42)	245-400 (35-58)	510-610 (74-88)	833-911 (120-132)
7	R	35 (22)	2,500 Approx	Reverse	420-480 (60-69)	-	1,666-2,058 (241-298)	-	1,666-2,058 (241-298)	254-450 (36-65)	450-646 (65-93)	-

EKNB026A

NOTE

Must be 19.6 kPa (2.8 psi) or less.

PRELIMINARY STEPS IF OIL PRESSURE IS NOT NORMAL

Trouble symptom	Probable cause	Remedy
*Line pressures are all low (or high). *"Line pressure" refers to oil pressures 2, 3, 4, 5, 6, 7 and 8 in the "Standard oil pressure table" on the previous page.	1. Obstructed oil filter 2. Improper adjustment of oil pressure (line pressure) regulator valve 3. Sticking of regulator valve 4. Looseness of valve body tightening part 5. Improper oil pump discharge pressure	1. Visually inspect the oil filter; replace the oil filter if it is restricted. 2. Measure line pressure 2 (kickdown brake pressure); if the pressure is not the standard value, readjust the line pressure, or if necessary, replace the valve body assembly. 3. Check the operation of the regulator valve; repair if necessary, or replace the valve body assembly. 4. Tighten the valve body tightening bolt and installation bolt. 5. Check the side clearance of the oil pump gear; replace the oil pump assembly if necessary.
Improper reducing pressure	1. Improper line pressure 2. Clogging of the filter (L-shaped type) of the reducing-pressure circuit 3. Improper adjustment of the reducing pressure 4. Improper adjustment of the reducing pressure 5. Sticking of the reducing valve 6. Looseness of valve body tightening part	1. Check the 2 kickdown brake pressure (line pressure); if the line pressure is not the standard value, check as described in item 1 above. 2. Disassemble the valve body assembly and check the filter; replace the filter if it is restricted. 3. Measure the 1 reducing pressure; if it is not the standard value, readjust, or replace the valve body assembly. 4. Check the operation of the reducing valve; if necessary, repair it, or replace the valve body assembly. 5. Tighten the valve body tightening bolt and installation bolt.
Improper kickdown brake pressure	1. Malfunction of the D-ring or seal ring or the sleeve or kickdown servo piston. 2. Looseness of valve body tightening part. 3. Functional malfunction of the valve body assembly.	1. Disassemble the kickdown servo and check whether the seal ring or D-ring is damaged. If it is cut or has scratches, replace the seal ring or D-ring. 2. Tighten the valve body tightening bolt and installation bolt. 3. Replace the valve body assembly.
Improper front clutch pressure	1. Malfunction of the D-ring of the sleeve or kickdown servo piston. 2. Looseness of valve body tightening part 3. Malfunction of the valve body assembly. 4. Wear of the front clutch piston or retainer, or malfunction of the D-ring. (Refer to the figure on the next page.) 5. Oil pump gasket or seal ring (2) damaged.	1. Disassemble the kickdown servo and check whether the seal ring is damaged. If it is cut or has scratches, replace the seal ring or D-ring. 2. Tighten the valve body tightening bolt and installation bolt. 3. Replace the valve body assembly. 4. Disassemble the transaxle itself and check whether or not there is wear of the front clutch piston and retainer inner circumference, or damage of the D-ring. If there is any wear or damage, replace the piston, retainer, D-ring and or seal ring.

Trouble symptom	Probable cause	Remedy
Improper end clutch pressure	1. Malfunction of a D-ring , seal ring of the end clutch or O-ring of the pipe (Refer to the figure on the next page.) 2. Looseness of valve body tightening part. 3. Malfunction of the valve body assembly	1. Disassemble the end clutch and check the seal ring, D-ring of the pisition, seal ring of the retainer, etc.; replace if there are cuts, scars, scratcher or damage. 2. Tighten the valve body tightening bolt and installation bolt. 3. Replace the valve body assembly.
Improper low-reverse brake pressure	1. O-ring between valve body and transaxle damaged or missing 2. Looseness of valve body tightening part 3. Malfunction of the valve body assembly 4. Malfunction of the O-ring of the low-reverse brake piston or the O-ring of the retainer (Refer to the figure on the next page.)	1. Remove the valve body assembly and check to be sure that the O-ring at the upper surface of the upper valve body is not missing or damaged; install or replace the O-ring if necessary. 2. Tighten the valve body tightening bolt and installation bolt. 3. Replace the valve body assembly. 4. Disassemble the transaxle itself and check the O-ring for damage; replace if there are cuts, scars, scratches or damage.
Improper torque converter pressure	1. Sticking of the damper clutch control solenoid valve (DCCSV) or the damper clutch control valve. 2. Clogging or leaking of the oil cooler and/or lines. 3. Damaged seal ring of the input shaft (Refer to the figure on the next page.) 4. Malfunction of the torque converter.	1. Check the operation of the damper clutch system and the DCCSV. 2. Repair or replace, as necessary, the cooler and/or lines. 3. Disassemble the transaxle itself and check for damage of the seal ring; replace the seal ring if there is damage. 4. Replace the torque converter.
Improper rear clutch pressure	1. Malfunction of the D-ring or seal ring of the rear clutch. 2. Looseness of valve body tightening part. 3. Functional malfunction of the valve body assembly	1. Disassemble the end clutch and check the seal ting, D-ring of the piston, seal ring of the retainer, etc.; replace if there are cut, scars, scratches or damage. 2. Tighten the value body tightening bolt and installation bolt. 3. Replace the valve body assembly.
Improper damper clutch release pressure	Same as the probable cause of damper clutch release pressure	Same as the remedy of damper clutch release pressure

CONVERTER STALL TEST EKNB0270

A stall test determines the maximum engine speed obtained at full throttle in "D" and "R" range. This test checks the torque converter stator overrunning clutch operation, and the holding ability of the transaxle clutches and the low-reverse brake.

WARNING

During this test, make sure that nobody stands in front of or behind the vehicle.

1. Check transaxle fluid level. Fluid should be at normal operating temperature [80-90°C (176-194°F)]. Engine coolant should also be at normal operating temperature [80-90°C (176-194°F)].
2. Apply chocks to both rear wheels.
3. Attach an engine tachometer.
4. Apply the parking and service brakes fully.
5. Start the engine.
6. With the selector lever in the "D" position, depress the accelerator pedal fully to read maximum engine rpm. Do not hold the throttle wide open any longer than is necessary to obtain maximum engine rpm reading, and never longer than 5 seconds at a time. If more than one stall test is required, operate the engine at approximately 1,000 rpm in neutral for 2 minutes to cool the transaxle fluid between tests.

Stall speed :
2,600-3,000 rpm (A4AF3)
2,300-2,700 rpm (A4BF2)

7. Place the selector lever in the "R" position and perform the stall test by the same procedure as previously described.

STALL SPEED ABOVE SPECIFICATION IN "D"

If stall speed is higher than specification, the rear clutch or overrunning clutch of the transaxle is slipping. In this case, perform a hydraulic test to locate the cause of slippage.

STALL SPEED ABOVE SPECIFICATION IN "R"

If the stall speed is higher than specification, the front clutch of the transaxle or low-reverse brake is slipping. In this case, perform a hydraulic test to locate the cause of slippage.

STALL SPEED BELOW SPECIFICATION IN "D" ND "R"

If the stall speed is lower than specification, insufficient engine output or a faulty torque converter is suspected. Check for engine misfiring, improper ignition timing, or valve clearance etc. If these are good, the torque converter is faulty.

SERVICE ADJUSTMENT PROCEDURES EKNB1280

TRANSAXLE FLUID LEVEL INSPECTION

1. Drive the vehicle until the fluid reaches normal operating temperature [80-90°C (176-194°F)].
2. Place the vehicle on a level surface.
3. Move the selector lever through all gear position. This will fill the torque converter and hydraulic system with fluid, then place lever in "N" (Neutral) position.
4. Before removing the dipstick, wipe all contaminants from around the dipstick. Then take out the dipstick and check the condition of the fluid. The transaxle should be overhauled under the following conditions.
   - If there is a ""burning" door.
   - If the fluid color has become noticeably blacker.
   - If there is a noticeably excessive amount of metal particles in the fluid.
5. Check to see if the fluid level is in the "HOT" range on dipstick. If fluid level is low, add automatic transaxle fluid until the level reaches the "HOT" range.

Transaxle fluid : GENUINE DIAMOND ATF SP-III

Low fluid level can cause a variety of abnormal conditions because it allows the pump to take in air along with fluid. Air trapped in the hydraulic system forms bubbles which are compressable. Therefore, pressures will be erratic, causing delayed shifting, sliping clutches and brakes, etc. Improper filling can also raise fluid level too high. When the transaxle has too much fluid, gears churn up foam and cause the same conditions which occur with low fluid level, resulting in accelerated deterioration of automatic transaxle fluid. In either case, air bubbles can cause overheating, and fluid oxidation, which can interfere with normal valve, clutch, and servo operation. Foaming can also result in fluid escaping from the transaxle vent where it may be mistaken for a leak.

6. Be sure to examine the fluid on the dipstick closely.

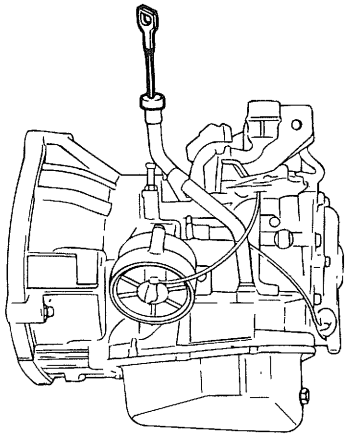



EKDA028A

SELECTOR LEVER OPERATION CHECK

1. Shift the selector lever to each range and check to see that the lever moves smoothly and is controlled. Check to see that the position indicator is correct.
2. Check to be sure that the selector lever can be shifted to each position.
3. Start the engine and check to see if the vehicle moves forward when the selector lever is shifted from "N" to "D" and moves backward when shifted to "R".
4. When the shift lever malfunctions, adjust the control cable and the selector lever sleeve. Check for worn shift lever assembly sliding parts.

TRANSAXLE RANGE SWITCH ADJUSTMENT

1. Place selector lever in "N" (Neutral) position.
2. Loosen the manual control lever lock nut to seperate the cable and lever.

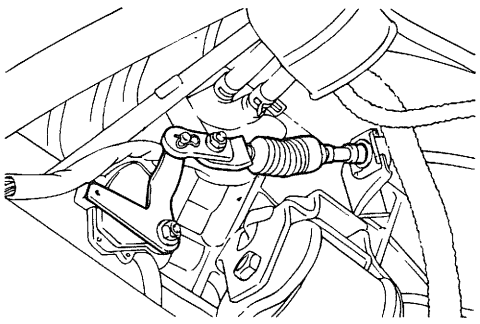

EKDA028C

3. Place the manual control lever in the "N" (Neutral) position.
4. Turn the transaxle range switch body until the 12 mm (.47 in.) wide end of the manual control lever aligns with the switch body flange [12 mm (0.472 in.) wide portion].
5. Tighten the attaching bolts (2 pcs.) to the specified torque.
   Transaxle Range Switch Attaching Bolt: 10-12 Nm (100-120 kg.cm, 7-9 lb.ft)

NOTE

When setting up the switch body, be careful that the O-ring does not drop from the switch body. Tighten the attaching bolts carefully.

Section A-A

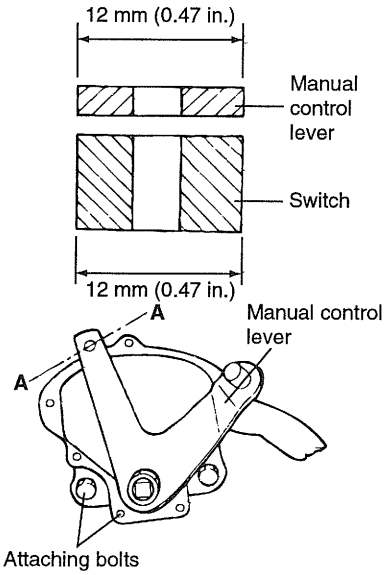

EKDA028D

6. Make sure that the selector lever is in the "N" (Neutral) position.
7. Adjust the flange nut so that there is no slack in the control cable and make sure that the selector lever operates smoothly.
8. Run the vehicle and confirm that the transaxle is set in each range when the selector lever is shifted to each position.

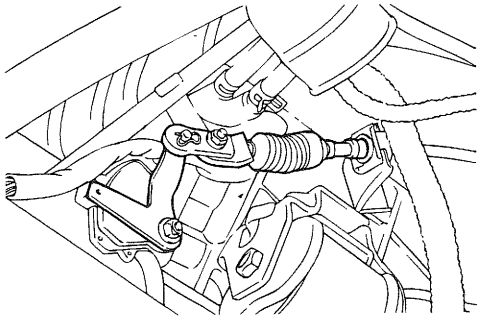

EKDA028E

KICKDOWN SERVO ADJUSTMENT

1. Completely remove all dirt and other contaminating materials adhered around the kickdown adjust screw.
2. Loosen the lock nut.
3. Loosen and tighten the adjust screw two times by torque of 5 Nm (3.6 lb.ft)
4. Tighten adjust screw by torque of 5 Nm and then, loosen the adjust screw 3 to 3-1/3 turns.

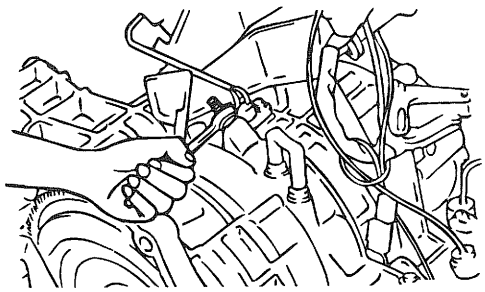

EKDA028F

5. Tighten the lock nut to the specified torque.

Lock nut :
15-22 Nm (150-220 kg·cm, 11-16 lb·ft)

NOTE

Before assembling, apply sealant (DC780) to the center portion of the adjust screw.

LINE PRESSURE ADJUSTMENT

1. Drain out the automatic transaxle fluid.
2. Remove the oil pan.
3. Remove the oil filter.
4. Remove the oil-temperature sensor.

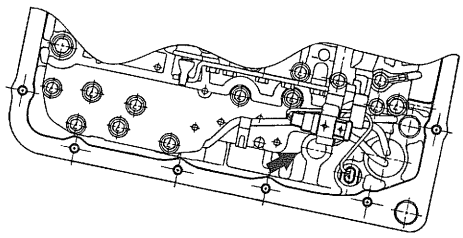

KKNB011A

5. Press the tab of the solenoid valve harness grommet and push in.

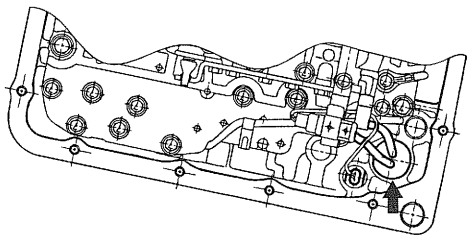

KKNB011B

6. Remove the valve body assembly. The manual valve can come out, so be careful not to drop it.

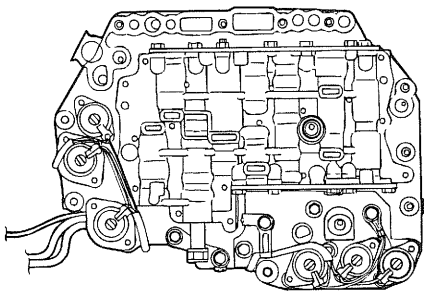

T8AT030H

7. Turn the adjustment screw of the regulator valve and adjust so that the line pressure (kickdown brake pressure) reaches the standard value. When the adjustment screw is turned clockwise, the line pressure becomes lower; when it is turned counter-clockwise, it becomes higher.

Standard value :
860-900 kPa (122-129 psi, 8.77-9.18 kg/cm²)
Oil pressure change for each turn of adjustment screw :
38 kPa (5.4 psi, 0.39 kg/cm²)

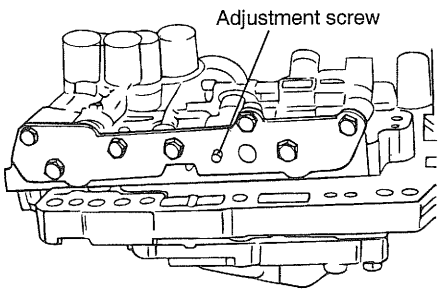

EKDA028J

8. Check to be sure that the O-ring is installed on the upper surface of the valve body at the place.

9. Replace the O-ring of the solenoid valve connector with a new one.

10. Install the valve body assembly to the case and then insert the solenoid valve connector into the case. Be sure, at this time, that the notched part of the connector faces as shown in the figure. Also be careful that the lead wiring isn't caught.

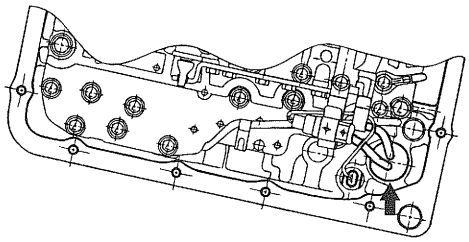

KKNB011B

11. Tighten the valve body assembly mounting bolts to 10-12 Nm (100-120 kg.cm, 7-9 lb.ft).

12. Install the oil filter.

13. Install a new oil pan gasket with the oil pan.

14. Pour in the specified amount of automatic transaxle fluid.

15. Perform the oil pressure test. Readjust if necessary.

REDUCING PRESSURE ADJUSTMENT

If the Scan Tool is not available

1. Remove parts up to the oil filter in the same way as for adjustment of the line pressure. The valve body need not be removed.

2. Turn the adjustment screw of the lower valve body and adjust so that the reducing pressure is the standard value. When the adjustment screw is turned clockwise, the reducing pressure becomes lower; when it is turned counter clockwise, it becomes higher.

NOTE

When adjusting the reducing pressure, aim for the center value (425 kPa, 60 psi) of the standard value allowance.

Standard value :
420 kPa (60 psi, 4.2±0.2 kg/cm)
Oil pressure change for each turn of the adjustment screw :
22 kPa (4.3 psi, 0.22 kg.cm²)

3. Install the oil filter and oil pan in the same way as for adjustment of the line pressure.

4. Peform the oil pressure test. Readjust if necessary.

If the Scan Tool is used

5. Adjust the PC solenoid so that the kickdown brake pressure is the standard value when activated to 50% duty by the Scan Tool.

Standard value :
320±30 kPa (39±1 psi, 3.2±0.3 kg/.cm²)
Oil pressure change for each turn of the adjustment screw :
30 kPa (3 psi, 0.3 kg/cm²)

6. Check to be sure that the reducing pressure (after the adjustment is completed) is within the range of 370-490 kPa (53-70 psi, 3.8-5.0 kg/cm²)

CAUTION

This adjustment should be made with an oil temperature of 80-90°C (176-194°F). If the adjustment is made at a temperature that is too high, the line pressure will drop during idling, with the result that it might not be possible to make the correct adjustment.

THROTTLE POSITION SENSOR INSPECTION

Refer to GROUP FUEL SYSTEM.

DRIVE SHAFT OIL SEALS REPLACEMENT

1. Disconnect the drive shaft from the transaxle. (Refer to DRIVE SHAFT & FRONT AXLE)
2. Using a flat-tip (-) screwdriver, remove the oil seal.

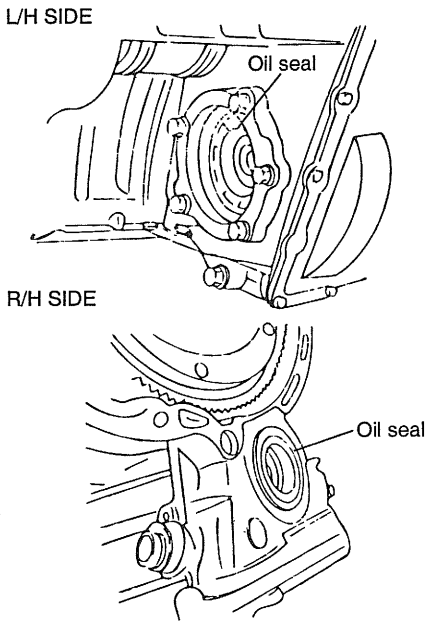

EKDA028M

3. Using the special tool (09431-21200), tap the drive shaft oil seal into the transaxle.
4. Apply a coating of the transaxle fluid to the lip of the oil seal.

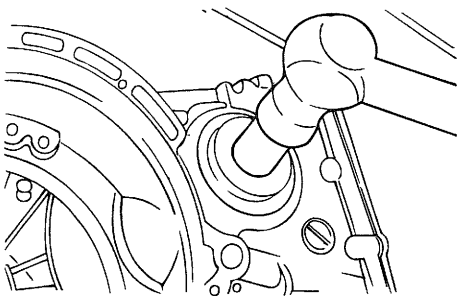

EKDA028N

TCM REPLACEMENT

TCM is located at the dash panel of the upper side of brake pedal in the driver side.

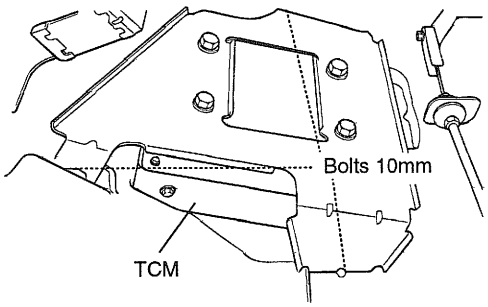

EKNB128A

AUTOMATIC TRANSAXLE HYDRAULIC CIRCUIT & PARKING EKKB0390

NEUTRAL & PARK

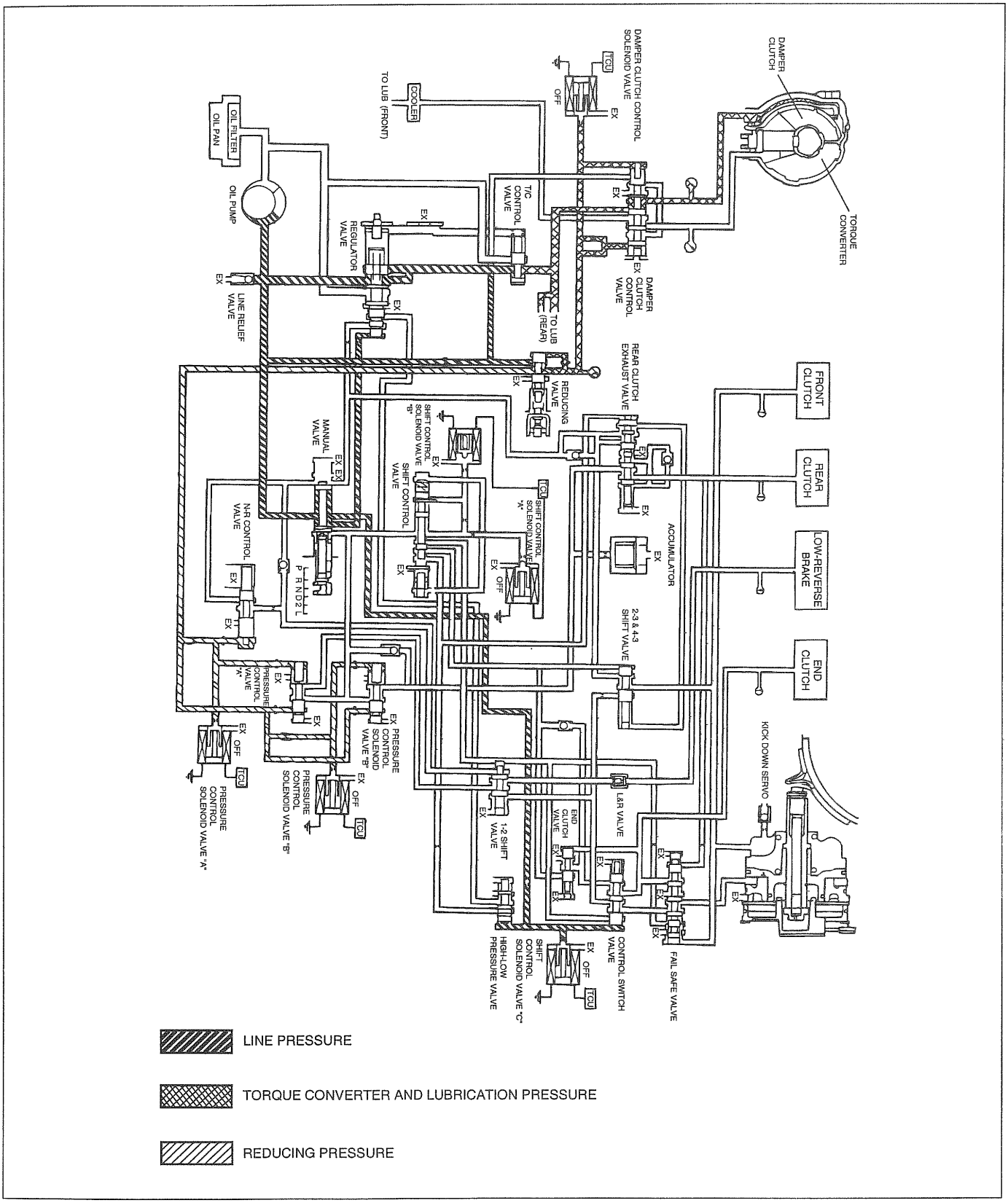

EKKB039A

DRIVE (FIRST)

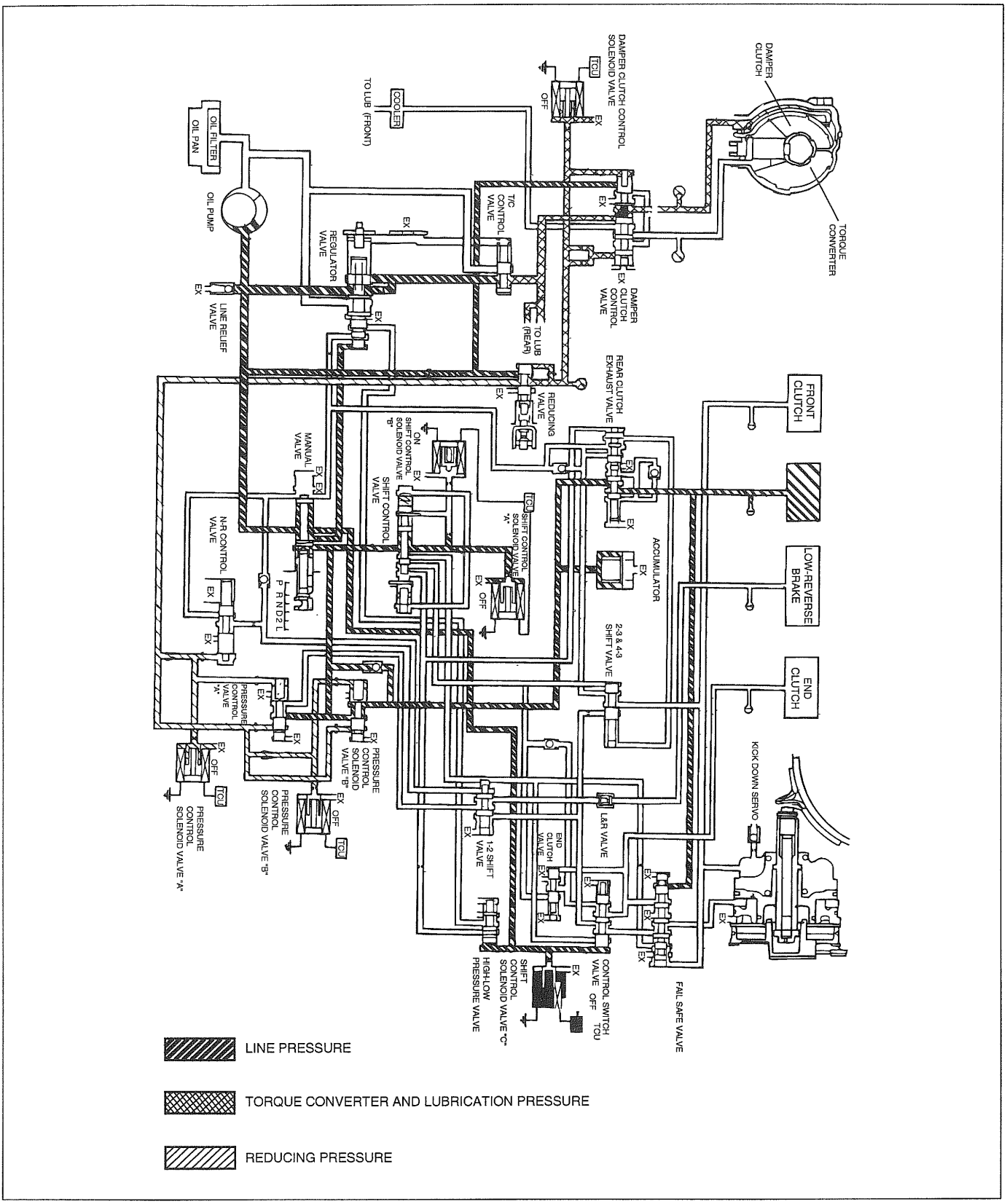

EKKB039B

DRIVE (SECOND)

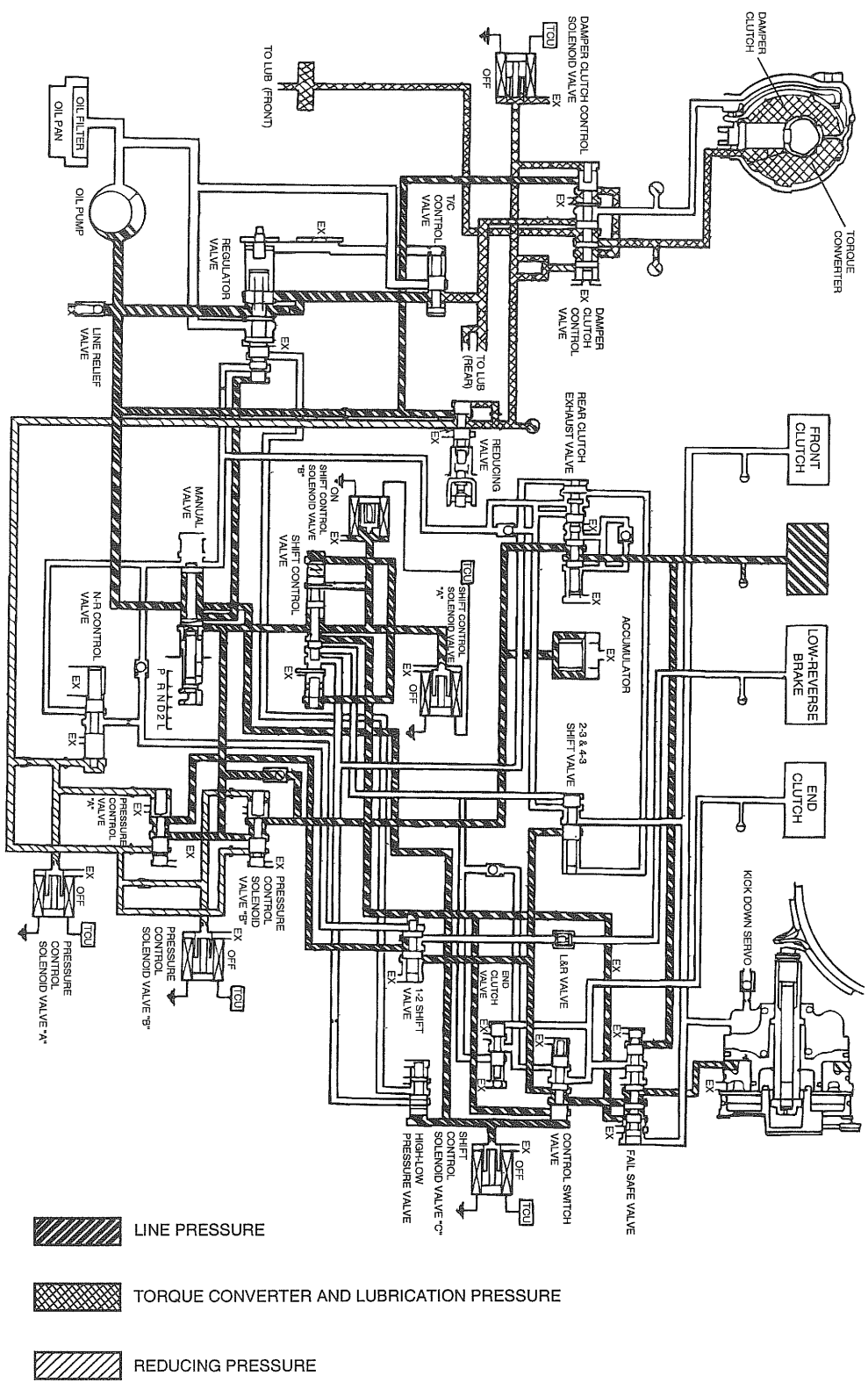

EKKB039C

DRIVE (THIRD)

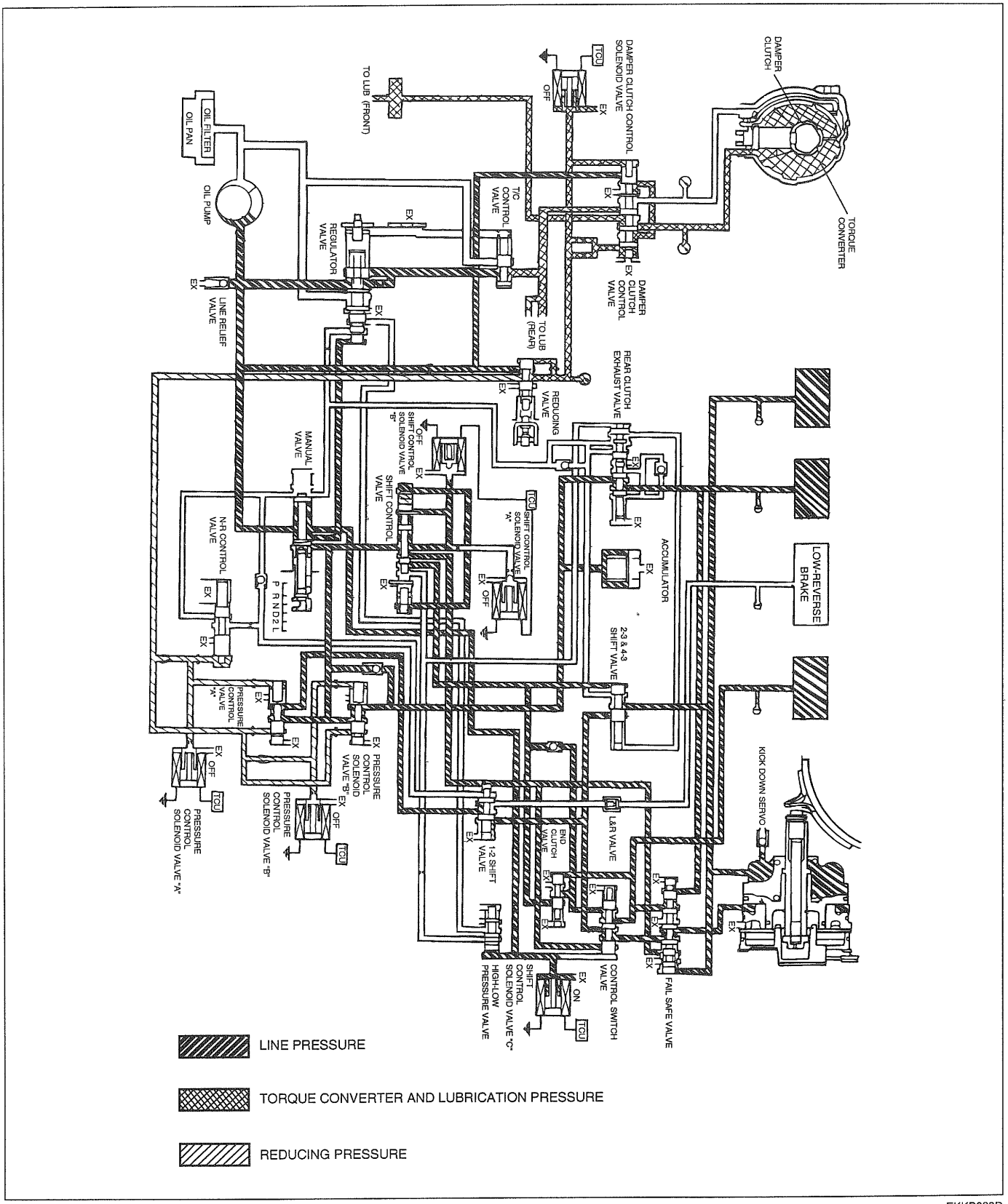

EKKB039D

DRIVE (FOURTH)

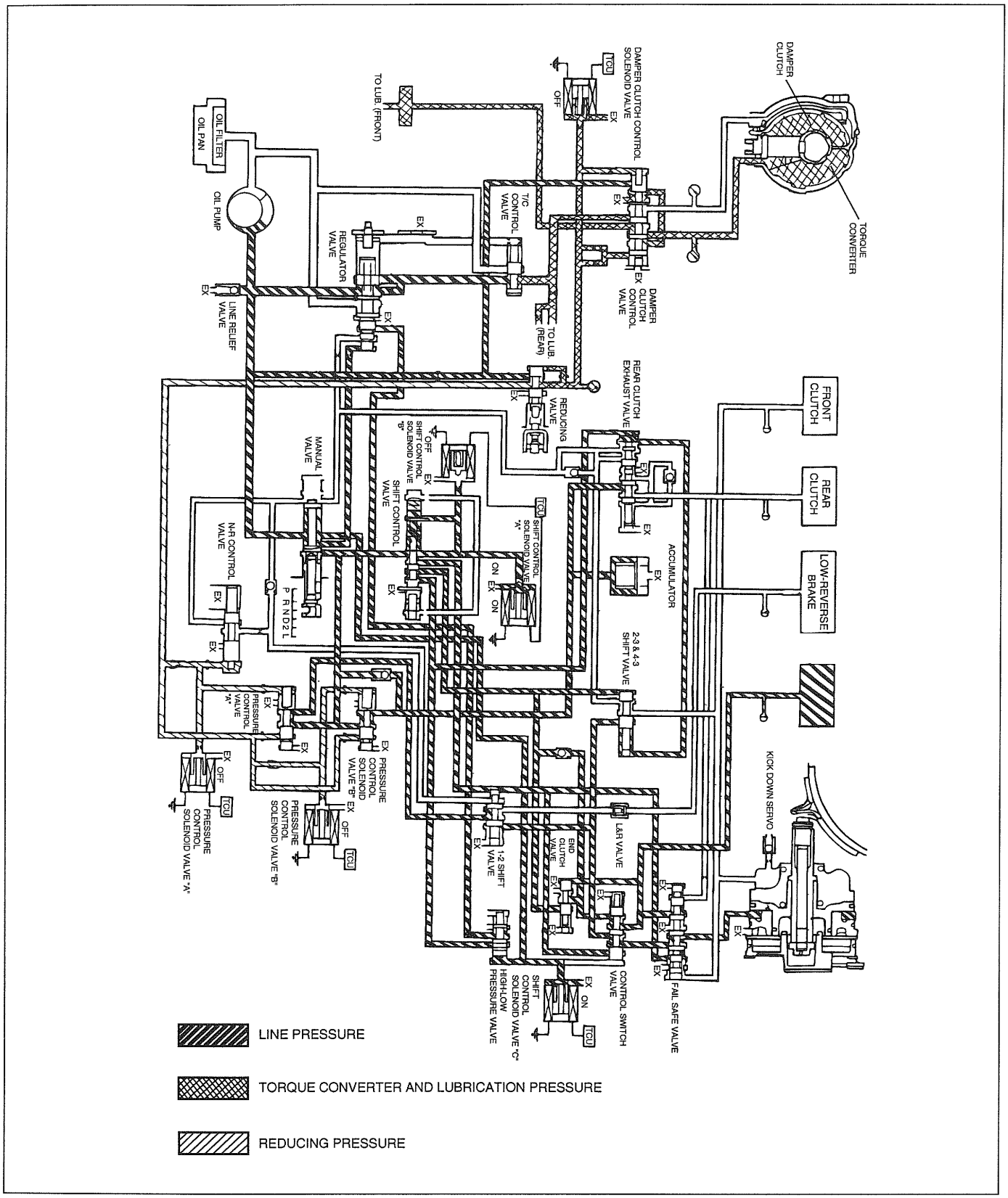

EKKB039E

REVERSE

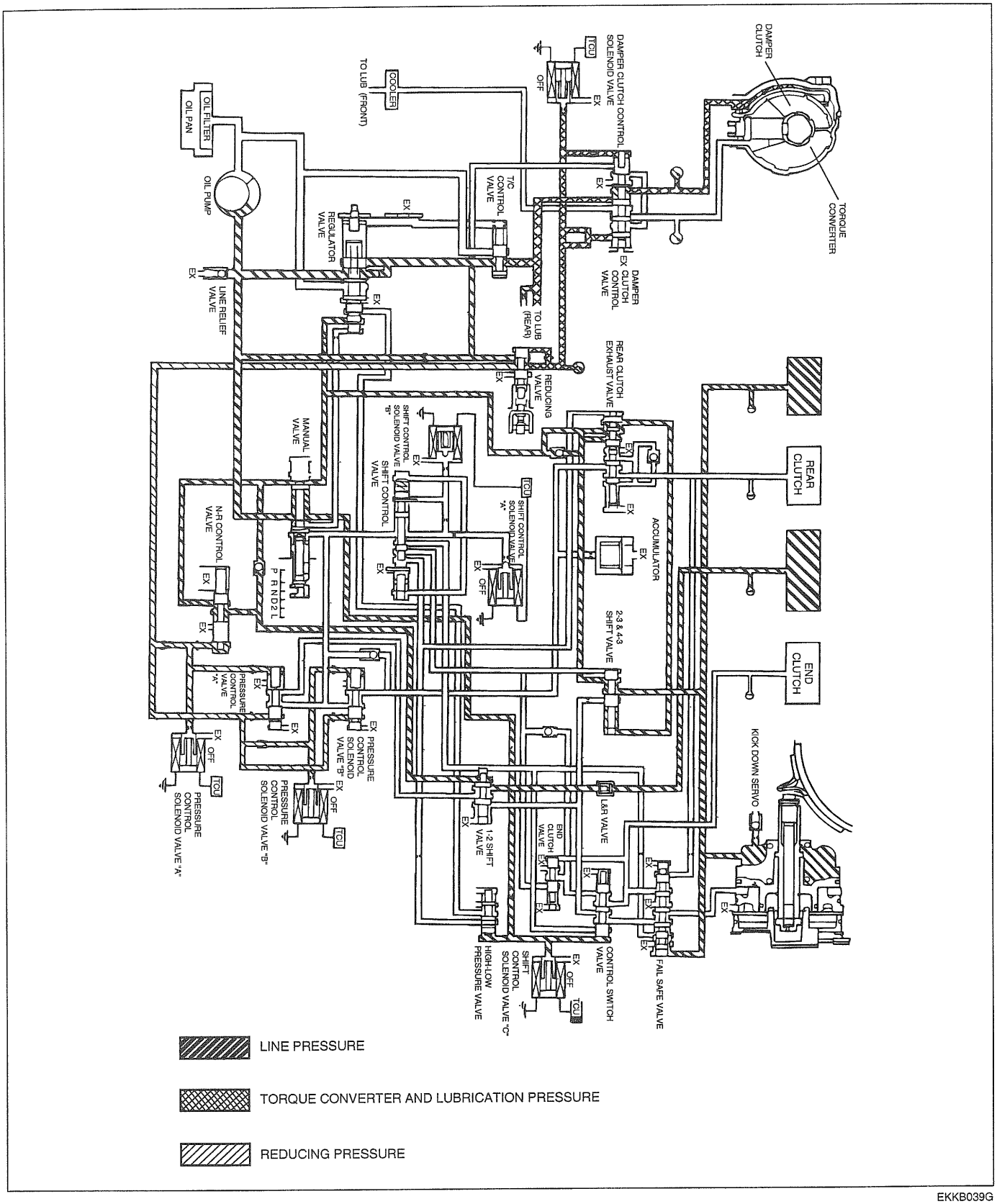

EKKB039G

TCM EKNB0580

TCM (1)

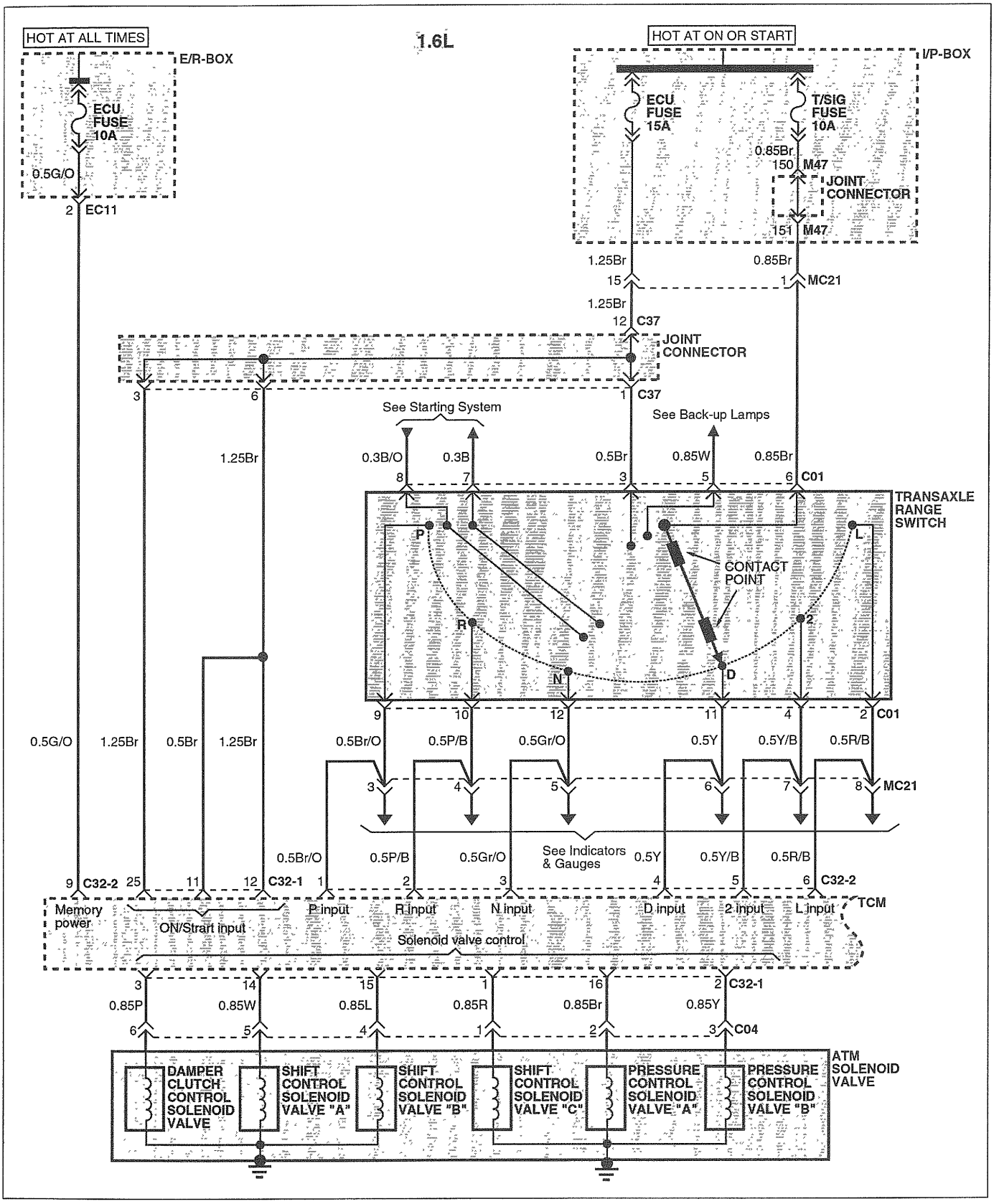

EKNB058A

TCM (2)

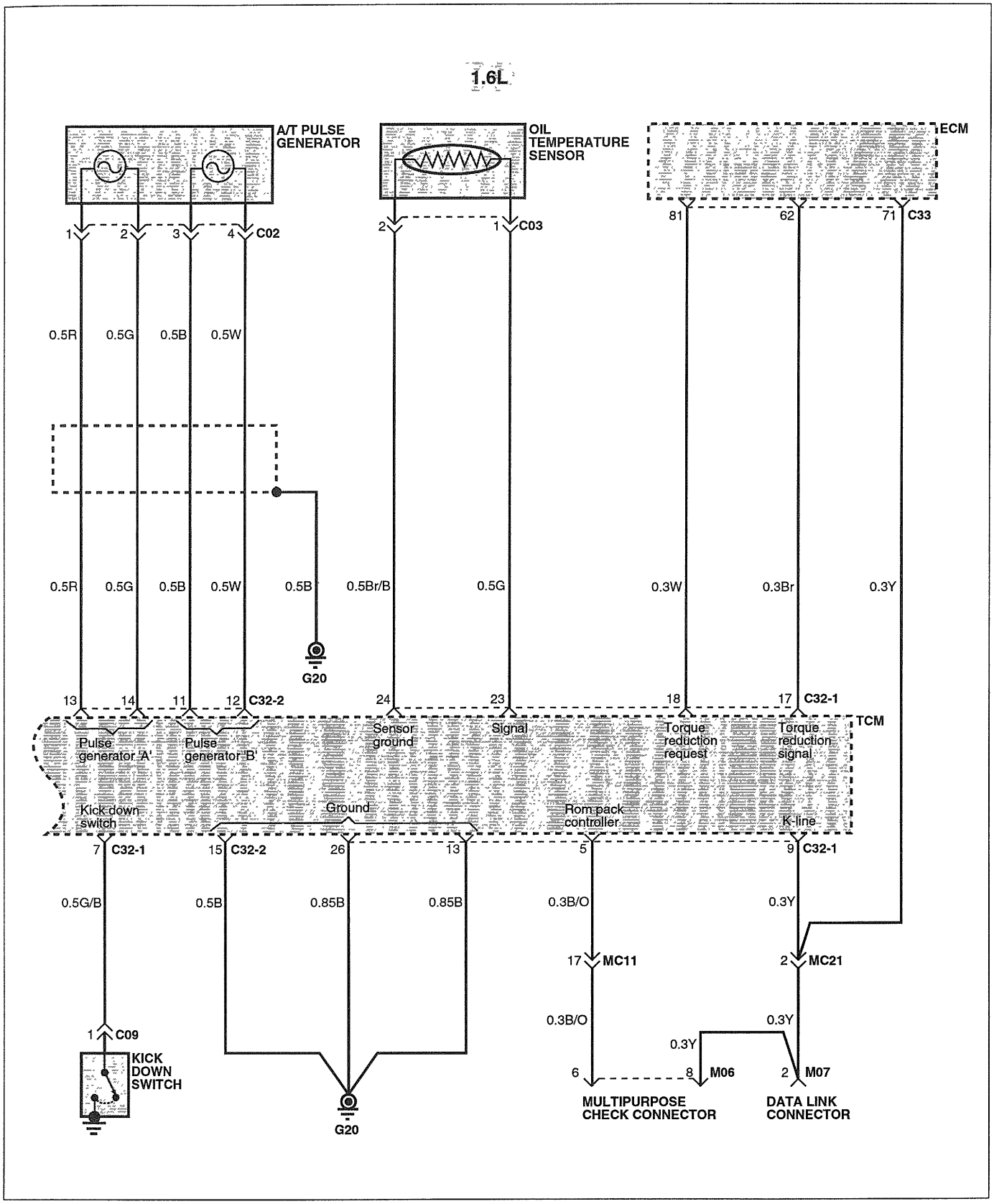

EKNB058B

TCM (3)

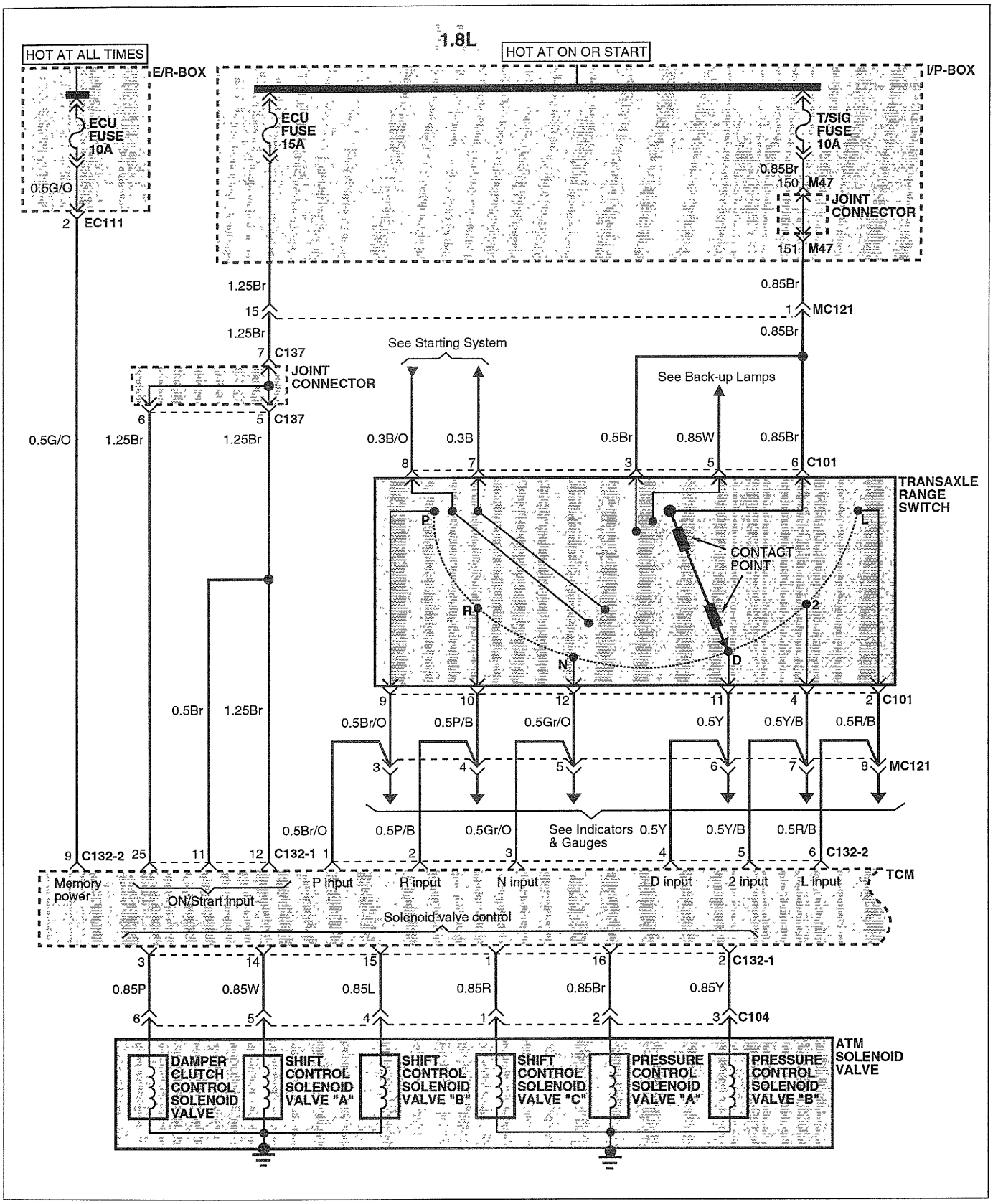

EKNB058C

TCM (4)

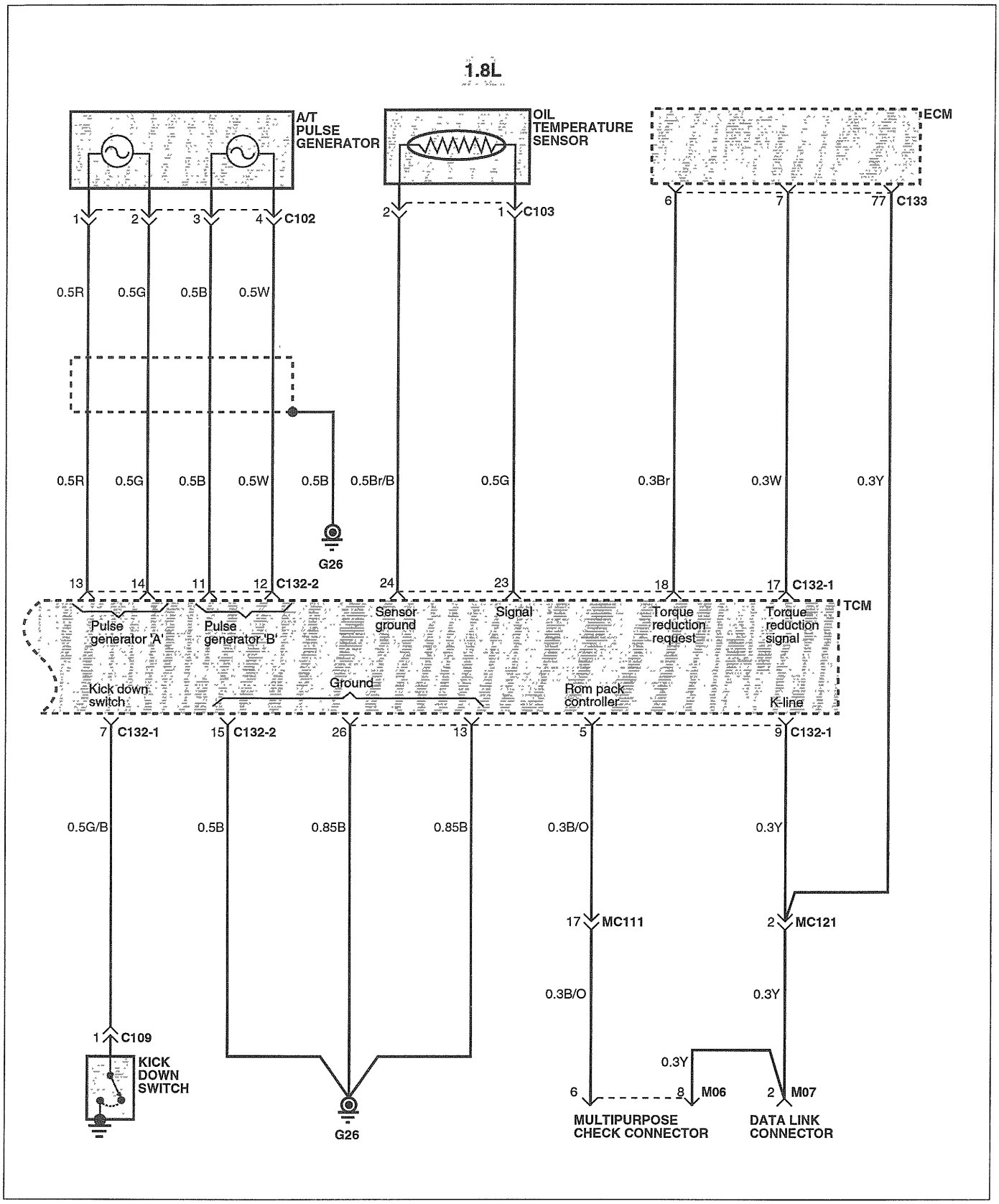

EKNB058D

TCM (5)

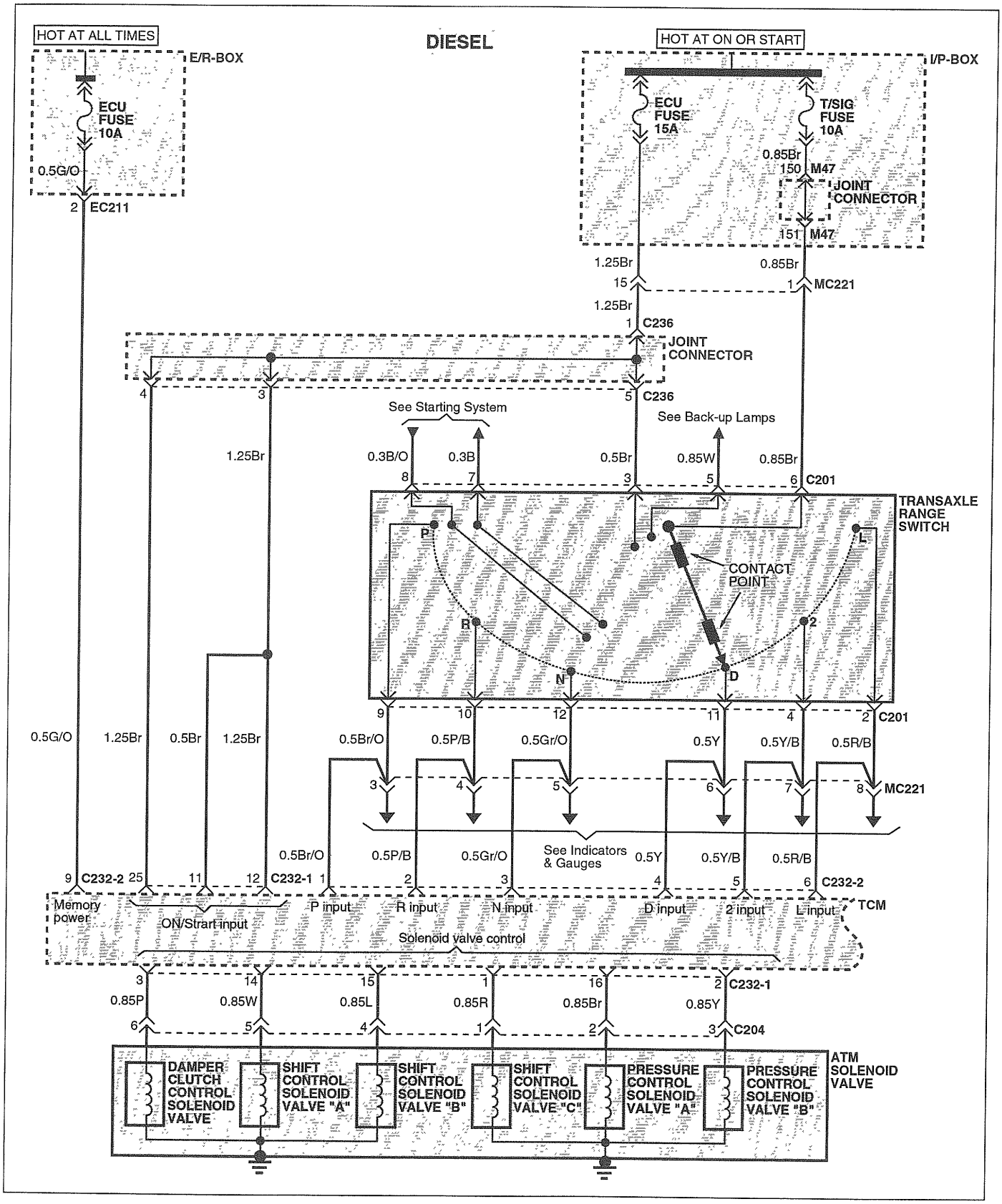

EKNB058E

TCM (6)

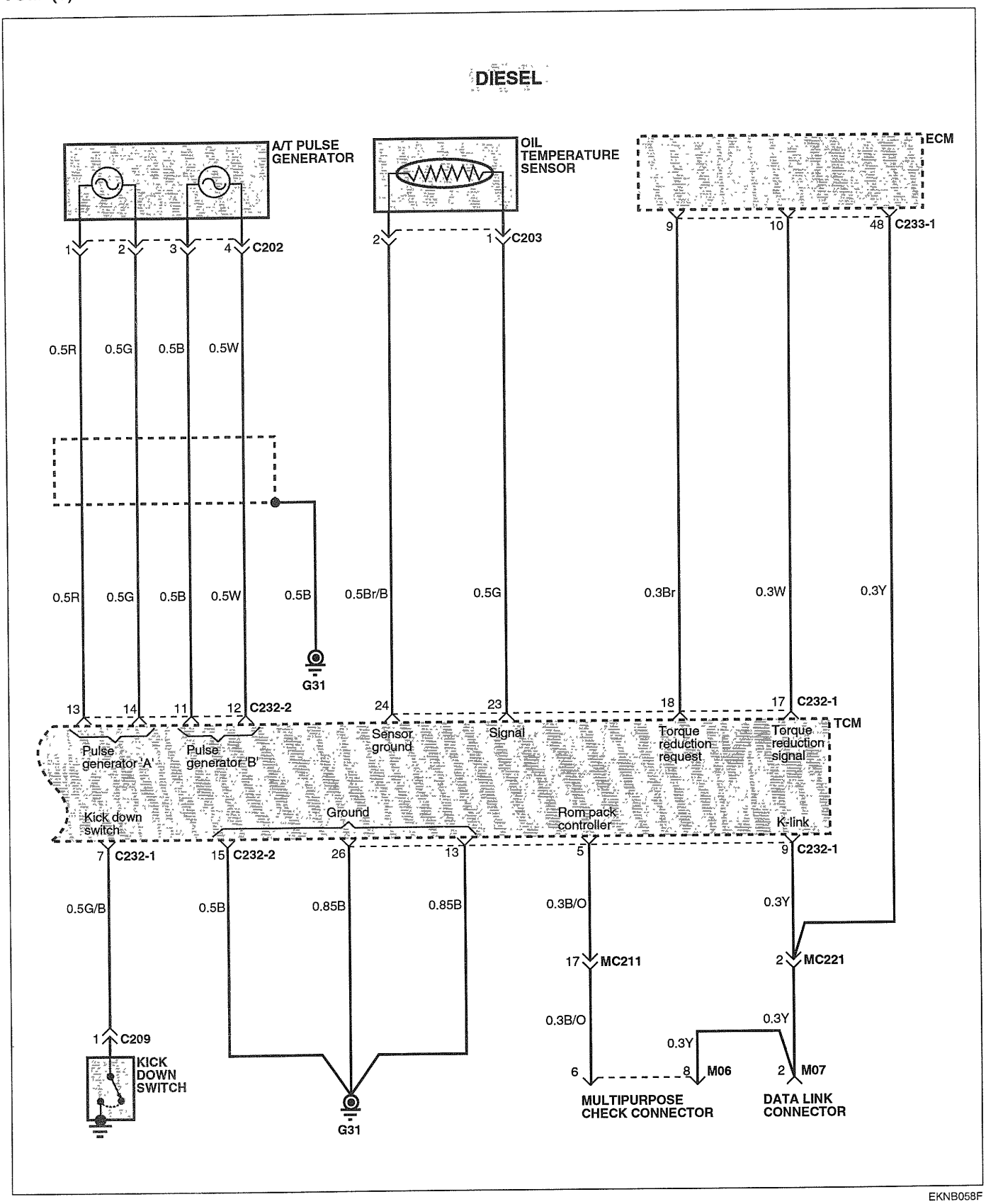

EKNB058F

TRANSAXLE OVERHAUL (A4AF3, A4BF2) EKNB0650

Automatic transaxle overhaul section have been separated from the shop manual.
A4AF3 like a A4BF2 overhaul section were included in the overhaul manual.

A4AF3 and A4BF2 are almost same in the overhaul except the gear ratio etc.
So, we describe the major contents of the A4AF3 and A4BF2 model in overhaul parts.

THRUST BEARING (4,6,8,9,11,12,13), THRUST RACE (3,7,10), THRUST WASHER (1,2,5)

O.D	I.D	Thickness	Code No.	O.D	I.D	Thickness	Code No.
70	55.7	1.4	#1	48.1	34.4	-	#4
70	55.7	1.8		40	21	2.4	#5
70	55.7	2.2		42.6	28	2.5	#6
70	55.7	2.6		54	38.7	1.6	#7
70	55.7	1.8	#2	52	36.4	2.8	#8
48.9	37	1.0	#3	41	28	2.0	#9
48.9	37	1.2		39	28	1.2	#10
48.9	37	1.4		38	22.2	-	#11
48.9	37	1.6		52	36.4	2.8	#12
48.9	37	1.8		58	44	5.0	#13
48.9	37	2.0					
48.9	37	2.2					
48.9	37	2.4					

Unit : mm

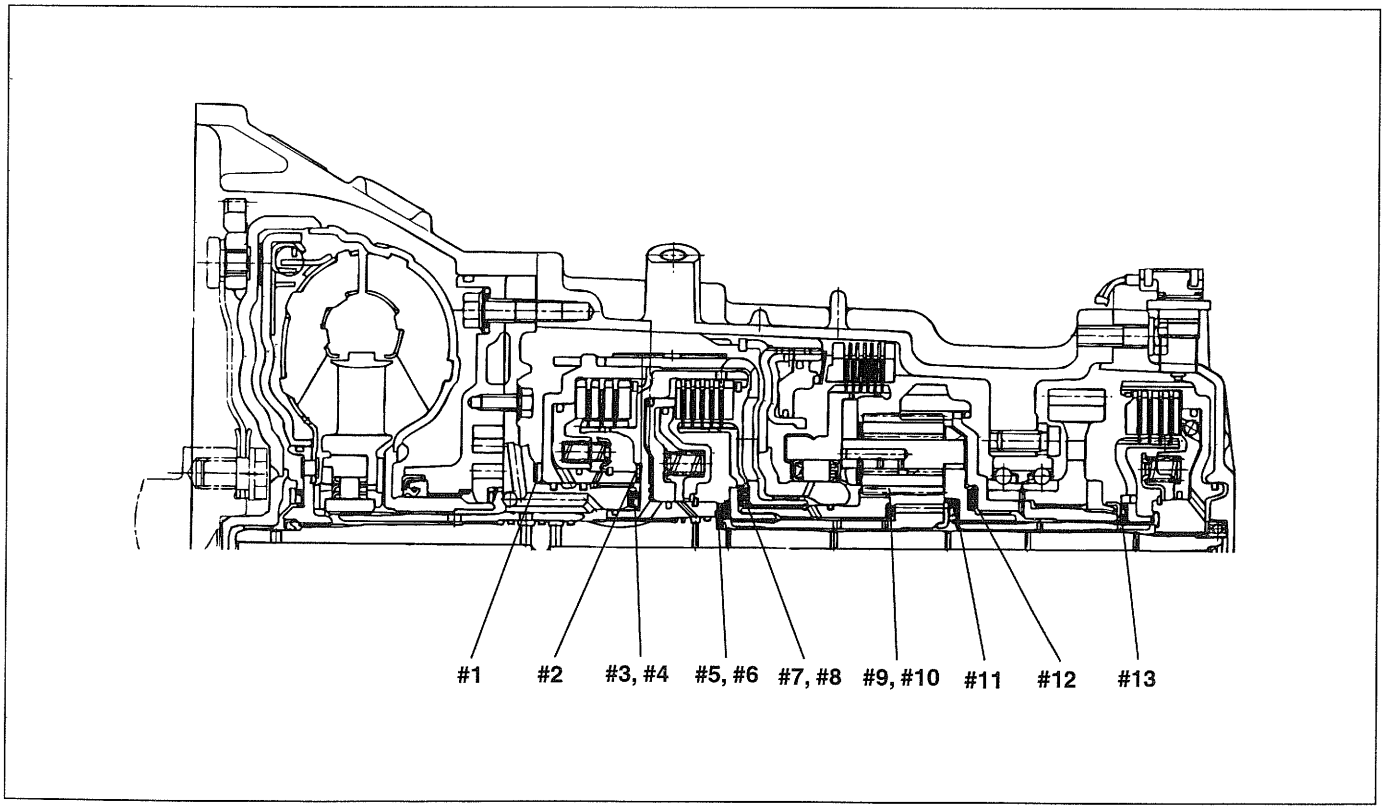

KKNA019A

END CLUTCH

COMPONENTS

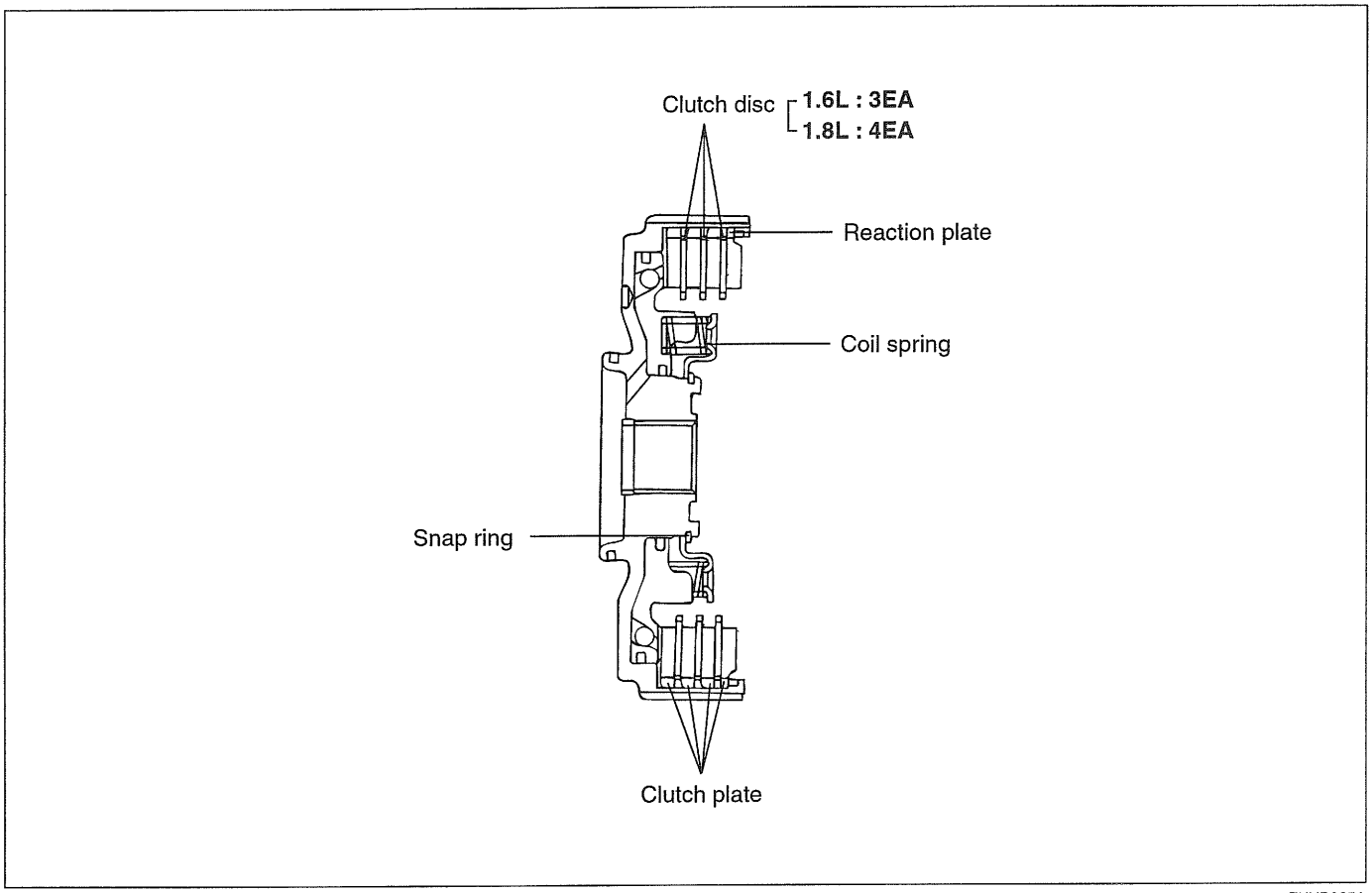

EKNB065A

FRONT CLUTCH

COMPONENTS

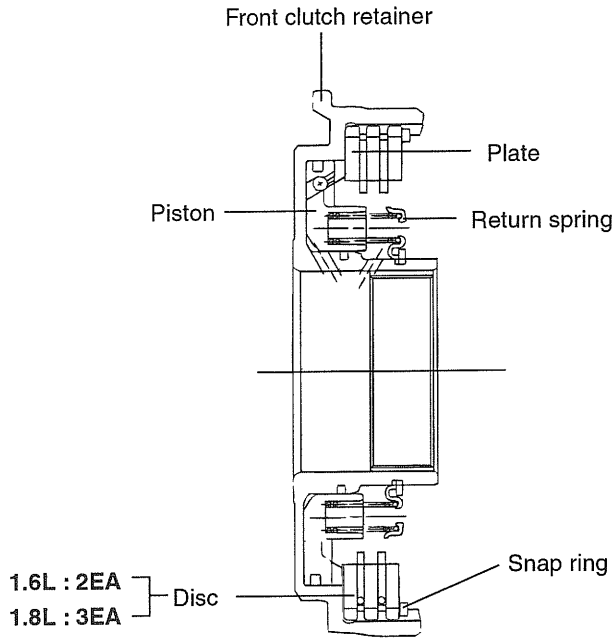

EKNB065B

REAR CLUTCH

COMPONENTS

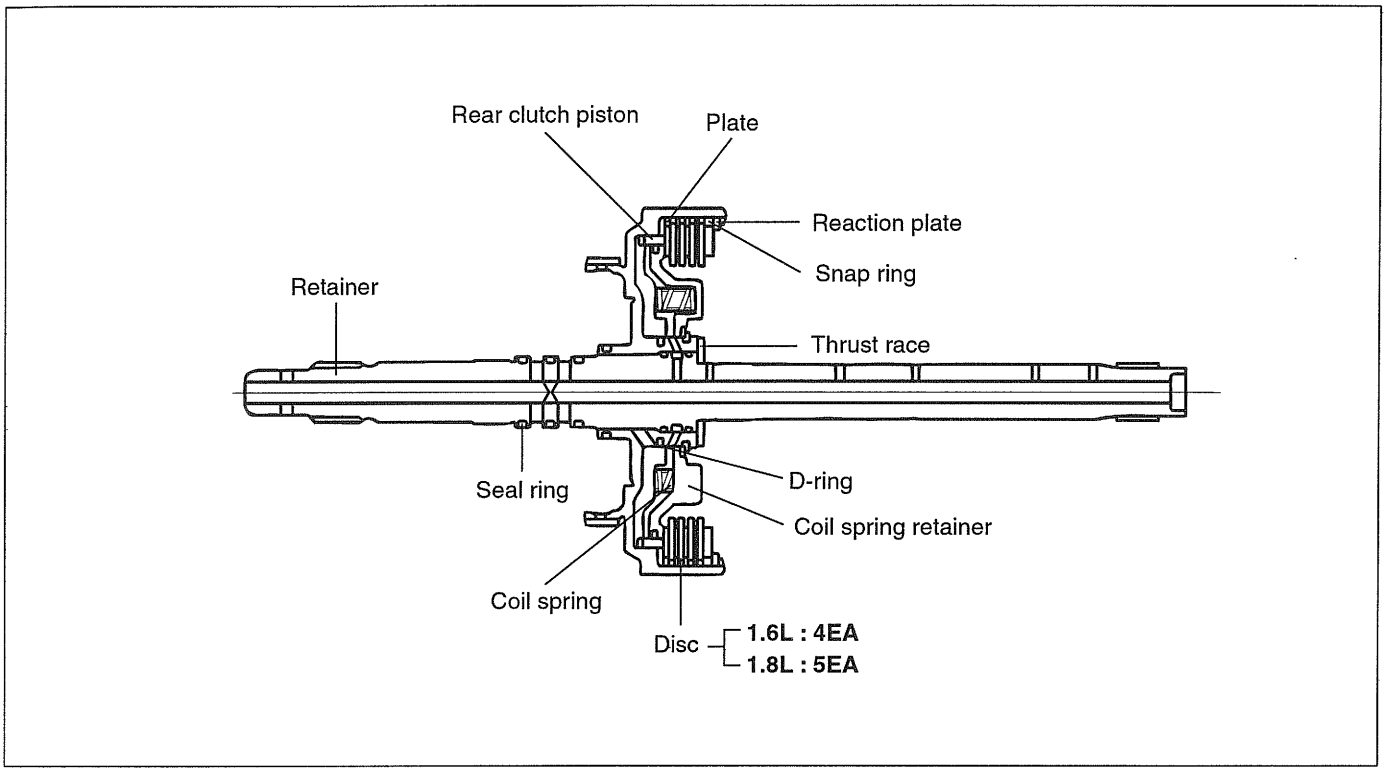

EKNB065C

VALVE BODY

Upper Valve Body

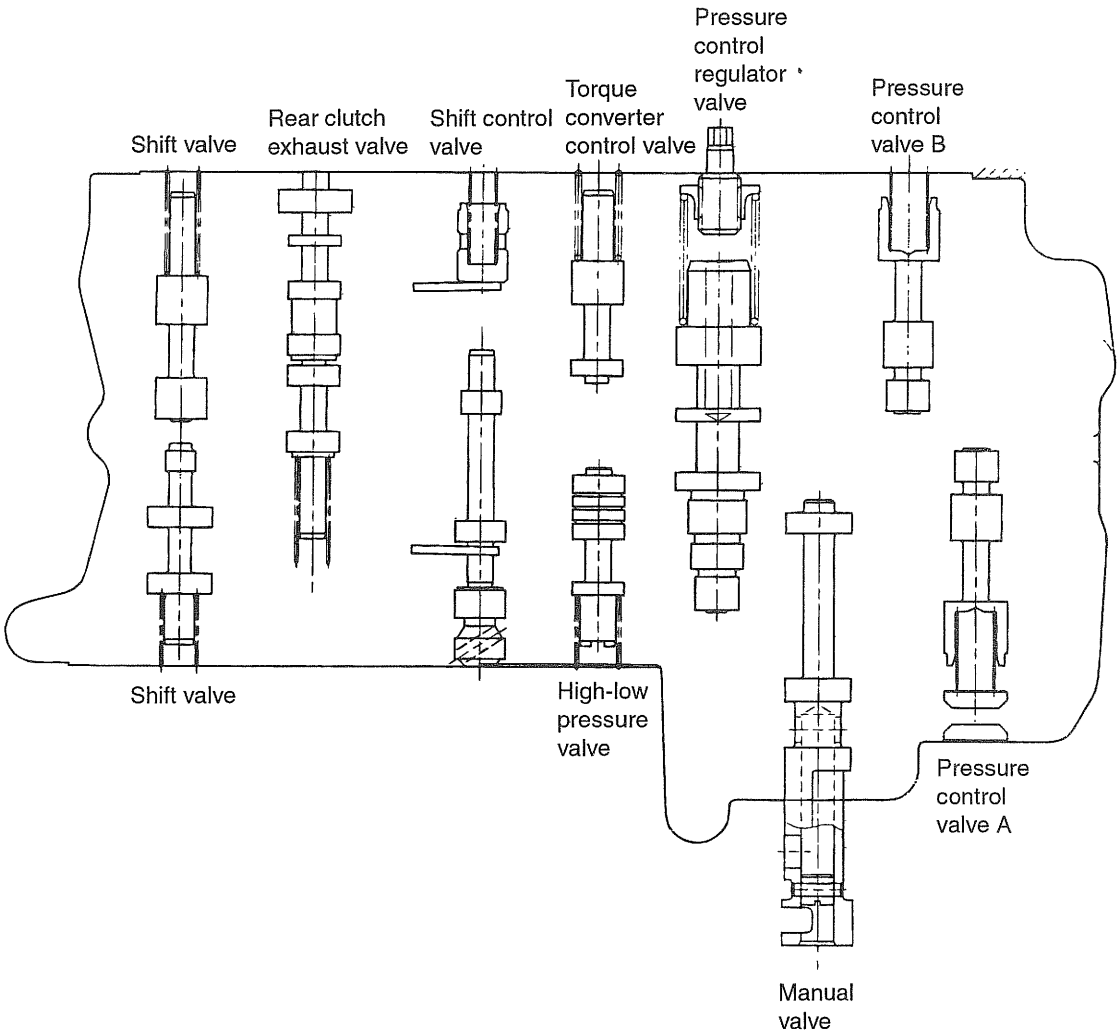

EKNB065D

Lower Valve Body

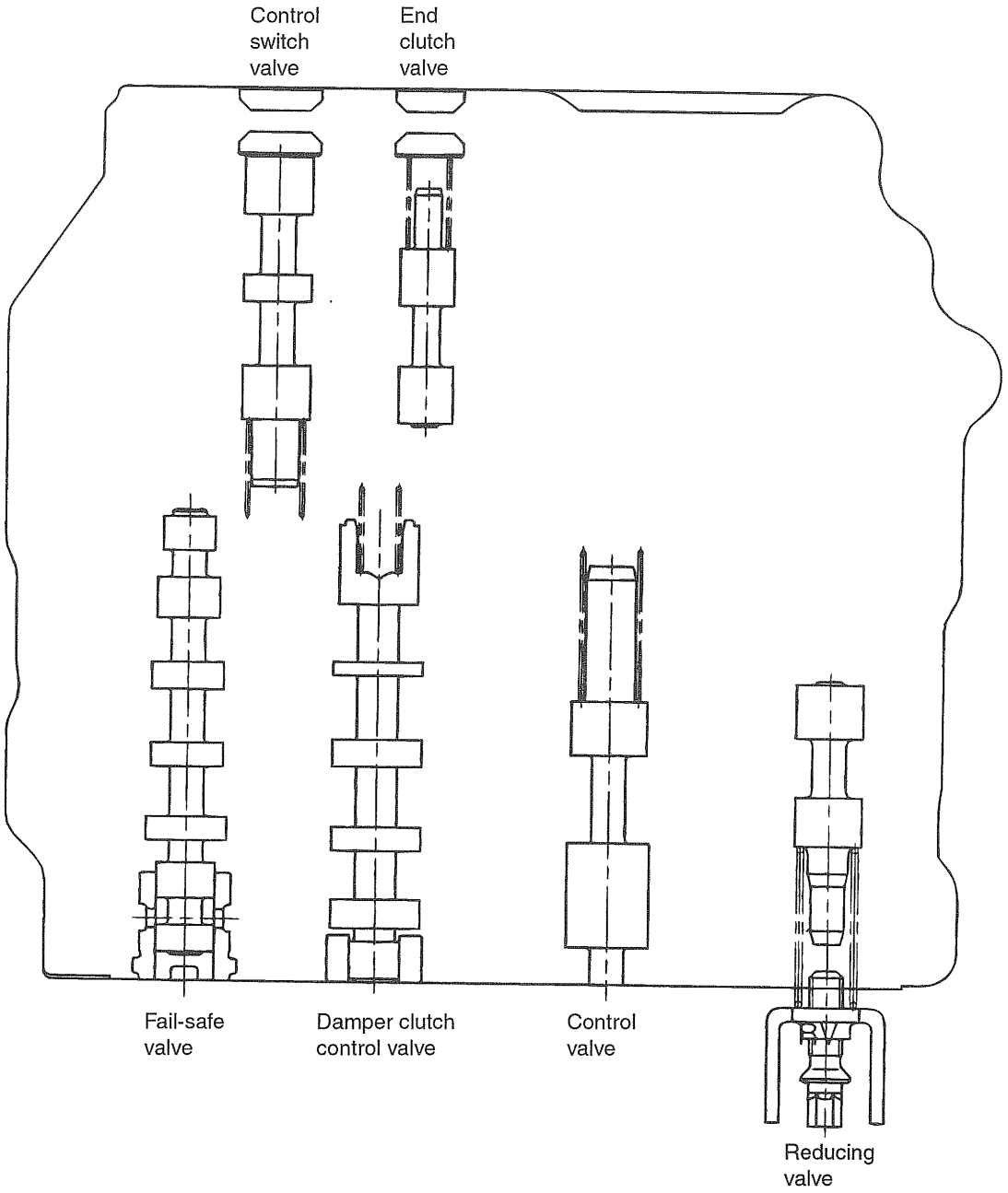

EKNB065E

AUTOMATIC TRANSAXLE

COMPONENTS EKNB0150

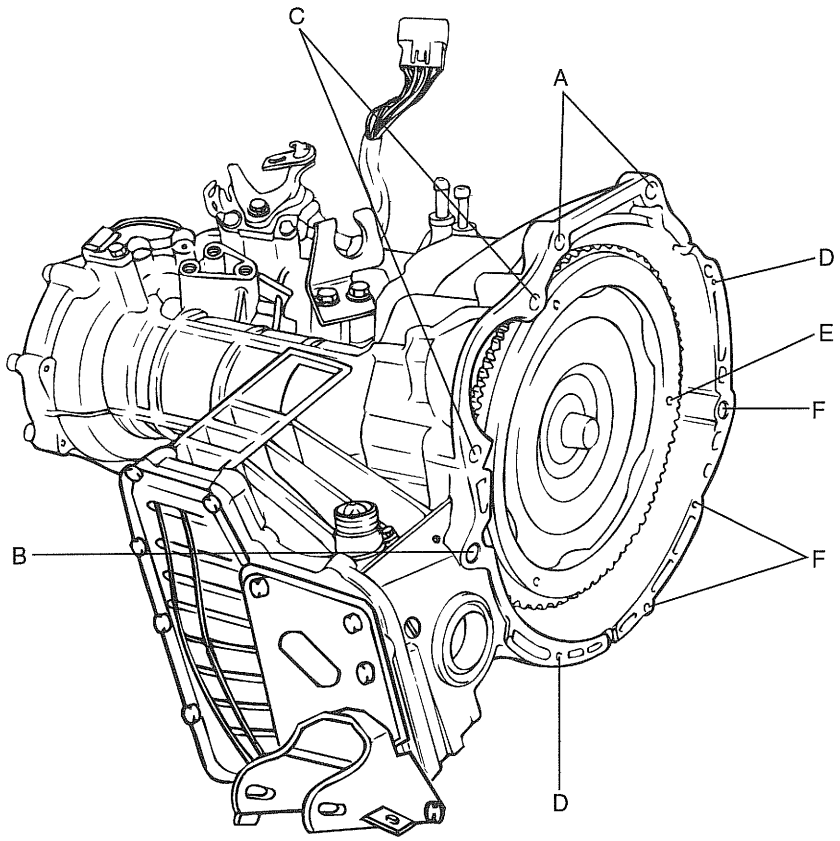

KKKA015A

	Torque (kg·m)	O.D x Length (mm)	Identification Mark
A	6~8	[7] 12x40	[7] AxB
B	4.3~5.5	[7] 10x70	
C	2.7~3.4	[7] 10x55	
D	0.8~1.0	[7] 6x10	
E	4.6~5.3	[7] 10x11	

EKNB015A

REMOVAL EKNA0160

1. Disconnect the battery terminal(-) and the connectors.
2. Remove the shift cable.
3. Separate the oil cooler hose for the transaxle.

NOTE

To prevent entry of dust or foreign matter, plug the disconnected hoses and tranxaxle fittings.

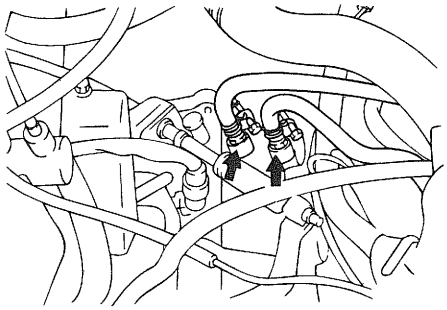

EKDA037B

4. Remove the tire.
5. Separate the front brake caliper.
6. Remove the side cover.
7. Remove the nut of the tie-rod.
8. Remove the knuckle mounting bolt of the front strut.
9. Drain the transaxle oil.
10. Separate the drive shaft.
11. Remove the center member.

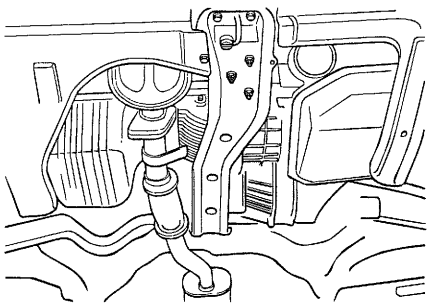

KKNA020A

12. Remove the front and rear mounting bracket.

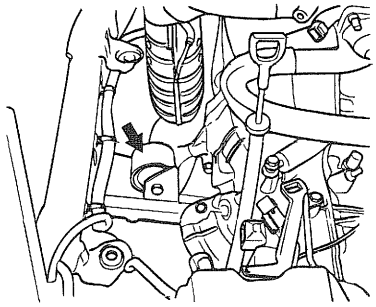

KKNB016B

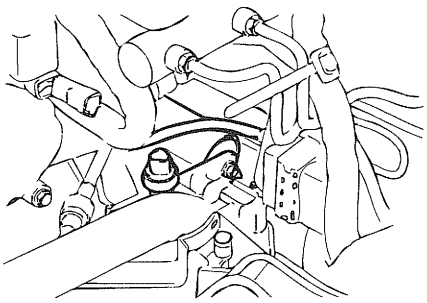

KDNB002D

13. Remove the lower mounting bolt.
14. Remove the cowl under cover.

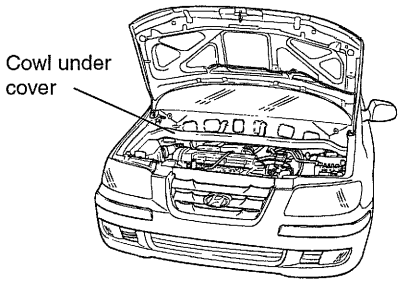

EKNA016A

15. Install the engine fixture.

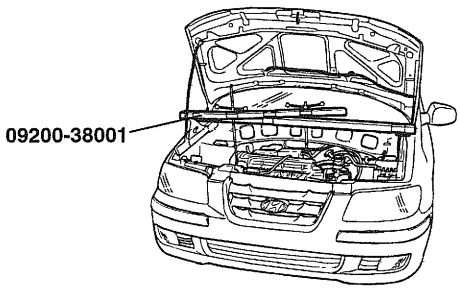

EKNA016B

16. Remove the transaxle side mounting bracket insulator.

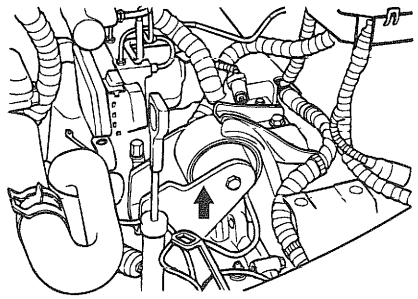

KKNB016C

17. Remove the transaxle upper mounting bolt.

18. Remove the transaxle assembly.

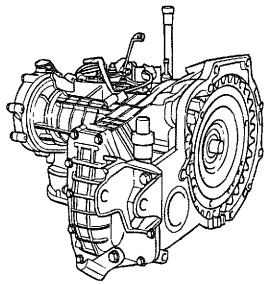

KKNA007A

INSTALLATION EKNB0380

1. Attach the torque converter on the transaxle side and mount the transaxle assembly onto the engine.

⚠ ***CAUTION***

If the torque converter is mounted on the engine first, the oil seal on the trasaxle side may be damaged. Therefore, be sure to first assemble the torque converter to the transaxle.

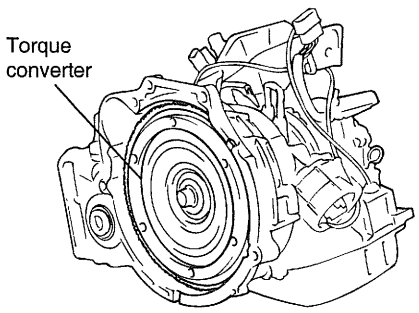

EKDA038A

⚠ ***CAUTION***

1. ***Engine and transmission mounting insulators should be installed by the specified order.***
2. ***Mounting bracket installation order :***
   1) ***Engine mounting bracket.***
   2) ***T/M mounting bracket.***
   3) ***Rear roll stopper mounting bracket.***
   4) ***Front roll stopper mounting bracket.***
3. ***Especially, when installing the front roll stopper mounting bracket, be careful not to crush the insulator. If crushed, idle vibration may occur.***

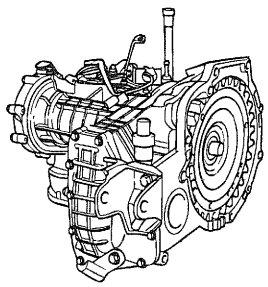

KKNA007A

SHIFT LEVER

COMPONENTS EKNA0590

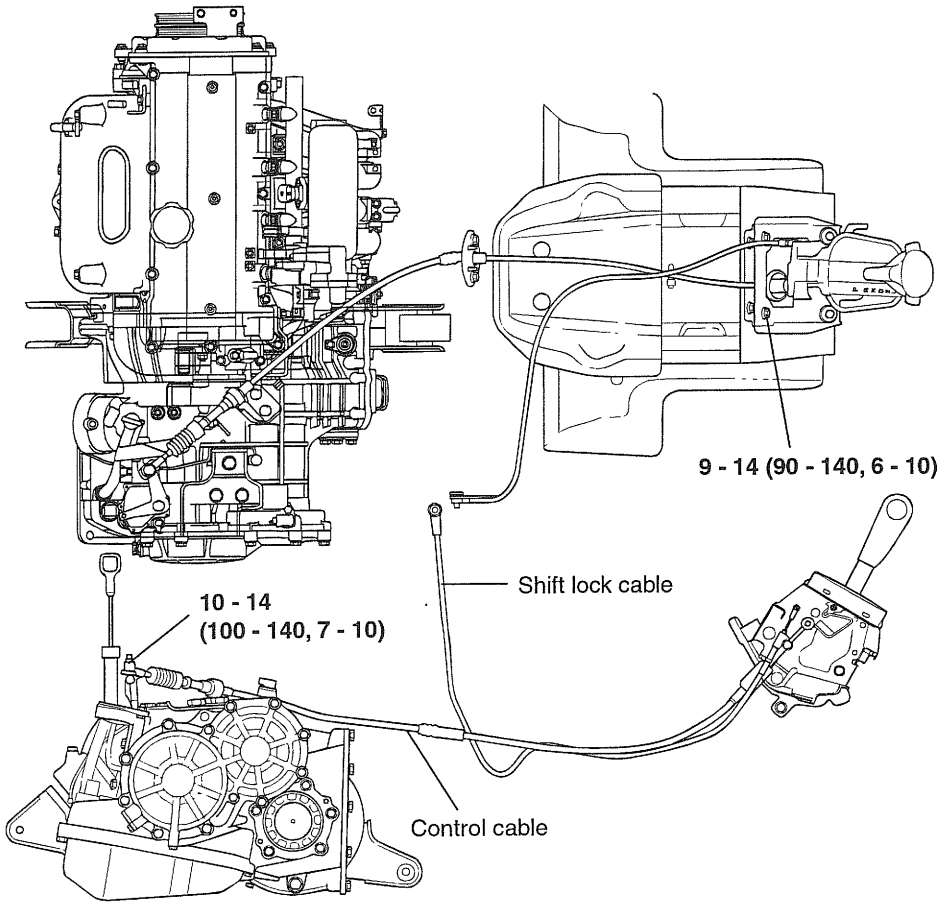

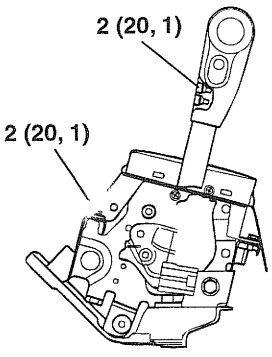

KKNB063A

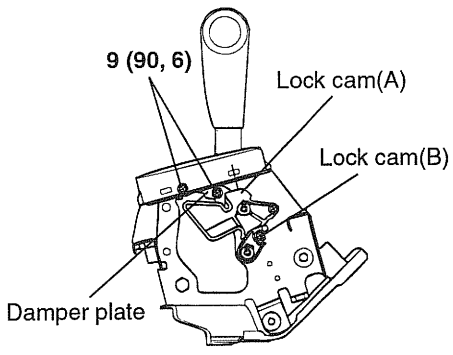

KKNB063B

N·m (kg·cm, lb·ft)

EKNA059A

REMOVAL EKNB0600

1. Remove the console upper cover.

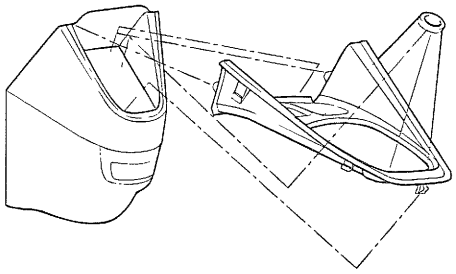

KSNB008G

2. Remove the console assembly.

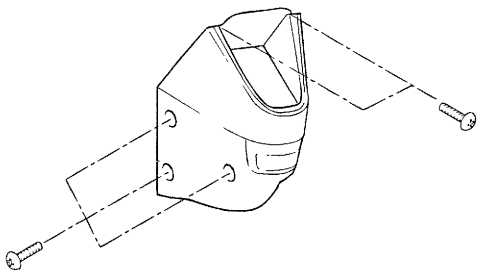

KSNB008H

3. Remove the screw of the knob.
4. Remove the overdrive switch connector and the knob.

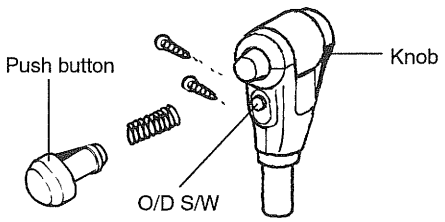

EKNB060A

5. Remove the pin.
6. Remove the shift lock and the key lock cable.
7. Remove the transaxle control cable.

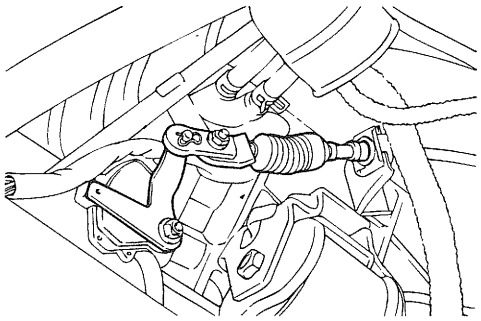

EKDA030F

INSPECTION EKNB0310

- Check the detent for wear.
- Check the bushing for wear or damage.
- Check the spring for damage or deterioration.
- Check the pin at the end of the rod assembly for wear.

SHIFT LOCK DEVICE INSTALLATION

NOTE

When servicing the shift lock device, follow the service instructions and procedures described below to ensure proper operation.

1. **Procedure to install the lock cam.**
   a. Move the P-lock cam to direction “A” and hold it by hand (Refer to figure 1).
   b. Check that the key lock cam is located at “B” by detent pin (Refer to figure 1,2).

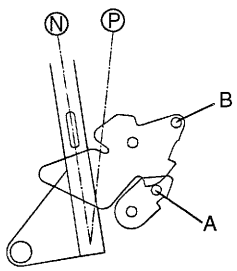

<FIG. 1>

EKNB031A

2. **Procedure for adjusting the shift lock and key lock cable.**
   a. Check that each lock cam is located in position as shown in figure 2.

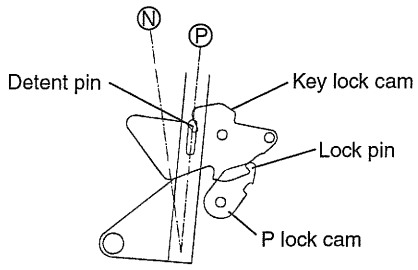

<FIG. 2>

EKNB031B

   b. Install the shift lock cable and key lock cable in position. In this case, the key lock cable must be fixed to the key cylinder and the shift lock cable must be fixed to the brake pedal in position.
   c. Temporarily install each cable to the A/T lever assembly as shown in figure 3. Securely insert the cable into the fixing pin of each cam.

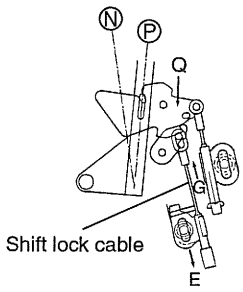

<FIG. 3>

EKNB031C

   d. Keep a gap of 0-0.5mm between the key lock cam and the P-lock cam to eliminate cable slack by pulling the shift lock cable slightly in the direction of "E" (Refer to figure 3).

⚠ ***CAUTION***

If the gap is not maintained between 2 and 4mm, the brake pedal will have to be depressed more than required when operating the push button of the shift lever.

   e. After checking that a portion of the cable end touches cable fixing pin of the P-lock cam, fix the shift lock cable to the A/T lever with the nut and fix the shift lock cable end with the washer and snap pin (Refer to figure 4).
   f. Slightly push the key lock cam in the direction of "Q".
   g. Performing the work of 6, slightly pull the key lock cable in the direction of "G" to stretch the cable tight and then fix it with a nut (Refer to figure 3, 4).
   h. Be sure to check whether the key lock cable is inserted into the fixing pin of the key lock cam, and then fix it with the washer and snap pin. At this time, check if the P-lock cam is fixed to the shift lock cable as shown in the figure 4.

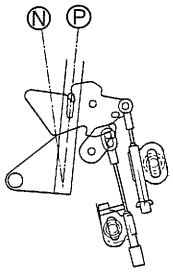

<FIG. 4>

EKNB031D

3. **Procedure for checking for correct shift lock installation.**
   a. When the brake pedal is not depressed the, push button of the shift lever in the "P" position cannot operate (shift lever cannot shift to other positions from "P"). Push button can be operated at other positions, except "P".
   b. When the brake pedal stroke is 15-25mm (with shift lever in the "P" position), push button should operate without catching and the shift lever can shift smoothly out of "P".
   c. When the brake pedal is not depressed, the shift lever should be shift smoothly to the "P" position from other positions.
   d. Brake pedal must operate smoothly without catching in all positions.
   e. When the ignition key is at the "LOCK" position, although brake pedal is depressed, the push button should operate.
   f. Ignition key must not turn to the "LOCK" position, except when in"P" position.
   g. If the shift lever is shifted to the "P" position, the ignition key must be able to turn to the "LOCK" position smoothly.

4. **Caution in service.**
   a. Keep the gap of 0-0.5mm between the key lock cam and p-lock cam by pulling the shift lock cable in the direction of "E" slightly, and then fix the cable with a nut. After this, be sure to check that the gap is within 0-0.5mm.

📖 ***NOTE***

If the gap is not maintained between the brake pedal will have to be depressed more than required in order to shift the lever from "P" to other positions.

b. Be sure that the key lock cable slack is eliminated.

NOTE

If slack in the key lock cable is not eliminated, the ignition key cannot be removed from the key cylinder and the shift lever will be able to shift from "P" to other positions, although the key is in the "LOCK" position.

c. Before and after the relating work, the key lock cam and P-lock cam should not be in the same condition as the figure 5 and 6.

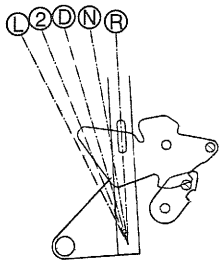

<FIG. 5>

EKNB031E

NOTE

When the key lock cam and P-lock cam are in the same condition as the figure 5, shifting the shift lever from D, 2, L positions to P, R, N by force may cause a malfunction of related parts. Under the condition in figure 5, shift the shift lever from D, 2, L to P, R, N after rotating the P-lock cam in the direction of "A".
Under the condition in figure 6, shift the shift lever from D, 2, L to P, R, N after rotating the P-lock cam in the direction of "A" the depressing the brake pedal.

KEY INTERLOCK DEVICE INSTALLATION

It is expected that the ignition key may not be removed from the key cylinder due to misassembly of the key inter lock cable. To prevent this problem, apply the following installation instructions when servicing.

1. **Assembly of key interlock cable and ignition lock.**
   a. The Ignition lock assembled to the steering column. Set the ignition lock to the lock position.
   b. Assemble the key interlock cable and the ignition lock with the set screw.

2. **Assembly of key interlock cable and shift lever.**
   a. Set the shift lever to the "P" position.
   b. After setting the key interlock cable as shown in the figure 6, temporarily assemble the key inter lock cable with a M8 nut just enough to move the key interlock cable plate by its spring force.

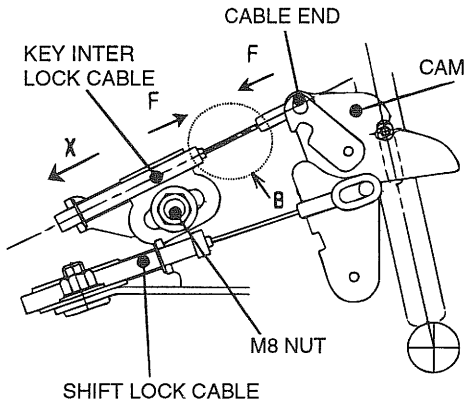

<FIG. 6>

EKNB031F

c. Holding the cable and the key inter lock cable plate, push them into the direction of "F" so as not to create any bending or slack on the "B" point of the key inter lock cable.

NOTE

Do not pull the cable in the direction of "X" to remove the slack. This may cause key not to remove from the key cylinder.

d. Tighten the key inter lock cable with a M8 nut.

MANUAL TRANSAXLE SYSTEM

TRANSAXLE OVERHAUL (M5BF2) EMNB0680

Manual transaxle overhaul section have been separated from the shop manual.

M5BF1 like a M5BF2 overhaul section were included in the overhaul manual.
M5BF1 and M5BF2 are almost same in the overhaul except the gear ratio etc.
So, we describe the major contents of the M5BF2 model in overhaul parts.

SECTION VIEW

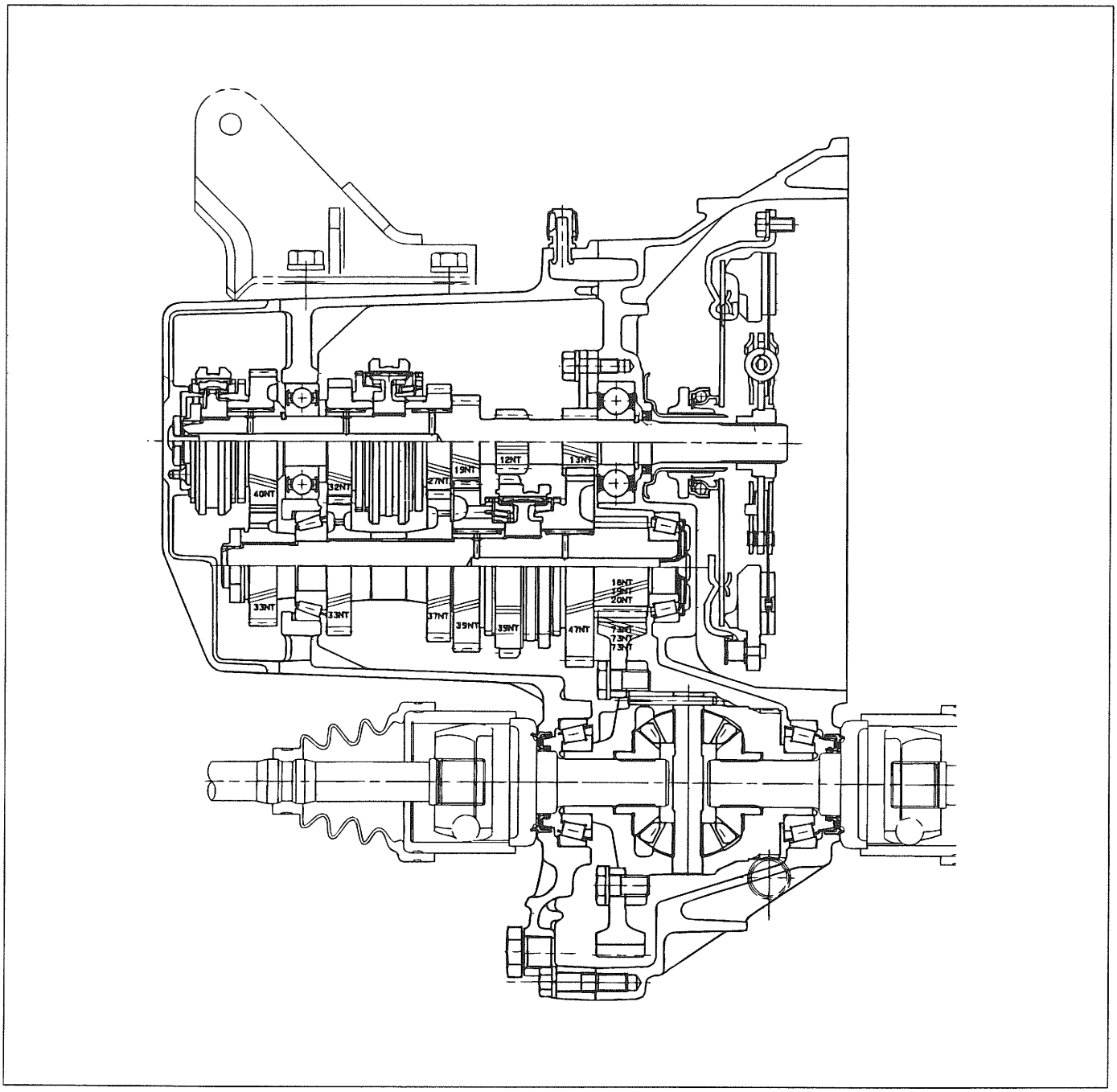

EMKA001A

INPUT SHAFT

COMPONENTS

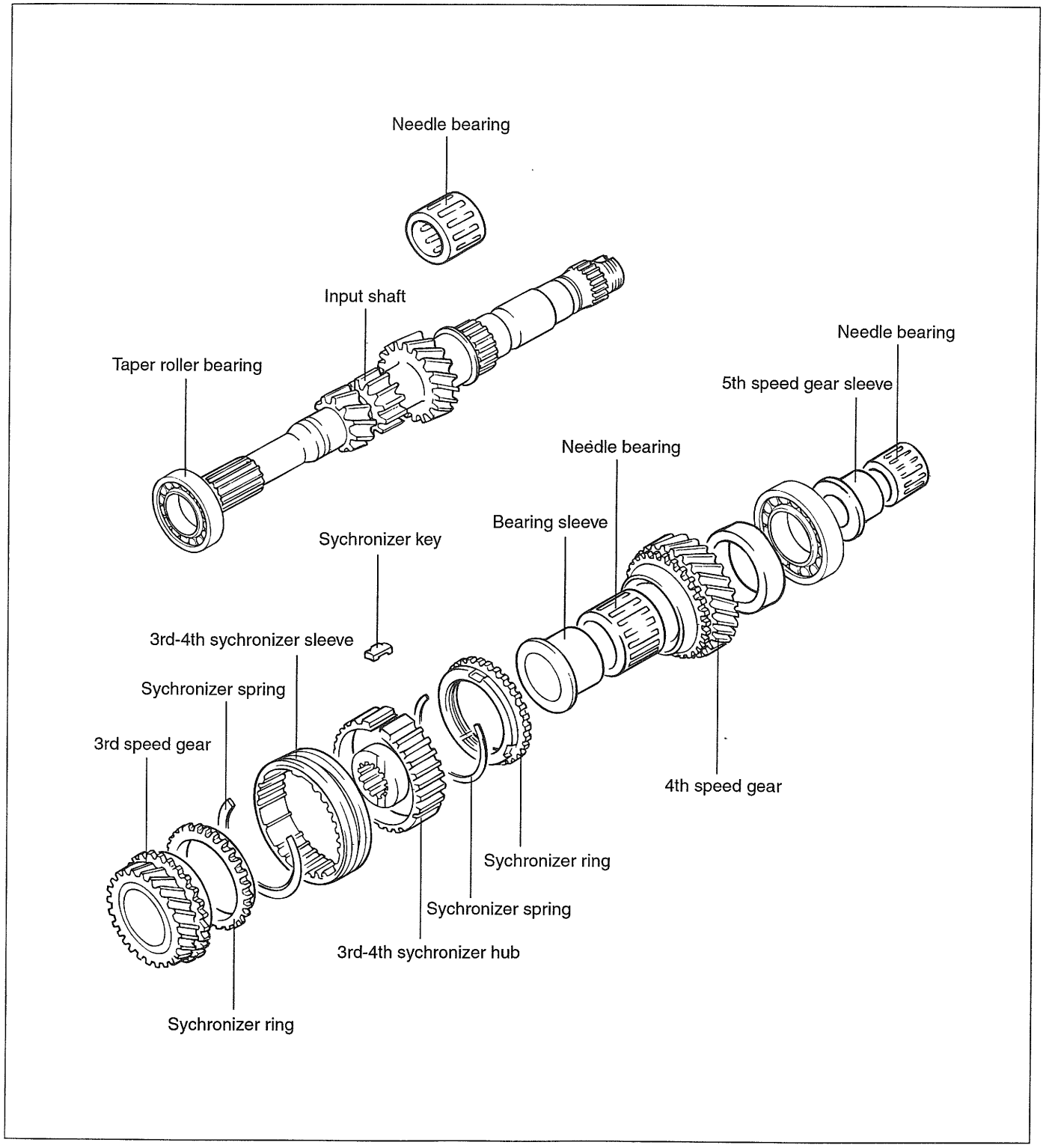

EMNB068A

OUTPUT SHAFT

COMPONENTS

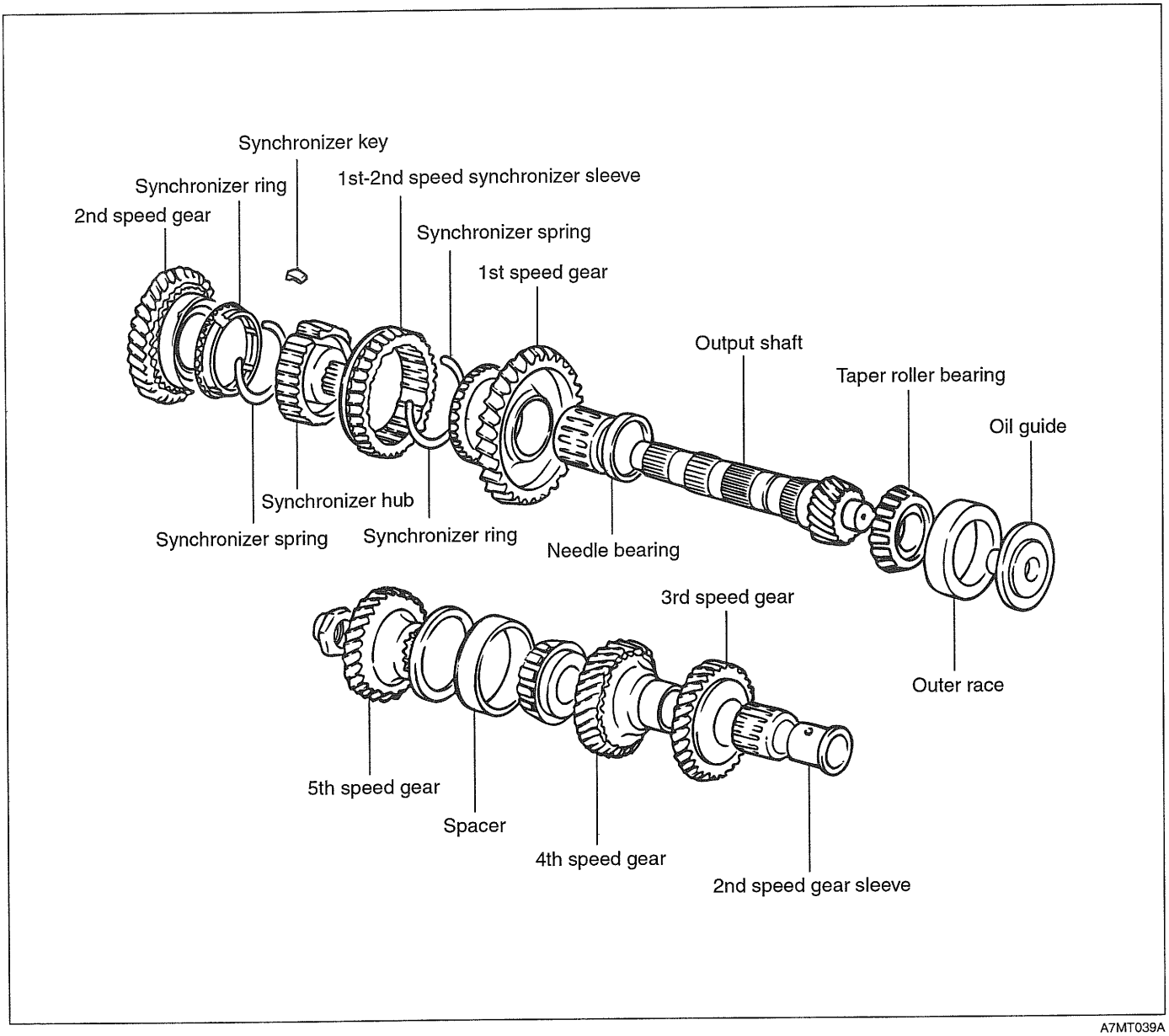

A7MT039A

MANUAL TRANSAXLE

SERVICE ADJUSTMENT PROCEDURES

EMNB1030

TRANSAXLE GEAR OIL LEVEL INSPECTION

Inspect transaxle for evidence of leakage. Check the gear oil level by removing the filler plug. If the oil is contaminated, it is necessary to replace it with new oil.

1. Remove oil filter plug and check level with finger.
2. Oil level must be up to the fill hole. If it is below the hole, add oil until it runs out, then reinstall the plug.
3. Replace the oil if the transaxle gear oil is noticeably dirty, or it is not of a suitable viscosity.

REPLACEMENT OF TRANSAXLE GEAR OIL

Use HP Gear Oil SAE 75W/90 (API-GL-4).

1. With the vehicle parked on a level surface, remove the drain plug and drain the transaxle oil.
2. Replace the gasket with a new one and install the drain plug.

Tightening torque:
Drain plug : 30-35 Nm (300-350 kg·cm, 22-25 lb·ft)

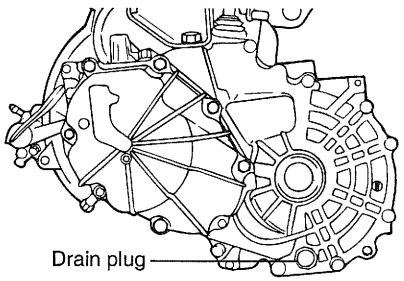

EMDA003A

3. Add new oil the through the filler plug, filling to a level of 5-9mm (0.2-0.4 in.) below the plug opening.

Transaxle oil total capacity :
2.15 liters (2.27 u.s.qts., 1.89 Imp.qts.)

Tightening torque:
Filler plug : 30-35 Nm (300-350 kg·cm, 22-25 lb·ft)

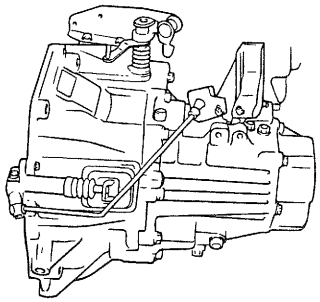

EMDA003B

DRIVE SHAFT OIL SEAL REPLACEMENT

1. Disconnect the drive shaft from the transaxle (Refer to DS GROUP).
2. Using a flat-tip screwdriver, remove the oil seal.

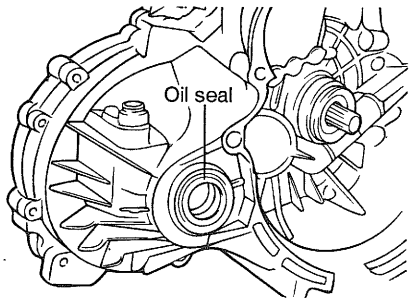

EMDA003C

3. Using the special tool (09431-21200) name, tap the drive shaft oil seal into the transaxle.
4. Apply a coating of gear oil to the lip of the oil seal.

Transaxle gear oil :
HYUNDAI GENUINE PARTS MTF 75W/90
conforming to API GL-4 or higher

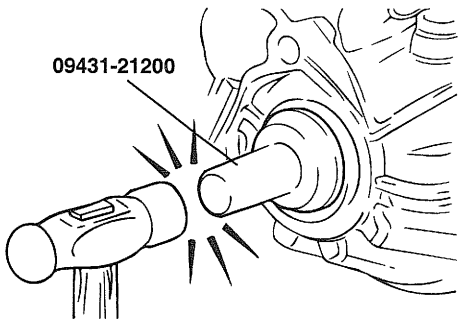

EMDA003D

COMPONENTS EMDA0110

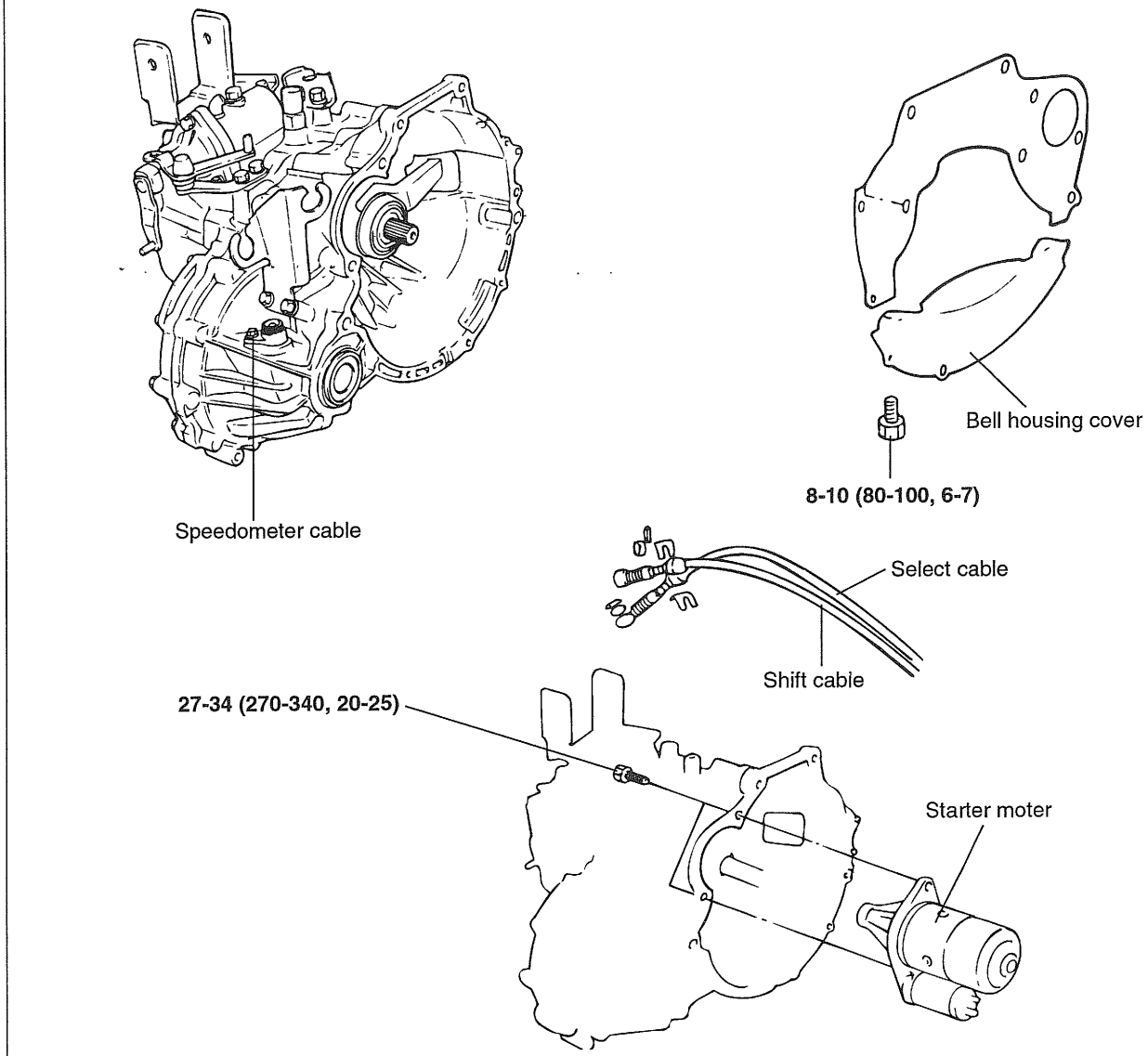

TORQUE : Nm (kg·cm, lb·ft)

EMDA011A

REMOVAL EMNB0160

1. Remove the battery terminal(-) and the connectors.
2. Remove the shift cable and the select cable.
3. Remove the clutch release cylinder.
4. Remove the tire.
5. Separate the front brake caliper.
6. Remove the side cover.
7. Remove the nut of the tie-rod.
8. Remove the front strut knuckle mounting bolt.
9. Drain the transaxle oil.
10. Separate the drive shaft.

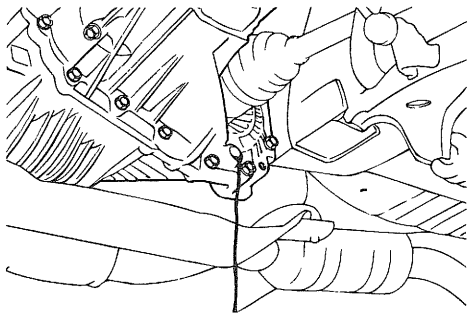

R7MT015C

11. After removing the center member, remove the front and rear mounting bracket of the transaxle.

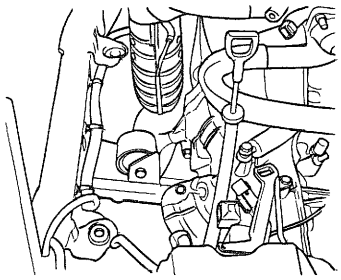

KDNB002C

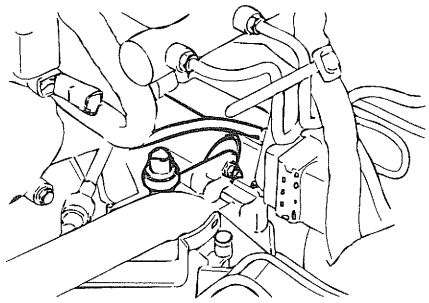

KDNB002D

12. Remove the lower mounting bolt.
13. Install the engine fixture.

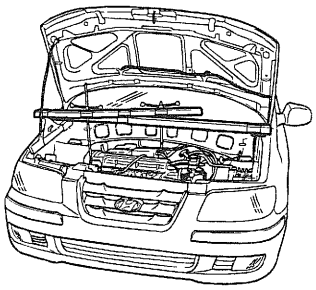

KKNB016A

14. Remove the transaxle side mounting bracket.

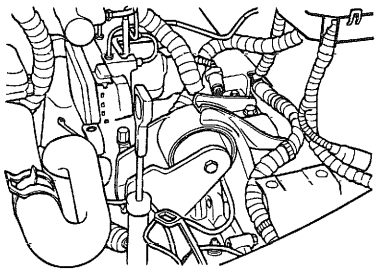

KDNB002B

15. Remove the transaxle upper mounting bolt.
16. Remove the transaxle assembly.

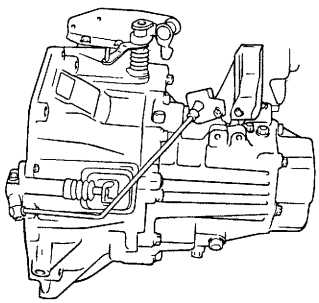

A7CH011A

INSTALLATION EMDA0130

1. Installation is the reverse of removal.

SHIFT LEVER

COMPONENTS EMNB0080

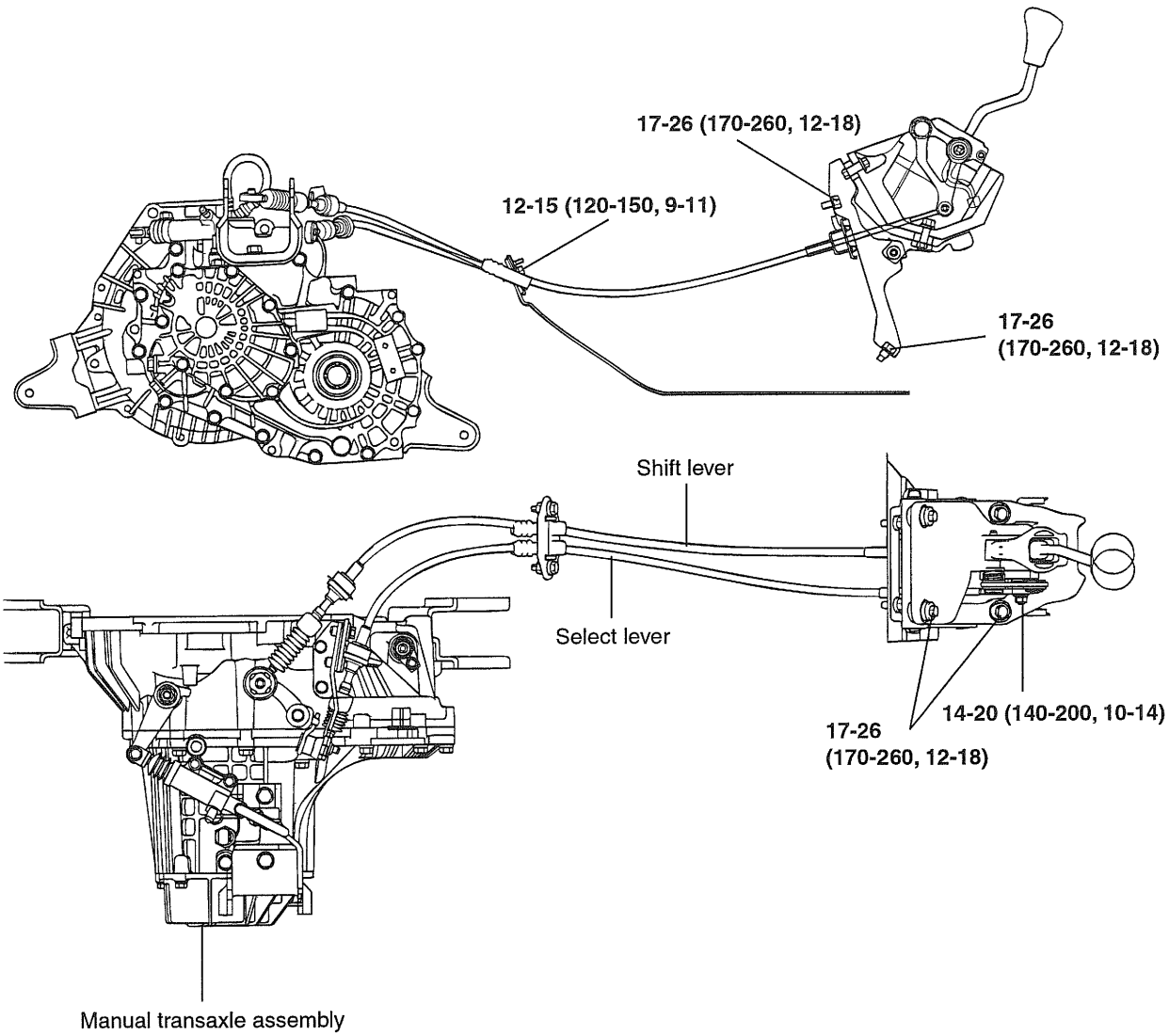

TORQUE : N·m (kg·cm, lb·ft)

EMNB008A

REMOVAL EMDA0050

1. Remove the console assembly (Refer to CONSOLE).
2. Remove the cotter pins and clips (shift lever side).
3. Remove the shift lever assembly.
4. Remove the retainer and bolts.
5. Remove the cotter pins and clips (transaxle side).
6. Remove the shift cable and select cable.

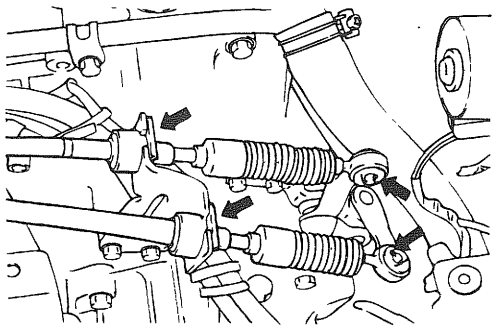

EMDA005A

INSPECTION EMDA0060

1. Check the select cable for proper operation and for damage.
2. Check the shift cable for proper operation and for damage.
3. Check the boot for damage.
4. Check each bushing for wear, abrasion , sticking, restricted movement or damage.
5. Check for a weak or damaged spring.

REASSEMBLY EMDA0070

1. Install the shift lever assembly.
2. Install of shift lever and select cable.

Driveshaft and Axle

GENERAL ..... DS - 2

DRIVESHAFT ..... DS - 6

FRONT AXLE ..... DS -11

REAR AXLE ..... DS -15

GENERAL

SPECIFICATIONS EINC0100

Driveshaft		
Joint type	1.6L M/T, A/T	1.8L M/T, A/T
Outer	B.J.	B.J.
Inner	T.J.	T.J.
Maximum permissible angle		
B.J.	45° or more	45.8° or more
T.J.	22.5° or more	23° or more
Hub end play mm (in.)	0.008 (0.0003) or less	
Wheel bearing starting torque Nm (kg·cm, lb·in)	1.8 (18, 16) or less	

B. J. : Birfield joint
T. J. : Tripod joint
M/T : Manual transaxle
A/T : Automatic transaxle

TIGHTENING TORQUE EINC0200

	Nm	Kgf·cm	lb·ft
Driveshaft nut	200-260	2200-2600	159-192
Knuckle to strut assembly nut	110-130	1100-1300	81-96
Lower arm ball joint to knuckle nut	60-72	600-720	44-53
Tie rod end to knuckle	16-34	160-340	12-25
Brake caliper to knuckle	69-85	690-850	51-63
Wheel nut	90-110	900-1100	66-81
Rear hub bearing flange nut	200-260	2000-2600	159-192
Rear brake to rear axle carrier mounting bolt	65-75	650-750	48-56
Rear strut to carrier nut	110-130	1100-1300	81-96
Trailing arm to rear axle carrier mounting nut	100-120	1000-1200	74-88
Rear suspension arm to rear axle carrier mounting nut	130-150	1300-1500	96-110

⚠ ***CAUTION***

Replace self-locking nuts with new ones after removal.

LUBRICANTS EINC0300

Items	Recommended	Quantity
B.J.87+T.J.87 Type driveshaft (For 1.6L M/T, A/T)		
B.J. boot grease	CENTOPLEX 278M/136K	95 ± 6gr.
T.J. boot grease	KLK T.J. 41-182	105 ± 6gr.
B.J.92+T.J.92 Type driveshaft (For 1.8L M/T, A/T)		
B.J. boot grease	CENTOPLEX 278M/136K	110 ± 6gr.
T.J. boot grease	KLK T.J. 41-182	120 ± 6gr.

SPECIAL TOOLS EIDA1400

Tool (Number and Name)	Illustration	Use
09495-33000 Puller	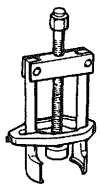 EIDA140A	Removal of wheel bearing inner race from the hub.
09495-33100 Center bearing remover and installer	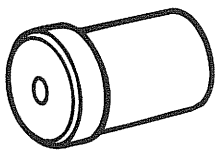 EIDA140B	1. Removal of wheel bearing from the knuckle. (use with 09517-29000) 2. Installation of hub to the knuckle.
09517-21500 Front hub remover and installer	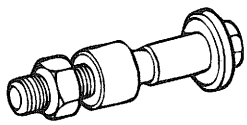 EIDA140C	1. Removal of front hub from the knuckle. (use with 09517-29000) 2. Measurement of front wheel bearing pre-load. (use with 09532-11600)
09517-29000 Knuckle arm bridge	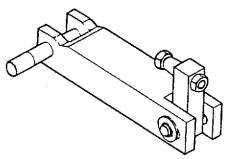 EIDA140D	1. Removal of front hub from the knuckle. (use with 09517-21500) 2. Removal of wheel bearing outer race from the knuckle. (use with 09495-33100)

Tool (Number and Name)	Illustration	Use
09532-11600 Preload socket	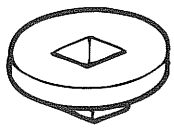 EIDA140E	Measurement of front wheel bearing pre-load. (use with 09517-21500)
09532-31200A Oil seal installer	 EIDA140F	Installation of wheel bearing to the knuckle.
09568-34000 Ball joint puller	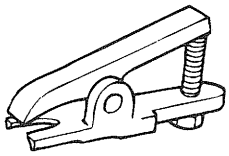 EIDA140G	Seperation of front lower arm and tie rod end ball joint.

TROUBLESHOOTING EIDA1500

Symptom	Possible cause	Remedy
Vehicle pulls to one side	Galling of drive shaft ball joint	Replace
	Wear, rattle or galling of wheel bearing	Replace
	Defective front suspension and steering	Adjust or replace
Vibration	Wear, damage or bending of drive shaft	Replace
	Drive shaft rattle and hub serration	Replace
	Wear, rattle or scratching of wheel bearing	Replace
Shimmy	Improper wheel balance	Adjust or replace
	Defective front suspension and steering	Adjust or replace
Excessive noise	Wear, damage or bending of drive shaft	Replace
	Drive shaft rattle and hub serration	Replace
	Drive shaft rattle and side gear serration	Replace
	Wear, rattle or galling of wheel bearing	Replace
	Loose hub nut	Adjust or replace
	Defective front suspension and steering	Adjust or replace

DRIVESHAFT

FRONT DRIVESHAFT ASSEMBLY

COMPONENTS EINC0600

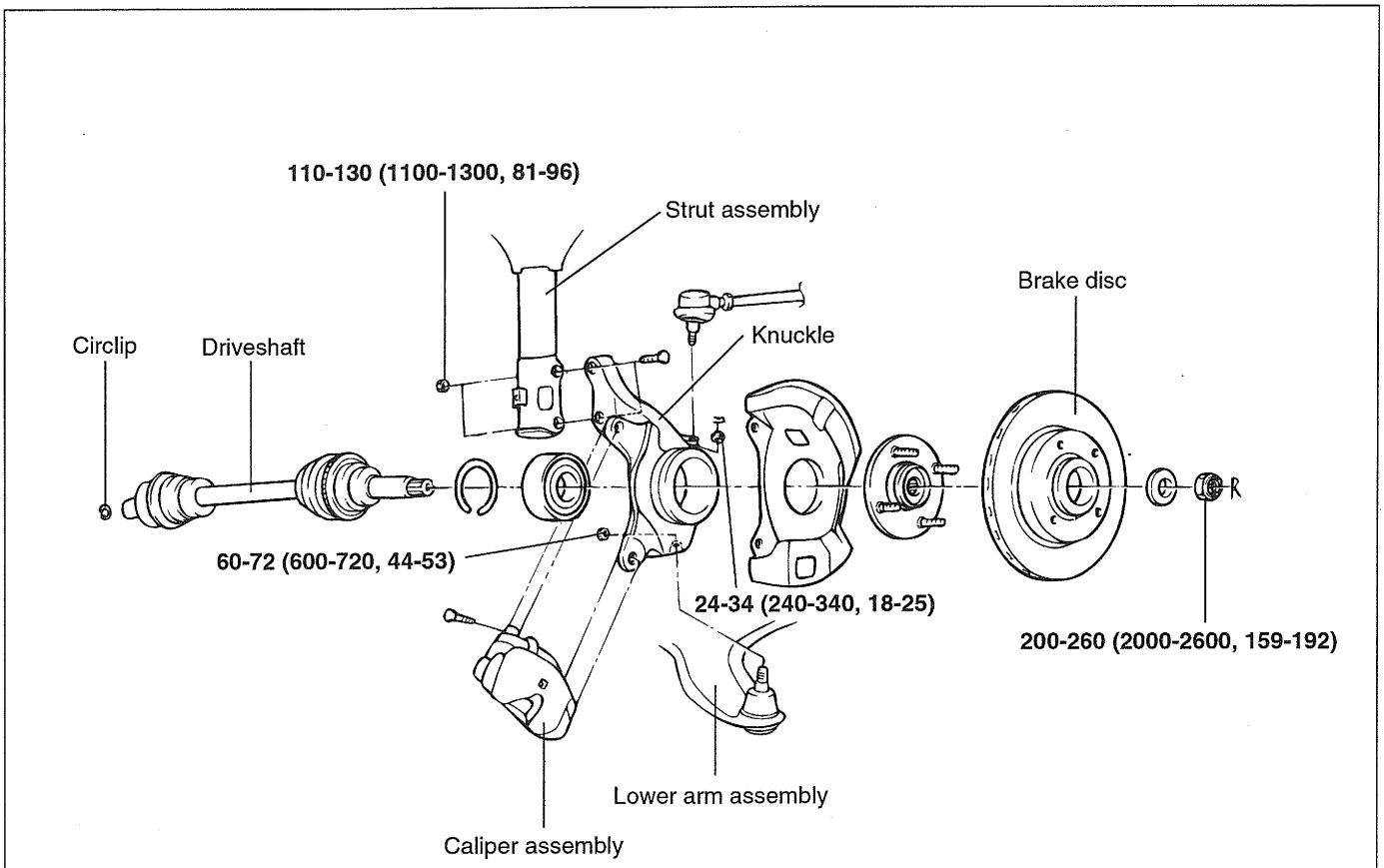

EINC060A

REMOVAL EIKB0054

1. Raise the vehicle and remove the front wheel.
2. Remove the split pin and driveshaft nut from the front hub.
3. Drain the transaxle fluid.
4. Using a plastic hammer, disconnect the driveshaft from the axle hub.

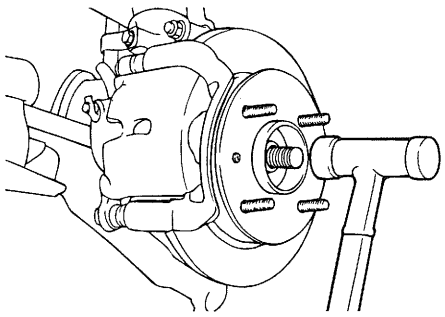

EIDA210A

5. Push the axle hub toward the outside of the vehicle, and separate the driveshaft from the axle hub.

6. Insert a pry bar between the transaxle case and joint case, and separate the driveshaft from the transaxle case.

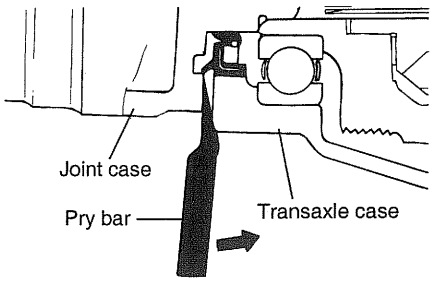

EXDA210B

⚠ *CAUTION*

1. ***Use a pry bar being careful not to damage the transaxle and joint.***
2. ***Do not insert the pry bar too deep, as this may cause damage to the oil seal. [max. depth : 7 mm (0.28 in.)]***
3. ***Do not pull the driveshaft by excessive force it may cause components inside the B.J. or T.J. joint kit to dislodge resulting in a torn boot or a damaged bearing.***

7. Pull out the driveshaft from the transaxle case.

⚠ *CAUTION*

- ***Plug the hole of the transaxle case with the oil seal cap to prevent contamination.***
- ***Support the driveshaft properly.***
- ***Replace the retainer ring whenever the driveshaft is removed from the transaxle case.***

INSPECTION EIKB0057

1. Check the driveshaft boots for damage and deterioration.
2. Check the ball joints for wear and damage.
3. Check the splines for wear and damage.
4. Check the dynamic damper for cracks and wear.

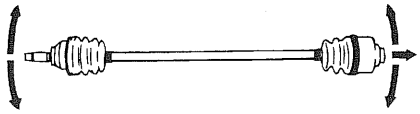

EIDA211A

INSTALLATION EIKB0060

1. Apply gear oil on the driveshaft splines and differential case contacting surface.
2. Before installing the driveshaft, set the opening side of the circlip facing downward.
3. After installation, check that the driveshaft cannot be removed by hand.
4. Position the convex side of the washer to face outside and install the nut and split pin.
5. Replace the self-locking nuts and split pin with new ones after removal.

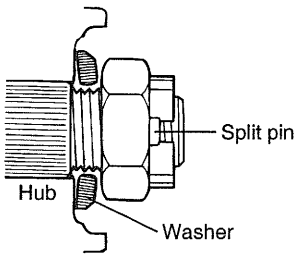

EIDA212A

FRONT DRIVESHAFT (T.J-BJ TYPE)

COMPONENTS EINC1000

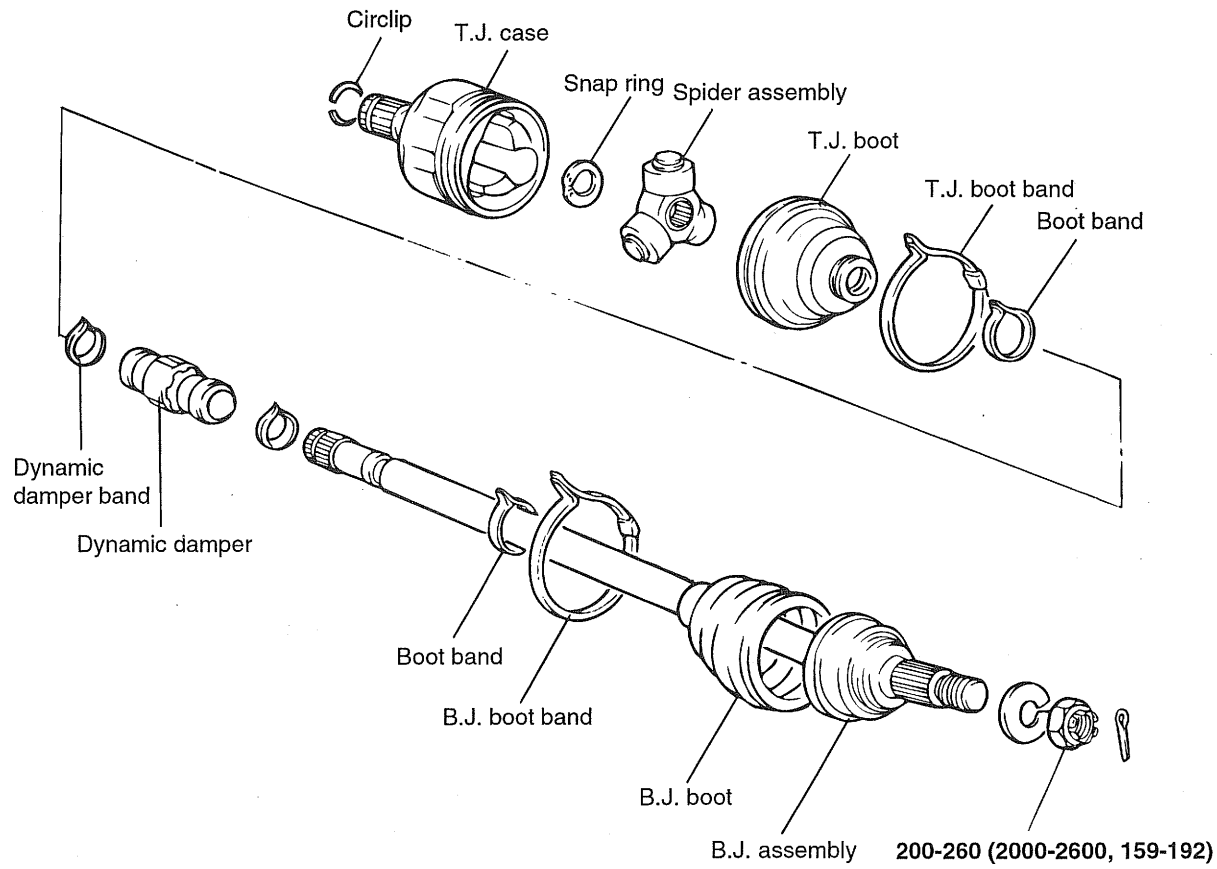

TORQUE : Nm (kgf·cm, lb·ft)

EINC100A

DISASSEMBLY EIKB0094

NOTE

- *Do not disassemble the B.J. assembly.*
- *Special grease must be applied to the driveshaft joint. Do not substitute with another type of grease.*
- *The boot band should be replaced with a new one.*

1. Remove the T.J. boot bands and pull the T.J. boot from the T.J. case.

NOTE

Be careful not to damage the boot.

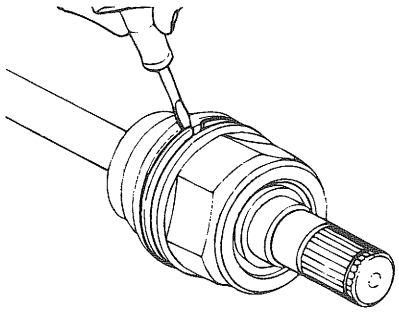

EIDA301A

2. Remove the snap ring and spider assembly from the driveshaft.

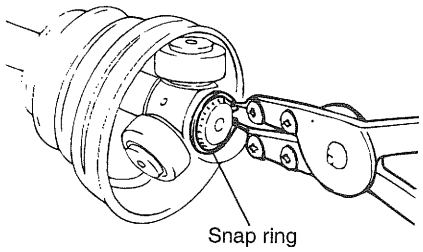

EIDA301B

3. Clean the spider assembly.

4. Remove the B.J. boot bands and pull out the T.J. boot and B.J. boot.

NOTE

If the boot is to be reused, wrap tape around the driveshaft splines to protect the boot.

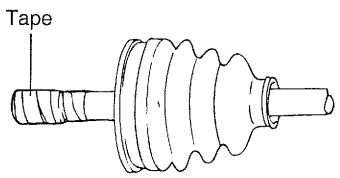

EIDA251D

INSPECTION EIKB0097

1. Check the driveshaft spline for wear or damage.
2. Check that there is no water or foreign material in the B.J.
3. Check the spider assembly for roller rotation, wear or corrosion.
4. Check the groove inside the T.J. case for wear or corrosion.
5. Check the dynamic damper for damage or cracks.

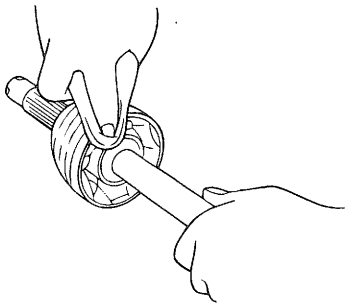

EIDA252A

REASSEMBLY EINC1300

1. Wrap tape around the driveshaft splines (T.J. side) to prevent damage to the boots.
2. Apply grease to the driveshaft and install the boots.

Recommended lubricant
B.J. Boot grease : Centoplex 278M/136K T.J. Boot grease : KLKTJ41-182 (MS511-50, KOREA KLUBER)

3. To install the dynamic damper, keep the B.J. and driveshaft in a straight line and secure the dynamic damper with the dynamic damper band in the direction illustrated.

Standard value (LH, RH)		mm (in.)
	1.6L M/T, A/T	1.8L M/T, A/T
LH	246 ± 3 (9.69 ± 0.12)	-
RH	475 ± 3 (18.7 ± 0.12)	439 ± 3 (17.28 ± 0.12)

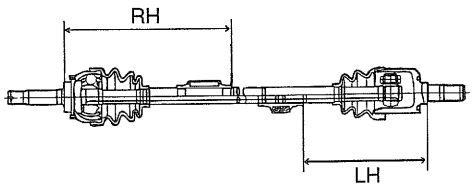

EFCDS05A

4. Apply grease into the T.J. boot and install the boot.

T.J. boot grease gr.		
	1.6L M/T, A/T	1.8L M/T, A/T
Total	105 ± 6	120 ± 6
In the joint	65 ± 3	75 ± 3
In the boot	40 ± 3	45 ± 3

5. Tighten the T.J. boot bands.
6. Add the specified grease to the B.J. as much as was wiped away at inspection.
7. Install the boots.
8. Tighten the B.J. boot bands.
9. To control the air in the T.J. boot, keep the specified distance between the boot bands when they are tightened.

Standard value (A)		mm (in.)
	1.6L M/T, A/T	1.8L M/T, A/T
LH	508.7 ± 2 (20.03 ± 0.08)	502.5 ± 2 (19.78 ± 0.08)
RH	806.2 ± 2 (31.73 ± 0.08)	806 ± 2 (31.73 ± 0.08)

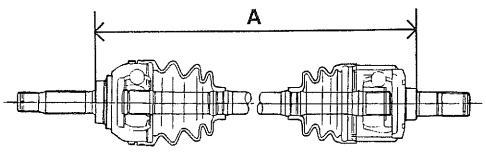

EIDA253D

FRONT AXLE

FRONT HUB/KNUCKLE

COMPONENTS EINC1400

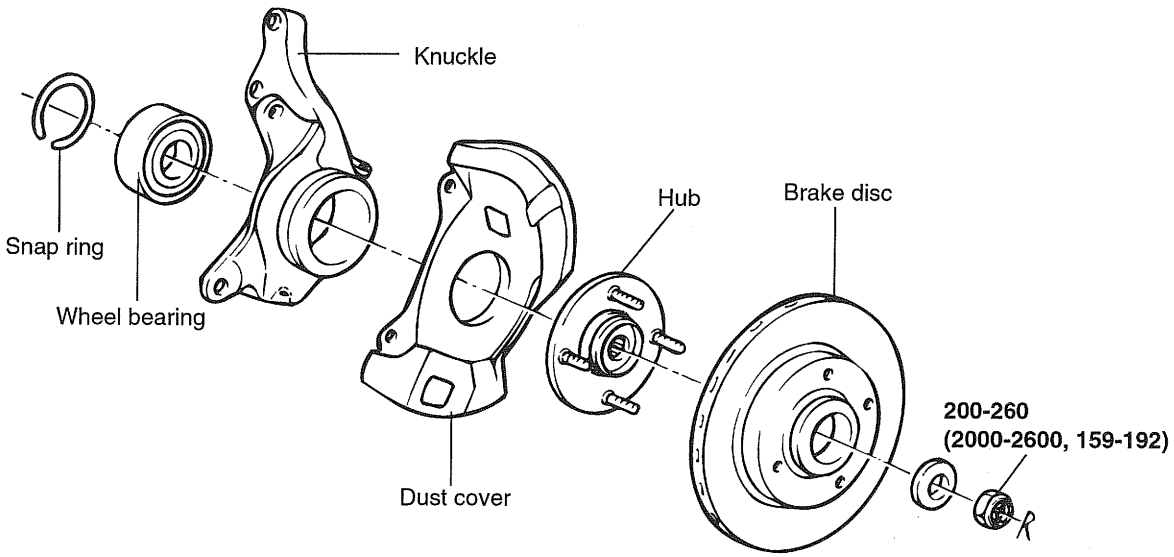

TORQUE : Nm (kgf·m, lb·ft)

EINC140A

REMOVAL EIKB0120

1. Remove the front wheel.
2. Remove the split pin and driveshaft nut from the front hub.
3. Remove the front brake assembly from the knuckle and suspend it with a wire.
4. Remove the vehicle speed sensor from the knuckle.
5. Disconnect the tie rod end ball joint from the knuckle by using the Special Tool (09568 - 34000).

NOTE

Be sure to tie the special tool (09568 - 34000) to the near part with cord not to fall.

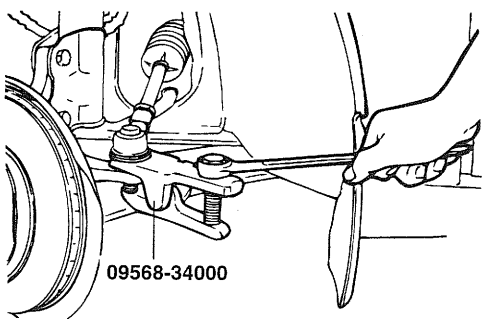

EIDA401A

6. Disconnect the strut assembly from the knuckle.

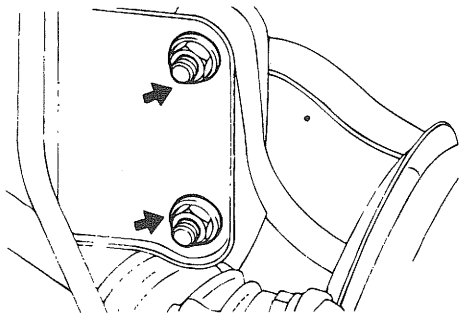

EIDA401B

7. Disconnect the driveshaft from the hub.

8. Disconnect the lower arm ball joint from the knuckle by using the Special Tool (09568 - 34000).

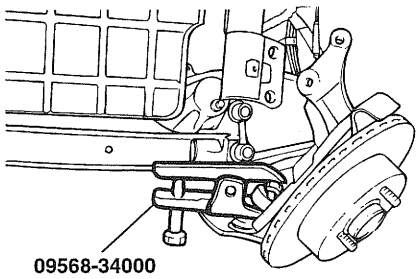

EIDA401C

9. Remove the hub and knuckle as an assembly.

INSTALLATION EINC1600

1. Installation is the reverse of removal.

NOTE

- *Tighten the components below to the specified torque as follows :*

Items	Torque Nm (kgf·cm, lb·ft)
Driveshaft nut	200-260 (2000-2600, 159-192)
Lower arm ball joint to knuckle nut	60-72 (600-720, 44-53)
Knuckle to strut assembly nut	110-130 (1100-1300, 81-96)

- *Install the washer behind the driveshaft nut with the convex side outward as shown in the illustration.*

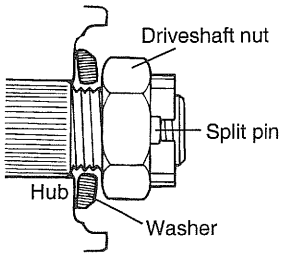

EIA9212A

DISASSEMBLY EIKB0134

1. After removing the screws(2) mounting the brake disc, remove the brake disc from the hub.

2. Remove the snap ring.

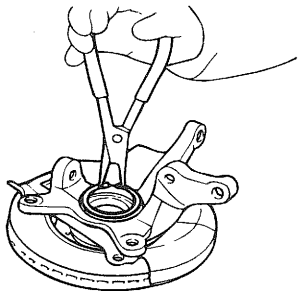

EIDA403A

3. Install the Special Tools as illustrated.

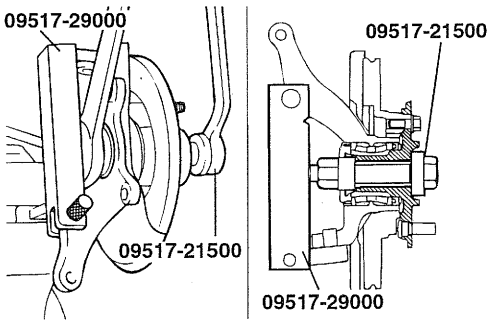

EIDA403B

4. Remove the hub from the knuckle by turning the Special Tool.
5. Remove the Special Tool and dust cover.
6. Remove the bearing inner race from the hub by using the Special Tool.

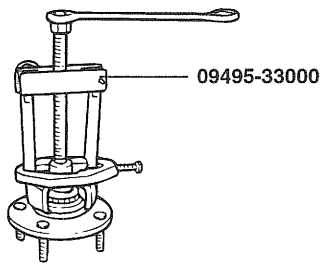

EIDA403C

7. Using the Special Tool (09495 - 33100, 09517 - 29000), remove the wheel bearing outer race from the knuckle.

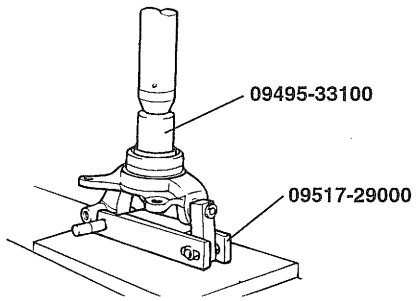

EIDA403D

INSPECTION EIKB0137

1. Check the hub for cracks and the splines for wear.
2. Check the brake disc for scoring and damage.
3. Check the knuckle for cracks.
4. Check the bearing for cracks or damage.

REASSEMBLY EINC1900

1. Apply multi-purpose grease to the contacting surface of the knuckle hub and bearing thinly.
2. Using the Special Tool (09495 - 33100, 09517 - 29000), press-in the bearing to the knuckle.

NOTE

- *Press-in the outer race of the wheel bearing to prevent damage to the bearing assembly.*
- *When installing a bearing assembly, always use a new one.*

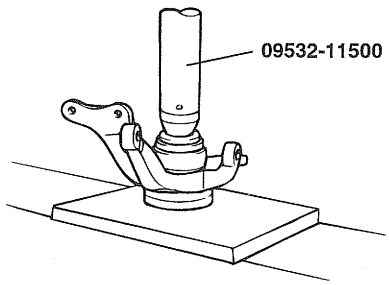

EIKB014A

3. Install the dust cover.
4. Using the Special Tool (09495 - 33100), press-in the hub to the knuckle.

NOTE

Press-in the inner race of the wheel bearing to prevent damage to the bearing assembly.

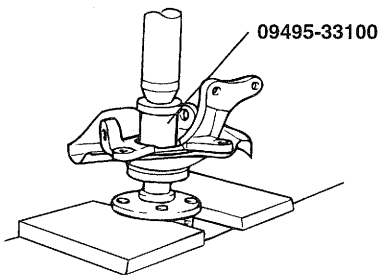

EIDA405B

5. Install the brake disc.
6. Tighten the hub and the knuckle to the specified torque by using the Special Tool (09517 - 21500).

Specified torque Nm (kgf.cm, ft.lb) :

200-260 (2000-2600, 159-192)

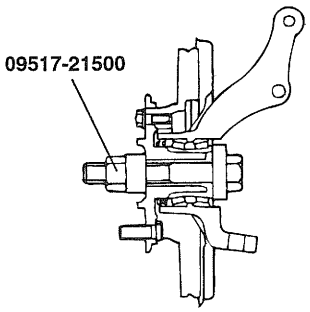

EIDA405C

7. Rotate the hub several times to seat the bearing.
8. Measure the hub bearing starting torque.

Hub bearing starting torque [Limit] :

1.8 Nm (18 kgf.cm, 16 lb.in) or less

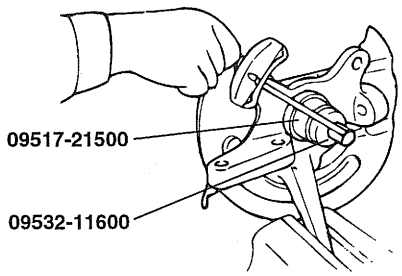

EIDA405D

9. If the starting torque is 0 Ncm (0 in.lbs.), measure the hub bearing axial play.

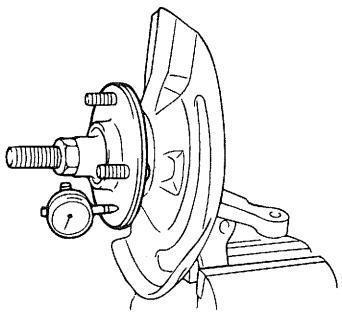

S5DS022E

10. If the hub axial play exceeds the limit while the nut is tightened to 200-260 Nm (2000-2600Kg.cm, 159-192 ft.lb), the bearing, hub and knuckle are not installed correctly. Repeat the disassembly and assembly procedure.

Hub bearing axial play [Limit] :

0.008 mm (0.0031 in.) or less

11. Remove the Special Tool (09517 - 21500).

REAR AXLE

REAR AXLE/HUB

COMPONENTS EINC2000

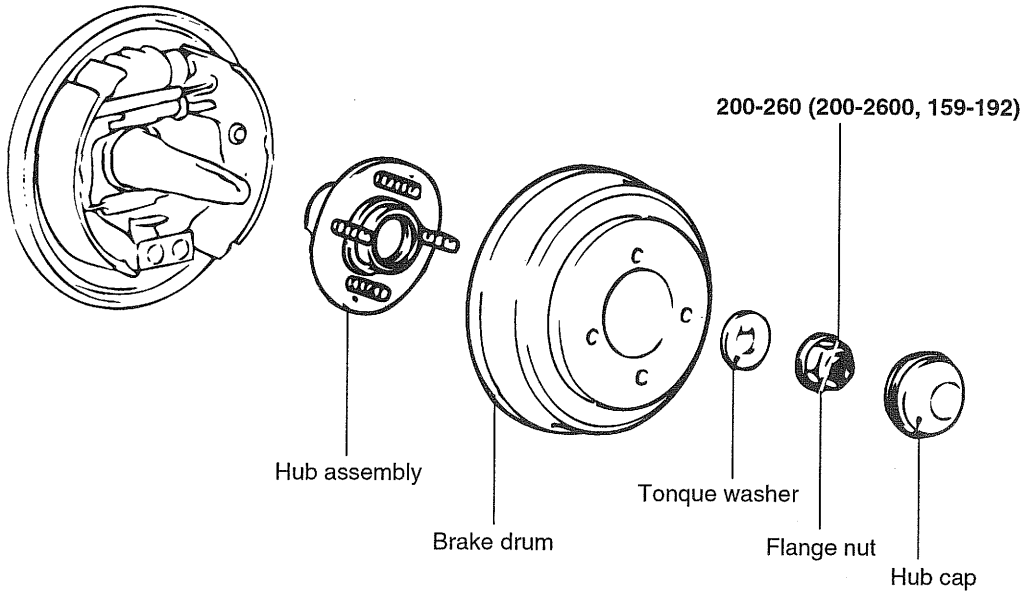

TORQUE : Nm (kgf·m, lb·ft)

EINC200A

REMOVAL EINC2100

1. Remove the rear wheel speed sensor (for vehicles equipped with ABS).

   ⚠ ***CAUTION***

   When removing the speed sensor from the adapter, be careful so that the end of the pole piece doesn't strike teeth on the rotor or other components.

2. Remove the brake drum.
3. Remove the hub cap, wheel bearing nut and tongue washer.
4. Remove the hub assembly.

⚠ *CAUTION*

- ***The rear hub assembly should not be disassembled.***
- ***(For vehicles equipped with ABS)***
  Care must be taken not to scratch or damage the teeth of the rotor. The rotor must never be dropped. If the teeth of the rotor are chipped, it results in deformation of the rotor. It will make it impossible to detect the wheel rotation speed accurately and to operate the system normally.

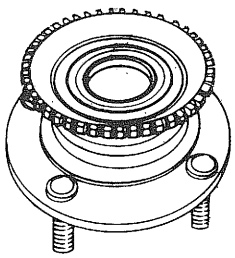

S5SS051B

INSPECTION EIKB0170

1. Check the oil seal for cracks or damage.
2. Check the rear hub bearing for wear or damage.
3. Check the rear rotor for chipped teeth.
4. Check the rear carrier for cracks.

INSTALLATION EINC2300

Installion is the reverse of removal.

1. After tightening the flange nut, caulk the concave portion of the spindle by crimping the nut.

⚠ *CAUTION*

Replace the flange nut with new ones after removal.

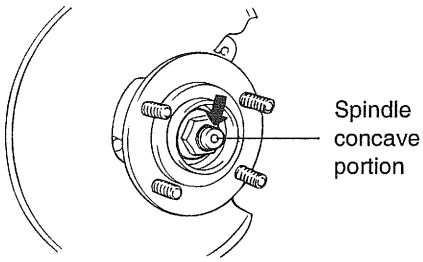

S5SS053A

2. Installation of the rear speed sensor (For vehicles equipped with ABS)

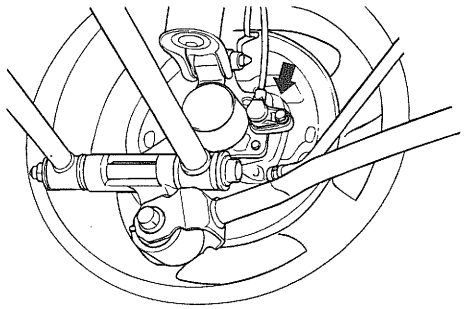

KFCDS01A

3. Install the hub cap.

Suspension System

GENERAL ..... SS -2

FRONT SUSPENSION SYSTEM ..... SS -9

REAR SUSPENSION SYSTEM ..... SS -21

TIRES/WHEELS ..... SS -28

GENERAL

SPECIFICATIONS EHNC0100

Front suspension system	Macpherson strut type
Shock absorber	
Type	Gas type
Stroke mm (in)	165.1 (6.5)
Damping force at 0.3 m/s	
Expansion N(kg)	1270 ± 190 (127 ± 19)
Compression N(kg)	410 ± 90 (41 ± 9)
I.D color	Green (CBS), Gray (ABS)

Coil spring free height and identification color

Model	Free height mm (in.)	I.D color
1.6L M/T (ALL)	334.4 (13.2)	White-1
1.6L A/T (ALL)	340.1 (13.4)	Green-2
1.8L M/T (ALL)	344.0 (13.5)	Blue-2
1.8L A/T (ALL)	348.6 (13.7)	Yellow-2

* M/T : With manual T/A
* A/T : With automatic T/A
* CBS : With conventional brake system
* ABS : With Anti-lock Brake System

EHNC010A

Rear suspension system	Dual link
Shock absorber	
Type	Gas type
Stroke mm (in)	203.7 (8.02)
Damping force at 0.3 m/s	
Expansion N(kg)	720 ± 110 (72 ± 11)
Compression N(kg)	320 ± 70 (32 ± 7)
I.D color	Green (CBS), Gray (ABS)
Coil spring free height and identification color	
Free height mm(in.)	252.01 (9.92)
I.D color	Yellow-1

EHNC010B

SERVICE STANDARD EHNC0200

Standard value				
Toe-in mm (in.)		Front	-2 ~ +2 (-0.08 ~ ±0.08) (Max. difference between LH and RH : 1.5 mm)	
		Rear	4^{+3}_{-1} ($0.16^{+0.12}_{-0.04}$) (Max. difference between LH and RH : 2.5 ± 1mm)	
Camber		Front	0° ± 30′ (Max. difference between LH and RH : 0°30′)	
		Rear	-1° ± 30′ (Max. difference between LH and RH : 30′)	
Caster		Front	2°47′ ± 30′ (Max. difference between LH and RH : 0°30′)	
King pin angle		Front	12°12′ ± 30′	
King pin offset	mm (in.)	Front	-1.4 (0.055)	
Side slip	mm (in.)	Front	±3 (Front), 2-9 (Rear)	
Wheel and tire			185/65 R14, 195/55 R15, 205/55/R15	
Wheel type			[Steel wheel]	[Aluminum wheel]
Wheel size			5.5J x 14, 5.5J x 15	5.5J x 15, 6.0J x 15
Tire size			185/65 R14, 195/55 R15, 205/55 R15	
Tire inflation pressure	kg·cm² (PSI)		$2.0^{+0.07}_{0}$ (30^{+1}_{0})	
Temporary spare tire				
Wheel size			3.5J x 15	
Tire size			T115/70 R15, T115/70 D15	
Tire inflation pressure	kg·cm² (PSI)		4.2 (60)	

EHNC020A

LUBRICANTS EHDA1300

In ball joint of lower arm	Variant R-2 grease or poly lub gly 801 K	As required
In insulator bearing of strut	SAE J310a, Chassis grease (NLGI No.0 or equivalent)	As required

TIGHTENING TORQUE EHNC0300

Items	Nm	kgf·cm	lb·ft
Wheel nut	90-110	900-1100	67-82
Driveshaft nut	200-260	2000-2600	148-192
Strut upper installation nut	40-50	400-500	29-37
Strut assembly to knuckle	110-130	1100-1300	81-96
Strut mounting self-locking nut	50-70	500-700	37-51
Lower arm ball joint to knuckle	60-72	600-720	43-52
Lower arm bushing (A) mounting bolt	95-120	950-1200	70-88
Lower arm bushing (G) mounting bolt	130-150	1300-1500	96-111
Crossmember mounting bolt/nut	160-180	1600-1800	118-133
Stabilizer bar bracket mounting bolt	17-26	170-260	13-19
Stabilizer link nut	35-45	350-450	26-33
Tie rod end ball joint to knuckle	16-34	160-340	12-25
Tie rod end lock nut	50-55	500-550	37-41
Rear strut upper mounting nut	30-40	300-400	22-29
Rear strut lower mounting nut	110-130	1100-1300	81-96
Rear strut mounting self locking nut	40-55	400-550	29.6-40.7
Rear stabilizer link to stabilizer bar	35-45	350-450	26-33
Rear stabilizer bar bracket bolt	17-26	170-260	13-19
Rear suspension arm tie rod nut	50-60	500-600	37-43
Rear suspension arm to rear axle carrier mounting nut	130-150	1300-1500	96-110
Rear suspension arm to rear crossmember mounting nut	110-130	1100-1300	81-96
Rear crossmember mounting bolt	100-120	1000-1200	74-88
Trailing arm to bracket nut	40-50	400-500	30-37
Trailing arm bracket to body frame	40-50	400-500	30-37

⚠ ***CAUTION***

Replace the self-locking nuts with new ones after removal.

SPECIAL TOOLS EHKB0040

Tool (Number and Name)	Use	Illustration
09216-21100 Mount bushing remover and installer	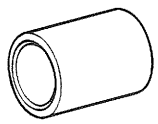 EHDA140A	Removal & installation of lower arm bushing (G) (Use with 09216-21200, 09545-02000)
09216-21200 Mount bushing remover and installer base	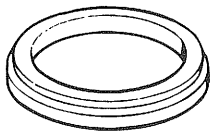 B1621200	Removal & installation of the lower arm bushing (G) (Use with 09216-21100, 09545-02000)
09532-11600 Preload socket	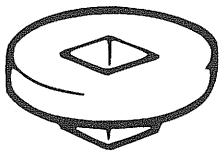 EHDA140C	Measurement of the lower arm ball joint & stabilizer link starting torque
09545-02000 Lower arm bushing remover and installer	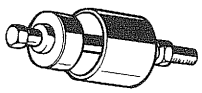 EHDA140D	Removal & installation of the lower arm bushing (G) (Use with 09216-21100, 09216-21200)
09545-11000 Ball joint remover and installer	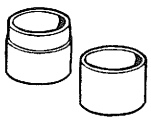 E4511000	Installation of the lower arm ball joint
09545-21100 Ball joint dust cover installer	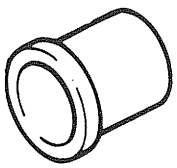 EHDA140E	Installation of the lower arm ball joint dust cover

Tool (Number and Name)	Use	Illustration
09551-25000 Trailing arm bushing remover and installer	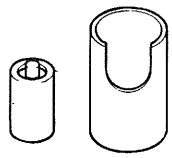 EHDA140G	Removal & installation of the trailing arm bushing
09551-25000 Rear suspension arm remover and installer	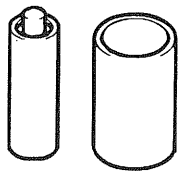 EHDA140H	Removal & installation of the rear suspension arm bushing (Use with 09545-28100)
09568-34000 Ball joint puller	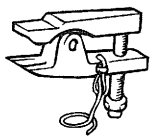 EHDA140I	Separation of the lower arm ball joint
A-20 Strut compressor adapter	 EHDA140J	Compression of the rear coil spring (Use with J38402)
A-42 Strut compressor adapter	 EHDA140J	Compression of front coil spring (Use with J38402)
J38402 Strut spring compressor	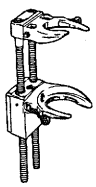 EHDA140K	Compression of the front & rear coil spring (Use with A-42 or A-20)

TROUBLESHOOTING EHDA1500

Symptom	Possible cause	Remedy
Hard steering	Improper front wheel alignment	Correct
	Excessive turning resistance of lower arm ball joint	Replace
	Low tire pressure	Adjust
	No power assist	Repair and replace
Poor return of steering wheel to center	Improper front wheel alignment	Correct
Poor or rough ride	Improper front wheel alignment	Correct
	Malfunctioning shock absorber	Repair or replace
	Broken or worn stabilizer	Replace
	Broken or worn coil spring	Replace
	Worn lower arm bushing	Replace the lower arm assembly
Abnormal tire wear	Improper front wheel alignment	Correct
	Improper tire pressure	Adjust
	Malfunctioning shock absorber	Replace
Wandering	Improper front wheel alignment	Correct
	Poor turning resistance of lower arm ball joint	Repair
	Loose or worn lower arm bushing	Retighten or replace
Vehicle pulls to one side	Improper front wheel alignment	Correct
	Excessive turning resistance of lower arm ball joint	Replace
	Broken or worn coil spring	Replace
	Bent lower arm	Repair
Steering wheel shimmy	Improper front wheel alignment	Correct
	Poor turning resistance of lower arm ball joint	Replace
	Broken or worn stabilizer	Replace
	Worn lower arm bushing	Replace
	Malfunctioning shock absorber	Replace
	Broken or worn coil spring	Replace
Bottoming	Broken or worn coil spring	Replace
	Malfunctioning shock absorber	Replace

WHEEL AND TYPE DIAGNOSIS				
CENTER OF TREAD WORN		BOTH SIDES OF TREAD WORN	CHUNKING OF TIRE	ONE SIDE OF TIRE WORN
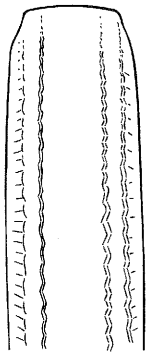 EHDA150A	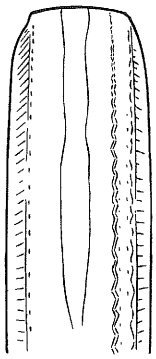 EHDA150B	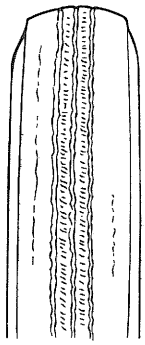 EHDA150C	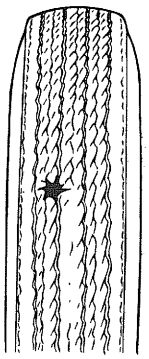 EHDA150D	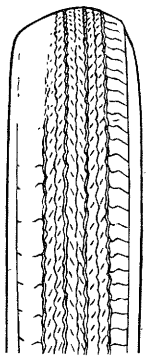 EHDA150E
Over-Inflation	Center-tread down to fabric due to excessive over-Inflation	Under-Inflation Bulge at the shoulder Rapid wear	When a patch of tread has loosened, torn off the tire by centrifugal force at high speed	Incorrect camber angle

WHEEL AND TYPE DIAGNOSIS				
FLAT SPOT	FEATHERING	BAD PLUGGING	UNEVEN TIRE WEAR	TOTALLY UNSAFE TIRE
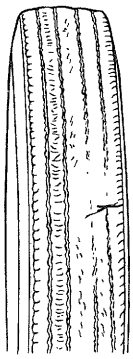 EHDA150F	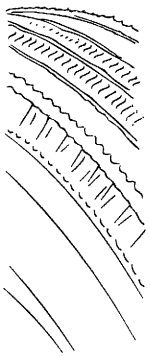 EHDA150G	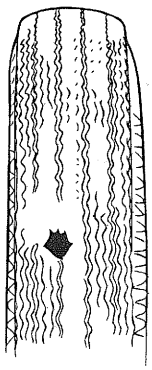 EHDA150H	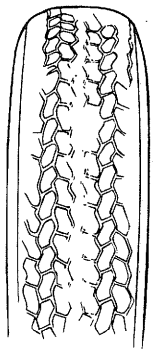 EHDA150I	 EHDA150J
Caused by heavy braking which makes the wheels lock and scrubs the tires along the road surface	Excessive toe-in toe-out	Using more than one plug distorts the tread, resulting in carcass failure	Bad wheel balance, fault in suspension, steering gear or bearing	Tread worn below the limit

FRONT SUSPENSION SYSTEM

STRUT ASSEMBLY

COMPONENTS EHNC0700

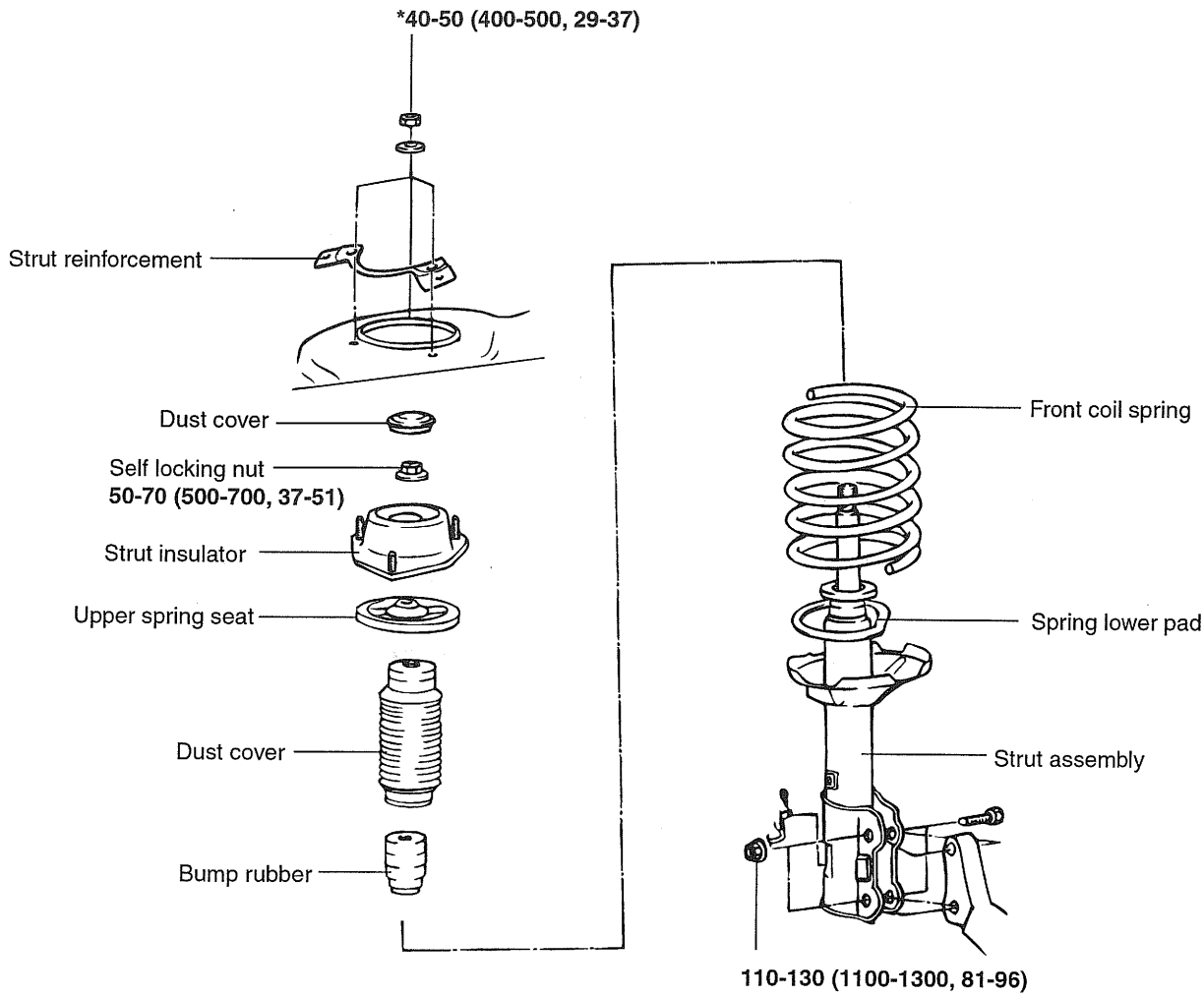

CAUTION
- **Components marked with * should be temporaily tightened, and then fully tightened with the vehicle on the ground in an unladen condition.**
- **Replace the self-locking nuts with new ones after removal.**

TORQUE : Nm (kgf·cm, lb·ft)

EFCSS01A

REMOVAL EHNC0800

1. Remove the front wheel.
2. Detach the brake hose bracket from the strut assembly.

NOTE

Do not apply excessive force to the components.

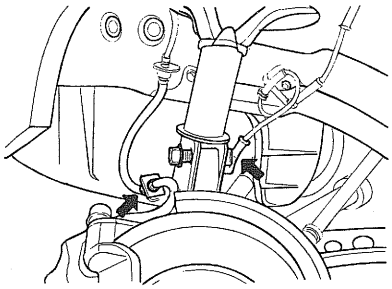

EIHA002A

3. Remove the wiper assembly, cowl top cover and cowl top under panel.
4. Remove the strut upper mounting bolts(3).

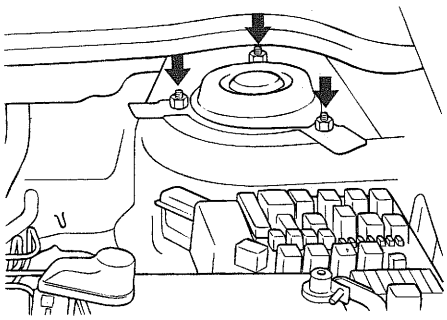

KFCSS02A

5. Remove the strut assembly.

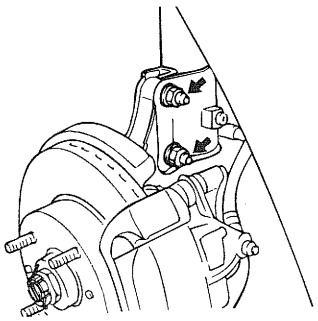

EHDA201C

INSTALLATION EHNC0900

1. When installing the front strut, be sure to clear the conneting surface.
2. Install the strut assembly so the identification label on the strut insulator faces toward the inside of vehicle.

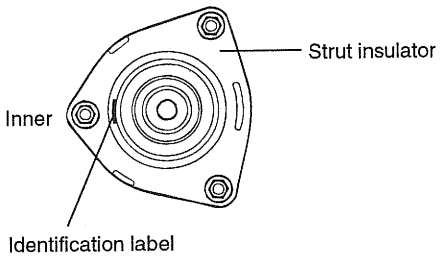

EFCSS03A

3. Tighten the components below to the specified torque as follows.

Items	Torque Nm (kgf·cm, lb·ft)
Front strut upper mounting nut	40-50 (400-500, 29-37)
Front strut to knuckle	110-130 (1100-1300, 81-96)

4. Install the brake hose and front wheel speed sensor wire on the front strut assembly.

DISASSEMBLY EHDA2020

1. Remove the dust cover with a flat-tip screw driver.
2. Using the Special Tools (J38402, A - 42), compress the coil spring until there is only a little tension on the strut.

NOTE

Do not use an impact gun.

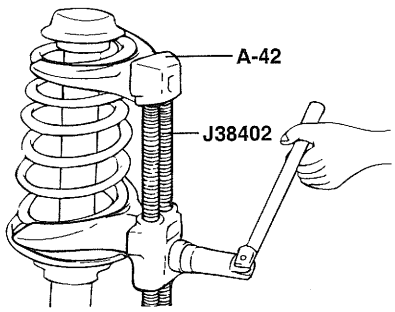

EHDA202A

3. Remove the nut at the top end of shock absorber.

4. Remove the insulator, spring seat, coil spring, dust cover from the strut assembly.

INSPECTION EHDA2030

1. Check the strut insulator bearing for wear or damage.
2. Check rubber parts for damage or deterioration.
3. Check the coil spring for sagging and weakness.
4. Check the shock absorber for abnormal resistance or unusual sound.

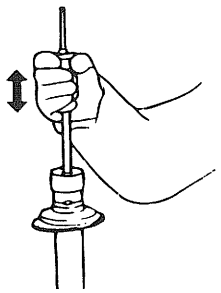

EHDA203A

DISPOSAL EHHA2050

1. Fully extend the shock absorber rod.
2. Drill a hole on the A section to remove gas from the cylinder.

CAUTION

The gas coming out is harmless, but be careful of chips that may fly when drilling.

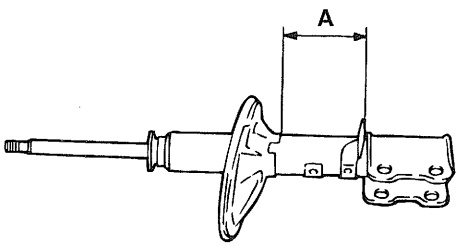

EHHA003A

REASSEMBLY EHNC1300

1. Install lower spring pad so that the protrusions fit in the holes of the spring lower seat.

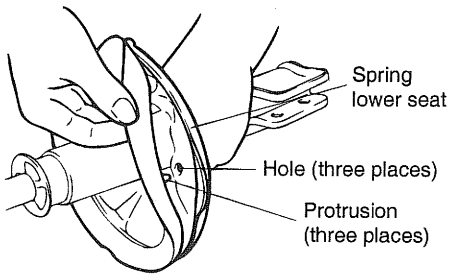

EHDA204A

2. Install the dust cover on the shock absorber.
3. Using the Special Tools (J38402, A - 42), compress the coil spring.
   After the spring is fully compressed, install it on the shock absorber.

NOTE

Install the coil spring with the identification mark directed toward the knuckle.

4. After fully extending the piston rod, install the spring upper seat and insulator assembly.

NOTE

Align the D-shaped hole in the spring seat upper assembly with the protrusion on the piston rod.

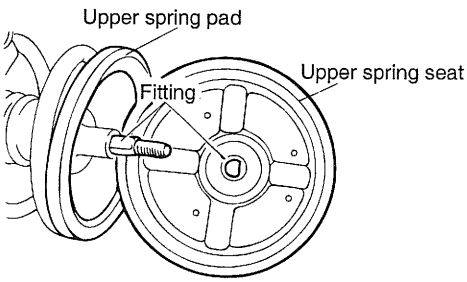

EHDA204B

5. After seating the upper and lower ends of the coil spring in the upper and lower spring seat grooves correctly, tighten the new self-locking nut temporarily.

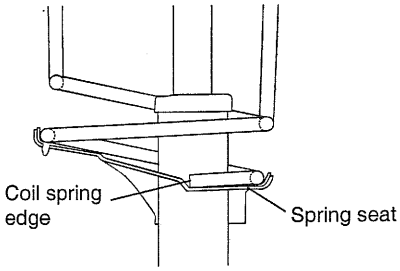

ESMSS44A

6. Remove the Special Tools (J38402, A-42).
7. Tighten the self-locking nut to the specified torque.

Tightening torque
50-70 Nm (500-700 kgf·cm, 37-51 lb·ft)

8. Apply grease to the strut upper bearing and install the insulator cap.

⚠ ***CAUTION***

When appling the grease, be careful so that it isn't smeared on the insulator rubber.

Recommended grease
Chassis grease NLGI No. 0 or equivalent

LOWER ARM

COMPONENTS EHNC1400

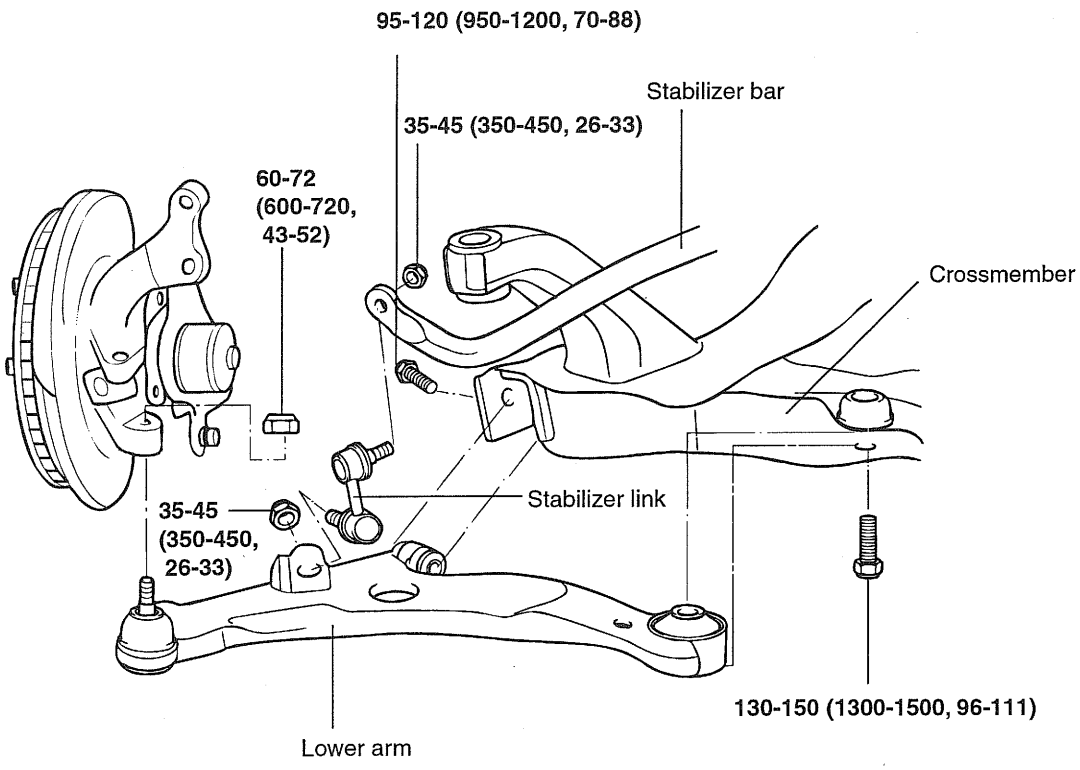

TORQUE : Nm (kgf·cm, lb· ft)

EFCSS04A

REMOVAL EHNC1500

1. Remove the front wheel.
2. Remove the driveshaft split pin, nut and washer.
3. Loosen the lower arm ball joint nut, but do not remove it.
4. Remove the strut lower mounting bolts(2).

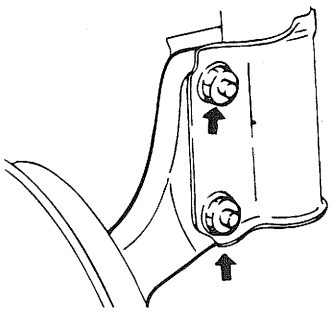

S5SS012B

5. Push the axle hub toward the outside to disconnect the driveshaft from the axle hub.

6. Using the Special Tool (09568 - 34000), disconnect the lower arm ball joint from the lower arm.

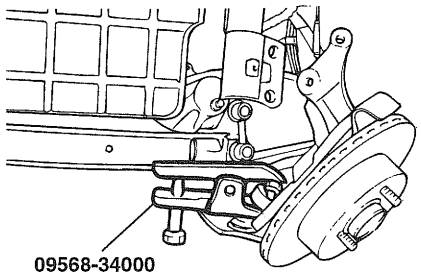

EIDA401C

7. Temporary install the strut lower mounting bolt.

8. Remove the stabilizer link nut.

9. Remove the lower arm bushing (A) and bushing (G) mounting bolts(2).

10. Remove the lower arm assembly.

INSTALLATION EHNC1600

1. Installation is the reverse of removal.

   NOTE

   Tighten the components below to the specified torque as follows.

Items	Torque Nm (kgf·cm, lb·ft)
Wheel nut	90-110 (900-1100, 67-82)
Driveshaft nut	200-260 (2000-2600, 148-192)
Strut lower mounting	110-130 (1100-1300, 81-86)
Lower arm ball joint nut	60-72 (600-720, 43-52)
Lower arm bushing (A)	95-120 (950-1200, 70-88)
Lower arm bushing (G)	130-150 (1300-1500, 96-111)
Stabilizer link nut	35-45 (350-450, 26-33)

2. Secure the stabilizer link with an open-end wrench (14 mm or 9/16 in.), then install the self locking nut.

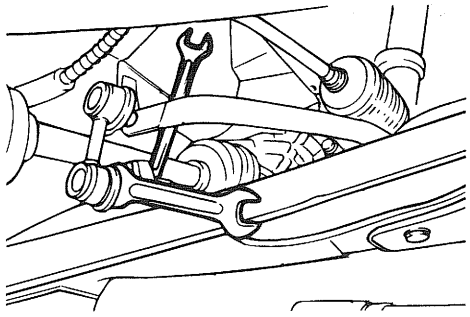

EHDA252A

REPLACEMENT EHNC1700

BALL JOINT AND DUST COVER

1. Using a flat-tipped screwdriver, remove the dust cover from the lower arm ball joint.

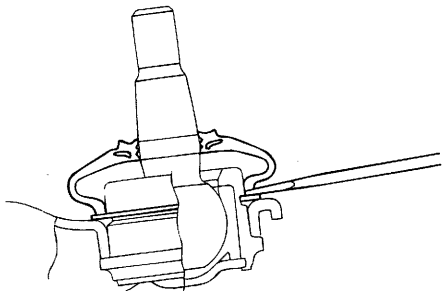

EHDA253D

2. Remove the snap ring.

3. Using a plastic hammer, tap the ball joint out of the lower arm.

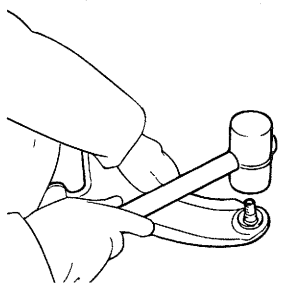

EHDA253A

4. Using Special Tool (09545 - 11000), press-fit the ball joint into the lower arm assembly.

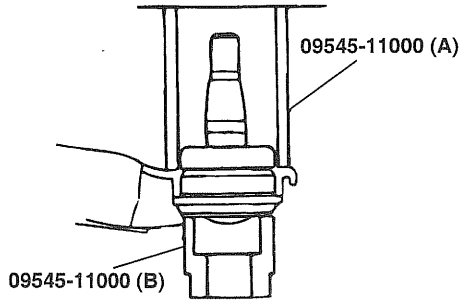

EHDA253E

5. Install the snap ring.
6. Using the Special Tool (09545 - 21100), install the dust cover.

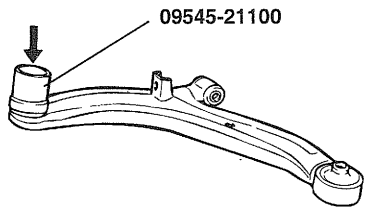

EHDA253B

LOWER ARM BUSHING (G)

1. Install the Special Tools (09545 - 02000, 09216 - 21200 and 09216 - 21200) on the lower arm.
2. Press out the bushing.

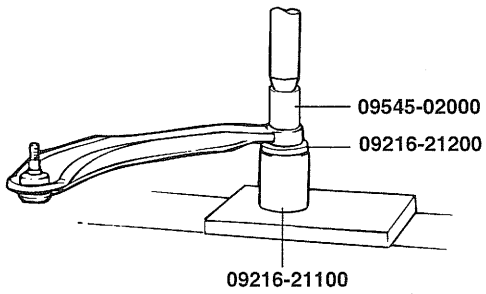

KXDSS06A

3. Apply soap solution to the following parts.
   - Outer surface of the bushing
   - Inner surface of the lower arm bushing mounting part.
4. Install the new bushing on the lower arm by using Special Tools (09216 - 21100, 09624 - 34000).

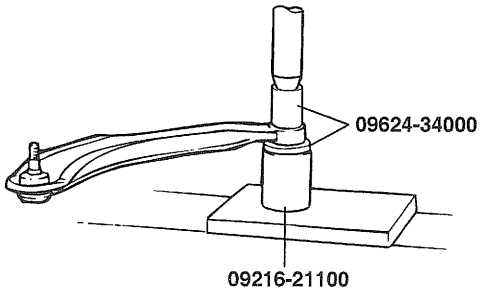

EHKB011A

NOTE

Press-in the lower arm bushing (G) in the same direction as shown in illustration.

Pull out force for the bushing :

80 N [800 kg(f), 11.9 lb(f)] or more

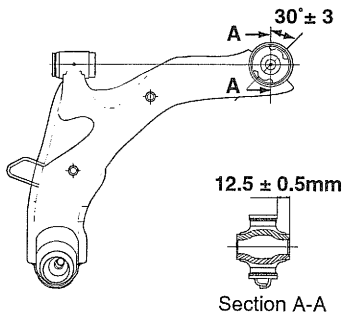

EFCSS05A

INSPECTION EHNC1800

1. Check the bushing for wear and deterioration.
2. Check the lower arm for bending or breakage.
3. Check the ball joint dust cover for cracks and damage.
4. Check all bolts for damage and deformation.
5. Check the lower arm ball joint for rotating torque.

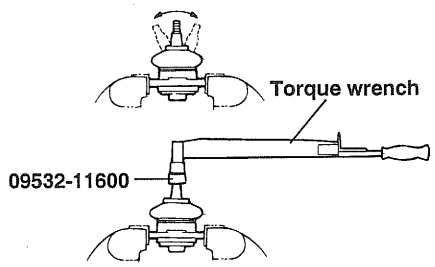

EXDSS85A

- If there is a crack in the dust cover, replace the ball joint assembly.
- Shake the ball joint stud several times.
- Measure the balll joint rotating torque.

Standard value

3.5-10 Nm (35-100 kgf·cm, 2.6-7.4 lb·in)

- If the rotating torque is above the upper limit of the standard value, replace the ball joint assembly.
- Even if the rotating torque is below the lower limit of the standard value, the ball joint may be reused unless it has drag and excessive play.

FRONT STABILIZER BAR

COMPONENTS EHNC1900

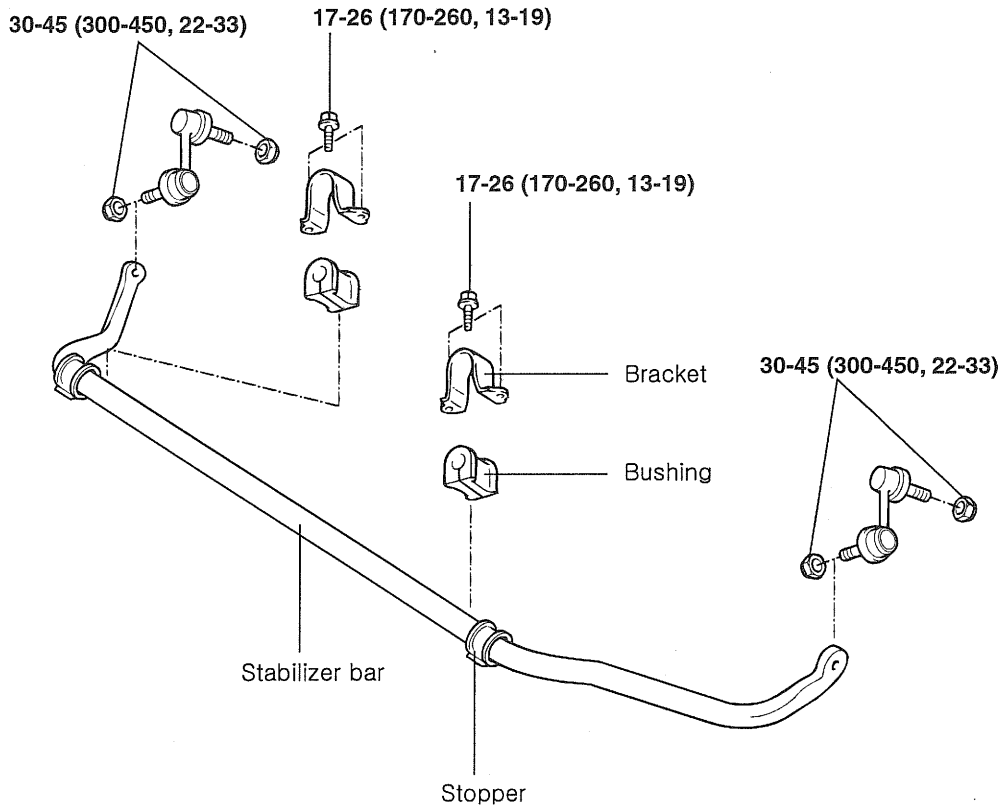

TORQUE : Nm (kgf·cm, lb·ft)

EFCSS06A

REMOVAL EHNC2000

1. Remove the front wheel.
2. Remove the stabilizer link assembly.

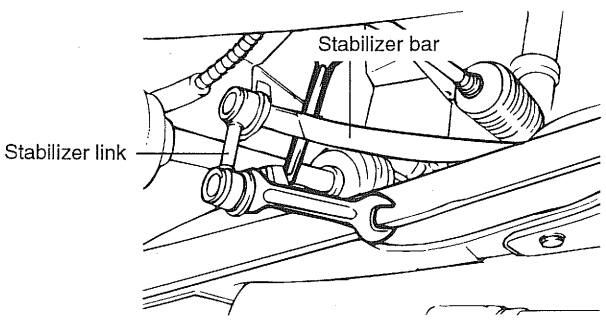

EFCSS45A

3. Remove the stabilizer bracket and bushing

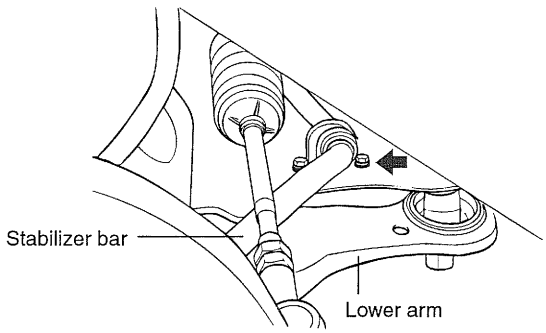

EFCSS07A

4. Remove the stabilizer bar.

INSPECTION EHNC2100

1. Check the stabilizer bar for deterioration and damage.
2. Check all bolts for damage and deformation.
3. Check the stabilizer link dust cover for cracks or damage.
4. Check the stabilizer link ball joint for rotating torque.

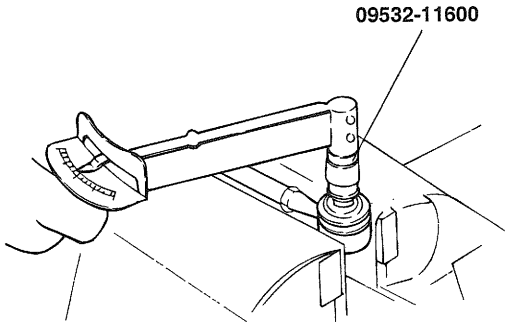

EHDA302A

- If there is a crack in the dust cover, replace it and add grease.
- Shake the stabilizer link ball joint stud several times.
- Mount the self-locking nut on the ball joint, and then measure the ball joint rotating torque.

Standard value

0.7-2 Nm (7-20 kgf·cm, 6-18 lb·in.)

- If the rotating torque is higher than the upper limit of the standard value, replace the stabilizer link.
- If the rotating torque is below the lower limit of the standard value, the ball joint may be reused unless it has drag and excessive play.

INSTALLATION EHNC2200

1. Install the bushing on the stabilizer bar.
2. Install the bracket on the bushing
3. Align and install the bushing with the white paint on the stabilizer bar. After tightening the bolts of the bushing bracket temporarily, install the bushing bracket on the opposite side.

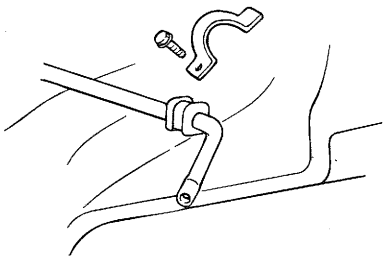

EHDA303B

CROSS MEMBER

COMPONENTS EHNC2300

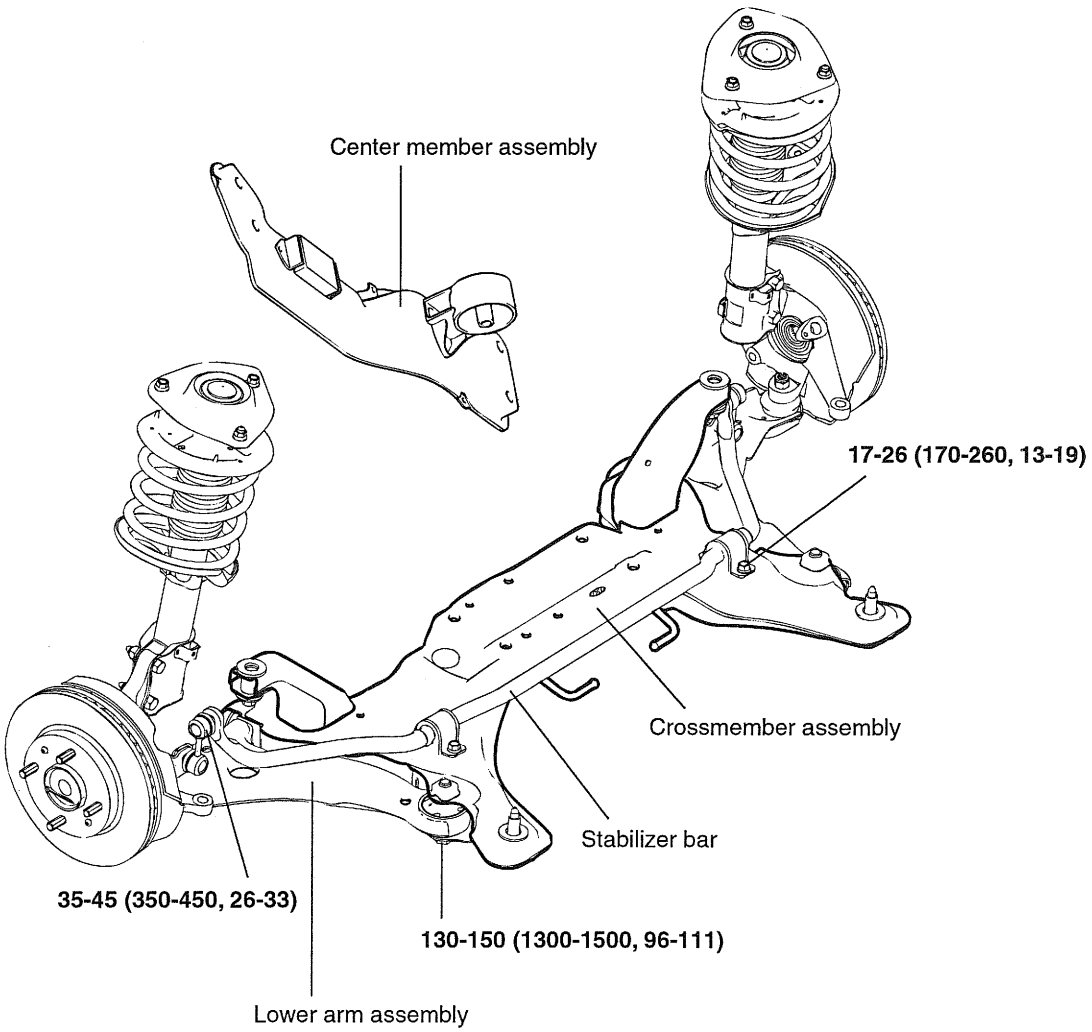

TORQUE : Nm (kgf·cm, lb· ft)

EFCSS08A

REMOVAL EHNC2400

1. Remove the front exhaust pipe.

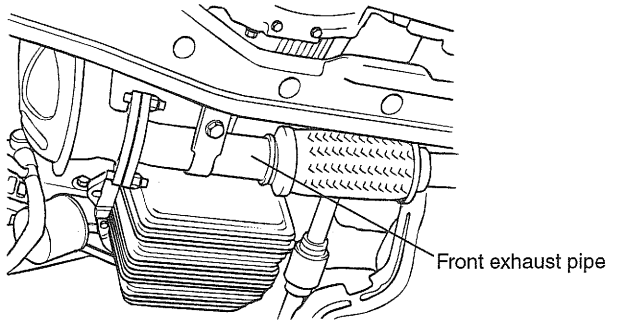

EFCSS47A

2. Remove the under cover and the center member.
3. Remove the stabilizer link mounting nut.

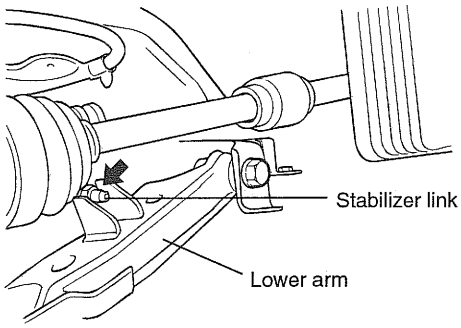

EFCSS09A

4. Remove the lower arm bushing mounting bolts.
5. To make it easier to remove the crossmember, remove steering gear box mounting bolts, and then support the steering gear and linkage on the vehicle.
6. Remove the lower arm bushing mounting bolts.

NOTE

After support the center of the crossmember assembly with a jack, remove the crossmember mounting bolts to the body.

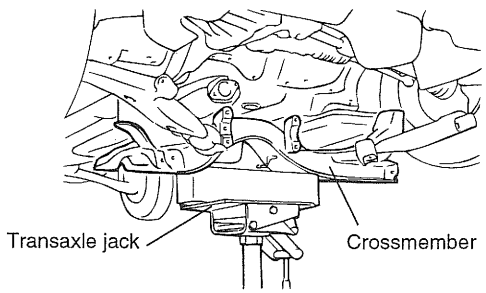

EHNB390A

INSPECTION EHNC2500

1. Check the crossmember for cracks or deformation.
2. Check the centermember for cracks or deformation.
3. Check each insulator and bushing for cracks or deterioration.

INSTALLATION EHNC2600

1. Install the crossmember while supporting it with a jack.

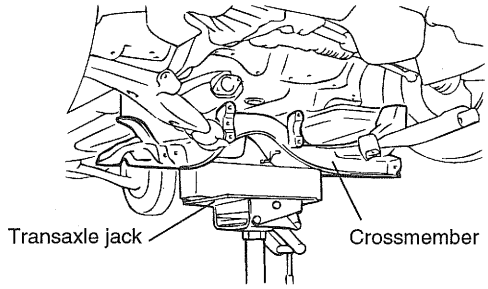

EHNB390A

2. Install steering gear box assembly and stabilizer bar link to the vehicle.
3. Install lower arm bushing mounting bolts and nuts.
4. Install the center member assembly and the under cover.
5. Temporarily tighten the front roll stopper bracket bolt. After the total weight of the engine has been placed on the vehicle body, securely tighten the nut.

Items	Torque Nm (kgf·cm, lb·ft)
Center member mounting bolt	45-64 (450-640, 33-47)
Front roll stopper bracket to center member bolt	45-64 (450-640, 33-47)
Crossmember to body mounting	160-180 (1600-1800, 118-133)

REAR SUSPENSION SYSTEM

COMPONENTS EHNC2700

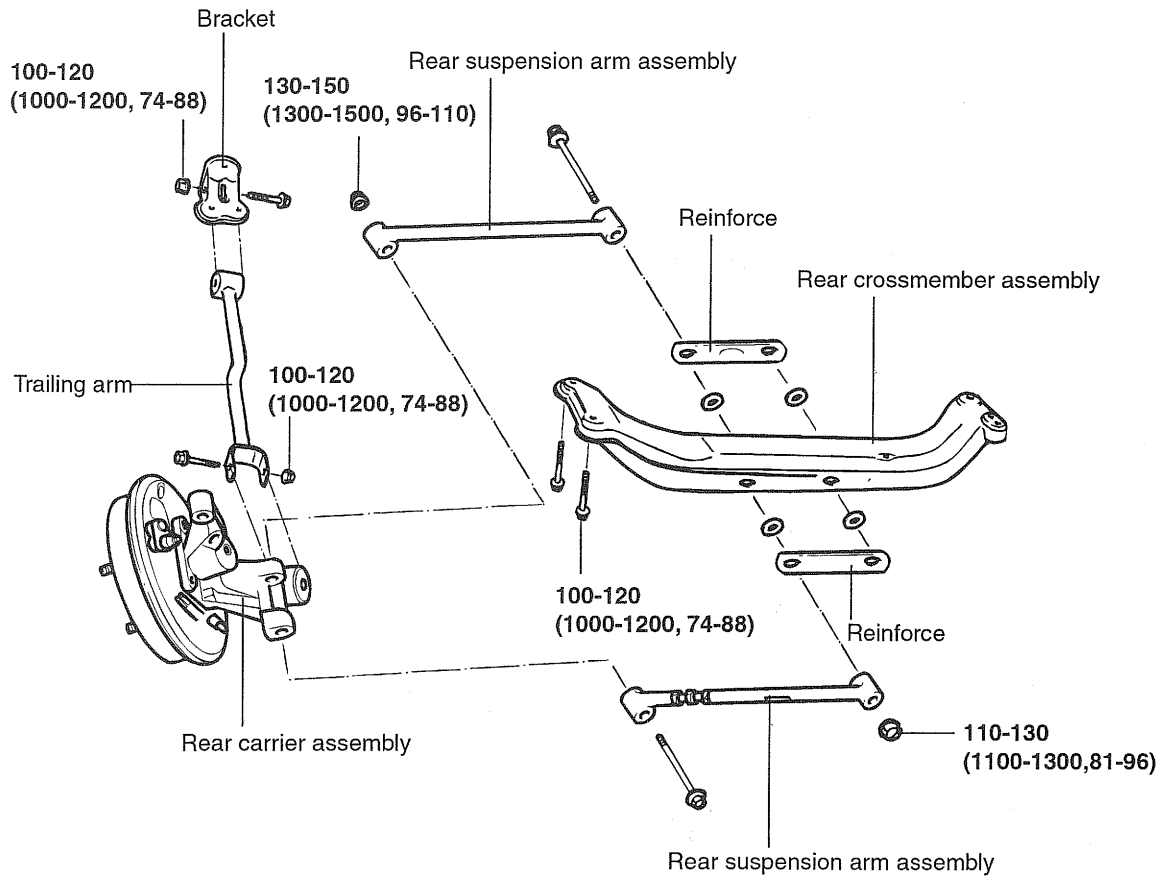

TORQUE : Nm (kgf·cm, lb· ft)

EFCSS16A

REMOVAL EHNC2800

1. Remove the wheel and tire.
2. Remove the stabilizer link.
3. After loosening the rear trailing arm mounting bolts, remove the trailing arm.
4. Remove the rear suspension arm mounting bolt from the rear axle carrier.
5. After supporting the center of the rear crossmember assembly with a jack, remove the rear crossmember mounting bolts to the body.

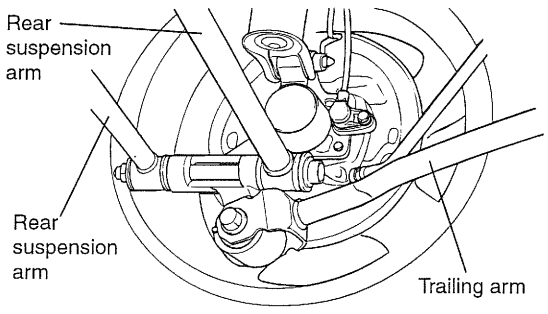

EFCSS25A

6. Remove the rear crossmember and suspension arm.

INSPECTION EHNC2900

1. Check the rubber parts for damage or deterioration.
2. Check the trailing arm and suspension arm for bent or deterioration.
3. Check the bolts for damage or rust.

INSTALLATION EHNC3000

1. Installation is the reverse of removal.
2. Tighten the components below to the specified torque as follows.

Items	Torque Nm (kgf·cm, lb·ft)
Trailing arm mounting	100-120 (1000-1200, 74-88)
Trailing arm bracket mounting	40-50 (400-500, 29-37)
Stabilizer bar bracket mounting	17-26 (170-260, 13-19)
Stabilizer link nut	34-45 (340-450, 25-33)
Rear suspension arm to axle carrier mounting	130-150 (1300-1500, 96-110)
Rear suspension arm to crossmember mounting	110-130 (1100-1300, 81-96)
Rear crossmember mounting	100-120 (1000-1200, 74-88)

* Should be temporaily tightened, and then fully tightened with the vehicle on the ground in an unladen condition.

REAR STRUT

COMPONENTS EHNC3100

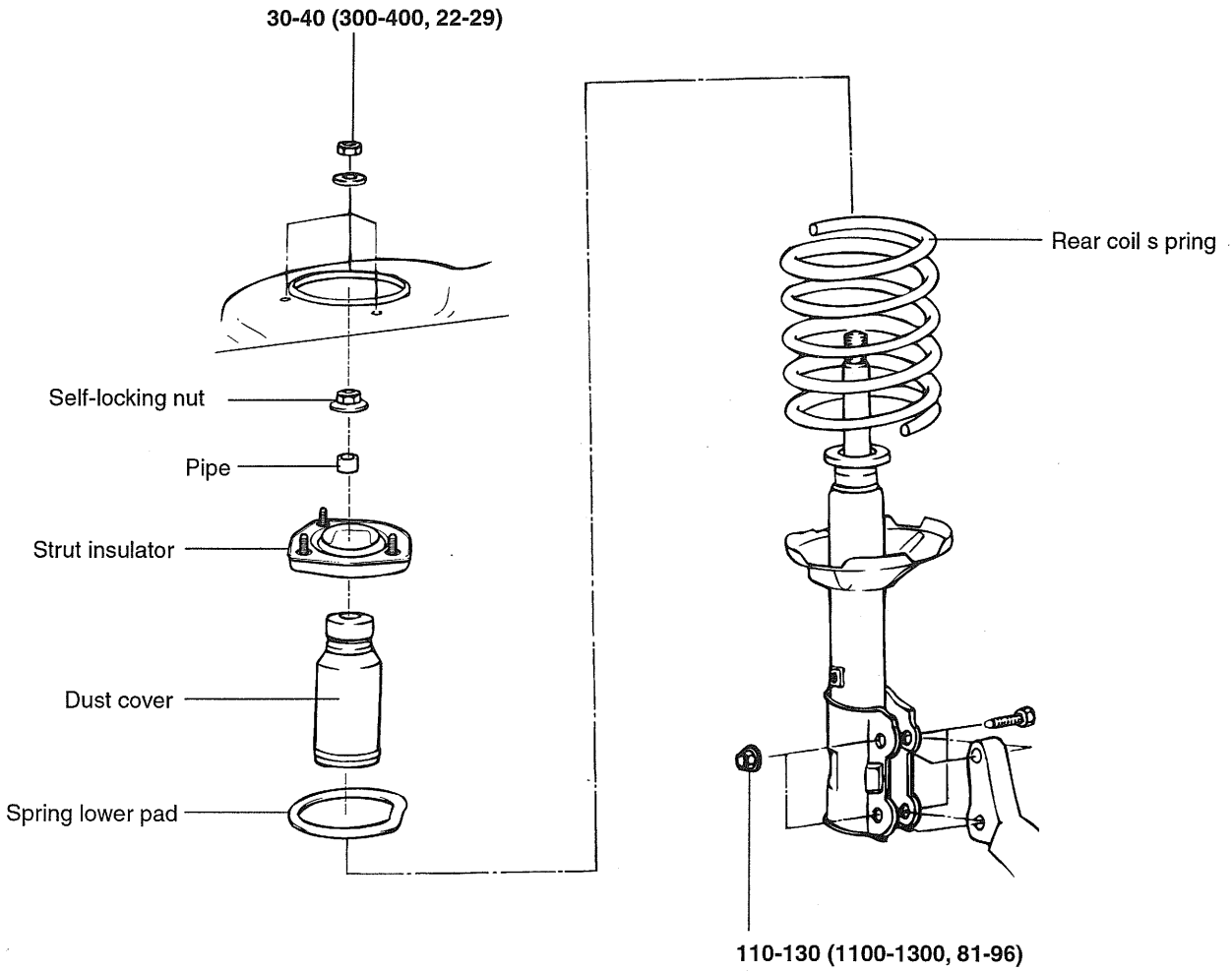

Caution
*** Replace the self-locking nuts with new ones after removal.**

TORQUE : Nm (kgf·cm, lb·ft)

EFCSS12A

REMOVAL EHNC3200

1. Remove the wheel and tire.
2. Remove the luggage tray cover from the quarter trim and pry the service cover loose with a (-) screwdriver.

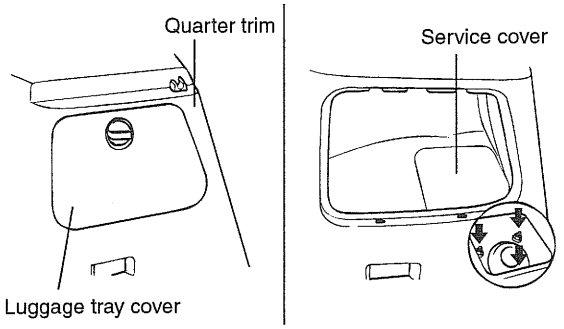

EFCSS30A

3. Remove the rear strut upper mounting nuts (3).
4. Disconnect the brake hose and wheel speed sensor wiring from the rear strut.
5. Remove the stabilizer bar link.

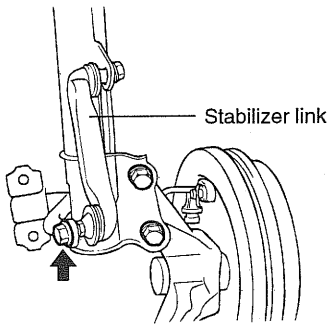

EFCSS14A

6. Remove the strut and carrier mounting bolts(2).

CAUTION

Be careful not to drop the rear strut.

7. Remove the rear strut assembly.

DISASSEMBLY EHNC3300

1. Using the Special Tools (J38402, A - 20 and A - 50), compress the coil spring until there is only a little tension on the strut.

NOTE

Do not use an impact gun.

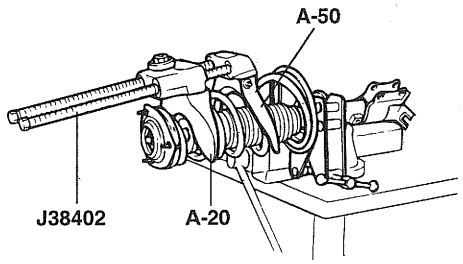

EHDA602A

2. Remove the self-locking nut at the top end of the shock absorber.
3. Remove the insulator, coil spring and dust cover from strut assembly.

INSPECTION EHKB0177

1. Check the strut insulator for wear or damage.
2. Check rubber parts for damage or deterioration.
3. Check the coil spring and strut assembly for sagging and deformation.
4. Check the shock absorber for abnormal resistance or unusual sound.

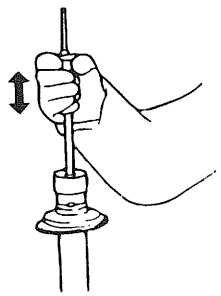

EHDA603B

REASSEMBLY EHNC3500

1. Install the lower spring pad so that the protrusions fit in the holes in the spring lower seat.

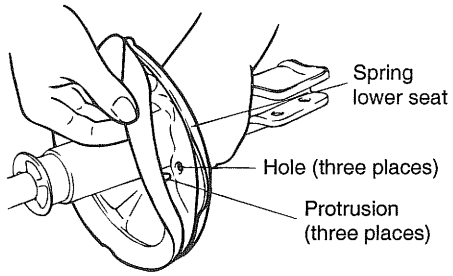

EHDA604A

2. Install the dust cover on the shock absorber.
3. Using the Special Tools (J38402, A - 20 and A - 50), compress the coil spring.

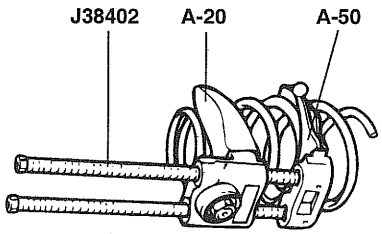

EHDA604C

4. After extending the piston rod fully, install the insulator assembly and pipe.

NOTE

Align the D-shaped hole in the spring seat upper assembly with the protrusion of the piston rod.

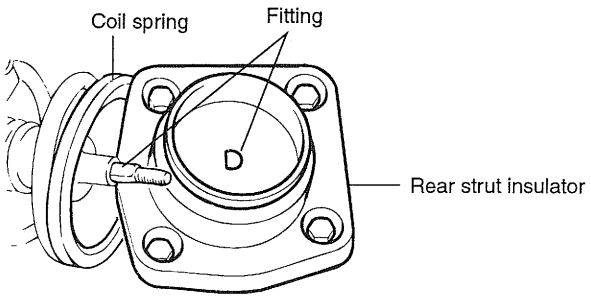

EFCSS15A

5. After seating the lower ends of the coil spring in the lower spring seat grooves correctly, tighten the new self-locking nut temporarily.

CAUTION

Replace the self-locking nut with new ones after removal.

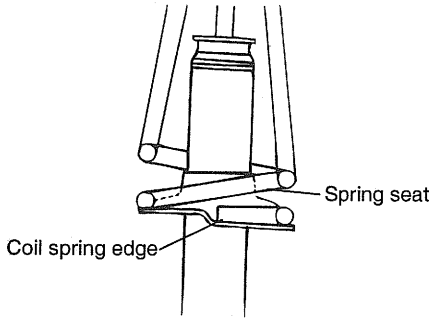

EHDA604B

6. Remove the Special Tools (J38402, A - 20 and A - 40).
7. Tighten the self-locking nut to the specified torque.

Tightening torque
40-55 Nm (400-550 kgf·cm, 29.6-40.7 lb·ft)

TRAILING ARM

REPLACEMENT OF TRAILING ARM BUSHING EHNC3600

1. Install the special tool (09551 - 25000) on the trailing arm.

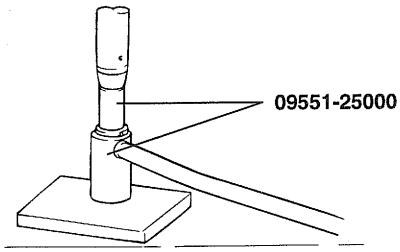

EHDA651A

2. Remove the trailing arm bushing.
3. Using the special tool (09551 - 25000), press-fit the rear trailing arm bushing.

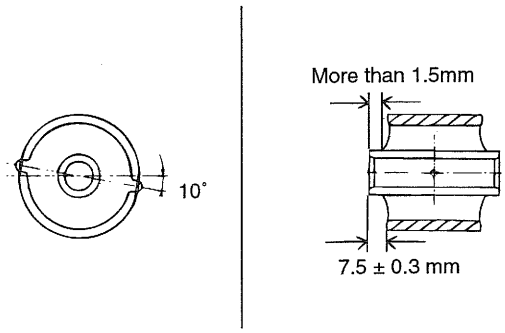

EFCSS46A

NOTE

Press-fit the bushing in the same way as shown in the illustration.

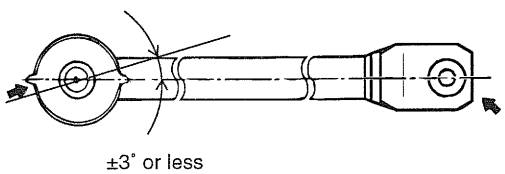

EFCSS17A

REPLACEMENT OF REAR SUSPENSION ARM BUSHING EHKB0210

1. Install the special tools (09545 - 28100, 09545 - 25000) on the rear suspension arm.

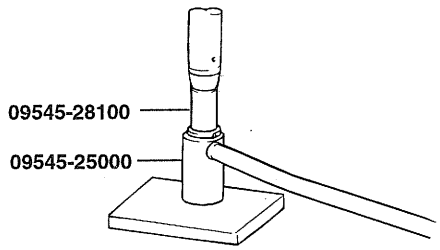

EHKB021A

2. Remove the rear suspension bushing.
3. Apply soap solution to the new bushing and the rear suspension arm.
4. Using the special tool (09552 - 25000), press-fit the the bushing.

REAR STABILIZER BAR

REPLACEMENT OF REAR STABILIZER BAR EHNC3700

1. Remove the stabilizer bar link from the rear strut assembly.

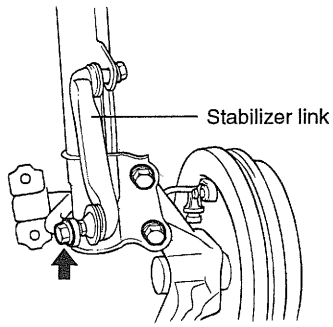

EFCSS14A

2. Remove the rear stabilizer bar mounting brackets.
3. Remove the stabilizer bar.

INSPECTION EHNC3800

Check the stabilizer link ball joint rotating torque.

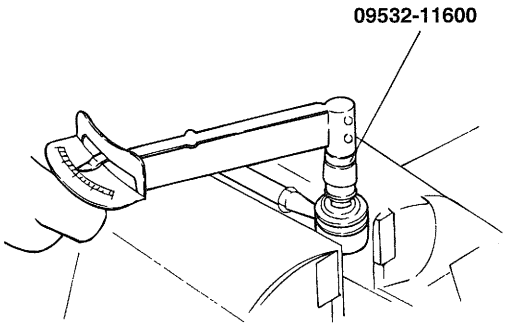

EHDA653A

1. If there is a crack in the dust cover, replace it and add grease.
2. Shake the stabilizer link ball joint stud several times.
3. Mount the self-locking nut on the ball joint, and then measure the ball joint rotating torque.

Standard value

1.7-3.2 Nm (17-32 kgf·cm, 15-27 lb·in.)

4. If the rotating torque is above the upper limit of the standard value, replace the stabilizer link.
5. If the rotating torque is below the lower limit of the standard value, the ball joint may be reused unless it has drag and excessive play.

TIRES/WHEELS

TIRE

FRONT WHEEL ALIGNMENT EHNC3900

When using a wheel alignment tester to inspect the front wheel alignment, always position the car on a level surface with the front wheels facing straight ahead. Prior to inspection, make sure that the front suspension and steering system are in normal operating conditions and that the wheels and tires face straight ahead and the tires are inflated to the specified pressure.

TOE-IN

Toe-in (B-A or angle a+b) is adjusted by turning the tie rod turnbuckles. Toe-in on the left front wheel can be reduced by turning the tie rod toward the rear of the car. Toe-in change is adjusted by turning the tie rods for the right and left wheels simultaneously at the same amount as follows:

Standard value
Toe-in (B-A) mm (in.) : 0 ± 2 mm (0 ± 0.08 in.)

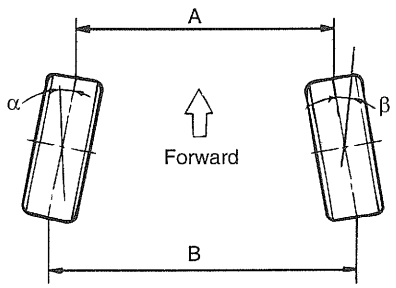

EHHA850A

NOTE

- *Toe-in adjustment should be made by turning the right and left tie rods at the same amount.*
- *When adjusting toe-in, loosen the outer bellows clip to prevent twisting the bellows.*
- *After the adjustment, tighten the tie rod end lock nuts firmly and reinstall the bellows clip.*
- *Adjust each toe-in to be the range of ±1mm*

Tightening torque
Tie rod end lock nuts :
50-55 Nm (500-550 kgf·cm, 37-41 lb·ft)

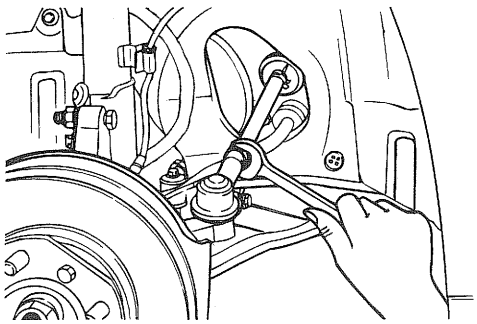

EHHA850B

CAMBER

The steering knuckle which is installed with the strut assembly is pre-set to the specified camber at the factory and doesn't need to be adjusted.

Camber : 0°±30′

CASTER

Caster is pre-set at the factory and doesn't need to be adjusted. If the caster is not within the standard value, replace the bent or damaged parts.

Caster : 2°47′±30′

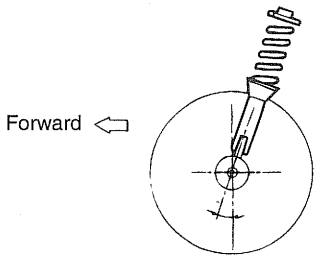

EHHA850C

NOTE

1. *The worn loose or damaged parts of the front suspension assembly must be replaced prior to measuring front wheel alignment.*
2. *Measure the wheel alignment by using special tool (09529-21000).*
3. *Camber and caster are pre-set to the specified value at the factory and don't need to be adjusted.*
4. *If the camber and caster are not within specifications, replace bent or damaged parts.*
5. *The difference of left and right wheels about the camber and the caster must be within the range of 0° ± 30′.*

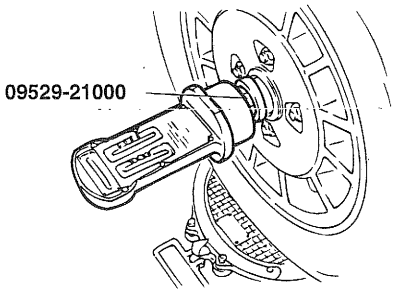

EHHA850D

REAR WHEEL ALIGNMENT

TOE-IN

Standard value : 4^{+3}_{-1} mm ($0.16^{+0.12}_{-0.04}$ in.)

EHKB023A

NOTE

- *Adjust the toe-in by turning the tie rod end of the rear suspension arm.*

Left tie rod : Clockwise direction : ton-in

Right tie rod : Clockwise direction : toe-out

A variation of toe by a rotation of the tie rod:

About 6mm (0.6°)

- *The cam bolt should be adjusted to a maximum of 90° left or right from the center position.*

CAUTION

After adjusting the tie rod, tighten both nuts to the specified torque.

Specified torque

50-60 Nm (500-600 kgf·cm, 37-43 lb·ft)

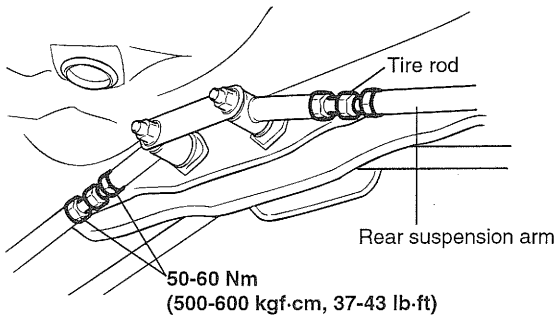

EXDSS13A

CAMBER

Camber is pre-set at the factory and doesn't need to be adjusted. If the camber is not within the standard value, replace the bent or damaged parts.

Camber : -1° ± 30′

TIRE WEAR

1. Measure the tread depth of the tires.

Tread depth of tire [Limit] : 1.6 mm (0.06 in.)

2. If the remaining tread depth is less than the limit, replace the tire.

NOTE

When the tread depth of the tires is less than 1.6 mm (0.06 in.) the wear indicators will appear.

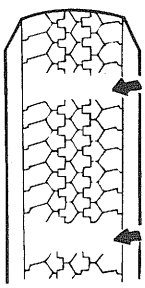

EHA9850E

WHEEL

WHEEL RUNOUT EHNC4000

1. Jack up the vehicle and support it with jack stands.
2. Measure the wheel runout with a dial indicator as illustrated.

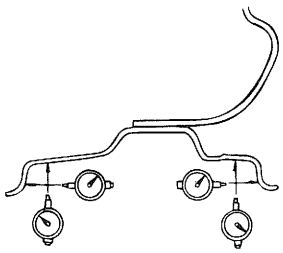

EHDA852B

3. Replace the wheel if the wheel runout exceeds the limit.

Wheel runout [Limit]
Steel wheel
Radial : 0.6 mm (0.028 in.) : (Average of LH & RH)
Axial : 1.0 mm (0.039 in.)
Aluminum wheel
Radial : 0.3 mm (0.012 in.)
Axial : 0.3 mm (0.012 in.)

TIGHTENING WHEEL NUT

1. Tightening torque
   Steel and aluminum alloy wheel

Specified torque
90-110 Nm (900-1,100 kgf·cm, 65-80 lb·ft)

⚠ ***CAUTION***

When using an impact gun, final tightening torque should be checked using a torque wrench.

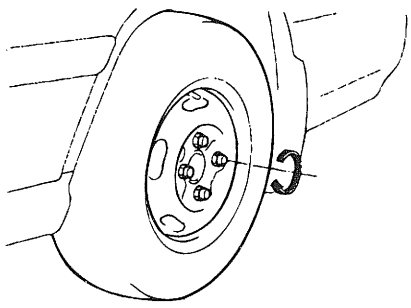

EHDA853A

2. Tightening order
   Check the torque again after tightening the wheel nuts diagonally.

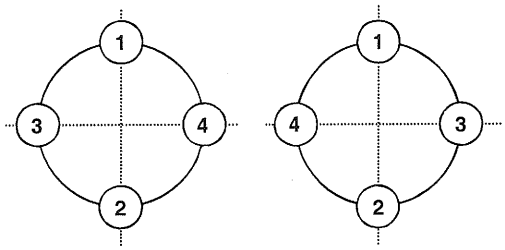

KXDSS51A

WHEEL ROTATION EHKB0244

1. Rotate the tires in the pattern illustrated.

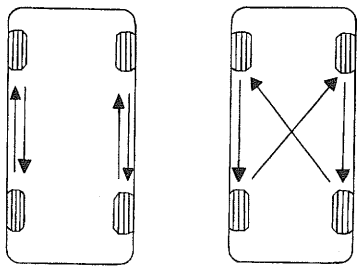

EHDA854A

CHECKING FOR PULL AND WANDER

1. If the steering pulls to one side, rotate the tires according to the following wheel rotation procedure.
   a. Rotate the front right and front left tires, and perform a road test in order to confirm vehicle stability.

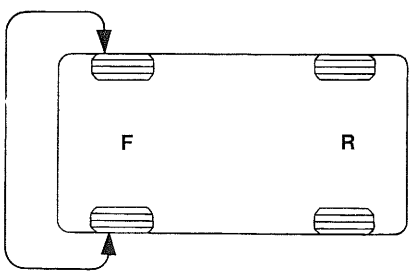

EHDA854B

b. If the steering pulls to the opposite side, rotate the front and rear tires, and perform a road test again.

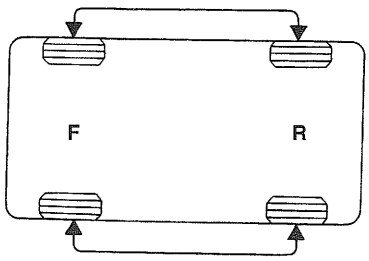

EHDA854C

c. If the steering continues to pull to one side, rotate the front right and left tires again, and perform a road test.

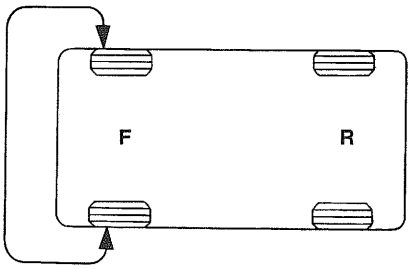

EHDA854B

d. If the steering continues to pull to the opposite side, replace the front wheels with new ones.

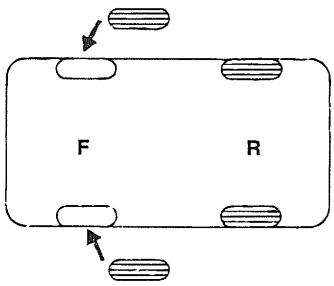

EHDA854D

Steering System

GENERAL ..... ST -2

MECHANICAL POWER STEERING SYSTEM ..... ST -12

GENERAL

EPNC0100

SPECIFICATIONS

Items	Specifications
Steering gear type	Rack and pinion
Rack stroke	146 ± 1 mm
Oil pump type	Vane type
Displacement	9.6 cm²/rev.

SERVICE STANDARD

Items	Specifications
Steering wheel free play	0-30 mm (0-1.1 in.)
Steering angle	
Inner wheel	39°53′ ± 1°30′
Outer wheel	32°10′
Stationary steering effort	3.5kg
Belt deflection	7-10mm
Oil pump pressure	75-82 kg/cm²
Total pinion preload	0.06-0.13 kg·m
Tie rod swing resistance	0.19-0.49 kg·m
Ball joint starting torque	0.05-0.25 kg·m

TIGHTENING TORQUE EPNC0200

Items	Tightening torque (kg·m)
Power steering column and shaft	
Steering column and shaft mounting bolt	1.3 - 1.8
Steering wheel lock nut	3.5 - 4.5
Pinion gear to joint assembly	3.0 - 3.5
Steering column and shaft to universal joint assembly	3.0 - 3.5
Dust cover mounting bolt	0.4 - 0.6
Power steering gear box	
Gear box mounting bolt (A)	6.0 - 8.0
Gear box mounting bolt (B)	9.0 - 11.0
Tie rod lock nut	5.0 - 5.5
Tie rod end ball joint to knuckle arm mounting nut	1.6 - 3.4
Feed tube to gear box	1.2 - 1.8
Gear box to valve body	2.0 - 3.0
Yoke plug lock nut	5.0 - 7.0

Items	Tightening torque (kg·m)
Power steering oil pump	
Oil pump to pressure hose	5.5 - 6.5
Oil pump adjusting bolt	
1.6 DOHC	2.5 - 3.3
1.8 DOHC	3.5 - 5.0
Oil pump mounting bolt	
1.6 DOHC	2.0 - 2.7
1.8 DOHC	3.5 - 5.0
Oil pump bracket mounting bolt	
1.6 DOHC	2.0 - 2.7
1.8 DOHC	3.5 - 5.0
Power steering hose	
Power steering reservoir mounting bolt	0.9 - 1.4
Power steering hose mounting bolt	0.8 - 1.2
Power steering tube mounting bolt	0.8 - 1.2

LUBRICANTS EPNC0300

Items	Recommended lubricant	Quantity
Horn contact ring of steering wheel	CENTOPLX278 (KLUBER KOREA)	1.5g
Bearing of steering shaft	ALVANIA #2 OR #3 (KEUK DONG SHELL, KOREA)	As required
Ball joint of tie rod end	SHOWA SUNLIGHT MB-2 OR equivalent	4g
Steering gear housing	ONE-LUBER RP GREASE (KYODOYUSHI, JAPAN)	As required
Inner ball joint of gear box	LONG TIME PD2 (OPTIMOL, GERMAN)	As required
Contact area of gear box bellows & tie rod	SILICON GREASE (SPEC NO : MS511-41)	As required
Power steering fluid	PSF-3	0.75-0.8 liter (0.79-0.84 qts.)

SPECIAL TOOLS EPNC0400

Tool (Number and name)	Illustration	Use
09565-11100 Preload socket	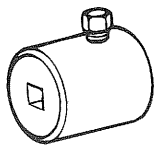 E6511100	Measuring the main shaft preload
09568-31000 Tie rod end puller	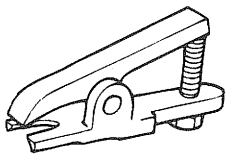 E6831000	Separating the tie rod end ball joint.
09572-21000 Oil pressure gauge	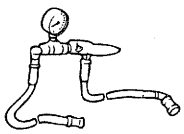 E7221000	Measuring the power steering oil pressure (Use with 09572-22100, 09572-21200)
09572-22100 Oil pressure gauge adapter (Pump side)	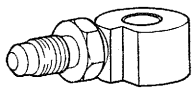 E7222100	Measuring the power steering oil pressure (Use with 09572-21000, 09572-21200)
09572-21200 Oil pressure gauge adapter (Hose side)	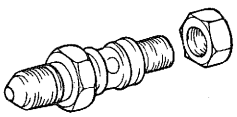 E7221200	Measuring the power steering oil pressure (Use with 09572-21000, 09572-22100)
09561-11002 Steering wheel puller	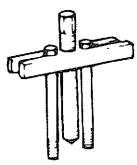 E6111002	Removing the steering wheel

Tool (Number and name)	Illustration	Use
09573-21200 Oil seal guide	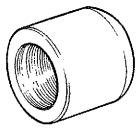 E7321200	1. Removing the oil seal from the rack housing 2. Installing the oil seal to the rack housing
09555-21000 Bar	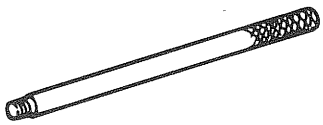 E5521000	1. Removing the oil seal from the rack housing 2. Installating the oil seal to the rack housing
09573-21000 Oil seal installer guide	 E7321000	Installing the oil seal to the rack housing
09573-21100 Oil seal installer	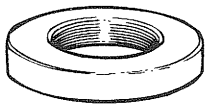 E7321100	Installing the oil seal
09432-21600 Bearing installer	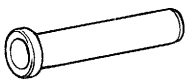 D3221600	1. Installing the needle bearing to the rack housing 2. Installing the ball bearing and oil seal to the valve body
09222-32100 Valve stem oil seal installer	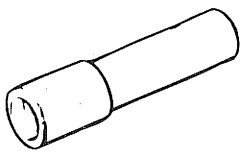 B2232100	1. Installing the ball bearing to the rack housing 2. Installing the oil seal to the rack bushing and valve body
09434-14200 Counter shaft bearing installer	 D3414200	Installing the oil seal to the rack bushing and valve body.

TROUBLESHOOTING EPNC0500

Symptom	Probable cause	Remedy
Excessive play in steering wheel	Loose yoke plug	Retighten
	Loose steering gear mounting bolts	Retighten
	Loose or worn tie rod end ball stud	Retighten or replace as necessary
Steering wheel operation is not smooth (Insufficient power assist)	V-belt slippage	Inspect
	Damaged V-belt	Replace
	Low fluid level	Replenish
	Air in the fluid	Air bleeding
	Twisted or damaged hoses	Repair or replace
	Insufficient oil pump pressure	Repair or replace the oil pump
	Sticky control valve	Replace
	Oil pump leakage	Replace the damaged parts
	Excessive oil leaks from rack and pinion in gear box	Replace the damaged parts
	Distorted or damaged gear box or valve	Replace
Steering wheel does not return properly	Excessive turning resistance of tie rod ball joint	Replace
	Excessively tightened yoke plug	Adjust
	Faulty inner tie rod and ball joint	Replace
	Loose connection between gear box and crossmember	Retighten
	Worn steering shaft and body grommet	Repair or replace
	Bent rack	Replace
	Damaged pinion bearing	Replace
	Twisted or damaged hoses	Reposition or replace
	Damaged oil pressure control valve	Replace
	Damaged oil pump pressure shaft bearing	Replace
Noise	**Hissing Noise in Steering Gear** There is some noise with all power steering systems. One of the most common is a hissing sound when the steering wheel is turned with the vehicle stopped. This noise will be most evident when turning the wheel with the brakes being applied. There is no relationship between this noise and steering performance. Do not replace the valve unless the "hissing" noise becomes extreme. A replaced valve will also make a slight noise.	
Rattling or chucking noise in the rack and pinion	Interference between hoses and vehicle body	Reposition
	Loose gear box bracket	Retighten
	Loose tie rod end ball joint	Retighten
	Worn tie rod end ball joint	Replace
Abnormal noise in the oil pump	Low fluid level	Replenish
	Air in the fluid	Air bleeding

SERVICE ADJUSTMENT PROCEDURE EPNC0600

CHECKING STEERING WHEEL FREE PLAY

1. Start the engine with the steering wheel in the straight ahead position.
2. Gently turn the steering wheel left and right and check the play at the circumference of the steering wheel.

Standard value
Steering wheel free play : 0-30 mm (0-1.1 in.)

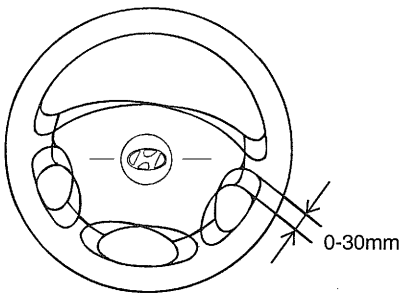

KPKA001A

3. If the play exceeds the standard value, inspect the steering shaft connection and steering linkage play.

CHECKING STEERING ANGLE

1. Place the front wheel on a turning radius gauge and measure the steering angle.

Wheel angle [Standard value]
Inner wheel : 39°53′ ± 1°30′
Outer wheel : 32°10′

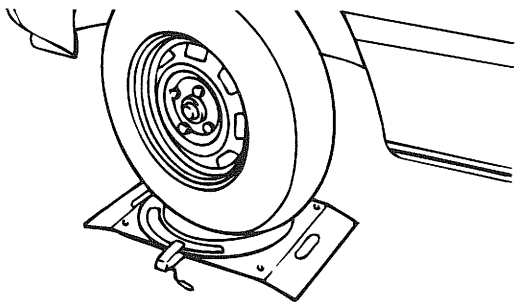

EPA9002A

2. If the measured value is not within the standard value, adjust the toe and inspect again.

CHECKING THE TIE ROD END BALL JOINT STARTING TORQUE EPNC0700

1. Disconnect the tie rod and knuckle using the special tool.

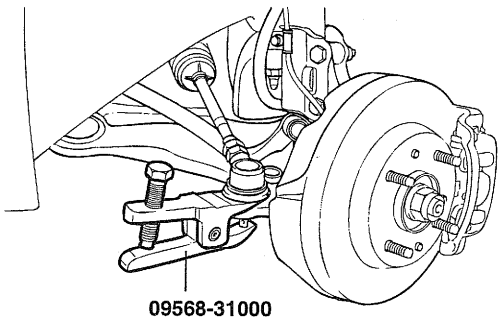

KPNB070A

2. Shake the ball joint stud several times, install the nut on the stud and adjust the ball joint starting torque.

Standard value : 0.05 - 0.25 kg·m

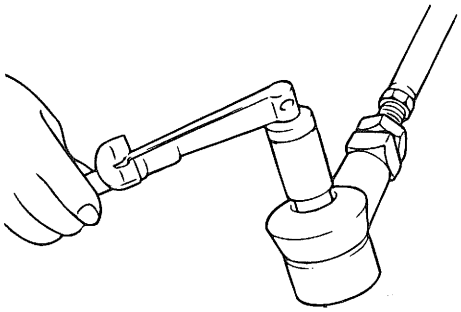

EPA9003A

3. If the starting torque exceeds the standard value, replace the tie rod end.
4. Even if the starting torque is below the standard value, check the ball joint play and installation.

CHECKING STATIONARY STEERING EFFORT EPNC0800

1. Place the vehicle on a level surface and place the steering wheel in the straight ahead position.
2. Start the engine and keep the engine speed at 1000 ± 100 rpm.

   NOTE

   After checking, reset the engine speed to the standard value (idling speed).

3. Measure the turning force with a spring scale by turning the steering wheel clockwise and counterclockwise one and a half turns.

Standard value
Stationary steering effort : 3.5 kg

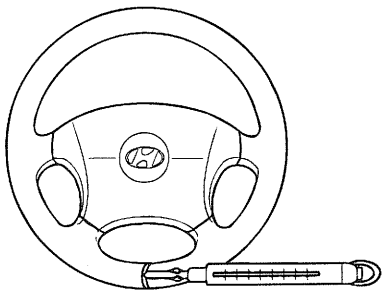

KPKA003A

4. Check that there is no sudden change of force while turning the steering wheel.
5. If the stationary steering effort exceeds the standard value, check and adjust the following points.
   1) Damage or cracks on the dust cover and tie rod end ball joint.
   2) Pinion preload of the steering gear box and starting torque of the tie rod end ball joint.
   3) Starting torque of the ball joint.

CHECKING STEERING WHEEL RETURN

Check the steering wheel return and confirm the following points:

1. The force required to turn the steering wheel and the wheel return should be the same for both left and right in case of moderate or sharp turns.
2. When the steering wheel is turned 90° and held for a couple of seconds while the vehicle is being driven at 35kph, the steering wheel should return to within 20° from the neutral position when it is released.

   NOTE

   If the steering wheel is turned very quickly, steering may be momentarily difficult. This is not a malfunction because the oil pump output will be somewhat decreased.

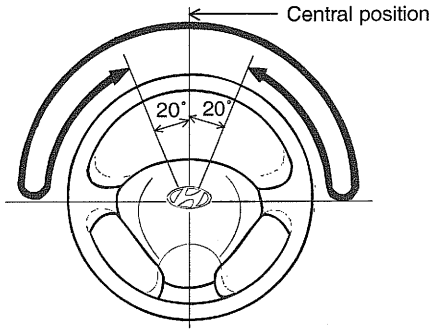

EPJB080A

CHECKING POWER STEERING BELT TENSION EPNC0900

1. Press the V belt, applying a pressure of 98N (10kg, 22lb) at the specified point and measure the deflection to confirm that it is within the standard value.

Standard value : V belt deflection : 6-9 mm

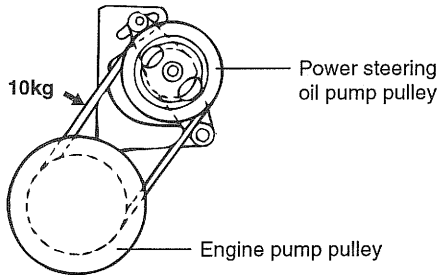

EPKB085A

2. If the belt deflection is out of the standard value, adjust the belt tension as follows.
   1) Loosen the power steering "V"belt tension adjusting bolt.

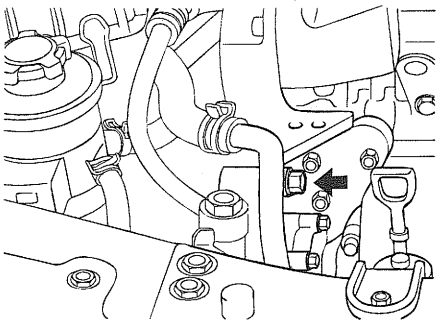

KPNB090A

   2) Put a bar or equivalent between the bracket and the oil pump and adjust the tension so that the belt deflection is within the standard value.

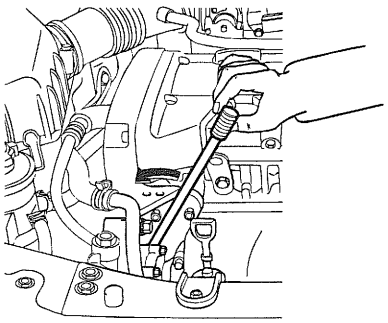

KPNB090B

   3) Tighten the power steering "V"belt tension adjusting bolt.
   4) Check the belt deflection and adjust it again if necessary.

CAUTION

After turning the V belt in the normal rotation direction more than once, recheck the belt deflection

CHECKING POWER STEERING FLUID LEVEL EPNC1000

1. Place the vehicle on a level surface.
2. Start the engine. With the vehicle kept stationary, turn the steering wheel several times continuously to raise the fluid temperature to 50 - 60°C (122 to 140°F).
3. With the engine at idle, turn the steering wheel fully clockwise and counterclockwise several times.
4. Make sure there is no foaming or cloudiness in the reservoir fluid.
5. Stop the engine to check for any difference in fluid level between a stationary and a running engine.

NOTE

1. *If the fluid level varies 5 mm (0.2 in.) or more, bleed the system.*
2. *If the fluid level suddenly rises after stopping the engine, further bleeding is required.*
3. *Incomplete bleeding will produce a chattering sound in the pump and noise in the flow control valve, and lead to decreased durability of the pump.*

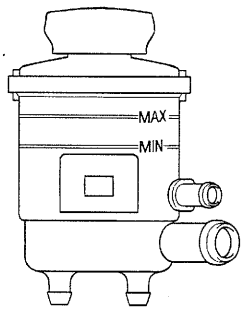

KPNB100A

REPLACING POWER STEERING FLUID EPNC1100

1. Jack up the front wheels of the vehicle and support them with a rigid rack.
2. Disconnect the return hose from the oil reservoir and plug the oil reservoir.
3. Connect a vinyl hose to the disconnected return hose, and drain oil into a container.
4. Disconnect the high-tension cables.
   While operating the starter motor intermittently, drain fluid by turning the steering wheel fully left and right several times.
5. Connect the return hose and fix it with a clip.
6. Fill the power steering fluid reservoir with the specified fluid.

PSF-3 : 0.75-0.8 lit.

7. Start the engine.
   Check for fluid leaks from the hose, then stop the engine.
8. Pour fluid into the bottom of the oil filter in the power steering fluid reservoir.
9. Air bleed the system.

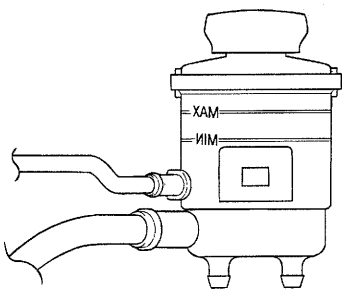

KPNB100B

AIR BLEEDING EPNC1200

1. Disconnect the ignition coil high tension cable, and then, while operating the starter motor intermittently (for 15 to 20 seconds), turn the steering wheel fully to the left and right five or six times.

   NOTE
   1. *When bleeding, replenish with fluid so that the level does not decrease fall below the bottom of the filter.*
   2. *If air bleeding is done with the vehicle idling, the air will be decomposed and absorbed into the fluid. Be sure to do the bleeding only while cranking.*

2. Connect the high tension cable, and then start the engine (idling).
3. Turn the steering wheel left and right until there are no air bubbles in the oil reservoir.
4. Confirm that the fluid is not milky and the level is between "MAX" and "MIN" mark on the reservoir.
5. Check that there is a little change in the fluid level when the steering wheel is turned left and right.

   NOTE
   1. *If the fluid level varies 5mm (0.2 in.) or more, bleed the system again.*
   2. *If the fluid level suddenly rises after stopping the engine, further bleeding is required.*
   3. *Incomplete bleeding will produce a chattering sound in the pump and noise in the flow control valve, and lead to decreased durability of the pump.*

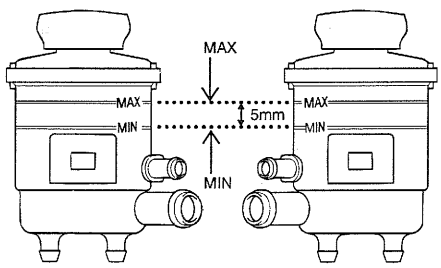

KPNB120A

OIL PUMP PRESSURE TEST EPNC1300

1. Disconnect the pressure hose from the oil pump and connect the special tool.
2. Air bleed and then start the engine. Turn the steering wheel several times so that the fluid temperature can rise to approximately 50°C (122°F).
3. Increase the engine speed up to 1,000 rpm ± 100 rpm.
4. Close the shut-off valve and measure the fluid pressure to confirm that it is within the standard value.

Oil pump pressure [Standard value]

Relief pressure : 75-82 kg·cm²

CAUTION

Do not keep the shut-off valve on the pressure gauge closed longer than 10 seconds.

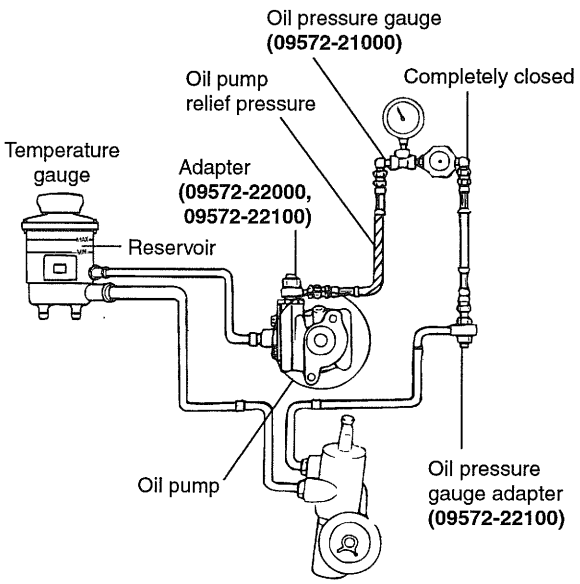

EPNC130A

5. Remove the special tools, and tighten the pressure hose to the specified torque.

Tightening torque

Pressure hose : 5.5 - 6.5 kg·cm

6. Air bleed the system.

MECHANICAL POWER STEERING SYSTEM

STEERING COLUMN/SHAFT

COMPONENTS EPNC1500

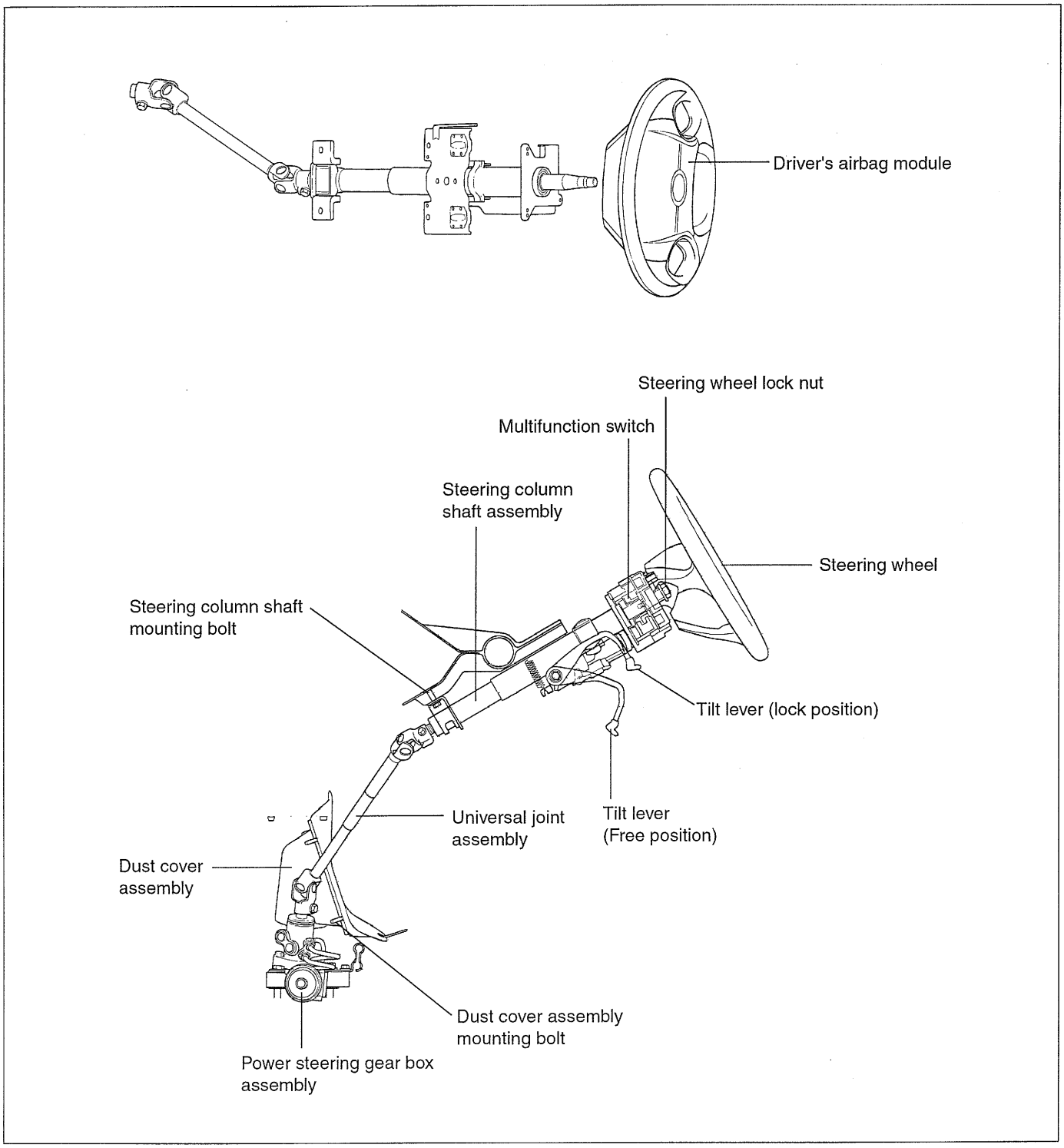

EPNC150A

REMOVAL EPNC1600

1. Disconnect the negative (-) terminal from the battery.

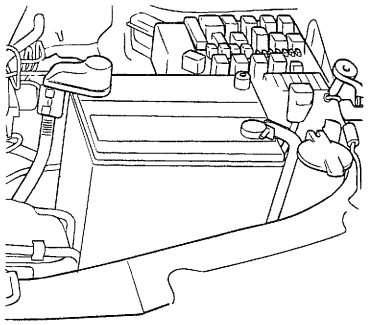

KPNB160A

2. After removing the bolt shown in the illustration, remove the airbag module.

NOTE

For the vehicles not equipped with SRS airbag, remove the horn pad.

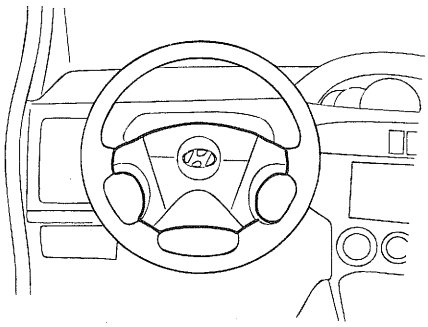

KPNB160B

3. Remove the steering wheel lock nut.

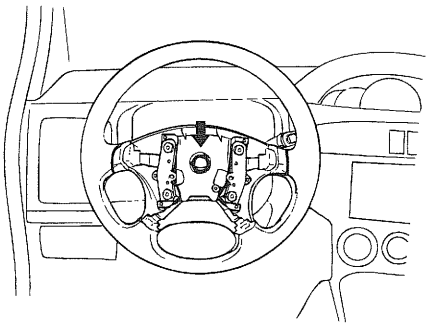

KPNB160C

4. After aligning the marks on the steering shaft and wheel, remove the steering wheel using the special tool.

NOTE

Do not hammer on the steering wheel to remove the steering wheel. It may damage the steering column.

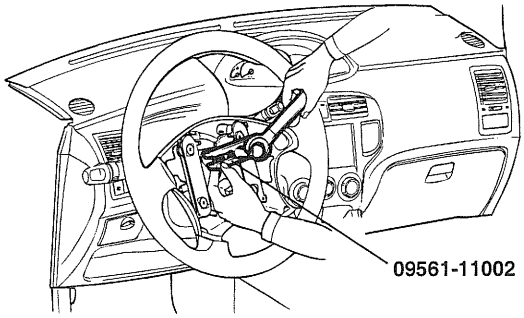

KPNB160D

5. After removing the bolt shown in the illustration, remove the column shrouds.

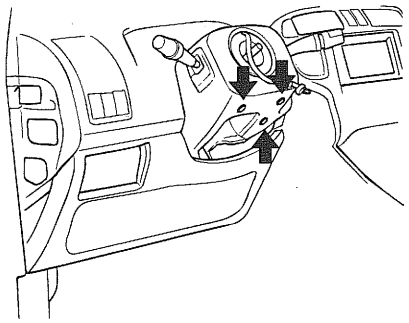

KPNB160E

6. After removing the connectors of the multifunction switch, remove the multifunction switch assembly.

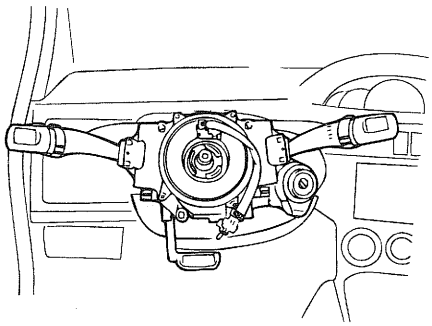

KPNB160F

7. After removing the mounting bolts, remove the lower crash pad.

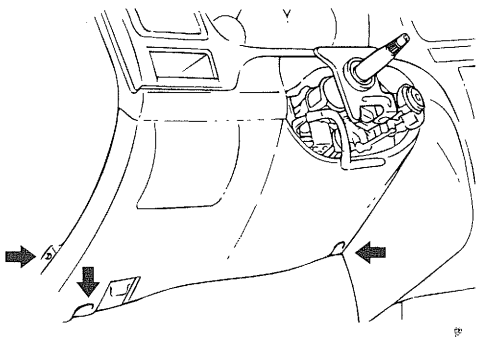

KPNB160G

8. Remove the bolt connecting the pinion and the universal joint.

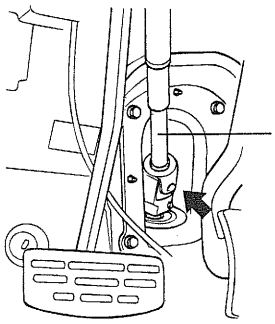

EPNC160A

9. After removing the mounting bolts, remove the steering column and shaft assembly.

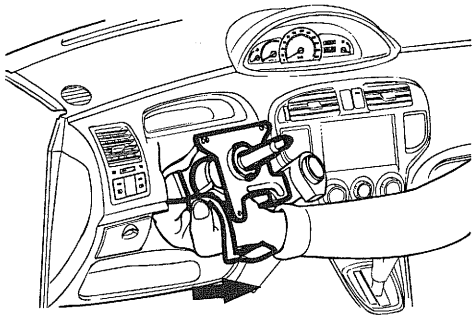

KPNB160I

INSPECTION EPKB1550

1. Check the steering column shaft for damage and deformation.
2. Check connections for play, damage and smooth operation.
3. Check the ball joint bearing for wear and damage.

INSTALLATION EPNC1900

Installation is the reverse of removal.

DISASSEMBLY AND REASSEMBLY EPKB1600

KEY LOCK ASSEMBLY

1. If it is necessary to remove the key lock assembly, use a punch to make a groove on the head of the special bolt, and then use a screwdriver to remove the key lock assembly mounting bracket.

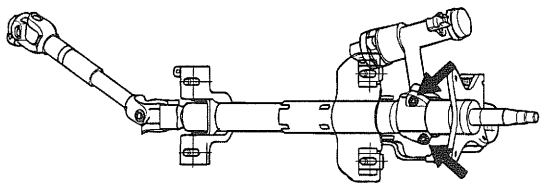

KPKA021A

2. Disassemble the key lock assembly from the steering column and shaft assembly.

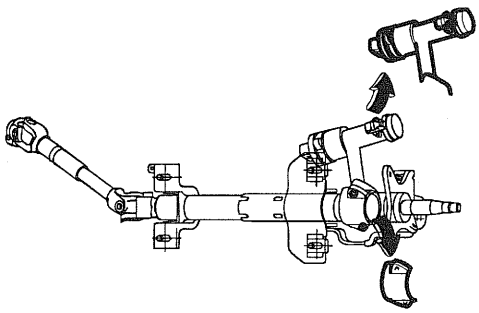

KPKA022A

3. Reassembly is the reverse of disassembly.

UNIVERSAL JOINT ASSEMBLY

1. Remove the bolt connecting the universal joint assembly and the steering column and shaft assembly.

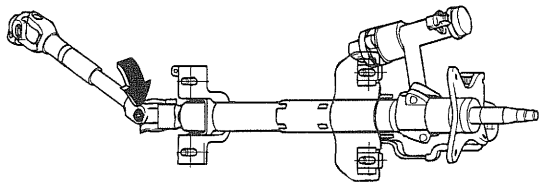

KPKA023A

2. Remove the universal joint assembly from the steering column and shaft assembly.

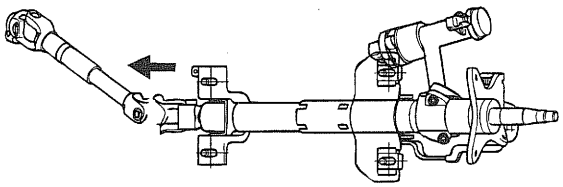

KPKA024A

3. Reassembly is the reverse of disassembly.

POWER STEERING GEAR BOX

COMPONENTS EPNC2000

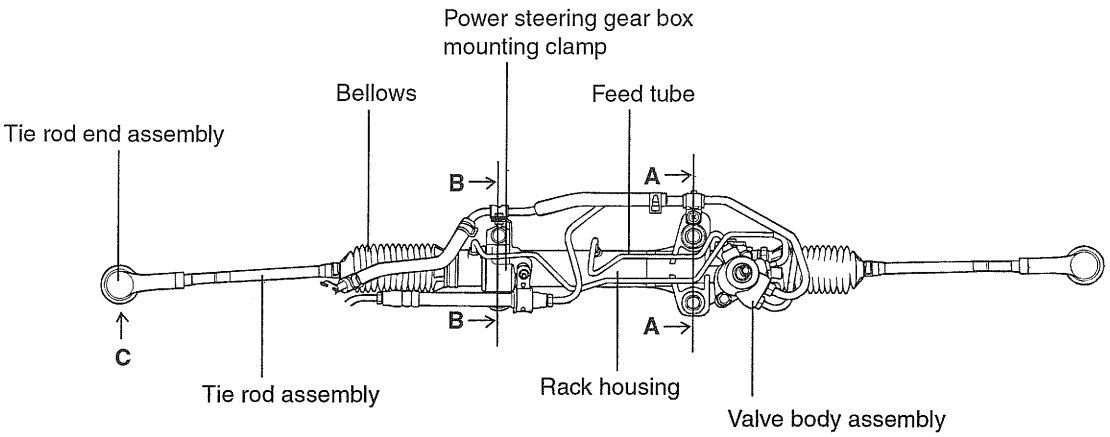

[VIEW A]

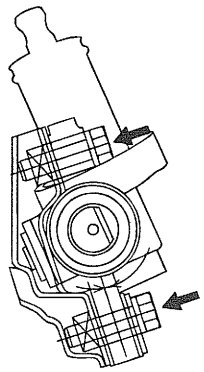

[VIEW B]

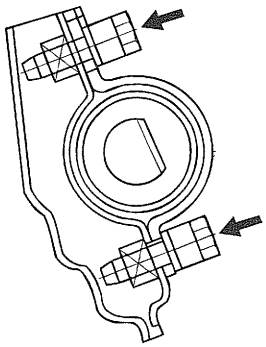

[VIEW C]

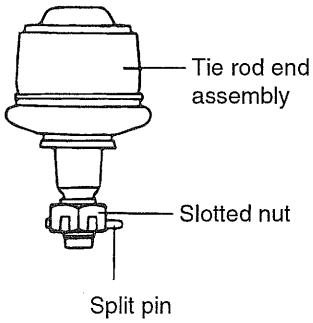

EPNC200A

REMOVAL EPNC2100

1. Drain the power steering fluid.
2. Separate the transaxle mounting bracket and the transaxle insulator.

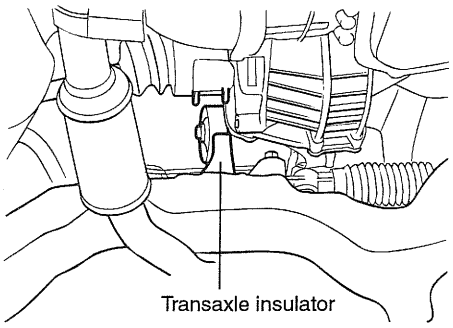

EPNC210A

3. Separate the universal joint assembly from the gear box of driver's seat side.

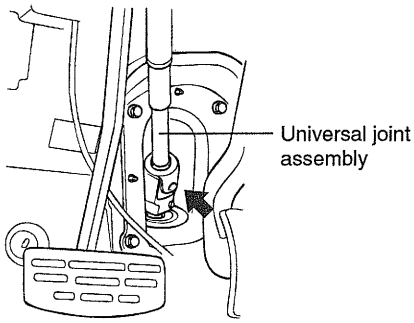

EPNC210B

4. After removing the four dust cover mounting bolt, remove the dust cover assembly.

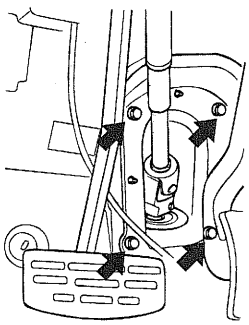

KPNB160J

5. Lift up the vehicle.
6. Remove the front tires (RH/LH).
7. After removing the split pin, disconnect the tie rod from the knuckle using the special tool (09568-31000).

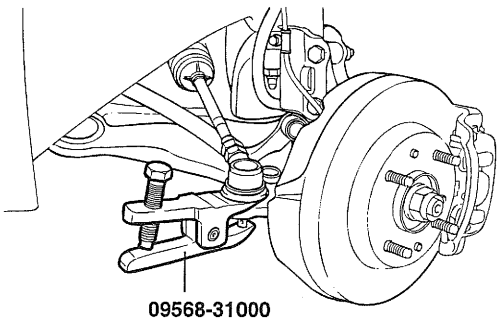

KPNB070A

8. Disconnect the pressure and return hoses.

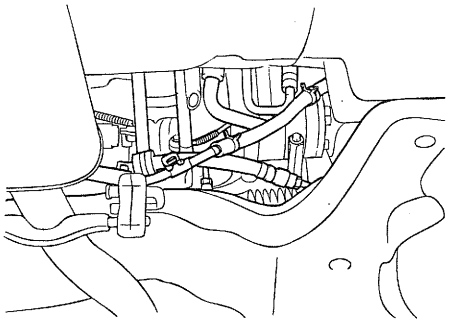

KPNB210B

9. Disconnect the stabilizer bar (RH/LH sides) from the link.

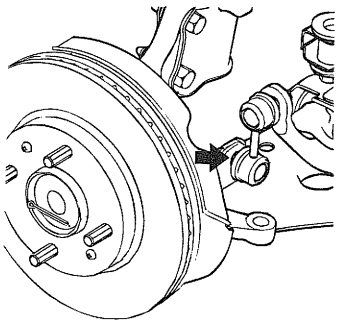

KPNB210C

10. Remove the center member and front muffler assembly.

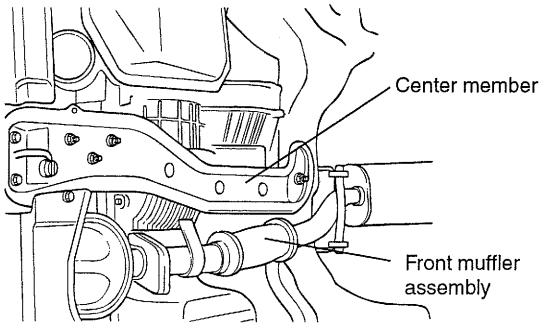

EPNC210C

11. Remove the transaxle mounting insulator from the crossmember.

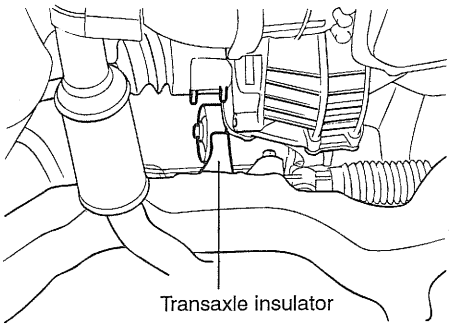

EPNC210A

12. Loosen the crossmember mounting bolts and nuts.

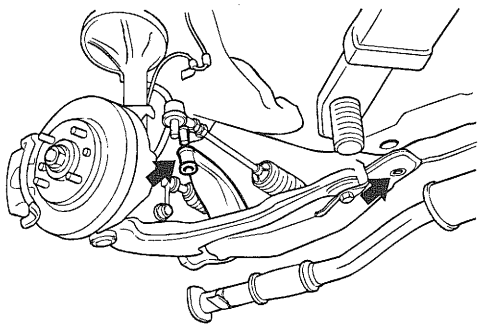

KPNB210E

13. Remove the power steering gear box mounting bolts and clamps.

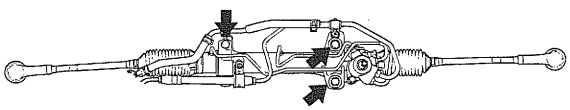

KPNB210J

14. Remove the power steering gear box by pulling it toward the left side of the vehicle (driver's seat side).

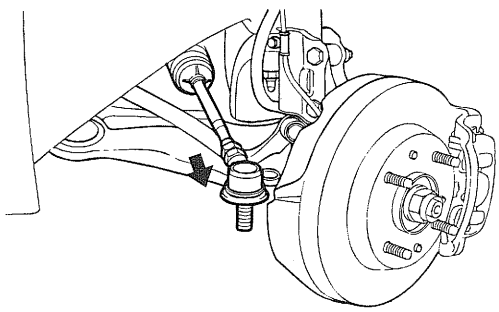

KPNB210G

NOTE

When removing the gear box, pull it out carefully and slowly so as not to damage the boots.

DISASSEMBLY AND ASSEMBLY EPKB1900

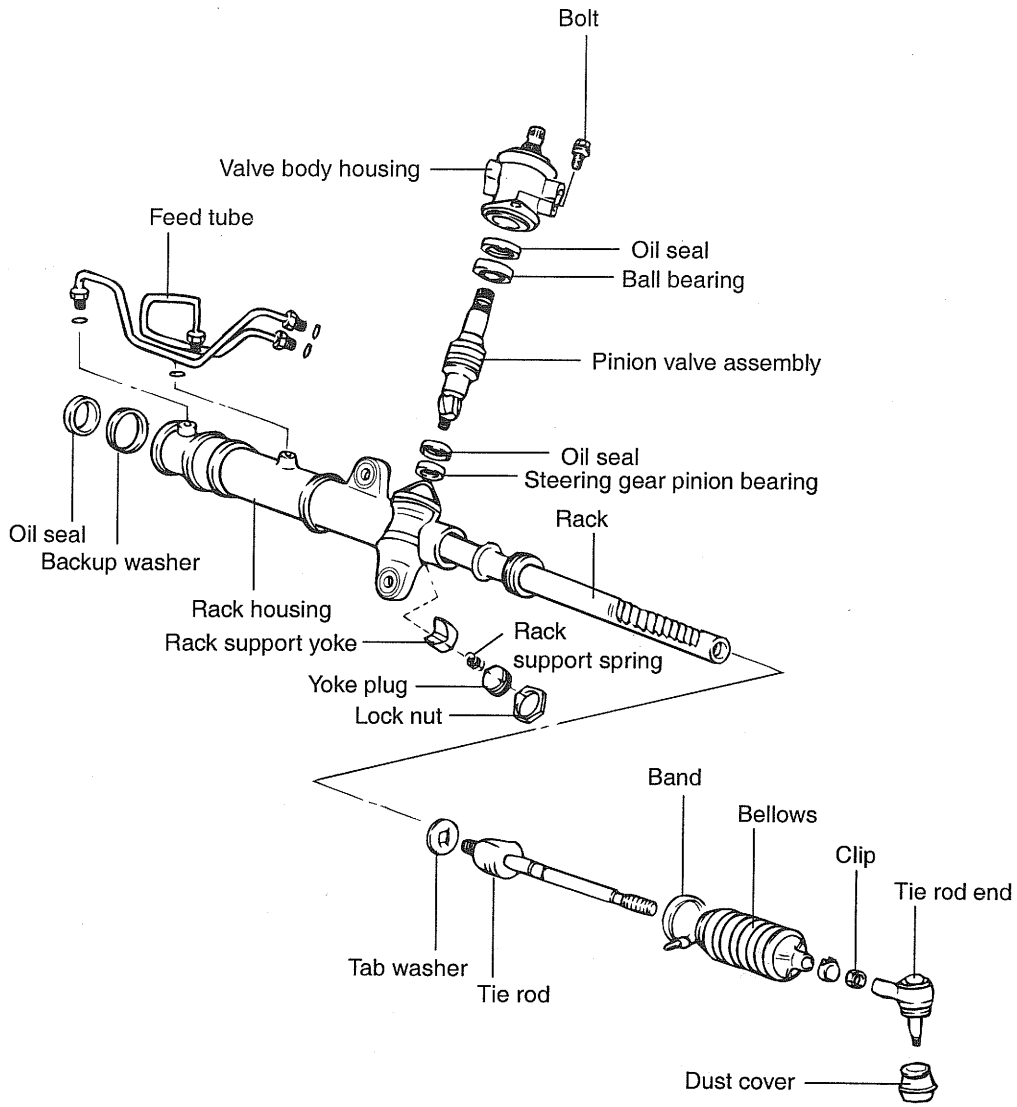

KPKA033A

INSPECTION AND ADJUSTMENT BEFORE DISASSEMBLY EPNC2300

Fix a brass plate or aluminum plate for protection to the jaws of a vise and mount the gear box in a vise.

> ⚠ *CAUTION*
>
> ***When mounting the gear box in a vise, let the installation position of it be fixed to the jaws. If other position is fixed, the gear box may be damaged.***

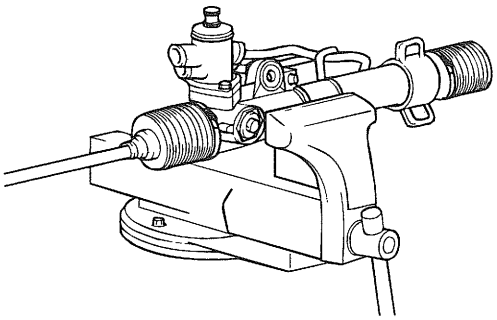

KPNB220B

TOTAL PINION PRELOAD

1. Rotate the pinion gear for approximately 4-6 seconds for one rotation to measure the total pinion preload.

Standard value
Total pinion preload : 0.06-0.13 kg·m

> 📖 *NOTE*
>
> *Measure the pinion preload through the entire stroke of the rack.*

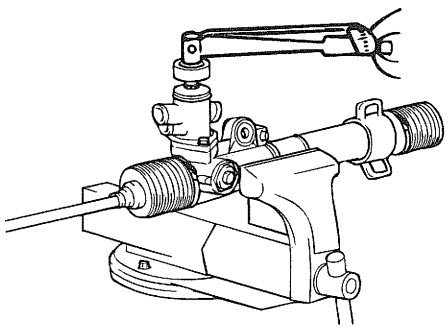

KPNB220C

2. If the measured value is out of the standard value, adjust the yoke plug and then recheck the total pinion preload.
3. After re-checking the total pinion preload, if the value is still out of the standard value, inspect or replace the yoke plug components.

TIE ROD SWING RESISTANCE

1. Rotate the tie rod severely ten times.
2. Measure the tie rod swing resistance with a spring scale.

Standard value
Total rod swing resistance : 0.19-0.49 kg·m

3. If the measured value exceeds the standard value, replace the tie rod assembly.

> ⚠ *CAUTION*
>
> ***Even if the measured value is below the standard value, the tie rod that swings smoothly without excessive play may be used. If the measured value is below 0.44kg·m replace the tie rod.***

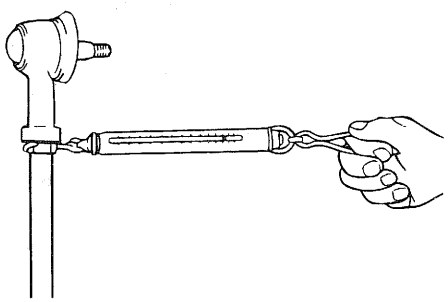

EPKB200A

BELLOWS INSPECTION

1. Inspect the bellows for damage or deterioration.
2. Make sure the bellows are secured in the correct position.
3. If the bellows are defective, replace them with new ones.

DISASSEMBLY EPNC2400

1. Remove the tie rod end from the tie rod.

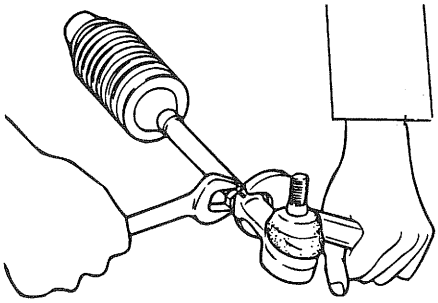

EPA9013F

2. After mounting the tie rod end in a vise, remove the dust cover from the ball joint.

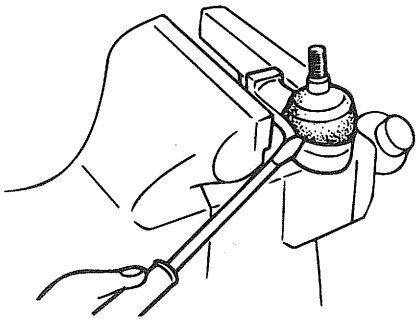

EPA9013G

3. Remove the bellows band.

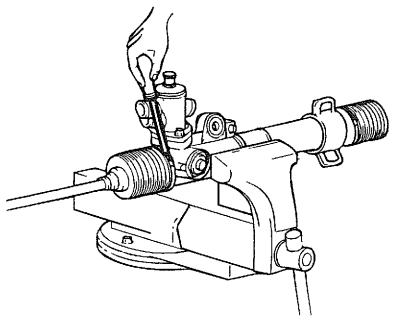

KPNB240A

4. Remove the bellows clip.

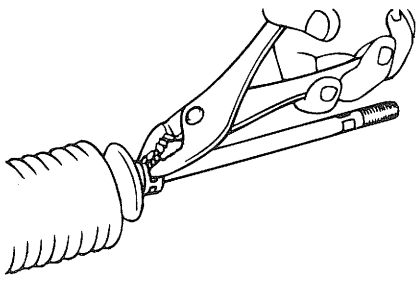

EPA9013I

5. Pull the bellows out toward the tie rod.

NOTE

Check for rust on the rack when the bellows are replaced.

6. Remove the feed tube from the rack housing.
7. While moving the rack slowly, drain fluid from the rack housing.
8. Remove the tab washer which fixes the tie rod and rack using a chisel.

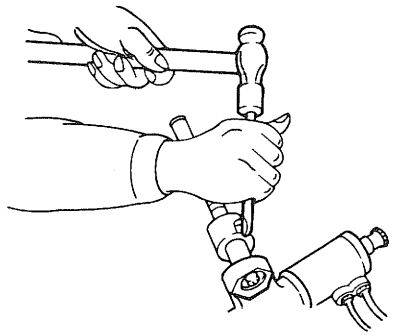

KPKA037A

9. Remove the tie rod from the rack.

CAUTION

Remove the tie rod from the rack taking care not to twist the rack.

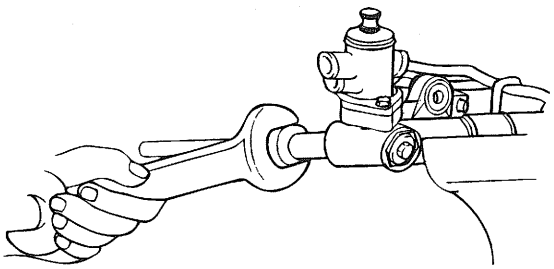

KPNB240B

10. After removing the yoke plug locking nut, remove the yoke plug.

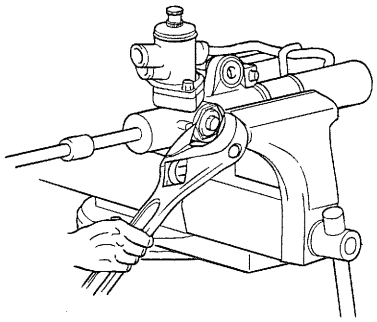

KPKA039A

11. Remove the lock nut, yoke plug, rack support spring, rack support yoke and bushing from the gear box.

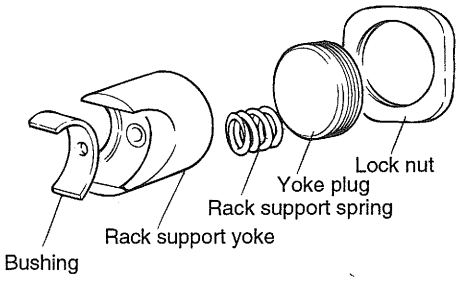

EPA9013N

12. Remove the valve body housing by loosening the two bolts.

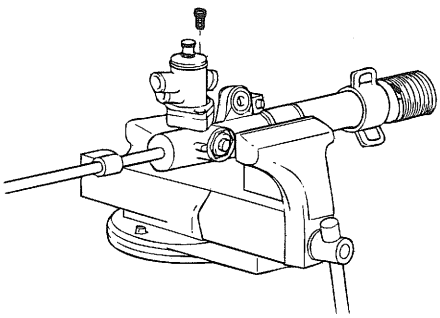

KPNB240C

13. Turn the rack stopper clockwise until the end of the circlip comes out of the slot in the rack housing.

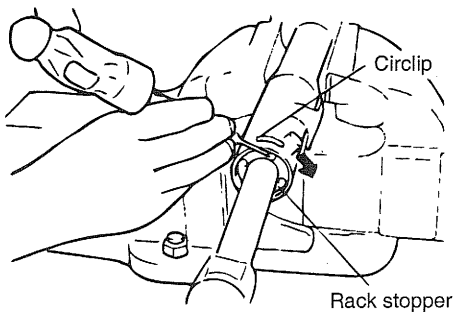

EPA9013Q

14. When the end of the circlip comes out of the notched hole of the housing rack cylinder, turn the rack stopper counterclockwise and remove the circlip.

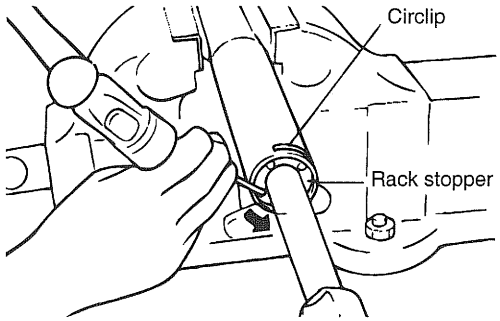

EPA9013R

15. Remove the rack stopper, rack bushing and rack from the rack housing.

16. Remove the O-ring from the rack bushing.

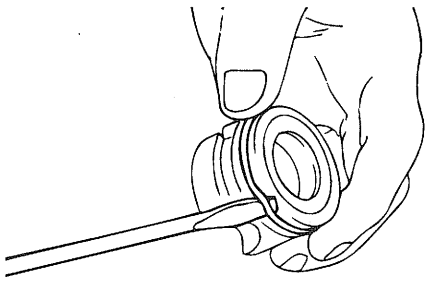

EPA9013T

17. Remove the oil seal from the rack bushing.

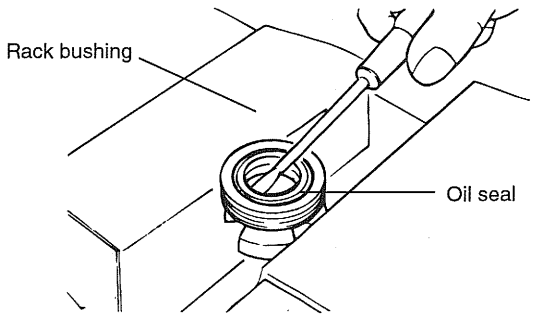

EPA9013U

18. Remove the valve body from the valve body housing with a soft hammer.

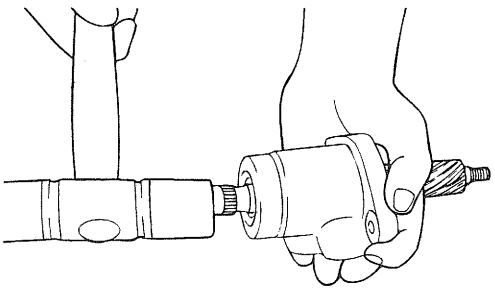

EPKB210A

19. Using the special tool, remove the oil seal and ball bearing from the valve body housing.

20. Remove the oil seal and O-ring from the rack housing.

⚠ *CAUTION*

Be careful not to damage the pinion valve cylinder bore of the rack housing.

21. Using the special tool, remove the oil seal from the rack housing.

⚠ *CAUTION*

Be careful not to damage the rack cylinder bore of the rack housing.

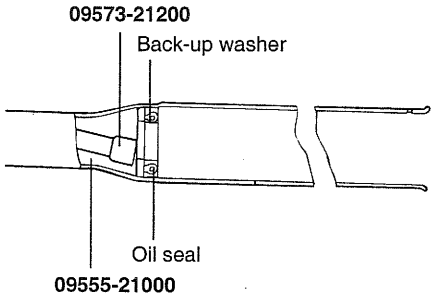

EPKB210B

INSPECTION EPNC2500

1. **Rack**

   1) Check the rack tooth face for damage or wear

   2) Check the oil seal contact surface for damage

   3) Check the rack for bending or twisting

   4) Check the oil seal ring for damage or wear

   5) Check the oil seal for damage or wear

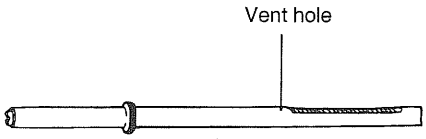

EPA9014E

2. **Pinion valve**

   1) Check the pinion gear tooth face for damage or wear

   2) Check the oil seal contact surface for damage

   3) Check the seal ring for damage or wear

   4) Check the oil seal for damage or wear

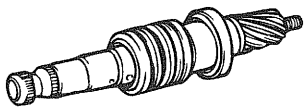

EPA9013Z

3. **Bearing**

   1) Check for seizure or abnormal noise during rotating a bearing

   2) Check for excessive play

   3) Check the needle bearing rollers for missing

4. **Others**

   1) Check the rack housing cylinder bore for damage

   2) Check the boot for damage, cracking or aging

REASSEMBLY EPNC2600

1. Apply the specified fluid to the entire surface of the rack oil seal.

Recommended fluid : PSF-3

2. Install the oil seal to the specified position in the rack housing.

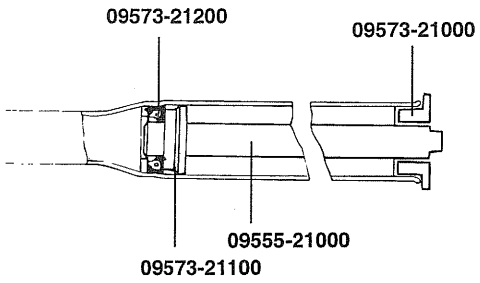

EPKB230A

3. Apply the specified fluid to the entire surface of the rack bushing oil seal.

Recommended fluid : PSF-3

4. Install the oil seal in the rack bushing.

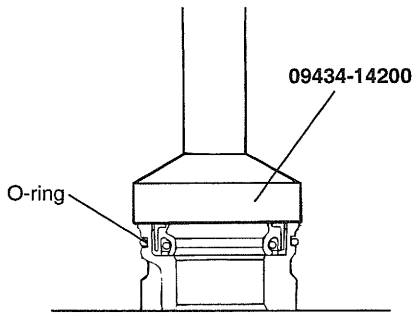

EPKB230B

5. Apply the specified fluid to the entire surface of the O-ring and install it in the rack bushing.

6. Apply the specified grease to the rack teeth.

Recommended grease :

Multipurpose grease SAE J310 NLGI No.2EP

⚠ ***CAUTION***

Do not plug the vent hole in the rack with grease.

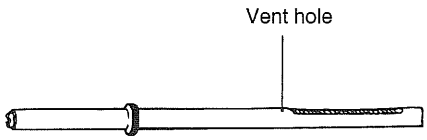

EPA9014E

7. Insert the rack into the rack housing and install the rack bushing and rack stopper.

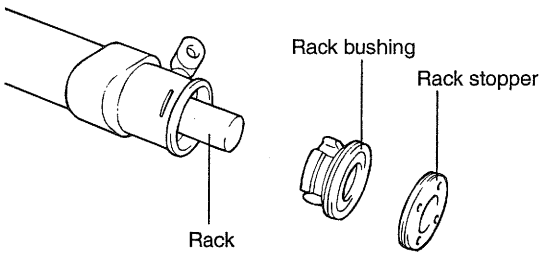

EPKB230I

8. Push in the rack stopper until the circlip groove of the rack stopper is aligned with the notched hole of the rack housing and install the circlip by turning the rack stopper.

⚠ ***CAUTION***

The circlip end should not be visible through the notched hole of the rack housing.

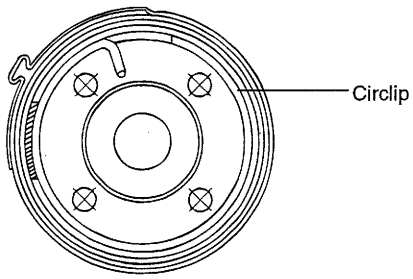

EPNC260B

9. Using the special tool, install the oil seal and the ball bearing in the valve body housing

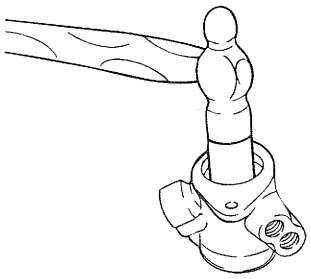

EPKB230D

10. After appling the specified fluid and grease to the pinion valve assembly, install it in the rack housing assembly.

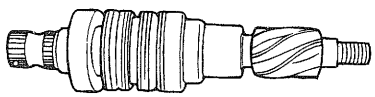

EPKB230E

11. After applying the specified fluid to the oil seal, install it in the rack housing, and fix the valve body assembly and O-ring in the gear box.

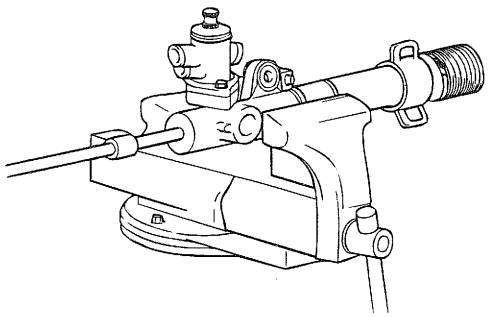

KPNB260A

12. Install the tab washer and the tie rod and plug the tab washer end at two points of the tie rod.

NOTE

1. *Align the tab washer pawls with the rack grooves.*
2. *Always use a new tab washer.*

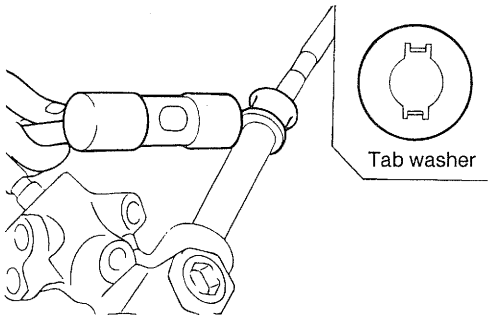

EPKB230F

13. Install the bushing, rack support yoke, rack support spring and yoke plug in the order shown in the illustration. Apply semi-drying sealant to the threaded section of the yoke plug before installation.

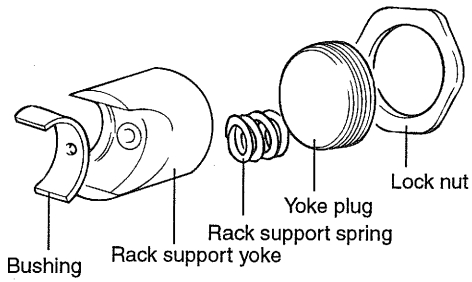

EPKB230K

14. With the rack placed in the center position, attach the yoke plug to the rack housing. Tighten the yoke plug to 15 Nm (150 kg.cm, 11 lb.ft), using the special tool. Loosen the yoke plug approximately from 30° to 60° and tighten the locking nut to the specified torque.

Tightening torque	
	50-70 Nm (500-700 kg·cm, 37-52 lb·ft)

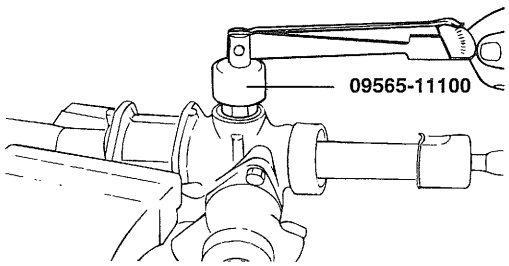

EPNC260C

15. Tighten the feed tube to the specified torque and install the mounting rubber using adhesive.

16. Apply the specified grease to the bellows mounting position (fitting groove) of the tie rod.

Recommended grease : Silicone grease

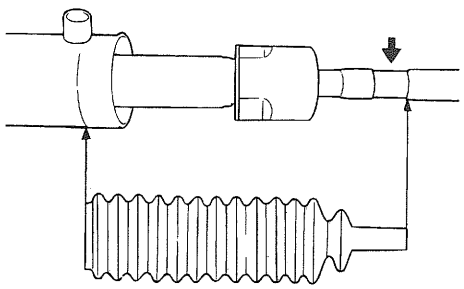

EPKB230H

17. Install the new attaching band to the bellows.

> **NOTE**
> *When the bellows are installed, a new band must be used.*

18. Install the bellows in the exact position, taking care not to twist it.

19. Fill the dust cover inner side and lip with the specified grease, and fix the dust cover in position with the clip ring attached in the groove of the tie rod end.

Recommended grease
A : POLY LUB GLY 801K or equivalent
B : SHOWA SUNLIGHT MB2 or equivalent

Dust cover inner side and lip : THREE BOND

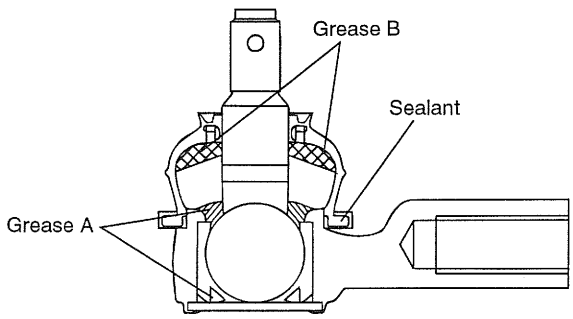

KPKA043A

20. Install the tie rods so that the length of the left and right tie rods meets the standard value.

Standard value
Tie rod free length : 201.9 ± 2.5mm

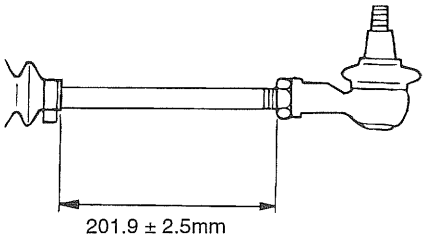

EPNC260A

21. Check for total pinion preload.

INSTALLATION EPNC2700

1. Push in the power steering gear box assembly on the right side of the vehicle.

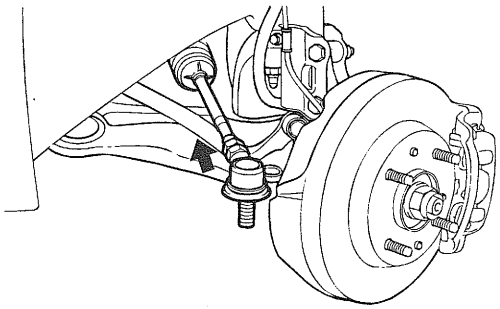

KPNB210K

2. Fix the power steering gear box assembly to the crossmember.

3. Fix the transaxle mounting insulator to the crossmember.

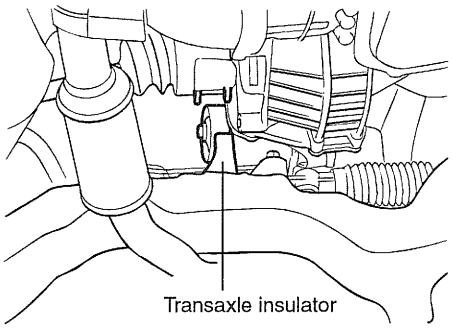

EPNC210A

4. Fix the stabilizer bar (LH/RH sides) to the link.

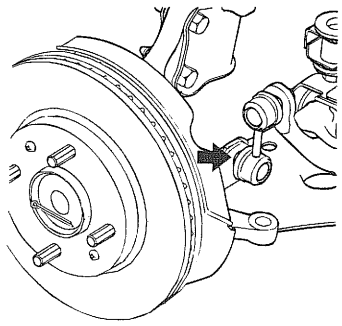

KPNB210C

5. Install the crossmember (LH/RH sides) to the body.

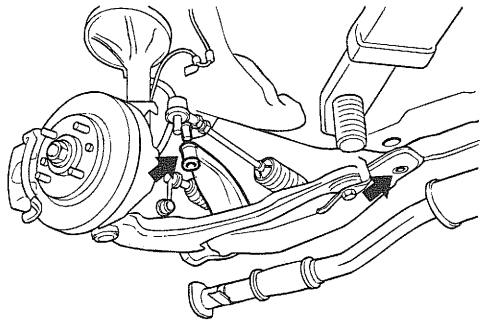

KPNB210E

6. Fix the transaxle mounting insulator to the crossmember.

7. Install the return hose and the pressure hose.

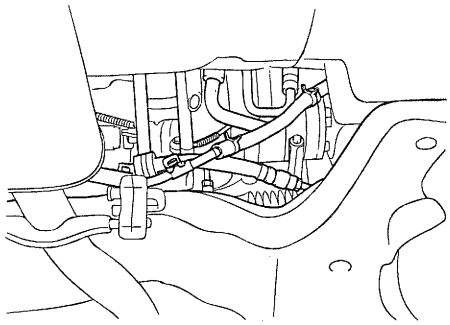

KPNB210B

8. Fix the tie rod end (LH/RH sides) to the knuckle.

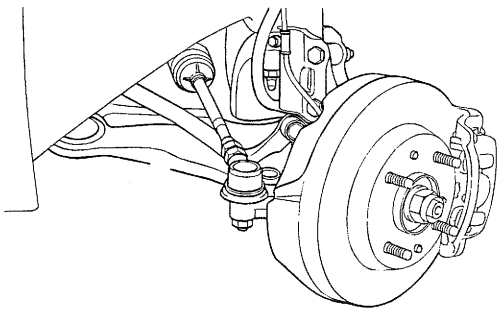

KPNB210I

9. Install the front muffler assembly and the center member.

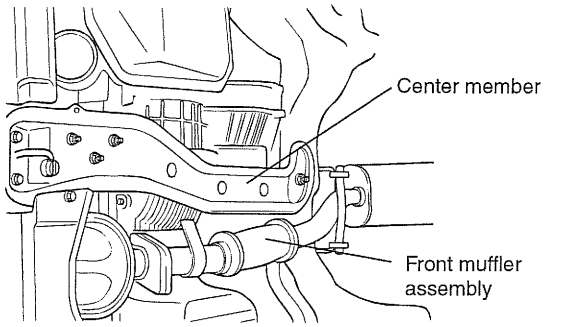

EPNC210C

10. Install the dust cover assembly.

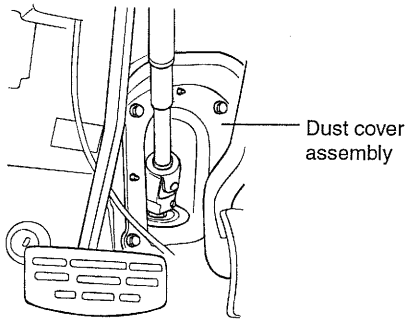

EPNC270A

11. Connect the steering gear box in the driver's seat side with the universal joint.

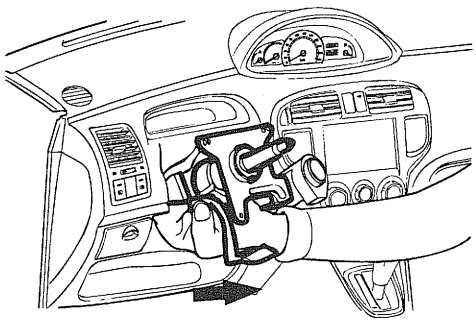

KPNB160I

12. After applying the power steering fluid, air-bleed the system.

POWER STEERING HOSES

COMPONENTS EPNC2800

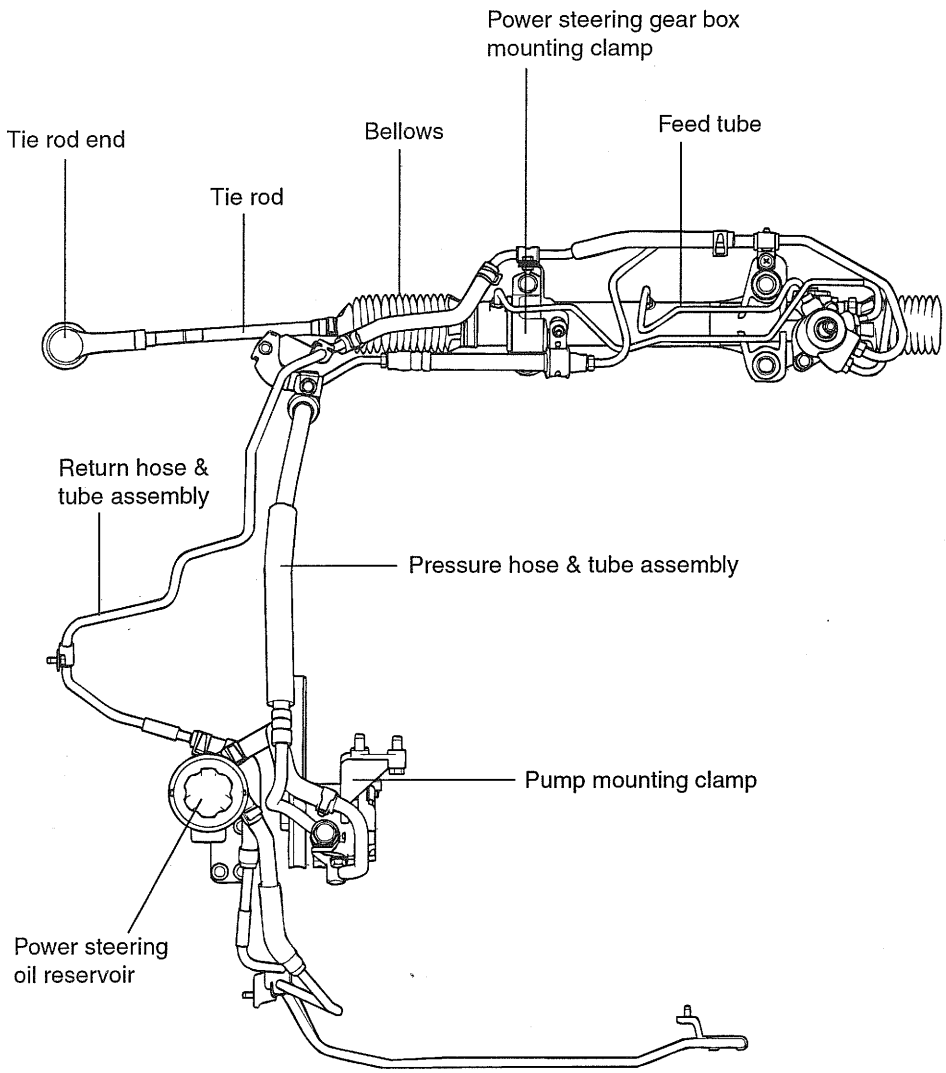

EPNC280A

REMOVAL AND INSTALLATION EPNC2900

While installing the tube and hose assembly, be sure to align painting marks on each fitting.

PRESSURE HOSE AND TUBE

1. Remove the air intake hose and air cleaner.

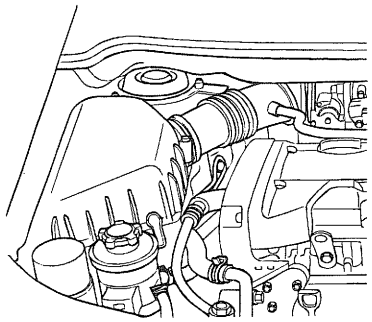

KPNB290A

2. Remove the pressure hose mounting clamp.
3. Lift up the vehicle and remove the pressure tube and the return tube mounting clamp.
4. Disconnect the pressure tube fittings from the gear box.

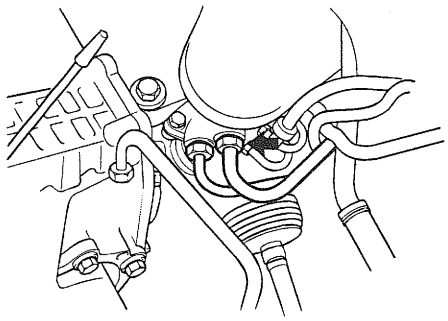

KPNB290D

5. Lower the vehicle and remove the connector.

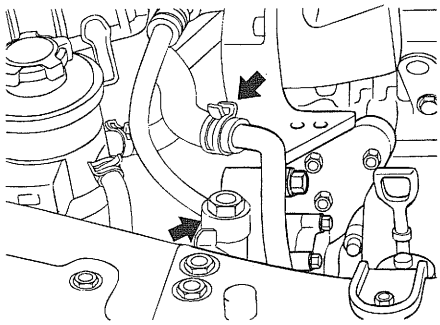

KPNB090C

6. Remove the pressure hose and tube assembly

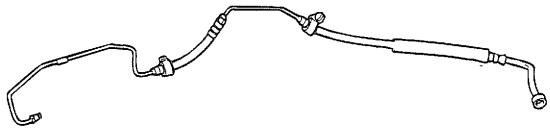

KPNB290B

7. Installation is the reverse of removal.

NOTE

1. *When installing hoses and tubes, be careful not to twist or come in contact with any other parts.*
2. *After installation, air bleed the system.*

RETURN TUBE AND HOSE

1. After removing the air intake hose and air cleaner, detach the power steering fluid reservoir from the mounting bracket.

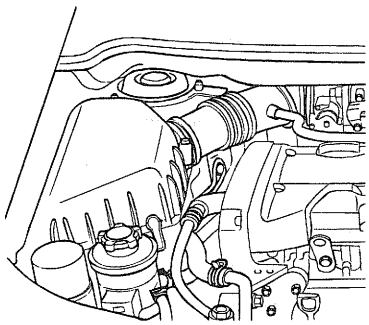

KPNB290A

2. Remove the return tube and hose mounting clamps.
3. Lift up the vehicle and remove the pressure tube and the return tube mounting clamp.
4. Disconnect the return tube fittings from the gear box.

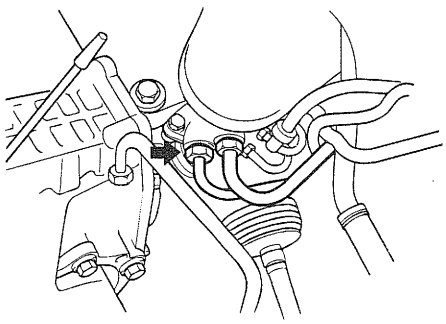

KPNB290E

5. Lower the vehicle and disconnect the return tube and hoses.

6. Installation is the reverse of removal.

NOTE

1. *When installing hose and tubes, be careful not to twist or come in contact with any other parts.*
2. *After installation, air bleed the system.*

INSPECTION EPNC3000

1. Twisting the hose by hand, check for cracks.

2. Check that the hose does not contact other components

HOW TO FILL WITH POWER STEERING FLUID

1. Fill the power steering reservoir with power steering fluid to the "Max." mark.

2. Lift the front wheels with a jack and turn the steering wheel fully to the left and right 5-6times while driving the pulley only by operating the start motor with the engine stopped.

3. Start the engine, let it idle and turn the steering wheel fully left and right several times until bubbles disappear from the power steering reservoir.

4. If the oil color does not become milk-white and the oil level is constant at the "MAX" mark, fluid level is O.K.

CAUTION

If the oil level changes when turning the steering wheel, and the oil overflows when stopping the engine, it shows that air bleeding wasn't performed perfectly. As it can cause noise or early damage, you must repeat the above procedures.

POWER STEERING OIL PUMP

COMPONENTS EPKB2700

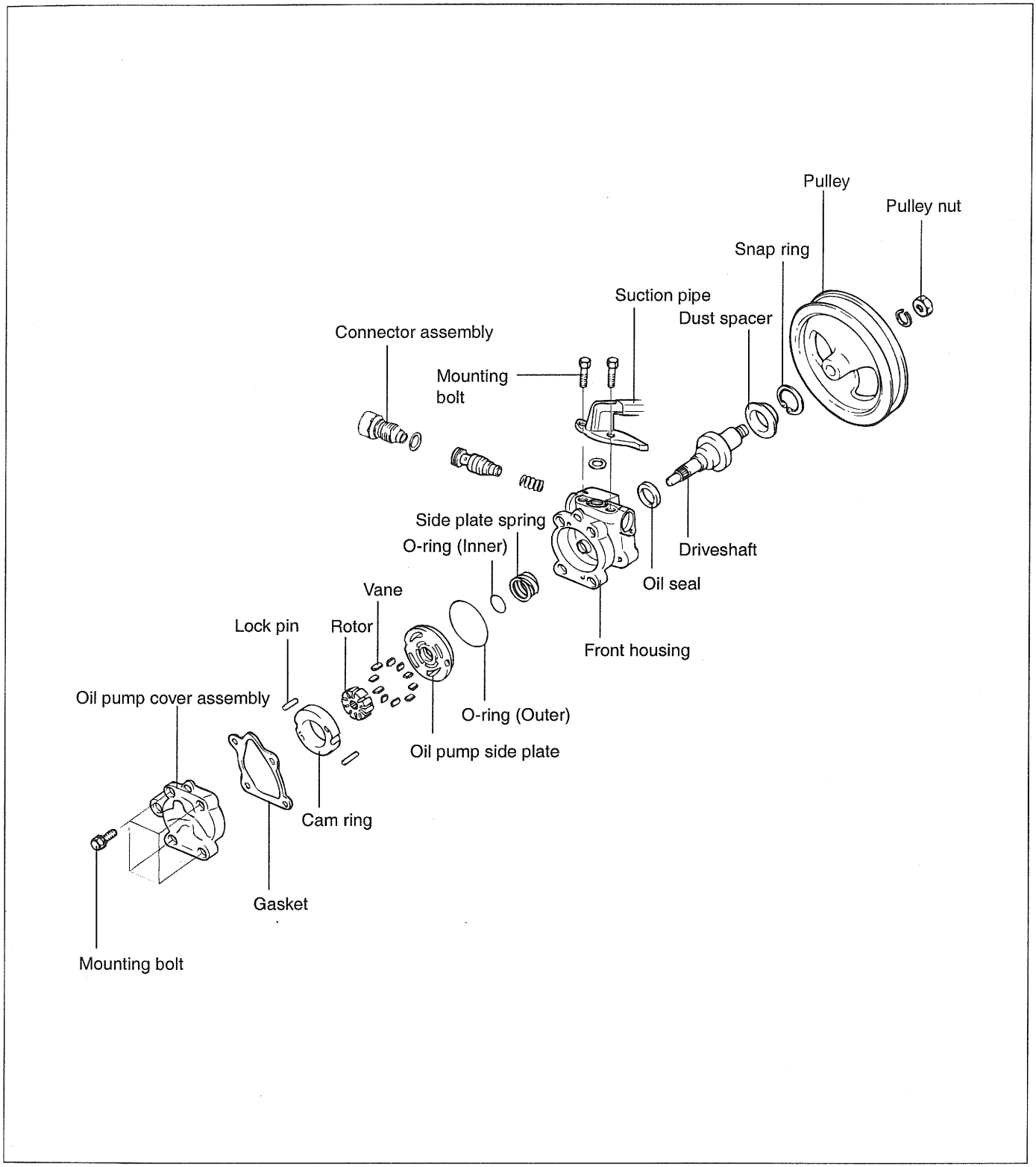

EPKB270A

REMOVAL EPNC3200

1. Remove the pressure hose from the oil pump. Disconnect the suction hose from the suction pipe and drain fluid into a container.

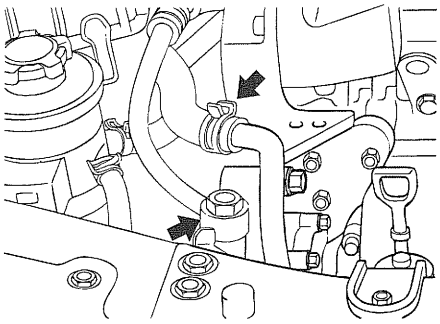

KPNB090C

2. Loosen the power steering V-belt tension adjusting bolt.

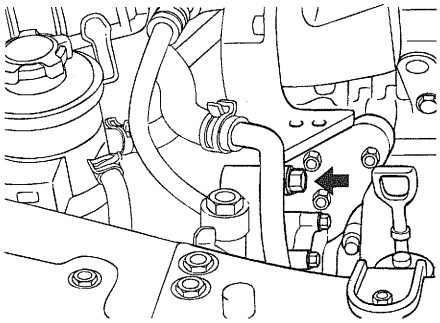

KPNB090A

3. Remove the V-belt from the power steering oil pump pulley.

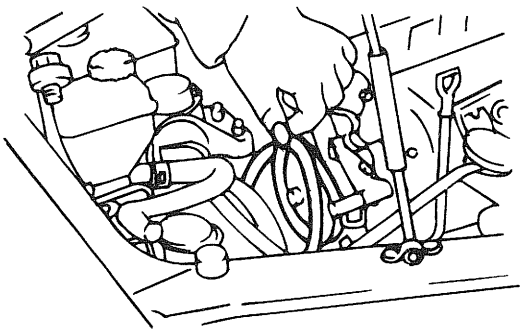

KPKA047A

4. After loosening the power steering oil pump mounting bolts and the tension adjusting bolt, remove the power steering oil pump assembly.

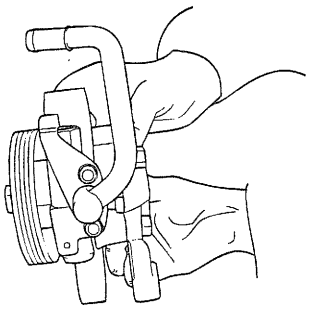

KPNB320C

5. Remove the power steering oil pump mounting bracket.

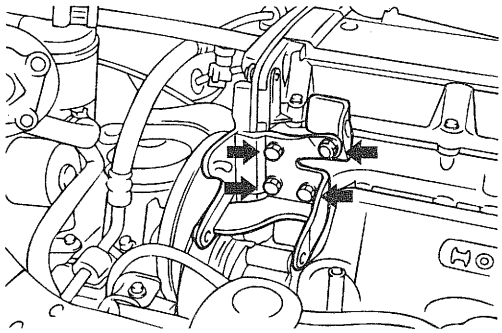

KPKA049A

DISASSEMBLY EPNC3300

1. After removing the two bolts from the oil pump body, remove the suction pipe and the O-ring from the oil pump.

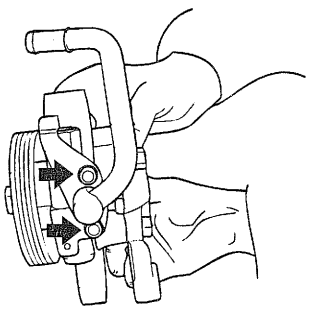

KPNB320D

2. Loosen the four bolts and remove the oil pump cover assembly.
3. Remove the cam ring.
4. Remove the rotor and vanes.
5. Remove the oil pump side plate.

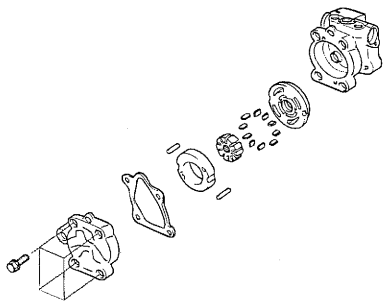

KPKA046A

6. Remove the inner and outer O-ring.
7. Remove the side plate spring.

NOTE

When assembling, use a new gasket and O-ring.

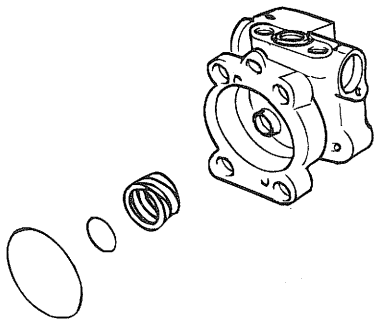

KPKA055A

8. Mount the pulley in a vise and remove the pulley nut and the spring washer.

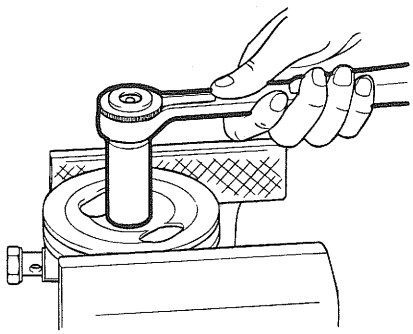

KPKA056A

9. Pull the pulley out.
10. After removing the snap ring of the shaft using a pair of snap ring pliers, remove the dust spacer.

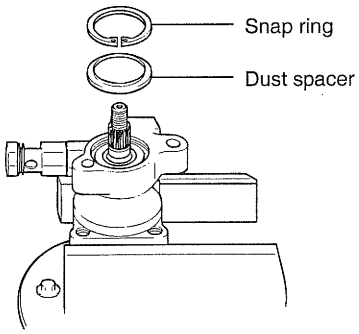

KPKA057A

11. Tap the rotor side of the shaft slighty with a plastic hammer to remove the shaft.

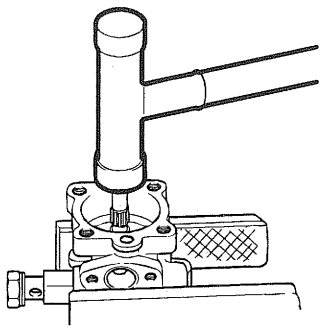

KPKA058A

12. Remove the oil seal from the oil pump body.

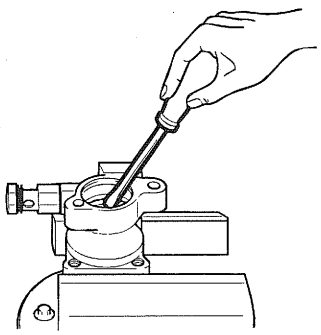

KPKA059A

13. Remove the connector from the oil pump body, and take out the flow control valve and the flow control spring.
14. Remove the O-ring from the connector.

CAUTION

Do not disassemble the flow control valve.

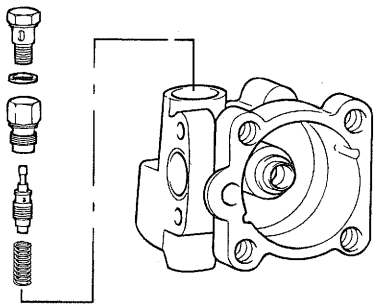

KPKA060A

INSPECTION EPNC3400

1. Check the free length of the flow control spring.

Free length of the flow control spring : 36.5mm

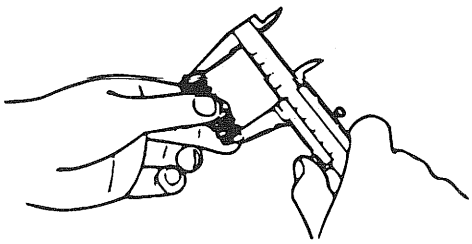

KPKA068A

2. Check the flow control valve for bending.
3. Check the shaft for wear and damage.
4. Check the V-belt for wear and deterioration.
5. Check the grooves of the rotor and vanes for stratified abrasion.
6. Check the contact surface of the cam ring and vanes for stratified abrasion.
7. Check vanes for damage.
8. Check that there is no striped wear in the side plate or in the contact part between the shaft and the pump cover surface.

REASSEMBLY EPNC3500

1. Install the flow control spring, flow control valve and connector to the pump body.

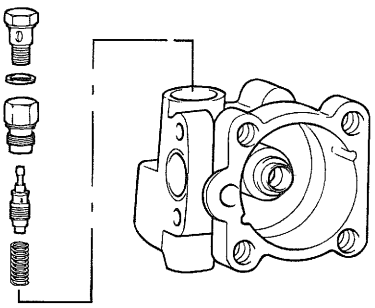

KPKA060A

2. Install the oil seal in the pump body by using the special tool.

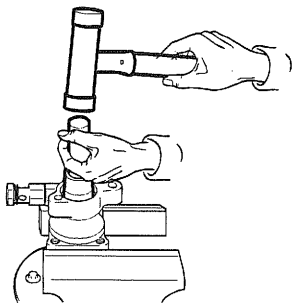

KPKA061A

3. After inserting the shaft assembly into the pump body smoothly, install the dust spacer and snap ring.

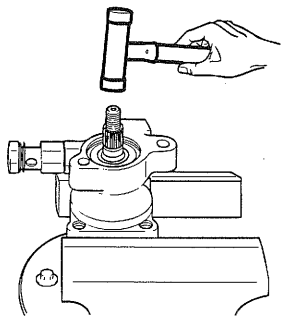

KPKA062A

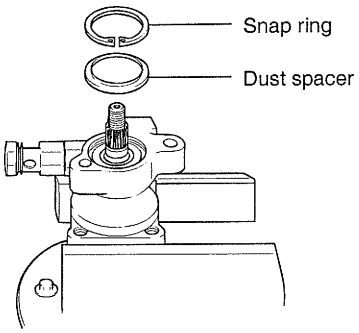

KPKA057A

4. Install the pump pulley.

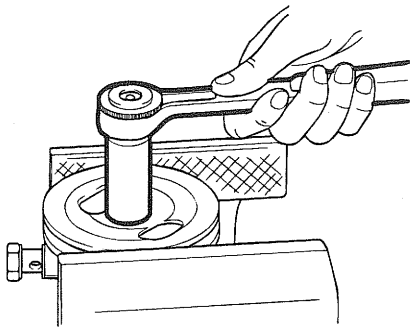

KPKA056A

5. Install the spring and inner O-ring.

6. Insert the outer O-ring in the oil pump side plate and then install it in the pump body.

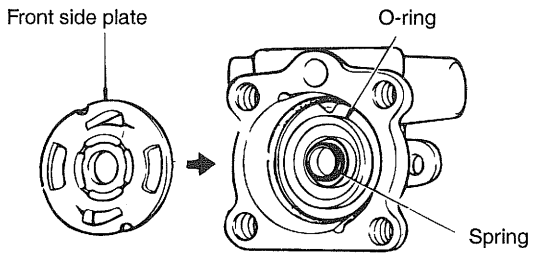

EPKB300A

7. After inserting the lock pin into the groove of the front housing, install the cam ring taking care to the direction.

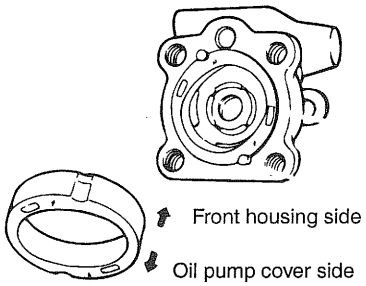

EPKB300B

8. Install the rotor.

9. Install vanes letting the rounded portions face outward.

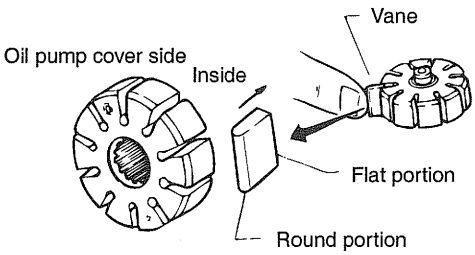

EPKB300C

10. Install the gasket and oil pump cover assembly.

11. Install the suction pipe and O-ring.

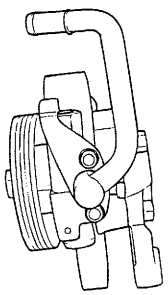

KPNB350A

INSTALLATION EPNC3600

1. After installing the oil pump to the oil pump bracket, install the "V" belt and tighten the tension adjusting bolt to the specified torque.

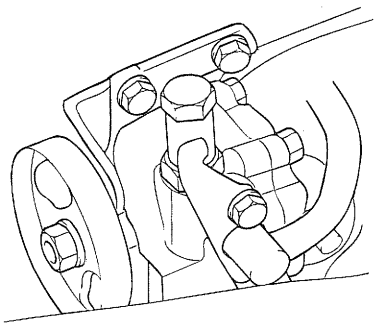

KPNB360A

2. Install the suction hose.

Oil pump adjusting bolt
1.6DOHC : 2.5-3.3
1.8DOHC : 3.5-5.0

CAUTION

When installing, left the painting mark on hose face the oil pump.

3. Install the pressure hose to the oil pump.

NOTE

When installing the pressure hose, be careful not to twist or come in contact with other components.

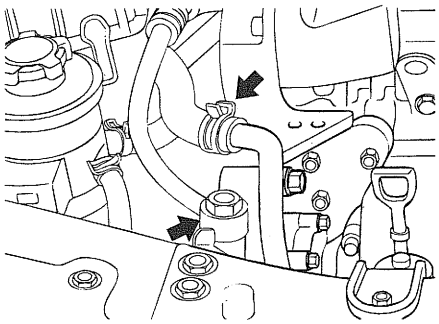

KPNB090C

4. Apply the power steering fluid (PSF-3).
5. Air bleed the system.
6. Check the oil pump pressure.

Restraints System

GENERALE RT-2

SRSCM (SUPPLEMENTAL RESTRAINTS SYSTEM CONTROL MODULE) RT-7

AIR BAG MODULE (DRIVE SIDE) AND CLOCK SPRING RT-15

AIR BAG MODULE (PASSENGER SIDE) RT-18

TROUBLESHOOTING RT-23

AIRBAG MODULE DISPOSAL RT-58

GENERAL

GENERAL ERJB0010

The Supplemental Restraint System (SRS AIRBAG) is designed to supplement the seat belts to help reduce the risk or severity of injury to the driver and passenger by activating and deploying the driver, passenger and side airbag as well as the belt pretensioner in certain frontal or side collisions.

The SRS (Airbag) consists of : a driver airbag module located in the center of the steering wheel, which contains a folded cushion and an inflator unit ; a passenger airbag module located in the passenger side crash pad which contains a folded cushion together with an inflator unit ; side airbag modules located in the driver and passenger seat which contain folded cushions and inflator units; SRSCM located on the floor center console core which monitors the system,; an accelerometer which senses vehicle deceleration,; a spring interconnection (clock spring) located within the steering column; system wiring and wiring connectors; and a knee bolster located under the steering column. The impact sensing function of the SRSCM is carried out by the electronic accelerometer that continuously measures the vehicle's acceleration and delivers a corresponding signal through an amplifying and filtering circuit to the microprocessor. Deployment of the airbag is designed to occur in frontal or near-frontal side impacts of moderate to severe force.

Only authorized service personnel should work on or around SRS components. Those service personnel should read this manual carefully before doing any such work. Extreme care must be used when servicing the SRS to avoid injury to the service personnel (by inadvertent deployment of the airbag) or the driver (by rendering the SRS inoperative).

CUSTOMER CAUTIONS ERJB0020

Failure to carry out service operations in the correct sequence could cause the airbag system to unexpectedly deploy during servicing, possibly leading to serious injury.

Further, if a mistake is made in servicing the airbag system, it is possible that the airbag may fail to operate when required.

Before performing servicing (including removal or installation of parts, inspection or replacement), be sure to read the following items carefully.

1. Be sure to proceed with airbag related service only after approx. 30 seconds or longer from the time the ignition switch is turned to the LOCK position and the negative (-) terminal cable is disconnected from the battery. The airbag system is equipped with a back-up power source to assure the deployment of airbags when the battery cable is disconneted during an accident. The back-up power is available for approx. 150ms.

2. When the negative(-) terminal cable is disconnected from the battery, the clock and audio system's memory will be wiped out. So before starting work, make a record of the contents of the audio system's memory. When the work is finished, reset the audio system and adjust the clock.

3. Symptoms of malfunction of the airbag system are difficult to detect, so the diagnostic codes become the most important source of information when troubleshooting.

4. When troubleshooting the airbag system, always inspect the diagnostic codes before disconnecting the battery.

5. Never use airbag parts from another vehicle. When replacing parts, replace them with new parts.

6. Never attempt to disassemble and repair the airbag modules (DAB, PAB, SAB, BPT), clock spring and wiring in order to reuse them.

7. If any component of SRS has been dropped, or if there are cracks, dents or other defects in the case, bracket or connector, replace them with new ones.

8. After work on the airbag system is completed, perform the SRS SRI check. The airbag indicator lamp can be triggered by faults in other circuit in some cases. Therefore if the airbag indicator lamp goes on, be sure to erase the DTC codes using Hi-scan just after repairing or replacing the troubled parts, including the fuse.

9. Especially when carring out body welding, never fail to disconnect the battery's negative (-) terminal.

SPECIAL SERVICE TOOL ERJB0030

Tool (Number and name)	Illustration	Use
0957A-34100A Deployment tool	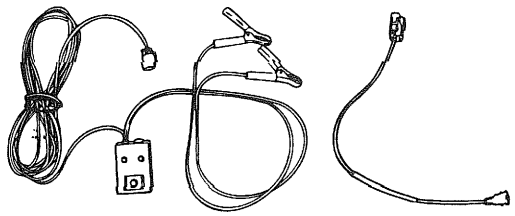 ERHA010A	Airbag deployment tool PAB, SAB : 0957A-38100 DAB, BPT : 0957A-38500
0957A-38000 Diagnosis checker	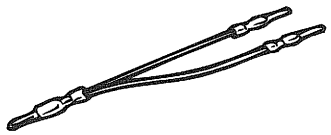 ERHA010B	Wring harness checker for each module
0957A-38200 Dummy	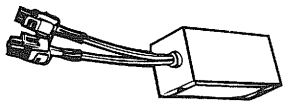 ERHA010C	Simulator to check the resistance of each wiring harness Dummy adapter PAB, SAB : 0957A-38300 DAB, BPT : 0957A-38400

* DAB : Driver Airbag

* PAB : Passenger Airbag

* SAB : Side Airbag

* BPT : Belt Pretensioner

WARNING/CAUTION LABELS ERNC0035

A number of caution labels relating to the SRS are found in the vehicle, as shown in the following illustration. Follow label instructions when servicing the SRS.

If labels are dirty or damaged, replace them with new ones.

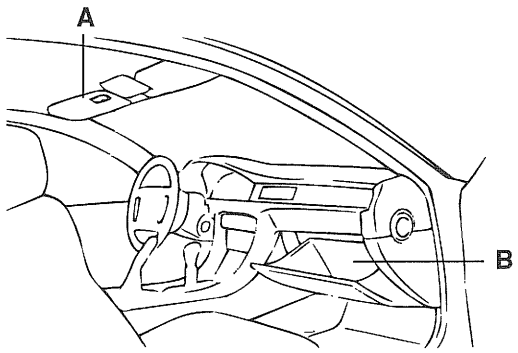

ERNC003A

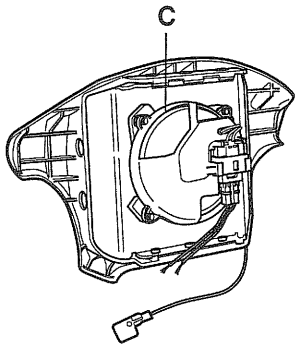

ERKB003A

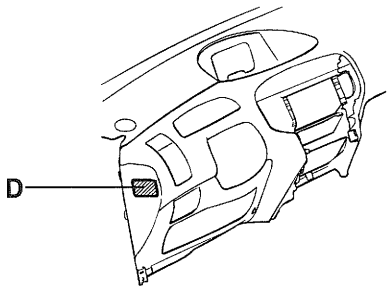

KRNB004A

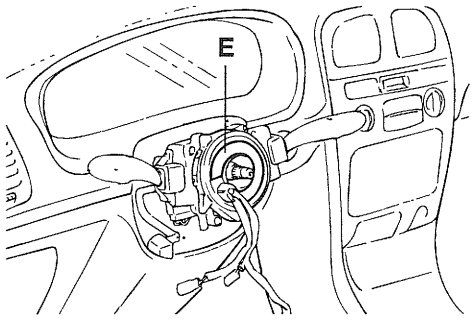

ERA9001F

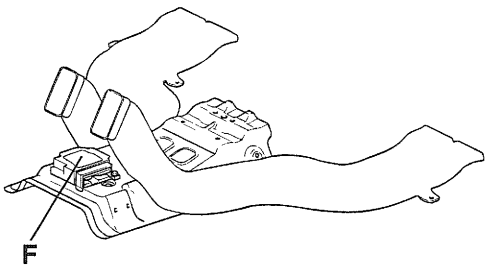

KRNB004B

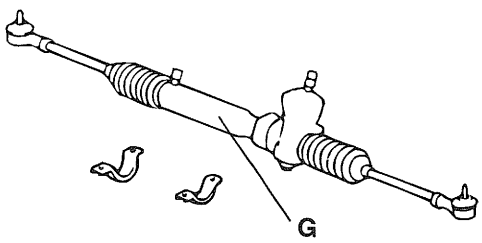

ERA9001C

ERNC0040

A. DAB + PAB
CAUTION
TO AVOID SERIOUS INJURY :

- For maximum safety protection in all types of crashes, you must always wear your safety belt.
- Do not install rearward-facing child seats in any front passenger seat position.
- Do not sit or lean unnecessarily close to the airbag.
- Do not place any objects over the airbag or between the airbag and yourself.
- See the owner's manual for further information and explanation.

B. SUPPLEMENTAL RESTRAINT SYSTEM (AIRBAG) INFORMATION

The airbag is a Supplemental Restraint System (SRS). You must always wear the seat belts. The airbag system condition is normal when the "SRS" lamp in the cluster flashes approximately 6 times after the ignition key is turned on and then goes off.

If any of the following conditions occur, the system must be serviced.

1. "SRS" lamp does not light up when the key is turned on.
2. "SRS" lamp stays lit or flashes continuously.
3. The airbag has inflated.

The airbag system must be inspected by an authorized dealer ten years after the vehicle manufacture date shown on the certification label, located on left front door opening area.

WARNING

Failure to follow the above instructions may result in injury to you or other occupants in the vehicle. See the "SRS" section in Owner's Manual for more information about airbags.

C. WARNING :

Contents are poisonous and extremely flammable. Do not probe with electrical devices or otherwise tamper with item in any way. Servicing of this unit to be performed only by authorized personnel.

D. WARNING

This car is equipped with a side airbag for each front seat.

- Do not use any accessory seat covers.
- Use of other seat covers could reduce the effect of the system.
- Do not install any accessories on the side or near the side airbag.
- Do not use excessive force on the side of the seat.
- For further information, see the owner's manual.

E. CAUTION : SRS clock spring

This is not a repairable part. Do not disassemble or tamper. If defective, replace entire unit as per service manual instructions.
To re-center, rotate clockwise until tight. Then rotate in opposite direction approximately 3 turns and align →←
Failure to follow instructions may render SRS system inoperative possibly resulting in serious driver injury.

F. CAUTION : AIRBAG ESPS UNIT

Detach connector before unmounting. Assemble strictly according to manual instructions.

G. CAUTION : SRS

Before removal of steering gearbox, read service manual, center the front wheels and remove the ignition key.
Failure to do so may damage the SRS clock spring and render SRS system inoperative, possibly resulting in serious the injury to the driver.

ELECTRICAL SYSTEM ERHA0250

The SRS airbag system has sophisticated electrical and electronic components. Therefore the airbag operating components should be handled very carefully.

SRSCM (Supplement Restraint System Control Module)

The SRSCM will deploy the airbag modules by sensing the frontal impact sensed by the sensor built in to the SRSCM.

1. DC/DC convertor : The DC/DC converter in the power supply includes a step-up and a step-down converter, which provides the firing voltage for four firing circuits and the internal operating voltage. If the internal operating voltage falls below a defined threshold, a reset is executed.

2. Arming sensor/safing sensor : The arming/safing sensor built in to the airbag firing circuit has the function of arming the airbag circuit under all required deployment conditions and maintaining the airbag firing circuits unarmed under normal driving conditions. The safing sensor is a dual-contact electromechanical switch that closes if it experiences a deceleration exceeding a specified threshold.

3. Back-up power : The SRSCM reserves an energy reserve to provide deployment energy for a short period when the vehicle voltage is low or if lost in a vehicle frontal crash.

4. Malfunction detection : The SRSCM continuously monitors SRS operating status while the ignition key is turned on and detects possible malfunctions in the system. The malfunction can be displayed in the form of a diagnostic trouble codes using the Hi-Scan Pro.

5. MIL (Malfunction Indication Lamp) notification : If any fault is detected, the SRSCM sends a signal to the indicator lamp on the instrument cluster to warn the vehicle driver.
   The MIL indicator is the key item in notifying the driver of SRS faults. It verifies lamp and SRSCM operation by flashing 6 times when the ignition switch is first turned on.

6. Malfunction recording : Once a fault occurs in the system, the SRSCM records the fault in memory in the form of a DTC, which can only be erased by the Hi-Scan Pro.

7. Data link connector : SRSCM memory stored is linked through this connector located underneath the driver side crash pad to an external output device such as the Hi-Scan Pro.

8. After firing the airbags once, the SRSCM cannot be used again and must be replaced.

9. Crash output
   The crash output is used to unlock the doors in case of a crash. The crash output is : 0-200 μA in OFF mode and 200mA in ON mode. During the unlock command, the switch is closed for 200 mS.

SRSCM (SUPPLEMENTAL RESTRAINTS SYSTEM CONTROL MODULE)

INFLATOR MODULE (DAB, PAB, SAB) ERJB0060

DAB (Driver airbag), PAB (Passenger airbag) module, DSAB (Driver side airbag), PSAB (Passenger side airbag) all consist of an inflator and cushion. The initiator (a gas generator igniting device) is port of the inflator. When the vehicle is in a frontal or side crash of sufficient force to close the sensor of the SRSCM, current flows through the deployment loop. This current ignites the material and inflates the airbag.

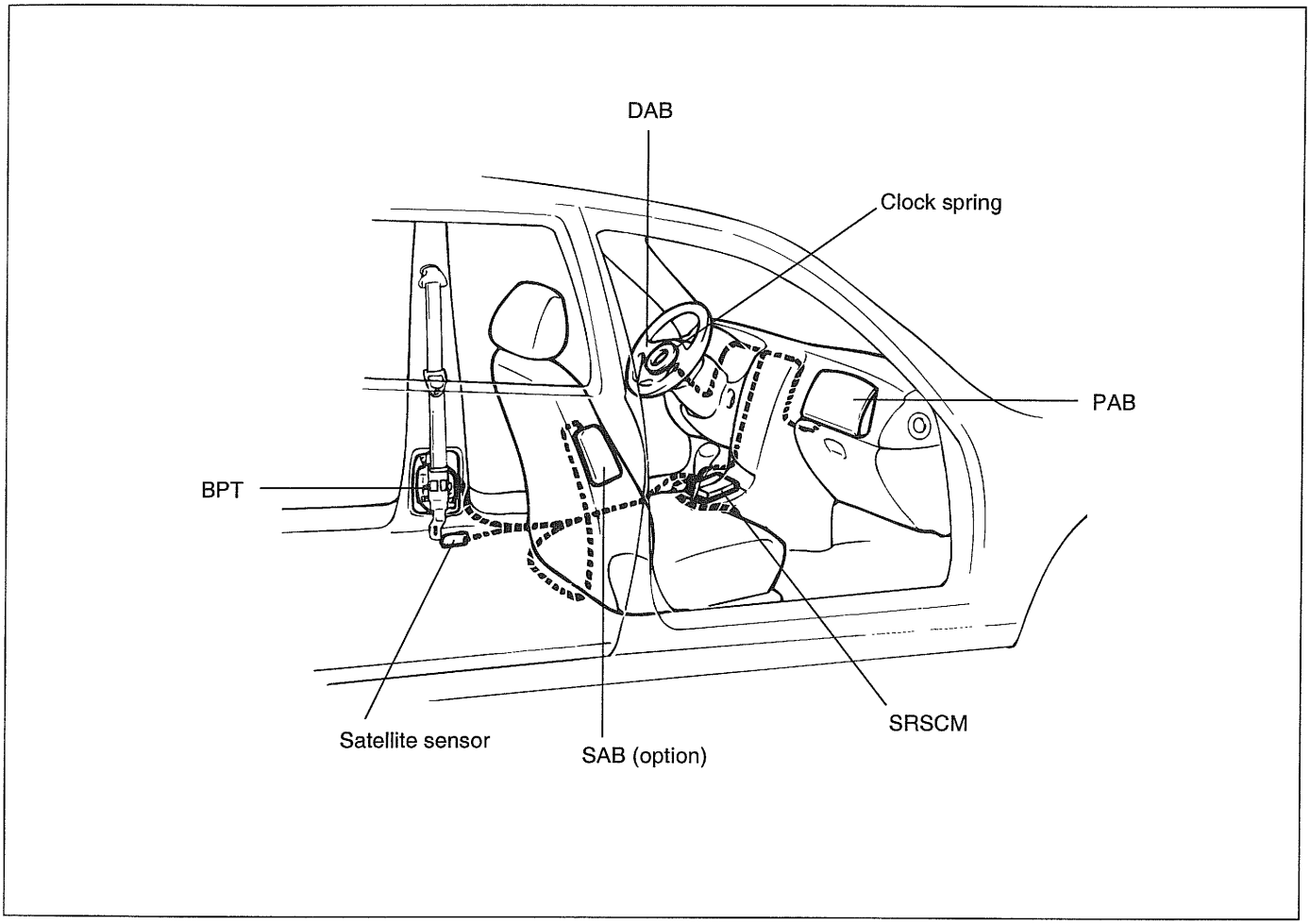

ERA9002A

1. When removing the airbag module or handling a new airbag module, it should be placed with the pad top surface facing up. In this case, the twin-lock type connector lock lever should be in the locked state and care should be taken to place it so the conector will not be damaged. Do not store a steering wheel pad on top of another one. (Storing the pad with its metallic surface up may lead to a serious accident if the airbag should inflate accidentally.)
2. Never measure the resistance of the airbag squib. (This may cause the airbag to deploy, which is very dangerous.)
3. Store the airbag module where the ambient temperature remains below 93°C (200°F), without high humidity and away from electrical noise.
4. During electric welding, disconnect the airbag under the steering column near the MULTI-FUNCTION SWITCH connector before starting work.

SRS HARNESS ERNC0070

The SRS harness is wrapped in a yellow tube to be discriminated from other system harnesses. A shorting bar is included inside the wiring connectors of DAB, PAB, SAB and BPT inflator side. The shorting bar shorts the current flow the DAB, PAB, SAB and BPT module circuits when the connectors are disconnected. The circuits to the inflator module are shorted in this way to help prevent unwanted deployment of the airbag when servicing the airbag module.

SRSCM INDEPENDENT LAMP ACTIVATION

The SRS malfunction indicator lamp (MIL) is located in the cluster giving information of SRS operating conditions by control signals from the SRSCM.

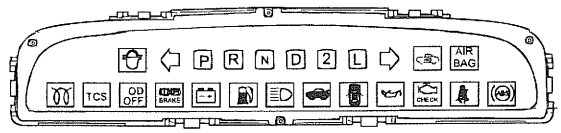

KTNB001P

There are certain fault conditions in which the SRSCM (SRS Control Module) cannot function and thus cannot control the operation of the lamp. In these cases, the lamp is directly activated by appropriate circuitry that operates independently of the SRSCM, as follow :

1. Loss of ignition voltage supply to the SRSCM : lamp turned on continuously.
2. Loss of internal operating voltage : lamp turned on continuously.
3. SRSCM not connected : lamp turned on through shorting bar in wiring harness connector.

MIL OPERATING METHOD ERJB0080

	Operating situation	Operating method
RUNNING	o Return to normal from temporary fault	ON → OFF
	o Total faults frequency ≥ 5 o Active fault	Turn it on continuously
STARTING	o Normal	Blink 6 times
	o Total faults frequency ≤ 4	On to off after 6 seconds
	o Total faults frequency ≥ 5 o Active fault	Turn it on continuously

ERJB008A

CLOCK SPRING ERJB0090

The clock spring (coil spring) consists of two current carrying coils. It is attached between the steering column and the steering wheel. It allows rotation of the steering wheel while maintaining continuous contact of the deployment loop through the inflator module.

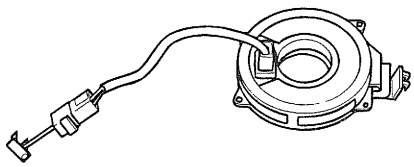

ERJA010E

The steering wheel must be fitted correctly to the steering column with the clock spring at the neutral position, otherwise cable disconnection and other troubles may result.

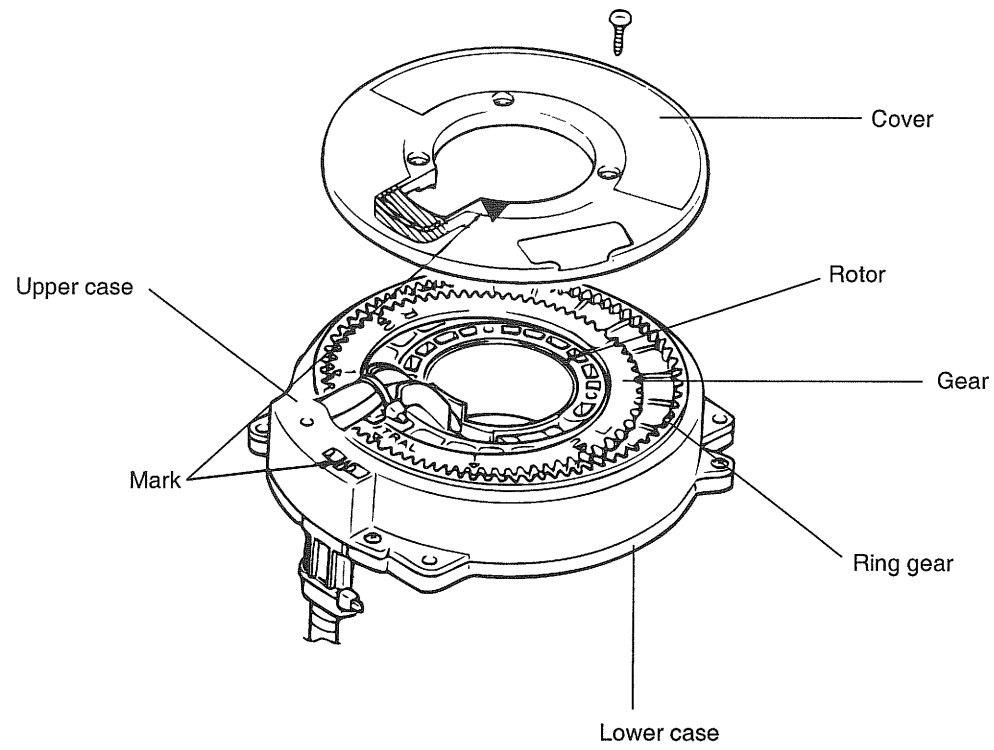

When the rotor is rotated clockwise

ERLB002C

SATELLITE SENSOR ERKB0110

The release system for the side airbag consists of a SRSCM installed in the middle of the vehicle and two satellites - one on the left-hand side and one on the right. Only the SRSCM is capable of deploying the airbags or the seat-belt pretensioners systems in the vehicle. In the dialog between the SRSCM and the satellite, it is the SRSCM that makes the deployment decision.

The SRSCM is supported with the side airbag function by two satellites, which act as intelligent acceleration sensors and as such back up the central airbag controller. Both the satellites continuously report the system status on the left and right-hand sides of the vehicle to the SRSCM.

It monitors the acceleration sensor continuously. The test results are reported to the SRSCM by means of periodic status signals.

NOTE

When the ignition is ON, never cause a sudden shock around the installation area of the satellite sensor by a hammer, etc. Otherwise it could cause the airbag system to unexpectedly deploy during servicing.

SYSTEM COMPONENT AND LAYOUT ERKB0120

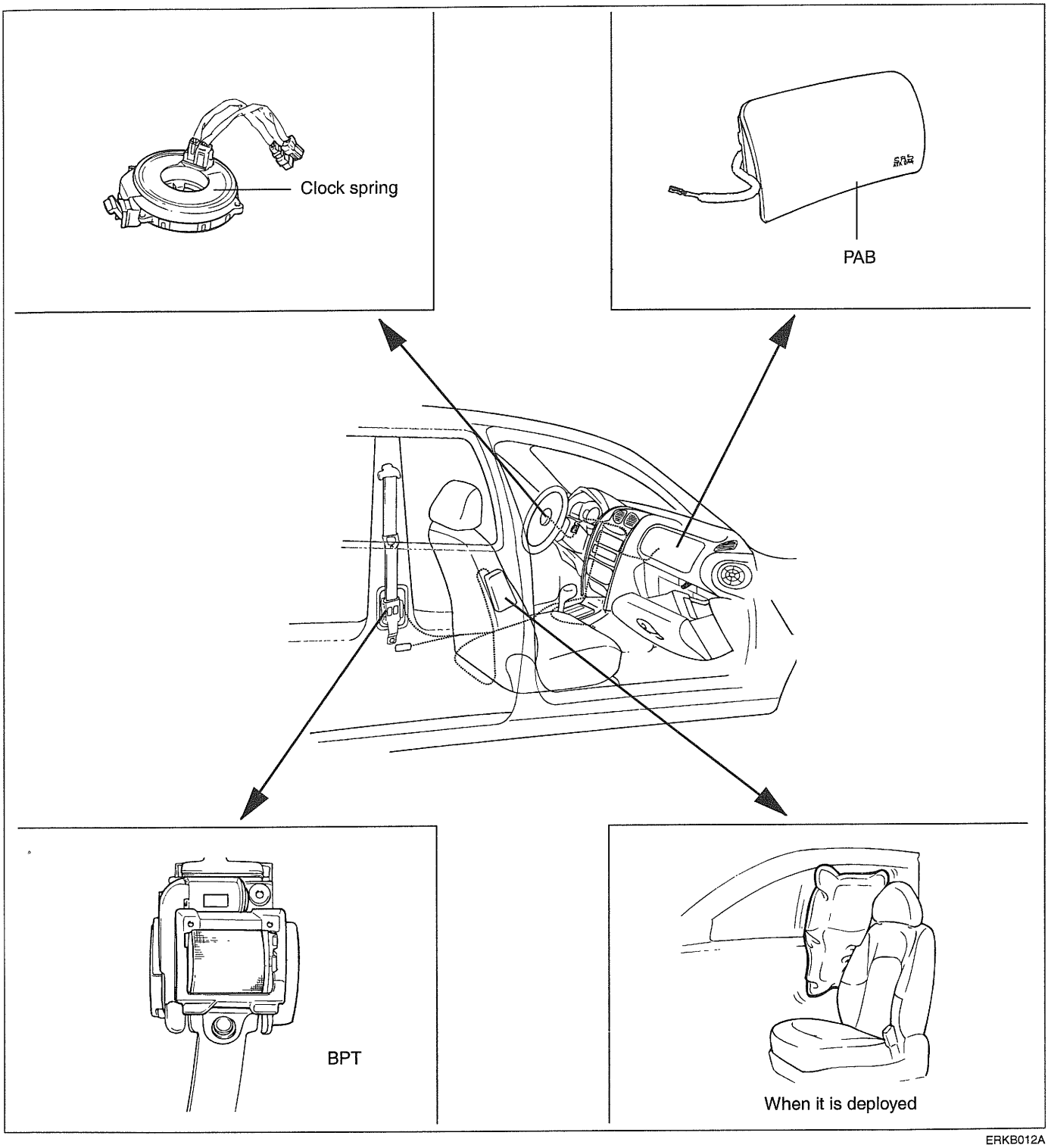

ERKB012A

SRSCM (SRS CONTROL MODULE) ERJB0130

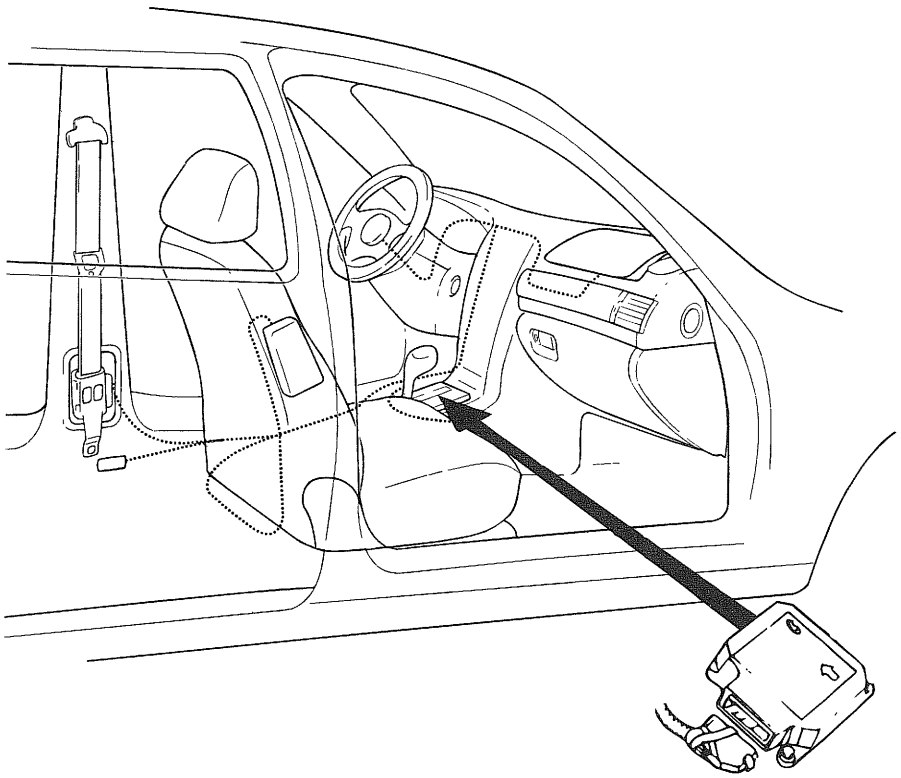

SRSCM

ERB9004A

AIRBAG SYSTEM (SRS) ERNC0140

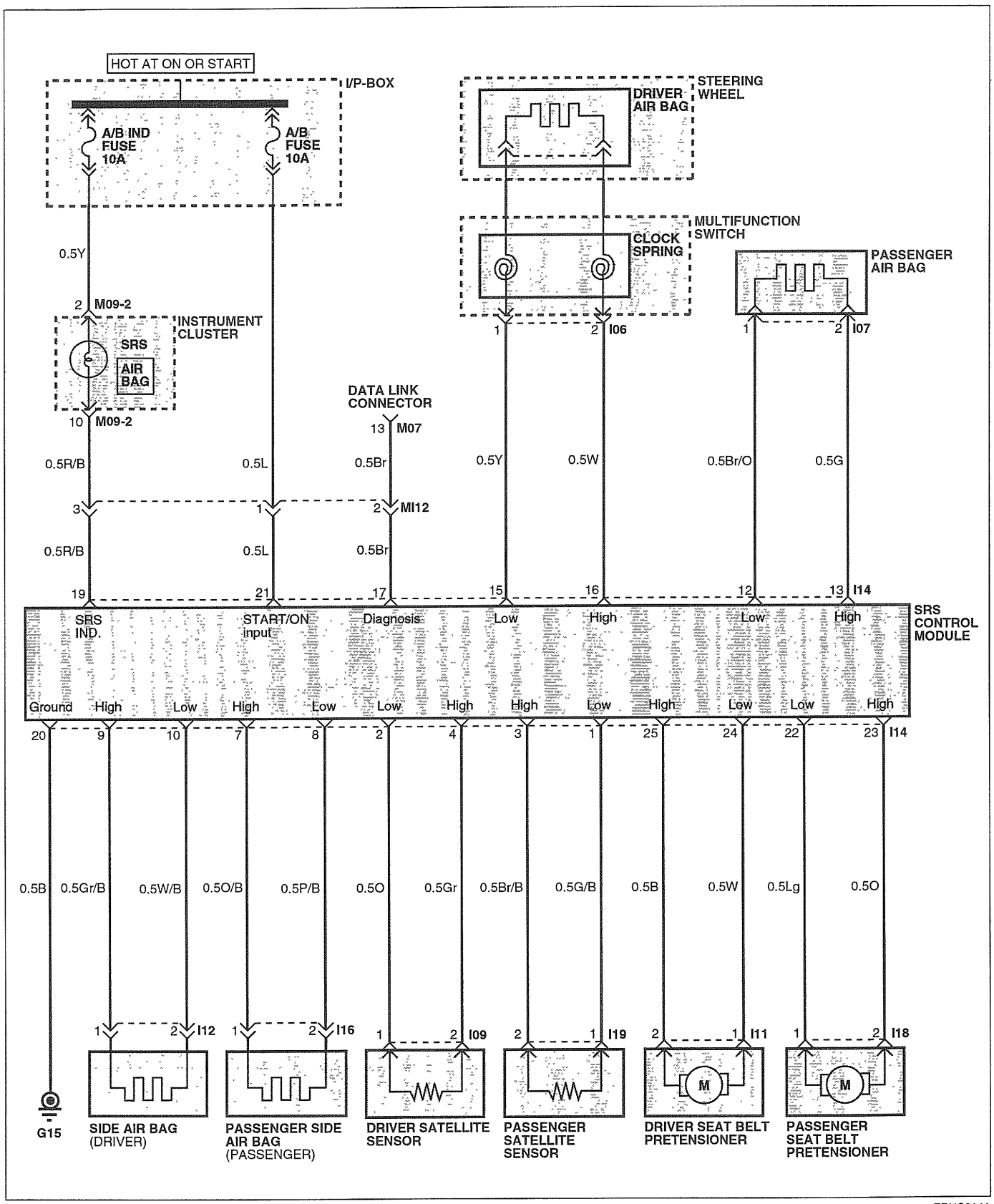

ERNC014A

SRSCM CONNECTOR

DAB+PAB+SAB+BPT ERNC0160

1	2	3	4	5	6	7	8	9	10	11	12	13	14	15	16	17	18	19	20	21	22	23	24	25
●	●	●	●			●	●	●	●		●	●		●	●	●		●	●	●	●	●	●	●

26	27	28	29	30	31	32	33	34	35	36	37	38	39	40	41	42	43	44	45	46	47	48	49	50

ERNB016A

PIN NO.	Function	Input/output
1	Passenger satellite sensor, Low	output
2	Driver satellite sensor, Low	output
3	Passenger satellite sensor, High	output
4	Driver satellite sensor, High	output
5	Not used	-
6	Not used	-
7	Passenger side airbag, Low	Output
8	Passenger side airbag, High	Output
9	Driver side airbag, Low	Output
10	Driver side airbag, High	Output
11	Not used	-
12	Passenger airbag, Low	Output
13	Passenger airbag, High	Output
14	Not used	-
15	Driver airbag, Low	Output
16	Driver airbag, High	Output
17	K-diagnostic line	Input/output
18	Not used	-
19	Warning lamp	Output
20	GND	Input
21	Battery supply	Input
22	Passenger belt pretensioner, Low	Output
23	Passenger belt pretensioner, High	Output
24	Driver belt pretensioner, Low	Output
25	Driver belt pretensioner, High	Output
26	Not used	-
27	Not used	-
28	Not used	-
29	Not used	-
30	Not used	-

PIN NO.	Function	Input/output
31	Not used	-
32-33	Shorting bar	-
34-35	Shorting bar	-
36	Not used	-
37-38	Shorting bar	-
39	Not used	-
40-41	Shorting bar	-
42	Not used	-
43	Not used	-
44-45	Shorting bar	-
46	Not used	-
47-48	Shorting bar	-
49-50	Shorting bar	-

AIR BAG MODULE (DRIVE SIDE) AND CLOCK SPRING

COMPONENTS ERJB0200

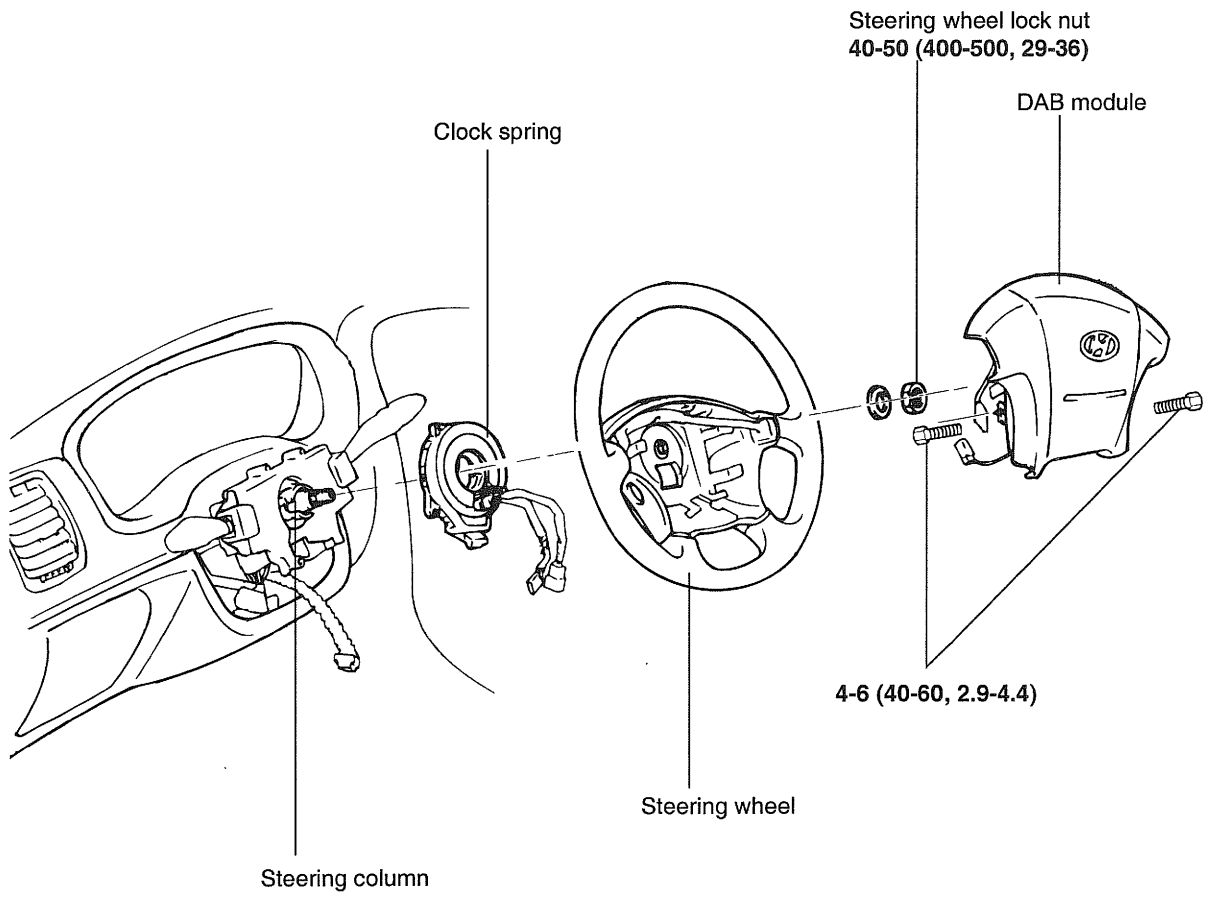

TORQUE : Nm (kg.cm, lb.ft)

ERJB020A

REMOVAL ERKB0210

1. Disconnect the negative battery cable and keep secure from battery.

⚠ ***CAUTION***

Wait at least 30 seconds after disconnecting the battery cable before doing any further work.

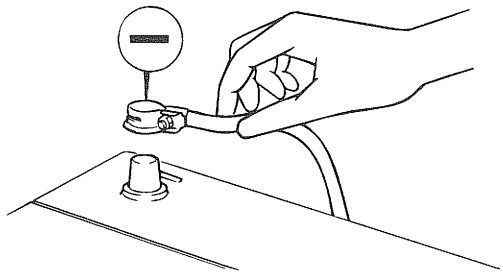

EADA011A

2. Remove the side protect cover of steering wheel and airbag module mounting bolts using a hexagonal wrench.

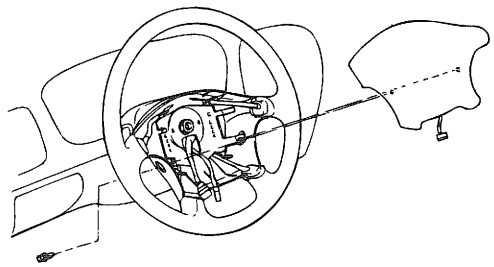

ERB9005A

3. When disconnecting the connector of the clock spring from the airbag module, pull the airbag's lock toward the outer side to spread it open.

⚠ ***CAUTION***

When disconnecting the airbag module-clock spring connector, take care not to apply excessive force to it.

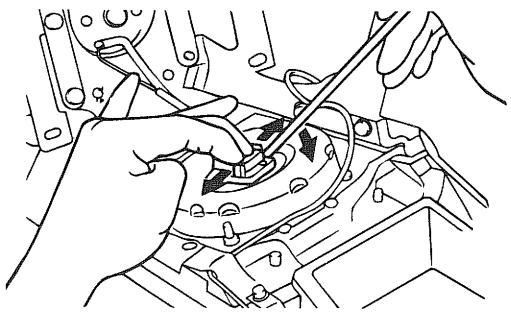

ERA9007C

4. Remove the drive airbag module.

⚠ ***CAUTION***

The removed airbag module should be stored in a clean, dry place with the pad cover face up.

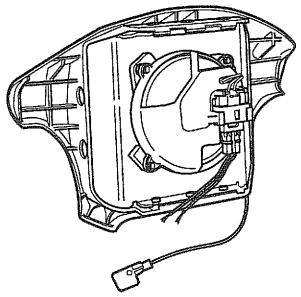

KFWE001A

5. Remove the steering wheel using SST (09561–11002).

⚠ ***CAUTION***

Do not hammer on the steering wheel. Doing so may damage the collapsible column mechanism.

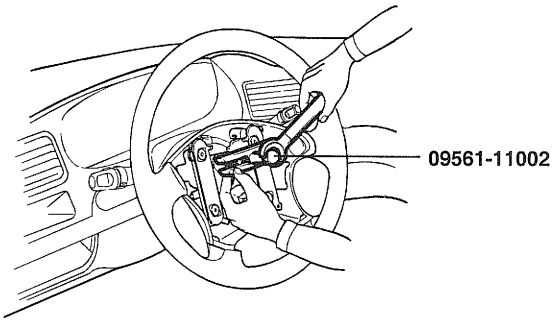

KPKA014A

INSPECTION ERKB0220

AIRBAG MODULE

If any improper parts are found during the following inspection, replace the airbag module with a new one.

Dispose the old one according to the specified procedure.

> ⚠ *CAUTION*
>
> ***Never attempt to measure the circuit resistance of the airbag module (squib) even if you are using the specified tester. If the circuit resistance is measured with a tester, accidental airbag deployment will result in serious personal injury.***

1. Check pad cover for dents, cracks or deformities.
2. Check the airbag module for denting, cracking or deformation.
3. Check hooks and connectors for damage, terminals for deformities, and harness for binds.
4. Check airbag inflator case for dents, cracks or deformities.

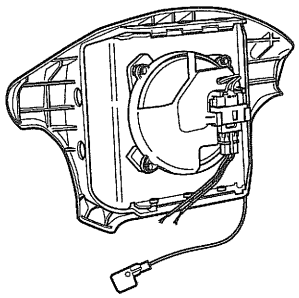

KFWE001A

5. Install the airbag module to the steering wheel to check for fit or alignment with the wheel.

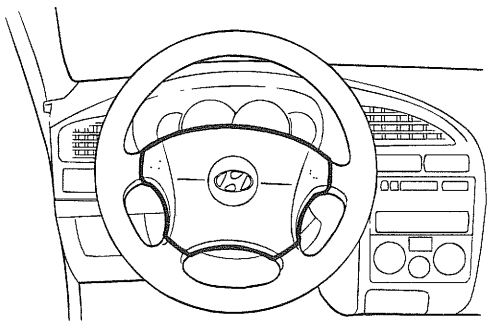

KPKA012A

CLOCK SPRING

1. If, as a result of the following checks, even one abnormal point is discovered, replace the clock spring with a new one.
2. Check connectors and protective tube for damage, and terminals for deformities.

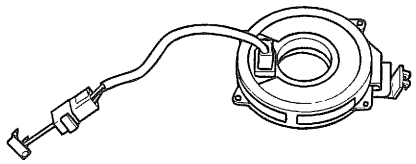

ERJA010E

AIR BAG MODULE (PASSENGER SIDE)

AIR BAG MODULE (PASSENGER)

REMOVAL ERKB0250

NOTE

1. *Never attempt to disassemble or repair the airbag module.*
2. *Do not drop the airbag module or allow contact with water, grease or oil. Replace it if a dent, crack, deformation or rust are detected.*
3. *The airbag module should be stored on a flat surface and placed so that the pad surface is facing upward. Do not place anything on top of it.*
4. *Do not expose the airbag module to temperature over 93°C (200°F)*
5. *An undeployed airbag module should only be disposed in accordance with the procedures.*
6. *Never attempt to measure the circuit resistance of the airbag module (squib) even if you are using the specified tester. If the circuit resistance is measured with a tester, accidental airbag deployment will result in serious personal injury.*
7. *Whenever the PAB is deployed it should be replaced with a new one assembled with an extension wire. The squib is melt down if the PAB is deployed making the extension wire useless.*

1. Disconnect the battery negative (-) terminal cable.

CAUTION

Wait at least 30 seconds.

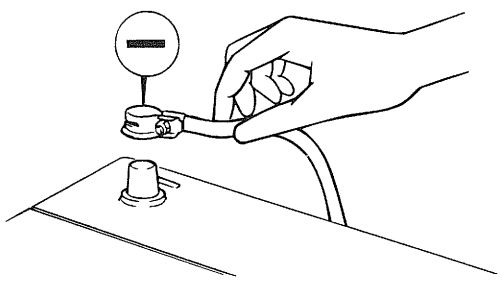

EADA011A

2. Remove the glove box.
3. Disconnect the PAB module connector.
4. Remove the crash pad assembly and then undo the PAB module. (Refer to the BD section)
5. The skin of the passenger airbag module is integrated with the crash pad, therefore, the crash pad must be replaced if the PAB deploys.

COMPONENTS ERJB0260

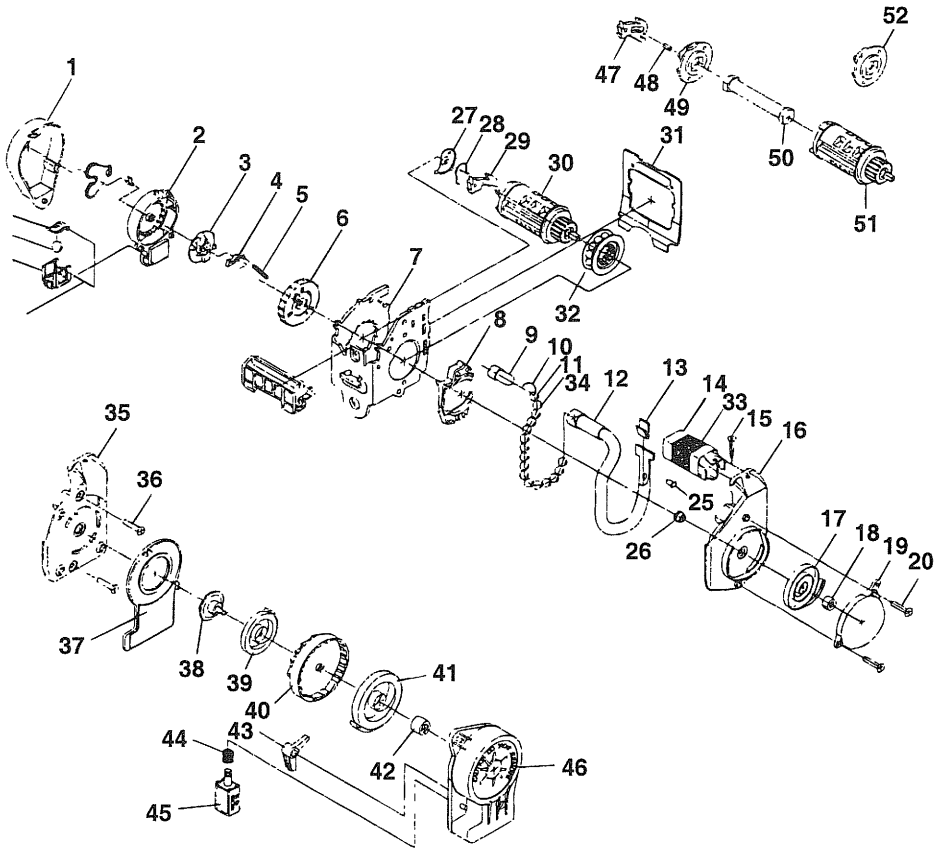

1. COVER-L/RH
2. BEARING PLATE-L/RH
3. INTERTIA MASS
4. WEB SENSOR PAWL
5. WEB SENSOR SPRING
6. STEERING DISC-L/RH
7. BASE L/RH
8. BALL L/RH
9. GAS GENERATOR
10. TUBE SPRING
11. PISTON
12. TUBE-L/RH
13. BALL STOPPING SPRING
14. BALL TRAP-L/RH
15. SCREW
16. TUBE COVER-L/RH
17. REWINDING SPRING
18. SPRING CORE-L/RH
19. SPRING COVER-L/RH
20. RIVET
27. RETAINING WASHER-L/RH
28. LOCK DISC SPRING
29. LOCKING ELEMENT-L/RH
30. SPINDLE-L/RH
31. DISTANCE SHEET
32. PINION GEAR
33. LABEL
34. BALL ALUMINUM
35. TUB COVER (T/R)-L/RH
36. RIVET (T/R)
37. RETAINER-L/RH
38. BUSH SHAFT
39. REDUCE SPRING
40. HOLDER-L/RH
41. NORMAL SPRING
42. STAY SHAFT
43. SOLENOID ASSY
44. RETURN SPRING
45. SOLENOID LEVER-L/RH
46. T/R COVER-L/RH
47. LOCK G ELEMENT (L/L)-L/RH
48. NECK
49. TREAD HEAD (W/STOP)-L/RH
50. TORSION BAR-5.5kN
51. SPINDLE (L/L)-L/RH
52. TREAD HEAD (W/OUT STOP)-L/RH

KFWE004A

FUNCTION OF PRETENSIONER ERHA0900

When a vehicle crashes with a certain degree of frontal impact, the gas generator will ignited an electrical firing signal from the SRSCM (Supplemental Restraint System Control Module).

Gas from the gas generator causes movement of the piston in the manifold case (cylinder), which operates the rack gear.

The rack gear, rotates a piston gear and a pinion rotates the planet gears.

Finally, the webbing is retracted by the rotation of the spool. Therefore, the pretensioner seat belt helps to reduce the severity of injury to the front seat occupant by retracting the seat belt webbing. This prevents the occupant from thrusting forward and hitting the steering wheel or the instrument panel when the vehicle crashes.

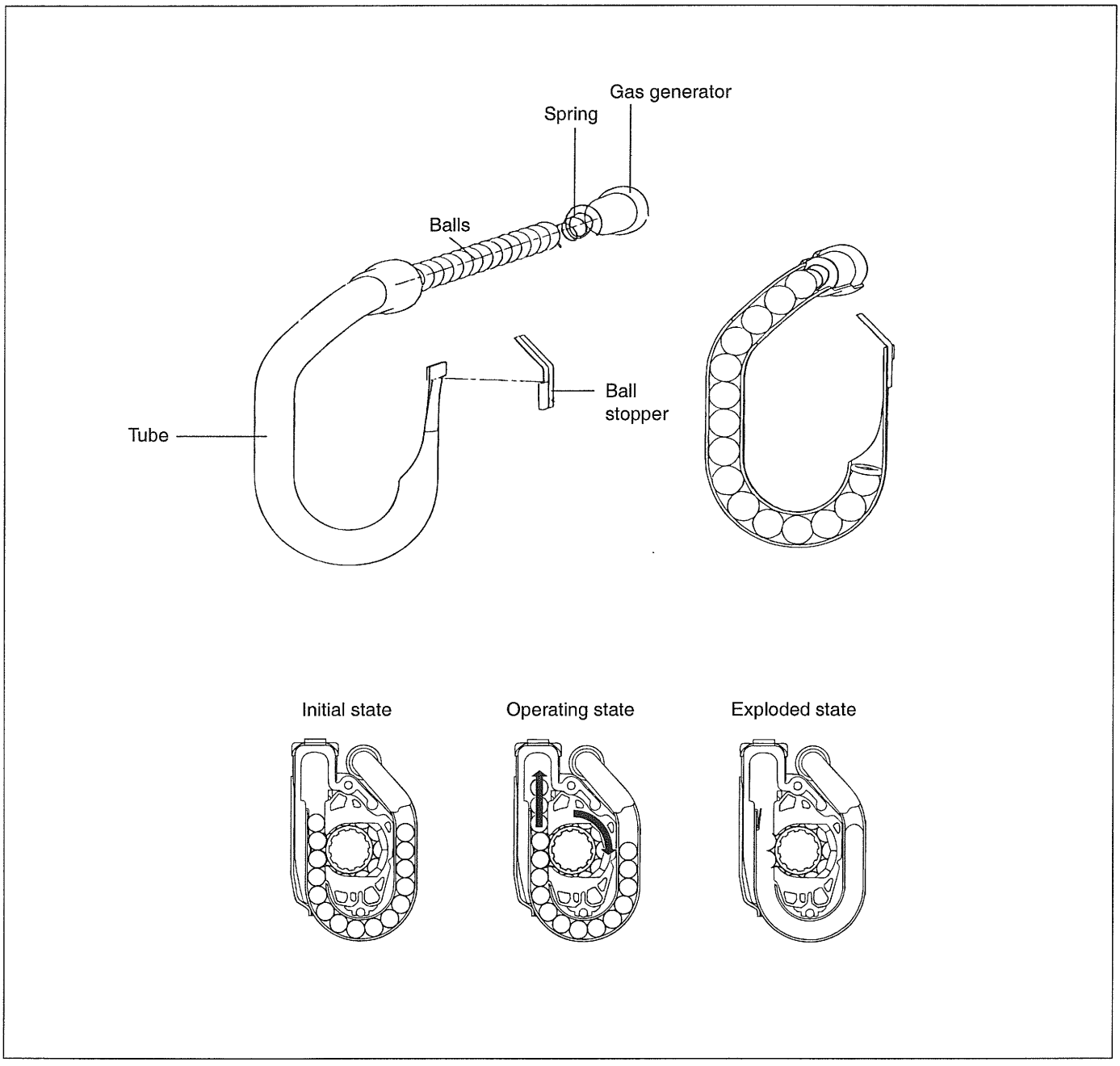

KFWE005A

LOAD LIMITER

The load limiter is designed to relieve the impact force to an occupant chest's of the seat belt webbing when the occupant is restrained by the seat belt during a crash. If the crash force reaches a certain value, the torsion bar in the pretensioned seat belt will deform and cause the webbing to extracted from the seat belt, thus, relieving the impact force.

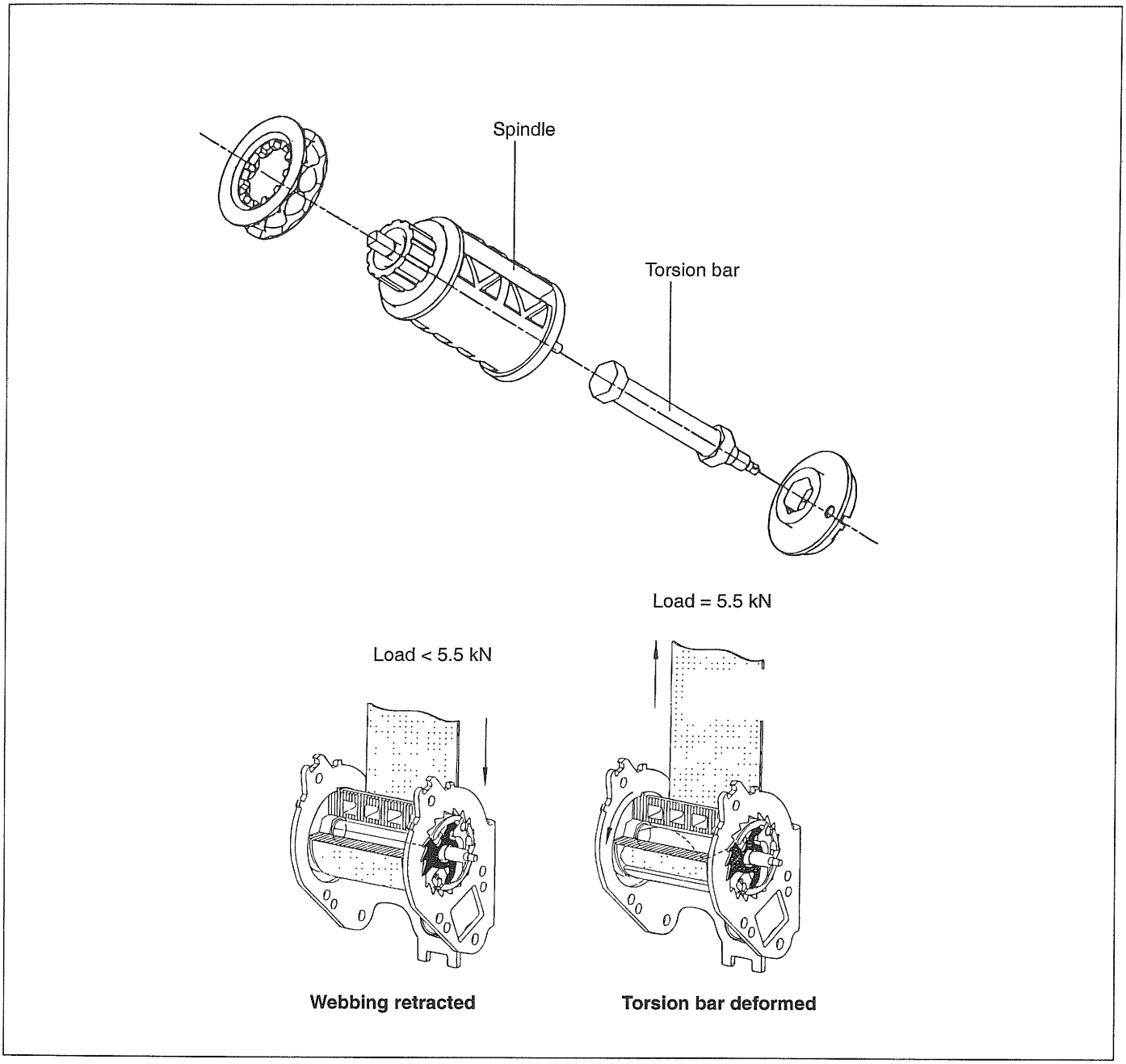

KFWE006A

REMOVAL ERNC0290

1. Disconnect the battery negative (-) terminal.

⚠ ***CAUTION***

Wait at least 30 seconds.

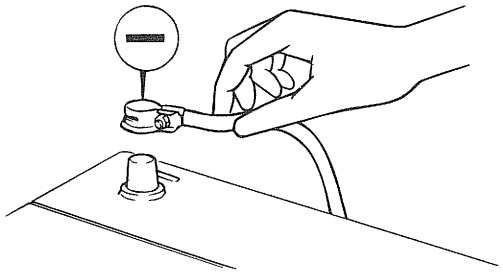

EADA011A

2. Remove the door scuff trim.

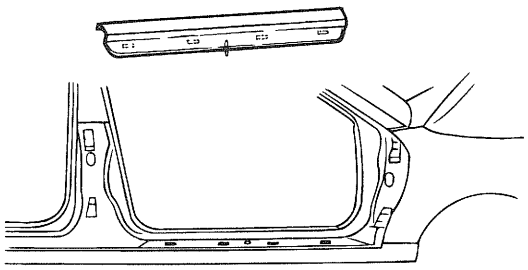

KRKB025A

3. Remove the center pillar lower trim after removing seat belt lower anchor bolt.

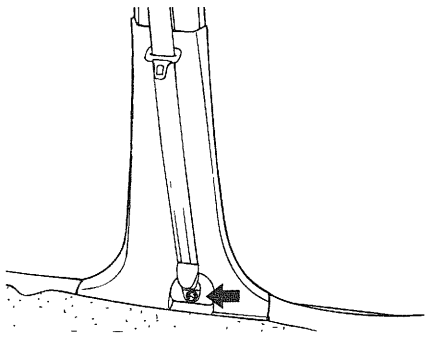

ESJA050D

4. Remove the upper anchor plate cover and upper anchor plate.

5. Remove the lower anchor plate and front seat belt.

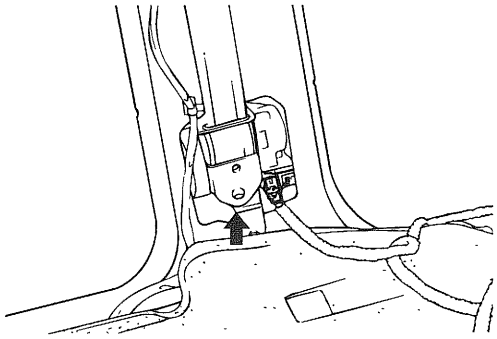

ESHA040J

⚠ ***CAUTION***

1. ***Never attempt to disassemble or repair the BPT.***
2. ***Do not drop the BPT or allow contact with water, grease, oil.***
   Replace it if a dent, crack, deformation or rust are detected.
3. ***Do not place anything on the BPT.***
4. ***Do not expose the BPT to temperature over 93°C(200°F).***
5. ***BPT functions one time only. Be sure to replace the BPT after it is deployed.***
6. ***Be sure to wear gloves and safety goggles when handling the deployed BPT.***

TROUBLESHOOTING

DIAGNOSIS WITH SCAN TOOL ERKB0300

CHECK PROCEDURES

1. Connect the Hi-Scan Pro DLC to the vehicle's data link connector located underneath the dash panel.
2. Turn the ignition key to the "ON" position and turn the Hi-Scan Pro ON.
3. Perform the SRS diagnosis according to the vehicle model configuration.
4. If a fault code is assured, then replace the component. Never attempt to repair the component.
5. If the Hi-Scan Pro finds that a component of the system is faulty, there is a possibility that the fault is not in the component, but in SRS wiring or connector.

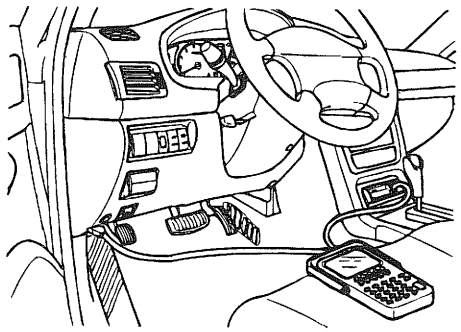

ERLB005D

DIAGNOSTIC TROUBLESHOOTING FLOW ERNC0310

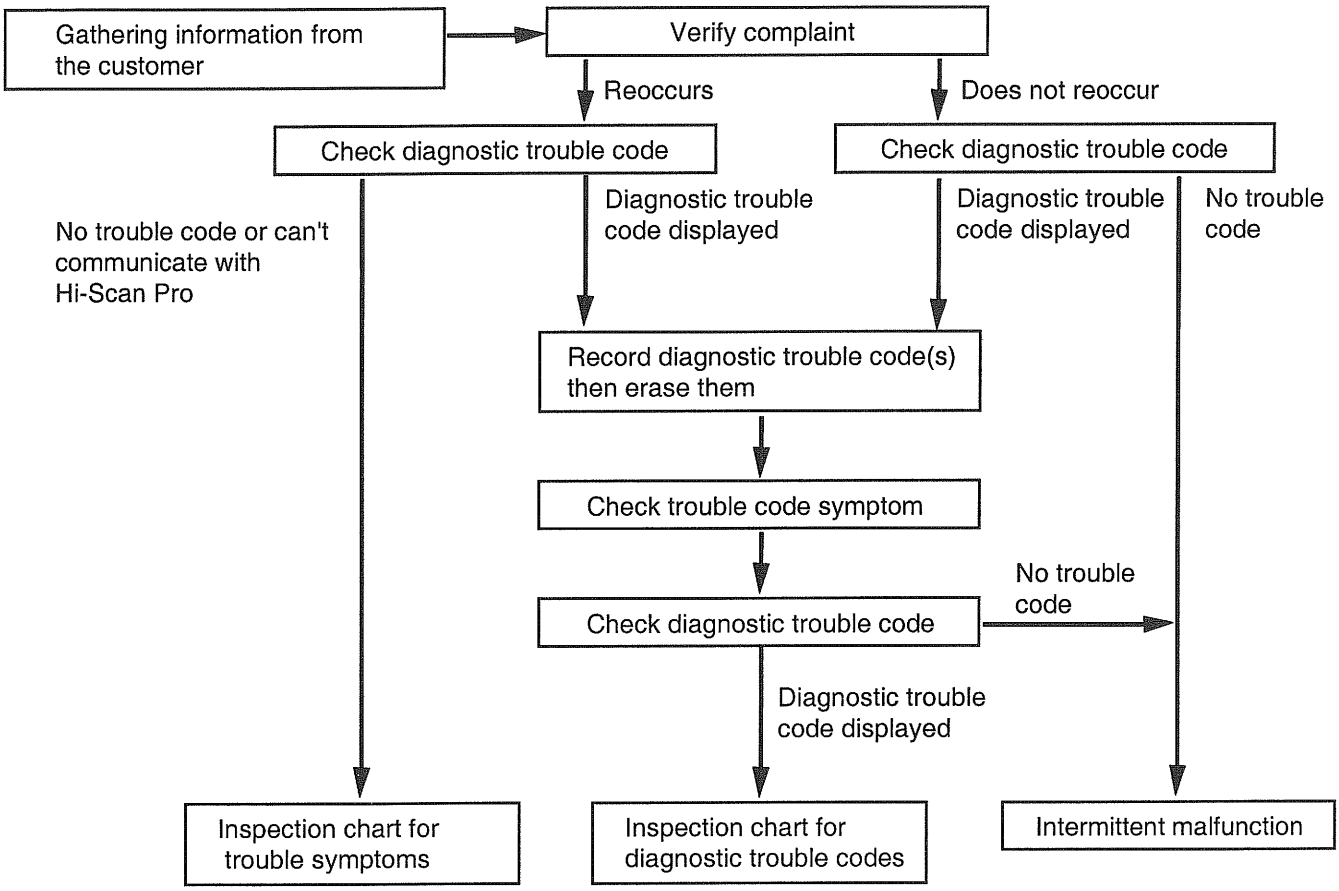

ERA9035A

AIRBAG SQUIB RESISTANCE LIMITS

DAB

$R \leq 0.83\Omega$	Resistance too low	Fault definitely detected
$1.47\Omega \leq R \leq 3.89\Omega$	Resistance whithin tolerance	Definitely no fault detected
$R \geq 5.44\Omega$	Resistance too high	Fault definitely detected
$0.83\Omega < R < 1.47\Omega$ $3.89\Omega < R < 5.44\Omega$	Tolerance band	Fault may or may not be detected

PAB, SAB, BPT

$R \leq 0.83\Omega$	Resistance too low	Fault definitely detected
$1.47\Omega \leq R \leq 2.83\Omega$	Resistance whithin tolerance	Definitely no fault detected
$R \geq 4.31\Omega$	Resistance too high	Fault definitely detected
$0.83\Omega < R < 1.47\Omega$ $2.83\Omega < R < 4.31\Omega$	Tolerance band	Fault may or may not be detected

INSPECTION CHART FOR DIAGNOSTIC TROUBLE CODE ERNC0330

OPTIONS : DAB + PAB + SAB + BPT

DTC No.	Fault description
B1111	Battery voltage too high
B1112	Battery voltage too low
B1345	Driver airbag (DAB), open circuit
B1346	Driver airbag (DAB), Resistance too high
B1347	Driver airbag (DAB), Resistance too low
B1348	Driver airbag (DAB), Short to GND
B1349	Driver airbag (DAB), Short to Battery
B1351	Passenger airbag (PAB), open circuit
B1352	Passenger airbag (PAB), Resistance too high
B1353	Passenger airbag (PAB), Resistance too low
B1354	Passenger airbag (PAB), Short to GND
B1355	Passenger airbag (PAB), Short to Battery
B1360	Driver seat belt pretensioner (DBPT), open circuit
B1361	Driver seat belt pretensioner (DBPT), Resistance too high
B1362	Driver seat belt pretensioner (DBPT), Resistance too low
B1363	Driver seat belt pretensioner (DBPT), Short to GND
B1364	Driver seat belt pretensioner (DBPT), Short Battery
B1366	Passenger seat belt pretensioner (PBPT), open circuit
B1367	Passenger seat belt prestensioner (PBPT), Resistance too high
B1368	Passenger seat belt prestensioner (PBPT), Resistance too low
B1369	Passenger seat belt prestensioner (PBPT), Short to GND
B1370	Passenger seat belt prestensioner (PBPT), Short to Battery
B1377	Driver side airbag (DSAB), open circuit
B1378	Driver side airbag (DSAB), Resistance too High
B1379	Driver side airbag (DSAB), Resistance t0o Low
B1380	Driver side airbag (DSAB), Short to GND
B1381	Driver side airbag (DSAB), Short to Battery
B1382	Passenger side airbag (PSAB), Resistance too high
B1383	Passenger side airbag (PSAB), Resistance too low
B1384	Passenger side airbag (PSAB), Short to GND
B1385	Passenger side airbag (PSAB), Short to Battery
B1386	Passenger side airbag (PSAB), Open circuit
B1400	Satellite left side sensor defect
B1403	Satellite right side sensor defect
B1409	Satellite left side sensor communication error

DTC No.	Fault description
B1410	Satellite right side sensor communication error
B1414	Satellite left side sensor wrong ID
B1415	Satellite right side sensor wrong ID
B1620	Airbag unit internal failure
B1651	Crash redcorded driver side airbag
B1652	Crash recorded passenger side airbag
B1658	Belt pretensioner 6 times deployment
B1660	Crash recorded driver airbag
B1662	Driver belt pretensioner deployment commanded
B1663	Crash recorded passenger airbag
B1664	Passenger belt pretensioner deployment commanded
B2503	Warning indicator circuit open or short to GND
B2504	Warning indicator circuit short to battery.

NOTE

- *The DAB is located in the steering wheel.*
- *The PAB is located in the crash pad.*
- *The DSAB is located in the left side of driver's seat.*
- *The PSAB is located in the right side of passenger's seat.*

ERKB0400

CIRCUIT INSPECTION

DTC	B1111	Battery voltage too high
	B1112	Battery voltage too low

CIRCUIT DESCRIPTION

The SRS is equipped with a voltage-increase or decrease circuit (DC-DC converter) in the SRSCM in case the source voltage goes down or up. When the battery voltage is down or up the voltage-increase or decrease circuit (DC-DC converter) function will increase or decrease the voltage of the SRS to normal voltage. The diagnosis system malfunction display for this circuit is different to other circuits. When the SRS warning lamp remains lit up and the DTC is a B1111 or B1112 code, battery voltage too high or low is indicated. When voltage returns to normal, the SRS warning light automatically goes off and a malfunction is no longer indicated.

INSPECTION PROCEDURE

1. Preparation
   1) Disconnect the negative (-) terminal cable from the battery, and wait at least 30 seconds.
   2) Remove the DAB module.
   3) Disconnect the connectors of the PAB, left and right side airbags, belt pretensioners and satellite sensors.
   4) Disconnect the SRSCM connector.

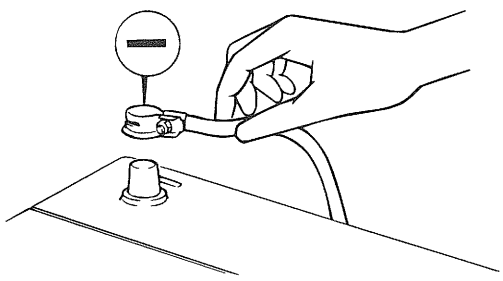

EADA011A

⚠ *CAUTION*

Place the DAB with the front surface facing upward.

2. Check source voltage.
   1) Connect the negative (-) terminal cable to the battery.
   2) Turn the ignition switch ON.

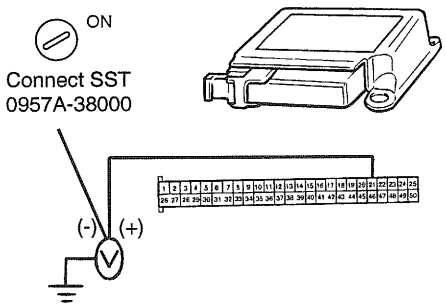

ERKB002B

[CHECK]

Measure voltage between the battery supply terminal 21 of the SRS connector and body ground.

LIMIT : 10-16.5V

NG → Check the harness between the battery and the SRSCM. Check the battery and charging system

OK ↓

ERJB040A

3. Does the SRS warning light turn off ?
[PREPARATION]

1) Turn the ignition switch to LOCK.

2) Connect the DAB module.

3) Connect the PAB connector, left and right side airbag, belt pretensioner and satellite connectors.

4) Connect the SRSCM connector.

5) Turn the ignition switch ON.

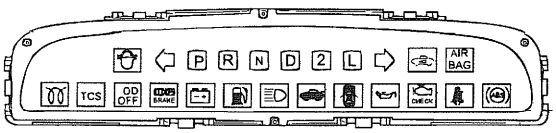

KTNB001P

[CHECK]

Check that the SRS warning light goes off.

NG → Check for DTCs. If a DTC is output, perform troubleshooting for the DTC. If B1111 or B1112 is output, replace the SRSCM.

OK ↓

From the results of the above inspection, the malfunctioning part can now be considered normal.

ERJB040B

ERNC0410

CIRCUIT INSPECTION

DTC	B1348	DAB Short to ground
	B1354	PAB Short to ground
	B1363	DBPT Short to ground
	B1369	PBPT Short to ground
	B1380	DSAB Short to ground
	B1384	PSAB Short to ground

CIRCUIT DESCRIPTION

The squib circuit consists of the SRSCM, clock spring, DAB, PAB, SAB, BPT, and satellite sensors. It causes the SRS to deploy when the SRS deployment conditions are satisfied. The above DTCs are recorded when a short to ground is detected in the squib circuit.

DTC Detecting Condition	Trouble Area
• Short circuit in squib wire harness (to ground) • Squib malfunction • Clock spring malfunction • SRSCM malfunction	• DAB squib • PAB squib • DSAB squib • PSAB squib • BPT squib • Clock spring • SRSCM • Wire harness

WIRING DIAGRAM

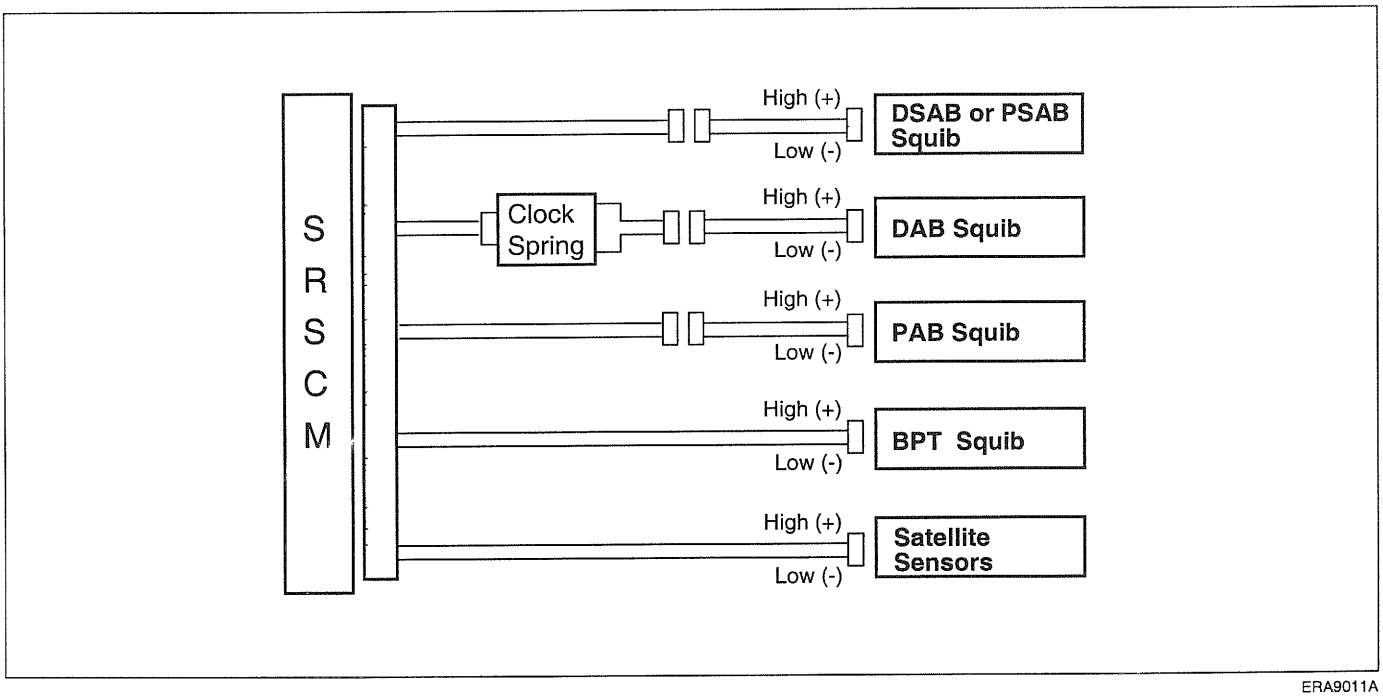

ERA9011A

INSPECTION PROCEDURE

1. Preparation
   Preparation
   1) Disconnect the negative (-) terminal cable from the battery, and wait at least 30 seconds.
   2) Remove the DAB module.
   3) Disconnect the connectors of the PAB, left and right side airbags, belt pretensioners and satellite sensors.
   4) Disconnect the SRSCM connector.

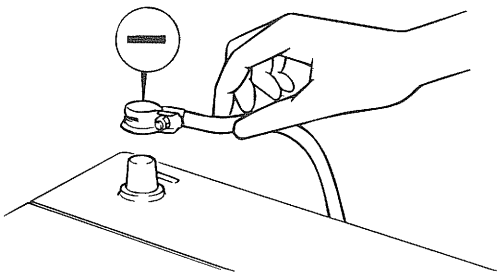

EADA011A

⚠ ***CAUTION***

Place the DAB with the front surface facing upward.

2. Check DAB squib circuit.

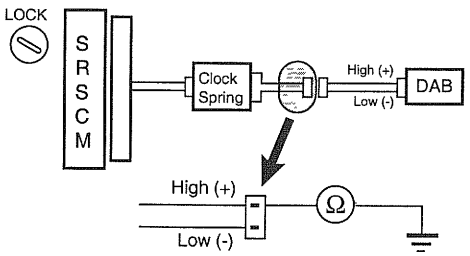

ERA9011B

[CHECK]
For the connector (on the clock spring side) between the clock spring and the DAB, measure the resistance between the DAB high and body ground.
Resistance : ∞

NG ➔ Go to step "11"

OK
↓
Go to step "7"

ERKB041A

3. Check the PAB squib circuit.

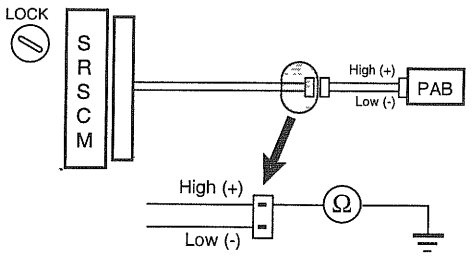

ERA9011C

[CHECK]
For the connector (on the SRSCM side) between the SRSCM and the PAB, measure the resistance between the PAB high and body ground.
Resistance : ∞

NG ➔ Repair or replace the harness or the connector between the SRSCM and the PAB.

OK
↓
Go to step "8"

ERKB041B

4. Check the PSAB and DSAB squib circuit.

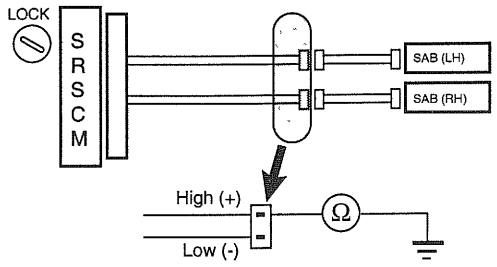

ERA9011D

[CHECK]
For the connector (on the SRSCM side) between the SRSCM and the SAB, measure the resistance between the SAB high and body ground.
Resistance : ∞

NG → Repair or replace the harness between the SRSCM and the SAB.

OK ↓
Go to step "9"

ERKB041C

5. Check the BPT squib circuit.

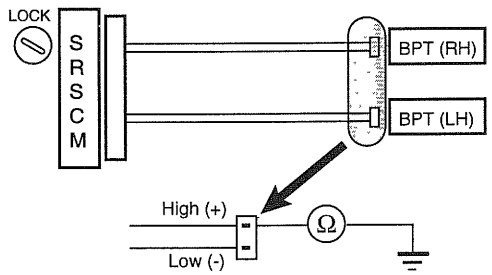

ERA9011E

[CHECK]
For the connector (on the SRSCM side) between the SRSCM and the BPT, measure the resistance between the BPT high and body ground.
Resistance : ∞

NG → Repair or replace the harness between the SRSCM and the BPT.

OK ↓
Go to step "10"

ERKB041D

6. Check the SRSCM.
[PREPARATION]
1. Connect the connector to the SRSCM.
2. Using a service wire, connect the DAB high and the DAB low to the clock spring side connector between the clock spring and the DAB.
3. Using a service wire, connect the PAB high and low on the SRSCM side of the connector between the SRSCM and the PAB.
4. Connect the SAB and the BPT by the same method.
5. Connect the negative (-) terminal cable to the battery, and wait least 30 seconds.

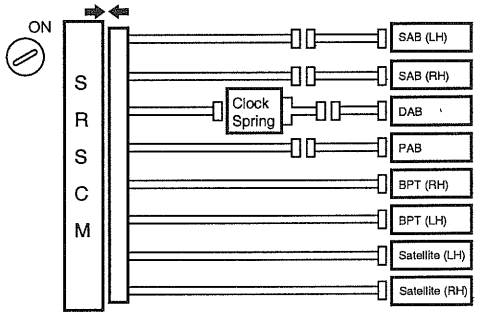

ERA9011G

[CHECK]
1. Turn the ignition switch to ON, and wait at least 30 seconds.
2. Clear the malfunction code stored in the memory with the Hi-Scan Pro.
3. Turn the ignition switch to LOCK, and wait for 30 seconds.
4. Turn the ignition switch to ON, and wait for 30 seconds.
5. Using Hi-Sacn Pro, check the DTC.
There is no DTC.

[HINT]
Codes other than these ones may be output at this time, but they are not relevant to this check.

NG → Replace the SRSCM.

OK

From the results of the above inspection, the malfunctioning part can now be considered normal.

ERJB041F

7. Check the DAB squib.
   [PREPARATION]
   1. Turn the ignition switch to LOCK.
   2. Disconnect the negative (-) terminal cable from the battery, and wait for 30 seconds.
   3. Connect the the DAB connector.
   4. Connect the negative (-) terminal cable to the battery, and wait for 30 seconds.

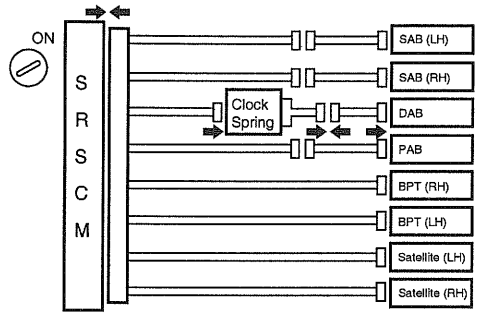

ERA9011I

   [CHECK]
   1. Turn the ignition switch to ON, and wait for at least 30 seconds.
   2. Clear the malfunction code stored in the memory with the Hi-Scan Pro.
   3. Turn the ignition switch to LOCK, and wait for 30 seconds.
   4. Turn the ignition switch to ON, and wait for 30 seconds.
   5. Using the Hi-scan, check the DTC.
      There is no DTC.

   [HINT]
   Codes other than these may be output at this time, but they are not relevant to this procedure.

NG → Replace the DAB.

OK

From the results of the above inspection, the malfunctioning part can now be considered normal.

ERJB041G

8. Check the PAB squib.
   [PREPARATION]
   1. Turn the ignition switch to LOCK.
   2. Disconnect the negative (-) terminal cable from the battery, and wait for 30 seconds.
   3. Connect the the PAB connector.
   4. Connect the negative (-) terminal cable from the battery, and wait for 30 seconds.

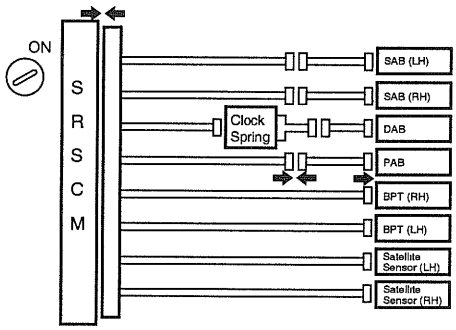

ERA9011J

   [CHECK]
   1. Turn the ignition switch to ON, and wait for at least 30 seconds.
   2. Clear the malfunction code stored in the memory with Hi-Scan Pro.
   3. Turn the ignition switch to LOCK, and wait for 30 seconds.
   4. Turn the ignition switch to ON, and wait for 30 seconds.
   5. Using the Hi-Sacn Pro, check the DTC.
      There is no DTC.

   [HINT]
   Codes other than these may be output at this time, but they are not relevant to this procedure.

NG → Replace the PAB.

OK

From the results of the above inspection, the malfunctioning part can now be considered normal.

ERJB041H

9. Check the SAB squib.
   [PREPARATION]
   1. Turn the ignition switch to LOCK.
   2. Disconnect the negative (-) terminal cable from the battery, and wait for 30 seconds.
   3. Connect the the SAB connector.
   4. Connect the negative (-) terminal cable from the battery, and wait for 30 seconds.

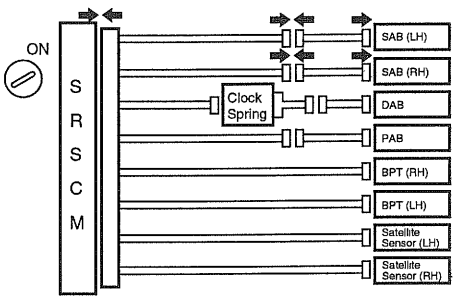

ERNC041A

   [CHECK]
   1. Turn the ignition switch to ON, and wait for at least 30 seconds.
   2. Clear the malfunction code stored in the memory with the Hi-Scan Pro.
   3. Turn the ignition switch to LOCK, and wait for 30 seconds.
   4. Turn the ignition switch ON, and wait for 30 seconds.
   5. Using the Hi-Sacn Pro, check the DTC.
      There is no DTC.

   [HINT]
   Codes other than these may be output at this time, but they are not relevant to this procedure.

NG → Replace the SAB.

OK

From the results of the above inspection, the malfunctioning part can now be considered normal.

ERJB041I

10. Check the BPT squib.
    [PREPARATION]
    1. Turn the ignition swich to LOCK.
    2. Disconnect the negative (-) terminal cable from the battery, and wait for 30 seconds.
    3. Connect the BPT connector.
    4. Connect the negative (-) terminal cable from the battery, and wait for 30 seconds.

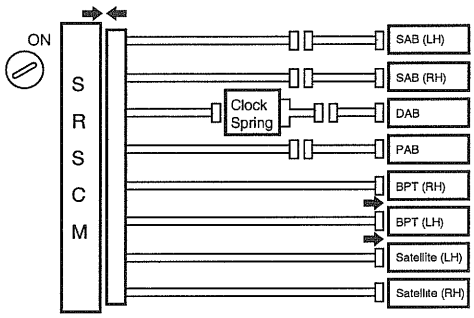

ERA9011K

    [CHECK]
    1. Turn the ignition switch to ON, and wait for 30 seconds.
    2. Clear the malfunction code stored in the memory with the Hi-Scan Pro.
    3. Turn the ignition switch to LOCK, and wait for 30 seconds.
    4. Turn the ignition switch to ON, and wait for 30 seconds.
    5. Using the Hi-Scan Pro, check the DTC.
       There is no DTC.

    [HINT]
    Codes other than these may be output at this time, but they are not relevant to this procedure.

NG ➔ Replace the BPT.

OK

From the results of the above inspection, the malfunctioning part can now be considered normal.

ERJB041J

11. Check the clock spring circuit.
[PREPARATION]
Disconnect the connector between the SRSCM and the clock spring.

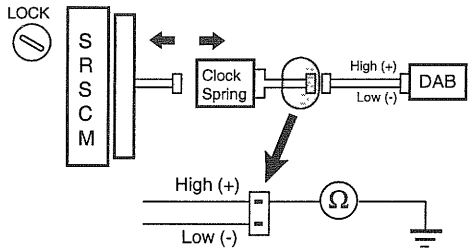

ERKB010B

[CHECK]
Measure the resistance between the DAB high on the clock spring side of the connector between the clock spring and the DAB and body ground.
Resistance : ∞

NG ➔ Replace the clock spring.

OK

Repair or replace the harness or the connector between the SRSCM and the clock spring.

ERDA027R

ERNC0420

CIRCUIT INSPECTION

DTC	B1349	DAB Short to battery
	B1355	PAB Short to battery
	B1364	BPT (Driver) Short to battery
	B1370	BPT (Passenger) Short to battery
	B1381	SAB (Driver) short to battery
	B1385	SAB (Passenger) short to battery

CIRCUIT DESCRIPTION

The squib circuit consists of the SRSCM, clock spring, DAB, PAB, SAB, BPT and satellite sensor. It causes the SRS to deploy when the SRS deployment conditions are satisfied. The above DTCs are recorded when a B+ short is detected in the squib circuit.

DTC Detecting Condition	Trouble Area
• Short circuit in squib wire harness (to B+) • Squib malfunction • Spiral cable malfunction • SRSCM malfunction	• DAB squib • PAB squib • DSAB or PSAB squib • BPT squib • Wire harness

WIRING DIAGRAM

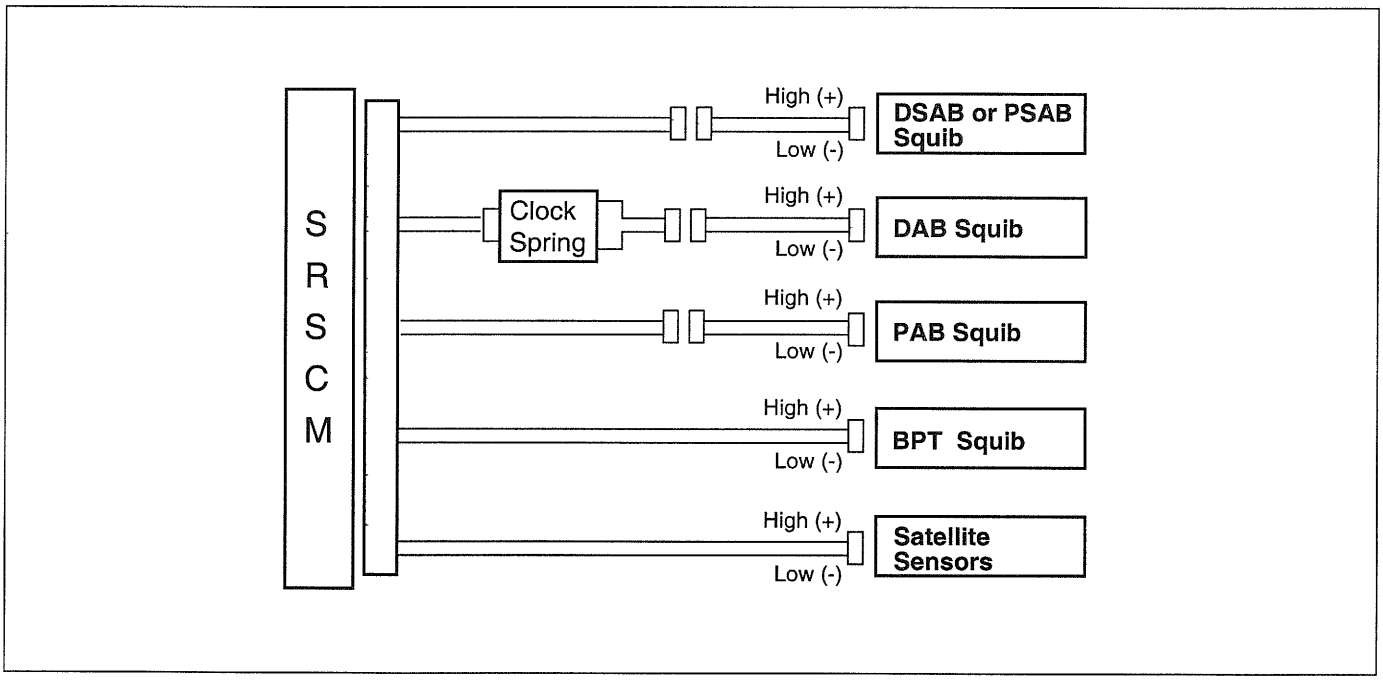

ERA9011A

INSPECTION PROCEDURE

1. Preparation

   1) Disconnect the negative (-) terminal cable from the battery, and wait at least 30 seconds.

   2) Remove the DAB module.

   3) Disconnect the connectors of the PAB, left and right side airbags, belt pretensioners and satellite sensors.

   4) Disconnect the SRSCM connector.

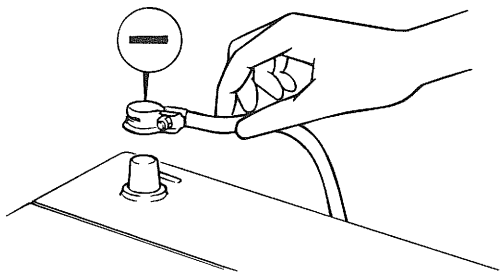

EADA011A

⚠ ***CAUTION***

Place the DAB with the front surface facing upward.

2. Check the DAB squib circuit.

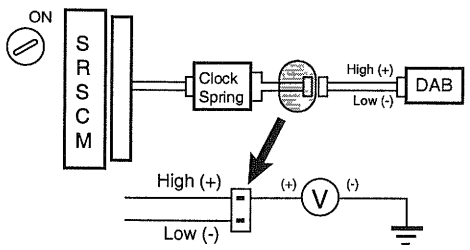

ERA9011O

[CHECK]
For the connector (on the clock spring side) between the clock spring and the DAB, measure the voltage between the DAB high and body ground.
Voltage : 0 V

NG ➔ Go to step "11"

OK
↓
Go to step "7"

ERKB041A

3. Check the PAB squib circuit.

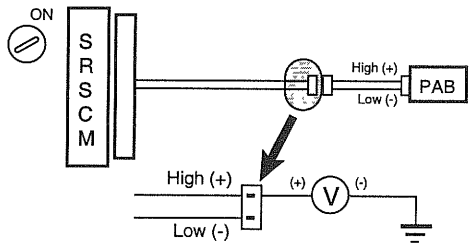

ERA9011P

[CHECK]
For the connector (on the SRSCM side) between the SRSCM and the PAB, measure the voltage between the PAB high and body ground.
Voltage : 0 V

NG ➔ Repair or replace the harness between the SRSCM and the PAB.

OK
↓
Go to step "8"

ERKB042A

4. Check the SAB squib circuit.

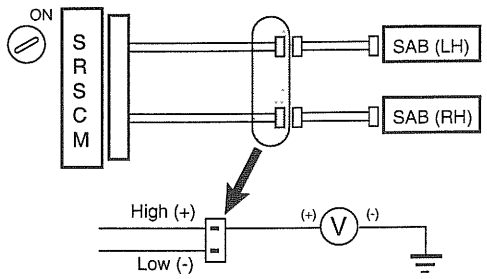

ERA9011Q

[CHECK]
For the connector (on the SRSCM side) between the SRSCM and the SAB, measure the voltage between the SAB high and body ground.
Voltage : 0 V

NG → Repair or replace the harness between the SRSCM and the SAB.

OK ↓
Go to step "9"

ERKB041C

5. Check the BPT squib circuit.

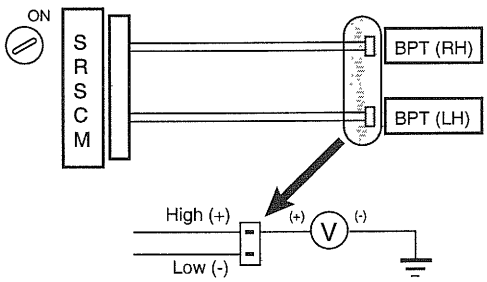

ERA9011R

[CHECK]
For the connector between the SRSCM and the BPT, measure the voltage between the BPT high and body ground.
Voltage : 0 V

NG → Repair or replace the harness between the SRSCM and the BPT.

OK ↓
Go to step "10"

ERKB041D

6. Check the SRSCM.

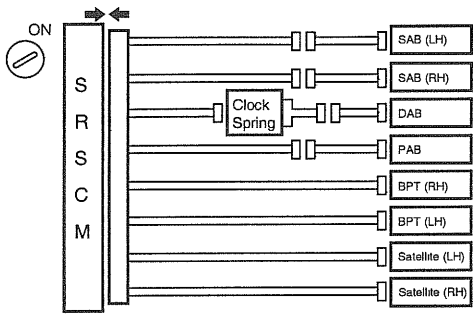

ERA9011G

[PREPARATION]
1. Connect the connector to the SRSCM.
2. Using a service wire, connect the DAB high and low on the clock spring side of the connector between the clock spring and the DAB.
3. Using a service wire, connect the PAB high and low on the SRSCM side of the connector between the SRSCM and the PAB.
4. Using a service wire, connect the SAB high and low on the SRSCM side connector between the SRSCM and the SAB.
5. Using a service wire, connect the BPT high and low on the SRSCM side connector between the SRSCM and the BPT.
6. Using a service wire, connect the satellite high and low on the SRSCM side connector between the SRSCM and the satellite sensor.
7. Connect negative (-) battery cable to the battery, and wait at least 30 seconds.

[CHECK]
1. Turn the ignition switch to ON, and wait at least 30 seconds.
2. Clear the malfunction code stored in memory with Hi-Scan Pro.
3. Turn the ignition switch to LOCK, and wait at least 30 seconds.
4. Turn the ignition switch to ON, and wait at least 30 seconds.
5. Using Hi-Scan Pro, check the DTC.
   There is no DTC.

[HINT]
Codes other than these may be output at this time, but they are not relevant to this check.

NG → Replace the SRSCM.

OK

From the results of the above inspection, the malfunctioning part can now be considered normal.

ERJB041F

7. Check the DAB squib.
[PREPARATION]
1. Turn the ignition switch to LOCK.
2. Disconnect the negative (-) terminal cable from the battery, and wait for 30 seconds.
3. Connect the DAB connector.
4. Connect the negative (-) terminal cable to the battery, and wait for 30 seconds.

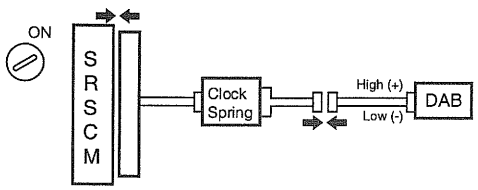

ERA9011U

[CHECK]
1. Turn the ignition switch to ON, and wait for at least 30 seconds.
2. Clear the malfunction code stored in the memory with the Hi-Scan Pro.
3. Turn the ignition switch to LOCK, and wait for 30 seconds.
4. Turn the ignition switch to ON, and wait for 30 seconds.
5. Using Hi-Scan Pro, check the DTC.
There is no DTC.

[HINT]
Codes other than these may be output at this time, but they are not relevant to this procedure.

NG → Replace the DAB.

OK

From the results of the above inspection, the malfunctioning part can now be considered normal.

ERJB041G

8. Check the PAB squib.
[PREPARATION]
1. Turn the ignition switch to LOCK.
2. Disconnect the negative (-) terminal cable from the battery, and wait for 30 seconds.
3. Connect the the PAB connector.
4. Connect the negative (-) terminal cable from the battery, and wait for 30 seconds.

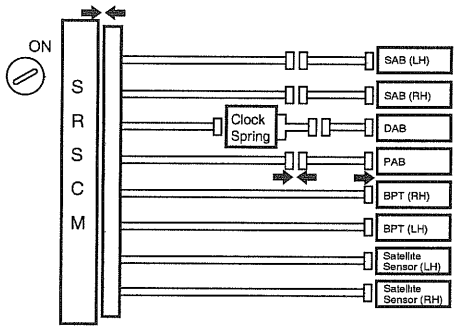

ERA9011J

[CHECK]
1. Turn the ignition switch to ON, and wait for at least 30 seconds.
2. Clear the malfunction code stored in the memory with Hi-Scan Pro.
3. Turn the ignition switch to LOCK, and wait for 30 seconds.
4. Turn the ignition switch ON, and wait for 30 seconds.
5. Using the Hi-Sacn Pro, check the DTC.
DTC is not output.

[HINT]
Codes other than these may be output at this time, but they are not relevant to this procedure.

NG → Replace the PAB.

OK

From the results of the above inspection, the malfunctioning part can now be considered normal.

ERJB041H

9. Check the SAB squib.
   [PREPARATION]
   1. Turn the ignition switch to LOCK.
   2. Disconnect the negative (-) terminal cable from the battery, and wait for 30 seconds.
   3. Connect the SAB connector.
   4. Connect the negative (-) terminal cable from the battery, and wait for 30 seconds.

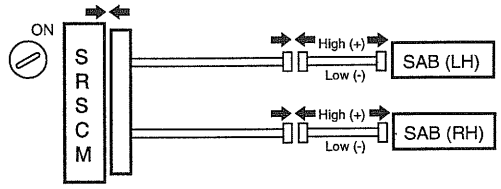

ERA9011W

   [CHECK]
   1. Turn the ignition switch to ON, and wait for at least 30 seconds.
   2. Clear the malfunction code stored in the memory with Hi-Scan Pro.
   3. Turn the ignition switch to LOCK, and wait for 30 seconds.
   4. Turn the ignition switch ON, and wait for 30 seconds.
   5. Using the Hi-Sacn Pro, check the DTC.
      There is no DTC.

   [HINT]
   Codes other than these ones may be output at this time, but they are not relevant to this checking procedure.

NG → Replace the SAB.

OK

From the results of the above inspection, the malfunctioning part can now be considered normal.

ERJB041I

10. Check the BPT squib.
    [PREPARATION]
    1. Turn the ignition swich to LOCK.
    2. Disconnect the negative (-) terminal cable from the battery, and wait for 30 seconds.
    3. Connect the the BPT connector.
    4. Connect the negative (-) terminal cable from the battery, and wait for 30 seconds.

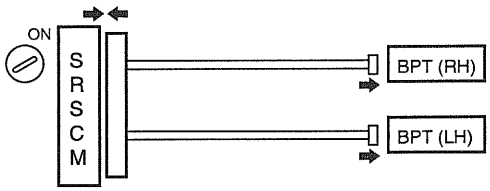

ERA9011X

    [CHECK]
    1. Turn the ignition switch to ON, and wait for 30 seconds.
    2. Clear the malfunction code stored in the memory with the Hi-Scan Pro.
    3. Turn the ignition switch to LOCK, and wait for 30 seconds.
    4. Turn the ignition switch to ON, and wait for 30 seconds.
    5. Using the Hi-Scan Pro check the DTC.
       There is no DTC.

    [HINT]
    Codes other than these may be output at this time, but they are not relevant to this procedure.

NG ➔ Replace the BPT.

OK

From the results of the above inspection, the malfunctioning part can now be considered normal.

ERJB041J

11. Check the clock spring.
[PREPARAION]
1. Turn the ignition switch to LOCK.
2. Disconnect the connector between the SRSCM and the clock spring.

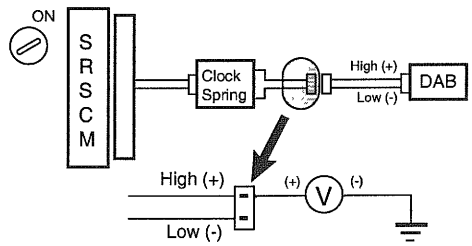

ERA9011O

[CHECK]
Turn the ignition switch to ON, and measure voltage between the DAB high and body ground.
Voltage : 0V

NG ➔ Replace the clock spring.

OK

Repair or replace the harness or the connector between the SRSCM and the clock spring.

ERDA027R

ERNC0430

CIRCUIT INSPECTION

DTC	B1345	DAB open circuit (R = ∞)
	B1346	DAB resistance too high (R ≥ 5.44 Ω)
	B1347	DAB resistance too low (R ≤ 0.83 Ω)

CIRCUIT DESCRIPTION

The DAB squib circuit consists of the SRSCM, the clock spring, the DAB. It causes the airbag to deploy when the airbag deployment conditions are satisfied. The above DTCs are recorded when the DAB circuit is open or the DAB resistance too high or low is detected in the DAB squib circuit.

DTC Detecting Condition	Trouble Area
• Too high or low resistane between DAB high (+) wiring harness and DAB low (-) wiring harness of squib.	• DAB squib
• DAB malfunction • Clock spring malfunction • SRSCM malfunction	• Clock spring • SRSCM • Wire harness

WIRING DIAGRAM

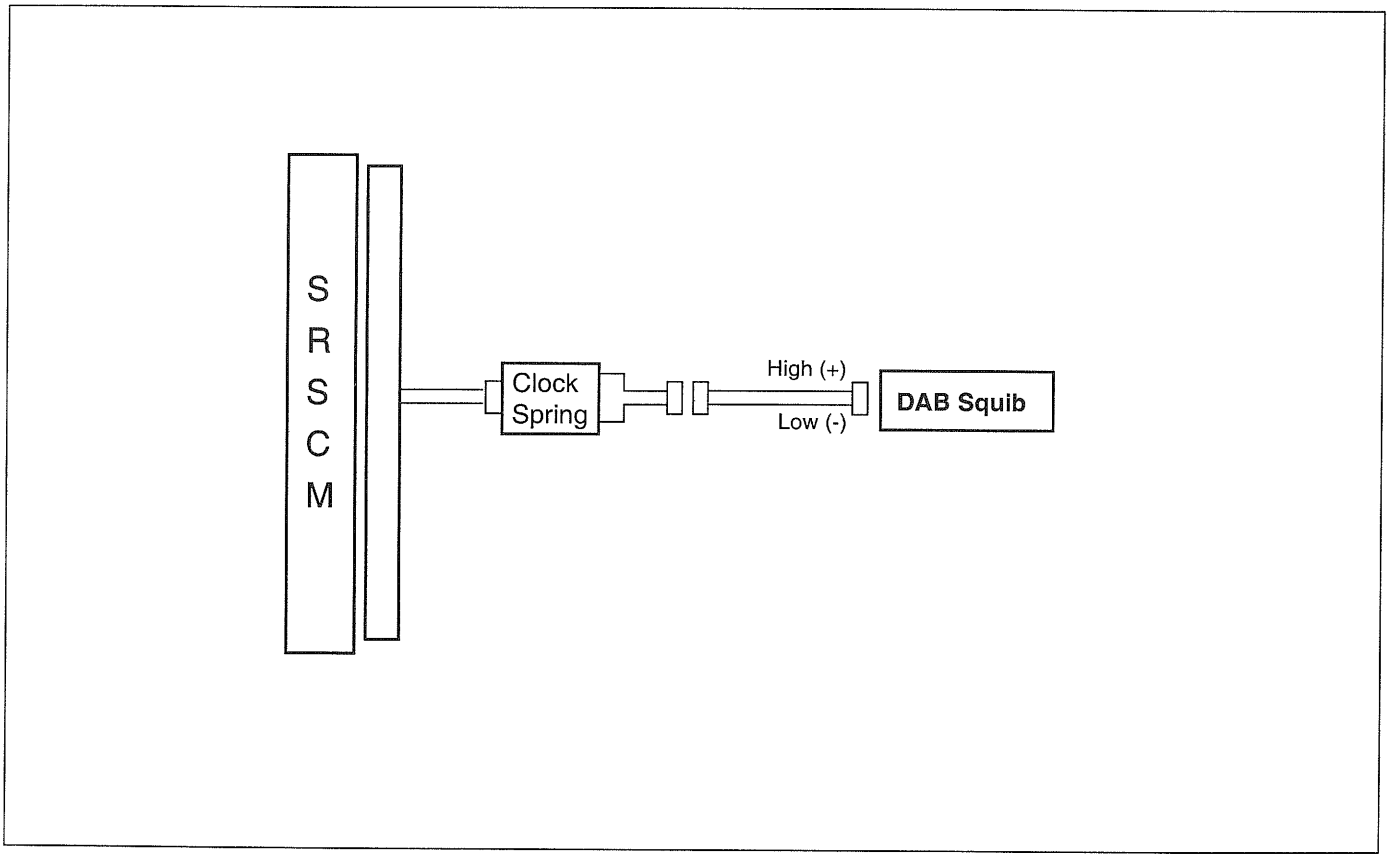

ERA9012A

INSPECTION PROCEDURE

1. Preparation

   1) Disconnect the negative (-) terminal cable from the battery, and wait at least 30 seconds.

   2) Remove the DAB module.

   3) Disconnect the connectors of the PAB, left and right side airbags, belt pretensioners and satellite sensors.

   4) Disconnect the SRSCM connector.

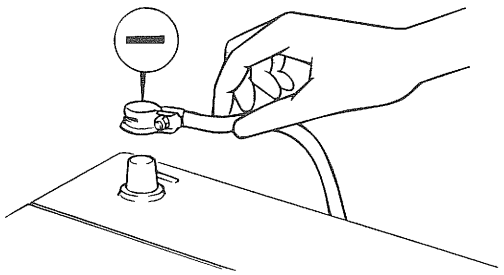

EADA011A

CAUTION

Place the DAB with the front surface facing upward.

2. Check the DAB resistance.
   [PREPARATION]
   Release the airbag activation prevention mechanism on SRSCM side of airbag squib side. Connect the dummy (0957A-38200) and dummy adapter (0957A-38400) to the clock spring side connector.

CAUTION

Never attempt to measure the circuit resistance of the airbag module (squib) even if you are using the specified tester.

NOTE

Before checking the resistance, you have to insert the shorting bar insert plastic that is attached to the diagnosis checker into the SRSCM connector.

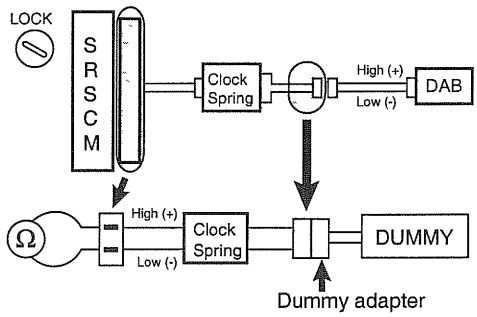

ERKB010C

[CHECK]
Measure the resistance between the DAB high (+) and low (-).
1.47 Ω ≤ R ≤ 3.89 Ω

NG ➔ Go to step "4"

OK

ERJB043A

3. Check the DAB squib.
   [PREPARATION]
   1. Turn the ignition switch to LOCK.
   2. Disconnect the negative (-) terminal cable from the battery, and wait for 30 seconds.
   3. Connect the DAB connector.
   4. Connect the negative (-) terminal cable to the battery, and wait for 30 seconds.

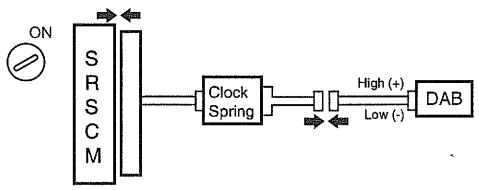

ERA9011U

[CHECK]
1. Turn the ignition switch to ON, and wait for at least 30 seconds.
2. Clear the malfunction code stored in the memory with the Hi-Scan Pro.
3. Turn the ignition switch to LOCK, and wait for 30 seconds.
4. Turn the ignition switch to ON, and wait for 30 seconds.
5. Using Hi-Scan Pro, check the DTC.
   There is no DTC.

[HINT]
Codes other than these may be output at this time, but they are not relevant to this procedure.

NG ➔ Replace the DAB.

OK
↓
From the results of the above inspection, the malfunctioning part can now be considered normal.

ERJB041G

4. Check the clock spring.
   [PREPARAION]
   Disconnect the connector between the SRSCM clock spring, and connect the dummy connector (0957A-38200) and dummy adapter (0957A-38400) to the clock spring side connector.

   NOTE
   Before checking the resistance, you have to insert the shorting bar insert plastic that is attached to the diagnosis checker into the SRSCM connector.

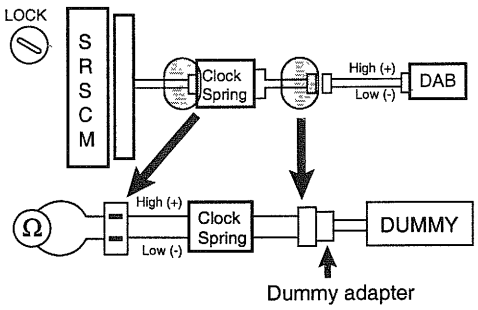

ERKB010D

[CHECK]
Measure the resistance between the DAB high (+) and low (-).
1.47 Ω ≤ R ≤ 3.89 Ω

NG ➔ Replace the clock spring.

OK
↓
Repair or replace the harness or the connector between the SRSCM and the clock spring.

ERDA027R

ERNC0440

CIRCUIT INSPECTION

DTC	B1351	PAB open circuit (R = ∞)
	B1352	PAB resistance too high (R ≥ 4.31 Ω)
	B1353	PAB resistance too low (R ≤ 0.83 Ω)

CIRCUIT DESCRIPTION

The PAB squib circuit consists of the SRSCM and PAB. It causes the airbag to deploy when the airbag deployment conditions are satisfied. The above DTCs are recorded when the PAB circuit is open or the PAB resistance too high or low is detected in the PAB squib circuit.

DTC Detecting Condition	Trouble Area
• Too high or low resistance between PAB high (+) wiring harness and PAB low (-) wiring harness of squib.	• PAB squib
• PAB malfunction • SRSCM malfunction	• SRSCM • Wire harness

WIRING DIAGRAM

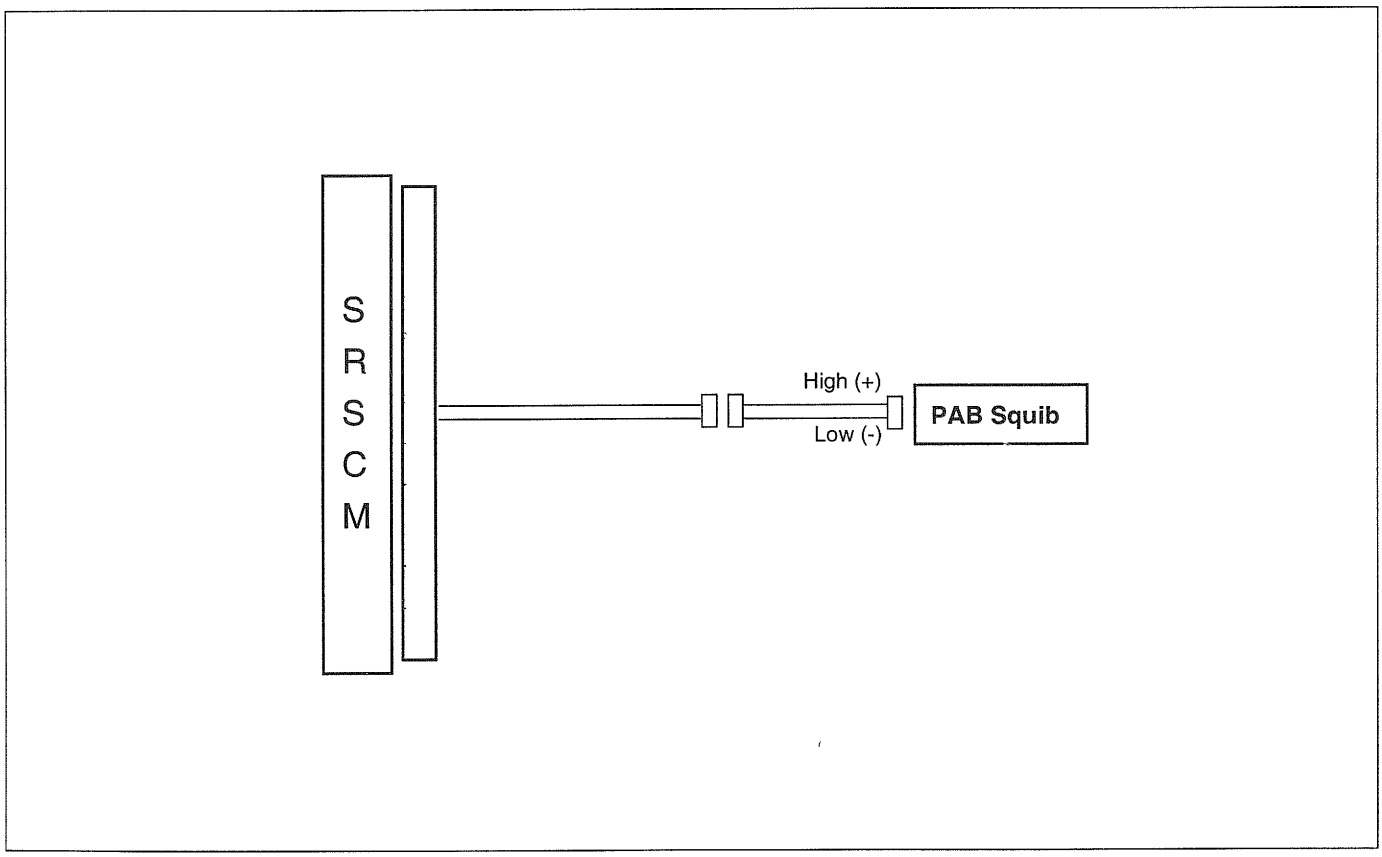

ERA9012E

INSPECTION PROCEDURE

1. Preparation

   1) Disconnect the negative (-) terminal cable from the battery, and wait at least 30 seconds.

   2) Remove the DAB module.

   3) Disconnect the connectors of the PAB, left and right side airbags, belt pretensioners and satellite sensors.

   4) Disconnect the SRSCM connector.

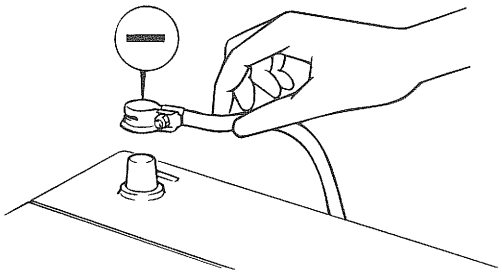

EADA011A

CAUTION

Place the DAB with the front surface facing upward.

2. Check the PAB resistance.
   [PREPARATION]
   Release the airbag activation prevention mechanism on the SRSCM side of the airbag squib side. Connect the dummy (0957A-38200) and dummy adapter (0957A-38300) to PAB connector of the SRSCM connector side.

NOTE

Before checking the resistance, you have to insert the shorting bar insert plastic that is attached to the diagnosis checker into the SRSCM connector.

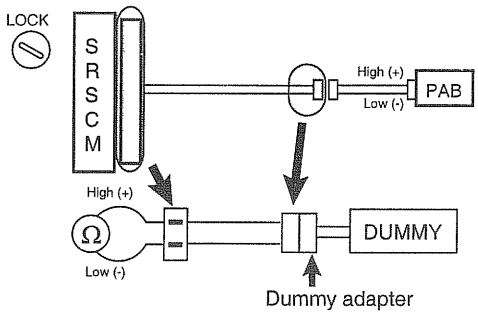

ERKB010E

[CHECK]
Measure the resistance between the PAB high (+) and the PAB low (-).
1.47 Ω ≤ R ≤ 2.83 Ω

NG → Repair or replace the harness between the SRSCM and the PAB.

OK

ERJB044A

3. Check the PAB squib.
   [PREPARATION]
   1. Turn the ignition switch to LOCK.
   2. Disconnect the negative (-) terminal cable from the battery, and wait for 30 seconds.
   3. Connect the PAB connector.
   4. Connect the negative (-) terminal cable to the battery, and wait for 30 seconds.

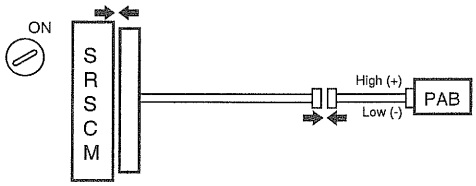

ERA9011V

[CHECK]

1. Turn the ignition switch to ON, and wait for at least 30 seconds.
2. Clear the malfunction code stored in the memory with the Hi-Scan Pro.
3. Turn the ignition switch to LOCK, and wait for 30 seconds.
4. Turn the ignition switch to ON, and wait for 30 seconds.
5. Using Hi-Scan Pro, check the DTC.
   There is no DTC.

[HINT]

Codes other than these may be output at this time, but they are not relevant to this procedure.

NG → Replace the PAB.

OK

↓

From the results of the above inspection, the malfunctioning part can now be considered normal.

ERJB041H

ERNC0450

CIRCUIT INSPECTION

DTC	B1377	DSAB open circuit (R = ∞)
	B1378	DSAB Resistance too high (R ≥ 4.31 Ω)
	B1379	DSAB Resistance too low (R ≤ 0.83 Ω)
	B1382	PSAB Resistance too high (R ≥ 4.31 Ω)
	B1383	PSAB Resistance too low (R ≤ 0.83 Ω)
	B1386	PSAB open circuit (R = ∞)

CIRCUIT DESCRIPTION

The SAB squib circuit consists of the SRSCM and SAB. It causes the airbag to deploy when the airbag deployment conditions are satisfied. The above DTCs are recorded when the SAB circuit is open or the SAB resistance too high or low is detected in the SAB squib circuit.

DTC Detecting Condition	Trouble Area
• Too high or low resistane between SAB high (+) wiring harness and SAB low (-) wiring harness of squib.	• SAB squib
• SAB malfunction • SRSCM malfunction	• SRSCM • Wire harness

WIRING DIAGRAM

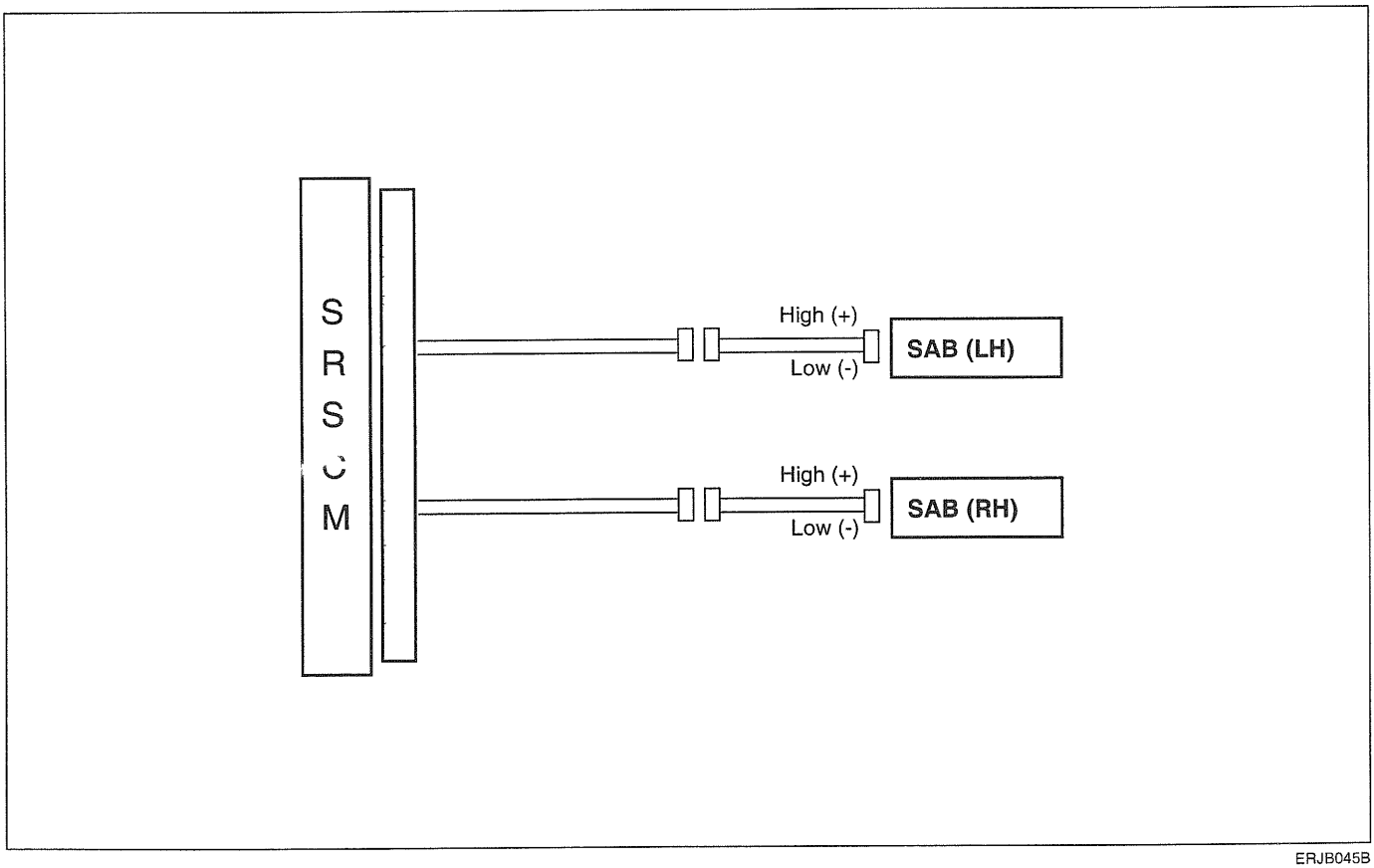

ERJB045B

INSPECTION PROCEDURE

1. Preparation

   1) Disconnect the negative (-) terminal cable from the battery, and wait at least 30 seconds.

   2) Remove the DAB module.

   3) Disconnect the connectors of the PAB, left and right side airbags, belt pretensioners and satellite sensors.

   4) Disconnect the SRSCM connector.

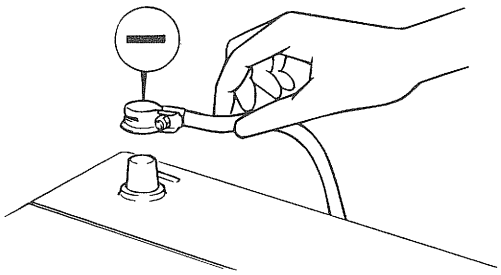

EADA011A

CAUTION

Place the DAB with the front surface facing upward.

2. Check the SAB resistance.
   [PREPARATION]
   Release the airbag activation prevention mechanism on the SRSCM side of the airbag squib side. Connect the dummy (0957A-38200) and dummy adapter (0957A-38300) to the SAB connector of the SRSCM connector side.

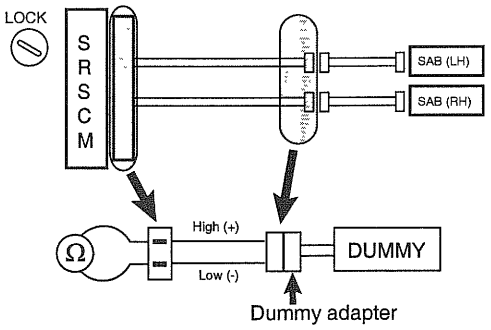

ERKB020A

NOTE

Before checking the resistance, you have to insert the shorting bar insert plastic that is attached to the diagnosis checker into the SRSCM connector.

[CHECK]
Measure the resistance between the SAB high (+) and the SAB low (-).
1.47 Ω ≤ R ≤ 2.83 Ω

NG ➔ Repair or replace the harness between the SRSCM and the SAB.

OK ↓

ERJB045A

3. Check the SAB squib.
   [PREPARATION]
   1. Turn the ignition switch to LOCK.
   2. Disconnect the negative (-) terminal cable from the battery, and wait for 30 seconds.
   3. Connect the SAB connector.
   4. Connect the negative (-) terminal cable to the battery, and wait for 30 seconds.

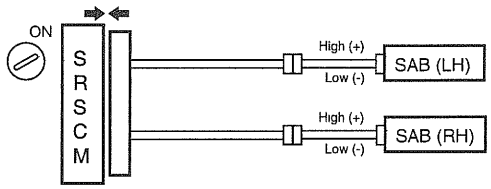

ERA9012K

[CHECK]
1. Turn the ignition switch to ON, and wait for at least 30 seconds.
2. Clear the malfunction code stored in the memory with the Hi-Scan Pro.
3. Turn the ignition switch to LOCK, and wait for 30 seconds.
4. Turn the ignition switch to ON, and wait for 30 seconds.
5. Using Hi-Scan Pro, check the DTC.
   There is no DTC.

[HINT]
Codes other than these may be output at this time, but they are not relevant to this procedure.

NG → Replace the SAB.

OK
↓
From the results of the above inspection, the malfunctioning part can now be considered normal.

ERJB041I

ERNC0460

CIRCUIT INSPECTION

DTC	B1360	DBPT open circuit (R = ∞)
	B1361	DBPT Resistance too high (R ≥ 4.31 Ω)
	B1362	DBPT Resistance too low (R ≤ 0.83 Ω)
	B1366	PBPT open circuit (R = ∞)
	B1367	PBPT Resistance too high (R ≥ 4.31 Ω)
	B1368	PBPT Resistance too low (R ≤ 0.83 Ω)

CIRCUIT DESCRIPTION

The BPT squib circuit consists of the SRSCM and BPT. It causes the airbag to deploy when the airbag deployment conditions are satisfied. The above DTCs are recorded when the BPT circuit is open or the BPT resistance too high or low is detected in the BPT squib circuit.

DTC Detecting Condition	Trouble Area
• Too high or low resistane between BPT high (+) wiring harness and BPT low (-) wiring harness of squib.	• BPT squib
• BPT malfunction • SRSCM malfunction	• SRSCM • Wire harness

WIRING DIAGRAM

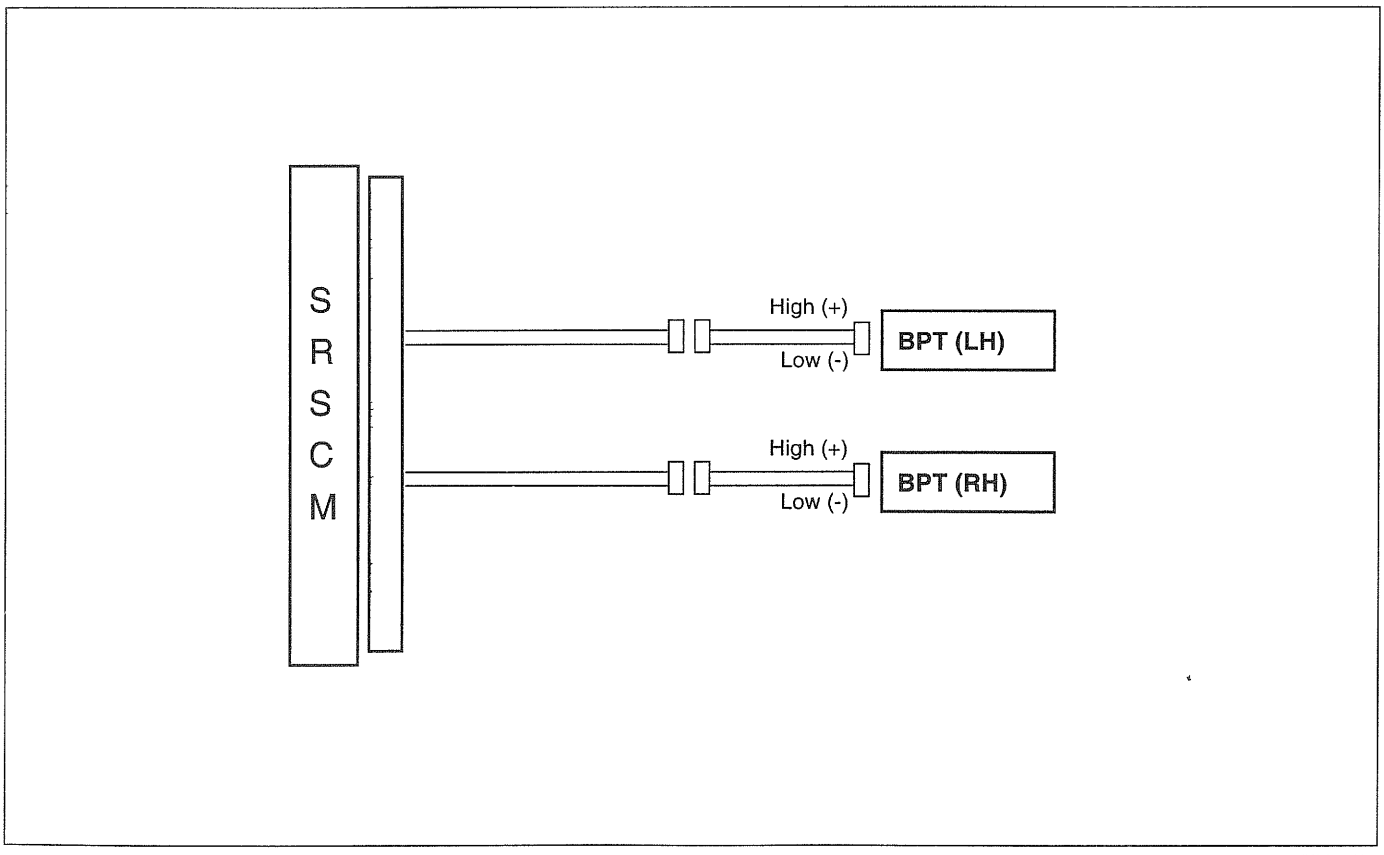

ERJB046A

INSPECTION PROCEDURE

1. Preparation
   1) Disconnect the negative (-) terminal cable from the battery, and wait at least 30 seconds.
   2) Remove the DAB module.
   3) Disconnect the connectors of the PAB, left and right side airbags, belt pretensioners and satellite sensors.
   4) Disconnect the SRSCM connector.

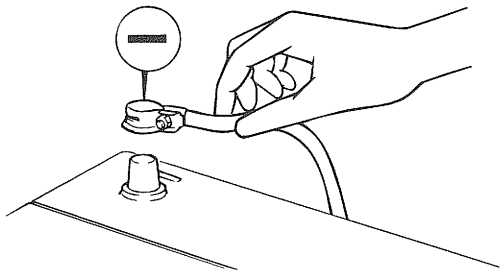

EADA011A

⚠ ***CAUTION***

Place the DAB with the front surface facing upward.

2. Check the BPT resistance.
   [PREPARATION]
   Release the airbag activation prevention mechanism on the SRSCM side of the airbag squib side. Connect the dummy (0957A-38200) and dummy adapter (0957A-38300) to the BPT connector of the SRSCM connector side.

📖 ***NOTE***

Before checking the resistance, you have to insert the shorting bar insert plastic that is attached to the diagnosis checker into the SRSCM connector.

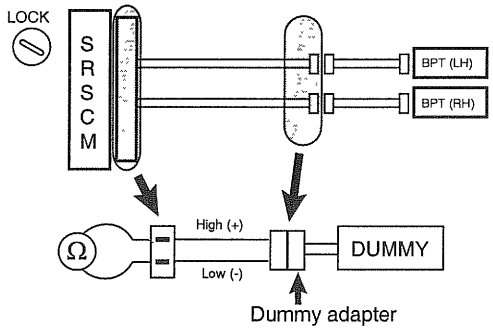

ERJB046D

[CHECK]
Measure the resistance between the BPT high (+) and the BPT low (-).
1.47 Ω ≤ R ≤ 2.83 Ω

NG ➔ Repair or replace the harness between the SRSCM and the BPT.

OK ↓

ERJB046B

3. Check the BPT squib.
   [PREPARATION]
   1. Turn the ignition switch to LOCK.
   2. Disconnect the negative (-) terminal cable from the battery, and wait for 30 seconds.
   3. Connect the BPT connector.
   4. Connect the negative (-) terminal cable to the battery, and wait for 30 seconds.

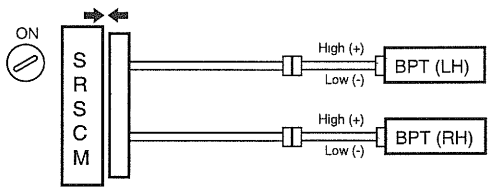

ERJB046C

[CHECK]

1. Turn the ignition switch to ON, and wait for at least 30 seconds.
2. Clear the malfunction code stored in the memory with the Hi-Scan Pro.
3. Turn the ignition switch to LOCK, and wait for 30 seconds.
4. Turn the ignition switch to ON, and wait for 30 seconds.
5. Using Hi-Scan Pro, check the DTC.
   There is no DTC.

[HINT]
Codes other than these may be output at this time, but they are not relevant to this procedure.

NG → Replace the BPT.

OK
↓
From the results of the above inspection, the malfunctioning part can now be considered normal.

ERJB041J

ERNC0470

CIRCUIT INSPECTION

DTC	B1400	Satellite left side defect
	B1403	Satellite right side defect
	B1409	Satellite left communication error
	B1410	Satellite right communication error

CIRCUIT DESCRIPTION

The release system for the airbag consists of the SRSCM and two satellites - one on the left - hand side and one on the right. The above DTCs are recorded when a defect or communication error of the satellite is detected in the satellite circuit.

WIRING DIAGRAM

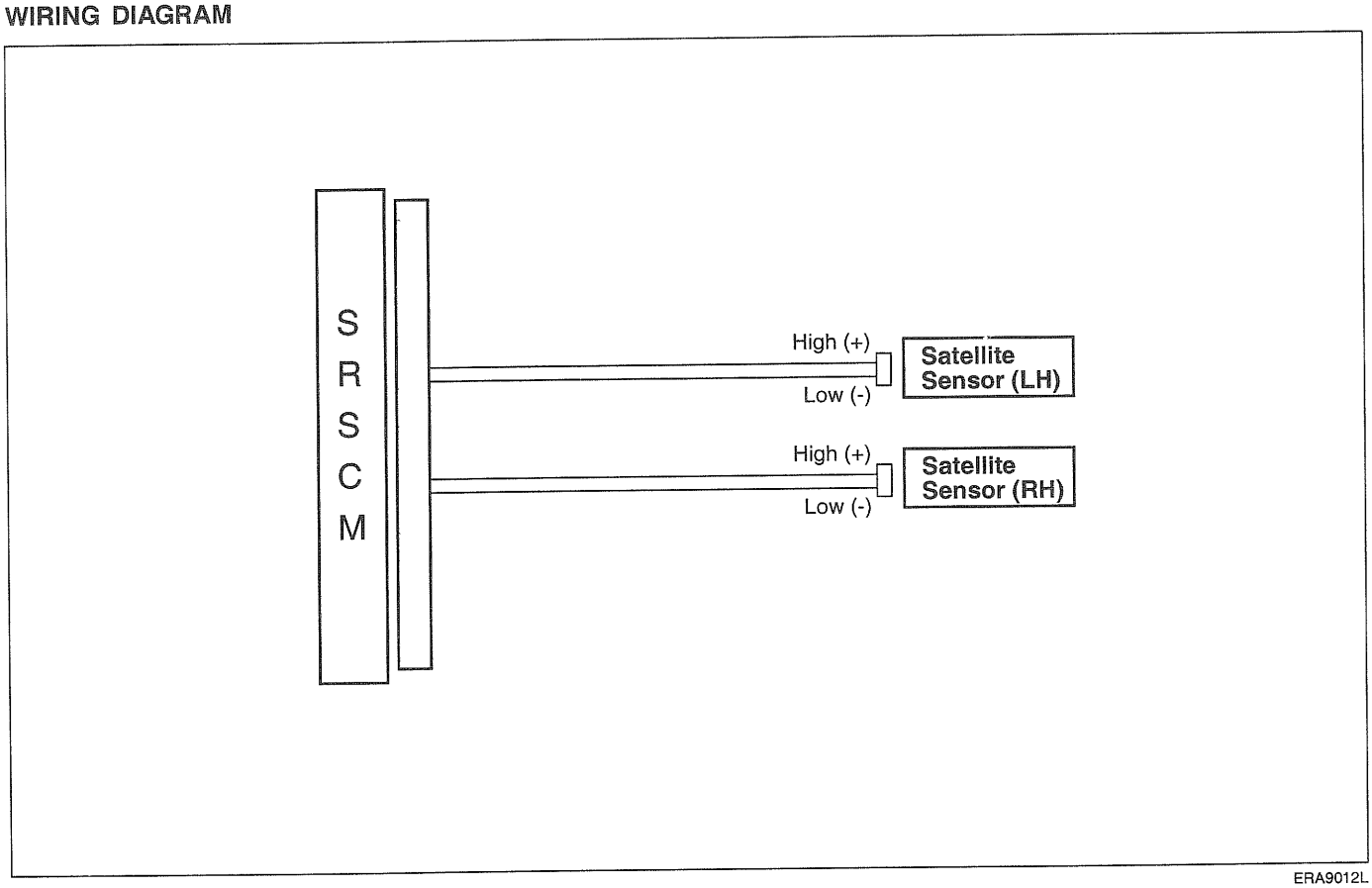

ERA9012L

INSPECTION PROCEDURE

1. Preparation

   1) Disconnect the negative (-) terminal cable from the battery, and wait at least 30 seconds.

   2) Remove the DAB module.

   3) Disconnect the connectors of the PAB, left and right side airbags, belt pretensioners and satellite sensors.

   4) Disconnect the SRSCM connector.

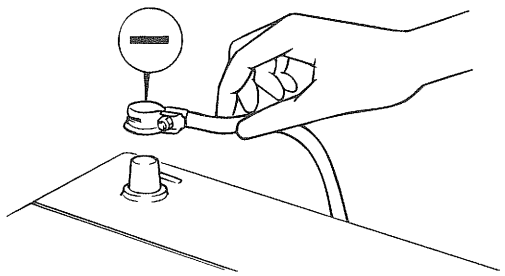

EADA011A

⚠ ***CAUTION***

Place the DAB with the front surface facing upward.

2. Check satellite circuit (communication error).

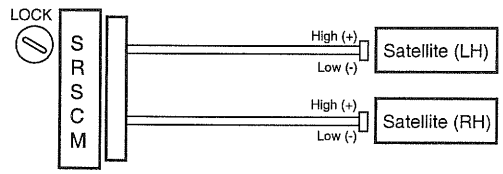

ERA9012M

[PREPARATION]
Check continuity between the SRSCM connector and the satellite connector as high (+) and high, low (-) and low (-).
OK : Continuity

NG ➔ Repair or replace the harness between the SRSCM and the Satellite sensor.

OK ↓

ERJB047A

3. Check the satellite sensor (defect).
[PREPARATION]
   1. Turn the ignition switch to LOCK.
   2. Disconnect the negative (-) terminal cable from the battery, and wait for 30 seconds.
   3. Connect the satellite connector.
   4. Connect the negative (-) terminal cable to the battery, and wait for 30 seconds.

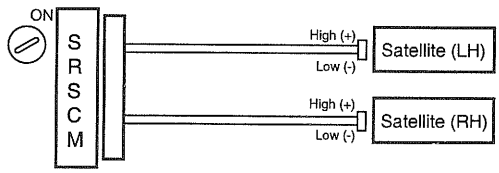

ERA9012N

[CHECK]
   1. Turn the ignition switch to ON, and wait for at least 30 seconds.
   2. Clear the malfunction code stored in the memory of the Hi-Scan Pro.
   3. Turn the ignition switch to LOCK, and wait for 30 seconds.
   4. Turn the ignition switch to ON, and wait for 30 seconds.
   5. Using the Hi-Scan Pro, check DTC.
      There is no DTC.

[HINT]
Codes other than these may be output at this time, but they are not relevant to this check.

NG ➔ Replace the Satellite sensor.

OK ↓

From the results of the above inspection, the malfunctioning part can now be considered normal.

ERJB041K

ERNC0490

CIRCUIT INSPECTION

DTC	B2503	Warning indicator circui5t open or short to GND
	B2504	Warning indicator circuit short to Battery

CIRCUIT DESCRIPTION

The SRS warning lamp is located in the cluster. When the airbag system is normal, the SRI flashes for approx. 6 seconds after the ignition switch is turned ON, and then turns off automatically. If there is a malfunction in the airbag system, the SRI lights up to inform the driver of the abnormality. The SRSCM shall measure the voltage at the airbag SRI (Malfunction Indicator Lamp) output pin, both when the lamp is on and when the lamp is off, to detect whether the commanded state matches the actual state.

INSPECTION PROCEDURE

1. Check the fuse.
   [PREPARATION]
   1. Remove airbag fuse and airbag warning lamp fusefrom the junction block.
   2. Inspect the state of the fuses.
   3. Replace if necessary.

2. Check the SRS warning lamp circuit.
   [PREPARATION]
   1. Connect the negative (-) terminal cable to the battery.
   2. Turn the ignition switch to ON.

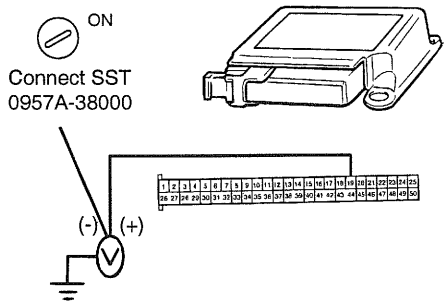

ERKB049A

[CHECK]
1. Measure voltage at the harness side connector of the SRSCM.
   Voltage : 10-16.5 V

NG → Check the SRS warning light bulb/repair the SRS warning light circuit.

OK ↓

ERDA032A

2. Check the SRS SRI (Service Reminder Indicator).
   OK : SRS SRI ON

NG → If no fault is found in wiring or connector, replace the SRSCM.

OK ↓

From the results of the above inspection, the part can now be considered to be normal.

ERDA032B

ERNC0500

CIRCUIT INSPECTION

DTC	B1414	Satellite left side sensor wrong ID
	B1415	Satellite right side sensor wrong ID
	B1620	Airbag unit internal failure
	B1651	Crash recorded driver side airbag
	B1652	Crash recorded passenger side airbag
	B1658	Belt pretensioner 6 times deployment
	B1660	Crash recorded driver airbag
	B1662	Driver belt pretensioner deployment commanded
	B1663	Crash recorded passenger airbag
	B1664	Belt pretensioner deployment commanded

CIRCUIT DESCRIPTION

SRSCM MALFUNCTION

The SRSCM shall also cyclically monitor the following :

1. Functional readiness of the firing circuit activation transistors.
2. Adequacy of deployment energy reserves.
3. Safing sensor integrity : detection of faulty closure.
4. Plausibility of accelerometer signal.
5. Operation of SRSCM components.

The timely completion of all tests is monitored by a separate hardware watchdog. During normal operation, the watch dog is triggered periodically by the SRSCM : If the SRSCM fails to trigger the watchdog, the watchdog will reset the SRSCM and activate the SRI (Service Reminder Indicator). The SRSCM must be replaced once the fault codes mentioned above are confirmed.

AIRBAG MODULE DISPOSAL

FIELD DEPLOYMENT PROCEDURES ERJB0600

⚠ *CAUTION*

When handling the deployed airbag be careful that not the dust enters your eyes and always wear gloves to avoid direct contact with the dust.

AIRBAG REMOTE DEPLOYMENT DEVICES

Tool, Number, Name	Use
Deployment tool (0957A-34100A) SRS DEPLOYMENT ADAPTER HARNESS DAB, BPT : 0957A-38500 PAB, SAB : 0957A-38100 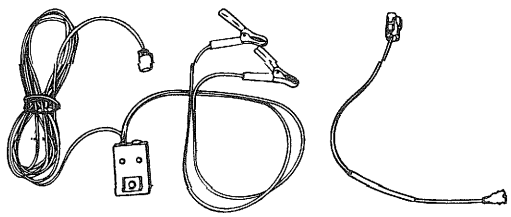 ERDA034A	Deployment inside the vehicle (if the vehicle will no longer be driven)

AIRBAG MODULE DISPOSAL PROCEDURES

Before disposing of a vehicle equipped with an airbag, or prior to disposing of the airbag module, be sure to first follow the procedures described below to deploy the airbag.

DISPOSAL PLAN

Take the following disposal steps.

CASE		DISPOSAL PLAN
Abnormal problems in airbag module		Deploy and discard
Car scrapping	DAB, PAB, BPT	Deploy the airbag module with the SST
Crash (Deployed)		Discard

UNDEPLOYED AIRBAG MODULE DISPOSAL ERKB0610

⚠ *CAUTION*

1. ***If the vehicle is to be scrapped, junked, or otherwise disposed of, deploy the airbag inside the vehicle.***
2. ***Since there is a loud noise when the airbag is deployed, avoid residential areas whenever possible. If anyone is nearby, give warning of the impending noise.***
3. ***Since a large amount of smoke is produced when the airbag is deployed, select a well-ventilated site. Moreover, never attempt the test near a fire or smoke sensor.***

DEPLOYMENT INSIDE THE VEHICLE

when vehicle will no longer be driven

1. Open all windows and doors of the vehicle. Move the vehicle to an isolated spot.
2. Disconnect the negative (-) and positive (+) battery cables from the battery terminals, and then remove the battery from the vehicle

⚠ *CAUTION*

Wait at least 30 seconds after disconnecting the battery cable before doing any further work.

3. Remove the center crash pad side cover.
4. Remove Airbag SRSCM connector.
5. Connect deployment tool to the connector of each module.

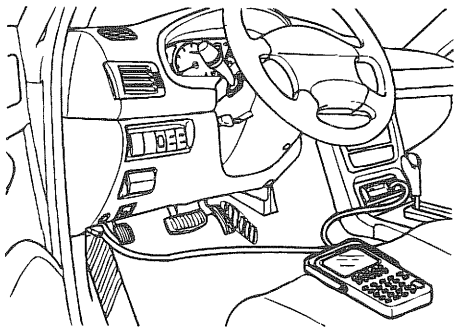

ERLB005D

6. At location as far away from the vehicle as possible, press the push button (removed from the vehicle) to deploy the airbag.

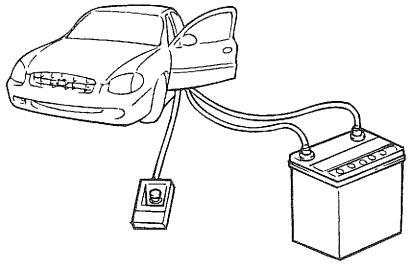

ERA9009B

⚠ *CAUTION*

1. ***Before deploying the airbag in this manner, first check to be sure that there is no one in or near the vehicle. Wear safety glasses.***
2. ***The inflator will be quite hot immediately following the deployment, so wait at least 30 minutes to allow it to cool before attempting to handle it. Although not poisonous, do not inhale gas from airbag deployment. See Deployed Airbag Module Disposal Procedures for post-deployment handling instructions.***
3. ***If the airbag fails to deploy when the procedures above are followed, do not go near the module. Contact your local distributor.***

DEPLOYED AIRBAG MODULE DISPOSAL PROCEDURES ERJB0620

After deployment, the airbag module should be disposed of in the same manner as any other scrap part, except that the following points should be carefully noted during disposal.

1. The inflator will be quite hot immediately following deployment, so wait at least 30 minutes to allow it to cool before attempting to handle it.
2. Do not put water or oil on the airbag after deployment.
3. There may be adhered to the deployed airbag module, material that could irritate the eyes and/or skin, so wear gloves and safety glasses when handling a deployed airbag module. If despite these precautions, the material does get into your eyes or on your skin, immediately rinse the affected area with a large amount of clean water. If any irritation develops, seek medical attention.
4. Tightly seal the airbag module in a strong vinyl bag for disposal.

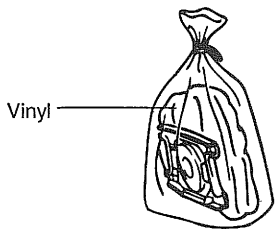

ERA9009C

5. Be sure to always wash your hands after completing this operation.

Brake System

GENERAL ..... BR -2

BRAKE SYSTEM ..... BR -9

PARKING BRAKE SYSTEM ..... BR -27

ABS (ANTI-LOCK BRAKE SYSTEM) ..... BR -29

GENERAL

SPECIFICATIONS EJNC0010

Master cylinder	
Type	Tandem type
I.D. mm(in.)	23.81 (0.937)
Fluid level warning sensor	Provided
Brake booster	
Type	Vacuum
Effective dia.mm(in.)	Tandem type with 7+8 in.
Boosting ratio	7.0 : 1
Proportioning valve	
Cut-in pressure (Split point)	2.6 MPa (26.52 kg/cm², 377 psi)
Decompression ratio	0.27 : 1
Front brake	
Type	Floating type with ventilated disc
Disc O.D.	257 mm (10.12 in.)
Disc thickness	24 mm (0.94 in.)
Pad thickness	11 mm (0.43 in.)
Cylinder I.D.	54 mm (2.13 in.)
Rear brake (Drum)	
Type	Leading trailing drum
Drum I.D.	203.2 mm (8 in.)
Drum thickness	9.4 mm (0.37 in.)
Brake lining thickness	4.5 mm (0.177 in.)
Clearance adjustment	Automatic
Parking brake	
Actuation	Mechanical brake acting on rear wheels
Type	Lever
Cable arrangement	V type

O.D = Outer Diameter
I.D = Inner Diameter

SPECIFICATION (ABS) EJDA0010

Part	Item	Standard value	Remarks
ABSCM	Operating voltage	10V - 16V	ABS, EBD Integrated control unit
	Operating temp	-40° - 110°C	
Warning Lamp ABS BRAKE (EBD)	Operating voltage Consumption current	12V 80mA	BRAKE : Parking, Brake oil, EBD fail
Wheel Speed Sensor	Internal resistance	1275 ± 1495Ω	Ambient temperature
	Output range	15 - 2000Hz	
	Air gap	0.2 mm -1.2 mm	Min. sensor Volt :150mV
HECU (Hydraulic and Electronic Control Unit)	Weight	2.5 kg	NO : Normal Open
	Motor	12V, 30A	NC : Normal Close
	Motor power	180W	LPA : Low Pressure Accumulator
	Pump capacity	5.5cc/sec	HPA : High Pressure Accumulator
	Accumulator amount	LPA:2.1cc, HPA : 6cc	
	Valve NO NC	Operating voltage : 12V	

SERVICE STANDARD EJNC0020

	Standard value	Service limit
Brake pedal height	178.8 mm (7.04 in.)	
Brake pedal stroke	135 mm (5.31 in.)	
Stop lamp switch outer case to pedal stopper clearance	0.5-1.0 mm (0.02-0.04 in.)	
Brake pedal free play	3-8 mm (0.11-0.31in.)	
Booster push rod to master cylinder piston clearance	0 (at 500 mmHg vacuum)	
Parking brake lever stroke when lever assembly is pulled with 196N (20kg, 44lb force)	7-8 clicks	
Front disc brake pad thickness	11 mm (0.43 in.)	2 mm (0.08 in.)
Front disc thickness (minimum)	24 mm (0.95 in.)	22.4 mm (0.88 in.)
Drum brake lining thickness	4.5 mm (0.177 in.)	1.5 mm (0.06 in.)
Brake drum I.D. (maximum)	203.2 mm (8 in.)	205.2 mm (8.08 in.)

TIGHTENING TORQUE EJNC0030

	Nm	Kg·cm	lb·ft
Master cylinder to booster mounting nut	8-12	80-120	6-9
Brake booster mounting nut	13-16	130-160	10-12
Brake booster vacuum hose fitting to surge tank	15-18	150-180	11-13
Proportioning valve mounting	3.5-5.5	35-55	3-4
Bleeder screw	7-13	70-130	5-12
Brake tube flare nut, brake hose	13-17	130-170	10-12
Caliper guide rod bolt	22-32	220-320	16-24
Caliper assembly to knuckle	65-75	650-750	48-55
Brake hose to front caliper	25-30	250-300	18-22

⚠ ***CAUTION***

Replace self-locking nuts with new ones after removal.

TIGHTENING TORQUE (ABS) EJDA0020

	Nm	kg·cm	lb·ft
Wheel speed sensor mounting bolt on the brake plate			
Front	8-9.5	80-95	5.6-6.7
Rear	15.5-16.5	155-165	11-12
Hydraulic & electronic control unit mounting bolt	8-10	80-100	5.6-6.9
Hydraulic & electronic control unit mounting bracket bolt	9-10	90-100	6.2-6.9
Six brake tubes on the Hydraulic Unit	16	160	12

SPECIAL TOOLS EJNC0040

Tool (Number and Name)	Illustration	Use
09581 - 11000 Piston expander	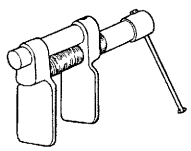 EJDA043A	Spreading the front brake piston

TROUBLESHOOTING EJDA0440

Symptom	Probable cause	Remedy
Noise or vibration when brakes are applied	Backing plate or caliper improperly mounted	Correct
	Loose backing plate or caliper mounting bolts	Retighten
	Unevenly worn or cracked brake drum or brake disc	Replace
	Foreign material in brake drum	Clean
	Seized pad or lining contact surface	Replace
	Excessive caliper to pad assembly clearance	Correct
	Uneven pad contact	Correct
	Lack of lubrication in sliding parts	Lubricate
	Loose suspension parts	Retighten
Vehicle pulls to one side when brakes are applied	Difference in left and right tire inflation pressure	Adjust
	Improper front wheel alignment	Adjust
	Inadequate contact of pad or lining	Correct
	Grease or oil on pad or lining surface	Replace
	Drum warpage or uneven wear	Replace
	Incorrect wheel cylinder installation	Correct
	Auto adjuster malfunction	Correct
Insufficient braking power	Low or deteriorated brake fluid	Refill or change
	Air in the brake system	Bleed the system
	Brake booster malfunction	Correct
	Inadequate contact of pad or lining	Correct
	Grease or oil on pad or lining surface	Replace
	Auto adjuster malfunction	Correct
	Overheated brake rotor due to dragging of pad or lining	Correct
	Restricted brake line	Replace
	Proportioning valve malfunction	Replace
Increased pedal stroke required (Reduced pedal to floorboard clearance)	Air in the system	Bleed the system
	Brake fluid leaks	Correct
	Auto adjuster malfunction	Correct
	Excessive push rod to master cylinder clearance	Adjust

Symptom	Probable cause	Remedy
Brake drag	Incomplete release of parking brake	Adjust
	Incorrect parking brake adjustment	Adjust
	Worn brake pedal return spring	Replace
	Restricted master cylinder return port	Correct
	Broken rear drum brake shoe return spring	Replace
	Lack of lubrication in sliding parts	Lubricate
	Defective master cylinder check valve or piston return spring	Replace
	Insufficient push rod to master cylinder clearance	Replace
Insufficient parking brake function	Worn brake lining or pad	Replace
	Grease or oil on lining or pad surface	Replace
	Parking brake cable sticking	Replace
	Auto adjuster malfunction	Adjust
	Excessive parking brake lever stroke	Adjust the parking brake lever stroke or check the parking brake cable routing

SERVICE BRAKE PEDAL INSPECTION AND ADJUSTMENT EJKB0050

1. Turn the stop lamp switch until the clearance between the stop lamp switch outer case and pedal arm reaches the standard value, and secure the stop lamp switch with the lock nut.

Clearance between pedal and stop lamp switch A :
0.5-1.0 mm (0.02-0.039 in.)

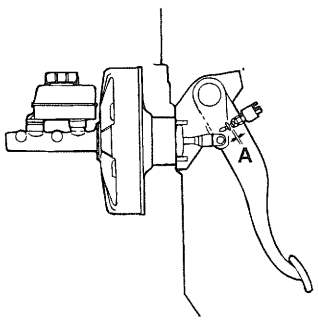

EJDA020A

2. Free play of brake pedal.

Brake pedal free play B :
3-8 mm (0.117-0.312 in.)

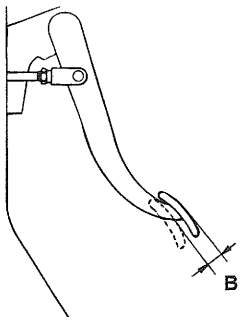

EJDA020B

BRAKE BOOSTER OPERATION TEST WITHOUT A TESTER EJKB0060

For a simple check of brake booster operation, perform the following tests.

1. Run the engine for one minute or two minutes, and then shut it off. Depress the brake pedal several times at normal foot pressure. If the pedal goes down further first but rises gradually after the second or third time, the brake booster is functioning properly. If the pedal height doesn't change, the booster is damaged.

2. With the engine stopped, depress the brake pedal several times and check the pedal height changes. After that, with the pedal depressed, start the engine. If the pedal goes down slightly, the booster is in good condition. If the pedal height doesn't change, the booster is damaged.

3. With the engine running, depress the brake pedal and then stop the engine. Hold the pedal depressed for 30 seconds. If the pedal height does not change, the booster is in good condition. if the pedal goes up, the booster is damaged.
   If one of the above three tests is not okay, check the vacuum hoses and the brake booster and make any necessary corrections. If all tests are OK, the booster is good.

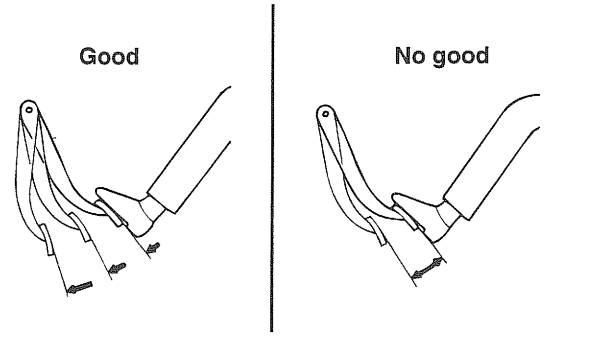

EJDA021A

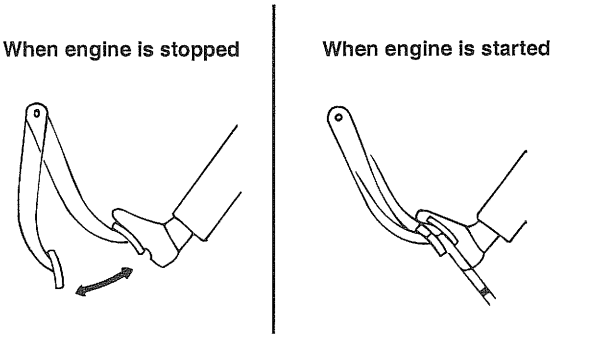

EJDA022A

BLEEDING THE BRAKE SYSTEM EJNC0070

1. Remove the reservoir cap and fill the brake reservoir with brake fluid.

   ⚠ ***CAUTION***

   If there is any brake fluid on any painted surface, wash it off immediately.

   NOTE

   When bleeding pressurized fluid, do not depress the brake pedal.

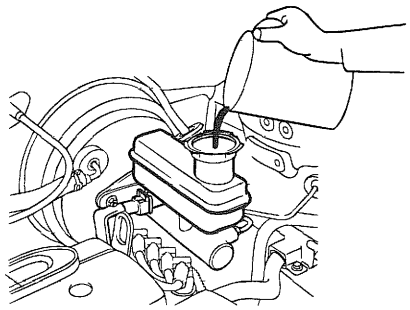

KFCBR01A

2. Connect a vinyl tube to the wheel cylinder bleeder plug, and insert the other end of tube in the container of brake fluid.

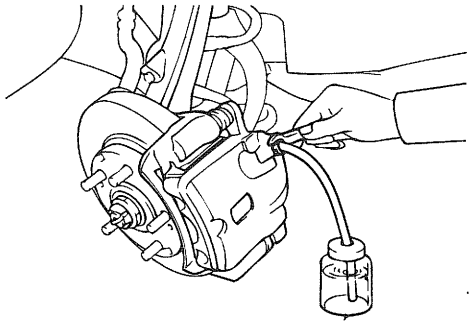

EJKB007A

3. Depress the brake pedal several times.
4. While depressing the brake pedal fully, loosen the bleeder plug until the fluid starts to run out. Then close the bleeder plug.

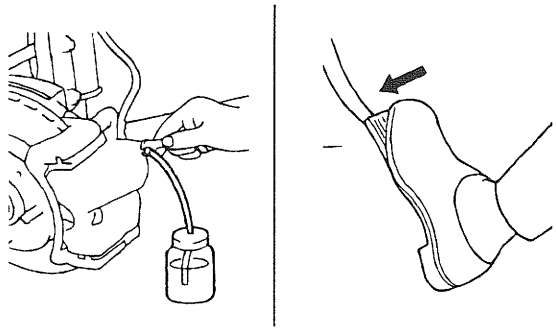

EAHA014B

5. Repeat steps 3 and 4 until there are no more bubbles in the fluid.
6. Tighten the bleeder plug screw.

Bleeder screw tightening torque :
7-13 Nm (70-130 kgf·cm, 5-10 lb·ft)

7. Repeat the above procedure for each wheel in the sequence shown in the illustration.

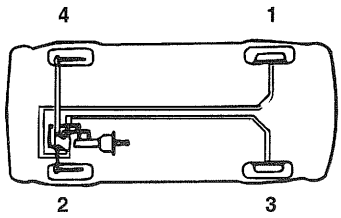

EJDA047B

ADJUSTMENT OF PARKING BRAKE STROKE EJNC0080

1. Pull the brake lever with a force of approx. 196 N (20 kg, 44 lbs.) and check the number of clicks.

Parking brake lever stroke (Standard value) : 7-8 clicks

2. If the number of notches is not the standard value, adjust the cable length with the adjusting nut on the equalizer.

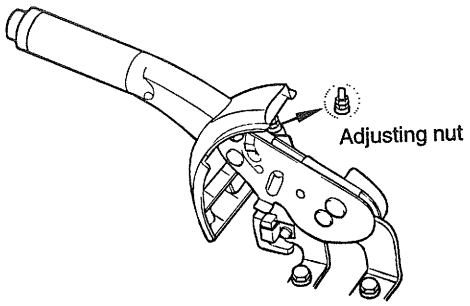

KFCBR02A

3. The indicator light will go out when the brake lever is fully released, and will light up with the lever pulled one notch. If it does not operate properly, replace it.

4. After the adjustment, check that the rear brakes do not drag with the parking brake lever released.

BRAKE SYSTEM

BRAKE BOOSTER

COMPONENTS EJNC0100

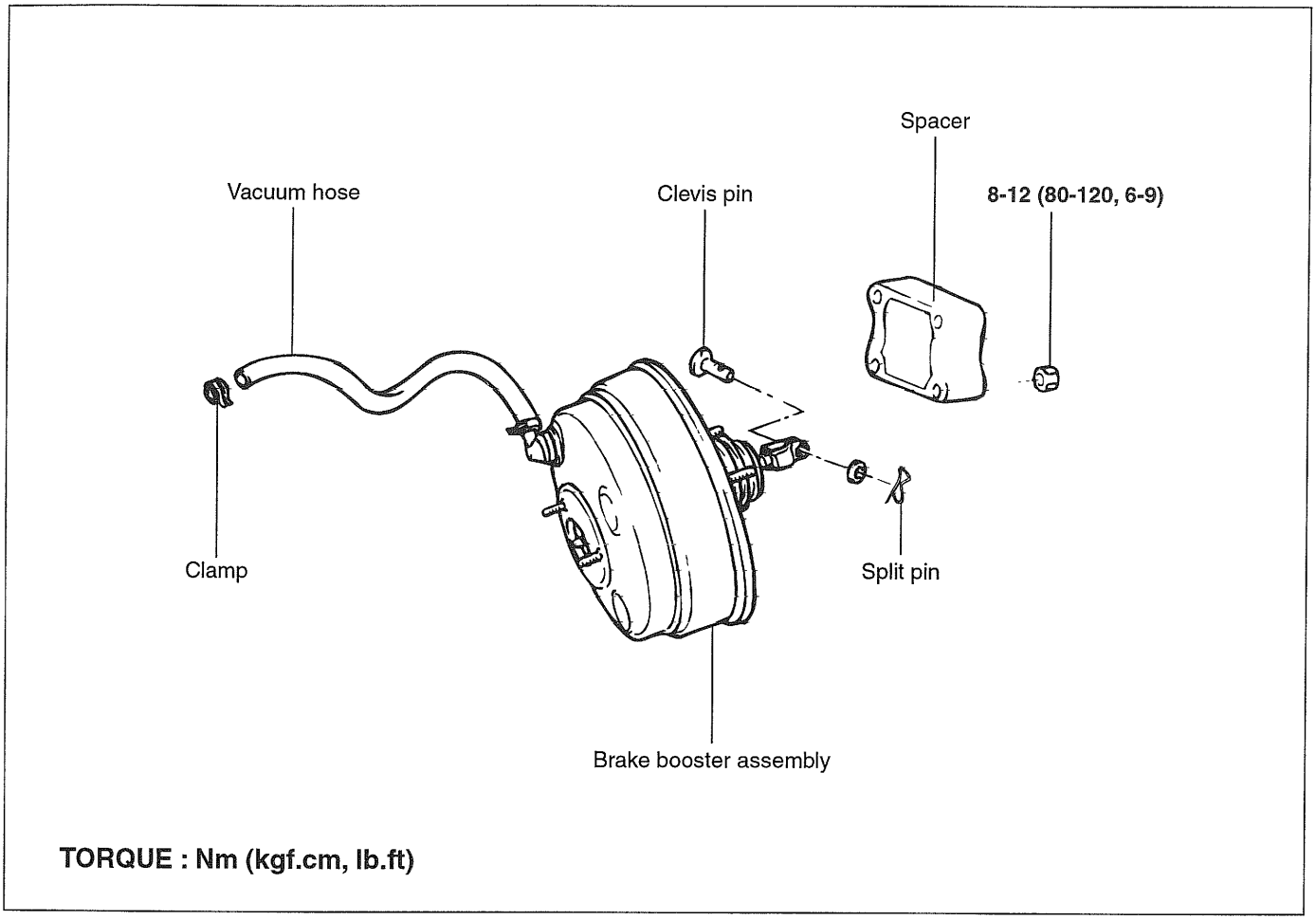

EJNC010A

REMOVAL EJNC0110

1. Disconnect the brake tube from the master cylinder.
2. Remove the master cylinder.

> ⚠ ***CAUTION***
>
> ***If there is any brake fluid on any painted surface, wash it off immediately.***

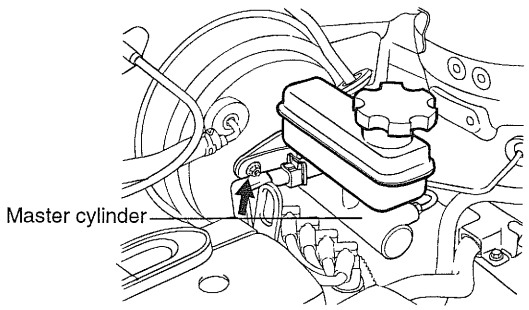

EFCBR03A

3. Disconnect the vacuum hose from the booster.
4. Remove the operating rod from the brake pedal.
5. Loosen the booster mounting nuts.

6. Lift out the booster assembly.

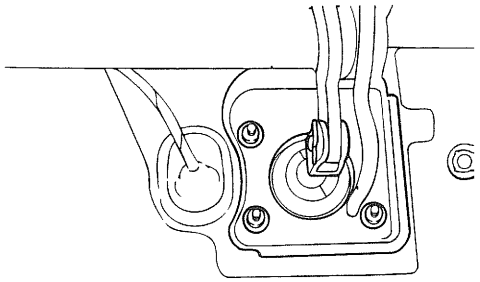

EJDA025A

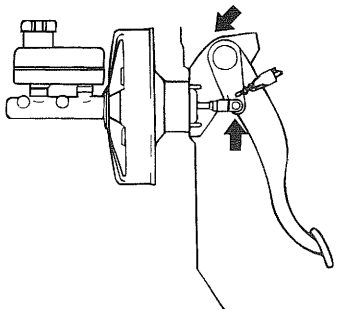

KFCBR04A

INSTALLATION EJNC0120

1. When the booster assembly is installed, replace the packing at each end of the booster mounting holder, if necessary.
2. Install the brake booster and tighten the mounting nuts.

Tightening torque :

13-16 Nm (130-160 kgf.cm, 10-12 lb.ft)

3. Apply sufficient grease inside the brake pedal hole.
4. Connect the clevis to the brake pedal with the clevis pin and install the split pin to the clevis pin.

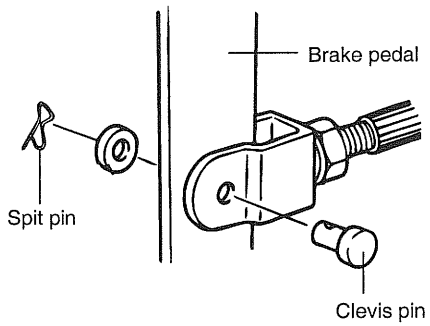

KSRBR05B

5. Install the master cylinder and connect the brake tube to the master cylinder.
6. Connect the vacuum hose to the brake booster.
7. Fill the brake reservoir with brake fluid and bleed the system.
8. Check for fluid leakage.
9. Check and adjust the brake pedal.
10. After installation, apply sufficient grease to contact points of the clevis and brake pedal.

BRAKE LINE

COMPONENTS EJKB0210

[CBS]

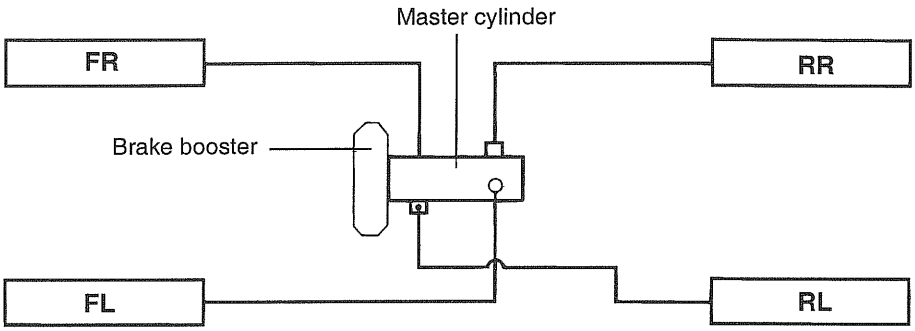

[ABS]

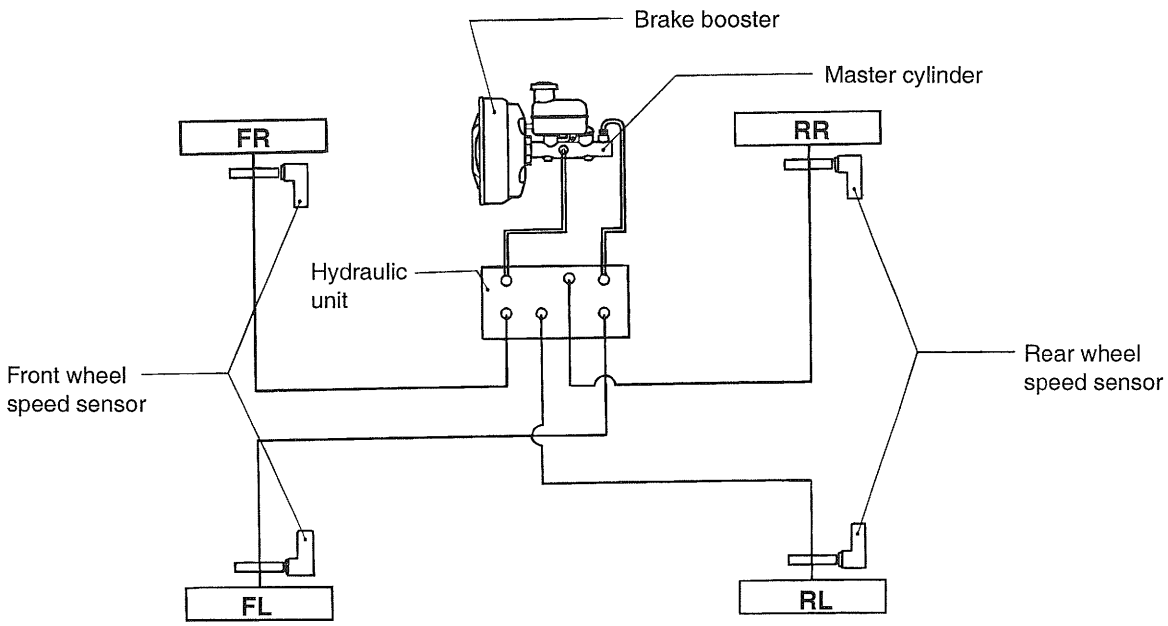

AXDBR04B

INSPECTION EJDA0630

1. Check the brake tubes for cracks, crimps and corrosion.
2. Check the brake hoses for cracks, damage and leakage.
3. Check the brake tube flare nuts for damage and leakage.

INSTALLATION EJNC0150

1. Install the brake hoses so as they do not twist.
2. The brake tubes should be installed away from edges, weld beads or moving parts.
3. Tighten the connections to the specified torque.

Flare nuts : 13-17 Nm (130-170 kgf·cm, 10-12 lb·ft)

Brake hose to front caliper :

25-30 Nm (250-300 kgf·cm, 18-22 lb·ft)

BRAKE PEDAL

COMPONENTS EJNC0160

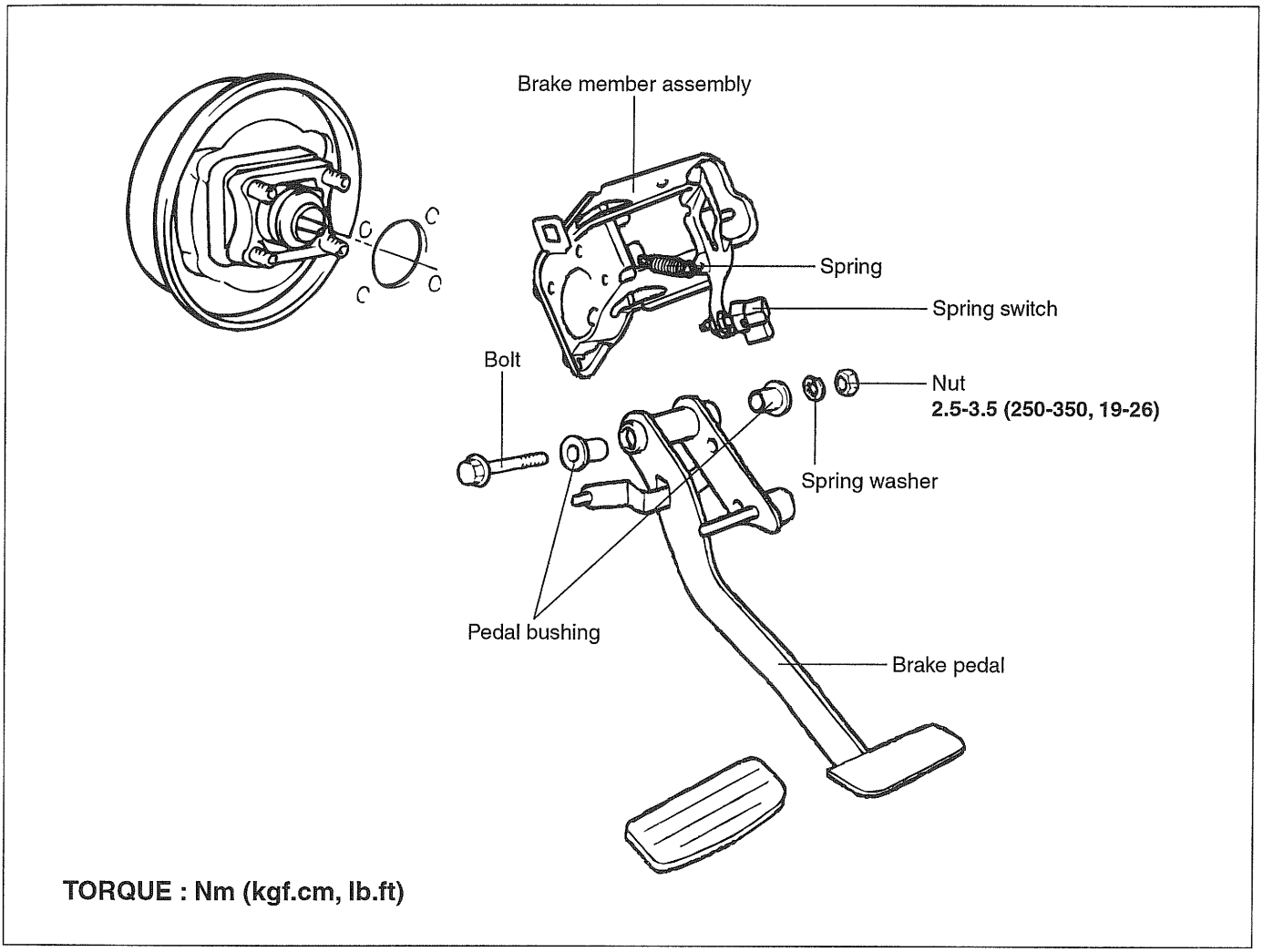

EJNC016A

REMOVAL EJNC0170

1. Remove the stop lamp switch.
2. Remove the shift lock cable (ABS).

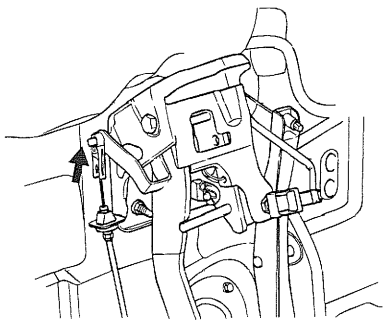

KFCBR20A

3. Remove the split pin and clevis pin.
4. Remove the flange nuts of the brake mounting bracket.
5. Remove the brake pedal assembly.

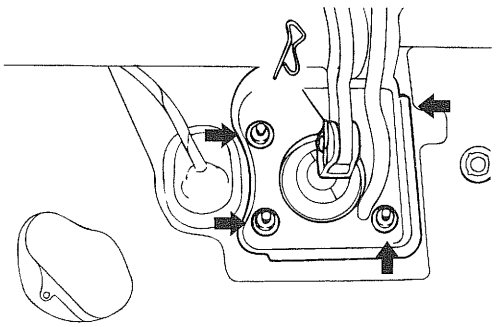

EJKB010A

INSPECTION EJDA0510

1. Check the bushing for wear.
2. Check the brake pedal for distortion.
3. Check the brake pedal return spring for damage.
4. Check the stop lamp switch
   1) With an ohmmeter connected to the stop lamp switch terminals, check for continuity.
   2) If there is no continuity when the plunger is depressed and there is continuity when the plunger is released, the stop lamp switch is normal.

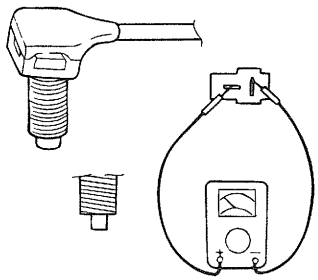

Brake switch check

EJDA026A

INSTALLATION EJNC0190

1. Installation is the reverse of removal.

   NOTE

   Be sure to install the split pin on the operating rod clevis pin.

2. Install the brake pedal assembly and tighten the flange nuts (booster mounting nuts) and bolt.

Tightening torque :

9-14 Nm (90-140 kgf.cm, 7-10 lb.ft

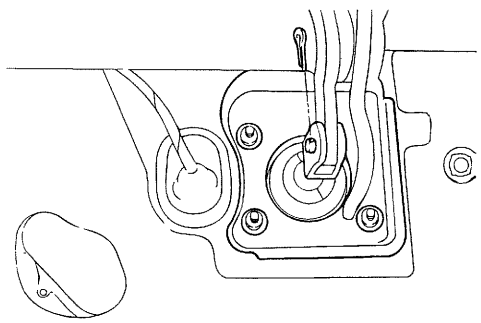

EJDA025B

3. Adjust the brake pedal height and free play.
4. Install the stop lamp switch.

FRONT DISC BRAKE

COMPONENTS EJNC0200

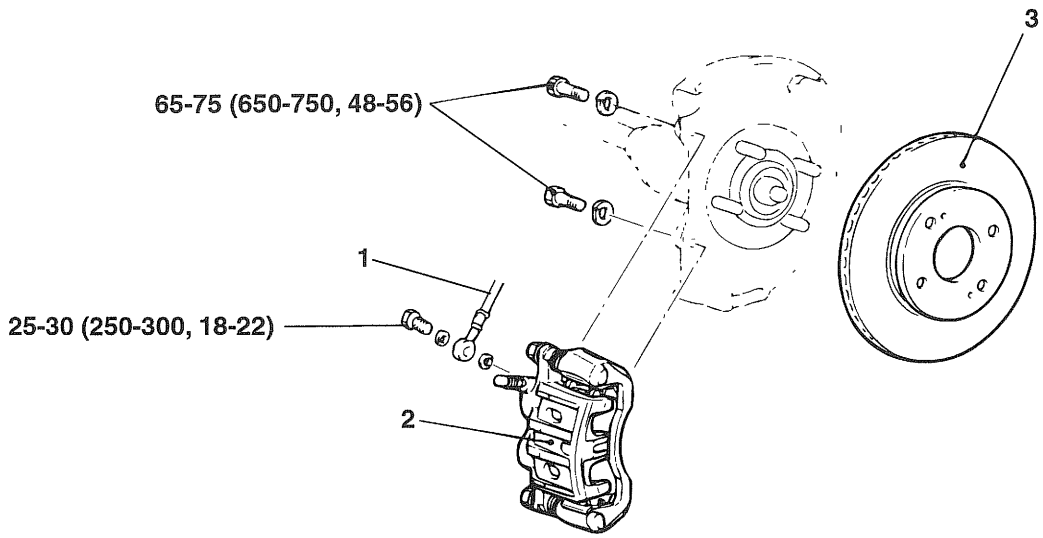

Removal order
1. Connecting tube
   (Brake hose and brake tube)
2. Front brake assembly
3. Brake disc

TORQUE : Nm (kgf.cm, lb.ft)

EJNC020A

BRAKE PAD EJKB0240

REMOVAL

1. Remove the lower bolt and lift the caliper assembly up and secure it with a wire or some other retaining method.
2. Remove the pads.

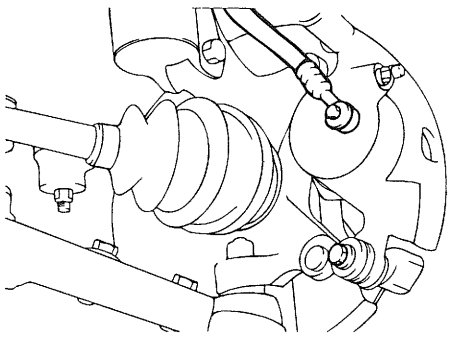

EJDA032A

⚠ ***CAUTION***

Do not depress the brake pedal while disassembling the pads.

INSPECTION EJKB0250

1. Check the pads for wear or oil contamination and replace, if necessary.

> ⚠ ***CAUTION***
>
> - ***The pads for the right and left wheels should be replaced at the same time. Never "drop" or intermix brake pad sets.***
> - ***All four pads must be replaced as a complete set.***
> - ***When replacing the brake pad, check for deformation. When replacing the guide spring, use a new one or the used one after cleaning away foreign material.***

2. Check the pad for damage or deformation.

Brake pad thickness :

Standard value : 11mm (0.433 in.)

Service limited value : 2mm (0.0788 in.)

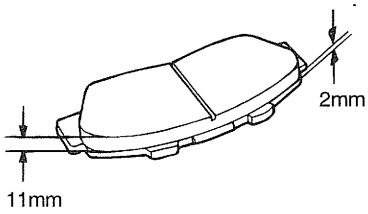

KXDBR04A

INSTALLATION EJNC0230

1. Install the pad clips.
2. Install the pads onto each pad clip.

> 📖 ***NOTE***
>
> *Position the pad with its pad wear indicator upward on the piston side.*

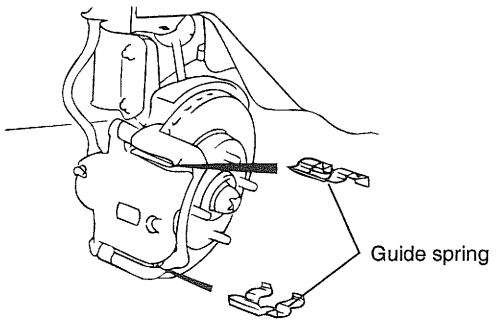

EJDA033A

3. Insert the piston in the cylinder using the Special Tool (09581-11000).

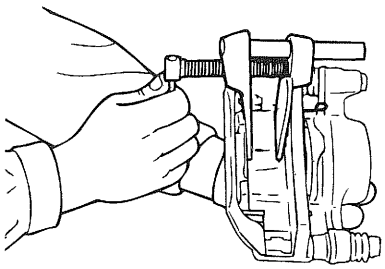

EJDA033B

4. Install the new pads. The shims are attached to the each pad as illustrated.

> ⚠ ***CAUTION***
>
> ***Be careful so that the disc or pad isn't contaminated by grease.***

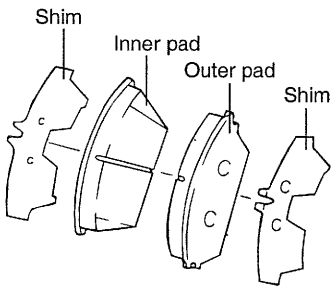

EJDA033C

5. Install the bolt and tighten to the specified value.

Tightening torque

Guide rod bolt : 22-32 Nm (220-320 kgf·cm, 16-24 lb·ft)

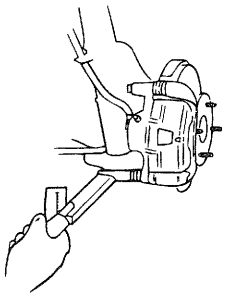

EJDA033D

CALIPER ASSEMBLY EJKB0270

REMOVAL

1. Remove the wheel and tire.
2. Disconnect the brake hose.
3. Remove the cylinder mounting bolt.
4. Remove cylinder and pads.
5. Remove the caliper mounting bolts (2EA) from the knuckle.
6. Remove the caliper.

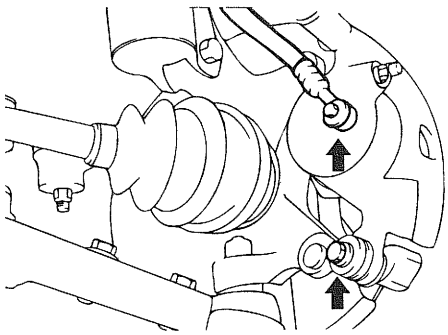

EJKB027A

DISASSEMBLY EJKB0280

1. Remove the piston boot.
2. Remove the piston using compressed air.

> **NOTE**
> 1. *Do not put your fingers in front of the piston when using compressed air.*
> 2. *Be careful not to splatter the brake fluid.*

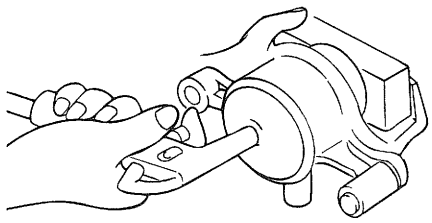

EJDA034A

3. Remove the piston seal from the caliper by using a screwdriver.

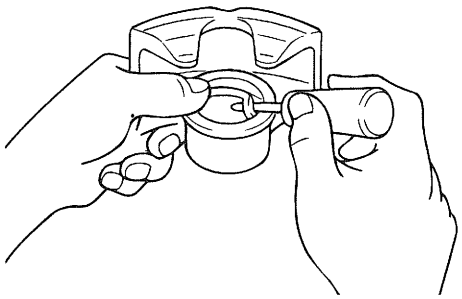

EJDA034B

INSPECTION EJKB0290

1. Check the caliper for wear, damage, cracks and dust.
2. Check the piston for dust, damage, cracks and wear on the outer surface.
3. Check the sleeve and pin for damage and dust.
4. Check the pad spring and boots for damage.
5. Check the carrier for damage, dust, wear and cracks.

> **CAUTION**
> 1. ***Do not use sand paper on the piston surface.***
> 2. ***All rubber parts must be replaced with new parts.***

6. Inspect the disc by using a calipers and a dial gauge.

Thickness of disc mm (in.)
Standard value : 24 (0.95)
Service limit : 22.4 (0.88)
Runout of the disc mm (in.) : 0.08 (0.003)
Difference of thickness : 0.01mm (0.0004 in.)

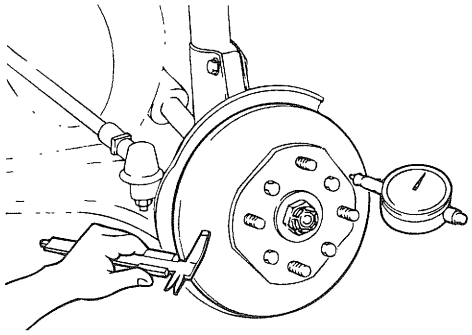

EJKB029A

NOTE

1. *Using a micrometer, measure the disc thickness at eight positions approximately 10mm from the outer edge of the disc and at 45° intervals.*
   If you substract the minimum of measurements from the maximum, you get the difference of the disc thickness.
2. *When measuring the disc runout, fix a dial gauge approximately 5mm from the outer edge of the disc, and rotate the disc 360°.*
   At this time, if you subtract the minimum of measurements from the maximum, you get the disc runout.

7. If necessary, replace the brake disc.

REASSEMBLY EJNC0250

1. Clean all components except the pads and shims with isopropyl alcohol.
2. Apply rubber grease on the piston seal and install the piston seal in the cylinder.

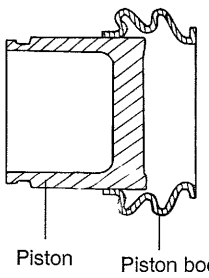

EJDA035A

3. Assemble the piston and piston boots according to the following procedure.
   1) Apply rubber grease to the caliper bore, the outside surface of the piston and the piston boot.
   2) Install the piston boot on the piston as illustrated.
   3) Insert the piston boot in the inner groove of the caliper and push the piston into the caliper.

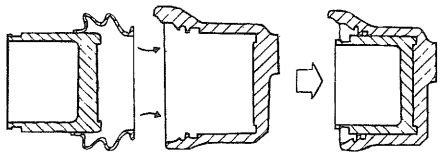

EJDA035B

4. Assemble the sliding parts according to the following procedure.
   1) Apply rubber grease to the outside surface of the sleeve and pin, pin and sleeve bore of the caliper, pin boot and sleeve boot.
   2) Insert the boot into the groove of the caliper.

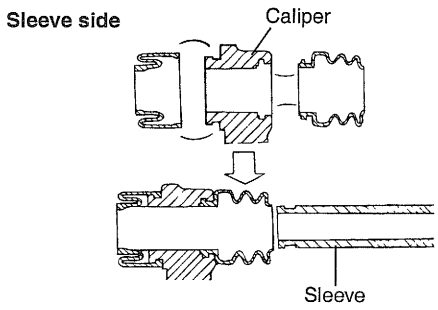

EJDA035C

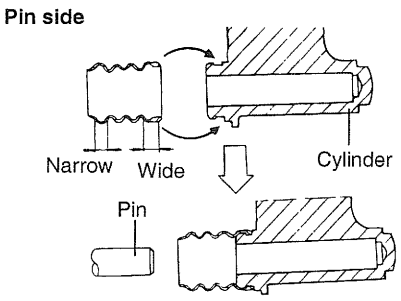

EJDA035D

5. Install the pads.

NOTE

Be careful so that the disc or pad is contaminated by grease

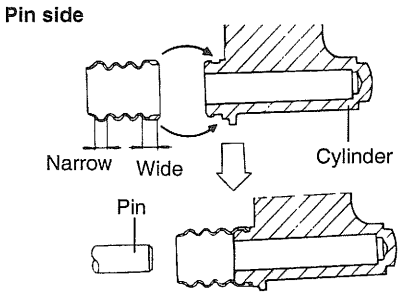

EJDA035D

6. Tighten the brake hose connecting bolt.

Tightening torque	Nm (kgf.cm, lb.ft)
Sliding pin	34-44 (350-450, 26-33)
Sliding bolt	22-31 (220-320, 16-23)
Carrier mounting bolt	65-75 (650-750, 48-54)
Brake hose mounting bolt	25-30 (250-300, 18-22)

NOTE

1. *Check that the surface of the pin and bolts is not damaged before tightening.*
2. *Bleed the system. Depress the pedal several times and check for fluid leakage from all connecting parts.*

MASTER CYLINDER

COMPONENTS EJNC0260

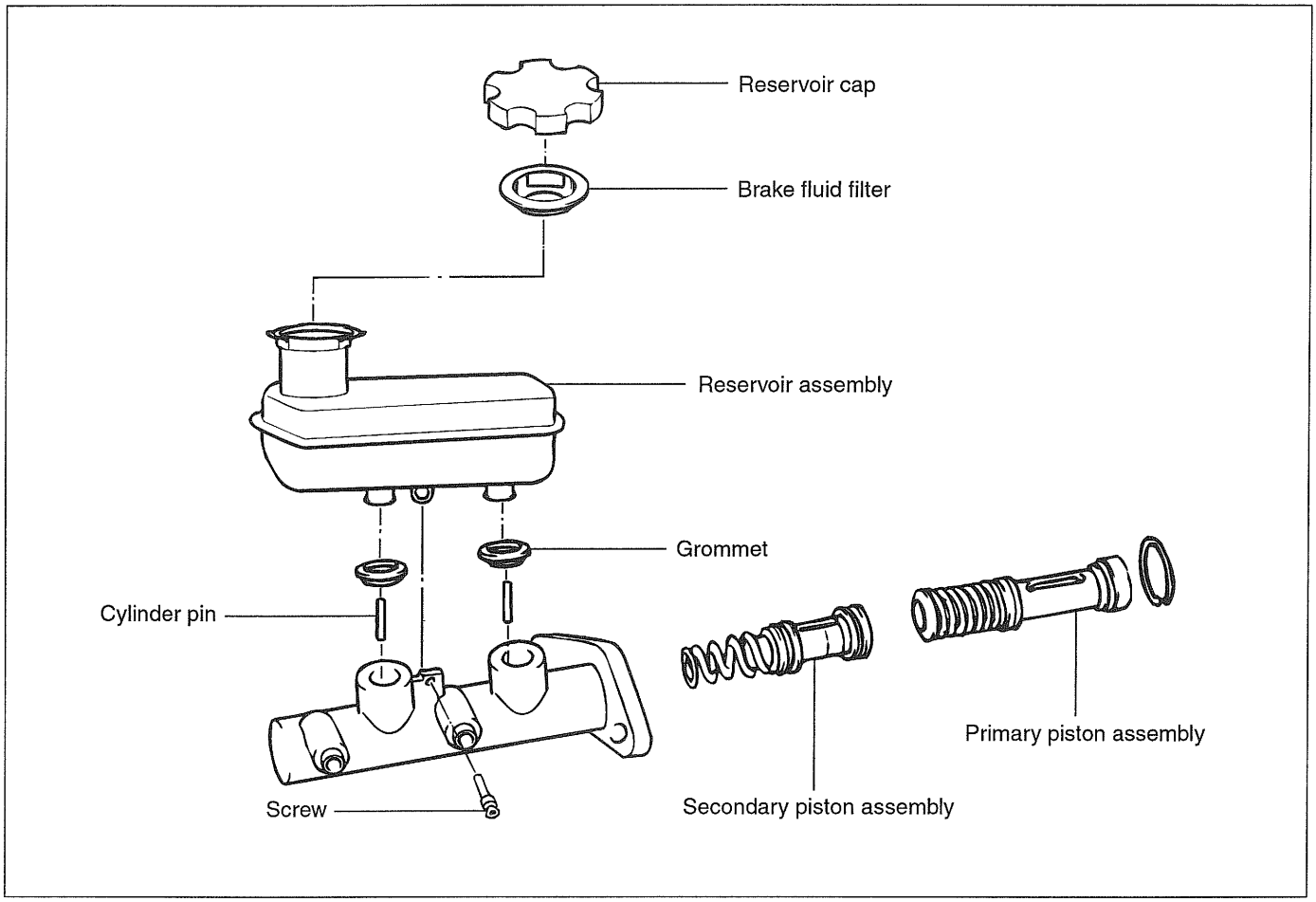

EFCBR08A

REMOVAL EJNC0270

1. Remove the fluid level warning device connector.
2. Detach the brake tubes from the master cylinder, and then install the plug.

   ⚠ ***CAUTION***

   Painted on the surface, wash it off immediately. If there is brake fluid.

3. Remove master cylinder mounting nuts and then lift out the master cylinder.

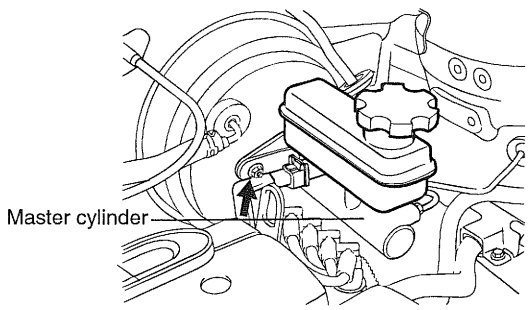

EFCBR03A

DISASSEMBLY EJNC0280

1. Remove the reservoir cap and drain the brake fluid into a suitable container.
2. After disconnecting the mounting screws, pry the reservoir free from the master cylinder.

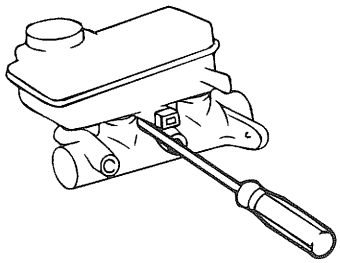

KFCBR09A

3. Using snap ring pliers, remove the retainer ring.

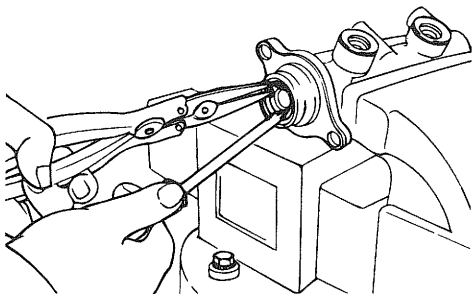

X58-012C

4. Remove the primary cylinder pin, pushing the primary piston with a screwdriver and remove the primary piston assembly.

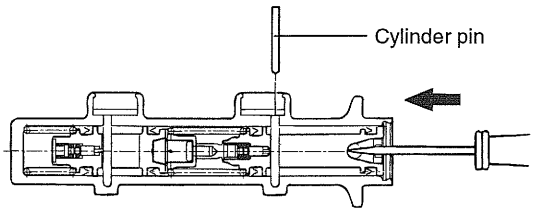

EFCBR40A

5. Remove the secondary cylinder pin. Push the secondary piston with a screwdriver and remove the secondary piston assembly.

NOTE

Do not disassemble the primary and secondary piston assembly.

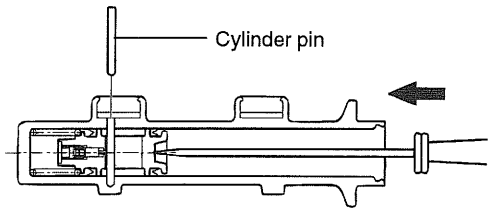

EFCBR41A

INSPECTION EJJB0140

1. Check the master cylinder bore for rust or scoring.
2. Check the master cylinder for wear or damage. If necessary, clean or replace the cylinder.

NOTE

1. *If the cylinder bore is damaged, replace the master cylinder assembly.*
2. *Wash the parts in alchohol.*

REASSEMBLY EJNC0300

1. Apply genuine brake fluid to the rubber parts of the cylinder kit and grommets.

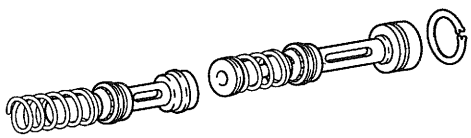

KFW8016A

2. Carefully insert the springs and pistons in the proper direction.
3. Press against the pistons with a screwdriver and install the retainer ring.

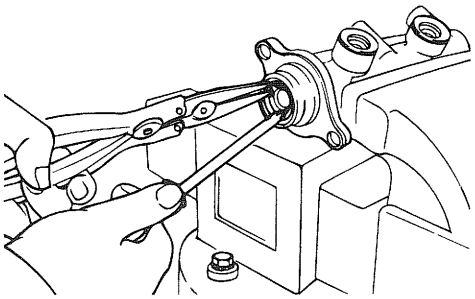

X58-012C

4. With the piston pushed completely by a screwdriver, install the cylinder pin.
5. Mount two grommets.
6. Install the reservoir on the cylinder.

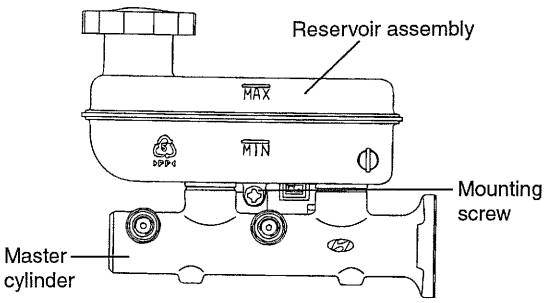

EFCBR10A

INSTALLATION EJJB0160

1. Install the master cylinder to the brake booster.
2. Install the booster and master cylinder to the dash panel.
3. Connect the brake tubes to the master cylinder.
4. Install the vacuum hose tightly.
5. Connect the operating rod to the brake pedal.
6. After filling the brake reservoir with the brake fluid, bleed the system.

CAUTION

Don't disassemble the brake booster.

PROPORTIONING VALVE

PROPORTIONING VALVE EJNC0320

The proportioning valve distributes the proper fluid pressure to the front and rear wheels to obtain greater braking efficiency and prevents premature rear wheel lock-up. You should not disassemble it because the performance of the valve is closely connected with the mounting tension of the spring.

PROPORTIONING VALVE FUNCTION TEST

1. Remove the proportioning valve from the master cylinder.
2. Connect two pressure gauges; one to the input side, and one to the output side.

   NOTE

   Be sure to bleed the system after connecting the pressure gauges.

3. With the brakes applied, measure the input pressure and the output pressure. If the measured pressures are within the specified range as illustrated, the proportioning valve is good.
4. Reconnect the brake lines in their original positions and bleed the system.

   NOTE

   This figure shows characteristics of the proportioning valve as the pressure incrases.

ITEMS	STANDARD VALUE
A (80 kgf/cm²)	A′ (40.6 ± 3 kgf/cm²)
B (140 kgf/cm²)	B′ (56.8 ± 4 kgf/cm²)

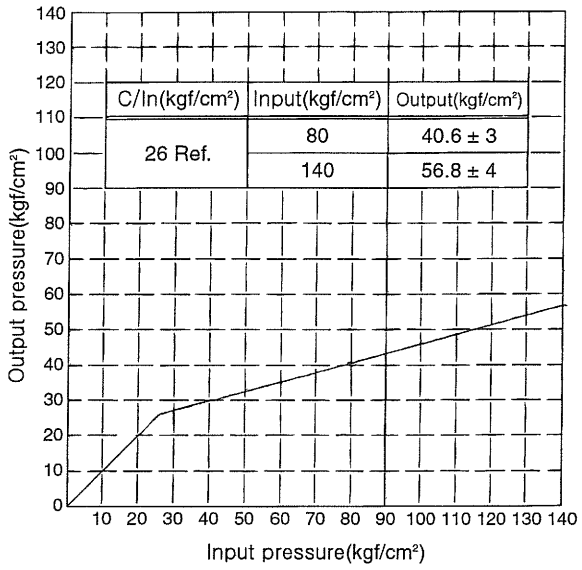

EFCBR80A

INSTALLATION OF PROPORTIONING VALVE EJNC0330

1. Install the master cylinder according to the illustration.

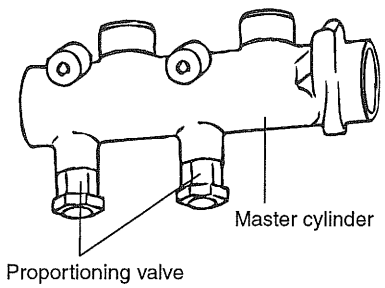

EFCB001A

2. Tighten the flare nuts and bleed the system.

Tightening torque

Brake tube flare nut :

13-17 Nm (130-170 kgf.cm, 9-12 lb.ft)

Proportioning valve mounting nut :

35-55 Nm (350-550 kgf.cm, 30-40 lb.ft)

REAR DRUM BRAKE

COMPONENTS EJNC0340

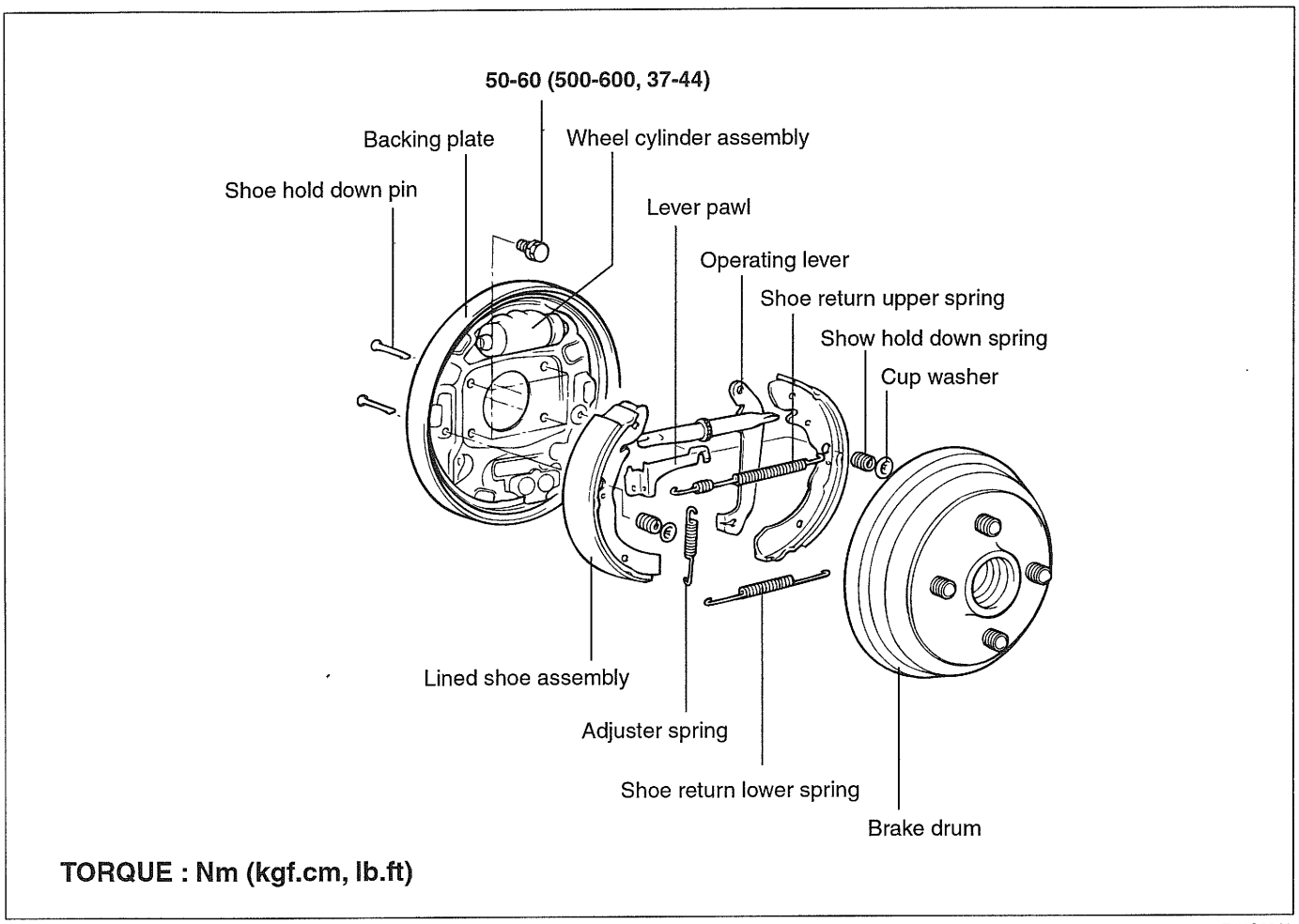

EJNC034A

REMOVAL EJNC0350

1. After removing the wheel, remove the brake drum.

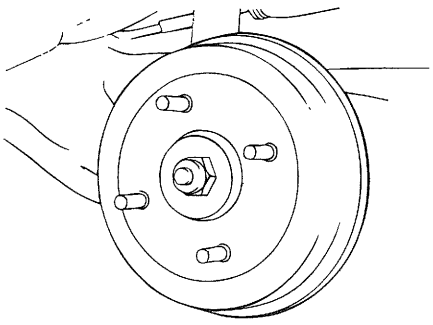

KFCBR90A

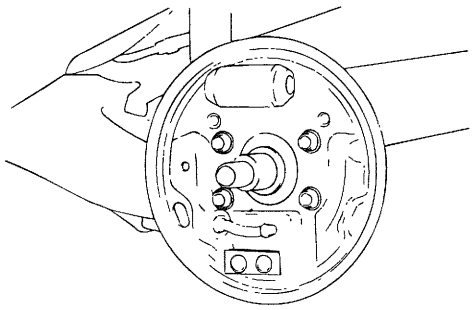

KFCBR91A

2. Remove the shoe return lower spring and shoe hold down spring.
3. Remove the shoes and adjuster as an assembly.

INSPECTION EJKB0320

1. Measure the inside diameter of the brake drum. Check the runout of the brake drum by using a dial indicator.

	Standard value	Service limit
Inside diameter mm (in.)	203.2 (8)	205.2 (8.079)
Out-of-round (brake drum) mm (in.)	-	0.05 (0.002)

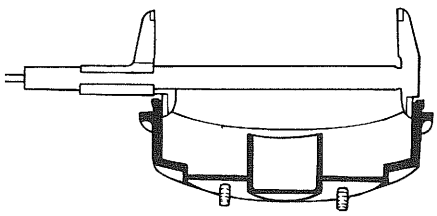

EJDA038A

2. Measure the brake shoe lining thickness.

	Standard value	Service limit
Lining thickness mm (in.)	4.5 (0.177)	1.5 (0.059)

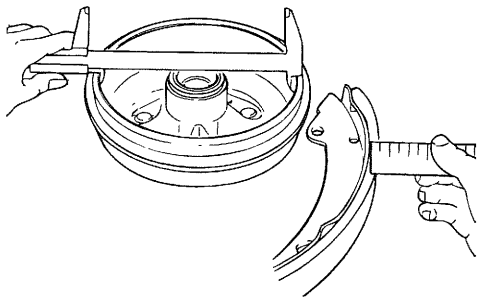

EJDA038B

3. Inspect the brake lining and drum for proper contact.
4. Inspect the wheel cylinder outside for excessive wear and damage.
5. Inspect the backing plate for wear or damage.

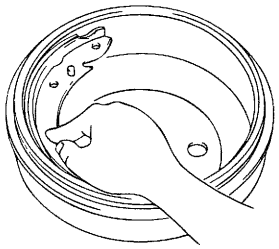

EJDA038C

INSTALLATION EJNC0370

1. Apply the specified grease to the locations indicated in the illustration and to each component.
   - Shoe and backing plate contact surfaces.
   - Shoe and anchor plate contact surfaces.

Recommended grease :

Multipurpose grease SAE J310, NLGI No.2

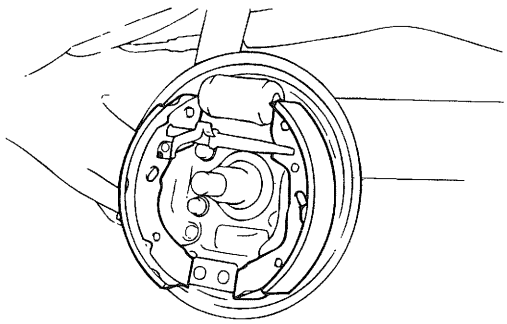

KFCBR92A

2. Install the shoe hold-down pin.

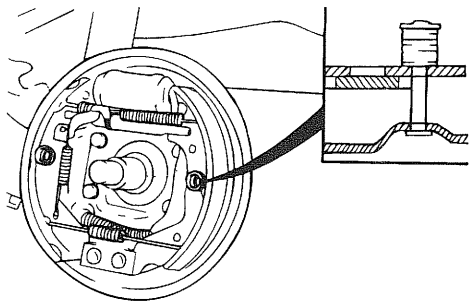

KFCBR93A

3. Assemble the return spring by pressing the push rod.

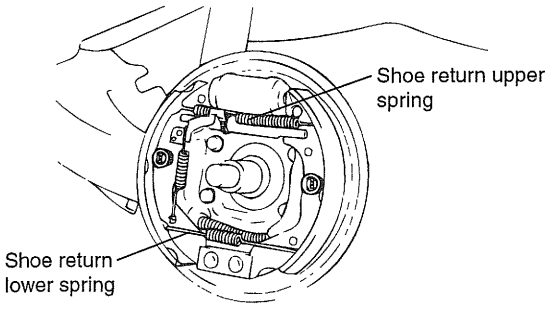

EFCBR94A

4. After assembling the drum and components, pull and release the parking brake lever several times.

REPLACEMENT OF WHEEL CYLINDER

EJKB0340

1. Remove the brake shoe.
2. Disconnect the brake tube.
3. Remove the wheel cylinder assembly.

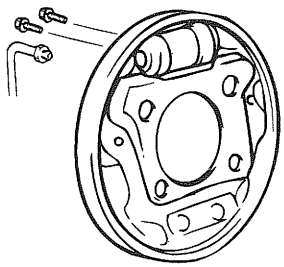

EXDBR44B

4. Remove the dust boot.
5. Remove the piston and piston cup.
6. Remove the return spring.

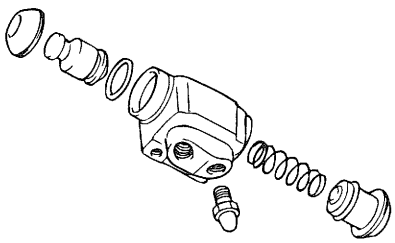

EJDA039B

7. Before assembling the wheel cylinder, inspect the following.
   1) Check the cylinder and piston for wear, damage and dust.
   2) Check the cylinder body for damage and cracks.
   3) Check the contact surface of the piston and shoes for wear.
   4) Check the piston spring for looseness.
8. Assembly is the reverse of removal.

NOTE

1. *Clean the cylinder with isopropyl alcohol before assembly.*
2. *Apply enough brake fluid to the piston cups and cylinder.*
3. *Be sure to use new piston cups and dust boots.*

CAUTION

Be careful not to lose the steel ball in the bleeder.

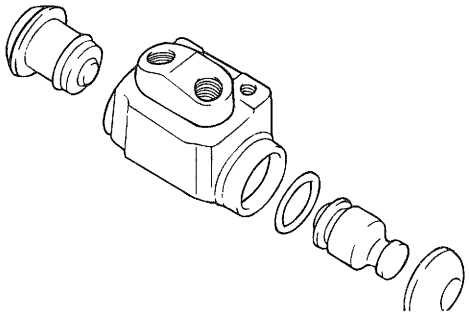

EJDA039C

PARKING BRAKE SYSTEM

PARKING BRAKE

PARKING BRAKE EJNC0390

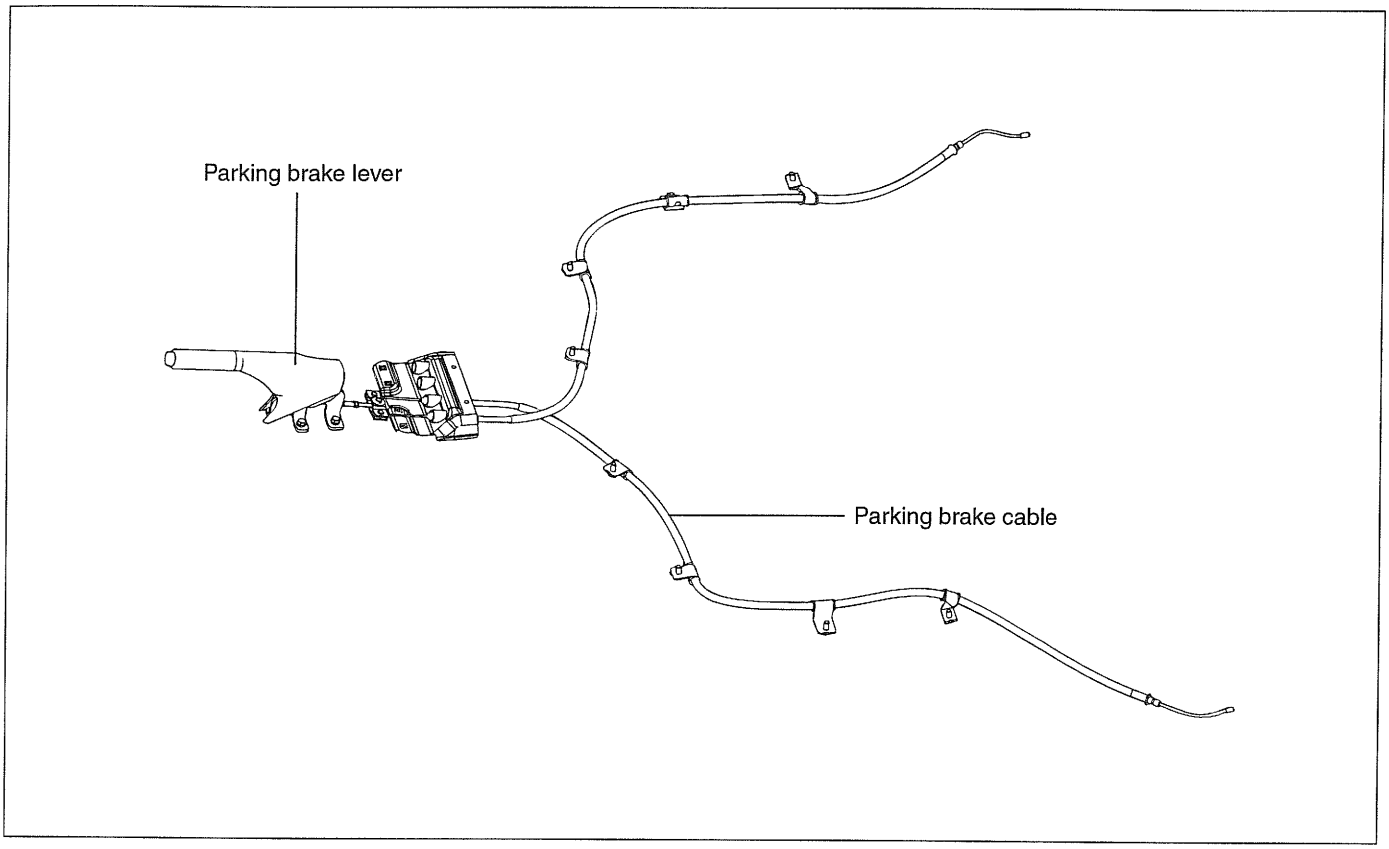

EJNC039A

REMOVAL EJNC0400

1. Remove the rear console.
2. Loosen the adjusting nut and detach the parking brake cable.
3. Detach the parking brake switch assembly.
4. Remove the parking brake lever assembly.

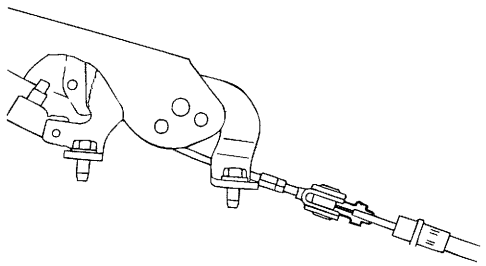

KFCBR13A

5. Remove the rear wheel.
6. Remove the brake drum.
7. Detach the parking brake cable from the brake shoe.

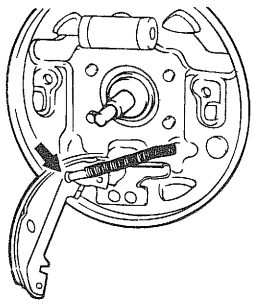

EJDA041B

8. Remove the parking brake cable retaining ring in the rear of the backing plate.

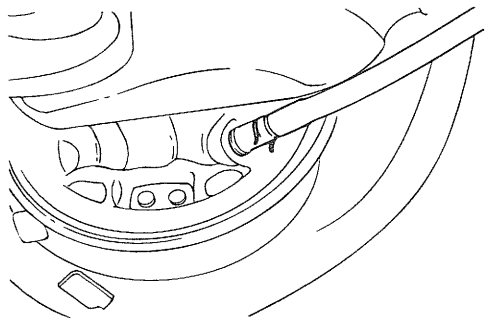

EJDA041C

9. Loosen the parking brake cable clamp and remove the parking brake cable assembly.

INSPECTION EJKB0400

1. Check the parking brake switch operation.
2. Check the parking brake lever ratchet for wear.
3. Check the parking brake cable for wear or damage.

INSTALLATION EJNC0440

1. Check the parking brake cables for left and right and install accordingly.

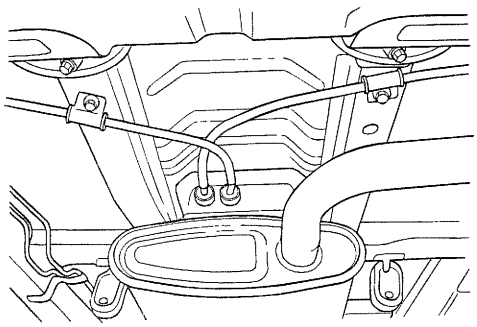

KFCBR30A

2. Move the adjusting lever back when installing the shoe return spring.

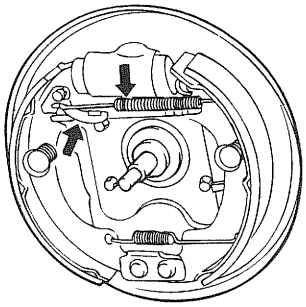

EJDA042A

3. Install the parking brake cable in the direction shown in the illustration.

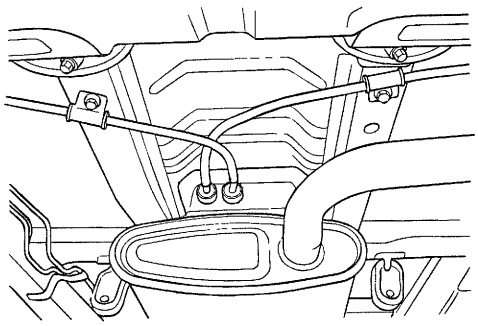

KFCBR30A

4. Apply the specified grease to the moving parts of the ratchet plate and ratchet pawl.

Specified grease :

Multipurpose grease SAE J310, NLGI No.2

5. After installing the cable adjuster, adjust the parking brake lever stroke.

NOTE

When pulling up the point where is at a distance of 40mm from the end of the lever, adjust the adjusting nut to the lever assembly so that the lever is fixed to 7-8 notches.

ABS (ANTI-LOCK BRAKE SYSTEM)

SYSTEM COMPONENT EJNC5000

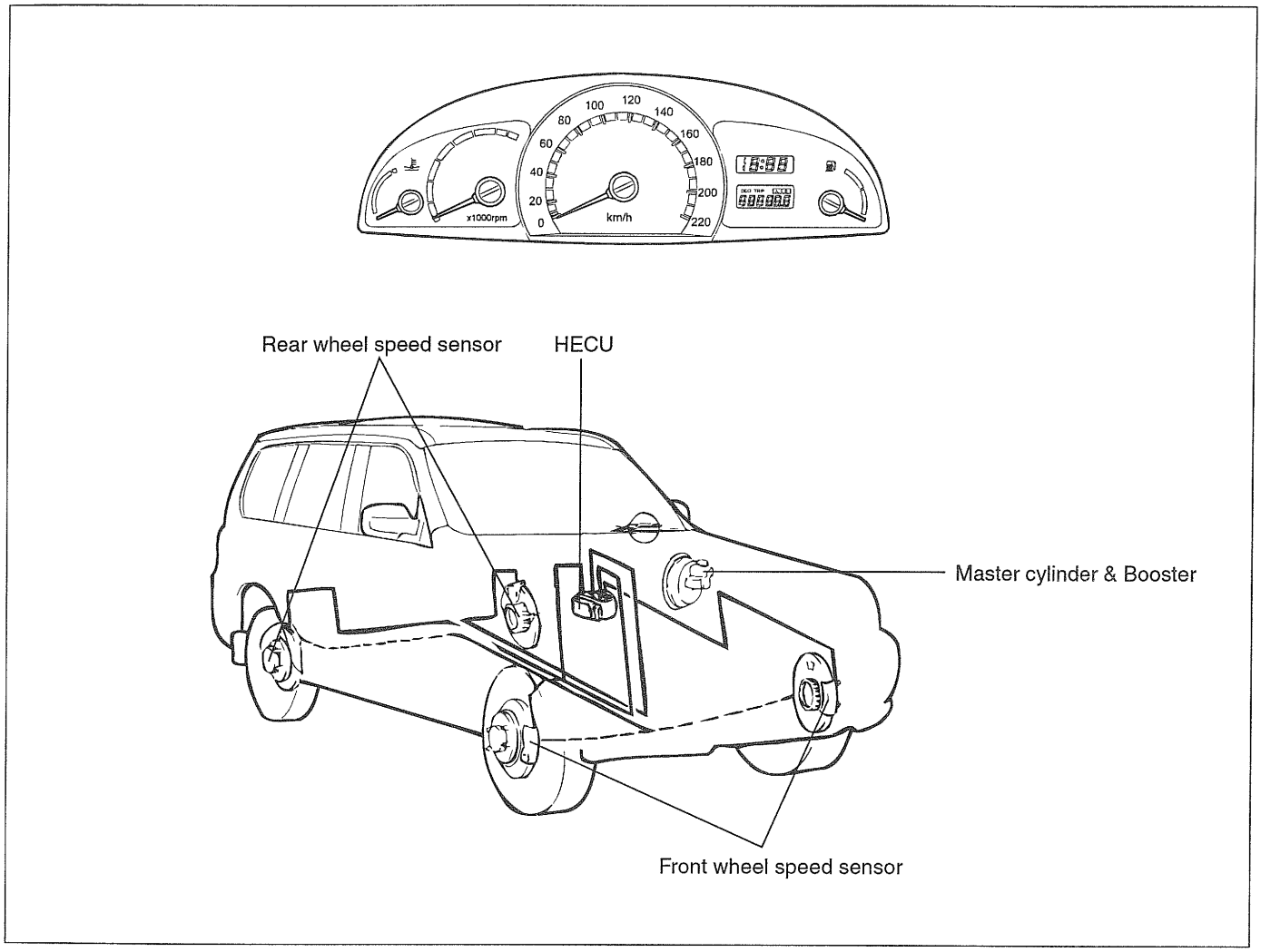

EJNC500A

The Anti-Lock Brake System (ABS) controls the hydraulic brake pressure of all four wheels during braking on hazardous road surfaces, preventing the wheels from locking up. ABS provides the following benefits.

1. Enables steering around obstacles with a greater degree of certainty, even during emergency braking.
2. Enables stopping during emergency braking while keeping stability and steerability even on curves.

If a malfunction occurs, a diagnosis function and fail-safe system are included for serviceability.

The Hydraulic and Electronic Control Unit (HECU) receives signals about the vehicle's speed, direction and road conditions from sensors at the wheels.

Based on these signals, the control unit will determine the optimum amount of wheel spin.

EBD (ELECTRONIC BRAKE-FORCE DISTRIBUTION) EJKB0510

EBD, instead of the proportioning valve, delivers ideal distribution of hydraulic pressure to the front and rear brakes. This prevents rear wheel lock up and provides higher brake efficiency within the range of brake application.

ADVANTAGES

- Functional improvement of the basic-brake system
- Compensation for different friction coefficients
- Elimination of the proportioning valve
- Failure notification by warning lamp

COMPARISON BETWEEN PROPORTIONING VALVE AND EBD

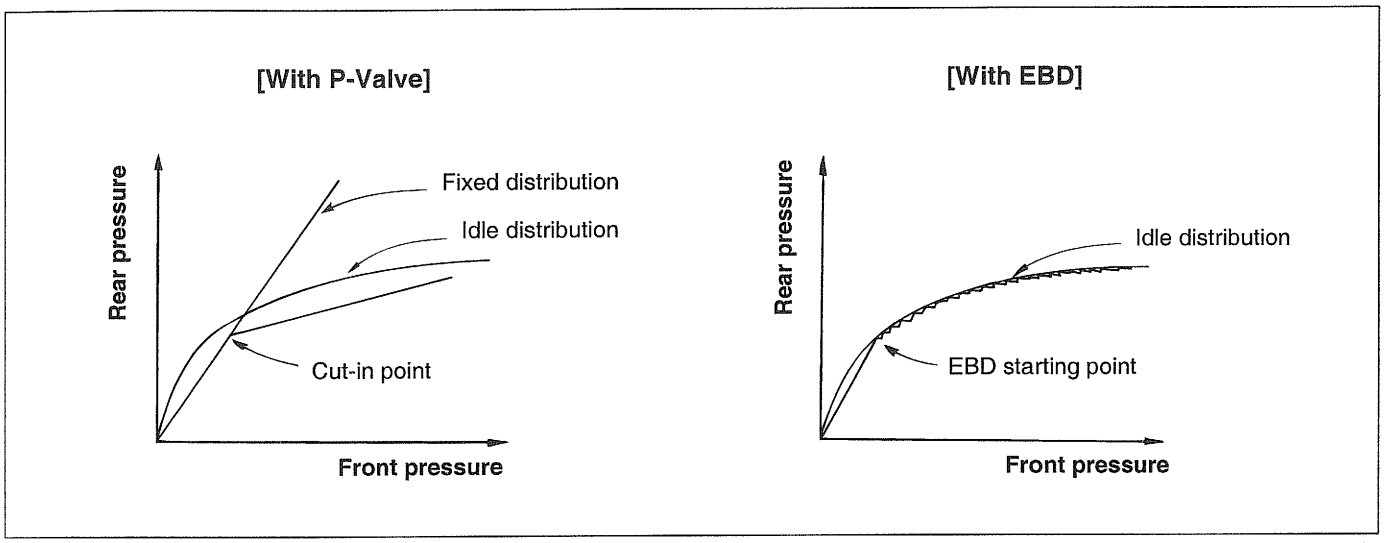

EJA0032A

INSPECTION AT HECU TERMINALS EJKB0520

TERMINAL VOLTAGE CHART

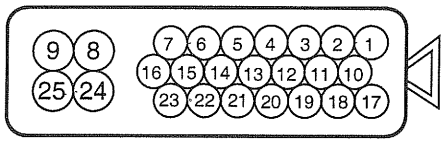

EJKB052A

Terminal No.	Description	Condition	Output
9	• Battery power source 1 • Solenoid valve power source	Always	System voltage
8	Ground	Always - In ABS control	
7	Diagnosis interface terminal (K-Line)	Data to the Hi-Scan (Pro)	
6	Wheel speed sensor (Left rear)		Resistance R=1275-1495 Ω
2	Wheel speed sensor (Left front)		
20	Wheel speed sensor (Right front)		
23	Wheel speed sensor (Right rear)		
5	Wheel speed sensor (Left rear)		
1	Wheel speed sensor (Left front)		
19	Wheel speed sensor (Right front)		
22	Wheel speed sensor (Right rear)		
4	Power input via ignition 2 switch	Ignition 2 condition	High voltage detection : 16 - 20V Suspend voltage detection : 6.5 - 10 V
25	• Battery power source 2 • Motor power source	Always	• System voltage • Max. current < 100A (time < 100 msec) • Rated current < 30A (time > 100 msec)
24	Ground - 2 (Motor)	G17	
16	ABS indicator control	Energized ABS relay	Max. current < 200 mA Max. voltage < 40 V
18	Brake lamp switch input terminal		Input voltage threshold 1.0 - 2.75V 5.0 - 16.0V
17	TCS warning lamp		Max. current < 200mA
13	TCS switch "ON"		Input voltage -1.0 - 16.0V
3	Vehicle speed signal		Max. current < 10mA External resistance : 10kΩ or more

DIAGRAM OF INPUT/OUTPUT FOR HECU EJKB0530

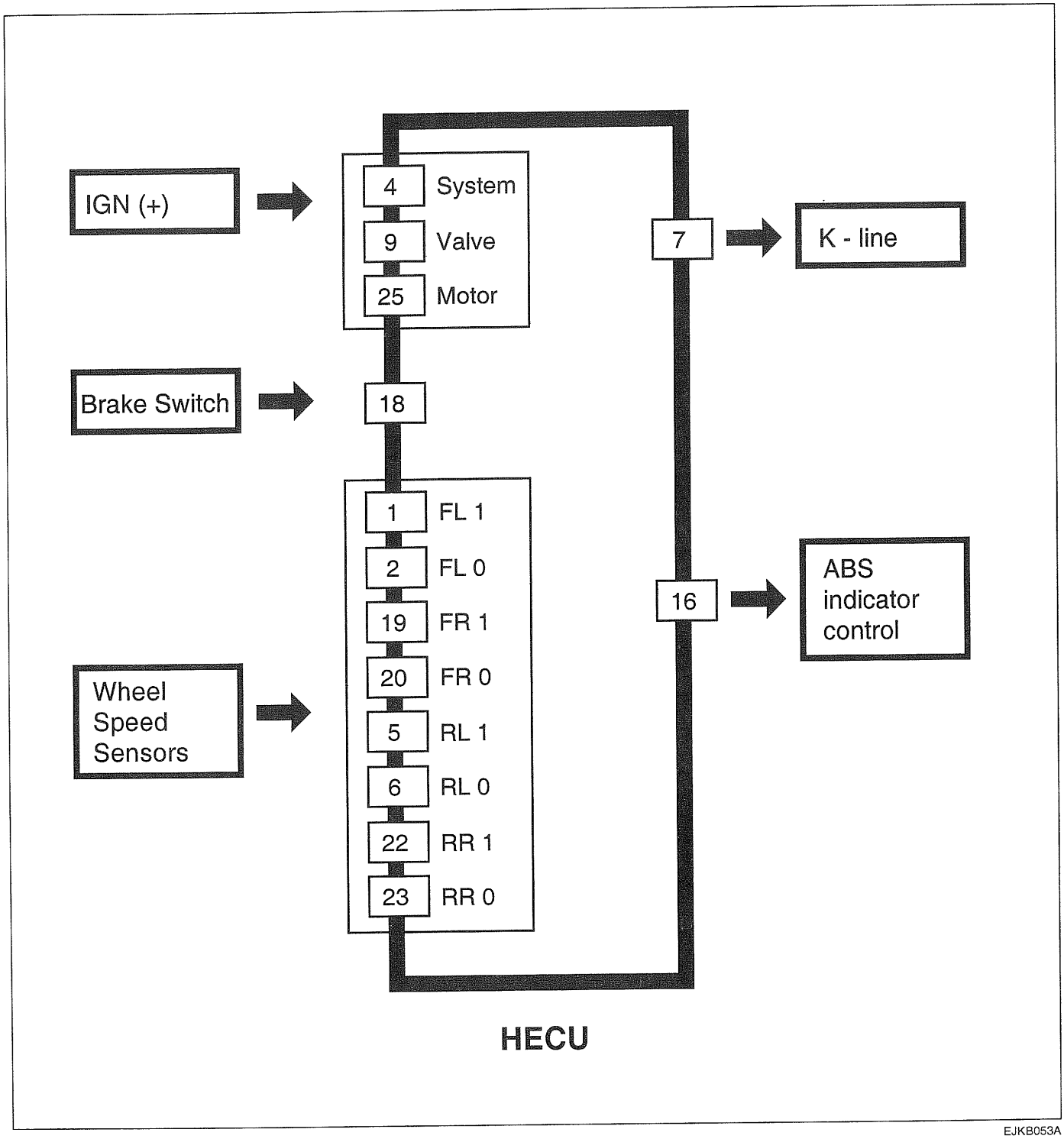

EJKB053A

COMPONENT SPECIFICATION EJNC5040

Item	Content
Wheel sensor	Type : Electromagnetic induction type Resistance : 1100Ω ± 50% Output range : 30 - 2000Hz Inductance : 0.7H ± 50%
ABS/EBD Warning lamp circuit	Type : Active ABS and EBD warning module Max. Current : I < 200mA 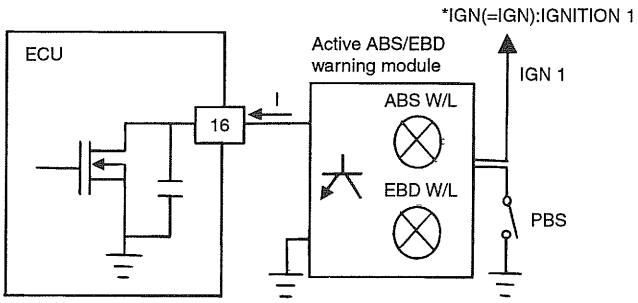 EJNC504A Timing diagram for driving the ABS and EBD warning lamp module 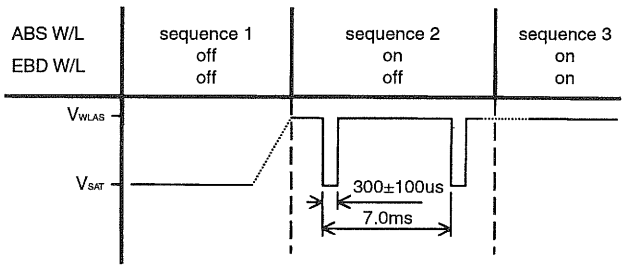 VWLAS, VSAT : Voltage of ECU side EJNC504B
Diagnosis tester	Communication type : HMC Specification ES 95620-01 Pulled up in ignition voltage by 220kΩ 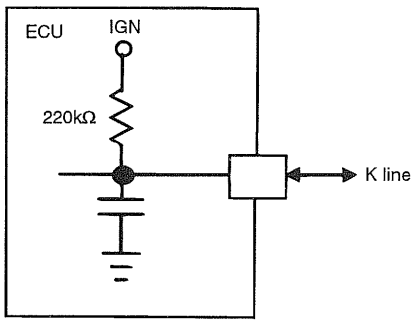 EJNB053E

Item	Content
Wheel speed output	Max. current : I < 10mA Output voltage : V < IGN External resistor : Must use resistance above 10kΩ. 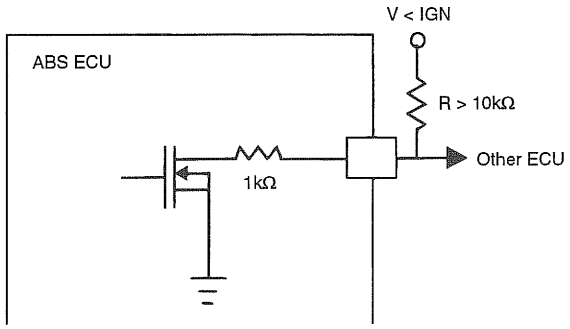 EJNC504C
Brake lamp switch	Type : Contact type (Normal open) Pulled up in ignition voltage by 15kΩ 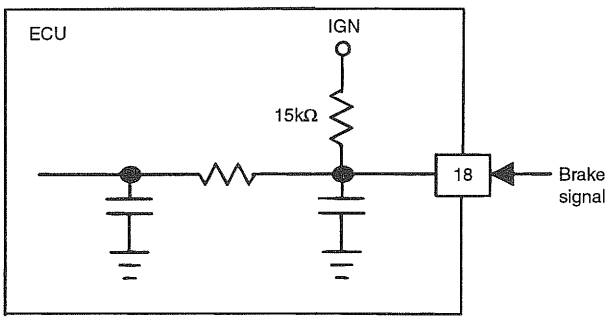 EJNC504D
TCS Warning/Function lamp circuit (Only TCS (BTCS or FTCS) system)	Max. current : I < 200mA 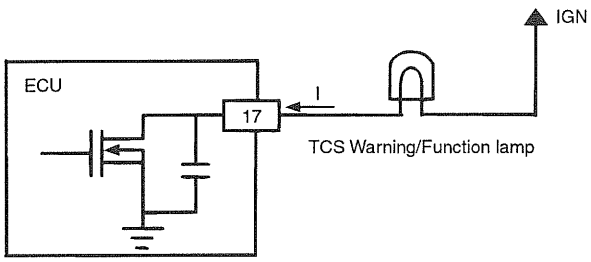 EJNC504E

EXTERNAL WIRING DIAGRAM

(ABS) EJNC5050

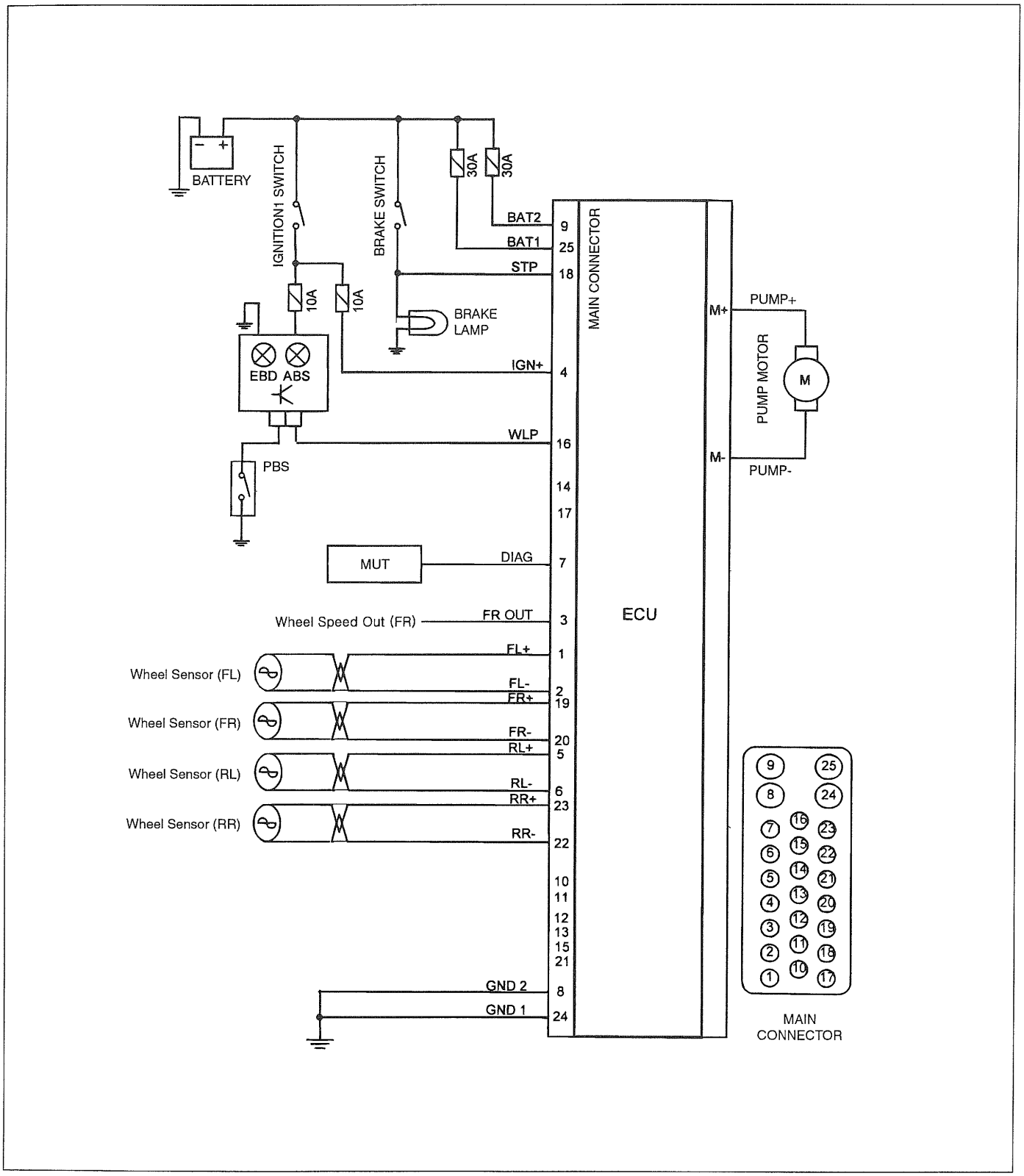

EJNC505A

EXTERNAL WIRING DIAGRAM

(BTCS) EJNC5060

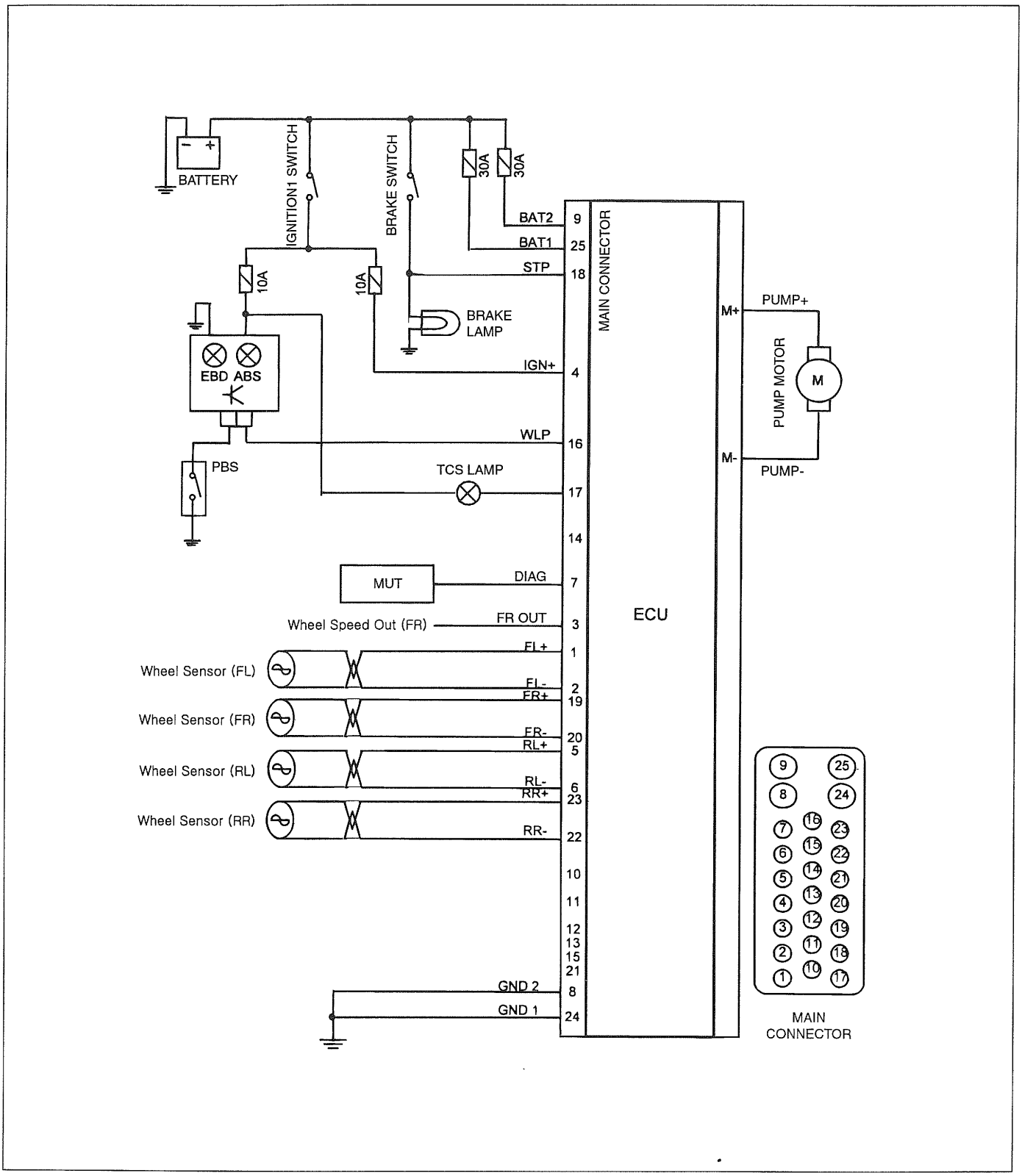

EJNC506A

INPUT/OUTPUT SPECIFICATION EJNC5070

Connector terminal			Specification	Note
No.	Mark	Terminal name		
4	IGN+	Power source via ignition switch terminal	Over voltage range : 16.5 ± 0.5V < V < 20V Operating voltage range : 9.5 ± 0.5V <V < 16.5 ± 0.5V Low voltage range : 8.0V < V < 9.5 ± 0.5V System down range : V < 7.5 ± 0.5V Max. current : I < 300mA	
8 24	GND1 GND2	Ground terminal	Max. current (Total of 2 terminals) : I < 60A	In ABS control
18	BRAKE	Brake lamp switch input terminal	Input voltage (Low) : -1.00 < V_{IL} < 2.00V Input voltage (High) : -7.00 < V_{IH} < 16.00V	
1 19 5 23 2 20 6 22	FL+ FR+ RL+ RR+ FL- FR- RL- RR-	Wheel sensor input terminal	Min. sensor voltage : V_S > 130mV_{PP} Resistance : 1100Ω ± 50% Input range : 30 - 2000Hz Inductance : 0.7H ± 50% Permissible offset voltage range : 2.15V < V_{offset} < 3.5V	
16	WLP	ABS and EBD warning lamp output terminal	Max. current : I < 200mA Saturation voltage, at I = 200mA : V_{sat} < 1.5V	
7	Diag.	Diagnosis interface terminal	Input voltage : V_{IL} < 0.3V_BV, V_{IH}> 0.7V_BV Output voltage : V_{OL} < 0.2V_BV, V_{OH}> 0.8V_BV	V_B : Ignition voltage
3	FR-out	Wheel speed output terminal	Max. current : I < 10mA External pull up resistance : above 10kΩ (Open collector type)	
25	Batt 1	Battery power Source 1 terminal (Valve power source)	Max. current (Inside control) : I <30A Max. current (Outside control) : I < 20mA	
9	Batt 2	Battery power Source 2 terminal (Motor power source)	In ABS control Max. rush current : I < 100A (t < 100 msec) Max. current : I < 30A (t > 100 msec) At IGN off Dark current : I < 0.5mA	t : The running time of motor

BTCS/INPUT OUTPUT SPECIFICATION

(BTCS) EJNC5080

Connector terminal			Specification	Note
No.	Mark	Terminal name		
4	IGN+	Power source via ignition switch terminal	Over voltage range : 16.5 ± 0.5V < V < 20V Operating voltage range : 9.5 ± 0.5V <V < 16.5 ± 0.5V Low voltage range : 8.0V < V < 9.5 ± 0.5V System down range : V < 7.5 ± 0.5V Max. current : I < 300mA	
8 24	GND1 GND2	Ground terminal	Max. current (Total of 2 terminals) : I < 60A	In ABS control
18	BRAKE	Brake lamp switch input terminal	Input voltage (Low) : -1.00 < V_{IL} < 2.00V Input voltage (High) : -7.00 < V_{IH} < 16.00V	
1 19 5 23 2 20 6 22	FL+ FR+ RL+ RR+ FL- FR- RL- RR-	Wheel sensor input terminal	Min. sensor voltage : V_S > 130mV_{PP} Resistance : 1100Ω ± 50% Input range : 30 - 2000Hz Inductance : 0.7H ± 50% Permissible offset voltage range : 2.15V < V_{offset} < 3.5V	
16	WLP	ABS and EBD warning lamp output terminal	Max. current : I < 200mA Saturation voltage, at I = 200mA : V_{sat} < 1.5V	
7	Diag.	Diagnosis interface terminal	Input voltage : V_{IL} < 0.3V_BV, V_{IH}> 0.7V_BV Output voltage : V_{OL} < 0.2V_BV, V_{OH}> 0.8V_BV	V_B : Ignition voltage
3	FR-out	Wheel speed output terminal	Max. current : I < 10mA External pull up resistance : above 10kΩ (Open collector type)	
25	Batt 1	Battery power Source 1 terminal (Valve power source)	Max. current (Inside control) : I <30A Max. current (Outside control) : I < 20mA	
9	Batt 2	Battery power Source 2 terminal (Motor power source)	In ABS control Max. rush current : I < 100A (t < 100 msec) Max. current : I < 30A (t > 100 msec) At IGN off Dark current : I < 0.5mA	t : The running time of motor
17	TCS lamp	TCS Warning/Function lamp output	Max. current : I < 200mA	

BLEEDING OF BRAKE SYSTEM EJKB0540

This procedure should be followed to ensure adequate bleeding of air and filling of the ABS unit, brake lines and master cylinder with brake fluid.

1. Remove the reservoir cap and fill the brake reservoir with brake fluid.

CAUTION

If there is any brake fluid on any painted surface, wash it off immediately.

NOTE

When pressure bleeding, do not depress the brake pedal.
Recommended fluid ..... DOT3 or equivalent

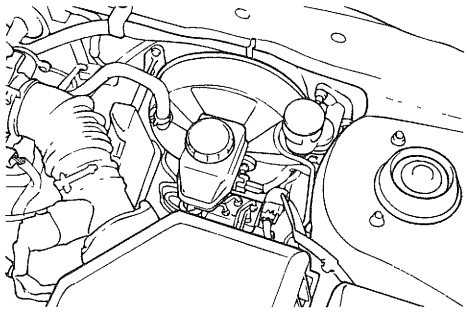

EJDA014A

2. Connect a clear plastic tube to the wheel cylinder bleeder plug and insert the other end of the tube into a half filled clear plastic bottle.

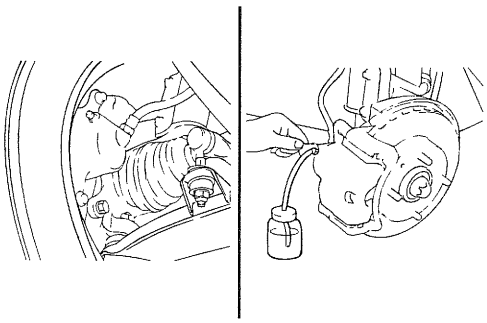

EJDA014I

3. Connect the Hi-Scan (Pro) to the Data Link Connector located underneath the dash panel.

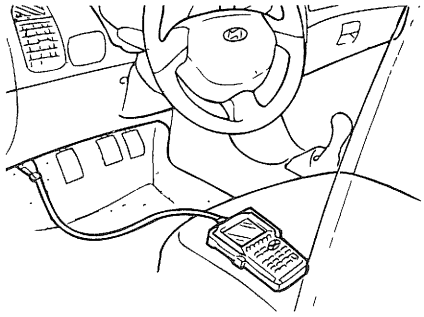

ERDA010A

4. Select and operate according to the instructions on the Hi-Scan (Pro) screen.

CAUTION

You must obey the maximum operating time of the ABS motor with the Hi-Scan (Pro) to prevent the motor pump from burning.

1) Select hyundai vehicle diagnosis.

0. INITIAL SCREEN
01. HYUNDAI VEHICLE DIAGNOSIS
02. TOOL BOX
03. CARB OBD-II DIAGNOSIS
04. FLIGHT RECORD REVIEW
05. SYSTEM SETUP

EJDA014C

2) Select vehicle name.

3) Select Anti-Lock Brake system.

4) Select air bleeding mode.

5) Press 'YES' to operate motor pump and solenoid valve.

1.6 AIR BLEEDING MODE	
ABS AIR BLEEDING STATUS	
01. SOLENOID VALVE STATUS	CLOSE
02. MOTOR PUMP STATUS	OFF
DO YOU WANT TO START ?	
(PRESS [YES] KEY)	

EJDA014F

6) Wait 60 sec. before operating the air bleeding. (If not, you may damage the motor).

1.6 AIR BLEEDING MODE	
ABS AIR BLEEDING STATUS	
01. SOLENOID VALVE STATUS	OPEN
02. MOTOR PUMP STATUS	ON
TIME : AUTOMATIC COUNT (1-60 SEC.)	

EJDA014G

5. Pump the brake pedal several times, and then loosen the bleeder screw until fluid starts to run out without bubbles. Then close the bleeder screw.
6. Repeat step 5 until there are no more bubbles in the fluid for each wheel.
7. Tighten the bleeder screw.

Bleeder screw tightening torque :
7-9 Nm (70-90 kg·cm, 5-6.6 lb·ft)

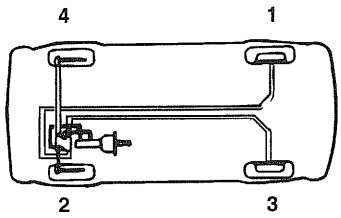

EJDA014H

STANDARD FLOW OF DIAGNOSTIC TROUBLESHOOTING EJKB0550

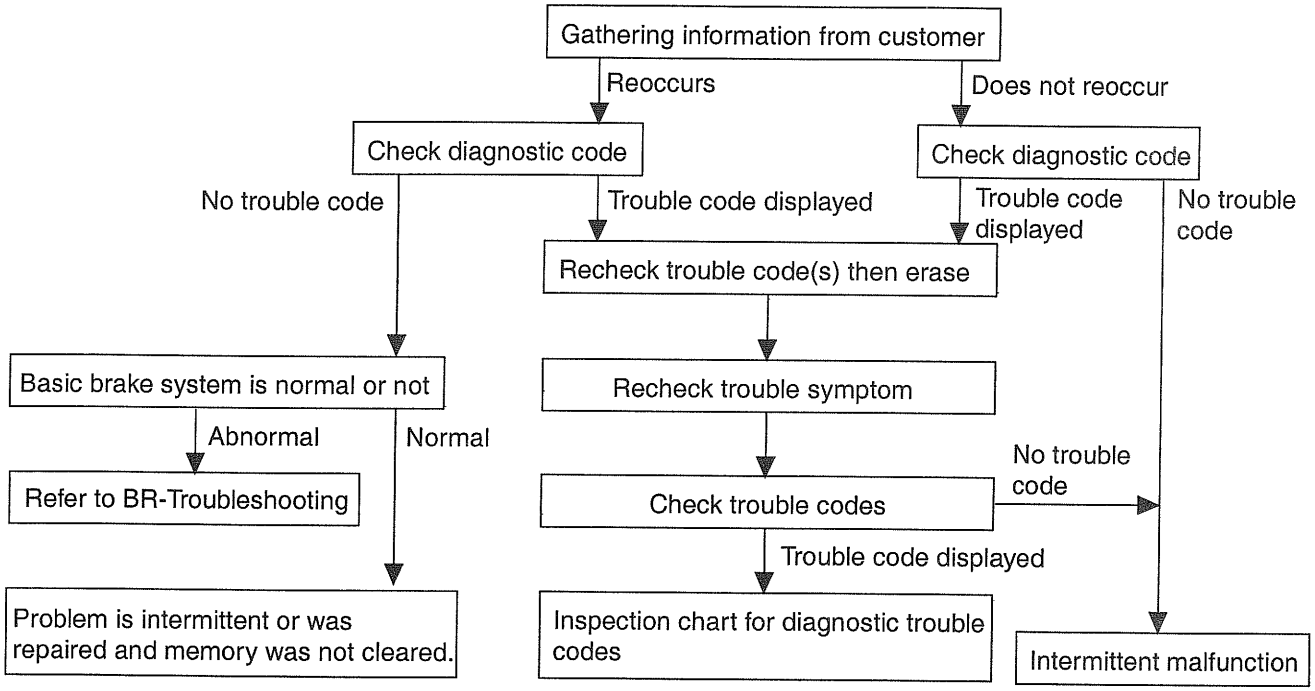

EJKB055A

*** Using the customer problem analysis check sheet for reference, ask the customer as much detail as possible about the problem.**

NOTES WITH REGARD TO DIAGNOSIS EJKB0560

The phenomena listed in the following table are not abnormal.

Phenomenon	Explanation
System check sound	When starting the engine, a thudding sound can sometimes be heard coming from inside the engine compartment. This is because the system operation check is being performed.
ABS operation sound	1. Sound of the motor inside the ABS hydraulic unit operation (whine). 2. Sound is generated along with vibration of the brake pedal (scraping). 3. When ABS operates, sound is generated from the vehicle chassis due to repeated brake application and release (Thump : suspension; squeak: tires)
ABS operation (Long braking distance)	For road surfaces such as snow-covered and gravel roads, the braking distance for vehicles with ABS can sometimes be longer than that for other vehicles. Accordingly, advise the customer to drive safely on such roads by lowering the vehicle speed.
Pedal kick back	Pedal kick back is normal operation.
Diagnosis detection conditions can vary depending on the diagnosis code. When checking the trouble symptom after the diagnosis code has been erased, ensure that the requirements listed in "Comment" are met.	

ABS CHECK SHEET EJDA0170

ABS Check Sheet

Inspector's Name _____

Customer's Name		**Registration No.**	
		Registration Year	/ /
		VIN.	
Date Vehicle Brought In	/ /	**Odometer**	Km Miles

Date the Problem First Occurred	/ /
Frequency of Occurence of Problem	☐ Continuous ☐ Intermittent (times a day)

Symptoms	☐ ABS does not operate.	
	☐ ABS does not operate efficiently.	☐ Intermittent (times a day)
	ABS Warning Light Abnormal	☐ Remains ON ☐ Does not light up

Diagnostic Trouble Code Check	**1st Time**	☐ Normal Code	☐ Malfunction Code (Code)
	2nd Time	☐ Normal Code	☐ Malfunction Code (Code)

EJDA017A

HI-SCAN (PRO) CHECK EJKB0570

1. Turn the ignition OFF.
2. Connect the Hi-Scan (Pro) to the Data Link Connector located underneath the lower crash pad panel.
3. Turn the ignition ON.
4. Use the Hi-Scan (Pro) to check for diagnostic trouble codes.
5. After completion of the repair or correction of the problem, erase the stored fault codes using the clear key on the Hi-Scan (Pro).
6. Disconnect the Hi-Scan (Pro).

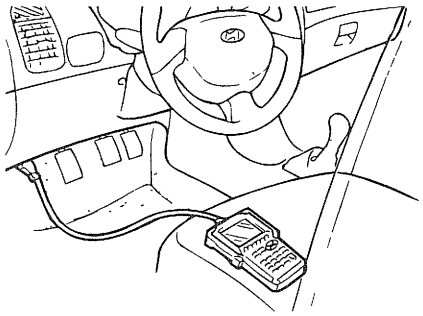

ERDA010A

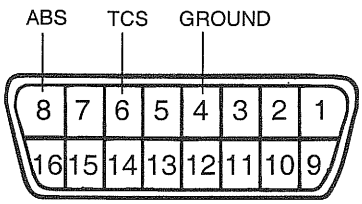

DATA LINK CONNECTOR

EJKB057A

CONNECTOR CHECK EJDA0190

1. Remove the negative battery (-) terminal.
2. Disconnect the connectors and check terminals following the troubleshooting procedure.

NOTE

When you check the terminals, be sure to use a small enough pin so as to not damage the connector terminals.

INSPECTION CHART FOR DIAGNOSTIC TROUBLE CODES EJDA0200

Inspect according to the inspection chart that is appropriate for the malfunction code.

DTC on Hi-Scan (Pro)	Failure Location	Failure Cause	Condition for Detection	Management/Detect Mode				
				A	B	C	D	E
FL : C1200 FR : C1203 RL : C1206 RR : C1209	SENSOR (wiring, harness, exciter, ABSCM)	Short to GND, Short to BATT, Open	The wheel velocity is below 7km/h and the offset voltage of the sensor is outside the permitted range (2.15-3.5V). If this condition continues for more than 140msec.	+3) +3) +3) +3)	+3) +3) +3) +3)	+4) +4) +4) +4)	+3) +3) +3) +3)	+3) +3) +3) +3)
FL : C1201 FR : C1204 RL : C1207 RR : C1210		Speed Jump	The wheel deceleration of -100g[-25km/h) for 7ms] causes the controller to start monitoring this failure and to compare the wheel velocity with the vehicle velocity from the next cycle. When this decelaration of -100g is continued for more than 140msec, the controller recongnizes the failure.	- - - -	+3) +3) +3) +3)	+4) +4) +4) +4)	+3) +3) +3) +3)	+3) +3) +3) +3)
FL : C1202 FR : C1205 RL : C1208 RR : C1211		Large Air-Gap	This monitoring is performed for the period that the minimum velocity rises from 2km/h to 10km/h. 1. When the minimum wheel velocity is 2km/h and the velocity of other wheels exceeds 10km/h with an acceleration >0.4g, the controller starts comparing the velocity of the other wheels with each other. If their difference is below 4km/h and continues for 140msec. 2. Except case 1, when the min. wheel velocity is 2km/h and the max. wheel velocity exceeds 10km/h, the condition continues for 20 sec.	- - - -	+3) +3) +3) +3)	- - - -	+3) +3) +3) +3)	+3) +3) +3) +3)
FL : C1201 FR : C1204 RL : C1207 RR : C1210		Wrong exciter	1. Max. wheel velocity exceeds 20km/h and the wheel velocity is 40% of max. wheel velocity. If this condition lasts for 1 min. 2. Max. wheel velocity exceeds 40km/h and the wheel velocity is 60% of max. wheel velocity. If this condition lasts for 30sec.	- - - -	+3) +3) +3) +3)	+4) +4) +4) +4)	+3) +3) +3) +3)	+3) +3) +3) +3)

EJDA020E

DTC on Hi-Scan (Pro)	Failure Location	Failure Cause	Condition for Detection	Management/Detect Mode				
				A	B	C	D	E
FL : C1202 FR : C1205 RL : C1208 RR : C1211	SENSOR (wiring, harness, exciter, ABSCM)	Long term ABS mode	1. During the ABS control cycle, if a wheel velocity of 2km/h lasts for more than 12 sec. 2. If the ABS control cycle continues for more than 36sec.	- - - -	- - - -	+4) +4) +4) +4)	- - - -	- - - -
C2112	Valve Relay (ABSCM, wiring harness)	Open	When the valve relay is switched on, the reference voltage of the valve relay is outside the permitted range, and this continues for 56msec.	+1)	+1)	+1)	+1)	-
		Short	When the valve relay is switched off, the reference voltage of the valve relay is over the criterion, and this continues for 56msec.	+1)	-	-	-	+1)
C1604	Solenoid Valve (ABSCM, wiring harness)	Open, Short, Leakage Current	1. When the valve relay is switched off, the drain voltage of the solenoid drive MOSFET is over the criterion, and this continues for 56msec. 2. When the valve relay is switch on and the solenoid off, the drain voltage of the solenoid drive MOSFET is under the criterion, and this continues for 56msec. 3. When the valve relay and a solenoid are switched on, the drain voltage of the solenoid drive MOSFET is over the criterion, and this continues for 56msec.	+1)	+1)	+1)	+1)	+1)
C2402	Motor Relay Motor (ABSCM, wiring harness)	Motor Relay or Fuse Open, Motor Short to GND	When the motor relay is switched on, the reference voltage of the motor is under the criterion, and this continues for 49msec.	-	+2)	+2)	+2)	-
		Motor Lock	The controller starts monitoring the motor voltage for 84msec from the time when the motor relay is switched off. If the motor voltage is under the criterion for 49msec, after 1.8sec from driving the motor off, the motor is reactivated for 1sec and the above check is performed again. In second check, when the motor voltage is under the criterion for 49msec, the controller recognizes the failure.	-	+2)	+2)	+2)	-

DTC on Hi-Scan (Pro)	Failure Location	Failure Cause	Condition for Detection	Management/Detect Mode				
				A	B	C	D	E
C2402	Motor Relay Motor (ABSCM, wiring harness)	Motor Short to BATT	The controller starts monitoring the motor after 1.8sec from the time when the motor relay is switched off. If the motor voltage is over the criterion for 200msec.	+2)	+2)	-	+2)	+2)
		Motor Open	The controller starts monitoring the motor after 1.8sec from the time when the motor relay is switched off. If the motor voltage is outside the permitted range for 200msec.	+2)	+2)	-	+2)	+2)
C1102	Power Supply	Low Voltage	1. When Vign<9.4V continues for 500msec. 2. If the voltage reaches more than 9.6V, the control recovers to normal state.	+5)	+5)	+5)	+5)	+5)
			3. When Vign<7.2V is detected during stat 1. 4. If the voltage reaches to more than 7.5V, the controller recovers to state 1.	+1)	+1)	+1)	+1)	+1)
C1101		Over Voltage	1. When Vign>16V continues for 500msec, or when Vign>18V continues for 49msec. 2. If the voltage recovers its normal operating range, the controller is reset.	+1)	+1)	+1)	+1)	+1)
C1604	ABSCM	EEPROM Failure	After the master processor writes the pre-defined data to the EEPROM the data is read, compared, and must not differ.	+1)	+1)	+1)	+1)	+1)
		ECU Failure	If the master/slave processor detects abnormal operation in RAM, status register, interrupt, timer, A/D converter or cycle time.	+1)	+1)	+1)	+1)	+1)

NOTE
The Vign means ignition voltage.

DETECT MODE

A : Intial check

B : Outside the ABS control cycle

C : Inside the ABS control cycle

D : Diagnosis mode

E : Failure mode

THE ABILITY TO DETECT A FAILURE

+ : Detect the failure

– : Not detect the failure

THE MANAGEMENT OF FAILURE DETECTION

1. System down. Both the ABS and the EBD function are inhibited and the ABS and the EBD warning lamps are activated.
   If this happens, the valve relay and all solenoids are prevented from being switched on.

2. Only the ABS function is inhibited. The ABS warning lamp is activated and the EBD warning lamp is not activated.

3. Sensor failure outside the ABS control cycle.

   1) Only one sensor fails : take the same action as management 2.

   2) More than two sensors fail : take the same action as in management 1.

4. Sensor failure inside the ABS control cycle.

   1) One front sensor fails : inhibit the ABS control of the failed-wheel and maintain ABS control of the normal wheels.
      After the controller completes the ABS control, take the same action as in management 2.

   2) One rear sensor fails : inhibit ABS control of both front wheels and the pressure of both rear wheels is decreased.
      After the controller completes the ABS control, take the same action as in management 2.

   3) More than two sensor fail : take the same action as in management 1.

5. Low operating voltage

   1) Outside the ABS control cycle : inhibit the ABS control of front wheels and allow ABS control of rear wheels, deactivating the motor. The ABS warning lamp is directly switched on.
      When the voltage recovers to the normal operating range, enable the ABS function and the ABS warning lamp is switched off and erases the error code of low voltage.

   2) Inside the ABS control cycle : inhibit the ABS control of the front wheels and allow the the ABS control of rear wheels, deactivating the motor. The ABS warning lamp is directly switched on and remains on. The error code is always stored.

6. Inhibit the ABS control of the front wheels and allow the ABS control of rear wheels, while deactivating the motor. (Only in motor failure).
   After the controller completes the ABS control, take the same action as in management 2.

ACTUATOR DRIVING EJKB0580

No.	Description	Condition	Recognition	Time
01	Motor	KEY ON ENG. OFF	Motor pump relay operation (Click sounds)	2 seconds
02	Front left valve (In)		Front left solenoid valve operation (Click sounds)	
03	Front right valve (In)		Front right solenoid valve operation (Click sounds)	
04	Rear left valve (In)		Rear left solenoid valve operation (Click sounds)	
05	Rear right valve (In)		Rear right solenoid valve operation (Click sounds)	
06	Front left valve (Out)		Front left solenoid valve operation (Click sounds)	
07	Front right valve (Out)		Front right solenoid valve operation (Click sounds)	
08	Rear left valve (Out)		Rear left solenoid valve operation (Click sounds)	
09	Rear right valve (Out)		Rear right solenoid valve operation (Click sounds)	

CURRENT DATA EJDA0220

No.	Description	Recognition	Unit
1	Battery	Battery	Voltage
2	FL wheel speed SNSR	Front left wheel speed sensor	km/h
3	FR wheel speed SNSR	Front right wheel speed sensor	
4	RL wheel speed SNSR	Rear left wheel speed sensor	
5	RR wheel speed SNSR	Rear right wheel speed sensor	
6	ABS SRI status	Warning lamp	ON/OFF
7	Brake SW	Brake switch	
8	Motor pump relay	Motor relay	
9	Valve relay	Valve relay	
10	Motor pump status	Motor	
11	FL valve (In)	Front left valve (In)	
12	FR valve (In)	Front right valve (In)	
13	RL valve (In)	Rear left valve (In)	
14	RR valve (In)	Rear right valve (In)	
15	FL valve (Out)	Front left valve (Out)	
16	FR valve (Out)	Front right valve (Out)	
17	RL valve (Out)	Rear left valve (Out)	
18	RR valve (Out)	Rear right valve (Out)	

ANTI-LOCK BRAKE SYSTEM EJNC5200

SCHEMATIC DIAGRAM (1)

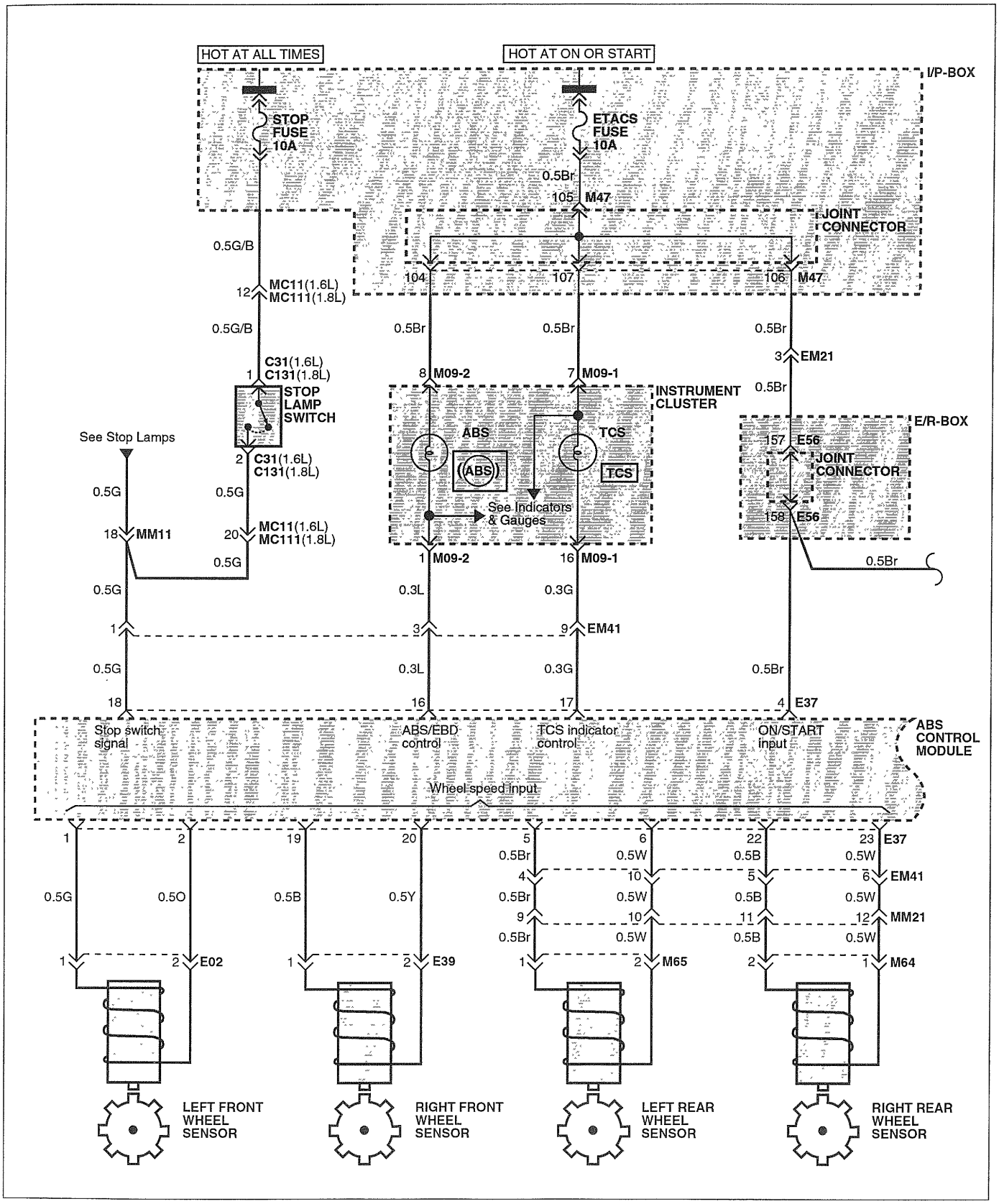

E2FC016A

SCHEMATIC DIAGRAM (2)

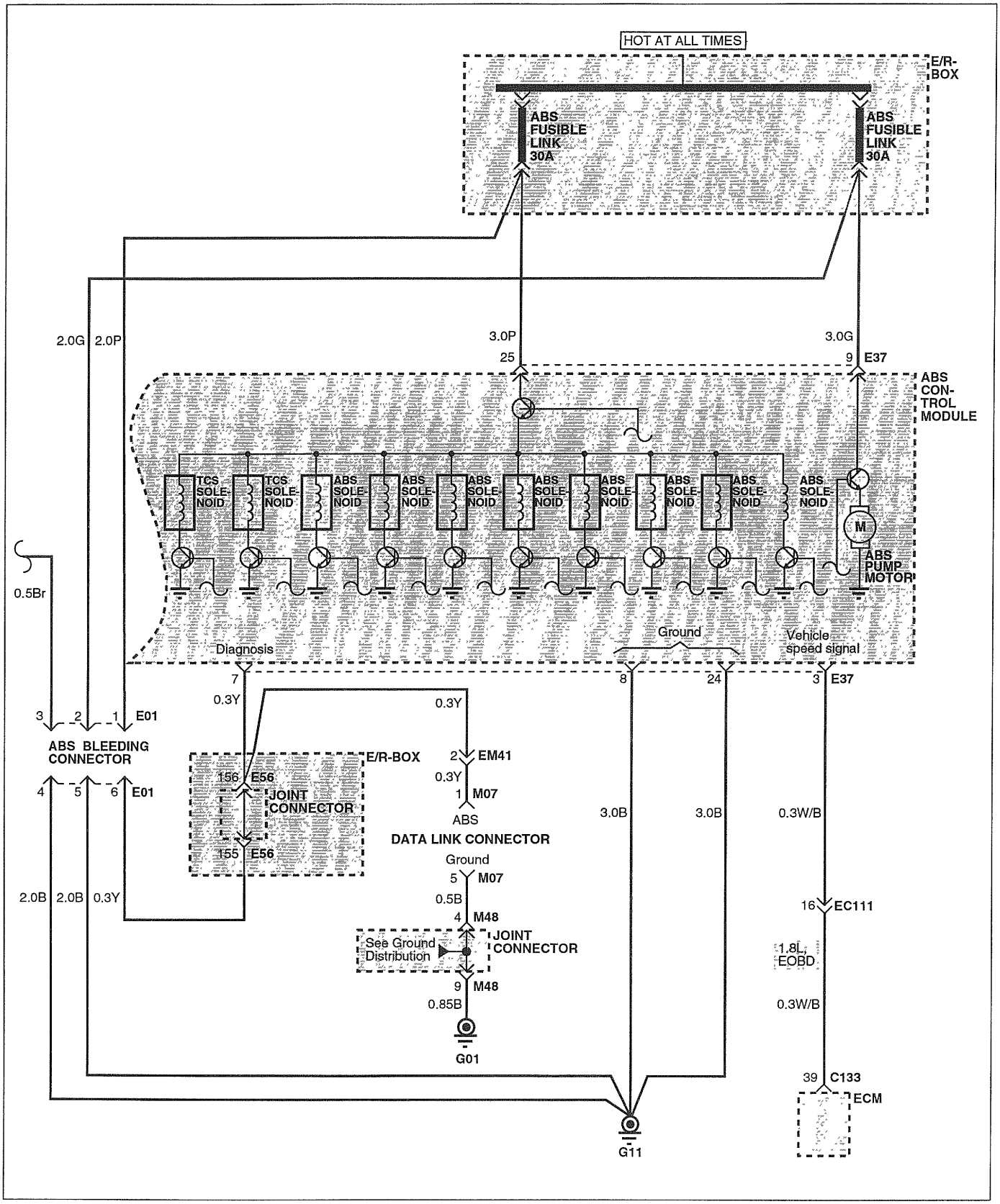

E2FC016B

INSPECTION PROCEDURE FOR DIAGNOSTIC TROUBLE CODES EJKB0600

DTC No. C1200, C1203, C1206, C1209 Wheel speed sensor open or short to GND circuit	Probable cause
The HECU determines that an open or short circuit has occured in more than one wire of a wheel speed sensor.	• Malfunction of wheel speed sensor • Malfunction of wiring harness or connector • Malfunction of HECU

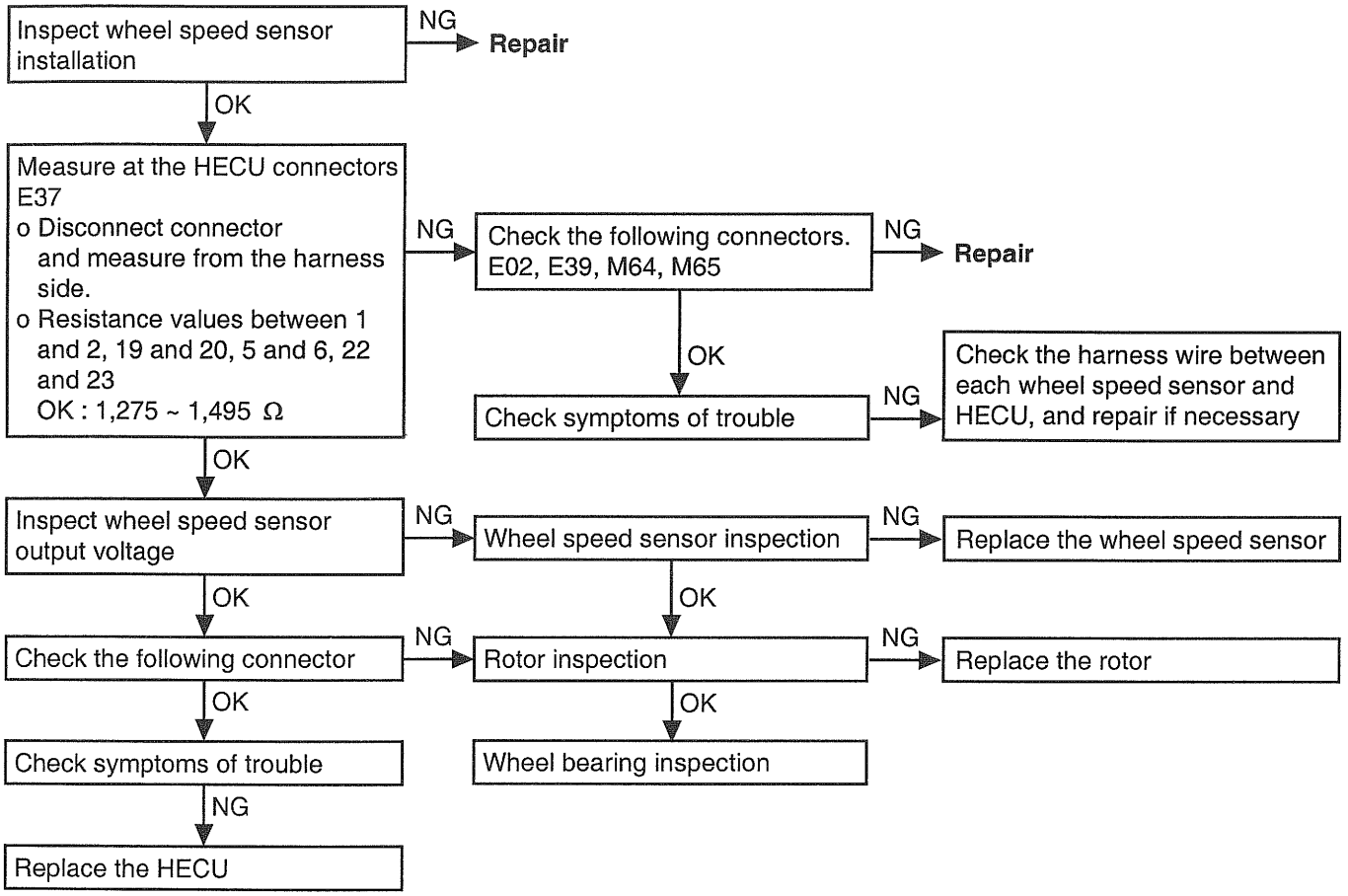

EJKB060A

EJKB0610

DTC No. C1201, C1204, C1207, C1210 (Speed jump or wrong exciter)	Probable cause
Abnormal output signal from a wheel speed sensor other than an open or short circuit.	• Improper installation of wheel speed sensor • Malfunction of wheel speed sensor • Malfunction of rotor • Malfunction of wheel bearing • Malfunction of wiring harness or connector • Malfunction of HECU

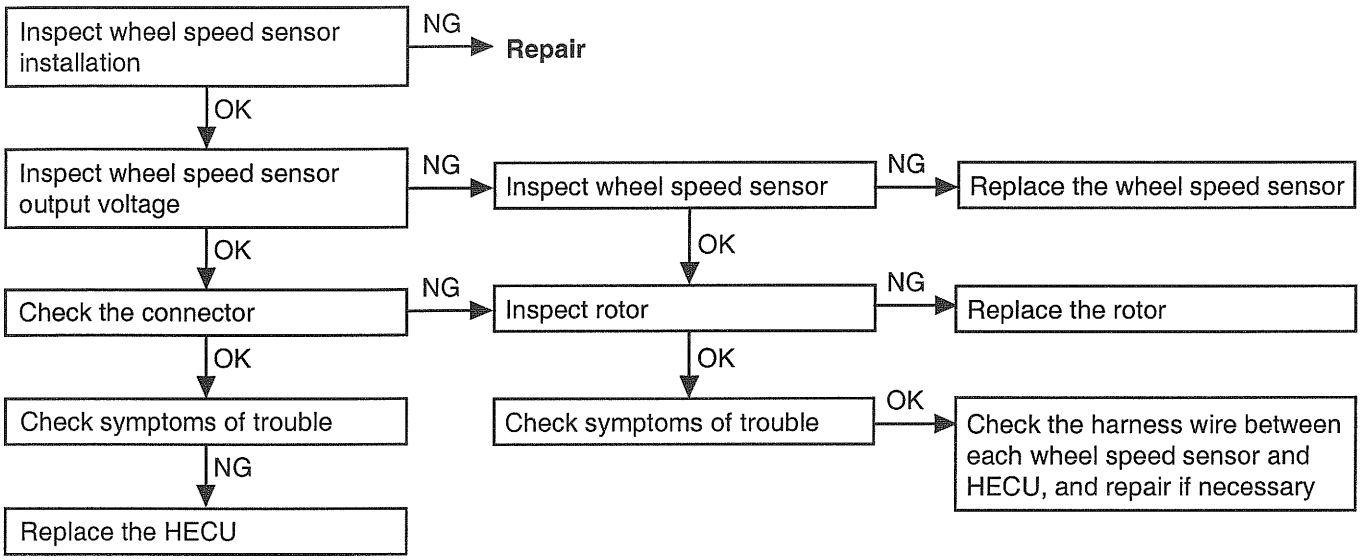

EJKB061A

EJKB0620

DTC No. C1202, C1205, C1208, C1211 (Large air gap)	Probable cause
No wheel speed sensor output signal.	• Malfunction of wheel speed sensor • Improper installation of wheel speed sensor • Malfunction of rotor (excitor) • Malfunction of wiring harness or connector • Malfunction of HECU

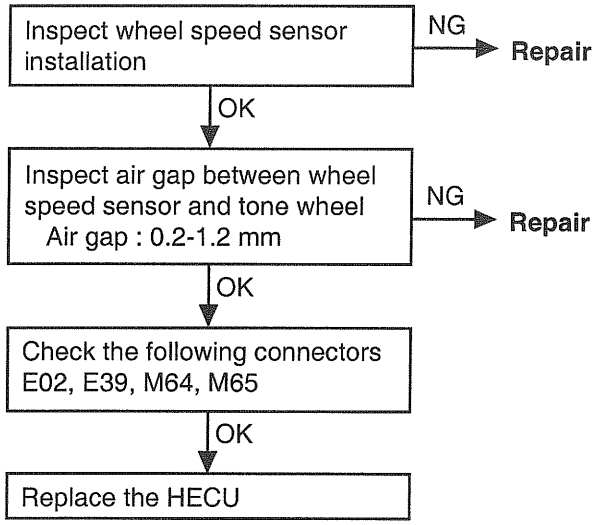

EJKB062A

EJKB0630

DTC No. C1101, C1102 Voltage out of range (Low and over voltage)	Probable cause
The voltage of the HECU power supply drops lower than or rises higher than the specified value. If the voltage returns to the specified value, this code is no longer output.	• Malfunction of wiring harness or connector • Malfunction of HECU.

⚠ ***CAUTION***

If battery voltage drops or rises during inspection, this code will be output as well. If the voltage returns to the standard value, the code is no longer output. Before carrying out the following inspection, check the battery level, and refill if necessary.

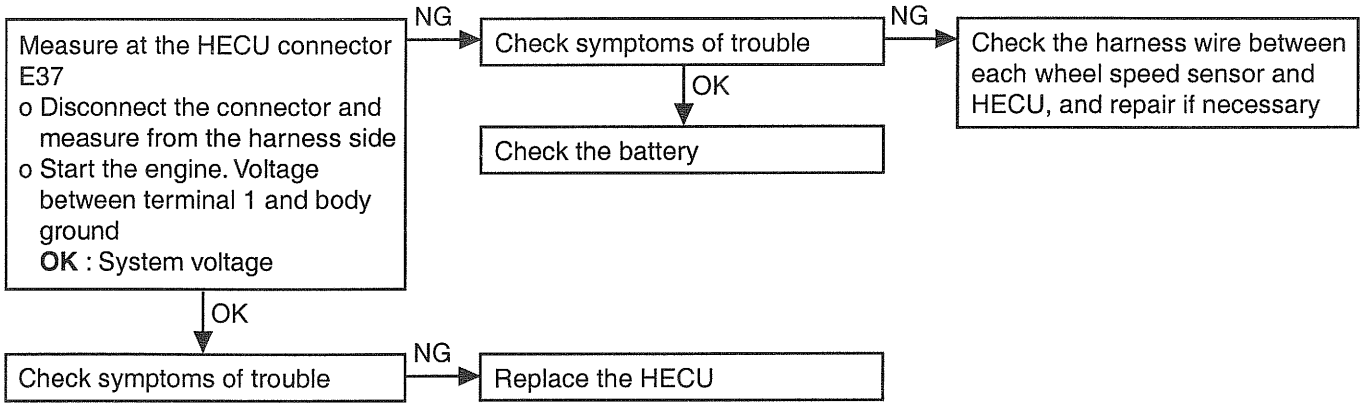

EJKB063A

EJKB0640

DTC No. C1604 ECU Hardware (EEPROM and ECU failure)	Probable cause
The HECU always monitors the solenoid valve drive circuit. It determines that there is an open or short-circuit in the solenoid coil or in a harness even if no current flows in the solenoid or through the HECU.	• Malfunction of wiring harness • Malfunction of hydraulic unit • Malfunction of HECU

EJKB0650

DTC No. C2112 Valve relay (Including fuse failure)	Probable cause
When the ignition switch is turned ON, the HECU switches the valve relay on and off during its initial check. During this time, voltage sent to the valve relay is compared to the voltage in the valve power monitor line. If no current is detected in the valve power monitor line, the HECU determines that there is an open circuit and DTC C2112 is recorded.	• Malfunction of wiring harness or connector • Malfunction of HECU

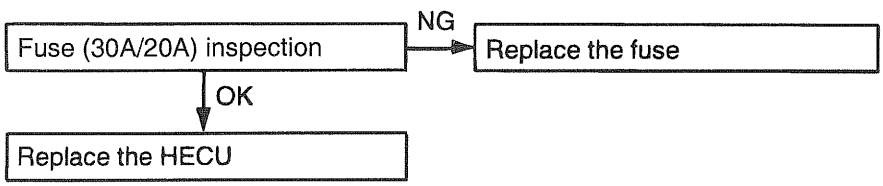

EJDA029B

EJKB0660

DTC No. C2402 Electrical (Motor relay, motor)	Probable cause
When the motor power line is normal but no signal is in detected in the motor monitor line.	• Malfunction of hydraulic unit • Malfunction of HECU

⚠ ***CAUTION***

Powering the motor with the Hi-Scan (Pro) will discharge the battery. Start and run the engine for a while after testing is complete.

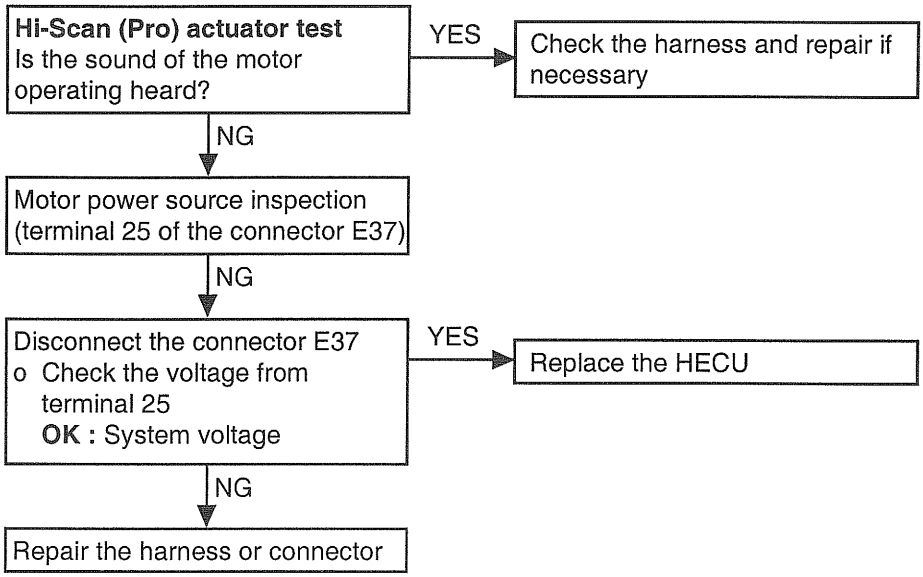

EJKB066A

INSPECTION CHART FOR TROUBLE SYMPTOMS EJKB0670

Find out the symptom and check according to the inspection procedure chart.

Trouble system		Inspection procedure No.
Communication with Hi-Scan (Pro) is not possible	Communication with any system is not possible.	1
	Communication with ABS only is not possible.	2
When the ignition key is turned to "ON" (engine OFF), the ABS warning lamp does not illuminate.		3
After the engine starts, the lamp remains illuminated.		4
Faulty ABS operation	Unequal braking power on both sides	5
	Insufficient braking power	
	ABS operates under normal braking conditions	
	ABS operates before vehicle stops under normal braking conditions	
	Large brake pedal vibration (See Caution)	-

⚠ *CAUTION*

During ABS operation, the brake pedal may vibrate or may not be able to be depressed. Such phenomena are due to intermittent changes in hydraulic pressure inside the brake line to prevent the wheels from locking and is not an abnormality.

INSPECTION PROCEDURE FOR TROUBLE SYMPTOMS EJKB0680

INSPECTION PROCEDURE 1

Communication with Hi-Scan (Pro) is not possible. (Communication with all systems is not possible.)	Probable cause
Possible defect in the power supply system (including ground) for the diagnosis line.	• Malfunction of connector • Malfunction of wiring harness

INSPECTION PROCEDURE 2

Communication with Hi-Scan (Pro) is not possible. (Communication with ABS only is not possible.)	Probable cause
When communication with Hi-Scan (Pro) is not possible, the cause may be probably an open circuit in the HECU power circuit or an open circuit in the diagnosis output circuit.	• Blown fuse • Malfunction of wiring harness or connector • Malfunction of HECU

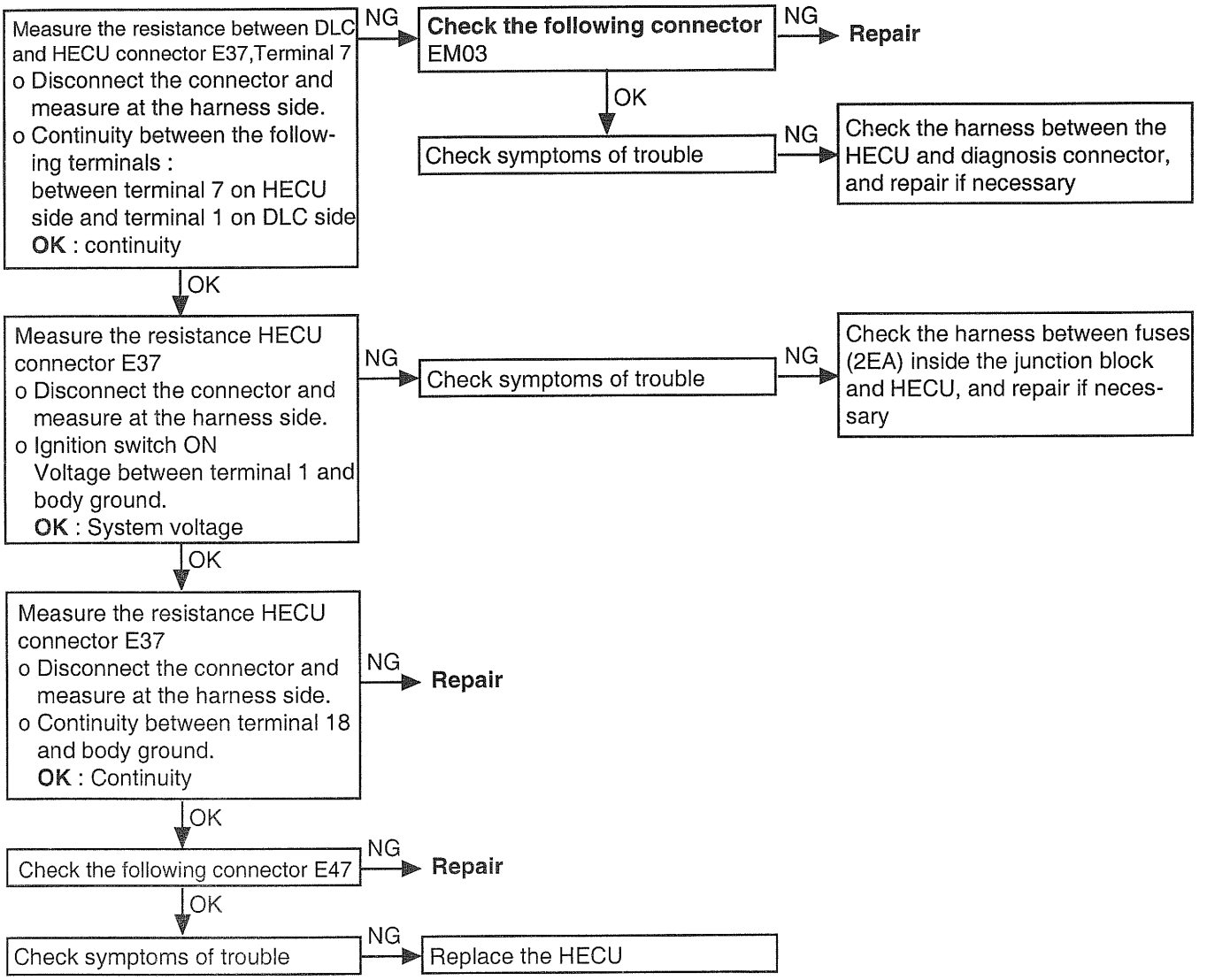

EJKB068A

INSPECTION PROCEDURE 3

When ignition key is turned "ON" (engine OFF), the ABS warning lamp does not illuminate	Probable cause
When current flows in the HECU, the ABS relay turns from on to off as the initial check. The ABS warning lamp will illuminate when the ABS relay is off even if there is a problem with the circuit between the ABS warning lamp and the HECU. Therefore, if the lamp does not illuminate, the cause may be an open circuit in the lamp power supply circuit, a blown bulb, an open circuit in both the circuits between the ABS warning lamp and the HECU, and in the circuit between the ABS warning lamp and the ABS relay.	• Blown fuse • Burnt out ABS warning lamp bulb • Malfunction of wiring harness or connector

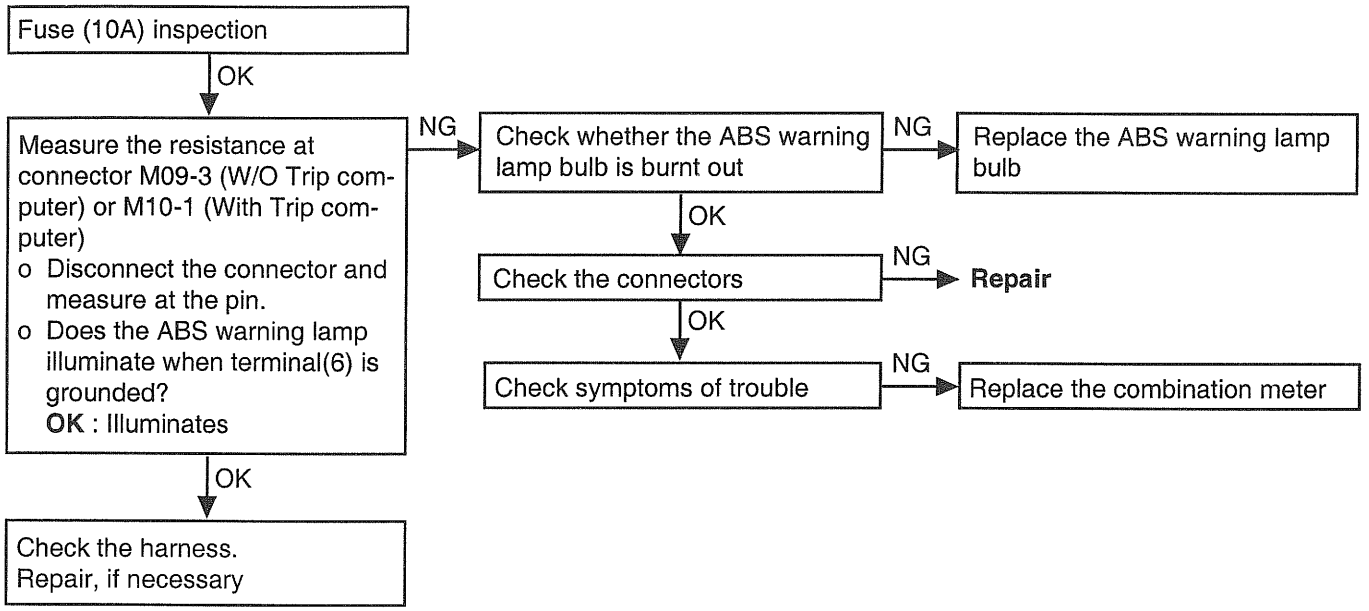

EJKB068B

INSPECTION PROCEDURE 4

Even after the engine is started, the ABS warning lamp remains illuminated	Probable cause
A possible short-circuit in the ABS warning lamp illumination circuit	• Malfunction of combination meter • Malfunction of HECU • Malfunction of wiring harness

This trouble symptom is limited to cases where communication with the Hi-Scan (Pro) is possible (HECU power supply is normal) and DTC is normal.

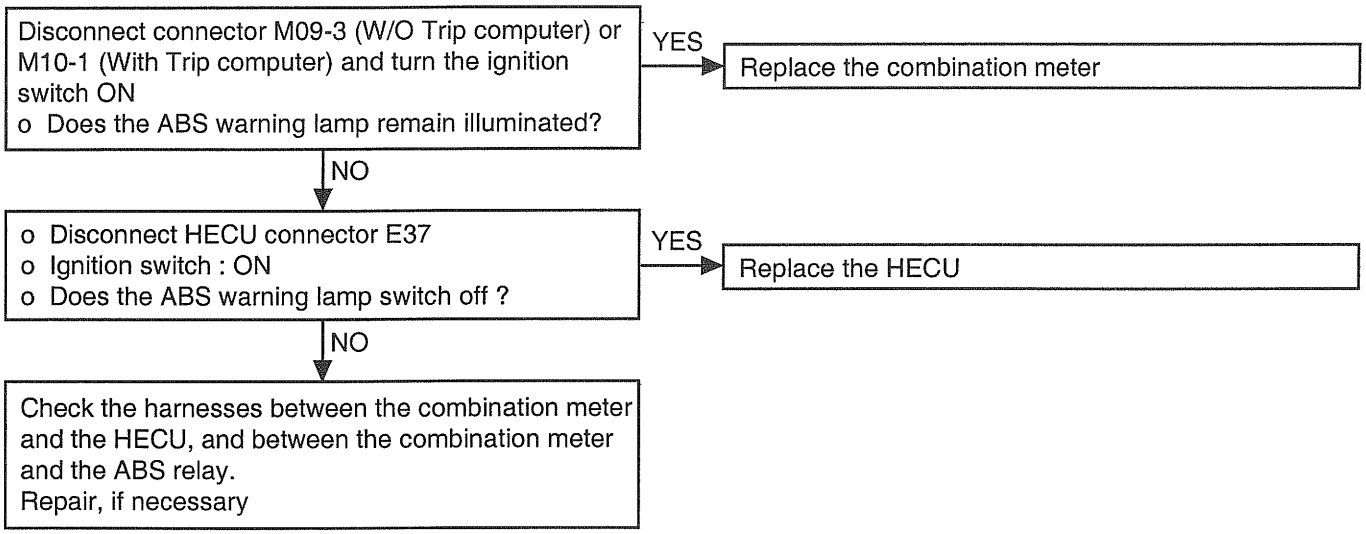

EJKB068C

INSPECTION PROCEDURE 5

Brake operation is abnormal	Probable cause
Brake operation varies depending on driving conditions and road surface conditions, so diagnosis can be difficult. However, if a normal DTC is displayed, carry out the following inspection.	• Improper installation of wheel speed sensor • Incorrect sensor harness contact • Foreign material on wheel speed sensor • Malfunction of wheel speed sensor • Malfunction of rotor • Malfunction of wheel bearing • Malfunction of hydraulic unit • Malfunction of HECU

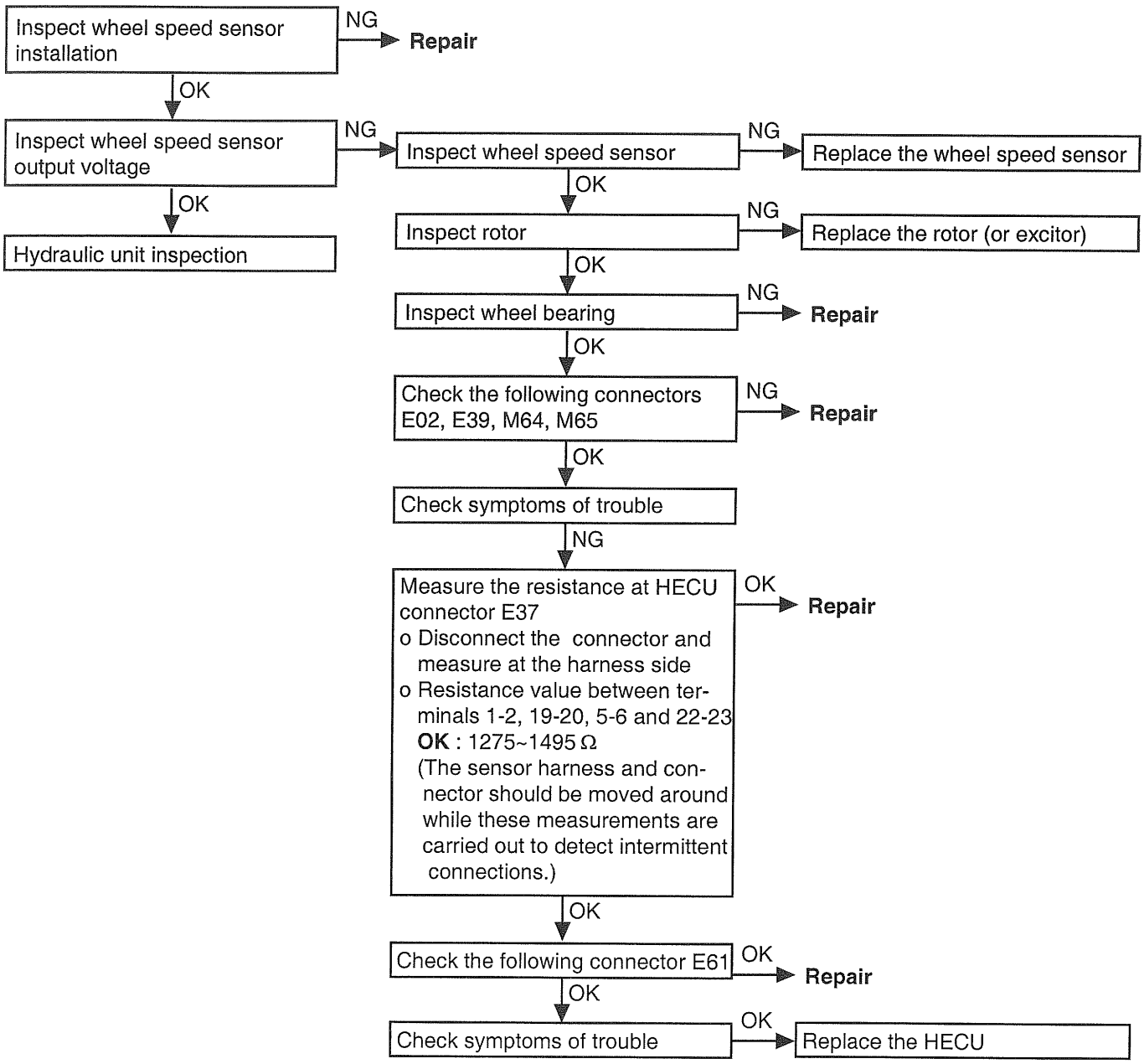

EJKB068D

ABS OPERATION CHECK EJDA0340

WHEEL SPEED SENSOR OUTPUT VOLTAGE CHECK

1. Raise the vehicle and release the parking brake.
2. Disconnect the HECU harness connector's and measure from the harness side connector.

   ⚠ *CAUTION*

   Be sure to remove the connector's double lock and insert the probe into the harness side (back-probe). Inserting it into the terminal side may result in a bad connection.

3. Rotate the wheel to be measured approximately 1/2 to 1 rotation per second, and check the output voltage using a circuit tester or an oscilloscope.

Wheel speed sensor	Front left	Front right	Rear left	Rear right
Terminal	8	22	4	19
	9	23	5	20

Output voltage :
When measuring with an oscilloscope : 100mV peak-to-peak or more

ANTI-LOCK BRAKING SYSTEM CONTROL MODULE

COMPONENTS EJA05090

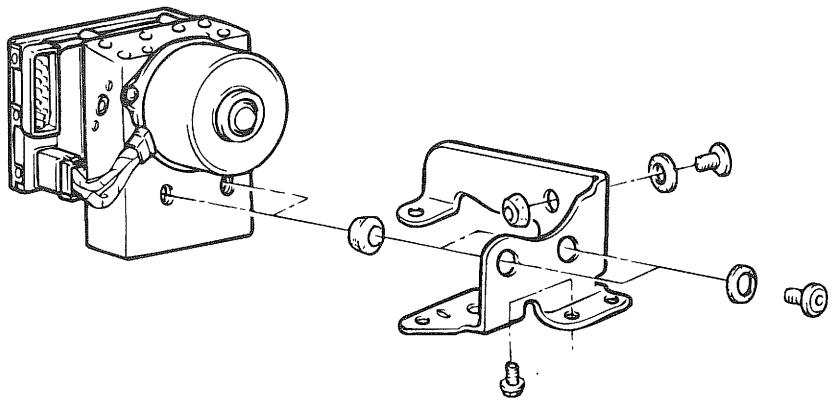

TORQUE : Nm (kg·cm, lb·ft)

EJA0028A

REMOVAL EJDA0080

1. Disconnect the brake tubes from the HECU.

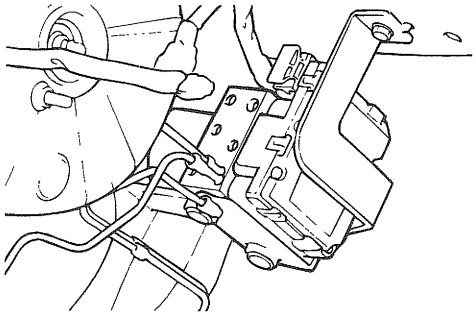

EJDA008A

2. Remove the HECU bracket mounting bolt and remove the HECU.

⚠ ***CAUTION***

1. ***Never attempt to disassemble the HECU.***
2. ***The HECU must be transported and stored in an upright position and with the ports sealed. The HECU must not be drained.***

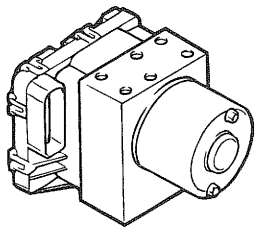

EJDA008B

3. Disconnect the HECU (Hydraulic and Electronic Control Unit) and motor connector.

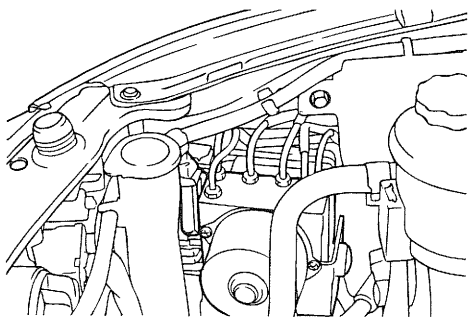

EJDA008C

INSTALLATION EJDA0090

1. Installation is the reverse of removal.
2. Tighten the modulator mounting bolts and brake tube nuts to the specified torque.

Tightening toque

HECU mounting bolt :

8-10 Nm (80-100 kg·cm, 5.6-6.9 lb·ft)

Brake tube nut :

13-17 Nm (130-170 kg·cm, 9-12 lb·ft)

ANTI-LOCK BRAKING SYSTEM
WHEEL SPEED SENSOR

COMPONENTS EJNC5400

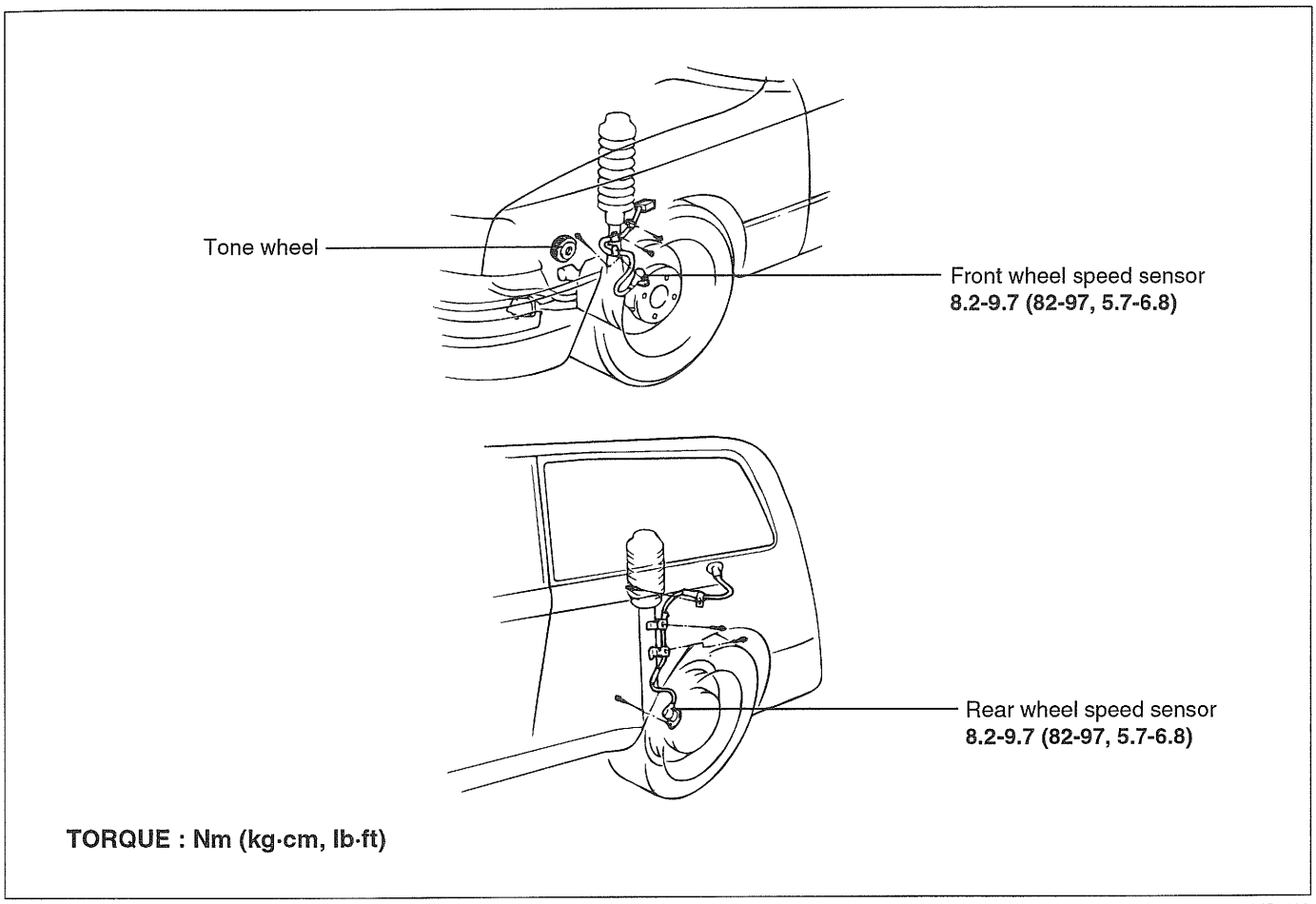

EJNC540A

REMOVAL EJKB0700

FRONT WHEEL SPEED SENSOR

1. Remove the front wheel speed sensor mounting bolt.

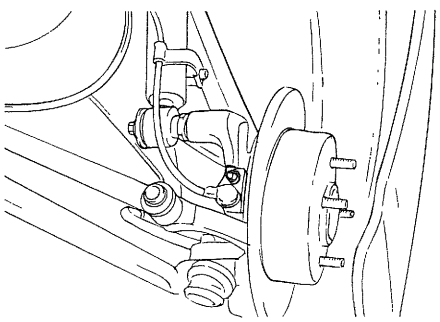

EJA9031A

2. Remove the front wheel speed sensor after disconnecting the wheel speed sensor connector.

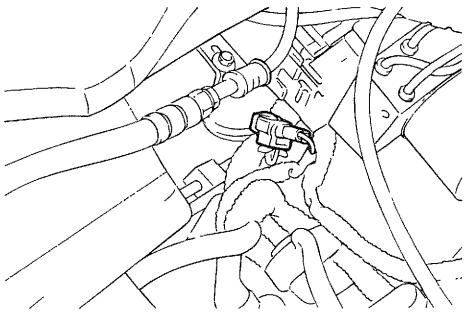

EJA9031B

REAR WHEEL SPEED SENSOR

1. Remove the rear seat cushion.
2. Remove the rear pillar trim assembly.
3. Remove the tire assembly.

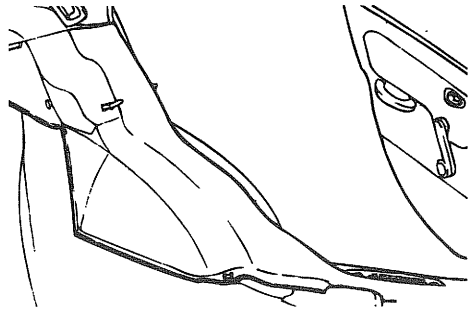

EJA9031C

4. Remove the rear wheel speed sensor after disconnection the wheel speed sensor connector.

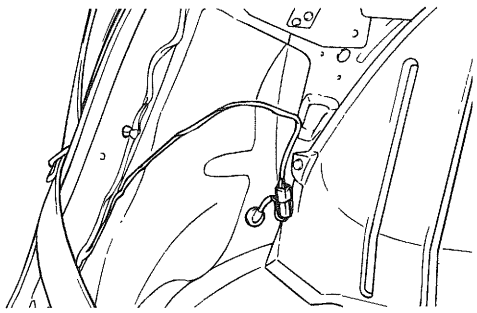

EJA9031D

INSPECTION EJKB0710

1. Connect an ohmmeter between the wheel speed sensor terminals and measure the resistance.

Service standard

Front : 1275 - 1495Ω

Rear : 1275 - 1495Ω

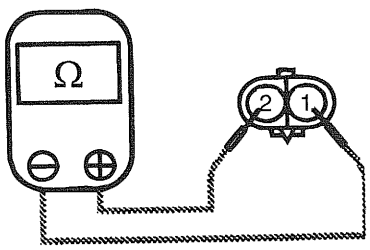

EJKB071A

2. Connect a voltmeter between the wheel speed sensor terminals and measure the voltage by turning the wheel.

NOTE

Set the voltmeter to measure AC voltage.
Service standard : AC voltage detected.

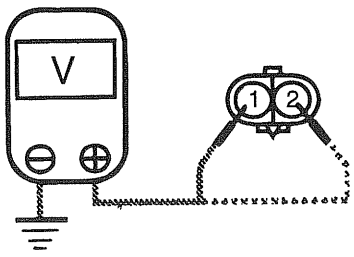

EJKB071B

Body (Interior & Exterior)

GENERAL ..... BD - 2

EXTERIOR ..... BD - 7

INTERIOR ..... BD -24

BUMPER ..... BD -43

SEAT ..... BD -48

GENERAL

SPECIFICATIONS ESNB0050

Hood	
Type	Rear hinged, front opening type
Front door	
Construction	Front hinged, full door construction
Regulator system	X-arm type
Locking system	Pin-fork system
Rear door	
Construction	Front hinged, full door construction
Regulator system	Wire drum type
Locking system	Pin-fork system
Tailgate	
Type	Inner hinged, gas lifter type
Glass thickness mm (in)	
Windshield glass	5 (0.20)
Front door glass	3.2 (0.13)
Rear door glass	3.2 (0.13)
Rear fixed glass	3.5 (0.14)
Tailgate glass	3.5 (0.14)
Seat belt	
Driver side	3 point type with E.L.R (Emergency Locking Retractor)
Passenger side and outboard rear side	3 point type with E.L.R (Emergency Locking Retractor)
Rear center	2 point type with static

TIGHTENING TORQUE ESNB0100

	Nm	kg·cm	lb·ft
Front and rear doors			
Door hinge to body	34-42	340-420	25-31
Door hinge to door	22-27	220-270	16.2-20
Door checker to door	8-12	80-120	5.9-8.8
Door checker to body	23-33	230-330	16.9-24.3
Door glass mounting bolts	8-12	80-120	5.9-8.8
Door window regulator mounting bolts	8-12	80-120	5.9-8.8
Front and rear channel mounting bolts	8-12	80-120	5.9-8.8
Door striker mounting bolts	17-22	170-220	12.5-16.2
Tailgate			
Tailgate hinge to body	7-9	70-90	5.2-6.6
Tailgate hinge to tailgate	7-9	70-90	5.2-6.6
Tailgate striker mounting bolts	9-14	90-140	6.6-10.3
Tailgate lifter ball joint mounting nuts	22-27	220-270	16.2-20
Hood			
Hood hinge to body	22-27	220-270	16.2-20
Hood hinge to hood	22-27	220-270	16.2-20
Hood latch to body	7-11	70-110	5.2-8.1
Seat belt			
Front seat belt upper anchor	40-55	400-550	29.5-40.6
Front seat belt lower anchor	40-55	400-550	29.5-40.6
Front seat belt retractor	40-55	400-550	29.5-40.6
Height adjuster	40-55	400-550	29.5-40.6
Rear seat belt upper anchor	40-55	400-550	29.5-40.6
Rear seat belt lower anchor	40-55	400-550	29.5-40.6
Rear seat belt retractor	40-55	400-550	29.5-40.6
Seat			
Front seat mounting bolts	35-55	350-550	25.8-40.6
Rear seat mounting bolts	35-55	350-550	25.8-40.6

SPECIAL TOOLS ESHA0100

Tool (Number and name)	Illustration	Use
09793-21000 Door hinge adjusting wrench	 ESA9010F	Adjustment, removal, and installation of the door hinge
09800-21000 Ornament remover	 ESA9010G	Trim removal
09853-31000 Headliner clip remover	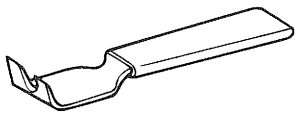 ESA9010H	Removal of the headliner clip
09861-31100 Sealant cut-out tool	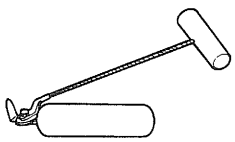 ESA9010I	Cutting the sealant of the windshield (use with 09861-31200)
09861-31200 Sealant cutting blade	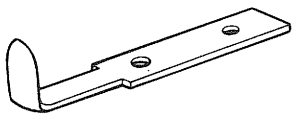 ESA9010J	Cutting the sealant of the windshield (use with 09861-31100)
09861-31300 Sealant gun	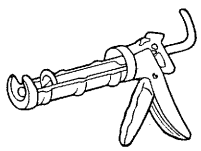 ESA9010K	Application of the sealant to the windshield
09861-31400 Glass holder	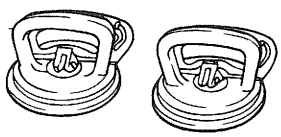 ESA9010L	Removal and installation of the windshield
09861-31000 Windshield moulding remover	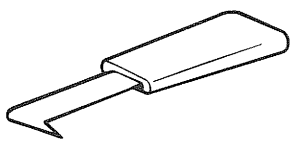 ESA9010M	Removal of the windshield moulding

TROUBLESHOOTING ESHA0150

Trouble symptom	Probable cause	Remedy
Water leaks from sunroof	Dirt accumulated in drain tube	Clear dirt inside of drain
	Clogged drain tube	Blow air into drain to remove dirt
	Broken or dislocated drain tube, defective or cracked clip	Check tube installation and flange contact
	Deteriorated roof lid weatherstrip	Replace
	Excessive roof lid-to-body clearance and improperly fitted weatherstrip	Adjust
Wind noise around sunroof	Loose or deformed deflector, gaps in body work	Retighten adjust or replace
Sunroof makes a noise when moved	Foreign particles lodged in guide rail	Check drive cable and guide rails for foreign particles
	Loose guide rails and lid	Retighten
Motor runs but sunroof does not move or moves only halfway	Foreign particles lodged in guide rail	Check drive cable and guide rails for foreign particles
	Incorrect engagement of motor pinion with drive cable	Check for loose motor installation and damaged pinion
	Decrease in motor's clutch slipping force	Adjust
	Increased sunroof sliding resistance or interference of sunroof with drive cables, weatherstrip, etc. due to maladjustment of sunroof	Adjust or replace
Noise in motor (clutch slipping noise from motor when sunroof is fully opened or closed is not an unusual noise.)	Incorrect engagement of motor pinion with drive cable	Check pinion installation and retighten motor
	Worn out or damaged motor pinion bearing	Replace motor assembly
	Worn out or deformed drive cable	Replace
Door glass fails to operate up and down	Incorrect window glass installation	Adjust position
	Damaged or faulty regulator arm or regulator	Correct or replace
Door does not open or close completely	Incorrect door installation	Adjust position
	Defective door check assembly	Correct or replace
	Door hinge requires grease	Apply grease
Hood does not open or close completely	Striker and latch not properly aligned	Adjust
	Incorrectly installed hood	Adjust
	Incorrect hood bumper height	Adjust
Water leak through windshield and rear window	Defective seal	Fill with sealant
	Defective flange	Correct

Trouble symptom	Probable cause	Remedy
Wind noise around door	Weatherstrip not holding firmly	Adjust fit of door
	Improperly installed weatherstrip	Repair or replace
	Improperly closed door	Adjust
	Improperly fit door	Adjust
	Improper clearance between door glass and division channel	Adjust
	Deformed door	Repair or replace

EXTERIOR

HOOD

COMPONENTS ESNB0150

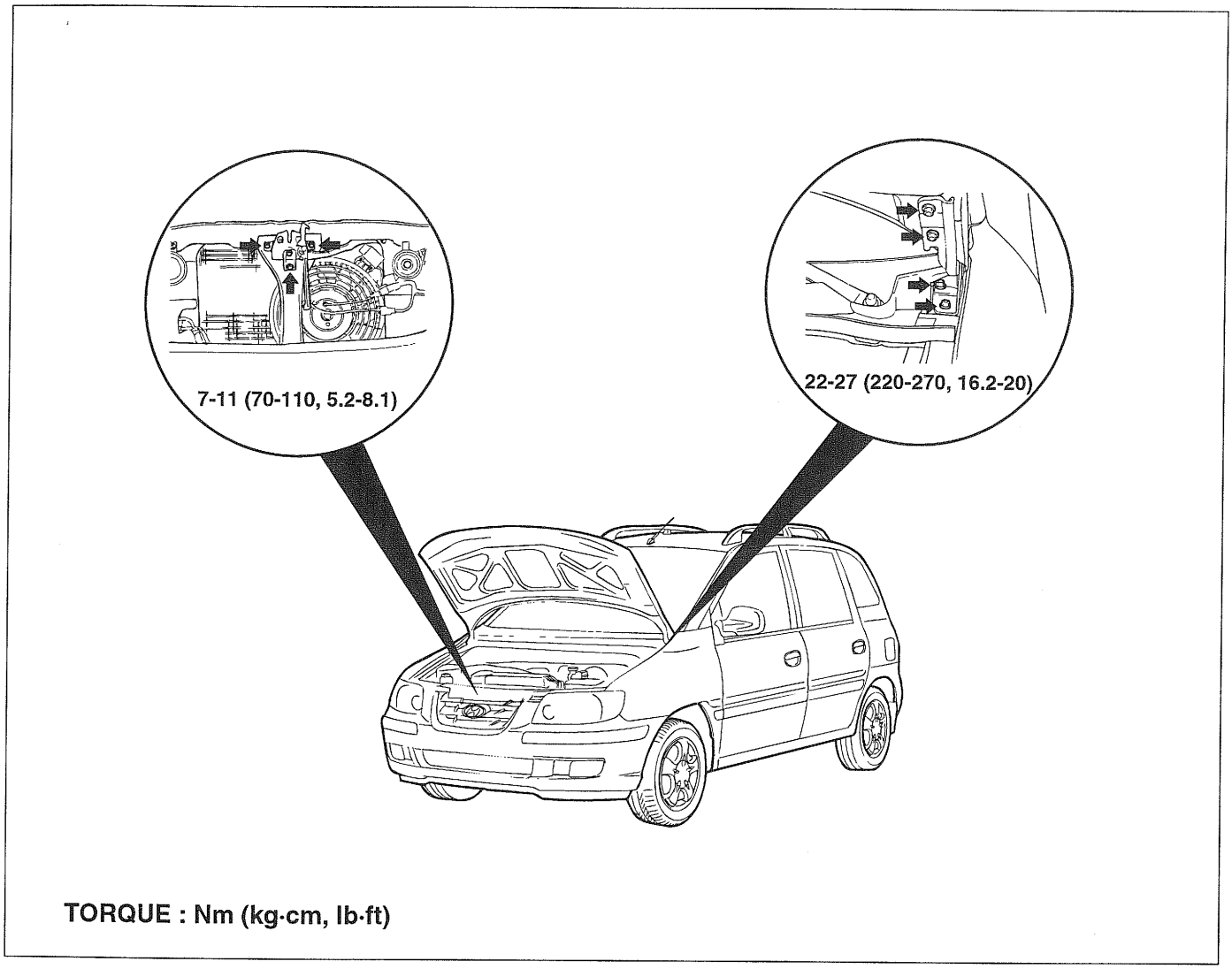

ESNB015A

HOOD ALIGNMENT ADJUSTMENT ESNB0200

1. Adjust the longitudinal and lateral positions of the hood by utilizing the holes in the hinge.
2. Turn the hood bumpers either clockwise or counter-clockwise to adjust the height of the hood.

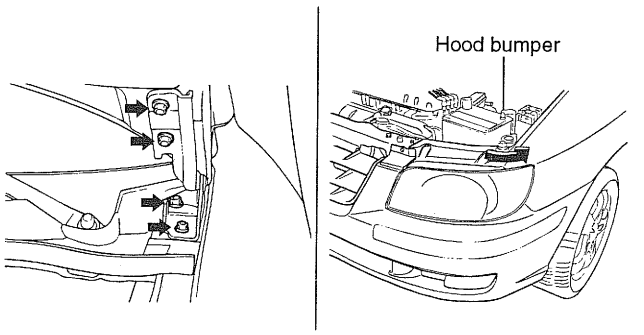

ESNB020A

3. Loosen the bolts holding the hood latch.

4. Adjust the alignment of the hood striker and the hood latch by adjusting the horizontal and vertical position of the latch and the height of the hood.

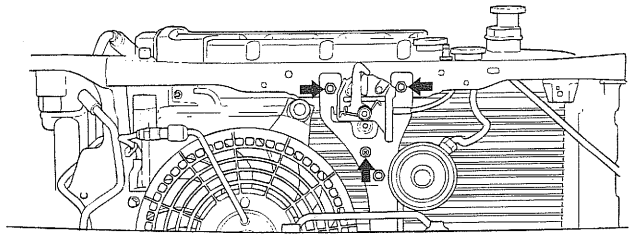

KSNB020B

TAIL GATE

REMOVAL AND INSTALLATION ESNB0250

1. Remove the high mounted stop lamp after removing the mounting bolts (2EA).

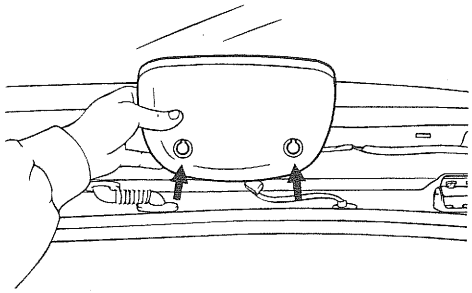

ESJA040N

2. Remove the upper trim from the tailgate frame.

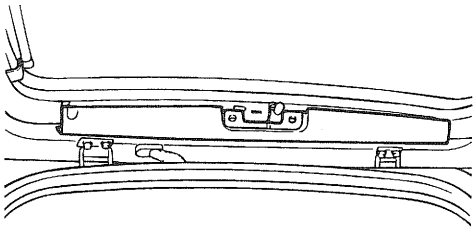

ESJA040A

3. Remove the 4 tapping screws and then remove the tailgate trim panel.

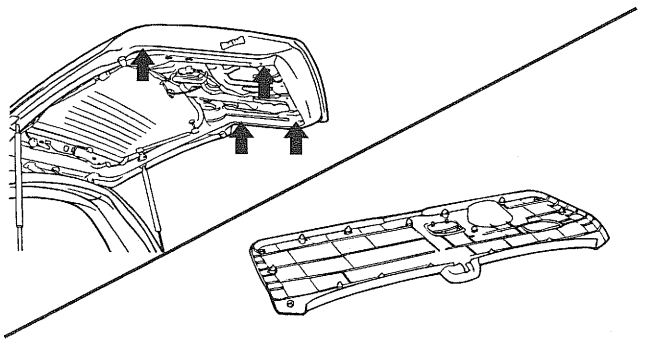

KSNB025A

4. Remove the side trim from the tailgate frame.

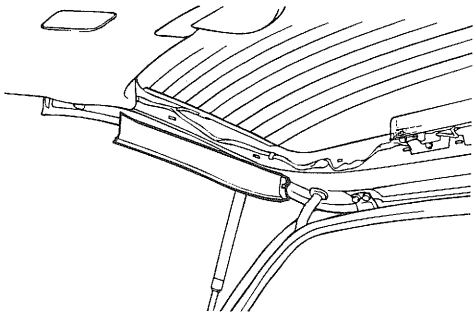

ESHA010B

5. Remove the tailgate garnish after removing 4 nuts.

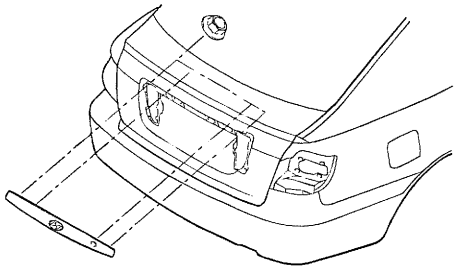

KSNB006A

6. Remove the license lamp assembly after removing 4 screws.

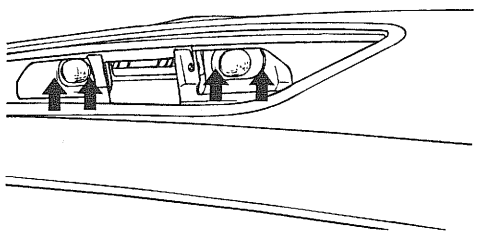

KSNB006B

7. Remove the tailgate outside handle after removing the mounting nuts (2EA), and then disconnect the rod.

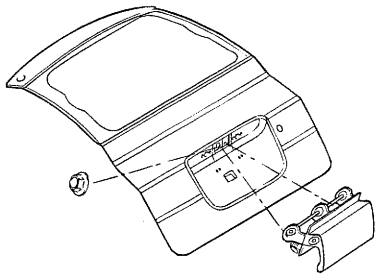

KSNB006C

8. Remove the key cylinder after removing the mounting bolt and then disconnect the rod.

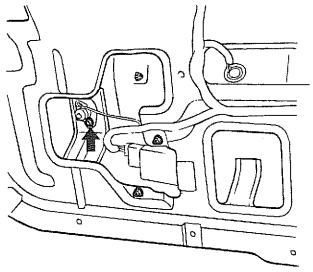

KSNB006D

9. Remove the rear wiper motor after removing the mounting nut.

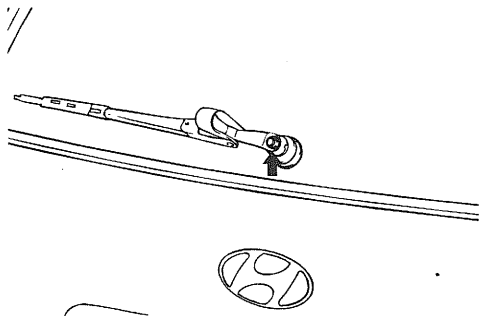

ESHA010I

Tightening torque :

10-13 Nm (100-130 kg·cm, 7.3-9.5 lb·ft)

10. Remove the rear wiper motor after removing the mounting bolts (2EA), and then disconnect the wire connectors.

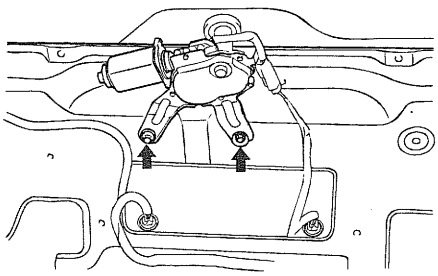

KSNB006E

11. Remove the tailgate actuator after removing the mounting nuts (2EA) and then disconnect the wire connectors and rod.

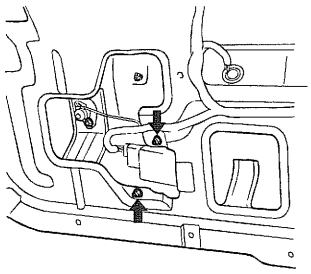

KSNB025B

12. Remove the tailgate latch after removing the mounting bolts (3EA).

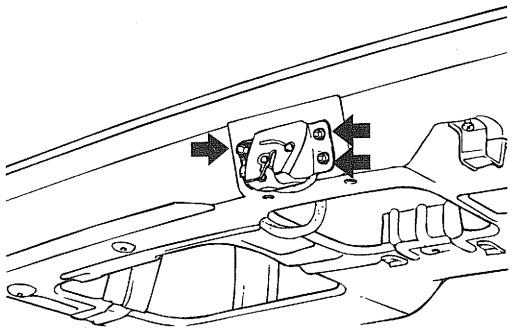

KSMB004G

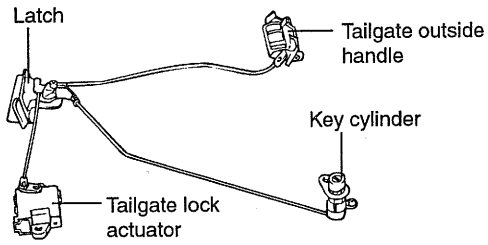

ESMB020A

13. Remove the tailgate lifter from ball joint.

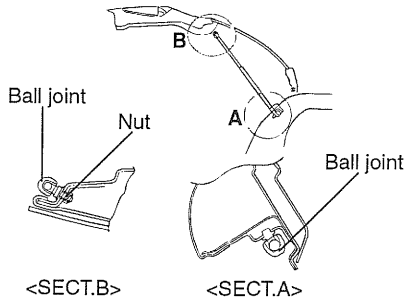

ESNB006F

Tightening torque

Tailgate hinge mounting bolts :

7-9 Nm (70-90 kg·cm, 5.2-6.6 lb·ft)

Tailgate lifter mounting bolts :

22-27 Nm (220-270 kg·cm, 16.2-20 lb·ft)

14. Remove the tailgate after removing the tailgate hinge mounting bolts.

15. Installation is the reverse of removal.

ADJUSTMENT ESMB0250

1. Adjustment the striker up or down, and right or left until the tailgate is flush with the rear edge of the body.

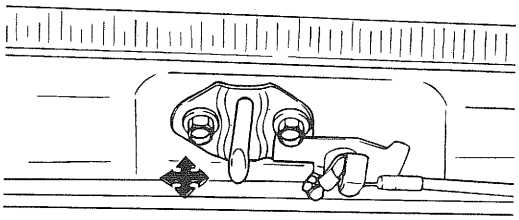

KSMB030A

2. Adjust the tailgate hinges up or down, and right or left as necessary to equalize the gap between the tailgate and body.

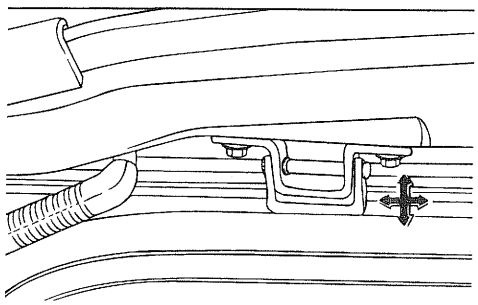

KSMB030B

FRONT DOOR

REMOVAL AND INSTALLATION ESNB0350

1. Loosen the screw holding the handle inside door and disconnect lock rods.

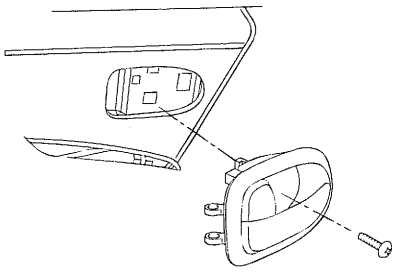

KSNB006H

2. Loosen the screws holding the door trim panel.

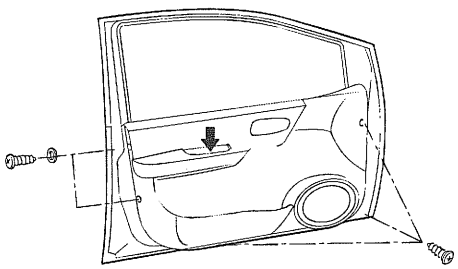

KSNB002R

3. Insert a trim panel remover between the trim fasteners and the door trim panel to pry off.
Disconnect the wire connectors from the front door.

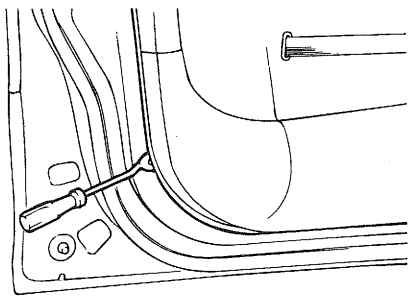

ESHA015D

4. Remove the door trim seal after removing door trim mounting bracket.

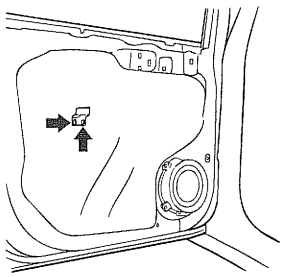

KSNB007A

5. Remove the front speaker after removing 4 screws.

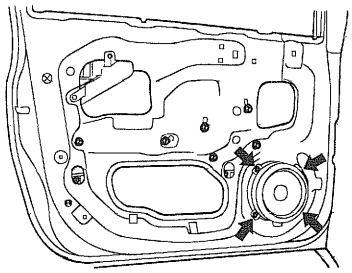

KSNB007B

6. Remove the front channel from the front door after removing 2 bolts.

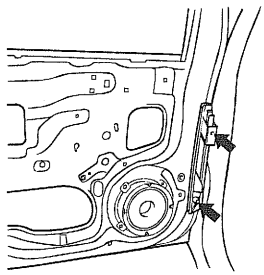

KSNB007D

Tightening torque :

8-12 Nm (80-120 kg·cm, 5.9-8.8 lb·ft)

7. Remove the front door glass from the power window regulator after removing 2 bolts.

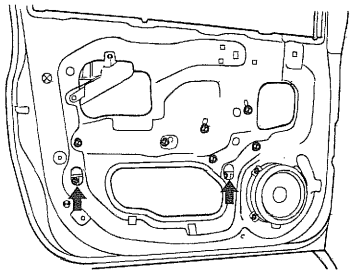

KSNB035A

Tightening torque :

8-12 Nm (80-120 kg·cm, 5.9-8.8 lb·ft)

8. Remove the front door window glass run.

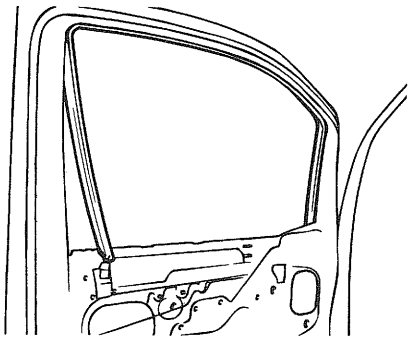

KSNB007C

9. Remove the safety lock rod cover after removing 2 screws.

10. Remove the rear channel from the front door after removing 2 bolts.

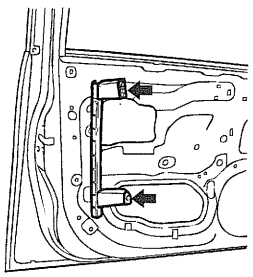

KSNB007E

Tightening torque :

8-12 Nm (80-120 kg·cm, 5.9-8.8 lb·ft)

11. Loosen the 6 bolts holding front door window regulator and remove the regulator assembly.

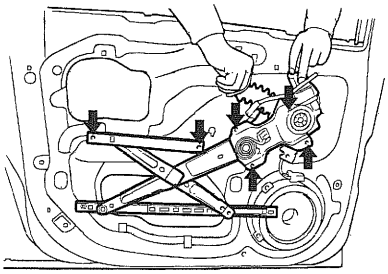

KSNB007F

12. Remove the door outside handle and key cylinder after removing bolts and rod.

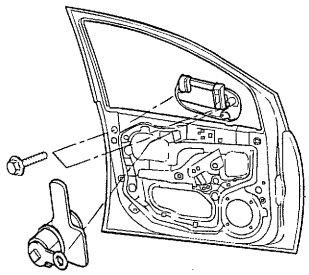

KSNB007G

13. Remove the front door lock actuator and latch assembly after removing the mounting screws and wire connectors.

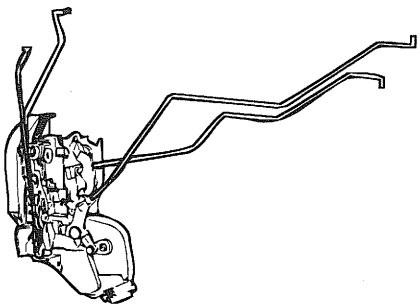

KSMB002D

14. Remove the outside rear view mirror.

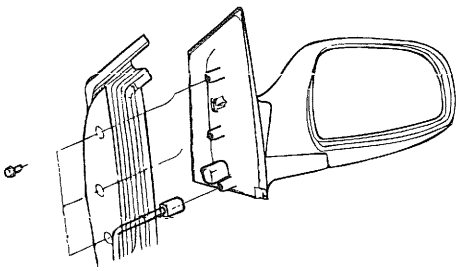

KTNB002B

15. Remove the door belt outside weatherstrip.

16. Remove the front door checker mounting bolts (2EA).

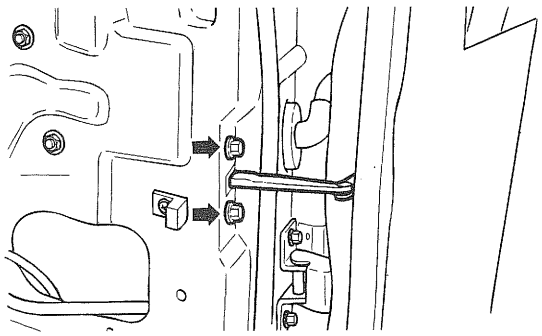

ESB9025K

Tightening torque :

8-12 Nm (80-120 kg·cm, 5.9-8.8 lb·ft)

17. Remove the front door hinge mounting bolts and disconnect the wire connector.
Remove the front door assembly.

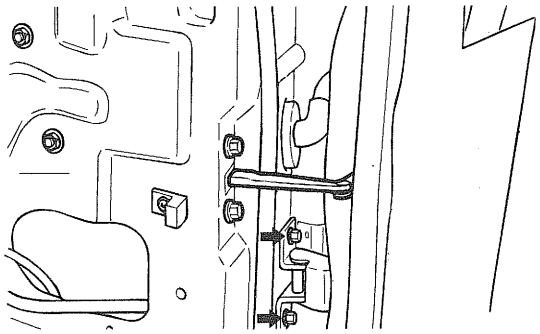

KSNB035B

Tightening torque :

22-27 Nm (220-270 kg·cm, 16.2-20 lb·ft)

18. Installation is the reverse of the removal process.
When installing the door trim seal, butyl tape should not be placed over the area when installing the door trim fastener.

ADJUSTMENT ESHA0400

DOOR POSITION

Check for a flush fit with the body, then check for an equal gap between the front and rear, top and bottom door edges and the body. The door and body edges should also be parallel.

⚠ ***CAUTION***

Attach protective tape to the fender edges where the hinge is installed.

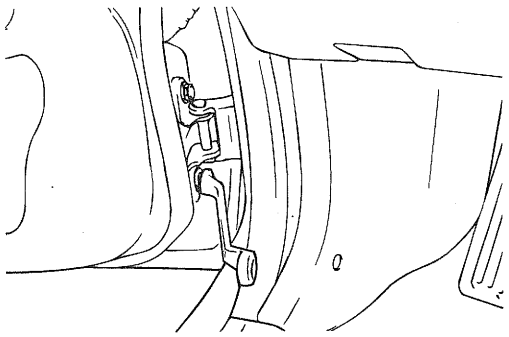

ESA9095A

DOOR STRIKER

Make sure the door is not loose, and that it latches securely without slamming. If necessary, adjust the door as follows :

1. Draw a line around the striker plate for reference.

2. Loosen the striker screws, and move the striker IN and OUT to make the latch fit tighter or looser. Move the striker UP and DOWN to align it with the latch opening. Then lightly tighten the screws and recheck.

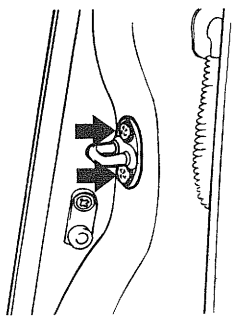

ESHA015N

NOTE

Hold the outside handle outward and push the door against the body to verify the striker provides a tight fit.

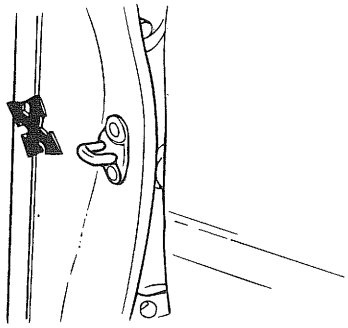

ESA9095B

REAR DOOR

REMOVAL AND INSTALLATION ESNB0400

1. Loosen the screw holding the handle inside the door and disconnect lock rods.

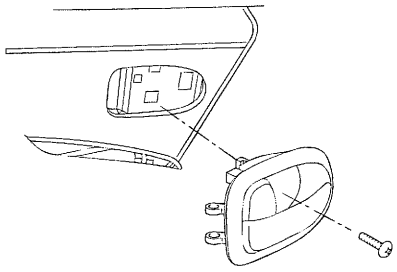

KSNB006H

2. Remove the 4 screws holding door trim panel.

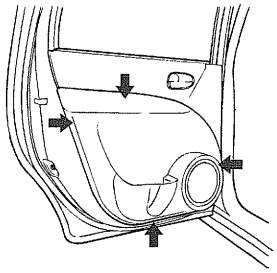

KSNB006I

3. Insert a trim panel remover between the trim fasteners and the door trim panel to pry off.
Disconnect the wire connectors from the rear door.

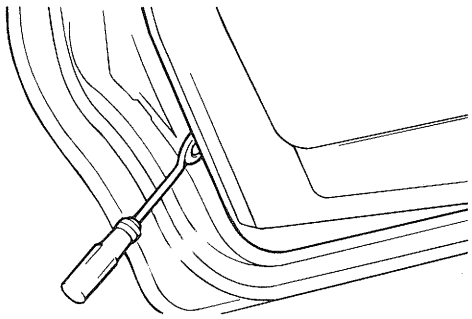

ESHA020D

4. Remove the door trim seal after removing the door trim mounting bracket.

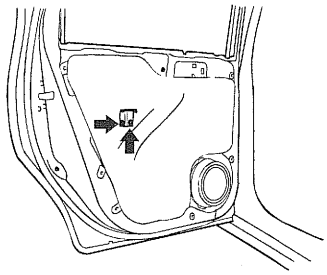

KSNB006J

5. Remove the rear door speaker after removing 4 screws.

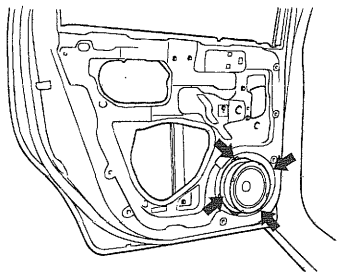

KSNB006K

6. Remove the rear channel from the rear door after removing 2 bolts.

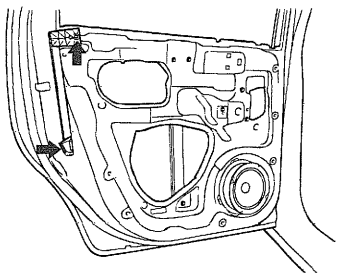

KSNB006L

Tightening torque :

8-12 Nm (80-120 kg·cm, 5.9-8.8 lb·ft)

7. Remove the 2 bolts holding rear door glass.

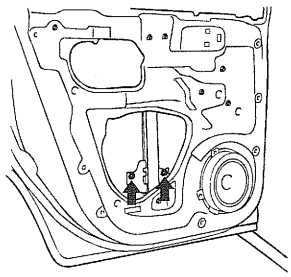

KSNB006M

Tightening torque :

8-12 Nm (80-120 kg·cm, 5.9-8.8 lb·ft)

8. Remove the rear door glass from the regulator assembly and then remove the rear door glass run.

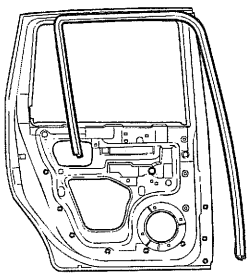

KSNB006O

9. Loosen the 3 nuts holding rear door window regulator and 3 nuts holding power window motor.
Remove the regulator assembly.

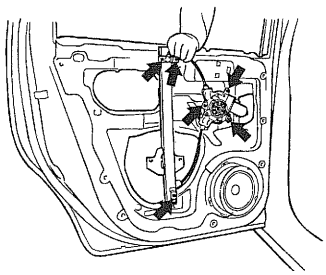

KSNB006N

10. Remove the outside handle after removing 2 bolts.

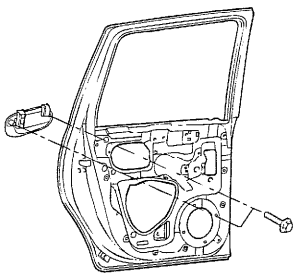

KSNB006P

11. Remove the 3 screws holding rear door latch.

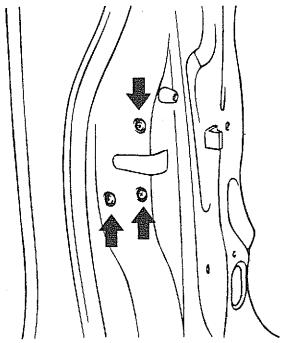

ESJA060J

12. Disconnect rod to outside handle and remove the rear door lock and latch assembly.

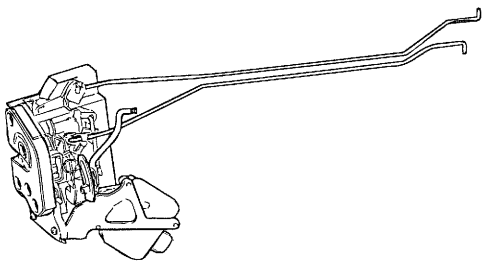

KSMB002E

13. Remove the door belt outside weatherstrip.

14. Remove the rear door checker mounting bolts (2EA).

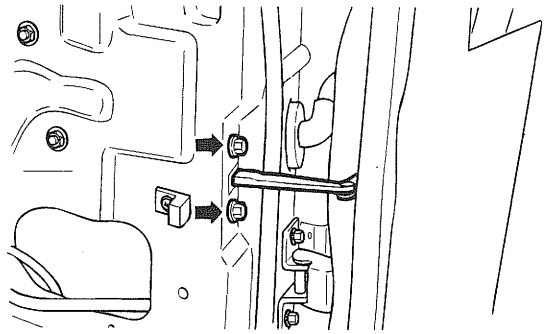

ESB9025K

Tightening torque :

8-12 Nm (80-120 kg·cm, 5.9-8.8 lb·ft)

15. Remove the rear door hinge mounting bolts and disconnect the wire connector.
Remove the rear door assembly.

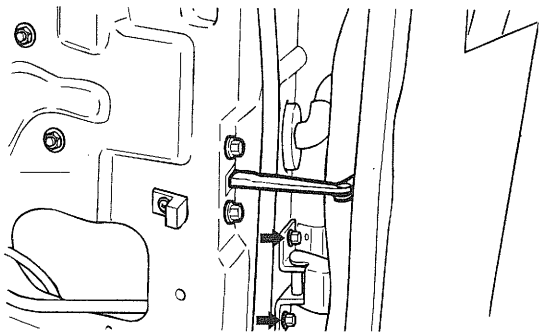

KSNB035B

Tightening torque :

22-27 Nm (220-270 kg·cm, 16.2-20 lb·ft)

16. Installation is the reverse of the removal process.
When installing the door trim seal, butyl tape should not be placed over the area installing the door trim fastener.

ADJUSTMENT ESHA0500

DOOR POSITION

Check for a tight fit with the body, then check for an equal gap between the front and rear, top and bottom door edges and the body. The door and body edges should also be parallel.

DOOR STRIKER

Make sure the door is not loose, and that it latches securely without slamming. If necessary, adjust the door as follows :

1. Draw a line around the striker plate for reference.
2. Loosen the striker screws, and move the striker IN and OUT to make the latch fit tighter or looser. Move the striker UP and DOWN to align it with the latch opening. Then lightly tighten the screws and recheck.

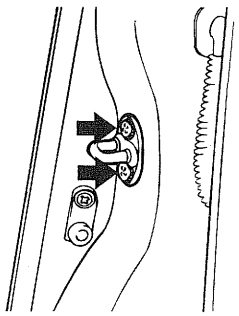

ESHA015N

NOTE

Hold the outside handle outward and push the door against the body to verify that the striker provides a tight fit.

SUN ROOF

COMPONENTS ESNB0450

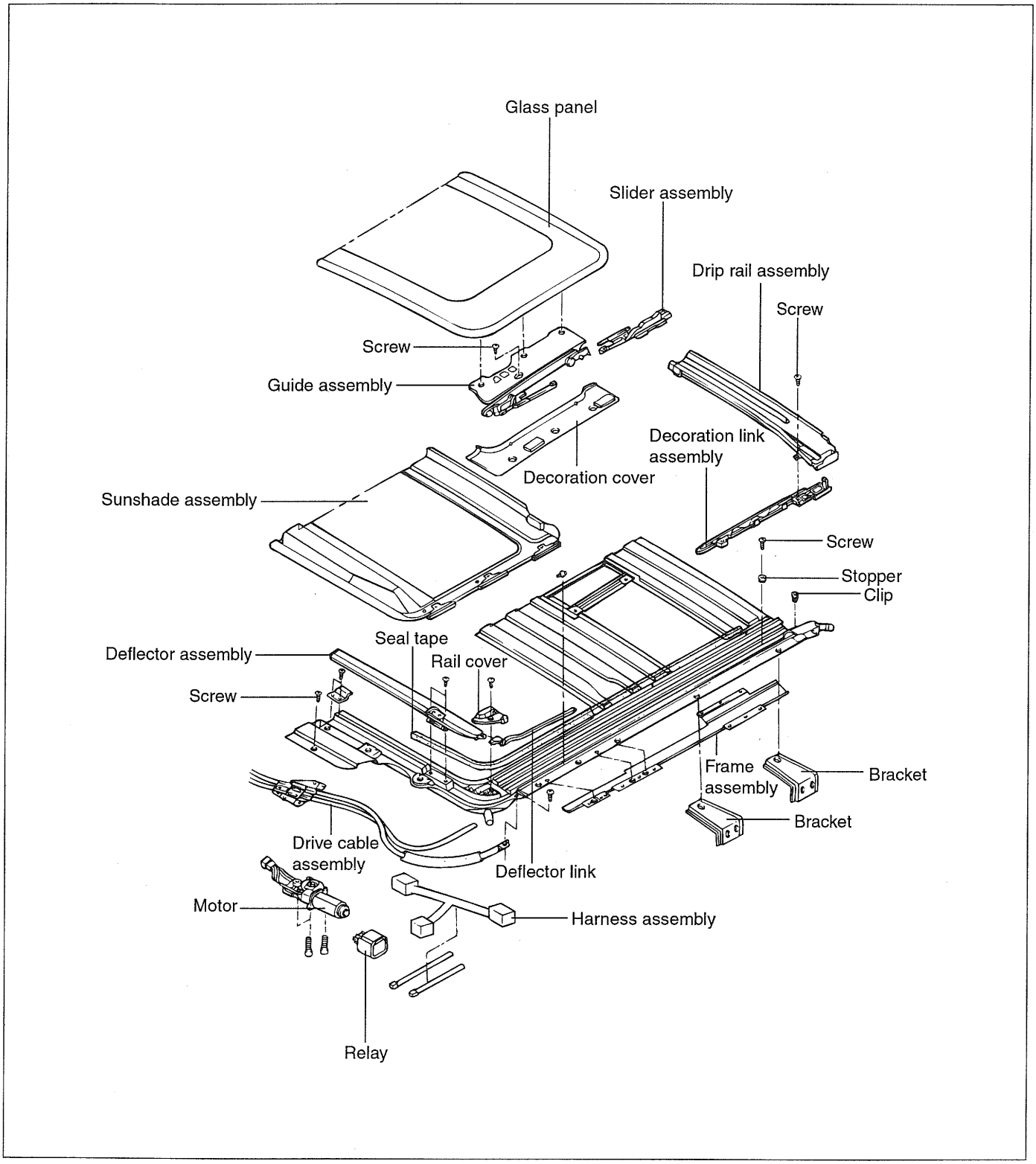

ESNB045A

REMOVAL ESHA0700

1. To remove the sunroof, first remove the following parts :
   1) Overhead console lamp.
   2) Sun visor and grip handle.
   3) Pillar trims.
2. Remove the decoration cover and the glass panel.

Tightening torque

Glass panel mounting nuts :

4-6 Nm (40-60 kg·cm, 2.9-4.4 lb·ft)

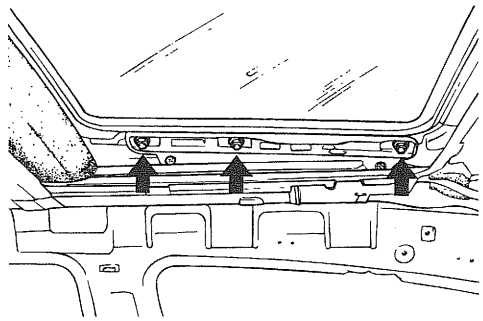

ESA9011K

3. Disconnect the drain hose.

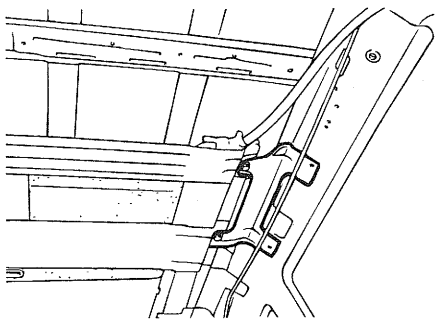

ESHA027A

4. Loosen the bolts and nuts holding the sunroof and then remove the sunroof assembly.

Tightening torque

Sunroof mounting bolts:

7-11 Nm (70-110 kg·cm, 5.1-8.0 lb·ft)

Sunroof mounting nuts:

4-6 Nm (40-60 kg·cm, 2.9-4.4 lb·ft)

NOTE

When removing the sunroof assembly, carefully pull out the assembly to avoid damaging other parts.

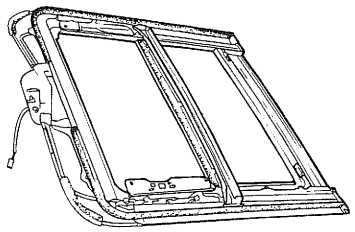

ESA9011B

DISASSEMBLY ESHA0750

1. Remove the drip rail.

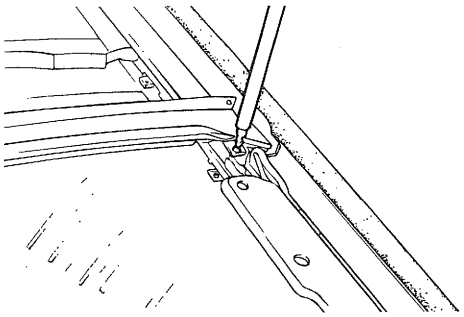

ESA9011C

2. Remove the stopper.

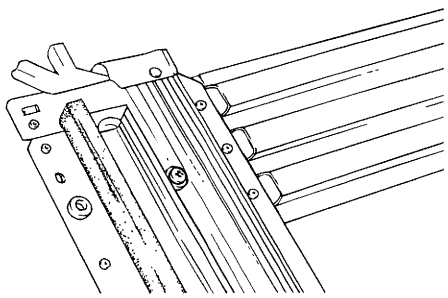

ESA9011D

3. Remove the sun shade.

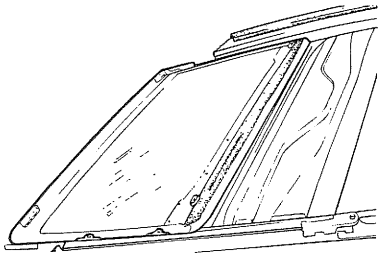

ESA9011E

4. Remove the guide assembly.

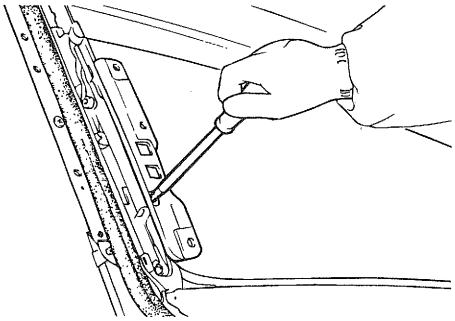

ESA9011F

5. Remove the deflector.

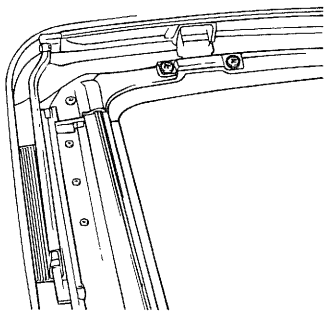

ESA9011G

6. Remove the motor assembly.

CAUTION

When removing the motor, the slider assembly should always be in a fully closed position. If there is discrepancy between the glass position and the motor pulley in a fully closed position, the sunroof will not operate correctly.

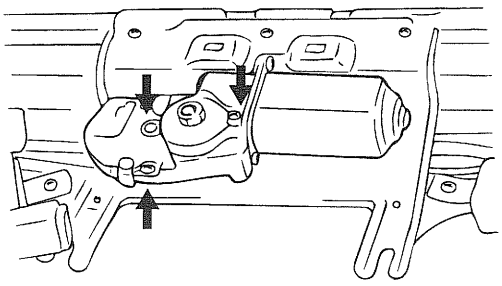

ESA9060N

INSTALLATION ESHA0850

Installation is the reverse of removal.

NOTE

Check that the limit switches (LS1 and LS2) of the motor are fully closed. Align the guide roller center and slider mating marks in the fully closed position.

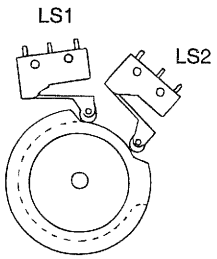

ESA9070D

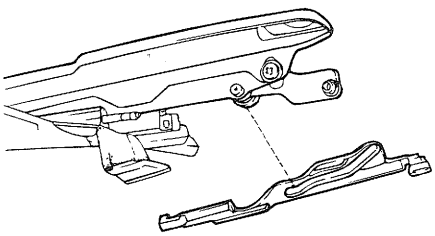

ESA9011H

VERIFY OPERATING CONDITION AFTER INSTALLATION ESHA0900

If the glass panel moves slowly, check and adjust.

1. Make sure the battery is fully charged.
2. Make sure that the sunroof sliding unit is free of abrasive materials.
3. Make sure that, when the glass panel opens, the rear of the panel does not jam against the roof panel. If there is interference, fully open the glass panel and move the stopper forward.

> **NOTE**
> *If the stopper is moved forward too far, it may cause malfunction or leaks. Make sure the gap between the glass panel and roof panel is not more than 0.3 mm (0.012 in.).*

4. Measure the driving force of the motor, and adjust it to 15-25 kg (33.1-55.7 lb) with the torque adjustment nut on the motor.

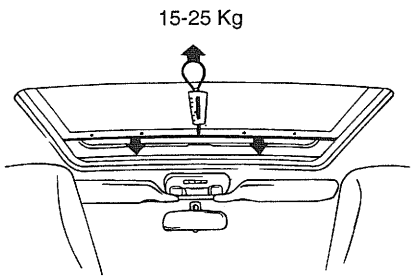

ESA9075D

5. After adjustment, be sure to lock the nut with the pawl washer.

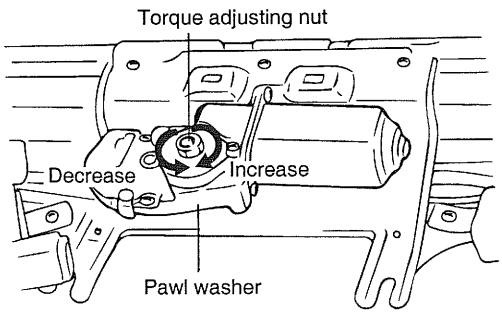

ESA9075E

ADJUSTMENT ESHA0950

Adjust the difference between the height of the glass panel and the roof panel.

Front side : 0 (+0, –1.0) mm

Rear side : 0 (+1, +0) mm

If the difference is not as specified, adjust using the following procedure.

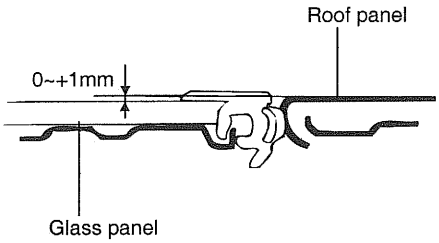

ESA9011J

1. Loosen the front screw and rear screw. Adjust the height between the glass panel and roof panel.

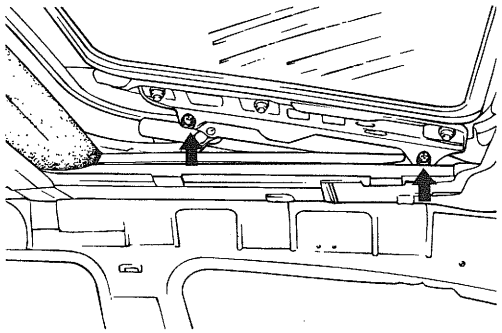

ESA9011I

2. Loosen the nuts holding the glass panel and adjust the gap between the glass panel and roof panel.

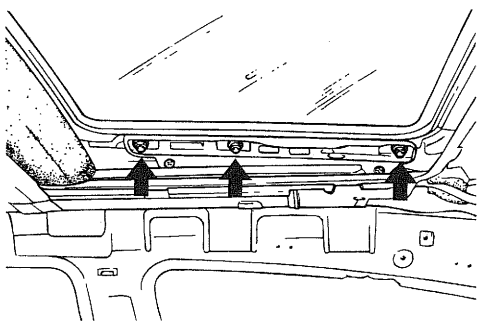

ESA9011K

OUTSIDE REAR VIEW MIRROR

REMOVAL ESNB0550

Remove the 3 bolts holding outside rear view mirror and disconnect the wire connector.

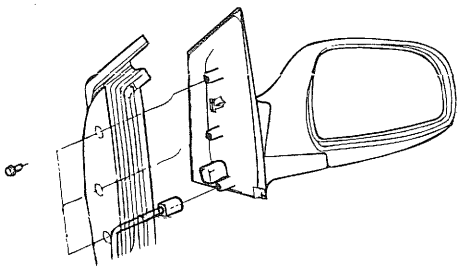

KTNB002B

DISASSEMBLY ESMB0850

CAUTION

Wear gloves to remove and install the mirror holder.

1. Insert flat bladed screwdriver between the outside rear view mirror holder and the mirror assembly.

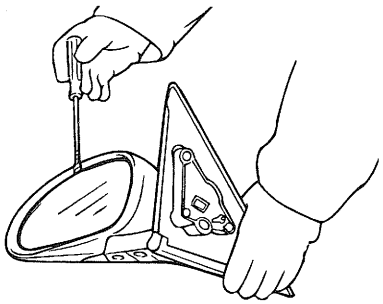

ESA9030B

CAUTION

When prying with a flat bladed screwdriver, wrap it with a shop towel to prevent damage.

2. Remove the outside rear view mirror actuator from the outside rear view mirror housing.

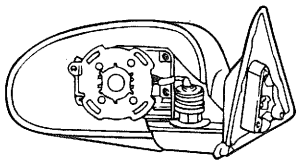

ESA9030C

3. Installation is the reverse of removal.

INTERIOR

CONSOLE

COMPONENTS ESNB0600

<FRONT CONSOLE>

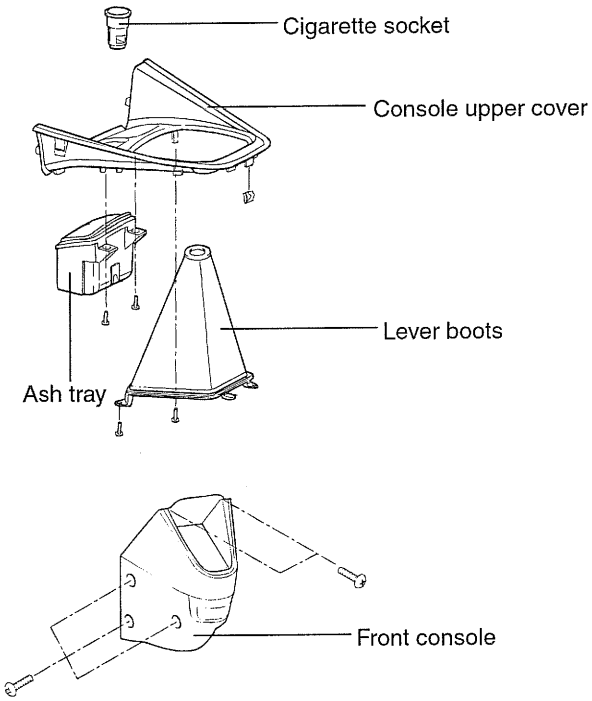

<REAR CONSOLE>

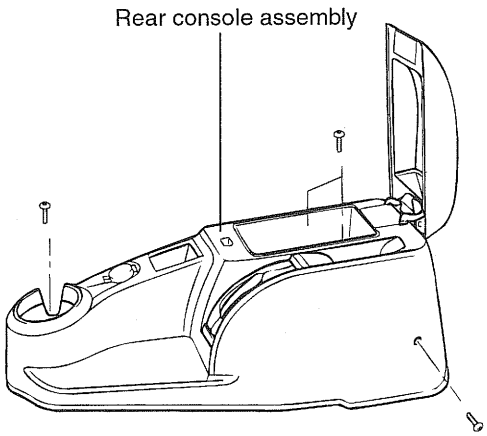

ESNB060A

REMOVAL AND INSTALLATION ESNB0650

1. Pry the front console upper cover loose with a flat-tip screwdriver and disconnect the wire connector to cigarette socket.

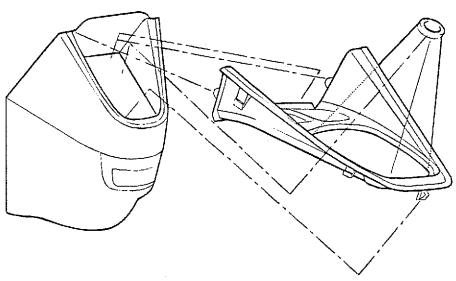

KSNB008G

2. Remove the 8 screws holding the front console assembly and then pull the front console out.

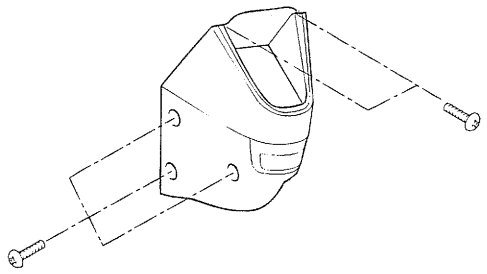

KSNB008H

3. Remove the front seat assembly and then loosen the 5 screws holding rear console assembly.

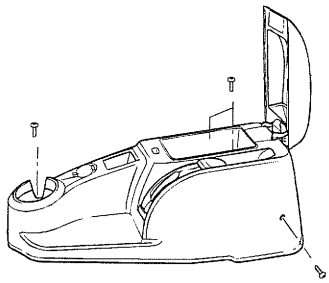

KSNB008A

4. Remove the rear console assembly from the mounting bracket.

5. Installation is the reverse of removal.

CRASH PAD

COMPONENTS ESNB0700

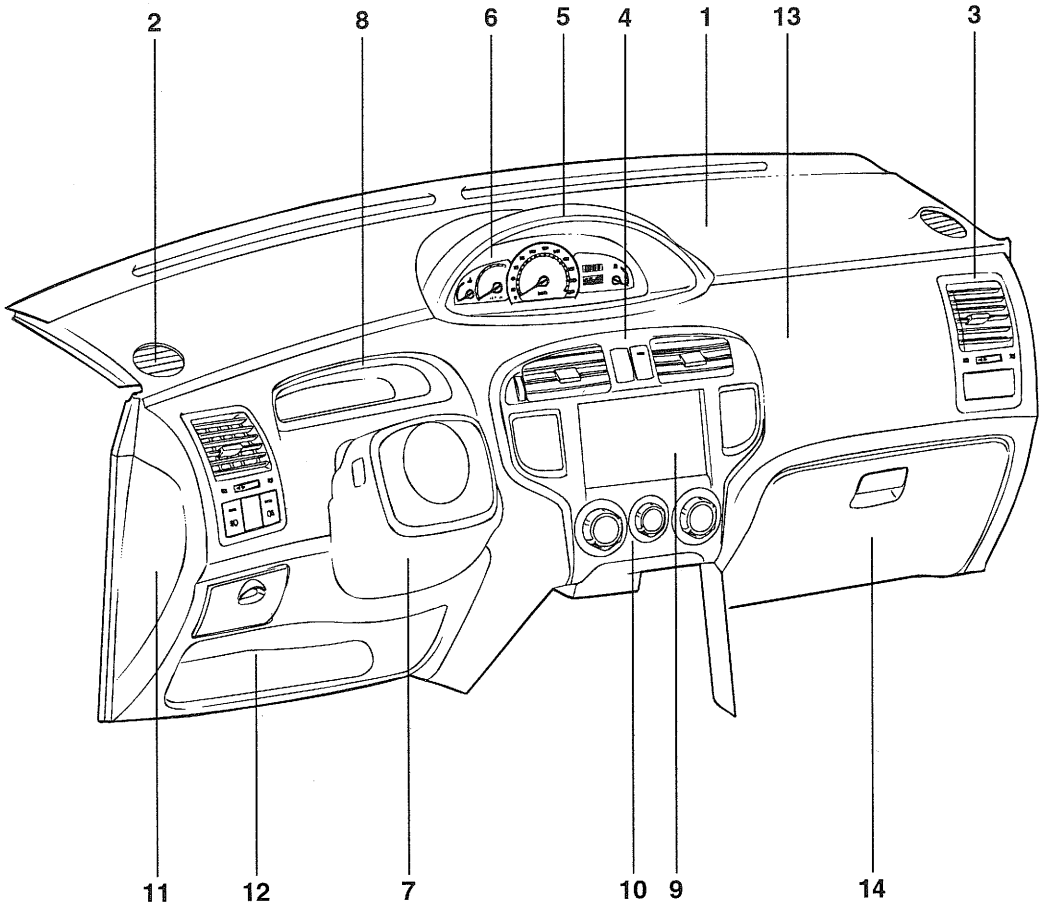

1. Crash pad assembly
2. Side defroster garnish
3. Side air vent
4. Center facia panel
5. Cluster facia panel
6. Cluster
7. Steering column shroud
8. Tell-tale lamp assembly
9. Audio unit
10. Heater control unit
11. Crash pad side cover
12. Crash pad lower panel
13. Passenger side air bag
14. Glove box

ESNB070A

REMOVAL AND INSTALLATION ESNB0750

1. Disconnect the negative (-) battery terminal.
2. Disconnect the wire connectors from the front seats and then remove the front seats.

⚠ CAUTION

Take care not to scratch the trim when removing the front seats.

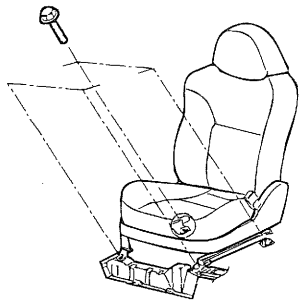

KSMB008G

3. Pry loose the front pillar trim with a flat-tip screwdriver.

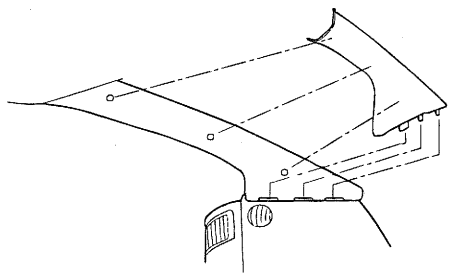

KSNB001E

4. Pull the rear console assembly out after removing 5 screws.

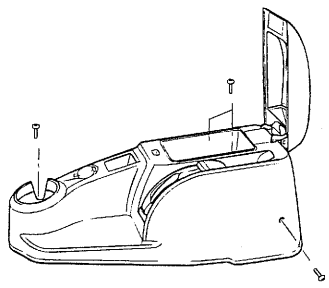

KSNB008A

5. Remove the air bag module.

⚠ CAUTION

For instructions on the removal of the air bag module and clock spring, refer to RT group.

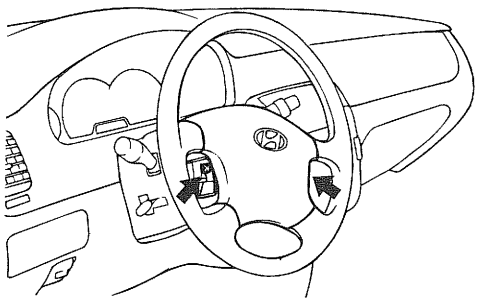

ESHA040M

6. Remove the steering wheel.

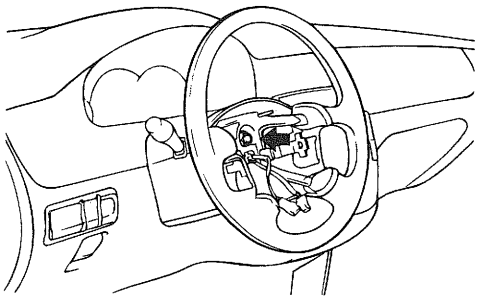

ESHA040N

7. Remove the 3 screws holding the steering column lower shroud and then remove the steering column lower and upper shroud.

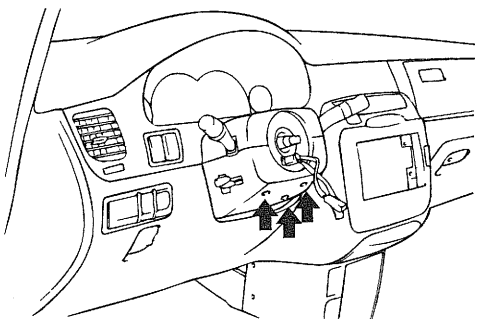

ESHA040O

8. Disconnect the wire connectors and remove the multifunction switch(3 screws).

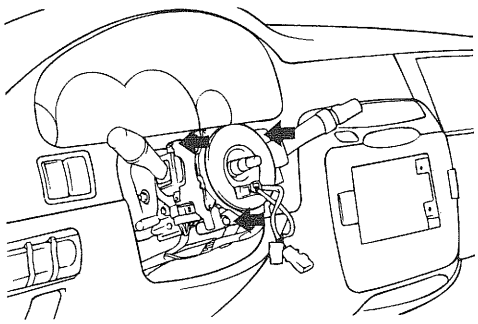

ESHA040P

9. Remove the cowl side trim.

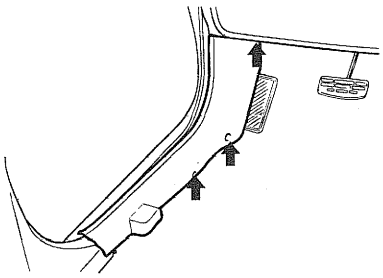

KSNB008B

10. Remove the crash pad side cover.

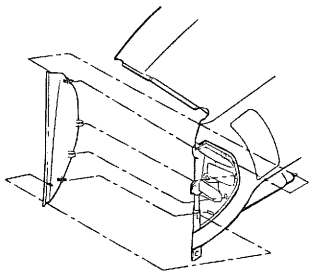

KSNB008C

11. Remove the crash pad lower panel after removing 2 screws and a bolt.

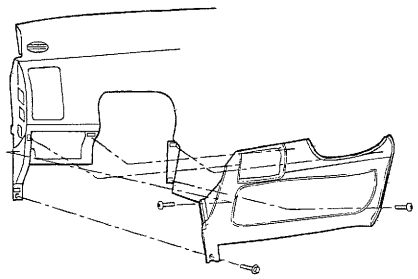

KSNB008D

12. Pry the tell-tale lamp assembly loose with a flat-tip screwdriver and disconnect the wire connector.

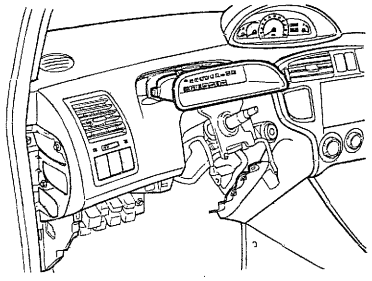

KSNB008E

13. Pry the cluster facia panel loose with a flat-tip screwdriver.

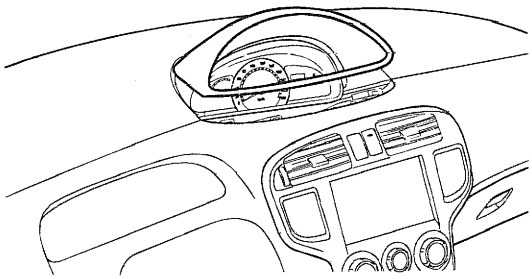

KSNB008R

14. Remove the cluster assembly (4 screws).

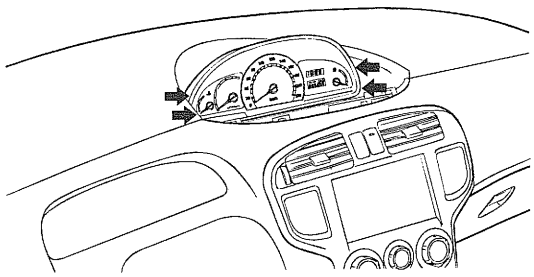

KSNB008F

5. Pry the front console upper cover loose with a flat-tip screwdriver and disconnect the wire connector to cigarette socket.

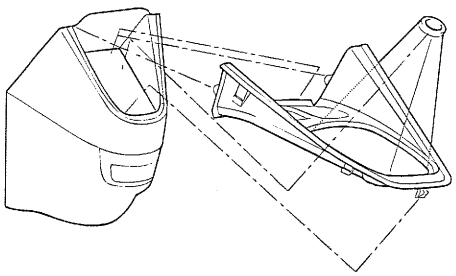

KSNB008G

16. Remove the 8 screws holding front console assembly and pull the front console out.

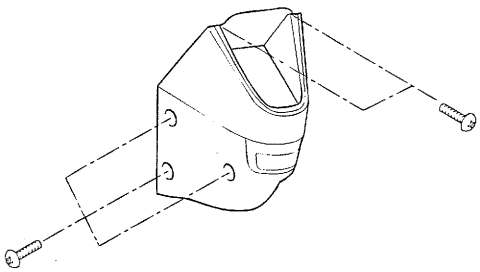

KSNB008H

17. Remove the screw holding center facia panel and disconnect the wire connectors.

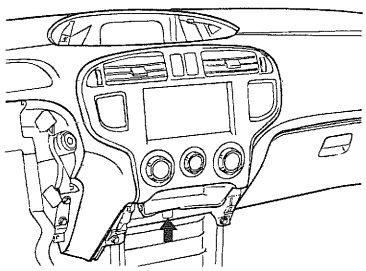

KSNB008J

18. Remove the audio unit (4 screws) and disconnect the wire connectors.

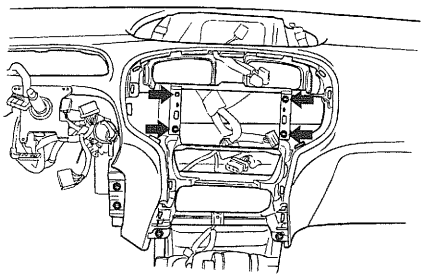

KSNB008I

19. Remove the glove box.

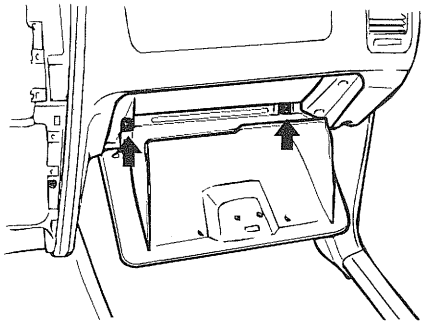

KSMB008Q

20. Remove the 5 bolts holding driver side main crash pad.

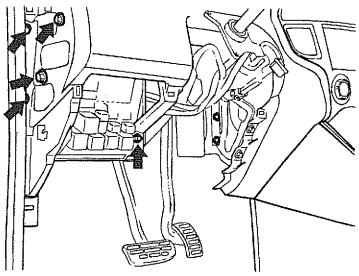

KSNB008K

21. Remove the 4 bolts holding center main crash pad.

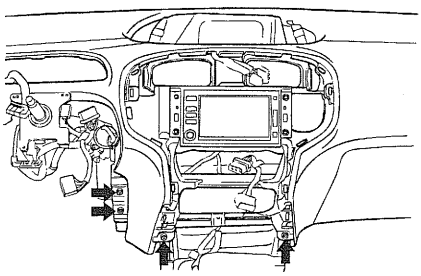

KSNB008L

22. Remove the 7 bolts holding passenger side main crash pad.

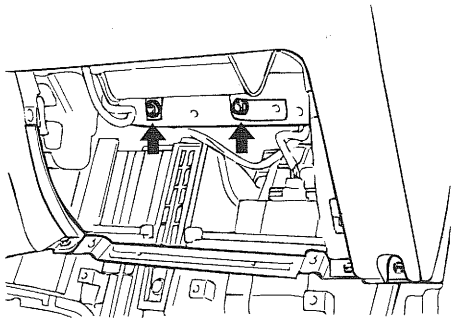

KSMB008U

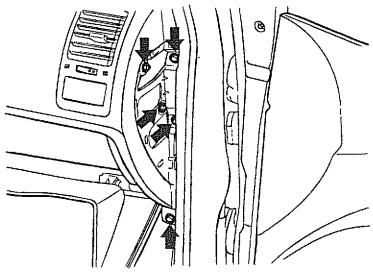

KSNB008M

23. Remove the main crash pad and disconnect the wire connectors.

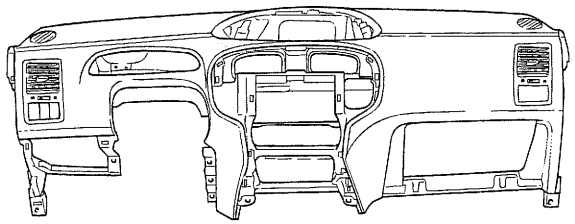

KSNB008N

24. Installation is the reverse of removal.
Connect all wire connectors securely.

INTE TRIM

REMOV NB0800

FRONT PIL TRIM

Pry the front pil r trim loose with a flat-tip screwdriver.

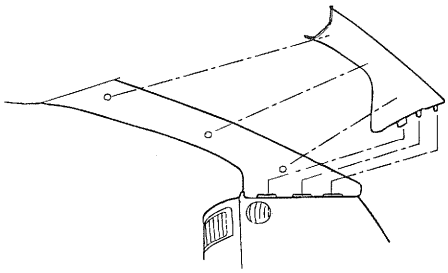

KSNB001E

COWL SIDE TRIM

Remove the screws and bolt holding the cowl side trim and remove it.

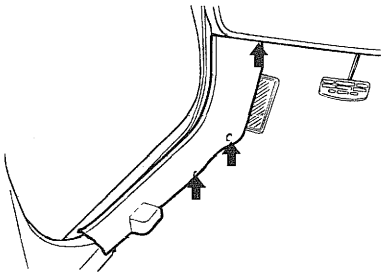

KSNB008B

FRONT DOOR SCUFF STEP PLATE

Pry the front door scuff step plate loose with a flat-tip screwdriver.

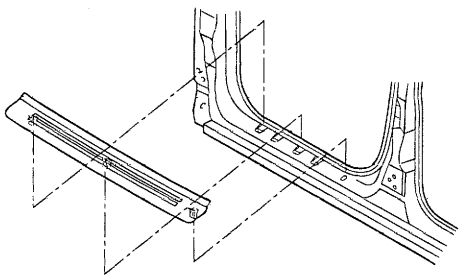

KSNB008V

REAR DOOR SCUFF TRIM

1. Remove the bolt holding rear seat belt lower anchor.
2. Remove the rear door scuff trim after removing 2 screws.

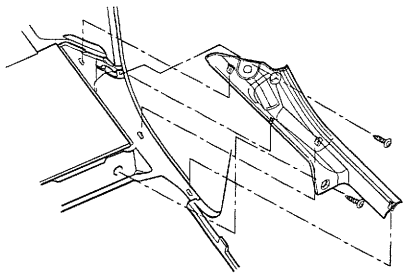

KSNB001G

REAR DOOR SCUFF STEP PLATE

Pry the rear door scuff step plate loose with a flat-tip screwdriver.

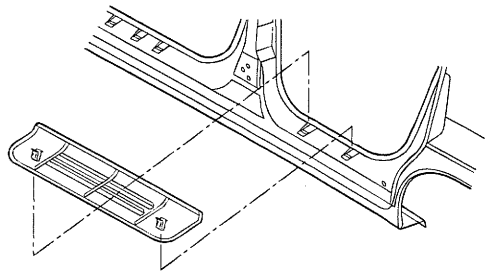

KSNB001I

CENTER PILLAR TRIM

1. Remove the bolt holding the seat belt lower anchor and pry loose the center pillar lower trim.

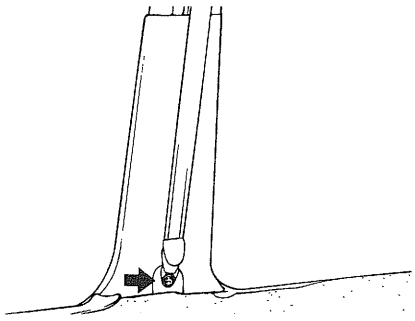

ESHA040I

2. Remove the bolt holding the seat belt upper anchor and pry loose the center pillar upper trim.

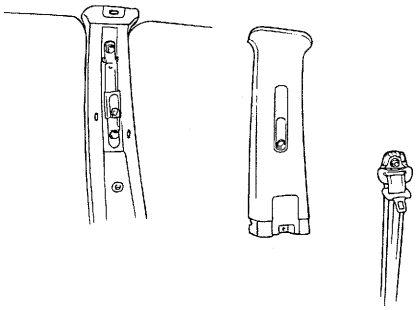

ESHA045B

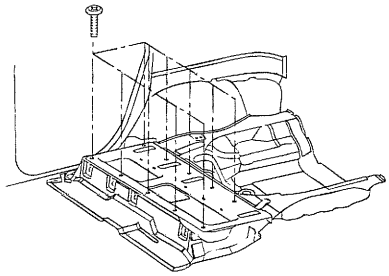

KSNB008W

REAR TRANSVERSE TRIM

Remove the 4 screws holding the rear transverse trim and remove the trim.

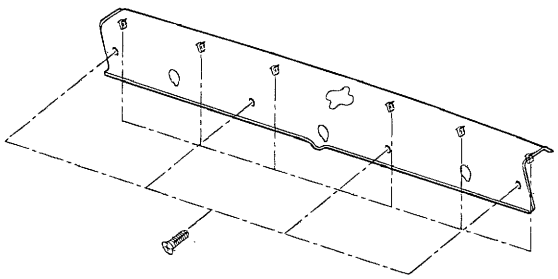

KSNB001H

LUGGAGE TRIM

1. Remove the 4 screws holding the luggage side trim and remove the trim.

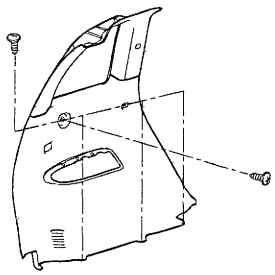

KSNB001F

2. Remove the 11 screws holding luggage floor trim and remove the trim.

REAR PILLAR TRIM

1. Remove the bolt holding rear seat belt upper anchor.
2. Pry the rear pillar trim loose with a flat-tip screwdriver.

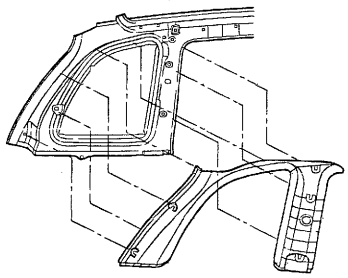

KSNB008X

HEADLINER

1. To remove the headliner, first remove the following parts :
   - Overhead console and sun visor.

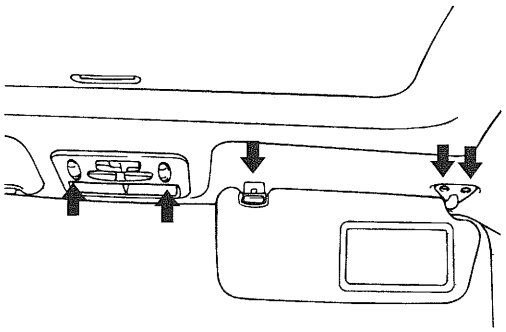

ESKA040B

- Room lamp and assist grip.

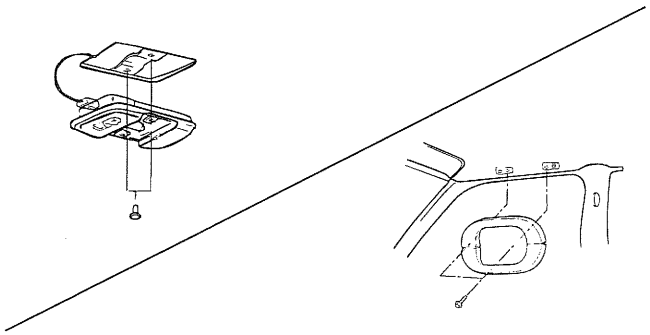

KSNB008Y

2. Remove front pillar trim, center pillar upper trim and rear pillar trim.

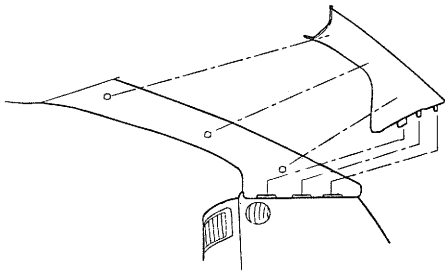

KSNB001E

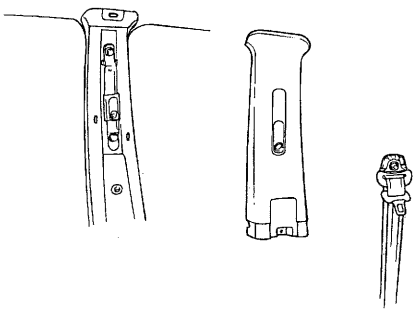

ESHA045B

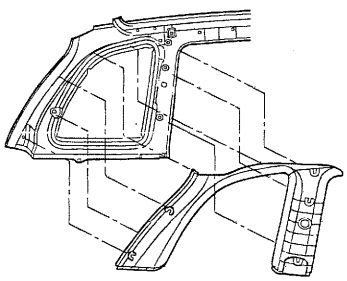

KSNB008X

3. Remove the headliner after removing the clip holding the headliner.

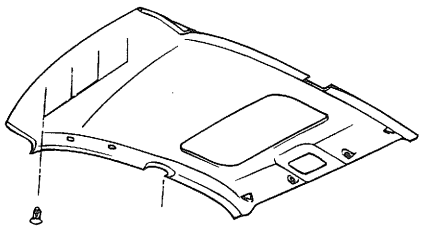

KSNB002Q

4. Installation is the reverse of removal.

WINDSHIELD GLASS

COMPONENTS ESNB0850

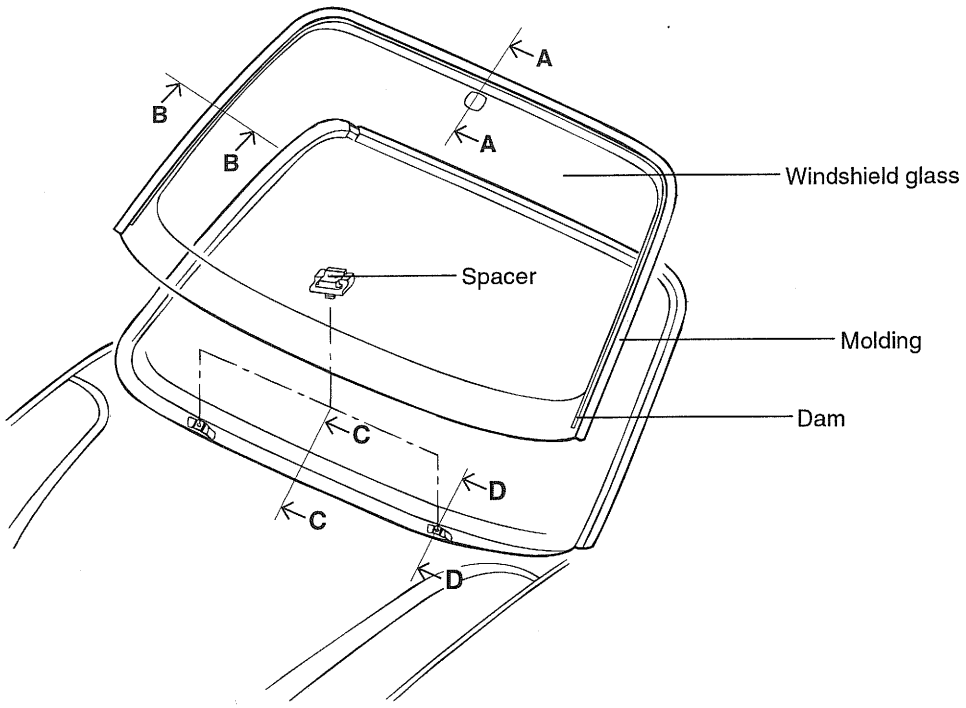

Unit : mm

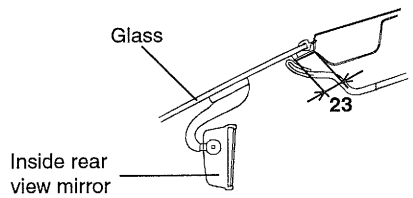

SECT. A-A

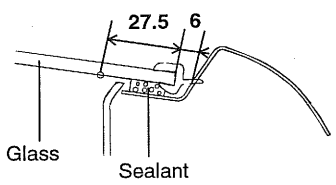

SECT. B-B

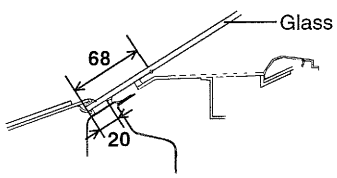

SECT. C-C

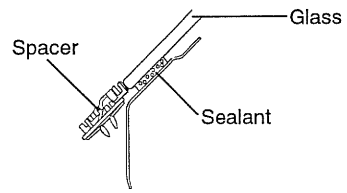

SECT. D-D

ESNB085A

REMOVAL ESNB0900

1. To remove the windshield, first remove the following parts :
   1) Front pillar trims
   2) Inside rear view mirror
   3) Wiper arms
   4) Weatherstrip and cowl top cover
   5) Windshield glass molding

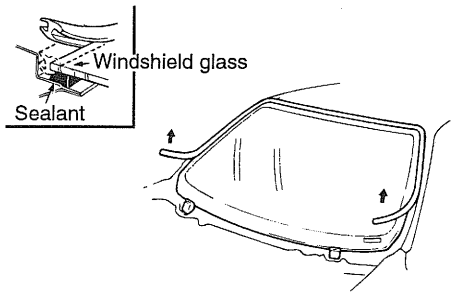

ESNB090A

2. Use the special tool (09861-31100) to cut through the sealant.

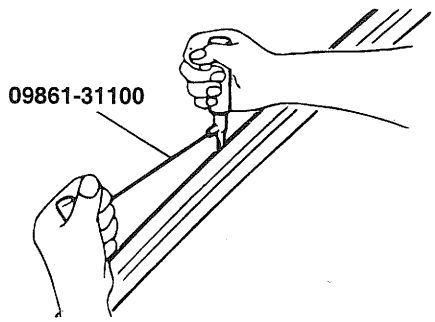

ESDA230B

3. Make mating marks on the glass and body if the glass is to be reinstalled.

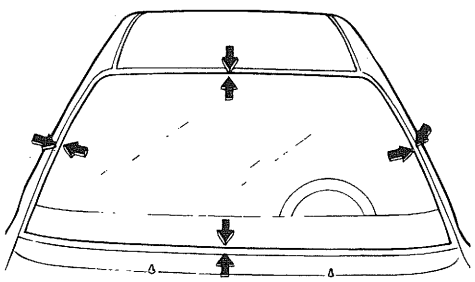

KSHA125A

4. Take out the windshield glass with the special tool (09861-31400).

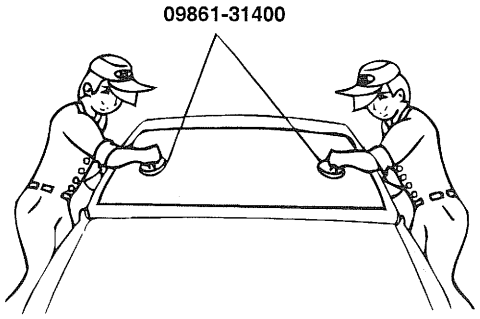

ESDA230D

INSTALLATION ESNB0950

1. Using a cutter knife or the special tool (09861-31200), scrape the old sealant smoothly to a thickness of about 2 mm (0.08 in.) on the bonding surface around the entire windshield flange.

⚠ ***CAUTION***

Be careful not to remove more adhesive than necessary, and also not to damage the paintwork on the body surface with the knife. If the paintwork is damaged, repair the damaged area with touch-up paint.

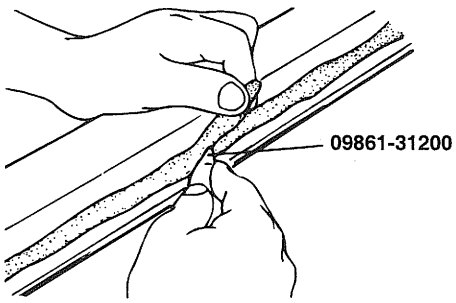

ESDA235B

2. Clean the body bonding surface with a sponge dampened in alcohol or wax and grease remover.
3. Install the spacer in the windshield aperture.

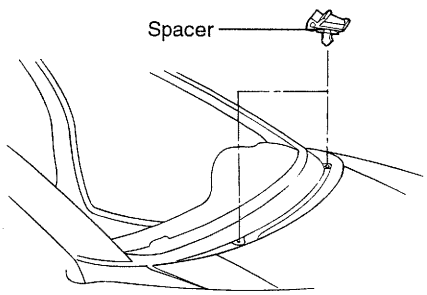

ESNB090B

4. Center a new windshield glass in the opening. Mark the location by marking lines across the glass and body with a grease pencil at the four points as shown.

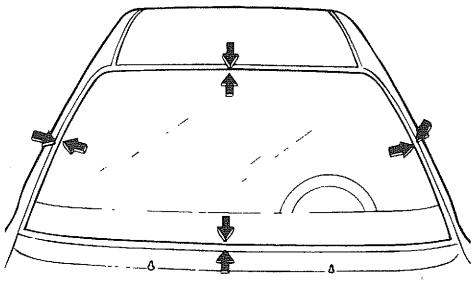

KSHA125A

5. Install the windshield glass molding without any gaps.

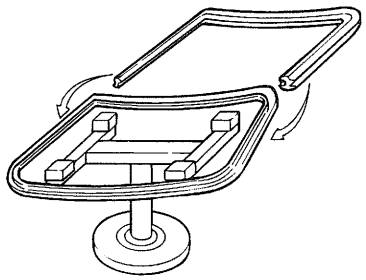

KSHA130B

6. Glue the rubber dam to the inside surface of the windshield glass around the entire edge as shown, to contain the sealant during installation.

Part	"A"	Remarks
Upper	13.5 mm	Glass molding sub
Side	13.5 mm	

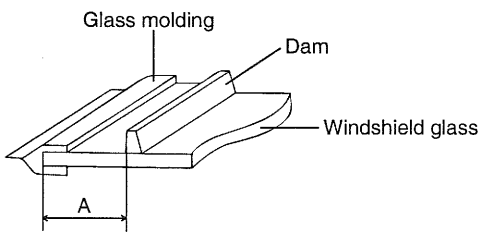

ESHA050E

7. Apply a light coat of glass primer to the outside of the dam.

NOTE

1. *Never touch the surface applied primer with your hand.*
2. *Do not apply body primer to the glass.*
3. *Keep water, dust, and abrasive materials away from the surface applied primer.*

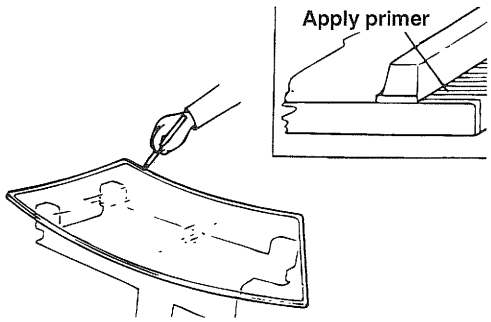

ESDA235E

8. Apply a primer to the lower glass as shown.

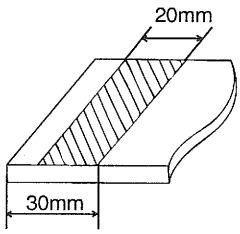

ESHA050F

9. Apply a sealant around the edge of the glass.

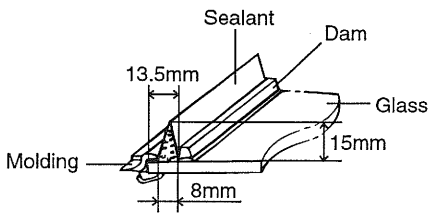

UPPER AND SIDE

ESNB095A

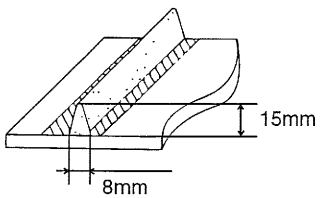

LOWER

ESNB095B

NOTE

Apply the adhesive within 5 minutes after applying the primer to the glass.

10. Apply a light coat of body primer to the original sealant remaining around the window opening flange. The glass should be installed within 5 minutes after you apply the primer.



ESDA235F

11. Using suction cups or the special tool (09861-31400), lower the glass over the opening, align it with the marks made in step 4 and set it down on the sealant.

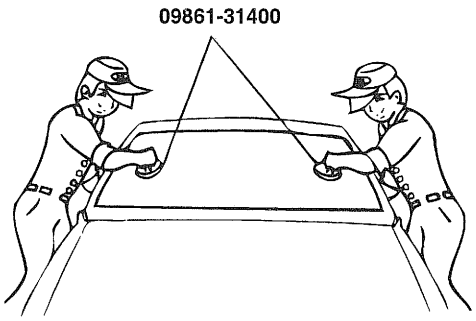

ESDA230D

12. Scrape or wipe excess adhesive off with a putty knife or gauze. Fill all cavities around the windshield glass.

13. Perform a water-leak test for the windshield. Use a cold water spray, being careful not to direct a powerful stream of water on the new adhesive material. Allow water to spill over the edges of the glass.

14. If there are leaks, dry the affected area, then apply sealant.

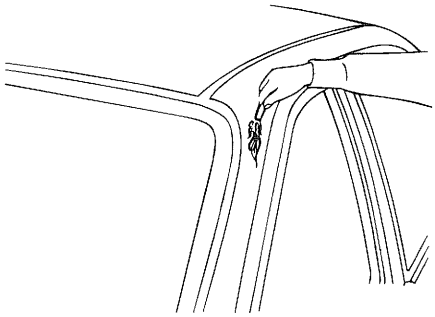

ESDA235G

15. Install the removed parts.

CAUTION

1. ***Keep the windshield dry for the first hour after installation.***
2. ***Let the car stand for at least four hours after windshield installation. If the car has to be used winthin the first 8 hours, it must be driven slowly.***
3. ***Take care not to slam the doors with all the windows rolled up.***
4. ***Take care not to twist the vehicle excessively (such as when going in and out of driveways at an angle or driving over rough, uneven roads).***

TAILGATE GLASS

COMPONENTS ESNB1000

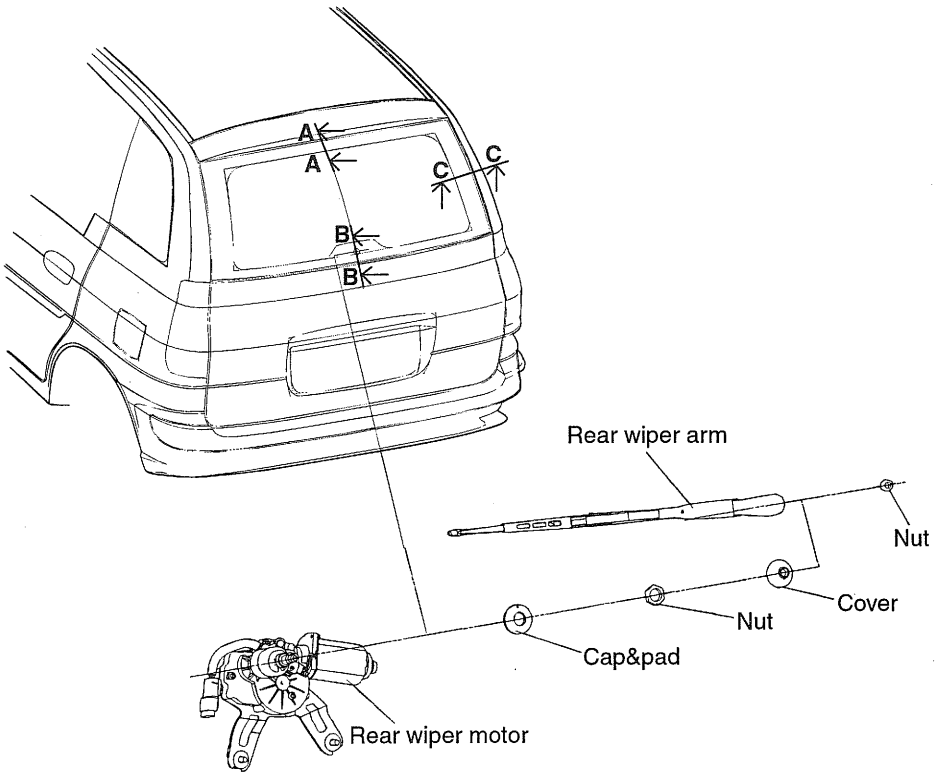

Unit : mm

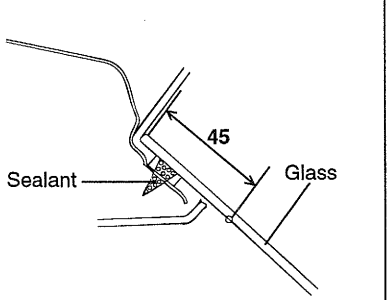

SECT. A-A

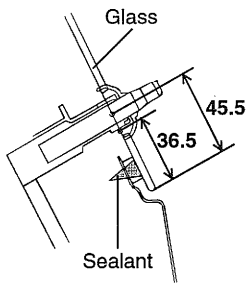

SECT. B-B

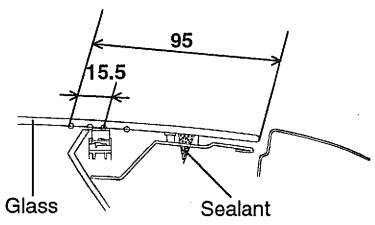

SECT. C-C

ESNB100A

REMOVAL ESNB1050

1. To remove the tailgate glass, first remove the following parts :

   1) Rear window defogger wire connector.

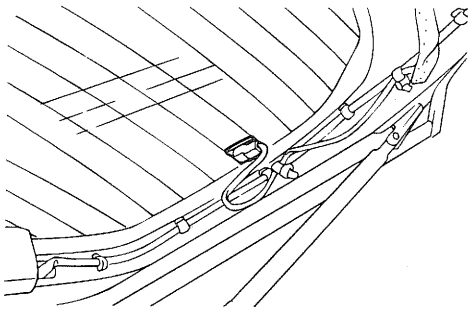

KSMB135A

   2) Tailgate trims.

   3) Rear wiper and wiper motor.

   4) High mounted stop lamp.

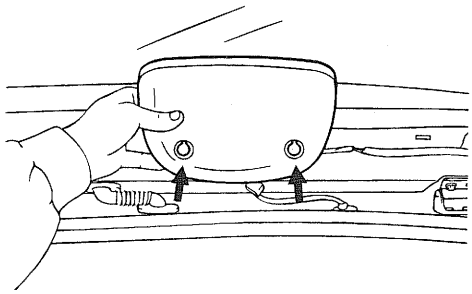

ESJA040N

2. Remove the tailgate glass in the same manner as the windshield glass.

INSTALLATION ESNB1100

1. Using a cutter knife or the special tool (09861-31200), scrape the old sealant smoothly to a thickness of about 2 mm (0.08 in.) on the bonding surface around the entire tailgate glass.

⚠ CAUTION

Be careful not to remove more adhesive than necessary, and also not to damage the paintwork on the body surface with the knife. If the paintwork is damaged, repair the damaged area with touch-up paint.

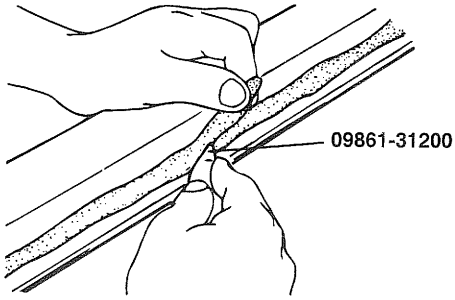

ESDA235B

2. Clean the body bonding surface with a sponge dampened in alcohol or wax and grease remover.

3. Center a new tailgate glass in the opening. Mark the location by marking lines across the glass and body with a grease pencil at the four points as shown.

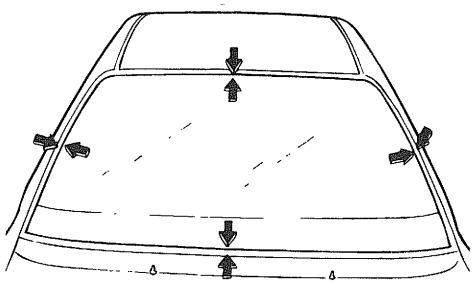

ESHA150B

4. Install the tailgate glass molding without any gaps.

5. Apply a light coat of glass primer around the tailgate glass.

NOTE

1. Never touch the surface applied primer with your hands.
If you do, the adhesive may not bond to the glass properly, causing a leak after the tailgate glass has been installed.
2. Do not apply body primer to the glass.
3. Keep water, dust, and abrasive materials away from the surface applied primer.

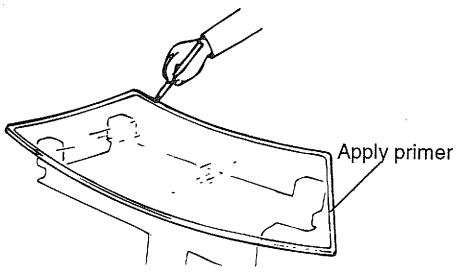

ESNB110A

6. Apply a sealant around the edge of the glass.

Part	A	Remarks
Upper	10.5mm	Glass molding sub
Side	27.5mm	
Lower	10.5mm	

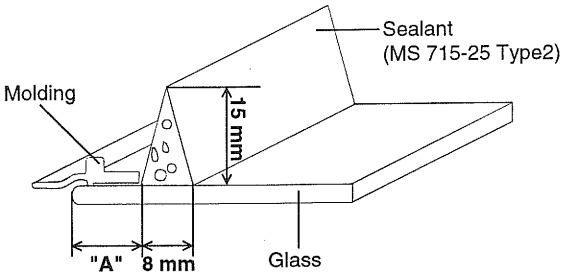

ESNB002P

NOTE

Apply the adhesive within 5 minutes after applying the primer to the glass.

7. Apply a light coat of body primer to the original sealant remaining around the window opening flange. The glass should be installed within 5 minutes after you apply the primer.

8. Use suction cups or the special tool (09861-31400), lower the glass over the opening, align it with the marks made in step 3 and set it down on the sealant.

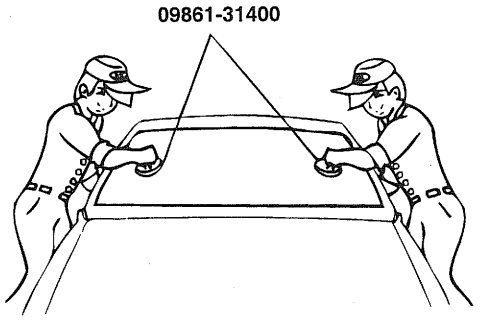

ESDA230D

9. Scrape or wipe excess adhesive off with putty knife or gauze. Fill all cavities around the tailgate glass.

10. Perform a water-leak test for the tailgate glass. Use a cold water spray, being careful not to direct a powerful stream of water on the new adhesive material. Allow water to spill over the edges of the glass.

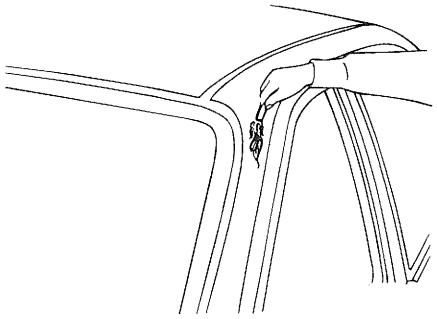

ESDA235G

11. If there are leaks, dry the affected area, then apply sealant.

12. Install the removed parts.

CAUTION

1. ***Keep the tailgate glass dry for the first hour after installation.***
2. ***Let the car stand for at least four hours after tailgate glass installation. If the car has to be used winthin the first 8 hours, it must be driven slowly.***
3. ***Take care not to slam the doors with all the windows rolled up.***
4. ***Take care not to twist the vehicle excessively (such as when going in and out of driveways at an angle or driving over rough, uneven roads).***

QUARTER GLASS

COMPONENTS ESNB1150

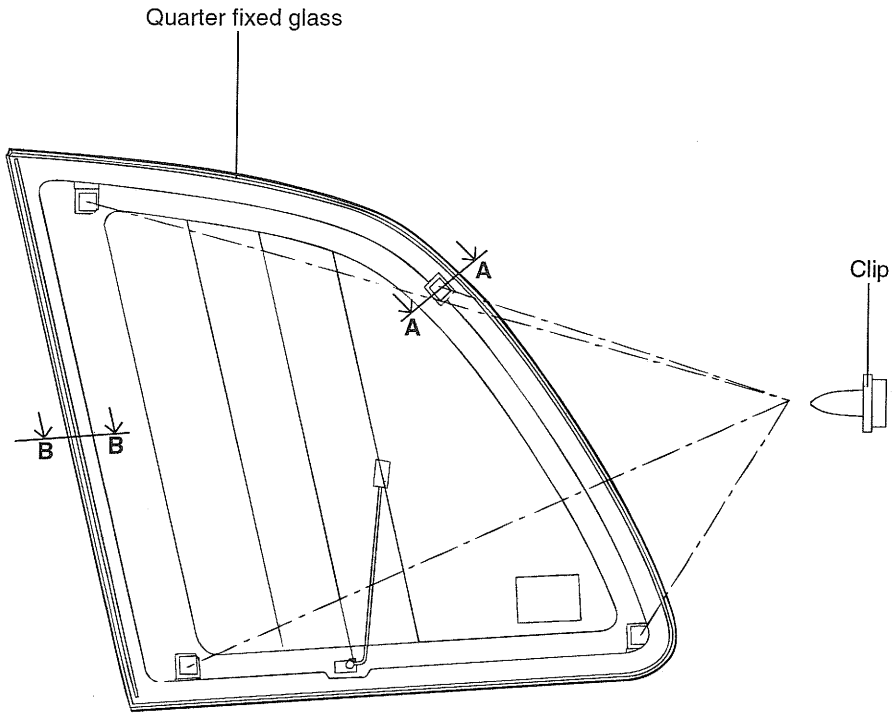

Unit : mm

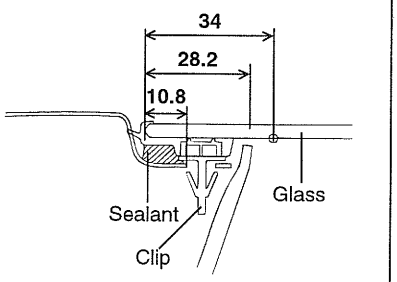

SECT. A-A

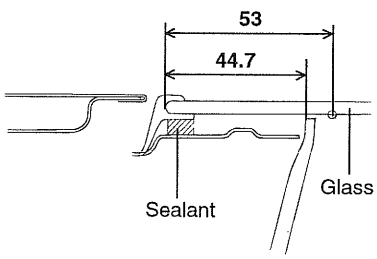

SECT. B-B

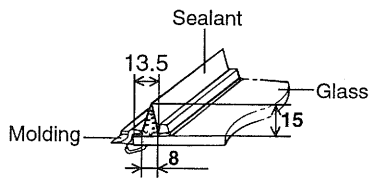

ESNB115A

INSTALLATION ESNB1200

1. Using a knife or the special tool (09861–31200), scrape the old sealant smoothly to a thickness of about 2mm (0.08in.)
2. Clean the body bonding surface with a sponge dampened in alcohol or grease remover.
3. Apply primer to the body bonding surface.

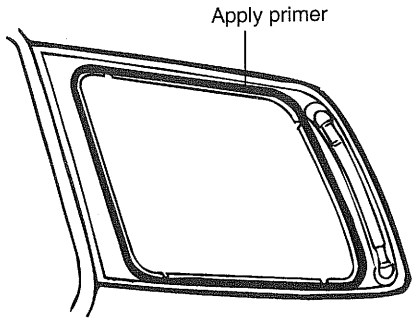

ESJA015K

4. Clean the surface of quarter fixed glass and then apply primer.
5. Apply sealant to the quarter fixed glass.

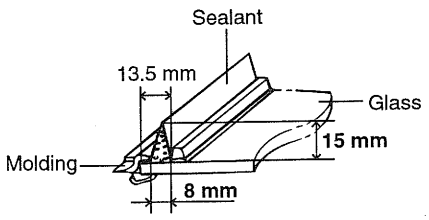

ESNB120B

6. Install the mounting clip to the contact surface around the quarter fixed glass.

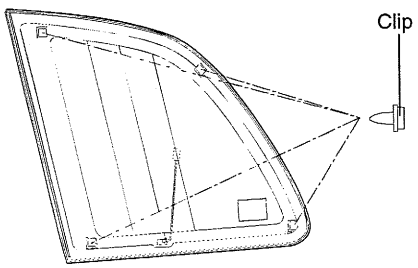

ESNB002D

BUMPER

FRONT BUMPER

COMPONENTS ESNB1250

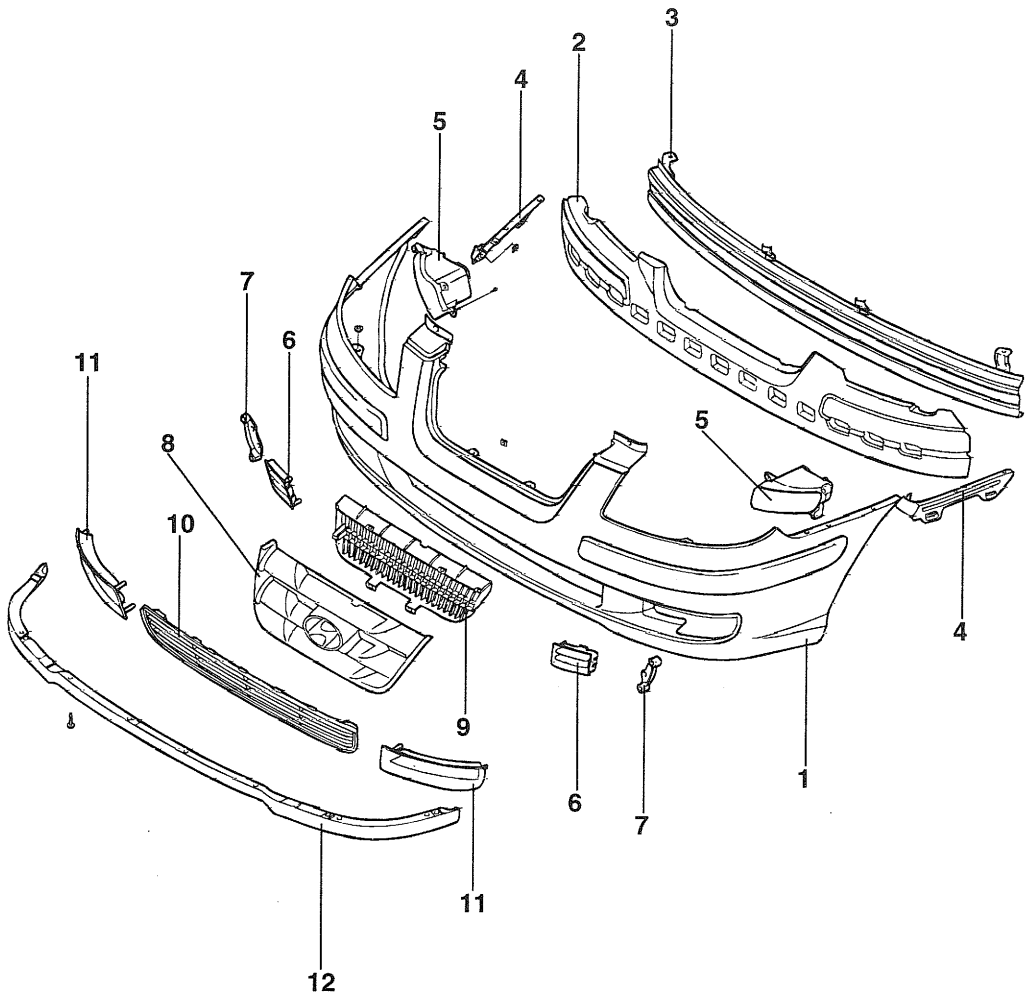

1. Front bumper cover
2. Energy absorber
3. Front bumper rail
4. Side bracket
5. Front fog lamp
6. Side grille
7. Bracket
8. Radiator grille
9. Radiator grille mesh
10. Front bumper grille
11. Blanking cover
12. Air dam

ESNB125A

REMOVAL AND INSTALLATION ESNB1300

1. Remove the 2 bolts holding the head lamp and disconnect the wire connector.
   Remove the head lamp assembly.

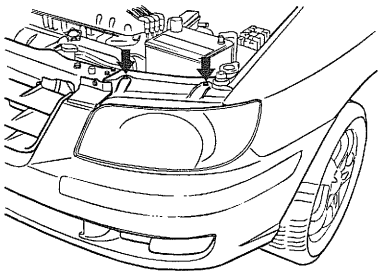

KSNB009B

2. Remove the screw holding the bumper cover at the fender wheel guard.

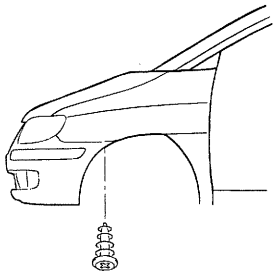

KSNB009C

3. Remove the 2 bolts and 2 screws holding the front bumper upper cover.

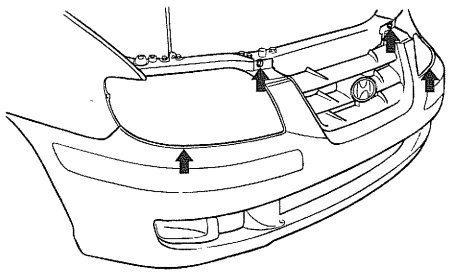

KSNB011A

4. Remove the nut mounting the bumper cover to the fender.

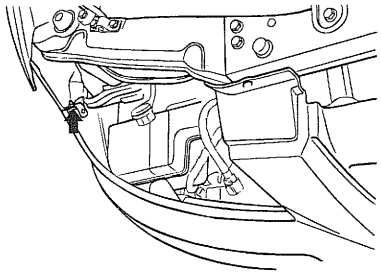

KSNB011B

5. Raise the vehicle then remove the 3 bolts holding the front bumper lower cover.

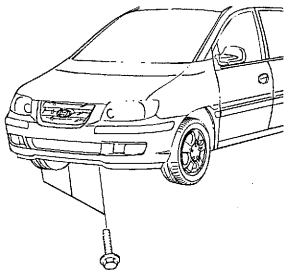

KSNB009D

6. Remove the front bumper cover and disconnect the wire connector to the front fog lamp.

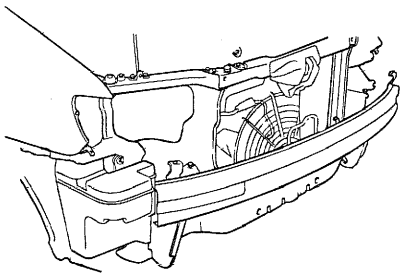

KSNB131A

7. Remove the front fog lamp after removing 4 screws.

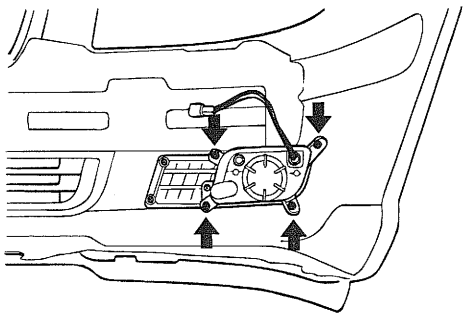

KTNB013B

8. Remove the front bumper rail after removing the bolts and nuts.

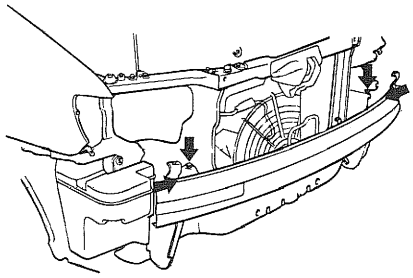

KSNB011C

9. Installation is the reverse of removal.

REAR BUMPER

COMPONENTS ESNB1350

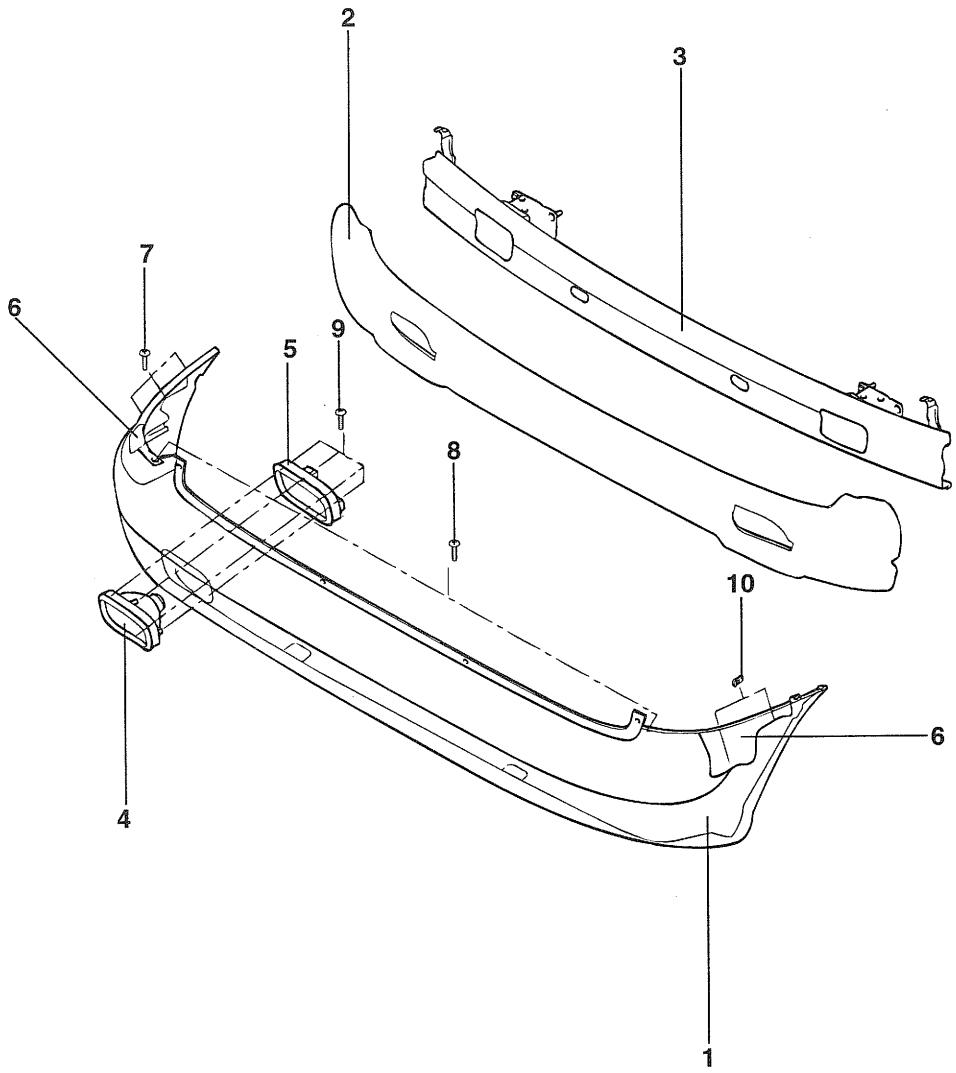

1. Rear bumper cover
2. Energy absorber
3. Rear bumper rail
4. Rear fog lamp
5. Rear fog lamp supporter
6. Side bracket
7. Clip
8. Retainer
9. Tapping screw
10. Clip

ESNB135A

REMOVAL AND INSTALLATION ESNB1400

1. Remove the screw and 3 bolts holding the rear mud guard.

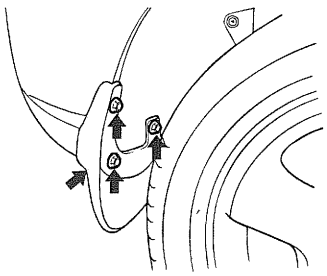

KSNB007P

2. Remove the screw holding rear bumper cover at the rear wheel housing.

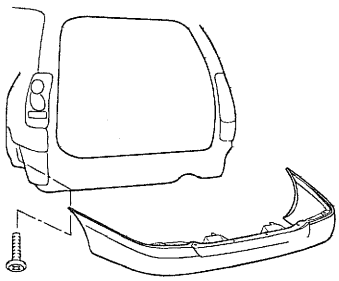

KSNB007T

3. Remove the 4 screws holding the rear bumper upper cover.

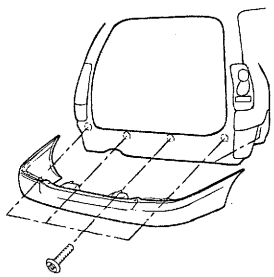

KSNB007R

4. Raise the vehicle then remove the 2 screws holding the rear bumper lower cover.

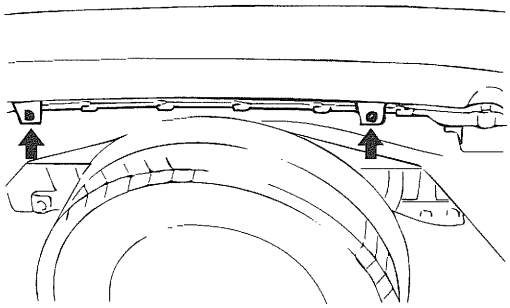

KSMB006F

5. Remove the rear bumper cover and disconnect the wire connector to the rear fog lamp.

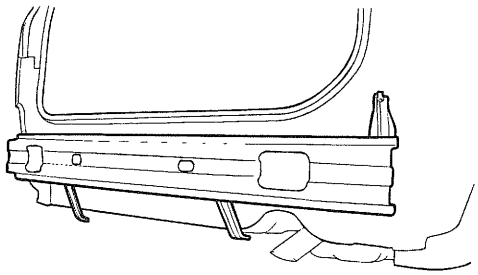

KSNB007S

SEAT

COMPONENTS ESNB1450

[FRONT SEAT]

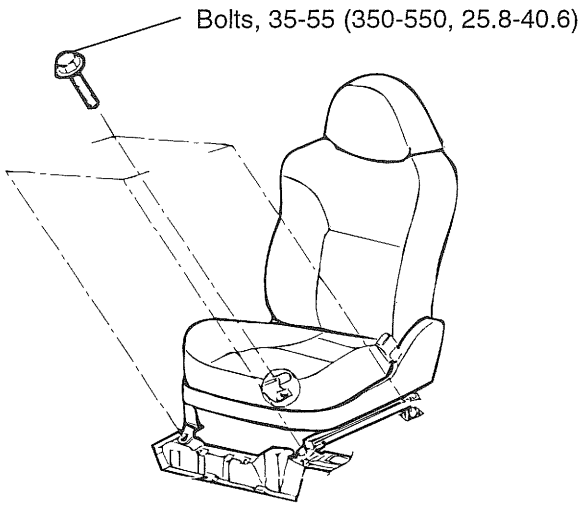

[REAR SEAT]

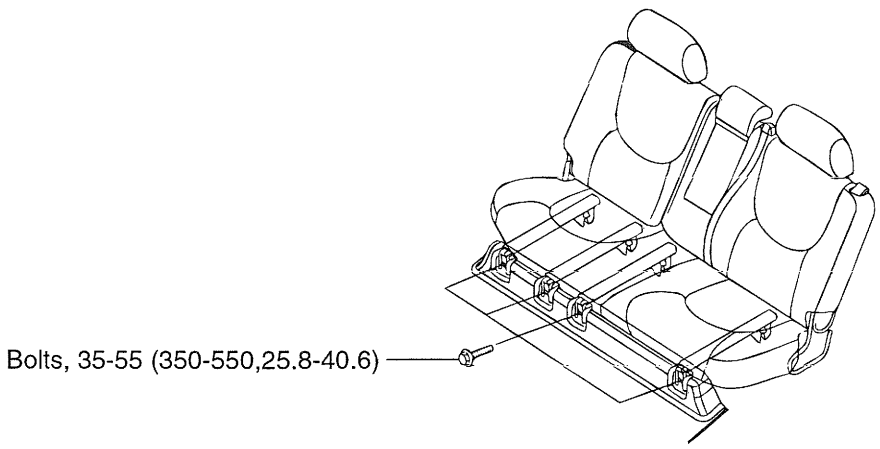

TORQUE : Nm (kg·cm, lb·ft)

ESNB145A

REMOVAL AND INSTALLATION ESNB1500

FRONT SEAT

1. Remove the front seat mounting bolts (4EA), and disconnect the wire connectors.
   Remove the front seat assembly.

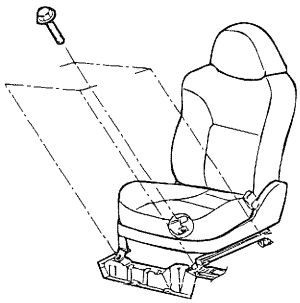

KSMB008G

Tightening torque :

35 - 55 Nm (350 - 550 kg·cm, 25.8 - 40.6 lb·ft)

REAR SEAT

1. Remove the rear seat mounting bolts (4EA).

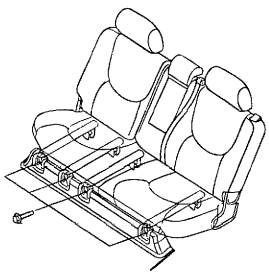

KSNB009A

Tightening torque :

35 - 55 Nm (350 - 550 kg·cm, 25.8 - 40.6 lb·ft)

2. Remove the rear seat assembly with folding the rear seat up.

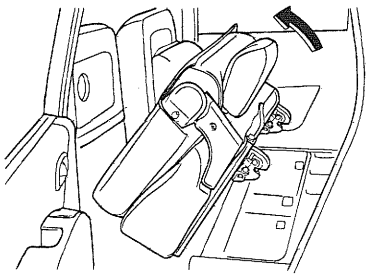

KSNB011D

FRONT SEAT BELT

COMPONENTS ESNB1550

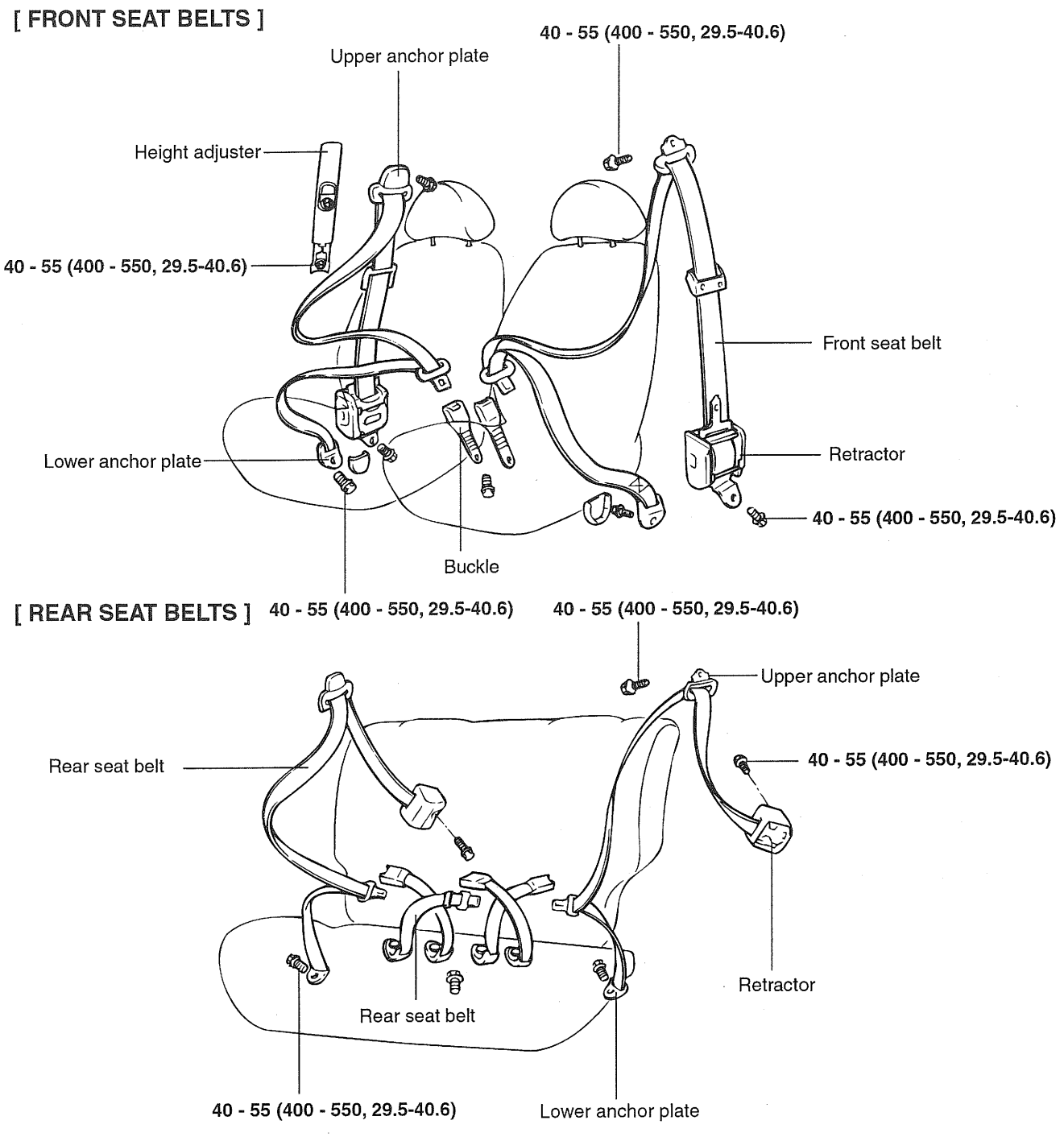

TORQUE : Nm (kg·cm, lb·ft)

ESNB155A

REMOVAL AND INSTALLATION ESHA1850

1. Loosen the seat belt lower anchor bolt and remove the center pillar lower trim.

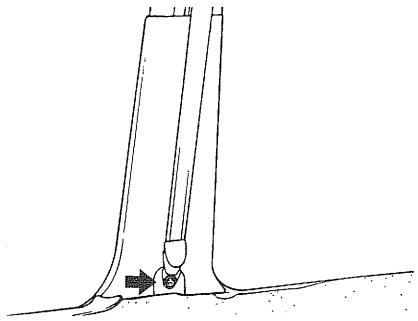

ESHA040I

2. Loosen the seat belt upper anchor bolt.

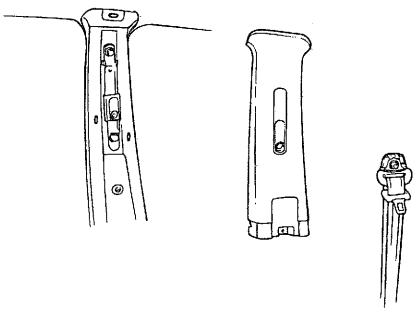

ESHA045B

3. In case of vehicles equipped with pretensioner seat belt, disconnect the negative (-) battery terminal and disconnect the connector from the gas generator and then remove the retractor.

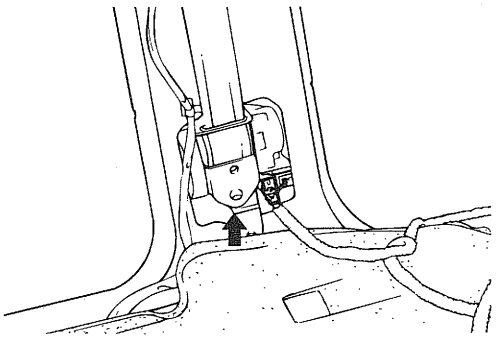

ESHA040J

4. Installation is the reverse of removal.

⚠ *CAUTION*

1. ***A pretensioner functions one time only. Be sure to replace the pretensioner seat belt after it is deployed.***
2. ***Do not attempt to disassemble or repair the seat belt pre-tensioner. When it malfunctions, replace with a new pre-tensioner seat belt.***
3. ***Be cautious in handling a pre-tensioner seat belt, and do not drop it in water, or oil. If crushed, damaged, or deformed, replace it with a new one.***
4. ***Only connect the battery after installation of the pretensioner seat belt has been correctly completed.***
5. ***Removal of the pretensioner seat belt :***

- ***Make sure that ignition is "Off".***
- ***Disconnect the negative (-) battery terminal and make sure it does not come into contact with the body.***
- ***Wait for about 1 minute.***
- ***Pull the plug out from the appropriate connector at the gas generator.***
- ***Loosen the bolt and remove the belt from the vehicle body.***

REAR SEAT BELT

REMOVAL AND INSTALLATION ESNB1650

1. Loosen the seat belt lower anchor bolt and remove the luggage side trim.

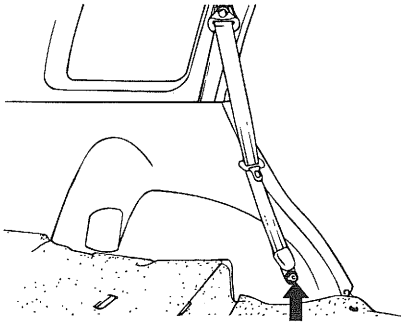

KSMB210A

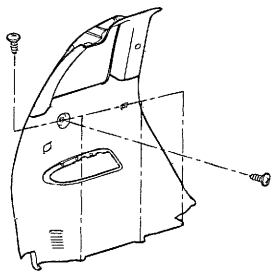

KSNB001F

2. Loosen the seat belt upper anchor bolt and retractor mounting bolt, then remove the rear seat belt.

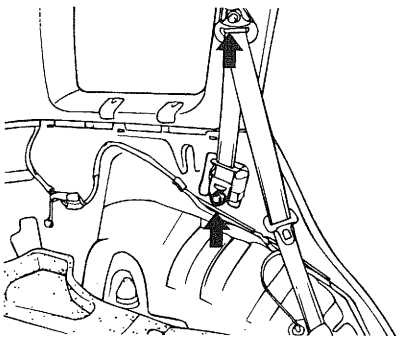

KSMB210C

Tightening torque

40 - 55 Nm (400 - 550 kg·cm, 29.5 - 40.6 lb·ft)

3. Installation is the reverse of removal.

Body Electrical System

GENERAL ..... BE -2

AUDIO SYSTEM ..... BE -22

MULTI FUNCTION SWITCH ..... BE -30

HORNS ..... BE -34

CLOCK ..... BE -35

ETACS (ELECTRONIC TIME AND ALARM CONTROL SYSTEM) ..... BE -38

FUSES AND RELAYS ..... BE -46

INDICATORS AND GAUGES ..... BE -50

POWER DOOR LOCKS ..... BE -59

POWER DOOR MIRRORS ..... BE -60

POWER WINDOWS ..... BE -62

REAR WINDOW DEFOGGER ..... BE -66

WINDSHIELD WIPER/WASHER ..... BE -69

REAR WIPER/WASHER ..... BE -74

SEAT WARMER ..... BE -79

SUN ROOF ..... BE -80

LIGHTING SYSTEM ..... BE -83

DAYTIME RUNNING LIGHTS ..... BE -91

HEAD LAMP LEVELLING DEVICE ..... BE -94

IMMOBILIZER CONTROL SYSTEM ..... BE -96

GENERAL

SPECIFICATIONS ETNC0050

MULTIFUNCTION SWITCH

Items	Specifications
Rated Voltage	DC 12V
Operating temperature range	-30°C - +80°C (-22 - +176°F)
Rated load Dimmer & passing switch Lighting switch Turn signal & lane change switch Wiper switch Wiper mist switch Washer switch Variable intermittent wiper volume switch Rear wiper & washer switch Horn switch	 High : 15A (Lamp load) Low : 10A (Lamp load) Passing : 15A (Lamp load) Lighting : 1A (Relay load) 6.6 ± 0.5A (Lamp load) Low, High : 4.5A (Motor load) Int. : 0.22 ± 0.05A (Relay load) Lock : Max. 28A (Motor load) 4.5A (Motor load) 4A (Motor load) Max. 25mA Rear wiper : 0.2A (Relay load) Rear washer : 4A (Motor load) 0.25A (Relay load)

INSTRUMENTS AND WARNING SYSTEM

Warning lamps	Bulb wattage (W)	Color
High beam	1.4	Blue
Low fuel	1.4	Amber
Turn signal (LH, RH)	1.4	Green
Battery (charge)	1.4	Red
Oil pressure	1.4	Red
Air bag	1.4	Red
Parking brake	1.4	Red
Seat belt	1.4	Red
Check engine	1.4	Amber
ABS	1.4	Amber
Door ajar	1.4	Red
Trunk lid open	1.4	Amber
Water seperator (DSL)	1.4	Red
TCS	1.4	Amber
O/D OFF	1.4	Amber
Glow (DSL)	1.4	Amber

Warning lamps	Bulb wattage (W)	Color
Immobilizer	1.4	Amber
A/T		
P	1.4	Green
R	1.4	Amber
N	1.4	Green
D	1.4	Green
2	1.4	Green
L	1.4	Green

SERVICE SPECIFICATIONS ETNC0100

INDICATORS AND GAUGES

Speedometer

Type

- Cross-coil type

Input spec.

- Hall IC type : 4 pulses/rev.

Indication

- Km/h : 637rpm x 4 pulses/rev. indicates 60Km/h
- MPH : 1026 rpm x 4 pulses/rev. indicates 60MPH

Standard values

Velocity (Km/h)	20	40	60	80	100	120
Tolerance (Km/h)	20-24.1	40-43	60-64.1	80-85.2	100-105.2	120.5-126.3
Tolerance (Km/h)	20.8-25.4	40-44	60.8-65.4	81.4-86.8	102.6-108.2	123.5-129.6
Velocity (Km/h)	140	160	180	200	Area	
Tolerance (Km/h)	140.5-146.7	160.5-167.5	181-188.4	201-209.1	Others	
Tolerance (Km/h)	144.4-151	165.4-172.4	186.3-193.8	207.2-215.2	EEC & General	

Velocity (MPH)	10	20	40	60
Tolerance (MPH)	10-12.5	20-22.5	40-42.6	60-63.4
Velocity (MPH)	80	100	120	Area
Tolerance (MPH)	80.3-84.1	100.3-104.7	120.3-125.3	EEC & General

- Tap the speedometer to prevent hysterisis effects during inspection.

Tachometer

Type

- Cross-coil type (4cyl : 2pulses/rev (MPI DOHC engine), 4cyl : 4pulses/rev (D-engine))

Standard values

Revolution (RPM)	1,000	2,000	3,000	4,000	5,000	6,000	7,000
Tolerance (RPM)	±100	±125	±150	±150	±150	±180	±210

- Tap the speedometer to prevent hysterisis effects during inspection.

Fuel gauge

Type

- Cross - coil type (Fixed point type : Pointer should not fall into the "E" point but indicate remaining fuel level when the ignition is off)

Standard values

Level	Gauge Resistance (Ω)	Tolerance assembled with fuel sender (°)
E (Empty)	95	-40 ± 2.5
1/2	32.5	0 ± 4.0
F (Full)	7	40 ± 2.5

- Inspection order : E → F → E
  The level must be reached within 7 minutes after the resistance is set for Full or Empty.
- Point stability tolerance : Within ±6°
  Apply power for 10 minutes. Then turn off the power for an hour and read the position of the pointer.

ETNC010A

<table>
<tr><th>Items</th><th>Specifications</th></tr>
<tr><td>Temperature gauge
Type
Indication standard</td><td>o Cross - coil type (Intermedia stability type).
<table><tr><th>Temperature</th><th>Angle (°)</th><th>Assembled tolerance (°)</th></tr><tr><td>60°C</td><td>-40</td><td>-</td></tr><tr><td>85°C ~ 110°C</td><td>-7^{+2}_{-3}</td><td>$^{+3}_{-2}$</td></tr><tr><td>Red zone (over 125°C)</td><td>35 ± 5</td><td>$^{+7}_{-4}$</td></tr></table>o Inspection order : OFF → C → H</td></tr>
<tr><td>Resistance of temperature sender (NTC)</td><td><table><tr><td>Temperature (°C)</td><td>60</td><td>85</td><td>110</td><td>125</td></tr><tr><td>Resistance (Ω)</td><td>122</td><td>47.4</td><td>24.3</td><td>15.9</td></tr></table></td></tr>
</table>

ETNC010B

LIGHTING SYSTEM

Items	Bulb wattage(W)
Head lamp	60W / 55W (High / Low beam)
Front turn signal / Front position lamp	21W / 5W
Front fog lamp	55W
Rear combination lamps Tail/stop lamp Back up lamp Turn signal lamp	 5W / 21W 21W 21W
Rear fog lamp	21W
Side repeater lamp	5W
Room lamp	10W
Luggage lamp	10W
Center high mounted stop lamp	27W / 5.7W (LED)
Overhead console lamp	10W
License plate lamp	5W

AUDIO

Items	H220 (H210)	H260	H280
Rated output	Max. 20W x 2	Max. 25W x 4	Max. 20W x 4
Load impedance	4Ω x 2 (4Ω x 4)	4Ω x 4	4Ω x 4
Band	AM/FM, LW/MW/FM	AM/FM, LW/MW/FM	AM/FM, LW/MW/FM
Tuning type	PLL Synthesized type	PLL Synthesized type	PLL Synthesized type
Dark current	Max. 2mA	Max. 3.8mA	Max. 2mA
Frequency range / Channel	AM : 531~1602KHZ/9KHZ	AM : 531~1602KHZ/9KHZ	AM : 531~1602KHZ/9KHZ
	FM : 87.5~108MHZ/100KHZ	FM : 87.5~108MHZ/100KHZ	FM : 87.5~108MHZ/100KHZ
	LW : 153~279KHZ/1KHZ	LW : 153~279KHZ/1KHZ	LW : 153~279KHZ/1KHZ
	MW : 531~1602KHZ/9KHZ	MW : 531~1602KHZ/9KHZ	MW : 531~1602KHZ/9KHZ
	FM : 87.5~108MHZ/50KHZ	FM : 87.5~108MHZ/50KHZ	FM : 87.5~108MHZ/50KHZ

WINDSHIELD WIPER AND WASHER

Items	Specifications
Wiper motor	
Speed/current at 2Nm load test	Low : 43-51rpm/4.0A or less High : 65-79rpm/5.0A or less
Speed/current at 7Nm load test	Low : 37-45rpm/7.0A or less High : 53-65rpm/9.0A or less
Torque/current when parking	Low : 38Nm/35A or less High : 32Nm/37A or less
Windshield washer	
Motor type	DC ferrite magnet
Pump type	Centrifugal
Rated voltage	12V
Discharge pressure	1.7kg/cm² or more
Flow rate	1,450cc/min. or more
Overload capacity (Continuous operation)	
With water	60sec. or less
Without water	20sec. or less
Rear wiper motor	
Speed/current at no load test	35rpm/2.2A or less
Speed/current at 1Nm load test	30-40rpm/3.5A or less
Torque/current when parking	8Nm/14A or less
Wiping angle at no load	170° ± 3°

TROUBLESHOOTING ETNC0150

INSTRUMENTS AND WARNING SYSTEM

Symptom	Possible cause	Remedy
Tachometer does not operate	Turn signal lamp fuse (10A) blown Tachometer faulty Wiring faulty	Check for short and replace fuse Check tachometer Repair if necessary
Fuel gauge does not operate	Turn signal lamp fuse (10A) blown Fuel gauge faulty Fuel sender faulty Wiring faulty	Check for short and replace fuse Check gauge Check fuel sender Repair if necessary
Low fuel warning lamp does not light	Turn signal lamp fuse (10A) blown Bulb burned out Fuel level sensor faulty Wiring or ground faulty	Check for short and replace fuse Replace bulb Check sensor Repair if necessary
Water temperature gauge does not operate	Turn signal lamp fuse (10A) blown Water temperature gauge faulty Water temperature sender faulty Wiring or ground faulty	Check for short and replace fuse Check gauge Check sender Repair if necessary
Oil pressure warning lamp does not light	Turn signal lamp fuse (10A) blown Bulb burned out Oil pressure sender faulty Wiring or ground faulty	Check for short and replace fuse Replace bulb Check sender Repair if necessary
Low brake fluid warning lamp does not light	Turn signal lamp fuse (10A) blown Bulb burned out Brake fluid level warning switch faulty Parking brake switch faulty Wiring or ground faulty	Check for short and replace fuse Replace bulb Check switch Check switch Repair if necessary
Open door warning lamp does not light	Room lamp fuse (10A) blown Bulb burned out Door switch faulty Wiring or ground faulty	Check for short and replace fuse Replace bulb Check switch Repair if necessary
Seat belt warning lamp does not light	Turn signal lamp fuse (10A) blown Bulb burned out Buckle switch faulty Wiring or gound faulty	Check for short and replace fuse Replace bulb Check switch Repair if necessary

LIGHTING SYSTEM

Symptom	Possible cause	Remedy
One lamp does not light (all exterior)	Bulb burned out Socket, wiring or ground faulty	Replace bulb Repair if necessary
Head lamps do not light	Bulb burned out Head lamp fuse (15A) blown Head lamp relay faulty Lighting switch faulty Wiring or ground faulty	Replace bulb Replace fuse and check for short Check relay Check switch Repair if necessary
Tail lamps and license plate lamps do not light	Tail lamp fuse (10A) blown Tail lamp relay faulty Lighting switch faulty Wiring or ground faulty	Replace fuse and check for short Check relay Check switch Repair if necessary

Symptom	Possible cause	Remedy
Stop lamps do not light	Stop lamp fuse (10A) blown Stop lamp switch faulty Wiring or ground faulty Stop lamp relay faulty	Replace fuse and check for short Adjust or replace switch Repair if necessary Replace relay
Stop lamps stay on	Stop lamp switch faulty Stop lamp relay faulty	Adjust or replace switch Replace relay
Instrument lamps do not light (Tail lamps light)	Rheostat faulty Wiring or ground faulty	Check rheostat Repair if necessary
Turn signal lamp does not flash on one side	Bulb burned out Turn signal switch faulty Wiring or ground faulty	Replace bulb Check switch Repair if necessary
Turn signal lamps do not operate	Turn signal lamp fuse (10A) blown Flasher faulty Turn signal switch faulty Wiring or ground faulty	Replace fuse and check for short Check flasher Check switch Repair if necessary
Hazard warning lamps do not operate	Hazard lamp fuse (10A) blown Flasher faulty Hazard switch faulty Wiring or ground faulty	Replace fuse and check for short Check flasher Check switch Repair if necessary
Flasher rate too slow or too fast	Lamps' wattages are smaller or larger than specified Defective flasher	Replace lamps Replace flasher
Back up lamps do not light up	ECU fuse (15A) blown Back up lamp switch faulty Wiring or ground faulty	Replace fuse and check for short Check switch Repair if necessary
Overhead console lamp does not light up	Room lamp fuse (10A) blown Wiring or ground faulty	Replace fuse and check for short Repair if necessary

AUDIO

There are six areas where a problem can occur: wiring harness, the radio, the cassette tape deck, the CD player, the speaker, and antenna. Troubleshooting enables you to confine the problem to a particular area.

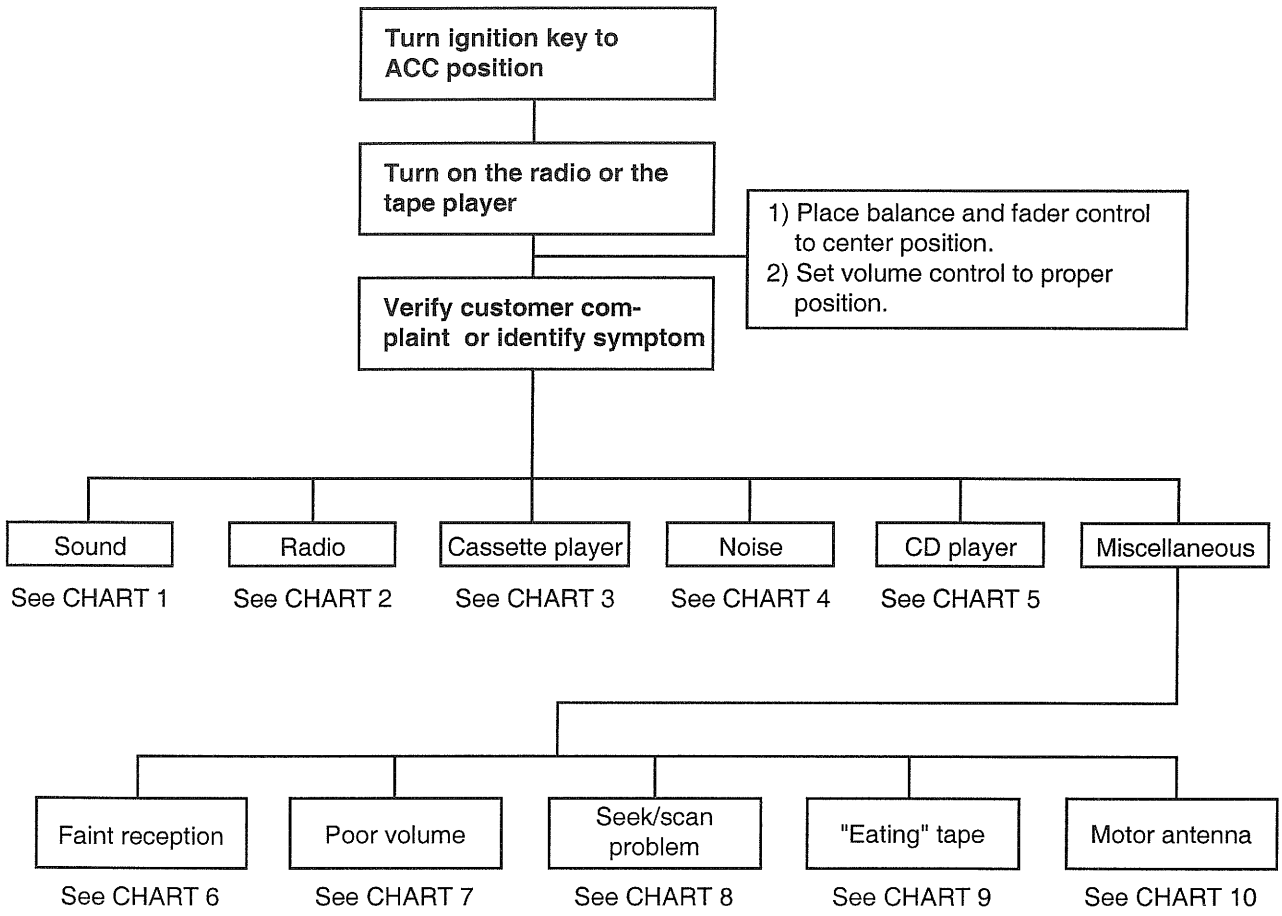

ETJA315A

CHART 1

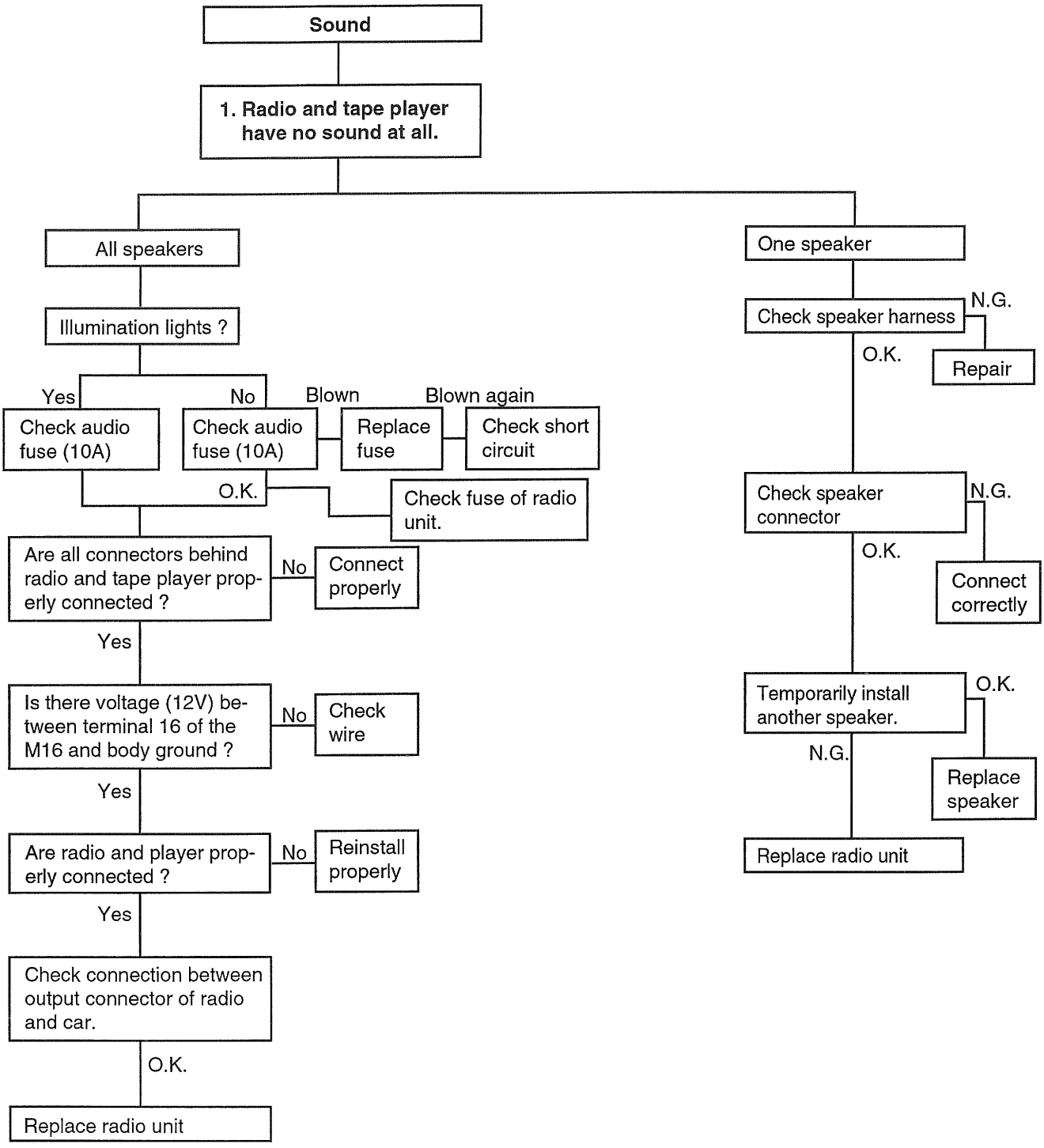

ETNC015A

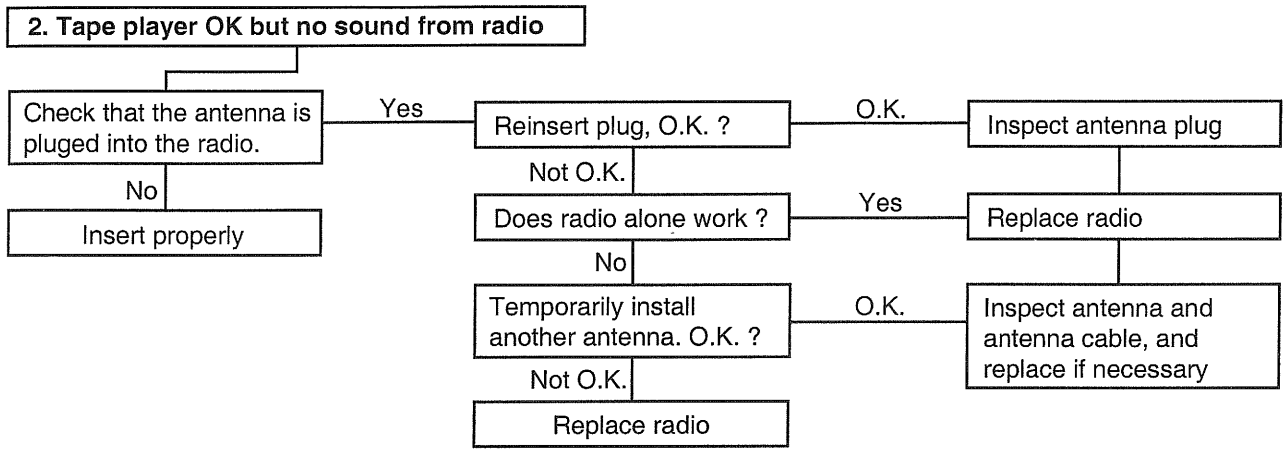

ETA9010C

CHART 2

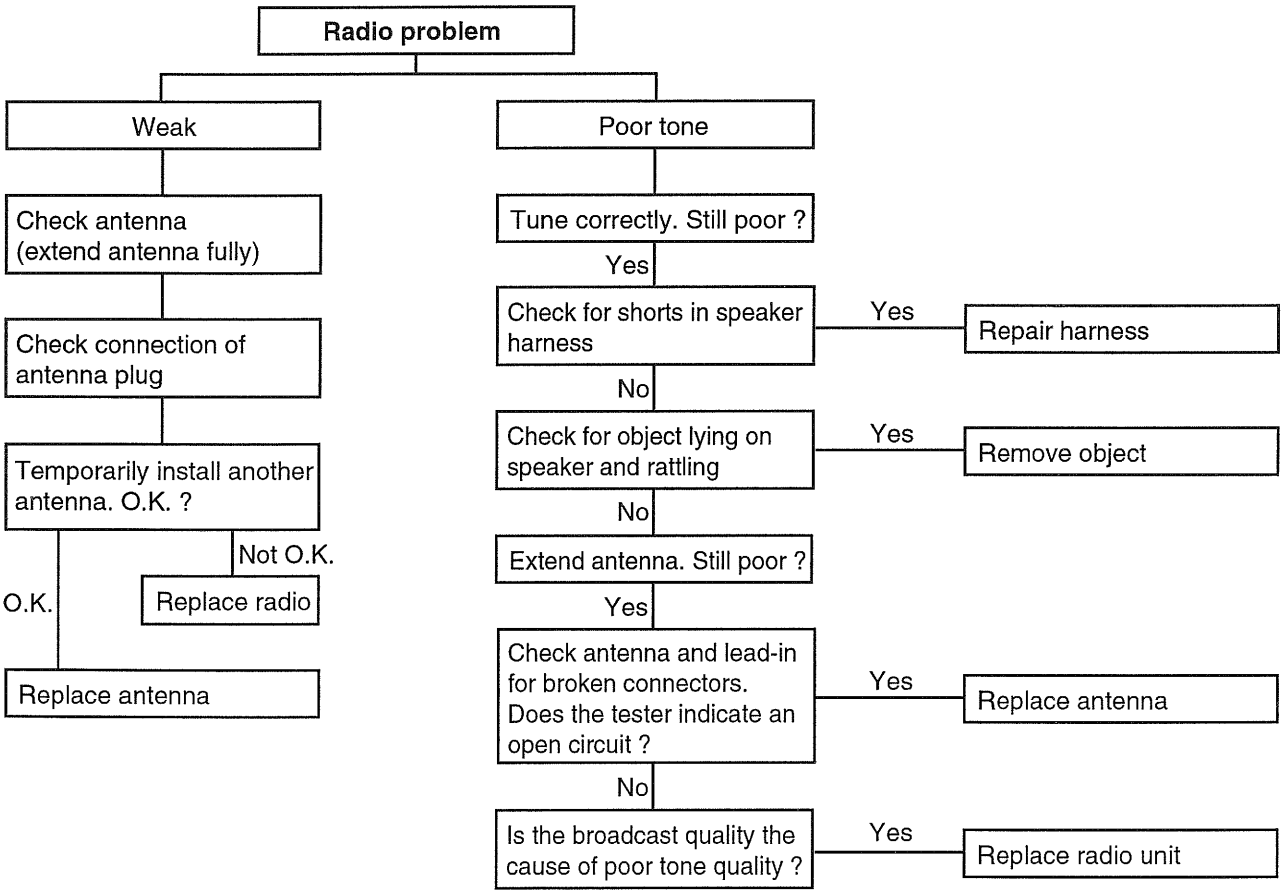

ETA9010D

CHART 3

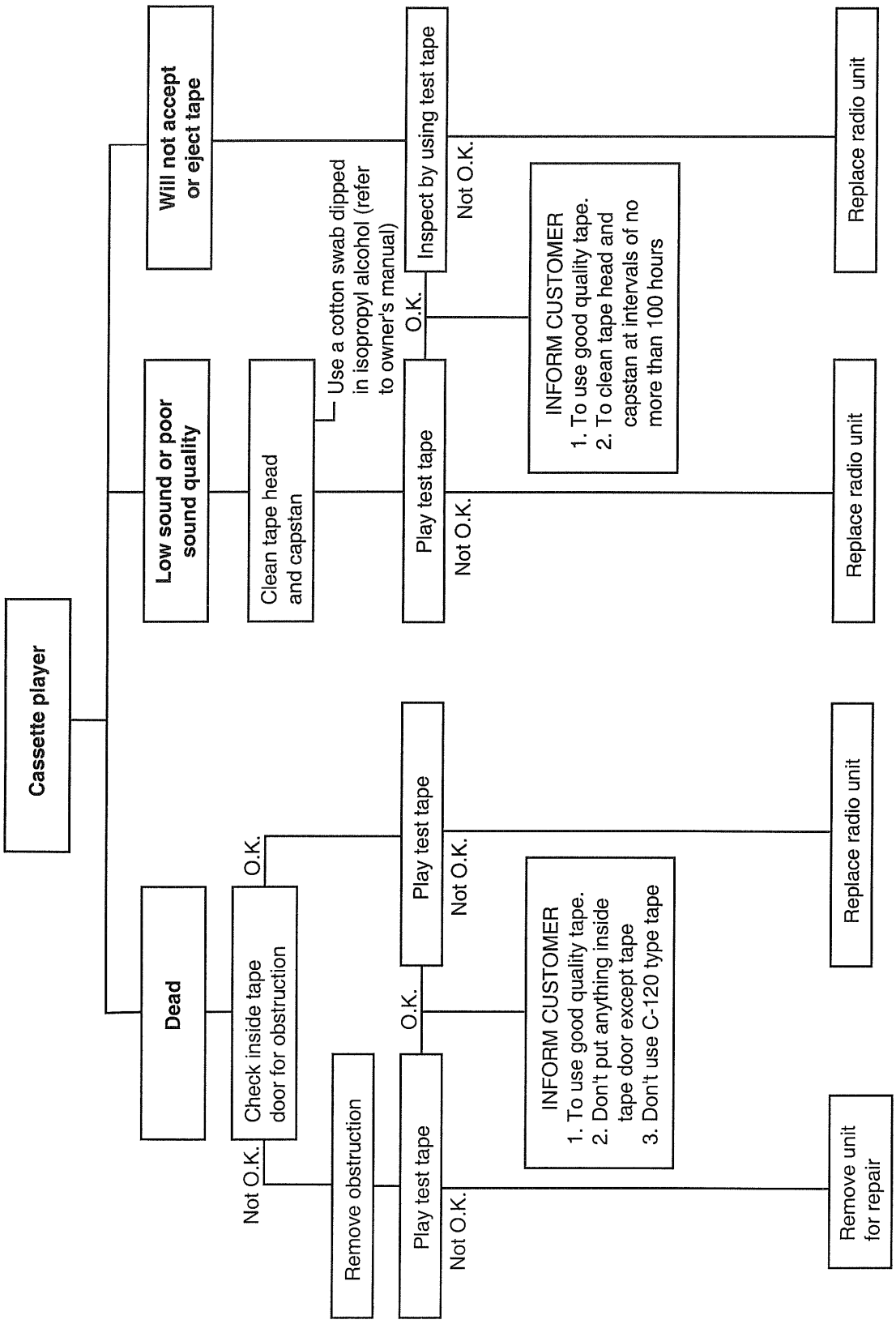

ETA9010E

CHART 4

1. RADIO

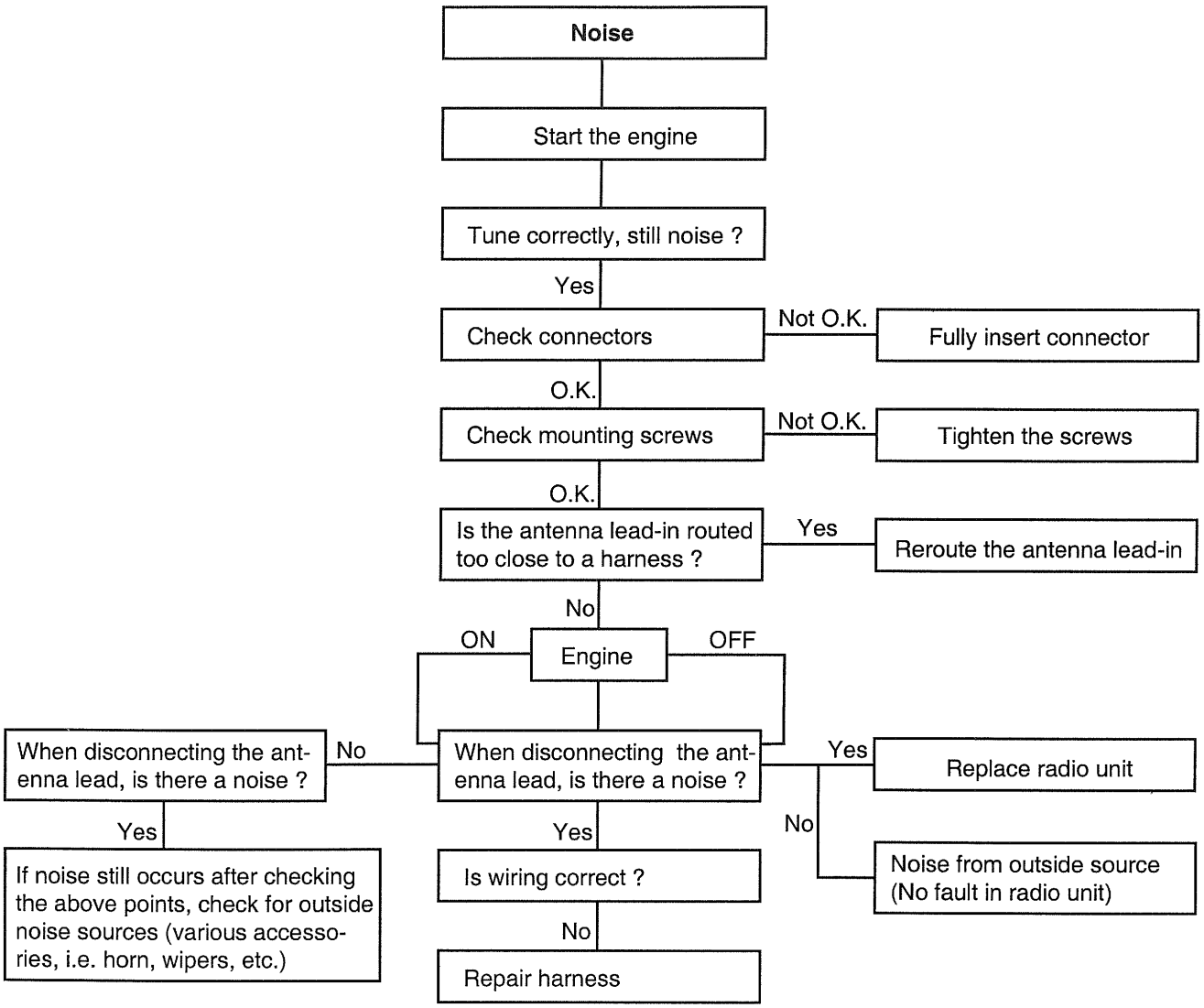

ETA9010F

2. TAPE

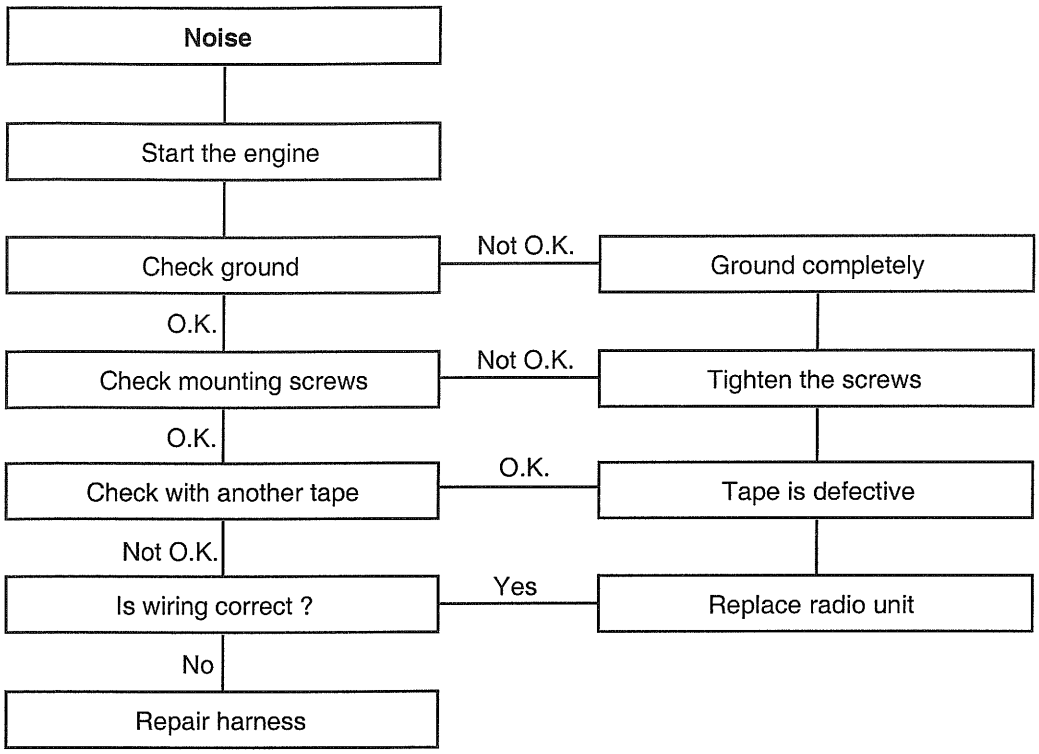

ETA9010G

CHART 5

1. CD WILL NOT BE ACCEPTED

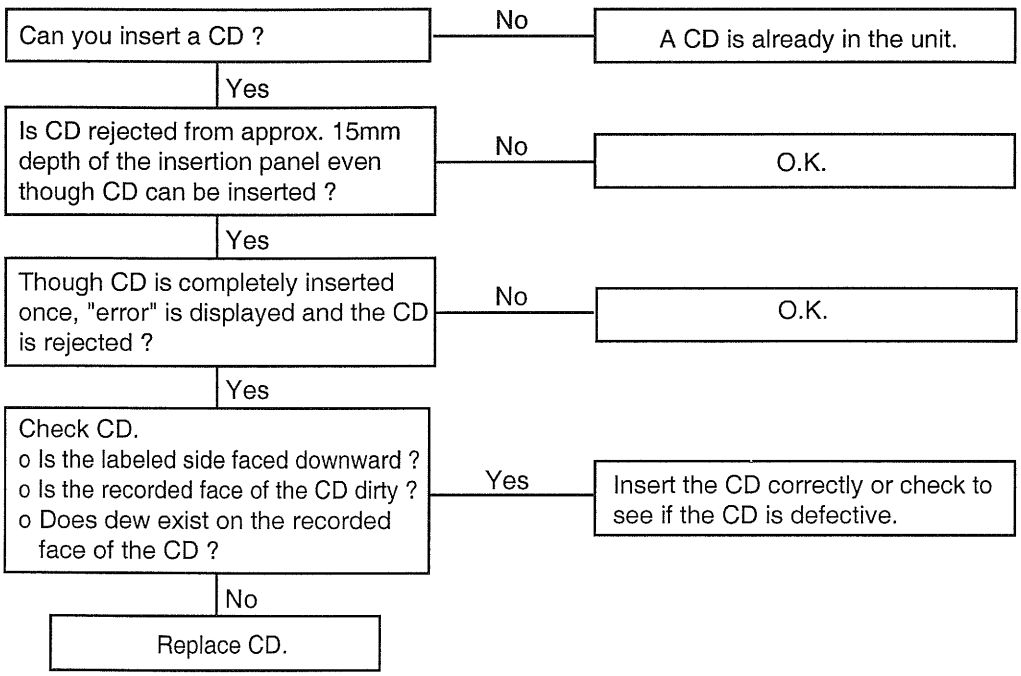

ETA9010H

2. NO SOUND

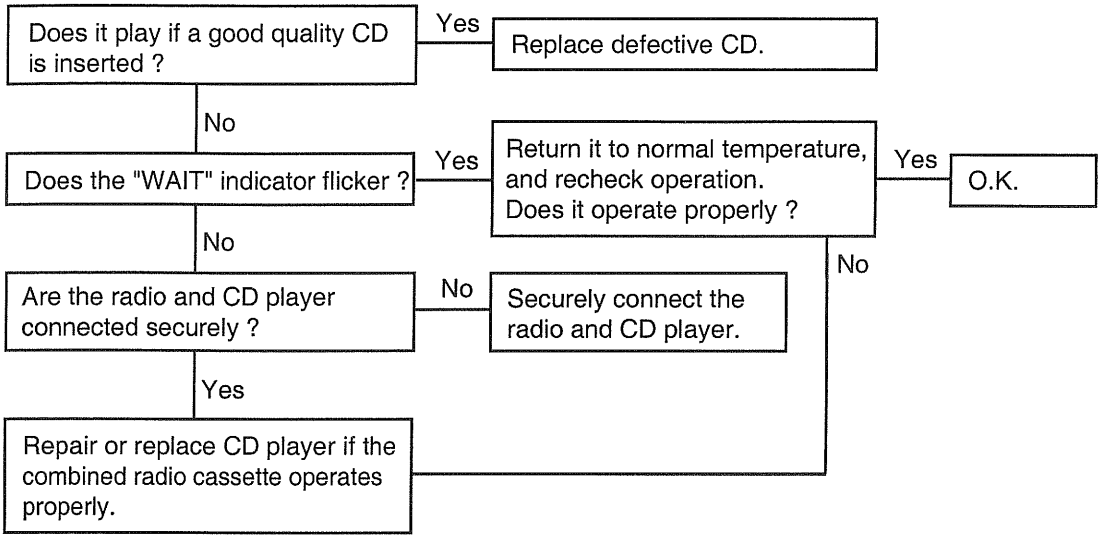

ETA9010O

3. CD SOUND SKIPS

1. Sound sometimes skips when parking.

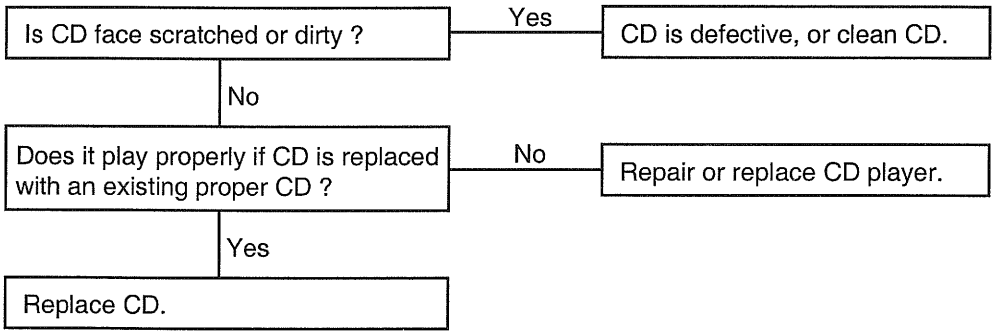

2. Sound sometimes skips when driving.
(Stop vehicle, and check it.)
(Check by using a CD which is free of scratches, dirt or other damage.)

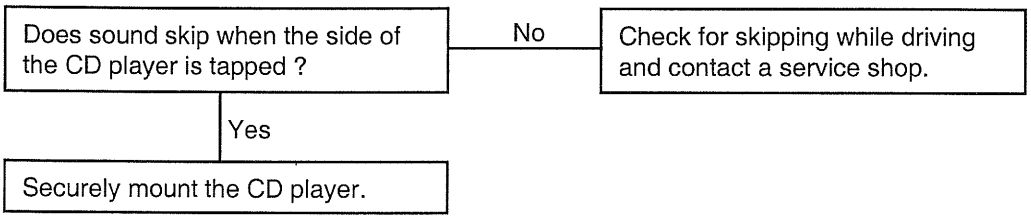

ETA9010I

4. SOUND QUALITY IS POOR

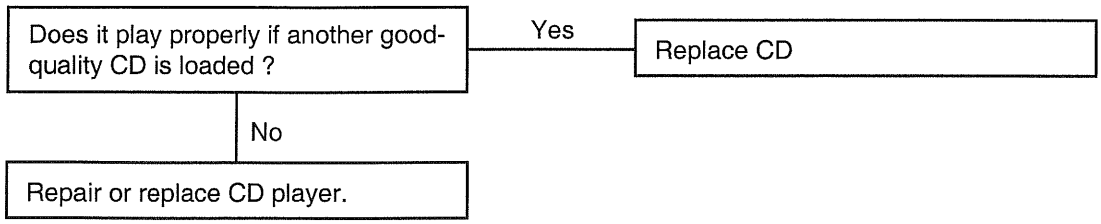

5. CD WILL NOT EJECT

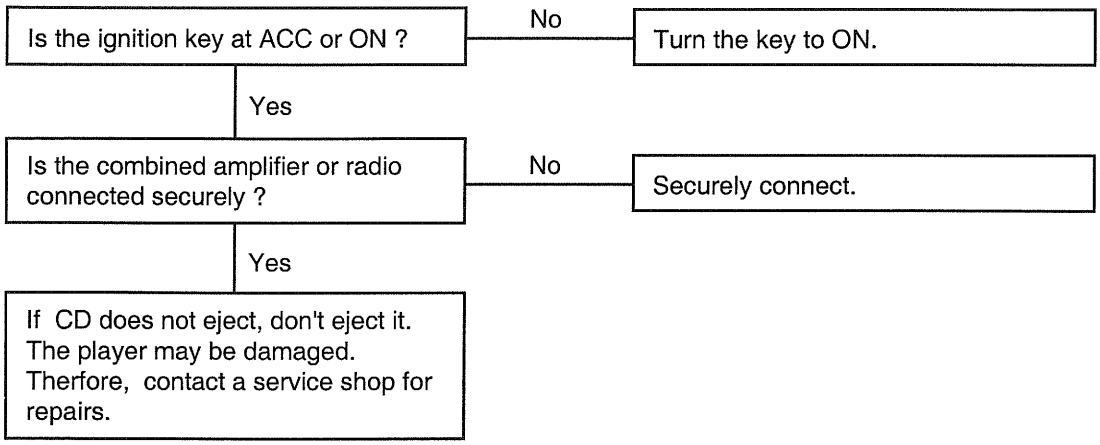

6. NO SOUND FROM ONE SPEAKER

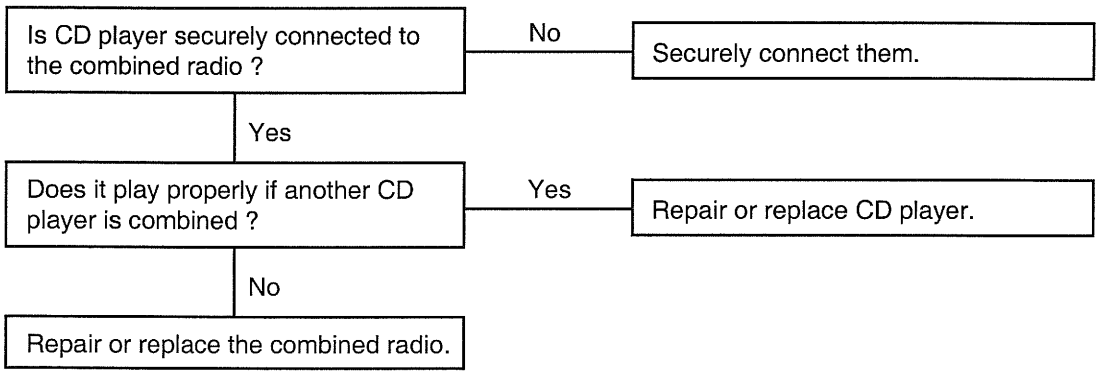

ETA9010J

CHART 6

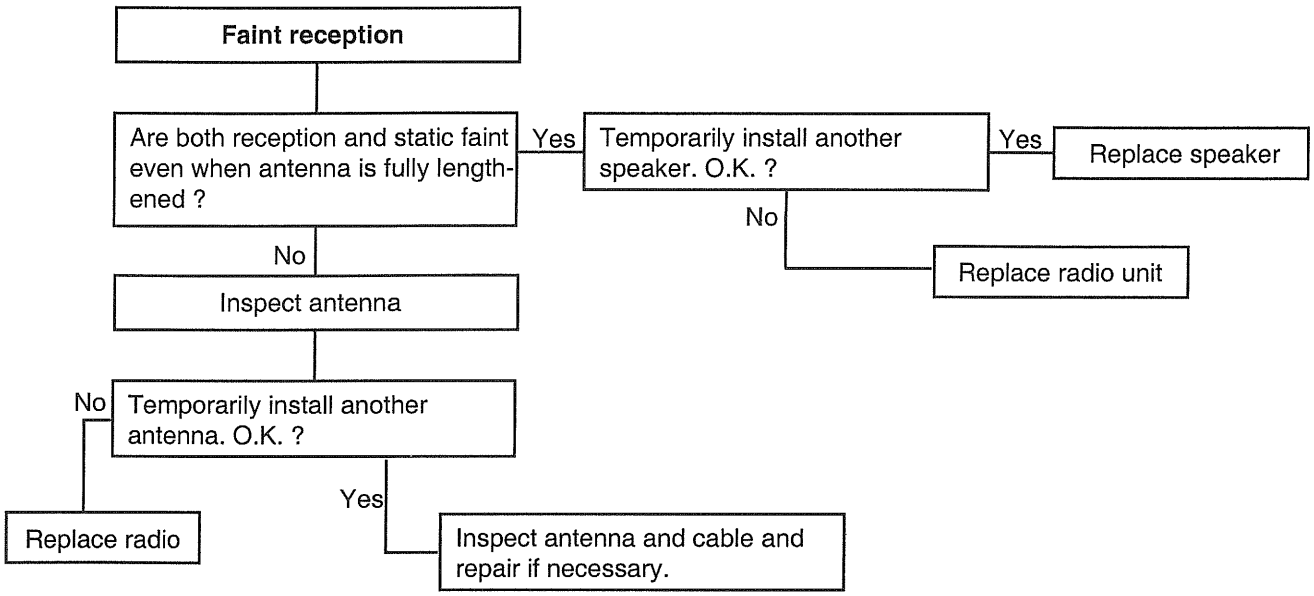

ETA9010K

CHART 7

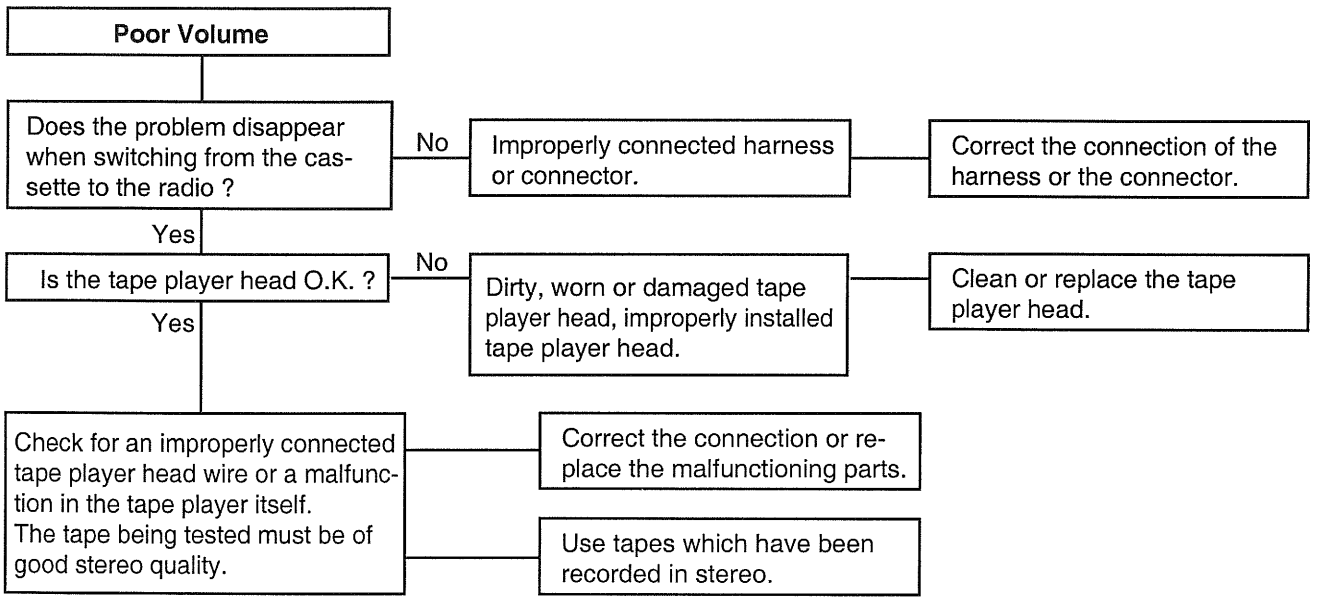

ETA9010L

CHART 8

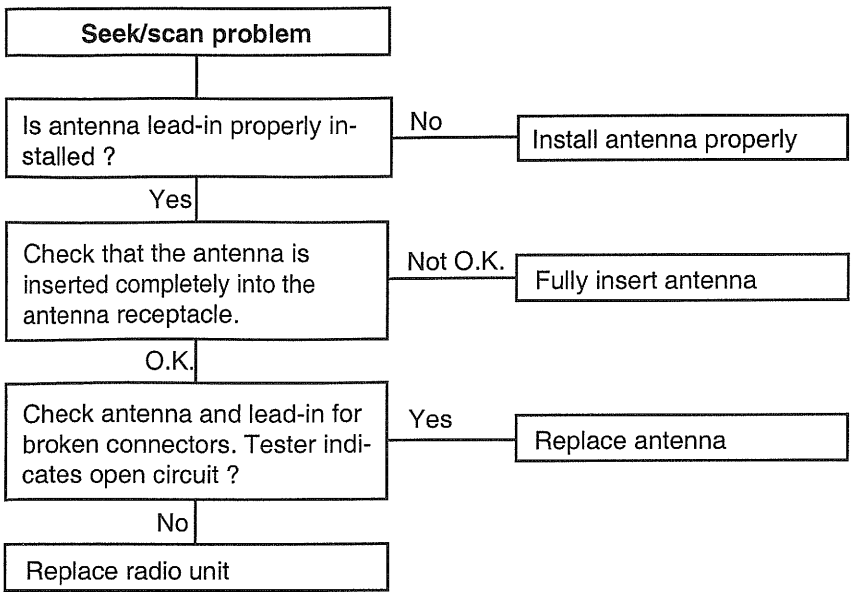

ETA9010M

CHART 9

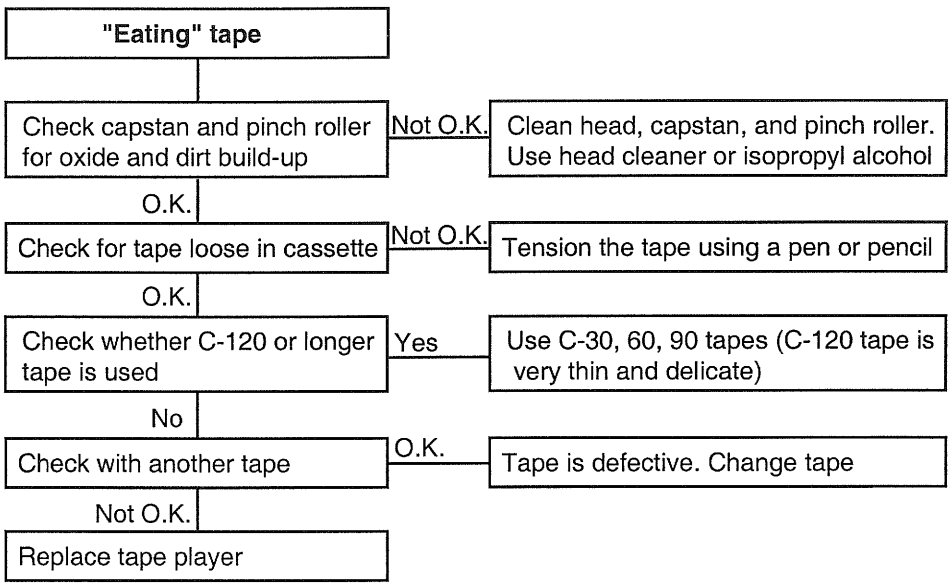

ETA9010N

CHART 10

1. MOTOR ANTENNA WON'T EXTEND OR RETRACT

Clean and polish the surface of the antenna rod.

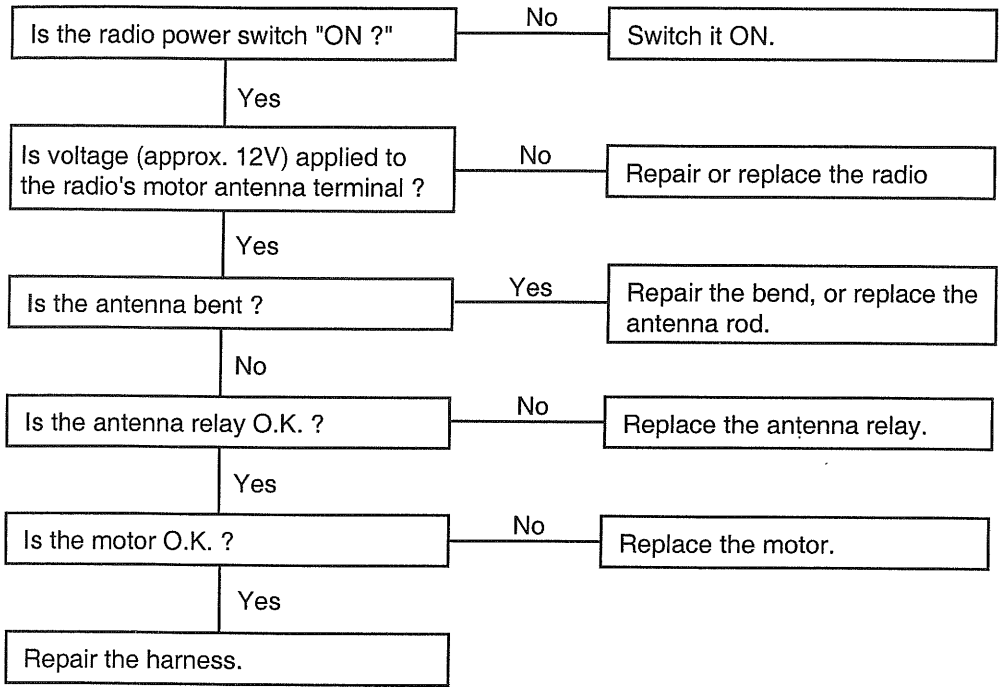

2. MOTOR ANTENNA EXTENDS AND RETRACTS BUT DOES NOT RECEIVE

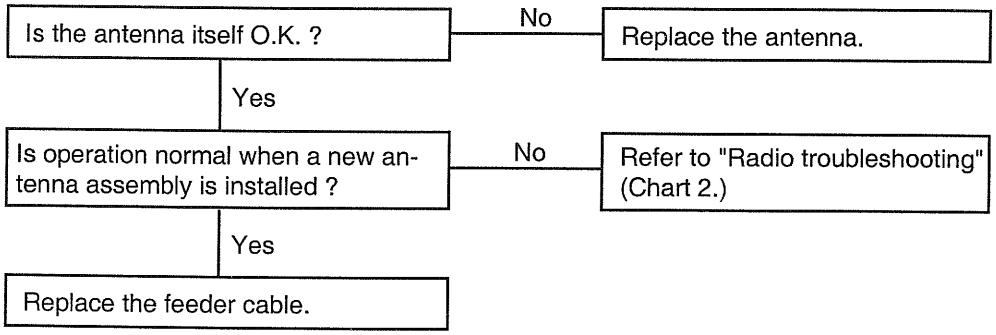

ETAA010P

WINDSHIELD WIPER

Symptom	Possible cause	Remedy
Wipers do not operate or return to off position.	Wiper fuse (20A) blown Wiper motor faulty Wiper switch faulty Wiring or ground faulty	Check for short and replace fuse Check motor Check switch Repair if necessary
Wipers do not operate in INT position	ETACS CM faulty Wiper switch faulty Wiper motor faulty Wiring or ground fautly	Check ETACS CM Check switch Check motor Repair if necessary

POWER WINDOW

Symptom	Possible cause	Remedy
No windows operate from the main switch on the driver's door	Fusible link (30A for P/Window) blown Poor ground Defective power window main switch Open circuit in wires or loose or disconnected connector	Replace the fusible link Clean and retighten the ground terminal mounting bolt Check the switch Replace if necessary Repair or replace
Driver's side window does not operate	Defective power window main switch Defective motor or circuit breaker Open circuit in wires or loose or disconnected connector	Check for driver's window switch Replace the motor Check the harness and the connector
Passenger's side window does not operate	Defective power window subswitch Defective motor or circuit breaker Wiring faulty or disconnected connector	Replace the switch Replace the motor Repair if necessary

POWER DOOR MIRROR

Symptom	Possible cause	Remedy
No mirrors operate	Rear fog lamp fuse (10A) blown Poor ground Defective mirror switch Open circuit in wires or loose or disconnected connector	Check the circuit and replace fuse Clean and retighten the gound terminal mounting bolt Check the switch Replace if necessary Repair or replace
One mirror does not operate	Defective mirror switch Defective mirror actuator Open circuit wires or loose or disconnected connector	Check the switch Replace if necessary Replace the actuator Repair or replace

ETACS

Symptom	Possible cause	Remedy
The system is not armed (The siren doesn't sound)	Transmitter faulty Receiver faulty Damaged or disconnected wiring of door switch input circuit ETACS module faulty	Replace the transmitter Replace the receiver Repair the harness Replace the ETACS module
The siren sounds in error when a door or tailgate is unlocked with the key while the system is armed	Damaged or disconnected wiring of a door key cylinder and tailgate key cylinder switch input circuit ETACS module faulty	Repair the harness or replace a door key cylinder and the tailgate key cylinder switch Replace the ETACS module
Engine does not start in disarm state	Burglar alarm relay faulty Damage or disconnected wiring of burglar alarm relay activation circuit Malfunction of the ETACS module	Replace the burglar alarm relay Repair the harness Replace the ETACS module

Symptom	Possible cause	Remedy
There is no alarm when, as an alarm test, a door is opened without using the key (The arming and disarming are normal, and the alarm is activated when the tailgate or hood is opened)	Damaged or disconnected wiring of door switch (all doors) input circuit Malfunction of the door switch Malfunction of the ETACS module	Repair the harness or replace the door switch Check the door switch Replace the ETACS module
There is no alarm when, as an alarm test, the tailgate is opened without using the key. (The alarm is activated, however, by opening a door or the hood)	Damaged or disconnected wiring of luggage compartment light switch input circuit Malfunction of the tailgate switch Malfunction of the ETACS module	Repair the harness or replace the luggage compartment light switch Check the tailgate switch Replace the ETACS module
There is no alarm when, as an alarm test the hood is opened from within the vehicle (The alarm is activated, however, by opening a door or tailgate)	Damaged or disconnected wiring of hood switch input circuit Malfunction of the hood switch Malfunction of the ETACS module	Repair the harness or replace the hood switch Check the hood switch Replace the ETACS module

KEYLESS ENTRY SYSTEM

Symptom	Possible cause	Check	Remedy
Operation range is unstable	Discharged transmitter battery	Check the transmitter, red lamp blinking upon pressing the transmitter switch	Replace the battery
	Transmitter or receiver faulty		Replace the transmitter or the receiver
Central locking device operates but keyless entry does not work	Discharged receiver battery	Check the transmitter, red lamp blinking upon pressing the transmitter switch	Replace the battery
	Faulty signal code registration		Ensure normal door opening/closing by using the door key and register the code again
	Faulty keyless entry circuit	Check the ETACS connector, and the harness between the ETACS and the door lock relay	Repair the connector or the harness
	Faulty receiver	Check the receiver output using the oscilloscope	Replace the receiver
	Faulty control unit and door module		Replace the faulty control unit and module

NOTE

If central lock and keyless entry do not operate simultaneously, systems other than the keyless entry may be considered faulty.
Then check related systems.

AUDIO SYSTEM

AUDIO UNIT

COMPONENTS ETNC0200

<H210>

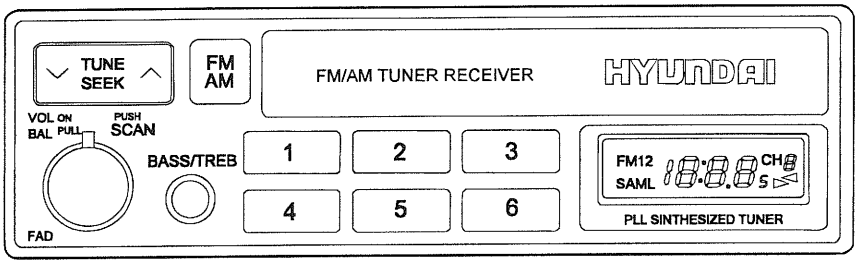

ETJA001W

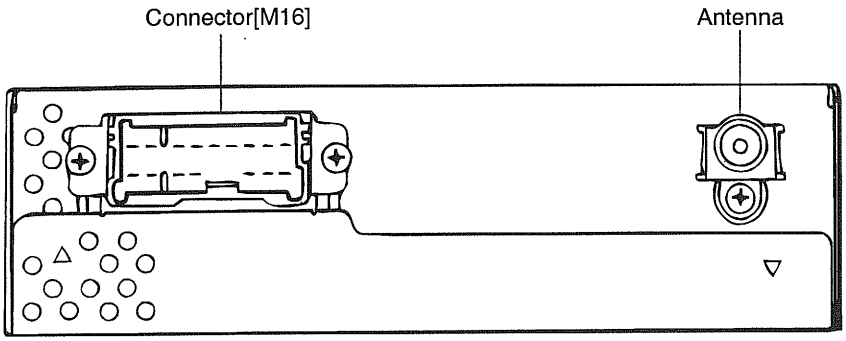

ETJA001X

Connector[M16]	Terminal	Description
[M16] ①②③ ④⑤ ⑥⑦ ⑧⑨⑩⑪⑫⑬⑭ ⑮⑯ ETJA001C	1	Antenna
	2	Rear left speaker(-)
	3	Front left speaker(-)
	4	Front right speaker(-)
	5	Rear right speaker(-)
	6	Illumination(-)
	7	ACC(+)
	8	Ground
	9	Rear left speaker(+)
	10	Front left speaker(+)
	11	N.C.
	12	N.C.
	13	Front right speaker(+)
	14	Rear right speaker(+)
	15	Illumination(+)
	16	Battery(+)

ETKA520A

<H220>

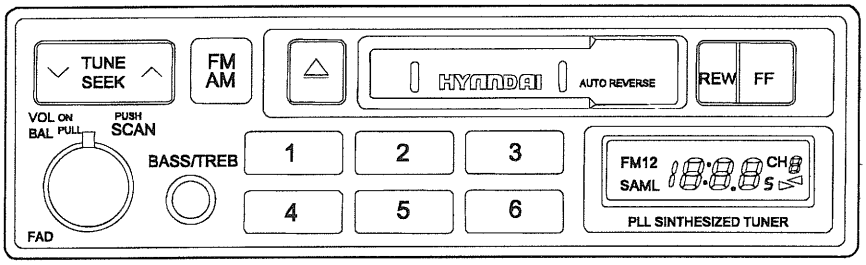

ETKA010A

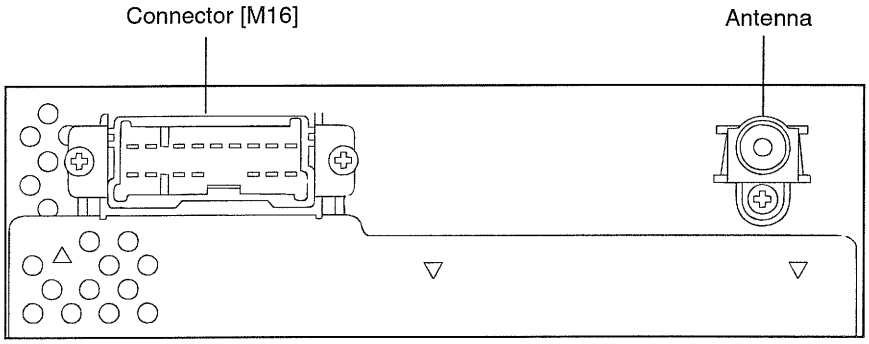

ETKA010B

Connector [M16]	Terminal	Description
[M16] 1 2 3 4 5 6 7 8 9 10 11 12 13 14 15 16 ETJA001C	1	Antenna
	2	Rear left speaker(-)
	3	Front left speaker(-)
	4	Front right speaker(-)
	5	Rear right speaker(-)
	6	Illumination(-)
	7	ACC(+)
	8	Ground
	9	Rear left speaker(+)
	10	Front left speaker(+)
	11	N.C.
	12	N.C.
	13	Front right speaker(+)
	14	Rear right speaker(+)
	15	Illumination(+)
	16	Battery(+)

ETNC020A

<H260>

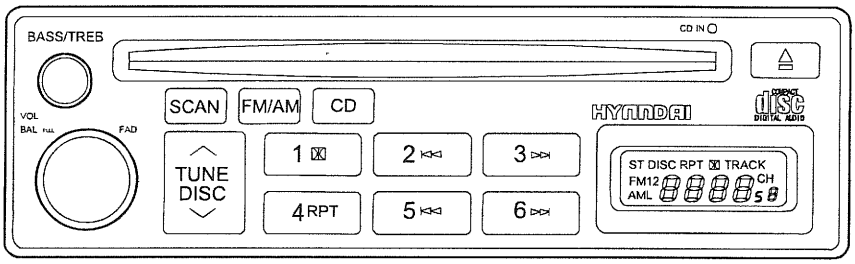

ETJA001E

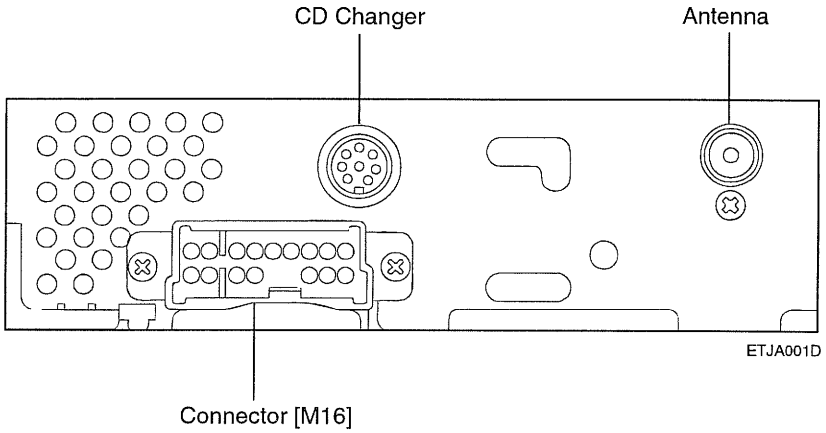

ETJA001D

Connector[M16]	Terminal	Description
[M16] 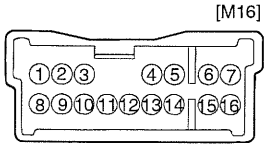 ETJA001C	1	Antenna
	2	Rear left speaker(-)
	3	Front left speaker(-)
	4	Front right speaker(-)
	5	Rear right speaker(-)
	6	Illumination(-)
	7	ACC(+)
	8	Ground
	9	Rear left speaker(+)
	10	Front left speaker(+)
	11	N.C.
	12	N.C.
	13	Front right speaker(+)
	14	Rear right speaker(+)
	15	Illumination(+)
	16	Battery(+)

Connector	Terminal	Description
(CD Changer) 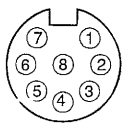 ETJA001G	1	R
	2	CD ON
	3	BUS
	4	B+
	5	M. Ground
	6	N.C.
	7	L
	8	A.Ground

ETNC020B

<H280>

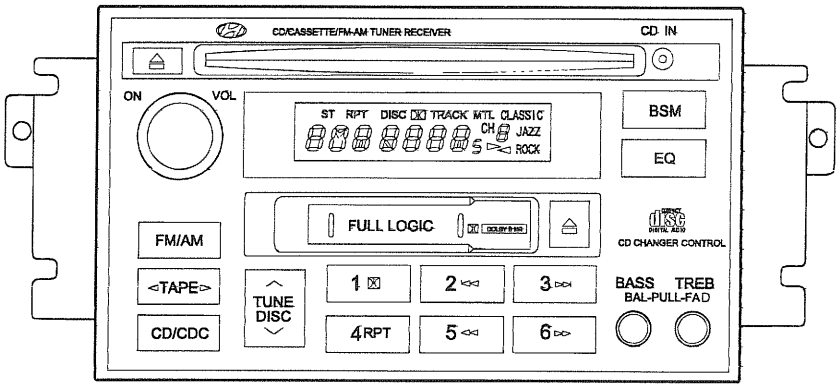

KTMB001M

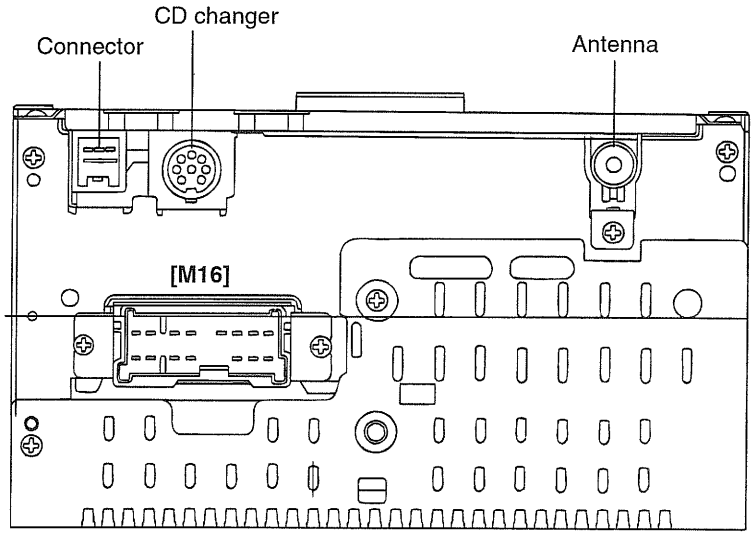

KTMB001L

Connector [M16]	Terminal	Description
[M16] 1 2 3 4 5 6 7 8 9 10 11 12 13 14 15 16 ETJA001C	1	Antenna
	2	Rear left speaker(-)
	3	Front left speaker(-)
	4	Front right speaker(-)
	5	Rear right speaker(-)
	6	Illumination(-)
	7	ACC(+)
	8	Ground
	9	Rear left speaker(+)
	10	Front left speaker(+)
	11	Voice ON
	12	N.C.
	13	Front right speaker(+)
	14	Rear right speaker(+)
	15	Illumination(+)
	16	Battery(+)

Connector	Terminal	Description
1 2 3 ETHA005F	1	Ground
	2	Signal
	3	Ground

Connector	Terminal	Description
(CD Changer) 7 1 6 8 2 5 4 3 ETJA001G	1	R
	2	CD ON
	3	BUS
	4	B+
	5	M. Ground
	6	N.C.
	7	L
	8	A.Ground

ETNC020C

REMOVAL AND INSTALLATION ETNC0250

1. Disconnect the negative(-) battery terminal.
2. Remove the center facia panel after removing a screw and disconnect the wire connectors.

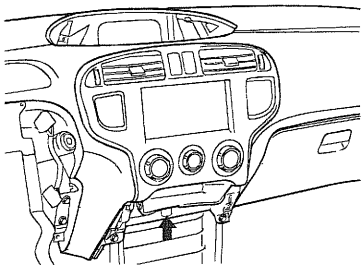

KSNB008J

3. Remove the 4 screws holding the audio unit then remove the audio assembly.

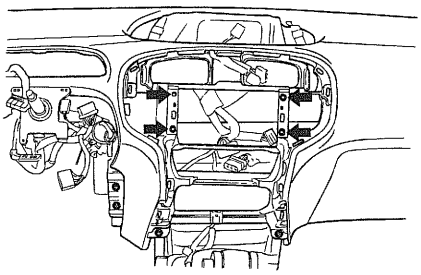

KSNB008I

4. Installation is the reverse of removal.

CD AUTO CHANGER

Remove the CD auto changer from the passenger's side seat leg.

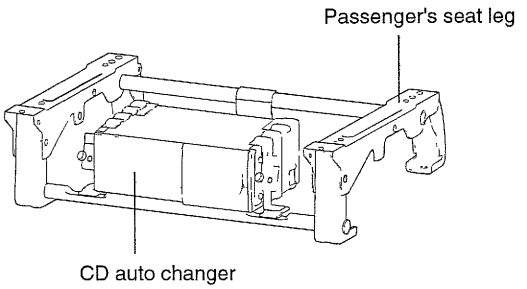

ETNC025A

SERVICE INSTRUCTIONS ETHA0750

TAPE HEAD AND CAPSTAN CLEANING

1. To obtain optimum performance, clean the head, and capstan as often as necessary, depending on frequency of use and tape cleanness.
2. To clean the tape head and capstan, use a cotton swab dipped in ordinary rubbing alcohol. Wipe the head and capstan.

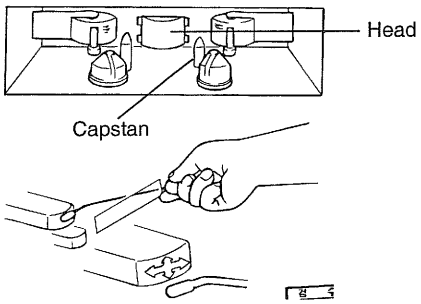

ETA9035A

SPEAKERS

REMOVAL AND INSTALLATION ETNC0300

FRONT SPEAKER

1. Remove the front door trim panel and remove the front speaker.

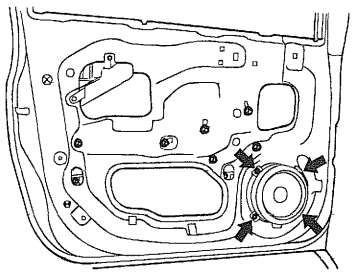

KSNB007B

2. Installation is the reverse of removal.

REAR SPEAKER

1. Remove the rear door trim panel and remove the rear speaker.

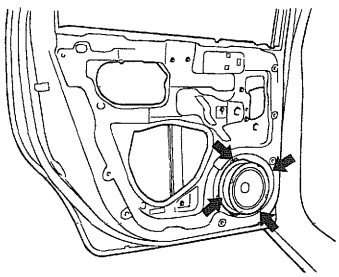

KSNB006K

2. Installation is the reverse of removal.

SPEAKER CHECKING ETA90400

1. Check the speaker with an ohmmeter. If an ohmmeter indicates the correct impedance of the speaker when checking between the speaker (+) and speaker (-) of the same channel, the speaker is ok.

2. If a clicking sound is emitted from the speaker when the ohmmeter is connected to the speaker terminals, the speaker is ok.

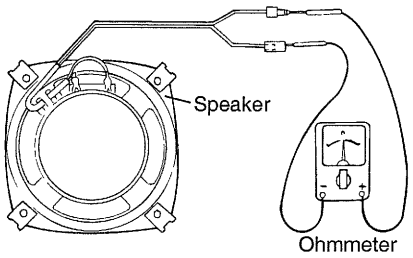

ETA9040A

ANTENNA

ROOF ANTENNA ETNC0350

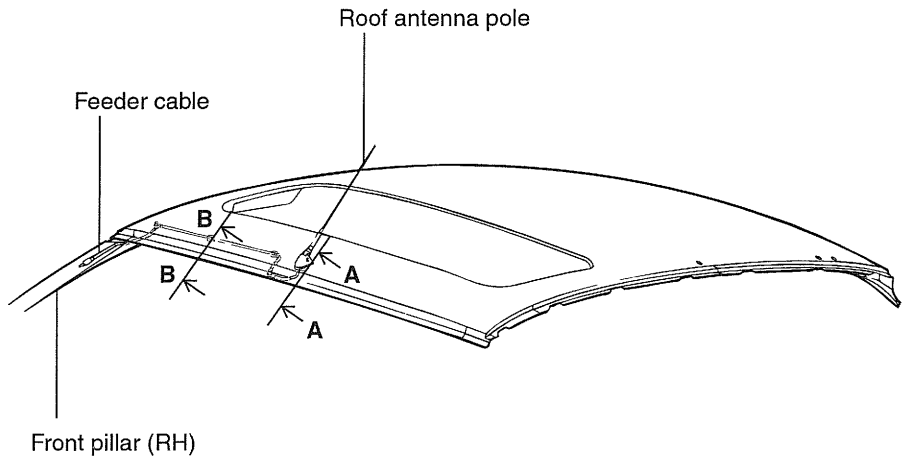

KSNB002A

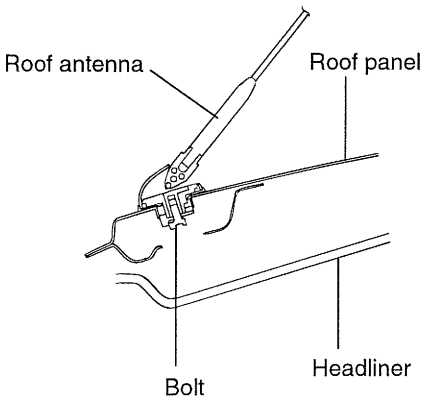

[SECT. A-A]

KSNB002B

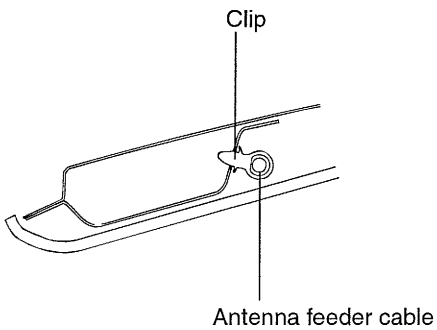

[SECT. B-B]

KSNB002C

ETNC035A

REMOVAL ETNC0400

1. Remove the overhead console lamp after removing 2 tapping screws.

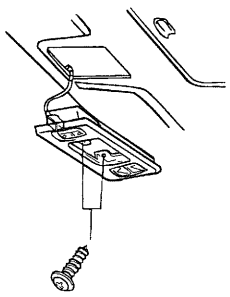

KTNB001S

2. Remove the roof antenna after removing a bolt.

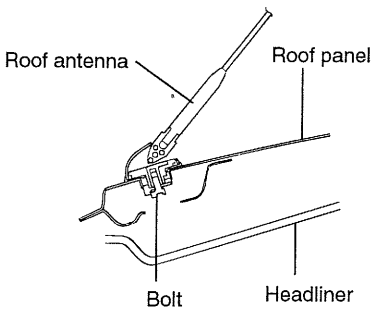

ETNC040A

3. Remove the sun visor and the assist grip then pull the headliner down and remove the antenna feeder cable.
4. Installation is the reverse of removal.

MULTI FUNCTION SWITCH

MULTI FUNCTION SWITCH

COMPONENTS ETNC0450

[WITHOUT AIR BAG]

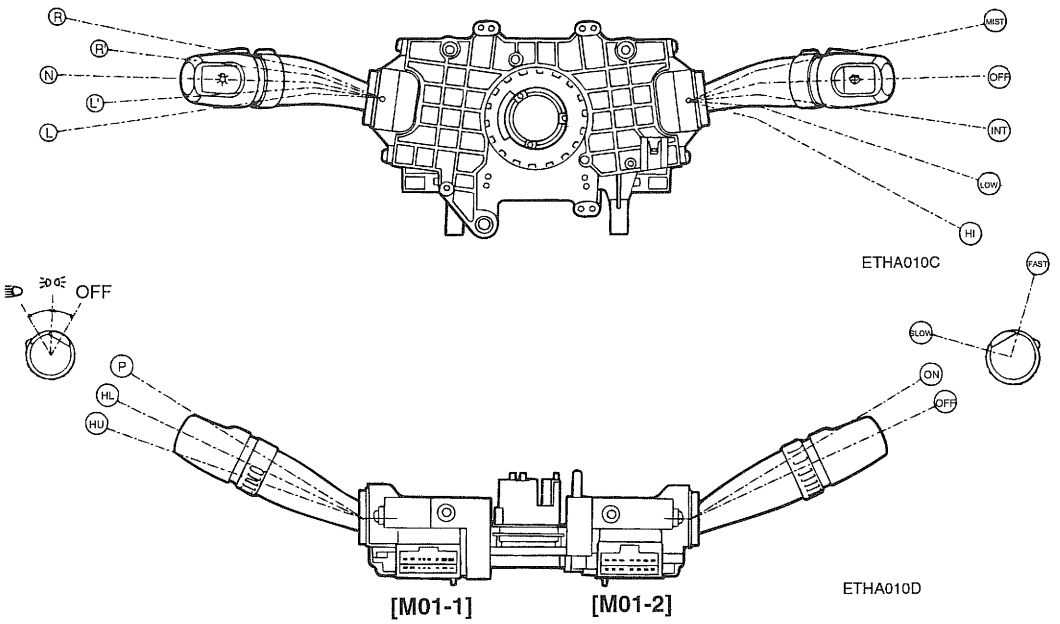

[M01-1]

1	2	3	4	5	6	7
8	9	10	11	12	13	14

[M01-2]

1	2	3	4	5	6	7	8	9
10	11	12	13	14	15	16	17	18

Circuit connection

Connector No.	Terminal No.	Description
M01-2	1	Head lamp passing switch
	2	Head lamp high beam power
	3	-
	4	-
	5	-
	6	-
	7	Turn signal RH lamp switch
	8	Flasher unit power
	9	Turn signal LH lamp switch
	10	Head lamp low beam power
	11	Dimmer & passing ground
	12	-
	13	-
	14	Tail lamp switch
	15	Head lamp switch
	16	Rear fog lamp switch
	17	Lighting switch ground
	18	-

Connector No.	Terminal No.	Description
M01-1	1	Wiper high speed
	2	Wiper low speed
	3	Wiper parking
	4	Mist switch
	5	Wiper & washer ground
	6	Intermittent wiper
	7	Front washer switch
	8	Horn relay
	9	Rear wiper & washer
	10	Rear wiper
	11	Rear wiper (INT)
	12	Rear wiper ground
	13	Intermittent wiper volume
	14	Intermittent wiper ground

ETNC045A

[WITH AIR BAG]

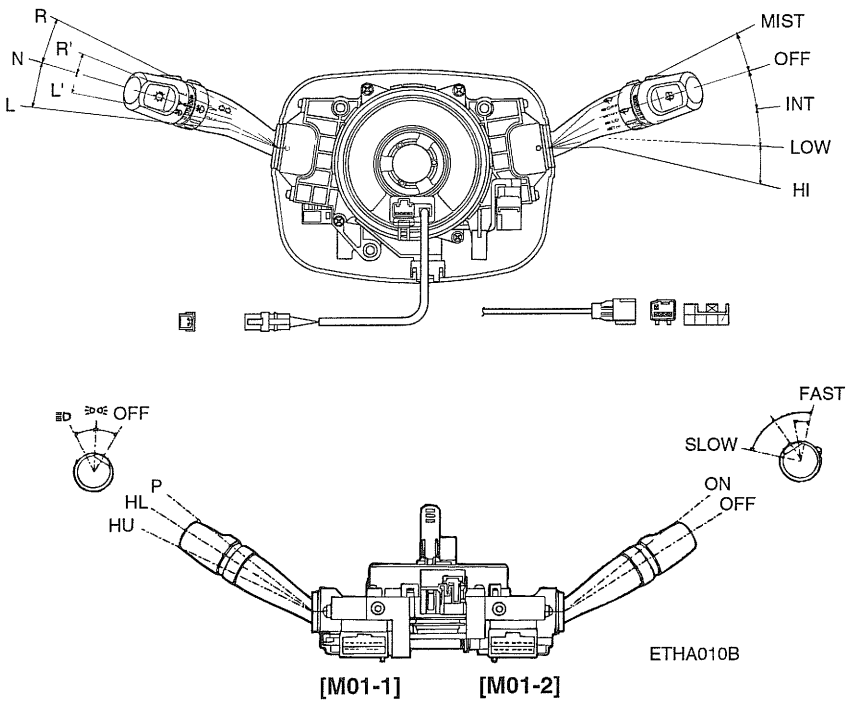

[M01-1]

1	2	3	4	5	6	7
8	9	10	11	12	13	14

[M01-2]

1	2	3	4	5	6	7	8	9
10	11	12	13	14	15	16	17	18

[M01-3]

1	2	3	4

Circuit connection

Connector No.	Terminal No.	Description	Connector No.	Terminal No.	Description
M01-2	1	Head lamp passing switch	M01-1	1	Wiper high speed
	2	Head lamp high beam power		2	Wiper low speed
	3	-		3	Wiper parking
	4	-		4	Mist switch
	5	-		5	Wiper & washer ground
	6	-		6	Intermittent wiper
	7	Turn signal RH lamp switch		7	Front washer switch
	8	Flasher unit power		8	-
	9	Turn signal LH lamp switch		9	Rear wiper & washer
	10	Head lamp low beam power		10	Rear wiper
	11	Dimmer & passing ground		11	Rear wiper (INT)
	12	-		12	Rear wiper ground
	13	-		13	Intermittent wiper volume
	14	Tail lamp switch		14	Intermittent wiper ground
	15	Head lamp switch	M01-3	1	-
	16	Rear fog lamp switch		2	Horn relay
	17	Lighting switch ground		3	-
	18	-		4	-

ETNC045B

REMOVAL AND INSTALLATION ETAC0400

Prior to removing of the multi function switch assembly in vehicles equipped with air bags, be careful to follow the following:

⚠ *CAUTION*

- ***Never attempt to disassemble or repair the air bag module or clock spring. If faulty, replace it.***
- ***Do not drop the air bag module or clock spring or allow contact with water, grease or oil. Replace if a dent, crack, deformation or rust is detected.***
- ***The air bag module should be stored on a flat surface and placed so that the pad surface is facing upward. Do not place anything on top of it.***
- ***Do not expose the air bag module to temperatures over 93°C(200°F).***
- ***After deployment of an air bag, replace the clock spring with a new one.***
- ***Wear gloves and safety glasses when handing an air bag that has been deployed.***
- ***An undeployed air bag module should only be disposed of in accordance with the procedures mentioned in the restraints section.***
- ***When you disconnect the air bag module-clock spring connector, take care not to apply excessive force.***
- ***The removed air bag module should be stored in a clean, dry place.***
- ***Prior to installing the clock spring, align the mating mark and "NEUTRAL" position indicator of the clock spring, and after turning the front wheels to the straight-ahead position, install the clock spring to the column switch. If the mating mark of the clock spring is not properly aligned, the steering wheel may not completely rotate during a turn, or the flat cable within the clock spring may be broken obstructing normal operation of the SRS and possibly leading to serious injury to the vehicle's driver. To inspect the clock spring, refer to the restraints section.***

1. Remove the air bag module.

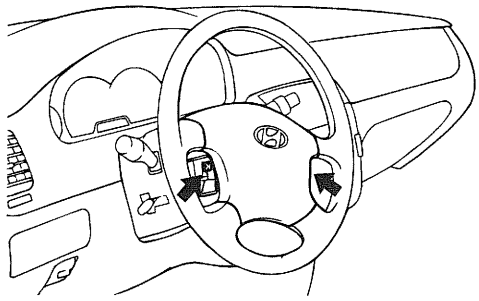

ESHA040M

2. Remove the steering wheel.

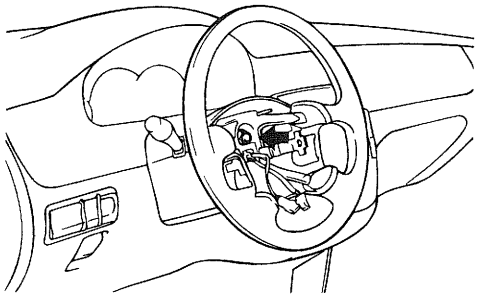

ESHA040N

3. Remove the steering column upper shroud and steering column lower shroud.

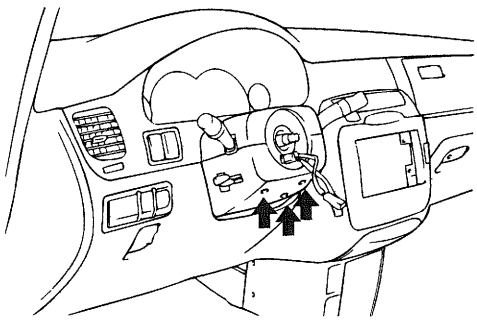

ESHA040O

4. Remove the 3 screws holding the multi function switch and disconnect the connectors. Remove the multi function switch assembly.

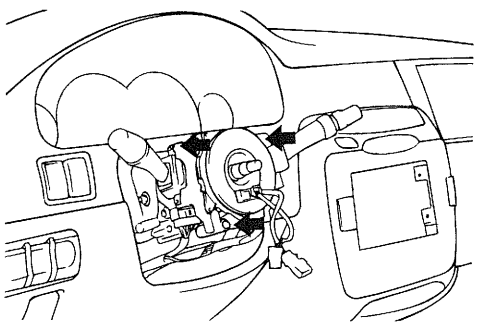

ESHA040P

5. Installation is the reverse of removal.

INSPECTION ETNC0500

Check the continuity between the terminals while operating the switch.

LIGHTING SWITCH [M01-2]

Position \ Terminal	14	15	16	17
OFF				
I	○			○
II	○	○	○	○

ETNC050A

DIMMER AND PASSING SWITCH [M01-2]

Position \ Terminal	1	2	10	11
HU		○		○
HL			○	○
P	○	○		○

HU : Head lamp high beam

HL : Head lamp low beam

P : Head lamp passing switch

KTDA040B

TURN SIGNAL AND LANE CHANGE SWITCH [M01-2]

Hazard switch \ Turn signal switch \ Terminal		7	8	9
OFF	L		○	○
	N			
	R	○	○	

KTDA040C

WIPER AND INTERMITTENT VOLUME SWITCH [M01-1]

Position \ Terminal	1	2	3	4	5	6	13	14
MIST				○	○			
OFF		○	○					
INT		○	○		○	○	○	○
LOW		○			○			
HI	○				○			

ETNC050B

WASHER SWITCH [M01-1]

Position \ Terminal	5	7
OFF		
ON	○	○

ETNC050C

REAR WIPER AND WASHER SWITCH [M01-1]

Position \ Terminal	9	10	11	12
WASHER	○			○
OFF				
INT			○	○
ON		○		○
WASHER	○			○

ETNC050D

HORNS

REMOVAL AND INSTALLATION ETNC0550

1. Remove the bolt holding the horn and remove the horn assembly.

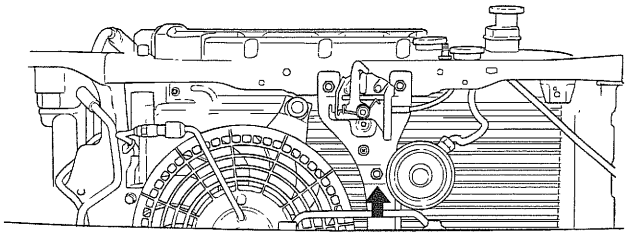

KTNB013C

2. Installation is the reverse of removal.

INSPECTION ETHA1200

1. Test the horn by connecting battery voltage to the 1 terminal and ground the 2 terminal.
2. The horn should make a sound. If the horn fails to make a sound, replace it.

ADJUSTMENT

Operate the horn, and adjust the tone to a suitable level by turning the adjusting screw.

> **NOTE**
> *After adjustment, apply a small amount of paint around the screw head to keep it from loosening.*

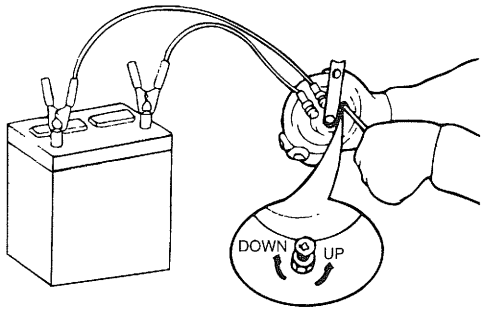

ETDA050A

CLOCK

COMPONENTS ETNC0600

[WITHOUT TRIP COMPUTER]

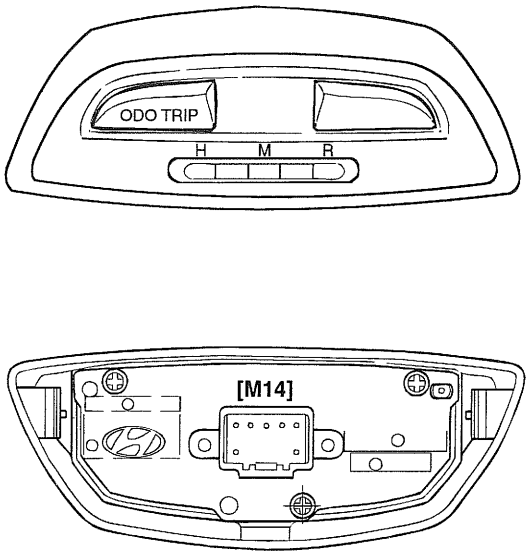

[WITH TRIP COMPUTER]

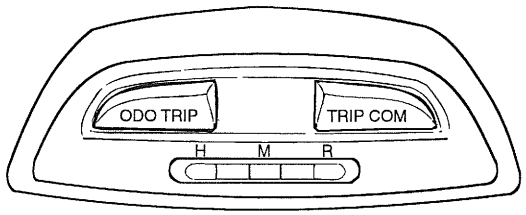

KTNB002G

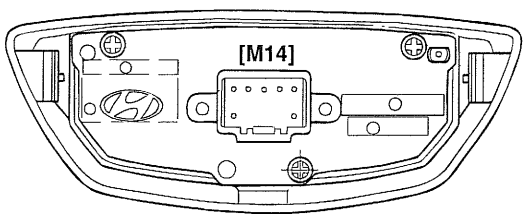

KTNB002H

ETNC060A

CIRCUIT DIAGRAM ETNC0650

[WITHOUT TRIP COMPUTER]

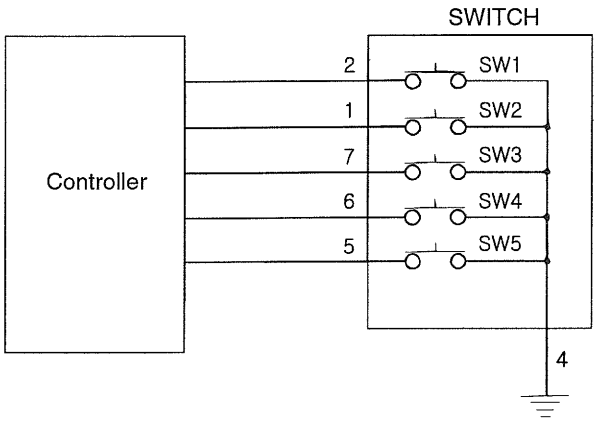

[M14]

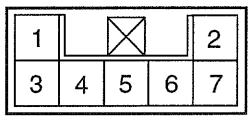

PIN CONNECTION

PINS	DESCRIPTION
1	-
2	Odo/Trip select & reset switch
4	Ground
5	Clock minute select switch
6	Clock hour select switch
7	Clock reset switch

[WITH TRIP COMPUTER]

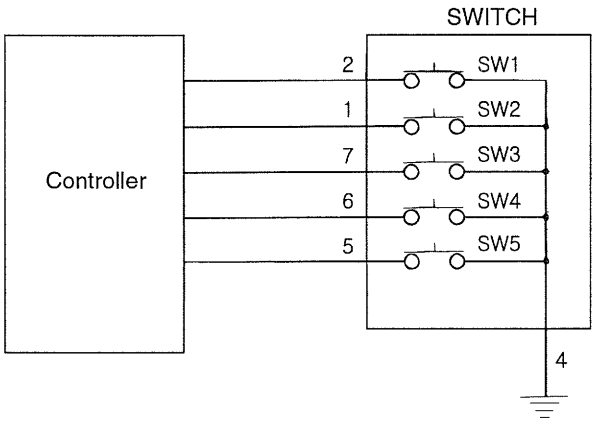

[M14]

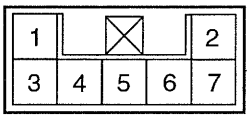

PIN CONNECTION

PINS	DESCRIPTION
1	Trip computer select & reset switch
2	Odo/Trip select & reset switch
4	Ground
5	Clock minute select switch
6	Clock hour select switch
7	Clock reset switch

ETNC065A

REMOVAL ETNC0700

1. Disconnect the negative(-) battery terminal.
2. Pry the cluster facia panel loose then disconnect the clock and trip computer switch connector.

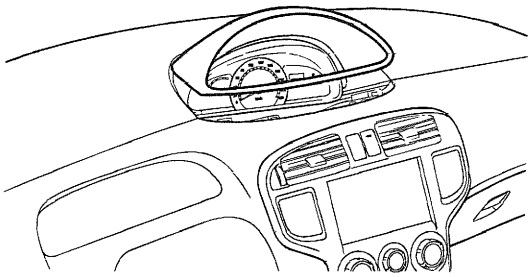

KSNB008R

ETACS (ELECTRONIC TIME AND ALARM CONTROL SYSTEM)

ETACS CM PIN CONNECTION ETNC0750

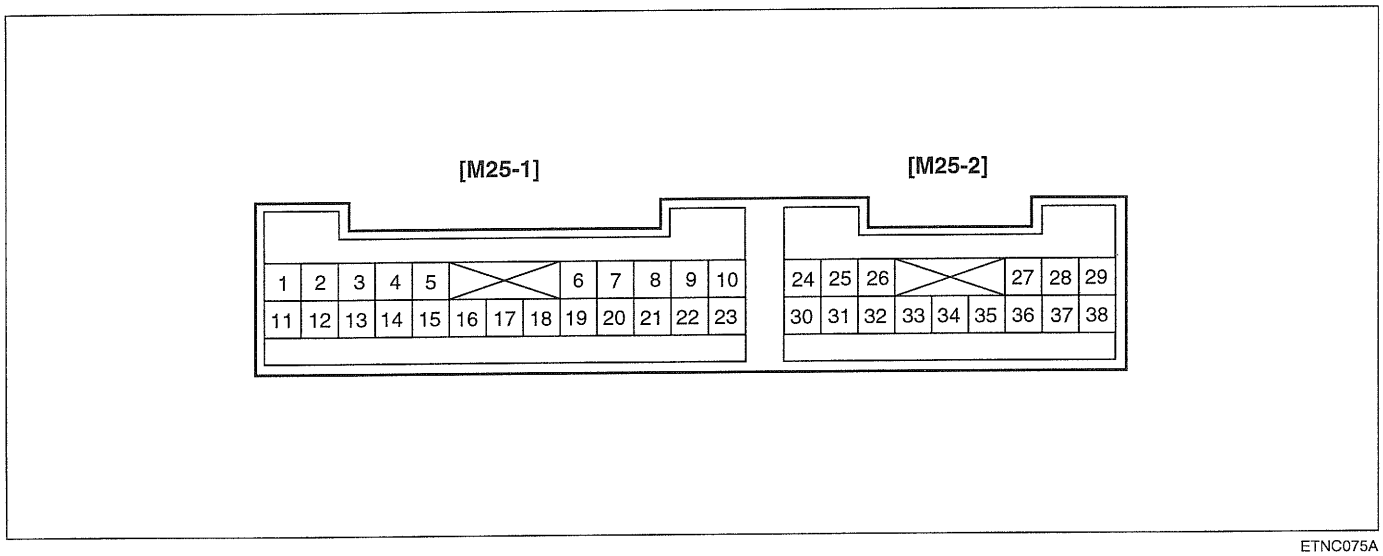

ETNC075A

Terminal No.	Description	Terminal No.	Description
1	Alternator "L"	21	Intermittent wiper switch
2	Tail lamp switch	22	Ignition 2
3	Door warning switch	23	Parking brake switch
4	Ignition 1	24	Hazard relay
5	Tail lamp relay	25	Door switch
6	Intermittent wiper volume switch	26	Horn
7	Code saver	27	Wiper relay
8	-	28	Power window relay
9	Battery (+)	29	DRL
10	Assist door lock switch	30	Door lock relay
11	Driver door lock switch	31	Door unlock relay
12	Speed sensor	32	Room lamp
13	Seat belt switch	33	Chime bell
14	Rear door lock switch	34	Rear defogger switch
15	Fuel cut switch	35	Tailgate switch
16	Ground	36	Hood switch
17	Washer switch	37	Burglar alarm relay
18	Seat belt warning indicator	38	Assist door switch
19	Driver door switch		
20	Rear defogger relay		

CIRCUIT DIAGRAM ETNC0800

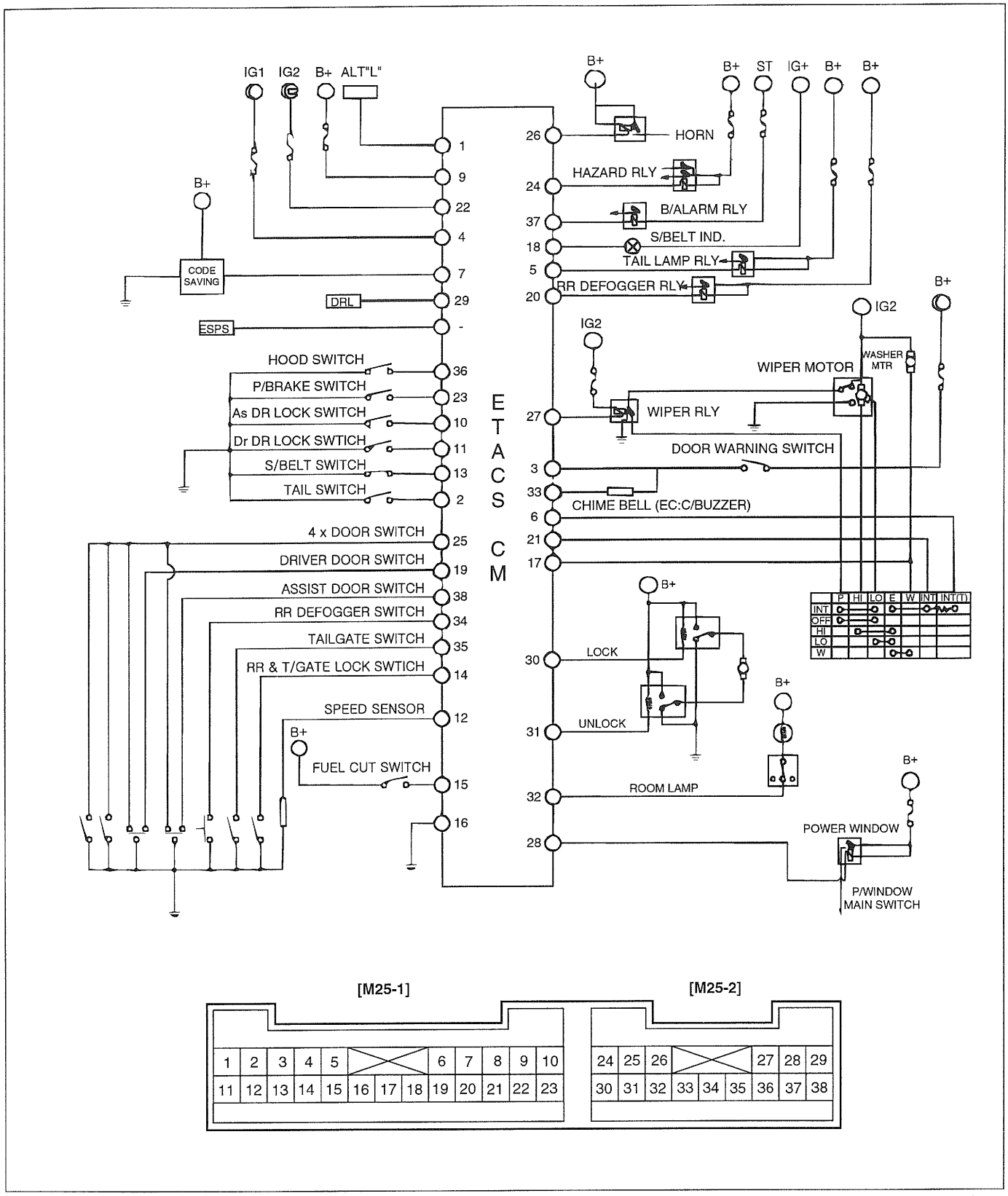

[M25-1]

1	2	3	4	5				6	7	8	9	10
11	12	13	14	15	16	17	18	19	20	21	22	23

[M25-2]

24	25	26				27	28	29
30	31	32	33	34	35	36	37	38

ETNC080A

REMOVAL AND INSTALLATION ETNC0850

1. Disconnect the negative (-) battery terminal
2. Remove the lower crash pad panel.

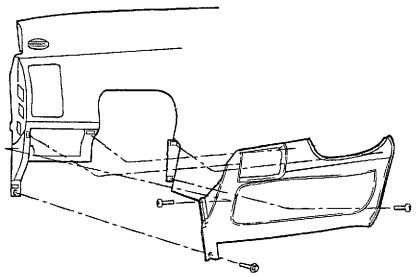

KSNB008D

3. Remove the ETACS CM after removing 2 bolts and disconnect the wire connectors.

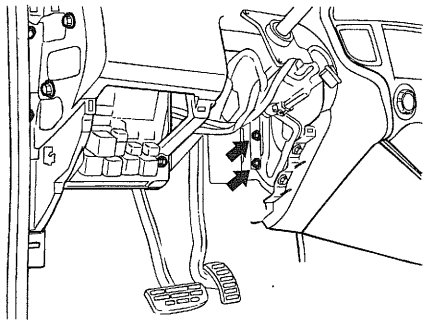

KTNB105A

4. Installation is the reverse of removal.

INSPECTION ETNC0900

While operating the components, check whether the operations are normal with timing chart.

ETACS FUNCTION

1. **Vehicle speed sensing intermittent wiper**

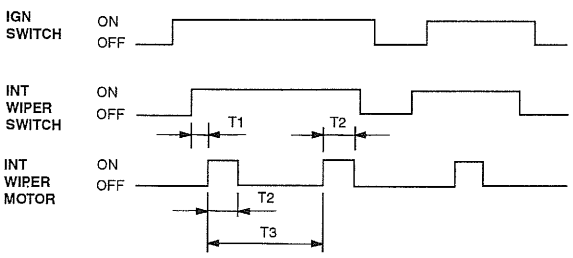

ETHA115C

Time specification
T1 : Max. 0.5 sec.
T2 : 0.6~0.7 sec. (Time of wiper motor 1 rotation)
T3 : At vehicle speed = 0km/h.
2.6±0.7 sec. (VR=0kΩ)~18.0±1sec (VR=50KΩ)
At vehicle speed = 100km/h or more.
1.0±0.2sec (VR=0kΩ)~10.0±1sec (VR=50KΩ)

2. **Washer**

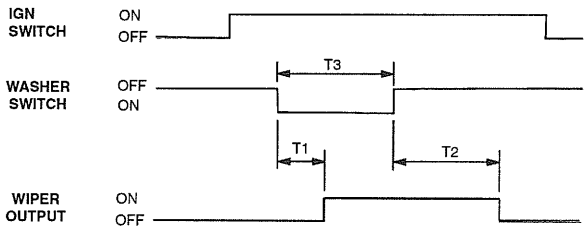

ETHA115D

a. Time specification
T1 : 0.3 sec.
T2 : 0.6 - 0.8 sec.
T3 : 0.2 - 0.6 sec.
b. Time specification
T1 : 0.3 sec.
T2 : 2.5 - 3.8 sec.
T3 : 0.6 sec. or more
c. This function should be operated preferentially even though the variable intermittent wiper is operating.

3. **Rear window defogger**

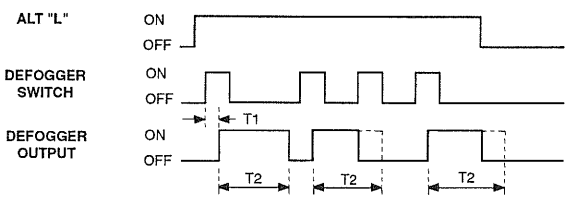

ETJA020B

Time specification
T1 : 60 msec
T2 : 20±1min.

4. Seat belt warning

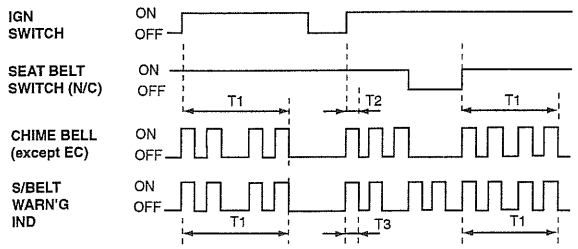

ETHA115F

Time specification
T1 : 6±1 sec.
T2 : 0.45±0.1 sec.
T3 : 0.3±0.1 sec.

5. Decayed out room lamp&keyless unlock timer

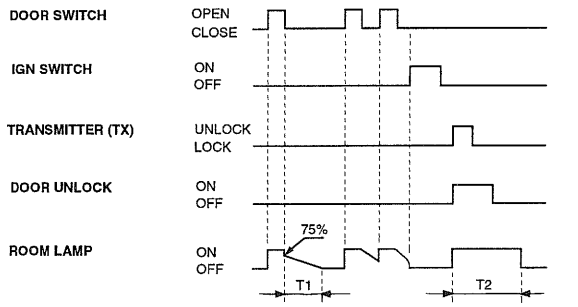

ETJA020C

Time specification
T1 : 5.5±0.5 sec.
T2 : 30±3 sec.

6. Key operated warning (except EC area)

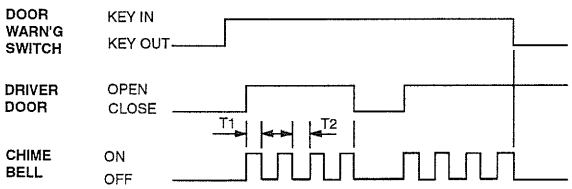

ETHA115L

Time specification
T1, T2 : 0.45±0.1 sec.

7. Ignition key reminder

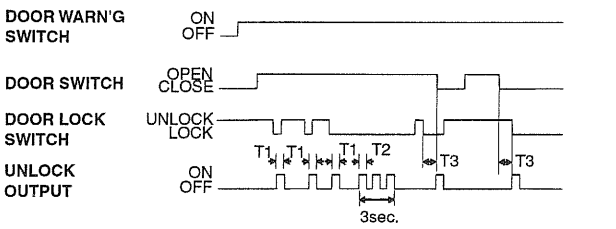

ETNC090A

Time specification
T1 : 1 sec.
T2 : 0.5 sec.
T3 : Max. 0.5 sec.

8. Tail lamp auto cut

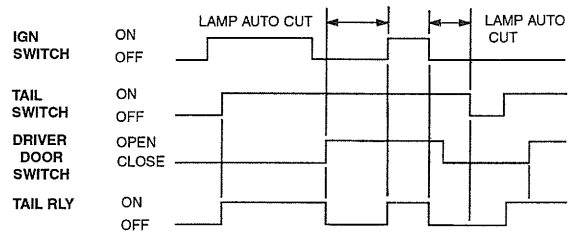

ETHA115M

9. Power window timer

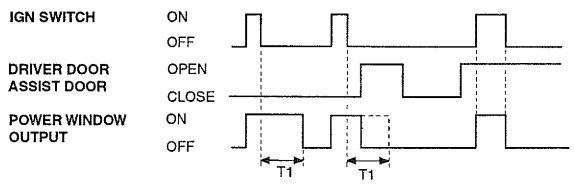

ETJA020E

Time specification
T1 : 30±3 sec.

10. Auto door lock(except EC area)

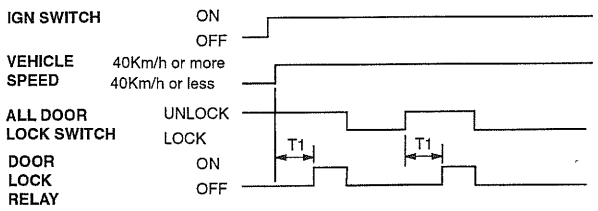

ETHA115N

Time specification
T1 : 2.5±0.5 sec.

11. Central door lock/unlock

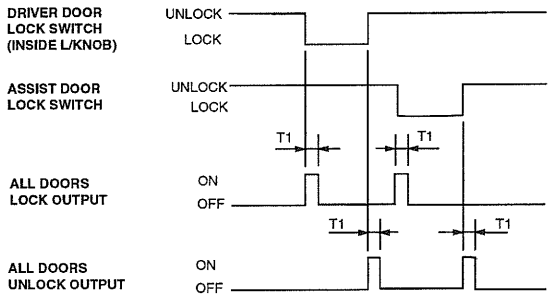

ETHA115H

Time specification
T1 : 0.5±0.1 sec.

12. Crash door unlock

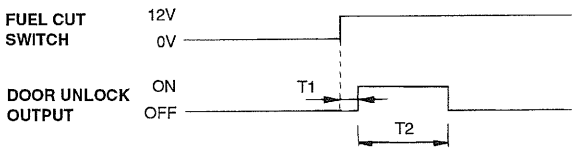

ETNC090B

Time specification
T1 : 40msec
T2 : 5±0.5 sec.

13. Ignition key off unlock(except EC area)

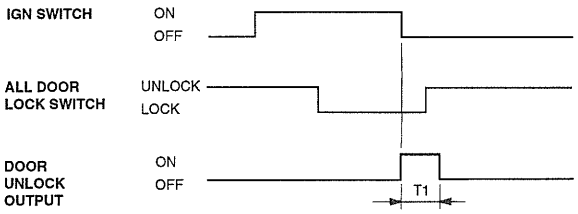

ETHA115P

Time specification
T1 : 0.5±0.1 sec.

14. Parking start warning

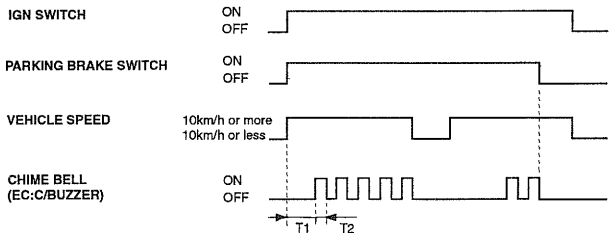

ETNC090C

Time specification
T1 : 2.5±0.5 sec.
T2 : 0.3±0.1 sec.

ANTI-THEFT FUNCTION

1. Arm function

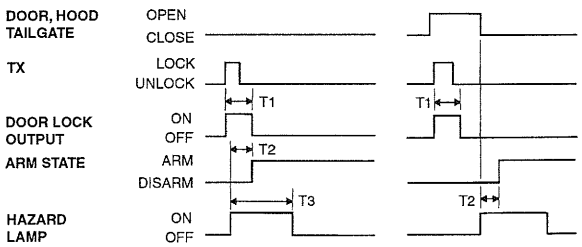

ETHA115Q

Time specification
T1 : 0.5sec.
T2 : Max 2sec.
T3 : 1.0±0.2sec.

2. **Disarm function**

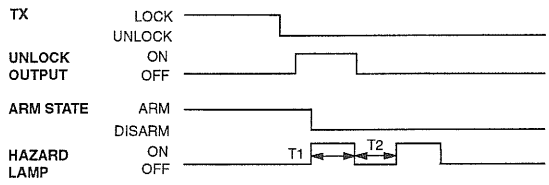

ETHA115R

Time specification
T1, T2 : 0.5±0.1sec.

3. **Alarm function**

a. Only EC area

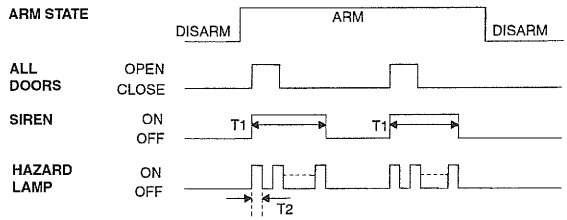

ETHA120F

Time specification
T1 : 27±2sec.
T2 : 0.5±0.1sec.

b. Except EC area

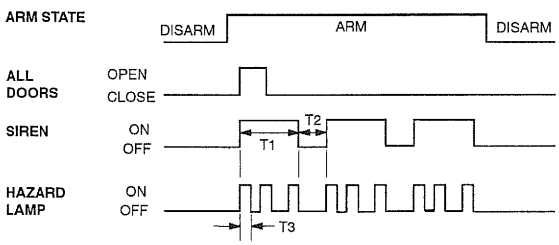

ETHA115S

Time specification
T1 : 27±2sec.
T2 : 10±1sec.
T3 : 0.5±0.1sec.

c. New alarm occurs while the alarm is sounding.

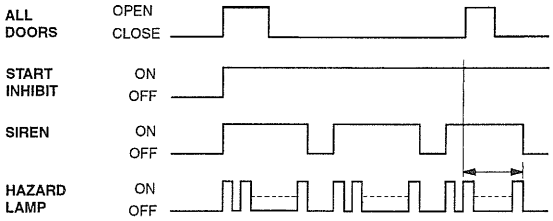

ETHA115T

d. Disarmed with TX (Transmitter) while the alarm is sounding.

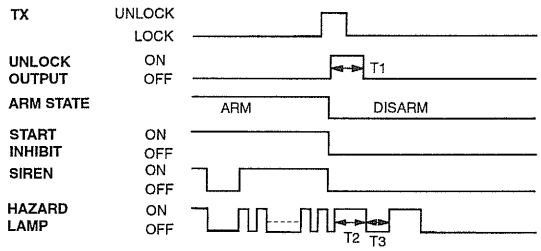

ETHA115U

Time specification
T1, T2, T3 : 0.5±0.1sec.

e. TX (Transmitter) lock button pressed when the door closed while the alarm is sounding.

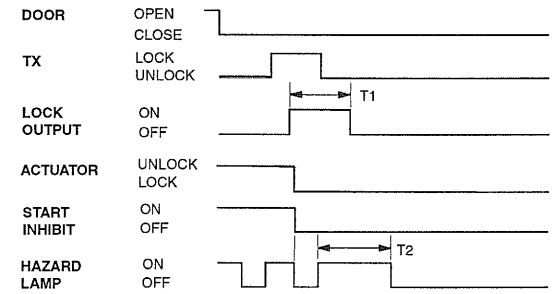

ETHA115V

Time specification
T1 : 0.5sec.
T2 : 1.0±0.2sec.

f. TX (Transmitter) lock button pressed when the door opened while the alarm is sounding.

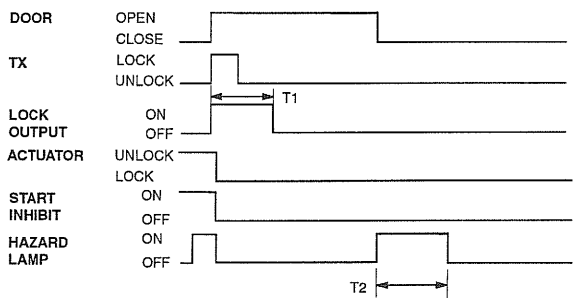

ETHA115W

Time specification
T1 : 0.5sec.
T2 : 1.0±0.2sec.

g. Disarmed after 30 sec when the ignition switch is turned on while the alarm is sounding.

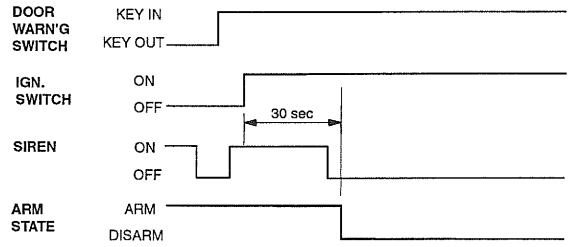

ETHA115X

h. Start inhibit is "ON" regardless of door latch lock state.

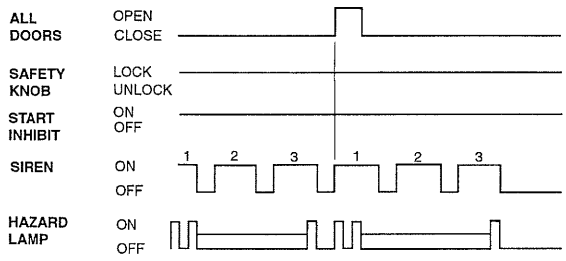

ETHA115Y

i. Battery is disconnected during the alarm state.

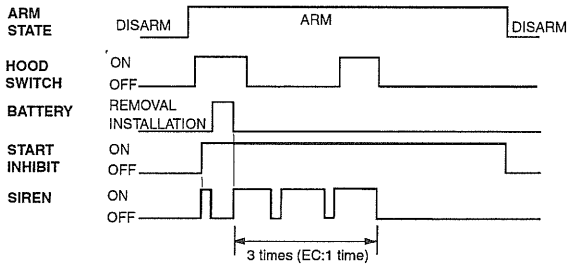

ETHA115Z

TRANSMITTER

INSPECTION ETNC0950

1. Check that the red light flickers when the door lock button or unlock button is pressed on the transmitter.
2. Remove the battery and check voltage if the red light doesn't flicker.

Standard voltage : 3V

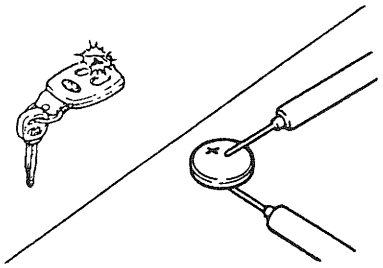

KTAB195A

3. Replace the battery if voltage is below 3V and replace the remote control switch if it is inoperable after replacing the battery.

Battery : Lithium CR2032 (3V, 220mA/h)

TRANSMITTER CODE SAVING METHOD ETNC1000

1. Remove the lower dash panel.

   NOTE

   Don't disconnect the negative (-) battery terminal.

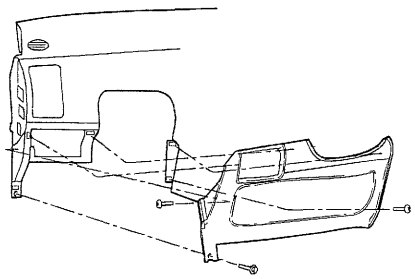

KSNB008D

2. To store new codes :
   - Activate the ETACS control module and change code saving switch of the ETACS control module from "OFF" to "SET".
   - The secret codes from the transmitter will be stored into the ETACS control module when the door lock button or unlock button is pressed on the transmitter.
   - Save the 2nd transmitter codes in the same manner.

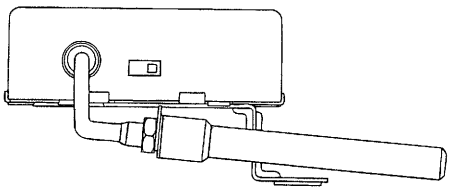

ETDA085R

3. Return the code saving switch of the ETACS control module from "SET" to "OFF".

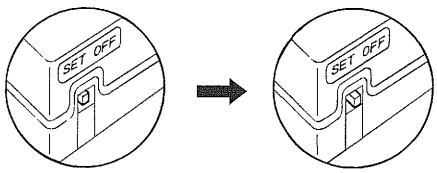

SET OFF

ETHA120D

4. Install the lower dash panel.

FUSES AND RELAYS

RELAY BOX (ENGINE COMPARTMENT)

SPECIFICATIONS ETNC1050

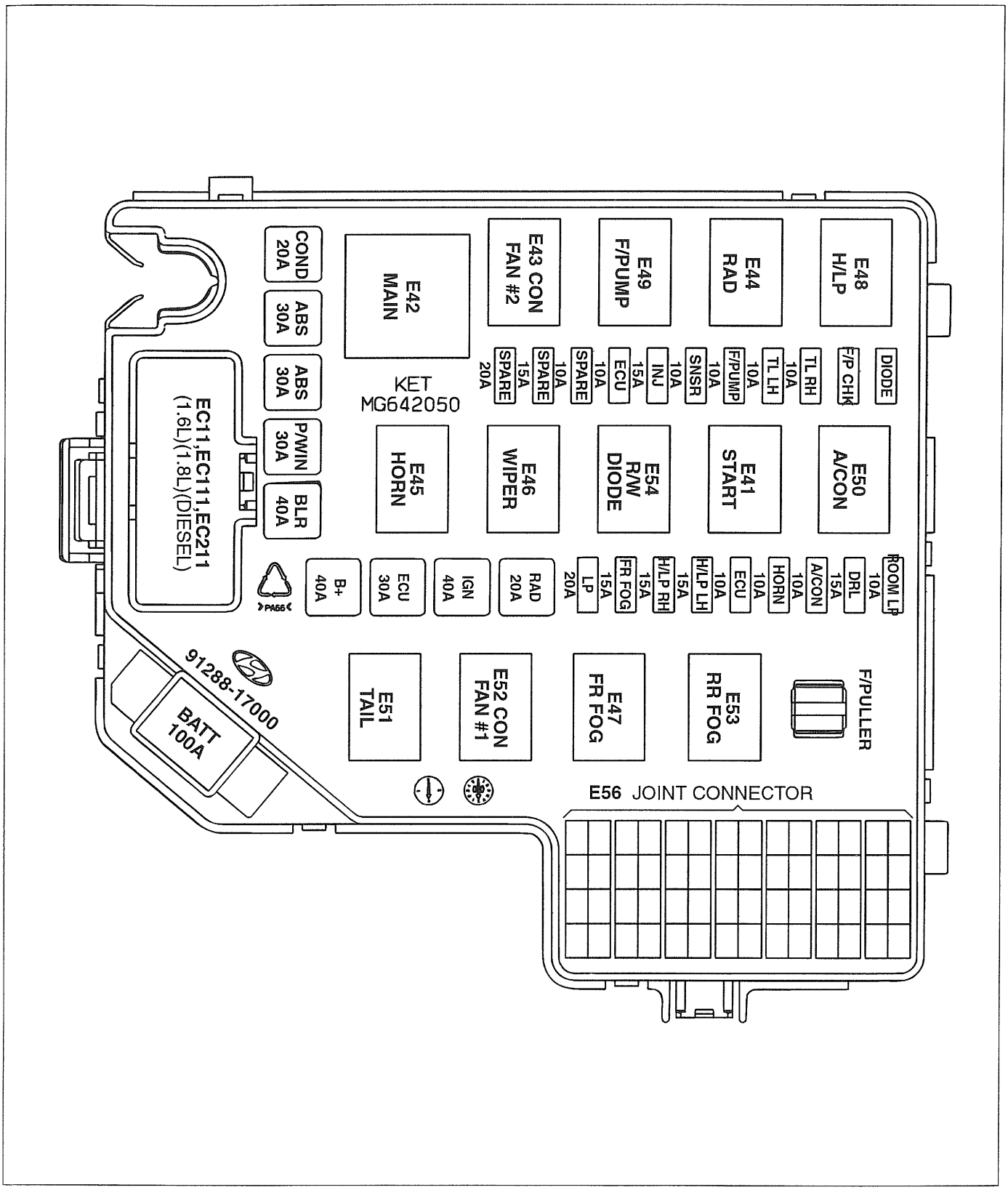

ETNC105A

INSPECTION ETMB1000

1. Check for a burnt fusible link with an ohmmeter.
2. If a fusible link burns out, there is a short or some other problem in the circuit. Carefully determine the cause and correct it before replacing the fusible link.

⚠ ***CAUTION***

The fusible link will burn out within 15 seconds if a higher than specified current flows through the circuit.

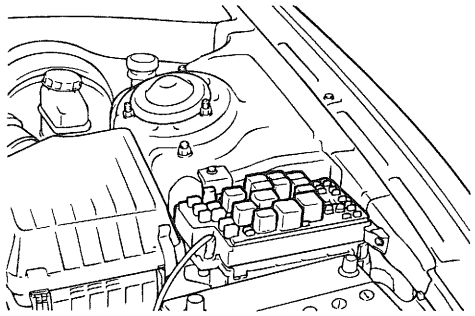

KTMB510A

RELAY BOX (PASSENGER COMPARTMENT)

SPECIFICATIONS ETNC1100

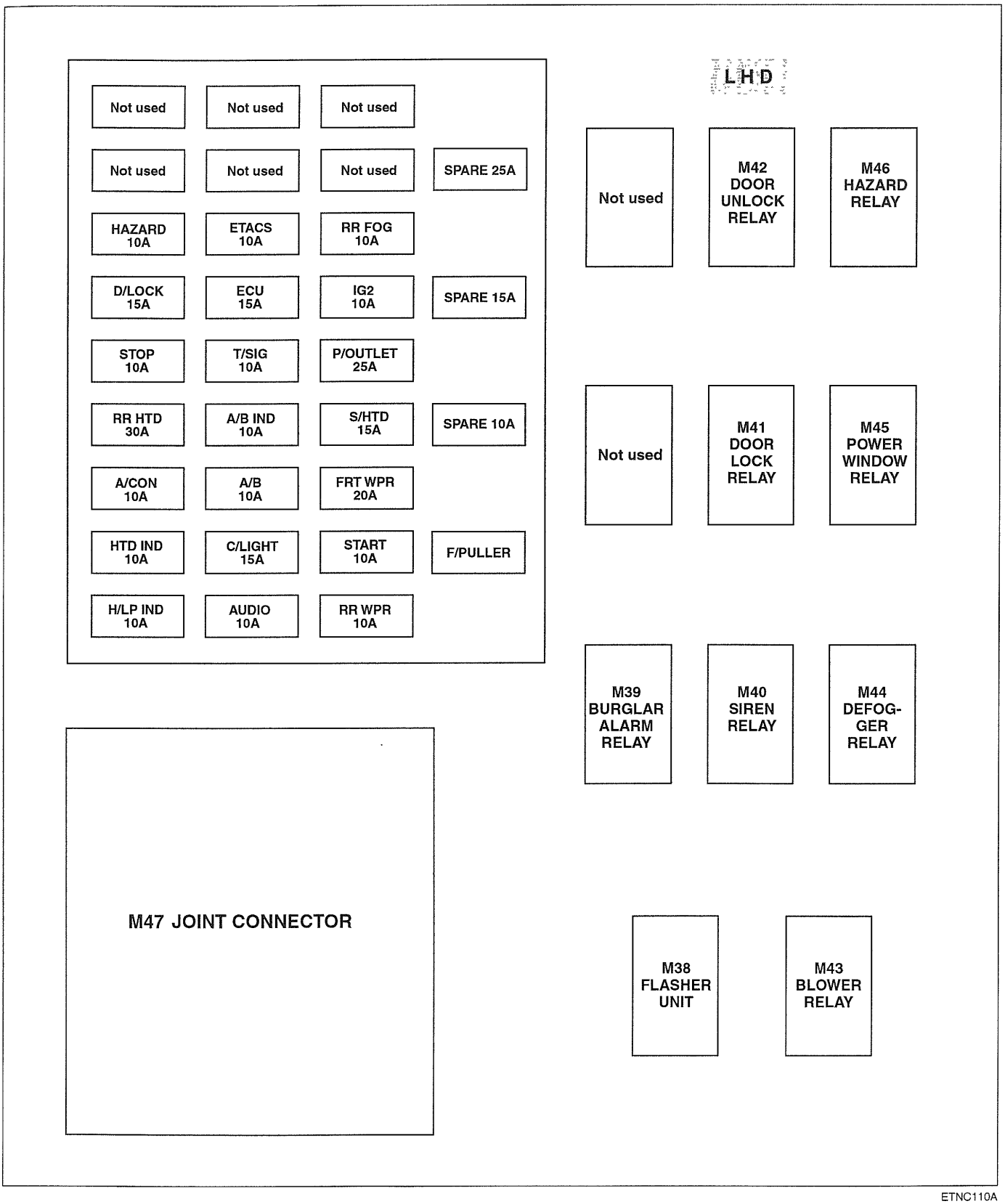

ETNC110A

INSPECTION ETNC1150

1. Check for a burnt relay with an ohmmeter.
2. If a relay burns out, there is a short or some other problem in the circuit. Carefully determine the cause and correct it before replacing the relay.

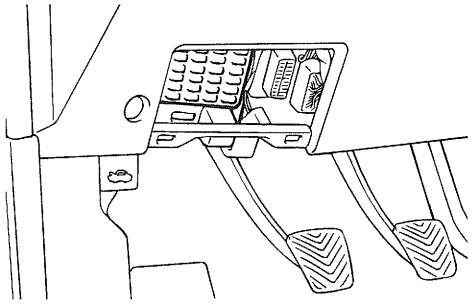

ETJA075E

INSPECTION OF FUSES

When a fuse is blown, there are two probable causes. The two causes can easily be determined by a visual check after removing the fuses.

1. **Fuse blown due to over-current.**
   Prior to replacing the fuse with a new one, check the circuit for a short and the related parts for abnormal conditions. Only after the correction of a short or replacement of abnormal parts, should a fuse with the same ampere rating be installed.

Blown fuse due to overcurrent

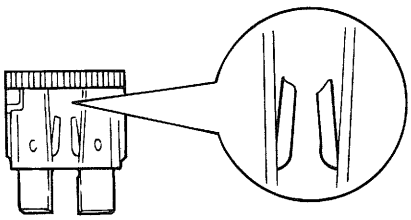

ETDA086A

2. **Fuse blown due to repeated on-off current.**
   Normally, this type of problem occurs after a fairly long period of use, and is less frequent than #1 above. In this case, you may simply replace with a new fuse of the same capacity.

Blown fuse due to thermal fatigue

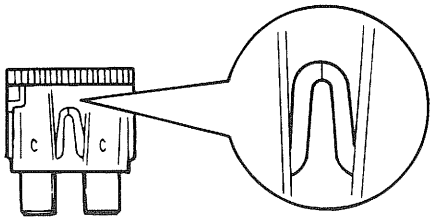

ETDA086B

⚠ *CAUTION*

A blade type fuse is identified by the numbered value in amperes. If the fuse is blown, be sure to replace a fuse with the same ampere rating. If a fuse of higher capacity than specified is used, parts may be damaged and a danger of fire exists. To remove or insert a fuse, use the fuse puller in the fuse box.

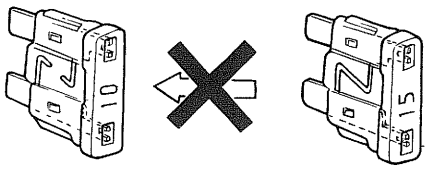

10A 15 A

ETDA086C

INDICATORS AND GAUGES

INSTRUMENT CLUSTER

COMPONENTS ETNC1200

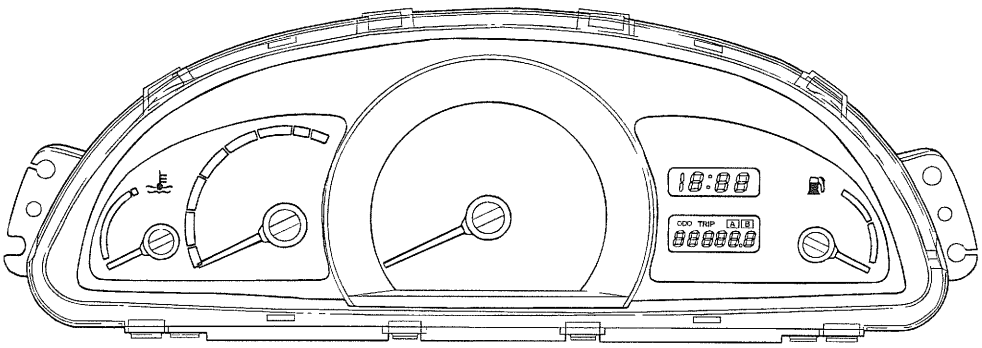

KTNB001M

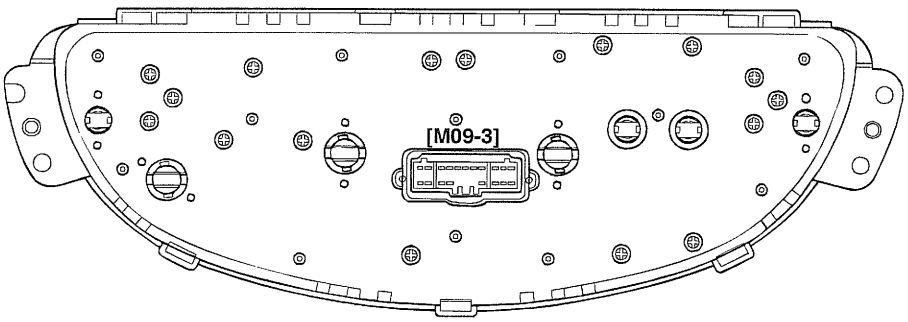

KTNB001N

[M09-3]

1	2	3	4				5	6	7	8
9	10	11	12	13	14	15	16	17	18	19

KTNB140A

CIRCUIT DIAGRAM ETNC1250

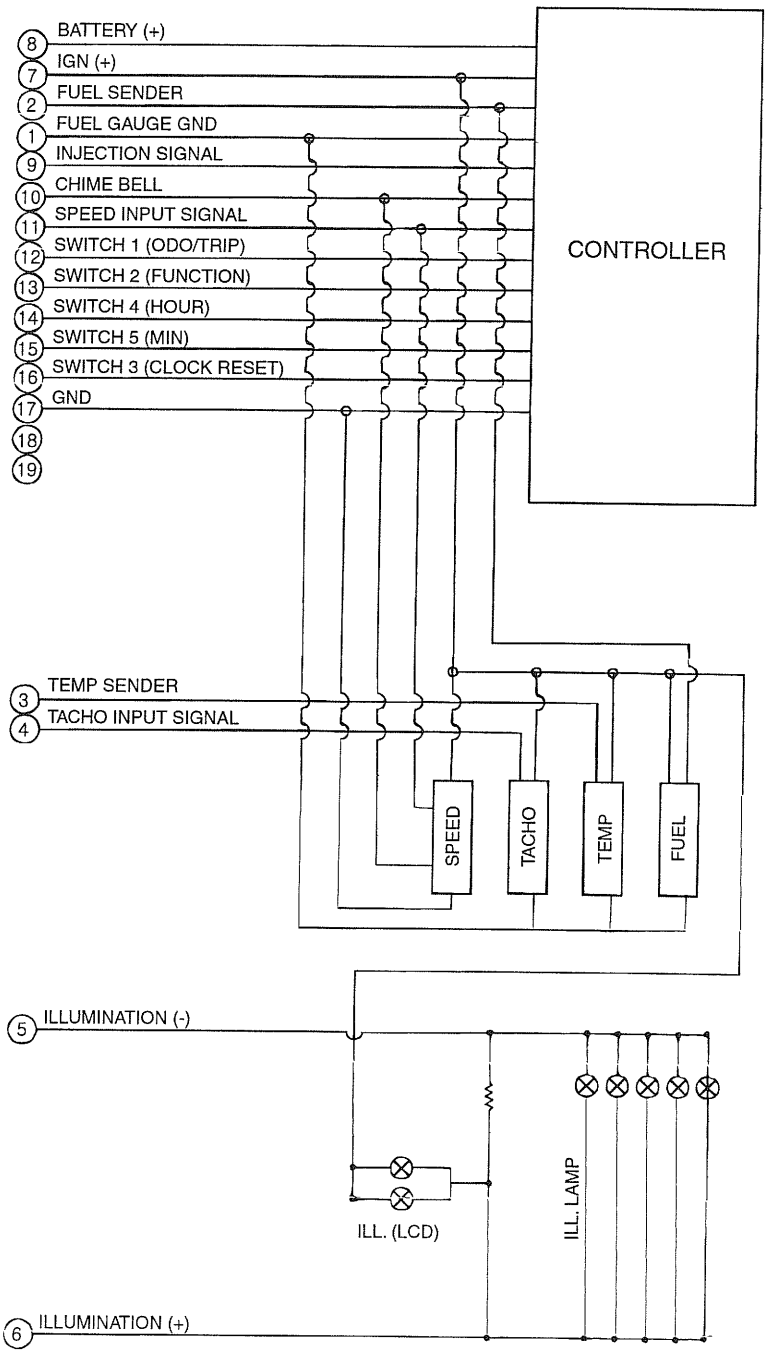

ETNC125A

REMOVAL AND INSTALLATION ETNC1300

1. Disconnect the negative (-) battery terminal.
2. Pry the cluster facia panel loose and disconnect the clock switch connector.

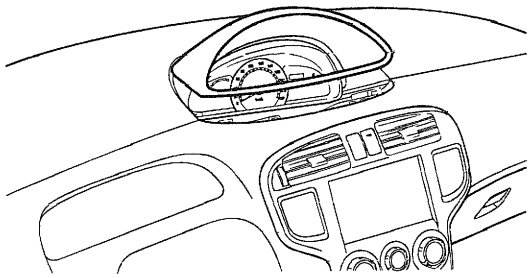

KSNB008R

3. Remove the 4 screws holding the cluster and remove the instrument cluster.

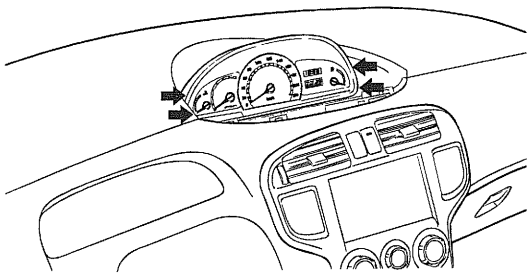

KSNB008F

4. Installation is the reverse of removal.

TELL-TALE LAMP ETNC1350

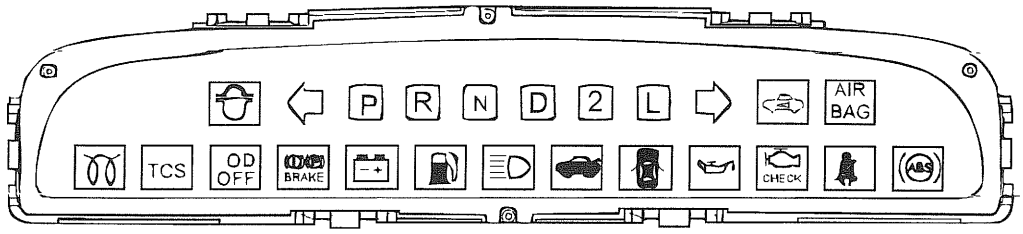

KTNB001P

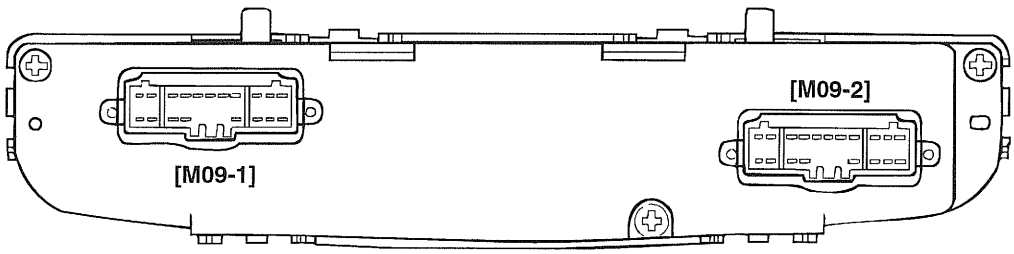

KTNB001Q

[M09-1]

1	2	3	4				5	6	7	8
9	10	11	12	13	14	15	16	17	18	19

[M09-2]

20	21	22	23				24	25	26	27
28	29	30	31	32	33	34	35	36	37	38

KTNB155A

CIRCUIT DIAGRAM ETNC1400

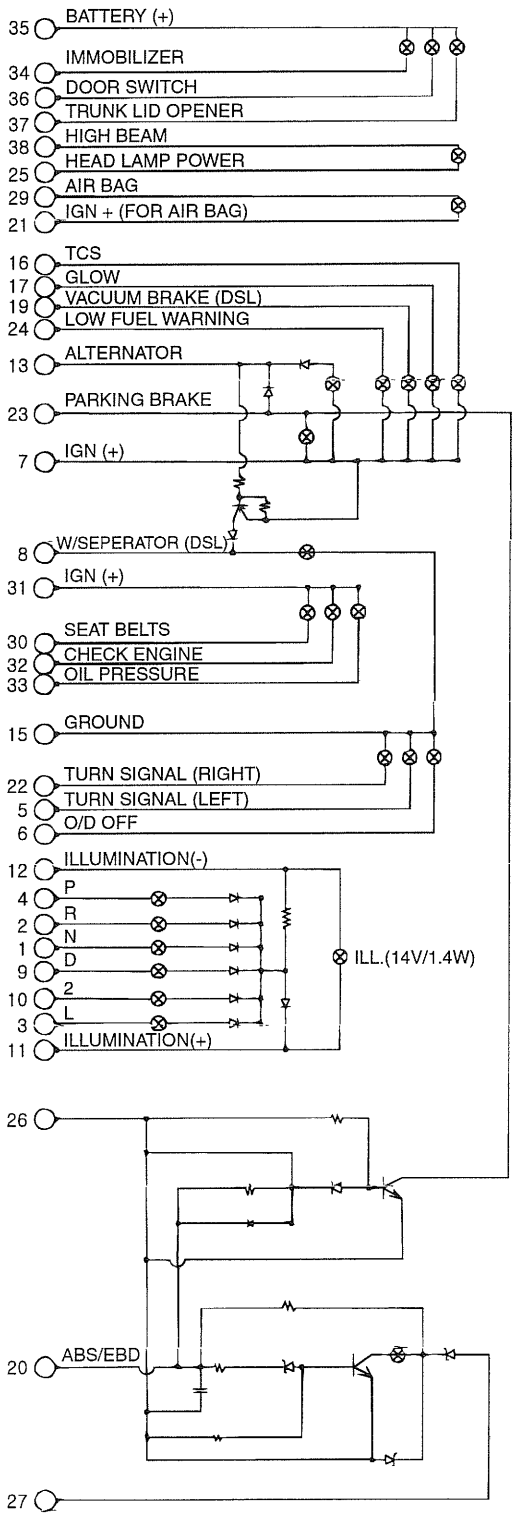

ETNC140A

REMOVAL ETNC1450

1. Disconnect the negative (-) battery terminal.
2. Remove the tell-tale lamp assembly with a flat-tip screwdriver and disconnect the wire connector.

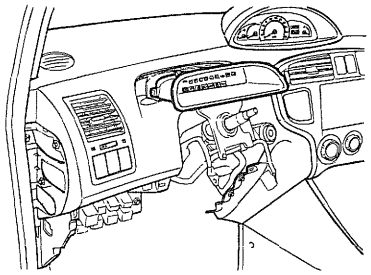

KSNB008E

3. Installation is the reverse of removal.

INSPECTION OF COMPONENTS ETNC1500

SPEEDOMETER

1. Adjust the pressure of the tires to the specified level.
2. Drive the vehicle onto a speedometer tester. Use wheel chocks as appropriate.
3. Check if the speedometer indicator range is within the standard values.

CAUTION

Do not operate the clutch suddenly or increase/ decrease speed rapidly while testing.

NOTE

Tire wear and tire over or under inflation will increase the indication error.

Velocity (Km/h)	20	40	60	80	100	120
Tolerance (Km/h)	20-24.1	40-43	60-64.1	80-85.2	100-105.2	120.5-126.3
Tolerance (Km/h)	20.8-25.4	40-44	60.8-65.4	81.4-86.8	102.6-108.2	123.5-129.6
Velocity (Km/h)	140	160	180	200	Area	
Tolerance (Km/h)	140.5-146.7	160.5-167.5	181-188.4	201-209.1	Others	
Tolerance (Km/h)	144.4-151	165.4-172.4	186.3-193.8	207.2-215.2	EEC & General	

Velocity (MPH)	10	20	40	60
Tolerance (MPH)	10-12.5	20-22.5	40-42.6	60-63.4
Velocity (MPH)	80	100	120	Area
Tolerance (MPH)	80.3-84.1	100.3-104.7	120.3-125.3	EEC & General

TACHOMETER

1. Connect the scan tool to the diagnostic link connector or install a tachometer.
2. With the engine started, compare the readings of the tester with that of the tachometer. Replace the tachometer if the tolerance is exceeded.

CAUTION

1. ***Reversing the connections of the tachometer will damage the transistor and diodes inside.***
2. ***When removing or installing the tachometer, be careful not to drop it or subject it to severe shock.***

Revolution (RPM)	1,000	2,000	3,000	4,000	5,000	6,000	7,000
Tolerance (RPM)	±100	±125	±150	±150	±150	±180	±210

FUEL GAUGE

OPERATION CHECK

1. Disconnect the fuel sender connector from the fuel sender.
2. Connect a 3.4 watt, 12V test bulb to terminals 2 and 3 on the wire harness side connector.
3. Turn the ignition switch to the ON, and then check that the bulb lights up and the fuel gauge needle moves to full.

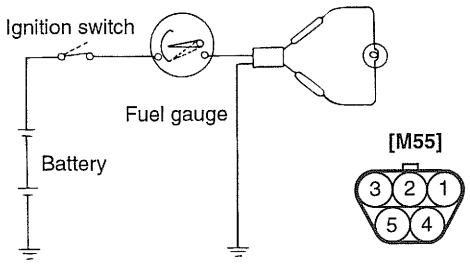

ETNC150B

FUEL SENDER

1. Using an ohmmeter, measure the resistance between terminals 2 and 3 at each float level.

Float position	F	1/2	E
Resistance (Ω)	4.0	32.5	110

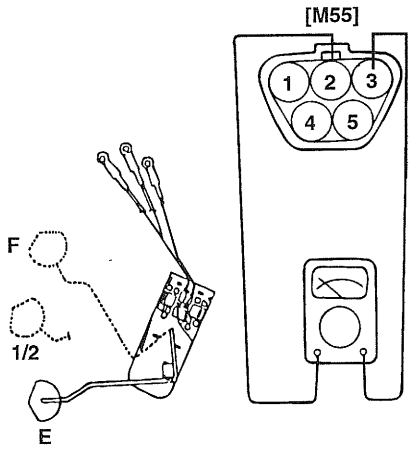

1. Thermister
2. Fuel gauge
3. Ground

ETNC150C

2. Also check that the resistance changes smoothly when the float is moved from "E" to "F".

LOW FUEL LEVEL SENSOR

1. Connect a test lamp (12V, 3.4W) and the battery to the sender. Immerse the sender in water.

2. The lamp should be off while the thermister is submerged in the water, and should illuminate when the sender is taken out of the water.

NOTE

If there is a malfunction, replace the fuel sender as an assembly.

CAUTION

After completing this test, wipe the sender dry and reinstall it in the fuel tank.

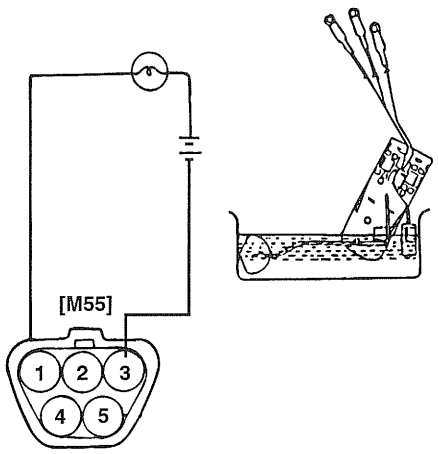

KTNB135C

ENGINE COOLANT TEMPERATURE GAUGE

1. Disconnect the wiring connector from the engine coolant temperature sender in the engine compartment.

2. Turn the ignition switch ON. Check that the gauge needle indicates cool. Turn the ignition switch OFF.

3. Connect a 12V, 3.4 watt test bulb between the harness side connector and ground.

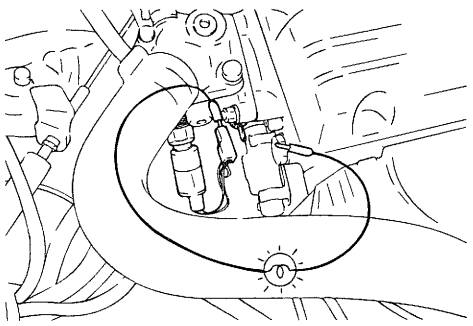

ETLA605D

4. Turn the ignition switch ON.

5. Verify that the test bulb flashes and that the indicator moves to HOT.

If operation is not as specified, replace the sender. Then recheck the system.

ENGINE COOLANT TEMPERATURE SENDER

1. Using an ohmmeter, measure the resistance between the terminal and ground.

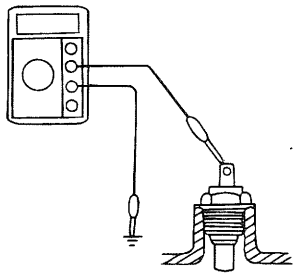

ETLA605E

2. If the resistance value is not as shown in the table, replace the temperature sender.

Temperature (°C)	60	85	110	125
Resistance (Ω)	122	47.4	24.3	15.9

OIL PRESSURE SWITCH

1. Check that there is continuity between the switch's terminal and ground with the engine stopped.
2. Check that there is no continuity between the terminal and ground with the engine running.
3. If operation is not as specified, replace the switch.

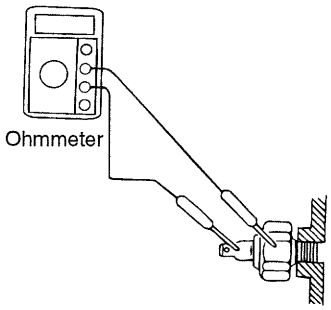

ETMB140C

OIL PRESSURE WARNING LAMP

1. Disconnect the connector from the warning switch and ground the terminal on the wire harness side connector.
2. Turn the ignition switch ON. Check that the warning lamp lights up. If the warning lamp doesn't light, test the bulb or inspect wire harness.

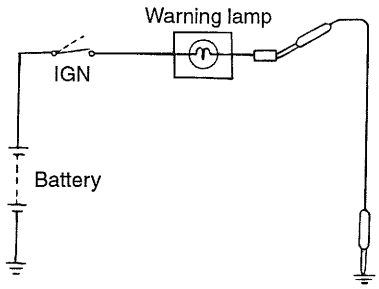

ETMB140D

BRAKE FLUID LEVEL WARNING SWITCH

1. Remove the connector from the switch located at the brake fluid reservoir.
2. Verify that continuity exists between switch terminals 1 and 2 while pressing down the switch (float) with a rod.

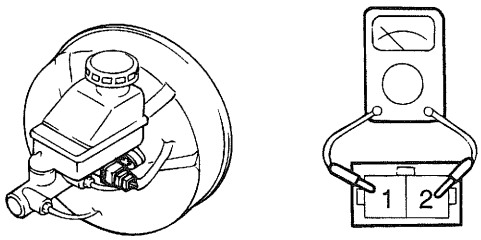

V5BE060M

BRAKE FLUID LEVEL WARNING LAMP

1. Start the engine.
2. Release the parking brake.
3. Remove the connector from the brake fluid level warning switch.
4. Ground the connector at the harness side.
5. Verify that the warning lamp lights.

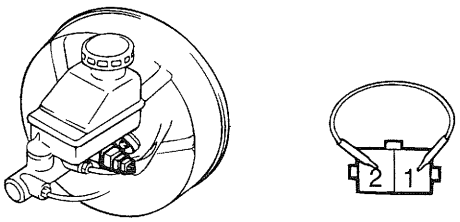

V5BE060N

PARKING BRAKE SWITCH

The parking brake switch is a push type located under the parking brake lever. To adjust, move the switch mount up and down with the parking brake lever released all the way.

1. Check that there is continuity between the terminal and switch body with the switch ON (Lever is pulled).
2. Check that there is no continuity between the terminal and switch body with the switch OFF (Lever is released).

If continuity is not as specified, replace the switch or inspect its ground connection.

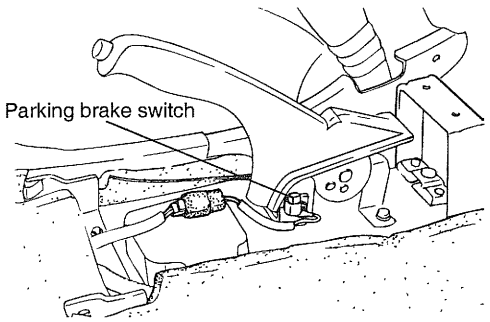

V5BE060O

DOOR SWITCH

Remove the door switch and check for continuity between the terminals.

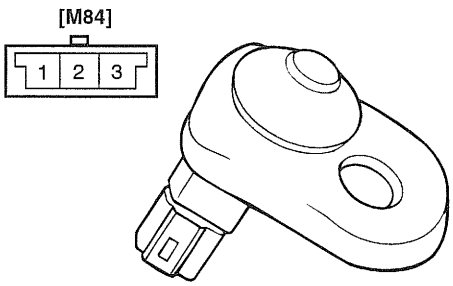

KTNB135D

Terminal / Position	1	2	3
Free (Door open)	○	○	○
Push(Door close)			

ETNC150A

SEAT BELT SWITCH

1. Remove the connector from the switch.
2. Check for continuity between terminals.

Seat belt condition	Continuity
Fastened	Non-conductive (∞Ω)
Not fastened	Conductive(0Ω)

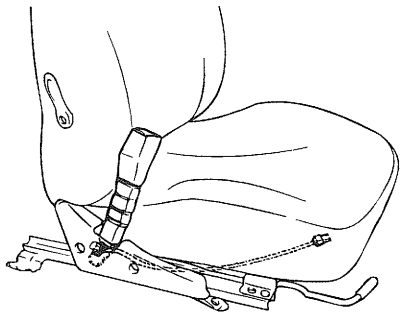

V5BE060Q

SEAT BELT WARNING LAMP

With the ignition switch turned ON, verify that the lamp glows.

Seat belt condition	Warning lamp
Fastened	OFF
Not fastened	ON

POWER DOOR LOCKS

POWER DOOR LOCK ACTUATORS

COMPONENTS ETNC1550

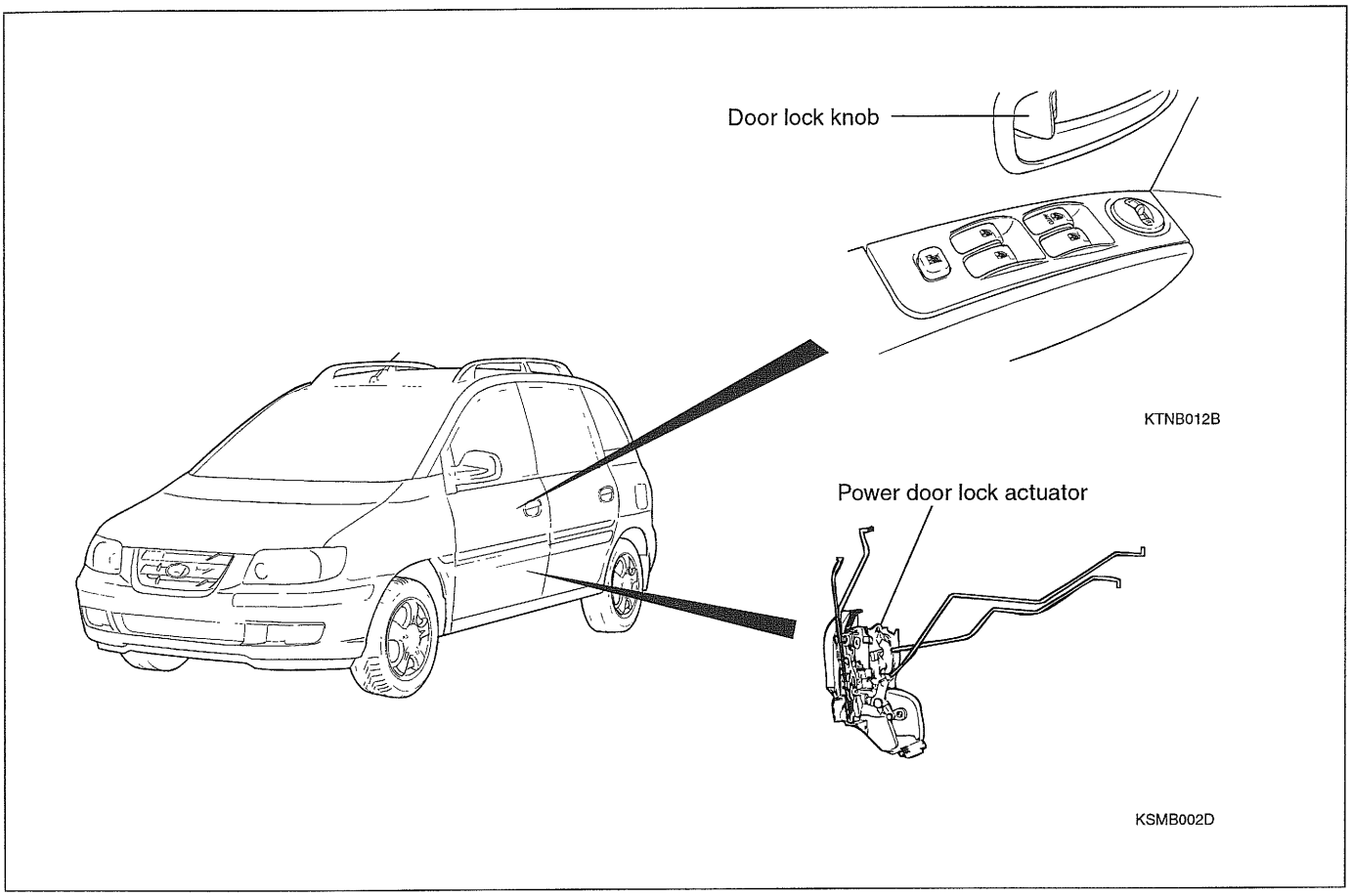

ETNC155A

INSPECTION ETKA1300

1. Disconnect the actuator connector from the wiring harness.
2. Apply battery voltage (12V) to each terminal as shown in the table and verify that the actuator operates correctly.

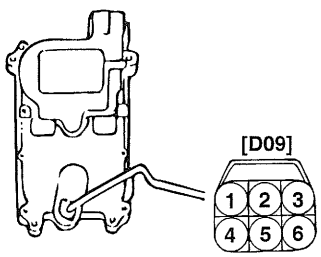

ETKA330A

[D09]

Position \ Terminal	4	6
Unlock	⊕	⊖
Lock	⊖	⊕

ETKA330B

POWER DOOR MIRRORS

COMPONENTS ETNC1600

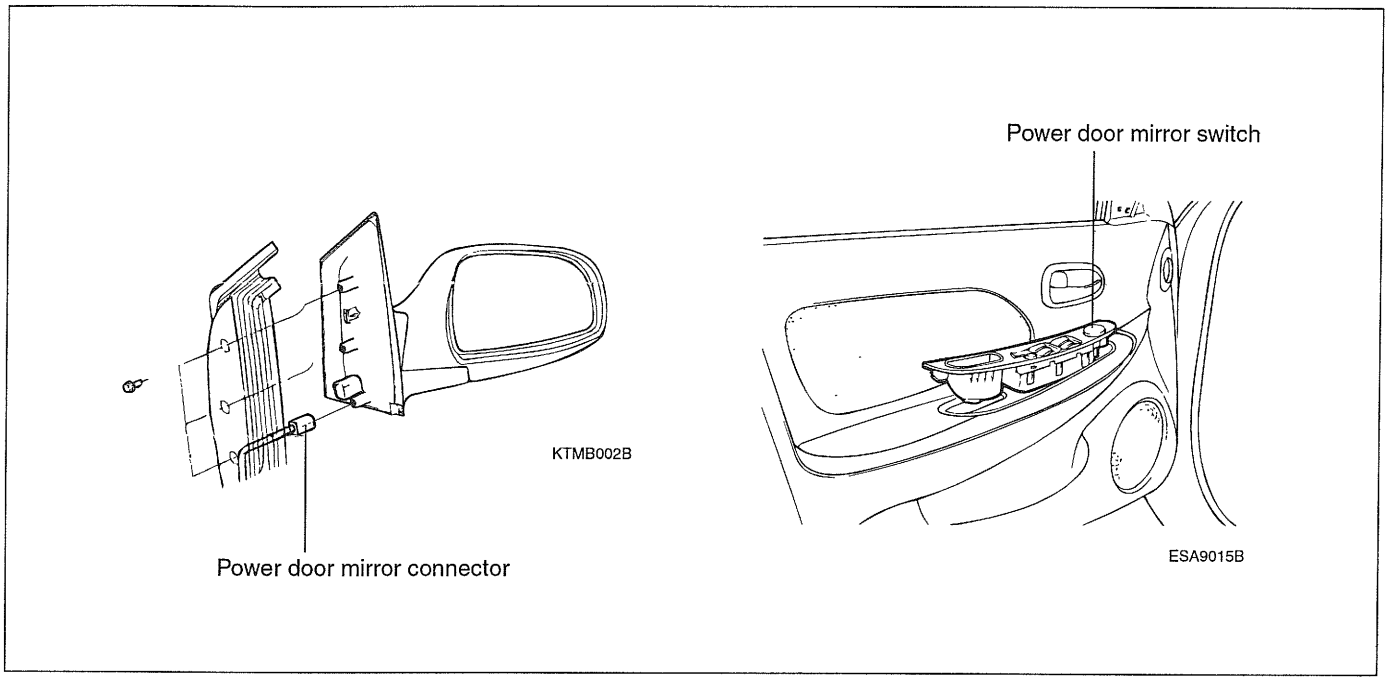

ETNC160A

POWER DOOR MIRROR SWITCH

INSPECTION ETNC1650

1. Remove the power door mirror switch from the door trim panel.
2. Check for continuity between the terminals in each switch position according to the table.
   If continuity is not as specified, replace the power door mirror switch.

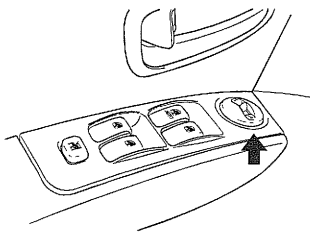

[D04]

1			2	3
4	5	6	7	8

KTNB185A

[D04]

Class	Terminal / Direction	1	2	3	4	5	6	7	8
LEFT HAND	UP	○			○			○	○
	DOWN	○			○			○	○
	OFF								
	LEFT		○		○			○	○
	RIGHT		○		○			○	○
RIGHT HAND	UP	○				○		○	○
	DOWN	○				○		○	○
	OFF								
	LEFT					○	○	○	○
	RIGHT					○	○	○	○

ETNC165A

POWER DOOR MIRROR ACTUATOR

INSPECTION ETNC1700

1. Disconnect the power door mirror connector from the harness.
2. Apply battery voltage to each terminal as shown in the table and verify that the mirror operates properly.

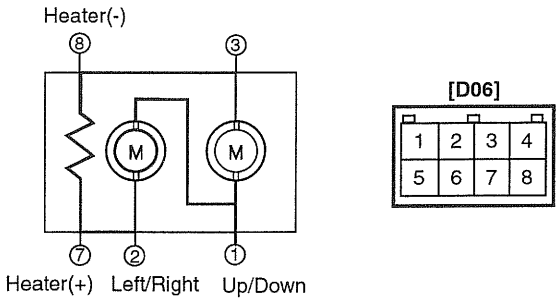

ETNC170A

[D06]

Terminal / Position	1	2	3
UP	⊕	⊕	⊖
DOWN	⊖	⊖	⊕
OFF	⊕	⊕	⊖
LEFT	⊖	⊕	⊖
RIGHT	⊕	⊖	⊕

ETNC170B

MIRROR HEATER INSPECTION

[D06]

Terminal / Position	7	8
Heater	No polarity	

ETNC170C

POWER WINDOWS

POWER WINDOW MOTOR

INSPECTION ETJA1200

Connect the motor terminals directly to battery voltage (12V) and check that the motor operates smoothly. Next, reverse the polarity and check that the motor operates smoothly in the reverse direction. If the operation is abnormal, replace the motor.

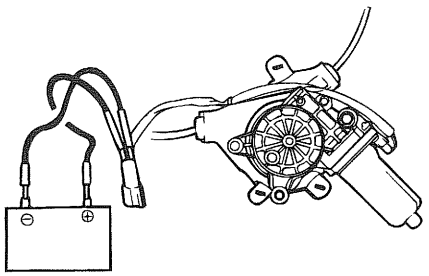

ETDA135A

POWER WINDOW SWITCH

CIRCUIT DIAGRAM ETNC1750

[POWER WINDOW MAIN SWITCH]

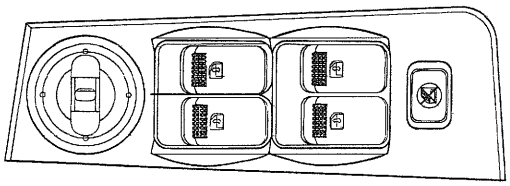

KTNB012C

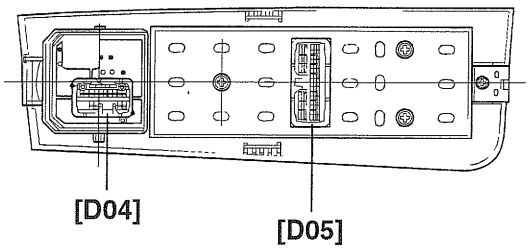

KTNB012D

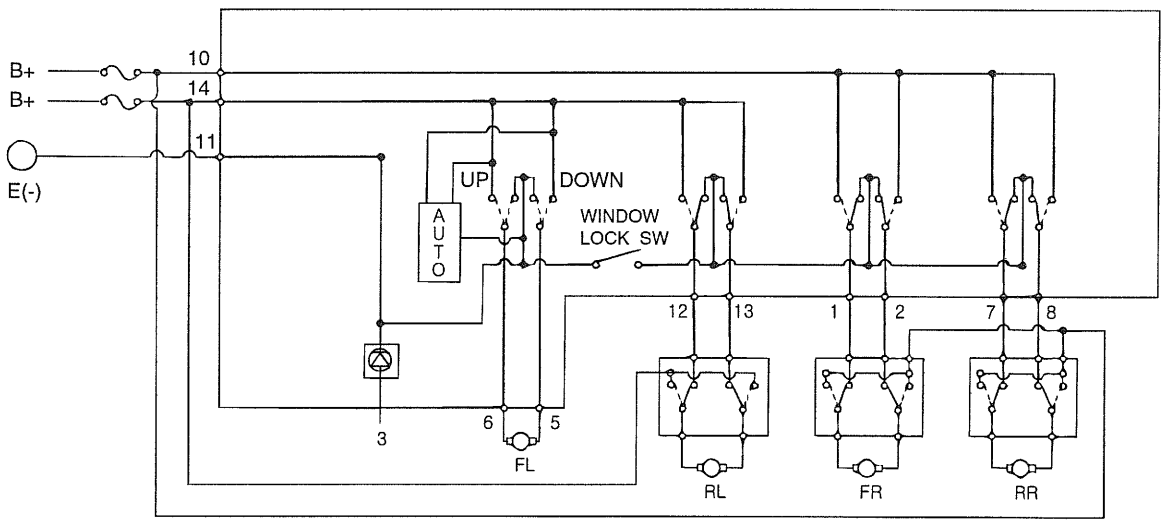

KTNB001K

[D05]

1	2	3		4	5	6	
7	8	9	10	11	12	13	14

ETNC175A

[POWER WINDOW SUB SWITCH]

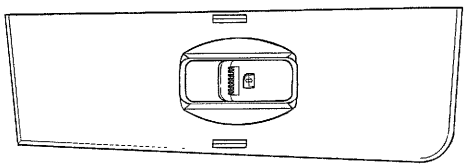

KTNB012E

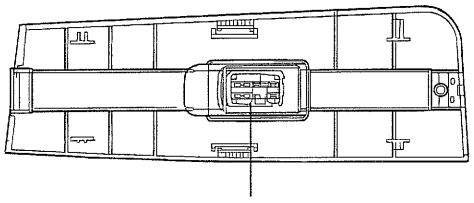

KTNB012F

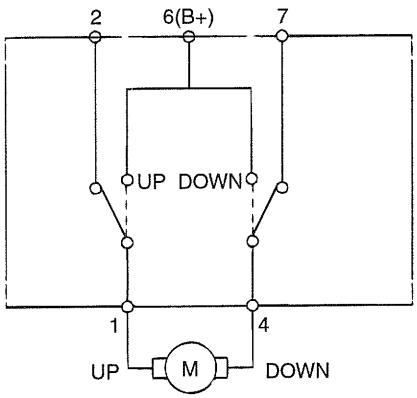

KTNB001K

[D15]

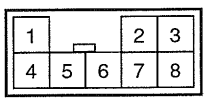

ETNC175B

INSPECTION ETNC1800

POWER WINDOW MAIN SWITCH

1. Remove the switch from the door trim panel.
2. Check for continuity between the terminals. If continuity is not as specified in the table, replace the power window switch.

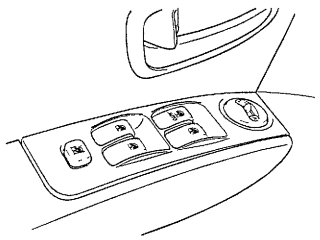

KTNB012B

[D05]

1	2	3		4	5	6	
7	8	9	10	11	12	13	14

KTNB200B

[D05]

Terminal / Position	FRONT LEFT				FRONT RIGHT				REAR LEFT				REAR RIGHT			
	5	6	11	14	1	2	10	11	11	12	13	14	7	8	10	11
UP	○	○	○		○	○	○		○	○	○	○	○	○	○	
OFF	○	○	○		○	○		○	○	○	○		○	○		○
DOWN	○	○	○	○	○	○	○	○	○	○	○	○	○	○	○	○

ETNC180A

POWER WINDOW SUB SWITCH

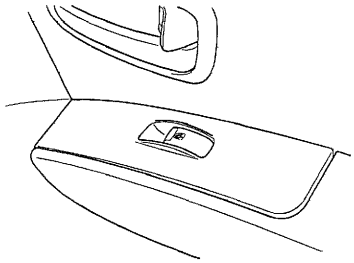

KTNB012G

[D15]

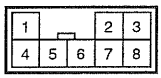

KTNB200C

[D15]

Terminal / Position	1	2	4	6	7
UP	○		○	○	○
OFF	○	○	○		○
DOWN	○	○	○	○	

ETNC180B

REAR WINDOW DEFOGGER

REAR WINDOW DEFOGGER PRINTED HEATER

INSPECTION ETA91650

⚠ *CAUTION*

Wrap tin foil around the end of the voltmeter test lead to prevent damaging the heater line. Apply finger pressure on the tin foil, moving the tin foil along the grid line to check for open circuits.

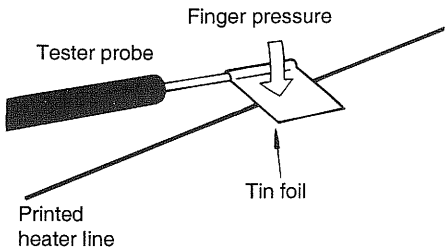

ETA9165A

1. Turn on the defogger switch and use a voltmeter to measure the voltage of each heater line at the glass center point. If a voltage of approximately 6V is indicated by the voltmeter, the heater line of the rear window is considered satisfactory.

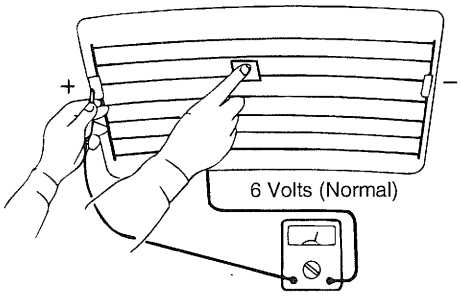

ETA9165B

2. If a heater line is burned out between the center point and (+) terminal, the voltmeter will indicate 12V.

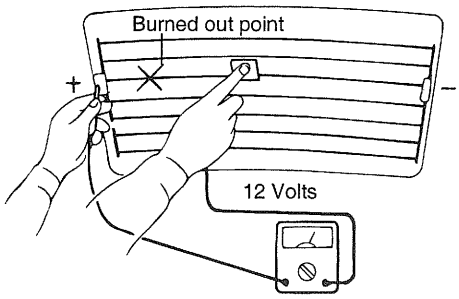

ETA9165C

3. If a heater line is burned out between the center point and (-) terminal, the voltmeter will indicate 0V.

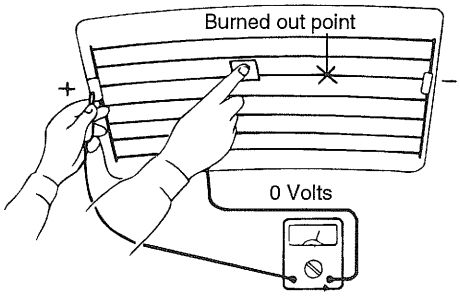

ETA9165D

4. To check for open circuits, slowly move the test lead in the direction that the open circuit seems to exist. Try to find a point where a voltage is generated or changes to 0V. The point where the voltage has changed is the open-circuit point.

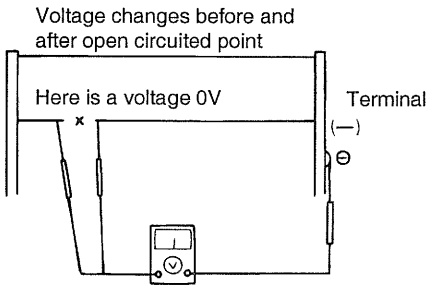

ETA9165E

5. Use an ohmmeter to measure the resistance of each heater line between a terminal and the center of a grid line, and between the same terminal and the center of one adjacent heater line. The section with a broken heater line will have a resistance twice as that in other sections. In the affected section, move the test lead to a position where the resistance sharply changes.

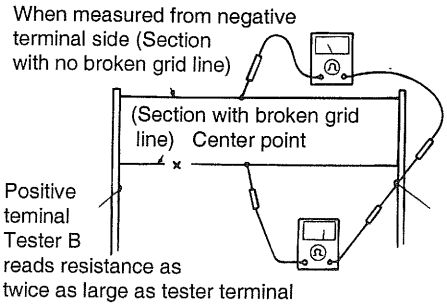

ETA9165F

REPAIR OF BROKEN HEATER LINE

Prepare the following items:

1. Conductive paint.
2. Paint thinner.
3. Masking tape.
4. Silicone remover.
5. Thin brush.
   Wipe the glass adjacent to the broken heater line, clean with silicone remover and attach the masking tape as shown. Shake the conductive paint container well, and apply three coats with a brush at intervals of about 15 minutes apart. Remove the tape and allow sufficient time for drying before applying power. For a better finish, scrape away excess deposits with a knife after the paint has completely dried. (Allow 24 hours).

⚠ ***CAUTION***

After repairing, clean the glass with a soft dry cloth or wipe along the grid line with a slightly moistened cloth.

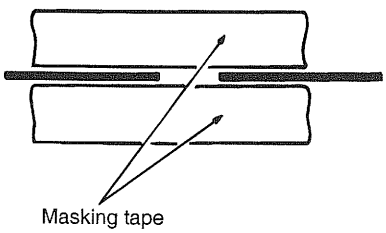

ETA9165G

REAR WINDOW DEFOGGER SWITCH

INSPECTION ETNC1850

1. Disconnect the negative(-) battery terminal.
2. Remove the rear window defogger switch from the center facia panel.

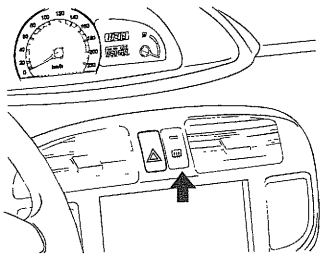

KTNB012I

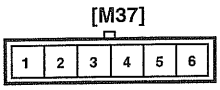

ETKA055A

KTNB205A

3. Check the switch for continuity between the terminals. If continuity is not as specified in the table, replace the switch.

[M37]

Terminal / Position	1	2	3	4	5	6
ON						
OFF						

ETNC185A

WINDSHIELD WIPER/WASHER

COMPONENTS ETNC1900

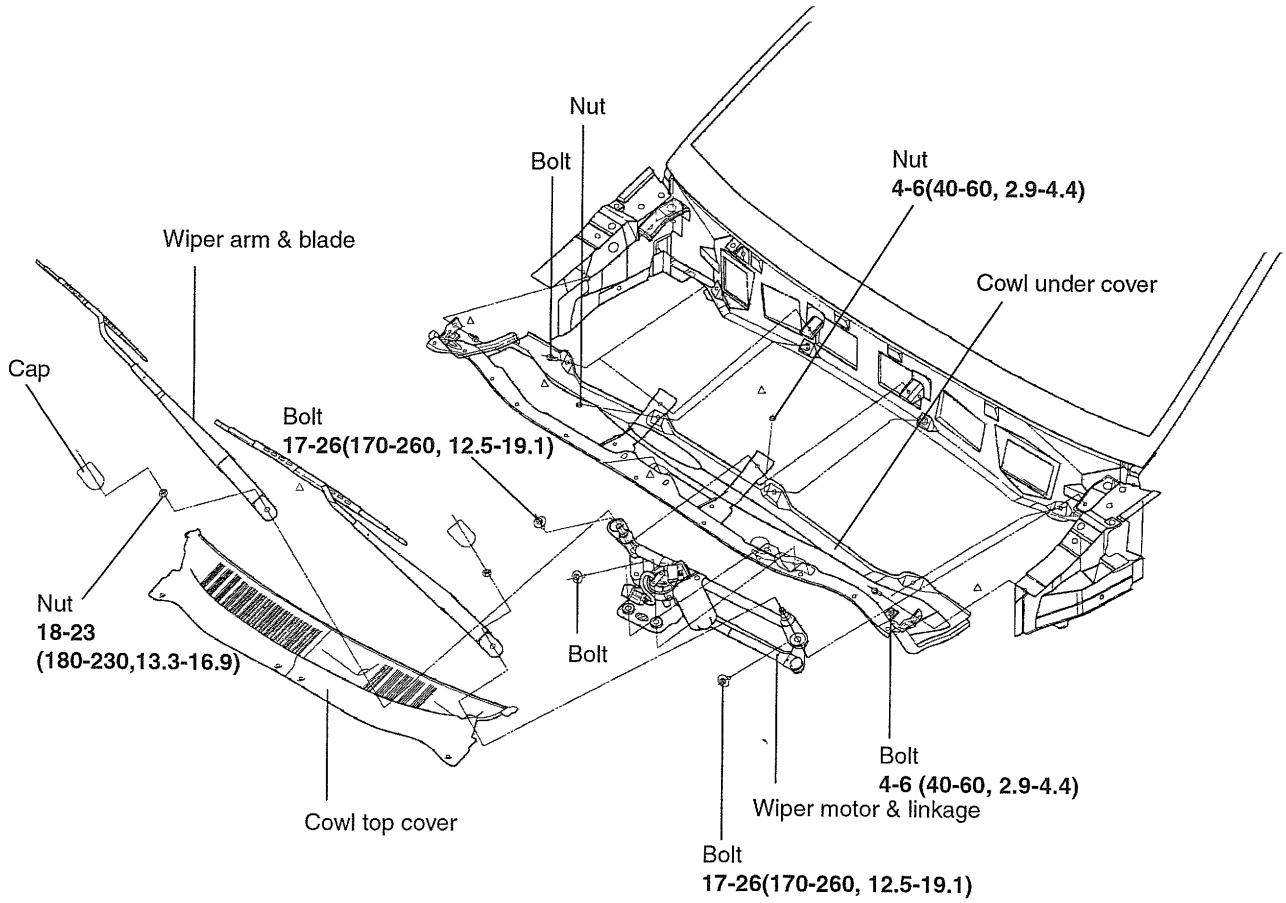

TORQUE : Nm (kg·cm, lb·ft)

ETNC190A

WINDSHIELD WIPER/WASHER SWITCH

INSPECTION ETNC1950

Remove the multifunction switch and disconnect the wire connectors.
Check the switch for continuity between the terminals.
If continuity is not as specified, replace the wiper and washer switch.

[M01-1]

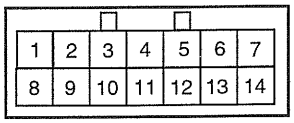

ETNC195A

WIPER AND INTERMITTENT VOLUME SWITCH [M01-1]

Terminal / Position	1	2	3	4	5	6	13	14
MIST				○	○			
OFF		○	○					
INT		○	○		○	○	○	○
LOW		○			○			
HI	○				○			

ETNC050B

WASHER SWITCH [M01-1]

Terminal / Position	5	7
OFF		
ON	○	○

ETNC050C

FRONT WIPER MOTOR

REMOVAL ETNC2000

1. Remove the wiper arm.

   NOTE

   Care must be taken not to scratch the engine hood.

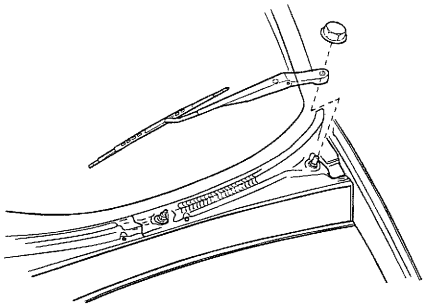

KTNB012J

Tightening torque
18-23 Nm (180-230 kg·cm, 13.3-16.9 lb·ft)

2. Remove the weatherstrip and cowl top cover after removing the screws.

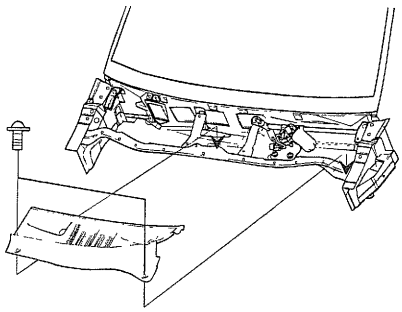

KTNB012K

3. Disconnect the windshield wiper motor connector and remove the 2 bolts holding the windshield wiper motor assembly.

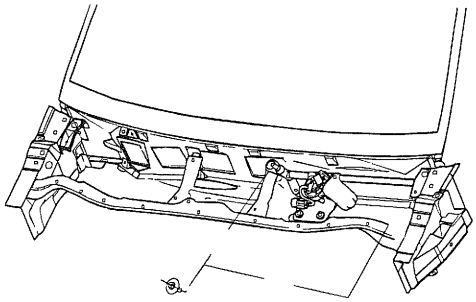

KTNB012L

4. Remove the cowl under cover after removing 7 bolts and 2 nuts.

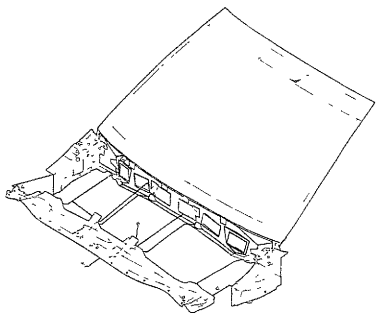

KTNB012M

5. Installation is the reverse of removal.

INSTALLATION ETNC2050

1. Install the wiper arm to the specified position.

Specified position	A	B
Distance (mm)	30-40	30-40

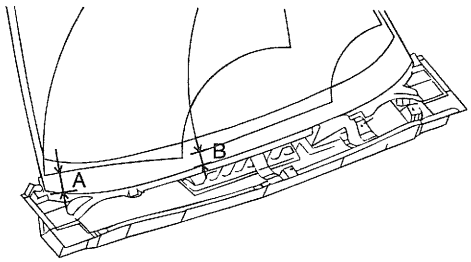

ETJA060I

2. Set the washer nozzle on the specified spray position.

Unit:mm

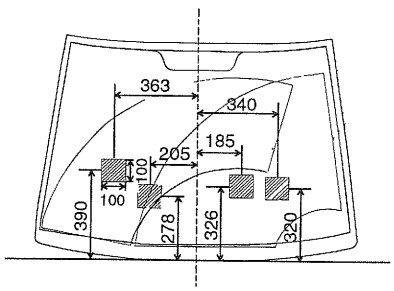

ETNC205A

INSPECTION ETAC1900

SPEED OPERATION CHECK

1. Remove the connector from the wiper motor.
2. Attach the positive (+) lead from the battery to terminal 4 and the negative (-) lead to terminal 1.
3. Check that the motor operates at low speed.
4. Connect the positive (+) lead from the battery to terminal 4 and the negative (-) lead to terminal 2.
5. Check that the motor operates at high speed.

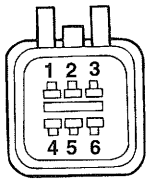

1. Low
2. High
3. Ground
4. IGN+
5. Parking
6. Blank

ETAC190A

AUTOMATIC STOP OPERATION CHECK

1. Operate the motor at low speed using the stalk control.
2. Stop the motor operation anywhere except at the off position by disconnecting terminal 1.
3. Connect terminals 1 and 5.
4. Connect the positive (+) lead from the battery to terminal 4 and the negative (-) lead to terminal 3.
5. Check that the motor stops running at the off position.

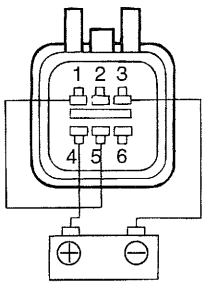

ETAC190B

FRONT WASHER MOTOR

INSPECTION ETNC2100

1. With the washer motor connected to the reservoir tank, fill the reservoir tank with water.
2. Connect positive (+) and negative (-) battery cables to terminals 2 and 3 respectively to see that the washer motor runs and water sprays from the front nozzles.
3. Check that the motor operates normally.

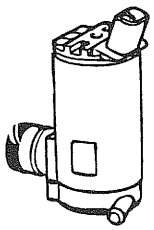



1. Blank
2. IGN (+)
3. Windshield washer (-)

ETNC210A

REAR WIPER/WASHER

COMPONENTS ETNC2150

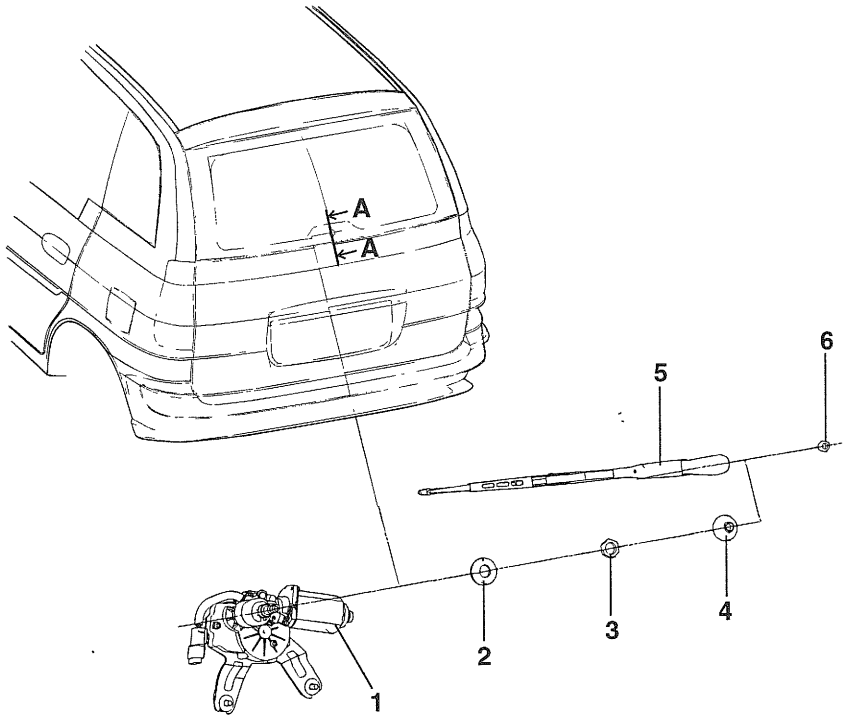

KTNB001A

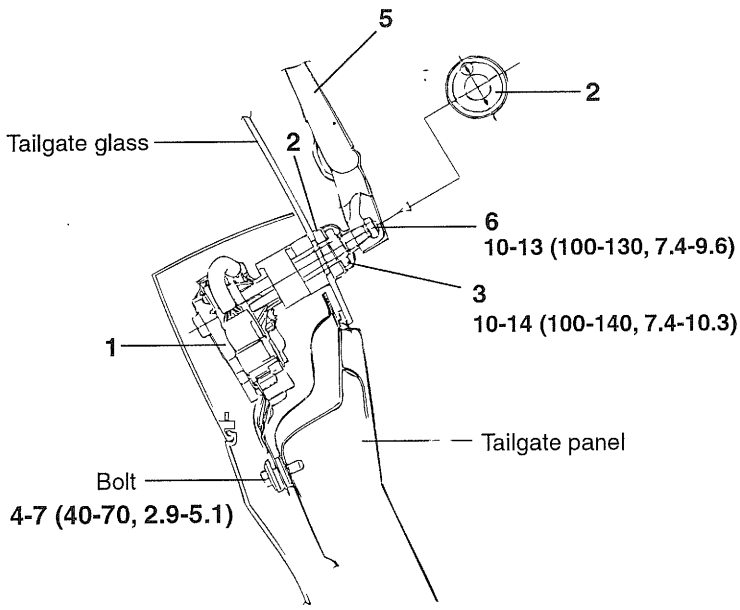

KTNB001C

1. Rear wiper motor assembly
2. Cap & pad
3. Nut
4. Cover
5. Rear wiper arm & blade
6. Nut

[SECT. A-A]

TORQUE : Nm (kg·cm, lb·ft)

ETNC215A

REAR WIPER MOTOR

REMOVAL ETNC2200

1. Remove the center high mounted stop lamp then pry the upper and side trim from the tailgate frame.

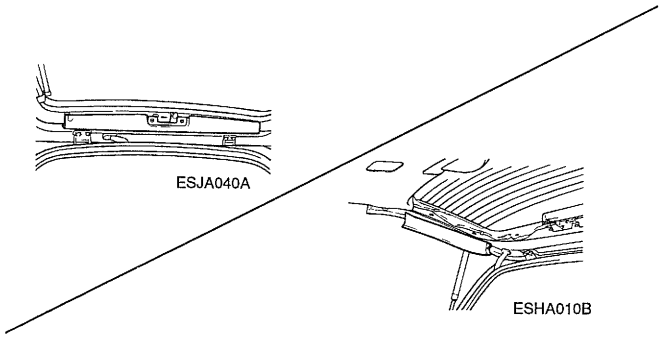

KTMB310A

2. Remove the tailgate trim panel after removing 4 screws.

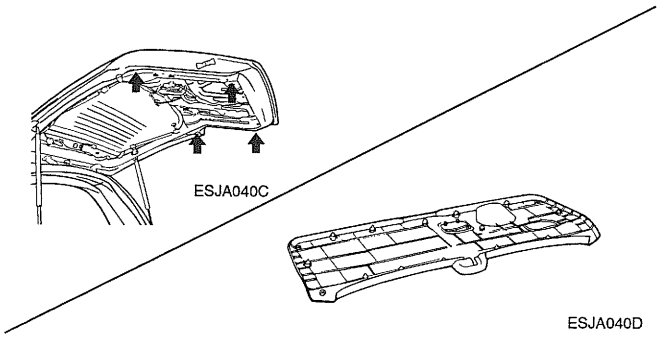

KTNB240A

3. Remove the mounting nut and the rear wiper assembly.

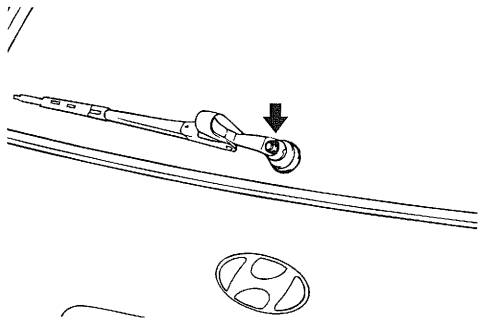

KTNB240B

Tightening torque
10-13 Nm (100-130 kg·cm, 7.4-9.6 lb·ft)

4. Remove the rear wiper motor after removing 2 bolts then disconnect the wire connector.

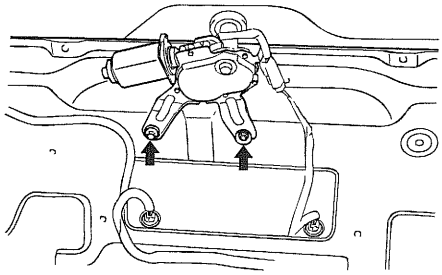

KSNB006E

5. Installation is the reverse of removal.

INSTALLATION ETNC2250

1. After replacing all the removed components, install the rear wiper arm to the specified stop position.

Specified position	A
Distance (mm)	45 - 55mm

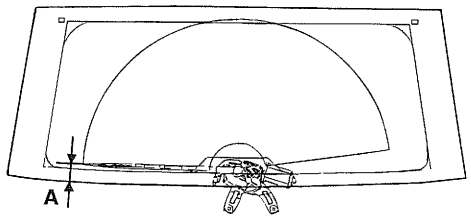

KTNB001B

2. Set the washer nozzle on the specified spray position.

Unit : mm

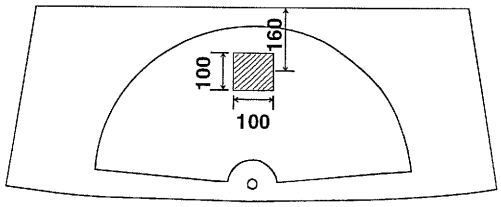

ETNC225A

INSPECTION ETNC2300

1. Remove the connector from the rear wiper motor.
2. Connect battery positive (+) and negative (-) cables to terminals 1and 4respectively.
3. Check that the motor operates normally. Replace the motor if it operates abnormally.

[R13]

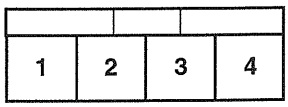

1. IGN (B+)
2. Parking
3. Switch
4. Ground

ETNC230A

REAR WASHER SWITCH

INSPECTION ETNC2350

1. Disconnect the connector from the rear wiper and washer switch.
2. Check for continuity between the terminals.

[M01-1]

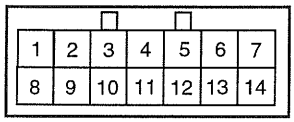

KTNB250A

Terminal / Position	9	10	11	12
WASHER	○			○
OFF				
INT			○	○
ON		○		○
WASHER	○			○

ETNC235A

REAR WASHER MOTOR

INSPECTION ETNC2400

1. With the washer motor connected to the reservoir tank, fill the reservoir tank with water.
2. Connect positive(+) and negative(-) battery cables to terminals 2 and 1 respectively to see that the washer motor runs and water is pumped.

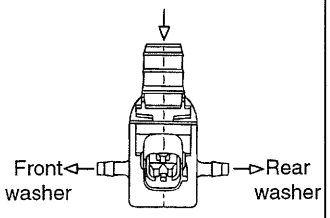

ETJA065E



1. Rear washer (-)
2. IGN (+)
3. Front washer (-)

ETJA065F

ETNC240A

3. Check that the motor operates normally.
   Replace the motor if it operates abnormally.

SEAT WARMER

COMPONENTS ETNC2410

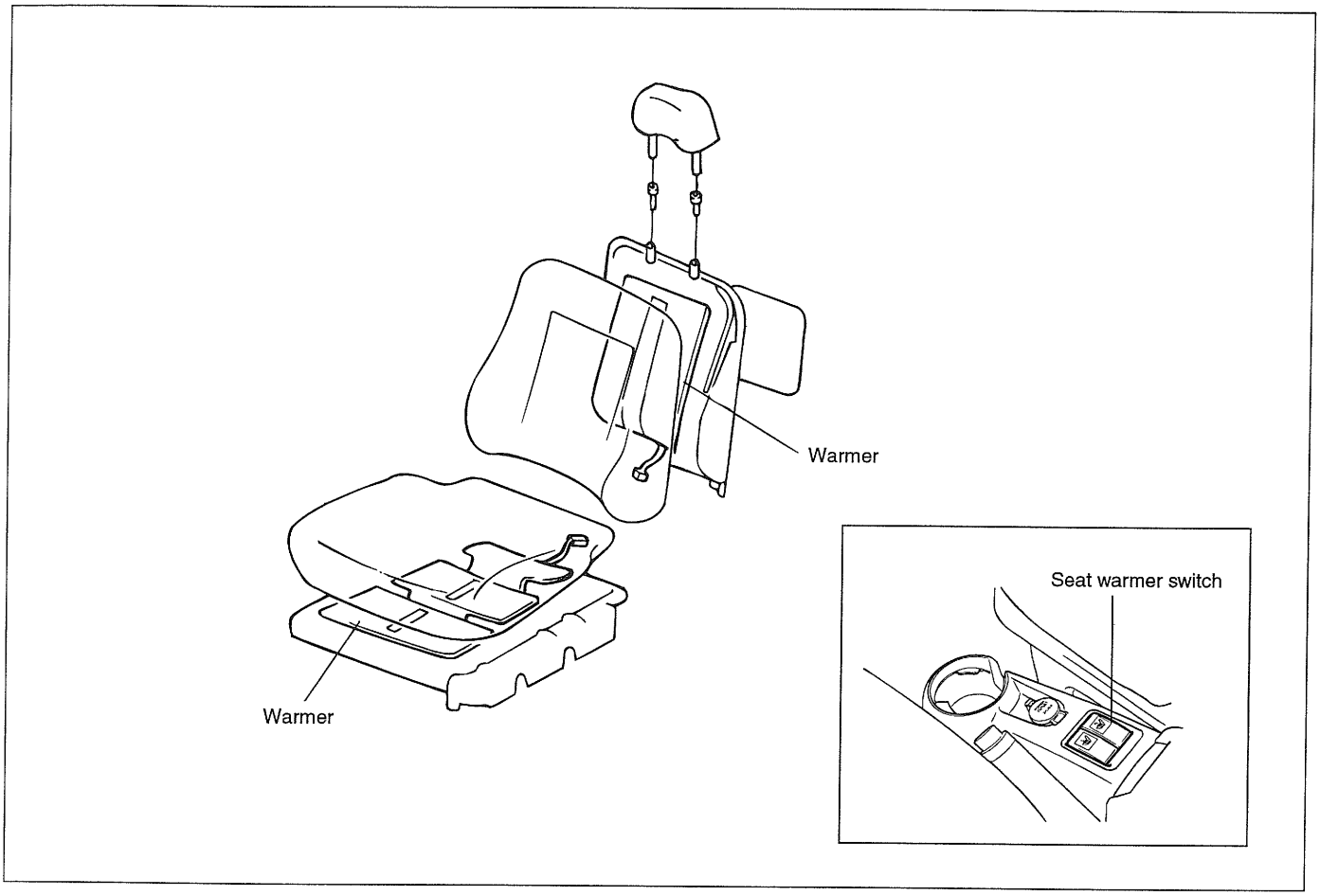

ETNC241A

SEAT WARMER SWITCH

INSPECTION ETNC2450

1. Disconnect the negative(-) battery terminal.
2. Remove the seat warmer switch from the floor console upper cover.

[LH:M70]

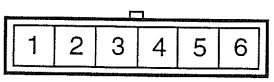

[RH:M69]

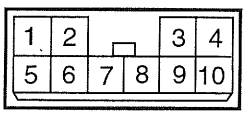

ETNC245B

3. Check for continuity between the terminals.

[M70/M69]

Terminal / Position	2	1	3	4	5
ON	○	○	○	○	○
OFF	○	○			

ETNC245A

SUN ROOF

SUN ROOF SWITCH

INSPECTION ETAC2200

1. Using an ohmmeter, check for continuity between the terminals.
2. If the continuity is not as specified, replace the switch.

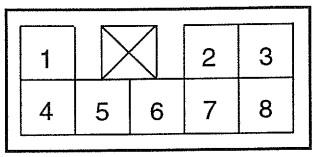

Connector No : M97

ETAC220A

[M97]

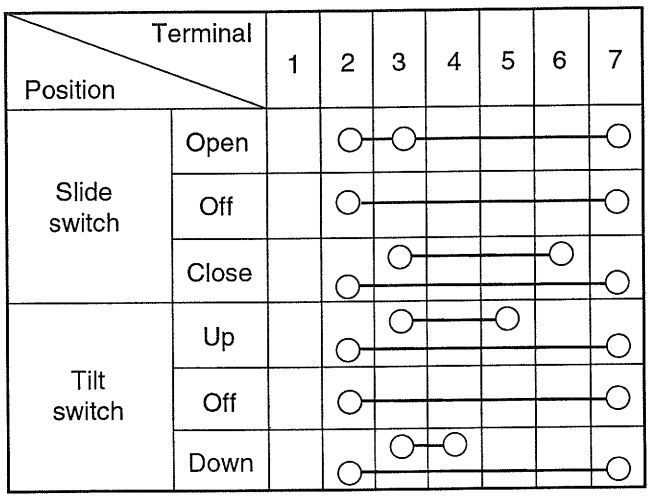

ETAC220B

SUN ROOF RELAY

INSPECTION ETNC2500

Check for continuity between the terminals.

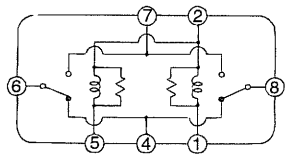

[M98]

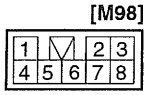

ETNC250A

Terminal / Position	1	2	3	4	5	6	7	8
Battery voltage not supplied (coils not energized)	○	○			○			
				○		○		○
Battery voltage supplied (coils energized)		⊕	- - -	⊖			○	○
	⊖	⊕				○	○	

⊕--⊖ Indicates battery connection

ETNC250B

SUN ROOF MOTOR

INSPECTION ETMB2650

1. Remove the overhead console.
2. Disconnect the motor connector from sun roof harness.
3. After applying DC 12V to the terminal 8, apply the terminal 3 to the ground.
4. Check that the motor turns in the direction of the sunroof when tilted down and is open.
5. Reverse the connections and check that the motor turns in the direction when the sunroof is closed and tilted up.

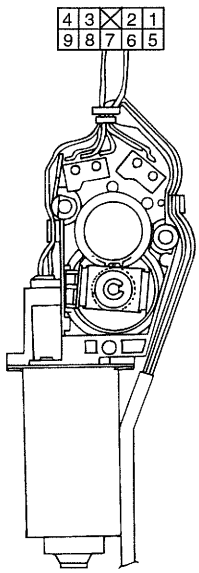

KTMB343A

LIGHTING SYSTEM

REPLACEMENT OF LAMPS ETNC2550

HEAD LAMP/TURN SIGNAL LAMP

1. Disconnect the negative battery terminal.
2. Remove the head lamp and turn signal lamp mounting bolts (2EA) and remove the lamp assembly.

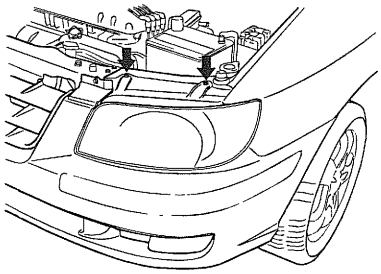

KSNB009B

3. Installation is the reverse of removal.

FRONT FOG LAMP

1. Disconnect the negative battery terminal.
2. Remove the turn signal lamp and head lamp assembly.

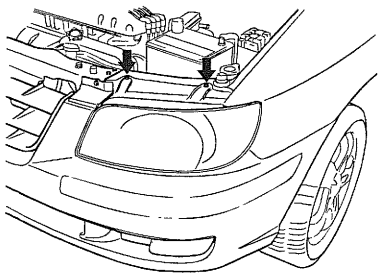

KSNB009B

3. Remove the front bumper cover (Refer to BD group). Disconnect the wire connector and remove the front fog lamp (4 screws).

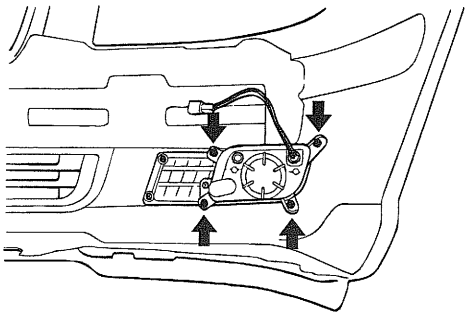

KTNB013B

4. Installation is the reverse of removal.

REAR FOG LAMP

1. Disconnect the negative battery terminal.
2. Remove the 2 screws holding the rear fog lamp and disconnect the wire connector.

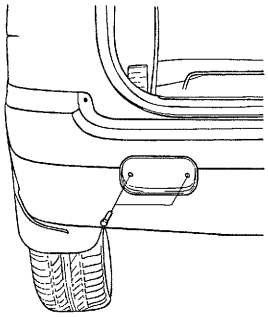

KTNB012Y

REAR COMBINATION LAMP

1. Disconnect the negative battery terminal.
2. Remove the 2 screws holding the rear combination lamp and disconnect the wire connectors.

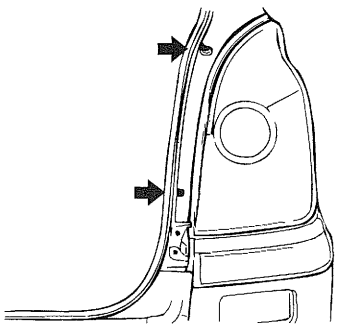

KTMB350A

3. Remove the rear combination lamp assembly.
4. Installation is the reverse of removal.

CENTER HIGH MOUNTED STOP LAMP

1. Disconnect the negative battery terminal.
2. Remove the two mounting bolts and disconnect the wire connector.

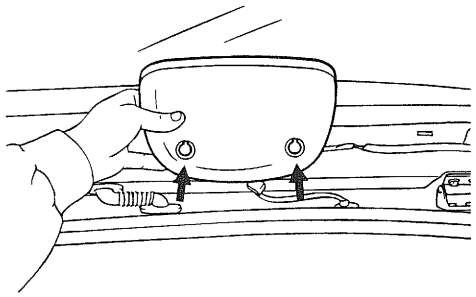

ESJA040N

3. Remove the center high mounted stop lamp assembly.
4. Installation is the reverse of removal.

LICENSE PLATE LAMP

1. Disconnect the negative battery terminal.
2. Remove the tailgate garnish after removing 4 nuts.
3. Remove the mounting screws and disconnect the lamp connector.

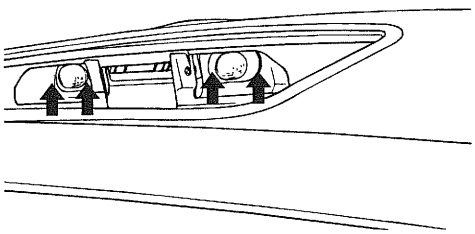

KSNB006B

4. Installation is the reverse of removal.

OVERHEAD CONSOLE LAMP

1. Disconnect the negative battery terminal.
2. Detach the map lamp lens from the lamp assembly with a flat-tip screwdriver.
3. Detach the lamp assembly from the headliner after removing the 2 screws.

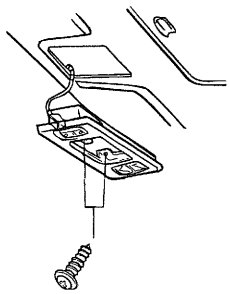

KTNB001S

4. Installation is the reverse of removal.

ROOM LAMP

1. Disconnect the negative battery terminal.
2. Using a flat-tip screwdriver detach the room lamp lens.
3. Detach the lamp assembly from the headliner after removing the 2 screws.

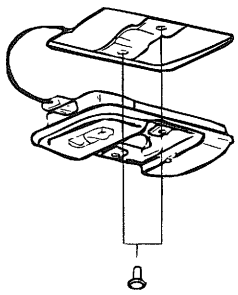

KTNB001T

4. Disconnect the connector from the roof harness.
5. Installation is the reverse of removal.

INSPECTION OF COMPONENTS ETNC2600

HEAD LAMP RELAY

1. Remove the headlamp relay from the relay box in the engine compartment.
2. Check for continuity between terminals on the relay.

Position \ Terminal	1	2	3	5
When de-energized			○ ○	
When energized	○ ○		⊖ ⊕	

NOTE:
1. ○——○: Indicates that there is continuity between the terminals.
2. ⊖——⊕: Indicates that power is supplied.

ETMB275A

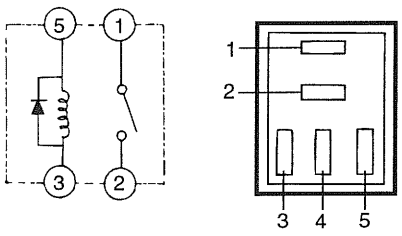

KTMB385B

FLASHER UNIT

1. Remove the flasher unit from the relay box in the passenger compartment.
2. Connect the positive (+) lead from the battery to terminal 2 and the negative (-) lead to terminal 3.

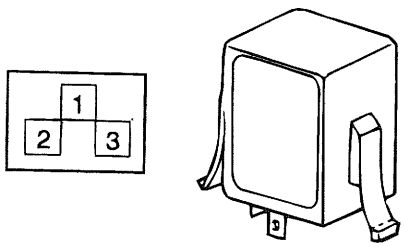

KTDA212A

3. Connect the two turn signal lamps in parallel to terminals 2 and 3. Check that the bulbs turn on and off.

NOTE

The turn signal lamps should flash 60 to 120 times per minute. If one of the front or rear turn signal lamps has an open circuit, the number of flashes will be more than 120 per minute. If operation is not as specified, replace the flasher unit.

HAZARD SWITCH

1. Disconnect the negative (-) battery terminal.
2. Detach the hazard lamp switch from the center facia panel.

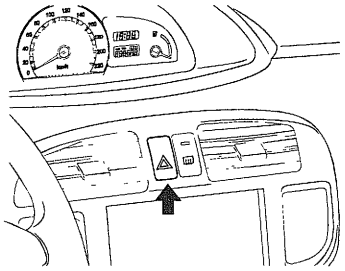

KTNB012I

[M13]

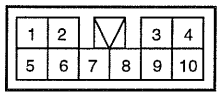

KTDA213B

KTNB270C

3. Operate the switch and check for continuity between terminals with an ohmmeter.

[M13]

Position \ Terminal	1	3	4	6	7	8	9	10
OFF				○	○	○		○
ON	○	○	○				○	○

ETNC260A

RHEOSTAT

1. Disconnect the negative (-) battery terminal.
2. Disconnect the rheostat connector from the crash pad lower panel.

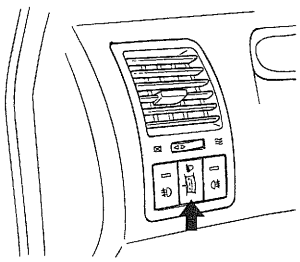

ETNC261T

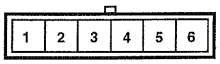

ETKA055A

ETNC260K

3. Check for intensity. If the light intensity of the lamps changes smoothly without any flickering when the rheostat is turned, it can be assumed that the rheostat is normal.

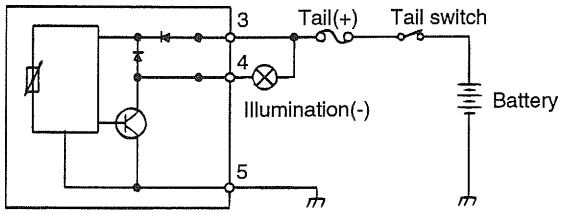

ETNC260B

FRONT FOG LAMP SWITCH

1. Disconnect the negative (-) battery terminal.
2. Disconnect the switch connector from the crash pad lower panel.

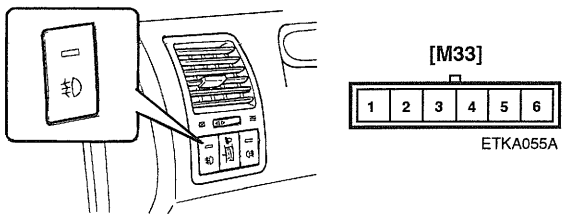

KTNB012T

KTNB270A

3. Operate the switch and check for continuity between the terminals with an ohmmeter.

[M33]

Position \ Terminal	1	2	3	4	5	6
ON	●	●	●	●	●	●
OFF						

ETNC260C

REAR FOG LAMP SWITCH

1. Disconnect the negative (-) battery terminal.
2. Disconnect the switch connector from the crash pad lower panel.

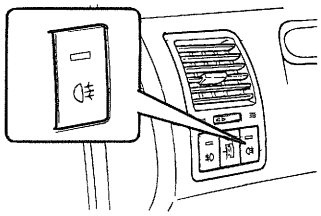

KTNB012H

KTNB270B

3. Operate the switch and check for continuity between the terminals with an ohmmeter.

[M17]

Position \ Terminal	1	2	3	4	5	6
ON	●	●	●	●	●	●
OFF						

ETNC260D

MAP LAMP

Remove the map lamp assembly and check for continuity between terminals.

[WITH SUN ROOF]

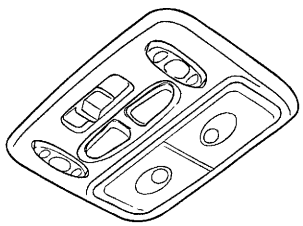

KTNB270F

[M97]

Sort	Map lamp switch			
Position	LH		RH	
Terminal	ON	OFF	ON	OFF
3	●		●	
8	●		●	

ETNC260E

[WITHOUT SUN ROOF]



[M92]

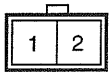

KTNB270G

[M92]

Sort / Position / Terminal	Map lamp switch			
	LH		RH	
	ON	OFF	ON	OFF
1	○		○	
2	○		○	

ETNC260F

ROOM LAMP

Remove the room lamp and check for continuity between terminals.

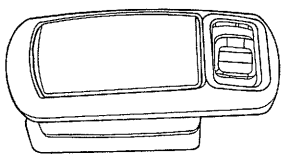

[M93]

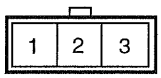

KTNB270H

[M93]

Terminal / Position	1	2	3
ON		○—⏚—○	
DOOR	○	—⏚—	○
OFF			

ETNC260G

HEAD LAMPS

HEAD LAMP AIMING INSTRUCTIONS ETNC2650

The headlamps should be aimed with the proper beam-setting equipment, and in accordance with the equipment manufacturer's instructions.

NOTE

If there are any regulations pertinent to the aiming of headlamps in the area where the vehicle is to be used, adjust so as to meet those requirements.

Alternately turn the adjusting gear to adjust the headlamp aiming. If beam-setting equipment is not available, proceed as follows:

1. Inflate the tires to the specified pressure and remove any loads from the vehicle except the driver, spare tire, and tools.
2. The vehicle should be placed on a flat floor.
3. Draw vertical lines (Vertical lines passing through respective headlamp centers) and a horizontal line (Horizontal line passing through center of headlamps) on the screen.
4. With the headlamp and battery in normal condition, aim the headlamps so the brightest portion falls on the horizontal and vertical lines.
   Make vertical and horizontal adjustments to the lower beam using the adjusting wheel.

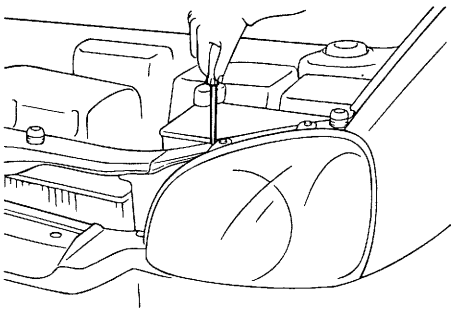

ETJA010F

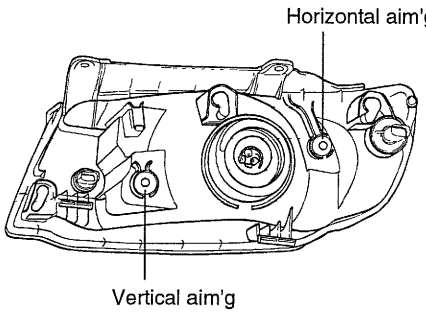

ETNC265A

FRONT FOG LAMP

The front fog lamps should be aimed as the same manner of the head lamps aiming.

With the front fog lamps and battery normal condition, aim the front fog lamps by turning the adjusting gear.

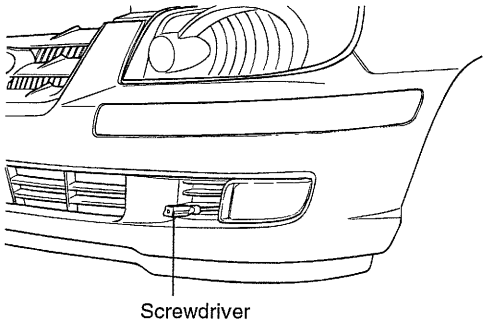

ETNC265B

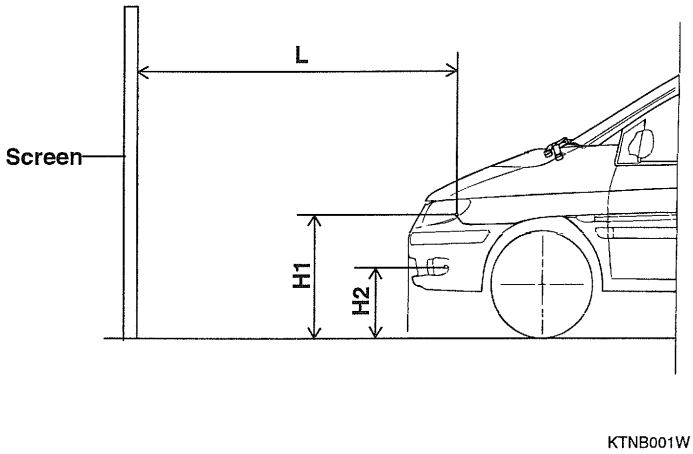

KTNB001W

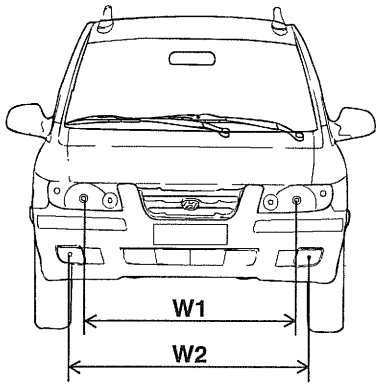

KTNB001V

H1 : Height between the head lamp bulb center and ground
H2 : Height between the fog lamp bulb center and ground
L : Distance between the head lamp bulb center and screen.

W1 : Distance between the head lamp bulb center
W2 : Distance between the fog lamp bulb center

ETNC265C

HEAD LAMP AND FOG LAMP AIMING POINT

Unit : mm

Vehicle condition	H1	H2	W1	W2	L
Without driver	656	363	1,164	1,304	3,000
With driver	648	355			

ETNC265D

1. Turn the low beam on without driver aboard.
   The cut-off line should be projected in the allowable range (shaded region).

Unit : mm

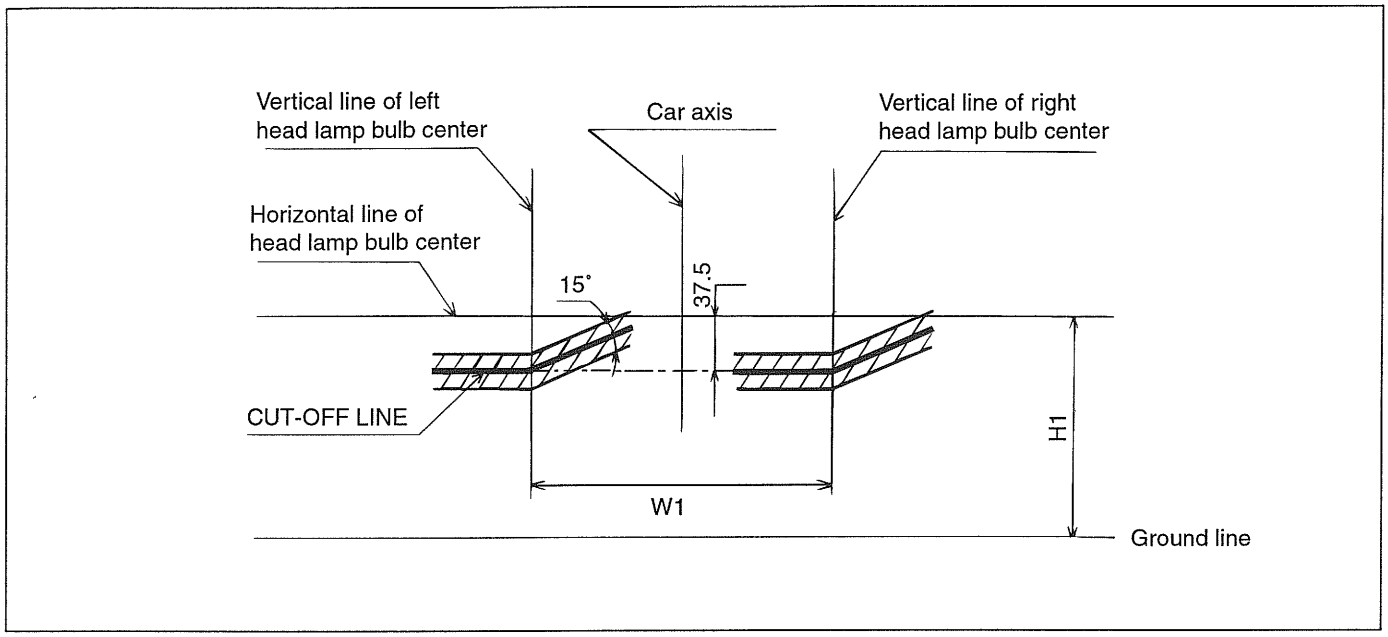

ETNC265E

2. Turn the front fog lamp on without the driver aboard.
   The cut-off line should be projected in the allowable range (shaded region).

Unit : mm

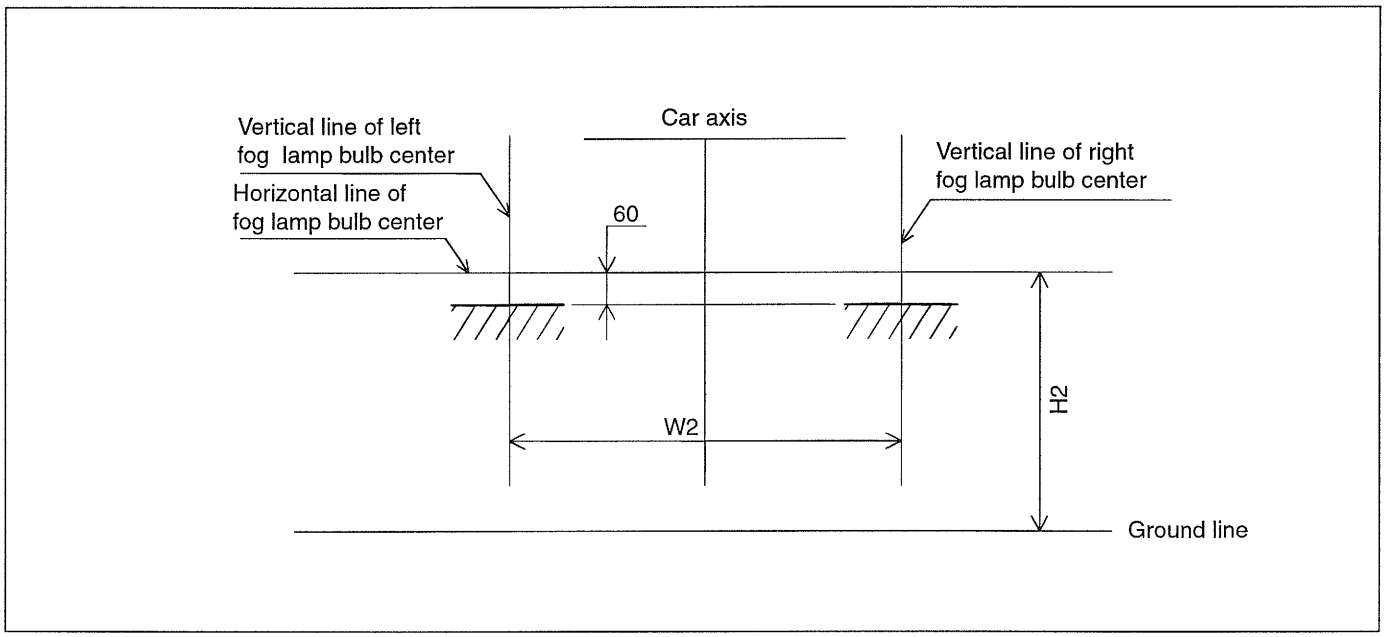

ETNC265F

DAYTIME RUNNING LIGHTS

DRL CONTROL MODULE

CIRCUIT DIAGRAM ETNC2700

[SWEDEN]

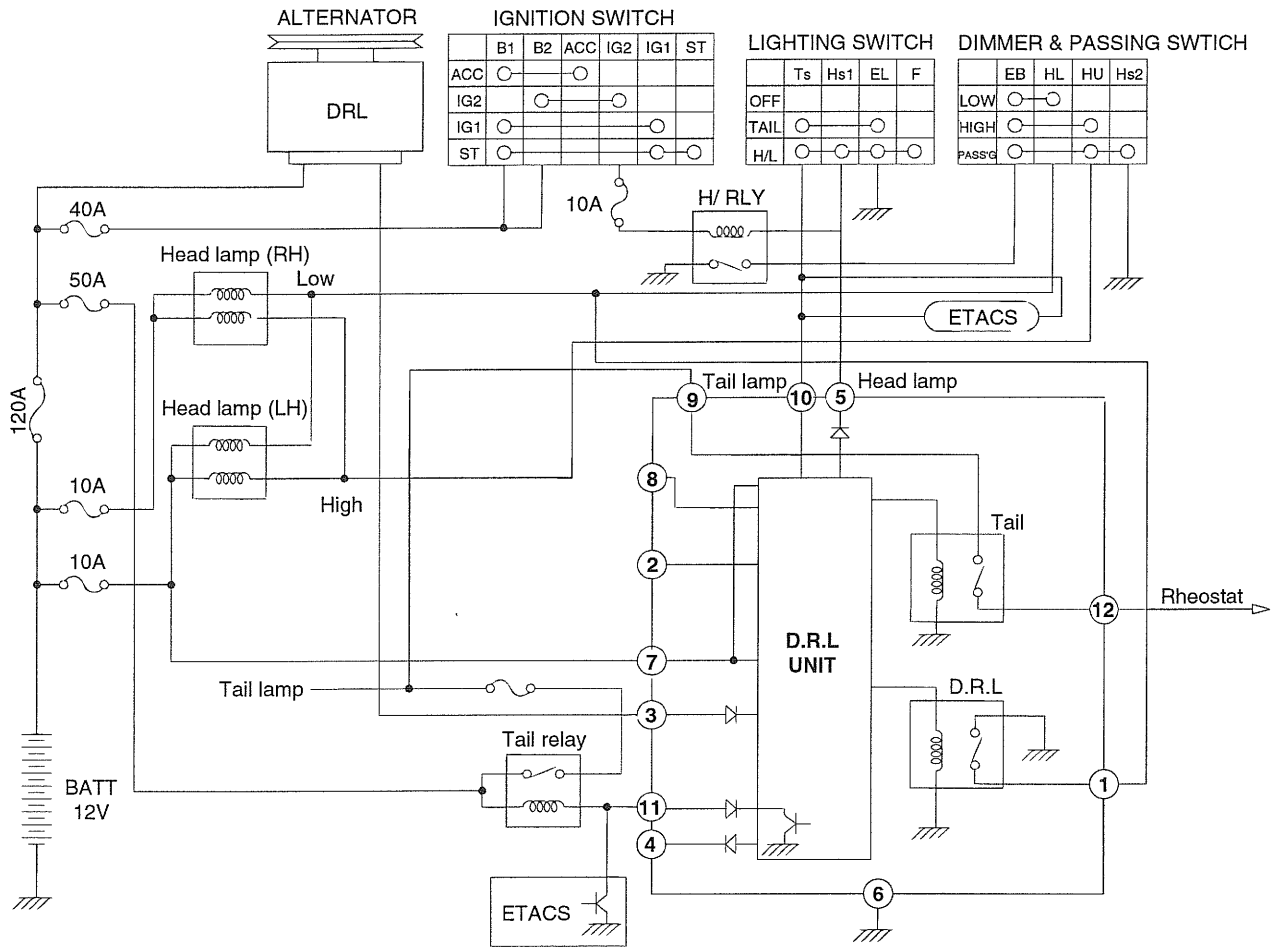

ETNB333A

[E13]

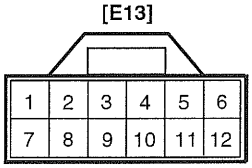

ETNC270A

[NORWAY]

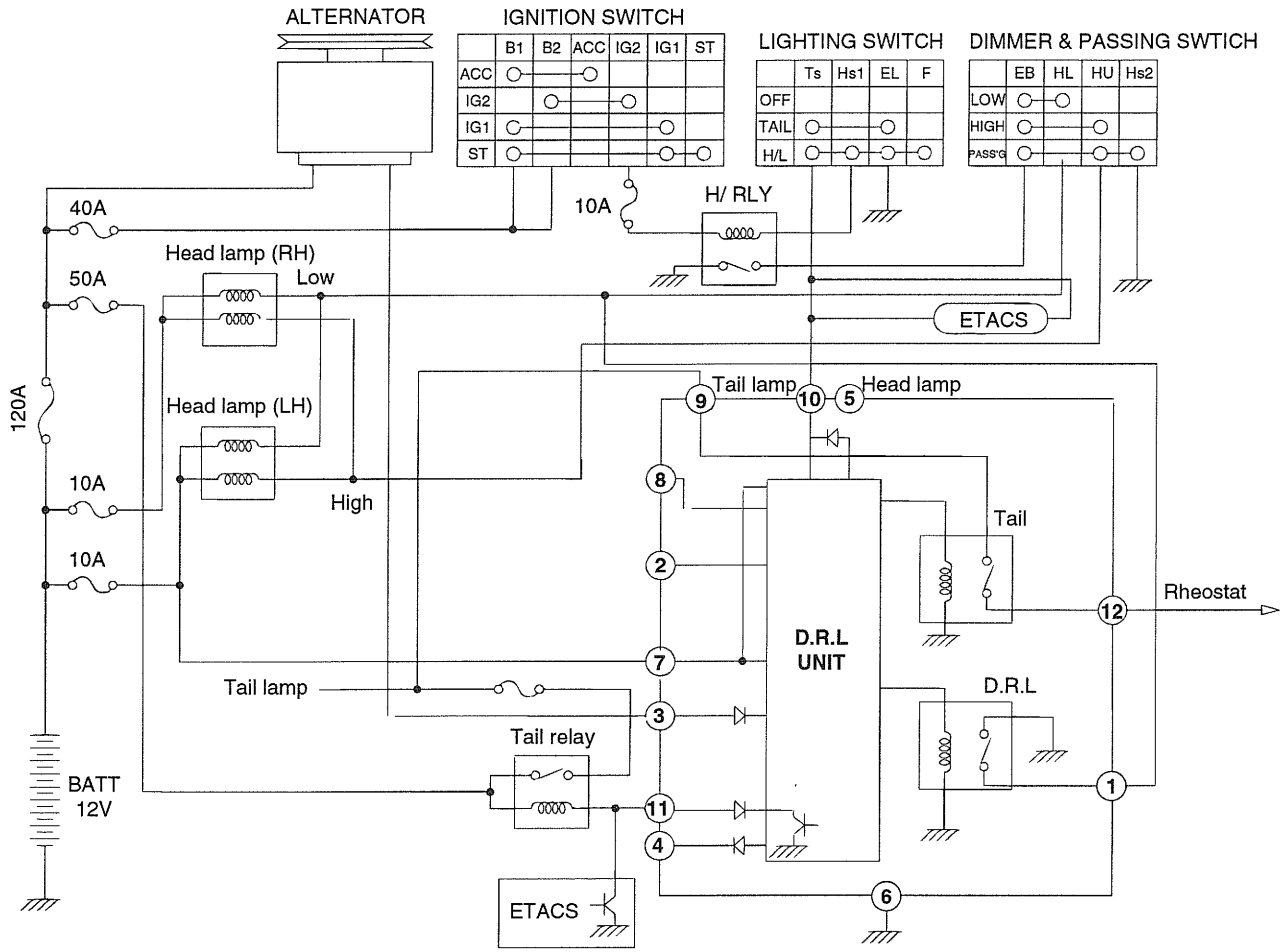

[E13]

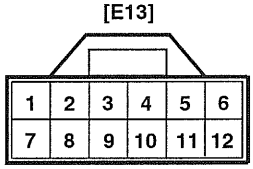

ETNC270B

INSPECTION ETNC2750

OPERATION CHECK

Check that the lights operate according to the following timing chart.

[SWEDEN]

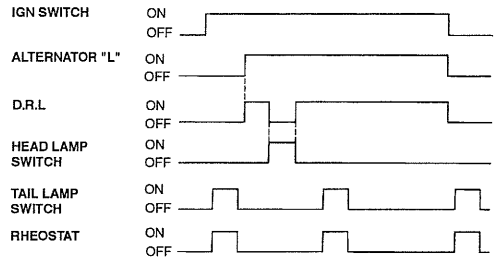

ETKA241A

[NORWAY]

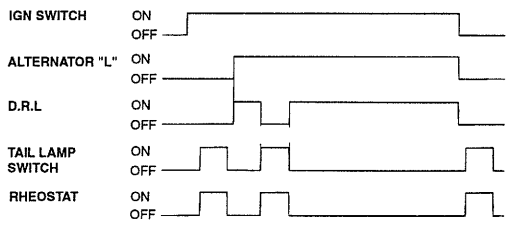

ETMB711B

INSPECT CIRCUITS FOR DAYTIME RUNNING LIGHT SYSTEM

1. Disconnect the wire connector to DRL module from engine compartment.
2. Inspect the connector on wire harness side as shown.

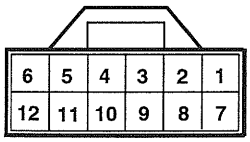

Harness side

ETNC275A

3. If circuit is not as specified, refer to schematic diagram and inspect short or circuits.

HEAD LAMP LEVELLING DEVICE

HEAD LAMP LEVELLING SWITCH

CIRCUIT DIAGRAM ETNC2800

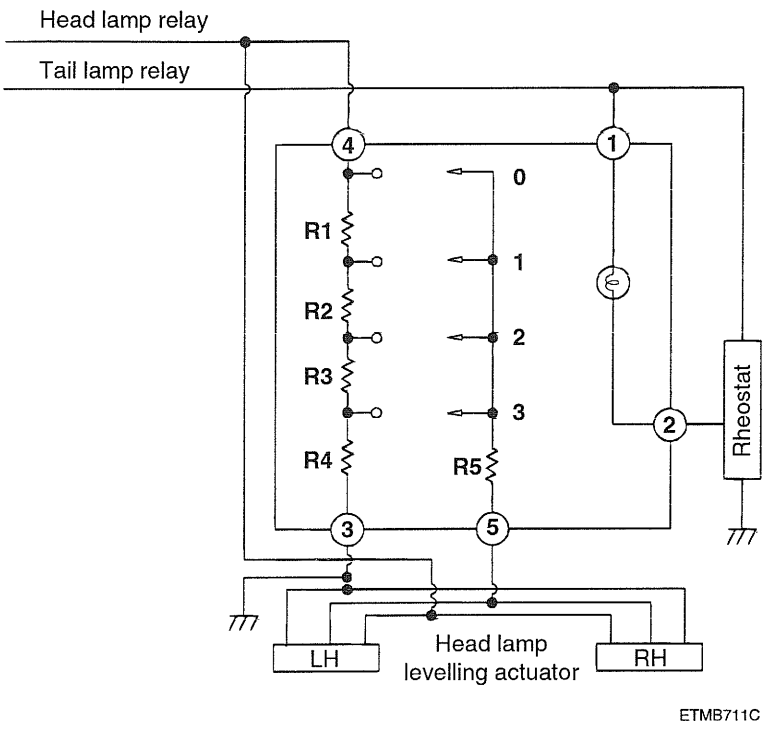

ETMB711C

PIN CONNECTION

PIN NO	Description
1	Illumination(+)
2	Rheostat
3	Ground
4	IGN
5	Actuator (+)

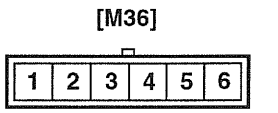

ETKA055A

ETNC280A

INSPECTION ETNC2850

1. Disconnect the switch connector from the crash pad lower panel.

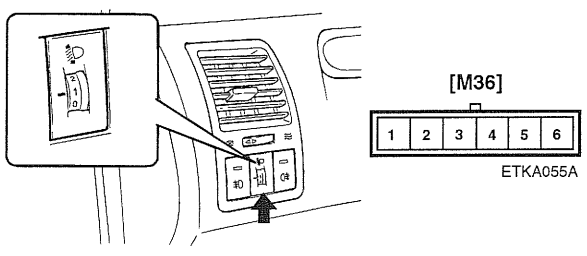

ETKA055A

ETNC285B

2. Connect the battery voltage between terminals 3 and 4(Reference voltage =V_B).
3. Measure the voltage between terminals 3 and 5(V).

ETNC285A

4. Check the percent ratio(V/V_B x 100%) between voltages V_B and V at each position.

Position No.	Rotation	Ratio(±5%)	Voltage(V)
0	0°	85%	11.05 ± 0.5V
1	30°	80%	10.4 ± 0.5V
2	60°	76.6%	9.96 ± 0.5V
3	90°	70%	9.1 ± 0.5V

5. If the voltage is not as specified, replace the head lamp levelling switch.

IMMOBILIZER CONTROL SYSTEM

GENERAL ETNC2900

The immobilizer system consists of a passive challenge-response (mutual authentication) transponder inside the key head and the SMARTRA (SMARt TRansponder Antenna) unit.

The SMARTRA unit contains an integrated inductive antenna and electronics. The SMARTRA communicates to the ECM (Engine Control Module) via a dedicated communications line.

Since the vehicle engine management system is able to control engine mobilization, it is the most suitable unit to control the SMARTRA.

SYSTEM BLOCK DIAGRAM

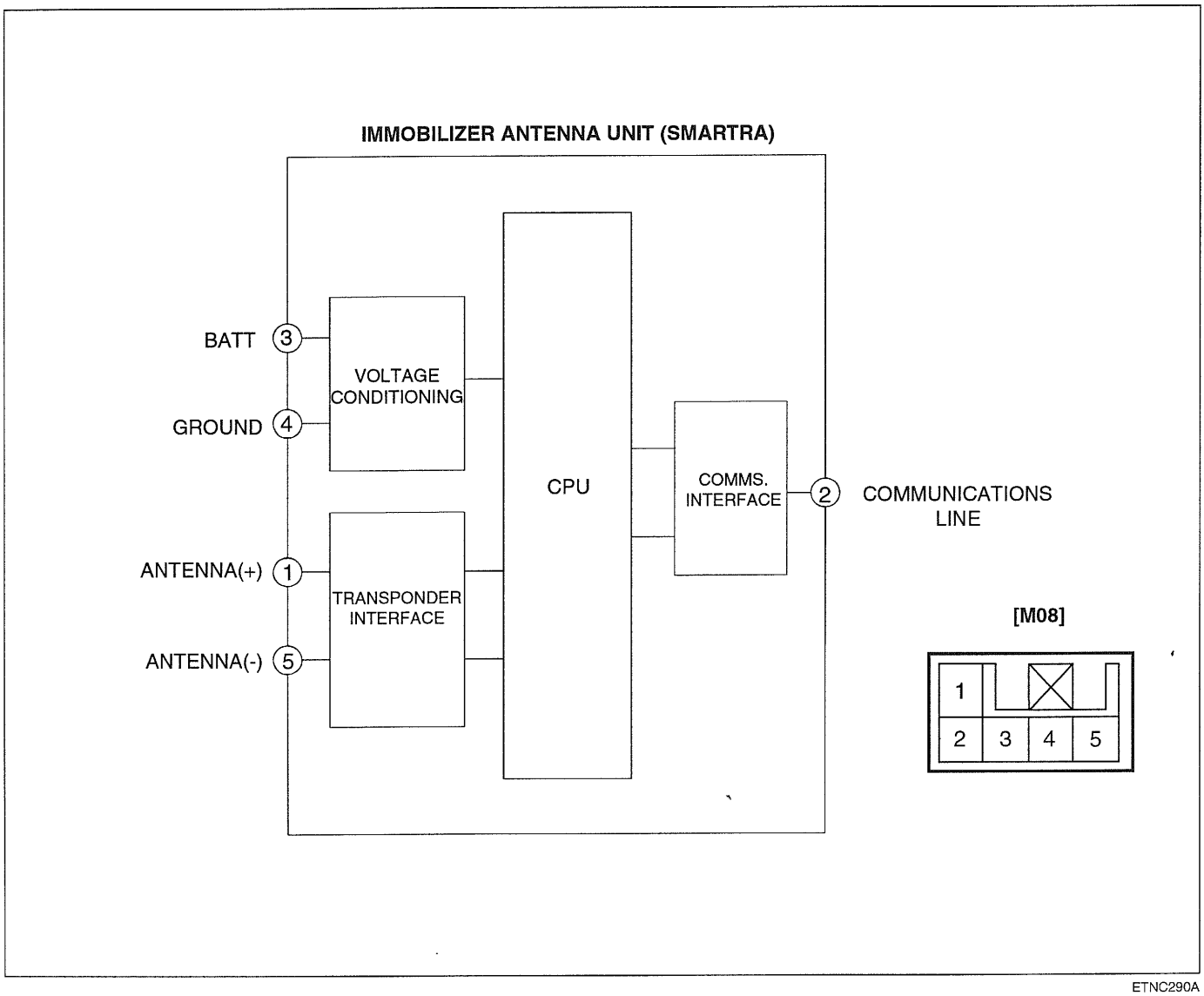

ETNC290A

COMPONENT

A. TRANSPONDER KEY	B. IMMOBILIZER ANTENNA UNIT (SMARTRA)
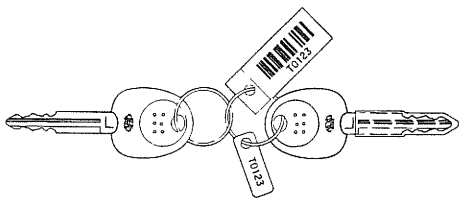 ETKA470C	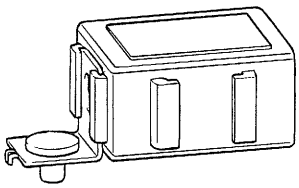 ETNB291C
C. ENGINE CONTROL MODULE	
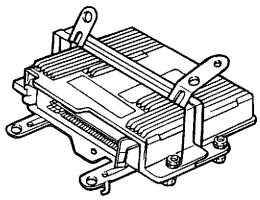 B6BE710E	

DESCRIPTION

The vehicle immobilizer system consists of the ECM, the SMARTRA and ignition keys with built-in TRANSPONDER.

COMPONENT	DESCRIPTION
ECM	The ECM carries out a check of the ignition key using a special encryption algorithm, which is programmed into the transponder as well as the ECM simultaneously. Only if the results are equal can the engine be started. The data of all transponders, which are valid for the vehicle, are stored in the ECM.
SMARTRA	The SMARTRA carries out communication with the built - in transponder in the ignition key. This wireless communication runs on RF (Radio frequency of 125 kHz). The SMARTRA is mounted around the ignition lock close to the antenna coil for RF transmission and receiving. The RF signal from the transponder, received by the antenna coil, is converted into messages for serial communication by the SMARTRA device. And, the received messages from the ECM are converted into an RF signal, which is transmitted to the transponder by the antenna. The SMARTRA does not carry out the validity check of the transponder or the calculation of encryption algorithm. This device is only an advanced interface, which converts the RF data flow of the transponder into serial communication to the ECM and vice versa.
TRANSPONDER (built-in keys)	The transponder has an advanced encryption algorithm. During the key teaching procedure, the transponder will be programmed with vehicle specific data. The vehicle specific data are written into the transponder memory. The write procedure is once only ; therefore, the contents of the transponder can never be modified or changed.

TEACHING PROCEDURES

1. Key Teaching Procedure

Key teaching must be done after replacing a defective ECM or when providing additional keys to the vehicle owner.

The procedure starts with an ECM request for vehicle specific data from the tester. The "virgin" ECM stores the vehicle specific data and the key teaching can be started. The "learnt" ECM compares the vehicle specific data from the tester with the stored data. If the data are correct, the teaching can procede.

If incorrect vehicle specific data have been sent to the ECM three times, the ECM will reject the request of key teaching for one hour. This time cannot be reduced by disconnecting the battery or any other manipulation. After reconnecting the battery, the timer starts again for one hour.

The key teaching is done by ignition on with the key and additional tester commands. The ECM stores the relevant data in the EEPROM and in the transponder. Then the ECM runs the authentication required for confirmation of the teaching process. The successful programming is then confirmed by a message to the tester.

If the key is already known to the ECM from a previous teaching, the authentication will be accepted and the EEPROM data are updated. There is no changed transponder content (this is impossible for a learnt transponder).

The attempt to repeatedly teach a key, which has been taught already during the same teaching cycle, is recognized by the ECM. This rejects the key and a message is sent to the tester.

The ECM rejects invalid keys, which are presented for teaching. A message is sent to the tester. The key can be invalid due to faults in the transponder or other reasons, which result from unsuccessful programming of data. If the ECM detects different authenticators of a transponder and an ECM, the key is considered to be invalid.

The maximum number of taught keys is 4.

If an error occurs during the Immobilizer Service Menu, the ECM status remains unchanged and a specific fault code is stored.

If the ECM status and the key status do not match for teaching of keys, the tester procedure will be stopped and a specific fault code will be stored at ECM.

2. User Password Teaching Procedure

The user password for limp home is taught at the service station. The owner of the vehicle can select a number with four digits.

User password teaching is only accepted by a "learnt" ECM. Before first teaching of user password to an ECM, the status of the password is "virgin". No limp home function is possible.

The teaching is started by ignition on, with a valid key and sending the user password by tester. After successful teaching, the status of the user password changes from "virgin" to "learnt".

The learnt user password can also be changed. This can be done if the user password status is "learnt" and the tester sends authorization of access, either the old user password or the vehicle specific data. After correct authorization, the ECM requests the new user password. The status remains "learnt" and the new user password will be valid for the next limp home mode.

If incorrect user passwords or wrong vehicle specific data have been sent to the ECM three times, the ECM will reject the request to change the password for one hour. This time cannot be reduced by disconnecting the battery or any other actions. After reconnecting the battery, the timer starts again for one hour.

THE USER PASSWORD CAN BE IN THE STATUS

00. Not yet checked

The status is stored in the EEPROM. In case of incorrect or no plausible data from this circuit, the ECM cannot check the status and the ECM sends 00.

01. Learnt

The password has been taught successfully to the ECM.

02. Virgin

This is the status at the end of the ECM production line before delivery to the final customer.

04. Locked by timer

After a certain number of incorrect inputs, the ECM is locked for one hour and no inputs are accepted during this time.

05. Teaching not accepted

This status is set if, for example, the ECM is in neutral status.

LIMP HOME FUNCTION

o NORMAL CONDITION

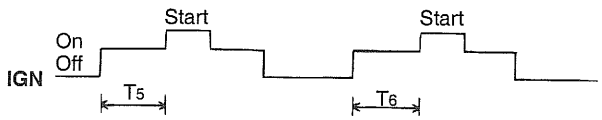

o START POSSIBLE

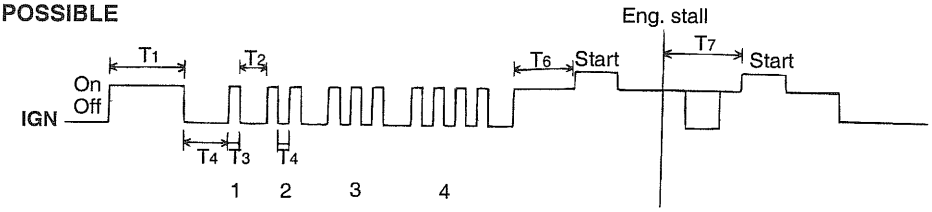

User Password
(1234H)

o START IMPOSSIBLE

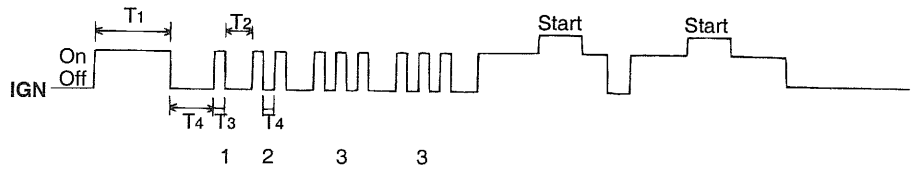

User Password
(1234H)

NOTE

$T_1 > 5$ sec
3 sec $< T_2 > 10$ sec
0.2 sec $< T_3 > 5$ sec
0.2 sec $< T_4 > 3$ sec
$T_5 < 5$ sec
$T_6 < 30$ sec
$T_7 < 8$ sec

ETKA470A

1. By tester

If the ECM detects the fault of the SMARTRA or transponder, the ECM will allow limp home function of the immobilizer. Limp home is only possible if the user password (4 digits) has been given to the ECM before. This password can be selected by the vehicle owner and is programmed at the service station.

The user password can be sent to the ECM via the special tester menu.

Only if the ECM is in status "learnt" and the user password status is "learnt" and the user password is correct, will the ECM be unlocked for a period of time (30 sec.). The engine can only be started during this time. After the time has elapsed, engine start is not possible.

If the wrong user password is sent, the ECM will reject the request of limp home for one hour. Disconnecting the battery or any other action cannot reduce this time. After reconnecting the battery to the ECM, the timer starts again for one hour.

2. By ignition key

The limp home can be activated also by the ignition key. The user password can be input to the ECM by a special sequence of ignition on/off.

Only if the ECM is in status "learnt" and the user password status is "learnt" and the user password is correct, will the ECM be unlocked for a period of time (30 sec.). The engine can be started during this time. After the time has elapsed, engine start is not possible. After a new password has been input, the timer (30 sec.) will start again.

After ignition off, the ECM is locked if the timer has elapsed 8 seconds. For the next start, the input of the user password is requested again.

DIAGNOSIS OF IMMOBILIZER RELATED FAULTS

The diagnosis monitors :

- Communication between the ECM and the SMARTRA
- Function of the SMARTRA and the transponder, and
- Data (stored in the ECM) related to the immobilizer function.

There are four different faults that are assigned to the immobilizer system. Every fault is broken down into four different types (circuit malfunction, circuit range / performance problem, low input, high input). The following table shows the assignment of immobilizer related faults to each type :

Immobilizer Related Faults	Fault types	Diagnostic Codes
Transponder Fault	Invalid transponder data	P1801
	Passive mode invalid	P1801
	Programming error	P1801
SMARTRA Fault	Antenna error	P1800
	Invalid request from ECM or corrupted data	P1803
	No answer from SMARTRA	P1610
	Invalid message from SMARTRA to ECM	P1610
EEPROM	Inconsistent data of EEPROM	P1805
	Invalid write operation to EEPROM	P1805
ECM Fault	No valid data from SMARTRA after 3 attempts by ECM	P1805
	Invalid tester message or unexpected requests by tester	P1805

REPLACEMENT OF ECM AND SMARTRA

In case of a defective ECM, the unit has to be replaced with a "virgin" or "neutral" ECM. All keys have to be programmed into the new ECM. Keys, which are not programmed into the ECM, are invalid for the new ECM (Refer to key teaching procedure). The vehicle specific data have to be left unchanged due to the unique programming of transponder.

In case of a defective SMARTRA, there is no special procedure required. A new SMARTRA device simply replaces the old one. There are no transponder - related data stored in this device.

NEUTRALISING ECM

The ECM can be set to the "neutral" status by a tester.

A valid ignition key is inserted and after ignition on is recorded, the ECM requests the vehicle specific data from the tester. The communication messages are described at " Neutral Mode". After successfully receiving the data, the ECM is neutralized.

The ECM remains locked. Neither the limp home mode nor the "twice ignition on" function, is accepted by the ECM.

The teaching of keys follows the procedure described for the virgin ECM. The vehicle specific data have to be unchanged due to the unique programming of the transponder. If data should be changed, new keys with a virgin transponder are requested.

Heating, Ventilation & Air Conditioning

GENERAL ..... HA -2

AIR CONDITIONING SYSTEM ..... HA -6

MANUAL A/C COMPRESSOR CONTROLS ..... HA -19

HEATER ..... HA -26

BLOWER CONTROLS ..... HA -30

BLOWER AND A/C CONTROLS (MANUAL) ..... HA -36

GENERAL

SPECIFICATIONS EQNB0010

Item		Specification
Heater	Type	Air mix type
	Capacity	4,500 ± 10%
Air conditioning	Evaporator Cooling capacity	4,100 ± 10%
	Compressor Type Oil capacity Pressure relief valve Voltage	Swash plate (HS-15) 154cc Operating pressure : 35-42.2kg/cm² D.C 12.8 ± 0.2V
	Magnetic clutch Voltage & wattage Torque	D.C 12.8 ± 0.2V, Max. 54W Min. 4.4 kg·m
	Refrigerant & capacity	R-134a (570g)
	Triple pressure switch	High pressure OFF 32kgf/cm² ON 26kgf/cm²
		Middle pressure OFF 14kgf/cm² ON 18kgf/cm²
		Low pressure OFF 2.0kgf/cm² ON 2.25kgf/cm²
	Thermostat	OFF 1.5 ± 0.6°C ON 3.0 ± 0.6°C
Heater control assembly		MANUAL Type

SPECIAL TOOLS EQKA0050

Tool (Number and name)	Illustration	Use
09455-34000 Bearing and gear puller	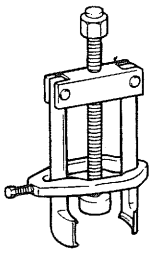 EQA9002B	Removal of field coil
09977-34000 Pressure plate bolt remover	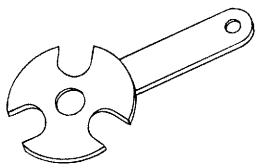 EQDA002A	Removal of pressure plate
09977-33700 Shaft seal remover and installer	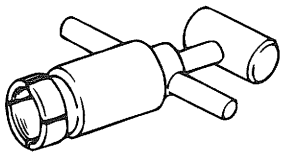 EQDA002B	Removal and installation of shaft seal
09977-33800 Snap ring remover	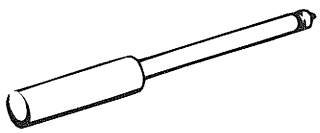 EQDA002C	Removal of snap ring

TROUBLESHOOTING EQHA0100

Before replacing or repairing air conditioning components, first determine if the malfunction is due to the refrigerant charge, air flow or compressor. The following diagnostic charts have been developed as a quick reference for determining the cause of the malfunction. If these charts do not satisfactorily describe the problem, refer to the appropriate section for a more detailed explanation. After correcting the malfunction, check the complete system to ensure that performance is satisfactory.

MALFUNCTION CAUSES AND REMEDIES (NUMBERS INDICATE CHECKING/INSPECTION ORDER.)

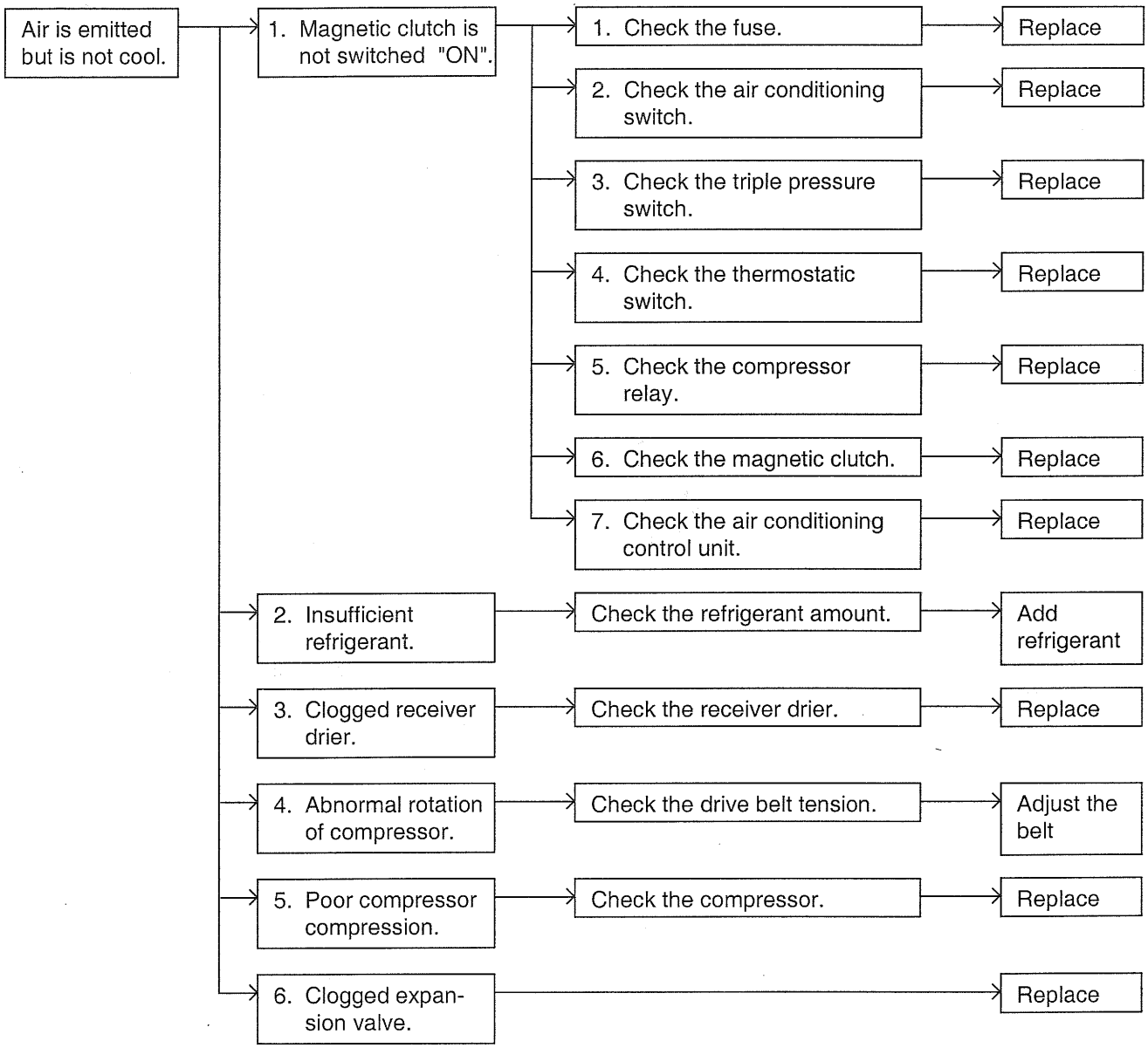

EQHA010A

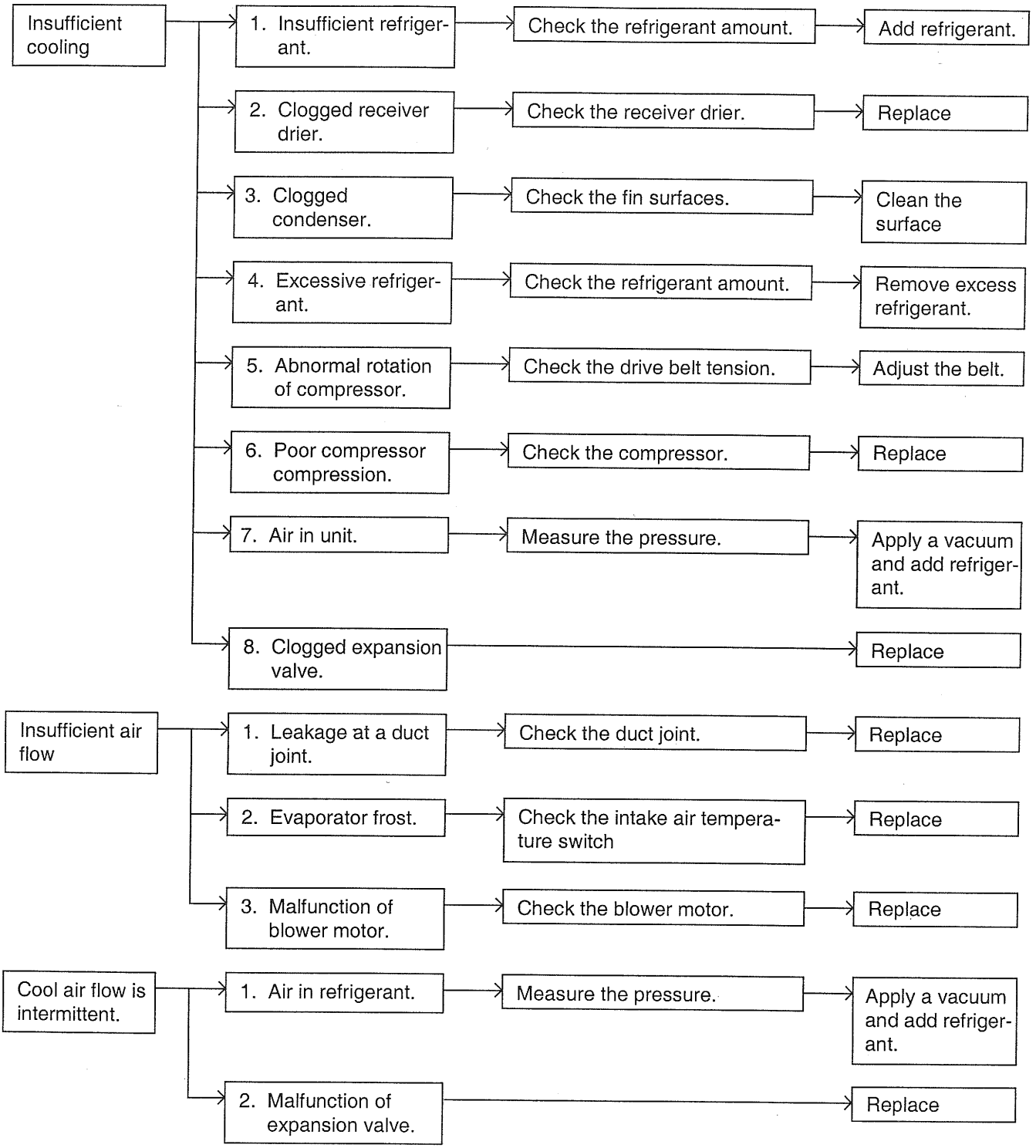
Insufficient cooling
1. Insufficient refrigerant.
Check the refrigerant amount.
Add refrigerant.
2. Clogged receiver drier.
Check the receiver drier.
Replace
3. Clogged condenser.
Check the fin surfaces.
Clean the surface
4. Excessive refrigerant.
Check the refrigerant amount.
Remove excess refrigerant.
5. Abnormal rotation of compressor.
Check the drive belt tension.
Adjust the belt.
6. Poor compressor compression.
Check the compressor.
Replace
7. Air in unit.
Measure the pressure.
Apply a vacuum and add refrigerant.
8. Clogged expansion valve.
Replace
Insufficient air flow
1. Leakage at a duct joint.
Check the duct joint.
Replace
2. Evaporator frost.
Check the intake air temperature switch
Replace
3. Malfunction of blower motor.
Check the blower motor.
Replace
Cool air flow is intermittent.
1. Air in refrigerant.
Measure the pressure.
Apply a vacuum and add refrigerant.
2. Malfunction of expansion valve.
Replace

EQHA010B

AIR CONDITIONING SYSTEM

INSTRUCTIONS EQDA0100

WHEN HANDLING REFRIGERANT

1. R-134a liquid refrigerant is highly volatile. A drop on the skin of your hand could result in localized frostbite. When handling the refrigerant, be sure to wear gloves.
2. It is standard practice to wear goggles or glasses to protect your eyes, and gloves to protect your hands. If the refrigerant splashes into your eyes, wash them with clean water immediately.
3. The R-134a container is highly pressurized. Never leave it in a hot place, and check that the storage temperature is below 52°C (126°F).
4. A electronic leak detector should be used to check the system for refrigerant leakage. Bear in mind that the R-134a, upon coming into contact with flame, produces phosgene, a highly toxic gas.
5. Use only recommended the lubricant for R-134a systems. If lubricants other than the recommended one used, system failure may occur.
6. PAG lubricant absorbs moisture from the atmosphere at a rapid rate, therefore the following precautions must be observed:
   - When removing refrigerant components from a vehicle, cap immediately the components to prevent from the entry of moisture.
   - When installing refrigerant components to a vehicle, do not remove the cap until just before connecting the components.
   - Complete the connection of all refrigerant tubes and hoses without delay to prevent the A/C system from taking on moisture.
   - Use the recommended lubricant from a sealed container only.
7. If an accidental discharge in the system occurs, ventilate the work area before resuming service.

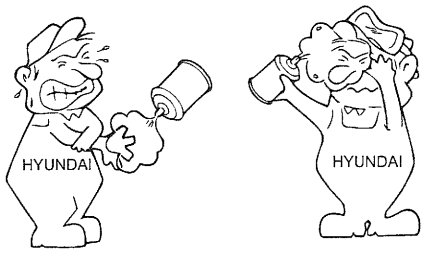

EQDA010A

WHEN REPLACING PARTS ON A/C SYSTEM

1. Never open or loosen a connection before discharging the system.
2. Seal the open fittings of components with a cap or plug immediately to prevent intrusion of moisture or dust.
3. Do not remove the sealing caps from a replacement component until it is ready to be installed.
4. Before connecting an open fitting, always install a new sealing ring. Coat the fitting and seal with refrigerant oil before making the connection.

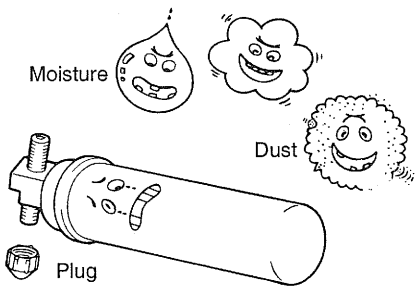

EQDA010B

WHEN INSTALLING CONNECTING PARTS

FLANGE WITH GUIDE PIN

Check the new O-ring for damage (use only the specified) and lubricate it using compressor oil. Tighten the nut to specified torque.

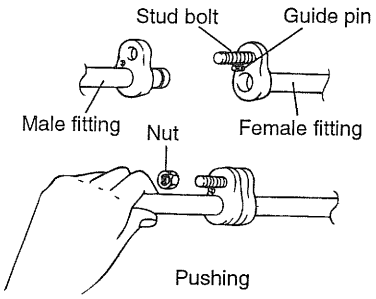

EQDA010C

HANDLING TUBING AND FITTINGS

The internal parts of the refrigeration system will remain in a state of chemical stability as long as pure moisture-free refrigerant and refrigerant oil are used. Abnormal amounts of dirt, moisture or air can upset the chemical stability and cause problems or serious damage.

THE FOLLOWING PRECAUTIONS MUST BE OBSERVED

1. When it is necessary to open the refrigeration system, have everything you will need to service the system ready so the system will not be left open any longer than necessary.
2. Cap or plug all lines and fittings as soon as they are opened to prevent the entrance of dirt and moisture.
3. All lines and components in parts stock should be capped or sealed until they are ready to be used.
4. Never attempt to rebend formed lines to fit. Use the correct line for the installation you are servicing.
5. All tools, including the refrigerant dispensing manifold, the gauge set manifold and test hoses, should be kept clean and dry.

REFRIGERATION CYCLE EQNB0200

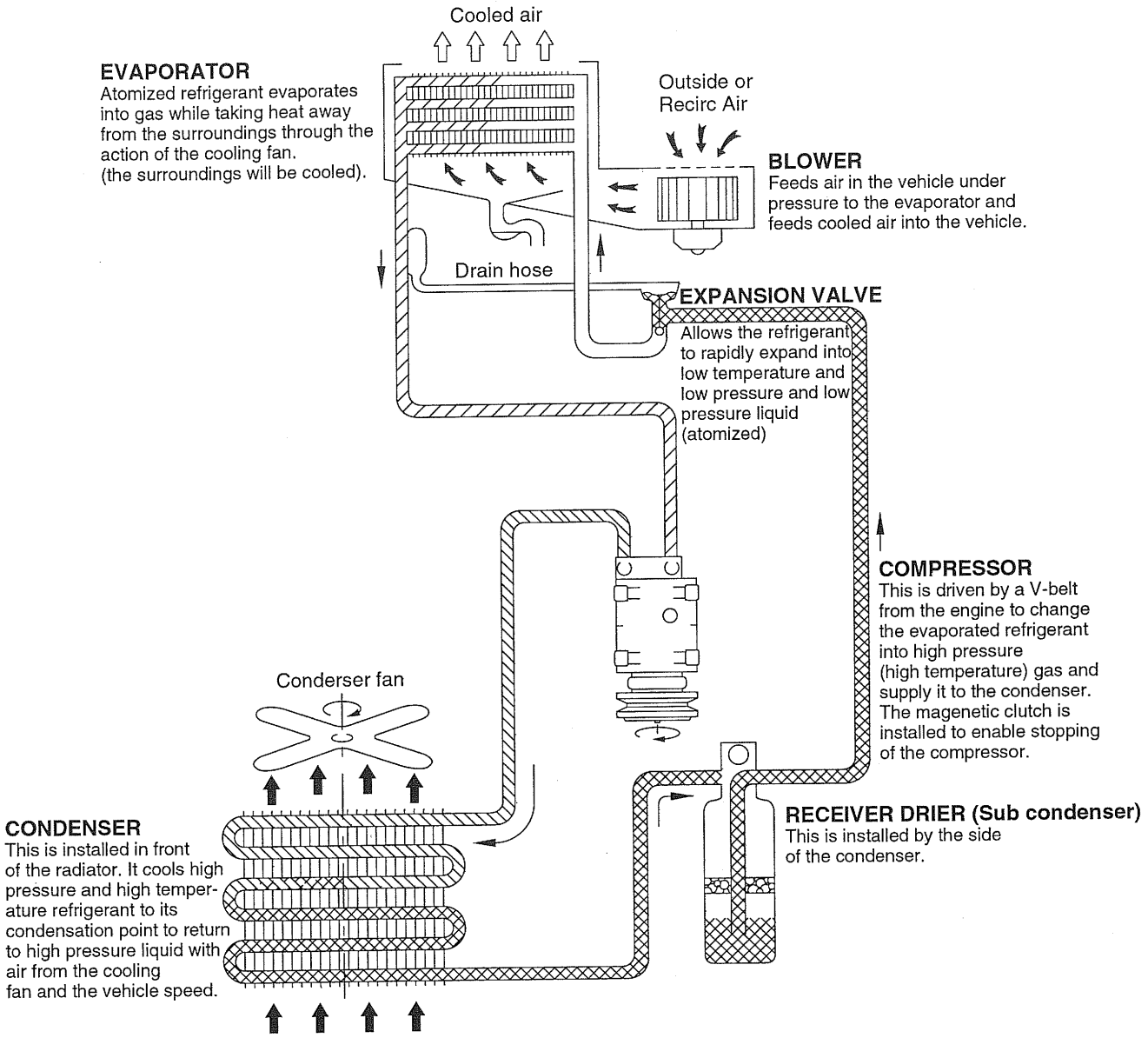

EQNB020A

INSTALLATION OF MANIFOLD GAUGE SET EQNB0300

CAUTION

When connecting the manifold gauge set, be sure to observe all safety precautions.

1. Close both hand valves of the manifold gauge fittings.
2. Install the charging hoses of the gauge set to the fittings. Connect the low-pressure hose to the low-pressure service port, and the high-pressure hose to the high-pressure service port. Tighten the hose nuts by hand.

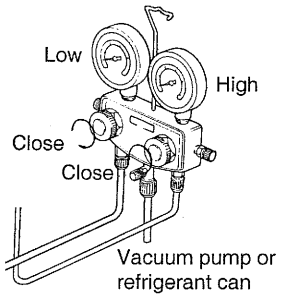

EQHA030A

NOTE

When charging the refrigerant, do it after removing the engine cover and the air intake hose.

REFRIGERANT DISCHARGING PROCEDURE EQHA0350

1. Connect the manifold gauge set to the system.
2. Put a towel under the open end of the center hose.
3. Open the high pressure valve slowly to discharge the refrigerant.

CAUTION

If discharging the refrigerant too fast, compressor oil may drain from the system.

4. Check if the towel is stained with oil. If so, gently close the valve.
5. If the manifold gauge reading drops below 3.5kg/cm², open the low pressure valve slowly.
6. Open the high and low pressure valves slowly in order to drop the system pressure until the gauge indicates 0kg/cm².

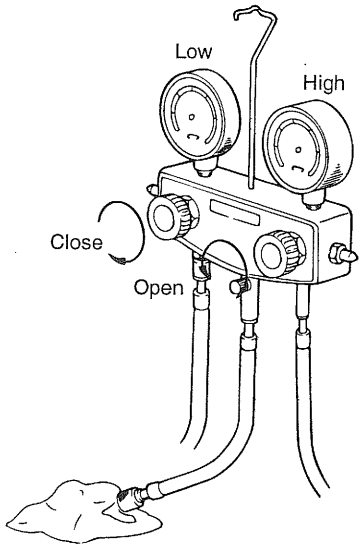

EQHA035A

EVACUATING REFRIGERANT EQNB0400

NOTE

It is necessary to evacuate the air conditioning system any time the system has been opened. Evacuation is necessary to rid the system of all air and moisture that may have been allowed to enter the unit. After installation of a component, the system should be evacuated for approximately 15 minutes. A component in service that has been opened for repair should be evacuated for 30 minutes.

1. Engine should be off.
2. Connect a manifold gauge set to the compressor gauge fittings. Close both high and low pressure valves.
3. Make sure the refrigerant has been discharged from the system.
4. Connect the center hose of the gauge set to the vacuum pump inlet.
5. Start the vacuum pump and then open the high and low manifold pressure valves.
6. After about ten minutes, check that the low pressure gauge reads more than 94,39 kPa (0.96 kg/cm², 13.7 psi) of vacuum. If negative pressure can not be obtained, there is a leak in the system. In this case, repair the leak as follows:

a. Close both manifold valves and stop the vacuum pump.
b. Charge the system with a can of refrigerant [about 0.4 kg (0.9 lb)]. Refer to Charging Refrigerant.
c. Check for refrigerant leakage with a leak detector. Repair any leakage found. Refer to Checking Refrigerant Leak.
d. Discharge refrigerant again, and then evacuate the system. If no leaks are found, continue evacuating the system.

7. Start the vacuum pump.

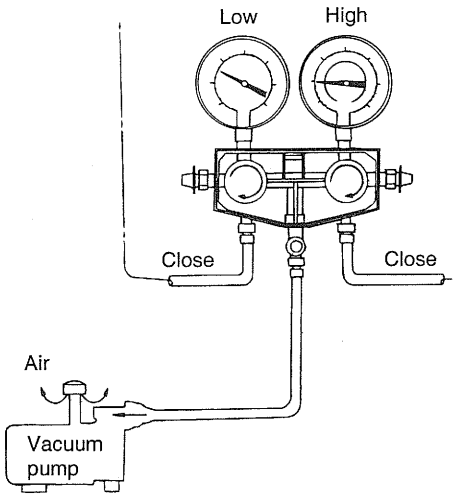

EQA9007A

8. Open both manifold pressure valves to obtain 94.39 kPa (0.96 kg/cm², 13.7 psi) of vacuum.

9. After the low pressure manifold gauge indicates close to 94.39 kPa (0.96 kg/cm², 13.7 psi), continue evacuating for 15 minutes.

10. After evacuating for 15 minutes, close both manifold pressure valves and stop the vacuum pump. Disconnect the hose from the vacuum pump. The system is now ready for charging.

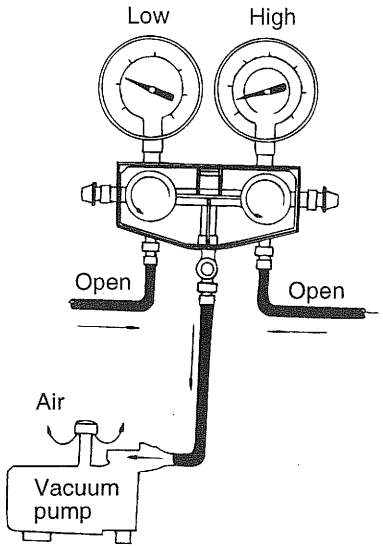

EQA9007B

HANDLING THE REFRIGERANT SERVICE TAP VALVE EQNB0450

1. Before connecting the valve to the refrigerant container, turn the handle fully counterclockwise.

2. Turn the disc counterclockwise until it reaches its highest position.

3. Connect the center hose to the valve fitting. Turn the disc fully clockwise by hand.

4. Turn the handle clockwise to make a hole in the sealed top.

5. Turn the handle fully counterclockwise to fill the center hose with air. Do not open the high and low-pressure hand valves.

6. Loosen the center hose nut connected to the center fitting of the manifold gauge.

7. Allow air to escape for a few seconds, and then tighten the nut.

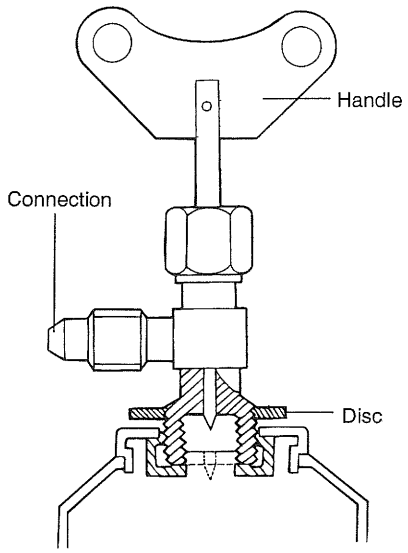

EQA9008A

CHARGING REFRIGERANT SYSTEM (VAPOR) EQNB0500

NOTE

This step is to charge the system through the low pressure side with the refrigerant in a vapor state. When the refrigerant container is placed right side up, refrigerant will enter the system as a vapor.

1. Install the refrigerant can tap valve as described in Handling the Refrigerant Service Tap Valve section.
2. Open the low pressure valve. Adjust the valve so that the low pressure gauge does not read over 412 kPa (4.2 kg/cm², 60 psi).

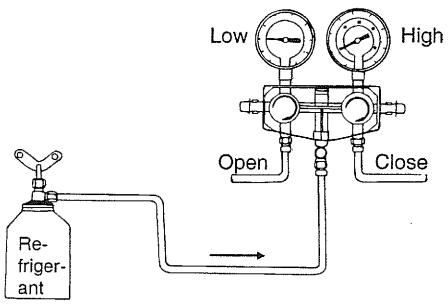

EQA9009A

3. Put the refrigerant in a pan of warm water (maximum temperature 40°C or 104°F) to keep vapor pressure in the container slightly higher than vapor pressure in the system.
4. Run the engine at fast idle and operate the air conditioning.

NOTE

Be sure to keep the container upright to prevent liquid refrigerant from being charged into the system through the suction side, resulting in possible damage to the compressor.

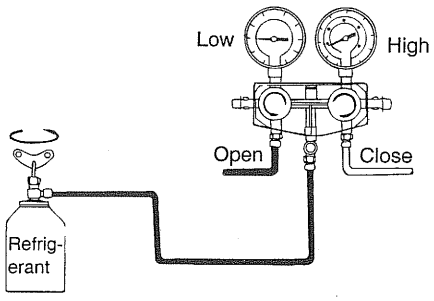

EQA9009B

5. Charge the system to the specified amount. Then close the low pressure valve.

Specified amount : 570g

When refrigerant charging speed is slow, immerse the refrigerant can in heated water. (a temperature of approx. 40°C (104°F)).

WARNING

- **Under any circumstances, the refrigerant must not be warmed in water heated to a temperature of over 52°C (126°F).**
- **A blow torch or stove must never be used to warm up the can.**

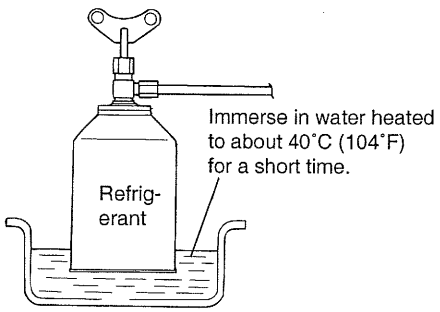

EQA9009C

CHARGING THE REFRIGERANT SYSTEM (LIQUID)

NOTE

This step is to charge an empty system through the high pressure side with refrigerant in a liquid state.

When the refrigerant container is held upside down, refrigerant will enter the system as a liquid.

CAUTION

Never run the engine when charging the system through the high pressure side. Do not open the low pressure valve when the system is being charged with liquid refrigerant.

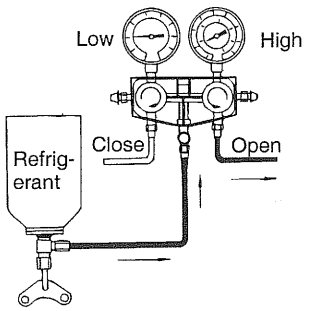

EQA9010A

1. Close both high and low pressure valves completely after the system is evacuated.
2. Install the refrigerant can tap valve as described in "Handling the Refrigerant Service Tap Valve" section.
3. Open the high pressure valve fully and keep the container upside down.
4. Charge the system to the specified amount by weighing the refrigerant with a scale. Overcharging will cause discharge pressure (high side) to rise. Then, close the high pressure valve.

Specified amount : 570g

NOTE

If the low pressure gauge does not show a reading, the system is restricted and must be repaired.

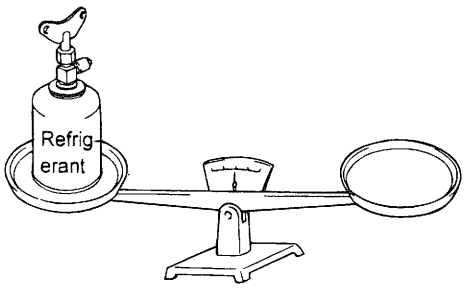

EQA9010B

5. After the specified amount of refrigerant has been charged into the system, close the manifold gauge valve.
6. Confirm that there are no leaks in the system by checking with a leak detector. Refer to Checking Refrigerant Leak.

NOTE

Conducting a performance test prior to removing the manifold gauge is good service practice.

CHARGING THE REFRIGERANT SYSTEM (LIQUID) EQNB0510

NOTE

This step is to charge an empty system through the high pressure side with refrigerant in a liquid state. When the refrigerant container is held upside down, refrigerant will enter the system as a liquid.

CAUTION

Never run the engine when charging the system through the high pressure side. Do not open the low pressure valve when the system is being charged with liquid refrigerant.

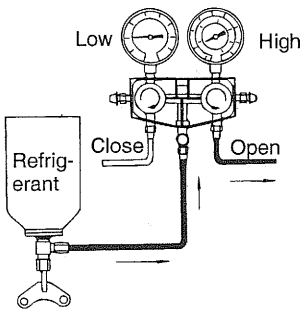

EQA9010A

1. Close both high and low pressure valves completely after the system is evacuated.
2. Install the refrigerant can tap valve as described in "Handling the Refrigerant Service Tap Valve" section.
3. Open the high pressure valve fully and keep the container upside down.
4. Charge the system to the specified amount by weighing the refrigerant with a scale. Overcharging will cause discharge pressure (high side) to rise. Then, close the high pressure valve.

Specified amount : 570g

NOTE

If the low pressure gauge does not show a reading, the system is restricted and must be repaired.

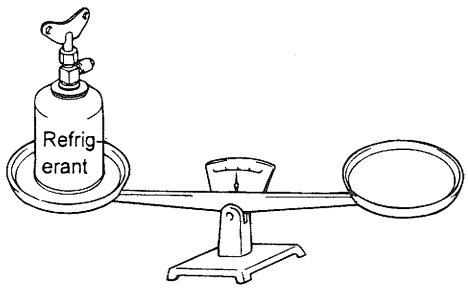

EQA9010B

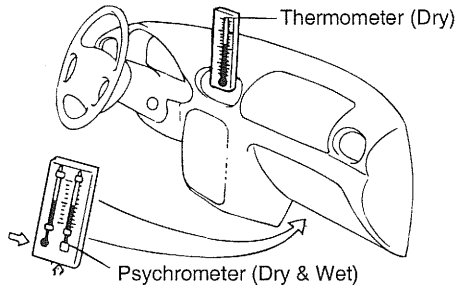

EQA9019A

5. After the specified amount of refrigerant has been charged into the system, close the manifold gauge valve.

6. Confirm that there are no leaks in the system by checking with a leak detector. Refer to Checking Refrigerant Leak.

NOTE

Conducting a performance test prior to removing the manifold gauge is good service practice.

PERFORMANCE TEST EQNB0550

1. Install the manifold gauge set.

2. Run the engine at 2,000 rpm and set the controls for maximum cooling and high blower speed.

3. Keep all windows and doors open.

4. Place a dry-bulb thermometer in the cool air outlet.

5. Place a psychrometer close to the inlet of the cooling unit.

6. Check that the reading on the high pressure gauge is 1,373-1,575 kPa (14-16 kg/cm², 199-228 psi). If the reading is too high, pour water on the condenser. If the reading to too low, cover the front of the condenser.

7. Check that the reading on the dry-bulb thermometer at the air inlet is 25-35°C (77-95°F).

8. Calculate the relative humidity from the psychrometric graph by comparing the wet-and dry-bulb reading of the psychrometer at the air inlet.

HOW TO READ THE GRAPH :
After measuring the temperatures of the wet and dry-bulb thermometers at the evaporator air inlet, relative humidity (%) can be obtained.
Example : Dry-and wet-bulb temperature at the evaporator air inlet are 25°C (77°F) and 19.5°C (67°F) respectively, the point of intersection of the dotted lines in the graph indicates 60%.

WET-BULB TEMPERATURE [°C(°F)]

100	(212)
90	(194)
80	(176)
70	(158)
60	(140)
50	(122)
40	(104)
30	(86)
20	(68)
10	(50)

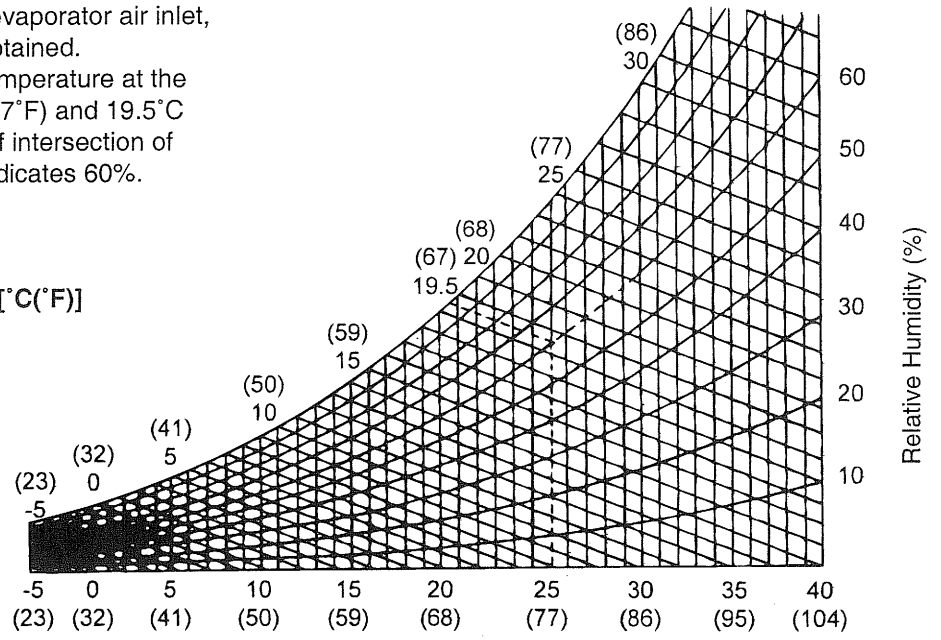

EQA9019B

9. Measure the dry-bulb temperature at the cool air outlet, and calculate the difference between the inlet dry-bulb and outlet dry-bulb temperatures.

10. Check that the intersection of the relative humidity and temperature difference is within the block hard line. If the intersection is within the block hard line, cooling performance is satisfactory.

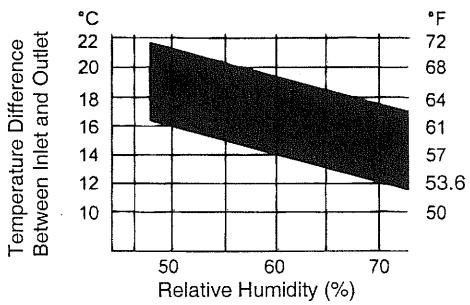

EQA9019C

COMPRESSOR OIL EQNB0600

The oil used to lubricate the compressor circulates in the system while the compressor is operating. Whenever replacing any component of the system or when a large amount of gas leakage occurs, add oil to maintain the original total amount of oil.

Single : 140 - 160g

HANDLING OF OIL

1. The oil should be free from moisture, dust, metal filings, etc.
2. Do not mix oils.
3. The moisture content in the oil increases when exposed to air for prolonged periods. After use, seal the container immediately.

OIL RETURN OPERATION

To check the oil level or add oil, idle engine for 20-30 minutes and setting the heater control set to maximum cooling and blower level, to return the lubricant to compressor.

CHECKING AND ADDING COMPRESSOR OIL

In order to add oil to an operating compressor, check the compressor oil using the following procedure:

1. Perform the oil return operation, stop the engine, discharge the refrigerant, and dismantle the compressor from vehicle.

2. Discharge oil from the system line outlet.

NOTE

If compressor is cold, sometimes it can be hard to drain the oil. Warm up the compressor (approx. 40–50°C) to drain the oil.

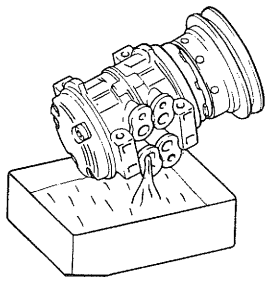

EQHA060A

3. Check the amount of the discharged oil. If it is less than 70cc, it means there is a little leak of oil. Perform the leakage test on each system connection, and repair or replace faulty parts if necessary.

4. Check oil for contamination and set the oil level in the following procedure:

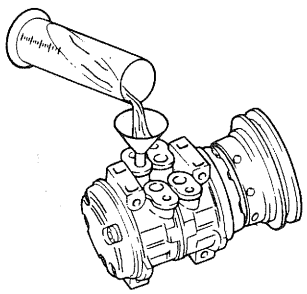

EQHA060B

a. When oil is clean

Discharge	Setting
Above 70cc	Oil level is normal, add equal amount of discharged oil.
Below 70cc	Oil level is low add 70cc of oil.

b. If oil is contaminated with metal fragments or other material, clean the receiver drier before charging the refrigerant into the air conditioning system.

CHECKING REFRIGERANT LEAKS EQNB0650

Conduct a leak test with an electronic leak detector whenever leakage of refrigerant is suspected and when conducting service operations that are accompanied by disassembly or loosening of connection fittings.

NOTE

In order to use the device properly, read the manuals supplied by the manufacturer to perform the specified maintenance and inspections.

If a gas leak is detected, proceed as follows:

1. Check the torque on the connection fitting and, if too loose, tighten to the proper torque. Check for gas leakage with a leak detector.
2. If leakage continues even after the fitting has been tightened, discharge the refrigerant from the system, disconnect the fittings, and check its seating face for damage. Always replace, even if the damage is slight.
3. Check compressor oil and add oil if required.
4. Charge the system and recheck for gas leaks. If no leaks are found, evacuate and charge the system.

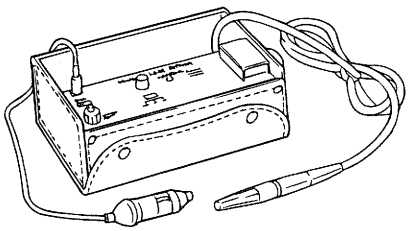

EQHA065A

AMOUNT OF DEFLECTION OF BELT EQNB0700

Item	Deflection (mm)
New one	5 - 5.5
Used one	6 - 7
After driving	8

PERFORMANCE TEST DIAGNOSIS USING MANIFOLD GAUGE EQNB0800

STANDARD VALUE

If the cooling cycle is operating normally, the manifold gauge reading will be approx. 1.5-2.0kg/cm² for the low pressure side and approx. 14.5-15kg/cm² for high the pressure side, when inlet temperature is 30-35°C, engine rpm is 2,000, max. the cooling, and the blower is at the highest level.

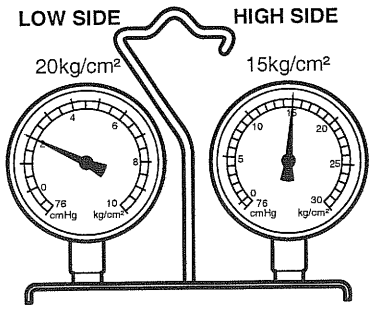

KFWD001A

DIAGNOSIS

SYMPTOMS	PROBABLE CAUSES	REMEDY	MANIFOLD GAUGE READINGS
1. Low pressure and high pressure are low. 2. Cooler outlet air is a little cooler.	• Gas leak in freezing cycle.	• Check and repair. • Add refrigerant.	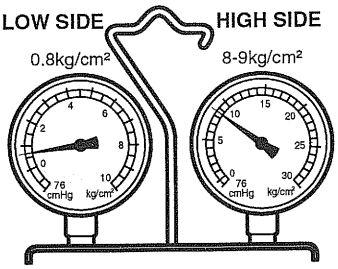 KFWD002A
1. Low pressure and high pressure are high.	• Faulty cooling or faulty condenser freezing. • Belt slipping.	• Maintain the proper level of refrigerant. Clean the condenser. • Repair the belt.	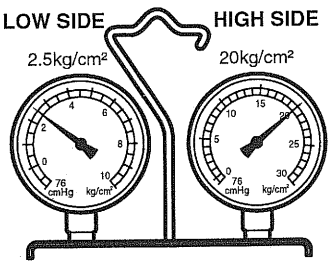 KFWD003A
1. Low pressure and high pressure are high. 2. Low pressure pipe is not cold.	• Air intake in freezing cycle.	• Clean or repair the receiver drier. • Check for oil contamination.	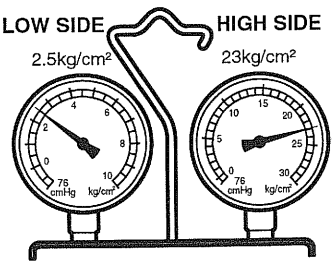 KFWD004A

SYMPTOMS	PROBABLE CAUSES	REMEDY	MANIFOLD GAUGE READINGS
1. Low pressure side indicates negative pressure and high pressure side indicates low pressure. 2. Frost or dew on pipes connected to receiver or expansion valve.	• Dust or moisture frozen at expansion valve hole. • Gas leak at cooling vessel.	• Repair the receiver drier and replace the expansion valve. • Replace the expansion valve if the cooling vessel is faulty.	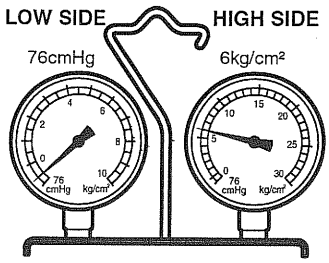 KFWD005A
1. Low pressure side sometimes goes negative pressure or normal.	• Intaken moisture is frozen at expansion valve hole.	• Repair and bleed receiver drier	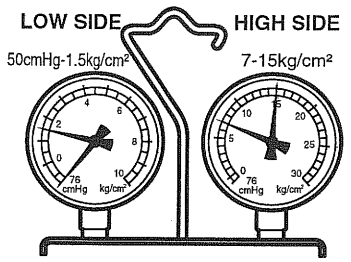 KFWD006A
1. Low pressure and high pressure are high. 2. Much frost or dew sticks on low pressure side piping.	• Expansion valve failure. Cooling vessel inlet faulty. • Flow control faulty.	• Repair receiver drier. • Check oil contamination.	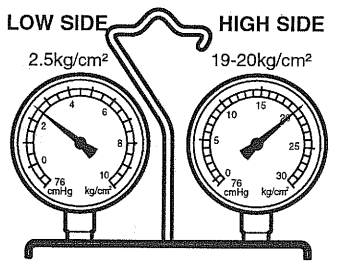 KFWD007A
1. Low pressure side is high and high pressure side is low.	• Leak inside compressor.	• Replace compressor.	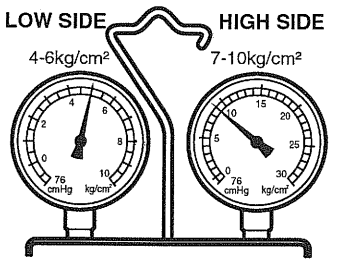 KFWD008A

REFRIGERANT LINE

COMPONENTS EQNB0250

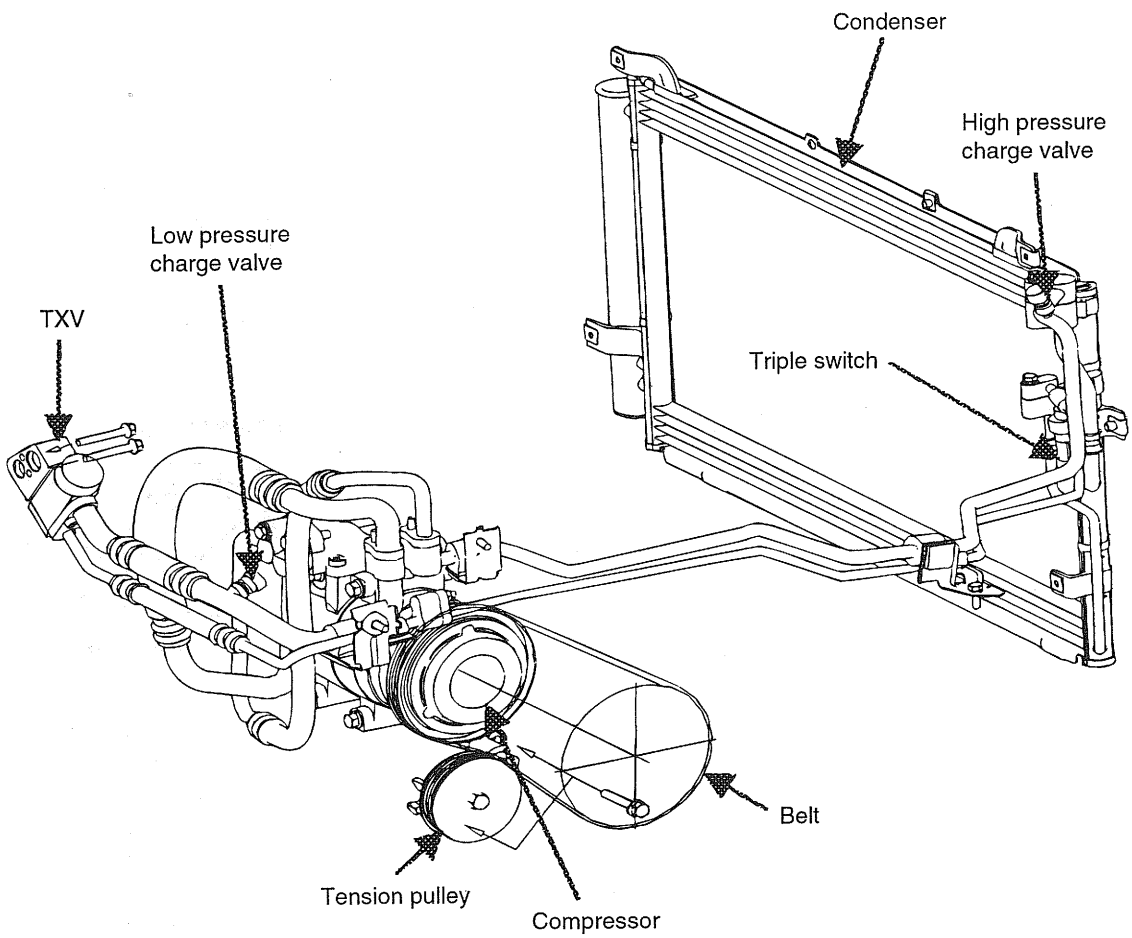

<Refrigerant line>

Compressor → Discharge line → Condenser → Liquid line

Compressor ← Suction line ← Evaporator ←

EQNB025A

MANUAL A/C COMPRESSOR CONTROLS

COMPRESSOR

COMPONENTS EQHA1250

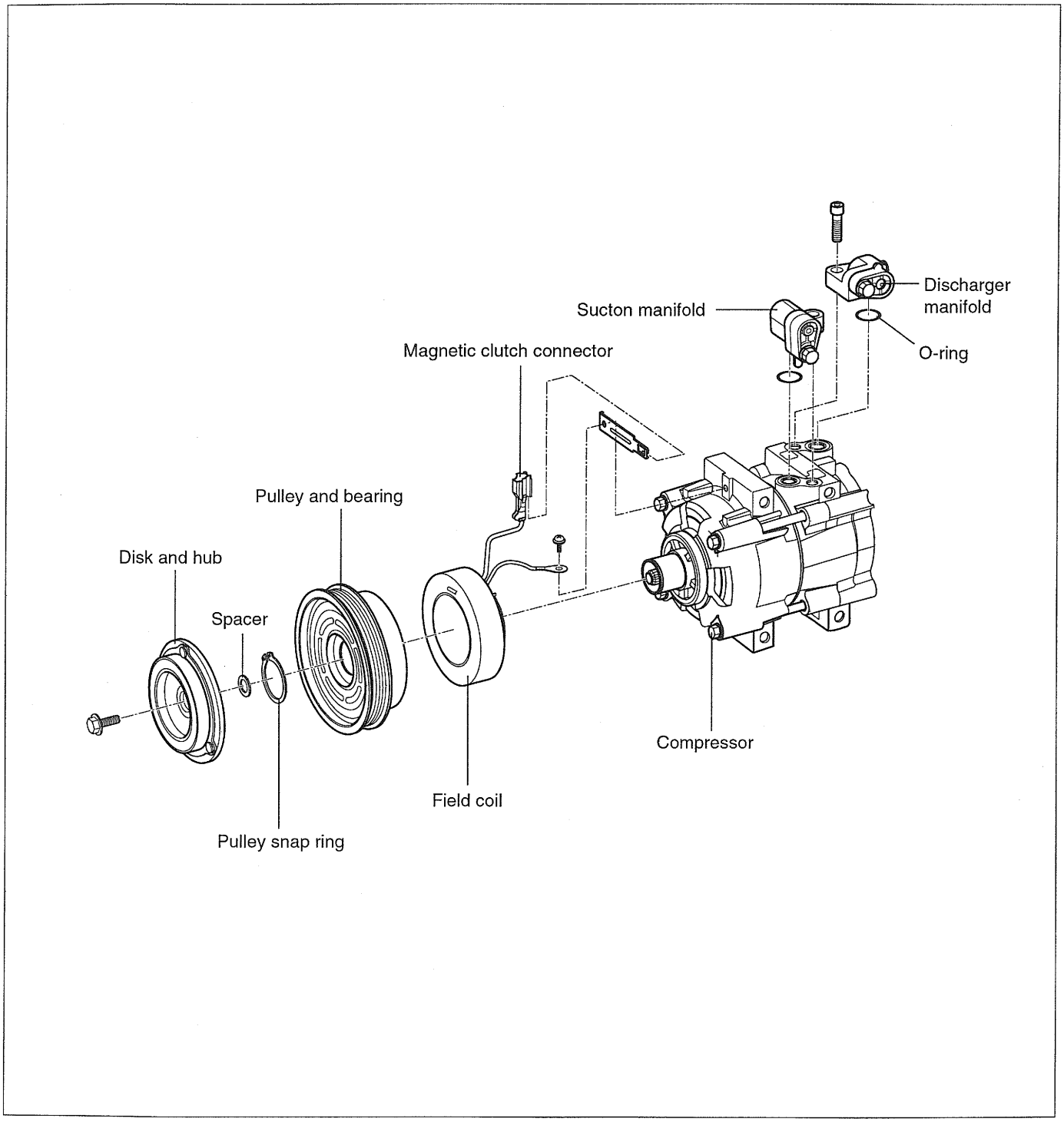

EQDA125A

CLUTCH HUB AND PULLEY

DISASSEMBLY EQNB1300

1. Remove the clutch hub supporting bolt using a spanner wrench.
2. Pull out the clutch hub and shim from the compressor shaft. If it an hard to pull out, insert 8mm bolt into the shaft hole to remove the hub from the shaft.
3. Remove the pulley supporting the snap ring.
4. Remove the pulley and bearing assembly from the compressor.

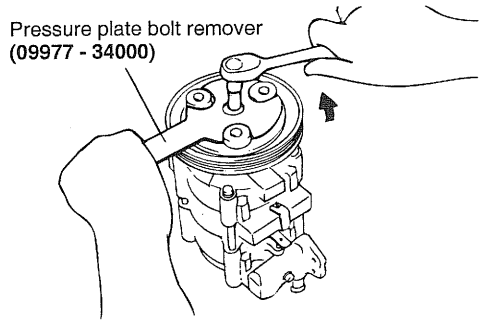

EQDA028B

REASSEMBLY EQKA1310

1. Clean the pulley bearing surface of the compressor head and remove dirt and rust.
2. Install the pulley and bearing on the compressor.
3. Install the snap ring with the bevelled side facing outward.
4. Place shim of specified side at the hub spline opening inside and slide the hub onto the compressor shaft end.
5. Install a new hub supporting bolt on the compressor shaft end. Tighten the bolt to the specified torque.

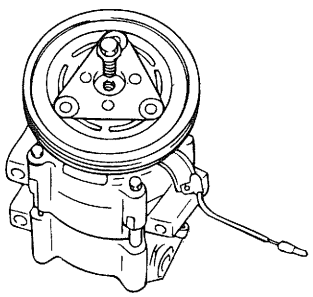

EQDA028C

Tightening torque : 110-140kg·cm

CAUTION

Do not use air tools.

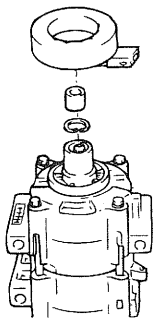

EQHA130A

CLUTCH FIELD COIL

DISASSEMBLY EQNB1320

1. Remove the clutch hub and pulley.
2. Install a shaft protection tool at the compressor opening.
3. Install the pulley at the compressor.
   Place the puller screw end at the shaft protectors center concave and the puller projection around the rear side field coil.
4. Turn the puller screw using a wrench and remove the coil.

CAUTION

Do not use air tools.

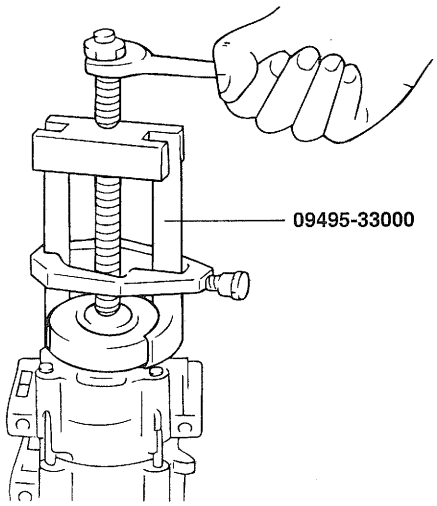

EQHA130B

THERMAL FUSE

1. The thermal fuse is located on the compressor clutch coil.
2. Outline
   The thermal fuse will detect clutch slip heat (184°C off) generated by faulty compressor operation, then interrupt the coil's power supply to stop the clutch operation. Therefore, clutch bearing and pulley bearing damage will not continue in order, to protect the belt and engine. Once the thermal fuse operates, vehicle power supply will be interrupted and the compressor will not operate. Then, check the clutch coil resistance (3.0-3.2Ω) to find the thermal fuse condition, and replace the clutch coil if required.

CHECKING CLUTCH AIR GAP

1. Check clutch air gap between the clutch hub and the pulley contact surface using a filler gauge.

Clutch air gap : 0.05-0.08mm

2. Check gaps around the pulley at 3 points.
3. If the clutch air gap is outside the normal range, correct the air gap into the normal range using a shim of the proper size.

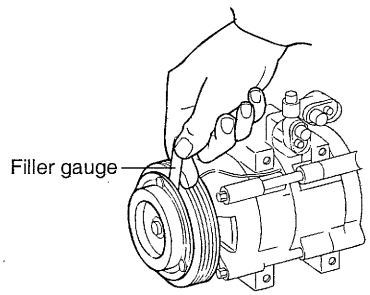

KFWD052A

MAGNETIC CLUTCH OPERATION CHECK

Connect the compressor side terminal to the battery (+) terminal and the ground battery (-) terminal to the compressor body. Check the magnetic clutch operating noise to determine the condition.

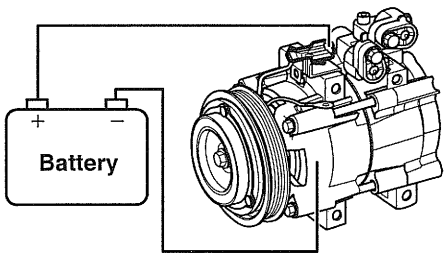

KFWD053A

CONDENSER

COMPONENTS EQNB1350

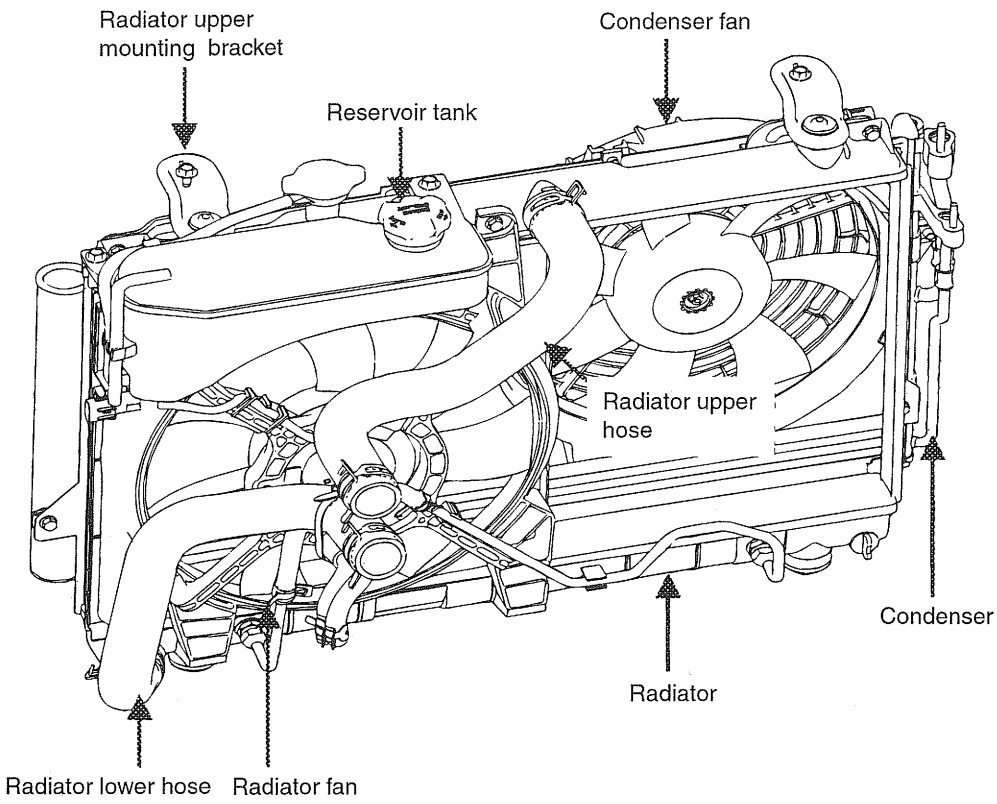

EQNB135A

REMOVAL EQNB1450

1. Discharge refrigerant from the refrigeration system.
2. Discharge engine coolant from the radiator.
3. Remove the bolts which hold the radiator upper mounting brackets and the radiator hoses.
4. Remove the radiator.
5. Separate the discharge pipe and the liquid tube.

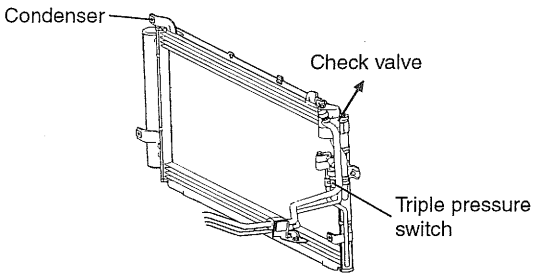

EQNB237A

6. Remove the condenser assembly.

CHECKING EQKA1400

CONDENSER

1. Check condenser pin for clogging and damage. If clogged, clean it with water, and blow it with compressed air. If bent, gently stretch it using a screwdriver or pliers.
2. Check the condenser connection area for leakage, and repair or replace if required.

CONDENSER FAN

1. Check the connector for connection condition.
2. Check the condenser fan motor using battery voltage.

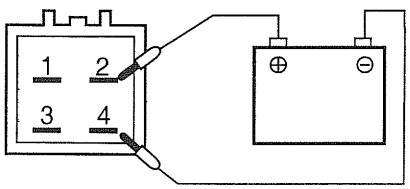

EQKA140A

TRIPLE PRESSURE SWITCH

TRIPLE SWITCH EQKA1500

The triple switch is a combination of a middle switch as well as conventional low pressure and high pressure switches. The low pressure switch will turn off to stop compressor operation if refrigerant pressure is low. The high pressure switch will turn off to stop compressor operation if refrigerant pressure is too high. The middle switch will it turn on at a medium level pressure to determine the A/C system is overheating. It will cool the A/C system by operating the radiator fan and the condenser fan at high speed.

OPERATING CHARACTERISTIC

kg·cm²

Pressure	ON	OFF
High	32.0 ± 2.0	26.0 ± 2.0
Low	2.3 ± 0.25	2.0 ± 0.2
Middle	18.0 ± 0.8	14 ± 1.2

EQKA150B

LOW & HIGH

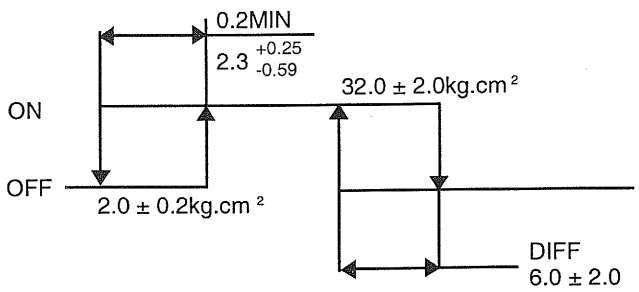

EQHA150A

MIDDLE

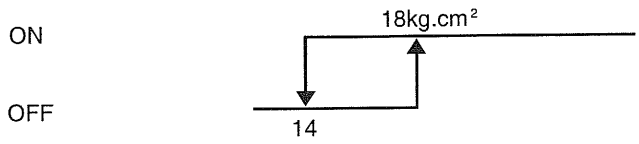

EQKA150C

CHECK VALVE

CHECK VALVE EQNB2370

When parking the vehicle for a long time, temperature difference between night and day will affect coolant to shift from evaporator and condenser to compressor. At this time when air conditioner is on, coolant in the compressor will be able to be compressed with noise.
So, this is installed on the flange of the discharge line connected with the condenser to reduce the operating noise of the compressor.

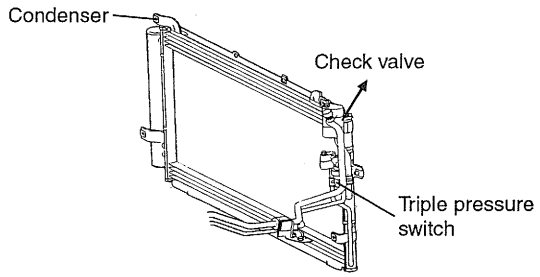

EQNB237A

HEATER

HEATER UNIT

COMPONENTS EQNB1600

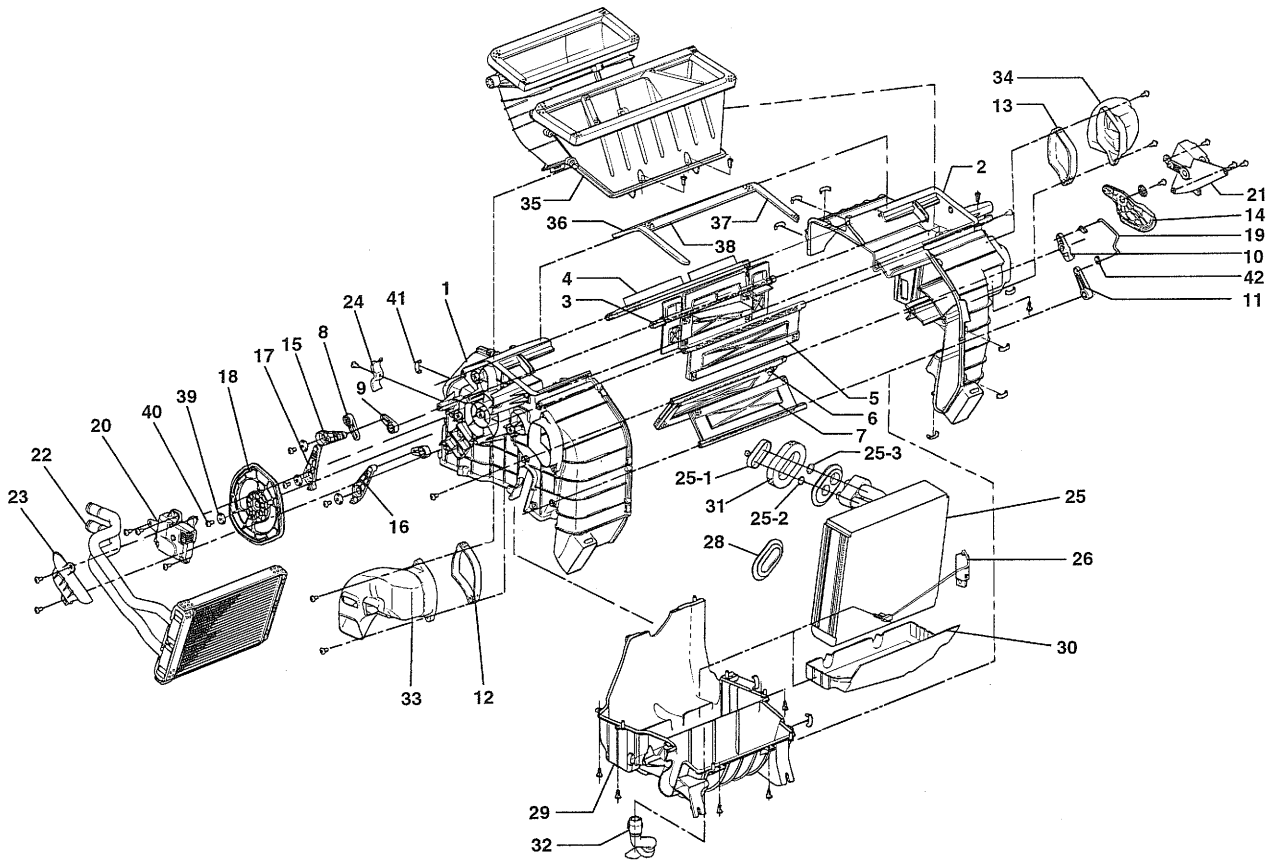

1. Case - heater & evaporator left
2. Case - heater & evaporator right
3. Door assembly - vent
4. Door assembly - def
5. Door assembly - floor
6. Door assembly - temp
7. Door assembly (A) - temp
8. Arm - def door
9. Arm - vent door
10. Arm - temp door
11. Arm (A) - temp door
12. Seal - shower duct left
13. Seal - shower duct right
14. Lever - temp door
15. Lever - vent door
16. Lever - floor door
17. Lever - def door
18. Cam - mode
19. Rod - link (temp)
20. Actuator motor assembly - mode
21. Actuator motor assembly - temp
22. Heater core & seal assembly
23. Cover-heater pipe
24. Clamp - heater water tube
25. Core complete assembly - evaporator
25-1. Cap(D) - joint flange
25-2. O - ring
25-3. O - ring
26. Thermister assembly A/C evaporator
27. Bracket - A/C evaporator core tube fix
28. Grommet (A) A/C evaporator tube
29. Case - heater & evaporator lower
30. Insulation heater lower
31. Seal - evaporator grommet
32. Drain hose assembly - A/C evaporator
33. Left shower floor duct
34. Right shower floor duct
35. Plenum duct assembly
36. Seal - heater to plenum duct
37. Seal(A) - heater to plenum duct
38.Seal(B) - heater to plenum duct
39. Spring washer
40. Tap screw ratchet
41. Clip - case to case
42. Holder - link rod

EQNB160A

REMOVAL EQNB1610

1. Disconnect the negative (-) battery.
2. Drain the cooling water of the radiator.
3. Remove the heater hose and the drain hose.
4. Drain the refrigerant.
5. Disconnect the air conditioning suction hose and the liquid tube.

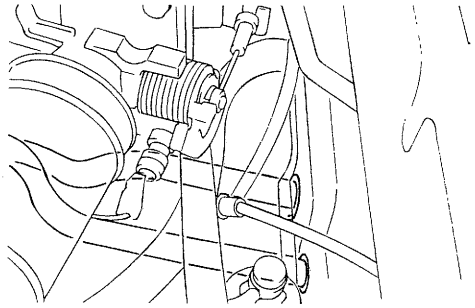

EQDA046A

6. Remove the front pillar trim.

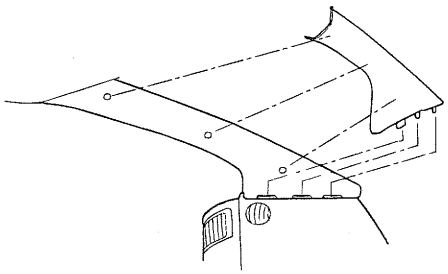

KSNB001E

7. Remove the rear console.

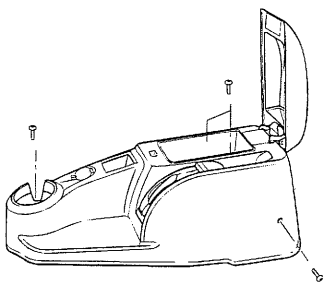

KSNB008A

8. Remove the steering wheel and the multifunction switch.

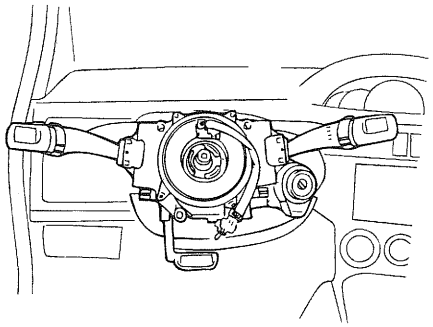

KPNB160F

9. Remove the lower crash pad.

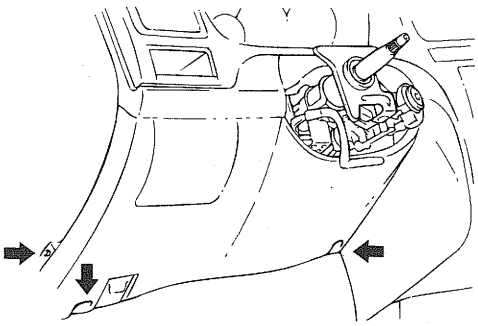

KPNB160G

10. Remove the cowl side trim.

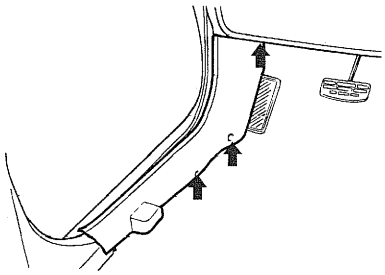

KSNB008B

11. Remove the side cover of the crash pad.

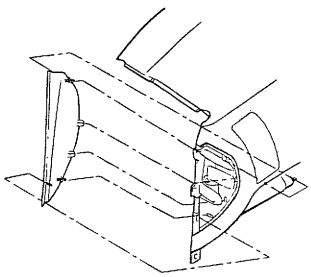

KSNB008C

12. Remove the crash pad lower panel. (screw : 2EA, bolt : 1EA)

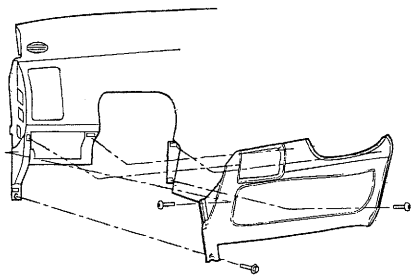

KSNB008D

13. After removing tail lamp assembly, disconnect the connector.

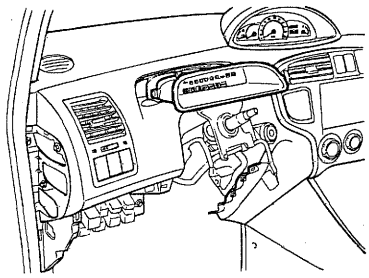

KSNB008E

14. Remove the cluster facia panel.

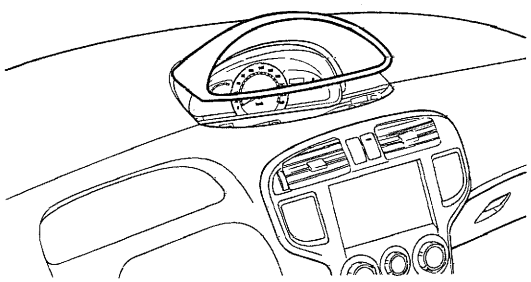

KSNB008R

15. Remove the cluster assembly.

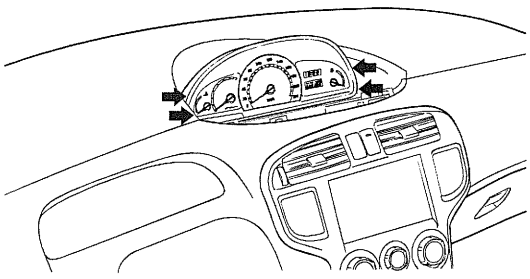

KSNB008F

16. Remove the console upper cover.

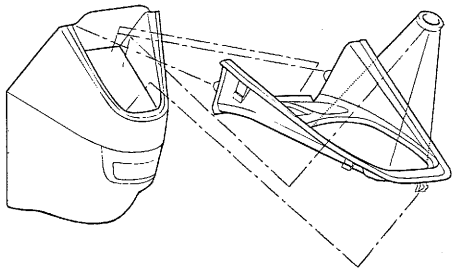

KSNB008G

17. Remove the console assembly. (screw : 8EA)

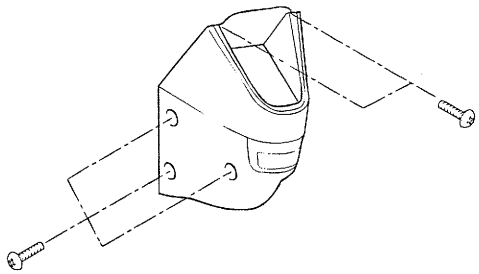

KSNB008H

18. Remove the switch connector and the center facia panel.

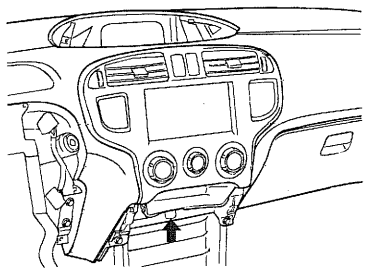

KSNB008J

19. Remove the audio component assembly.

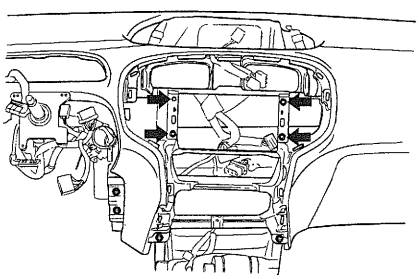

KSNB008I

20. Remove the glove box hinge pin and the glove box.

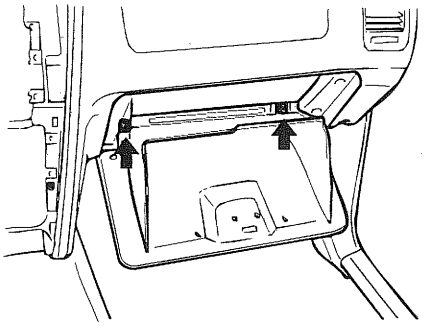

KSMB008Q

21. Remove the main crash pad mounting bolts (5EA) of the driver side.

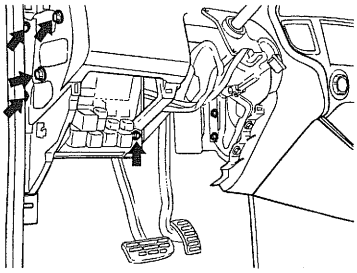

KSNB008K

22. Remove the center main crash pad mounting bolts (4EA).

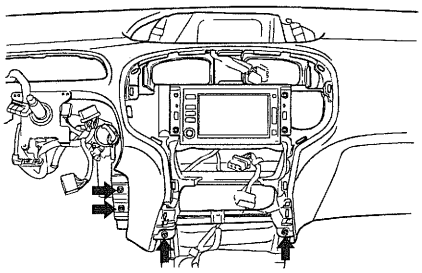

KSNB008L

23. Remove the main crash pad mounting bolts (7EA) of the passenger side.

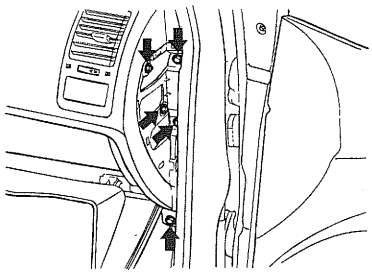

KSNB008M

24. Remove the main crash pad.

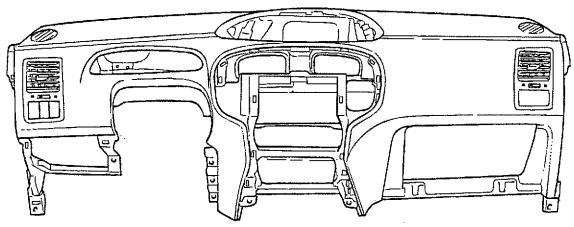

KSNB008N

25. Remove the heater assembly.

INSTALLATION EQKA1620

Installation is the reverse of removal.

BLOWER CONTROLS

THERMISTOR EQNB1950

The thermistor will detect the core temperature and interrupt the compressor relay power to prevent evaporator freezing by excessive cooling.
The thermistor will use the thermal negative characteristic.

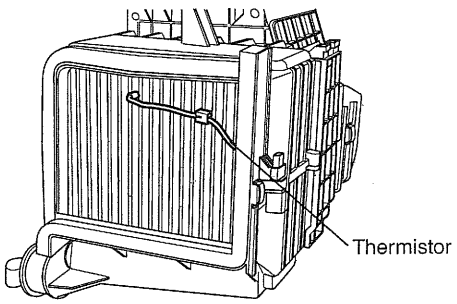

KFWD049A

1. Remove the glove box.
2. Start the engine.
3. Turn on the air conditioner.
4. Using the multitester, check the output voltage at terminals 2 and 3 of the thermistor.

Thermistor	Operating temperature	Output voltage
ON	0.5 ± 0.5°C	12V
OFF	2.5 ± 0.5°C	0V

WATER TEMPERATURE SENSOR EQNB2000

1. The water temperature sensor, located at the heater core, detects coolant temperature flowing through heater core. It is a negative type thermistor; resistance will increase with lower temperatures, and decrease with higher temperatures.

2. The sensor will compare temperature settings with the incar air temperature or the ambient air temperature for motive heating control.

CHECK

Water temperature	Resistance
25°C	10KΩ
60°C	2.50KΩ

A/C AIR FILTER

AIR FILTER REPLACEMENT EQNB1840

1. Remove the fixing pin of the glove box.
2. Remove the filter cover.

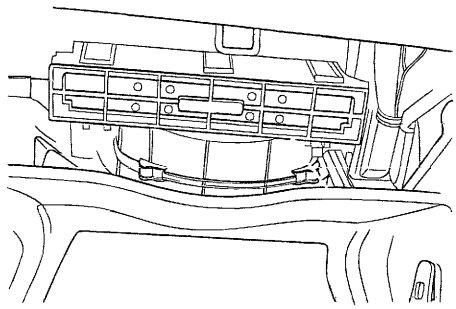

KQNA020A

3. Replace the filter.

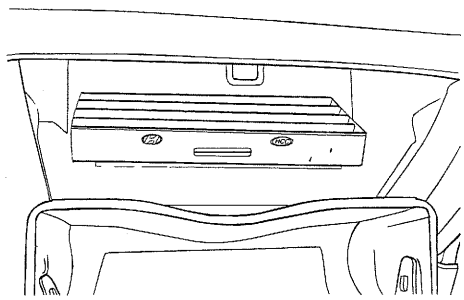

KQNA020B

4. Installation is the reverse of removal.

CAUTION

In case of driving in an air-polluted area or rugged terrain, check and replace the air filter as frequently as possible.

BLOWER UNIT

COMPONENTS EQNB1800

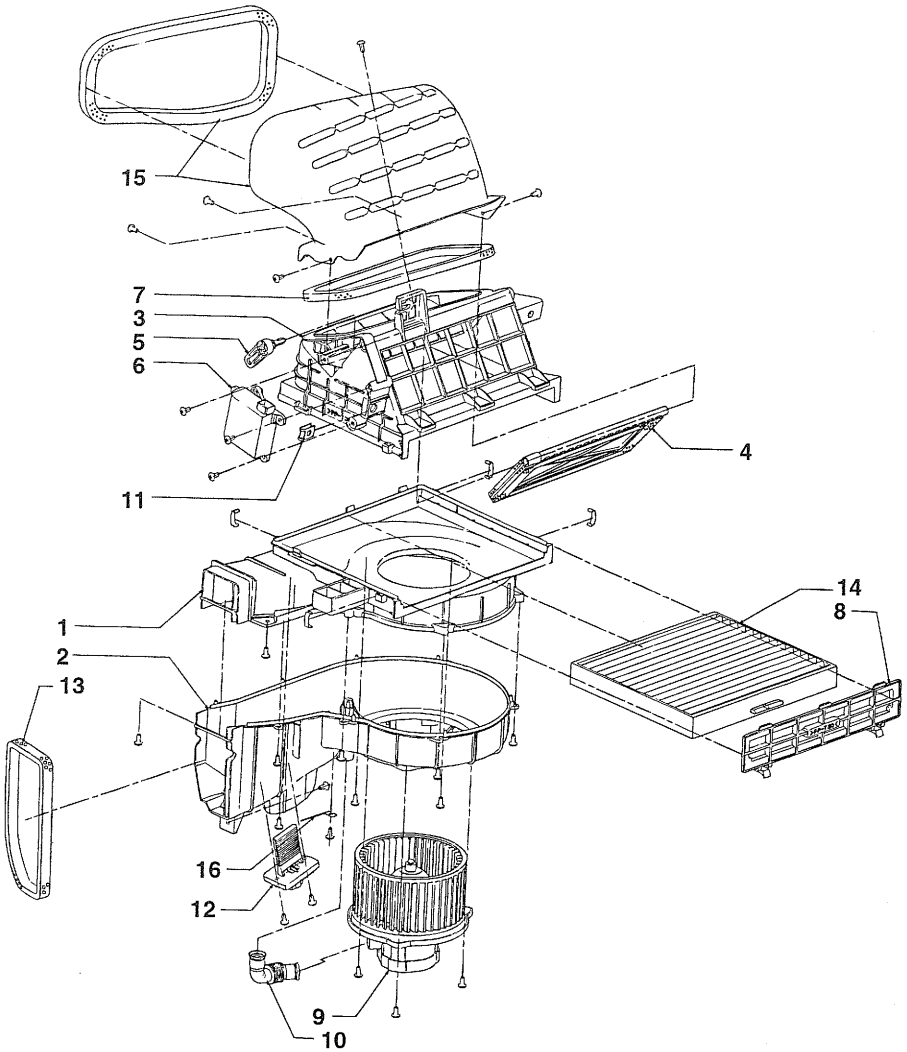

1. Case - Blower upper
2. Case - Blower lower
3. Case - Air inlet duct
4. Door assembly - Air inlet
5. Arm - Air inlet door
6. Actuator motor assembly - Inlet
7. Seal - Blower inlet to C/Panel
8. Cover assembly - Filter
9. Motor & Wheel assembly
10. Cooling tube Blower motor
11. U - Clip
12. Resistor assembly
13. Seal - Blower to heater evaporator
14. Filter - Air cleaner assembly
15. Cowl duct assembly
16. Holer - Lead wire

EQNB180A

REMOVAL EQNB1810

1. Remove the main crash pad.
2. Disconnect the register and the blower motor connector.
3. Loosen the blower mounting nuts.
4. Remove the blower assembly.

INSTALLATION EQKA1820

Installation is the reverse of removal.

DISASSEMBLY EQKA1830

1. Disconnect the motor cooling tube.
2. Loosen the motor mounting screw.
3. Loosen the screw of the duct and the blower case.

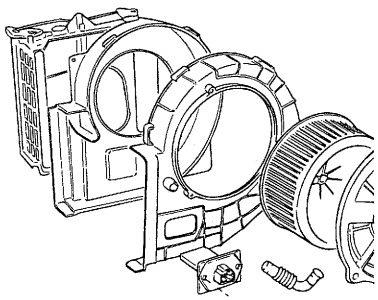

EQDA051B

4. Remove the duct.
5. Disconnect the case.

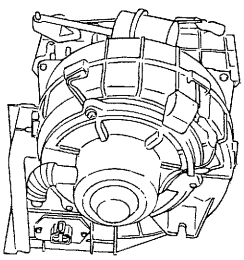

EQDA051C

6. Remove the blower register.

REASSEMBLY EQNA1840

Reassembly is the reverse of removal.

BLOWER MOTOR

BLOWER MOTOR EQNB2250

When blower is turned on, blower relay becomes turned on and voltage is supplied to blower motor. Current determined by register runs through the selected blower register and blower motor.

BLOWER MOTOR CHECK

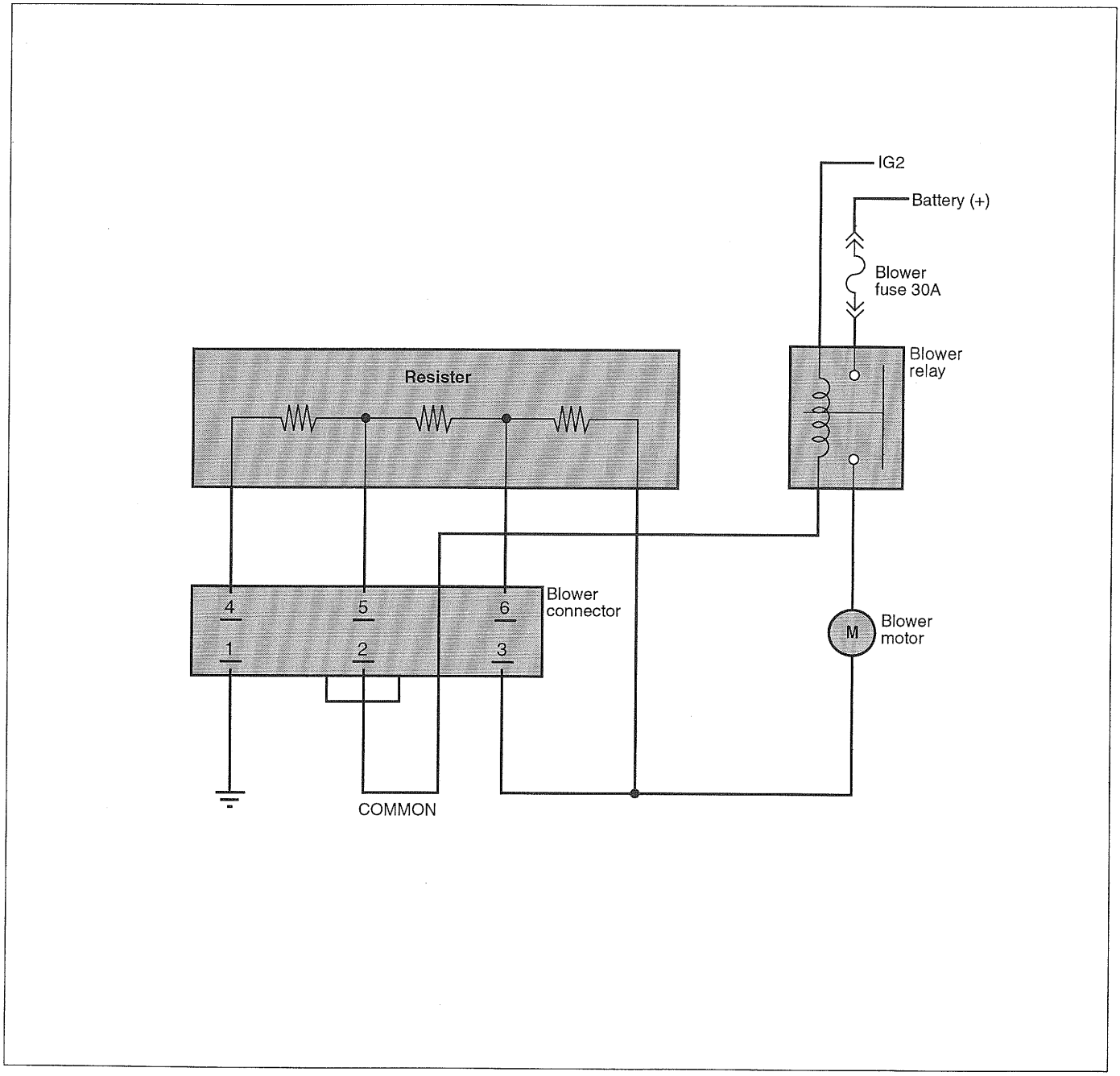

EQMB023A

VENTS/AIR DISTRIBUTION

Mode / Position	Recirculation		Fresh		
	COOL	1/2 COOL	WARM		
	VENT	BI/LEVEL	FLOOR	MIX	DEF
VENT	100 - 5	67.5 ± 5			
FLOOR	-	32.5 ± 5	50 ± 5	35 ± 5	-
DEF	-	-	25 ± 5	45 ± 5	80 ± 5
S/VENT			25 ± 5	20 ± 5	20 ± 5

Unit : %

BLOWER RESISTOR

BLOWER RESISTOR EQNB2350

Measure the resistance of the terminals.

If not within the standard value, replace the register.

Pin / Speed	1 ML	2 MH	3 LO	4 HI	Resistance (Ω)
Continuity	○		○		1.3
	○	○			0.65
		○		○	0.35±5%

EQNB235A

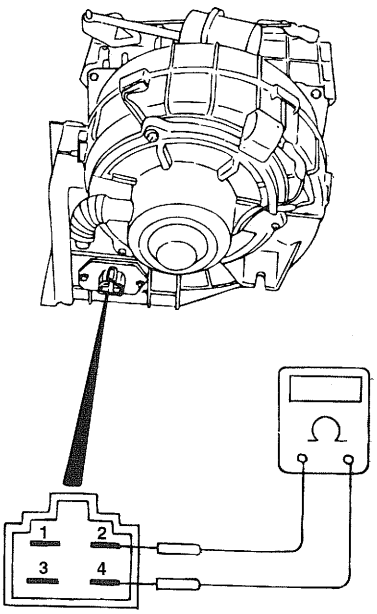

KQNB235B

BLOWER AND A/C CONTROLS (MANUAL)

SCHEMATIC DIAGRAM (MANUAL)

(1) EQNB0900

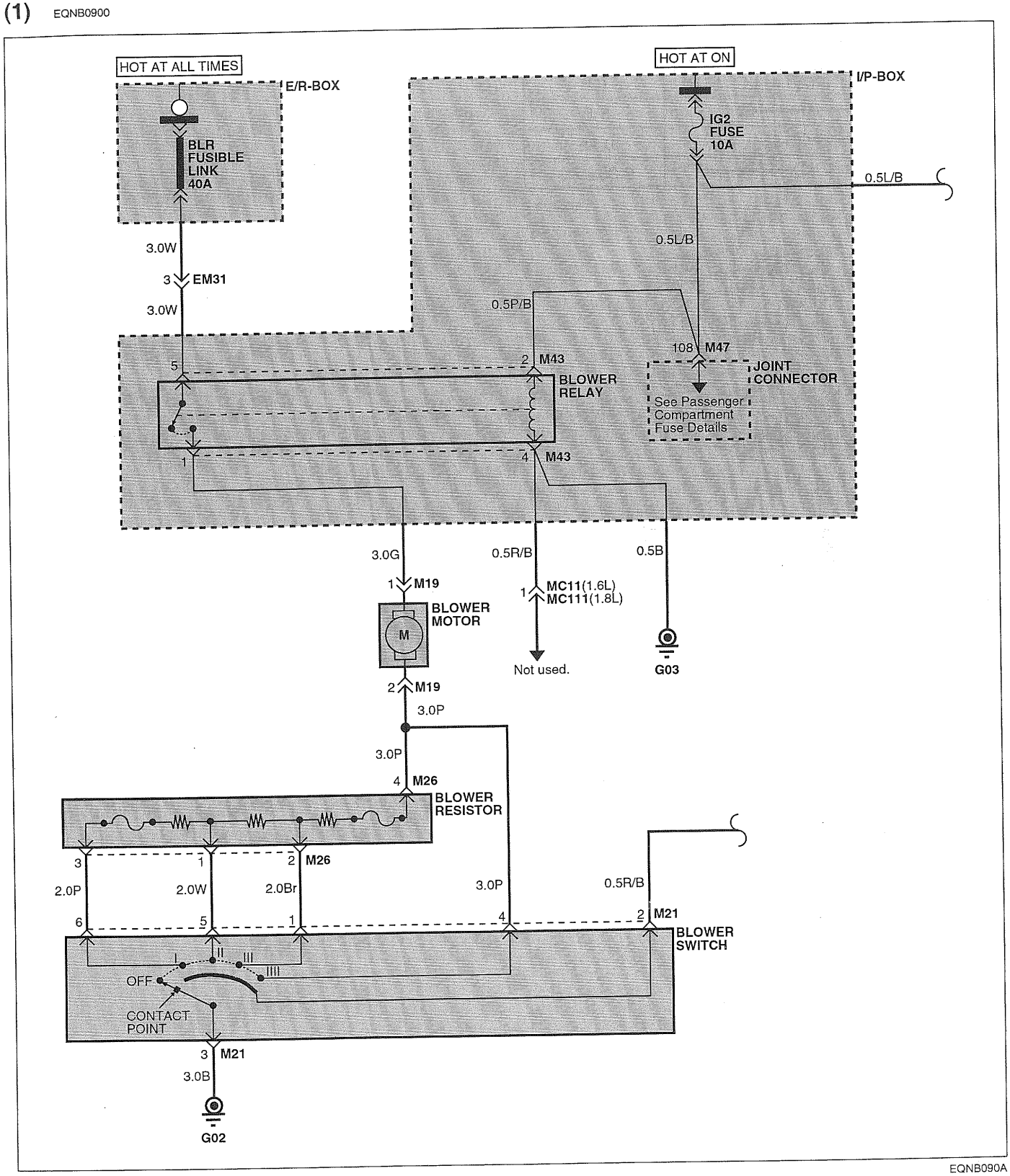

EQNB090A

SCHEMATIC DIAGRAM (MANUAL) (2)

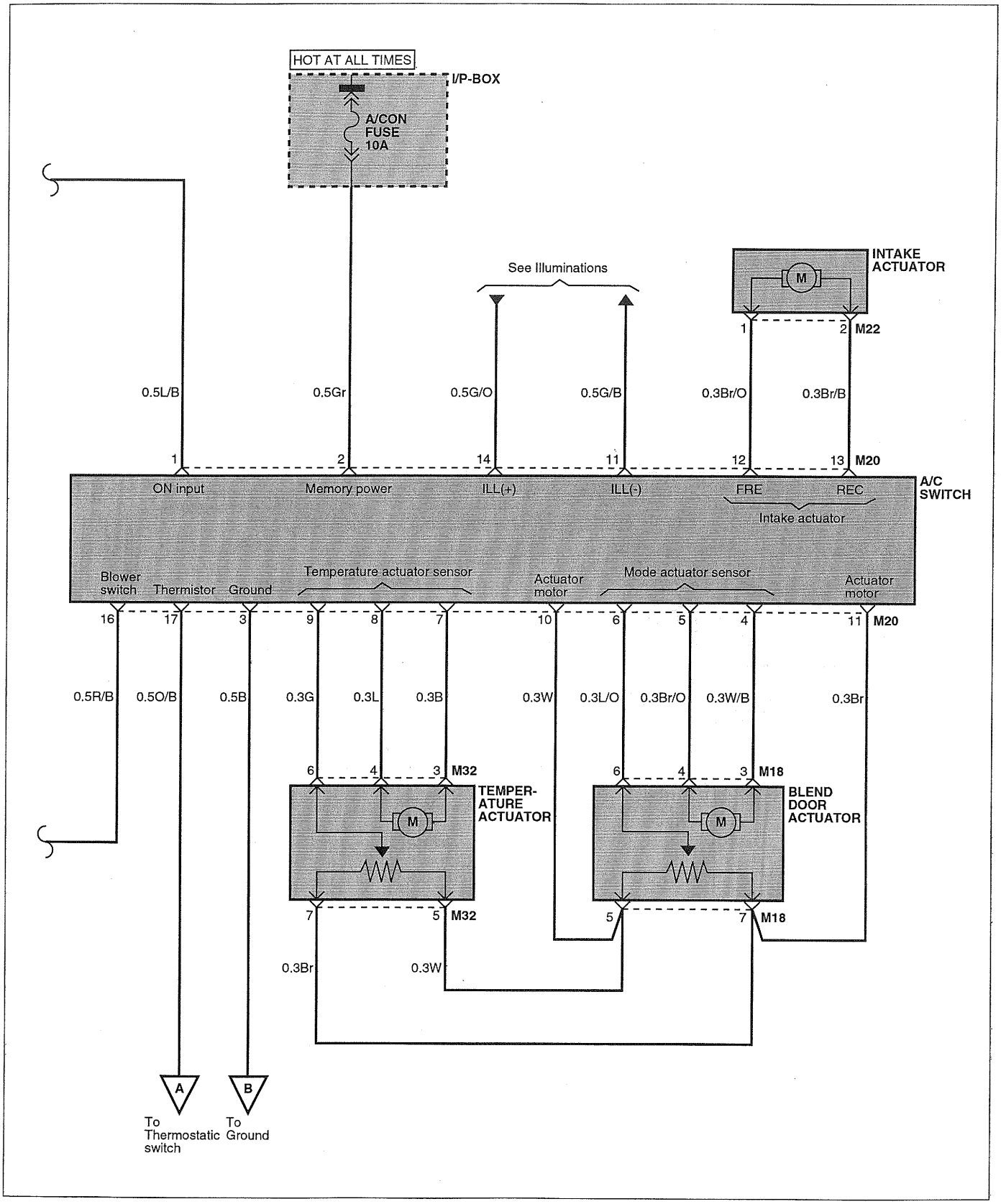

EQNB090B

SCHEMATIC DIAGRAM (MANUAL) (3)

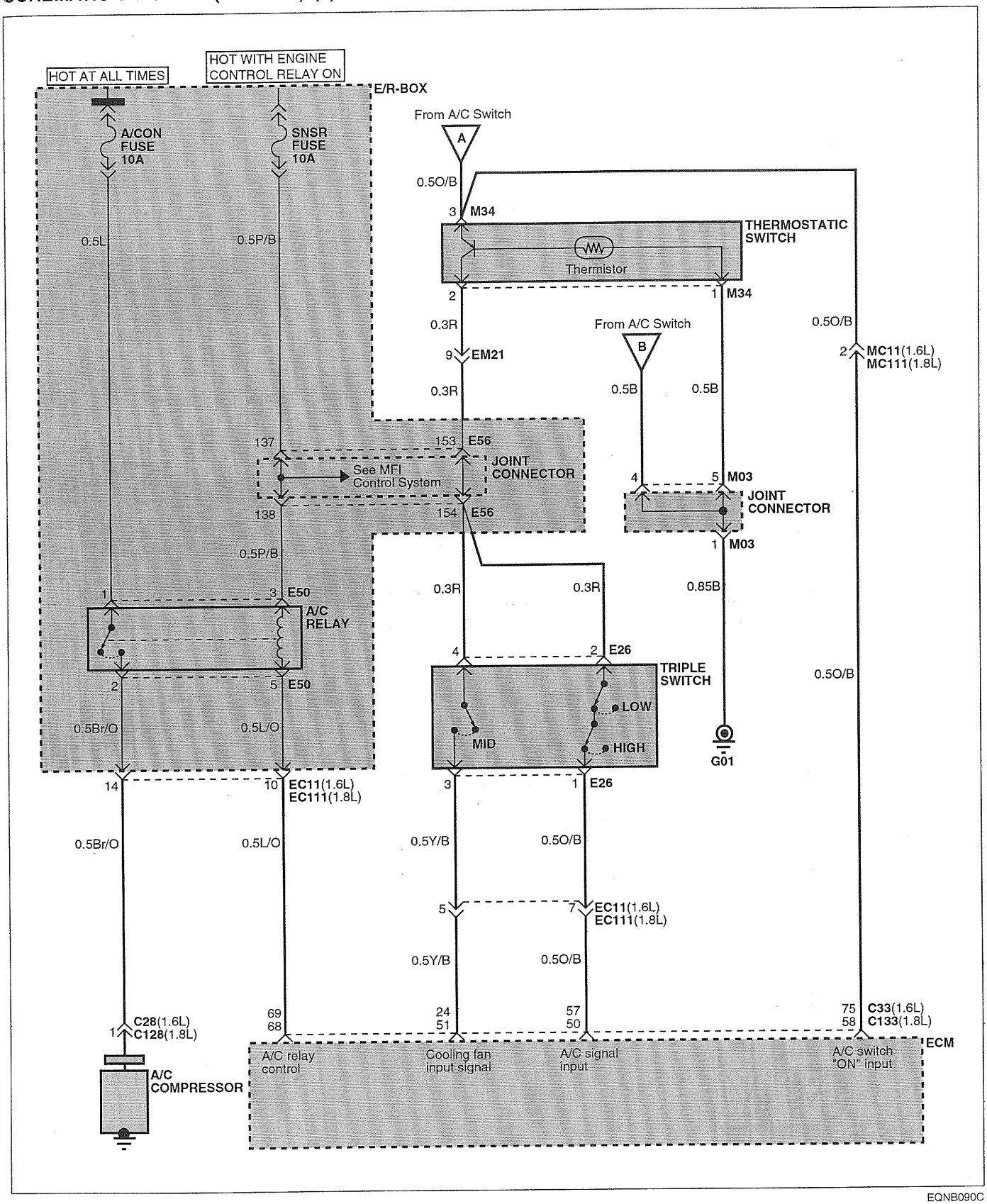

EQNB090C

CONTROL PANEL

EQNB0860

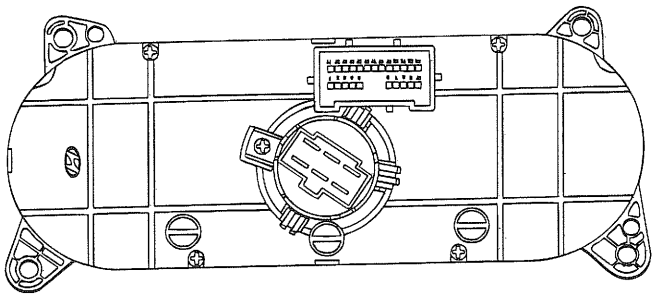

KQNB002A

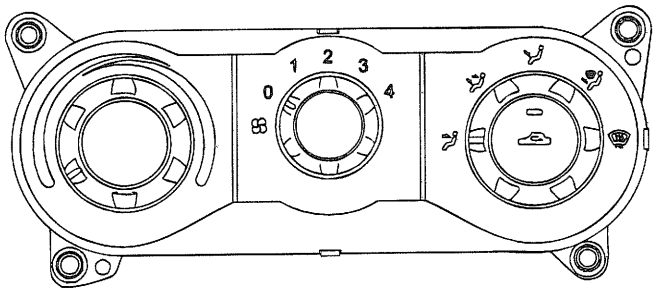

KQNB002B

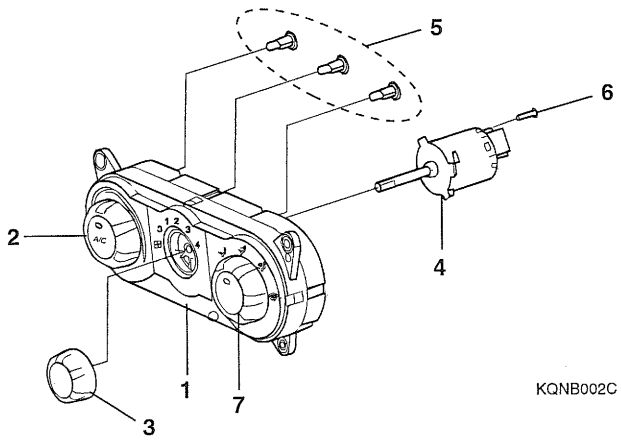

KQNB002C

1. Panel and housing assembly
2. Temperature control knob
3. Blower knob
4. Blower switch
5. Socket and bulb
6. Screw
7. Mode control knob

EQNB086A

CONTROL UNIT CONNECTOR

<Main connector>

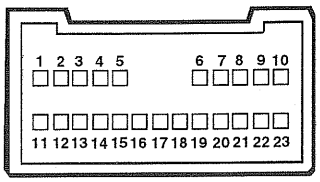

KQNB003A

<Blower switch>

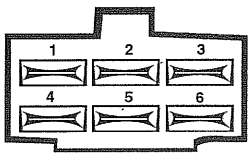

KQNB003B

EQNB086B

Connector	Pin No.	Name	Connector	Pin No.	Name
Main Connector	1	IGN	Blower S/W	1	MIDDLE HIGH
	2	B+		2	COMMON
	3	GROUND		3	GROUND
	4	Mode actuator (VENT)		4	HIGH
	5	Mode actuator (DEFROST)		5	MIDDLE LOW
	6	Mode F/B		6	LOW
	7	Temperature actuator (WARM)			
	8	Temperature actuator (COOL)			
	9	Temperature F/B			
	10	VCC			
	11	SENSOR/GROUND			
	12	FRE.			
	13	REC.			
	14	ILL+			
	15	ILL-			
	16	COMMON			
	17	A/C OUTPUT			
	18	-			
	19	-			
	20	-			
	21	-			
	22	-			
	23	-			