HYUNDAI

SANTA FE

Shop Manual

FOREWORD

This shop manual is intended for use by service technicians of authorized Hyundai dealers to help them provide efficient and correct service and maintenance on Hyundai vehicle.

To ensure customer satisfaction with Hyundai products, proper service and maintenance by Hyundai technicians is essential. Consequently, it is important that service personnel fully understand the contents of this manual, which should be kept in a handy place for quick and easy reference.

All the contents of this manual, including photographs, drawings, and specifications, are the latest available at the time of printing. As modifications affecting service occur, dealers will be provided technical service bulletins or supplementary volumes. This manual should be kept carefully up-to date upon receipt of the new information.

Hyundai Motor Company reserves the right to make changes in design or to make additions to or improvements in its products without imposing any obligations upon itself to install them on its products previously manufactured.

This book may not be reproduced or copied, as a whole or as a part, without the written permission of the publisher.

If you don't use HYUNDAI Genuine Parts (Engine oil, Transaxle oil, etc.) or use bad fuel, it can cause damage to the vehicle.

JUN. 2000, Printed in Korea

NOTE : Regarding the groups in small characters, refer to Electrical Troubleshooting Manual. (Pub. No : PPYE B044A)

CONTENTS

TITLE	GROUP
General Information	GI
Engine Mechanical System [2.4 I4]	EM
Engine Mechanical System [V6 2.7]	EMA
Engine Electrical System	EE
Emissions Control System	EC
Fuel System	FL
Clutch System	CH
Transaxle/Transmission	TR
Driveshaft and Axle	DS
Suspension System	SS
Steering System	ST
Restraints System	RT
Brake System	BR
Body (Interior & Exterior)	BD
Body Electrical System	BE
Heating, Ventilation & Air Conditioning	HA
Electrical Troubleshooting Manual	ETM

General Information

GENERAL INFORMATION ..... GI -2

RECOMMENDED LUBRICANTS AND CAPACITIES ..... GI -13

MAINTENANCE INFORMATION ..... GI -14

GENERAL INFORMATION

HOW TO USE THIS MANUAL EAJA0050

This manual is divided into 21 sections. The first page of each section is marked with a black tab at the edge of the page. You can quickly find the first page of each section without looking through the whole table of contents.

Each section includes the essential removal, installation, adjustment and maintenance procedures for servicing all body styles. This information is correct at the time of publication.

An **INDEX** is provided on the first page of each section to guide you to the appropriate item.

TROUBLESHOOTING tables are included for each system to help you diagnose the problem and find the cause. The repair for each possible cause is referred to in the remedy column to lead you to the solution quickly.

DEFINITION OF TERMS

STANDARD VALUE (SERVICE STANDARD)

Indicates the value used when a part or assembled item should be inspected or the value to which a part or assembled item should be adjusted after reinstallation. It is given as a tolerance.

SERVICE LIMIT

Indicates the maximum or minimum value that a part or assembled item must meet when inspected. It is a value established beyond the standard value.

NOTE, WARNING , CAUTION, ABBREVIATION

NOTE

Information needed in reference to a repair service.

CAUTION

Information about an activity that could cause damage to the vehicle.

WARNING

Information about an activity that could cause injury or damage to the driver, occupants or repairman.

ABBREVIATIONS
DOHC : Double Over Head Camshaft
V6 : V-type 6 Cylinder
I4 : Inline 4 Cylinder

VEHICLE IDENTIFICATION NUMBER LOCATION

The vehicle identification number (VIN) is located on the bulkhead and on the driver's side of the dash cover.

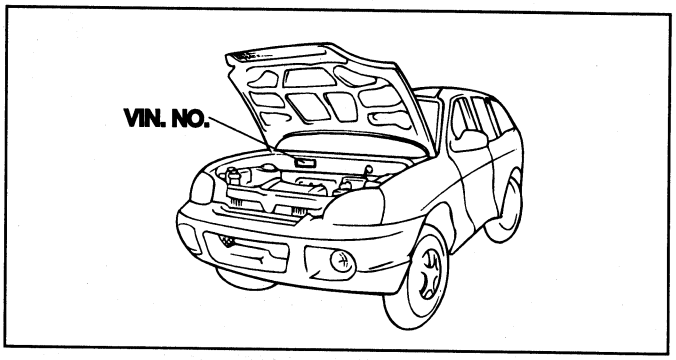

EAJA100A

VEHICLE IDENTIFICATION NUMBER

The Vehicle identification number consists of 17 digits.

K	M	H	S	C	8	3	B	P	Y	U	0	0	0	0	0	1
1			2	3	4	5	6	7	8	9	10					

EAJB001W

1. W.I.C. (World manufacturer's Identification Code)
   KM8 - Hyundai Motor Company, Korea
2. Vehicle Line
   S : SANTAFE
3. Model & Series
   A : Standard(L)
   B : Deluxe (GL)
   C : Super deluxe (GLS)
   D : Grand salon (GDS)
   E : Super grand salon (HGDS)
4. Body Type
   8 : Wagon
5. Restraint system or brake system
   1 - A / Belt (Driver side + Passenger side)
   2 - P / Belt (Driver side + Passenger side)
   3 - Driver side : A / Belt + A / Bag, Passenger side : A / Belt or P / Belt
   4 - A / Belt + A / Bag (Driver side + Passenger side)

NOTE

A / Belt : Active blet

P / Belt : Passive blet

A / Bag : Air bag

6. Engine type
   A : G 2.0 I4
   B : G 2.4 I4
   D : G 2.7 V6

7. Driver side
   P : LHD (Left hand driver)
   R : RHD (Reft hand driver)
8. Production year
   Y - 2000 Model Year, 2 - 2002 Model yeal
   1 - 2001 Model Year, 3 - 2003 Model yeal
9. Production plant
   U - Ulsan (Korea)
10. Vehicle production sequence number
    000001 - 999999

ENGINE IDENTIFICATION NUMBER LOCATION

The engine identification number is stamped on the right front side of the top edge of the cylinder block.

V6

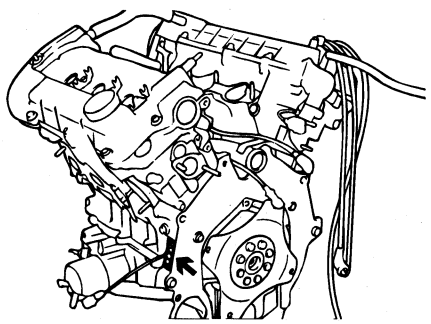

EAA9004A

I4

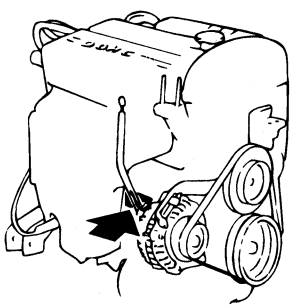

EAHA004B

DESCRIPTION OF ENGINE IDENTIFICATION NUMBER

The engine identification number consists of 11 digits.

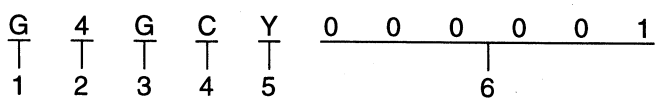

EAHA001D

1. Engine fuel
   G - Gasoline
2. Engine range
   4 - In line 4 cycle 4 cylinder
   6 - V type 4 cycle 6 cylinder
3. Engine development order
   B - V6 delta Engine
   J - SIRIUS II DOHC Engine
4. Engine capacity
   P - 1977cc
   S - 2351cc
   A - 2656cc
5. Production year
   Y - 2000
   1 - 2001
   2 - 2002
   3 - 2003
6. Engine production sequence number
   000001 - 999999

TRANSAXLE IDENTIFICATION NUMBER LOCATION

DESCRIPTION (MANUAL TRANSAXLE)

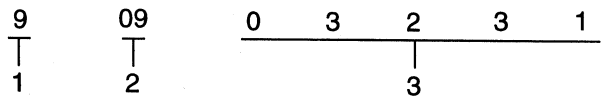

EAJB001X

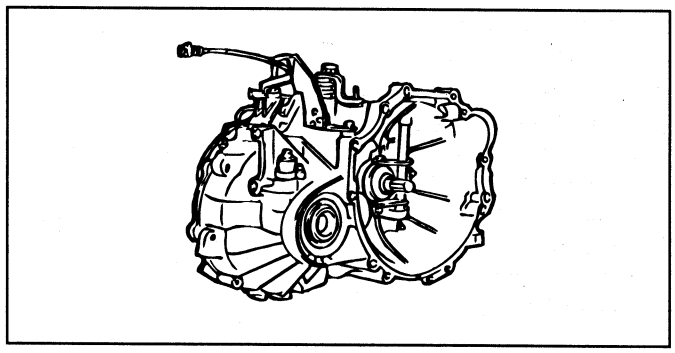

EMHA002A

1. Production year
   9 : 1999
   0 : 2000
   1 : 2001
2. Production month
   09–9 (September)
   12–12 (December)
3. Transmission production sequence number
   000001 ~ 999999

DESCRIPTION (AUTOMATIC TRANSAXLE)

S	Y	N	A	D	0	0	0	0	0	0	1
1	2	3	4		5				6		

EAHA001G

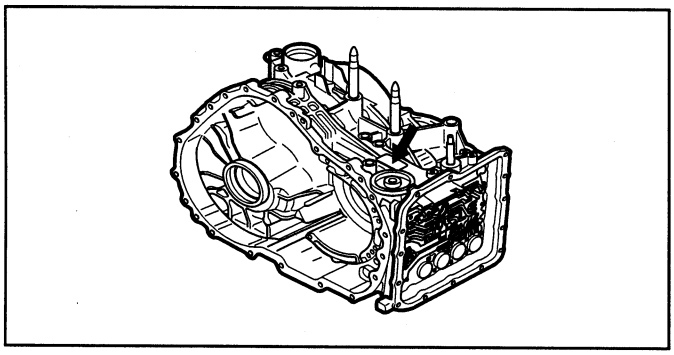

KFW9009T

1. T/M Model
   S : F4A51–2 (2.4l4, 2.7V6)
2. Production year
   Y : 2000, 1 : 2001
   2 : 2002, 3 : 2003
3. Final gear ratio
   N : 4.018 (F4A51)
4. Classification of detail
   AD : Damper spring type
5. Spare
6. Transmission production sequence number.
   000001 ~ 999999

PROTECTION OF THE VEHICLE

Always be sure to cover fenders, seats, and floor areas before starting work.

CAUTION

The support rod must be inserted into the hole near the edge of the hood whenever you inspect the engine compartment to prevent the hood from falling and causing possibly injury.

Make sure that the support rod has been released prior to closing the hood. Always check to be sure the hood is firmly latched before driving the vehicle.

A WORD ABOUT SAFETY

The following precautions must be followed when jacking up the vehicle.

1. Block the wheels.
2. Place a jack under the specified jacking point.
3. Support the vehicle with safety stands (jack stands) Refer to page GI-10.
4. Start the engine when engine compartment is clean.

PREPARATION OF TOOLS AND MEASURING EQUIPMENT

Be sure that all necessary tools and measuring equipments are available before starting work.

SPECIAL TOOLS

Use special tools when required.

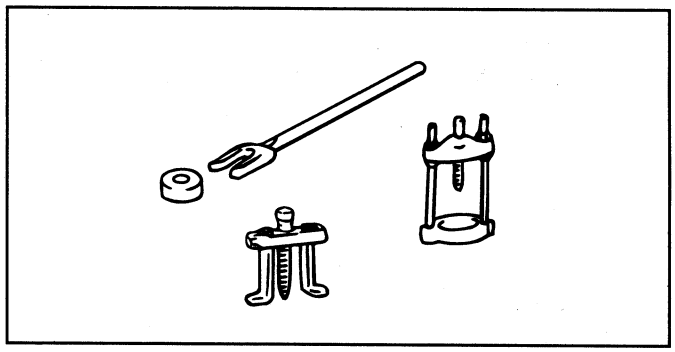

EAA9006A

REMOVAL OF PARTS

First find the cause of the trouble and then make sure whether removal or disassembly is required before starting the job.

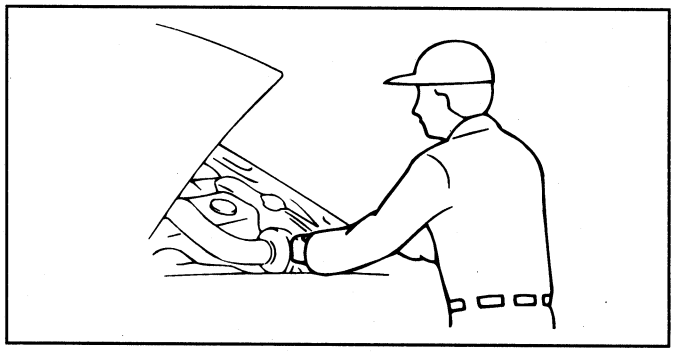

EADA010I

DISASSEMBLY

If the disassembly procedure is complex and requires many parts to be disassembled, all parts should be disassembled in a way that will not affect their performance or external appearance.

1. **Inspection of parts**

   Each part, when removed, should be carefully inspected for malfunction, deformation, damage, and other problems.

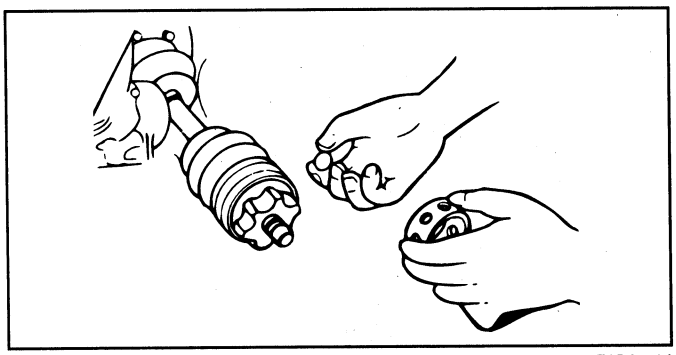

EADA010J

2. **Arrangement of parts**

   All disassembled parts should be carefully arranged for effective reassembly.

   Be sure to separate and correctly identify the parts to be replaced from those that will be used again.

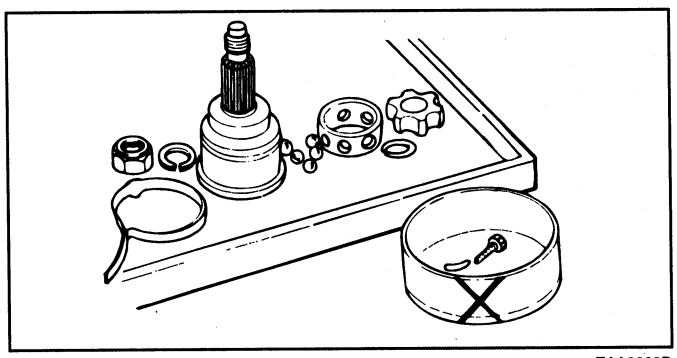

EAA9008B

3. **Cleaning parts for reuse**

   All parts to be used again should be carefully and thoroughly cleaned by the appropriate method.

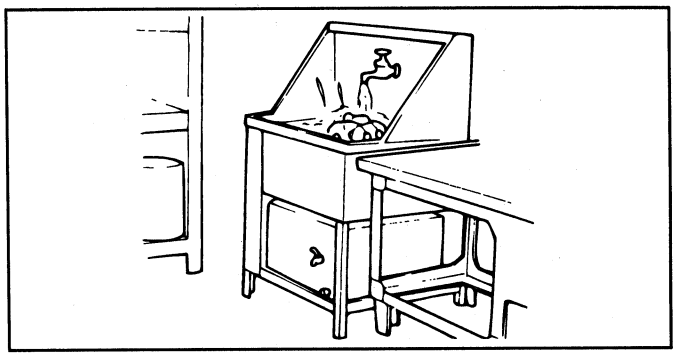

EADA010K

PARTS

When replacing parts, use HYUNDAI genuine parts.

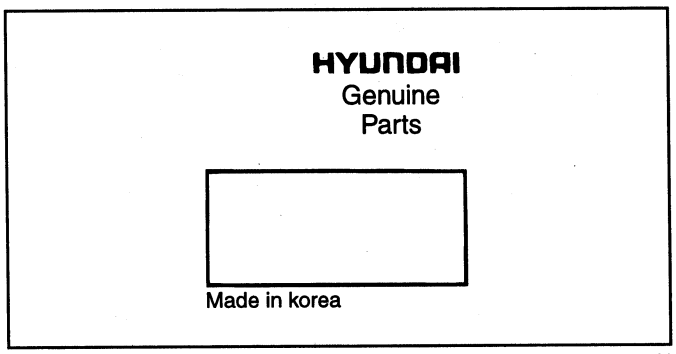

EADA010M

REPLACEMENT

Standard values, such as torques and certain adjustments, must be strictly observed in the reassembly of all parts.

If removed, the following parts should be always replaced with new ones.

1. Oil seals
2. Gaskets
3. O-rings
4. Lock washers
5. Cotter pins (split pins)
6. Plastic nuts

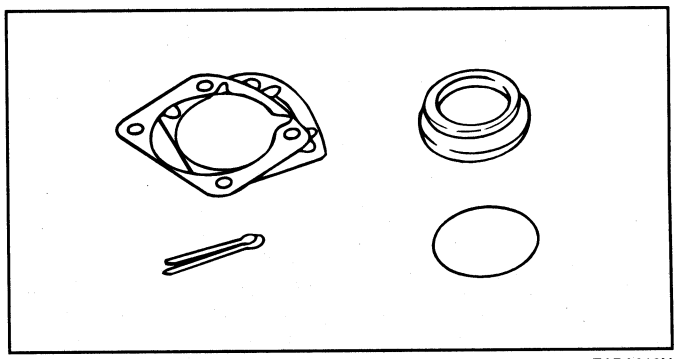

EADA010N

Depending on their location.

1. Sealant should be applied to gaskets.
2. Oil should be applied to the moving components of parts.

3. Specified oil or grease should be applied to the prescribed locations (oil seals, etc.) before assembly.

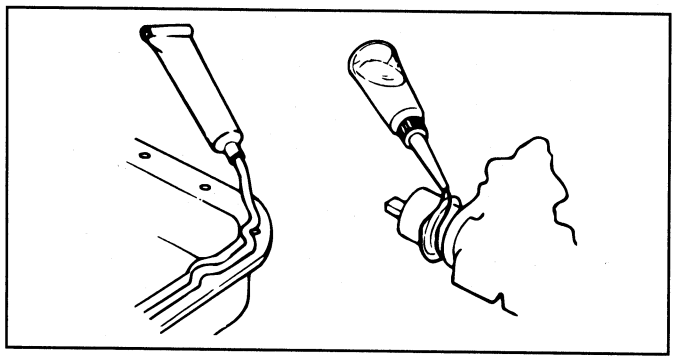

EADA010O

ADJUSTMENT

Use gauges and testers to adjust correctly the parts to standard values correctly.

ELECTRICAL SYSTEM

1. Be sure to disconnect the battery cable from the negative (-) terminal of the battery.
2. Never pull on the wires when disconnecting connectors.
3. Locking connectors will click when the connector is secure.
4. Handle sensors and relays carefully. Be careful not to drop them or hit them against other parts.

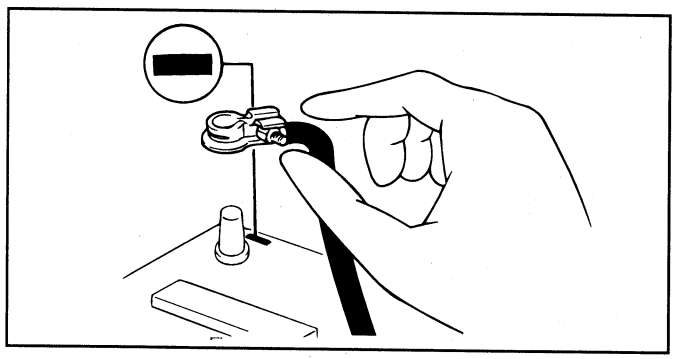

EAA9011A

RUBBER PARTS AND TUBES

Always prevent gasoline or oil from touching rubber parts or tubing.

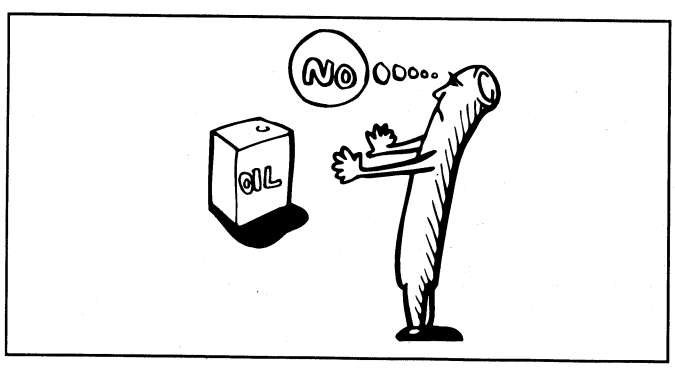

EADA010Q

MEASURING BODY DIMENSIONS

1. Basically, all measurements in this manual are taken with a tracking gauge.
2. When a measuring tape is used, check to be sure there is no elongation, twisting or bending.
3. For measuring dimensions, both projected dimensions and actual-measurement dimensions are used in this manual.

DIMENSIONS PROJECTED

1. These are the dimensions measured when the measurement points are projected from the vehicle's surface, and are the reference dimensions used for body alterations.
2. If the length of the tracking gauge probes is adjustable, measure it by lengthening one of the two probes as long as the height of the two surfaces are different.

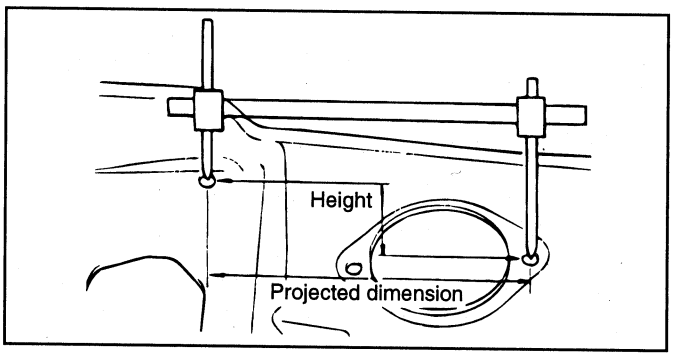

EADA011M

MEASURING ACTUAL DIMENSIONS

1. These dimensions indicate the actual linear distance between measurement points, and are used as the reference dimensions when a tracking gauge is used for measurement.
2. First adjust both probes to the same length (A=A') before measurement.

NOTE

Check the probes and gauge itself to make sure there is no free play.

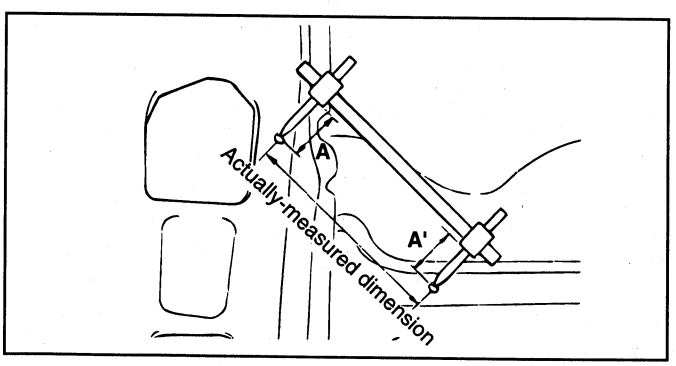

EADA011N

MEASUREMENT POINT

Measurement should be taken at the center of the hole.

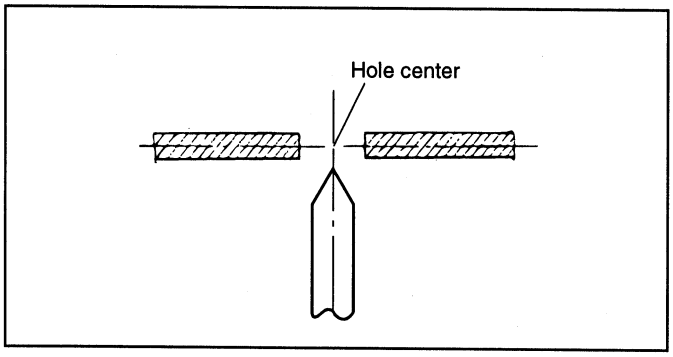

EADA011O

CHECKING CABLES AND WIRES

1. Check the terminal for tightness.
2. Check terminals and wires for corrosion from battery electrolyte, etc.
3. Check terminals and wires for open circuits.
4. Check wire insulation and coating for damage, cracks and degrading.
5. Check the conductive parts of terminals for contact with other metallic parts (vehicle body and other parts).
6. Check grounded parts to verify that there is complete continuity between their attaching bolt(s) and the vehicle's body.
7. Check for incorrect wiring.
8. Check that the wiring is clamped firmly to prevent contact with sharp corners of the vehicle body, etc. or hot parts (exhaust manifold, etc.)
9. Check that the wiring is clamped firmly to provide enough clearance from the fan pulley, fan belt and other rotating or moving parts.
10. Check that the wiring has a little space so that it can vibrate between the fixed and moving parts such as the vehicle body and the engine.

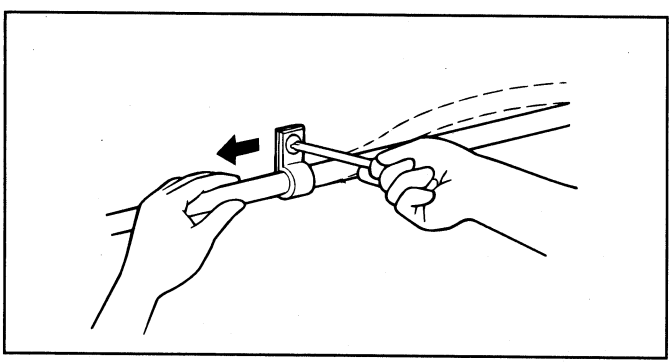

EADA011B

CHECKING FUSES

A blade type fuse has test taps provided to allow checking the fuse itself without removing it from the fuse block. The fuse is good if the test lamp lights up when its one lead is connected to the test taps (one at a time) and the other lead is grounded. (Turn the ignition switch so that the fuse circuit becomes operative.)

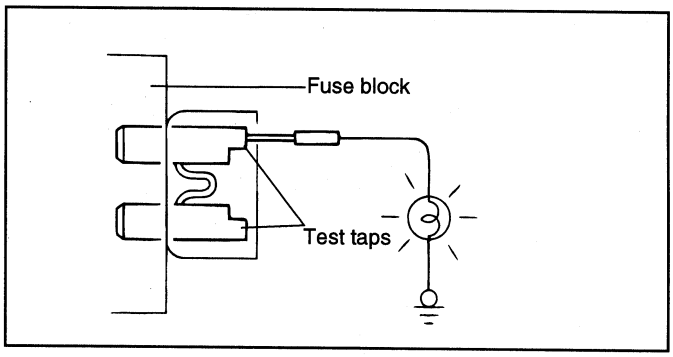

EAA9014B

SERVICING THE ELECTRICAL SYSTEM

1. Prior to servicing the electrical system, be sure to turn off the ignition switch and disconnect the battery ground cable.

NOTE

In the course of MFI or ELC system diagnosis, when the battery cable is removed, any diagnostic trouble code retained by the computer will be cleared. Therefore, if necessary, read the diagnostic codes before removing the battery cable.

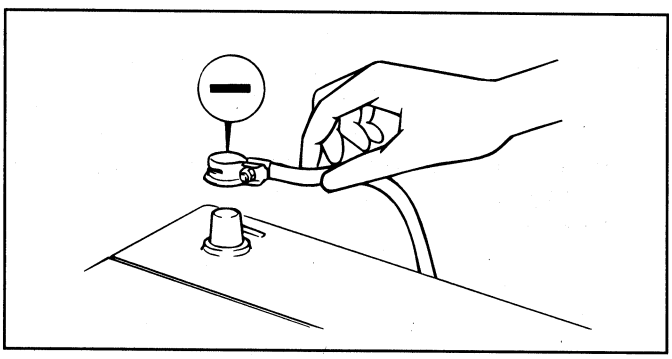

EADA011A

2. Attach the wiring harnesses with clamps so that there is no slack. However, for any harness which passes the engine or other vibrating parts of the vehicle, allow some slack within a range that does not allow the engine vibrations to cause the harness to come into contact with any of the surrounding parts, and then secure the harness by using a clamp.

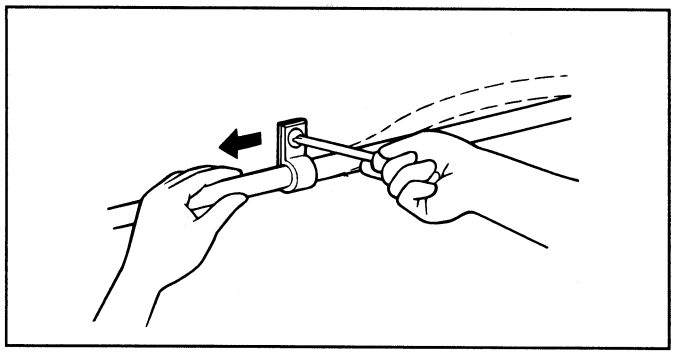

EADA011B

3. If any section of a wiring harness interferes with the edge of a part, or a corner, wrap the section of the harness with tape or something similar in order to protect it from damage.

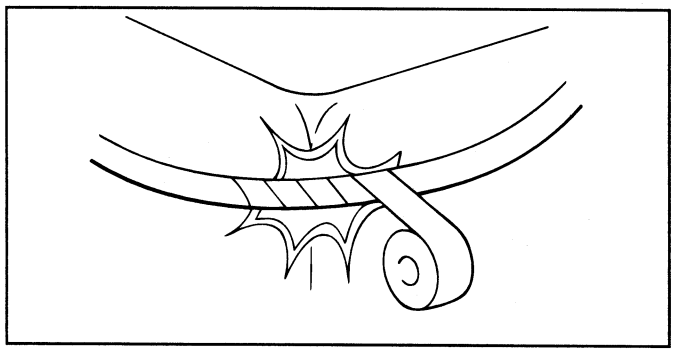

EADA011C

4. When installing any parts, be careful not to pinch or damage any of the wiring harnesses.

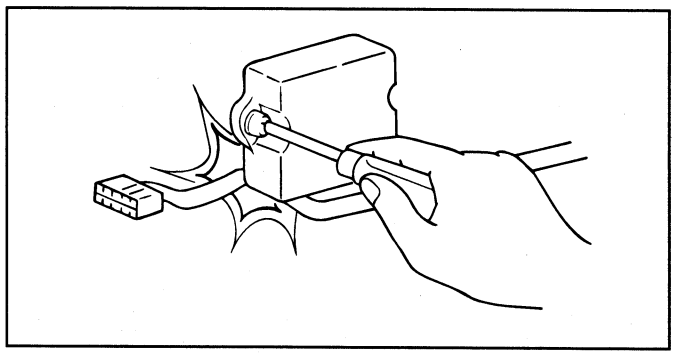

EADA011D

5. Never throw relays, sensors or electrical parts, or expose them to strong shock.

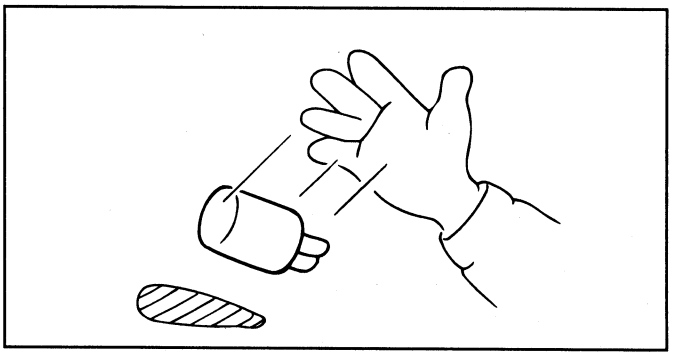

EADA011E

6. The electronic parts used in the computer, relays, etc. are readily damaged by heat. If there is a need for service operations that may cause the temperature to exceed 80°C (176°F), remove the electronic parts beforehand.

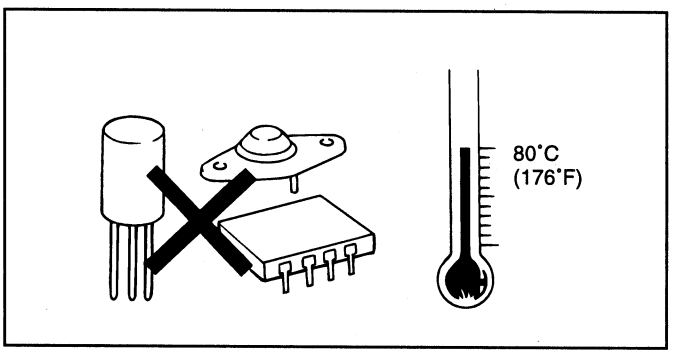

EADA011F

7. Loose connectors cause problems. Make sure that the connectors are always securely fastened.

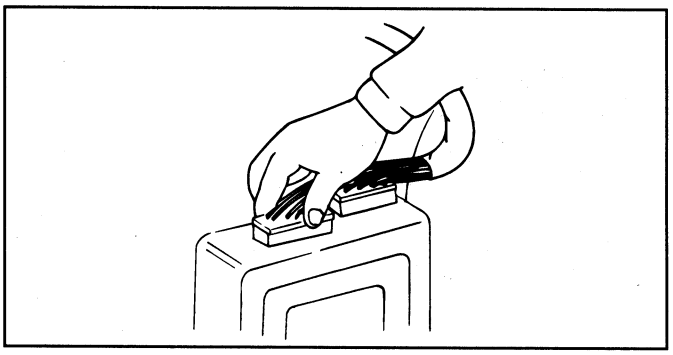

EADA011G

8. When disconnecting a connector, be sure to grip only the connector, not the wires.

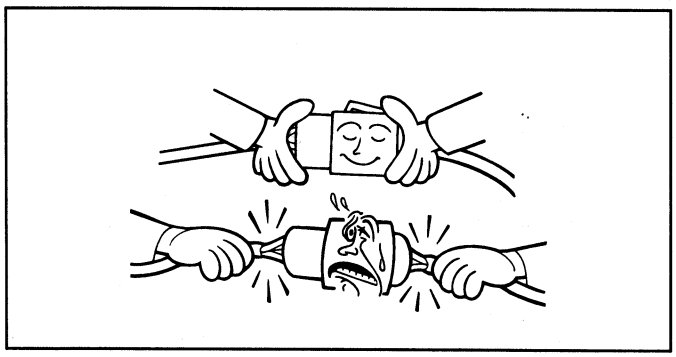

EADA011H

9. Disconnect connectors which have catches by pressing in the direction of the arrows shown the illustration.

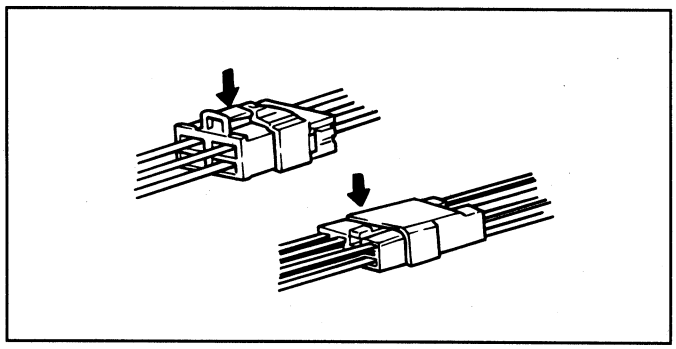

EADA011I

10. Connect connectors which have catches by inserting the connectors until they make a clicking sound.

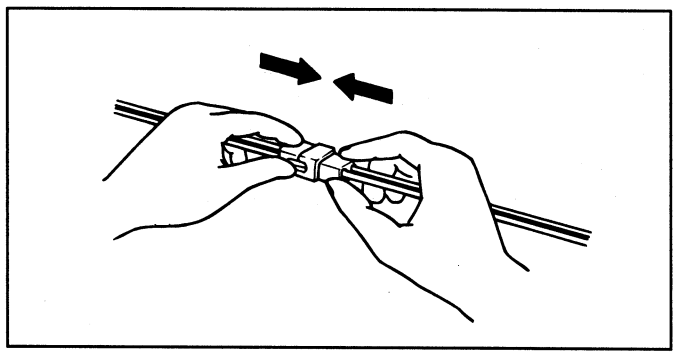

EADA011J

11. When, using a circuit tester, to check continuity or voltage on connector terminals, insert the test probe into the harness side. If the connector is a sealed connector, insert the test probe through the hole in the rubber cap until it contacts the terminal, being careful not to damage the insulation of the wires.

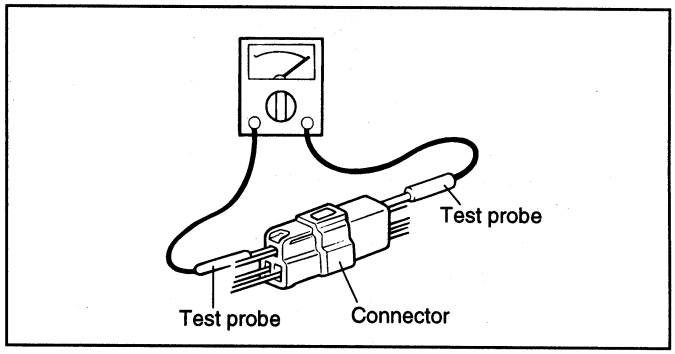

EADA011K

12. To avoid overloading the wiring, take the electrical current load of the optional equipment into consideration, and determine the appropriate wire size.

Norminal size	SAE gauge No.	Permissible current	
		In engine compartment	Other areas
0.3 mm^2	AWG 22	-	5A
0.5 mm^2	AWG20	7A	13A
0.85 mm^2	AWG18	9A	17A
1.25 mm^2	AWG16	12A	22A
2.0 mm^2	AWG14	16A	30A
3.0 mm^2	AWG12	21A	40A
5.0 mm^2	AWG10	31A	54A

PRECAUTIONS FOR CATALYTIC CONVERTER

CAUTION

If a large amount of unburned gasoline flows into the converter, it may overheat and create a fire hazard. To prevent this, observe the following precautions and explain them to your customer.

1. Use only unleaded gasoline.
2. Do not run the engine while the car is at rest for a long time. Avoid running the engine at fast idle speed for more than 10 minutes and at idle speed for more than 20 minutes.
3. Avoid spark- jump tests. Do spark- jumps only when absolutely necessary. Perform this test as rapidly as possible and, while testing, never race the engine.
4. Do not measure engine compression for an extended time. Engine compression tests must be made as rapidly as possible.
5. Do not run the engine when the fuel tank is nearly empty. This may cause the engine to misfire and create an extra load on the converter.
6. Avoid coasting with the ignition turned off and during prolonged braking.
7. Do not dispose of a used catalytic converter together with parts contaminated with gasoline or oil.

SRS SYSTEM COMPONENTS INFORMATION

CUSTOMER CAUTIONS

Failure to carry out service operations in the correct sequence could cause the airbag system to be deployed unexpectedly during servicing, and a serious accident to occur. Further, if there is a mistake in servicing the airbag system, it is possible the airbag may fail to operate when required. Before performing servic (including removal or installation of parts, inspection or replacement), be sure to read the following items carefully, then follow the correct procedures described in the repair manual.

1. Work must be started approx. 30 seconds or longer after the ignition switch is turned to the LOCK position and the negative (-) battery cable is disconnected. (The airbag system is equipped with a back-up power source. If work is started within 30 seconds after disconnecting the negative (-) terminal cable of the battery, the airbag may be operative.) When the negative (-) terminal cable is disconnected from the battery, the clock and audio systems memories will be erased. Before starting work, record the setting of the audio memory system. When work is finished, reset the audio system as before and adjust the clock.
2. Malfunction symptoms of the airbag system are difficult to confirm, so diagnostic codes become the most important source of information when troubleshooting. When troubleshooting the airbag system, always read the diagnostic codes before disconnecting the battery.
3. Never use airbag parts from another vehicle. When replacing parts, replace them with new parts.
4. Never attempt to disassemble and repair the airbag modules, SRSCM, clock spring and airbag wiring harness in order to reuse it.
5. If the SRSCM or airbag module has been dropped, or if there are cracks, dents or other defects in the case, bracket or connector, replace them with new ones.
6. After work on the airbag system is completed, re-set the SRS SRI.

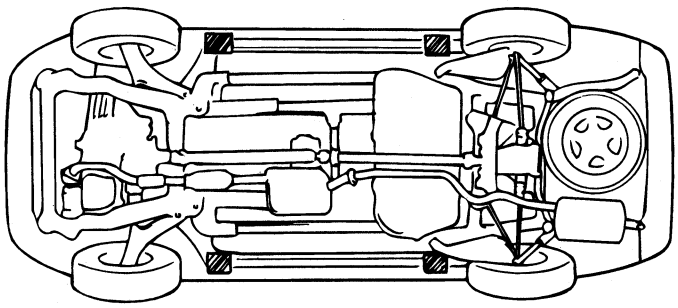

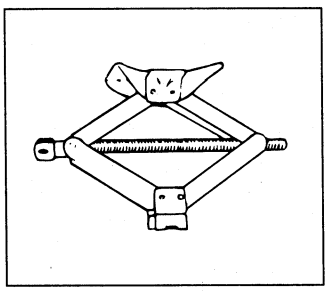

The jack provided with the vehicle (for reference)

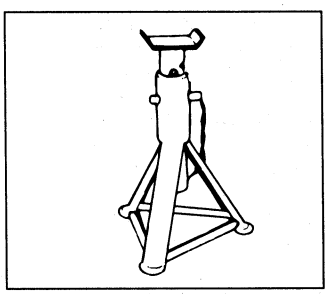

Rigid rack (Safety stand)

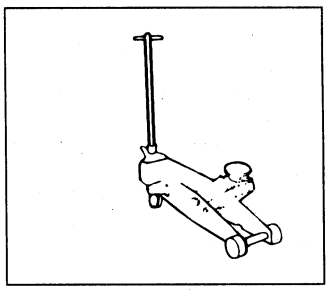

Garage jack (floor Jack)

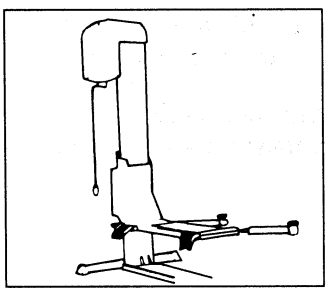

Single post lift

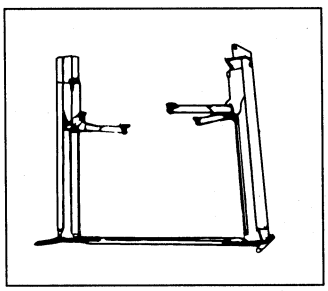

Double post lift

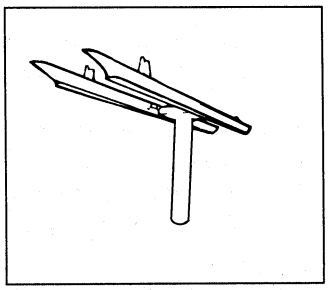

Free wheel type of auto lift (H bar lift)

EAJB001Y

CAUTION

1. Never use a jack beneath the lateral rod or rear suspension assembly.
2. In order to prevent scratching the sub frame, place a piece of cloth on the jack's contact surface (to prevent corrosion caused by damage to the coating).
3. Never support vehicle with only a jack. Always use safety stands.
4. Do not attempt to raise one entire side of the vehicle by placing a jack midway between the front and rear wheels. To do so could result in permanent damage to the body.

TIGHTENING TORQUE TABLE OF STANDARD PARTS

Bolt nominal diameter (mm)	Pitch (mm)	Torque Nm (kg.cm, lb.ft)	
		Head Mark 4	Head Mark 7
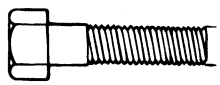 EADA010R	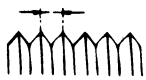 EADA010S	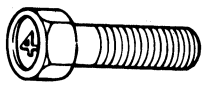 EADA010T	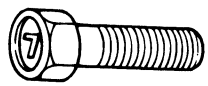 EADA010U
M5	0.8	3-4 (30-40, 2.2-2.9)	5-6 (50-60, 3.6-4.3)
M6	1.0	5-6 (50-60, 3.6-4.3)	9-11 (90-110, 6.5-8.0)
M8	1.25	12-15 (120-150, 9-11)	20-25 (200-250, 14.5-18.0)
M10	1.25	25-30 (250-300, 18-22)	30-50 (300-500, 22-36)
M12	1.25	35-45 (350-450, 25-33)	60-80 (600-800, 43-58)
M14	1.5	75-85(750-850,54-61)	120-140(1,200-1,400,85-100)
M16	1.5	110-130(1,100-1,300,80-94)	180-210(1,800-2,100, 130-150)
M18	1.5	160-180(1,600-1,800, 116-130)	260-300(2,600-3,000, 190-215)
M20	1.5	220-250 (2,200-2,500, 160-180)	360-420 (3,600-4,200,260-300)
M22	1.5	290-330 (2,900-3,300, 210-240)	480-550 (4,800-5,500,350-400)
M24	1.5	360-420 (3,600-4,200, 260-300)	610-700 (6,100-7,000, 440-505)

NOTE

1. **The torques shown in the table are standard values under the following conditions:**
   - **Nuts and bolts are made of steel bar, and galvanized.**
   - **Galvanized plain steel washers are inserted.**
   - **All nuts, bolts, and plain washers are dry.**
2. **The torques shown in the table are not applicable:**
   - **When Spring washers, toothed washers and the like are inserted.**
   - **If plastic parts are fastened.**
   - **If self-tapping screws or self-locking nuts are used.**
   - **If threads and surface are coated with oil.**
3. **If you reduce the torques in the table to the percentage indicated below, under the following conditions, if will be the standard value.**
   - **If spring washers are used. : 85%**
   - **If threads and bearing surfaces are stained with oil. : 85%**

RECOMMENDED LUBRICANTS AND CAPACITIES

EAJA0060

RECOMMENDED LUBRICANTS

Parts	Specifications	Remarks
Engine oil	API Classification SG Above	For further details, refer to SAE viscosity number
Manual transaxle	API classification GL-4	SAE grade number: SAE 75W/90
Automatic transaxle	GENUINE HYUNDAI transaxle oil, GENUINE DIAMOND ATF SP-II M	
Brake	DOT 3 or DOT 4	
Cooling system	High quality ethylene glycol	Concentration level 50% (normal) Concentration level 40% (tropical)
Power steering	PSF-3	
Transaxle linkage, parking brake cable mechanism, hood lock and hook, door latch, seat adjuster, trunk latch, door hinges, trunk hinges	Multipurpose grease NLGI grade #2	

M/EAST : Middle East, GEN.: General Areas AUST.: Australia, EC : European Community

LUBRICANTS CAPACITIES

Description		Capacities	
		2.0 I4 / 2.4 I4	2.7 V6
Engine oil	Oil pan	4.0 (4.21, 3.52)	4.2 (4.44, 3.69)
	Oil filter	0.3 (0.32, 0.26)	0.3 (0.32, 0.26)
	Total	4.3 (4.53, 3.78)	4.5 (4.76, 3.95)
Cooling system		7.0 (7.35, 6.19)	7.0 (7.35, 6.19)
Manual transaxle		2.1 (2.20, 1.80)	2.1 (2.20, 1.80)
Automatic transaxle		7.8 (8.2, 6.90)	8.5 (8.94, 7.52)
Power steering		1.0 (1.05, 0.88)	1.0 (1.05, 0.88)

liter (U.S. qts., Imp. qts.)

MAINTENANCE INFORMATION

CHANGING ENGINE OIL EAJA0030

1. If the engine is cold, run the engine until it reaches normal operating temperature.
2. Turn off the engine.
3. Remove the oil filler cap and drain plug. Drain the engine oil.
4. Tighten the drain plug to the specified torque.

Tightening torque
Oil pan drain plug :
35-45 N.m (350-450 kg.cm, 25-33 lb.ft)

NOTE

Whenever tightening the oil drain plug, use a new drain plug gasket.

5. Fill new engine oil through the oil filler cap opening.

NOTE

Do not overfill, this will cause oil aeration and loss of oil pressure.

6. Install the oil filler cap.
7. Start and run the engine.
8. Turn off the engine and then check the oil level. Add oil if necessary.

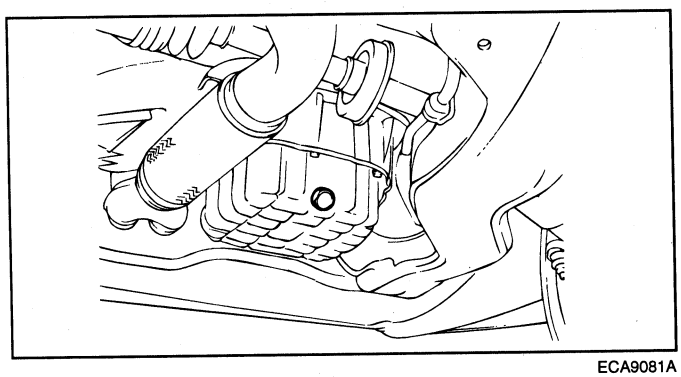

ECA9081A

REPLACING THE ENGINE OIL FILTER

1. Use a filter wrench to remove the oil filter.
2. Before installing a new oil filter on the engine, apply clean engine oil to the surface of the rubber gasket.
3. Tighten the oil filter to the specified torque.

Tightening torque
Oil filter : 12 -16 N.m (120-160 kg.cm, 9-12 lb.ft)

4. Start and run the engine and check for engine oil leaks.
5. After turning off the engine, check the oil level and add oil as necessary.

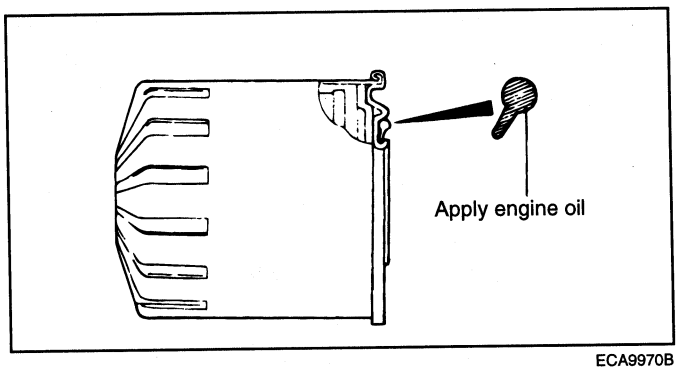

ECA9970B

REPLACING THE AIR CLEANER FILTER

The air cleaner filter will become dirty during use and the filtering efficiency will be substantially reduced. Replace with a new one as needed.

1. Disconnect the clip holding air cleaner filter cover.
2. Remove the air filter cover.

CAUTION

The air filter cover should be removed carefully because intake hose includes the air-flow sensor.

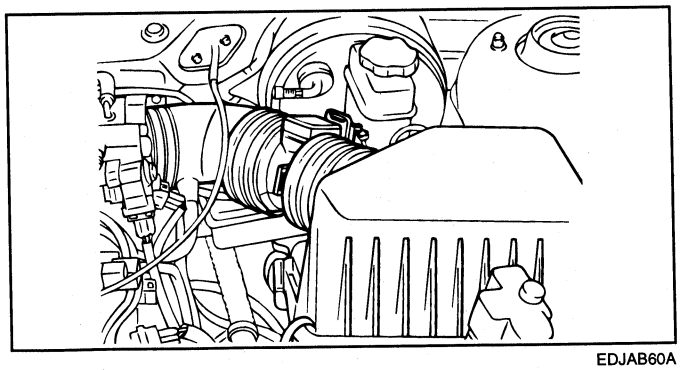

EDJAB60A

3. Remove the air cleaner filter.

4. Install a new air cleaner filter and replace the air cleaner filter cover.

CHECKING BELT TENSION

The belt tension is automatically adjusted by the auto-tensioner.

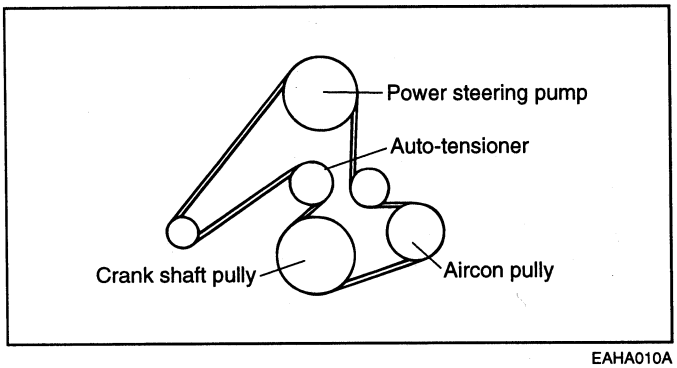

EAHA010A

ADJUSTING BELT TENSION

Refer to the EM and EMA-Sections.

COOLING SYSTEM

Check the cooling system for damaged hoses, loose or leaking connections, or other possible causes of coolant leaks.

ANTIFREEZE

The engine cooling system is provided with a mixture of 50% ethylene glycol anti-freeze and 50% water (For the vehicles of tropical area, the engine cooling system is provided with a mixture of 40% ethylene glycol anti-freeze and 60% water at the time of manufacture.)
Since the cylinder head and water pump body are made of aluminum alloy casting, be sure to use a 30 to 60% ethylene glycol antifreeze coolant to assure corrosion protection and freezing prevention.

CAUTION

If the concentration of the antifreeze is below 30%, the anticorrosion property will be adversely affected. In addition, if the concentration is above 60%, both the antifreeze and engine cooling properties will decrease, adversely affecting the engine. For these reasons, be sure to maintain the concentration level within the specified range.

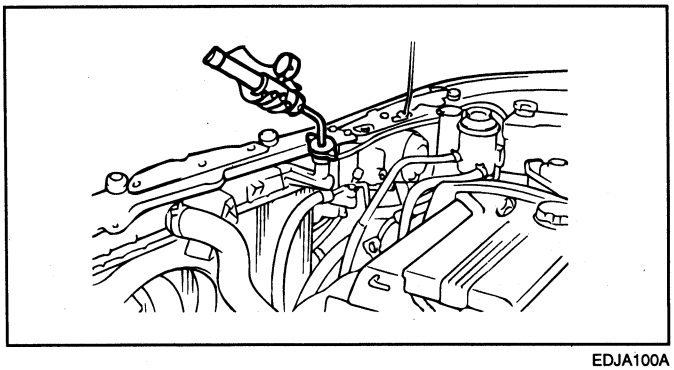

EDJA100A

MEASURING OF ANTIFREEZE CONCENTRATION

Run the engine until the coolant is fully mixed. Drain some coolant (antifreeze), and then measure the temperature and specific gravity of the coolant. Determine its concentration and safe working temperature. If the coolant is short of antifreeze, add antifreeze to a concentration of 50%. (Tropical Areas : 40%)

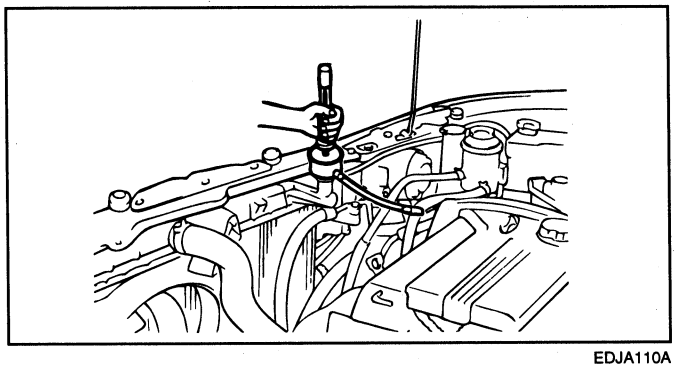

EDJA110A

REPLACING OF THE COOLANT

1. Set the temperature control lever to the hot position.
2. Remove the radiator cap.

CAUTION

Remove the cap slowly. The system is pressurized and the coolant may be hot. Do not open the cap when the engine is hot.

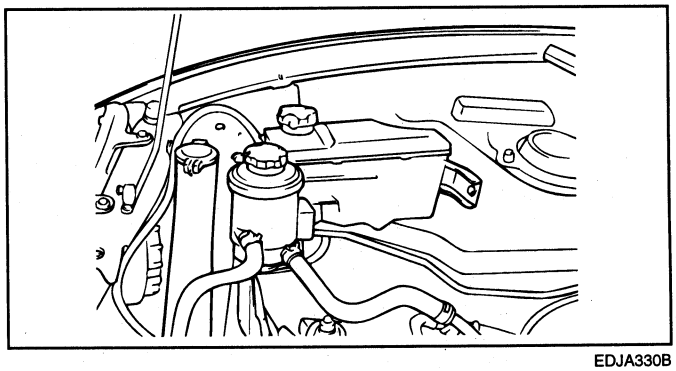

EDJA330B

3. Loosen the drain plug to drain the coolant.
4. Drain the coolant from the reserve tank.

5. After draining the coolant, tighten the drain plug securely.
6. Fill the radiator with the coolant up to its filler neck.
7. Fill the reserve tank with the coolant.
8. Warm up the engine until the thermostat opens, remove the radiator cap and check the coolant level.
9. When the radiator is filled up to its filler neck, install the radiator cap securely.
10. Fill the reserve tank with coolant up to the "FULL" line.

REPLACING IGNITION CABLES

The ignition cables should be replaced periodically with new ones. After replacing, make sure that the ignition cables and terminals are properly connected and positioned correctly.

NOTE

When disconnecting an ignition cable, be sure to hold the cable cap. If the cable is disconnected by pulling on the cable alone, an open circuit might result.

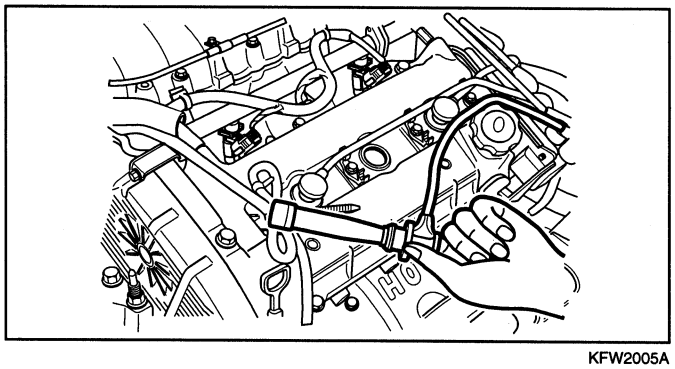

KFW2005A

REPLACING OXYGEN SENSOR

The oxygen sensor is a device which helps control the fuel mixture. If the oxygen sensor is damaged, the exhaust-gas cleaning efficiency as well as driveability deteriorates. Therefore, it should be replaced periodically with a new one.

FUEL SYSTEM

Tank, Lines And Connections

1. Check for damage or leakage in the fuel lines and connections.
2. Inspect the surface of fuel hoses for heat and mechanical damage. Hard and brittle rubber, cracking, tears, cuts, abrasions and excessive swelling indicate deterioration of the rubber.
3. If the fabric casing of the rubber hose is damaged by cracks and abrasions in the fuel system, the hoses should be changed.

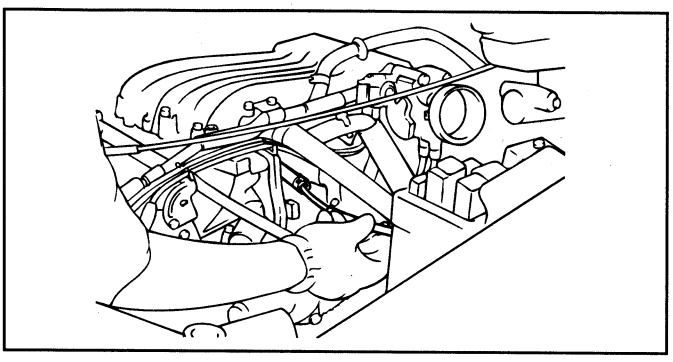

ECHA060A

MANUAL TRANSAXLE (INSPECT OIL LEVEL)

Inspect for leakage in each component and check the oil level by removing the filler plug. If the oil is contaminated, replace it with new oil.

1. With the vehicle parked at a level place, remove the filler plug and make sure that the oil level is the same level as the plug hole.
2. Check that the transaxle oil is not dirty.

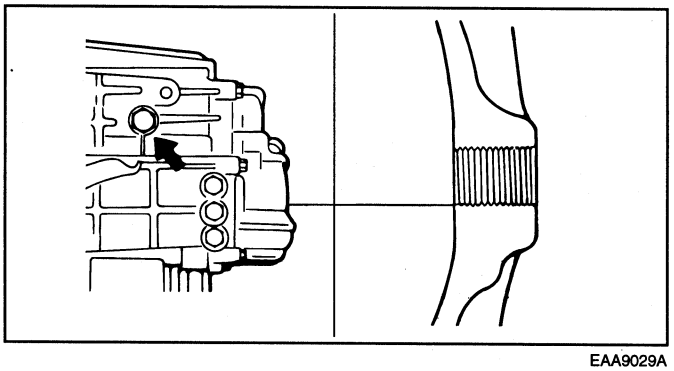

EAA9029A

TRANSAXLE OIL (REPLACE)

1. With the vehicle parked at a level place, remove the magnetic plug and drain transaxle oil.
2. Replace the washer with a new one and reinstall the plug.
3. Fill with transaxle oil (through the filler plug part) until the oil level is the same level as the plug hole.

INSPECTING STEERING LINKAGE

1. Check the steering wheel freeplay.

Maximum steering wheel freeplay : 30 mm (1.181 in.)

2. Check the steering linkage for looseness and damage.
   a) Tie rod ends must not have excessive play.
   b) Dust seals and boots must not be damaged.
   c) Boot clamps must not be loose.

POWER STEERING FLUID LEVEL (INSPECT FLUID LEVEL)

1. Park the vehicle on a level surface, start the engine, and then turn the steering wheel several times to raise the temperature of the fluid to approximately 50°C (122°F).

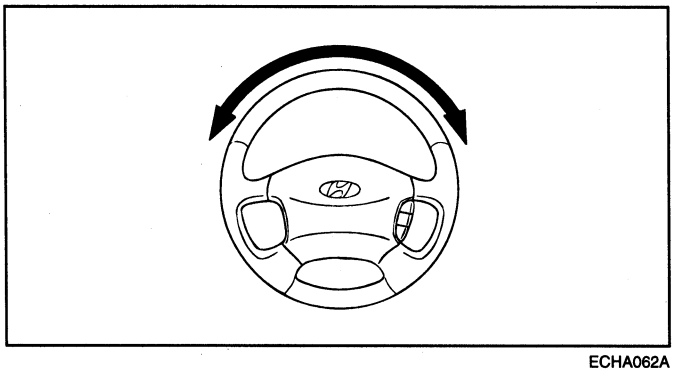

ECHA062A

2. With the engine idling, turn the wheel all the way to the left and right several times. Check the fluid in the oil reservoir for foaming, and its level. Replenish the fluid in the oil reservoir through the oil filter if necessary.

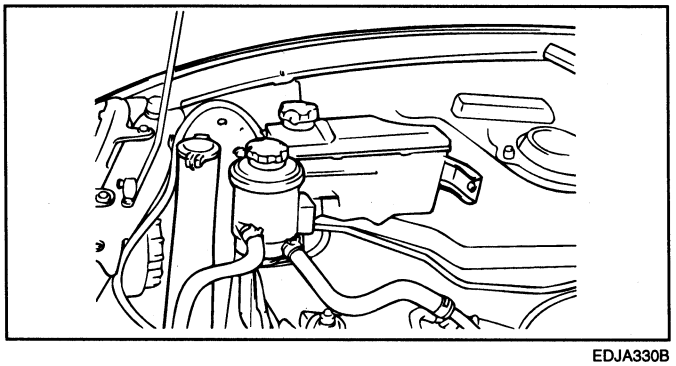

EDJA330B

POWER STEERING HOSES (CHECK FOR DETERIORATION OR LEAKS)

1. Check the hose connections for fluid leaks.
2. The power steering hoses should be replaced if there is severe surface cracking, pulling, scuffing or worn steps. Deterioration of the hoses could cause premature failure.

BALL JOINT AND STEERING LINKAGE SEALS, STEERING AND DRIVE SHAFT BOOTS

1. These components, which are permanently lubricated at the factory, do not require lubrication. Damaged seals and boots should be replaced to prevent leakage or contamination of the grease.
2. Inspect the dust covers and boots for proper sealing, leakage and damage. Replace them if defective.

INSPECTING BRAKE LINES

1. Check all brake lines and hoses for damage, wear, cracks, corrosion, leaks, bends and twists.
2. Check all clamps for tightness.
3. Check that the lines are clear of sharp edges, moving parts and the exhaust system.

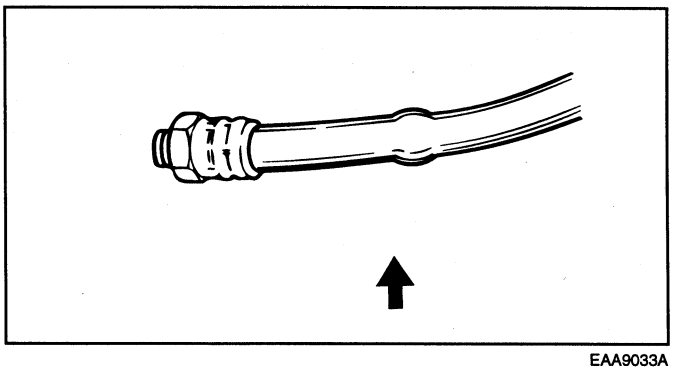

EAA9033A

FRONT DISC BRAKE PADS

Check for fluid contamination and wear. Always replace brake pads in complete sets.

NOTE

If a squealing or scraping noise occurs from the brake during driving, check if the pad wear indicator is contacting the disc. If it is, the brake pads should be replaced.

CAUTION

The pads for the right and left wheels should be replaced at the same time. Never split or intermix brake pad sets. All pads must be replaced as a complete set.

Thickness of pad lining [Limit] : 2.0 mm (0.079 in.)

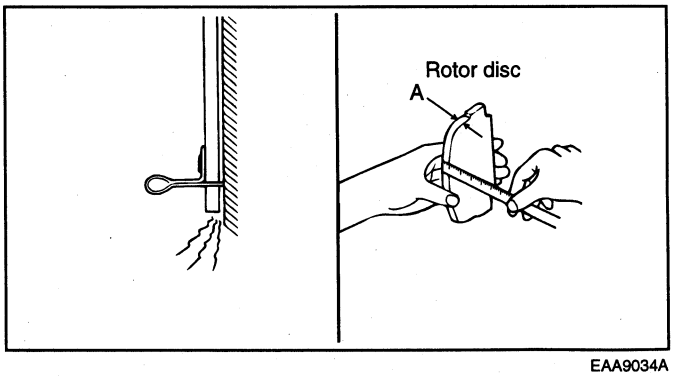

EAA9034A

REAR DRUM BRAKE LININGS AND REAR WHEEL CYLINDERS

1. Remove the brake drum and check the thickness of the brake shoe lining for wear. Check the automatic brake adjusting system by hand to see that it operates smoothly, and gears are in proper mesh with each other. To assure smoth function, apply a very thin coat of grease to the friction surface of the adjuster and link shaft.
2. Inspect the wheel cylinder boots for fluid leaks. Visually check the boots for cuts, tears or heat cracks. (A small amount of fluid on the boot may not be a leak but preservative fluid used at assembly.)

Checking the brake shoes for wear.

Thickness of lining [Limit] : 0.8 mm (0.031 in.)

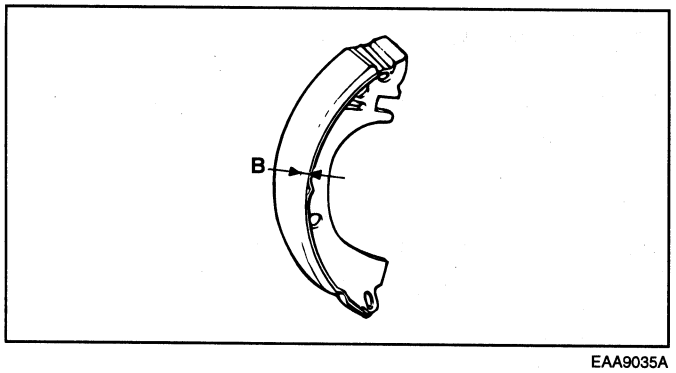

EAA9035A

CHECKING THE BRAKE FLUID LEVEL

1. Check the level of the brake fluid in the reserve tank of the master cylinder.
2. The level should be between the "MAX" and "MIN" mark.
3. If the level is lower than the "MIN" mark, add new brake fluid up to the "MAX" mark.

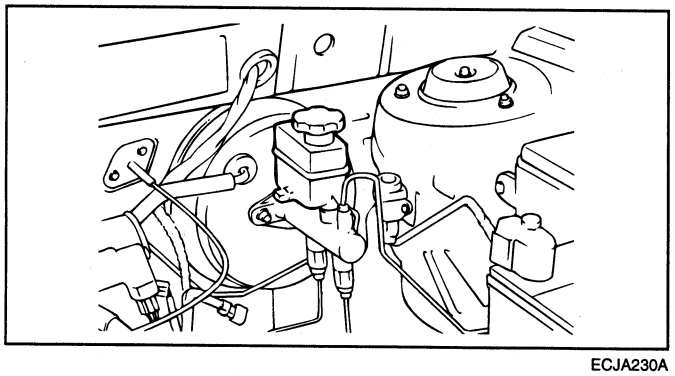

ECJA230A

CHANGING BRAKE FLUID

1. Refer to BR-Section for air-bleeding procedures.
2. With a vehicle equipped with ABS(Anti-lock Brake System), refer to BR-section.
3. Connect a vinyl tube to the bleeder screw of each wheel cylinder. Put the other end of the vinyl tube in a vessel to receive the brake fluid.

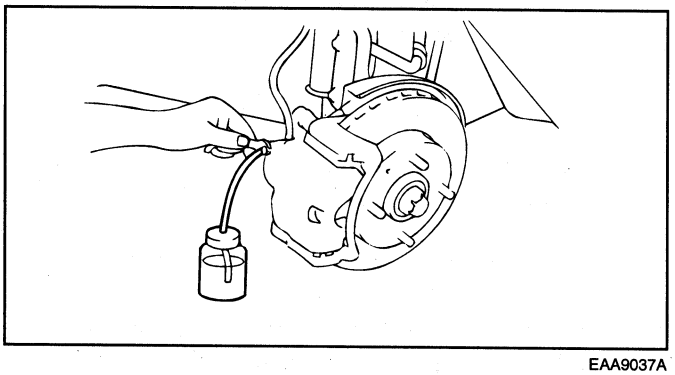

EAA9037A

4. Depress the brake pedal a few times. Then loosen the bleeder screw(with the brake pedal still depressed), and tighten it after the brake fluid stops flowing.
5. Repeat the above operation until there are no air bubbles in the brake fluid.
6. Repeat these steps for the other cylinders.
7. Add new brake fluid up to the "MAX" level in the reserve tank.

Brake fluid : DOT 3 or DOT4

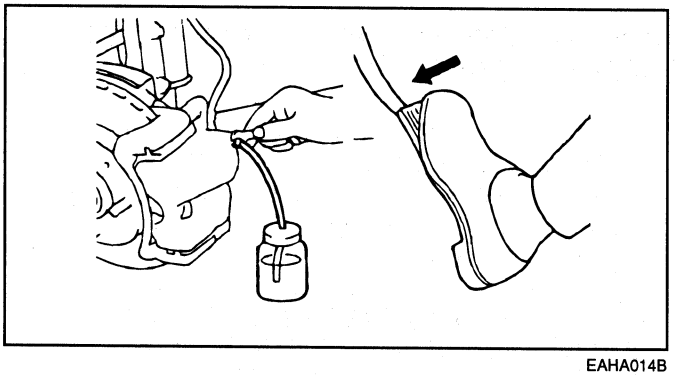

EAHA014B

CHECKING TIRE INFLATION PRESSURE

Check the tire inflation pressures as follows.

TIRE INFLATION PRESSURE (CHECK WITH TIRES COOL)

	Tire size	Front	Rear
2WD	215/70R15	30 psi	30 psi
4WD	225/70R16	30 psi	30 psi

ROAD TEST

Drive the vehicle and check for abnormal conditions.

1. Check oil, fluid, fuel, water and exhaust gas leaks.
2. Check free play of clutch pedal and brake pedal.
3. Check operation of brake booster.
4. Check the operation of service brake and parking brake systems.
5. Check the stroke of parking brake lever.
6. Check the driveability of engine.
7. Check the condition of instruments, gauges, indicators, exterior lamps, heater and ventilators.
8. Check the abnormal noises from each part.

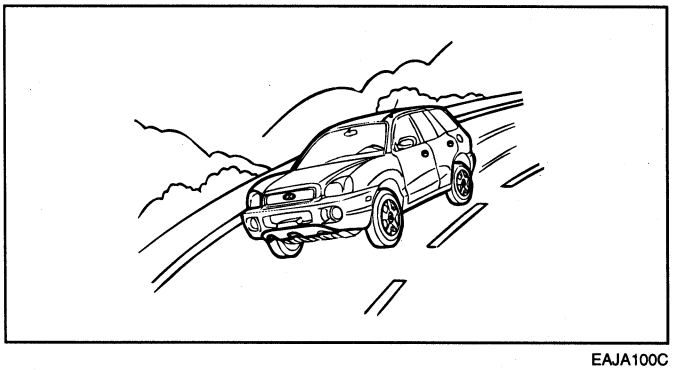

EAJA100C

STEERING AND DRIVE SHAFT BOOTS

1. Aluminum wheels require special attention. If salt or chemicals adhere to the wheels, they need to be rinsed off as soon as possible. After cleaning the wheels, apply a coating of wax to them to prevent corrosion.
2. When cleaning the vehicle with steam, do not direct steam onto the aluminum wheels.
   - Clean the hub surface.
   - After tightening the wheel nuts by hand, tighten them according to specifications.
   - Do not use an impact wrench or stand on the wrench with your foot to tighten the wheel nuts.
   - Do not apply oil to the threaded portions.

TIRE CHAINS AND SNOW TIRES

- Use tire chains only on the front wheels. Do not use tire chains on rear wheels.
- When using snow tires, use them on all four wheels for added maneuverability and safety.

Engine Mechanical System [2.0/2.4 I4]

GENERAL ..... EM -2

CYLINDER BLOCK ..... EM -25

MAIN MOVING SYSTEM ..... EM -43

COOLING SYSTEM ..... EM -57

INTAKE AND EXHAUST SYSTEM ..... EM -68

CYLINDER HEAD ASSEMBLY ..... EM -78

TIMING SYSTEM ..... EM -85

GENERAL

GENERAL ECJA0150

SPECIFICATIONS

Description	Specification	Limit	
General			
Type	In-line, Double Overhead Camshaft		
Number of cylinders	4		
	[2.4 L]	[2.0 L]	
Bore	86.5 mm (3.41 in.)	85 mm (3.35 in.)	
Stroke	100 mm (3.94 in.)	88 mm (3.46 in.)	
Total displacement	2351 cc (143.5 cu.in.)	1977 cc (121.9 cu.in.)	
Compression ratio	10:1	←	
Firing order	1-3-4-2	←	
Idle R.P.M	725 ± 100 rpm	750 ± 100 rpm	
Ignition timing at idling speed	BTDC 12° ± 8°	BTDC 10° ± 5°	
Valve timing			
Intake valve	[2.4 L]	[2.0 L M/T]	[2.0 L A/T]
Opens (BTDC)	18°	15°	15°
Closes (ABDC)	54°	53°	53°
Exhaust valve			
Opens (BBDC)	56°	51°	56°
Closes (ATDC)	8°	17°	8°
Cylinder head			
Flatness of gasket surface	Max. 0.03 mm (0.0012 in.)	0.2 mm (0.008 in.)	
Flatness of manifold mounting surface	0.15 mm (0.0059 in.)	0.3 mm (0.012 in.)	
Dimensions for reworking oversize valve seat hole			
Intake			
0.3 mm (0.012 in.) O.S.	35.3-35.325 mm (1.39-1.3907 in.)		
0.6mm (0.024 in.) O.S.	35.6-35.625 mm (1.40-1.4026 in.)		
Exhaust			
0.3mm (0.012 in.) O.S.	33.3-33.325 mm (1.31-1.3120 in)		
0.6mm (0.024 in.) O.S.	33.6-33.625 mm (1.32-1.3238 in.)		

Description	Specification	Limit
Dimensions for reworking oversize valve guide hole (both intake and exhaust)		
0.05mm (0.002in.) O.S.	12.05-12.068 mm (0.4751 in.)	
0.25mm (0.010in.) O.S.	12.25-12.268 mm (0.4830 in.)	
0.50mm (0.020in.) O.S.	12.50-12.518 mm (0.4928 in.)	
Camshaft		
Cam height		
Intake	35.493 mm (1.3974 in.)	34.993 mm (1.3776 in.)
Exhaust		
M/T		
[2.4 L]	35.204 mm (1.3860 in.)	34.704 mm (1.3663 in.)
[2.0 L]	35.317 mm (1.3904 in.)	34.817 mm (1.3707 in.)
A/T	35.204 mm (1.3860 in.)	34.704 mm (1.3663 in.)
Journal O.D.	26 mm (1.02 in.)	
Bearing oil clearance	0.040-0.076 mm (0.0020-0.0030 in.)	
End play	0.1-0.15 mm (0.004-0.006 in.)	
Valve		
Valve length		
Intake	109.5 mm (4.311 in.)	
Exhaust	109.7 mm (4.319 in.)	
Stem O.D.		
Intake	6.565-6.580 mm (0.2585-0.2591 in.)	
Exhaust	6.530-6.550 mm (0.2571-0.2579 in.)	
Face angle	45°~45°5'	
Thickness of valve head (margin)		
Intake	1.0 mm (0.039 in.)	0.7 mm (0.028 in.)
Exhaust	1.5 mm (0.059 in.)	1.0 mm (0.039 in.)

Description	Specification	Limit
Valve stem to valve guide clearance		
Intake	0.020-0.047 mm (0.0008-0.0019 in.)	0.1 mm (0.0039 in.)
Exhaust	0.050-0.085 mm (0.0020-0.0033 in.)	0.15 mm (0.0059 in.)
Valve guide		
Length		
Intake	45.5 mm (1.791 in.)	
Exhaust	50.5 mm (1.988 in.)	
Service over size	0.05, 0.25, 0.50 mm (0.002, 0.010, 0.020 in.)	
Valve seat		
Width of seat contact	0.9-1.3mm (0.035-0.051 in.)	
Seat angle	44°~44°. 5'	
Service size	0.3 mm (0.012 in.), 0.6 mm (0.024 in.) oversize	
Valve spring		
Free length	45.82 mm (1.804 in.)	44.82 mm (1.7646 in.)
Load	25.3kg/40mm (55.8 lb/1.57 in.) at installed height	
Out- of- square	Less than 1.5°	4°
Cylinder block		
	[2.4 L]	[2.0 L]
Cylinder bore	86.5+0.03 mm (3.406+0.0012 in.)	85.0+0.03 mm (3.346+0.0012 in.)
Out-of-round and taper of cylinder bore	Less than 0.01 mm (0.0004 in.)	
Flatness of gasket surface	Less than 0.05 mm (0.0020 in.)	0.1 mm (0.0039 in.)
Piston		
	[2.4 L]	[2.0 L]
O.D.	86.47-86.5 mm (3.404-3.406 in.)	84.97-85.0 mm (3.345-3.346 in.)
Piston-to-cylinder clearance	0.02-0.04 mm (0.0008-0.0016 in.)	
Ring groove width		
No. 1	1.22-1.24 mm (0.048-0.049 in.)	

Description	Specification	Limit
No. 2	1.51-1.53 mm (0.059-0.060 in.)	
Oil	2.81-2.83 mm (0.111-0.1114 in.)	
Service size	0.5 mm (0.020 in.) oversize	
Piston ring		
Side clearance		
No. 1	0.03-0.07 mm (0.0012-0.0028 in.)	
No. 2	0.02-0.06 mm (0.0008-0.0024 in.)	0.1 mm (0.0039 in.)
Oil ring	0.06-0.15 mm (0.0024-0.0059 in.)	
End gap		
No. 1	0.25-0.35 mm (0.0098-0.0138 in.)	0.8 mm (0.031 in.)
No. 2	0.40-0.55 mm (0.0157-0.0216 in.)	0.8 mm (0.031 in.)
Oil ring side rail	0.10-0.40 mm (0.0039-0.0157 in.)	1.0 mm (0.039 in.)
Connecting rod		
Bend	0.05 mm (0.0020 in.)	
Twist	0. 1 mm (0.004 in.)	
Connecting rod big end to crankshaft side clearance	0.10-0.25 mm (0.0040-0.0098 in.)	0.4 mm (0.0157in.)
Piston pin installation force	1250±500 kg (2756±1100 lb.f)	
Connecting rod pin O.D	48-48.015 mm (1.890-1.8903 in.)	
Connecting rod bearing oil clearance	0.015-0.048 mm (0.0008-0.0020 in.)	0.1 mm (0.0039 in.)
Crankshaft main bearing oil clearance		
No. 1,2,4,5 journal	0.018-0.036 mm (0.0007-0.0014 in.)	0.1 mm (0.0039 in.)
No. 3 journal	0.024-0.042 mm (0.0009-0.0016 in.)	
Crankshaft		
Journal O.D.	56.982-57.000 mm (2.2434-2.2441 in.)	
Out-of-round of journal and pin	Less than 0.015 mm (0.0006 in.)	

Description	Specification	Limit
Taper of journal and pin	Less than 0.005 (0.0002 in.)	
End play	0.05-0.25 mm (0.0020-0.0098 in.)	0.25 mm (0.0098 in.)
Flywheel		
Runout		0.13 mm(0.0051in.)
Oil pressure at idle [Oil temperature is 75-90°C (167-194°F)]	80 kPa (11.6 psi)	
Oil pump		
Tip clearance		
Drive gear	0.16-0.21 mm (0.0063-0.0083 in.)	0.25 mm(0.0098in.)
Driven gear	0.18-0.21 mm (0.0071-0.0083 in.)	0.25 mm(0.0098in.)
Side clearance		
Drive gear	0.08-0.14 mm (0.0031-0.0055 in.)	0.25 mm(0.0098in.)
Driven gear	0.06-0.12 mm (0.0024-0.0047 in.)	0.25 mm(0.0098in.)
Relief spring		
Free length	46.6 mm (1.835 in.)	
Load [61 N (13.5 lb)]	40.1 mm (1.579in.)	
Right silent shaft		
Front journal diameter	18.467-18.480 mm (0.7270-0.7276 in.)	
Rear journal diameter	40.951-40.967mm (1.6516-1.6129in.)	
Oil clearance		
Front	0.020-0.061 mm (0.0008-0.0024 in.)	
Rear	0.050-0.091 mm (0.0020-0.0036 in.)	
Left silent shaft		
Front journal diameter	18.467-18.480mm (0.7270-0.7276in.)	
Rear journal diameter	40.951-40.967 mm (1.6122-1.6130 in.)	
Oil clearance		

Description	Specification	Limit
Front	0.020-0.054 mm (0.0008-0.0021 in.)	
Rear	0.042-0.083 mm (0.0017-0.0033 in.)	

Description	Specification	Limit
Cooling method	Forced circulation with electric fan	
Cooling system quantity	7.0 lit (7.4 U.S.qts., 6.1 Imp.qts.) [For DOHC]	
Thermostat		
Type	Wax pellet type with jiggle valve	
Normal opening temperature	82°C(180°F)	
Opening temperature range	80°C-84°C (176°F-183°F)	
Wide open temperature	95°C (203°F)	
Radiator cap		
Main valve opening pressure	107.9±14.7 kPa (1.1±0.15 kg/cm^2 , 15.64±2.13 psi)	
Main valve closing pressure	83.4 kPa (0.85 kg/ cm^2, 12.1 psi)	
Vacuum valve opening pressure	-6.86 kPa (-0.07 kg/ cm^2, -1.00 psi)	
Air cleaner		
Type	Dry type	
Element	Unwoven cloth type	
Exhaust pipe		
Muffler	Expansion resonance type	
Suspension system	Rubber hangers	
Coolant temperature sensor		
Type	Thermister type	
Resistance		
20°C (68°F)	2.45±0.14 kΩ	
80°C (176°F)	0.3222 kΩ	

SERVICE STANDARDS

Standard value	
Coolant concentration	
Tropical area	40%
Other area	50%

LUBRICANT

Engine coolant	Ethylene glycol base for aluminum radiator

SEALANT

Engine coolant temperature sensor	LOCTITE 262, three bond No. 1324 or equivalent
Oil pressure switch	3M ATD No. 8660 or Three bond No. 1141E

NOTE

O.D.= Outer Diameter

I.D.= Inner Diameter

O.S.= Oversize Diameter

U.S. = Undersize Diameter

TIGHTENING TORQUE

ECHA0200

Item	Nm	kg.cm	Lb.ft
Engine mount insulator bolt	90-110	900-1100	65-80
Engine mounting bracket nuts	60-80	600-800	43-58
Engine mounting bracket bolts	60-80	600-800	43-58
Engine Support bracket bolt and nut	55-65	550-650	40-47
Front roll stopper bracket to cross member bolts	40-55	400-550	29-40
Front roll stopper insulator bolt and nut	50-65	500-650	36-47
Rear roll stopper bracket to cross member bolts	50-65	500-650	36-47
Rear roll stopper insulator bolt and nut	50-65	500-650	36-47
Transaxle mounting bracket bolts	60-80	600-800	43-58
Transaxle mounting insulator bolt	90-110	900-1100	65-80
Air conditioner compressor to bracket	23-27	230-270	17-20
Power steering oil pump to bracket	35-45	350-450	25-33
Front exhaust pipe to exhaust manifold	30-40	300-400	22-29
Rocker cover bolt	8-10	80-100	6-7
Center cover bolt	4-5	40-50	3-3.6
Camshaft sprocket bolt	80-100	800-1000	58-72
Camshaft bearing cap bolt	19-21	190-210	14-15
Crankshaft position sensor	10-13	100-130	7-9
Throttle body stay	15-22	150-220	11-16
Air cleaner body installation bolt	8-10	80-100	6-7
Crankshaft sprocket bolt	110-130	1100-1300	80-94
Damper pulley to crankshaft sprocket	20-30	200-300	14-22
Cylinder head bolt (cold engine)			
With new parts	63+Release all bolts +20+90°+90°	630+Release all bolts +200+90°+90°	46+Release all bolts +14+90°+90°
Without new parts.	20+90°+90°	200+90°+90°	14+90°+90°
Intake manifold stay	18-25	180-250	13-18
Tension pulley bracket bolt	23-27	230-270	17-20
Auto tensioner bolt	20-27	200-270	14-20
Tensioner pulley bolt	43-55	430-550	31-40
Idler pulley bolt	30-42	300-420	22-30
Front exhaust pipe clamp bolt	20-30	200-300	14-22

Item	Nm	kg.cm	Lb.ft
Oil pan (lower and upper)	10-12	100-120	7-9
Oil pan drain plug	35-45	350-450	25-33
Oil screen	15-22	150-220	11-16
Oil pump sprocket nut	50-60	500-600	36-43
Oil pressure switch	8-12	80-120	6-9
Oil filter bracket bolt	20–27	200-270	14-20
Oil pump cover bolt	15-18	150-180	11-13
Oil seal case bolt	10-12	100-120	7-9
Plug cap	20-27	200-270	14-20
Front case bolt (M6)	20-27	200-270	14-20
Driven gear bolt	34-40	340-400	25-29
Engine coolant pump pulley bolt	8-10	80-100	6-7
Timing belt upper cover	8-10	80-100	6-7
Timing belt lower cover	8-10	80-100	6-7
Relief plug	40-50	400-500	29-36
Flywheel	130-140	1300-1400	94-101
Drive plate	130-140	1300-1400	94-101
Timing belt rear right cover	10-12	100-120	7-9
Timing belt rear left cover (upper)	10-12	100-120	7-9
Connecting rod cap bolt	20+90°	200+90°	14+90°
Crankshaft bearing cap bolt	25+90°	250+90°	18+90°
Engine hanger			
M8	25-30	250-300	18-22
M10	35-55	350-550	25-40
Alternator support bolt	20-25	200-250	14-18
Alternator brace bolt			
M8x90	8-12	80-120	6-9
M8x40	20-25	200-250	14-18
Engine coolant pump to cylinder block bolt	20-27	200-270	14-20
Engine coolant temperature sensor	20-40	200-400	14-29
Engine coolant inlet fiting attaching bolt	10-15	100-150	7-11
Air cleaner mounting bolts	8-10	80-100	6-7
Resonator mounting bolt (Nut)	8-10	80-100	6-7
Throttle body to intake manifold	15-22	150-220	11-16
Intake manifold mounting bolt (M8)	15-20	150-200	11-14

Item	Nm	kg.cm	Lb.ft
Intake manifold mounting nut	30-42	300-420	22-30
Tension rod bracket bolt to tension rod	35-55	350-550	25-40
Ignition coil bolts	8-12	80-120	6-9
Power transistor bolts	10-12	100-120	7-9
Front exhaust manifold bolt to cylinder block	20-30	200-300	14-22
Center exhaust pipe nuts to catalytic converter	30-40	300-400	22-29
Center exhaust pipe bolts to main muffler	30-40	300-400	22-29
Center exhaust pipe bolt to bracket	10-15	100-150	7-11
Hanger bolt to body	10-15	100-150	7-11
Hanger bolt to main muffler	10-15	100-150	7-11
Exhaust manifold nuts (8)	25-30	250-300	18-22
Exhaust manifold nuts (10)	35-55	350-550	25-40
Oxygen sensor	40-50	400-500	29-36
Heat protector bolt to exhaust manifold	12-15	120-150	9-11
Air cleaner bracket bolt	10-13	100-130	7-9
Exhaust manifold cover to exhaust manifold bolt	12-15	120-150	9-11
Oxygen sensor to exhaust manifold	40-50	400-500	29-36
Front exhaust pipe bracket bolt	20-30	200-300	14-22
Main muffler hanger support bracket bolt	10-20	100-200	7-14
Oil level gauge	12-15	120-150	9-11
Stud bolt	30-40	300-400	22-29
Tensioner arm assembly	17-26	170-260	12-19
Balance shaft bolt	34-40	340-400	25-29
Starter bolt to cylinder block	27-35	270-350	20-25
Radiator fan motor bolt	8-10	80-100	6-7
Delivery pipe to cylinder block	10-13	100-130	7-9

SPECIAL TOOLS

ECHA0300

Tool (Number and name)	Illustration	Use
Counter balance shaft bearing puller (09212-32000)	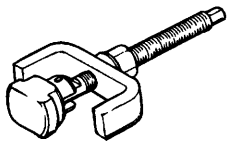 ECA9930K	Removal of counter balance shaft front bearing
Counter balance shaft bearing puller (09212-32100)	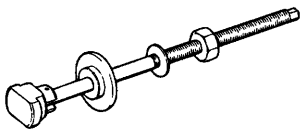 ECA9930L	Removal of counter balance shaft rear bearing (use with 09212-32300)
Counter balance shaft bearing installer (09212-32200)	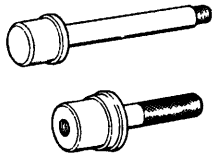 ECA9930M	Installation of counter balance shaft front and rear bearing (use with 09212-32300)
Guide plate (09212-32300)	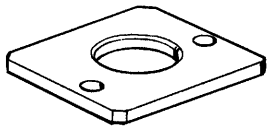 ECA9930N	Removal and installation of counter balance shaft rear bearing (use with 09212-32100, 09212-32200)
Plug cap wrench (09213-33000)	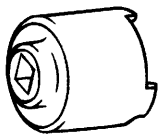 ECA9930O	Removal and installation of front case cap plug
Crankshaft front oil seal installer (09214-32000)	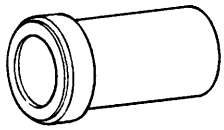 ECA9930A	Installation of the crankshaft front oil seal (use with 09214-32100)

Tool (Number and name)	Illustration	Use
Crankshaft front oil seal guide (09214-32100)	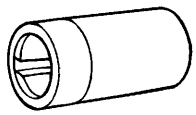 ECA9930B	Installation of the crankshaft front oil seal (use with 09214-32000)
Camshaft oil seal installer (09221-21000)	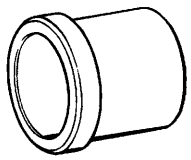 ECA9930C	Installation of the camshaft oil seal (use with 09221-21100)
Camshaft oil seal guide (09221-21100)	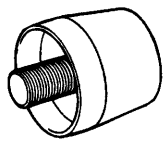 E2121100	1. Used as a guide when pressing in the camshaft oil seal (use with 09221-21000)
Cylinder head bolt socket (09221-32001)	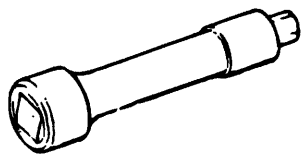 ECHA001E	Removal and installation of cylinder head bolts
Valve guide installer (09222-21200A, 09222-21200B)	 ECA9930G	Removal and installation of valve guides
Valve spring compressor (09222-28000) Valve spring compressor holder (09222-28100)	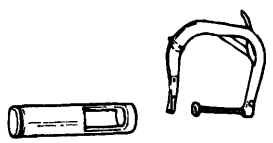 ECA9930E	Removal and installation of inlet and exhaust valves
Valve stem oil seal install (09222-28200)	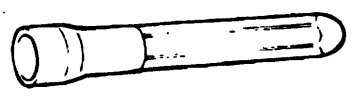 ECHA001G	Installation of valve stem oil seals

Tool (Number and name)	Illustration	Use
Valve guide installer adapter (09222-28400)	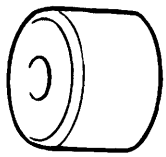 ECHA001I	Installation of valve guides
Crankshaft rear oil seal installer (09231-21000)	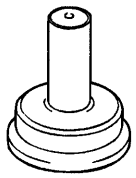 ECA9930H	1. Installation of the engine rear oil seal 2. Installation of the crankshaft real oil seal
Piston pin remover and installer kit (09234-33001)	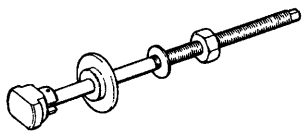 ECA9930L	Removal and installation of piston pins
insert (09234-33002)	 ECA9930J	Removal and installation of piston pins (use with 09234-33001)

TROUBLESHOOTING

ECHA0400

Symptom	Probable cause	Remedy
Low compression	Damaged cylinder head gasket	Replace gasket
	Worn or damaged piston rings	Replace rings
	Worn piston or cylinder	Repair or replace piston and/or cylinder block
	Worn or damaged valve seat	Repair or replace valve and/or seat ring
Oil pressure drop	Low engine oil level	Check engine oil level
	Faulty oil pressure switch	Replace
	Clogged oil filter	Replace
	Worn oil pump gears or cover	Replace
	Thin or diluted engine oil	Change and find out cause
	Oil relief valve stuck (open)	Repair
	Excessive bearing clearance	Replace
High oil pressure	Oil relief valve stuck (closed)	Repair
Excessive engine vibration	Loose engine roll stopper (front, rear)	Re-tighten
	Loose transaxle mount bracket	Re-tighten
	Loose engine mount bracket	Re-tighten
	Loose center member	Re-tighten
	Broken transaxle mount insulator	Replace
	Broken engine mount insulator	Replace
	Broken engine roll stopper insulator	Replace
Noisy valves	Thin or diluted engine oil (low oil pressure)	Change
	Worn or damaged valve stem or valve guide	Replace
Connecting rod and/main beaing noise	Insufficient oil supply	Check engine oil level
	Thin or diluted engine oil	Change and find out cause
	Excessive bearing clearance	Replace
Timing belt noise	Incorrect belt tension (alternator tensioner, timing belt)	Adjust belt tension
Low coolant level	Leakage of coolant	
	Damaged radiator core joint	Replace
	Corroded or cracked hoses (radiator hose, heater hose, etc)	Replace
	Faulty radiator cap valve or setting of spring	Replace
	Faulty thermostat	Replace
	Faulty engine coolant pump	Replace
Clogged radiator	Foreign material in coolant	Replace

Symptom	Probable cause	Remedy
Abnormally high coolant temperature	Faulty thermostat	Replace
	Faulty radiator cap	Replace
	Restricted of flow in cooling system	Replace
	Loose or missing drive belt	Adjust or replace
	Faulty engine coolant pump	Replace
	Faulty temperature sensor wiring	Repair or replace
	Faulty electric fan	Repair or replace
	Faulty thermo-sensor on radiator	Replace
	Insufficient coolant	Refill coolant
Abnormally low coolant temperature	Faulty thermostat	Replace
	Faulty temperature sensor wiring	Repair or replace
Leakage from oil cooling system	Loose hose and pipe connection	Retighten
	Blocked or collapsed hose and pipe	Replace
Inoperative electrical cooling fan	Damaged, fuse	Replace or repair
Exhaust gas leakage	Loose connections	Retighten
	Broken pipe or muffler	Repair or replace
Abnormal noise	Detached baffle plate in muffler	Replace
	Broken rubber hanger	Replace
	Pipe or muffler contacting vehicle body	Correct
	Broken pipe or muffler	Repair or replace

CHECKING ENGINE OIL ECJA0500

1. Position a vehicle on a level surface.
2. Turn off the engine.

NOTE

If a vehicle that has not been used for a prolonged period, run the engine for several minutes.

Turn off the engine and wait for 5 minutes at least, and then check the oil level.

3. Check that the engine oil level is within the level range indicated on the oil dipstick. If the oil level is found to have fallen to the lower limit (the "L" mark), refill to the "F" mark.

NOTE

When refilling, use the proper grade of engine oil.

4. Check that the oil is not dirty or mixed with coolant or gasoline and it has the proper viscosity.

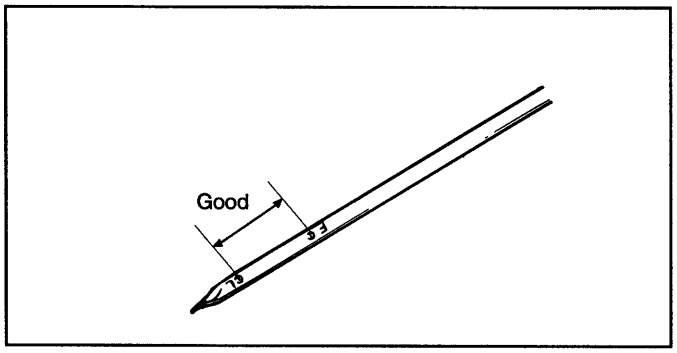

EDA9000A

SELECTION OF ENGINE OIL

ECJA0600

Recommended API classification: SD OR ABOVE SE OR ABOVE [For EC.]

Recommended SAE viscosity grades:

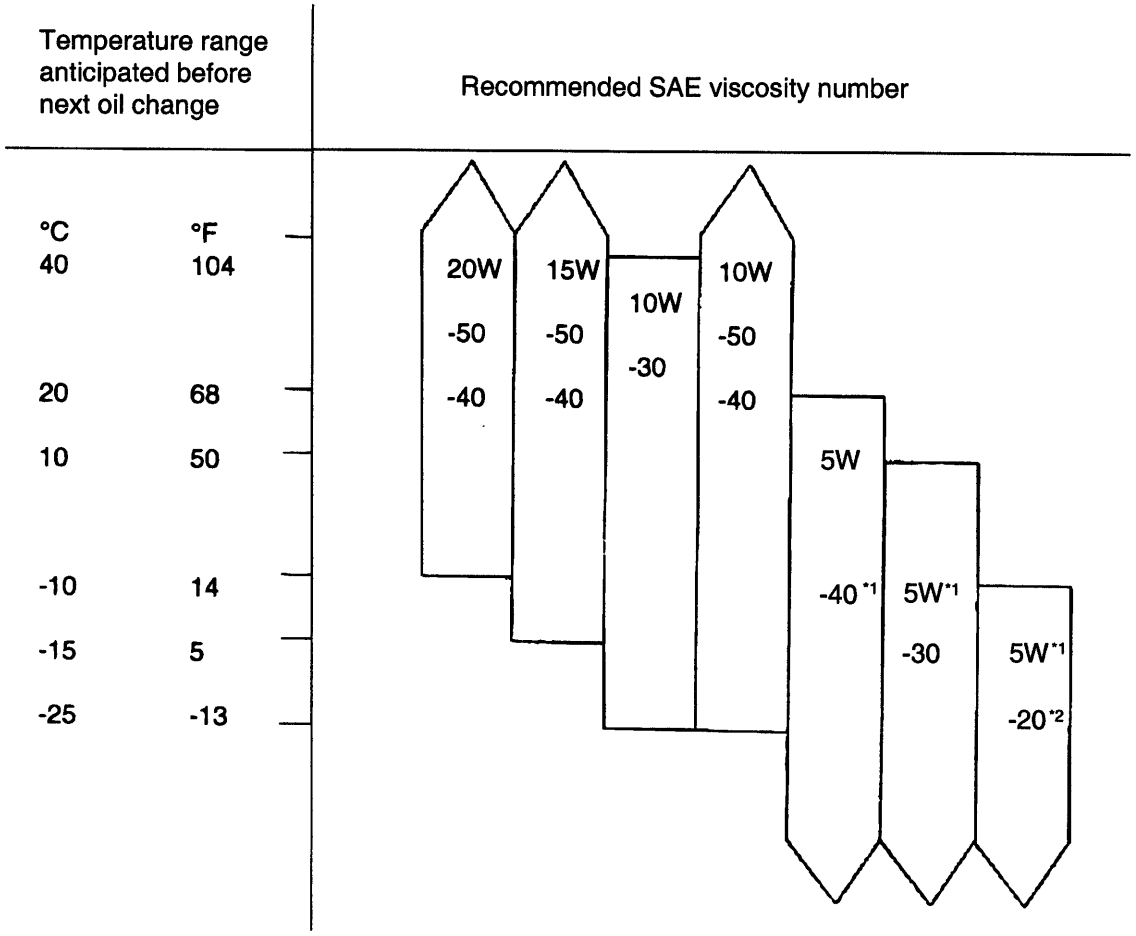

***1 Restricted by driving condition and dealing area.**
***2 Not recommended for sustained high speed vehicle operation**

EDA9990B

NOTE

For best performance and maximum protection of all types of operation, select only those lubricants which:

1. **Satisfy the requirements of the API classification.**
2. **Have the proper SAE grade number for expected ambient temperature range.**

Lubricants which do not have both SAE grade number and an API service classification on the container should not be used.

CHANGING ENGINE OIL ECJA0700

1. Run the engine until it reaches normal operating temperature.
2. Turn off the engine.
3. Remove the oil filler cap and the drain plug. Drain the engine oil.
4. Tighten the drain plug to the specified torque.

Tightening torque

Oil pan drain plug :

35-45 Nm (350-450 kg.cm, 25-33 lb.ft)

NOTE

Whenever tightening the oil drain plug, use a new drain plug gasket.

5. Fill new engine oil through the oil filler cap opening.

Capacity :

Drain and refill : 4.3 lit (4.53 U.S.qts., 3.78 Imp.qts.)

NOTE

Do not overfill. This will cause oil aeration and loss of oil pressure.

6. Install the oil filler cap.
7. Start and run the engine.
8. Turn off the engine and then check the oil level. Add oil if necessary.

REPLACING THE OIL FILTER ECJA0800

All Hyundai Motor Company engines are equipped with a high quality, disposable oil filter. This filter is recommended as a replacement filter for all vehicles. The quality of aftermarket replacement filters is considerably diverse.

High quality replacement filters should be used to assure the most efficient service. Make sure that the rubber gasket from the old oil filter is completely removed from the contact surface on the engine block before installing a new filter.

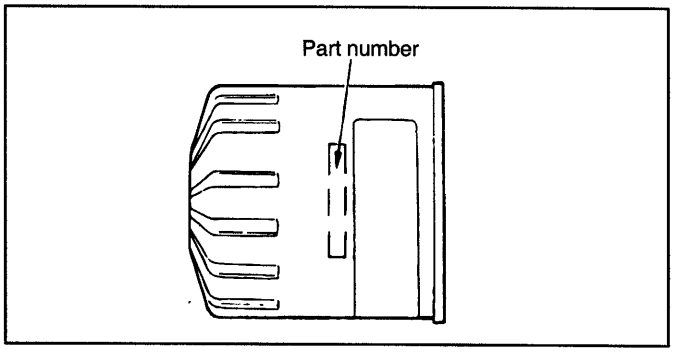

ECA9970A

PROCEDURE FOR REPLACING THE OIL FILTER

1. Use a filter wrench to remove the oil filter.
2. Before installing a new oil filter on the engine, apply clean engine oil to the surface of the rubber gasket.
3. Tighten the oil filter to the specified torque.

Oil filter : 12-16 Nm (120-160 kg.cm, 9-12 lb.ft)

4. Start and run the engine and check for engine oil leak.
5. After turning off the engine, check the oil level and add oil as necessary.

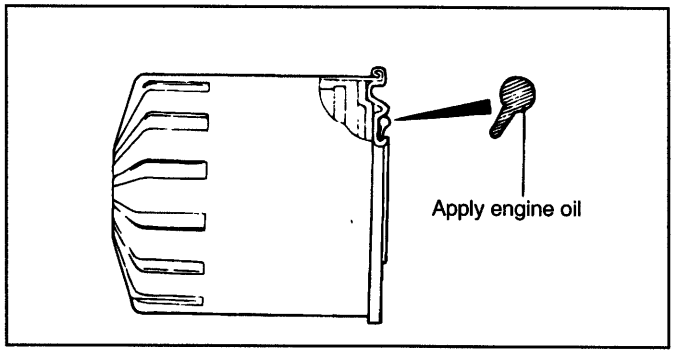

ECA9970B

CHECKING COOLANT LEAK ECJA0900

1. Loosen the radiator cap.
2. Confirm that the coolant level is up to the filler neck.
3. Install a radiator cap tester to the radiator filler neck and apply 150 KPa (21psi, 1.53 kg/cm^2) pressure. Hold it for two minutes in that condition while checking for leakage from the radiator, hoses or connections.

NOTE

1. **Radiator coolant may be extremely hot. Do not open the system because hot, or scalding water could gush out causing personal injury. Allow the vehicle to cool before servicing this system.**
2. **When the tester is removed, be careful not to spill any coolant from it.**
3. **Be sure to clean away completely any from the area.**
4. **Be careful when installing and removing the tester and when testing, not to deform the filler neck of the radiator.**

4. If there is leakage, repair or replace with the appropriate part.

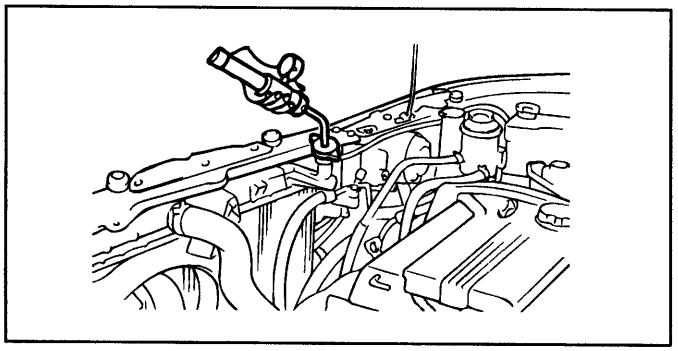

EDJA100A

RADIATOR CAP PRESSURE TEST

1. Use an adapter to attach the cap to the tester.
2. Increase the pressure until the gauge stops moving.

Main valve opening pressure :

107.9kPa±14.7kPa (1.1±0.15 kg/cm^2, 15.64±2.13)

Main valve closing pressure :

83.4 kPa (0.85 kg/cm^2, 12.1 psi)

3. Check that the pressure level is maintained at or above the limit.
4. Replace the radiator cap if the reading does not remain at or above the limit.

NOTE

Be sure that the cap is clean before testing, since rust or other foreign material on the cap seal will cause an incorrect reading.

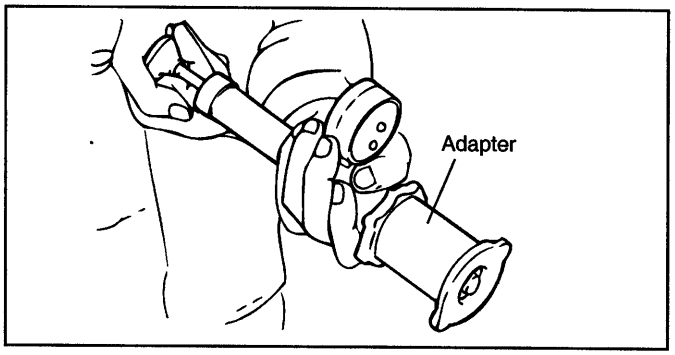

ECA9090A

SPECIFIC GRAVITY TEST ECJA1000

1. Measure the specific gravity of the coolant with a hydrometer.
2. Measure the coolant temperature and calculate the concentration from the relation between the specific gravity and temperature, using the following table for reference.

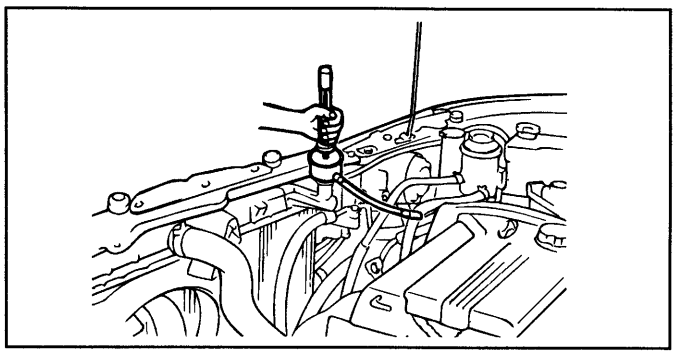

EDJA110A

RELATION BETWEEN COOLANT CONCENTRATION AND SPECIFIC GRAVITY

Coolant temperature °C (°F) and specific gravity					Freezing temperature °C (°F)	Safe operating temperature °C (°F)	Coolant concentration (Specific volume)
10 (50)	20 (68)	30 (86	40 (104)	50 (122)			
1.054	1.050	1.046	1.042	1.036	-16 (3.2)	-11 (12.2)	30%
1.063	1.058	1.054	1.049	1.044	-20 (-4)	-15 (5)	35%
1.071	1.067	1.062	1.057	1.052	-25 (-13)	-20 (-4)	40%
1.079	1.074	1.069	1.064	1.058	-30 (-22)	-25 (-13)	45%
1.087	1.082	1.076	1.070	1.064	-36 (-32.8)	-31 (-23.8)	50%
1.095	1.090	1.084	1.077	1.070	-42 (-44)	-37 (-35)	55%
1.103	1.098	1.092	1.084	1.076	-50 (-58)	-45 (-49)	60%

Example

The safe operating temperature is -15°C (5°F) when the measured specific gravity is 1.058 at coolant temperature of 20°C (68°F)

CAUTION

- **If the concentration of the coolant is below 30%, its anti-corrosion properties will be adversely affected.**
- **if the concentration is above 60%, both the anti-freeze and engine cooling property will decrease, affecting the engine adversely. For these reasons, be sure to maintain the concentration level within the specified range.**
- **Do not mix types of anti-freeze.**

RECOMMENDED COOLANT

Antifreeze	Mixture ratio of anti freeze in coolant
ETHYLENE GLYCOL BASE FOR ALUMINUM	50% [Except tropical areas] 40% [Tropical areas]

CHECKING COMPRESSION PRESSURE ECJA1100

1. Before checking engine compression, check the engine oil level. Also check that the starter motor and battery are all in normal operating condition.
2. Start the engine and wait until the engine coolant temperature reaches 80-95°C (176-205°F).
3. Turn off the engine and disconnect the spark plug cables.
4. Remove the spark plugs.
5. Crank the engine to remove any foreign material in the cylinders.
6. Insert the compression gauge into the spark plug hole.
7. Depress the accelerator pedal to open the throttle fully.
8. Crank the engine and read the gauge.

Standard value : 1200kpa (12.2Kg/cm^2, 170 psi)

Limit : 12.0 kg/cm^2 (1.18 MPa, 171 psi)

9. Repeat steps 6 to 8 for all cylinders, ensuring that the pressure difference for each of the cylinders is within the specified limit.

Limit : Max. 100 kpa (1.0 kg/cm^2 ,14 psi) between cylinders

10. If a cylinder's compression or pressure differential is outside the specification, add a small amount of oil through the spark plug hole, and repeat steps 6 to 9.
    1) If the addition of oil causes the compression to rise, it is likely that there may be wear between the piston ring and cylinder wall.
    2) If compression remains the same, valve seizure, poor valve seating or a compression leak from the cylinder head gasket are all possible causes.

Tightening torque

Spark plug : 20-30 Nm (200-300 kg.cm, 14-22 lb.ft)

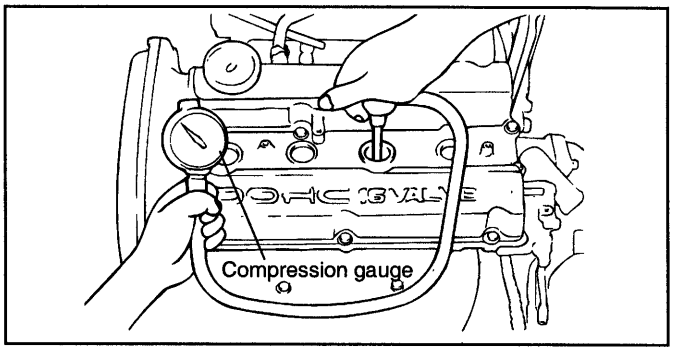

ECA9001A

ADJUSTING DRIVE BELT TENSION ECJA1200

1. Check that the belts are not damaged and are properly placed for the pulley grooves.
2. Apply 100 N (22 lbs.) force to the back and midway portion of the belt between the pulleys as shown in the illustration and measure the amount of deflection with a tension gauge.

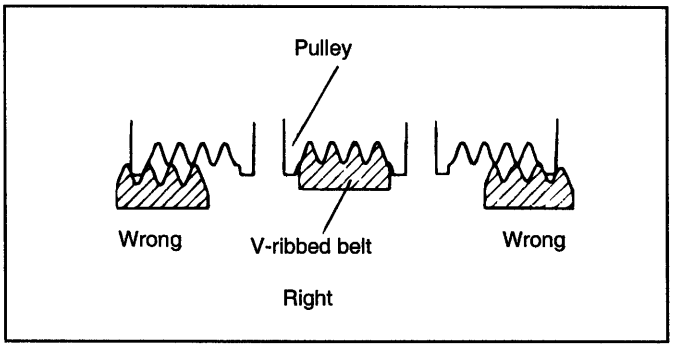

ECA9980A

CAUTION

1. **When installing the V-ribbed belt, check that the V-ribs are properly aligned.**
2. **If noise or slippage is detected, check the belt for wear, damage, or breakage on the pulley contact surface, and check the pulley for scoring. Also check the amount that the belt is deflected.**

STANDARD VALUE:

Items		Inspection	Adjustment	
			New	Used
For alternator	Deflection mm (in.)	9.0-10.4 (0.35-0.41)	7.5-9.0 (0.30-0.35)	10 (0.40)
	Tension N (lb)	350-500 (79-112)	600-700 (135-157)	400 (90)
For air conditioner	Deflection mm (in.)	8 (0.31)	5.0-5.5 (0.20-0.22)	6.0-7.0 (0.24-0.28)
	Tension N (lb)	250-500 (56-112)	470-570 (106-128)	320-400 (72-90)
For power steering	Deflection mm (in.)	6.0-9.0 (0.24-0.35)	-	-

NOTE

1. **The belt tension must be measured half-way between the specified pulleys.**
2. **When a new belt is installed, adjust the tension to the central value of the standard range indicated under "New" in the above table. Let the engine idle for 5 minutes or more, and check the standard value indicated under "Inspection."**
3. **When adjusting a belt which has been used, or a belt installed newly after 5 minutes or more of operation, refer to the standard value indicated under "Used" in the above table.**
4. **Refer to the standard value indicated under "Inspection" for periodic inspections.**

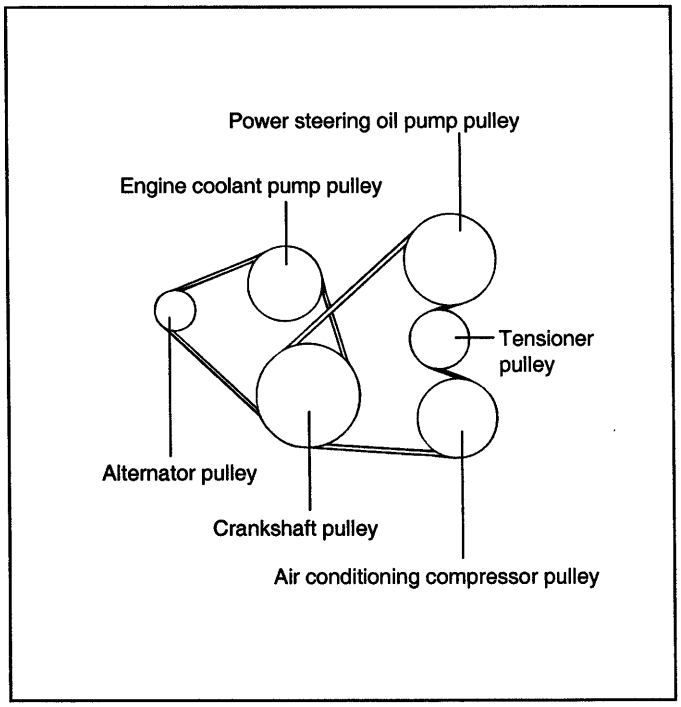

ECA9002A

TYPE A TENSION GAUGE

Do not let the dial section of the tension gauge contact other objects during measurement.

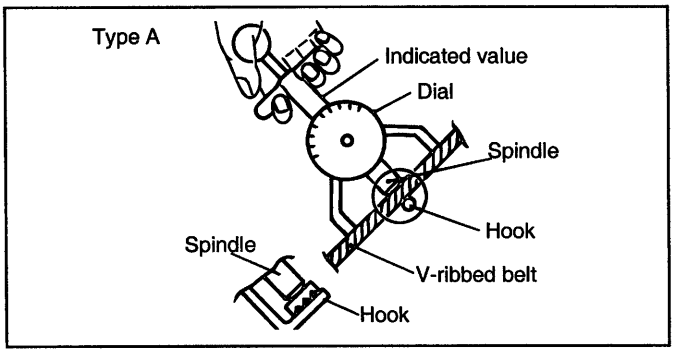

ECA9980C

TYPE B TENSION GAUGE

1. When measuring, turn the reset button in the direction of the arrow and set the gauge needle to the RESET position.

2. If the tension gauge is removed from the belt, the needle will still indicate the tension.Read the tension value after removing the gauge.

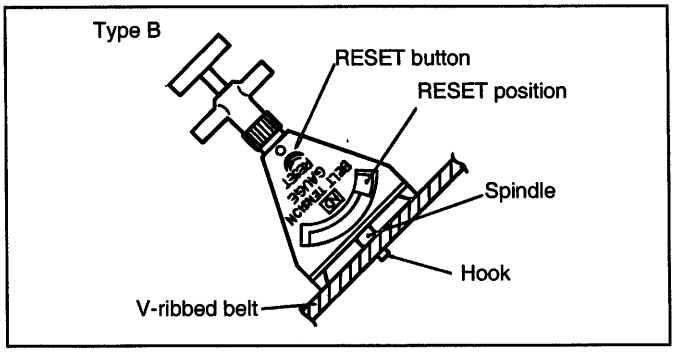

ECA9980D

ADJUSTING THE ALTERNATOR BELT

CAUTION

If the belt is too loose, it will cause noise or sudden wear.

If the belt is too tight, the engine coolant pump bearing or the alternator can be damaged.

1. Loosen the alternator nut "A" and the tension adjuster lock bolt "B".
2. Using the tension adjuster bolt, adjust the belt tension to the specification.
3. Tighten the adjuster lock bolt "B".
4. Tighten the alternator nut "A".
5. Check the tension or the deflection of belt, and readjust if necessary.

Tightening torque

Alternator nut A :

35-55 Nm (350-550 kg.cm, 25-40 lb.ft)

Adjuster lock bolt B :

20-25 Nm (200-250 kg.cm, 14-18 lb.ft)

Tension adjuster bolt :

8-12 Nm (80-120 kg.cm, 6-9 lb.ft)

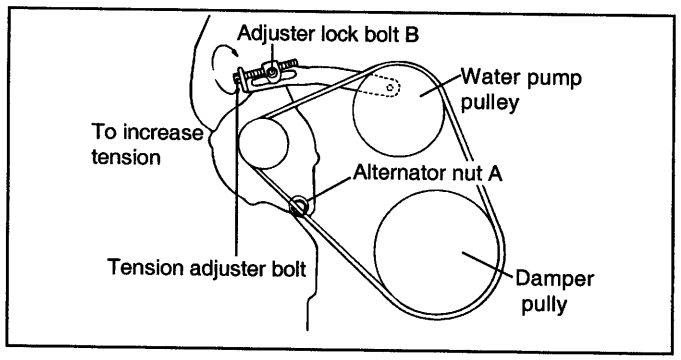

ECA9003A

ADJUSTING POWER STEERING AND AIR CONDITIONER BELTS

1. Loosen the tension pulley adjustment bolt A.
2. Adjust the belt deflection with adjustment bolt B.
3. Tighten bolt A.
4. Recheck the belt deflection and readjust, if necessary.

NOTE

Before rechecking, crank the engine one more revoltion.

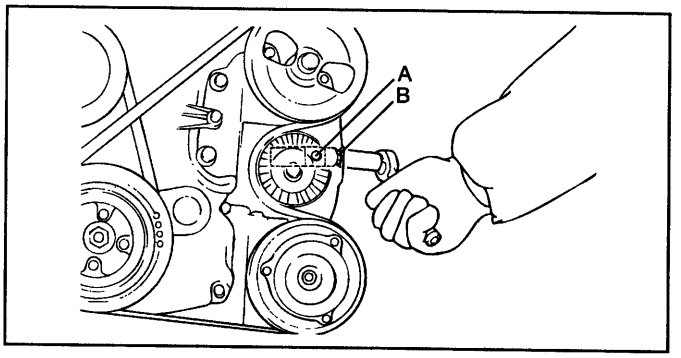

ECA9004A

CYLINDER BLOCK

CYLINDER BLOCK

CYLINDER BLOCK ECHA1500

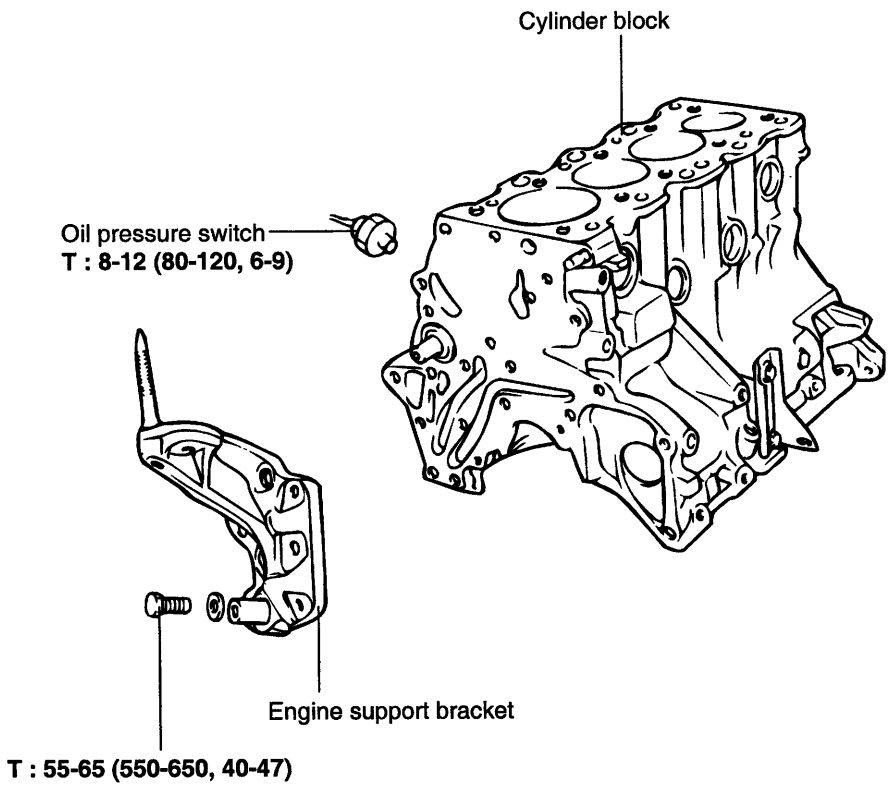

TORQUE : Nm (kg·cm, lb·ft)

ECHA150A

DISASSEMBLY ECHA1600

Remove the cylinder head, timing belt, front case, flywheel, pistonsand crankshaft.

For further details, refer to the appropriate section.

INSPECTION ECHA1750

CYLINDER BLOCK

1. Check the cylinder block for scores, rust and corrosion. Also check for cracks or any other defects. Replace the block if defective.
2. Measure the cylinder bore with a cylinder gauge at the three levels indicated and in the directions of A and B.

Level 1: No. 1 piston ring position at TDC

Level 2 : Center of cylinder

Level 3 : Bottom of cylinder

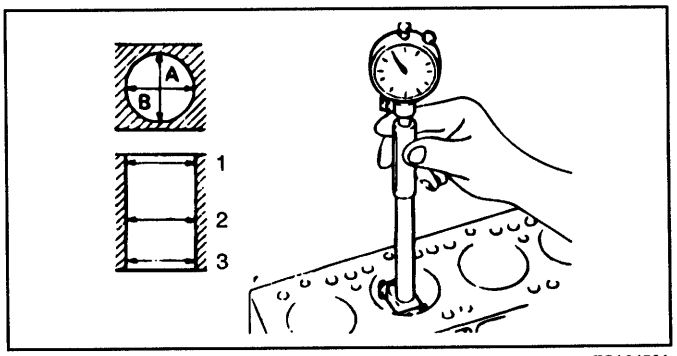

ECA9450A

3. If the cylinder bores show more than specified out-of-round or taper, or if the cylinder walls are badly scuffed or scored, the cylinder block should be rebored and honed. New oversize piston and rings should be installed.

Standard value

Cylinder bore :

86.5+0.03 mm (3.41+0.0012 in.) [2.4L]

85.0+0.03 mm (3.35+0.0012 in.) [2.0L]

Out-of -round and taper of cylinder bore :

Max. 0.01mm(0.0004 in.)

4. If a ridge exists at the top of the cylinder, cut it away with a ridge reamer.

PISTON SERVICE SIZE AND MARK MM (IN.)

Identification Mark	Size
0.50	0.50 (0.020) O.S.

5. To rebore the cylinder bore to oversize, maintain the specified clearance between the oversize piston and the bore, and make sure that all pistons used are of the same oversize. The standard measurement of the piston outside diameter is taken at a level 2 mm (0.08 in.) above the bottom of the piston skirt and across the thrust faces.

Piston-to-cylinder clearance :

0.02-0.04mm(0.0008-0.0016 in.)

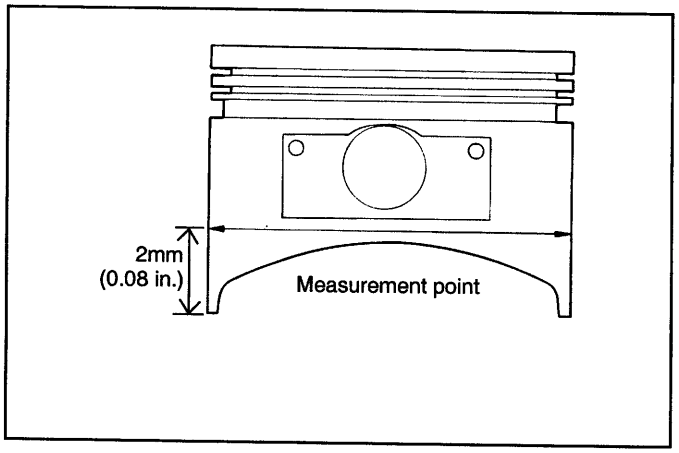

ECA9451A

6. Check for damage and cracks.

7. Check the top surface of the cylinder block for flatness. If the top surface exceeds limits, surface to minimum limit or replace.

Standard value

Flatness of cylinder block : Max. 0.05mm(0.0020 in.)

Service limit

Flatness of cylinder block : 0.1mm(0.0039 in.)

NOTE

When the cylinder head is assembled, grinding less than 0.2 mm (0.008 in.) is permissible.

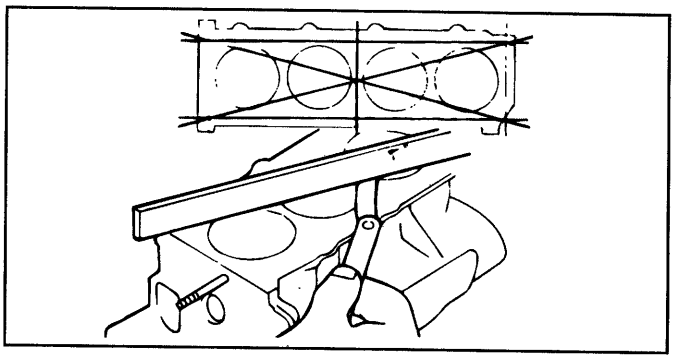

ECA9450B

BORING CYLINDER

1. Oversize pistons should be selected on the basis of the largest cylinder bore.

Identification Mark	Size
0.50	0.50 mm (0.020 in.) O.S.

NOTE

The size of a piston is stamped on top of the piston.

2. Measure the outside diameter of the piston to be used.

3. On the basis of the measured O.D., calculate the new bore size.

   New bore size = Piston O.D + 0.02 to 0.04 mm (0.0008 to 0.0016 in.) (clearance between piston and cylinder) - 0.02 mm (0.0008 in.) (honing margin.)

4. Bore each of cylinders to the calculated size.

NOTE

To prevent distortion that may result from temperature rise during honing, bore the cylinders, holes in the firing order sequence.

5. Hone the cylinders, finishing them to the proper dimension (piston outside diameter + gap with cylinder).

6. Verify the clearance between the piston and cylinder.

NOTE

When boring cylinders, finish all four cylinders to the same oversize. Do not bore only one cylinder to the oversize.

REASSEMBLY ECHA1800

Install the following parts by referring to their respective paragraphs.

1. Crankshaft
2. Flywheel
3. Piston
4. Cylinder head
5. Timing belt train
6. Front case

ENGINE MOUNTS

ENGINE MOUNTING ECJA2000

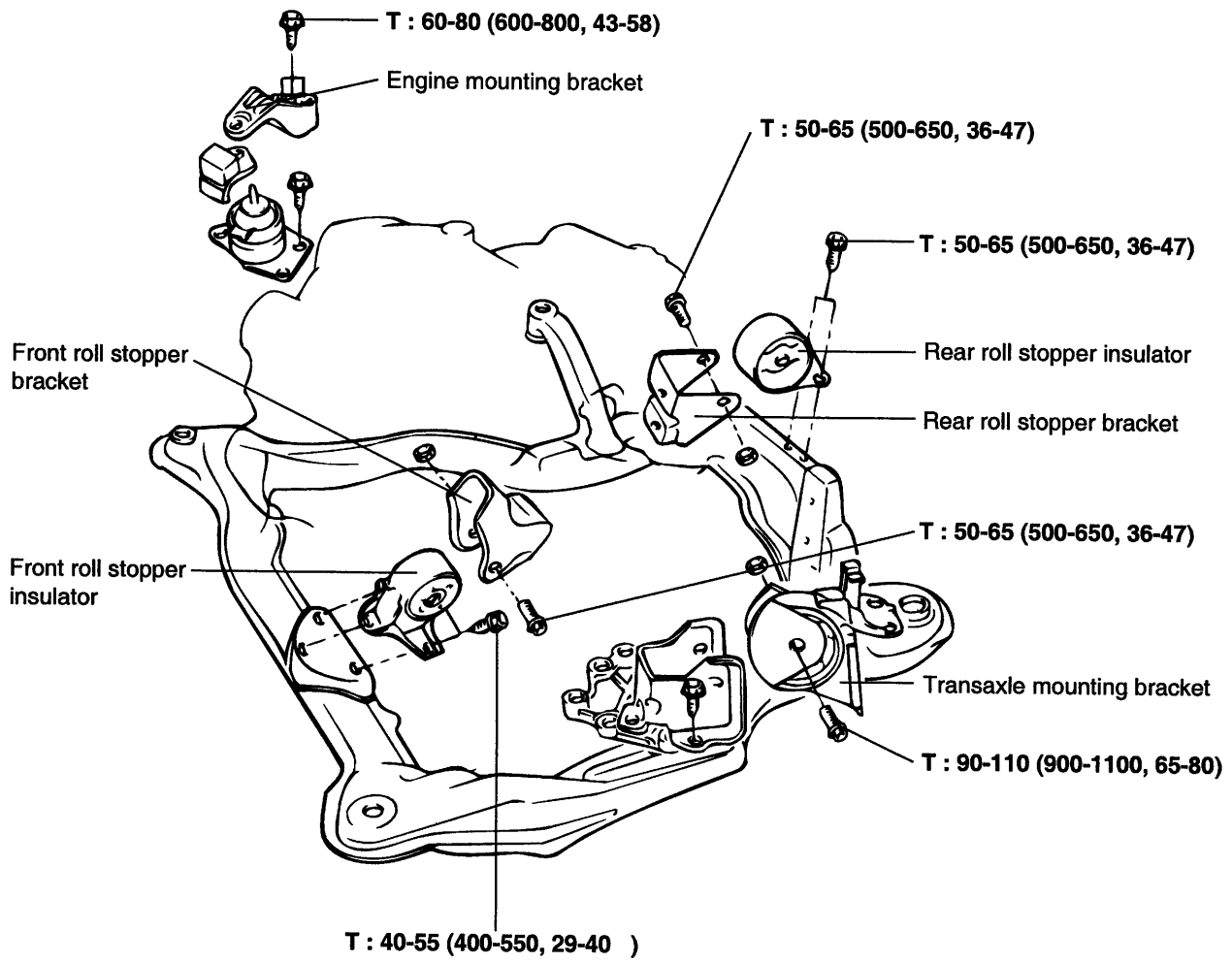

TORQUE : Nm (kg.cm, lb-ft)

EDJA300A

REMOVAL ECJA2100

Attach a chain or cable to the engine hooks and lift enough so that there is no pressure on the motor mounts.

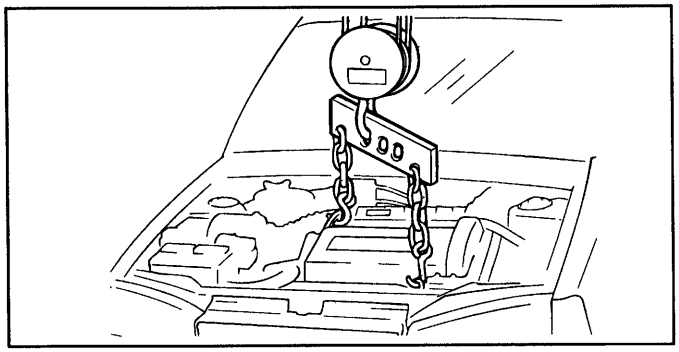

ECA9120A

ENGINE MOUNTING

1. Remove the engine mounting insulator bolts.
2. Remove the engine mounting bracket from the engine.

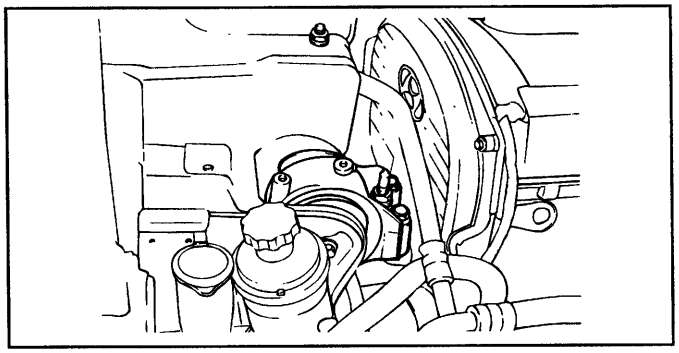

ECA9006A

TRANSAXLE MOUNTING

1. Remove the transaxle mounting insulator bolts.
2. Remove the tranaxle mounting bracket from the transaxle.

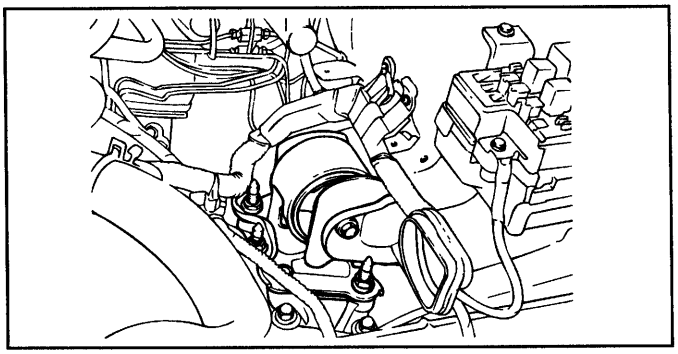

ECA9007A

FRONT ROLL STOPPER

Remove the front roll stopper bracket from the sub-frame.

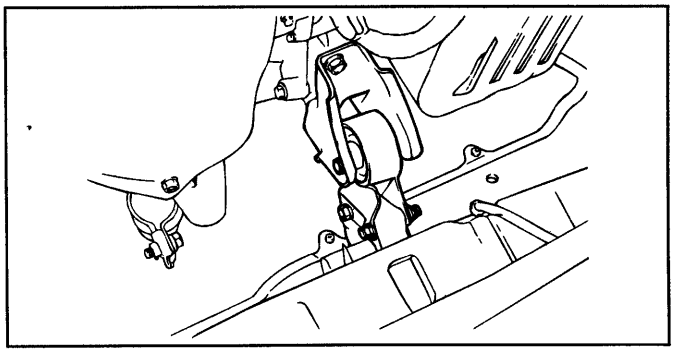

ECA9008A

REAR ROLL STOPPER

1. Remove the bolt from the rear roll stopper.
2. Remove the rear roll stopper from the subframe.

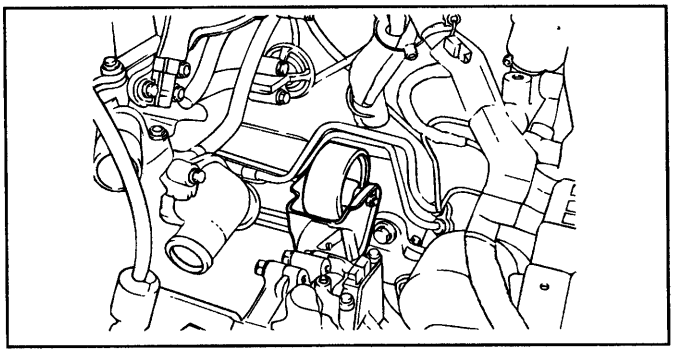

ECA9009A

INSPECTION ITEMS ECHA2200

Transaxle mounting

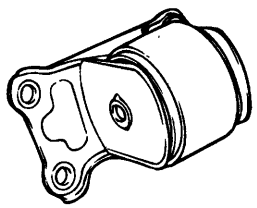

Engine mounting

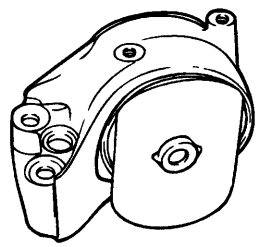

Front roll stopper assembly

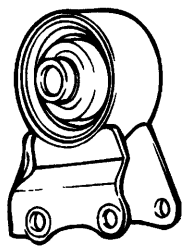

Rear roll stopper assembly

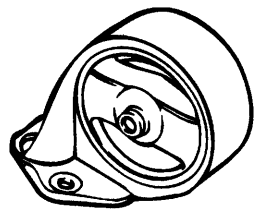

ECA9010A

ENGINE AND TRANSAXLE ASSEMBLY ECJA2300

REMOVAL

1. Remove the battery.
2. Detach the air cleaner.

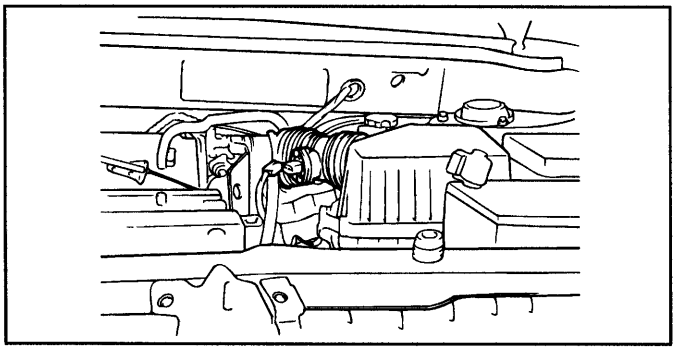

ECJA870B

3. Disconnect the engine harness connectors.
    1. Engine wiring connectors (alternator, starter, etc.)
    2. TPS connector
    3. Power steering switch connector, oil pressure gauge connector.
    4. Back up lamp switch connector.
    5. A/T solenoid, inhibitor switch connector.
    6. Coolant temperature sensor.
    7. Ignition coil, power TR connector.
    8. Idle speed control valve (ISC) connector.
    9. MAP and ATS connectors.
    10. Oxygen sensor connector.

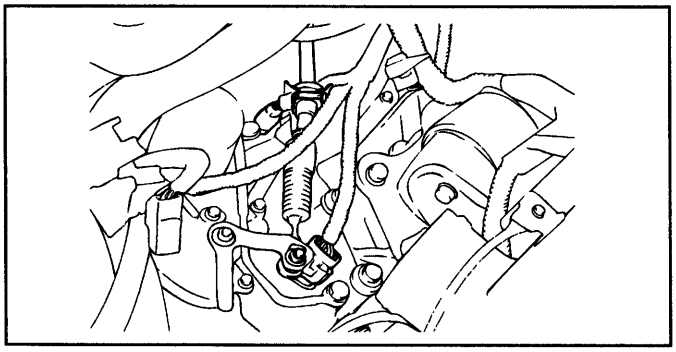

ECA9014A

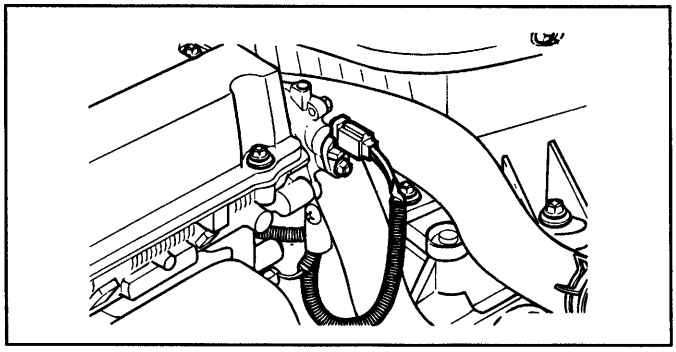

ECHA004C

4. Drain the engine coolant.
5. For a vehicle with automatic transaxles, disconnect the transaxle oil cooler hoses.

NOTE

- **When disconnecting hoses, make identification marks to avoid making any mistake when installing them again.**

CAUTION

- **Be careful not to spill any of oil or fluid out of the hoses. Plug the openings to prevent the entry of foreign material.**

6. Disconnect the radiator upper and lower hoses on the engine side then remove the radiator assembly.

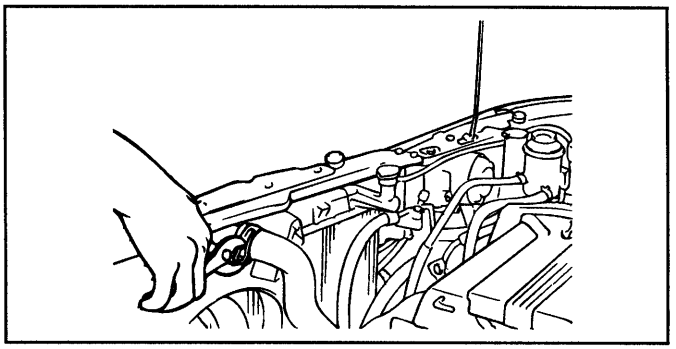

EDJA330A

7. Disconnect the engine ground.
8. Disconnect the brake booster vacuum hose.

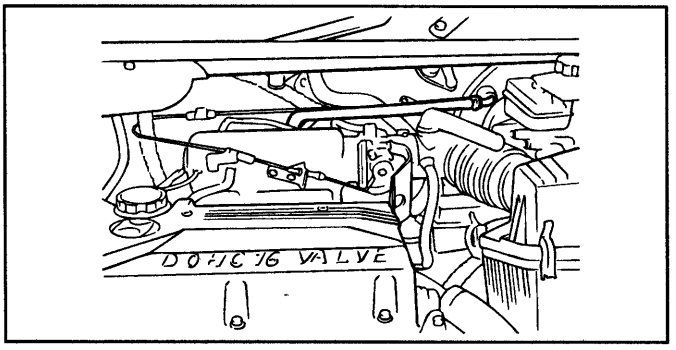

EDHA006B

9. Disconnect the heater hoses (inlet and outlet) on the engine side.

10. Disconnect the accelerator cable at the engine side.

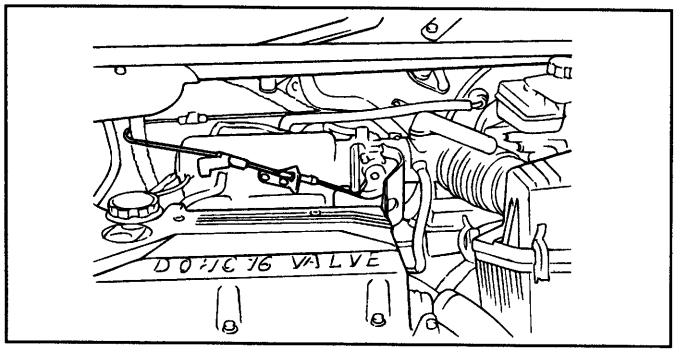

EDHA006E

11. Using a special tool, remove the main fuel line at the delivery pipe (supply/return).

12. Disconnect the speedometer cable from the transaxle.

13. Disconnect the clutch cable or control cable from the transaxle.

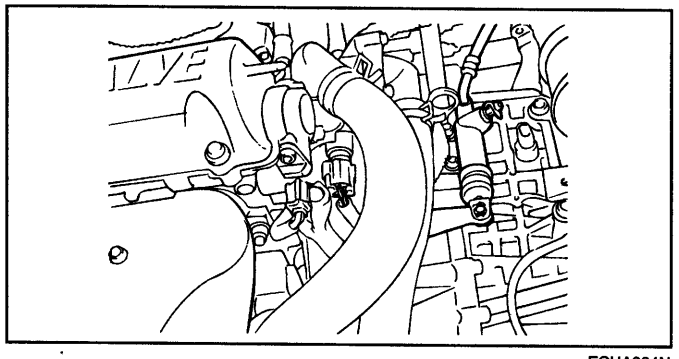

ECHA004N

14. Disconnect the power steering suction hose and return hose from the pump.

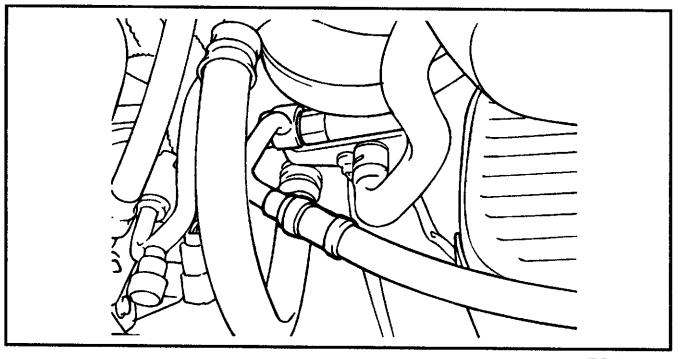

ECHA004H

15. Detach the steering dust cover in the engine compartment and then disconnect the gear box universal joint bolt.

NOTE

Make sure to make identification marks between the universal joint and the gear box for reassembly.

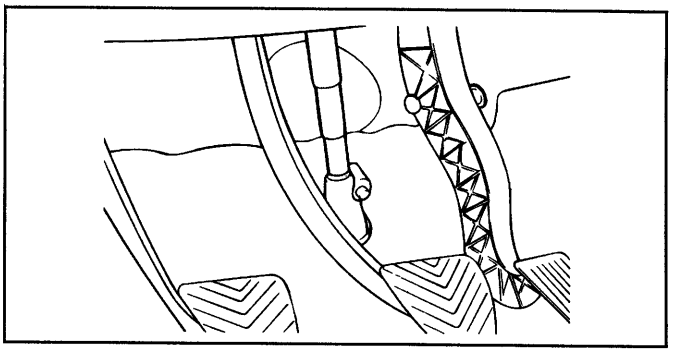

ECHA004I

16. Raise the vehicle and then remove the front tire.

17. Remove the calliper assembly from the knuckle. Tie it using wire, hang it from the suspension.

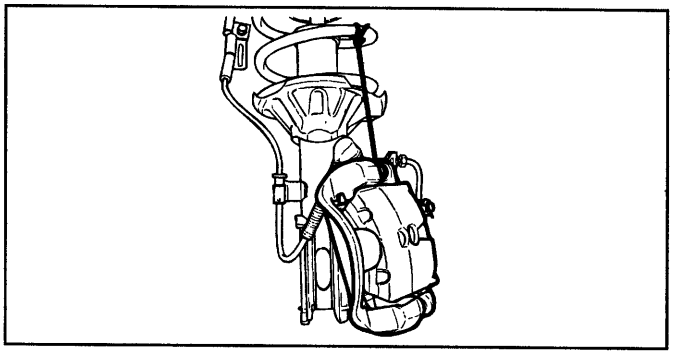

ECHA004J

18. Loosen the strut lower bolt and then remove it.

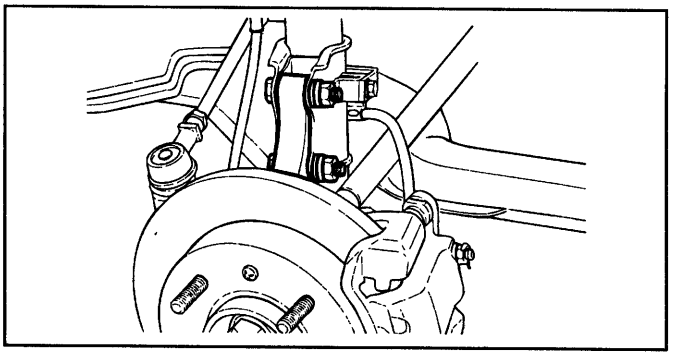

ECHA004K

19. Drain the transaxle oil.

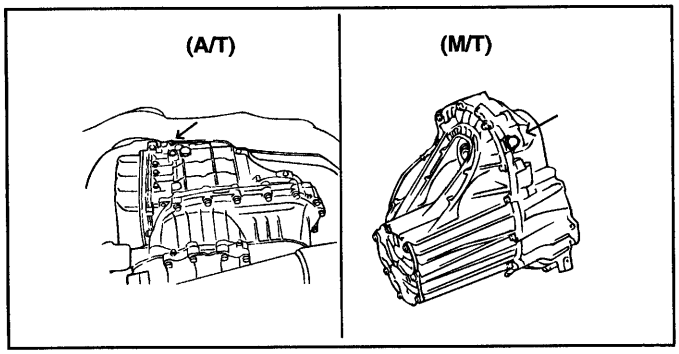

EDHA004Z

20. Remove the front muffler bolts.

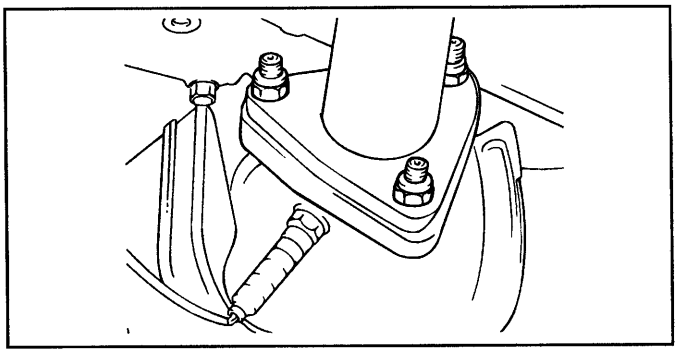

ECJA230B

21. Remove the transaxle control rod and extension rod (M/T only).

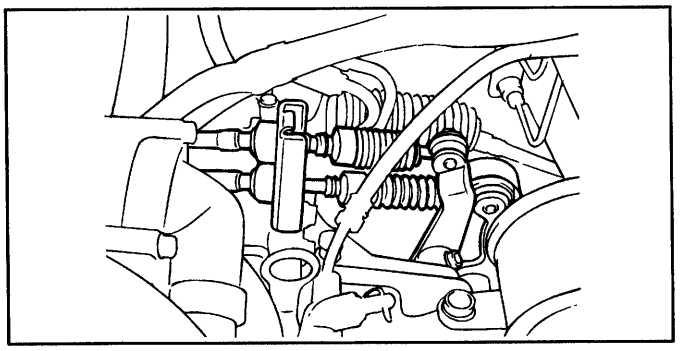

EDHA006F

22. Put the special fixture on the T/M jack and then adjust it to the sub-frame.

NOTE

Check that all the cables, harness connector and hose are disconnected from the engine and transaxle assembly.

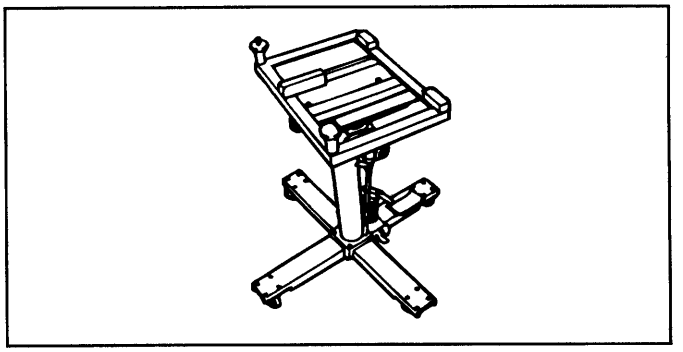

ECHA004O

23. Remove the engine mounting bracket and the transaxle mounting bracket.

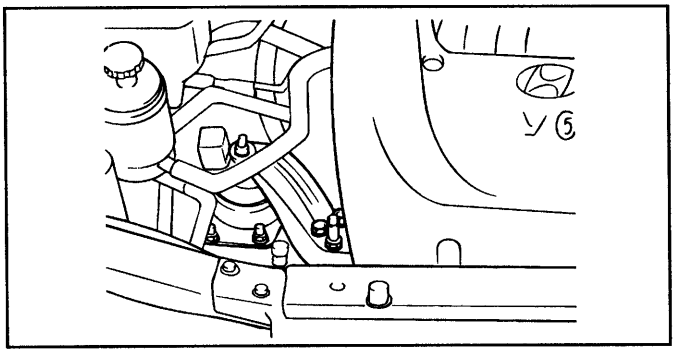

EDHA004A

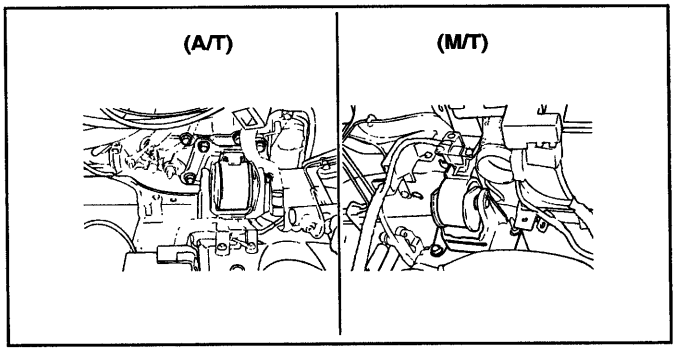

EDHA004C

24. Remove the sub-frame installation bolts.

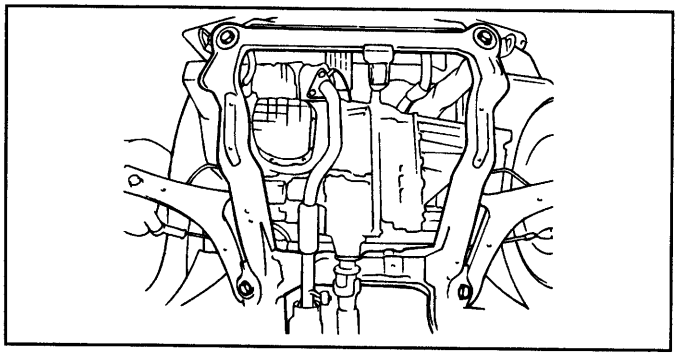

EDJA230C

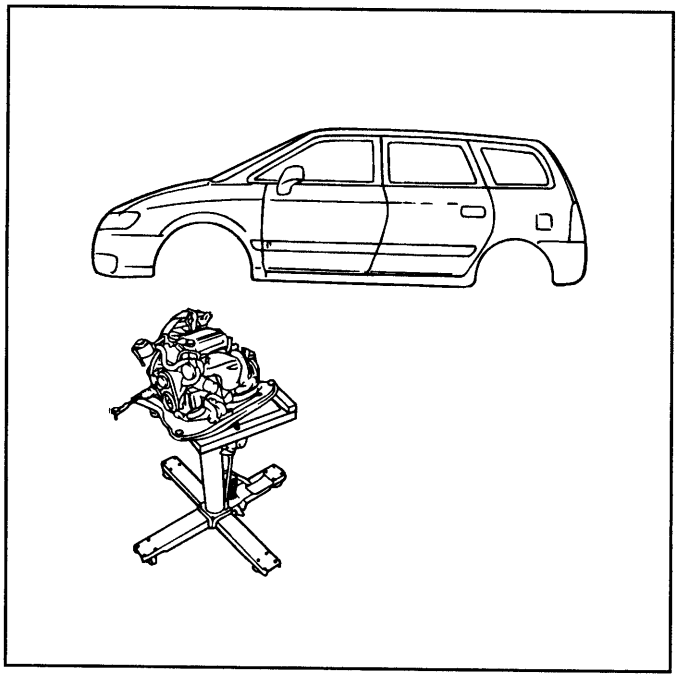

EDHA006I

25. After removing the drive shaft, lower the engine and transaxle assembly on the jack then, remove the front roll stopper and the rear roll stopper.

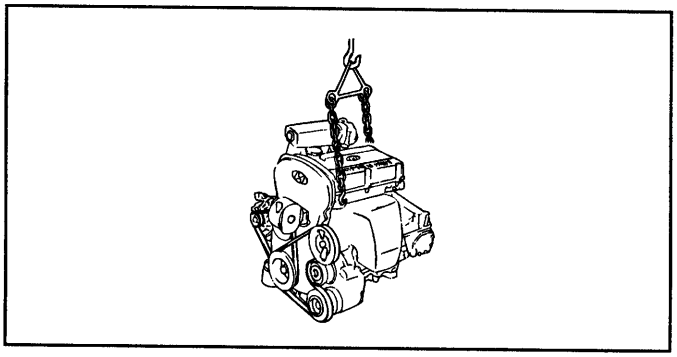

ECA9021A

26. Remove the engine and transaxle assembly as a unit.

INSTALLATION ECJA2400

1. When installing the engine and transaxle, check the connections of harnesses, pipes, hoses, etc. make sure that none of them are caught, damaged, etc.
2. Install the front roll stopper to the bracket roughly.

Tightening torque

Service standard : 50-65 Nm (500-650kg.cm, 36-47 lb.ft)

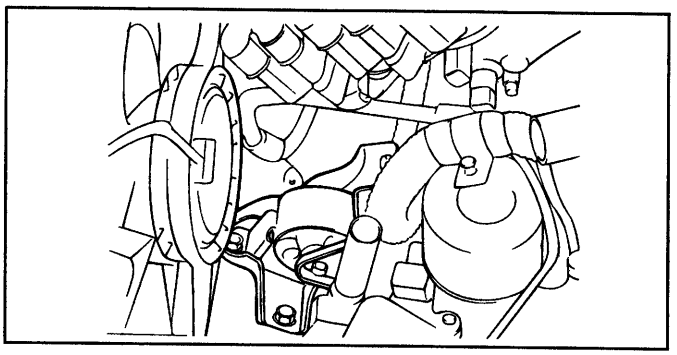

ECHA005A

3. Install the rear roll stopper to the bracket.

Tightening torque

Service standard : 50-65Nm(500-650kg.cm, 36-47 lb.ft)

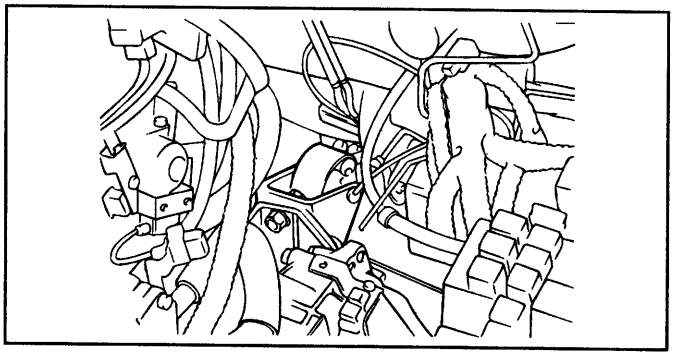

ECHA005B

4. Install the engine/transaxle to the sub-frame assembly. Use the T/M jack to raise the assembly slowly adjust it to the vehicle body.

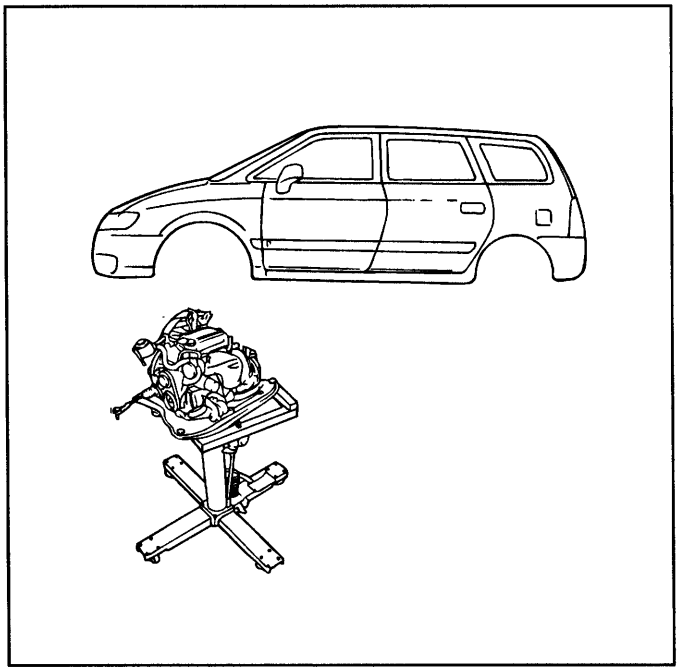

EDHA006I

5. Install the transaxle mounting bracket.

Tightening torque

Service standard : 90-110Nm(900-1100kg.cm, 65-80 lb.ft)

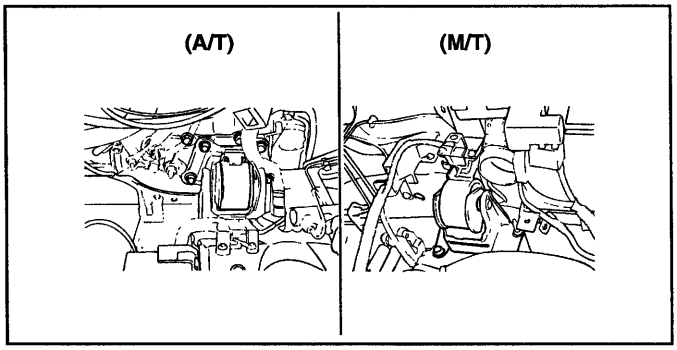

EDHA004C

6. Install the engine bracket (right side).

Tightening torque

Service standard : 60-80Nm(600-800kg.cm, 43-58 lb.ft)

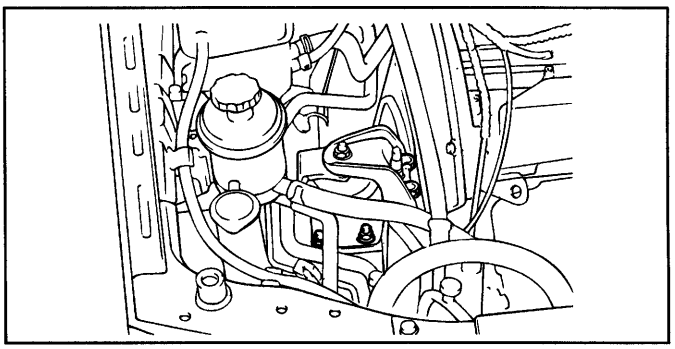

ECHA005E

7. To install all of parts, follow the removal procedures in the reverse order.
8. Refill the coolant and then check for leaks.
9. Refill the transaxle oil and check for leaks, then test its operation.
10. Check the operation of the transaxle control cable and accelerator cable.
11. Check the proper operation of each gauge.

FRONT CASE

OIL PUMP CASE, OIL PUMP AND COUNTER BALANCE SHAFT ECHA2500

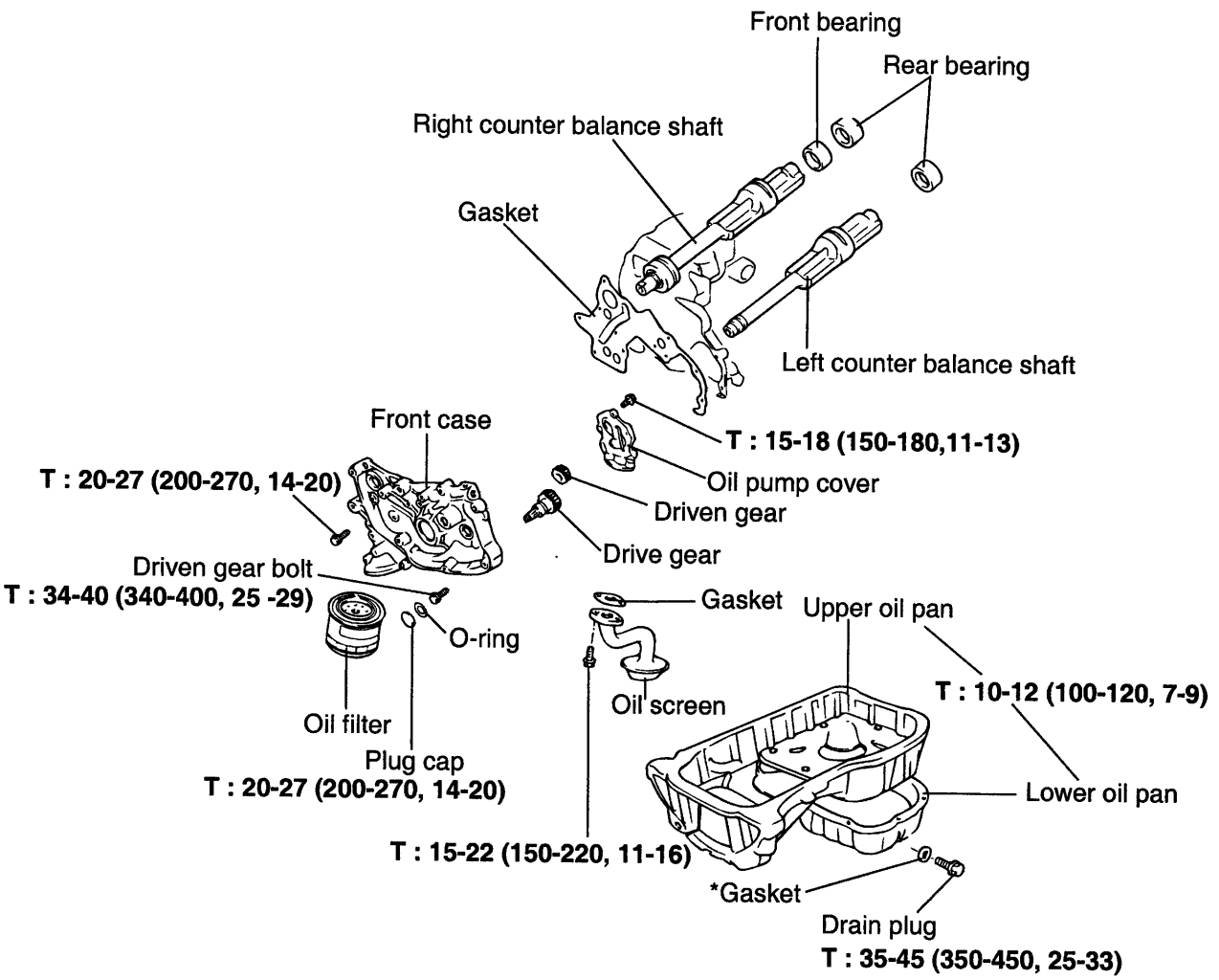

TORQUE : Nm (kg.cm, lb.ft)

*Drain plug gasket should not be used again.

ECHA250A

DISASSEMBLY ECHA2600

1. Remove the timing belt. Refer to "Timing Belt."
2. Remove all the oil pan bolts.
3. Tap the oil pan with a rubber hammer and remove the pan. (upper and lower parts)
4. Remove the oil screen and gasket.
5. Remove the front case assembly.
6. Remove the oil pressure switch.

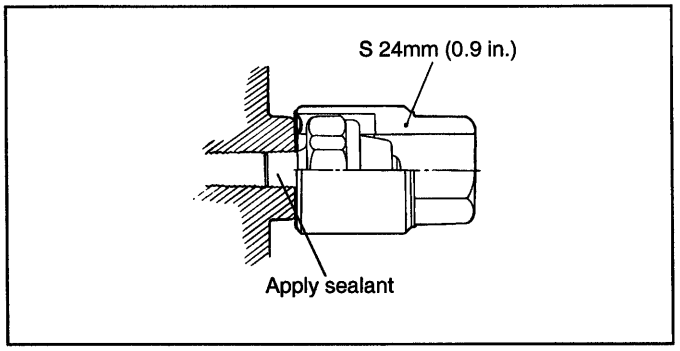

ECHA260A

7. Remove the oil filter bracket and gasket.
8. Using the special tool (09213-33000) remove the plug cap from the oil pump portion of the front case.

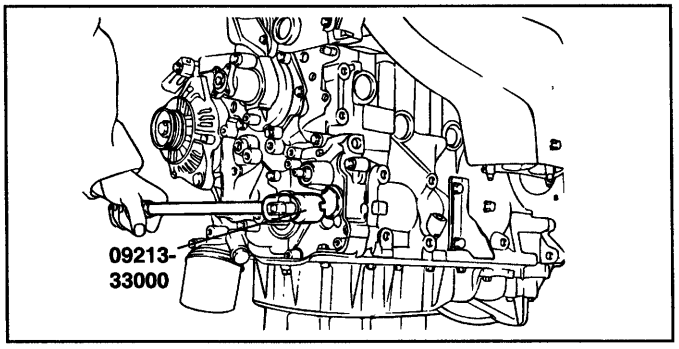

ECA9040A

9. Remove the plug on the left side of the cylinder block and insert a screw driver with an 8 mm (0.32 in.) diameter into the plug hole. The screwdriver must be inserted more than 60 mm (2.4 in.)

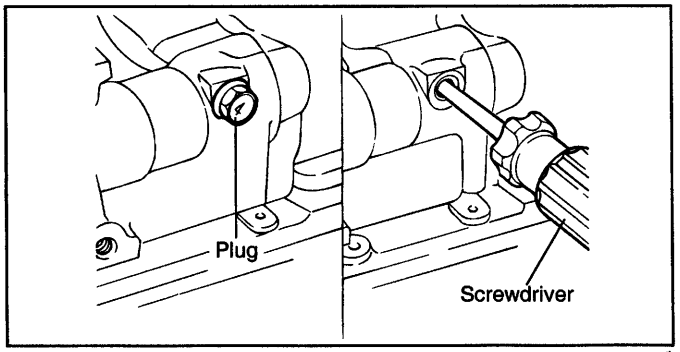

ECA9310C

10. Remove the oil pump driven gear and the left counter balance shaft retaining bolt.

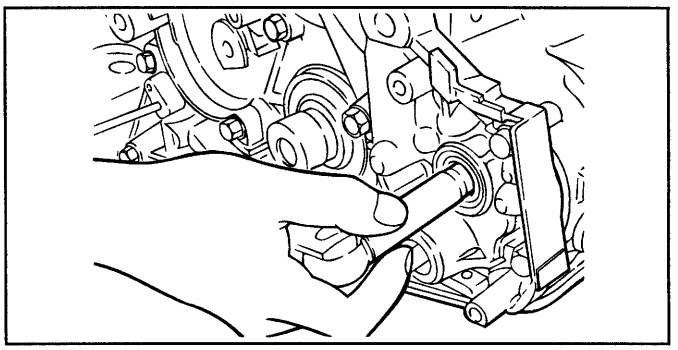

ECA9310D

11. Remove the front case mounting bolts and remove the front case assembly and gasket and then remove the two counter balance shafts from the cylinder block.

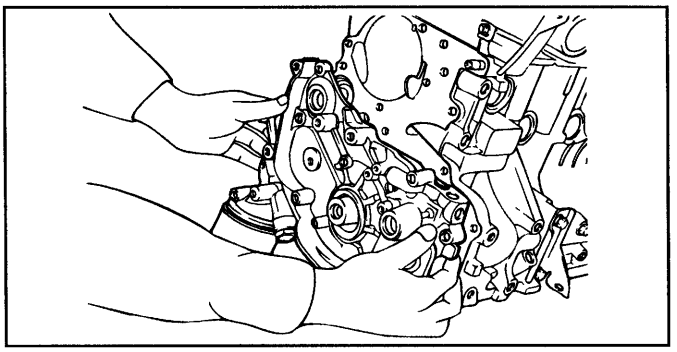

ECA9041A

12. Remove the oil pump cover from the front case.
13. Remove the oil pump gears from the front case.

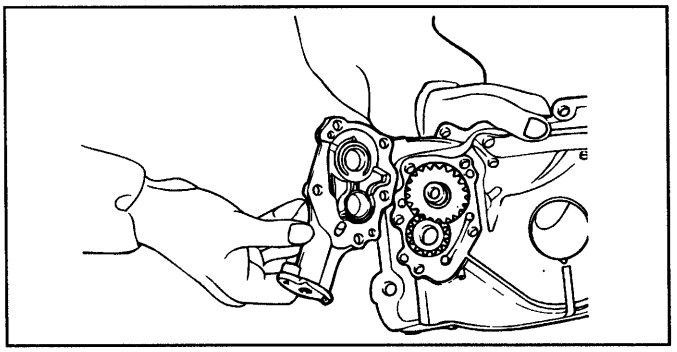

ECA9042A

14. Remove the screw driver.

(Step. 9)

INSPECTION ECJA2700

FRONT CASE

1. Check all oil holes for clogging. Clean the holes if necessary.
2. Check the counter balance shaft front bearing for wear, damage and seizure. If there is anything wrong with the bearing, replace the front case.
3. Check the front case for cracks and other damage.
4. Replace a cracked or damaged front case.

COUNTER BALANCE SHAFT

1. Check the journals for wear or seizure.
2. If excessive wear or seizure is evident, check the bearing carefully.
3. If necessary, replace the counter balance shaft bearing or the shaft itself.

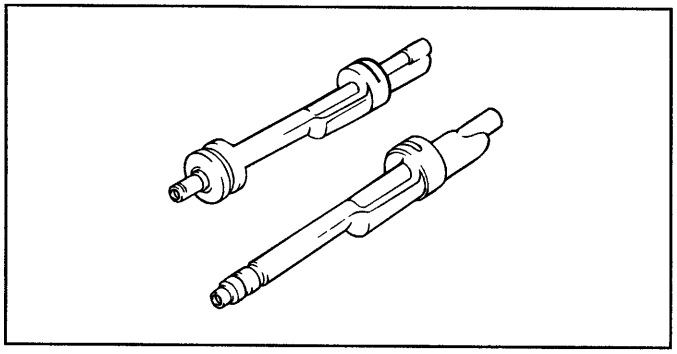

ECA9043A

OIL SEAL

1. Check the oil seal lip for wear and damage. Replace the oil seal if necessary.
2. Check the oil seal lip for deterioration. Replace the oil seal if necessary.

OIL PRESSURE SWITCH

1. Check the continuity between the terminal and the body with an ohmmeter.

   If there is no continuity, replace the oil pressure switch.

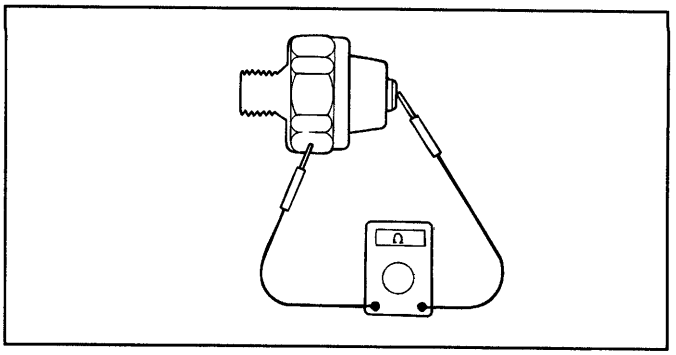

ECA9320D

2. Check the continuity between the terminal and the body when the fine wire is pushed. If there is continuity even when the fine wire is pushed, replace the switch.
3. If there is no continuity when a 50 kPa (7 psi) vacuum is applied through the oil hole, the switch is operating properly. Check for an air leak. If air leaks, the diaphragm is broken. Replace the switch.

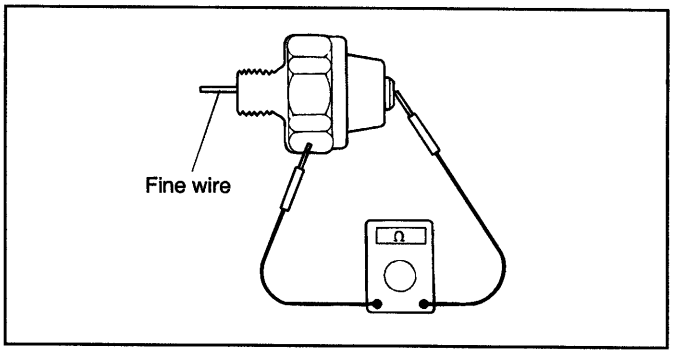

ECA9320E

OIL PUMP

1. Assemble the oil pump gear to the front case and rotate it to verfy smooth rotation with no looseness.
2. Make sure that there is no ridge wear on the contact surface between the front case and the gear surface of the oil pump cover.

3. Install the drive and driven gears to the front case. Measure the tip clearance of the gears.

[Standard value]

Drive gear : 0.16-0.21mm(0.0063-0.0083 in.)

Driven gear : 0.18-0.21mm(0.0071-0.0083 in.)

[Limit]

Drive gear : 0.25mm(0.0098 in)

Driven gear : 0.25mm(0.0098 in.)

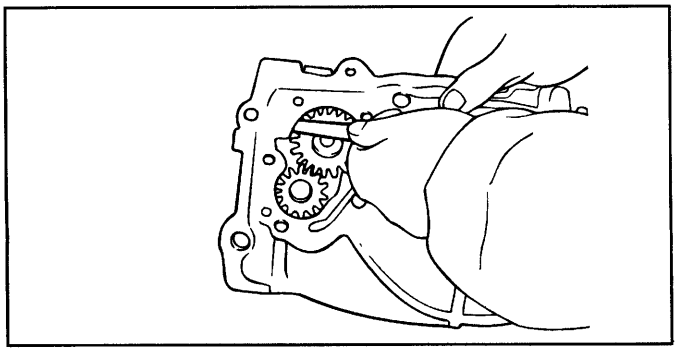

ECA9044A

4. Check the side clearance.

[Standard value]

Drive gear : 0.08-0.14mm(0.0031-0.0055in.)

Driven gear : 0.06-0.12mm(0.0024-0.0047in.)

[Limit]

Drive gear : 0.25mm(0.0098 in)

Driven gear : 0.25mm(0.0098 in.)

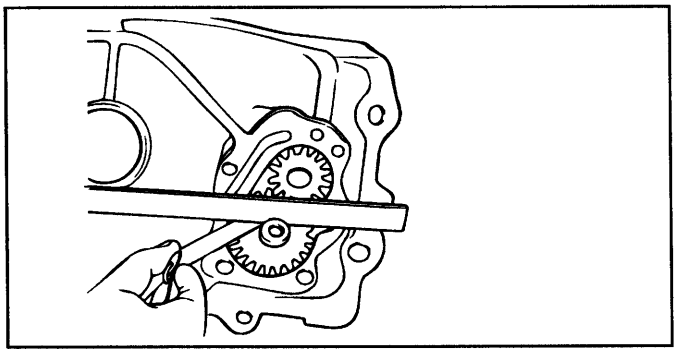

ECA9045A

COUNTER BALANCE SHAFT BEARING

ECJA2800

REPLACEMENT

1. Using a special tool, remove the front bearing of the right counter balance shaft from the cylinder block.

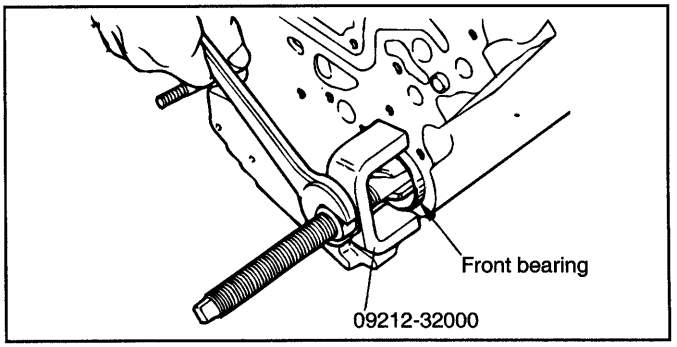

ECA9330A

2. Using a special tool, remove the rear bearing of the right counter balance shaft from the cylinder block.

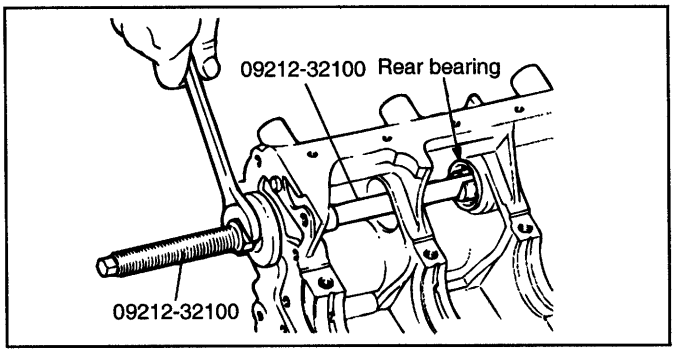

ECHA280A

3. Using a special tool, remove the rear bearing of the left counter balance shaft from the cylinder block. At this time, install a special tool on the front surface of cylinder block to hold the bearing puller.

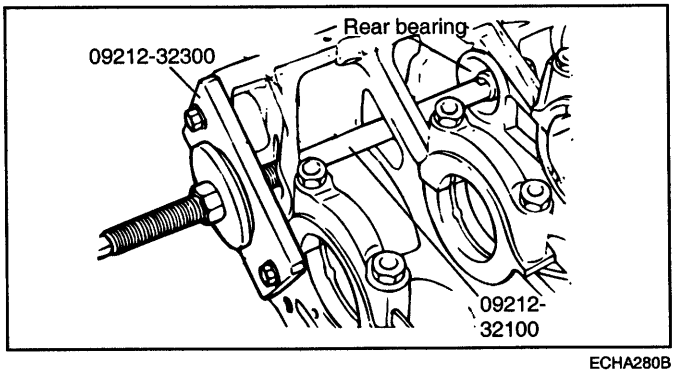

ECHA280B

4. Using a special tool, install the rear bearing of the left counter balance shaft to the cylinder block.

NOTE

1. **Apply engine oil to the outside of rear bearing and bearing hole in cylinder block.**

2. The left rear bearing has no oil holes.

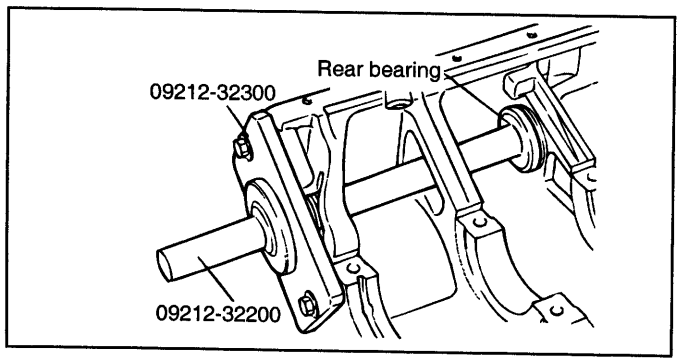

ECA9330D

5. Using a special tool, install the rear bearing of the right counter balance shaft to the cylinder block.

NOTE

1. **Apply engine oil to the outside surface of the bearing.**
2. **Make sure that the bearing oil hole is aligned with the oil hole of cylinder block.**

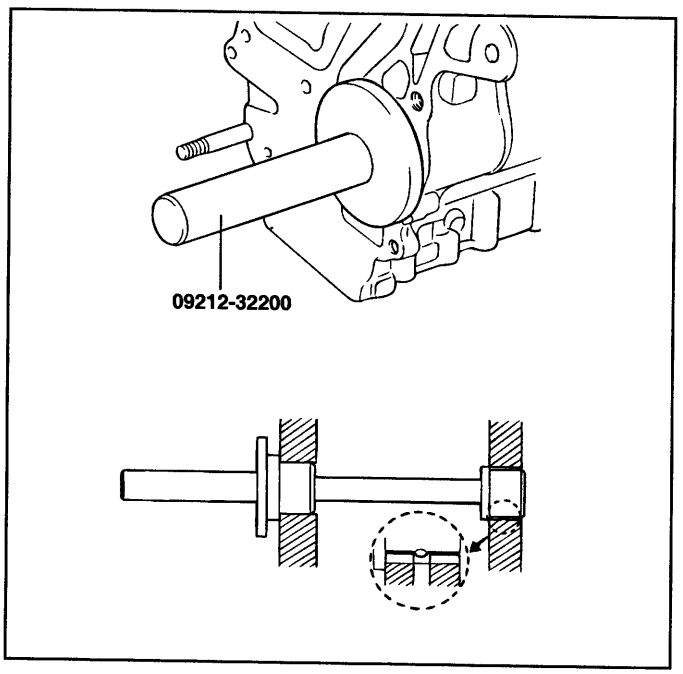

ECA9330E

6. Using a special tool, install the front bearing of the right counter balance shaft to the cylinder block.

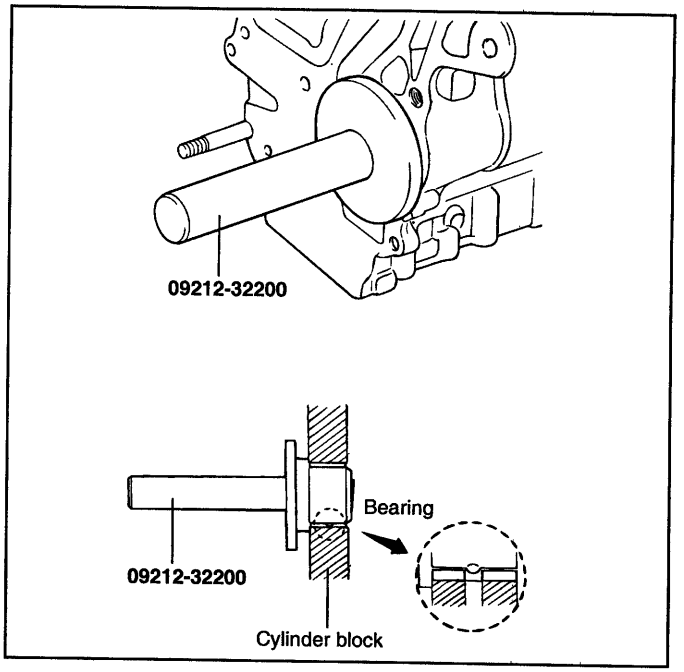

ECA9330F

NOTE

Make sure that the bearing oil hole is aligned with the oil hole cylinder block.

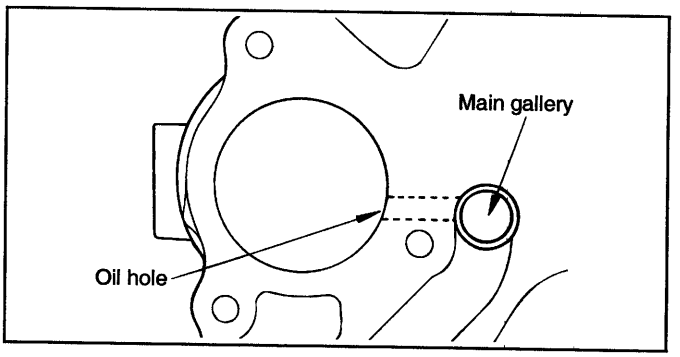

ECA9330G

REASSEMBLY ECJA2900

1. Apply engine oil to the gear and align the two timing marks.

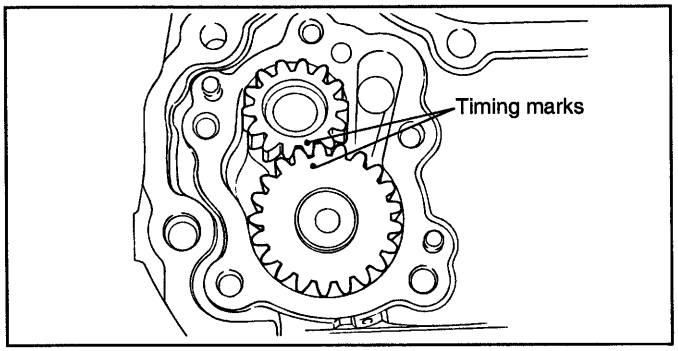

ECA9340A

2. Using the special tool, the crankshaft front oil seal installer (09214-32000), install the crankshaft front oil seal into the front case.

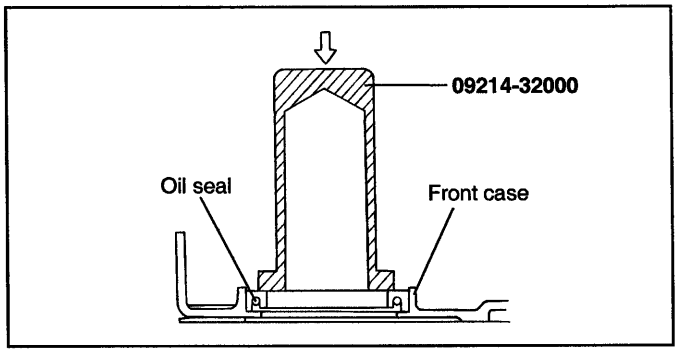

ECA9340B

3. Set the special tool (09214-32100) on the front end of the crankshaft and apply a thin coat of engine oil to the outer circumference of the special tool to install the front case.

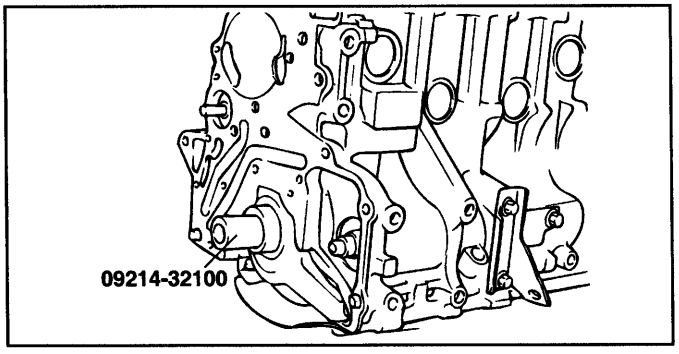

ECA9046A

4. Install a new front case gasket to the front case assembly and tighten the flange bolts temporarily.

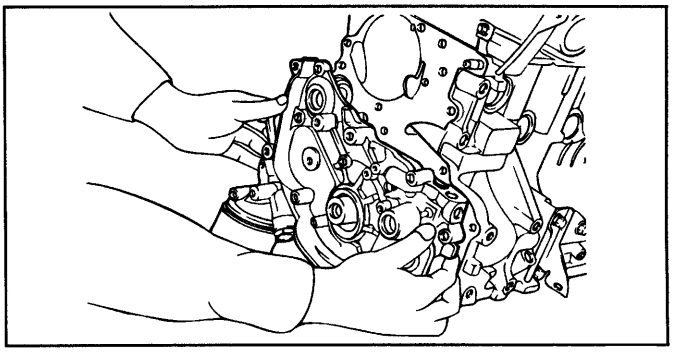

ECA9041A

5. Install the front case assembly with a new gasket. Tighten bolts to the specified torque.

Front case assembly

Tightening torque :

20-27Nm(200-270kg.cm, 14-20 lb.ft)

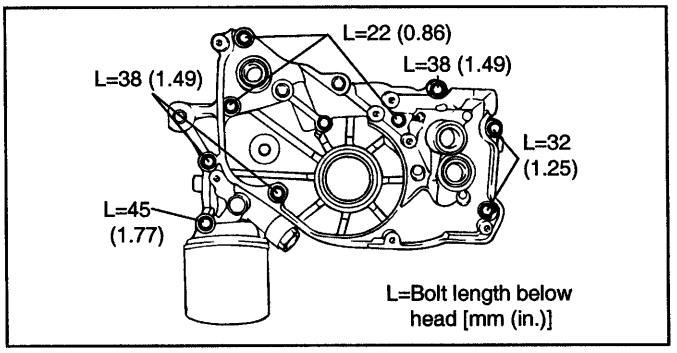

ECJA290B

6. Insert a screwdriver into the plug hole in left side of cylinder block. After verifying that the shaft is in the proper position, replace the bolt and tighten it.

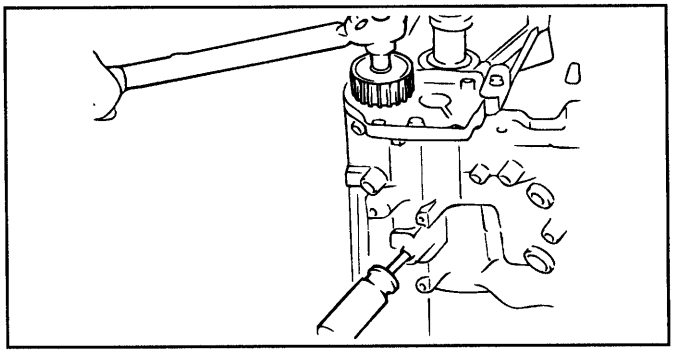

ECA9340F

7. Install a new O-ring to the groove of the front case.

8. Using a special tool, install the plug case and tighten it to the specified torque.

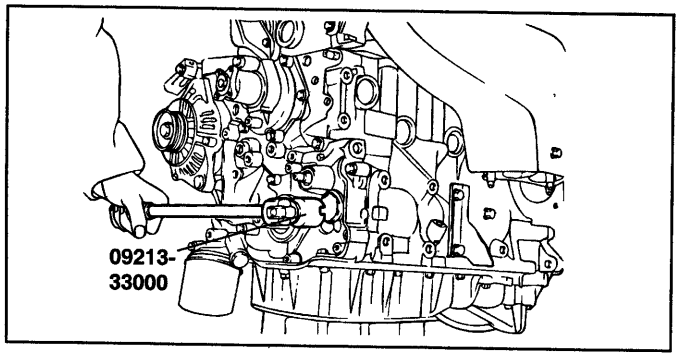

ECA9040A

Plug cap

Tightening torque :

20-27 N.m (200-270 kg.cm, 14-20 lb.ft)

9. Apply sealant to the groove of the pan flange as shown.

NOTE

1. **Apply sealant approximately 4 mm (0.16 in.) in thickness.**
2. **After the application of the sealant, install the oil pan within 15 minutes.**

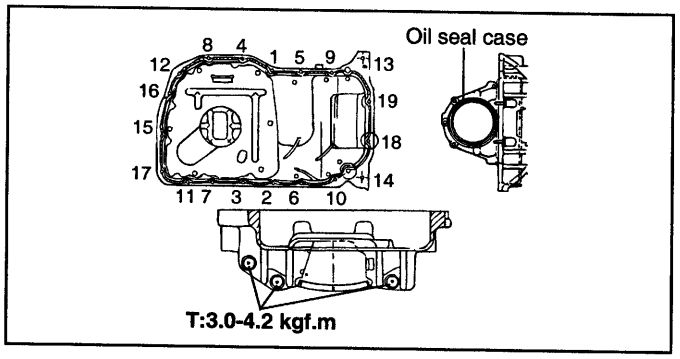

ECJA290A

10. Note the difference in bolt lengths at the locations shown.

    Install the upper and lower oil pans and tighten the bolts to the specified torque.

Tightening torque

Oil pan bolt : 10-12Nm(100-120kg.cm, 7-9 lb.ft)

11. Using a 24 mm deep socket, install the oil pressure switch after applying sealant to the threaded area.

Sealant : Threebond 1104 or equivalent

NOTE

Do not torque the oil pressure switch excessively.

Tightening torque

Oil pressure switch : 8-12Nm(80-120kg.cm, 6-9 lb.ft)

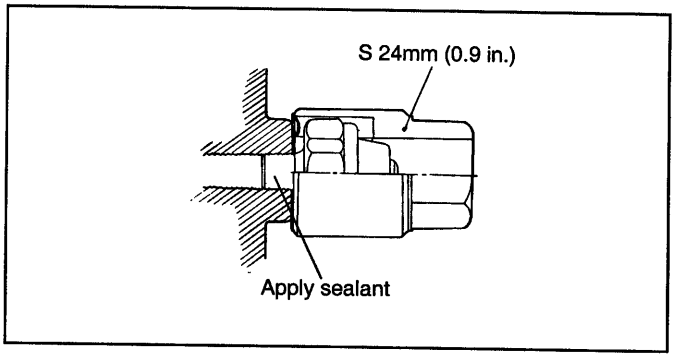

ECHA260A

MAIN MOVING SYSTEM

CAM SHAFT

CAMSHAFTS AND ROCKER ARMS ECHA3000

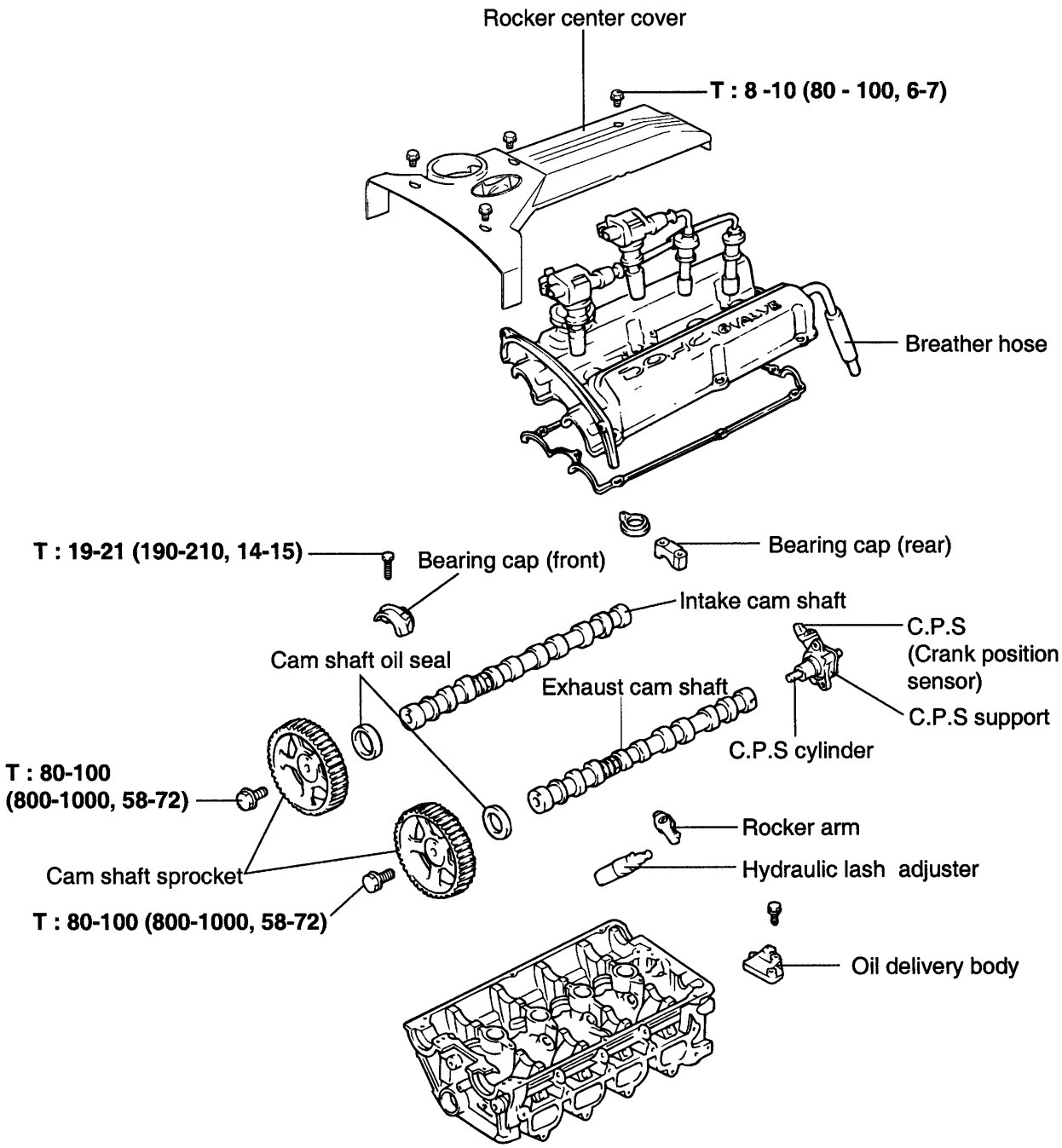

TORQUE : Nm (kg.cm, lb.ft)

ECHA053A

DISASSEMBLY ECHA3100

1. Disconnect the negative terminal from the battery.
2. Drain the engine coolant.
3. Remove the breather hose between the air cleaner and the rocker cover.
4. Remove the air cleaner.
5. Remove the timing belt cover.
6. Remove the rocker cover and crank shaft position sensor.
7. Loosen the camshaft sprocket bolts then remove the camshaft sprockets.
8. Loosen the camshaft bearing cap bolts and remove the bearing caps, camshafts, rocker arms and lash adjusters.

CAUTION

Loosen the cap bolts in increments to avoid bending the camshafts.

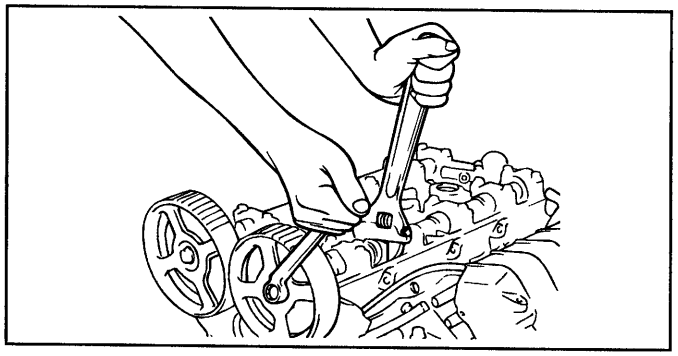

ECA9170C

INSPECTION ECJA3200

ROCKER ARMS

1. Check rotation of the roller. If they do not rotate smoothly or are loose, replace them.
2. Check the roller surface. Replace if there is any dent, damage or evidence fo seizure.
3. Check the valve contact surface for possible damage or evidence of seizure. Replace if necessary.

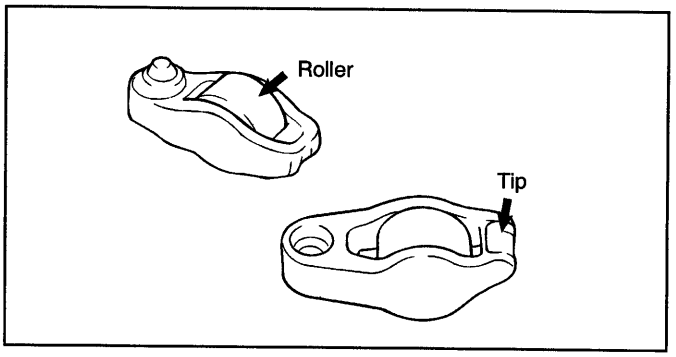

ECA9240A

CAMSHAFTS

1. Check the camshaft journals for wear. If the journals are badly worn, replace the camshaft.
2. Check the cam lobes for damage. If the lobe is damaged or worn excessively, replace the camshaft.

Cam height

[Standard]

Intake : 35.493 mm (1.3974 in.)

Exhaust :

[2.4L] M/T : 35.204 mm (1.3860 in.)

[2.0L] M/T : 35.317 mm (1.3904 in.)

A/T : 35.204 mm (1.3866 in.)

[Limit]

Intake : 35.993 mm (1.4170 in.)

Exhaust :

[2.4L] M/T : 34.704 mm (1.3663 in.)

[2.0L] M/T : 34.817 mm (1.3707 in.)

A/T : 34.704 mm (1.3663 in.)

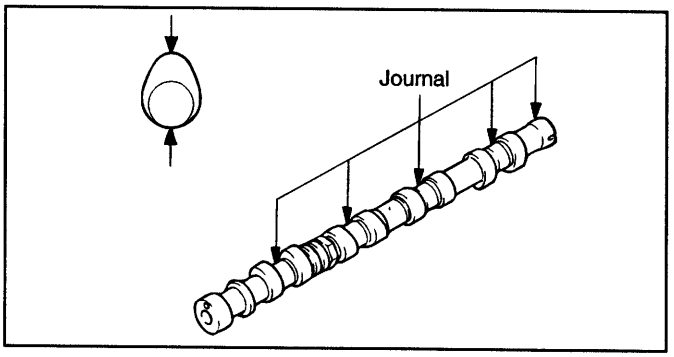

ECA9240B

REASSEMBLY ECJA3300

1. Install the camshafts on the cylinder head.

   Do not install the rocker arms yet.

NOTE

1. **Apply engine oil to journals and cams of the camshafts.**
2. **The exhaust camshaft has a slit on its rear end for the crankshaft position sensor.**

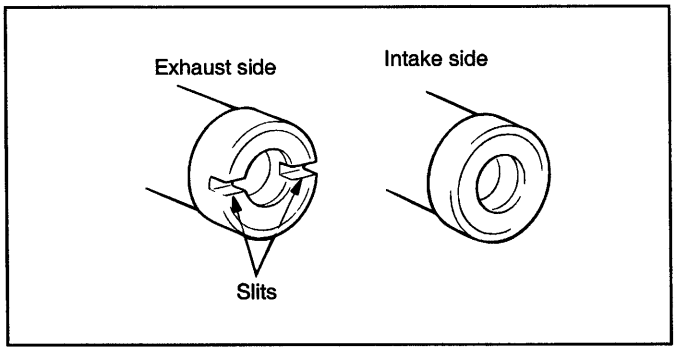

ECA9250A

2. Install the bearing caps. The markings on the caps are for for intake/exhaust identification.

   I : Intake camshaft. E : Exhaust camshaft

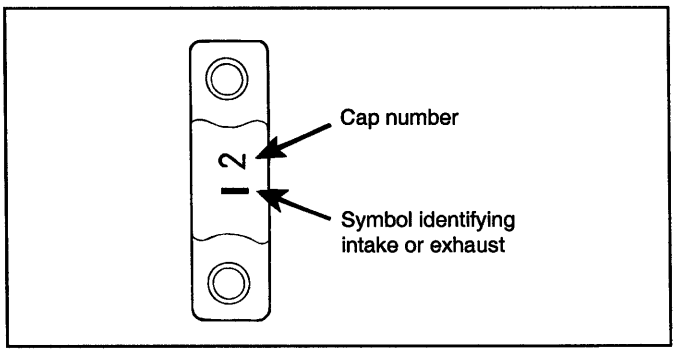

ECA9250B

3. Check that the camshaft can be easily turned by hand. After checking, remove the bearing caps and the camshafts, and then install the rocker arms.

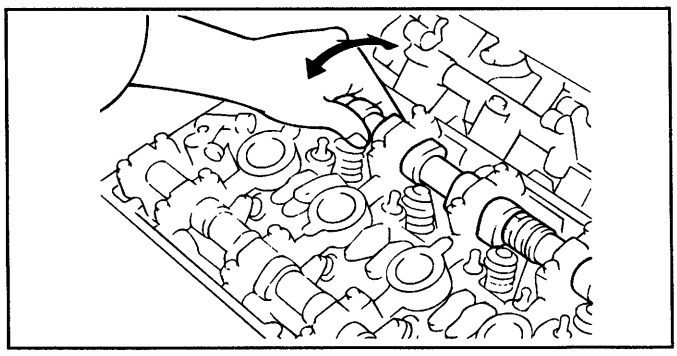

ECA9250C

4. Make sure that the dowel pins on the camshaft sprocket ends are located on the top.

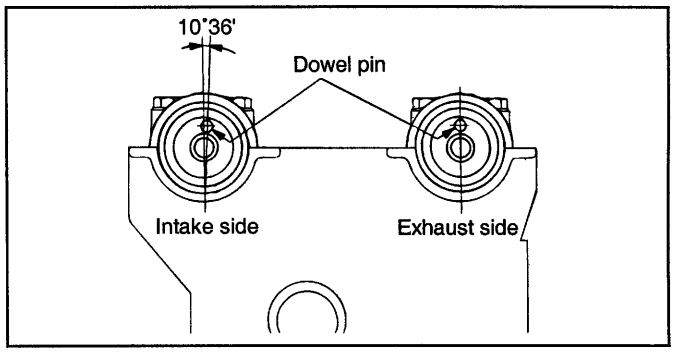

ECHA330A

5. Tighten the bearing caps to the specified torque in two or three increments as shown.

NOTE

Tighten the rocker arms uniformly.

Tightening torque

Bearing cap bolts:

19-21 Nm (190-210 kg.cm, 14-15 lb.ft)

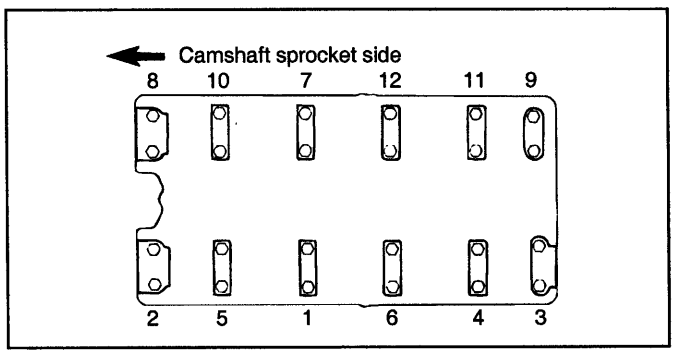

ECHA330B

6. Using the special tools, camshaft oil seal Installer and guide (09221-21000, 09221-21100),. Be sure to apply engine oil to the external surface of the oil seal.

   Insert the oil seal along the camshaft front end and install it by driving the installer with a hammer until the oil seal is fully seated.

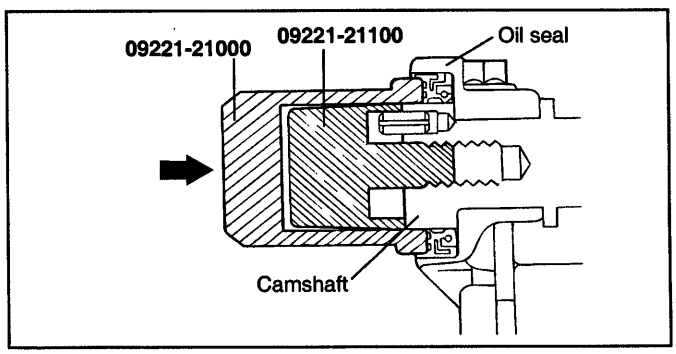

ECHA330C

7. Install the camshaft sprocket bolts to the specified torque.

Tightening torque

Camshaft sprocket bolts :

80-100 Nm (800-1000 kg.cm, 58-72lb.ft)

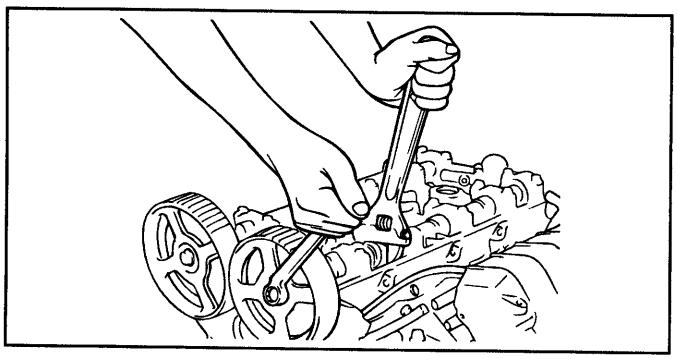

ECA9170C

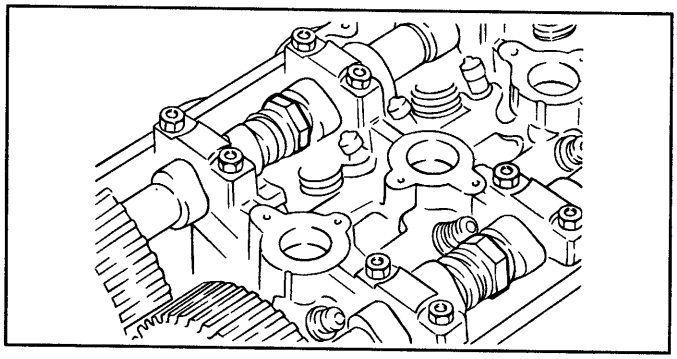

ECA9210J

8. Install the rocker cover. Apply sealant as shown.

Tightening torque

Rocker cover bolts : 8-10 Nm (80-100 kg.cm, 6-7 lb.ft)

Center cover bolts : 4-5 Nm (40-50 kg.cm, 3-4 lb.ft)

Sealant

A Portion : Threebond No. 10 or equivalent

B Portion : Threebond No. 1212D or equivalent

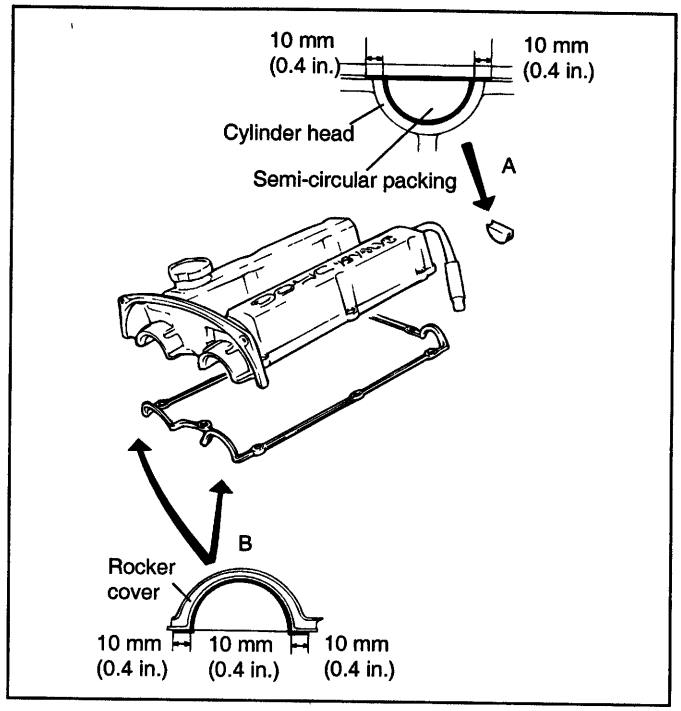

ECA9034A

Bolt

A : 13EA (Rocker cover bolts)

B : 4EA (Center cover bolts)

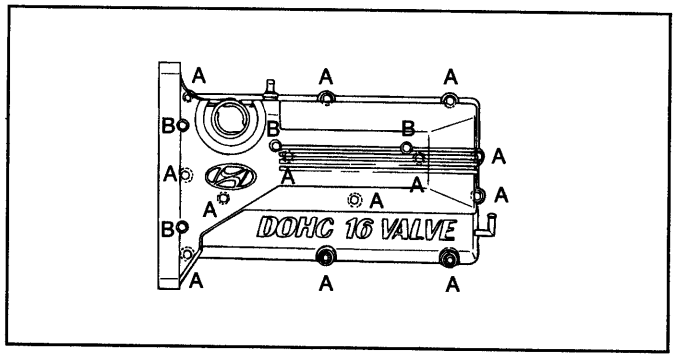

ECA9035A

9. Install the spark plugs, and ignition coils.Connect the secondary wires and then install the center cover.

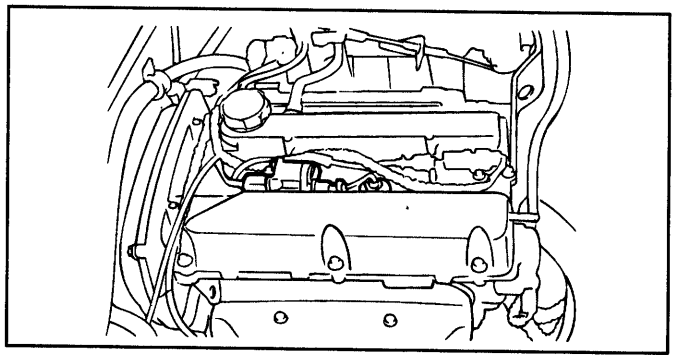

ECHA008A

10. Install the dowel pin on the sprocket side of the intake cam shaft.

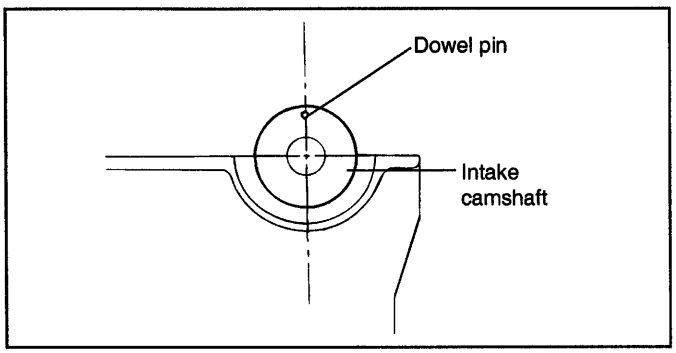

ECA9250L

11. Install the crank position sensor support assembly after installing the crank position sensor cylinder on the exhaust camshaft.

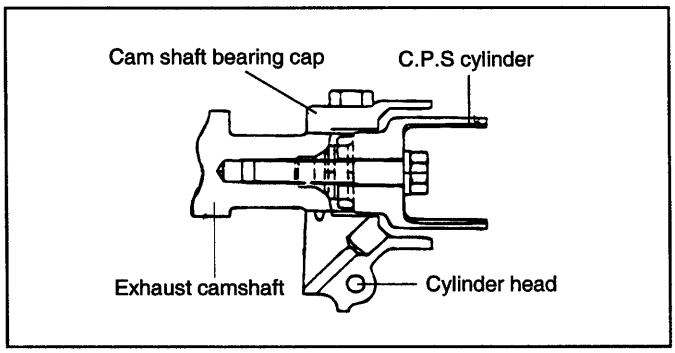

ECHA008B

CONNECTING ROD

PISTON AND CONNECTING ROD ECHA3500

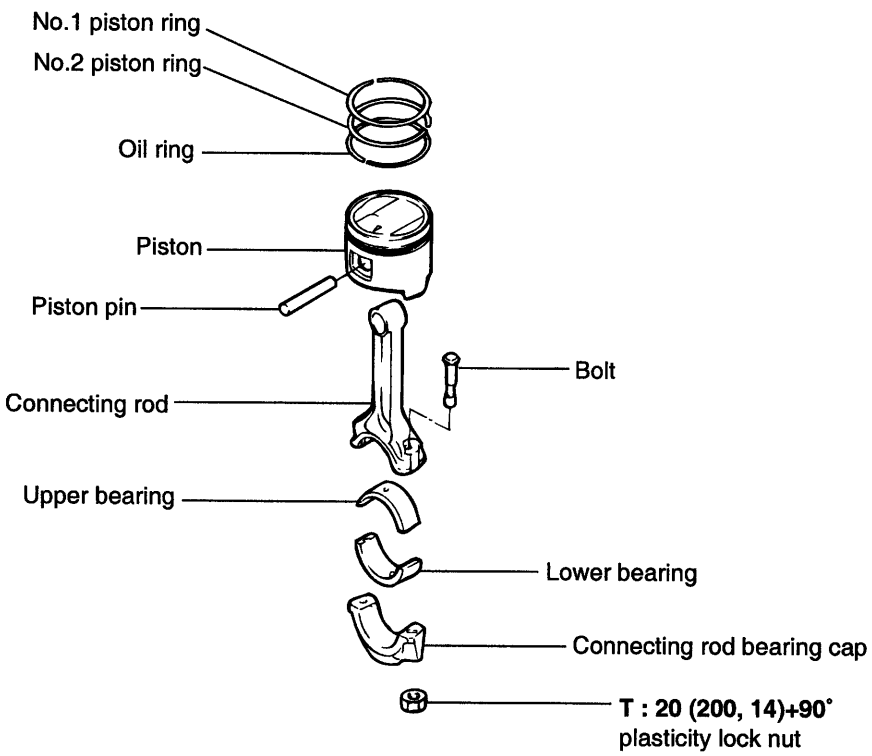

TORQUE : Nm (kg.cm, lb.ft)

ECHA350A

DISASSEMBLY ECJA3600

CONNECTING ROD CAP

NOTE

Keep the bearings in order with their corresponding connecting rods (according to cylinder numbers) for proper reassembly.

1. Remove the connecting rod cap nuts and then remove the caps and the big end lower bearing. Mark for reassembly.
2. Push each piston-connecting rod assembly toward the top of the cylinder.

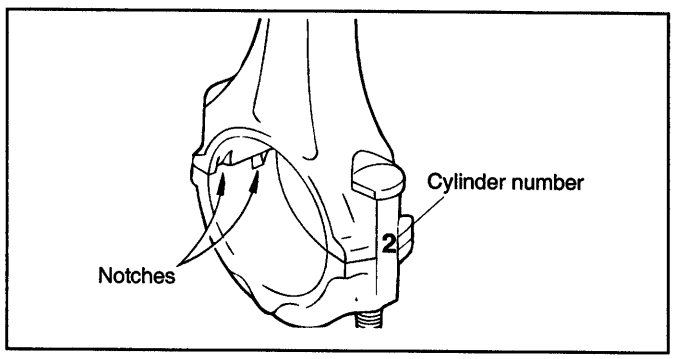

ECA9360A

DISASSEMBLY AND REASSEMBLY OF PISTON PIN

1. Use the special tools 09234 - 33001 and 09234 - 33002, disassemble and reassemble the piston and connecting rod.

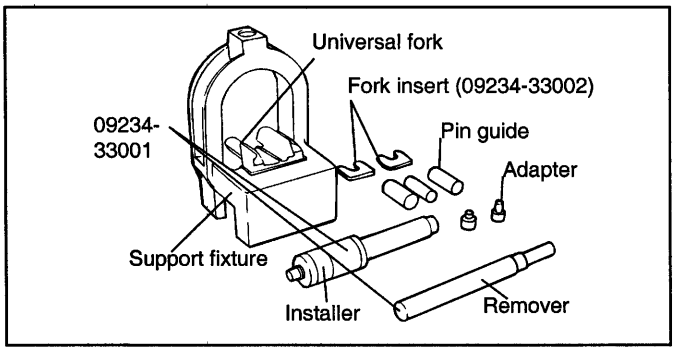

ECA9361A

2. The piston pin is a press fit in the rod little end, and the piston floats on the pin.

3. The tool consists of a support fixture with fork inserts, guides, adapters, an installer and a remover. The piston is supported in the support fixture while the pin is being installed or removed. Guides help position th pin as it is installed or removed, while the rod is supported by fork inserts.

4. To remove the pin from the piston, place the piston in the support fixture while the rod resting on the fork inserts. Pass the remover tool through the top of the support fixture and use it to press out the pin.

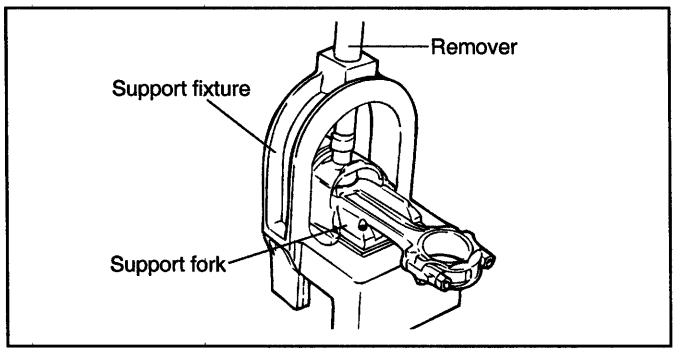

ECA9361B

5. To install a new pin, the proper fork inserts must be in place to support the rod.

6. Position the rod inside the piston. Insert the proper pin guide through on side of the piston and through the rod. Hand tap the pin guide so it is held by the piston. Insert the new pin into the piston from the other side and set the assembly into the support fixture with the pin guide facing down.

NOTE

The pin guide should be centered on the connecting rod though the piston. If assembled correctly, the pin guide will sit exactly under the center of the hole in the tool's arch, and rest evenly on the fort inserts. If the wrong size pin guide is used, the piston and pin will not line up with the support fixture.

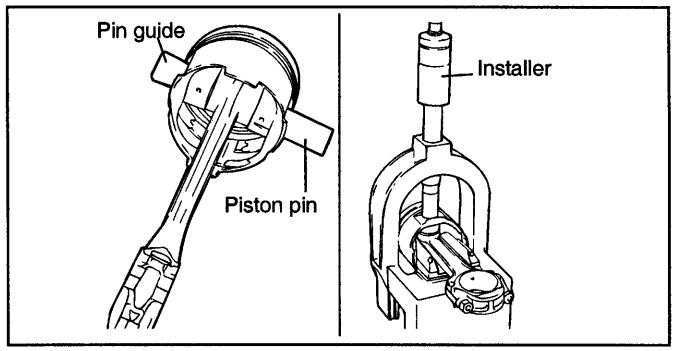

ECA9361C

7. Insert the installer tool through the hole in the arch of the support fixture and use an hydraulic press to force the piston pin through the rod little end. Continue pressing until the pin guide falls free and the installer tool seats against the top of the arch.

CAUTION

Do not exceed 1250±500 kg (2756±1102 lb) of force when stopping the installing arbor sleeve against the arch.

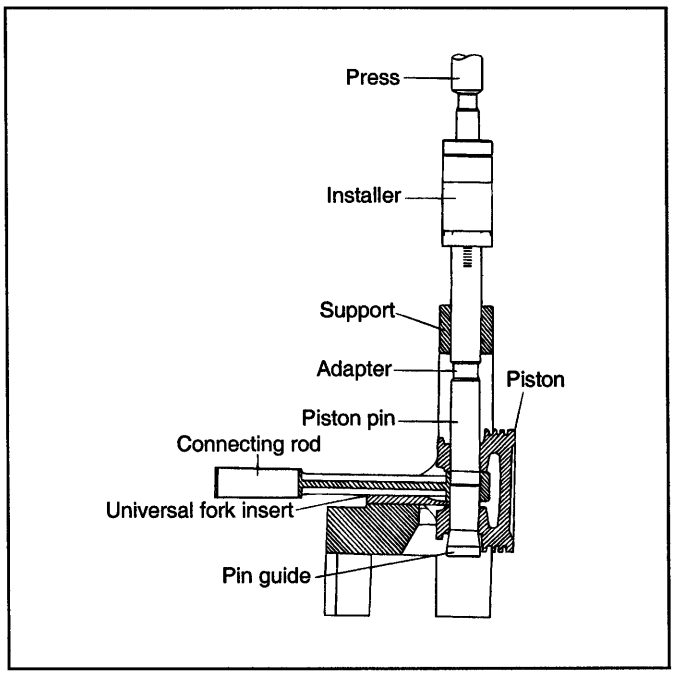

EOY055C

INSPECTION ECJA3700

PISTON AND PISTON PINS

1. Check each piston for scuffing, scoring, wear and other defects. Replace any piston that is defective.
2. Check each piston ring for breakage, damage and abnormal wear. Replace the defective rings. When the piston requires replacement, its rings should also be replaced.
3. Check that the piston pin fits in the piston pin hole. Replace any piston and pin assembly that is defective. The piston pin must be smoothly pressed by hand into the pin hole (at room temperature).

PISTON RINGS

1. Measure the piston ring side clearance. If the measured value exceeds the service limit, insert a new ring in a ring groove to measure the side clearance. If the clearance still exceeds the service limit, replace the piston and rings together. If it is less than the service limit, replace only the piston ring only.

Standard value

Piston ring side clearance :

No. 1 : 0.03-0.07mm(0.0012-0.0028 in.)

No. 2 : 0.02-0.06mm(0.0008-0.0024 in.)

Oil ring : 0.06-0.15 mm (0.0024-0.0059 in.)

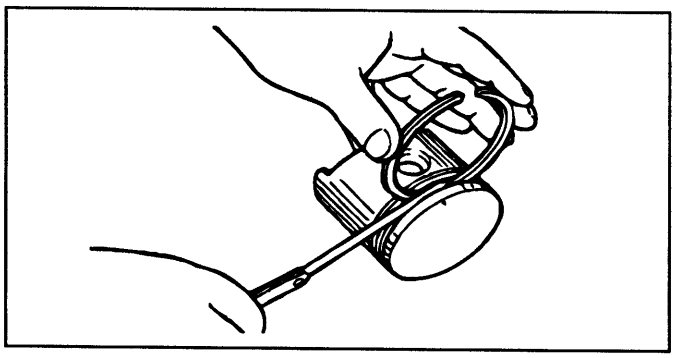

ECA9370A

2. To measure the piston ring end gap, insert a piston ring into the cylinder bore. Position the ring at right angles to the cylinder wall by gently pressing it down with a piston. Measure the gap with a feeler gauge. If the gap exceeds the service limit, replace the piston ring.

Piston ring end gap

[Standard dimensions]

No.1 : 0.25-0.35mm(0.0098-0.0138 in.)

No.2 : 0.40-0.55mm(0.0157-0.0216 in.)

Oil ring side rail : 0.10-0.40mm(0.0039-0.0157 in.)

[Limit]

No.1, No.2 : 0.8mm(0.031 in.)

Oil ring side rail : 1.0mm(0.039 in.)

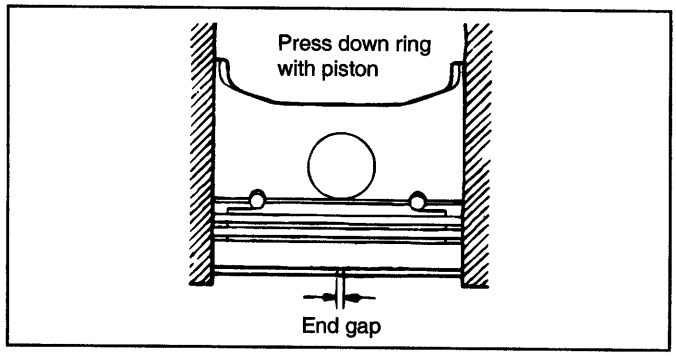

ECA9370B

CONNECTING RODS

1. When the connecting rod cap is installed, make sure that cylinder numbers, marked on the rod end cap at disassembly, match. When a new connecting rod is installed, make sure that the notches for holding the bearing in place are on the same side.
2. Replace the connecting rod if it is damaged at either end of the thrust faces. If it has stratified wear in, or if the surface of, the inside diameter of the small end is severely rough, replace the rod.

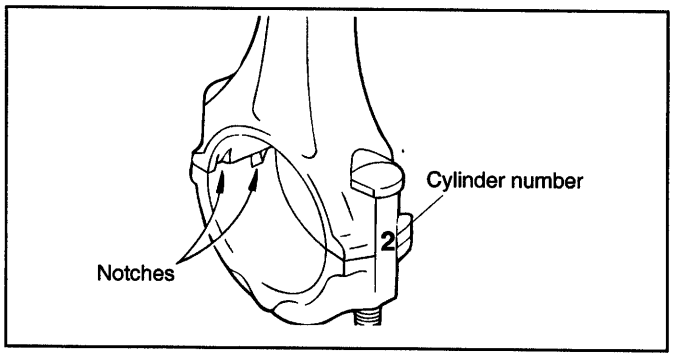

ECA9360A

REASSEMBLY ECJA3800

1. Install the spacer.

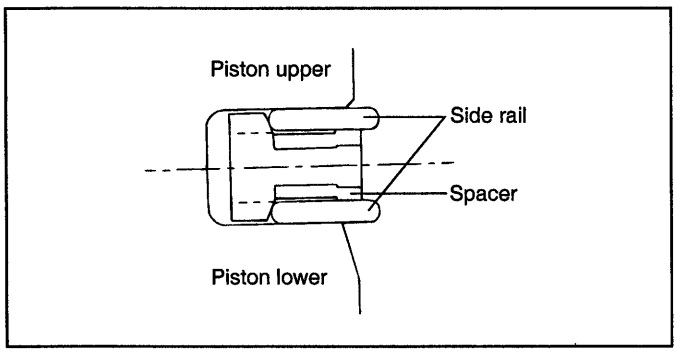

ECA9082A

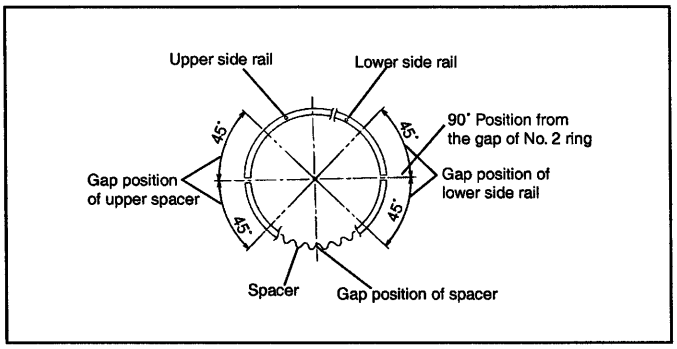

EDJA490A

2. Install the upper side rail. To install the side rail, first put one end of the side rail between the piston ring groove and spacer, hold it firmly, then press down with your finger the portion to be inserted into groove as illustrated.

Do not use a piston ring expander when installing the side rail.

3. Install the lower side rail by the same procedure as described in Step No. 2.

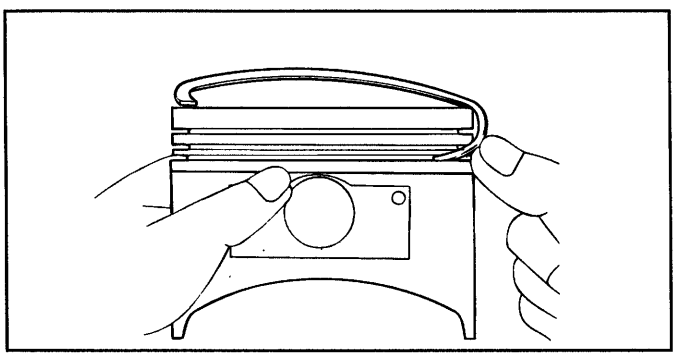

ECA9380B

4. Apply engine oil around the piston and piston grooves.

5. Using piston ring expander, install the No. 2 piston ring.

6. Install the No. 1 piston ring.

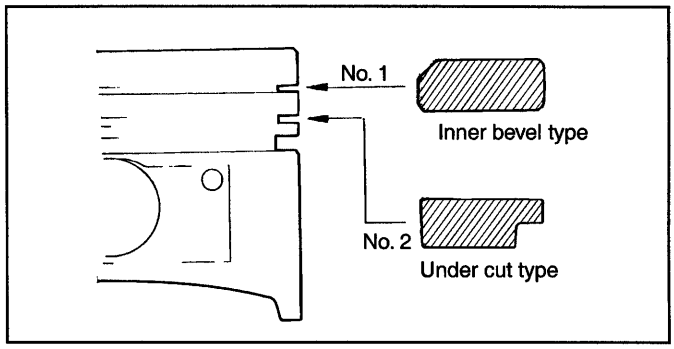

EDJA490B

7. Place each piston ring end gap as far apart from its neighboring gaps as possible. Make sure that gaps are not positioned in the thrust and pin directions.

8. Hold the piston rings firmly with a piston ring compressor as they are inserted into cylinder.

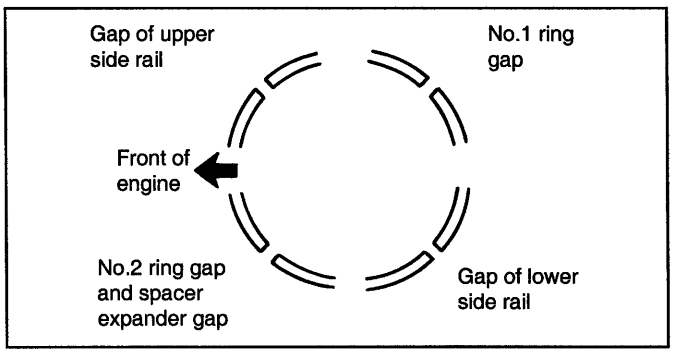

ECA9380D

9. Make sure that the front mark of the piston and the front mark (identification mark) of the connecting rod are directed toward the front of the engine.

10. When the connecting rod cap is installed, make sure that the cylinder numbers put on the rod and cap at disassembly match.

11. When a new connecting rod is installed, make sure that the notches for holding the bearing in place are on the same side.

12. Tighten the connecting rod cap nuts.

Tightening torque

Connecting rod cap nuts :

20Nm(200kg.cm, 14 lb.ft)+90°

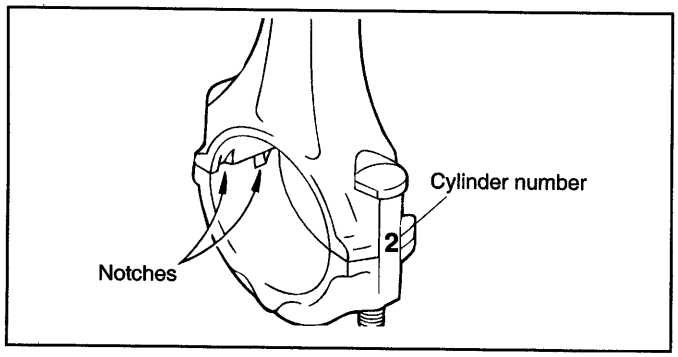

ECA9360A

13. Check the connecting rod side clearance.

Connecting rod side clearance

standard : 0.10-0.25mm(0.004-0.0098 in.)

Limit : 0.4 mm (0.0157 in.)

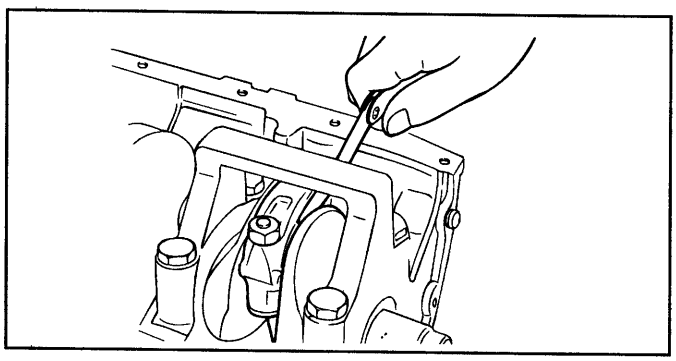

ECA9380F

CRANK SHAFT

CRANKSHAFT, FLYWHEEL ECHA4000

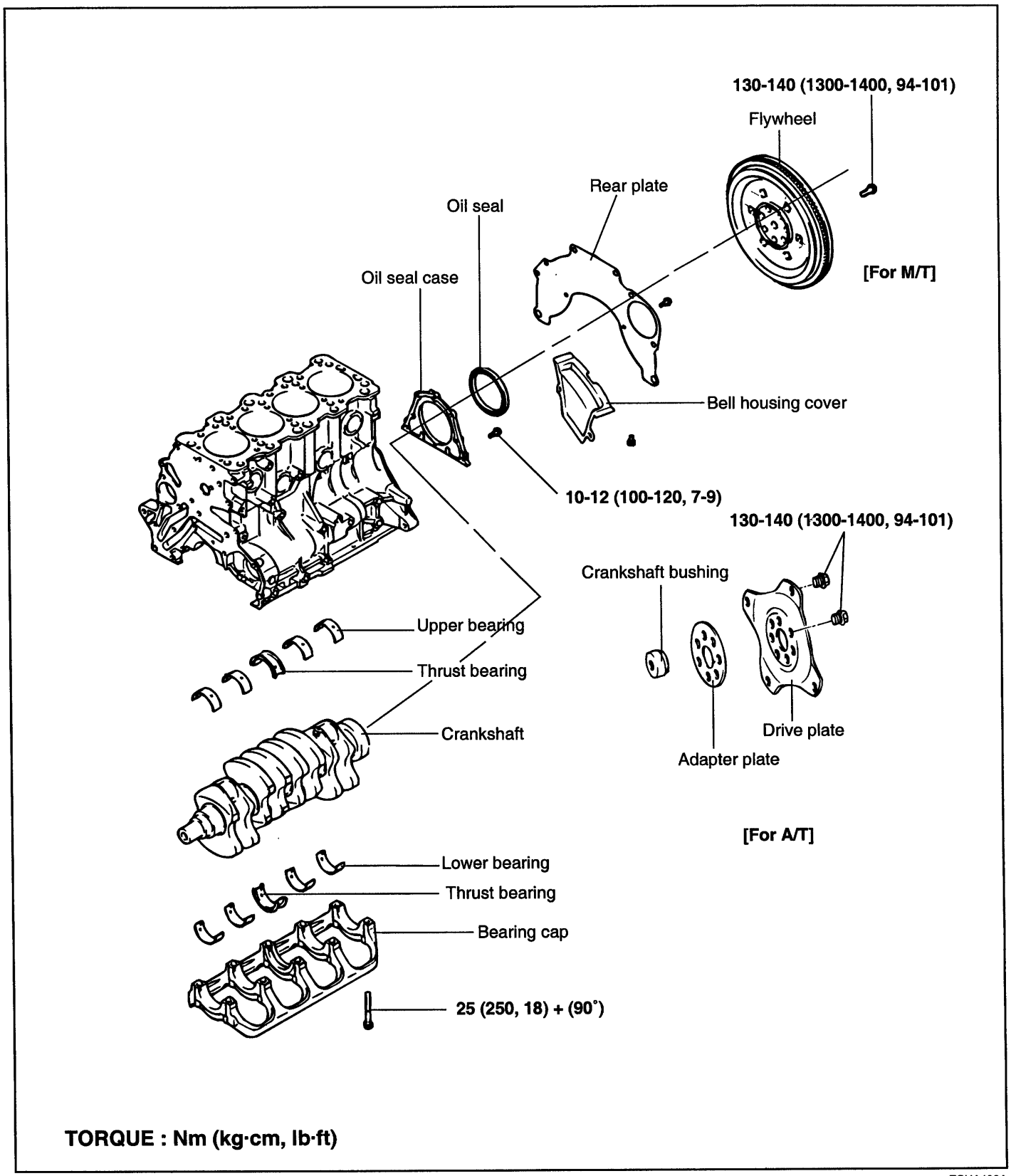

TORQUE : Nm (kg·cm, lb·ft)

ECHA400A

DISASSEMBLY ECJA4100

1. Remove the timing belt, front case, flywheel, cylinder head assembly and oil pan. For details, refer to the respective chapters.
2. Remove the rear plate and the rear oil seal.
3. Remove the connecting rod caps.

NOTE

Mark the main bearing caps to be able to reassembl in the original position and direction.

4. Remove the main bearing caps and the crankshaft. Keep the bearings in order according to the cap number.

INSPECTION ECJA4200

CRANKSHAFT

1. Check the crankshaft journals and pins for damage, uneven wear and cracks. Also check the oil holes for restrictions. Repair or replace any defective part.
2. Inspect the crankshaft journal for taper and out-of-round.

Standard value

Crankshaft journal O.D :

56.982-57.000mm(2.2434-2.2441 in.)

Crankshaft pin O.D :

44.980-45.000mm(1.7709-1.7717 in.)

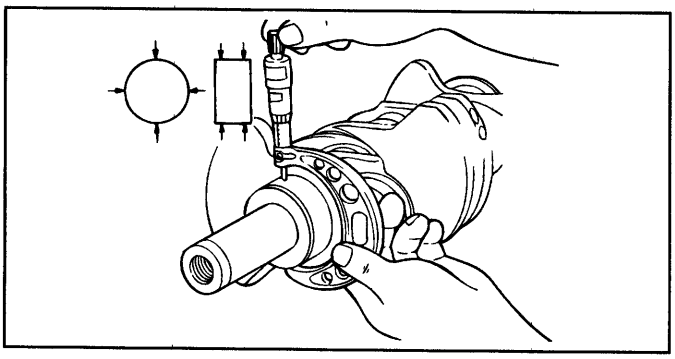

ECA9410A

MAIN BEARINGS AND CONNECTING ROD BEARINGS

Visually inspect each bearing for peeling, melting, seizure and improper contact. Replace any defective bearings.

MEASURING OIL CLEARANCE

Check the oil clearance by measuring the outside diameter of the crankshaft journal as well as the the inside diameter of the bearing. The clearance can be obtained by calculating the difference between the measured diameters.

Standard value

Oil clearance

Crankshaft main bearing

No.1,2,4,5 : 0.018-0.036 mm (0.0007-0.0014 in.)

No.3 : 0.024-0.042 mm (0.0009-0.0017 in.)

Connecting rod bearing :

0.015-0.048 mm (0.0006-0.0019 in.)

Limit : 0.1 mm (0.0039 in.)

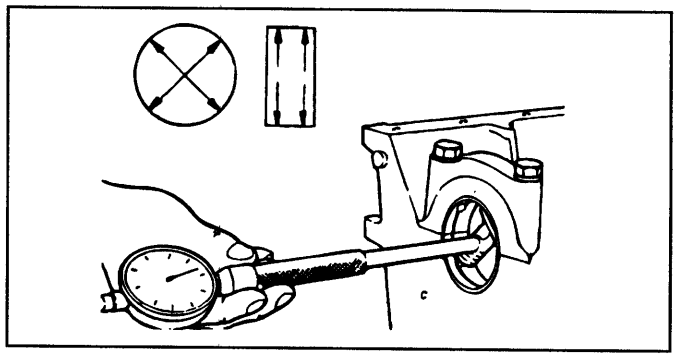

ECA9410B

HOW TO USE PLASTIC GAUGE

Plasticgauge may be used to measure the clearance.

1. Remove oil, grease and any other dirt from the bearings and journals.
2. Cut the plasticgauge to the same length as the width of the bearing and place it in parallel with the journal, avoiding the oil holes.
3. Install the crankshaft, bearings and caps and tighten them to the specified torques. During this operation, do not turn the crankshaft. Remove the caps. Measure the width of the plasticgauge at the widest part by using the scale printed on the gauge package. If the clearance exceeds the service limit, the bearing should be replaced or an undersize bearing should be used. When installing a new crankshaft, be sure to use standard size bearings. If the standard clearance can not be obtained even after replacing the bearing, the journal and pin should be ground to thr undersize and a bearing of the corresponding size should be installed.

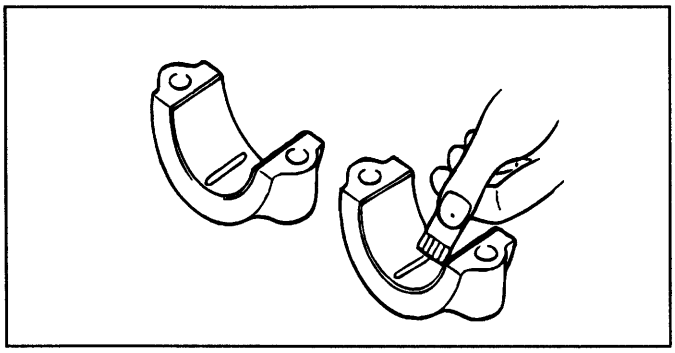

ECA9410C

OIL SEAL

Check the front and rear oil seals for damage or worn surfaces. Replace any seat that is defective.

BEARING CAPS

After installing the bearing caps, make sure the crankshaft turns smoothly and the end play is correct. If the end play exceeds the limit, replace the crankshaft bearings.

Standard value : 0.05-0.25mm(0.0020-0.0098 in.)

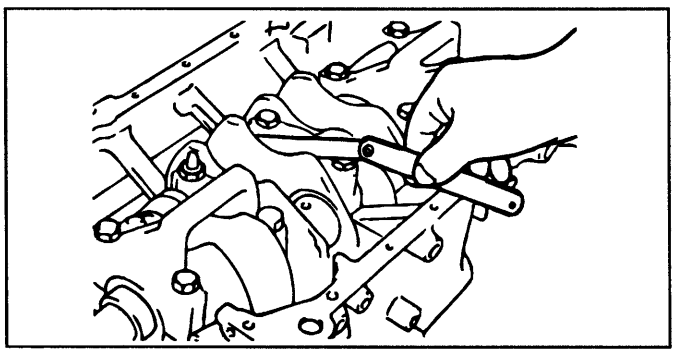

ECA9410D

DRIVE PLATE (A/T)

Replace distorted, damaged, or cracked drive plates.

FLYWHEEL (M/T)

1. Check the clutch disc contacting surface of the flywheel for damage and wear. Replace the flywheel if excessively damaged or worn.

2. Check the clutch disc contacting surface of the flywheel for run-out.

Limit

Flywheel run-out : 0.13mm(0.0051 in.)

3. Check the ring gear for damage, cracks and wear. Replace if necessary.

REASSEMBLY ECJA4300

1. Install a grooved main bearing (upper bearing) on the cylinder block side.

2. Install a grooveless main bearing (lower bearing) on the main bearing cap side.

3. Both upper and lower center thrust bearings are grooveless.

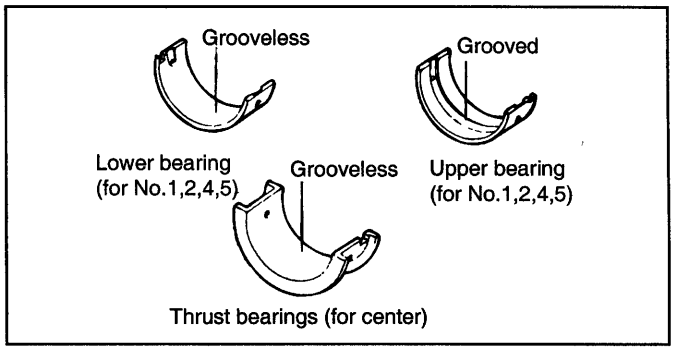

ECA9420A

4. Apply engine oil to journals and pins. Install the crankshaft.

5. Install the bearing caps with the arrow mark directed toward the front of the engine. The cap number must be correct.

6. Tighten the cap bolts to the specified torque.

Tightening torque

Main bearing cap bolts : 25 Nm (250, 18lb.ft) + (90°)

7. Cap bolts should be tightened evenly in 4 to 5 increments before they are tightened to the specified torque.

8. Make sure that the crankshaft turns freely and check the end play of the crankshaft.

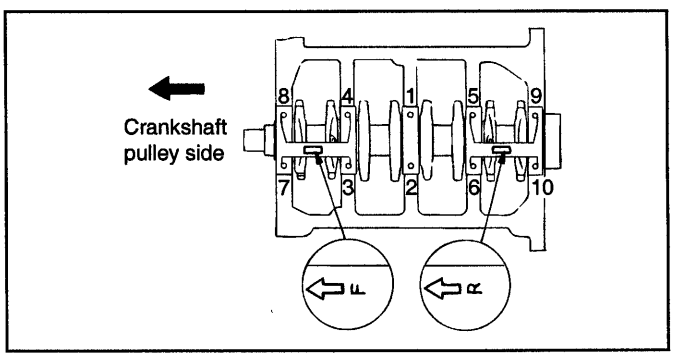

EOY062B

9. Using a special tool (09231–21000). Install the oil seal in the oil seal case. A new oil seal should be used.

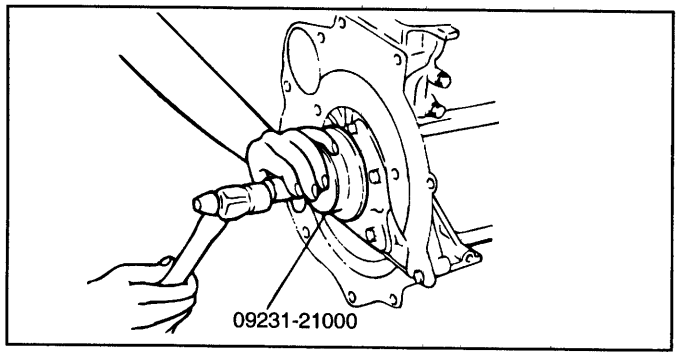

ECA9420C

10. Install the oil seal into the oil seal case so that the oil hole in the separator may be directed downward (arrow in illustration)

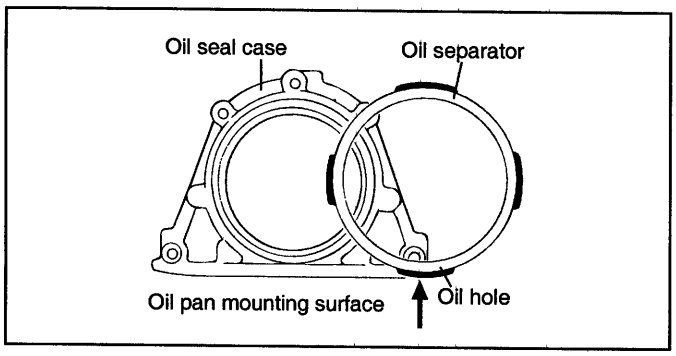

ECA9053A

11. Install the new oil seal case gasket and oil seal case assembly.

Tightening torque

Oil seal case :

10-12N.m (100-120kg.cm, 7-9 lb.ft)

<For M/T>

12. Install the rear plate to the cylinder block.

13. Install the flywheel assembly and tighten the bolts to the specified torque.

Tightening torque

Flywheel bolt :

130-140 Nm (1300-1400kg.cm,94-101lb.ft)

<For A/T>

14. Install the adapter plate to the cylinder block.

15. Install the drive plate and tighten the bolts to the specified torque.

Tightening torque

Drive plate :

130-140 Nm (1300-1400kg.cm,94-101lb.ft)

COOLING SYSTEM

ENGINE COOLANT HOSE/PIPES

ENGINE COOLANT HOSE AND PIPE ECHA4500

[DOHC ENGINE]

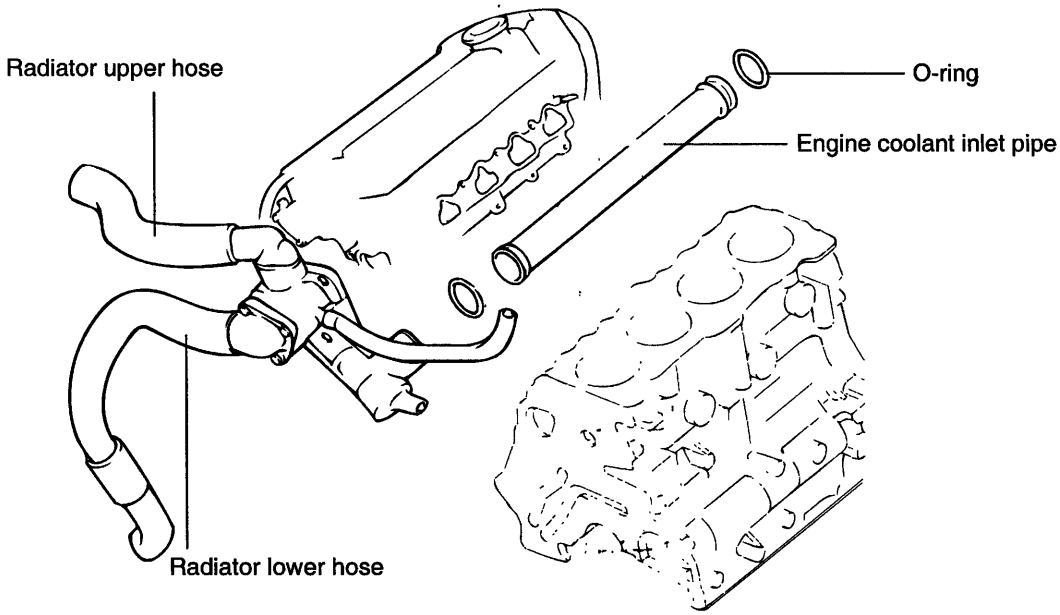

ECA9081B

INSPECTION ECHA4600

Check the engine coolant pipe and hose for cracks, damage and restrictions. Replace if necessary.

REASSEMBLY ECHA4700

Fit an O-ring in the groove provided at the engine coolant inlet pipe end. Wet the periphery of the O-ring with water and insert the engine coolant inlet pipe.

NOTE

1. **Do not apply oil or grease to engine coolant pipe O-ring.**
2. **Keep the engine coolant pipe connections free of sand, dust, etc.**
3. **Insert the engine coolant pipe into the end of the engine coolant pump inlet.**
4. **Whenever installing the engine coolant inlet pipe, always replace the O-ring with a new one.**

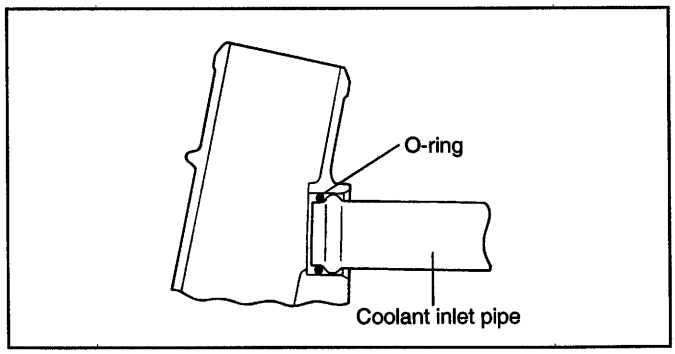

ECA9570A

COOLANT TEMPERATURE SENSOR ECJA4800

REMOVAL

1. Drain the coolant to a level below the bottom of the sensor.
2. Disconnect the ground cable from the battery and then remove the sensor connector.
3. Remove the coolant sensor.

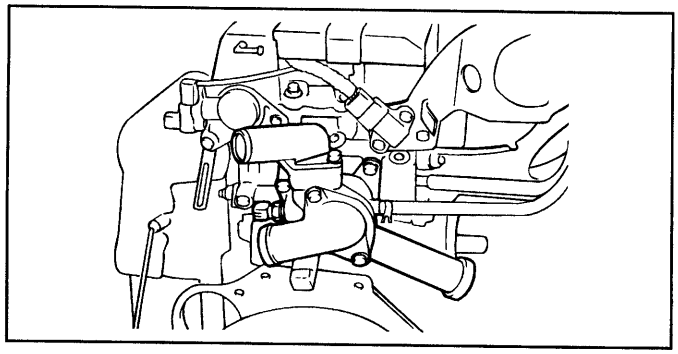

EDJA600B

INSTALLATION ECJA4900

1. Tighten the coolant temperature sensor to the specified torque after applying the sealant to the screw area.

Recommened sealant :

Threebond No. 1324N or LOCTITE 262

Tightening torque

The coolant temperature sensor :

20-40Nm (200-400 kg.cm, 14-29 lb.ft)

2. Connect the sensor to the harness.
3. Connect the ground cable to the battery.
4. Refill the engine coolant.

ENGINE COOLANT PUMP

ENGINE COOLANT PUMP [FOR DOHC ENGINE] ECHA5000

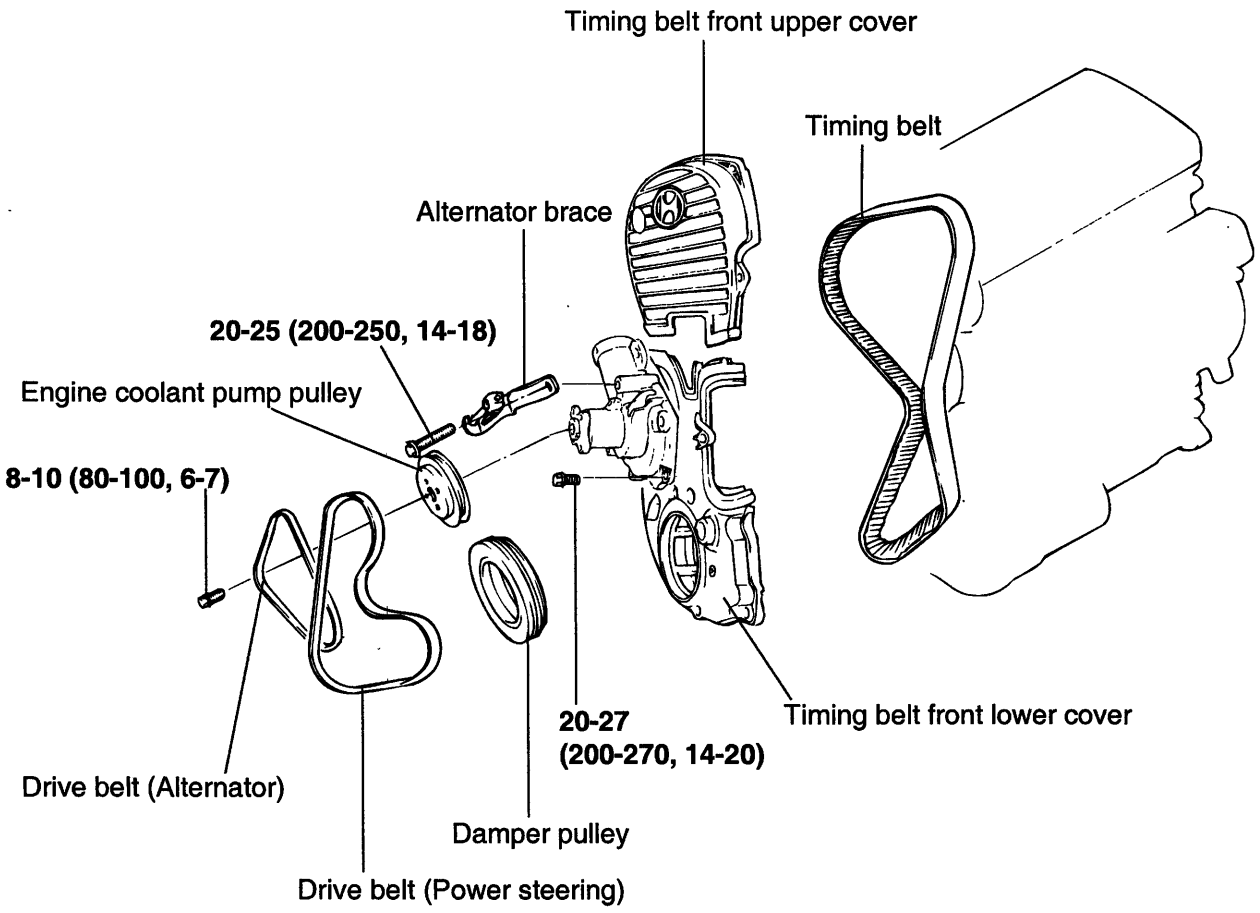

TORQUE : Nm (kg·cm, lb·ft)

ECA9022A

REMOVAL ECHA5100

1. Drain the coolant and disconnect the coolant pump inlet pipe.
2. Remove the drive belt and engine coolant pump pulley.
3. Remove the timing belt covers and the timing belt tensioner.
4. Remove the engine coolant pump mounting bolts, then remove the alternator brace.
5. Remove the engine coolant pump assembly from the cylinder block.

INSPECTION ECJA5200

1. Check the pump for cracks, damage or wear. Replace the pump assembly if necessary.
2. Check the bearing for damage, abnormal noise, and sluggish rotation. Replace the pump assembly if necessary.
3. Check the seal for leaks. Replace the pump assembly if necessary.
4. Check for engine coolant leakage. If the engine coolant leaks, the seal is defective. Replace the engine coolant pump assembly.

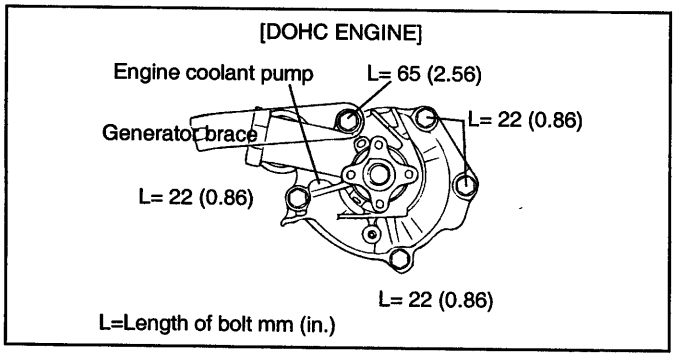

ECA9062A

INSTALLATION ECHA5300

1. Clean the gasket surfaces of the engine coolant pump body and the cylinder block.
2. Install the new O-ring onto the groove on the front end of the engine coolant pipe, then wet the O-ring with water. Do not apply oil or grease.

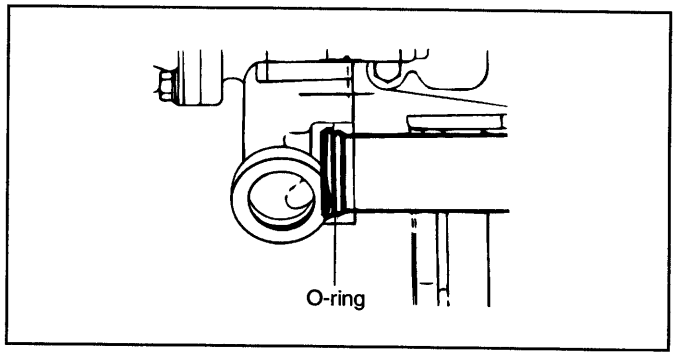

ECHA013A

3. Install a new engine coolant pump gasket and engine coolant pump assembly. Tighten the bolts to the specified torque.

Tightening torque

Engine coolant pump bolt :

20-27Nm(200-270kg.cm, 14-20lb.ft)

4. Install the timing belt tensioner and timing belt. Adjust the timing belt tension, then install the timing belt covers.
5. Install the engine coolant pump pulley and drive belt, then adjust the belt tension.
6. Refill the coolant.
7. Run the engine and check for leaks.

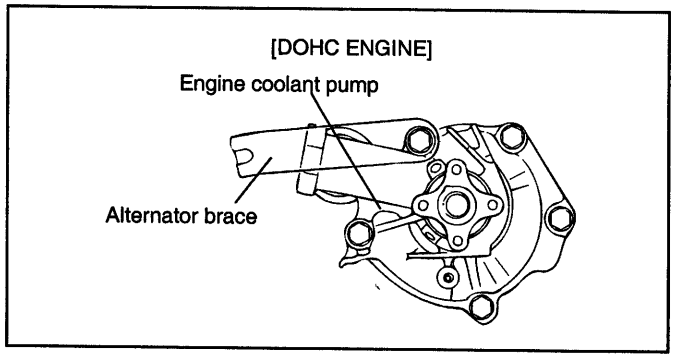

ECHA530A

RADIATOR

RADIATOR ECJA5500

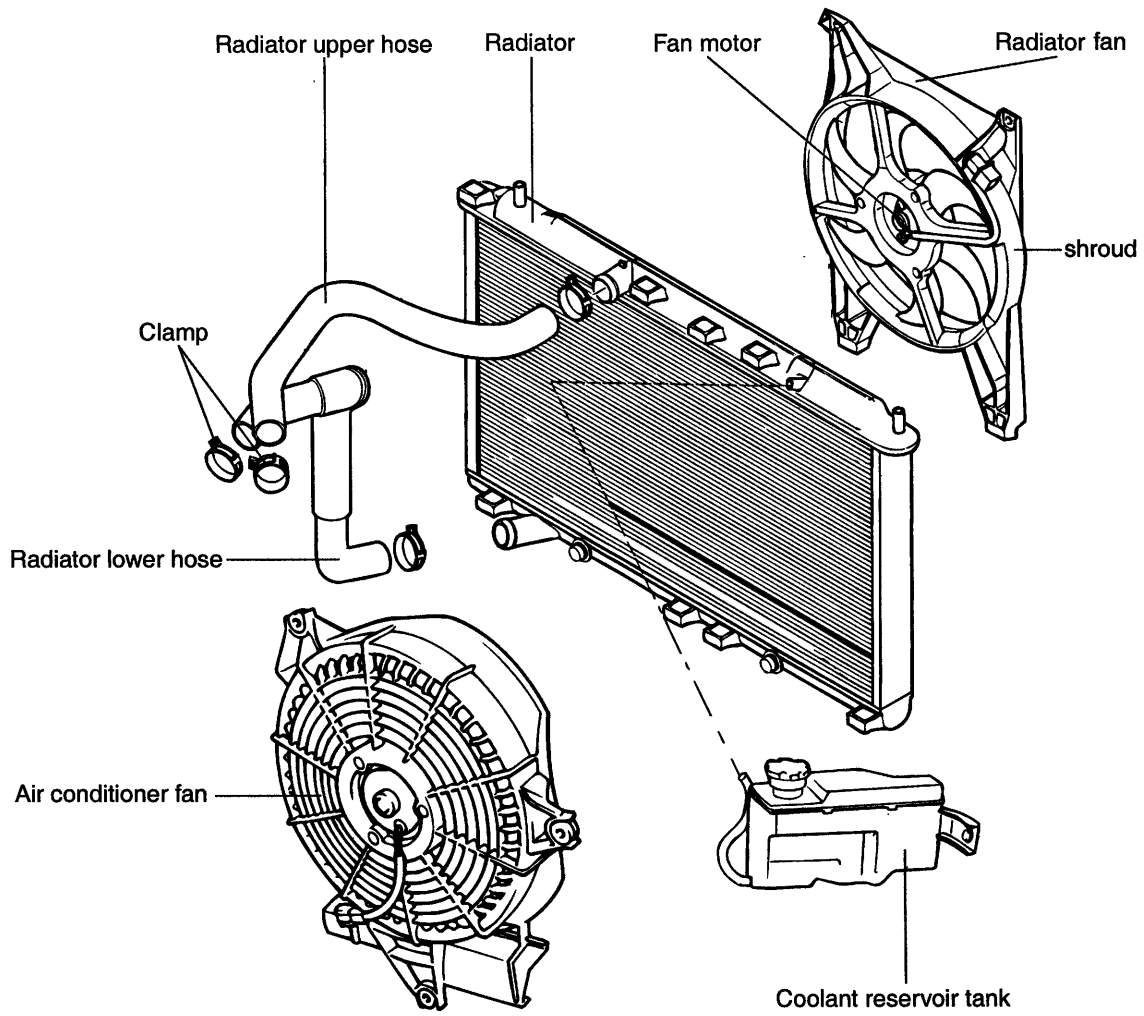

TORQUE : Nm (kg·cm, lb·ft)

ECJA550A

REMOVAL ECJA5600

1. Disconnect the ground cable from the battery terminal.
2. Disconnect the fan motor connector.
3. Loosen the radiator drain plug to drain the coolant.
4. Disconnect the upper and lower hoses and overflow tube after making marks on the radiator hose and the hose clamp. to ease. reassembly.

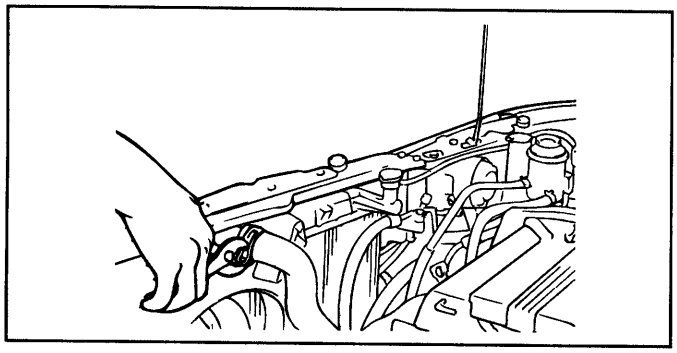

EDJA330A

5. For vehicles with automatic transaxles, disconnect the oil cooler hoses from the automatic transaxle.

CAUTION

Cover or plug the hose and inlets of the radiator so that dust and other foreign materials can not enter after the hose is disconnected from the radiator.

6. Remove the radiator upper mounting bolt.

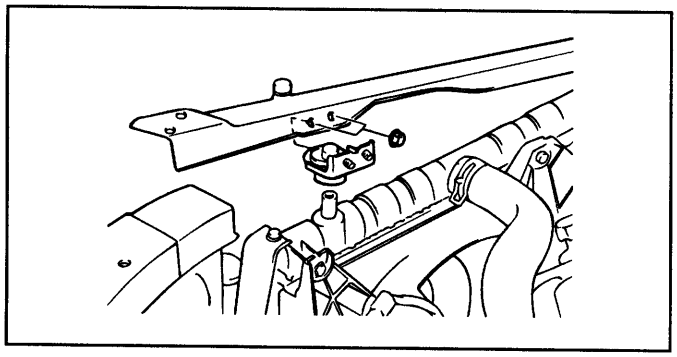

EDHA001C

7. Remove the radiator together with the fan motor.
8. Remove the radiator fan motor and condenser fan motor from the radiator.

INSPECTION ECHA5700

1. Check for foreign material between the radiator fins.
2. Check the radiator fins for damage and straighten if necessary.
3. Check the radiator for corrosion, damage, rust or scale.
4. Check the radiator hoses for cracks, damage or deterioration.
5. Check the reservoir tank for damage.
6. Check the automatic transaxle oil cooler hoses for cracking, damage or deterioration (only A/T).

INSTALLATION ECHA5800

1. Fill the radiator and reservoir tank with clean coolant mixture.
2. Run the engine until the coolant has warmed up enough so that the thermostat valve is open. Then, stop the engine.
3. Remove the radiator cap and pour the coolant into the filler neck of the radiator. Fill the reservoir tank with the coolant to the upper level. Replace the radiator cap.
4. Check that there are no leaks from the radiator, hoses or connections.

RADIATOR FAN MOTOR

RADIATOR FAN MOTOR

ASSEMBLY ECHA6200

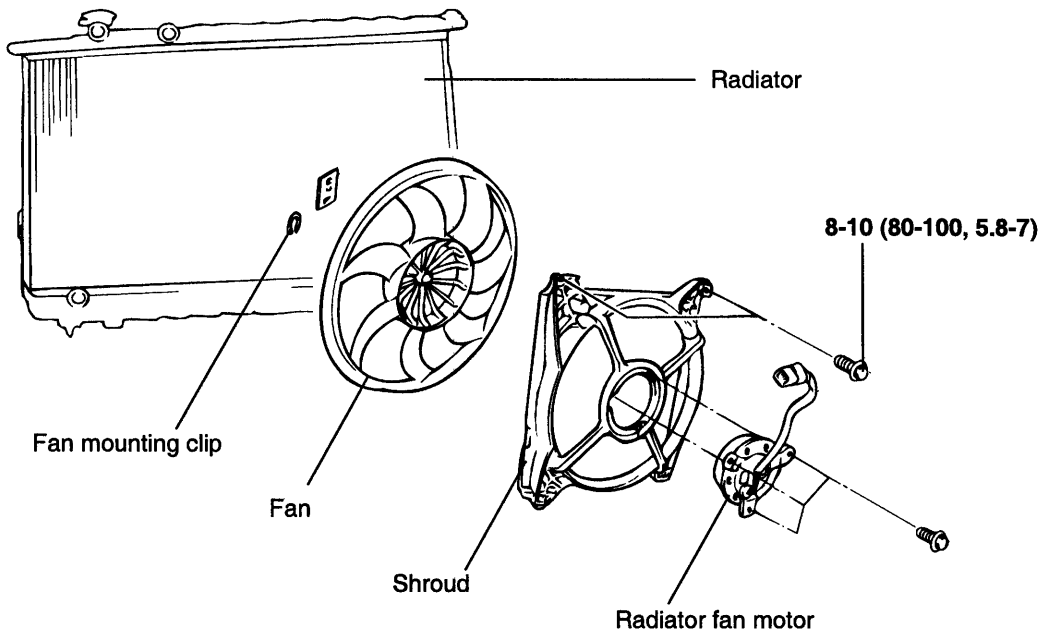

TORQUE : Nm (kg·cm, lb· ft)

ECA9059A

REMOVAL ECJA6000

1. Disconnect the ground cable from the battery cable.
2. Disconnect the connectors from the fan motor and the harness from the shroud.
3. For vehicles with automatic transaxles, remove the oil cooler hose from the shroud.
4. Remove the four bolts holding the shroud.
5. Remove the shroud with the fan motor.
6. Remove the fan mounting clip and detach the fan from the fan motor.
7. Remove the three screws and detach the fan motor.

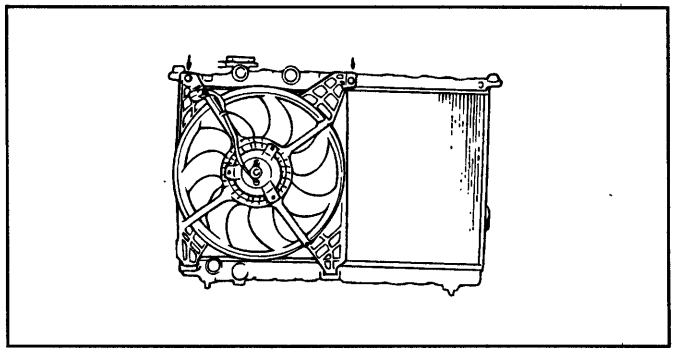

ECA9060A

INSPECTION

Radiator Fan Motor

1. Check that the radiator fan rotates when battery voltage is applied between the terminals (as shown in the table below).
2. Check that abnormal noise is not produced while the motor is turning.

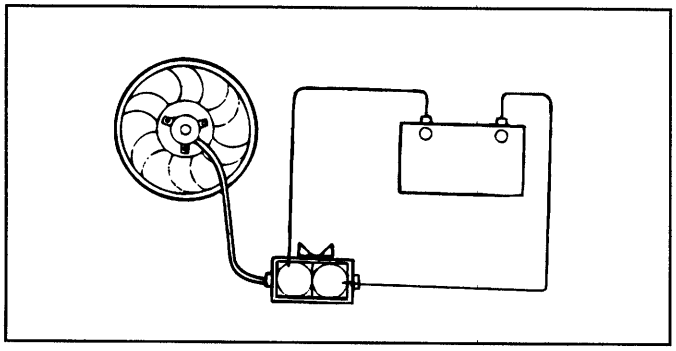

ECHA011C

RADIATOR FAN MOTOR RELAY

1. Remove the radiator fan motor relay (High and Low) from the relay box in the engine bay.

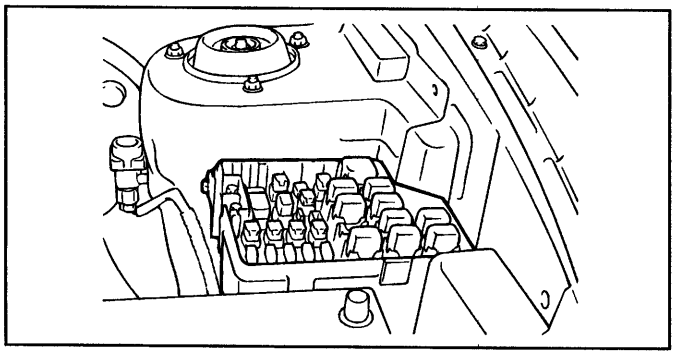

ECJA630A

2. Check the continuity of the terminals "2" and "4" with an ohmmeter.

Item	Terminal No.	Yes or No
ON	Terminal 1-3	Continuity
OFF	Terminal 1-3	Non continuity
	Terminal 2-4	Continuity

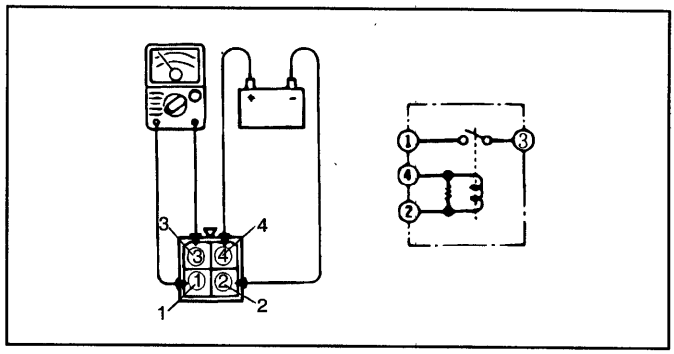

HFR25016

INSTALLATION ECJA6100

Installation is in the reverse order of removal procedures.

NOTE

- **Make sure the cooling fan does not come into contact with the shroud when installed.**
- **After installation, make sure there is no unusual noise or vibration when the fan is rotating.**

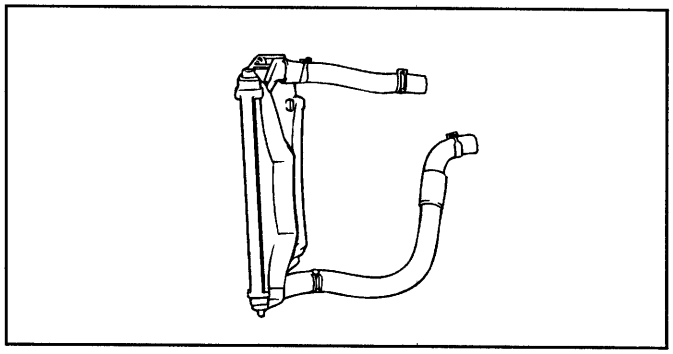

ECA9061A

RADIATOR CAP ECHA5900

RADIATOR CAP

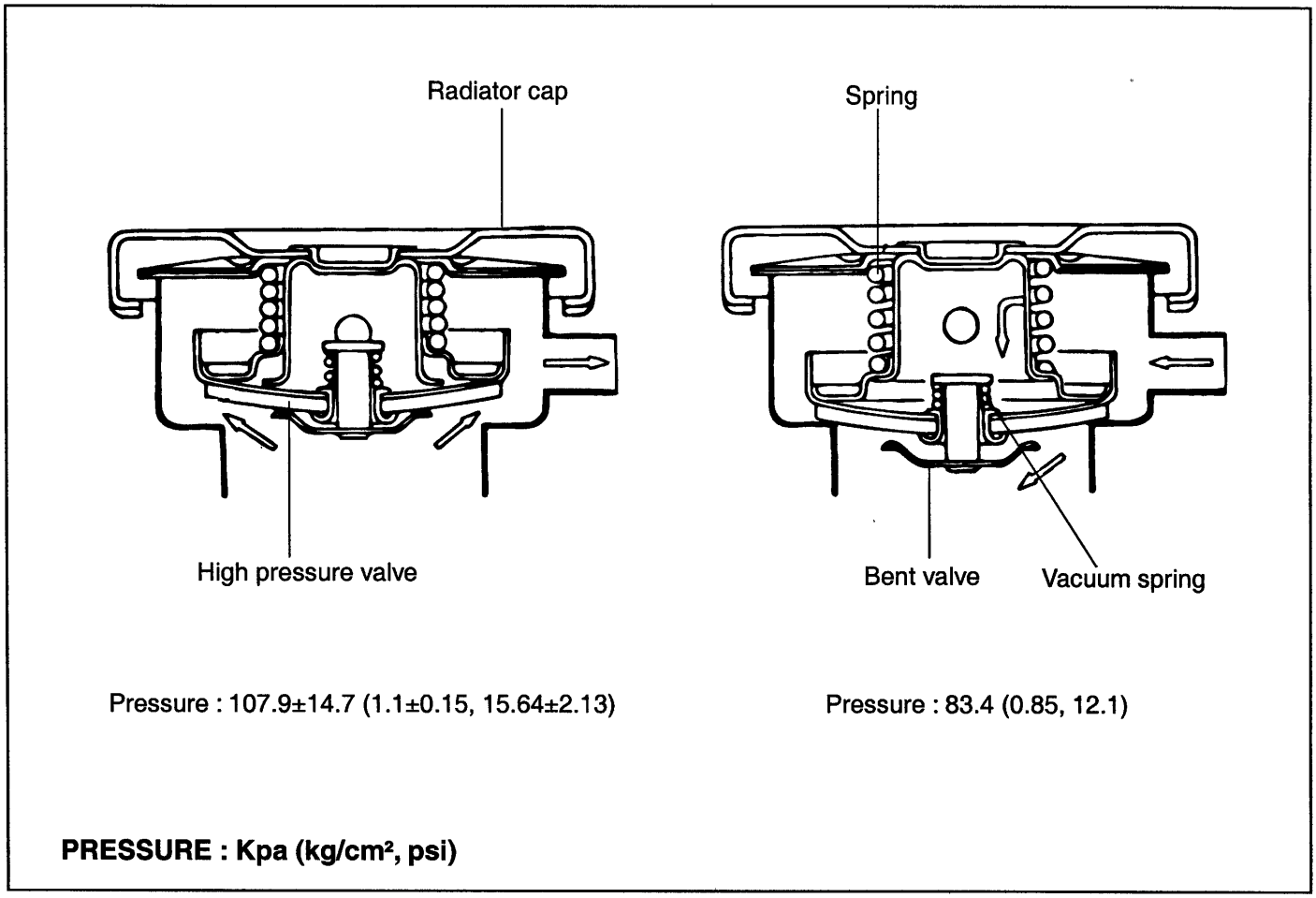

ECHA014A

INSPECTION ECJA6300

1. Check the radiator cap for damage, cracks or weakening.

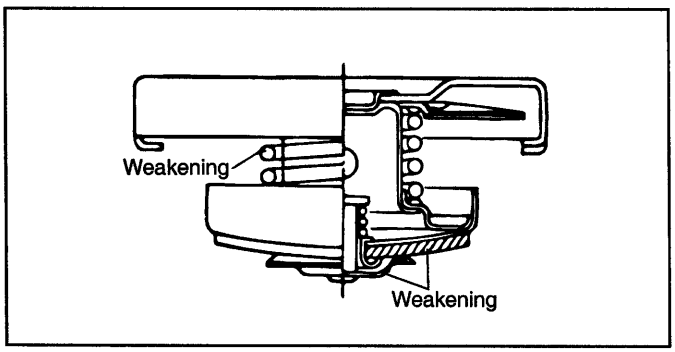

ECHA014B

2. Connect the tester to the radiator cap.
3. Increase the pressure until the indicator stops moving.
4. Replace the radiator cap if the reading does not hold steady for about 10 seconds.

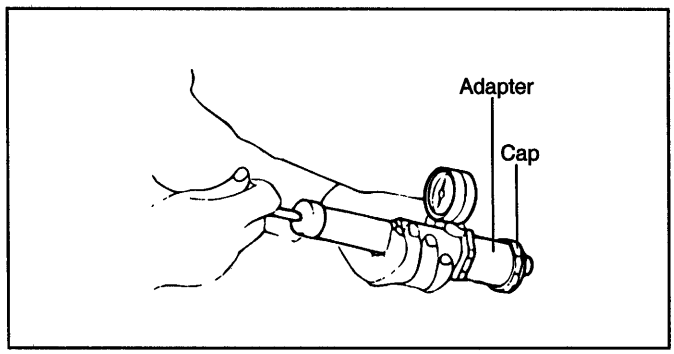

ECHA014C

THERMOSTAT

THERMOSTAT ECHA6600

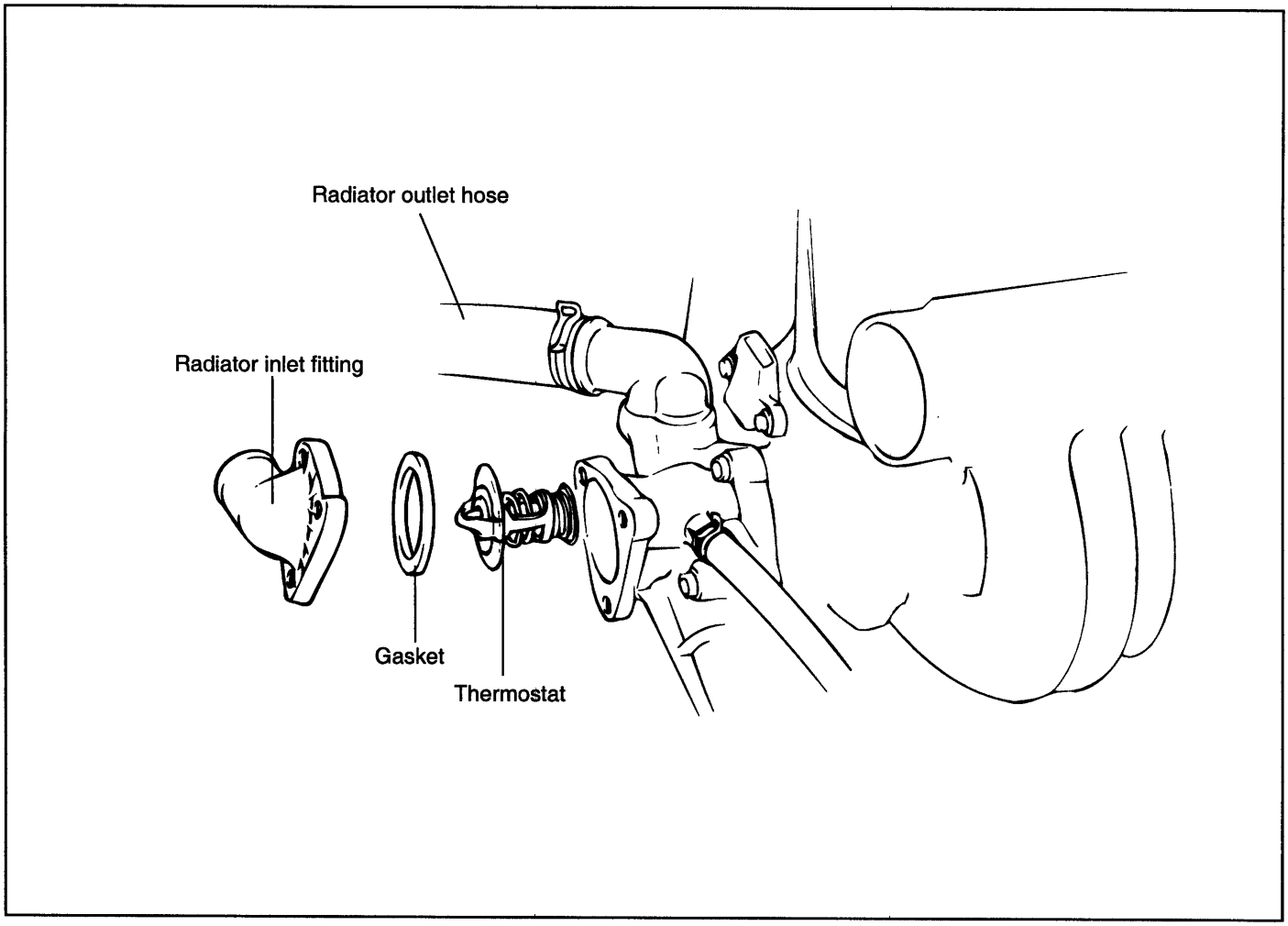

ECHA660A

REMOVAL ECHA6700

1. Drain the coolant so its level is below the thermostat.
2. Remove the inlet fitting and gasket.
3. Remove the thermostat.

INSPECTION ECHA6800

1. Heat the thermostat as shown in the illustration.
2. Check that the valve operates properly.
3. Verify the temperature at which the valve begins to open.

Valve opening temperature :

80-84°C(176-183.2°F)

Full opening temperature : 95°C(203°F)

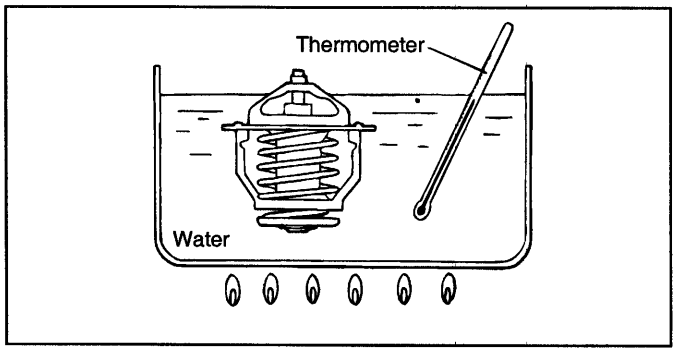

ECA9600A

INSTALLATION ECHA6900

1. Check that the flange of the thermostat is correctly seated in the socket of the thermostat housing.
2. Install the inlet fitting.

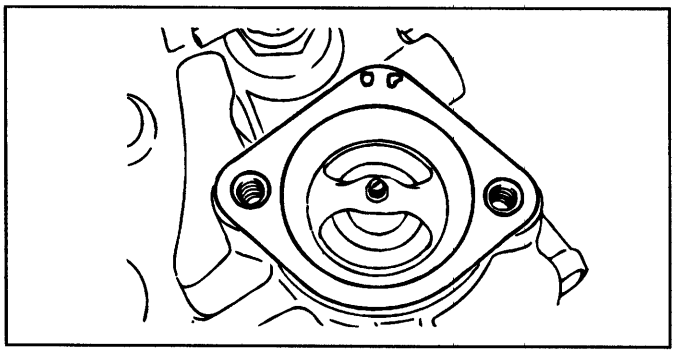

ECHA013B

Tightening torque

Engine coolant inlet fitting bolt :

10-15Nm(100-150kg.cm, 7-11lb.ft)

3. Refill the coolant.

INTAKE AND EXHAUST SYSTEM

EXHAUST PIPE

EXHAUST MANIFOLD ECJA7000

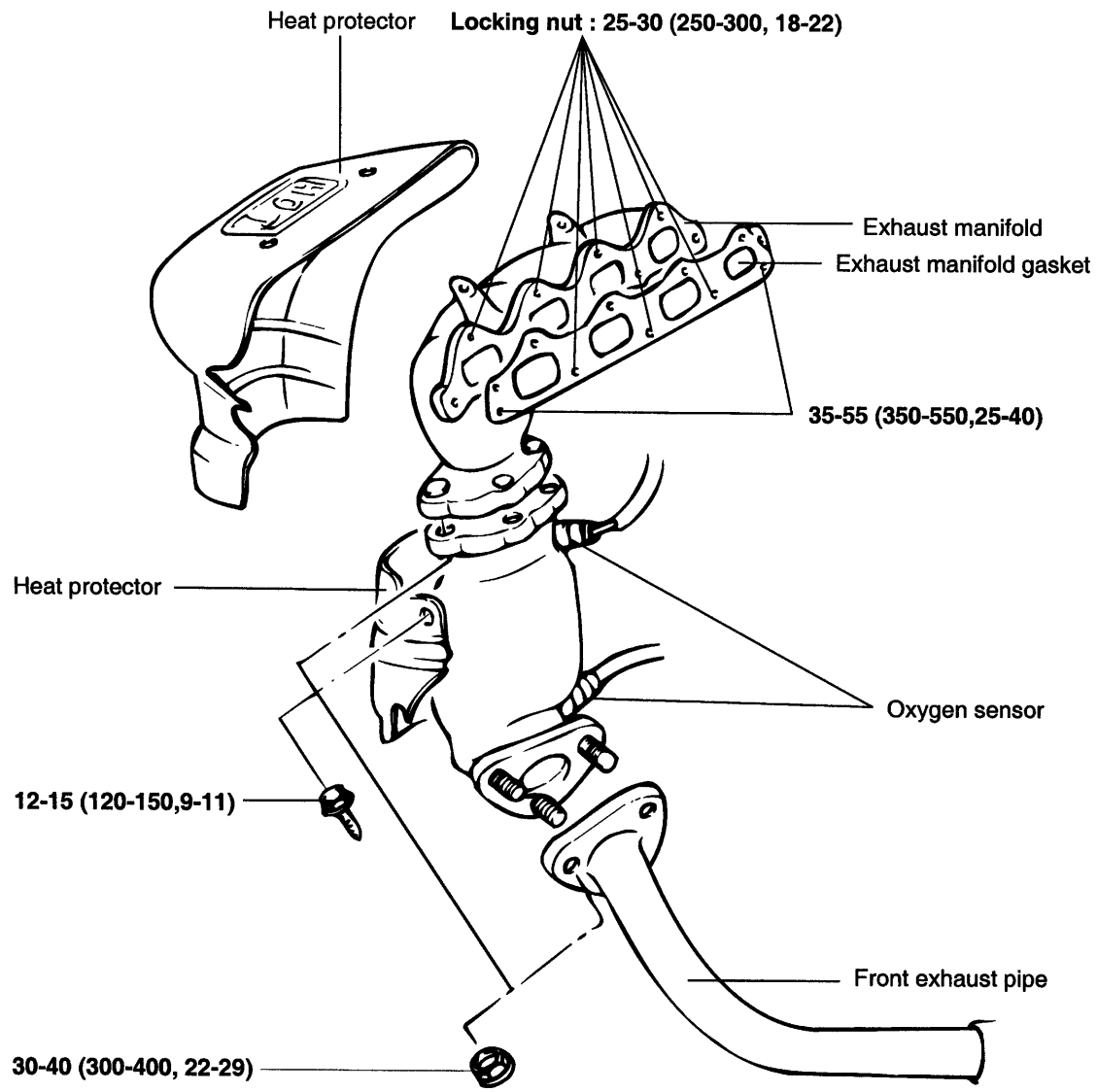

TORQUE : Nm (kg.cm, lb·ft)

ECA9071B

REMOVAL ECHA7100

1. Remove the heat protector.

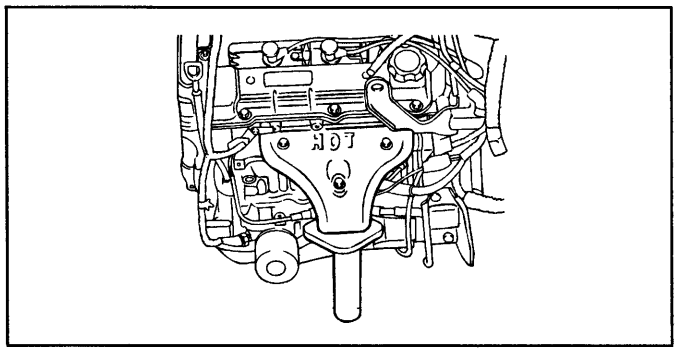

EDHA011A

2. Remove the exhaust manifold.

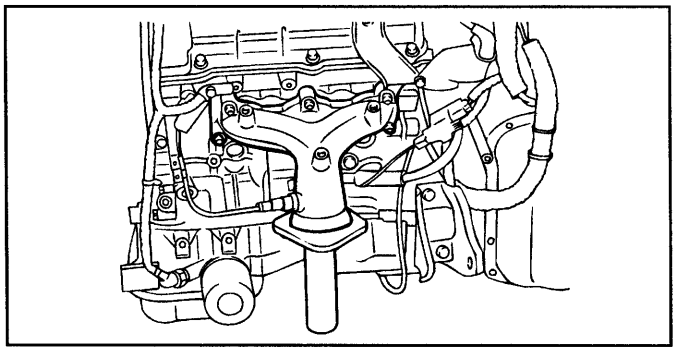

EDHA011B

3. Remove the exhaust manifold gasket.

INSPECTION

1. Check for damage or cracking.
2. Using a straight edge and feeler gauge, check for distortion on the cylinder head matching surface.

Standard value : 0.15 mm (0.006 in.)

Service limit : 0.3 mm (0.012 in.)

3. Check the exhaust manifold for damage and cracking.

INSTALLATION ECHA7200

1. Install the exhaust manifold with its gasket.

Tightening torque

Exhaust manifold

M8 : 25-30 N.m (250-300 kg.cm, 18-22 lb.ft)

M10 : 35-55 N.m (350-550 kg.cm, 25-40 lb.ft

NOTE

Do not use the used exhaust manifold gasket.

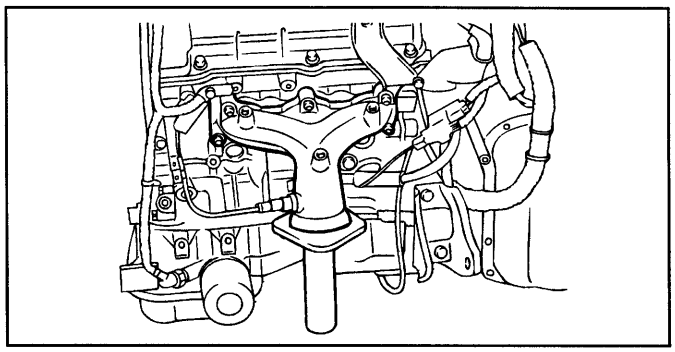

EDHA011B

2. Install the heat protector.

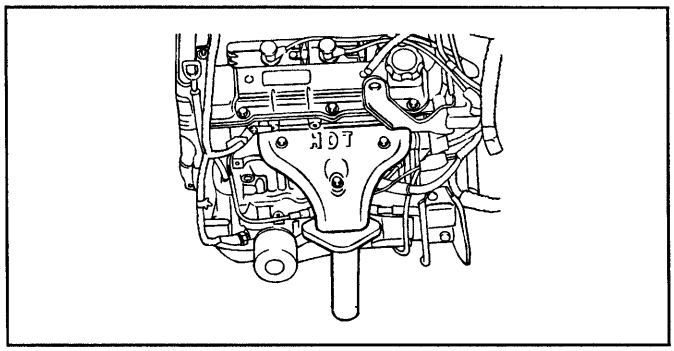

EDHA011A

INTAKE MANIFOLD

INTAKE MANIFOLD ECHA7500

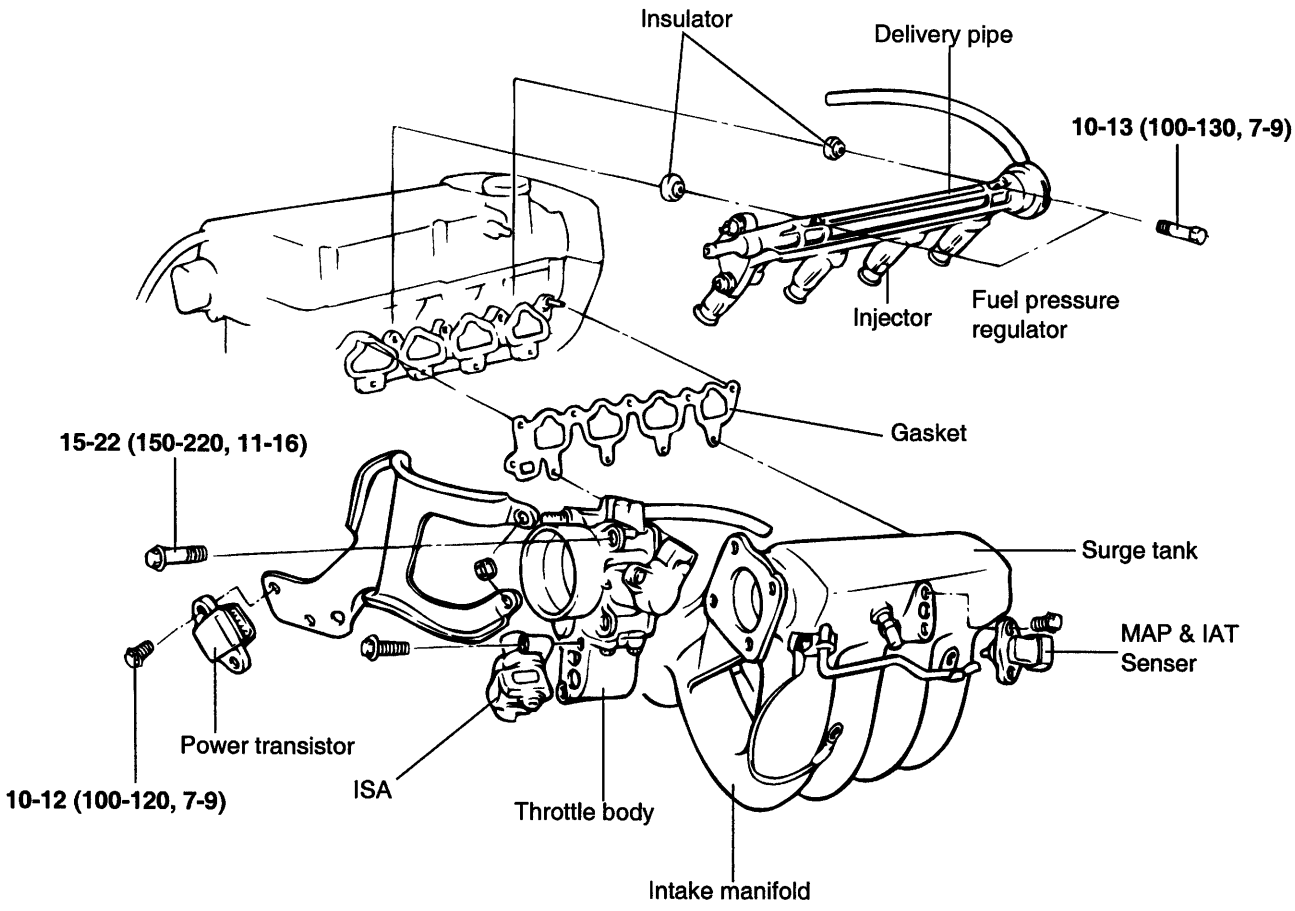

TORQUE : Nm (kg·cm, lb·ft)

ECA9067A

REMOVAL ECJA7600

1. Remove the air breather hose connected to the throttle body.

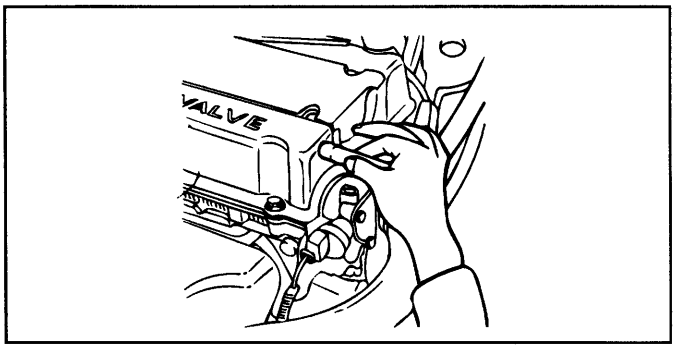

ECHA016A

2. Remove the accelerator cable.

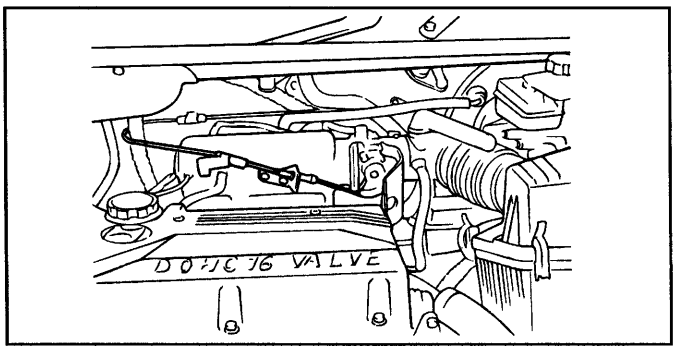

EDHA006E

3. Remove the engine coolant hose and throttle body.

4. Remove the P.C.V. valve and brake boost vacuum hose.

5. Disconnect the vacuum hose connector.

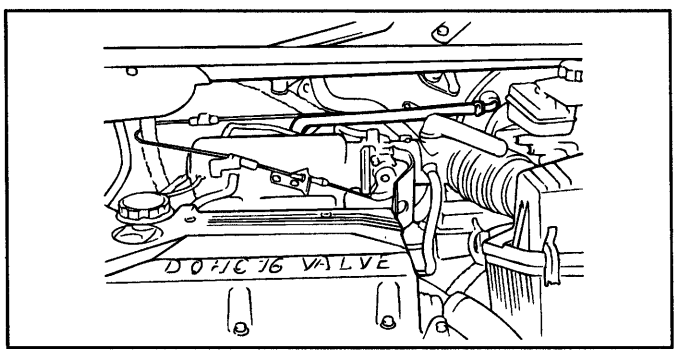

EDHA006B

6. Remove the injector cover.

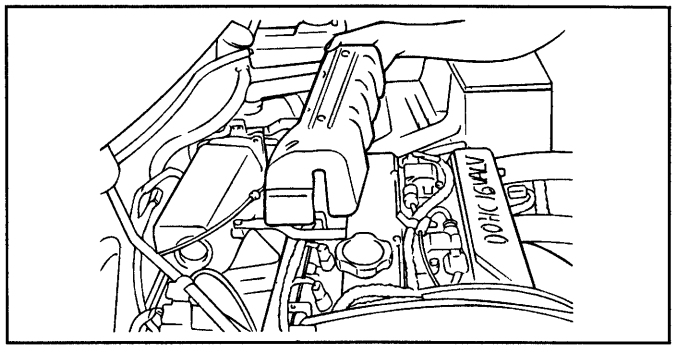

ECHA016I

7. Bleed off pressure in the fuel pipe line to prevent fuel from spilling and then disconnect the high pressure hose.

8. Disconnect the fuel injector harness connector.

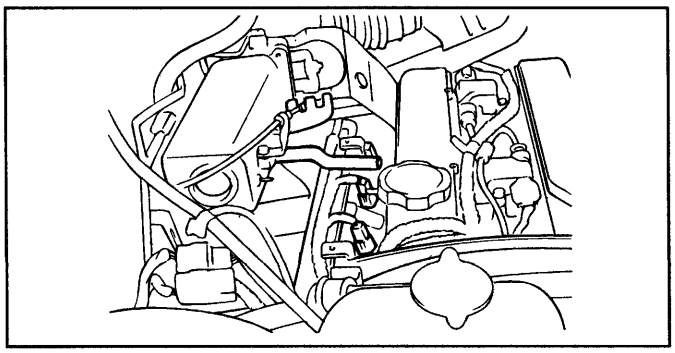

ECHA055A

9. Remove the delivery pipe with fuel injectors and the pressure regulator.

NOTE

When the delivery pipe is removed, do not drop the injectors.

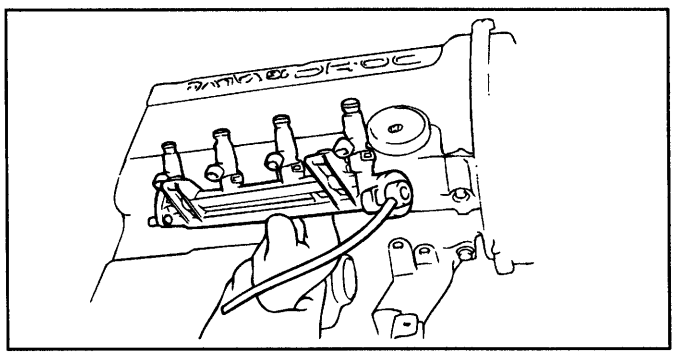

ECA9070A

10. Remove the intake manifold stay.

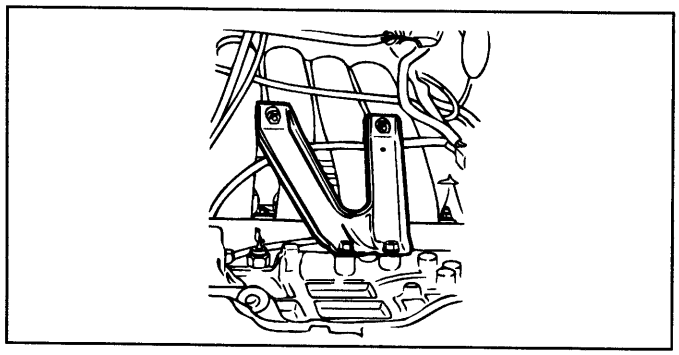

ECHA016C

11. Remove the intake manifold.

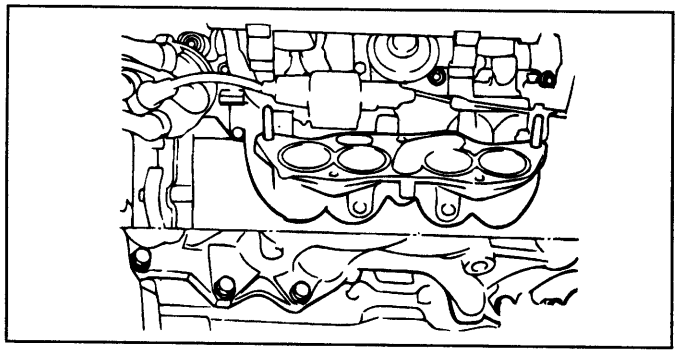

ECHA016J

INSPECTION ECHA7700

INTAKE MANIFOLD AND SURGE TANK

1. Check the parts for damage or cracking.
2. Check for restrictions in the vacuum outlet port, water or gas passages.
3. Check for flatness using a straight edge and feeler gauge.

Standard value : 0.15 mm (0.06 in.) or less

Service limit : 0.2 mm (0.0078 in.)

INSTALLATION ECJA7800

1. Install the intake manifold and new gasket to the specified torque.

Tightening torque

Intake manifold

Bolt : 15-20Nm (150-120 kg.cm, 11-14 lb.ft)

Nut : 30-42Nm (300-420 kg.cm, 22-30 lb.ft)

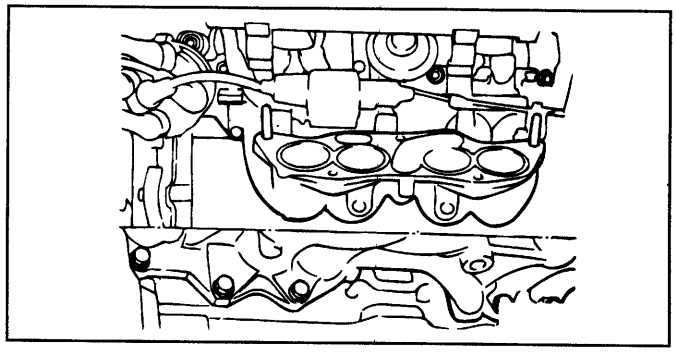

ECHA016J

2. Install the delivery pipe and injector assembly to the intake manifold.

NOTE

Make certain that there is no interferences between the injectors and injector ports on the intake manifold.

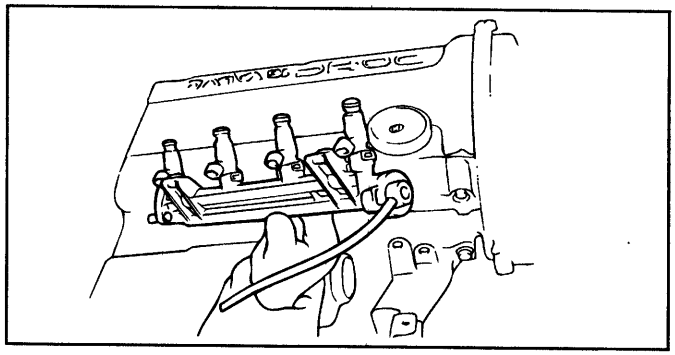

ECA9070A

3. Install the surge tank stay.
4. Connect the fuel injector connector and wiring harness and then install the cover.

5. Connect the high pressure hoses.

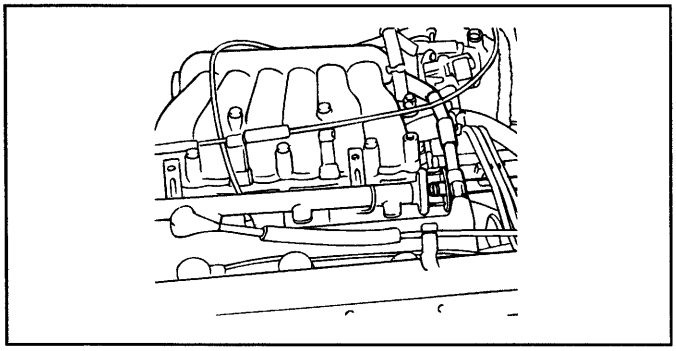

ECHA016B

6. Connect the vacuum hoses.

Tightening torque

Intake manifold stay and cylinder block :

18-25Nm (180-250 kg.cm, 13-18 lb.ft)

7. Connect the PCV valve and brake boost hoses.
8. Install the air breather hose.
9. Install the accelerator cable.

MUFFLER

MUFFLERS ECJA8000

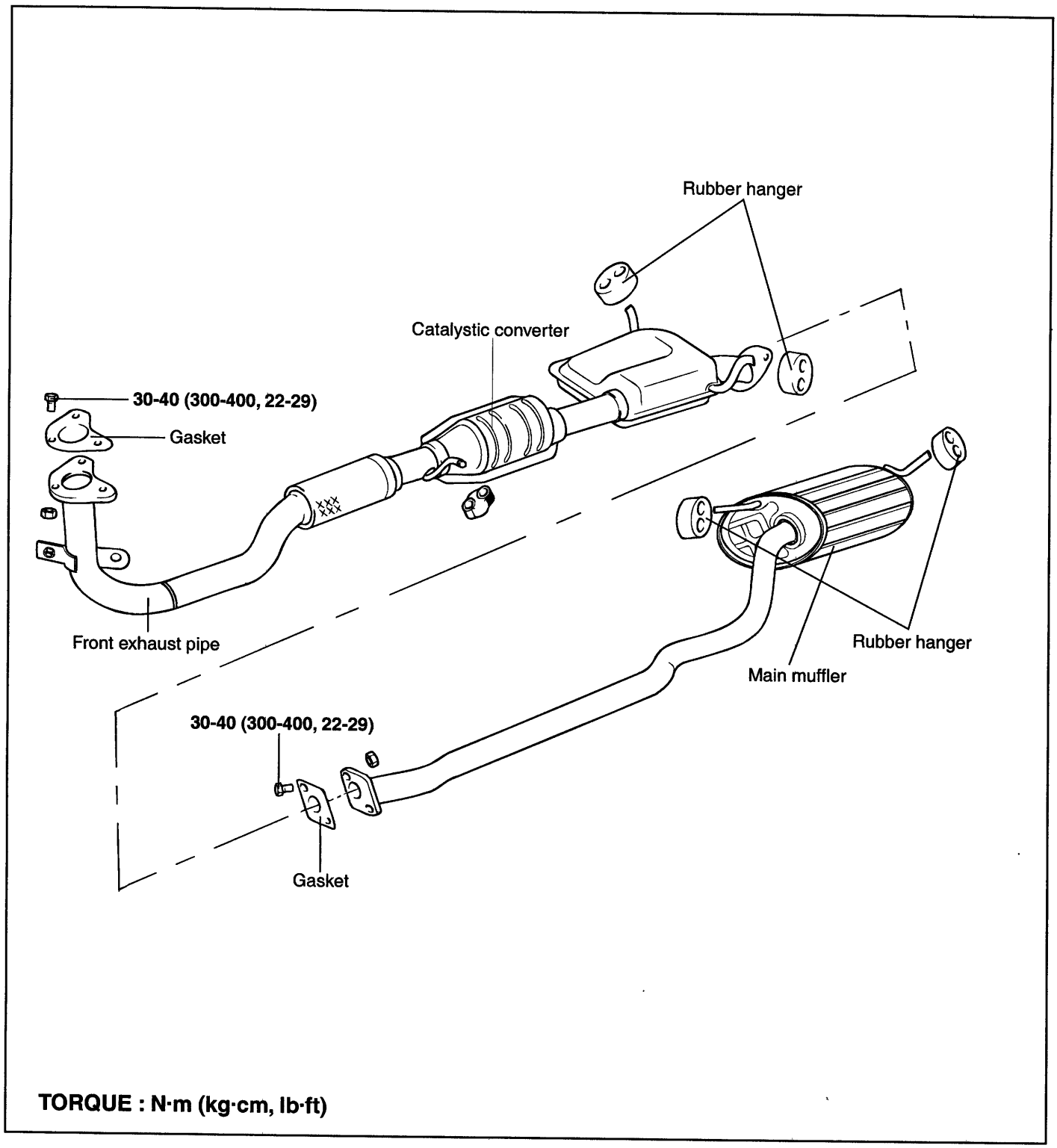

TORQUE : N·m (kg·cm, lb·ft)

ECJA800A

REMOVAL ECJA8100

MAIN MUFFLER

CAUTION

Before removing or inspecting the exhaust system, ensure that the exhaust system is cool.

1. Disconnect the main muffler from the center exhaust pipe.

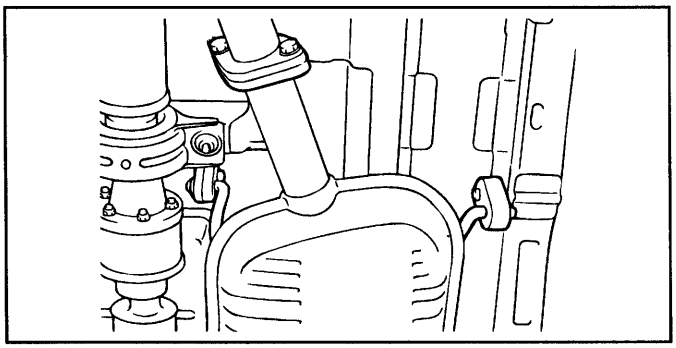

ECJA810A

2. Remove the rubber hangers and remove the main muffler.

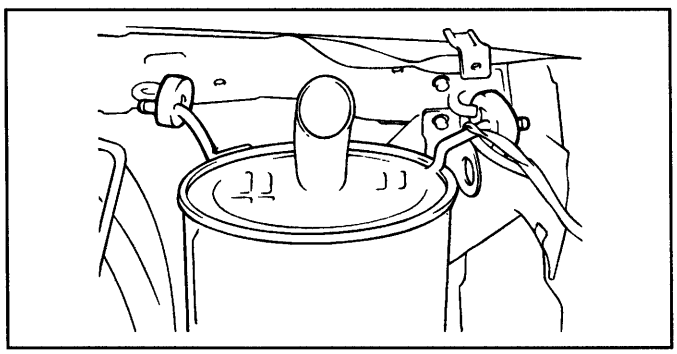

ECJA810B

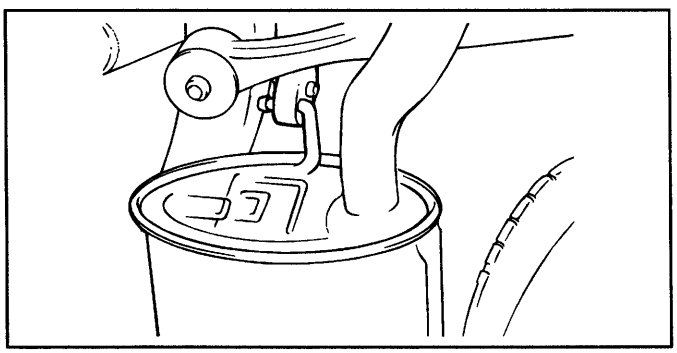

ECJA810C

FRONT EXHAUST PIPE (INCLUDING CATALYTIC CONVERTER)

1. Remove the front exhaust pipe from the center exhaust pipe.

2. Remove the front exhaust pipe bolts and exhaust manifold pipe mounting nuts.

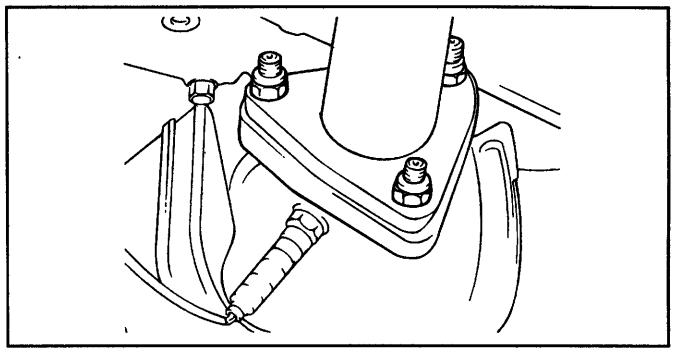

ECJA230B

3. Remove the front exhaust pipe from the rubber hanger.

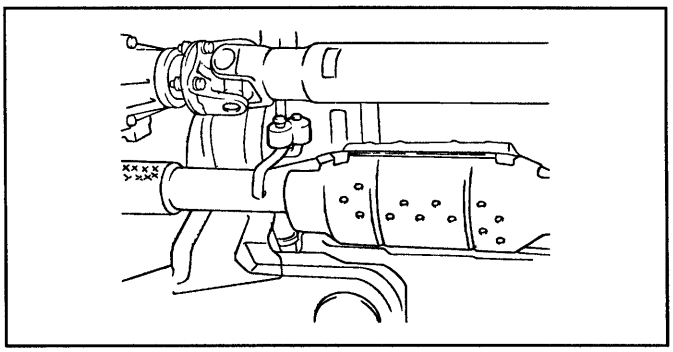

EDJA810C

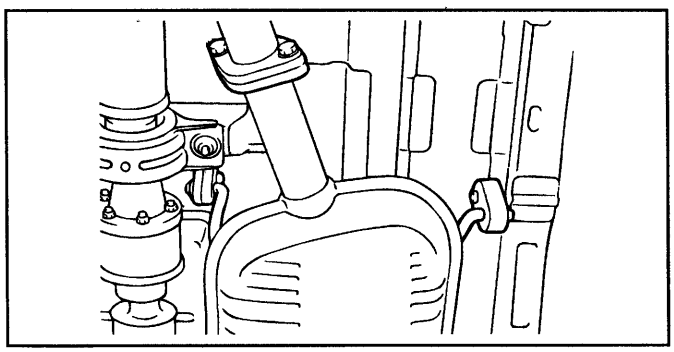

ECJA810A

INSPECTION ECHA8200

1. Check the mufflers and pipes for leaks, corrosion and damage.

2. Check the rubber hangers for deterioration and cracks.

INSTALLATION ECJA8300

1. Temporarily install the front exhaust pipe (catalytic converter assembly), the center exhaust pipe and the main muffler in this order.

2. Install the rubber hangers so that they hang equally (left and right).

3. Tighten the parts securely and then confirm that there is no interference with any of components.

AIR CLEANER (ACL)

AIR CLEANER ECJA8500

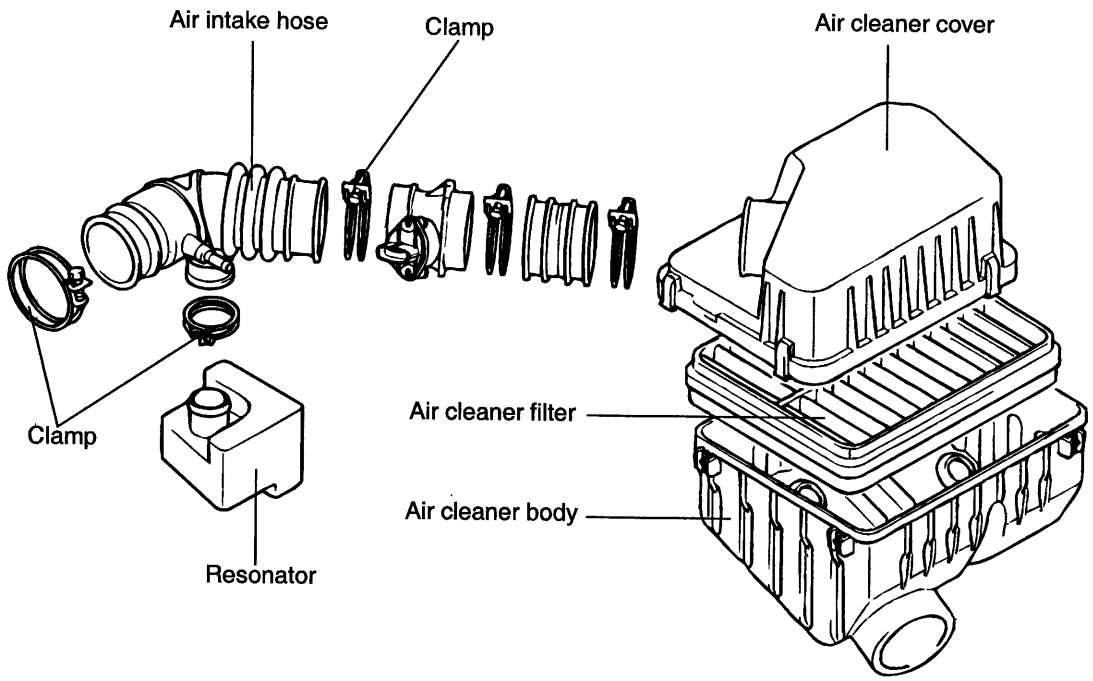

TOR QUE : Nm (kg·cm, lb·ft)

ECJA850A

REMOVAL ECJA8600

1. Disconnect the air flow sensor connector.
2. Remove the air intake hose at the air cleaner and the resonator.
3. Remove the three bolts attaching the air cleaner mounting brackets.
4. Detach the air cleaner.

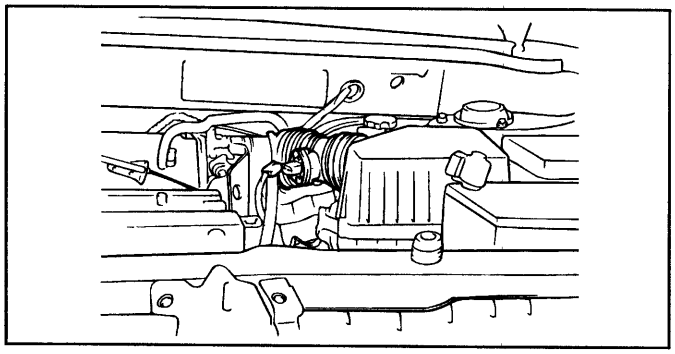

ECJA870B

5. Remove the air flow sensor from the air intake hose.

CAUTION

Do not pull on the air flow sensor wires.

INSPECTION ECJA8700

1. Check the air cleaner body, cover, or filter for distortion, corrosion or damage.
2. Check the air duct for damage.

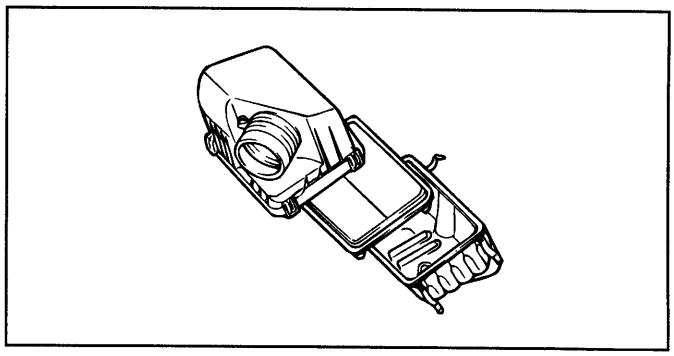

ECJA870A

3. Check the air cleaner element for restriction, contamination or damage. If the element is slightly restricted, remove the dust and debris by blowing compressed air from the inside of the element.

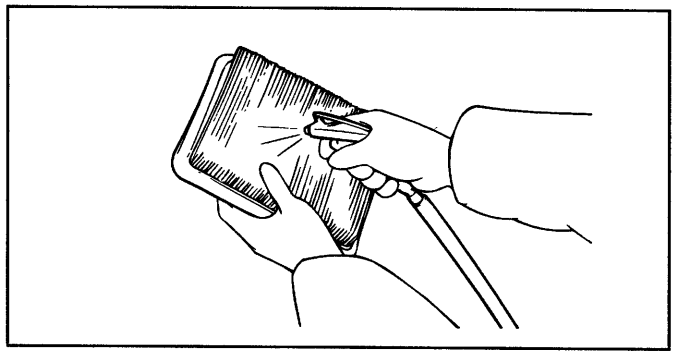

ECA9066A

INSTALLATION ECHA8800

Install the air cleaner assembly following the reverse order of removal.

CYLINDER HEAD ASSEMBLY

CYLINDER HEAD

CYLINDER HEAD AND VALVES ECHA9000

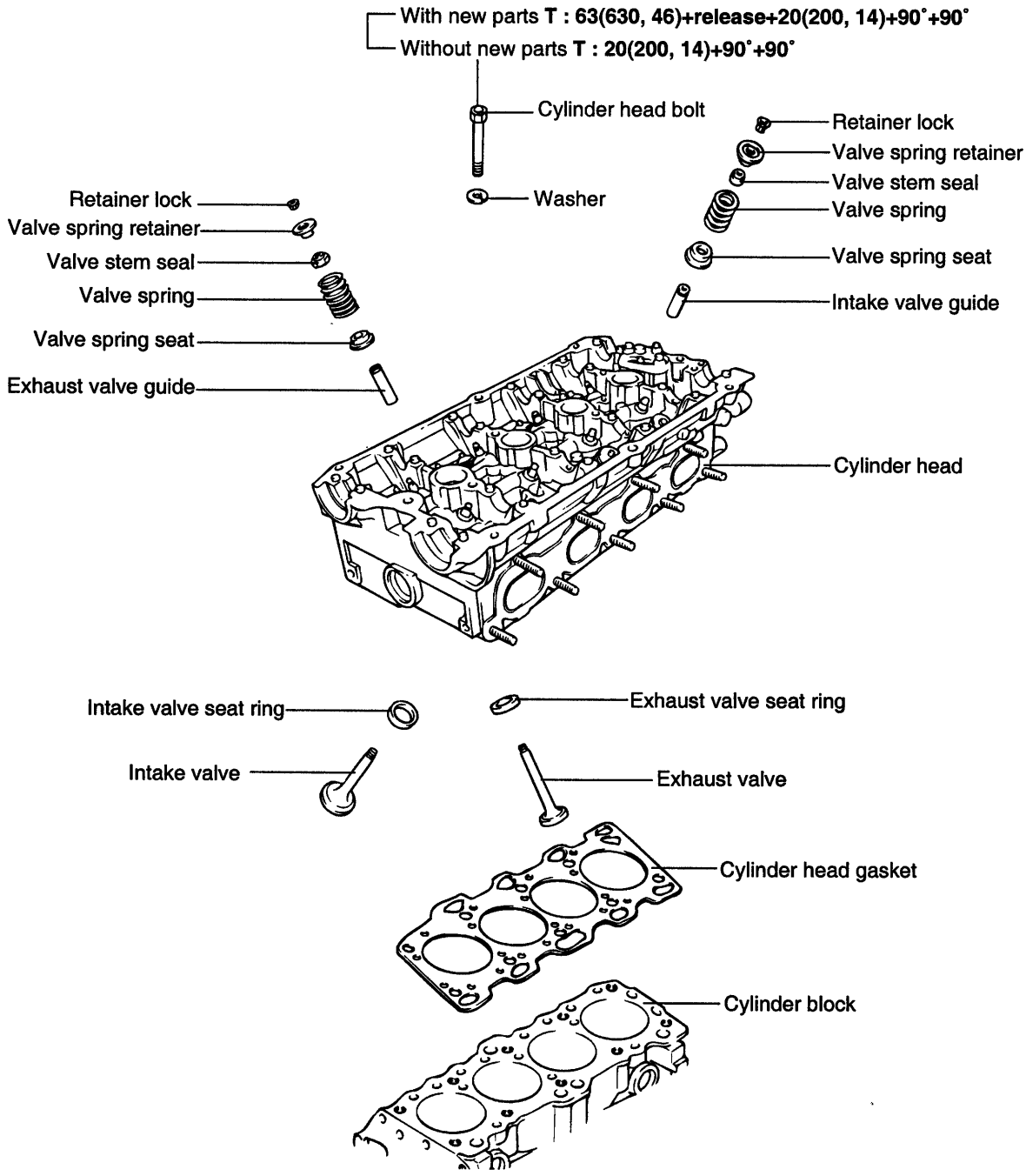

TORQUE : Nm (kg·cm, lb·ft)

ECHA900A

DISASSEMBLY ECJA9100

1. Using a special tool (09221–32001), remove the cylinder head bolts in the order shown in the illustration.

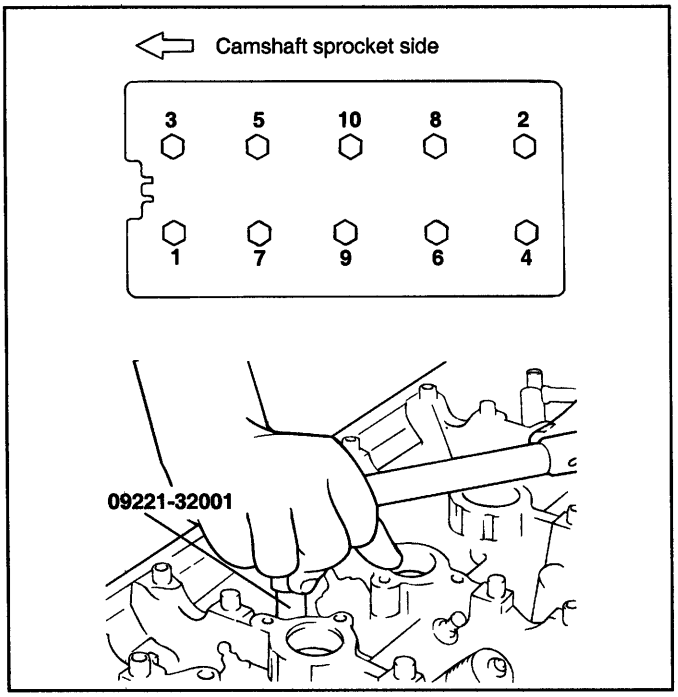

ECHA999B

2. Using the special tool (09222–28000, 09222–28100), remove the valve spring retainer lock. Then remove the spring retainer, valve spring, spring seat and valve.

NOTE

Arrange these parts so that they can be reinstalled in their original positions.

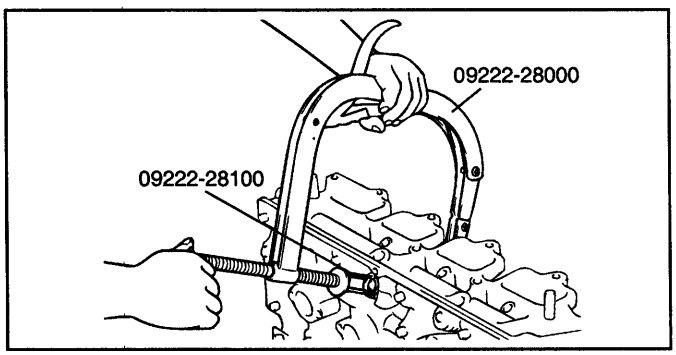

ECHA910B

3. Remove the valve stem seals with pliers.

NOTE

Do not reuse the valve stem seals.

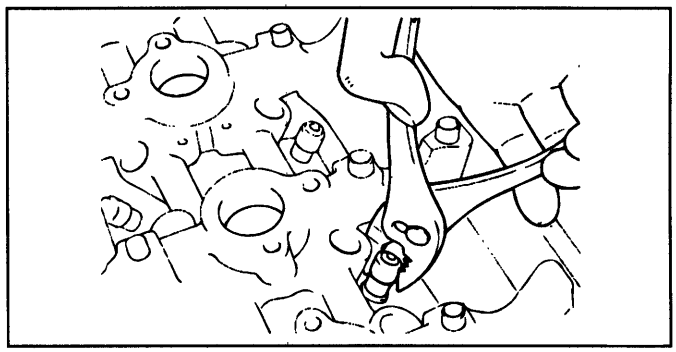

ECA9270C

INSPECTION ECHA9200

CYLINDER HEAD

1. Check the cylinder head for cracks, damage and coolant leakage. If cracked, replace the cylinder head.

2. Remove scale, sealing compound and carbon deposits completely. After cleaning the oil passages, apply compressed air to verify that the passages are not clogged.

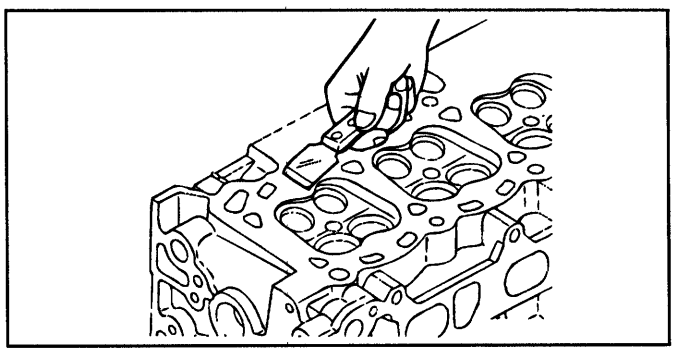

ECA9280A

3. Check the cylinder head surface for flatness in the direction as shown in the illustration. If flatness exceeds service limit in any direction, either replace the cylinder head or machine the cylinder head matching surface lightly.

Flatness of cylinder head gasket surface

Standard : Less than 0.03mm(0.0012 in.)

Limit : 0.2 mm (0.008 in.)

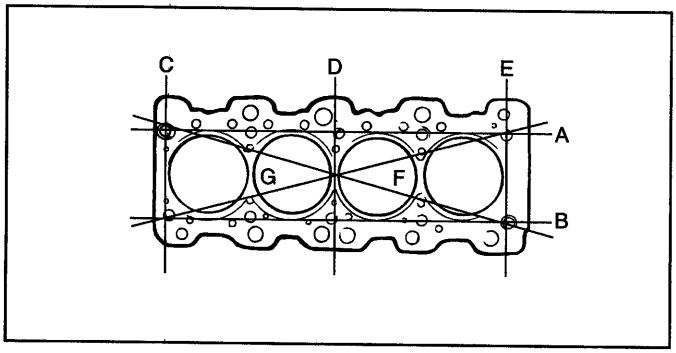

ECHA920A

VALVES

1. Using a wire brush, clean the valve thoroughly.

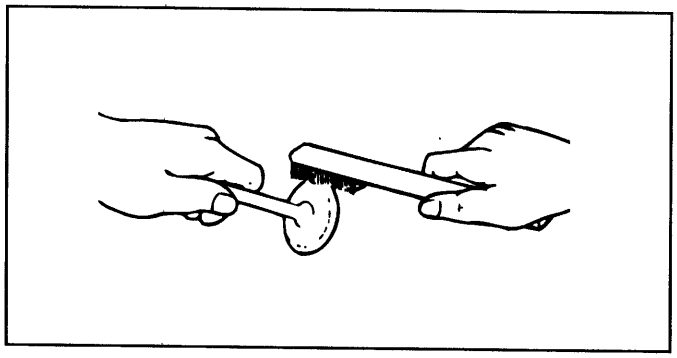

ECA9281A

2. Check each valve for wear, damage and distortion of the head and the stem at B Position. Replace, if necessary. If stem end, A, is hollowed out or worn, resurface as necessary. This correction must be limited to a minimum. Also resurface the valve face.

   Replace the valve if the margin has decreased to less than the service limit.

Margin

[Standard]

Intake : 1.0mm(0.040 in.)

Exhaust : 1.5mm(0.059 in.)

[Limit]

Intake : 0.7mm(0.028 in.)

Exhaust : 1.0mm(0.040 in.)

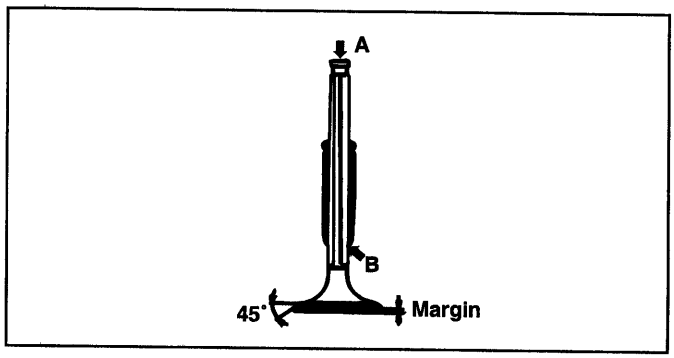

ECA9281B

VALVE SPRINGS

1. Check the free height of each valve spring. If they exceed the service limit, replace the springs.

2. Using a square, test the squareness of each spring. If a spring is excessively out- of-square, replace it.

Valve spring

[Standard]

Free height : 45.82mm(1.804 in.)

Load : 25.3kg/40mm (55.8 lb/1.57 in.)

Out of square : 1.5° or less

[Limit]

Free height : 44.82mm(1.7646in.)

Out of square : 4°

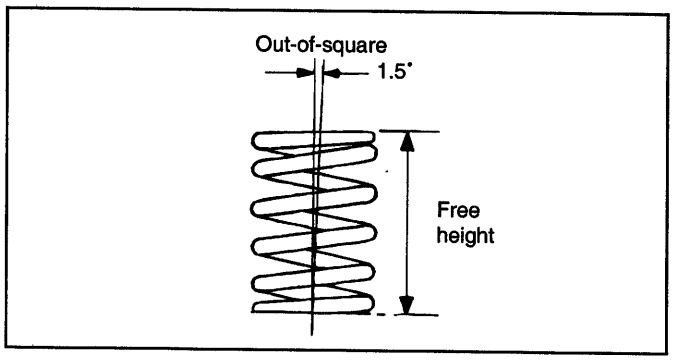

ECA9281C

VALVE GUIDES

Check the valve stem-to-guide clearance. If the clearance exceeds the service limit, replace the valve guide with the next oversize part.

Valve stem-to-guide clearance

[Standard]

Intake : 0.020-0.047mm(0.0008-0.0020 in.)

Exhaust : 0.050-0.085mm(0.0020-0.0033 in.)

[Limit]

Intake : 0.1mm(0.0040 in)

Exhaust : 0.15mm(0.0059 in.)

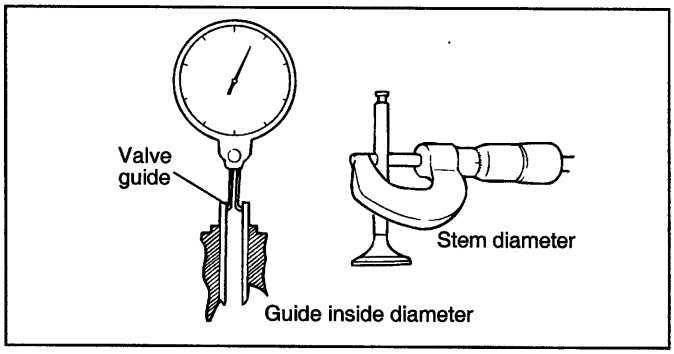

ECA9281D

RECONDITIONING VALVE SEAT

Check the valve seat for overheating and unequal contact with the valve face. Recondition or replace the seat if necessary. Before reconditioning the seat, check the valve guide for wear. If the valve guide is worn, replace it and then recondition the seat. Recondition the valve seat with a valve seat grinder or cutter. The valve seat contact width should be within specificatons and centered on the valve face. After reconditioning, the valve and valve seat should be lapped lightly with a lapping compound.

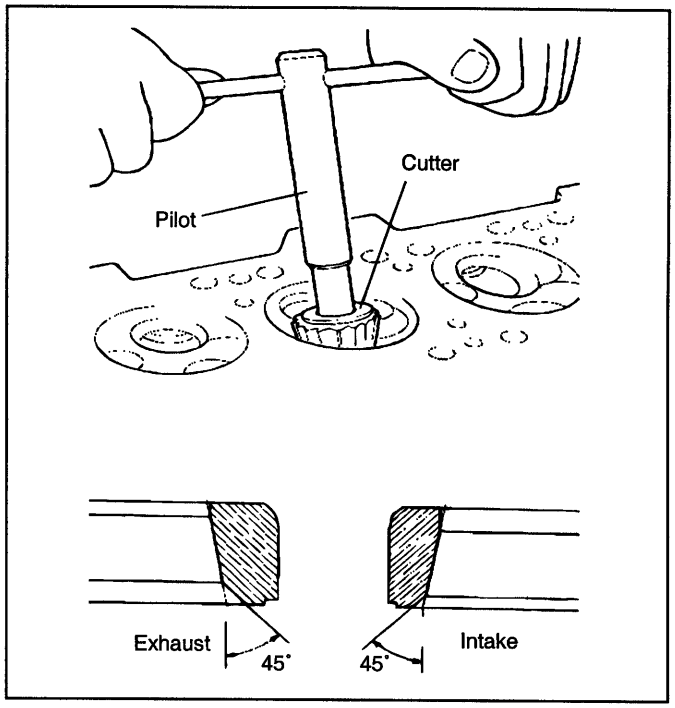

ECHA920B

REPLACING THE VALVE SEAT RING

1. Cut away the inner face of the valve seat to reduce the wall thickness.

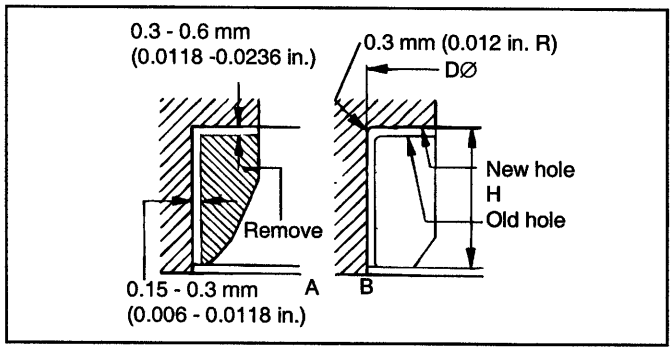

ECA9281F

2. Enlarge the diameter of the valve seat so that it matches the specified oversize hole diameter of the new valve seat ring.

3. Heat the cylinder head to about 250°C (480°F) and press-fit an oversize seat ring for the bore in the cylinder head.

4. Using lapping compound, lap the valve to the new seat.

Valve seat contact width :

0.9 -1.3 mm (0.035-0.051 in.)

VALVE SEAT INSERT OVERSIZES

Description	Size mm (in.)	Size mark	Seat ring height H mm(in.)	Oversize hole diameter I.D. mm(in.)
Intake valve	0.3 (0.012) O.S.	30	7.9-8.1 (0.311-0.319)	35.300-35.325 (1.3898-1.3907)
Seat ring	0.6 (0.024) O.S.	60	8.2-8.4 (0.323-0.331)	35.600-35.625 (1.4016-1.4026)
Exhaust valve	0.3 (0.012) O.S.	30	7.9-8.1 (0.311-0.319)	33.300-33.325 (1.3110-1.3120)
Seat ring	0.6 (0.024) O.S	60	8.2-8.4 (0.323-0.331)	33.600-33.625 (1.3228-1.3238)

REPLACING VALVE GUIDE

1. Using the special tool (09222–21200A), withdraw the old valve guide toward the bottom of cylinder head.
2. Recondition the valve guide hole so that it can match the newly press-fitted oversize valve guide.

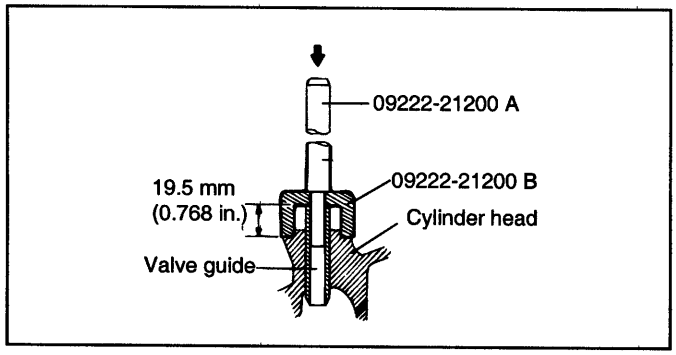

ECA9281G

3. Using the special tool (09222-21200 A, B), press-fit the valve guide. The valve guide must be press-fitted from the upper side of the cylinder head. Keep in mind that the intake and exhaust valve guides are different in length.

NOTE

Do not install a valve guide unless it is oversize.

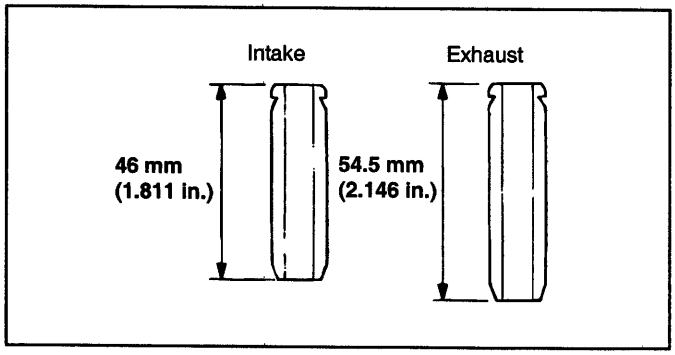

ECA9281H

4. After the valve guide is press-fitted, insert a new valve and check for proper stem-to-guide clearance.
5. After the valve guide is replaced, check that the valve is seated properly. Recondition the valve seats as necessary.

VALVE GUIDE OVERSIZES

Over size mm (in.)	Size mark	Oversize valve guide hole size mm (in.)
0.05(0.002)	5	12.050-12.068 (0.4744-0.4751)
0.25 (0.010)	25	12.250-12.268 (0.4823-0.4830)
0.50 (0.020)	50	12.500-12.518 (0.4921-0.4928)

REASSEMBLY ECJA9300

NOTE

1. **Clean each part before assembly.**
2. **Apply engine oil to the sliding and rotating parts.**

1. Install the spring seats.

2. Using a special tool (09222–28200), tap the seal in position lightly.

NOTE

- **Do not reuse old valve stem seals.**
- **Incorrect installation of the seal could result in oil leakage past the valve guides.**

3. Apply engine oil to each valve. Insert the valve into the valve guide. Avoid pushing the valve into the seal by force. After inserting the valve, check that it moves smoothly.

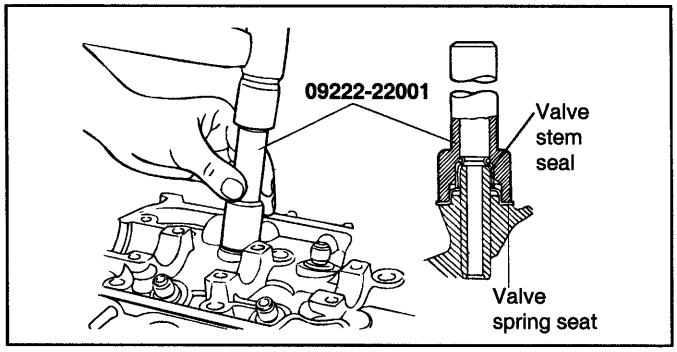

ECHA930A

4. Place valve springs so that the side coated with enamel faces the valve spring retainer and then install the retainer.

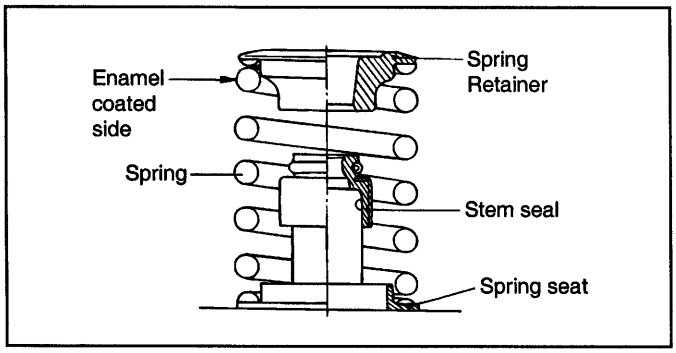

ECA9290B

5. Using the special tool (09222–28000, 09222–28100), compress the spring and install the retainer locks. After installing the valves, ensure that the retainer locks are correctly in place before releasing the valve spring compressor.

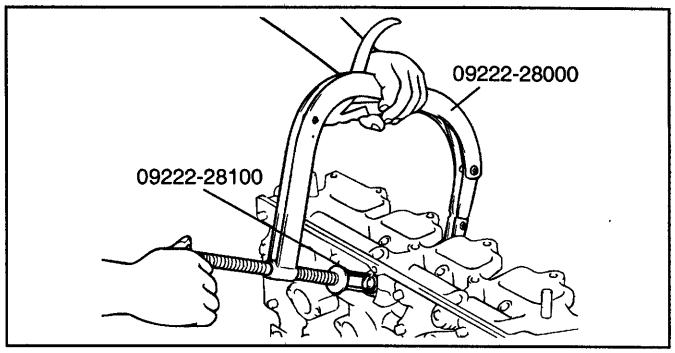

ECHA910B

NOTE

When the spring is compressed, Check that the valve stem seal is not pressed against the bottom of the retainer.

6. Clean both gasket surfaces of the cylinder block and cylinder head.

7. Verify the identification marks on the cylinder head gasket.

8. Install the gasket so that the surface with the identification mark faces toward the cylinder head.

NOTE

Check and measure the length of each head bolt.

Maximum length : 99.4 mm (3.9 in.)

9. Tighten the bolts to the specified torque.

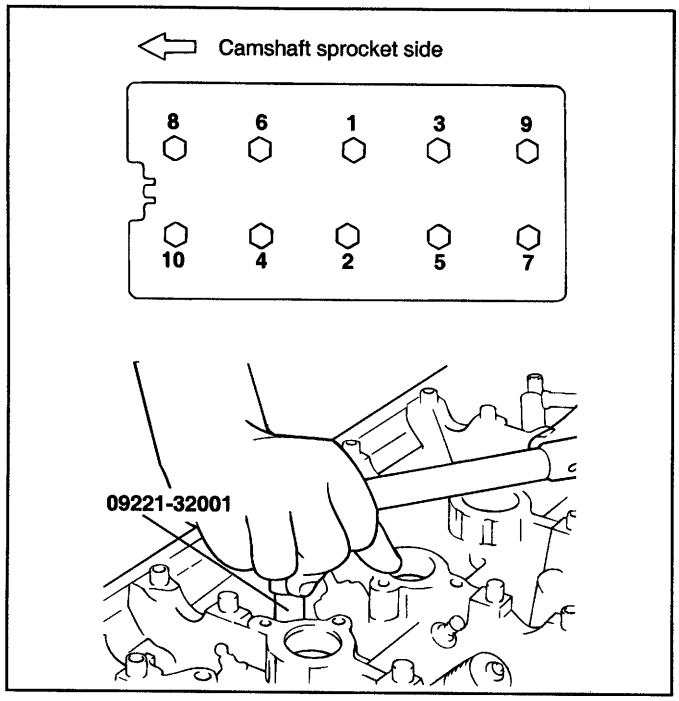

ECHA910A

Tightening torque

With used parts (head bolt, cylinder head, cylinder block) :

20Nm (200 kg.cm, 14 lb.ft)+90°+90°

With new parts (even if only onething is replaced) :

64Nm (640 kg.cm, 46 lb.ft)+release+20Nm (200 kg.cm, 14 lb.ft)+90°+90°

TIMING SYSTEM

TIMMING BELT

TIMING BELT ECHA9500

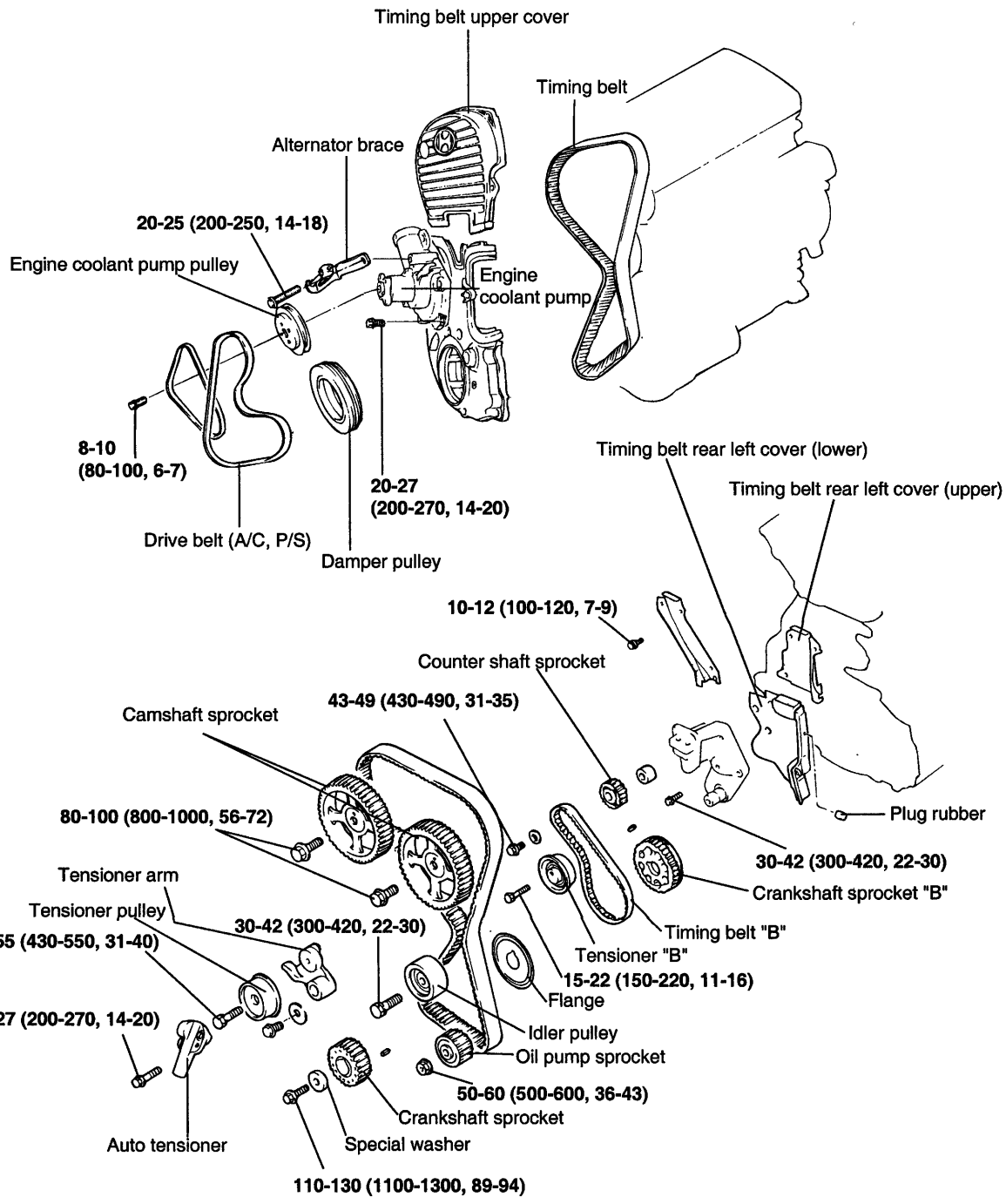

TORQUE : Nm (kg·cm, lb·ft)

ECA9022C

REMOVAL ECJA9600

CAUTION

Rotate the crankshaft clockwise and align the timing marks to set the No. 1 cylinder's piston to TDC.

At this time, the timing marks of the camshaft sprocket and cylinder head cover should coincide with eachother and the dowel pin of the camshaft sprocket should be at the upper side.

1. Remove the crankshaft pulley, engine coolant pump pulley and drive belt.
2. Remove the timing belt cover.
3. Remove the auto tensioner.

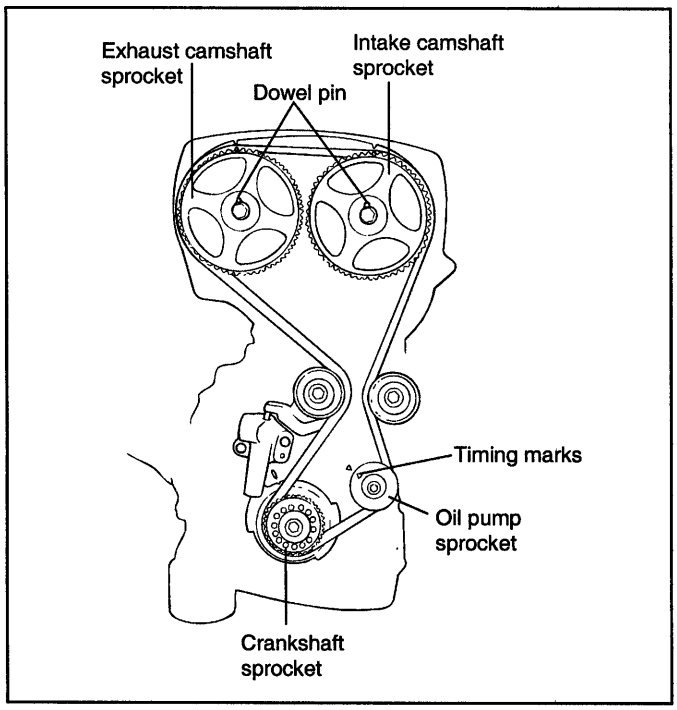

ECA9023A

NOTE

If the timing belt is reused, make an arrow mark indicating the turning direction (or the front of the engine) to make sure that the belt is reinstalled in the same direction as before.

4. Remove the timing belt.

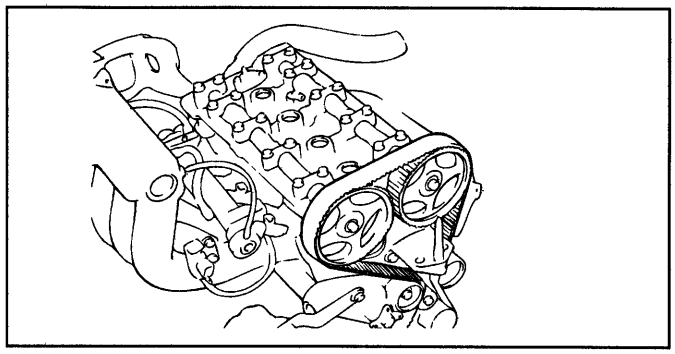

ECA9024A

5. Remove the camshaft sprockets.

NOTE

Be careful not to damage the cylinder head and camshaft sprocket with the wrench.

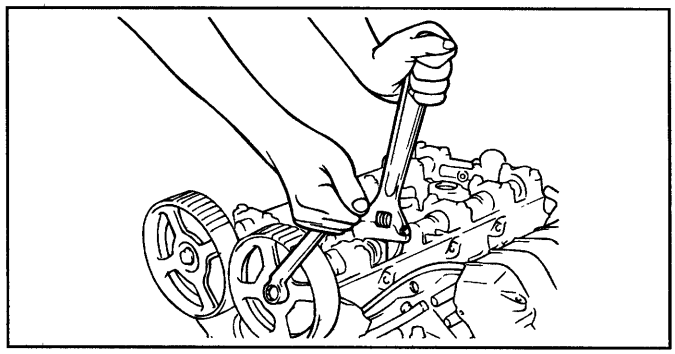

ECA9170C

6. When the oil pump sprocket nut is removed, first remove the plug at the left side of the cylinder block and insert a screwdriver to keep the left counter balance shaft in position. Use a screwdriver with a shaft measuring 8 mm (0.3in.) in diameter which can be inserted by more than 60 mm (2.36 in.)
7. Remove the oil pump sprocket retaining nut and the oil pump sprocket.

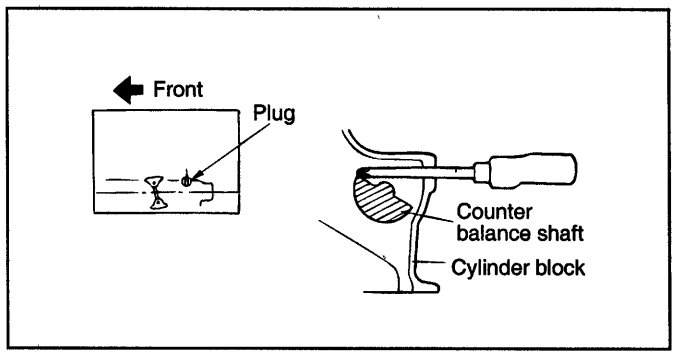

ECA9170D

8. Loosen the right counter balance shaft sprocket mounting bolt until it can be loosened by hand.

9. Next, remove the tensioner "B" and then the timing belt "B."

CAUTION

After the timing belt "B" is removed, do not attempt to loosen bolts while holding the sprocket with pliers or any other tool.

10. Remove the crankshaft sprocket "B" from the crankshaft.

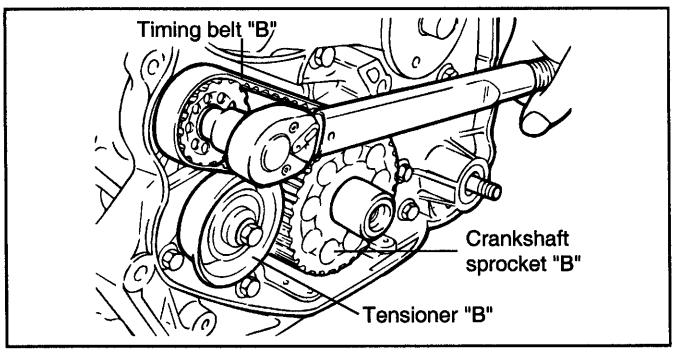

ECA9025A

INSPECTION ECJA9700

SPROCKETS, TENSIONER PULLEY AND IDLER PULLEY

1. Check the camshaft sprocket, crankshaft sprocket, tensioner pulley and idler pulley for abnormal wear, cracks or damage. Replace if necessary.
2. Inspect the tensioner pulley and the idler pulley for easy and smooth rotation and check for play or noise. Replace if necessary.
3. Replace the pulley if there is a grease leak from it s bearing.

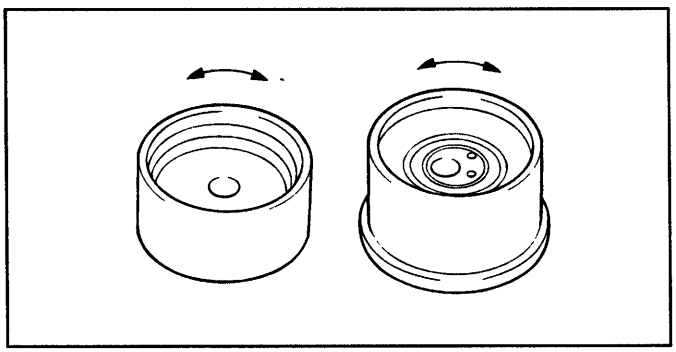

EOY025A

AUTO TENSIONER

1. Check the auto tensioner for leaking and replace if necessary.
2. Check the rod end for wear or damage and replace if necessary.

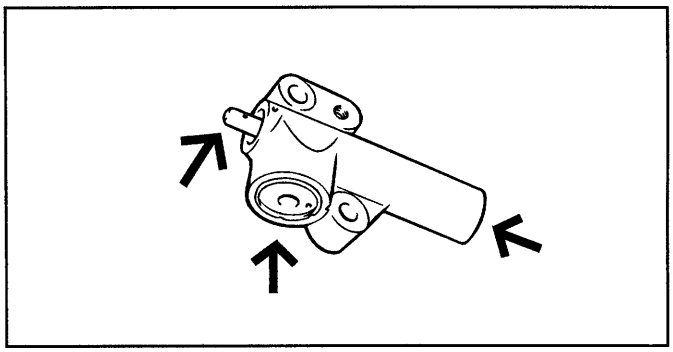

ECA9026A

3. Measure the rod protrusion. If it is out of specification, replace the auto tensioner.

Standard value : 14.5 mm (0.57 in)

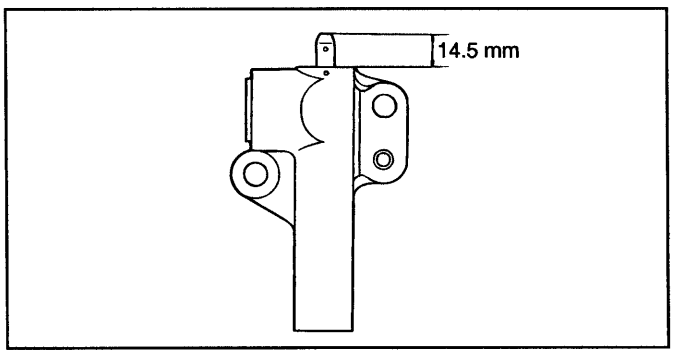

ECHA970A

4. Using a soft jaw vise , compress the auto tensioner rod. slowly. If the rod can be easily retracted, replace the auto tensioner. You should feel extensive resistance when pushing the rod in. And it must be compressed in sereral steps.

NOTE

Clamp the auto tensioner in the vise so that it is level. Use soft jaws in the vise to avoid damaging the auto tensioner.

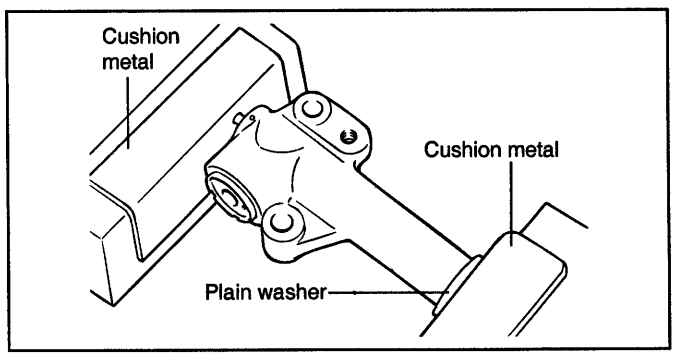

ECA9028A

TIMING BELT

1. Check the belt for oil or dust deposit. Replace if necessary. Small deposits should be wiped away with a dry cloth or paper. Do not clean with solvent.
2. When the engine is overhauled or belt tension is adjusted, check the belt carefully. If any of the following flaws are evident, replace the belt with a new one.

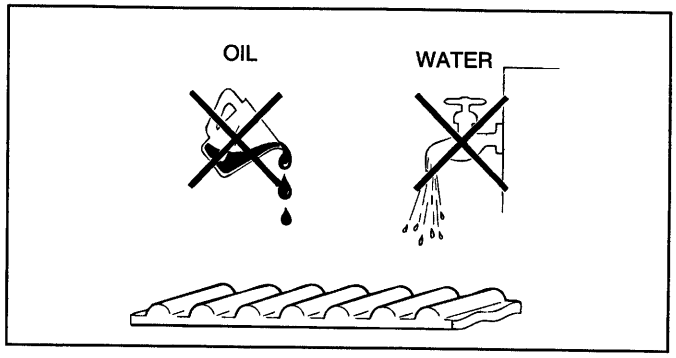

ECA9200A

Description	Flaw conditions
1. Hardened back surface of rubber	Back surface is glossy, Non-elastic and so hard that, when your fingernail is pressed into it, no mark is produced. 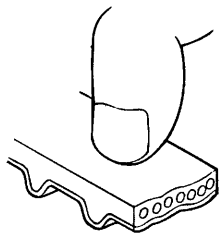 ECA9200B
2. Cracked back surface of rubber	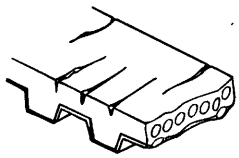 ECA9200Y
3. Cracked or separating canvas	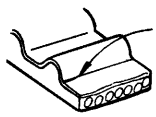 ECA9200I 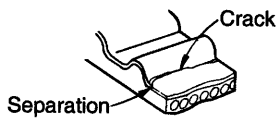 ECA9200J 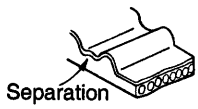 ECA9200K
4. Badly worn out teeth (initial stage)	Tooth flank shows canvas on the load side (Fluffy canvas fibers, rubber changed into white color and unclear canvas texture)

Description	Flaw conditions
	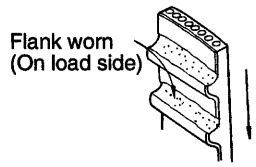 ECA9200C
5. Badly worn out teeth (last stage)	Tooth flank worn and rubber exposed on load side (tooth width reduced) 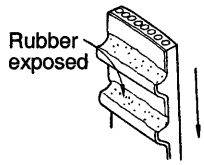 ECA9200D
6. Cracked tooth bottom	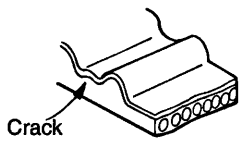 ECA9200E
7. Missing tooth	 ECA9200F
8. Badly worn side of belt	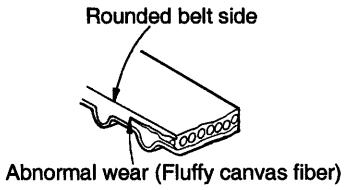 ECA9200G
9. Cracked side of belt	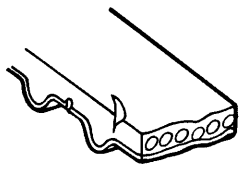 ECA9200H

INSTALLATION ECJA9800

1. Install the crankshaft sprocket "B" into the crankshaft.

CAUTION

Pay attention to the direction of the flange. If it is installed in the wrong direction, a broken belt could result.

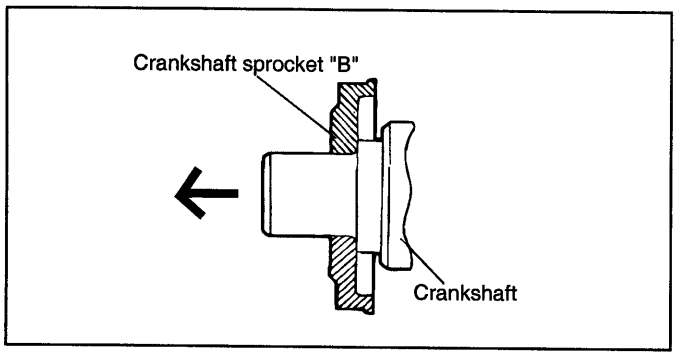

ECA9210A

2. Apply engine oil to the outer surface of the spacer lightly and then install the spacer to the right counter balance shaft. Be sure to install in the direction shown in the illustration.

3. Install the counter balance shaft sprocket onto the right counterbalance shaft and then tighten its flange bolt by hand tightly.

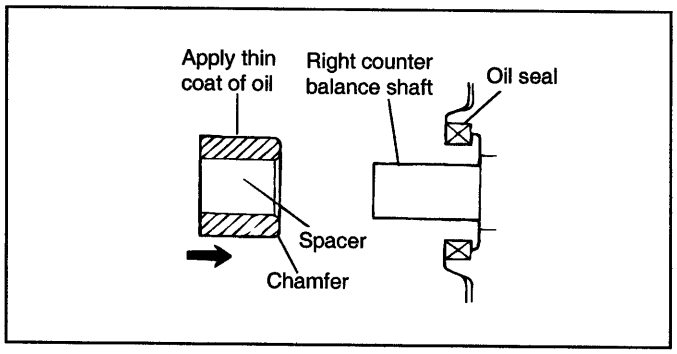

ECA9210B

4. Align the timing mark on each sprocket with the corresponding timing mark on the front case.

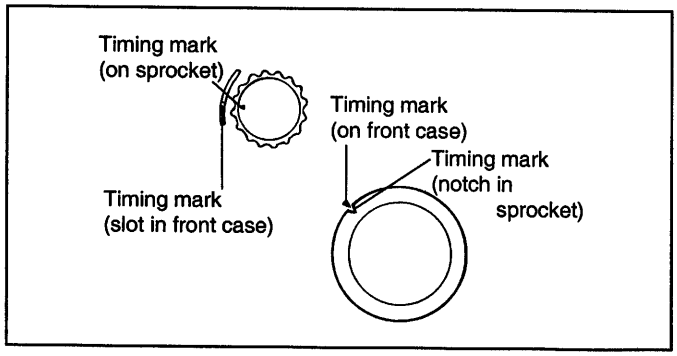

ECA9210C

5. When the timing belt "B" is installed, make certain that its tension side has no slack.

   Install the tensioner "B" so the center of the pulley is located on the left side of the mounting bolt and in the pulley flange faces the front of the engine.

   Align the timing mark on the right counter balance shaft sprocket with the timing mark on the front case.

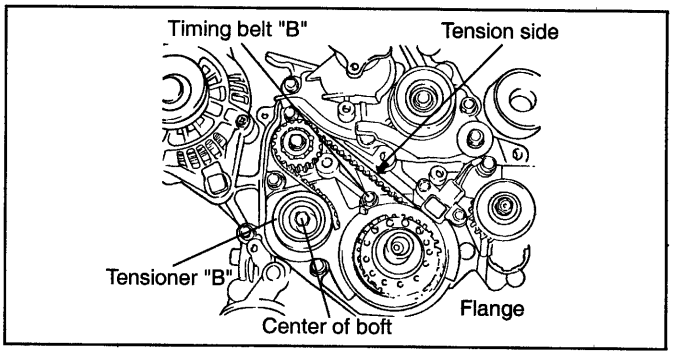

ECA9084A

6. Lift the tensioner "B" to tighten the timing belt "B" so that its tension side is pulled tight. In this condition, tighten the bolt to secure tensioner "B". As the bolt is tightened, be careful to prevent the shaft from turning. If the shaft is turned, the belt will be tightened excessively.

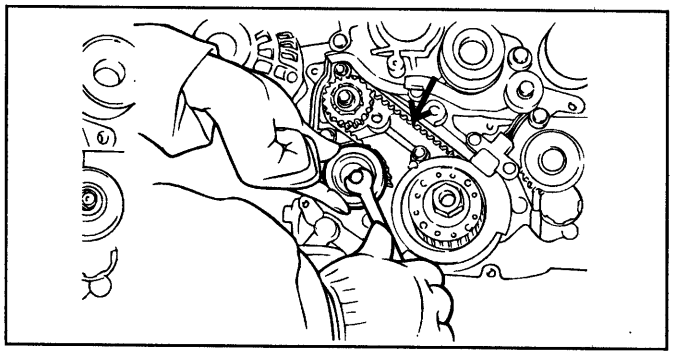

ECA9083A

7. Check to ensure that the timing marks are in alignment.

8. Verify the tension of the timing belt.

   Method 1 : Verify that, when the center of the span on the tension side is depressed with an index finger in the direction of arrow, the deflection of the belt is within specification.

Belt deflection : 5-7 mm (0.20-0.28 in)

   Method 2 : Measure the tension of the timing belt by using a tension gaugent.

Span length	Pressure	Torque
139mm (5.47 in.)	0.42 kg/cm^2 (42 kPa)	50-100Nm (500-1000kg.cm, 36-72 lb.ft)

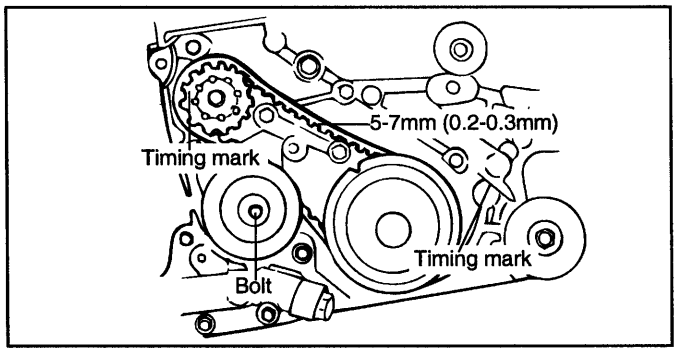

ECA9210F

9. Install the flange and crankshaft sprocket onto the crankshaft. Be sure to install the as shown in the illustration.

CAUTION

Pay attention to the direction of the flange. If it is installed in the wrong direction, a broken belt could result.

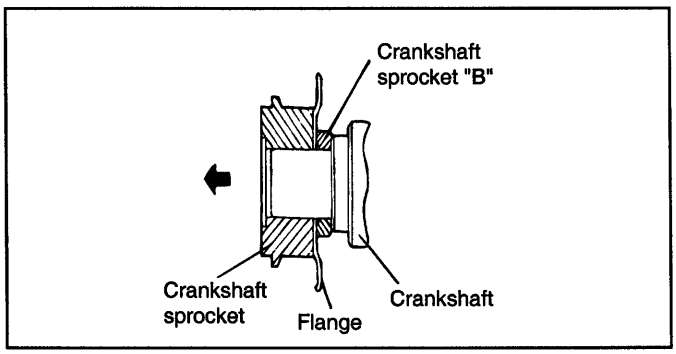

ECA9210G

10. Install the special washer and sprocket bolt to the crankshaft and then tighten the sprocket bolt.

Tightening torque

Crankshaft sprocket bolt :

110-130 Nm (1100-1300 kg.cm, 80-94 lb.ft)

11. Insert a screwdriver through the plug hole in the left side of the cylinder block to keep the shaft in position.

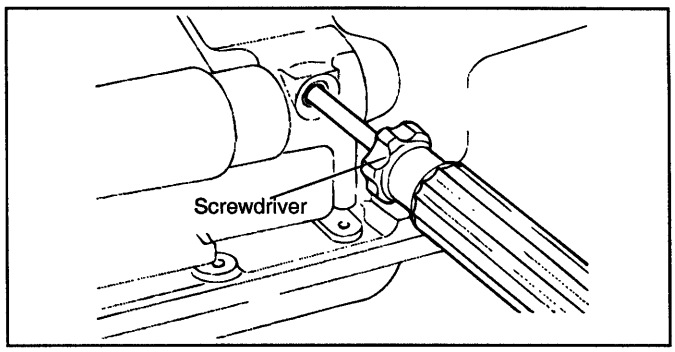

ECA9210H

12. Install the oil pump sprocket and tighten the nut to the specified torque.

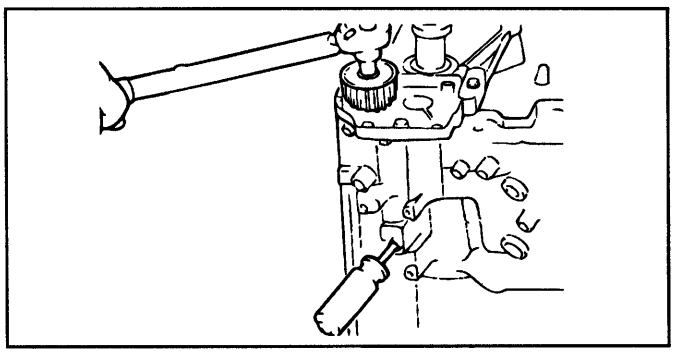

ECA9210I

Tightening torque

Oil pump sprocket :

50-60 Nm (500-600 kg.cm, 36-43 lb.ft)

13. Install the camshaft sprocket and tighten the bolt to the specified torque.

Tightening torque

Camshaft sprocket bolt :

80-100 Nm (800-1000 kg.cm, 58-72 lb.ft)

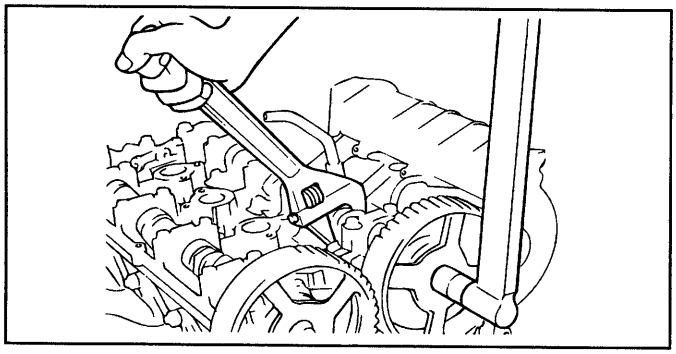

ECA9210K

14. Install the auto tensioner.

CAUTION

Leave the set pin installed in the auto tensioner.

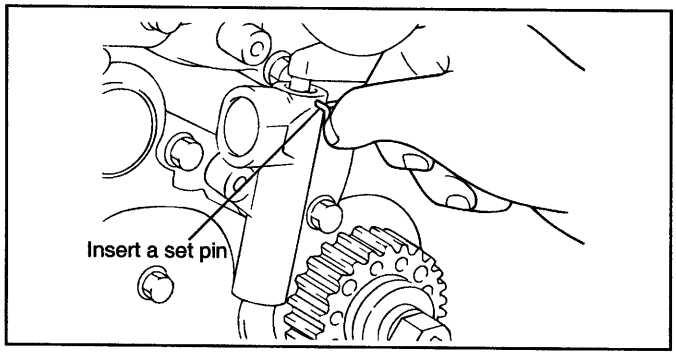

ECHA980A

NOTE

If the auto tensioner rod is in its fully extended position, reset it as follows.

1. **Clamp it in a vise equipped with soft jaws, in a level position. Use a plain washer if there is a plug at the bottom of the auto tensioner.**
2. **Compress the rod slowly with the vise until the set hole in the rod is aligned with set hole in the cylinder.**

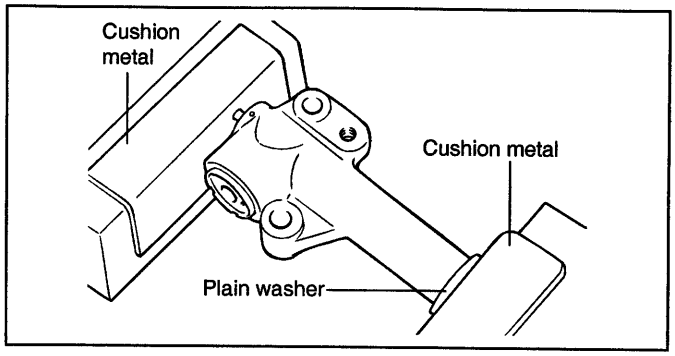

ECA9028A

3. **Insert a set pin through the auto tensioner body and rod.**

CAUTION

Leave the set pin installed in the auto tensioner.

15. Install the tensioner pulley onto the tensioner arm.

Tightening torque

Tensioner pulley

43-55 N.m (430-550 kg.cm, 31-40 lb.ft)

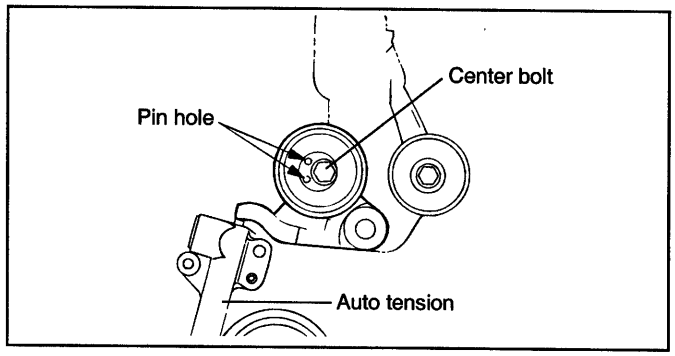

ECA9210N

16. Rotate the camshaft sprockets so that the dowel pin of the camshaft sprocket is at the upper side. Set the timing mark of sprocket correctly.

NOTE

1. **Before installing the timing belt, if the timing mark of the camsprocket doesn't coincide with that of the rocker cover, do not rotate the cam sprocket more than 2 teeth of the sprocket in any direction.**
   Rotating the sprocket more than 2 teeth may make the valve and piston touch each other.
2. **If it is mecessary to rotate the cam sprocket more than 2 teeth, rotate the crank sprocket counter clock wise first based on the timing mark.**
   After the camsprocket is properly timed return the crankshaft to TDC.

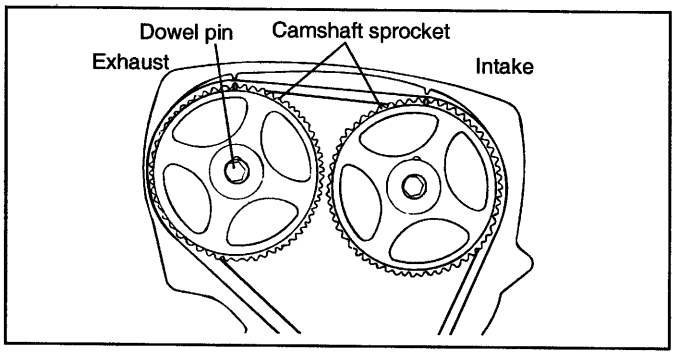

ECA9029A

NOTE

When exhaust and intake camshaft sprocket is used and install it after checking I.D mark depending on the engine deplacemeat.

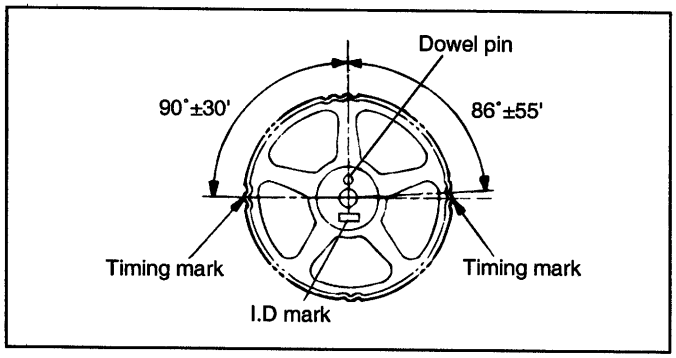

ECHA007C

17. Align the crankshaft sprocket timing marks.

18. Align the oil pump sprocket timing marks.

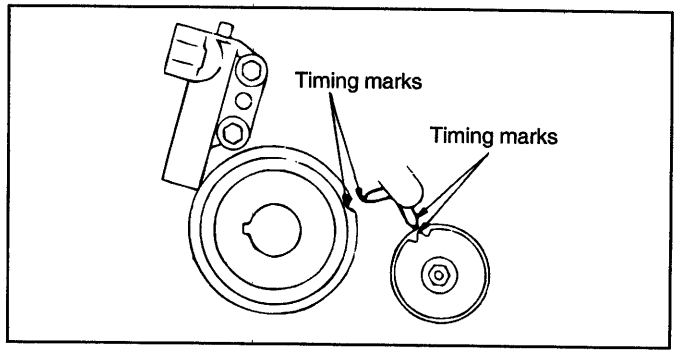

ECHA007D

19. Install the timing belt counter clockwise around the tensioner pulley and crankshaft sprocket. Hold the timing belt onto the tensioner pulley with your left hand.

20. Pulling the belt with your right hand, install it around the oil pump sprocket.

21. Install the belt around the right- hand idler pulley.

22. Install the belt around the intake camshaft sprocket.

23. Turn the exhaust camshaft sprocket one tooth clockwise to align its timing mark with the cylinder head top surface [see illustration in step 16]. Then, pulling the belt with both hands, install it around the exhaust camshaft sprocket.

24. Gently raise the tensioner pulley so that the belt doesn't sag and tighten the pulley's center bolt temporarily.

25. Check again whether the timing mark of each sprocket is correct.

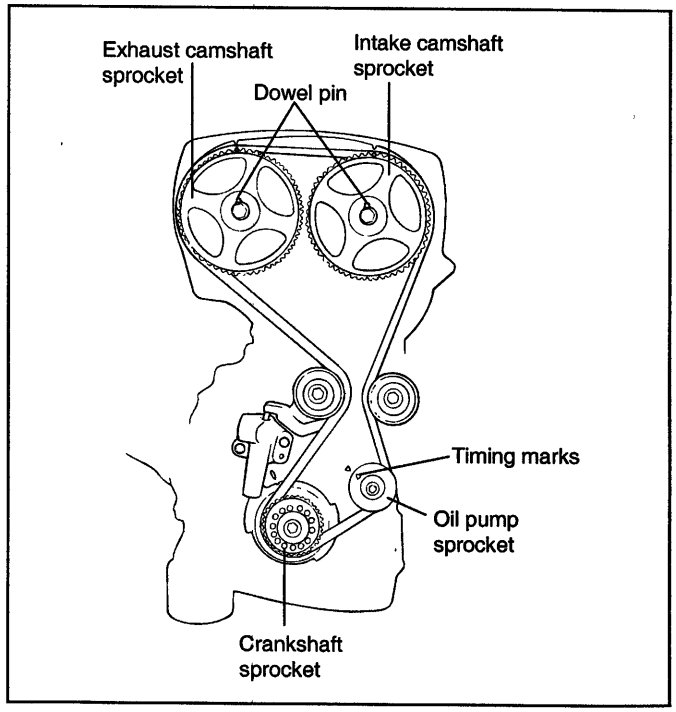

ECA9023A

26. Remove the set pin in the auto tensioner.

27. Rotate the crankshaft two turns clockwise and leave it for about 15 minutes. Then, measure the auto tensioner protrusion "A" (Distance between the tensioner arm and auto tensioner body) to ensure that it is within the specification.

Standard value : 6-9 mm (0.24-0.35 in)

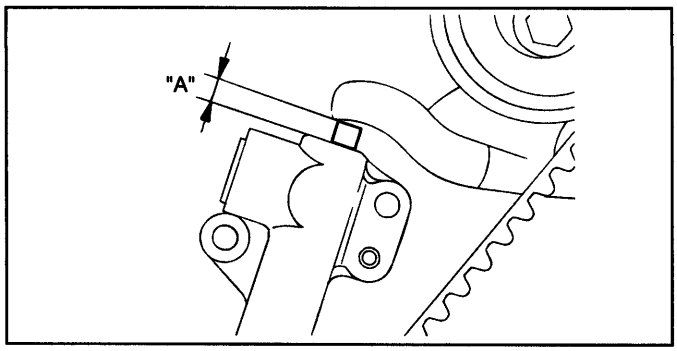

ECA9210R

28. Install the timing belt lower cover and the timing belt upper cover.

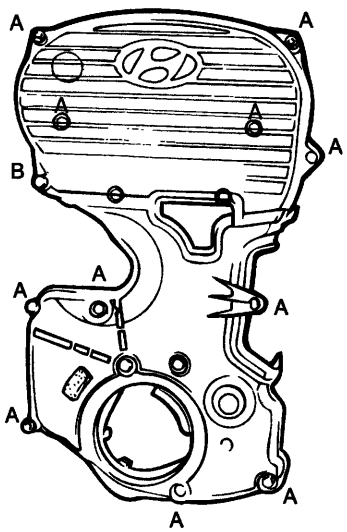

A:8-10 N.m (80-100 kg.cm, 6-7 lb.ft)
B:10-12 N.m (100-120 kg.cm, 7-9 lb.ft)

ECHA980B

Engine Mechanical System [V6 2.7]

GENERAL ..... EMA -2

CYLINDER BLOCK ..... EMA -23

MAIN MOVING SYSTEM ..... EMA -33

COOLING SYSTEM ..... EMA -48

LUBRICATION SYSTEM ..... EMA -62

INTAKE AND EXHAUST SYSTEM ..... EMA -66

CYLINDER HEAD ASSEMBLY ..... EMA -76

TIMING SYSTEM ..... EMA -82

GENERAL

GENERAL EDJA0100

SPECIFICATIONS

Description.	Specification	Limit
General		
Type	V-type, DOHC	
Number of cylinders	6	
Bore	86.7 mm (3.4133 in.)	
Stroke	75 mm (2.9528 in.)	
Total displacement	2,656 cc	
Compression ratio	10 : 1	
Firing order	1-2-3-4-5-6	
Idle R.P.M	725 ± 100	
Ignition timing at idle	BTDC 12° ± 8°	
Valve timing		
Intake valve		
Opens (BTDC)	6°	
Closes (ABDC)	46	
Exhaust valve		
Opens (BBDC)	44°	
Closes (ATDC)	8°	
Camshaft		
Drive mechanism	Cogged type belt	
Cam height		
Intake	43.95-44.15 mm (1.7303-1.7382 in.)	43.45mm (1.7106 in.)
Exhaust	43.95-44.15 mm (1.7303-1.7382 in.)	43.45 mm (1.7106 in.)
Journal diameter	25.964-25.980 mm (1.0222-1.0228 in.)	25.914 mm (1.0202 in.)
Bearing oil clearance	0.02-0.061 mm (0.0007-0.0024 in.)	0.1 (0.0039 in.)
End play	0.1-0.15 mm (0.0039-0.0059 in.)	
Cylinder head		
Flatness of cylinder head surface	Max. 0.03 mm (0.0012 in.)	0.05 mm (0.0020 in.)
Flatness of manifold mounting surface		
Intake	Max. 0.15 mm (0.0059 in.)	0.15 mm (0.0059 in.)
Exhaust	Max. 0.15 mm (0.0059 in.)	0.15 mm (0.0059 in.)
Valve guide hole diameter		
0.05 (0.002) O.S.	11.05-11.068 mm (0.435-0.436 in.)	

Description.	Specification	Limit
0.25 (0.010) O.S.	11.25-11.268 mm (0.443-0.444 in.)	
0.50 (0.020) O.S.	11.50-11.518 mm (0.453-0.453 in.)	
Intake valve seat ring hole diameter		
0.3 (0.012) O.S.	33.300-33.325 mm (1.311-1.312 in.)	
Exhaust valve seat ring hole diameter		
0.3 (0.012) O.S.	28.600-28.625 mm (1.126-1.127 in.)	
Valve		
Overall length		
Intake	96.1 mm (3.783 in.)	
Exhaust	97.15 mm (3.825 in.)	
Stem diameter		
Intake	5.965-5.98 mm (0.235-0.2354 in.)	
Exhaust	5.95-5.965 mm (0.234-0.235 in.)	
Face angle	45°-45.5°	
Margin		
Intake	1.0 mm (0.0394 in.)	0.5 mm (0.0197 in.)
Exhaust	1.3 mm (0.0512 in.)	0.8 mm (0.0315 in.)
Clearance (stem- to- guide)		
Intake	0.02-0.05 mm (0.0008-0.0020 in.)	0.10 mm (0.0039 in.)
Exhaust	0.035-0.065 mm (0.0014-0.0026 in.)	0.15 mm (0.0059 in.)
Valve spring		
Free height	42.5 mm (1.6732 in.)	41.5 mm (1.6339 in.)
Load	21.9 kg/ 35 mm (48.4 lb/1.3780 in.)	21.9 kg/ 34 mm (48.4 lb/ 1.3386 in.)
Out of squareness	Max 1.5°	Max 3°
Piston		
Diameter (Standard)	86.68-86.71mm (3.413-3.414 in.)	
Clearance (Piston -to - cylinder)	0.01-0.03 mm (0.0004-0.0012 in.)	
Ring groove width		
No.1	1.230-1.250 mm (0.0484-0.0492 in.)	
No.2	1.220-1.240 mm (0.0480-0.0488 in.)	
Oil	2.515-2.535 mm (0.0990-0.0998 in.)	
Piston for service	0.25 mm (0.010 in.), 0.50 mm (0.020 in.)	
Piston ring		
Number of rings per piston	3	
Compression ring	2	

Description.	Specification	Limit
Oil ring	1	
Compression ring type		
No.1	Inner bevel type.	
No.2	Under cut type	
Oil ring type	3-piece type	
Ring end gap		
No.1	0.20-0.35 mm (0.0079-0.0138 in.)	0.8 mm (0.031 in.)
No.2	0.37-0.52 mm (0.0146-0.0205 in.)	0.8 mm (0.031 in.)
Oil ring side rail	0.2-0.7 mm (0.0079-0.0276 in.)	1.0 mm (0.039 in.)
Ring side clearance		
No.1	0.04-0.08 mm (0.0016-0.0031 in.)	0.1 mm (0.004 in.)
No.2	0.03-0.07 mm (0.0012-0.0028 in.)	0.1 mm (0.004 in.)
Rings for service	0.25 mm (0.010 in.), 0.50 mm (0.020 in.)	
Connecting rod		
Piston pin installation force	2,450-12,255 N (250-1,250 kg, 551-2,755 lb)	
Side clearance (big end)	0.10-0.25 mm (0.0039-0.0098 in.)	0.4 mm (0.016 in.)
Bend	0.05 mm or less/100 mm (0.0020 in. or less/3.937 in.)	
Bearing oil clearance	0.018-0.036 mm(0.0007-0.0014 in.)	0.1 mm (0.004 in.)
Crankshaft		
Journal O.D.	61.982-62.000 mm (2.4402-2.4409 in.)	
Pin O.D.	47.982-48.000 mm (1.8891-1.8898 in.)	
Out-of-round of journal and pin	Max. 0.003 mm (0.00012 in.)	
Taper of journal and pin	Max. 0.005 mm (0.00020 in.)	
End play	0.070-0.250 mm (0.0028-0.0098 in.)	0.4 mm (0.016 in.)
Main bearing oil clearance	0.004-0.022 mm (0.0002-0.0009 in.)	0.1 mm (0.004 in.)
Cylinder block		
Cylinder bore	86.7 mm (3.4134 in.)	
Flatness of gasket surface	Max. 0.03 mm (0.0012 in.)	0.05 mm (0.002 in.)
Out-of-round of cylinder bore	Max. 0.02 mm (0.0008 in.)	
Oil pump		
Side clearance		
Body clearance	0.100-0.181 mm (0.0039-0.0071 in.)	
Side clearance	0.040-0.095 mm (0.0016-0.0037 in.)	

Description.	Specification	Limit
Relief spring		
Free length	43.8 mm (1.724 in.)	
Load	4.6 kg/39.3 mm (10.lb/1.547 in.)	
Oil filter		
Type	Cartridge, full flow	
Engine oil pressure	50 kPa (7.3 psi) or more	
	[Conditions: Oil temperature is 75 to 90°C (167 to 194°F)]	
Cooling method	Engine coolant cooling, forced circulation with electric fan	
Cooling system quantity	7.0 lit (7.4 U.S.qts., 6.1 Imp.qts.) [For V6]	
Thermostat		
Type	Wax pellet type with jiggle valve	
Normal opening temperature	82±2.0°C (179.6±35.6°F)	
Opening temperature range	80°C-84°C (176-183.2°F)	
Wide open temperature	95°C (203°F)	
Radiator cap		
Main valve opening pressure	107.9±14.7 kPa (1.1±0.15 kg/cm^2, 15.64±2.13 psi)	
Main valve closing pressure	83.4 kPa (0.85 kg/ cm^2, 12.1 psi)	
Vacuum valve opening pressure	-6.86 kPa (-0.07 kg/ cm^2, -1.00 psi)	
Air cleaner		
Type	Dry	
Element	Paper type	
Exhaust pipe		
Muffler	Expansion resonance type	
Suspension system	Rubber hangers	

SERVICE STANDARD

Standard value	
Coolant concentration	
Tropical areas	40%
Other areas	50%

COOLANT

Engine coolant	Ethylence glycol base for aluminum radiator

SEALANT

Engine coolant temperature sensor	LOCTITE 262 or equivalent, Three bond No. 1324 or equivalent.
Oil pressure switch	3M ATD No. 8660 or Three bond No. 1141E
PCV valve	LOCTITE 242 or equivalent

TIGHTENING TORQUE

EDJA0200

Item	Nm	kg.cm	Lb.ft
Camshaft sprocket bolt	90-110	900-1, 100	65-80
Cylinder head cover bolt	5-6	50-60	3.6-4.3
Main bearing cap bolt			
M10	14-16	140-160	10-12
M7	10-12	100-120	7-9
Connecting rod bolt	16-20+(90°-94°)	160-200+(90°-94°)	12-15+(90°-94°)
Cylinder head bolt (Cold engine)	25+(58°-62°)+(43°-47°)	250+(58°-62°)+(43°-47°)	18+(58°-62°)+(43°-47°)
Oil pan drain plug	35-45	350-450	25-33
Lower oil pan bolt	10-12	100-120	7-9
Upper oil pan bolt			
[10x38 mm (0.937x1.4961 in.)]	30-42	300-420	22-30
[8x22 mm (0.3150x0.866a in.)]	19-28	190-280	14-20
[171.5 mm (6.7519 in.)]	5-7	50-70	4-5
[152.5 mm (6.7520 in.)]	5-7	50-70	4-5
Oil screen bolt	15-22	150-220	11-16
Oil pump case bolt	12-15	120-150	9-11
Oil relief valve plug	40-50	400-500	29-36
Oil pressure switch	15-22	150-220	11-16
Oil pump cover screw	8-12	80-120	6-9
Oil filter	12-16	120-160	9-12
Fly wheel bolt	73-77	730-770	53-56
Drive plate and adaptor plate bolt	73-77	730-770	53-56
Air cleaner body installation bolt	8-12	80-120	6-9
Surge tank stay	15-20	150-200	11-14
Air intake surge tank to intake manifold (bolt)	15-20	150-200	11-14
Air intake surge tank to intake manifold (nut)	15-20	150-200	11-14
Intake manifold to cylinder head	19-21	190-210	14-15
Heat protector to exhaust manifold	12-15	120-150	9-11
Exhaust manifold to cylinder head(Self-locking nut)	25-30	250-300	18-22
Oil level gauge guide to engine	12-15	120-150	9-11
Water outlet fitting bolt	17-20	170-200	12-14
Power steering oil pump bracket to cylinder head	17-26	170-260	12-19
Power steering oil pump to bracket	17-26	170-260	12-19

Crank position sensor wheel screw	5-6	50-60	3.6-4.3
Engine mounting insulator bolt	40-55	400-550	29-40
Engine mounting bracket nut	60-80	600-800	43-58
Engine mounting bracket bolt	60-80	600-800	43-58
Engine support bracket stud	30-40	300-400	22-29
Front roll stopper bracket to sub cross member bolt	40-55	400-550	29-40
Front roll stopper insulator bolt and nut	50-65	500-650	36-47
Rear roll stopper bracket to cross member bolt	40-55	400-550	29-40
Rear roll stopper insulator bolt and nut	50-65	600-650	36-47
Transaxle mounting bracket bolt	40-55	400-550	29-40
Transaxle mounting insulator bolt	90-110	900-1,100	65-80
Fuel hose clamp to rear cylinder head assembly	12-15	120-150	9-11
Transaxle mounting plate	10-12	100-120	7-9
Rear plate	10-12	100-120	7-9
Oil seal case	10-12	100-120	7-9
Crankshaft pulley bolt	180-190	1,800-1,900	130-138
Timing belt cover bolt	10-12	100-120	7-9
Engine hanger bracket to engine	20-27	200-270	14-20
Alternator mounting bracket to engine	20-30	200-300	14-22
Alternator mounting nut (Engine front case side)	20-30	200-300	14-22
Alternator mounting bolt (Alternator mounting bracket side)	20-30	200-300	14-22
Starter to transmission (Nut)	20-30	200-300	14-22
Starter to transmission (Bolt)	27-34	270-340	20-25
Drive belt pulley bolt	35-55	350-550	25-40
Drive belt tensioner bolt	20-27	200-270	14-20
Engine coolant pump to cylinder block bolt (Head mark "7" bolt)	15-22	150-220	11-16
Engine coolant temperature sensor	20-40	200-400	14-29
Engine coolant inlet fitting attaching bolt	17-20	170-200	12-14
Throttle body to surge tank bolt	15-20	150-200	11-14
Oxygen sensor to exhaust manifold	40-50	400-500	29-36
Front exhaust pipe to exhaust manifold nut	30-40	300-400	22-29
Front exhaust pipe to catalytic converter bolt	40-60	400-600	29-43
Catalytic converter to center exhaust pipe nut	30-40	300-400	22-29

Center exhaust pipe to main muffler nut	30-40	300-400	22-29
Main muffler hanger support bracket bolt	10-15	100-150	7-11
Delivery pipe installation bolt	10-15	100-150	7-11
Timing belt tensioner pulley bolt	43-55	430-550	31-40
Timing belt idler pulley bolt	50-60	500-600	36-43
Timing belt tensioner arm Fixed bolt	35-55	350-550	25-40
Auto tensioner fixed bolt	20-27	200-270	14-20
Accelerator cable bracket	4-6	40-60	3-4
Spark plug	20-30	200-300	14-22

SPECIAL TOOLS

EDHA0300

Tool (Number and name)	Illustration	Use
Crankshaft front oil seal installer (09214-33000)	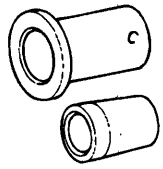 HFR20A01	Installation of the crankshaft front oil seal
Camshaft oil seal installer (09221-21000)	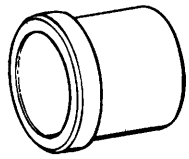 HFR20A02	Installation of the camshaft oil seal
Valve guide installer (09222-22000 (B)) (09221-29000 (A))	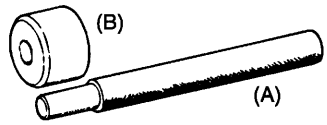 KFW3003A	Removal and installation of the valve guide
Valve stem oil seal installer (09222-22001)	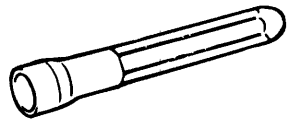 KFW3002A	Installation of the valve stem oil seal
Valve spring compressor (09222-28000) (09222-28100)	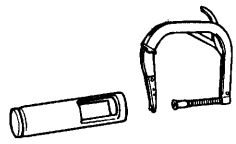 J20-008F	Removal and installation of the intake or exhaust valve
Valve stem oil seal remover (09222-29000)	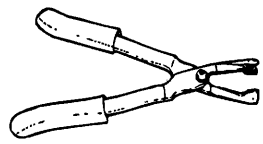 KFW3009A	Removal of the valve stem oil seal

Tool (Number and name)	Illustration	Use
Crankshaft rear oil seal installer (09231-33000)	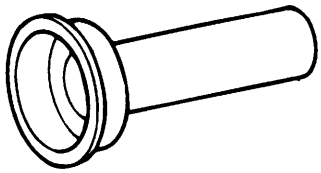 KFW3004A	Installation of the crankshaft rear oil seal
Crankshaft wrench (09231-33100)	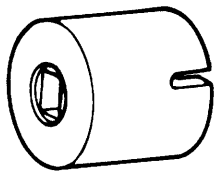 KFW3008A	Used if the crankshaft needs to be rotated to attach the timing belt, etc.
Piston pin remover and installer (09234-33001)	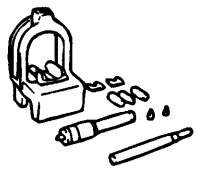 HFR20A10	Removal and installation of the piston pin

TROUBLESHOOTING

EDHA0400

Symptom	Probable cause	Remedy
Crankshaft bearing knock	Worn main bearing	Replace
	Seized bearing	Replace
	Bent crankshaft	Replace
	Excessive crankshaft end play	Replace thrust bearing
Knock piston and connecting rod knock	Worn bearing	Replace
	Seized bearing	Replace
	Worn piston pin	Replace piston and pin or connecting rod
	Worn piston in cylinder	Recondition cylinder
	Broken piston ring	Repair or replace
	Improper connecting rod alignment	Replace
Noisy valves	Faulty auto-lash adjuster	Replace
	Thin or diluted engine oil (low oil pressure)	Change
	Worn or damaged valve stem or valve guide	Replace
Excessively worn cylinder and piston	Shortage of engine oil	Add or replace
	Dirty engine oil	Replace
	Poor quality of engine oil	Use proper oil
	Improperly assembled piston and connecting rod	Repair or replace
	Improper piston ring end clearance	Replace
	Dirty air cleaner	Clean air cleaner assembly and replace the air filter
Connecting rod and main beaing noise	Insufficient oil supply	Check engine oil level
	Thin or diluted engine oil	Change and find out cause
	Excessive bearing clearance	Replace
Damaged crankshaft bearing	Shortage of engine oil	Add or replace
	Low oil pressure	Adjust or repair
	Poor quality of engine oil	Use proper engine oil
	Worn or out-of -round of crankshaft journal	Repair or replace
	Restricted oil passage in crankshaft	Clean
	Worn bearing	Replace bearing and check engine oil and lubrication system
	Faulty oil pump	Repair or replace
	Bearing improperly installed	Repair or replace
	Non-concentric crankshaft or bearing	Replace

Symptom	Probable cause	Remedy
Timing belt noise	Incorrect belt tension	Adjust belt tension
Low compression	Damaged cylinder head gasket	Replace gasket
	Worn or damaged piston rings	Replace rings
	Worn piston or cylinder	Repair or replace piston and/or cylinder block
	Worn or damaged valve seat	Repair or replace valve and/or seat ring
Oil pressure drop	Low engine oil level	Check engine oil level
	Faulty oil pressure switch	Replace
	Clogged oil filter	Replace
	Worn oil pump gears or cover	Replace
	Thin or diluted engine oil	Change and find out cause
	Oil relief valve stuck (open)	Repair
	Excessive bearing clearance	Replace
High oil pressure	Oil relief valve stuck (closed)	Repair or replace
Excessive engine rolling and vibration	Misfire	Correct
	Loose engine roll stopper (front, rear)	Re-tighten
	Loose transaxle mount bracket	Re-tighten
	Loose engine mount bracket	Re-tighten
	Loose center member	Re-tighten
	Broken transaxle mount insulator	Replace
	Broken engine mount insulator	Replace
	Broken engine roll stopper insulator	Replace or replace
Low coolant level	Leakage of coolant	Correct
	Damaged radiator core joint	Replace
	Corroded or cracked hoses (Radiator hose, heater hose, etc)	Replace
	Faulty radiator cap valve or setting of spring	Replace
	Faulty thermostat	Replace
	Faulty engine coolant pump	Replace
Clogged radiator	Foreign material in coolant	Replace

Symptom	Probable cause	Remedy
Abnormally high coolant temperature	Faulty thermostat	Replace parts
	Faulty radiator cap	Replace
	Restriction of flow in cooling system	Clear restriction or replace parts
	Loose or missing drive belt	Adjust or replace
	Faulty engine coolant pump	Replace
	Faulty temperature sender or wiring	Repair or replace
	Faulty electric fan	Repair or replace
	Faulty thermo-sensor on radiator	Replace
	Insufficient coolant	Refill coolant
Abnormally low coolant temperature	Faulty thermostat	Replace
	Faulty temperature gauge or wiring	Repair or replace
Leakage from oil cooling system	Loose hose and pipe connection	Replace
	Blocked or collapsed hose and pipe	Repair or replace
Inoperative electrical cooling fan	Damaged	Replace or repair
	Loose wires or in operative sensor	Repair or replace
Exhaust gas leakage	Loose connections	Re-tighten
	Broken pipe or muffler	Repair or replace
Abnormal noise	Detached baffle plate in muffler	Replace
	Broken rubber hanger	Replace
	Pipe or muffler contacting vehicle body	Correct
	Broken pipe or muffler	Repair or replace

CHECKING ENGINE OIL EDHA0500

1. Position a vehicle on a level surface.
2. Turn off the engine.

NOTE

In the case of a vehicle that has not been used for a prolonged period, run the engine for several minutes.

Turn off the engine and wait for 5 minutes at least, then check the oil level.

3. Check that the engine oil level is within the level range indicated on the oil dipstick. If the oil level is found to have fallen to the lower limit (the "L" mark), refill to the "F" mark.

NOTE

When refilling, use the proper grade of engine oil.

4. Check that the oil is not dirty or mixed with coolant or gasoline, and that it has the proper viscosity.

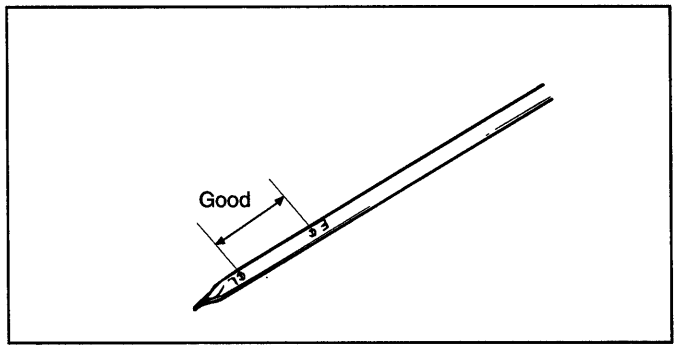

EDA9000A

SELECTION OF ENGINE OIL

EDJA0600

Recommended API classification: SD OR ABOVE SE OR ABOVE [For EC.]

Recommended SAE viscosity grades:

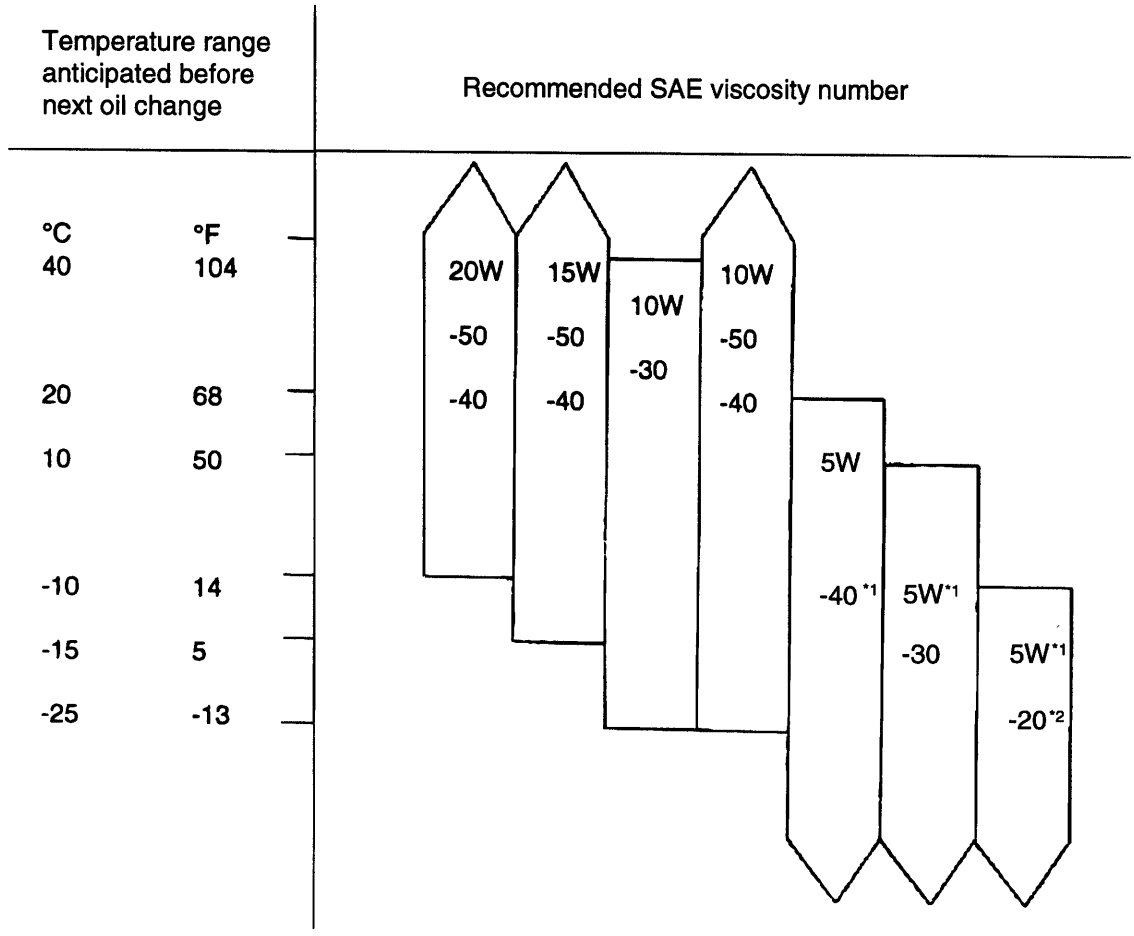

***1 Restricted by driving condition and dealing area.**
***2 Not recommended for sustained high speed vehicle operation**

EDA9990B

NOTE

For best performance and maximum protection of all types of operation, select only those lubricants which:

1. **Satisfy the requirements of the API classification.**
2. **Have the proper SAE grade number for expected ambient temperature range.**

Lubricants which do not have both an SAE grade number and an API service classification on the container should not be used.

CHANGE ENGINE OIL EDJA0700

1. Run the engine until it reaches normal operating temperature.
2. Turn off the engine.
3. Remove the oil filler cap and oil filter and then drain plug.

   Drain the engine oil.
4. Tighten the drain plug to the specified torque.

Tightening torque

Oil pan drain plug : 35-45 Nm (350-450 kg.cm, 25-33 lb.ft)

NOTE

Whenever tightening the oil drain plug, use a new drain plug gasket.

5. Fill the new engine oil through the oil filler cap.

Drain and Refill

Oil quantity : 4.5 lit (4.74 U.S. qts., 3.95 Imp. qts.)

NOTE

Do not over fill. This will cause oil aeration and loss of oil pressure.

6. Install the oil filler cap.
7. Start and run the engine.
8. Turn off the engine and then check the oil level. Add oil if necessary.

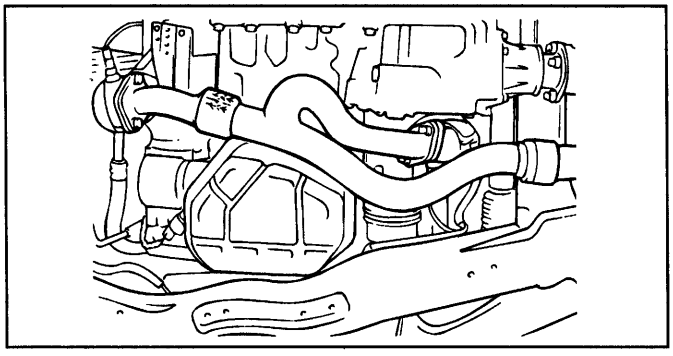

EDJA070A

REPLACEMENT OIL FILTER EDJA0800

FILTER SELECTION

All Hyundai Motor Company engines are equipped with a high quality, disposable oil filter. This filter is recommended as a replacement filter for all vehicles. The quality of after market replacement filters is various considerably.

High quality of replacement filters should be used to assure the most efficient service. Make sure that the rubber gasket from the old oil filter is completely removed from the contact surface on the engine block before installing a new filter.

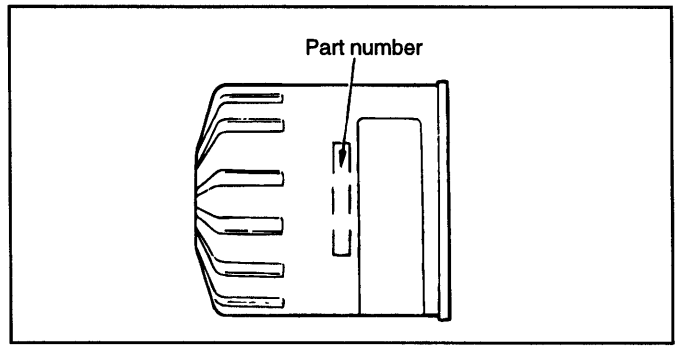

ECA9970A

PROCEDURE FOR REPLACING OIL FILTER

1. Use a filter wrench to remove the oil filter.
2. Before installing a new oil filter on the engine, apply clean engine oil to the surface of the rubber gasket.
3. Tighten the oil filter of the specified torque.

Tightening torque

Oil filter : 12-16 Nm (120-160 kg.cm, 9-12 lb.ft)

4. Start and run the engine and check engine oil leaks.
5. After stopping the engine, check the oil level and add oil as necessary.

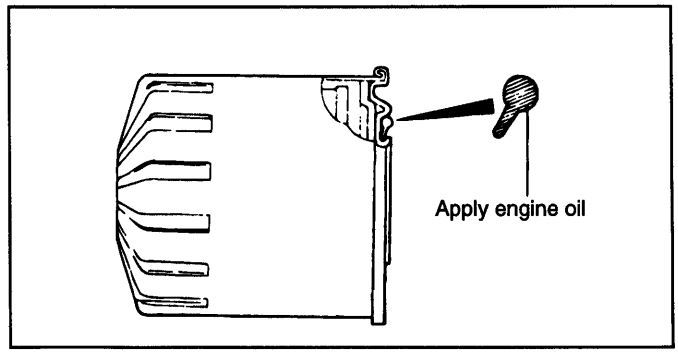

ECA9970B

CHECKING COOLANT LEAK CHECK EDHA0900

1. Loosen the radiator cap.
2. Confirm that the coolant level is up to the filler neck.
3. Install a radiator cap tester to the radiator filler neck and apply 150 KPa (21psi, 1.53 kg/cm^2) pressure. Hold for two minutes, then check for leakage from the radiator, hoses or connections.

CAUTION

1. **Radiator coolant may be extremely hot. Do not open the system while hot, or scalding engine coolant could gush out, causing personal injury. Allow the vehicle to cool before servicing this system.**
2. **When the tester is removed, be careful not to spill any coolant from it.**
3. **Be sure to clean away completely any coolant from the area.**
4. **Be careful, when installing and removing the tester and when testing, not to deform the filler neck of the radiator.**

4. If there is leakage, repair or replace with the apropriate part.

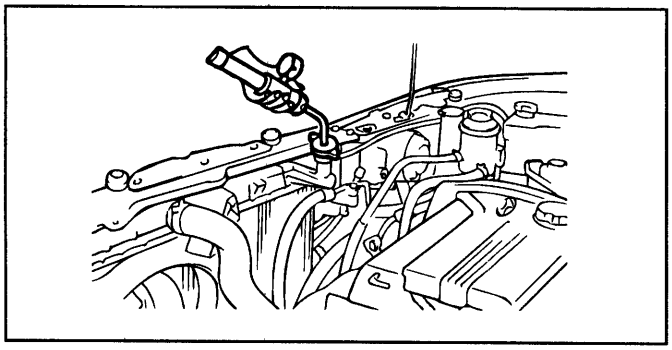

EDJA100A

RADIATOR CAP PRESSURE TEST EDHA1000

1. Use an adapter to attach the cap to the tester.
2. Increase the pressure until the indicator of the gauge stops moving.

Main valve opening pressure :

107.9±14.7 kPa (1.1±0.15 kg/cm^2 15.64±2.13 psi)

Main valve closing pressure :

83.4 kPa (0.85 kg/cm^2, 12.1 psi)

3. Check that the pressure level is maintained at or above the limit.
4. Replace the radiator cap if the reading does not remain at or above the limit.

NOTE

Be sure that the cap is clean before testing, since rust or other foreign material on the cap seal will cause an incorrect reading.

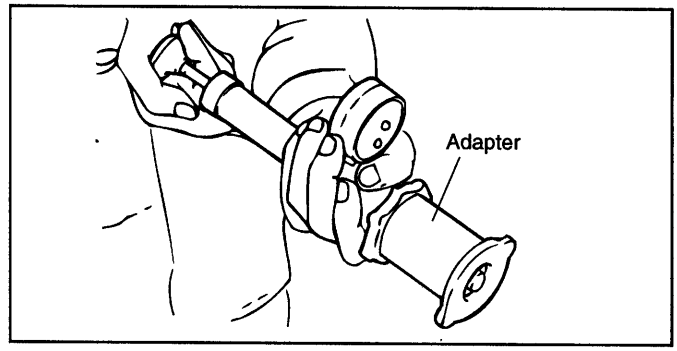

ECA9090A

SPECIFIC GRAVITY TEST EDJA1100

1. Measure the specific gravity of the coolant with a hydrometer.
2. Measure the coolant temperature and calculate the concentration from the relation between the specific gravity and temperature. Use the following table for reference.

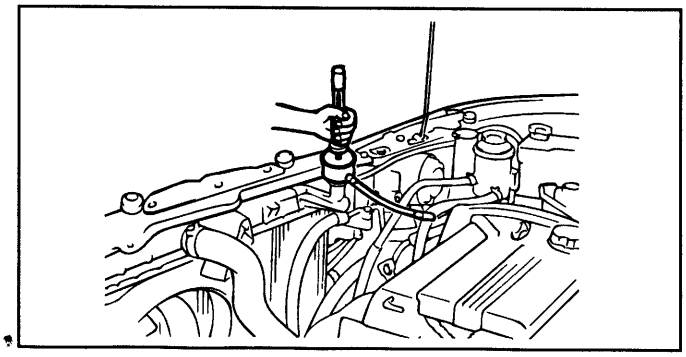

EDJA110A

RELATION BETWEEN COOLANT CONCENTRATION AND SPECIFIC GRAVITY

Coolant temperature °C (°F) and specific gravity					Freezing temperature °C (°F)	Safe operating temperature °C (°F)	Coolant concentration (Specific volume)
10 (50)	20 (68)	30 (86	40 (104)	50 (122)			
1.054	1.050	1.046	1.042	1.036	-16 (3.2)	-11 (12.2)	30%
1.063	1.058	1.054	1.049	1.044	-20 (-4)	-15(5)	35%
1.071	1.067	1.062	1.057	1.052	-25 (-13)	-20 (-4)	40%
1.079	1.074	1.069	1.064	1.058	-30 (-22)	-25 (-13)	45%
1.087	1.082	1.076	1.070	1.064	-36 (-32.8)	-31 (-23.8)	50%
1.095	1.090	1.084	1.077	1.070	-42 (-44)	-37 (-35)	55%
1.103	1.098	1.092	1.084	1.076	-50 (-58)	-45 (-49)	60%

Example

The safe operating temperature is -15°C (5°F) when the measured specific gravity is 1.058 at coolant temperature of 20°C (68°F)

CAUTION

- **If the concentration of the coolant is below 30%, its anti-corrosion property will be adversely affected.**
- **If the concentration is above 60%, the engine cooling property will decrease, affecting the engine adversely. For these reasons, be sure to maintain the concentration level within the specified range.**
- **Do not mix types of anti - freeze.**

RECOMMENDED COOLANT

Antifreeze	Mixture ratio of antifreeze in coolant
ETHYLENE GLYCOL BASE FOR ALUMINUM	50% [Except tropical areas]
	40% [Tropical areas]

CHECKING COMPRESSION PRESSURE EDHA1200

1. Before checking the engine compression, check the engine oil level. Also check that the starter motor and battery are all in normal operating condition.
2. Start the engine and wait until the engine coolant temperature reaches 80~95°C (176~205°F).
3. Stop the engine and disconnect the spark plug cables.
4. Remove the spark plugs.
5. Crank the engine to remove any foreign material in the cylinders.
6. Insert the compression gauge into the spark plug hole.
7. Depress the accelerator pedal to open the throttle fully.

8. Crank the engine and read the gauge.

Standard value :	1,200kpa(12.2 kg/cm^2 , 170psi)
Limit :	1,050kpa(10.7kg/cm^2 , 149psi)

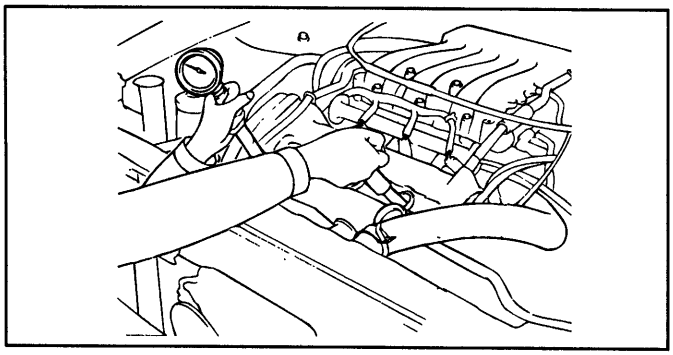

EDHA015A

9. Repeat steps 6 to 8 for all cylinders, making sure that the pressure difference for each of the cylinders is within the specified limit.

Limit :	Max. 100kpa (1.0 kg/cm^2 , 14psi) between cylinders

10. If a cylinder's compression or pressure differential is outside the specification, add a small amount of oil through the spark plug hole, and repeat steps 6 to 9.
    1) If the addition of oil causes the compression to rise, it is possible that the piston ring is be worn.
    2) If the compression remains the same, valve seizure, poor valve seating or a compression leak in the cylinder head gasket are all possible causes.

Tightening torque

Spark plug ; 20-30 Nm (200-300 kg.cm, 14-22 lb.ft)

TIGHTENING CYLINDER HEAD BOLTS EDHA1300

1. First loosen slightly and then tighten to the specified torque.

Tightening torque

Cylinder head bolts cold [Engine temperature approximately 20°C (68°F)] ;

25 Nm (250 kg.cm, 18 lb ft)+(58°-62°)+(43°-47°))

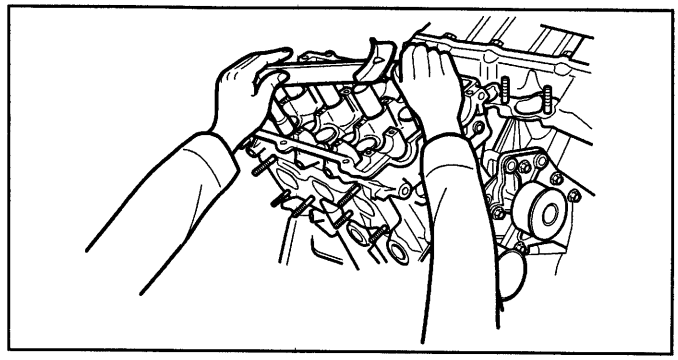

KFW3010A

2. Use the torque - angle method to torque the head bolts.
3. Be sure to follow the specific torque sequence as shown in the illustration.

NOTE

Run the engine to normal operating temperature and let it cool, then re-torque the bolts to specifications.

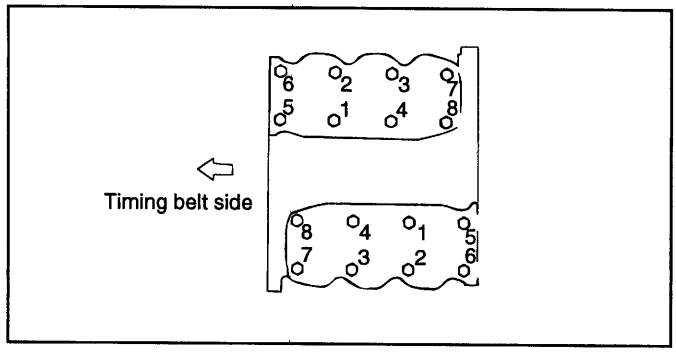

EDA9060B

ADJUSTING VALVE CLEARANCE EDHA1400

As the intake and exhaust valves are equipped with hydraulic lash adjusters, there is no need to adjust the valve clearance. The proper function of the hydraulic lash mechanism may be determined by checking for tappet noise. When there is a tappet noise or any unusual noise, check the hydraulic lash adjuster by removing and bleeding or replacing it.

ADJUSTING DRIVE BELT AND TENSIONER EDHA1500

1. Hang the belt on the pulley of the tensioner and install the tensioner.

   (If the tensioner is already installed, loosen its mounting bolts to allow belt installation.)

Tightening torque

Tensioner assembly bolt ;

20-27 Nm (200-270 kg.cm, 14-20 lb.ft)

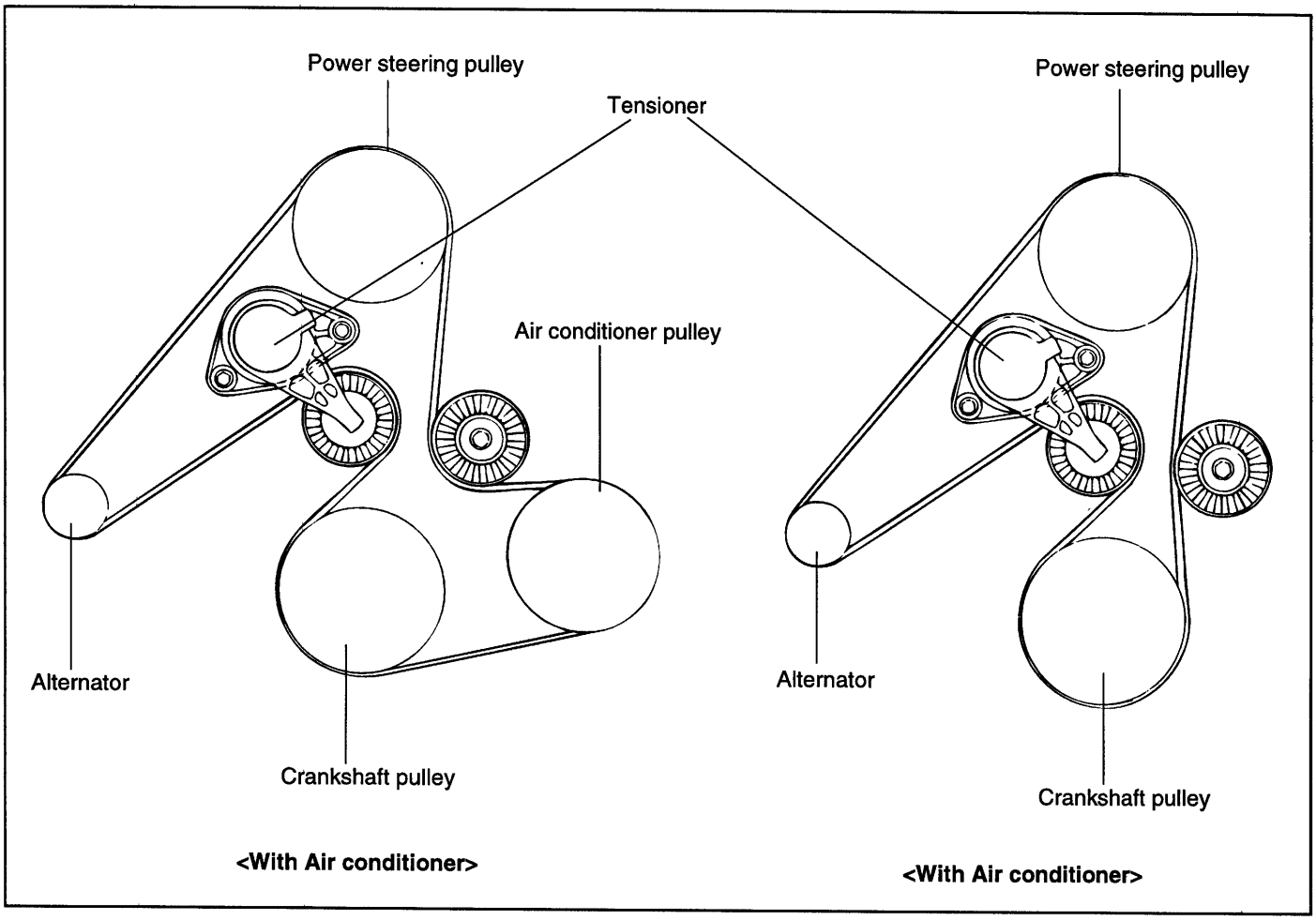

EDA9090A

2. Install the belt in the fllowing order.

   [Alternator ⇒ Power steering ⇒ Crankshaft pulley ⇒ Air conditioner pulley.]

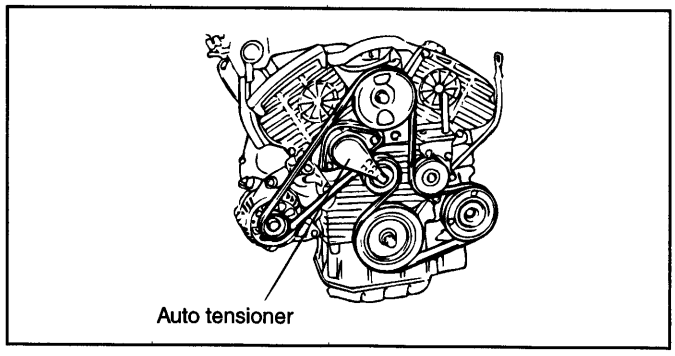

EDA9031A

3. Rotate the tensioner arm clockwise (about 14°) with a spaner (16 mm) and fit the belt to the idler pulley.

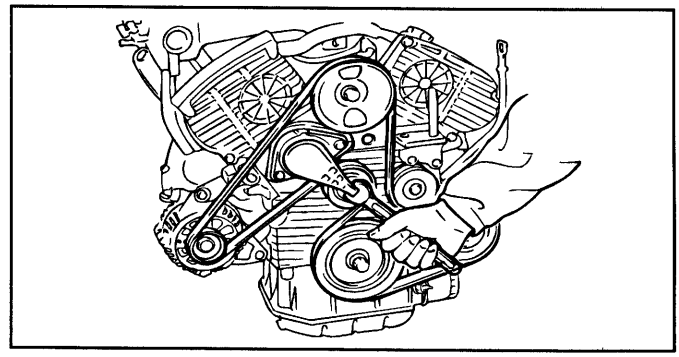

EDA9031B

4. When installing the belt on the pulley, make sure it is centered on the pulley.

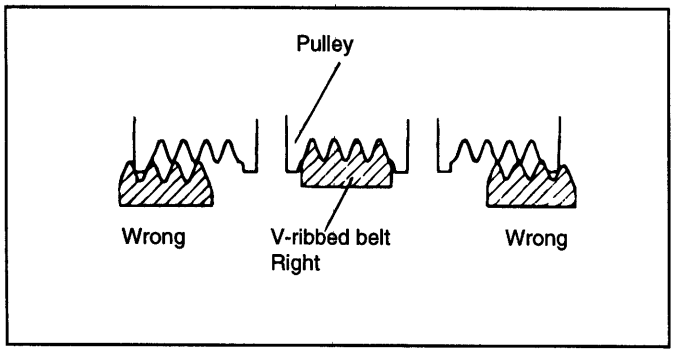

EOYR0020

5. The tensioner mark should be between the "MIN" and "MAX" position. If not, replace the belt.

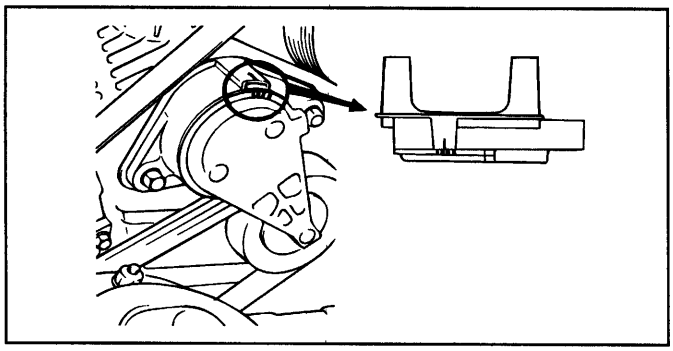

EDA9200A

CYLINDER BLOCK

CYLINDER BLOCK

CYLINDER BLOCK EDHA2000

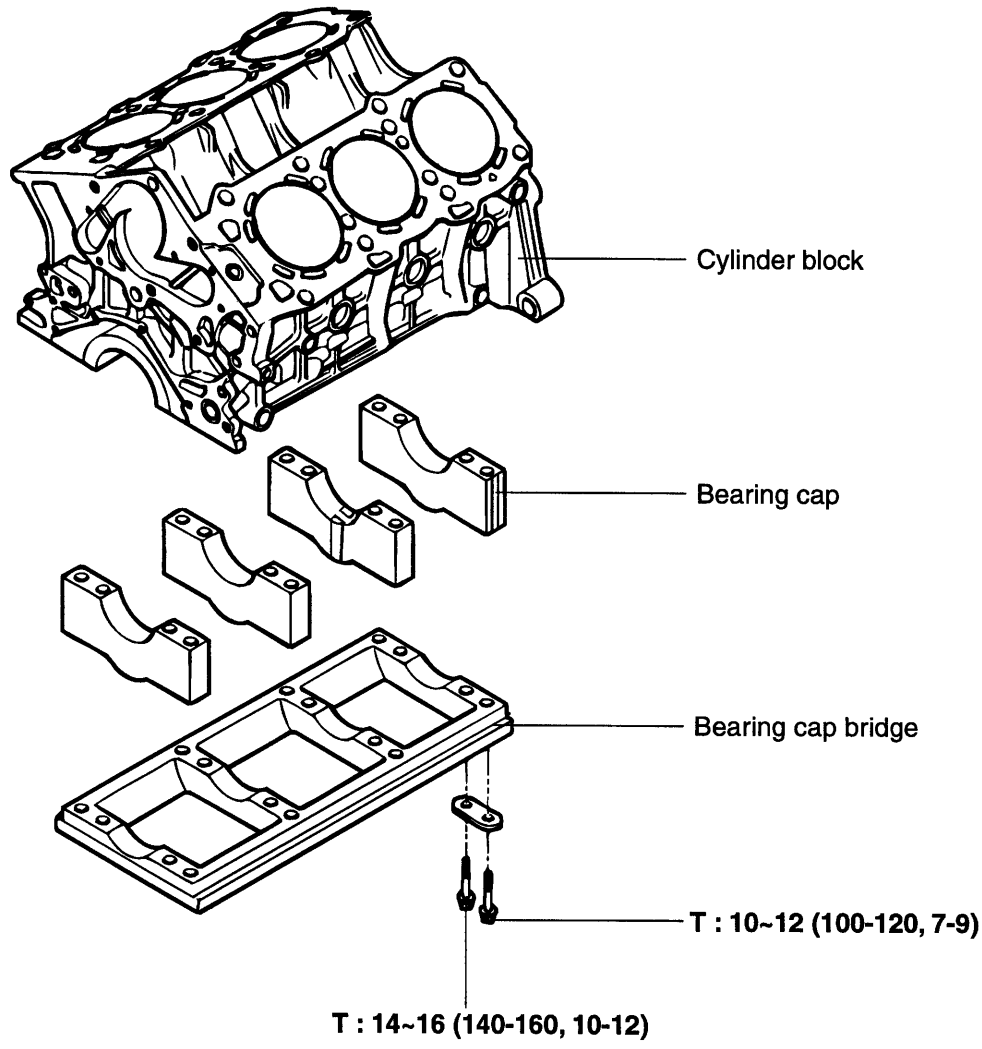

TORQUE : Nm (kg·cm, lb·ft)

EDJA200A

DISASSEMBLY EDHA2200

Remove the timing belt, cylinder head assembly, drive plate, transaxle mounting plate, oil pan and oil pump case.

For further details, refer to the appropriate section.

INSPECTION EDHA2300

CYLINDER BLOCK

1. Check the cylinder block for scores, rust and corrosion. Also check for cracks or any other defects. Replace the block if defective.
2. Measure the cylinder bore with a cylinder gauge at the three levels indicated, in the directions A and B.

   Level 1 : No.1 piston ring position at TDC

   Level 2: Center of cylinder

   Level 3 : Bottom of cylinder

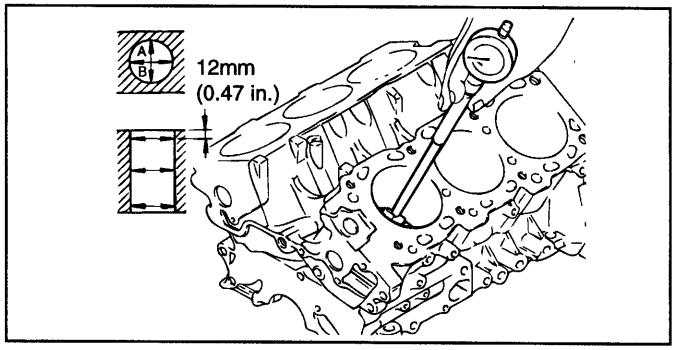

EDA9460A

3. If the cylinder bores show more than the specified out-of-round or taper, or if the cylidner walls are badly scuffed or scored, the cylinder block should be rebored and honed. New oversize pistons and rings should be installed.

Standard value

Cylinder bore : 86.7 mm (3.41 in.)

Out-of-round and taper of cylinder bore :

Max. 0.02 mm (0.0008 in.)

4. If a ridge exists at the top of the cylinder, cut it off with a ridge reamer.
5. Oversize pistons are available in two sizes.

Piston service size and mark mm (in.)

0.25 (0.010) O.S : 0.25

0.50 (0.020) O.S : 0.50

6. To rebore the cylinder bore to the oversize, maintain the specified clearance between the oversize piston and the bore and make sure that all used pistons are the same oversize. The standard measurement of the piston outside diameter is taken at a level of 12mm (0.47 in.) above the bottom of the piston skirt and across the thrust faces.

Piston-to-cylinder clearance :

0.01-0.03 mm (0.0004-0.0012 in.)

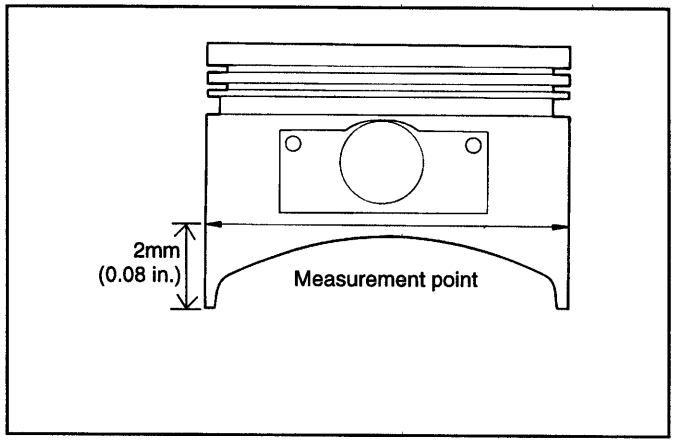

ECA9451A

7. Check for damage or cracks in the cylinders.
8. Check the top surface of the cylinder block for flatness. If the top surface exceeds the limit, grind to the minimum limit or replace.

Standard value

Flatness of gasket surface :

Max. 0.03 mm (0.0012 in.)

Service limit

Flatness of gasket surface : 0.05 mm (0.0020 in.)

CAUTION

When the cylinder head is assembled, grinding less than 0.2mm (0.008in.) is permissible.

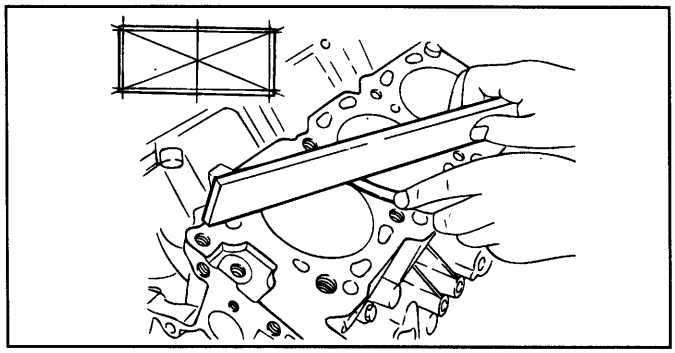

EDA9460B

BORING CYLINDER EDHA2400

1. Oversize pistons should be selected according to the largest bore cylinder.

Identification Mark	Size
0.25	0.25 mm (0.010 in.)
0.50	0.50 mm (0.020 in.)

NOTE

The size of piston is stamped on top of the piston.

2. Measure the outside diameter of the piston to be used.
3. According to the measured O.D., calculate the new bore size.

   New bore size = Piston O.D + 0.01 to 0.03 mm (0.0004 to 0.0012 in.) (clearance between piston and cylinder) - 0.01 mm (0.0004 in.) (honing margin.)

4. Bore each of the cylinders to the calculated size.

CAUTION

To prevent distortion that may result from temperature rise during honing, bore the cylinder holes in the firing order.

5. Hone the cylinders, finishing them to the proper dimension (piston outside diameter + gap with cylinder).
6. Check the clearance between the piston and cylinder.

Standard : 0.01-0.03 mm (0.0004-0.0012 in.)

NOTE

When boring the cylinders, finish all of the cylinders to the same oversize. Do not bore only one cylinder to the oversize.

REASSEMBLY EDHA2500

Install the following parts by referring to their respective sections.

1. Crankshaft
2. Drive plate
3. Piston
4. Cylinder head
5. Timing belt
6. Oil pump case

ENGINE MOUNTS

ENGINE MOUNTING EDJA2500

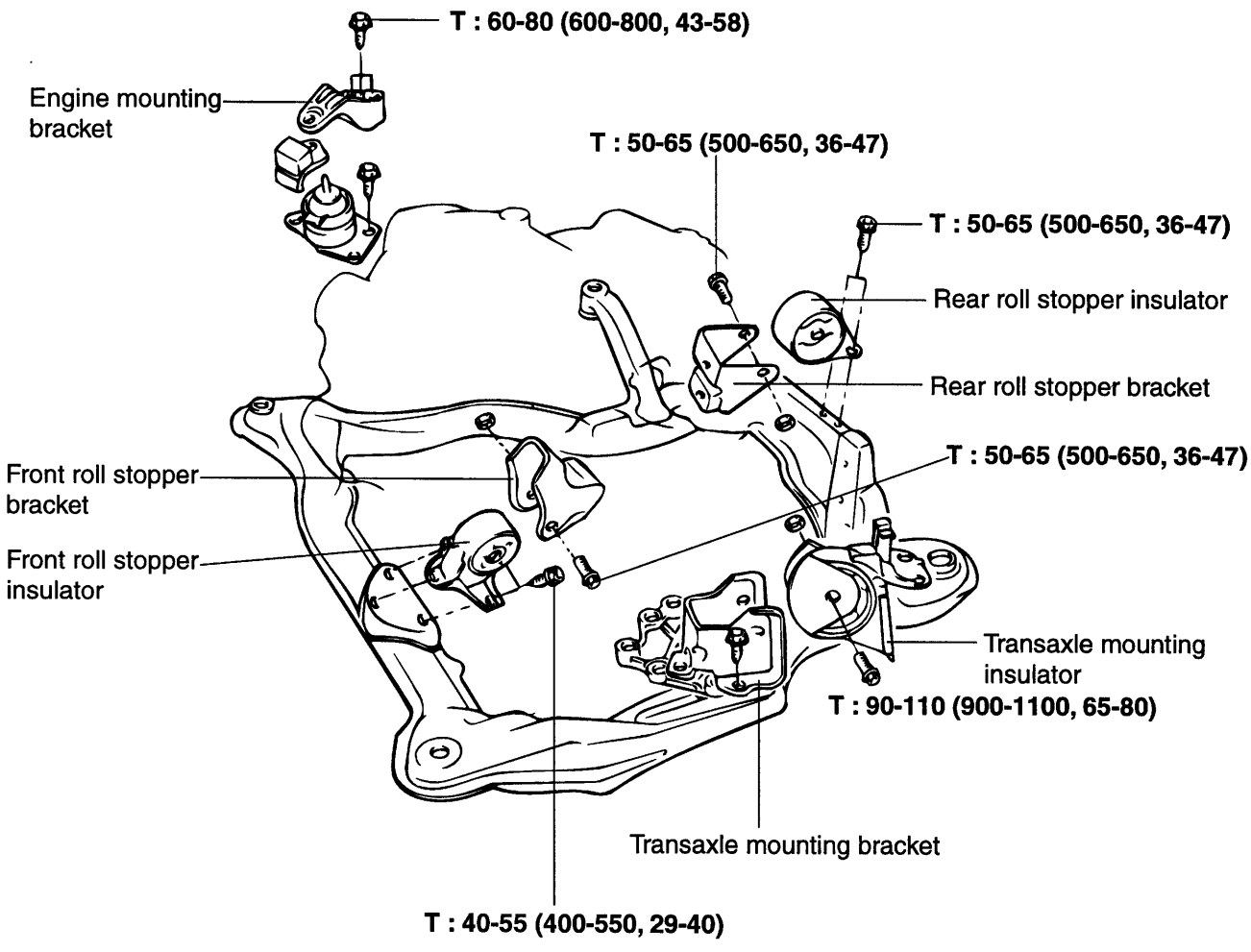

TORQUE : Nm (kg·cm, lb·ft)

ECJA300A

REMOVAL EDJA2600

Attach a cable or chain from the engine hooks and lift so that there is no pressure on the motor mounts.

ENGINE MOUNTING

1. Remove the engine mount insulator bolts.
2. Remove the engine mount bracket from the engine.

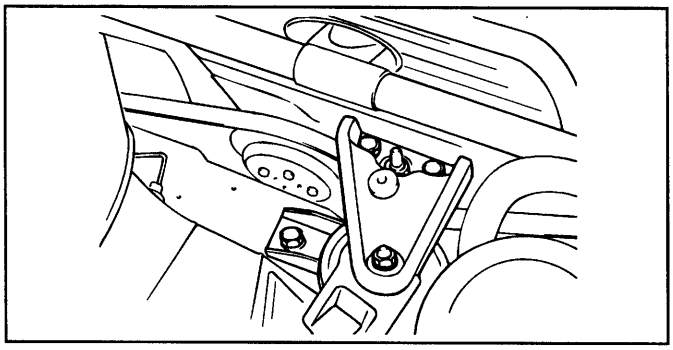

EDJA310A

TRANSAXLE MOUNTING

1. Remove the transaxle mounting bolt.
2. Remove the transaxle bracket.

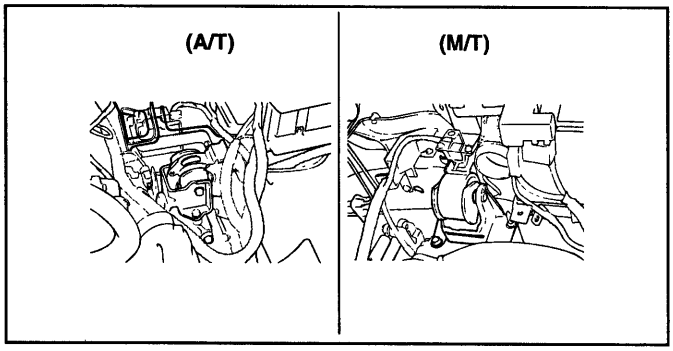

EDJB000A

FRONT ROLL STOPPER

1. Remove the front roll stopper upper and lower bolts.
2. Remove the front roll rod assembly.

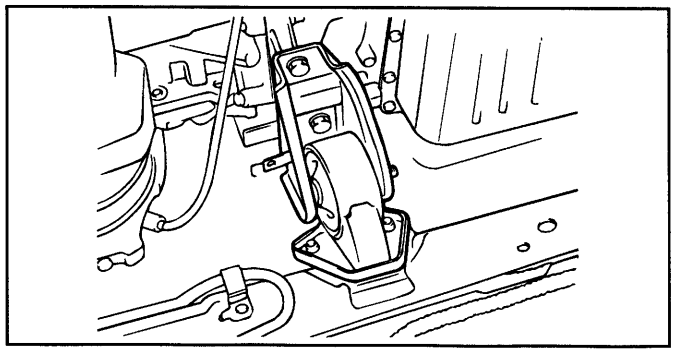

EDJA310C

REAR ROLL STOPPER

1. Remove the bolt from the rear roll stopper.
2. Remove the rear roll stopper from the sub-frame.

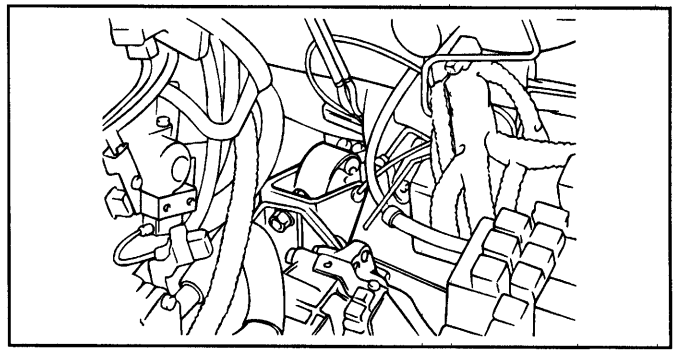

ECHA005B

INSPECTION ITEMS EDHA3200

Transaxle mount

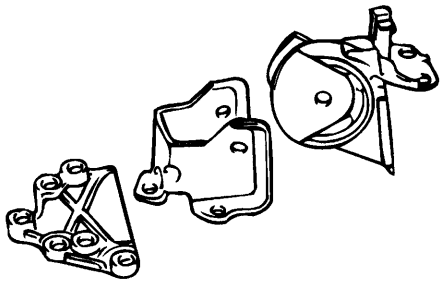

Engine mount

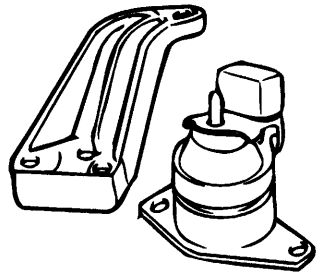

Front roll stopper assembly

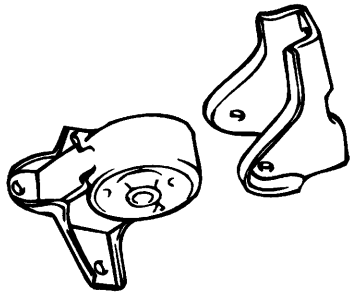

Rear roll stopper assembly

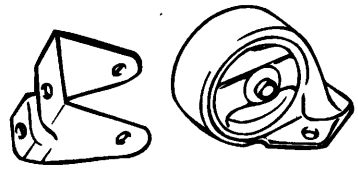

EDHA005E

ENGINE AND TRANSAXLE ASSEMBLY

ENGINE AND TRANSAXLE ASSEMBLY EDJA2800

REMOVAL

1. Remove the battery and engine cover.
2. Detach the air cleaner.

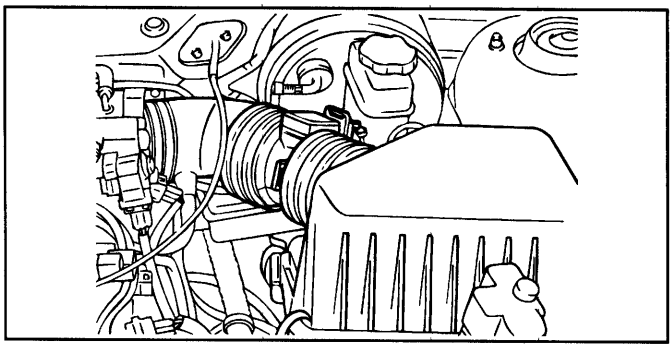

EDJAB60A

3. Disconnect the connectors from the engine harness.
   1. Alternator, starter
   2. Power steering switch connector, oil pressure gauge connector
   3. TPS connector
   4. Back up lamp switch connector
   5. A/T solenoid, inhibitor switch connector
   6. Coolant temperature
   7. Ignition coils, power TR connector
   8. Idle speed control valve (ISC) connector
   9. MAP and ATS connectors
   10. Oxygen sensor connector etc.
4. Drain the engine coolant.
5. Disconnect the transaxle oil cooler hoses (A/T).

NOTE

When disconnecting hoses, make identification marks to avoid making any mistake when installing them again.

CAUTION

Be careful not to spill any of the oil or fluid from the hoses. Plug the openings to prevent the entry of foreign material.

6. Disconnect the radiator upper and lower hoses on the engine side then remove the radiator assembly.

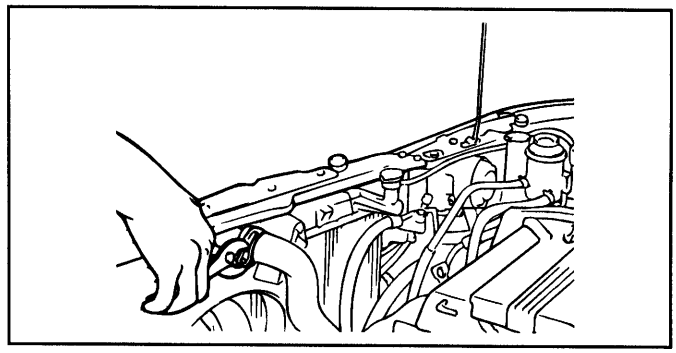

EDJA330A

7. Disconnect the engine ground.
8. Disconnect the brake booster vacuum hose.

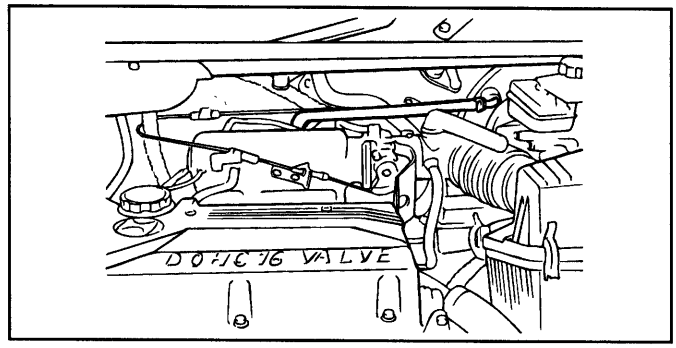

EDHA006B

9. Disconnect the heater hoses (inlet and outlet) on the engine side.
10. Disconnect the accelerator cable and cruise control cable at the engine side.

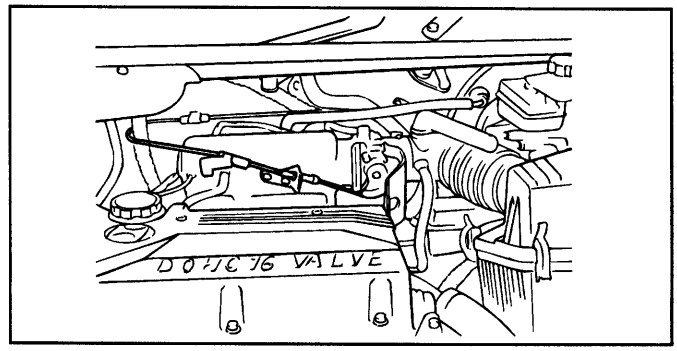

EDHA006E

11. Using a special tool, remove the main fuel line (supply and return) at the delivery pipe.
12. Disconnect the speedometer cable from the transaxle.

13. Disconnect the clutch cable or control cable from the transaxle.

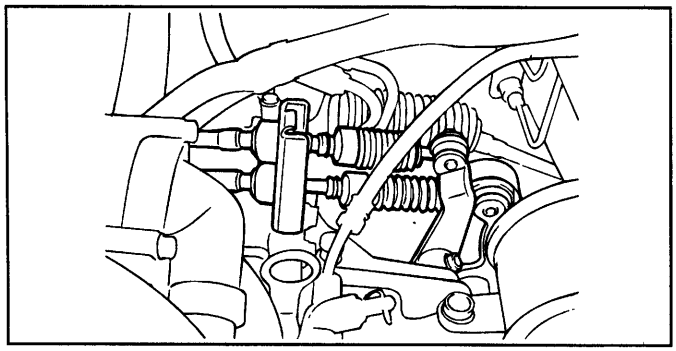

EDHA006F

14. Remove the power steering hose from the oil pump.

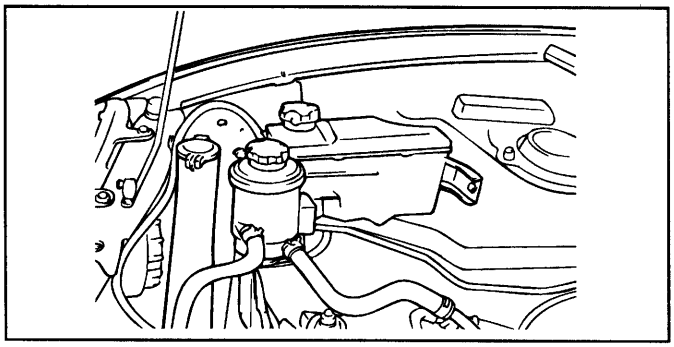

EDJA330B

15. Detach the steering dust cover in the engine compartment and then disconnect the gear box universal joint bolt.

NOTE

Make sure to make identification marks between the universal joint and the gear box for reassembly.

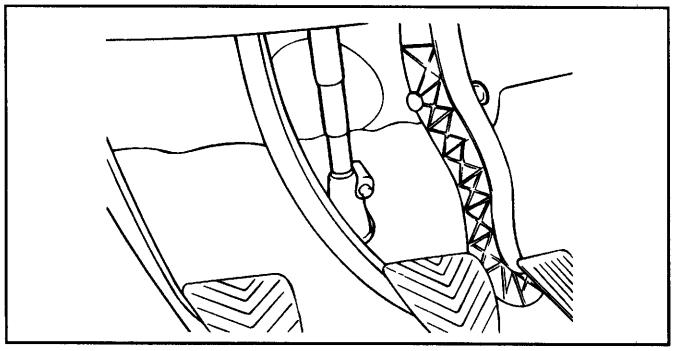

ECHA004I

16. Raise the vehicle and then remove the front tire.

17. Remove the calliper assembly from the knuckle. Using wire, hang it from the suspension.

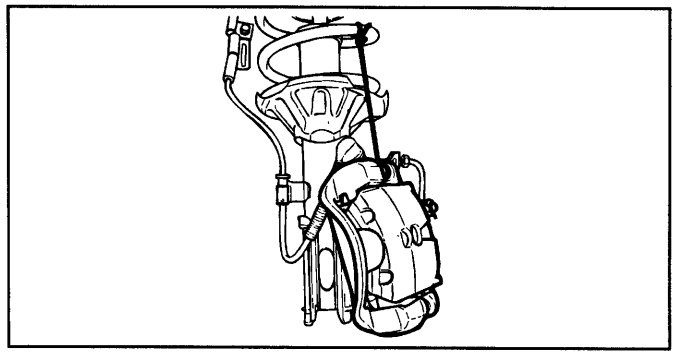

ECHA004J

18. Loosen the strut lower bolts and then remove it.

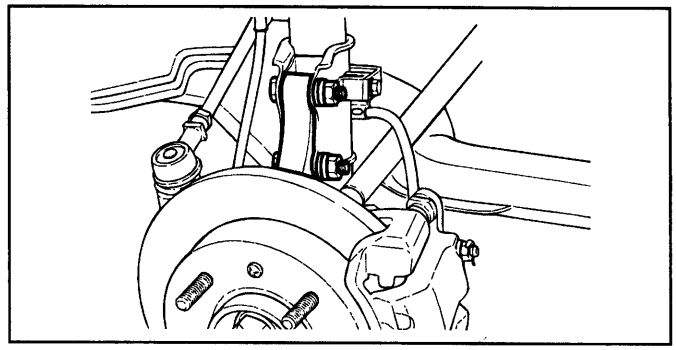

ECHA004K

19. Drain the transaxle oil.

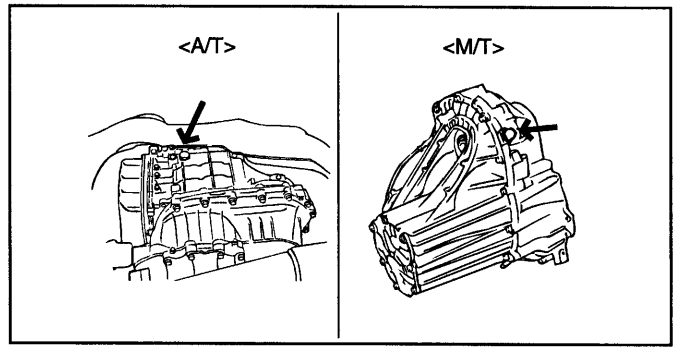

ECHA004Z

20. Remove the front muffler bolts.

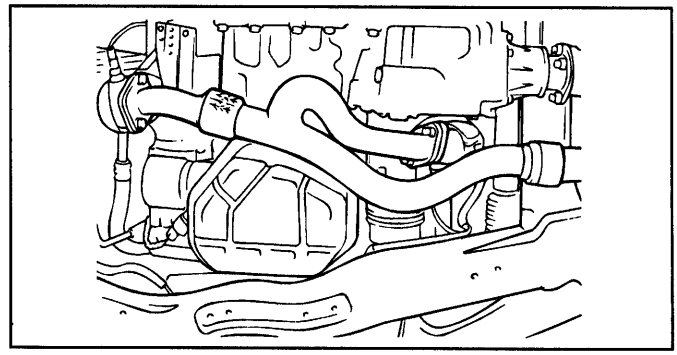

EDJA070A

21. Remove the transaxle control rod and extension rod (M/T only).

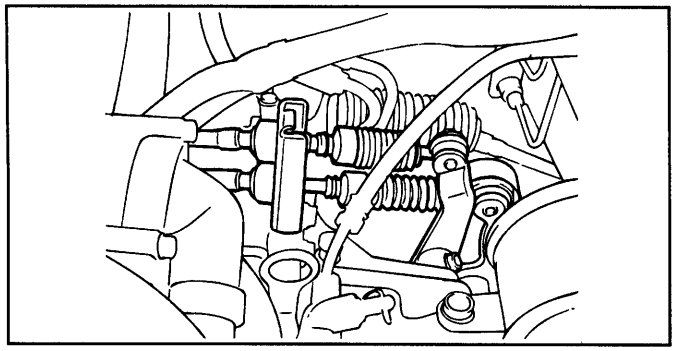

EDHA006F

22. Put the special fixfure on the T/M jack and then adjust it to the sub-frame.

NOTE

Check that all the cables, harness connector and hoses are disconnected from the engine and transaxle assembly.

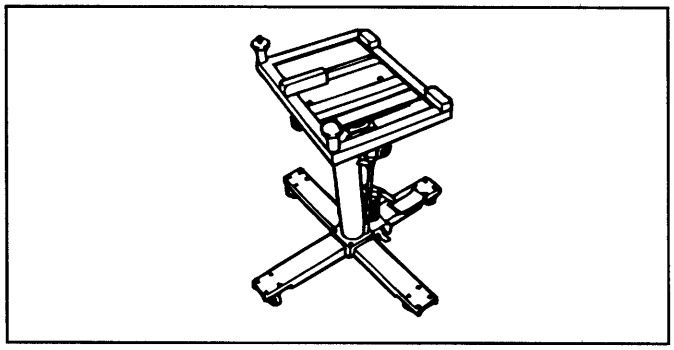

ECHA004O

23. Remove the engine mount bracket and the transaxle mount bracket.

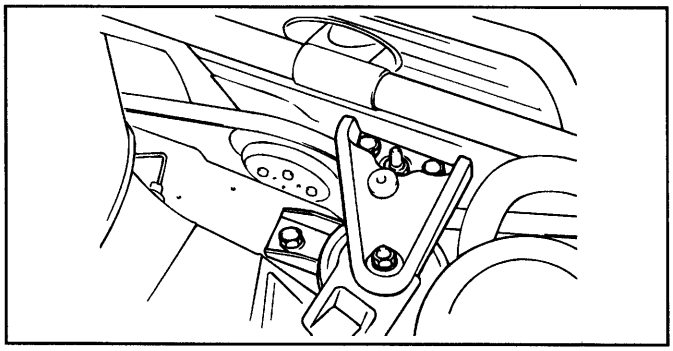

EDJA310A

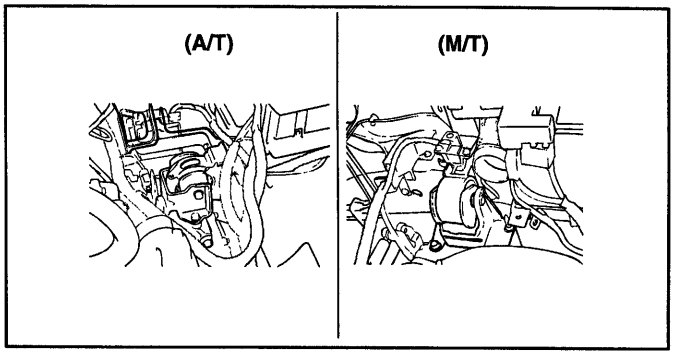

EDJB000A

24. Remove the sub-frame installation bolts.

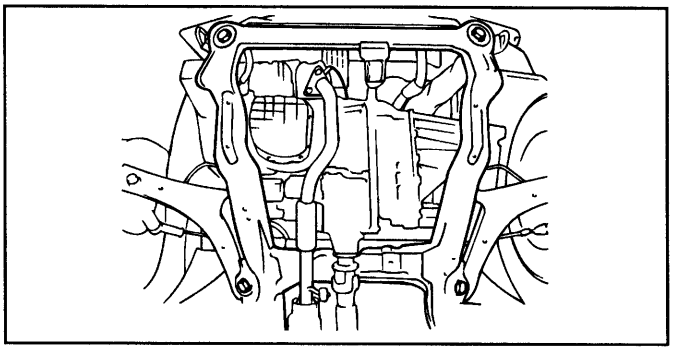

EDJA230C

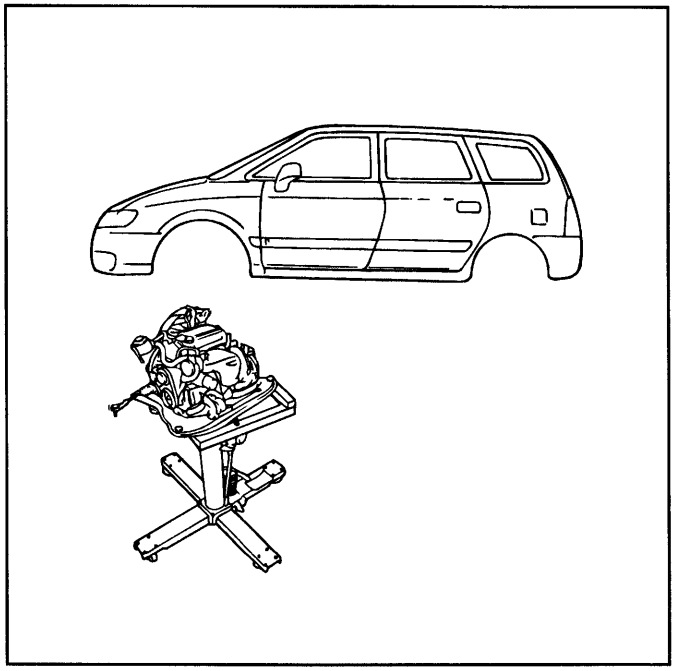

EDHA006I

25. After removing the drive shaft, lower the engine and transaxle assembly on the jack. Then remove the front roll stopper and the rear roll stopper.

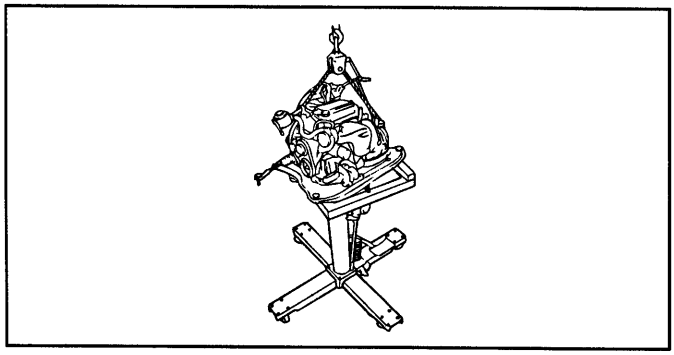

EDHA006L

26. Remove the engine and transaxle assembly as a unit.

MAIN MOVING SYSTEM

CAM SHAFT

CAMSHAFTS EDHA4000

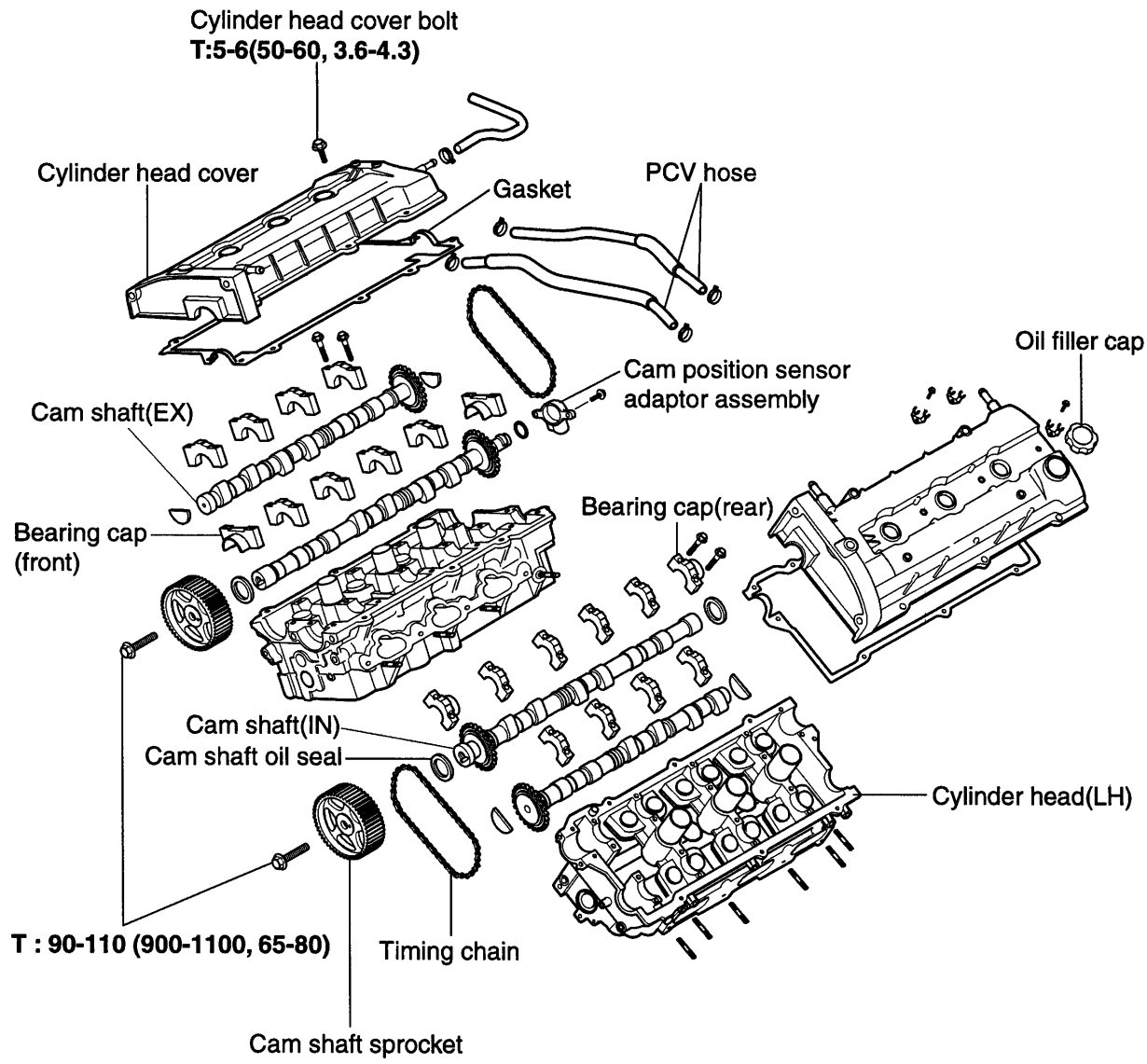

TORQUE : Nm (kg·cm, lb·ft)

KFW3031A

DISASSEMBLY EDHA4100

1. Remove the engine cover and intake manifold.

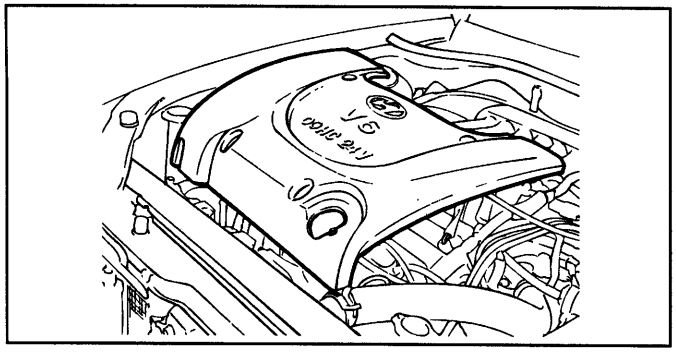

EDHA007A

2. Disconnect the breather hose and the engine harness.
3. Remove the power steering pulley, air conditioner pulley, crankshaft pulley, idler pulley and tensioner pulley.
4. Remove the timing belt cover.
5. Loosen the auto tensioner.
6. Remove the timing belt from the camshaft sprocket.
7. Remove the spark plug cables.
8. Loosen the cylinder head cover bolts and then remove it.

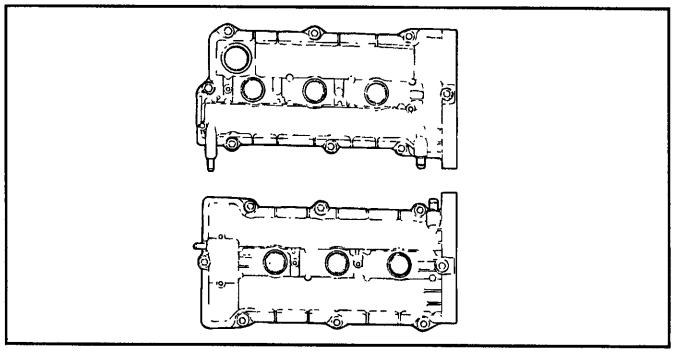

EDA9091A

9. Remove the camshaft sprockets.
10. Remove the camshaft bearing caps.

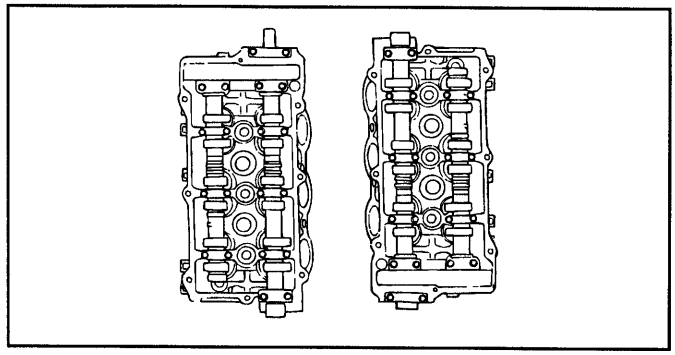

EDA9036A

11. Remove the camshafts.

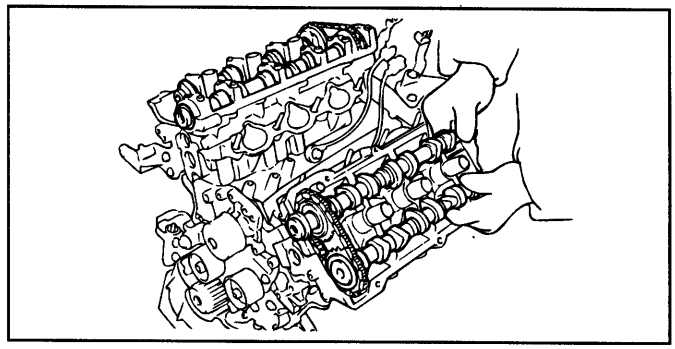

EDA9032A

INSPECTION EDJA3200

CAMSHAFTS

1. Check the camshaft journals for wear. If the journals are badly worn out, replace the camshaft.

2. Check the cam lobes for damage. If the lobe is damaged or excessively worn out, replace the camshaft.

Cam height

[Standard]

Intake : 43.95-44.15 mm(1.7303-1.7382 in.)

Exhaust : 43.95-44.15mm(1.7303-1.7382 in.)

[Limit]

Intake/Exhaust : 43.45mm(1.7106 in.)

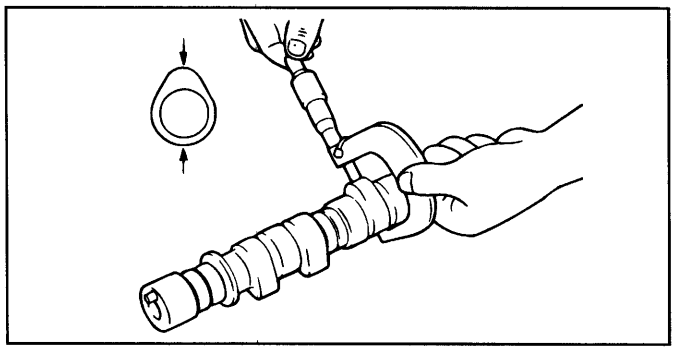

EDA9260A

3. Check the cam surface for abnormal wear or damage, and replace if necessary.

4. Check each bearing for damage. If the bearing surface is excessively damaged, replace the cylinder head assembly or camshaft bearing cap, as necessary.

Camshaft end play : 0.1-0.15mm(0.0039-0.0059 in.)

OIL SEAL (CAMSHAFT FRONT)

1. Check the lips for wear. If lip threads are worn out, replace the oil seal with new one.

2. Check a contact surface of oil seal lip on camshaft. If there stratified wear, replace the camshaft.

HLA (HYDRAULIC LASH ADJUSTER)

With the HLA filled with engine oil, hold A and press B by hand. If B moves, replace the HLA.

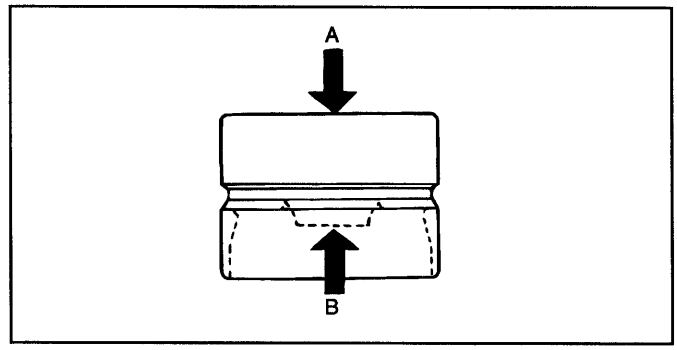

EDA9260B

Problem	Possible cause	Action
1. Temporary noise when starting a cold engine	Normal	This noise will disappear after the oil in the engine reaches the normal pressure.
2. Continuous noise when the engine is started after parking more than 48 hours.	Oil leakage of the high pressure chamber on the HLA,allowing air to get in.	Noise will disappear within 15 minutes when engine runs at 2000-3000 rpm. If it doesn't disappear,refer to step 7 below.
3. Continuous noise when the engine is first started after rebuilding cylinder head.	Insufficient oil in cylinder head oil gallery.	
4. Continuous noise when the engine is started after excessivly craking the engine by the starter motor or band.	Oil leakage of the high-pressure chamber in the HLA, allowing air to get in. Insufficient oil in the HLA.	
5. Continuous noise when the engine is running after changing the HLA.		**CAUTION** **Do not run engine at a speed higher than 3000 rpm, as this may damage the HLA.**

Problem	Possible cause	Action
6. Continuous noise during idle after high engine speed.	Engine oil level too high or too low.	Check oil level. Drain or add oil as necessary.
	Excessive amount of air in the oil at high engine speed.	Check oil supply system.
	Deteriorated oil.	Check oil quality. If deteriorated, replace with specitied type.
7. Noise cotinues for more than 15 minutes.	Low oil pressure.	Check oil pressure and oil supply system of each part of engine.
	Faulty HLA.	Remove the cylinder head cover and press HLA down by hand. If it moves, replace the HLA. **WARNING** **Be careful with the hot HLAS.**

TIMING CHAIN

Check the bushing and plate of timing chain for wear. Replace if there is severe wear.

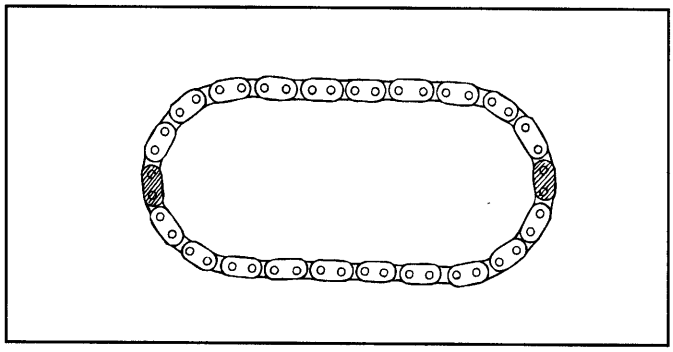

EDA9033A

REASSEMBLY EDJA3300

1. Install the HLA.
2. Align the camshaft timing chain with the intake timing chain sprocket and exhaust timing chain sprocket as shown in the illustration.

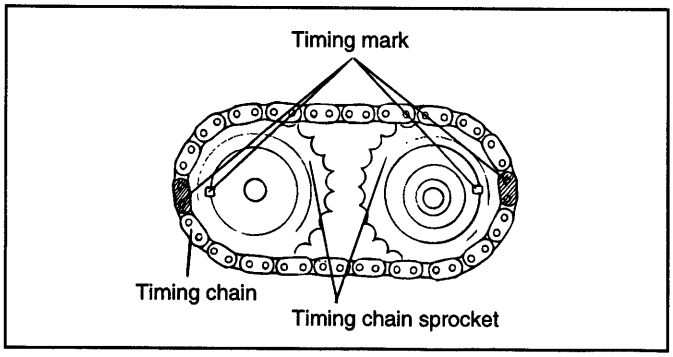

EDA9270A

3. Install the camshafts after lubricating the journals of the camshaft with engine oil.

NOTE

To check the press fit, the camshaft (IN) and timing chain sprocket should be separable by a force greater than 1000kg (MIN.) at room temperature.

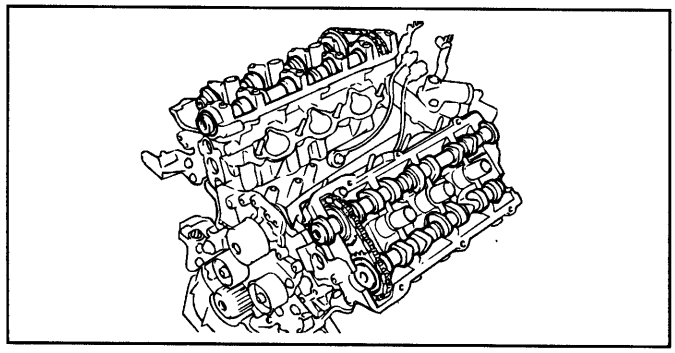

EDA9035A

4. Install the bearing caps. Check the markings on the caps for intake/exhaust identification symbol.

   I: Intake camshaft

   E: Exhaust camshaft

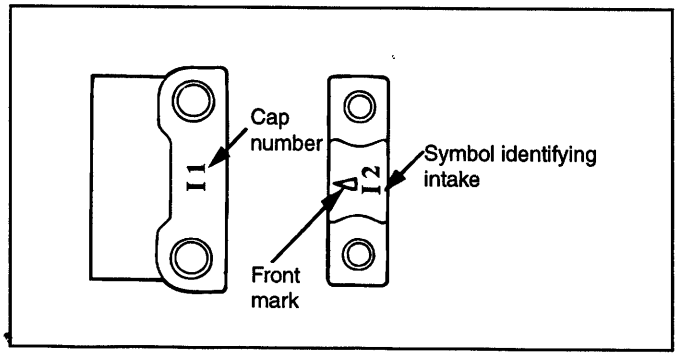

HFR20B64

5. Tighten the bearing caps to the specified torque in two or three increments as shown.

Tightening torque

Bearing cap bolt :

M 10 : 14-16 Nm(140-160 kg.cm, 10-12 lb.ft)

M 7 : 10 -12 Nm(100-120 kg.cm, 7-9 lb.ft)

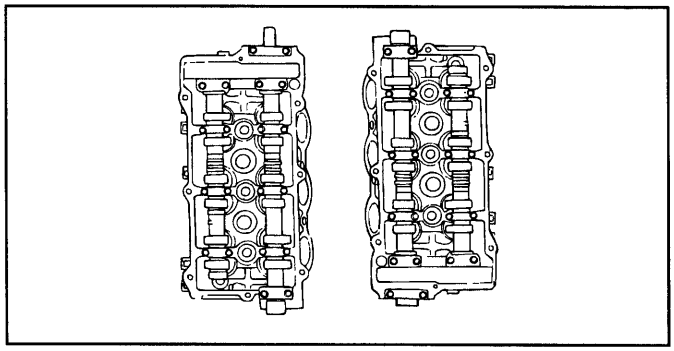

EDA9036A

6. Using the special tool, the camshaft oil seal installer (09221-21000), install the camshaft oil seal. Be sure to apply engine oil to the external surface of the oil seal.

   Insert the oil seal along the camshaft front end and install it with a hammer until it is seated.

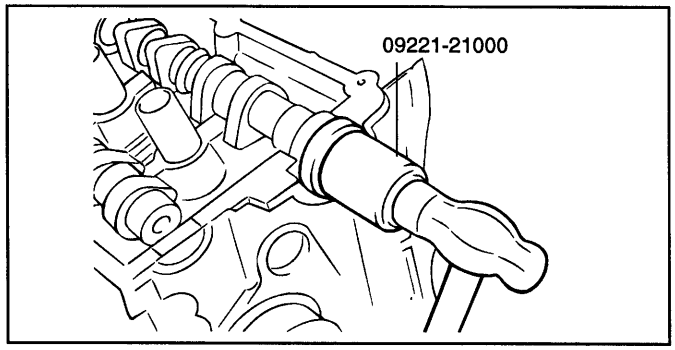

EDA9270E

7. Install the camshaft sprocket to the specified torque.

Tightening torque

Camshaft sprocket bolt :

90-110Nm(900-1100kg.cm, 65-80lb.ft)

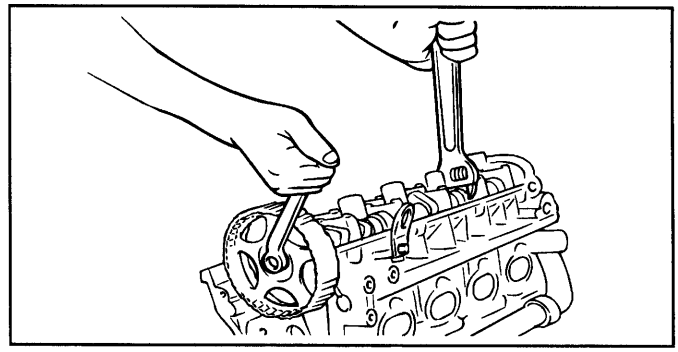

EDA9270F

8. Install the cylinder head cover.

Tightening torque

Cylinder head cover bolts :

5-6Nm(50-60kg.cm, 3.6-4.4 lb.ft)

<Tightening procedure>

1) Tighten all bolts temporarily to half of the specified torque in the sequence 1.2.3.4.5.6.7.8

2) Retighten all bolts to the specified torque.

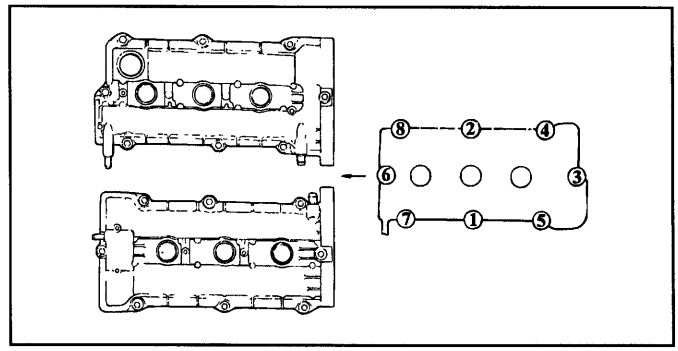

KFW3066A

9. Install the spark plug cables and, center cover.

10. Install the timing belt and then tighten the auto tensioner pulley.

11. Install the timing belt cover.

12. Install the power steering pulley, air conditioner pulley, crankshaft pulley and tensioner pulley.

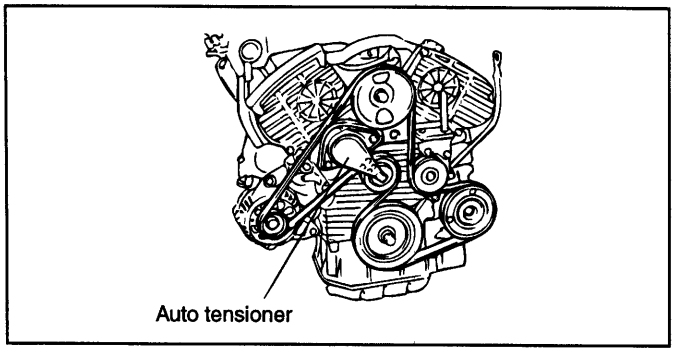

EDA9031A

13. Connect the breather hose and engine harness.

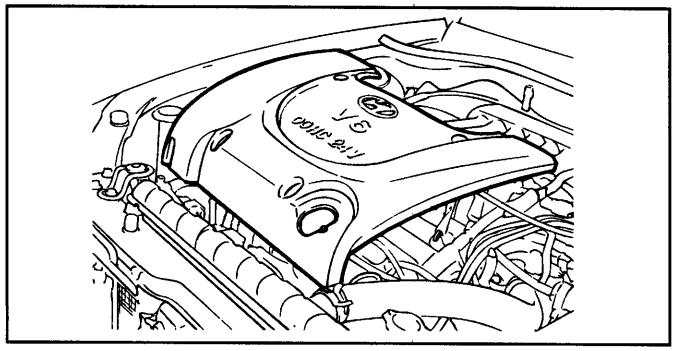

EDA9022A

14. Install the intake manifold and engine cover.

CONNECTING ROD

PISTONS AND CONNECTING RODS EDHA4600

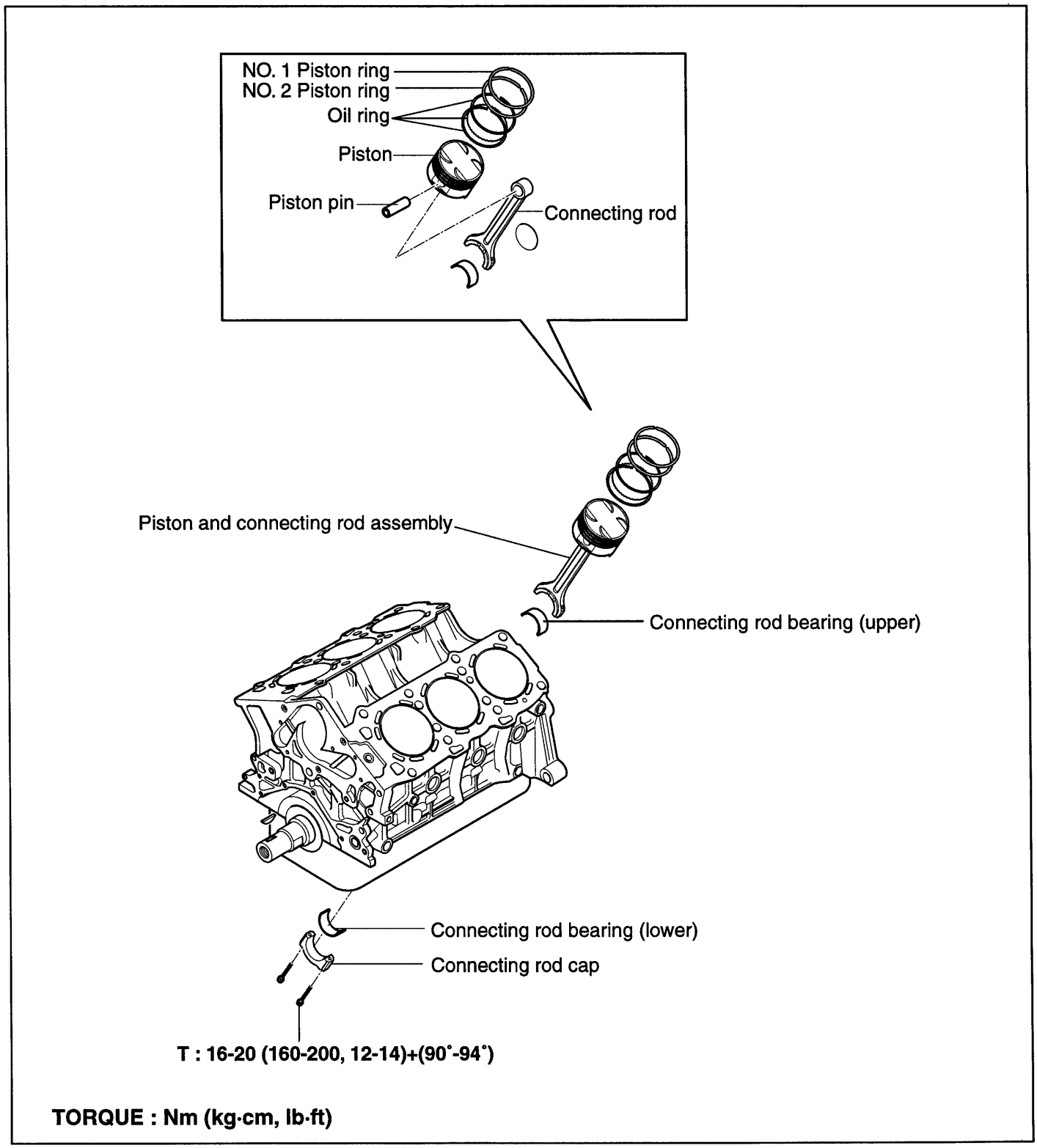

KFW3037A

DISASSEMBLY EDJA3600

CONNECTING ROD CAP

CAUTION

Keep the bearings in order with their corresponding connecting rods (according to cylinder numbers) for proper reassembly.

1. Remove the connecting rod cap bolts, then remove the caps and the big end lower bearing mark for reassembly.

2. Push each piston connecting rod assembly toward the top of the cylinder.

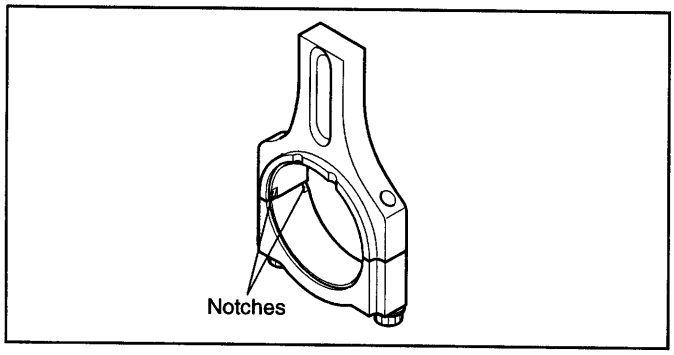

KFW3049A

DISASSEMBLY AND REASSEMLY OF THE PISTON PIN

1. Using the special tools 09234 - 33001 and 09234 - 3002, disassemble and reassemble the piston and connecting rod.

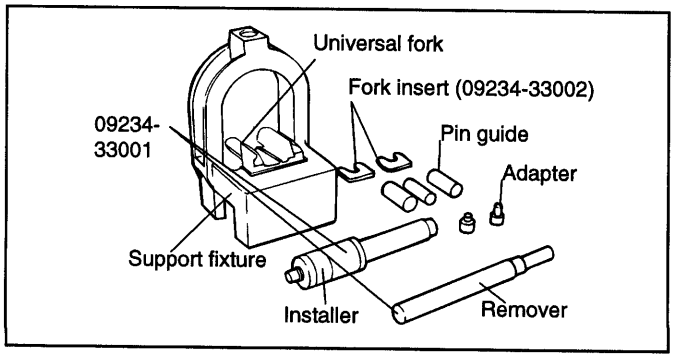

ECA9361A

2. The piston pin is a press fit in the rod little end, and the piston floats on the pin.

3. The tool consists of a support fixture with fork inserts, guides, adapters, an installer and a remover. The piston is supported in the support fixture while the pin is being installed or removed. Guides help position the pin as it is installed or removed, while the rod is supported by fork inserts.

4. To remove the pin from the piston, place the piston in the support fixture with the rod resting on the fork inserts. Pass the remover tool through the top of the support fixture and use it to press out the pin.

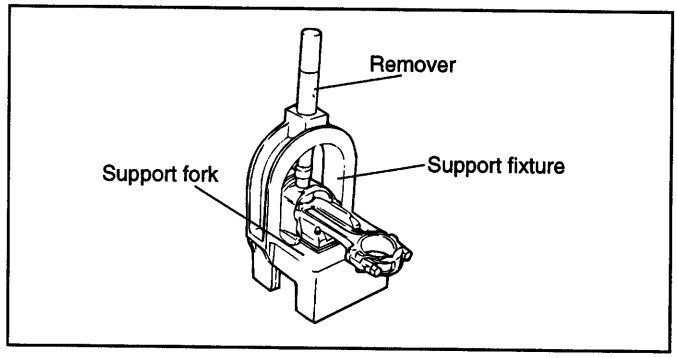

EDA9048A

5. To install a new pin, the proper fork inserts must be in place to support the rod.

6. Position the rod inside the piston. Insert the proper pin guide through one side of the piston and through the rod. Hand tap the pin guide so it is held by the piston. Insert the new pin into the piston from the other side and set the assembly into the support fixture with the pin guide facing down.

NOTE

The pin guide should be centered on the connecting rod through the pinton. If assembled correctly, the pin guide will sit exactly under the center of the hole in the tool's arch, and rest evenly on the fork inserts. If the wrong size pin guide is used, the piston and pin will not up with the support fixture.

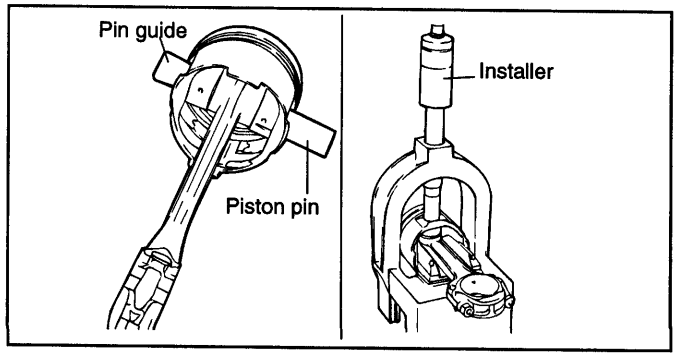

ECA9361C

7. Insert the installer tool through the hole in the arch of the support fixture and use an hydraulic press to force the piston pin through the rod little end. Continue pressing until the pin guide falls free and the installer tool seats against the top of the arch.

CAUTION

Do not exceed 1250 ± 500 kg (2765 ± 1100 lb) of force when the installing tool seats angainst the top of the arch.

INSPECTION EDJA3700

PISTONS AND PISTON PINS

1. Check each piston for scuffing, scoring, wear and other defects. Replace any piston that is defective.
2. Check each piston ring for breakage, damage and abnormal wear. Replace the defective rings. When the piston requires replacement, its rings should also be replaced.
3. Check that the piston pin fits in the piston pin hole. Replace any piston and pin assembly that is defective. The piston pin must be pressed smoothly by hand into the pin hole (at room temperature).

PISTON RINGS

1. Measure the piston ring side clearance. If the measured value exceeds the service limit, insert a new ring in the ring groove to measure the side clearance. If the clearance still exceeds the service limit, replace the piston and rings together. If it is less than the service limit, replace only the piston rings.

Piston ring side clearance

No.1 : 0.04-0.08 mm (0.0016-0.0031 in.)

No.2 : 0.03-0.07 mm (0.0012-0.0028 in.)

[Limit]

No.1 : 0.1 mm (0.004 in.)

No.2 : 0.1 mm (0.004 in.)

2. To measure the piston ring end gap, insert a piston ring into the cylinder bore. Position the ring at right angles to the cylinder wall by gently pressing it down with a piston. Measure the gap with a feeler gauge. If the gap exceeds the service limit, replace the piston ring.

Piston ring end gap

[Standard dimensions]

No.1 : 0.20-0.35 mm (0.0079-0.0138 in.)

No.2 : 0.37-0.52 mm (0.0146-0.0205 in.)

Oil ring side rail : 0.2-0.7 mm (0.0079-0.0276)

[Limit]

No.1, No.2 : .0.8 mm (0.031 in.)

Oil ring side rail : 1.0 mm (0.039 in)

When replacing the ring without correcting the cylinder bore, check the gap with the ring situated at the lower part of cylinder that is less worn out.

Piston ring service size and mark	
standard	None
0.25mm (0.010 in.) O.S	25
0.50mm (0.020 in.) O.S	50

NOTE

The mark can be found on the upper side of the ring next to the end.

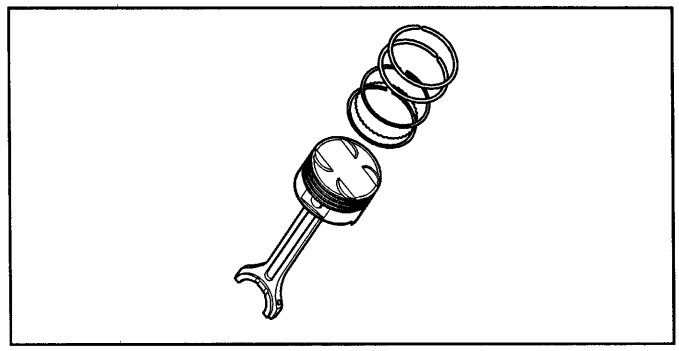

KFW3037C

CONNECTING RODS

1. When the connecting rod cap is installed, make sure that the cylinder numbers, marked on rod end cap at disassembly, match. When a new connecting rod is installed, make sure that the notches holding the bearing in place are on the same side.
2. Replace the connecting rod if it is damaged at either end of the thrust faces. If it has a stratified wear, or if the surface of the inside diameter of the small end is severely rough, replace the rod.

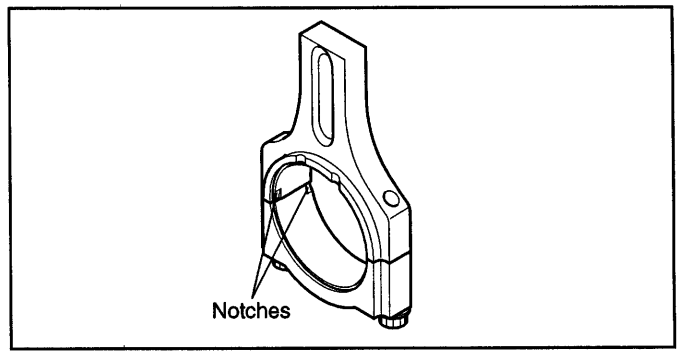

KFW3049A

REASSEMBLY EDJA3800

1. Install the spacer.

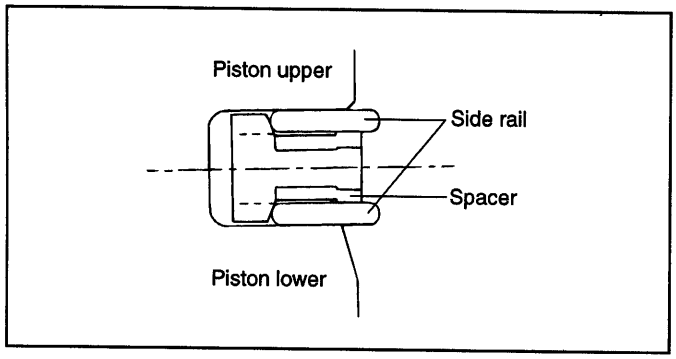

ECA9082A

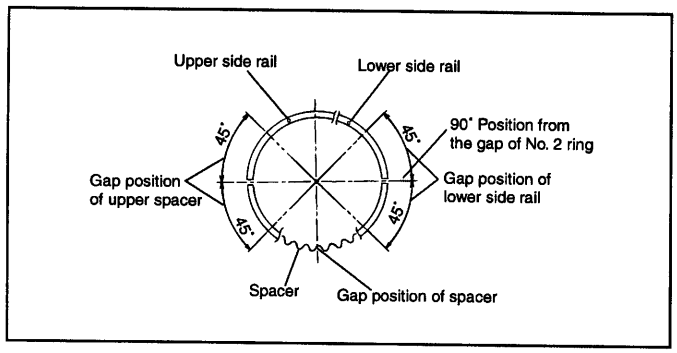

EDJA490A

2. Install the upper side rail. To install the side rail, first put one end of the side rail between the piston ring groove and spacer, hold it firmly, and press down with finger on the portion to be inserted into the groove (as illustrated).

CAUTION

Do not use a piston ring expander when installing the side rail.

3. Install the lower side rail by the same procedure described in Step 2.

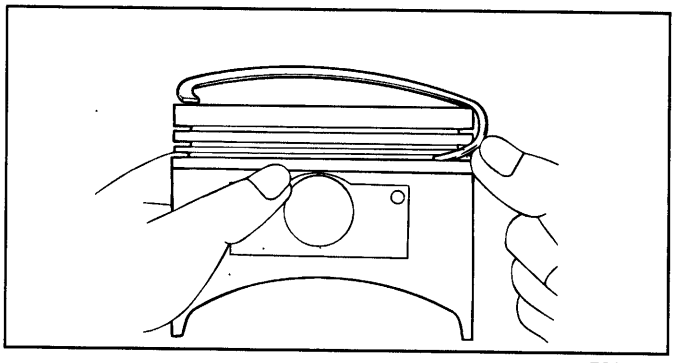

ECA9380B

4. Apply engine oil around the piston and piston grooves.

5. Using a piston ring expander, install the No.2 piston ring.

6. Install the No. 1 piston ring.

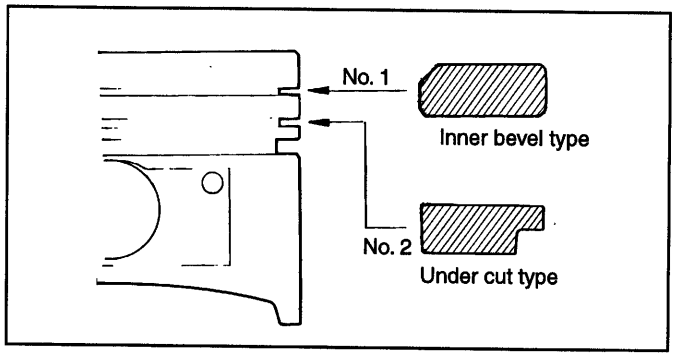

EDJA490B

7. Position each piston ring end gap as far away from its neighboring gaps as possible. Make sure that the gaps are not positioned in the thrust and pin directions.

8. Hold the piston rings firmly with a piston ring compressor as they are inserted into cylinder.

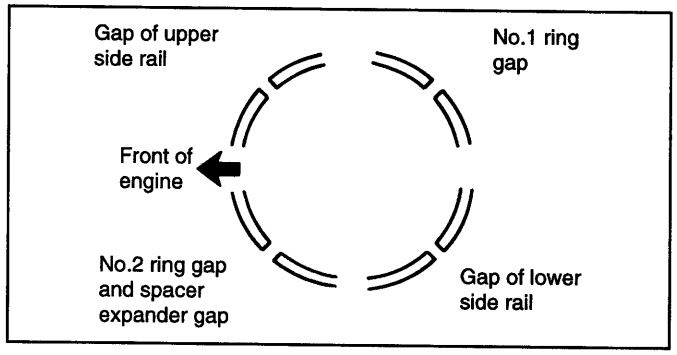

ECA9380D

9. Install the upper main bearings in the cylinder block.

10. Install the lower main bearings in the main bearing caps.

CAUTION

Install the bearing so it matches the oil hole in the block.

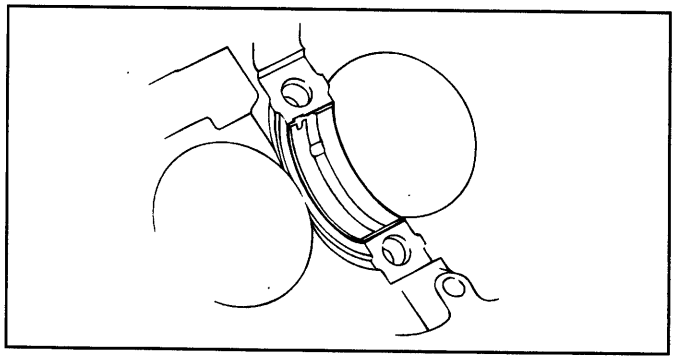

EDA9390E

11. Install the thrust washers in the No. 3 main bearing cap with the oil grooves facing outward.

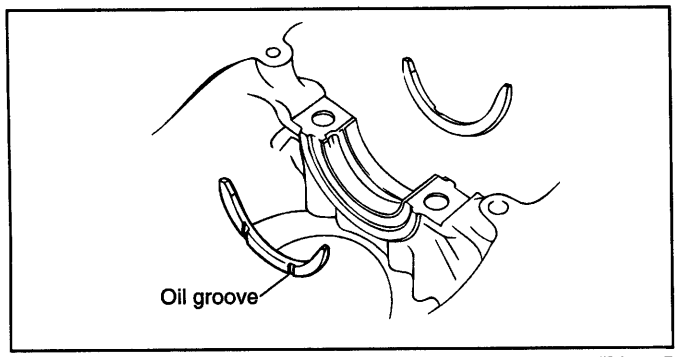

EDA9390F

12. Make sure that the front mark of the piston and the front mark (identification mark) of the connecting rod are directed toward the front of the engine.

13. When the connecting rod cap is installed, make sure that any cylinder numbers placed on the rod and cap at disassembly match.

14. When a new connecting rod is installed, make sure that the notches for holding the bearing in place are on the same side.

15. When assembling, bolts should be fastened using the plastic angle technique as follows.

    1) Apply oil to the threads and matching areas.

    2) Tighten the connecting rod bolt.

Tightening torque

Connecting rod bolt :

16-20 Nm (160-200 kg.cm, 12-15 lb.ft)+(90°-94°)

CAUTION

After removing the connecting rod bolt, do not use it again.

When using a new bolt, do not tighten the bolt more than 3 times.

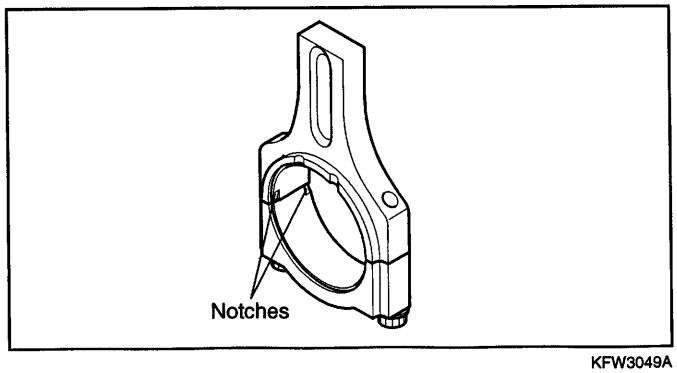

KFW3049A

16. Check the connecting rod side clearance.

Connecting rod side clearance

Standard : 0.10-0.25 mm (0.0039-0.0098 in.)

Limit : 0.4 mm (0.0157 in.)

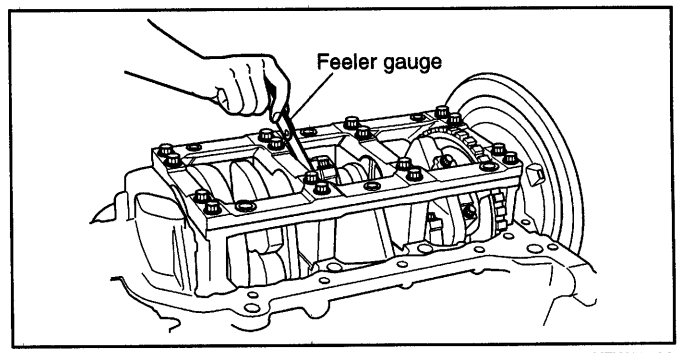

KFW3056A

CRANK SHAFT

CRANKSHAFT EDHA5000

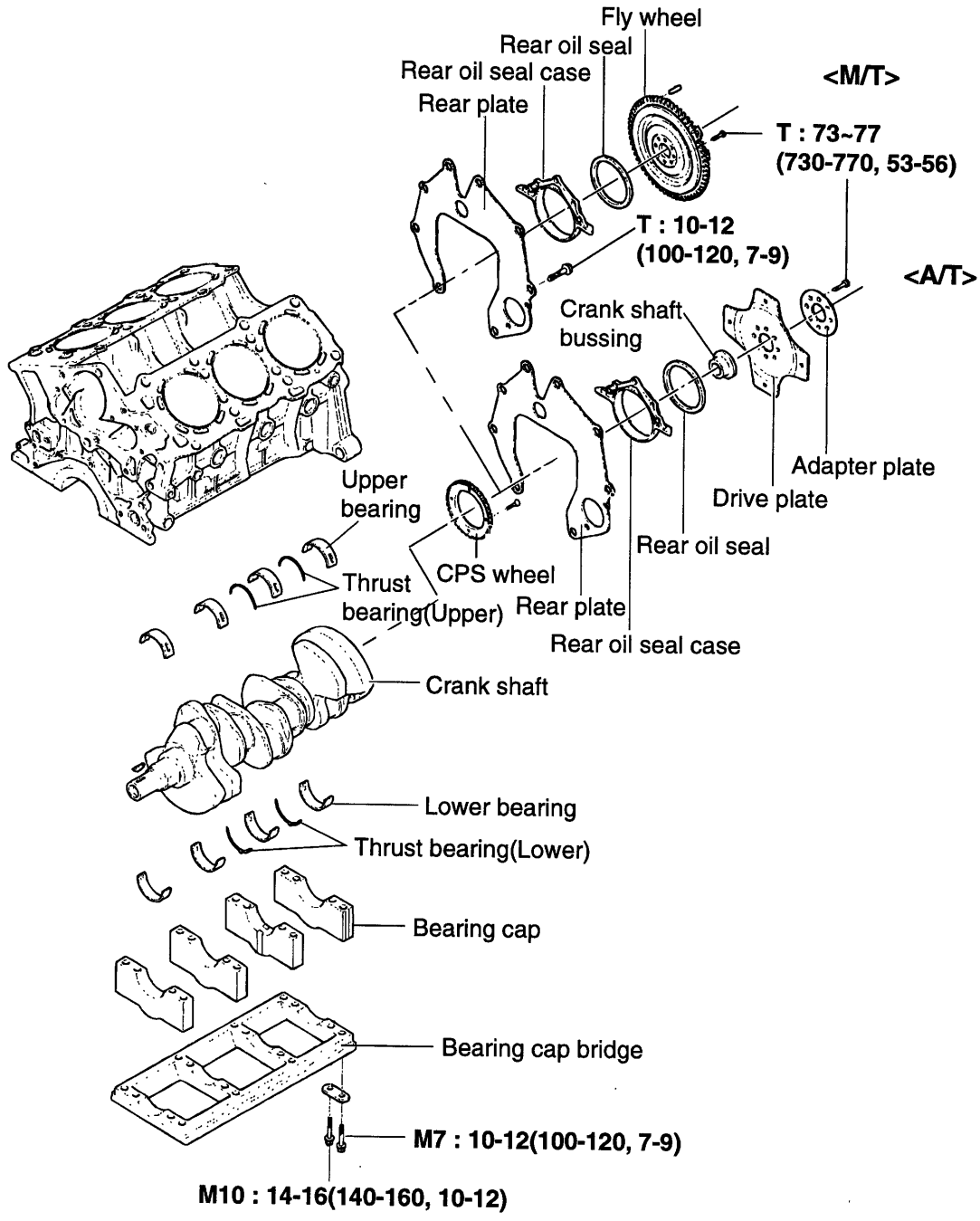

TORQUE : Nm (kg·cm, lb·ft)

EDJA500A

DISASSEMBLY EDHA5100

1. Remove the timing belt train, front case, flywheel, cylinder head assembly and oil pan. For details, refer to the respective chapters.
2. Remove the rear plate and the rear oil seal.
3. Remove the connecting rod caps.

NOTE

Mark the main bearing caps to be able to reassemble in the original position and direction.

4. Remove the main bearing caps and remove the crankshaft. Keep the bearings in order according to the cap number.

INSPECTION EDHA5200

CRANKSHAFT

1. Check the crankshaft journals and pins for damage, uneven wear and cracks. Also check the oil holes for restrictions. Repair or replace any defective parts.
2. Inspect the crankshaft journal and pin for out-of-round and taper.

Standard value

Crankshaft journal O.D :

61.982-62.000 mm (2.4402-2.4409 in.)

Crankshaft pin O.D :

47.982-48.000 mm (1.8890-1.8898 in.)

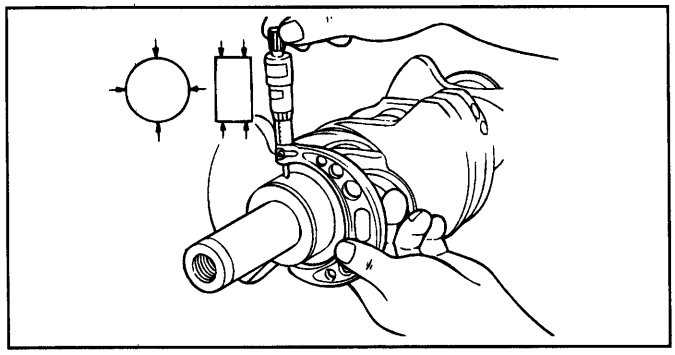

ECA9410A

MAIN BEARINGS AND CONNECTING ROD BEARINGS

Visually inspect each bearing for peeling, melting, seizure and improper contact. Replace any defective bearings.

MEASURING OIL CLEARANCE

Check for oil clearance by measuring the outside diameter of the crankshaft journal and the inside diameter of the bearing. The clearance can be obtained by calculating the difference between the measured outside diameters.

Standard value

Oil clearance

Crankshaft main bearing :

0.004-0.022 mm (0.00015-0.00087 in.)

Connecting rod bearing :

0.018-0.036 mm (0.00071-0.00141 in.)

LIMIT : 0.1mm (0.004 in.)

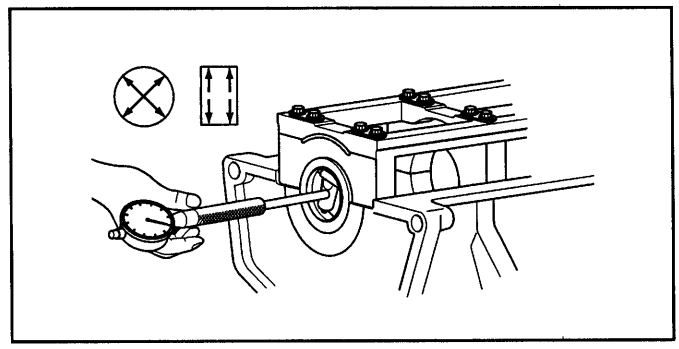

KFW3058A

PLASTIC GAUGE METHOD

Plastic gauge may be used to measure the clearance.

1. Remove oil, grease and any other dirt from the bearings and journals.
2. Cut the plastic gauge the same length as the width of the bearing and place it in parallel with the journal, avoiding the oil holes.
3. Install the crankshaft, bearings and caps and tighten them to the specified torques. During this operation, do not turn the crankshaft. Remove the caps. Measure the width of the plasticgauge at the widest part by using the scale printed on the gauge package.

   If the clearance exceeds the service limit, the bearing should be replaced or an undersize bearing should be used. When installing a new crankshaft, be sure to use standard size bearings.

   If the standard clearance can not be obtained even after replacing the bearing, the journal and pin should be ground to the undersize and a bearing of the corresponding size should be installed.

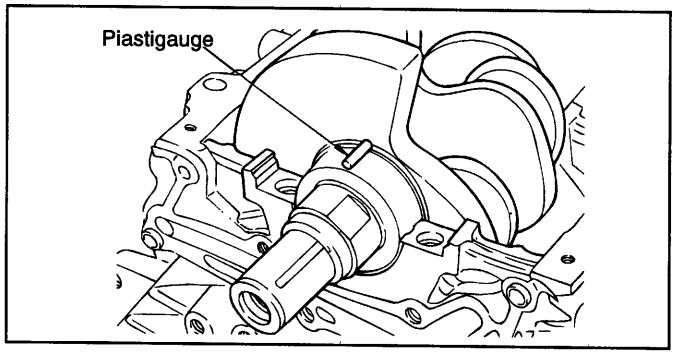

EDA9420C

OIL SEAL

Check the front and rear oil seals for damage or worn surfaces. Replace any seat that is defective.

DRIVE PLATE (A/T)

Replace distorted, damaged, or cracked drive plates.

FLYWHEEL (M/T)

See EM section.

REASSEMBLY EDHA5300

MAIN BEARING

1. Install a grooved main bearing (upper bearing) on the cylinder block side.
2. Installa grooveless main bearing (lower bearing) on the main bearing cap side.
3. Install the crankshaft. Apply engine oil to journal and pin.
4. Install the bearing caps with the arrow mark directed toward the front of the engine. Cap number must be correct.
5. Tighten the cap bolts to the specified torque.

Tightening torque

Main bearing cap bolts :

M7(9-16) : 10-12Nm (100-120 kg.cm, 7-9 lb.ft)

M10(1-8) : 14-16 Nm(140-160 kg.cm, 10-12 lb.ft)

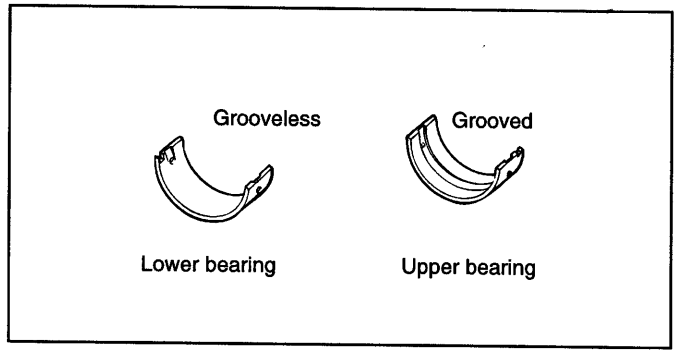

EDA9420D

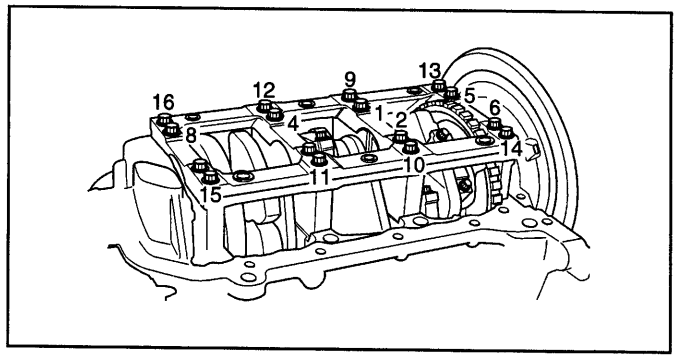

KFW3056B

6. Cap bolts should be tightened evenly in stages 4 to 5 increments before they are tightened to the specified torque.

7. Make certain that crankshaft turns freely and check the end play of the crankshaft.

Crankshaft end play

Standard : 0.070-0.250mm (0.0028-0.0098 in.)

Limit : 0.4 mm (0.016 in.)

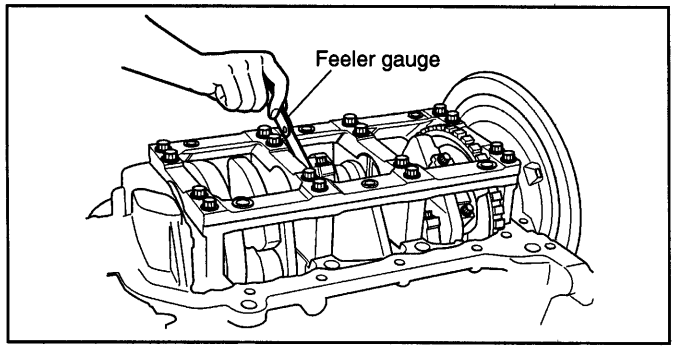

KFW3056A

8. Using special tool(09231-33000), install the rear oil seal in oil seal case.

9. Apply sealant to the area shown in the illustration. Install the oil seal case in the cylinder block.

Tightening torque

Oil seal case bolt :

10-12Nm (100 -120 kg.cm, 7-9 lb.ft)

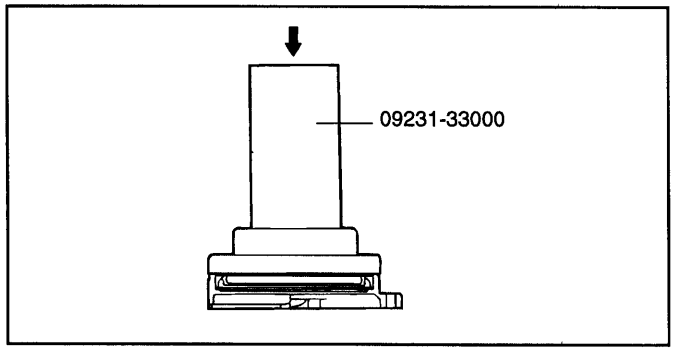

EDA9430C

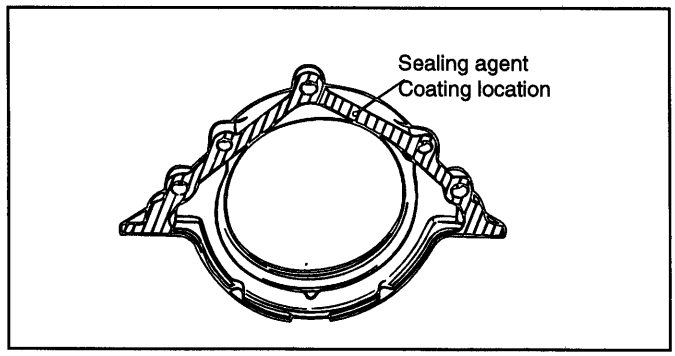

EDA9430D

10. Tighten the rear plate to the specified torque.

Tightening torque

Rear plate : 10 -12 Nm (100 -120 kg.cm, 7-9 lb.ft)

11. Tighten the drive plate and the adapter plate (A/T).

Tightening torque

Drive plate and adapter plate bolt :

73-77 Nm (730-770 kg.cm, 53-56 lb.ft)

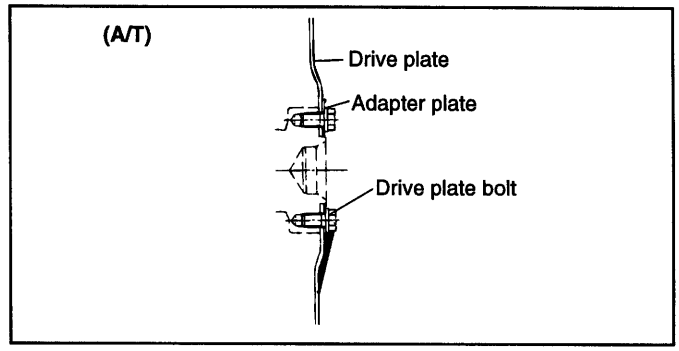

EDJA530A

12. Tighten the fly wheel (M/T).

Tightening torque

Fly wheel installation bolt :

73-77 Nm (730-770 kg.cm, 53-56 lb.ft)

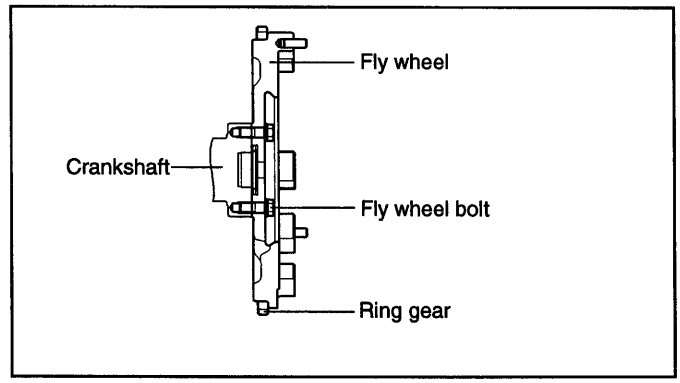

KFW3062B

COOLING SYSTEM

ENGINE COOLANT HOSE/PIPES

ENGINE COOLANT HOSE AND PIPE EDHA6000

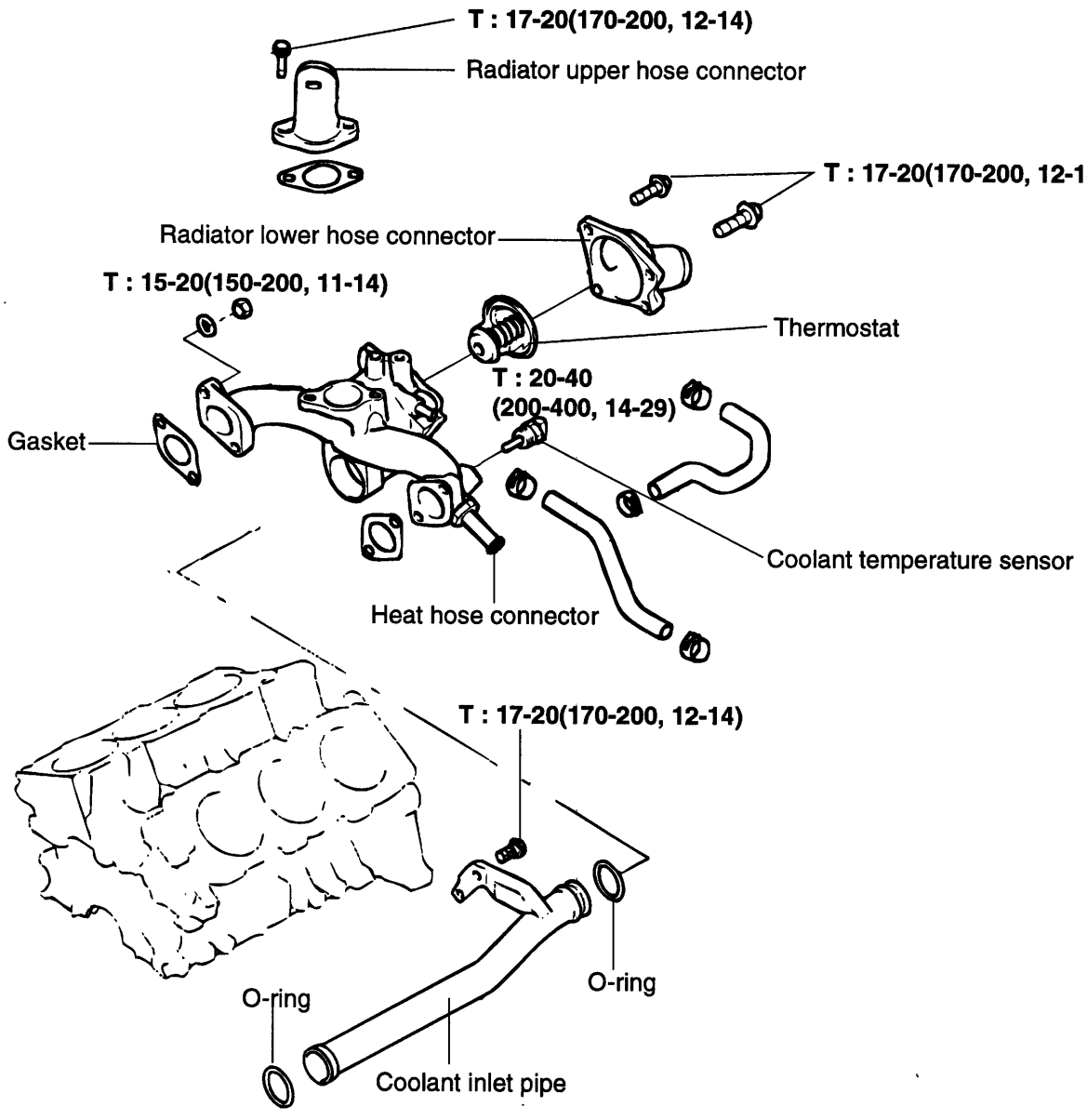

TORQUE : Nm (kg·cm, lb·ft)

EDJA600A

INSPECTION EDHA6100

Check the engine coolant pipe and hose for cracks, damage and restrictions. Replace if necessary.

REASSEMBLY EDJA4700

Fit the O-ring in the groove of the engine coolant inlet pipe end. Wet the periphery of the O-ring with water and insert the engine coolant inlet pipe.

NOTE

1. **Do not apply oil or grease to the engine coolant pipe O-ring.**
2. **Keep the engine coolant pipe connections free of sand, dust, etc.**
3. **Insert the engine coolant pipe into the end of the engine coolant pump inlet.**
4. **Whenever installing the engine coolant inlet pipe, always replace the O-ring with a new one.**

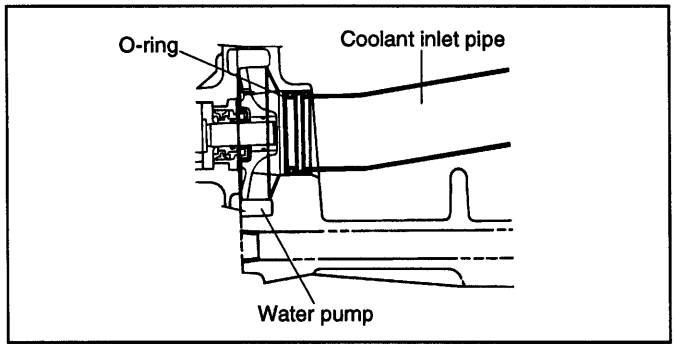

HEW2513B

COOLANT TEMPERATURE SENSOR EDJA4800

REMOVAL

1. Drain the engine coolant.
2. Remove the engine harness after disconnecting the ground cable of the battery.
3. Remove the engine coolant sensor.

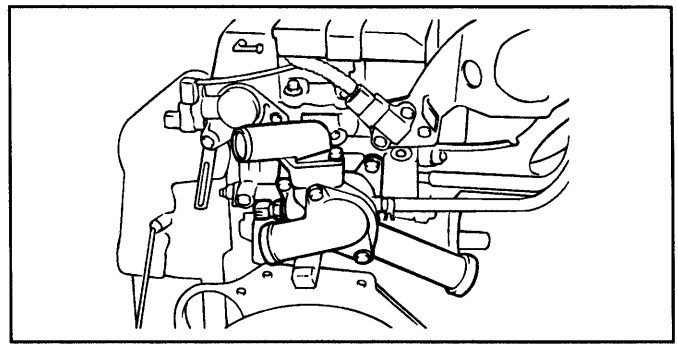

EDJA600B

INSTALLATION EDHA6400

1. Apply sealant to the sensor's threads. Tighten it to the specified torque.

Recommended sealant :

Three bond NO. 1324 or LOCTITE 262

Tightening torque

The coolant sensor :

20-40Nm(200-400 kg.cm, 14-29 lb.ft)

2. Connect the coolant sensor to the harness.
3. Connect the ground cable of battery.
4. Refill the coolant.

COOLING SYSTEM EDHA6500

INLET CONTROL

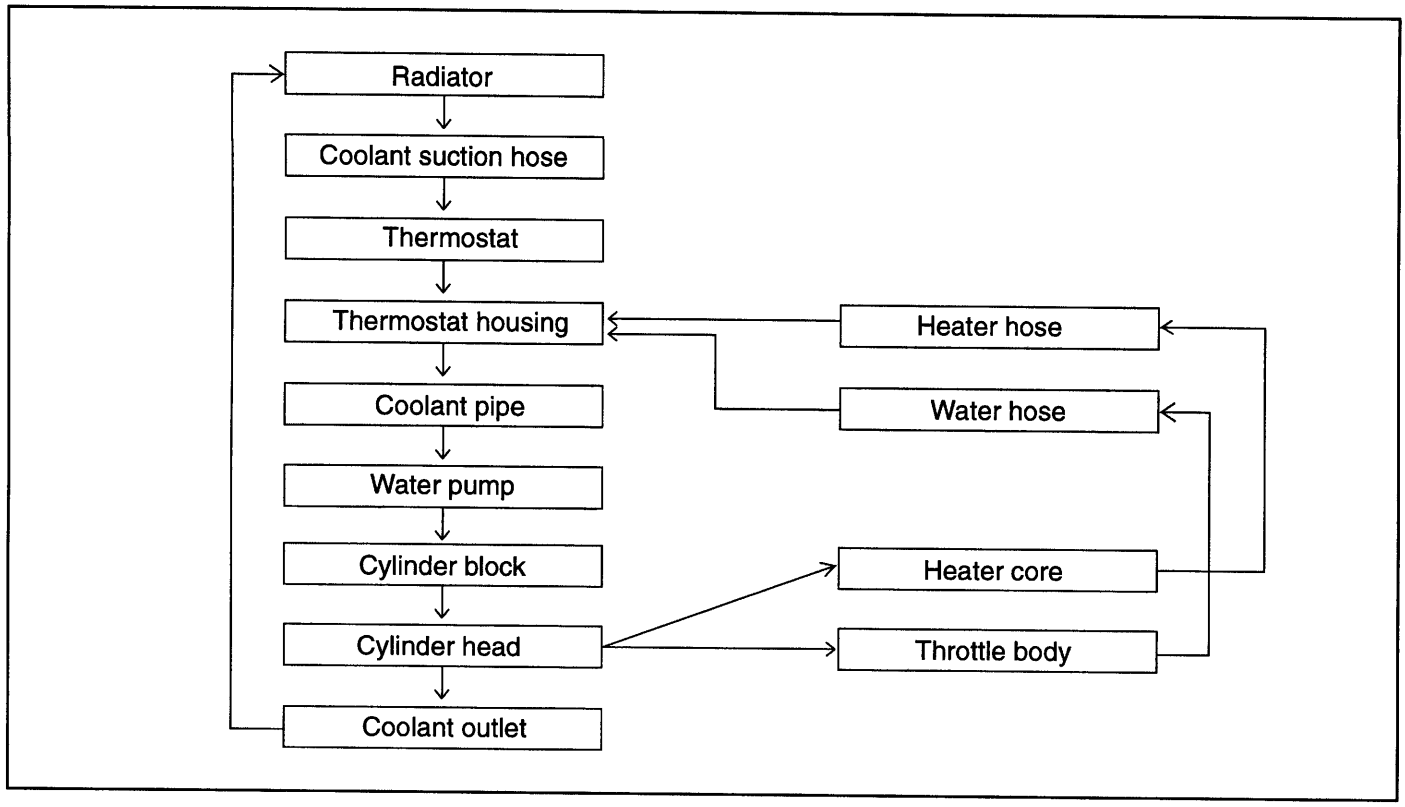

EDHA650A

FLOW CHART

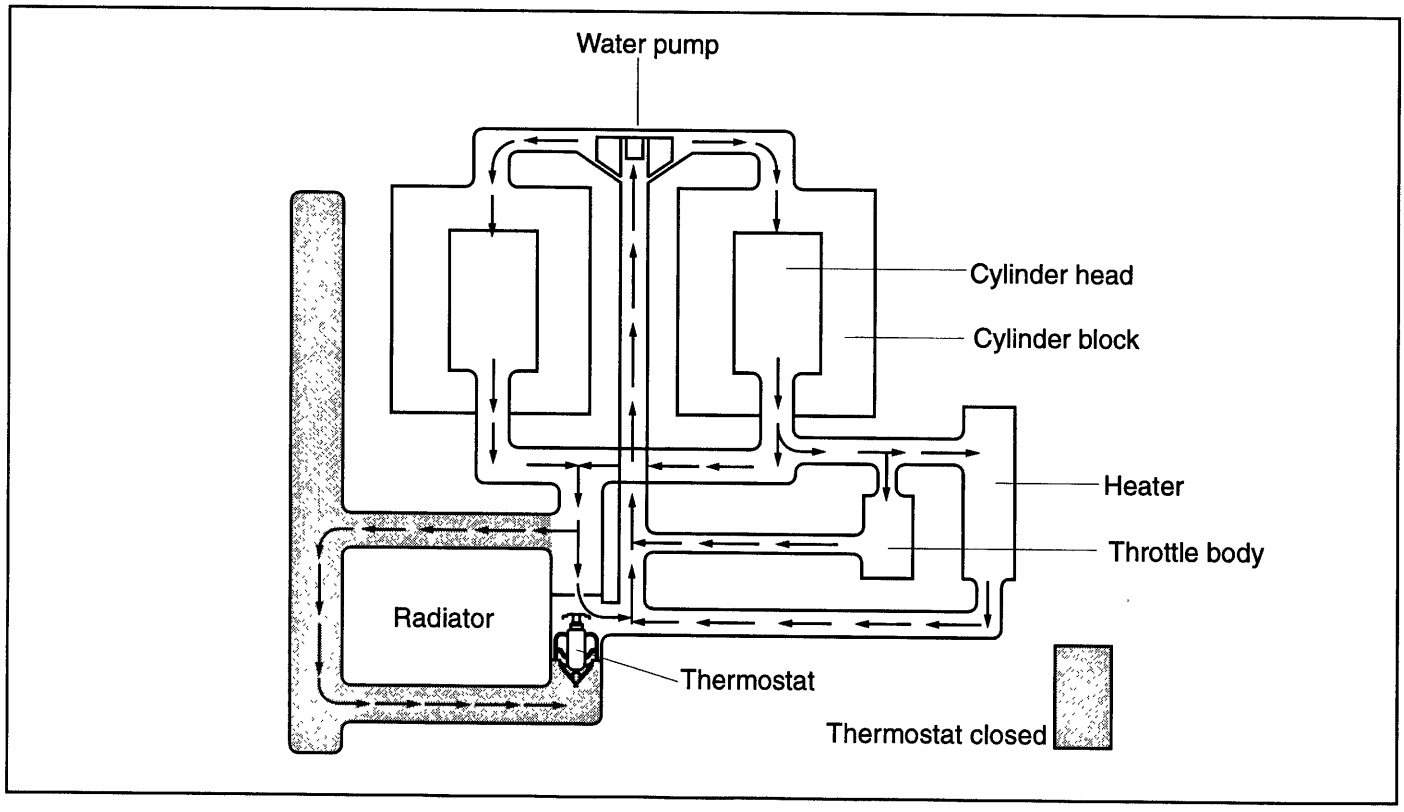

KFW3201A

ENGINE COOLANT PUMP

ENGINE COOLANT PUMP [FOR V-6 ENGINE] EDHA7000

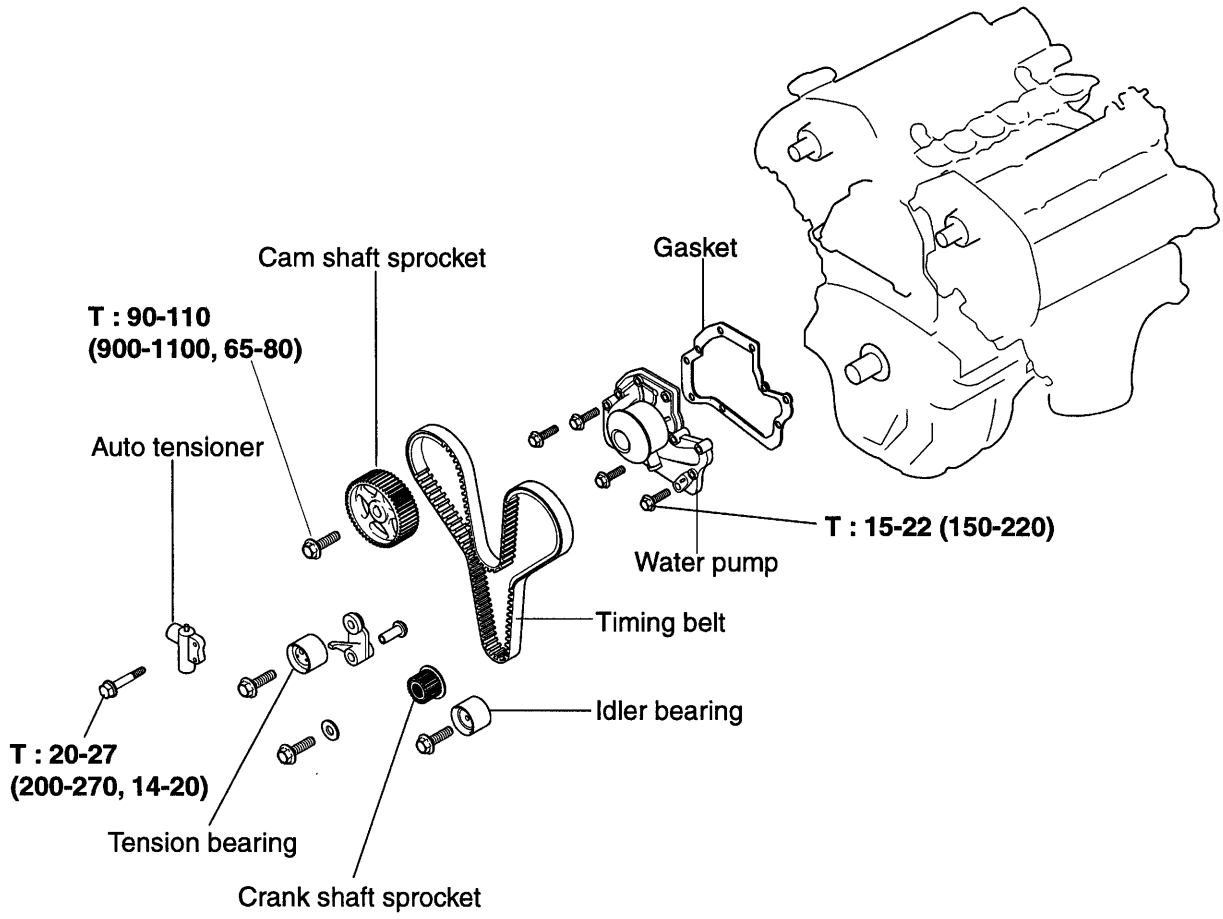

TORQUE : Nm (kg·cm, lb·ft)

EDJA700A

ENGINE COOLANT PUMP EDHA7100

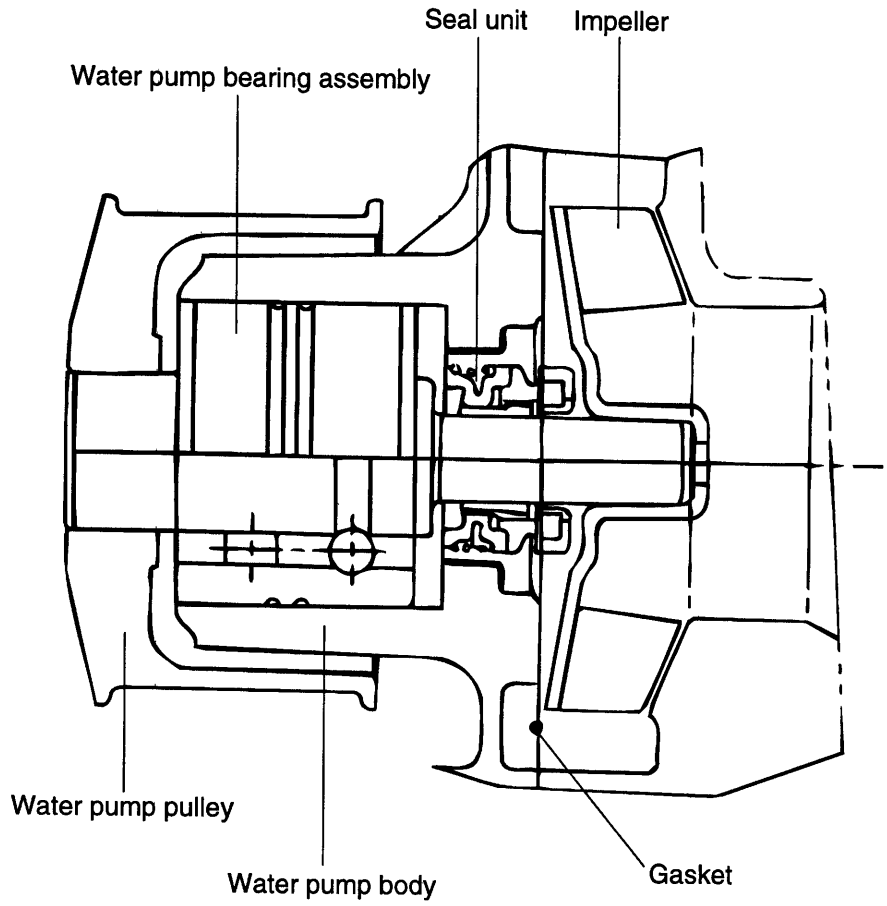

EDJA710A

REMOVAL EDHA7200

1. Using the drain plug, drain the coolant.
2. Remove the drive belt and the engine coolant pump pulley.
3. Remove the timing belt cover, the auto tensioner and idler pulley.
4. Remove the engine coolant pump mounting bolts.
5. Remove the engine coolant pump assembly from the cylinder block.

INSPECTION EDHA7300

1. Check the engine coolant pump for cracks, damage or wear, and replace the pump assembly if necessary.
2. Check the bearing for damage, abnormal noise and sluggish rotation and replace the pump assembly if necessary.
3. Check the seal it for leaks and replace the pump assembly if necessary.

INSTALLATION EDJA5600

1. Clean the gasket surfaces of the engine coolant pump body and the cylinder block.

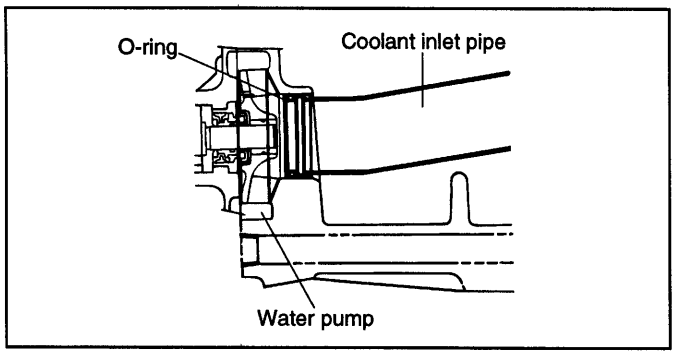

HEW2513B

2. Install the new engine coolant pump gasket and pump assembly. Tighten the bolts to the specified torque.

Tightening torque

Engine coolant pump bolt :

Head mark "7" : 15-22 (150-220, 11-16)

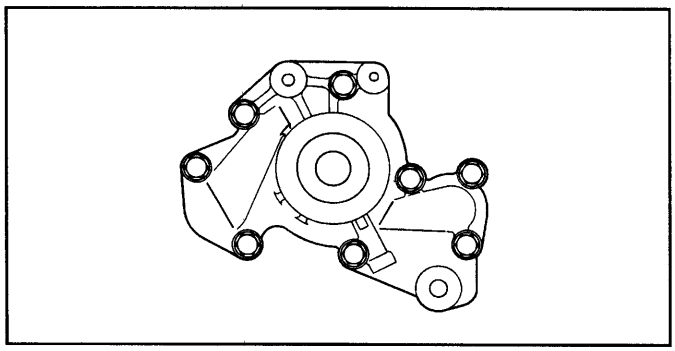

HEW2512A

3. Install the auto tensioner and timing belt. Adjust the timing belt tension, then install the timing belt cover.
4. Install the drive belt, coolant pump pulley and then adjust the auto tensioner.
5. Refill the coolant.
6. Run the engine and check for leaks.

RADIATOR

RADIATOR EDJA6000

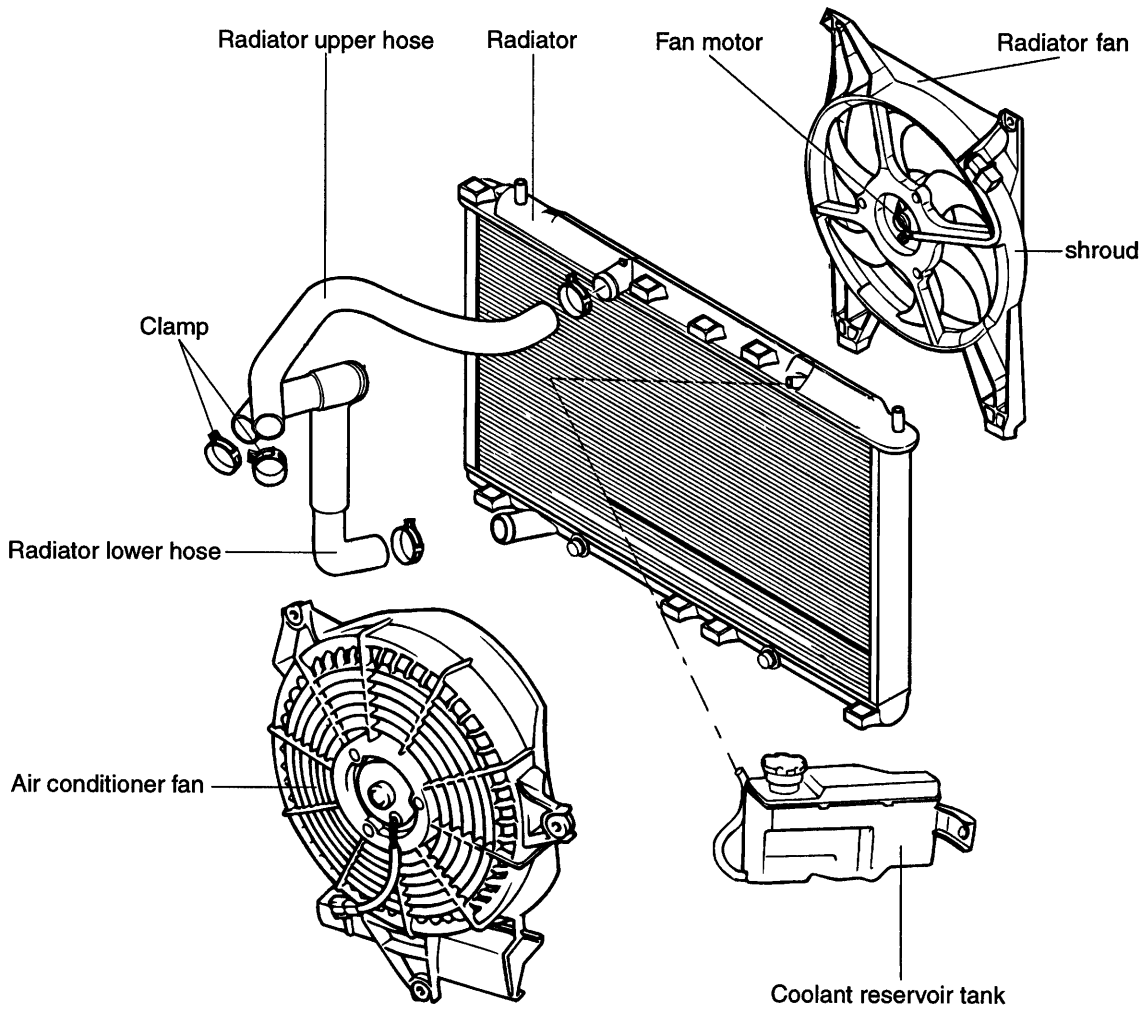

TORQUE : Nm (kg·cm, lb·ft)

ECJA550A

REMOVAL EDJA6100

1. Disconnect the ground cable from the battery terminal.
2. Disconnect the fan motor connector.
3. Loosen the radiator drain plug to drain the coolant.
4. Disconnect the upper and lower hoses and overflow tube after marking the radiator hose and the hose clamp the ease reassembly.

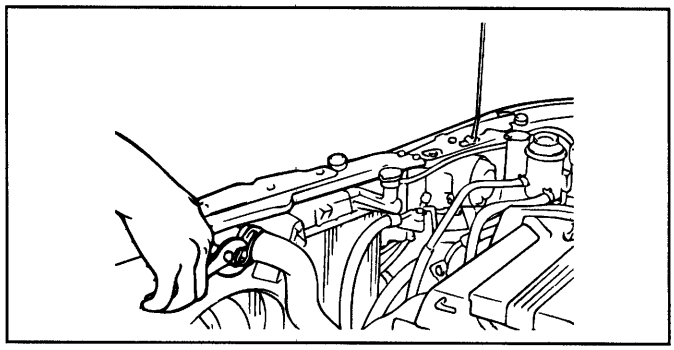

EDJA330A

5. For vehicles with automatic transaxles, disconnect the oil cooler hoses from the automatic transaxle.

CAUTION

Cover or plug the hose and inlets of the radiator so that dust and other foreign material etc. can not enter after the hose is disconnected from the radiator.

6. Remove the radiator mounting bolt.

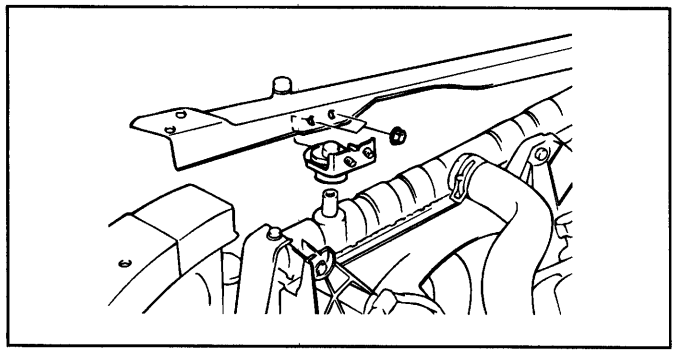

EDHA001C

7. Remove the radiator and the fan motor.
8. Remove the radiator fan motor and condenser fan motor from the radiator.

INSPECTION EDHA8000

1. Check for foreign material between the radiator fins.
2. Check the radiator fins for damage and straighten if necessary.
3. Check the radiator for corrosion, damage, rust or scale.
4. Check the radiator hoses for cracks, damage or deterioration.
5. Check the reservoir tank for damage.
6. Check the automatic transaxle oil cooler hoses for cracking, damage or deterioration (only A/T).

INSTALLATION EDJA6300

1. Fill the radiator and reservoir tank with a clean coolant mixture.
2. Run the engine until the coolant warms up enough so that the thermostat valve opens and then turn off the engine.
3. Remove the radiator cap and pour the coolant up to the filler neck of the radiator. Fill the reservoir tank to the upper level.
4. Check that there are no leaks from the radiator, hoses or connections.

RADIATOR PAN MOTOR

RADIATOR FAN MOTOR

ASSEMBLY EDHA8500

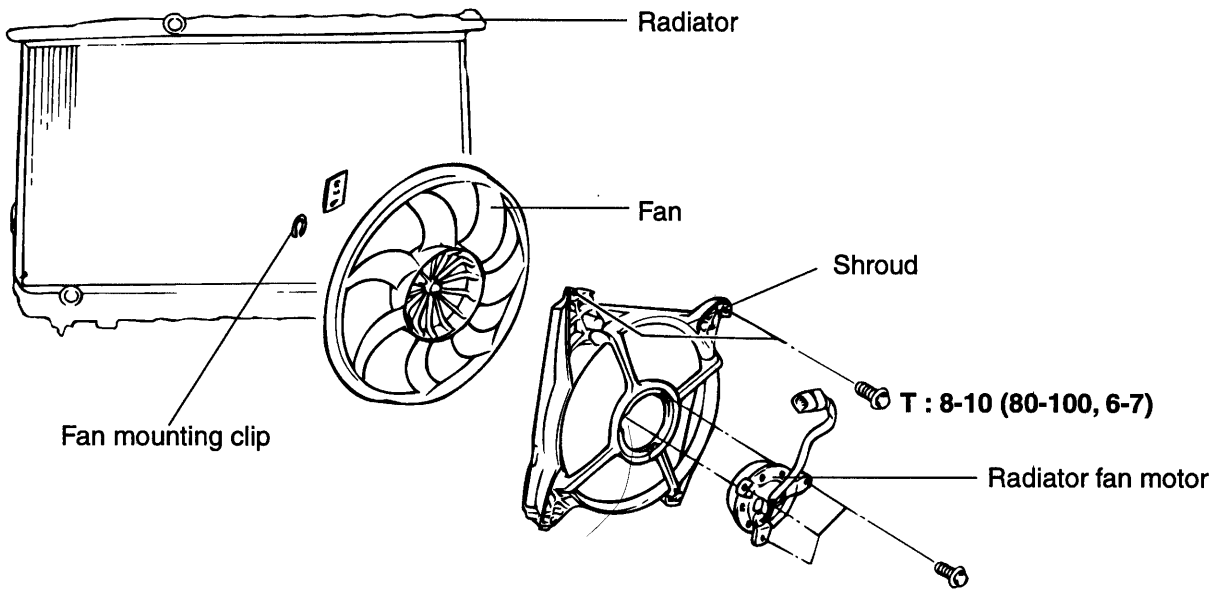

TORQUE : Nm (kg·cm, lb·ft)

ECHA011A

REMOVAL EDJA6500

1. Disconnect the ground cable from the battery cable.
2. Disconnect the connectors from the fan motor and the harness from the shroud.
3. For vehicles with automatic transaxles, remove the oil cooler hose from the shroud.
4. Remove the four bolts holding the shroud.
5. Remove the shroud with the fan motor.
6. Remove the fan mounting clip and detach the fan from the fan motor.
7. Remove the three screws and detach the fan motor.

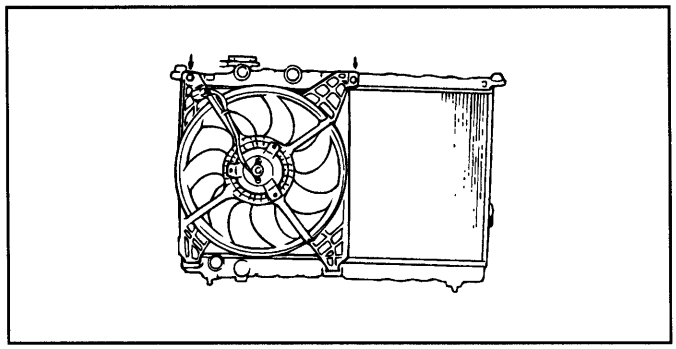

ECA9060A

INSPECTION EDJA6600

RADIATOR FAN MOTOR AND CONDENSER FAN MOTOR

1. Check that the radiator fan rotates when battery voltage is applied between the terminals.
2. Check that there are no abnormal noises while the motor is running.

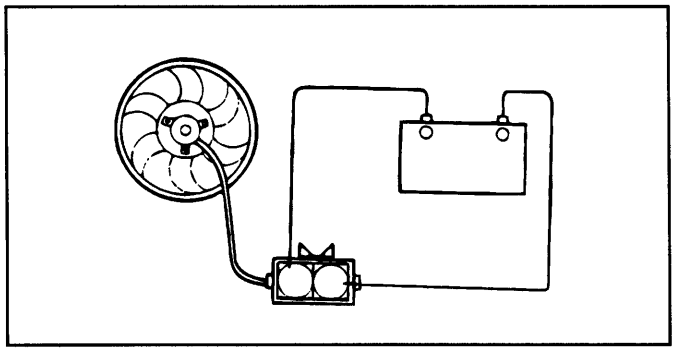

ECHA011C

RADIATOR FAN MOTOR RELAY

1. Remove the radiator fan motor relay (High and Low) from the relay box in the engine room.

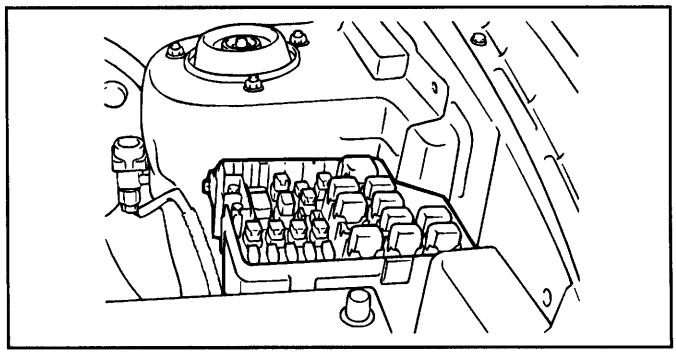

ECJA630A

2. Check the continuity of the terminals.

Current	Terminal No.	Yes or No
ON	Terminal 1-3	Continuity
OFF	Terminal 1-3	Non continuity
	Terminal 2-4	Continuity

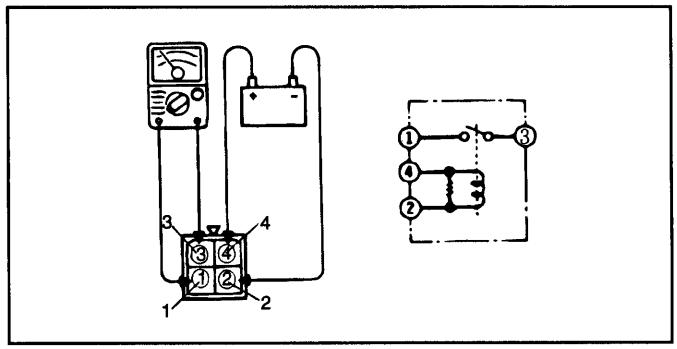

HFR25016

INSTALLATION EDHA8800

Installation is the reverse of removal.

NOTE

1. **Make sure the cooling fan does not come into contact with the shroud when installed.**
2. **After installation, make sure there is no unusual noise or vibration when the fan is rotating.**

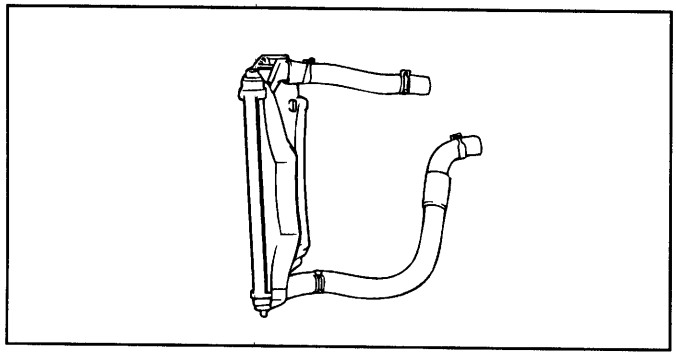

ECA9061A

RADIATOR CAP

RADIATOR CAP EDHA8200

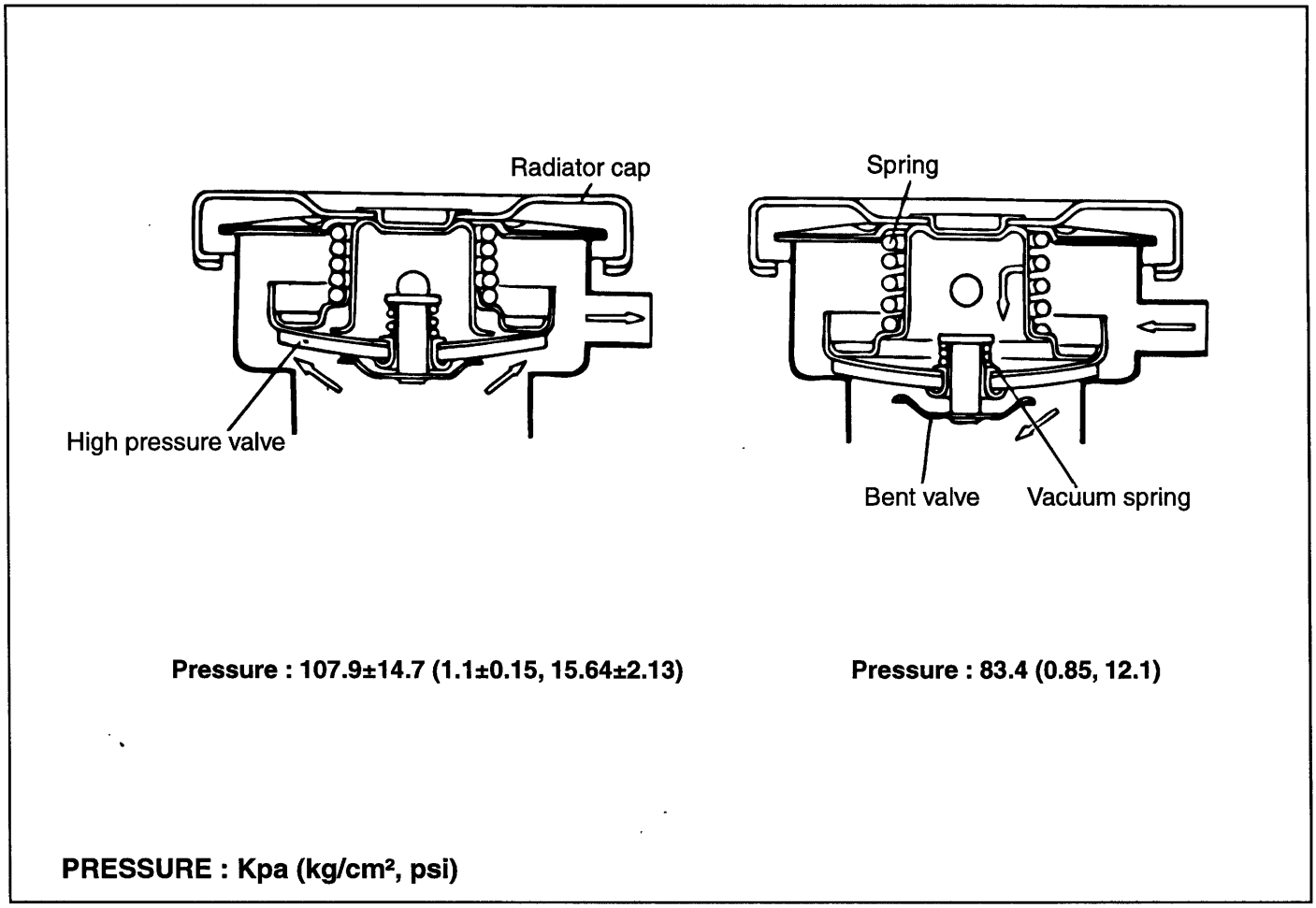

HCT25012

INSPECTION EDHA8300

1. Check the radiator cap for damage, cracks or weakening.

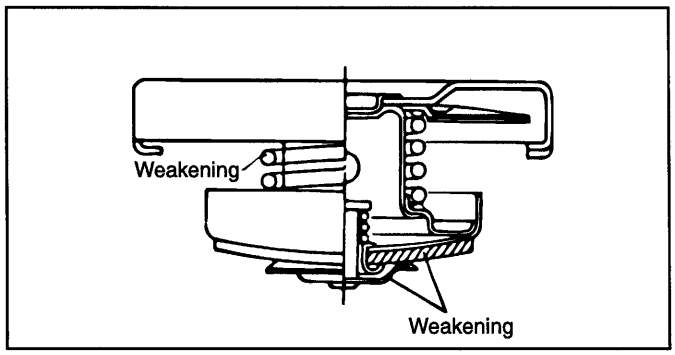

HCT25013

2. Connect the tester to the radiator cap.

3. Increase the pressure until the indicator of the gauge stops moving.

4. Replace the radiator cap if the reading does not hold steady for about 10 seconds.

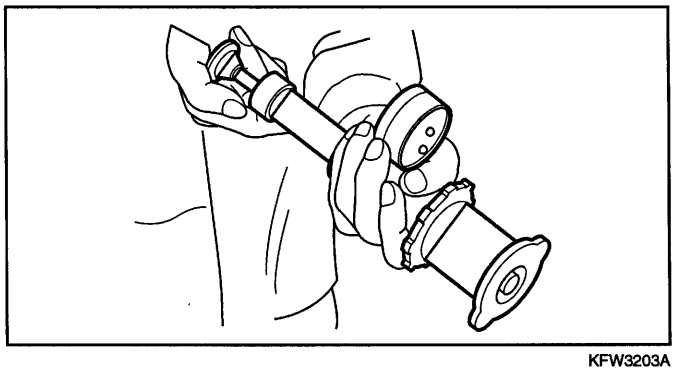

KFW3203A

THERMOSTAT

THERMOSTAT EDHA9000

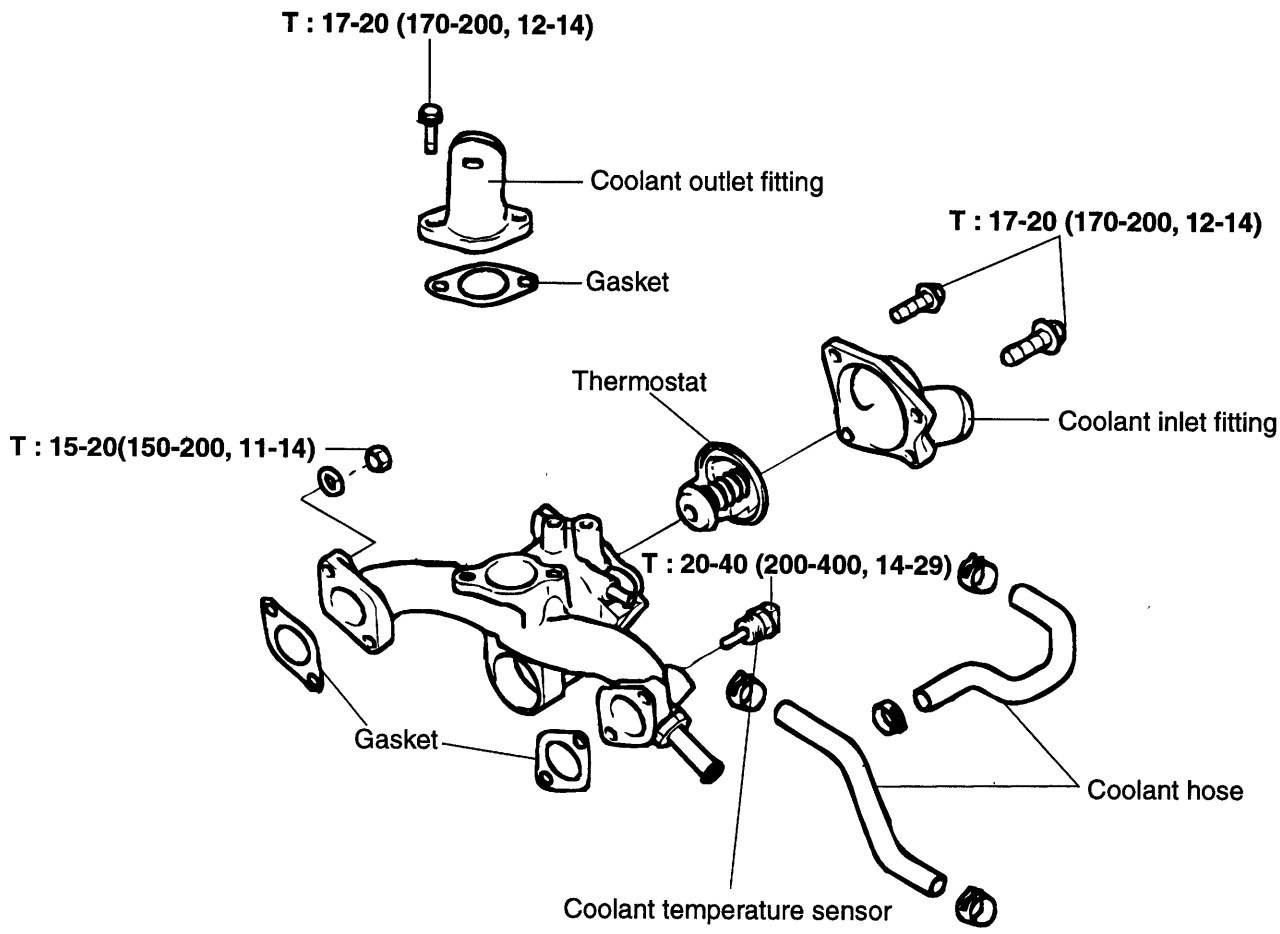

TORQUE : Nm (kg·cm, lb·ft)

EDJA900A

REMOVAL EDHA9100

1. Drain the coolant to thermostat level or below.
2. Remove the inlet fitting and gasket.
3. Remove the thermostat.

INSPECTION EDHA9200

1. Heat the thermostat as shown in the illustration.
2. Check that the valve operates properly.
3. Verify the temperature at which the valve begins to open.

Valve opening temperature : 80-84°C (176-183.2°F)

Full opening temperature : 95°C (203°C)

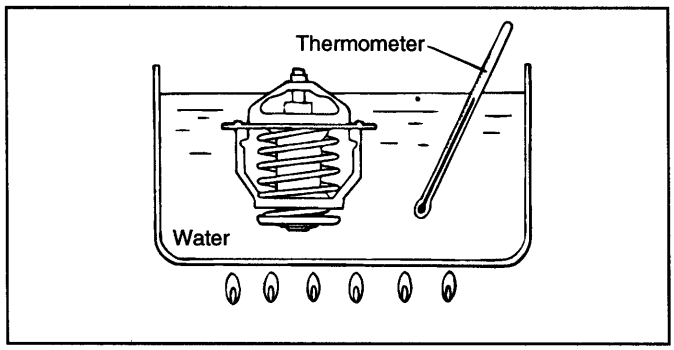

ECA9600A

INSTALLATION EDHA9300

1. Check that the flange of the thermostat is correctly placed in the socket of the thermostat housing.
2. Install the inlet fitting.

Tightening torque

Engine coolant inlet fitting bolt :

17-20 Nm (170-200 kg.cm, 12-14 lb.ft)

3. Refill the coolant.

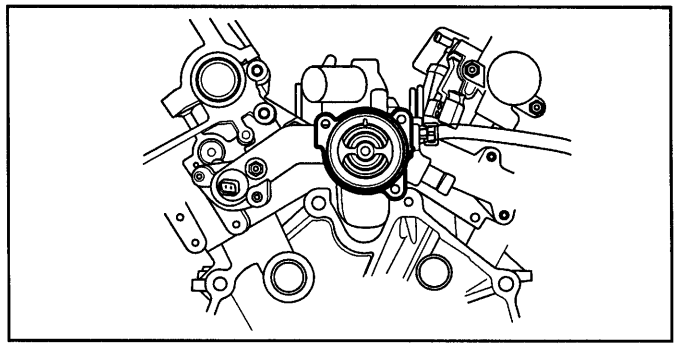

KFW3223A

LUBRICATION SYSTEM

OIL PUMP

OIL PUMP AND OIL PAN EDHA9400

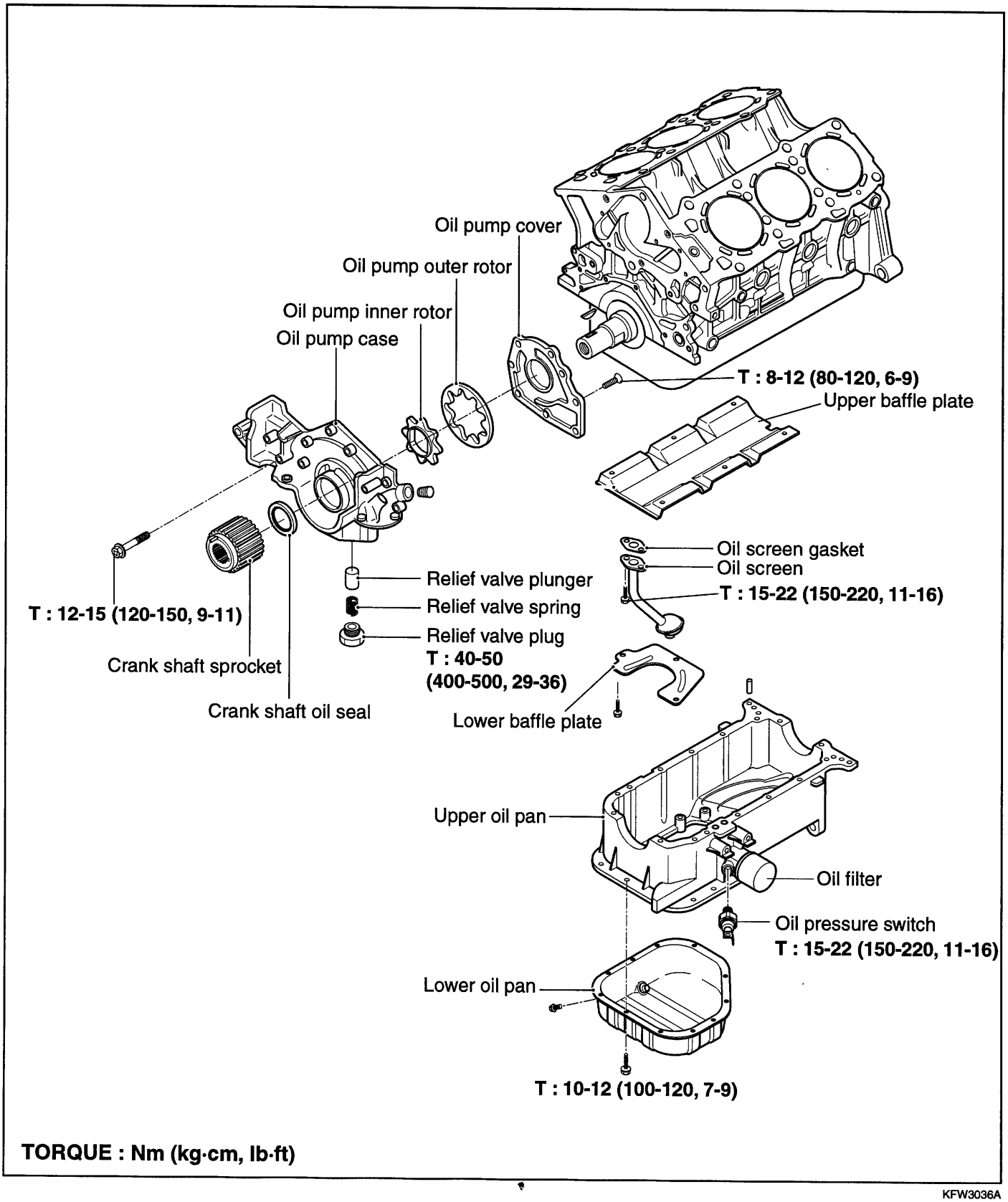

TORQUE : Nm (kg·cm, lb·ft)

KFW3036A

DISASSEMBLY EDHA9500

1. Remove the oil pressure switch, using 24 mm deep socket.

NOTE

Since a sealant is used on the threaded area, be careful not to damage the oil pressure switch.

2. Remove the oil filter and the oil pan.
3. Remove the oil screen and gasket.
4. Remove the three bracket securing bolts and remove the oil filter bracket and gasket.
5. Remove the oil relief valve plug from the oil pump case.
6. Remove the oil pump case.

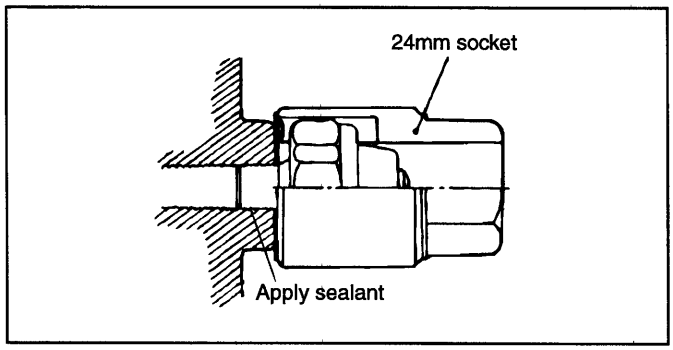

HFR20A33

INSPECTION EDJA7700

OIL PUMP

1. Visually check the parts of the oil pump case for cracks and damage.
2. Assemble the rotor on the oil pump and then check the clearance with a thickness gauge.

Oil pump side clearance
Standard value
Body clearance:0.100-0.181mm (0.0039-0.0071 in.)
Side clearance:0.040-0.095mm (0.0016-0.0037 in.)

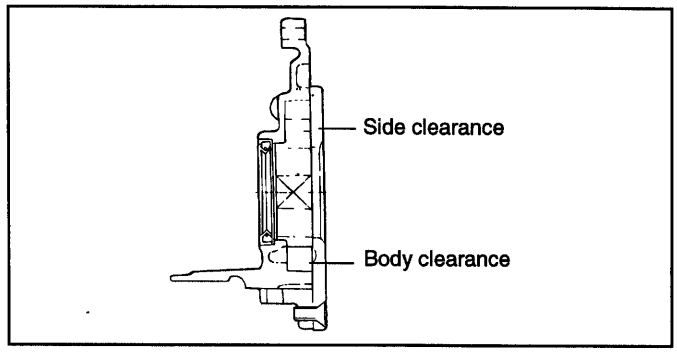

EDA9041A

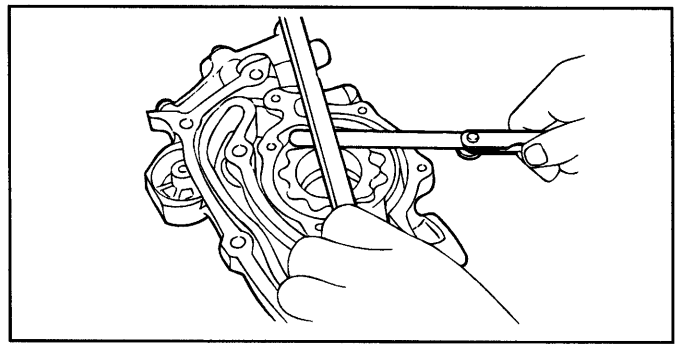

EDA9340B

RELIEF PLUNGER AND SPRING

1. Check the relief plunger for smooth operation.
2. Check the relief spring for deformation or breaks.

OIL FILTER BRACKET

1. Make sure that there is no damage on the surface that mates with the oil filter.
2. Check the oil filter bracket for oil leaks or cracks.

OIL PRESSURE SWITCH

1. Check the continuity between the terminal and the body with an ohmmeter.

   If there is no continuity, replace the oil pressure switch.

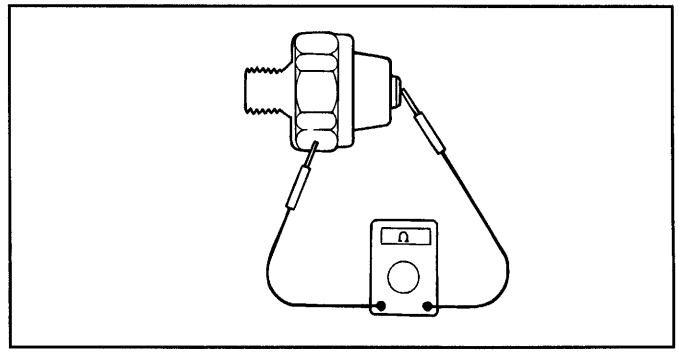

ECA9320D

2. Check the continuity between the terminal and the body when the fine wire is pushed. If there is continuity even when the fine wire is pushed, replace the switch.

3. If there is no continuity when a 50 kpa (7 psi) vacuum is applied through the oil hole, the switch is operating properly.

   Check for air leakage. If air leaks, the diaphragm is broken Replace it.

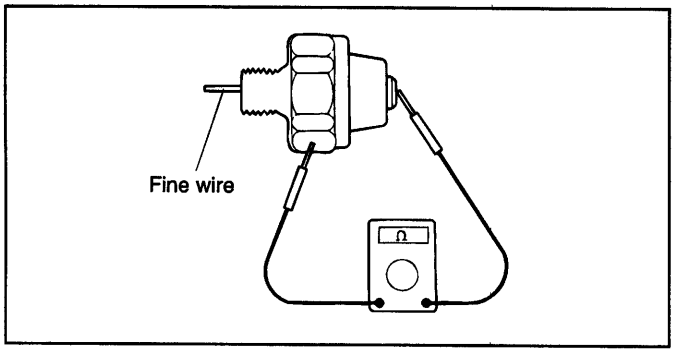

ECA9320E

Operation Pressure

Oil pressure switch :

20 ~40 kpa (0.2 ~ 0.4 kg/cm^2. 2.9 ~ 5.8 psi)

REASSEMBLY EDHA9700

1. Install the oil pump case with the gasket.

Tightening torque

Oil pump case bolt :

12-15 Nm (120-150 kg.cm, 9-11 lb.ft)

Oil pump cover screw :

8-12 Nm (80-120 kg.cm, 6-9 lb.ft)

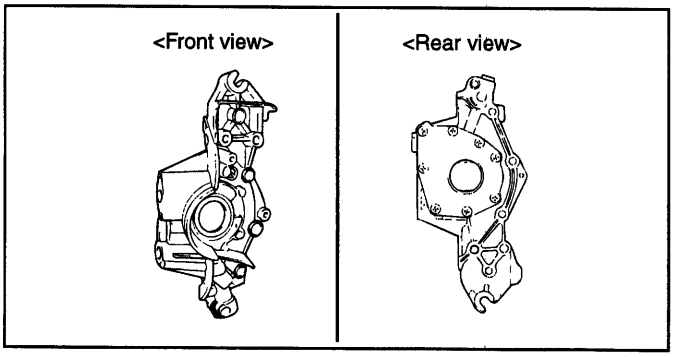

EDA9042A

2. Install the oil seal into the oil pump case as tightly as possible, using the special tool (09214-33000).

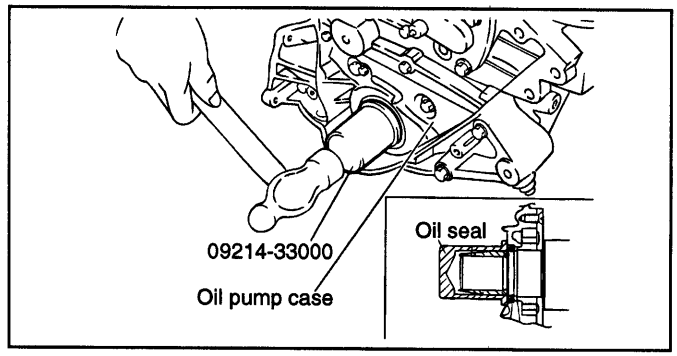

EDA9350B

3. Install the relief plunger and spring, and tighten the oil relief valve plug to the specified torque.

Tightening torque

Oil relief valve plug :

40-50 Nm (400-500 kg.cm, 29-36 lb.ft)

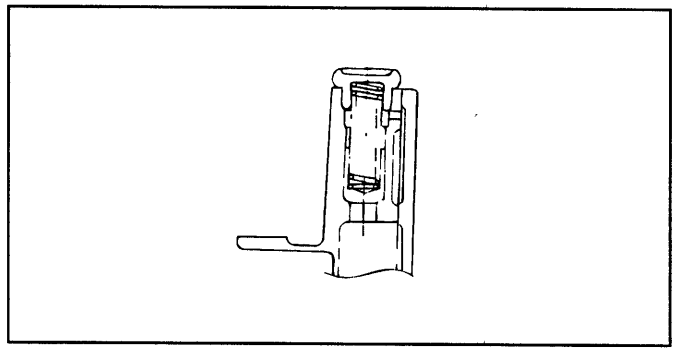

EDA9044A

4. Install the oil screen and a new gasket.

Tightening torque

Oil screen bolt :

15-22 Nm (150-220 kg.cm, 11-15 lb.ft)

5. Clean the gasket surfaces of the cylinder block and the oil pan.

6. Apply sealant to the groove of the oil pan flange.

NOTE

1. **Make the first cut approx. 4 mm from the end of the nozzle furnished with the sealant. After application of the sealant, do not exceed 15 minutes before installing the oil pan.**
2. **Make sure that the sealant doesn't enter the inside of the oil pan.**

7. Install the oil pan and tighten the bolts to the specified torque.

Tightening torque

Oil pan bolt :

* : 19-28 Nm (190-280 kg.cm, 14-20 lb.ft)

** : 5-7 Nm (50-70 kg.cm, 4-5 lb.ft)

*** : 30-42 Nm (300-420 kg.cm, 22-30 lb.ft)

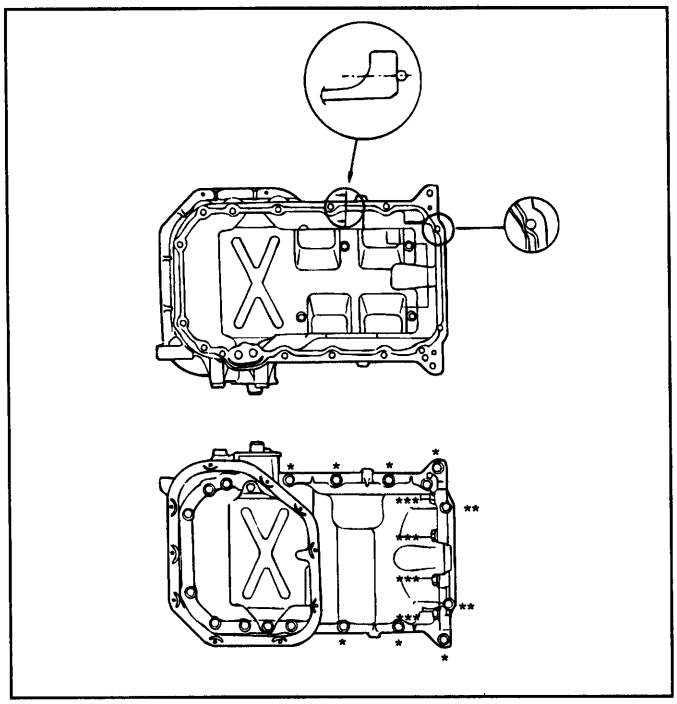

EDA9045A

8. Tighten the oil pan bolts as shown in the illustration.

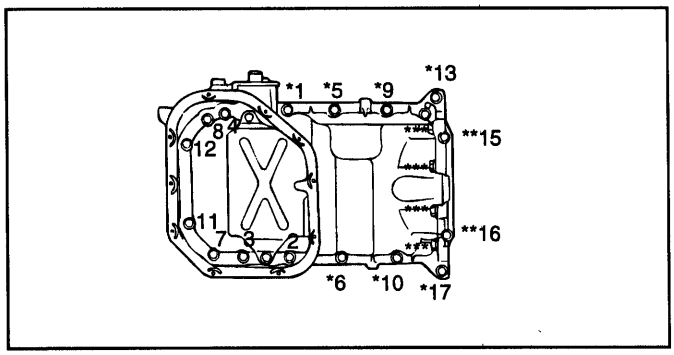

EDA9045B

9. Using a 24 mm deep socket, install the oil pressure switch after applying sealant to the threaded area.

Sealant :

Three bond No.1141E or 3M ATD No. 8660 or equivalent

NOTE

Do not torque the oil pressure switch too much.

Tightening torque

Oil pressure switch :

15-22 Nm (150-220 kg.cm, 11-16 lb.ft)

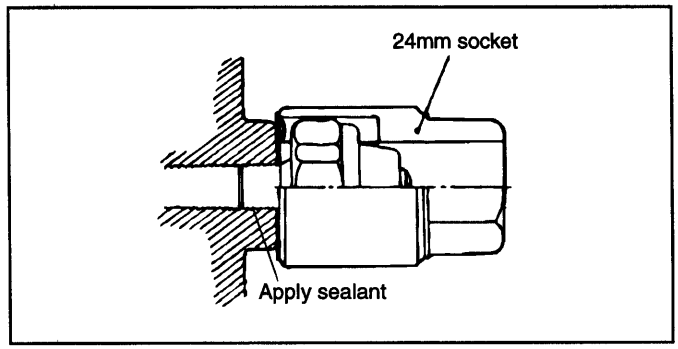

HFR20A33

10. Tighten the lower oil pan bolts as shown in figure.

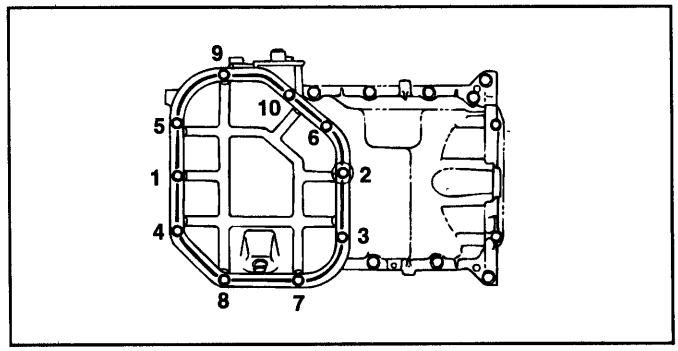

EDJA970A

INTAKE AND EXHAUST SYSTEM

EXHAUST MANIFOLD

EXHAUST MANIFOLD EDJA8000

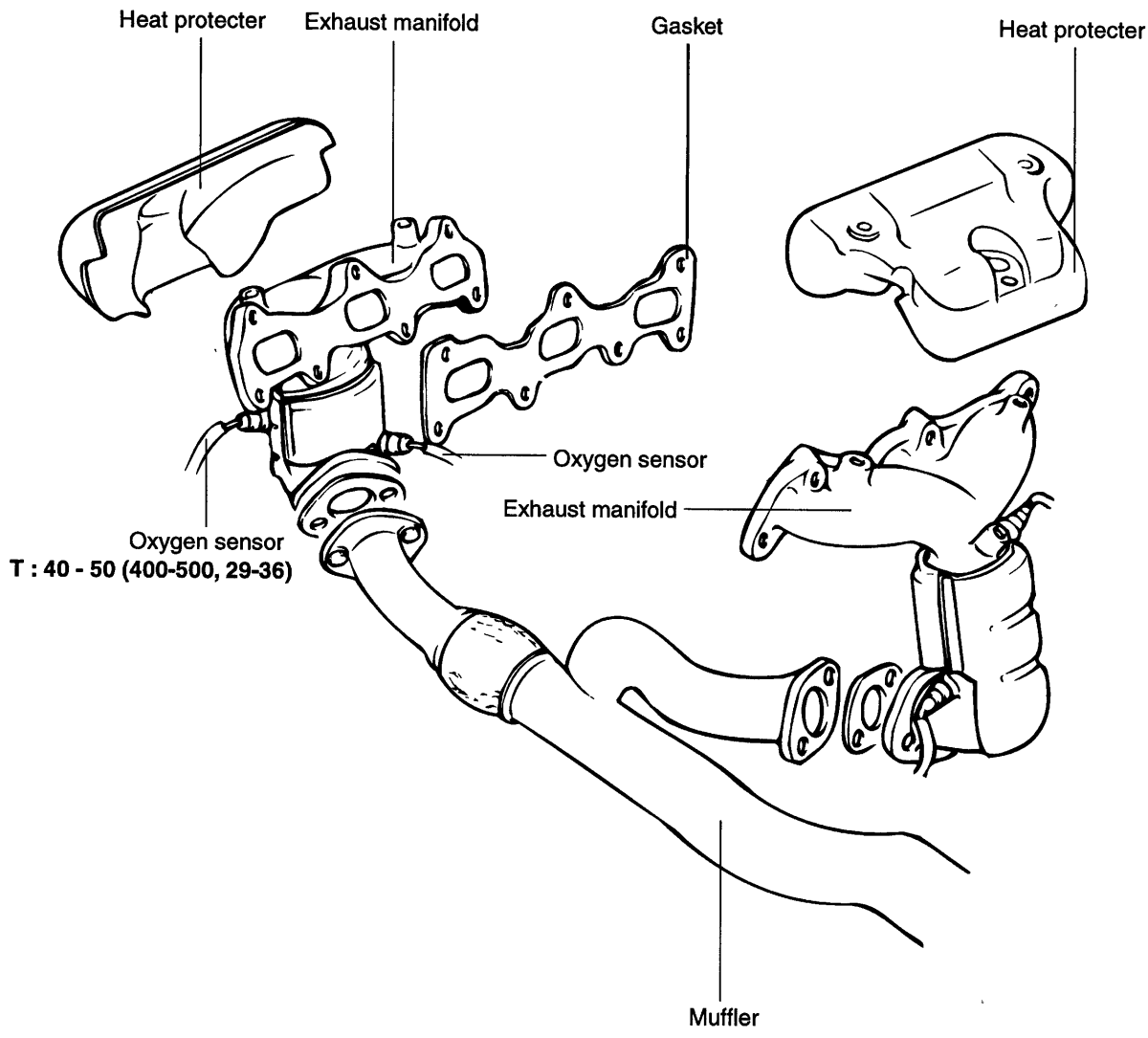

TORQUE : Nm (kg·cm, lb.ft)

EDJAA00A

REMOVAL EDHAA100

1. Remove the heat protector.

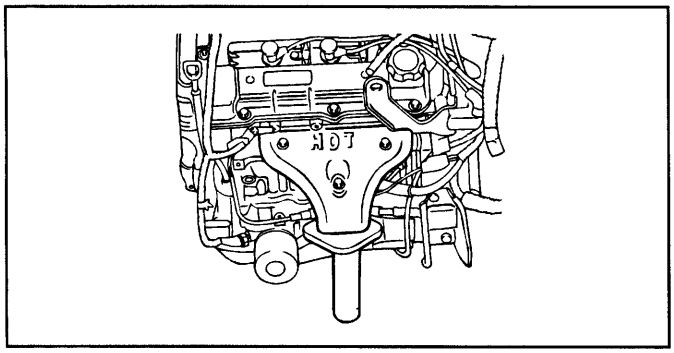

EDHA011A

2. Remove the exhaust manifold.

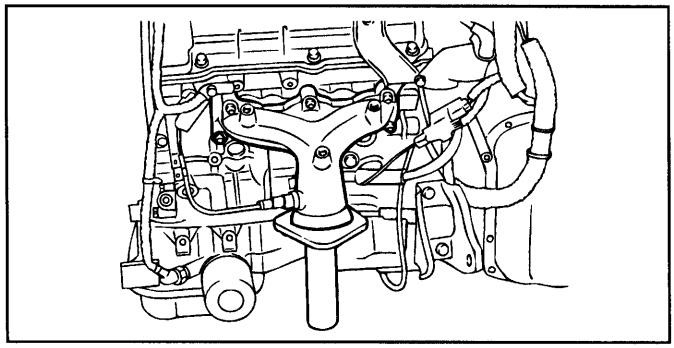

EDHA011B

3. Remove the exhaust manifold gasket.

INSPECTION EDHAA200

1. Check for damage or cracks.
2. Using a straight edge and feeler gauge, check for distortion on the cylinder head matching surface.

Standard value : 0.15 mm (0.006 in.) or less

Service limit : 0.3 mm (0.012 in.) or less

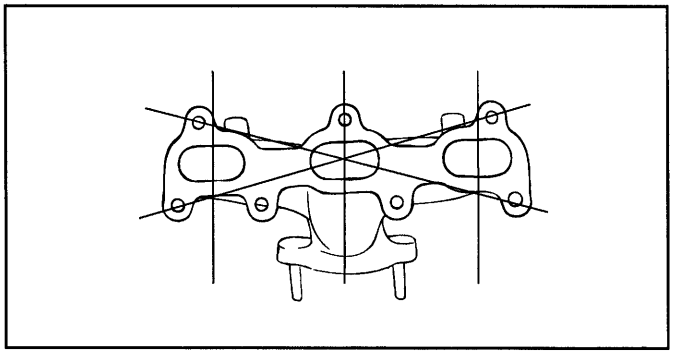

EDA9069A

3. Check the exhaust manifold for damage and cracks.

INSTALLATION EDHAA300

1. Install the exhaust manifold with gasket.

Tightening torque

Exhaust manifold :

25-30N.m (250-300 kg.cm, 18-22 lb.ft)

NOTE

Do not re - use an exhaust manifold gasket.

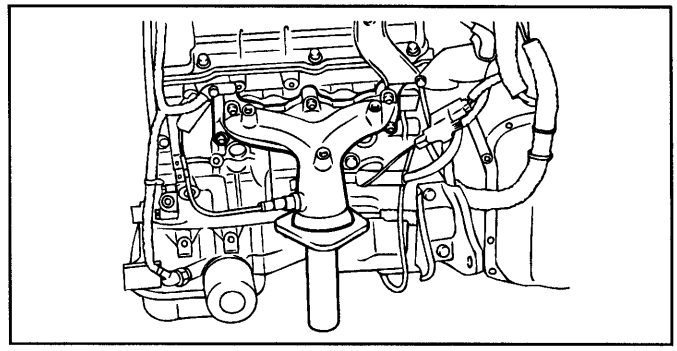

EDHA011B

2. Install the heat protector.

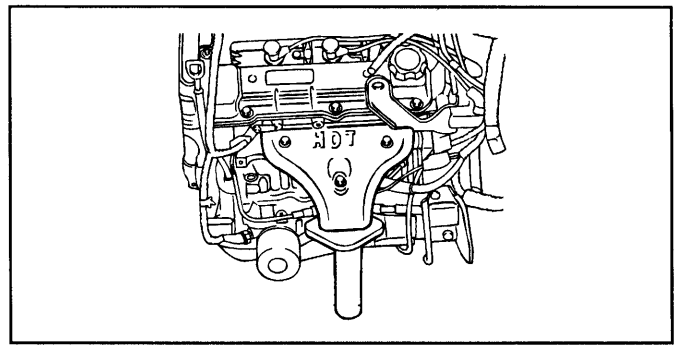

EDHA011A

INTAKE MANIFOLD

INTAKE MANIFOLD EDHAA500

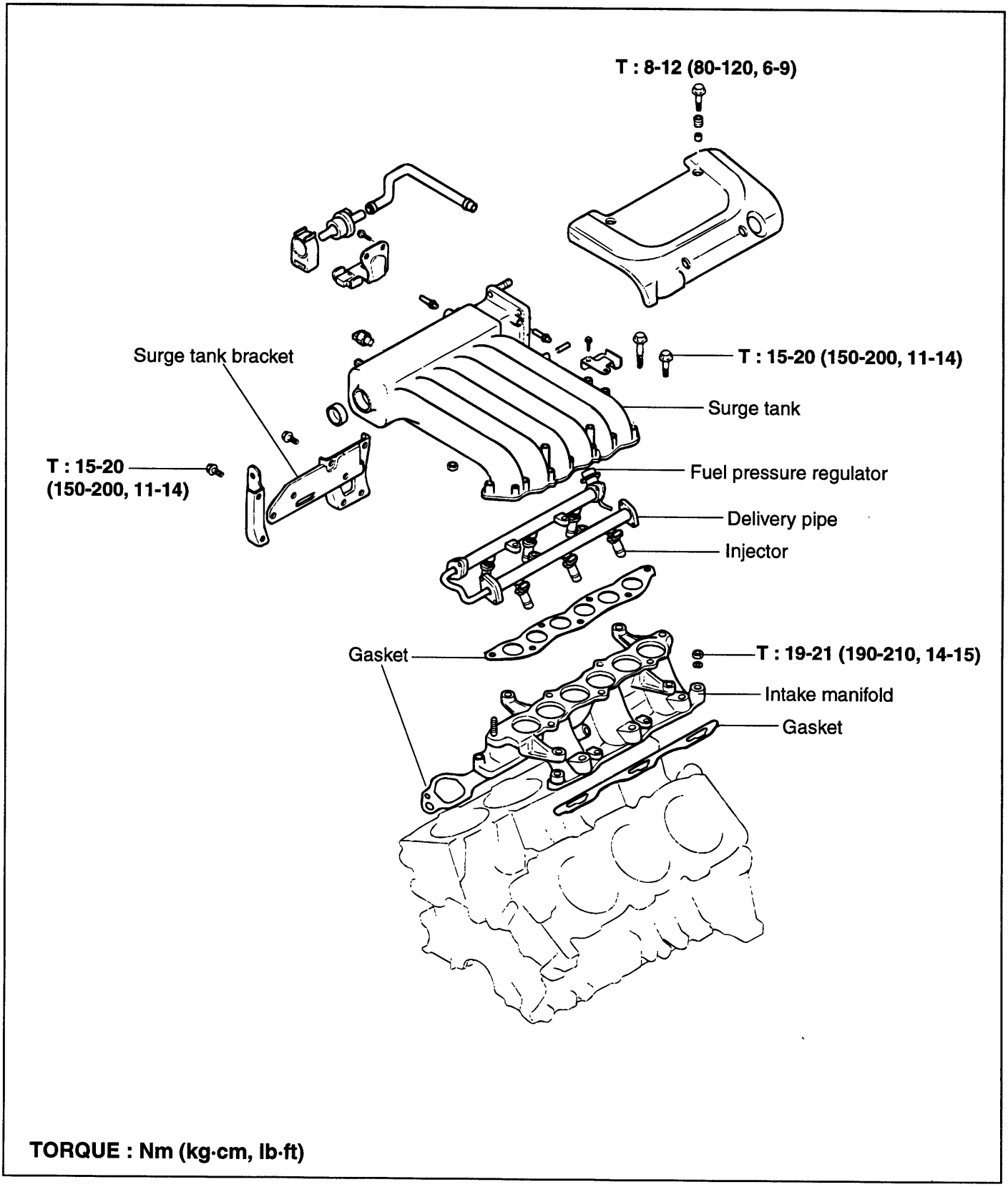

TORQUE : Nm (kg·cm, lb·ft)

ECB9505E

REMOVAL EDHAA600

1. Remove the air intake hose connected to the throttle body.

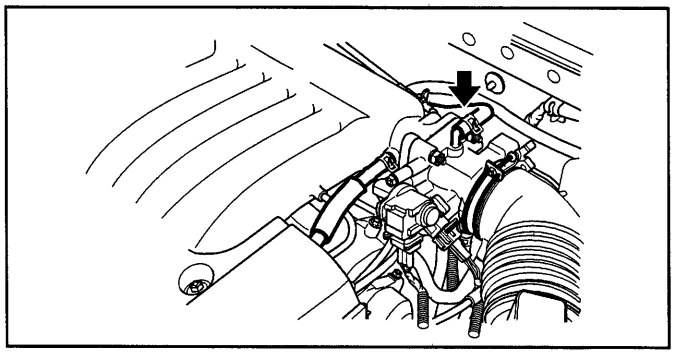

KFW3230A

2. Remove the accelerator and cruise control cables.

3. Remove the engine coolant hose and throttle body.

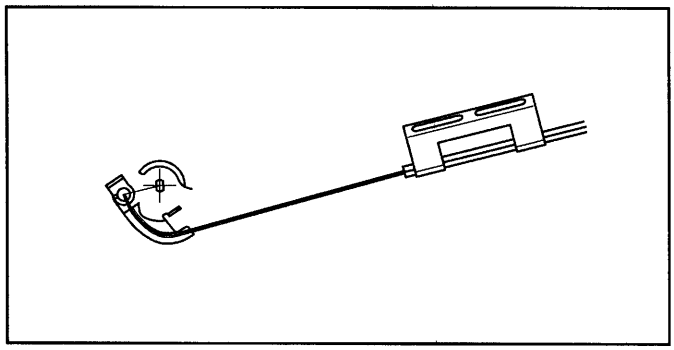

KFW3231A

4. Remove the P.C.V. hose and brake booster vacuum hoses.

5. Disconnect the vacuum hose connections.

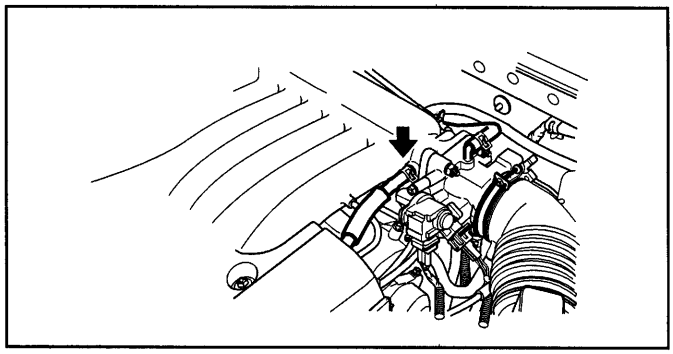

KFW3230B

6. Remove the surge tank stay.

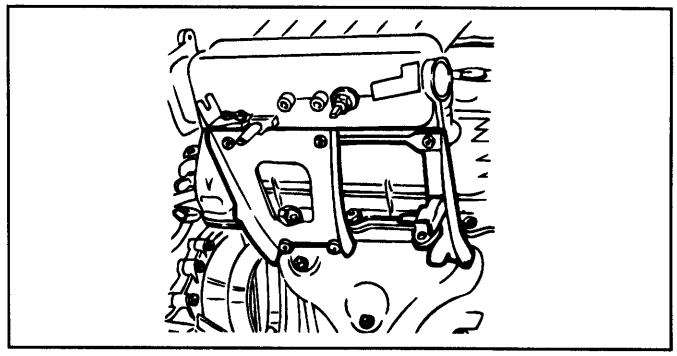

KFW2817A

7. Bleed off the pressure in the fuel pipe line to prevent the fuel from spilling.

8. Disconnect the connector from high pressure hose.

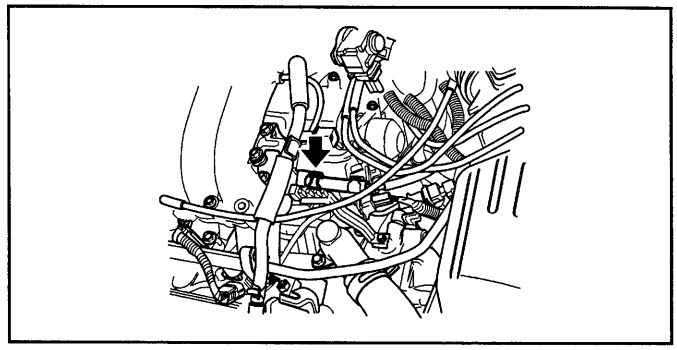

KFW3234A

9. Remove the surge tank and gasket.

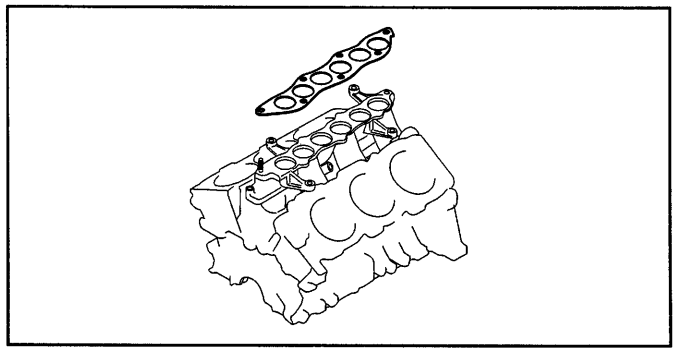

KFW3236A

10. Disconnect the fuel injector harness connector.

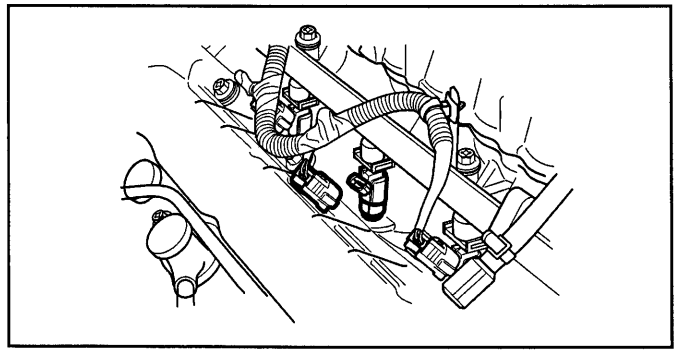

KFW3237A

11. Remove the delivery pipe with the fuel injector and the pressure regulator.

NOTE

When the delivery pipe is removed, be careful not to drop an injector.

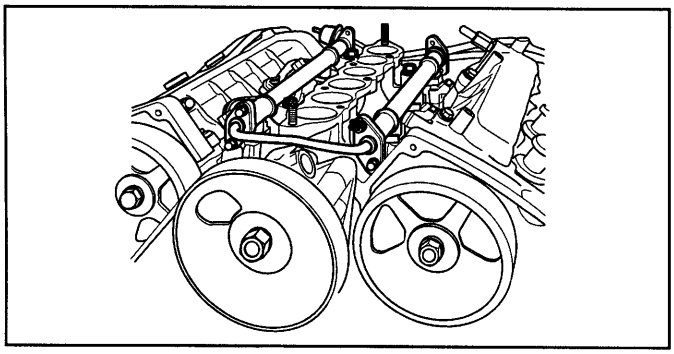

KFW3238A

12. Disconnect the wiring harness of the coolant sensor assembly.

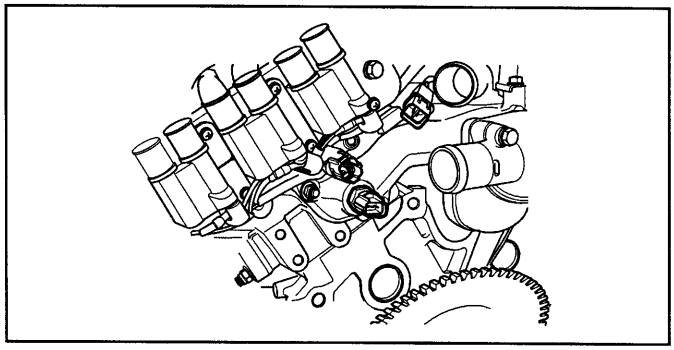

KFW5012A

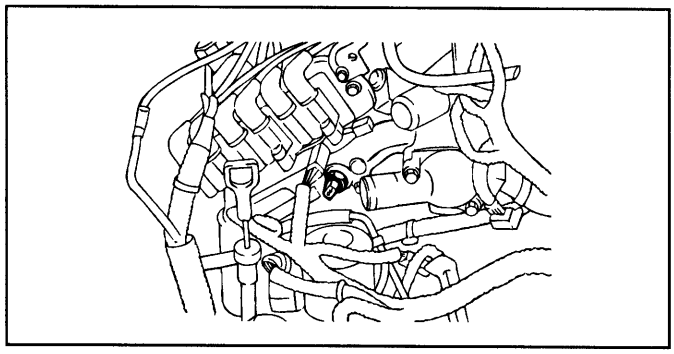

EDHA021B

13. Remove the surge tank.

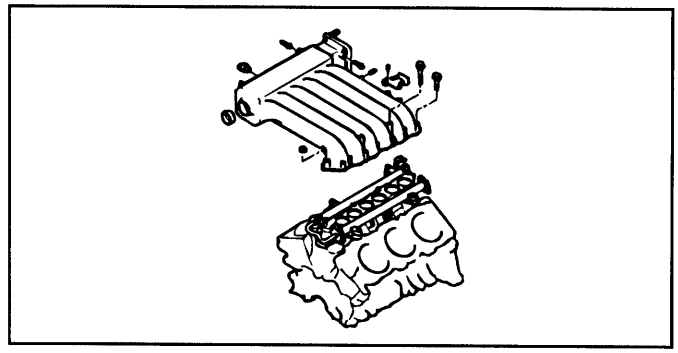

KFW3239A

INSPECTION EDHAA700

SURGE TANK AND INTAKE MANIFOLD

1. Check the surge tank and intake manifold for damage, cracking or restriction of the vacuum outlet port, water or gas passages.
2. Check for distortion on the surface using a straight edge and feeler gauge.

Standard value : 0.15 mm (0.006 in.) or less

Service limit : 0.2 mm (0.0078 in.)

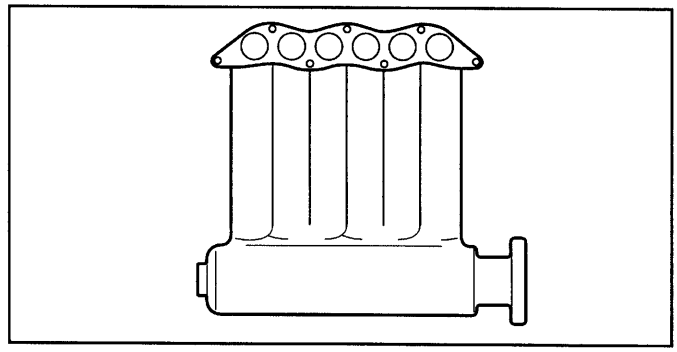

KFW3240A

INSTALLATION EDHAA800

1. Install the intake manifold and delivery pipe reversing the order of the removal procedure.

Tightening torque

Intake manifold :

19-21 N.m (190-210 kg.cm, 14-15 lb.ft)

Surge tank :

15-20 N.m (150-200 kg.cm, 11-14lb.ft)

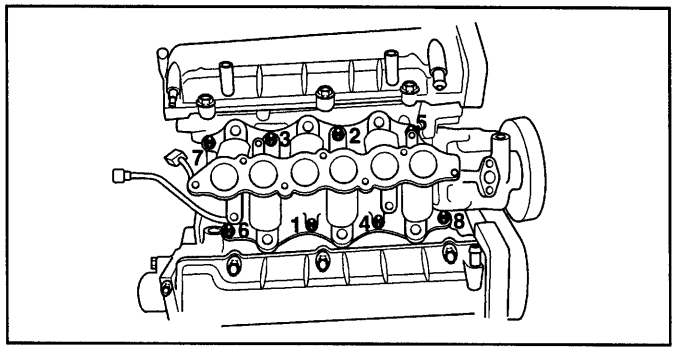

KFW3241A

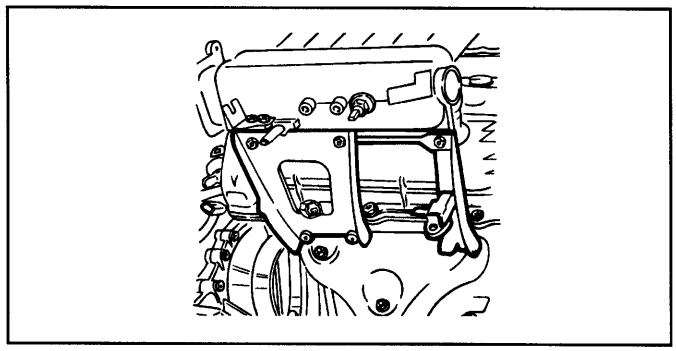

HEW2817A

MUFFLER

MUFFLERS EDJA9000

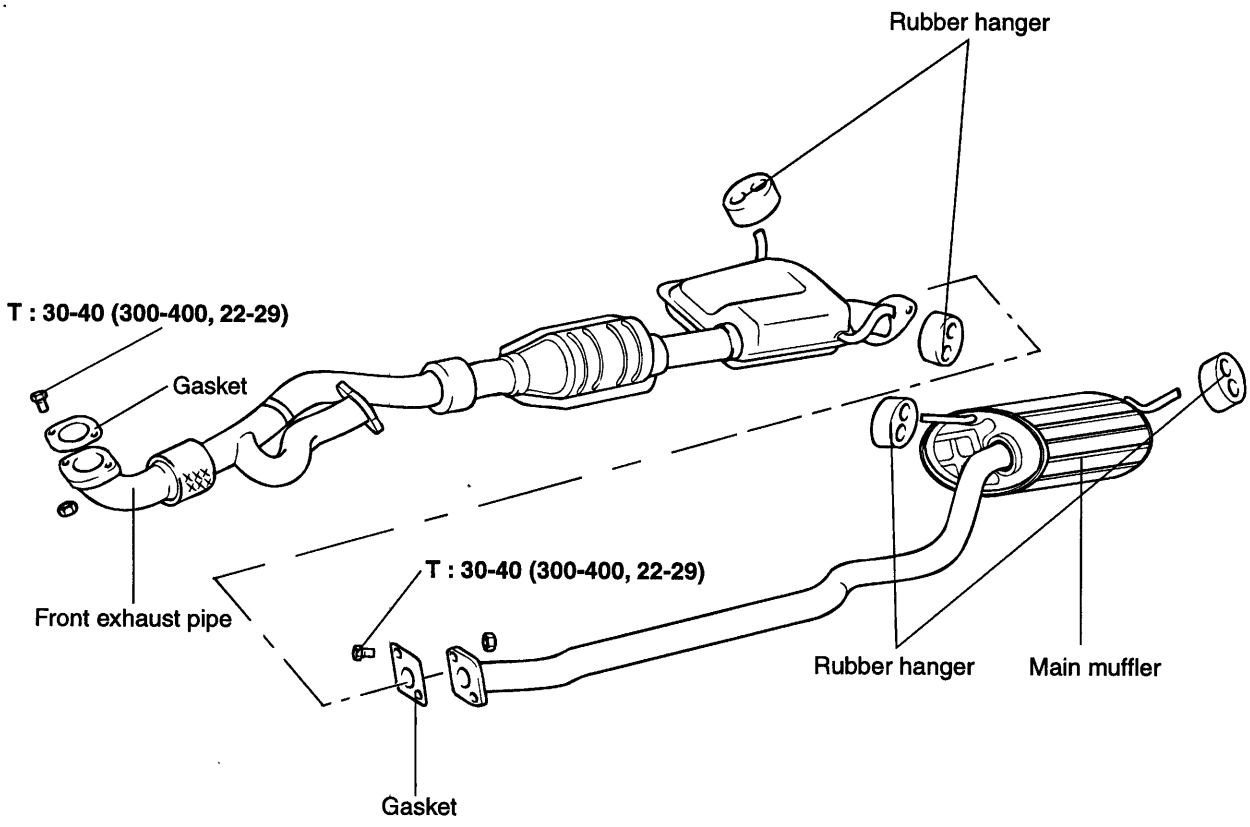

TORQUE : Nm (kg·cm, lb·ft)

EDJA800A

REMOVAL EDJA9100

MAIN MUFFLER

CAUTION

Before removing or inspecting the exhaust system, ensure that the exhaust system is cool.

1. Disconnect the main muffler from the center exhaust pipe.

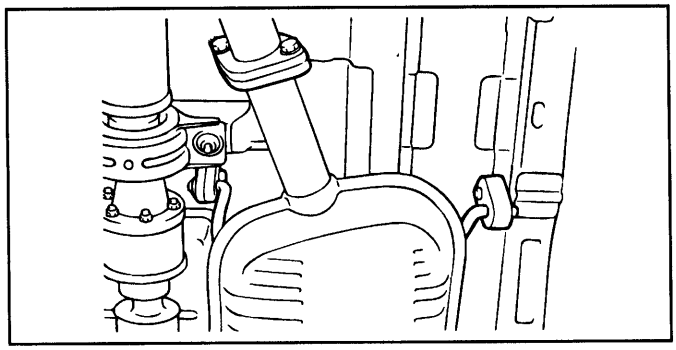

ECJA810A

2. Remove the rubber hangers and the main muffler.

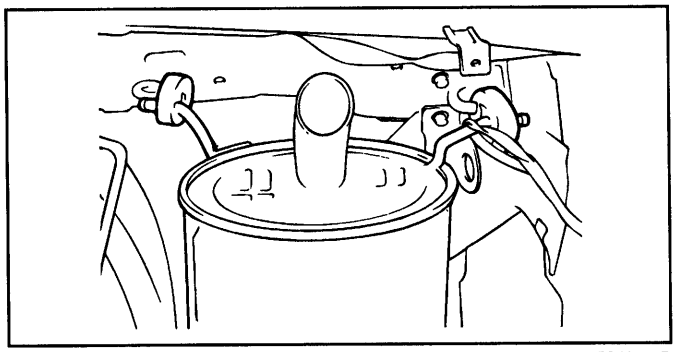

ECJA810B

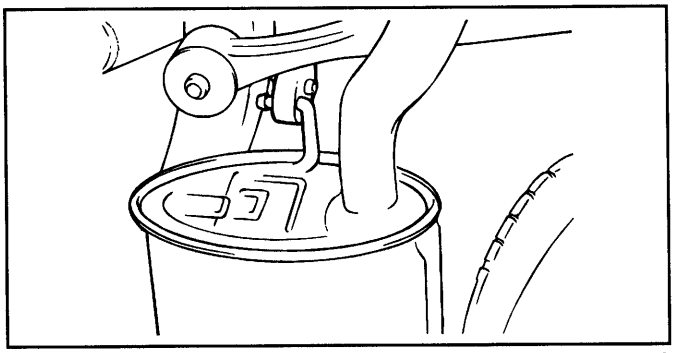

ECJA810C

FRONT EXHAUST PIPE (INCLUDING CATALYTIC CONVERTER)

1. Remove the front exhaust pipe from the center exhaust pipe.

2. Remove the front exhaust pipe bolt and the exhaust manifold pipe mounting nuts.

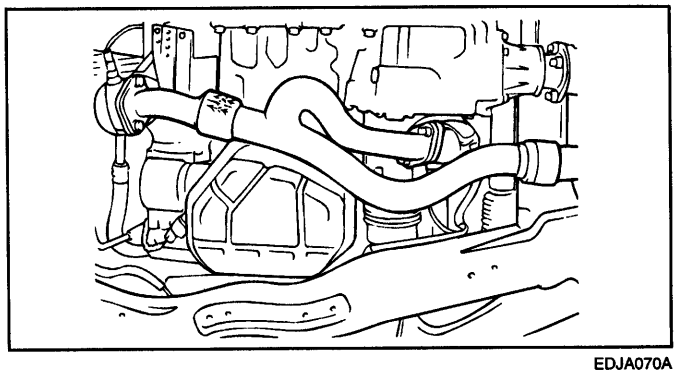

EDJA070A

3. Remove the front exhaust pipe from the rubber hanger.

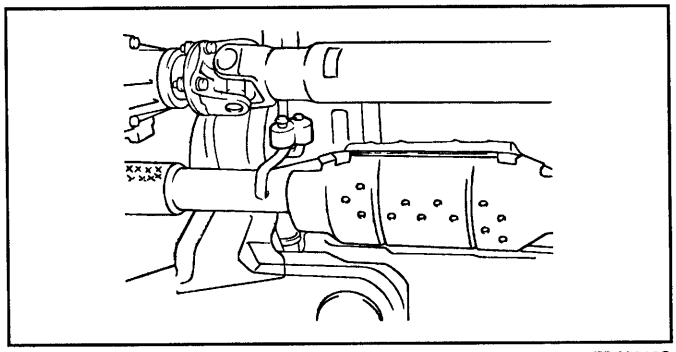

EDJA810C

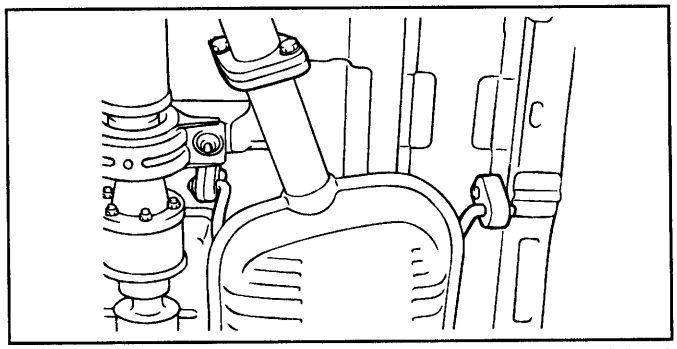

ECJA810A

INSPECTION EDHAB200

1. Check the mufflers and pipes for leaks, corrosion and damage.

2. Check the rubber hangers for deterioration and cracks.

INSTALLATION EDHAB300

1. Temporarily install the front exhaust pipe, the catalytic converter assembly, the center exhaust pipe and the main muffler, in this order.

2. Install the rubber hangers so that they hang equally left and right.

3. Tighten the parts securely and then confirm that there is no interference with any components.

AIR CLEANER (ACL)

AIR CLEANER EDJA9500

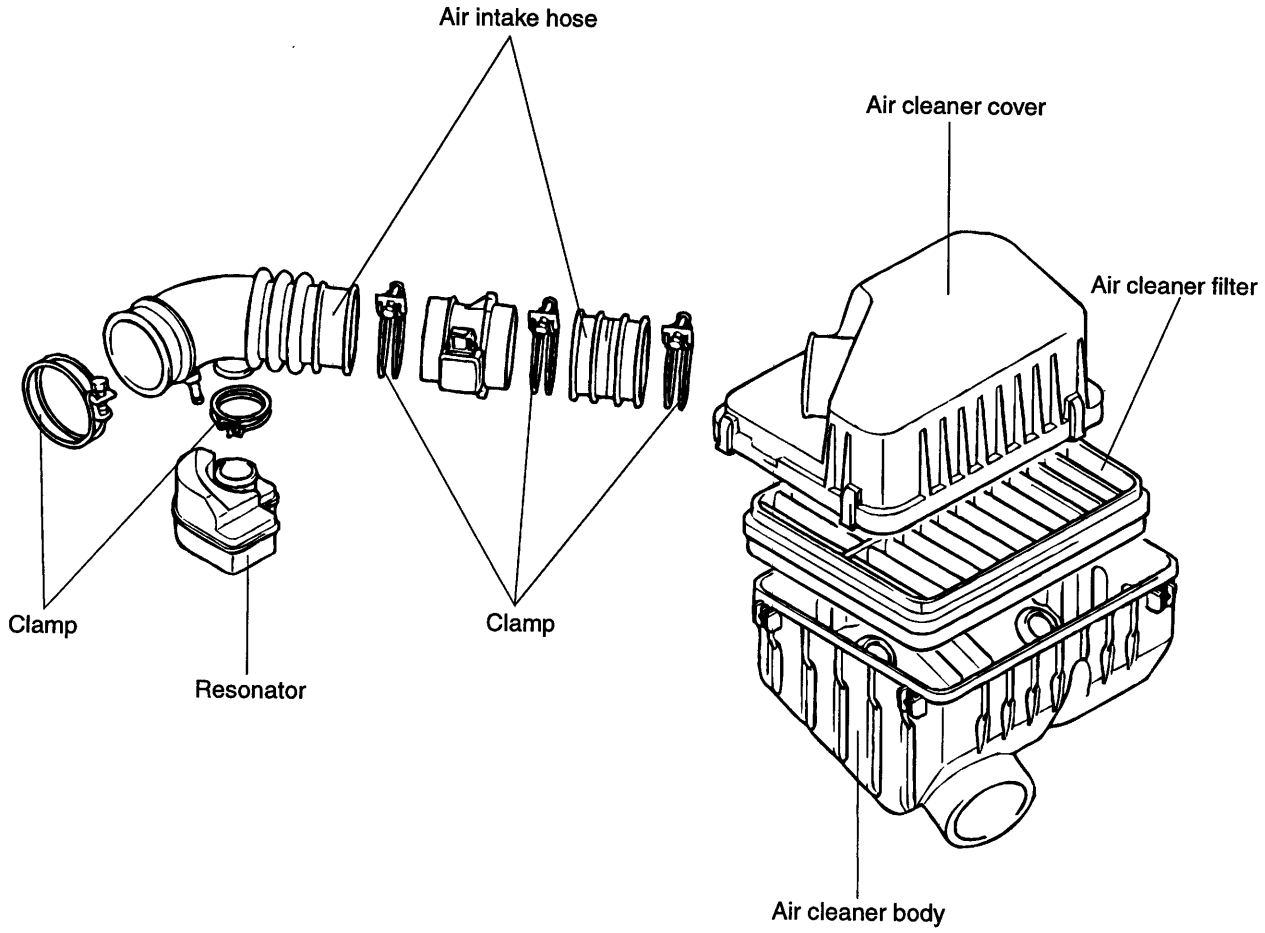

TORQUE : Nm (kg·cm, lb·ft)

EDJA850A

REMOVAL EDJA9600

1. Disconnect the air flow sensor connector.
2. Remove the air intake hose and air duct connected to the air cleaner.
3. Remove the three bolts attaching the air cleaner mounting brackets.
4. Detach the air cleaner.

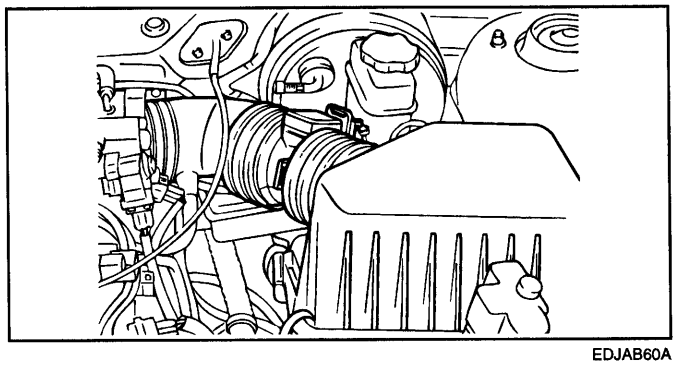

EDJAB60A

5. Remove the air flow sensor from the air intake hose.

CAUTION

Do not pull on the air flow sensor wires.

INSPECTION EDJA9700

1. Check the air intake hose, air cleaner cover for damage.
2. Check the air duct for damage.

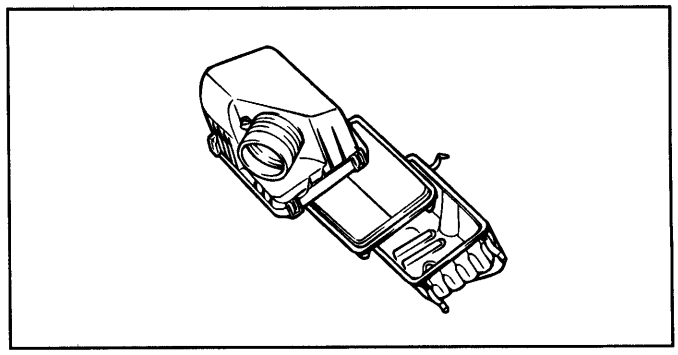

ECJA870A

3. Check the air cleaner element for restriction, contamination or damage.

   If the element is slightly restricted, remove dust and debris by blowing compressed air from the inside of the element. Replace the element if it cannot be cleaned.

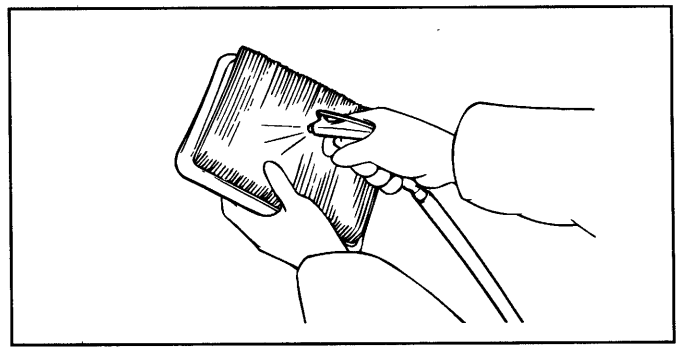

ECA9066A

INSTALLATION EDHAB800

1. Install the air cleaner assembly following the reverse order of removal.

CYLINDER HEAD ASSEMBLY

CYLINDER HEAD

CYLINDER HEADS, VALVES AND VALVE SPRINGS EDHAC000

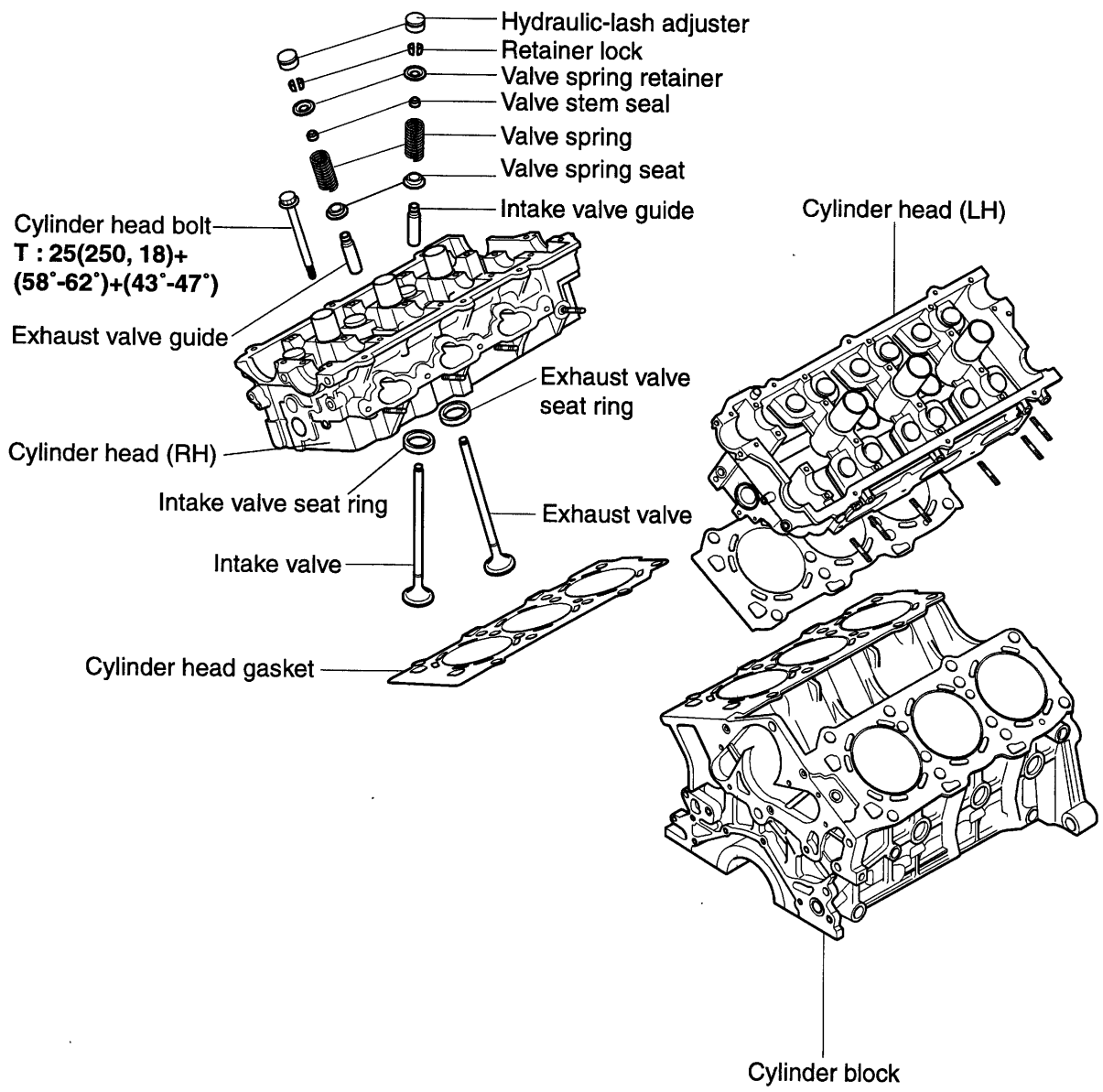

TORQUE : Nm (kg·cm, lb·ft)

KFW3033A

DISASSEMBLY EDHAC100

1. Drain the coolant and disconnect the upper radiator hose.
2. Remove the breather hose and air-intake hose.
3. Remove the vacuum hose, fuel hose and coolant hose.
4. Remove the intake manifold.
5. Remove the cables from the spark plugs. The cables should be removed by holding the boot portion.
6. Remove the ignition coil.
7. Remove the upper and lower timing belt cover.
8. Remove the timing belt and camshaft sprockets.
9. Remove the heat protector and exhaust manifold assembly.
10. Remove the coolant pump pulley and head cover.
11. Remove the intake and exhaust camshaft.

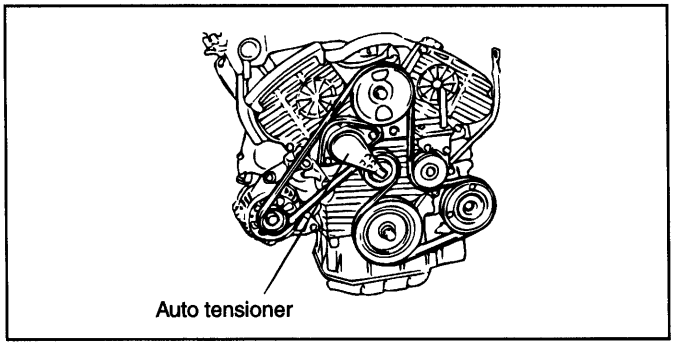

EDA9031A

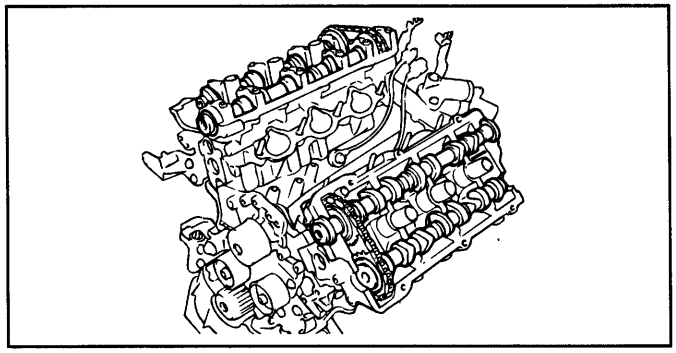

EDA9035A

12. Remove the cylinder head assembly. The cylinder head bolts should be removed using the S12 mm socket, in two or three steps.
13. Clean the gasket pieces from the cylinder block top surface and cylinder head bottom surface.

NOTE

Make sure that fragments from the gasket do not fall in the engine.

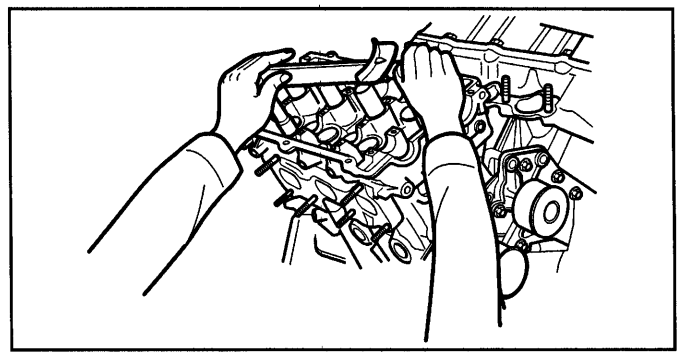

KFW3010A

INSPECTION EDHAC200

CYLINDER HEAD

1. Remove scale, sealing compound and carbon deposits. After cleaning oil passages, apply compressed air to make certain that the passages are not clogged.
2. Visually check the cylinder head for cracks, damage or water leakage.
3. Check the cylinder head surface for flatness with a straight edge and feeler gauge as shown in the illustration.

Cylinder head flatness:

Standard dimensions : Max. 0.03mm(0.0059 in.)

Service limit : 0.05mm(0.0020 in.)

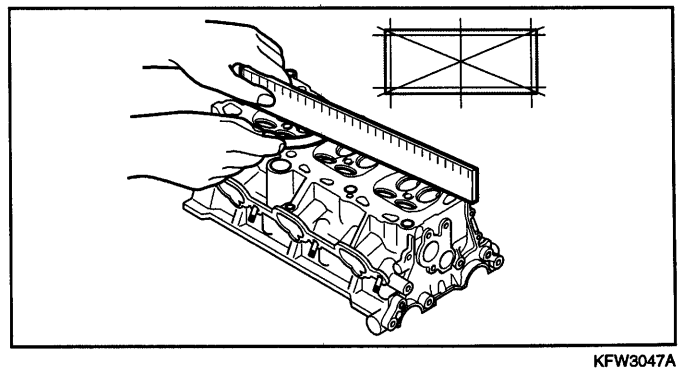

KFW3047A

VALVE GUIDES

Check the valve stem-to-guide clearance. If the clearance exceeds the service limit, replace the valve guide with a new oversize guide.

Valve stem-to-guide clearance

Standard value

Intake : 0.02-0.05mm(0.0009-0.0020 in.)

Exhaust : 0.035-0.065mm(0.0014-0.0026 in.)

Service limit

Intake : 0.10mm(0.0039 in.)

Exhaust : 0.15mm(0.0059 in.)

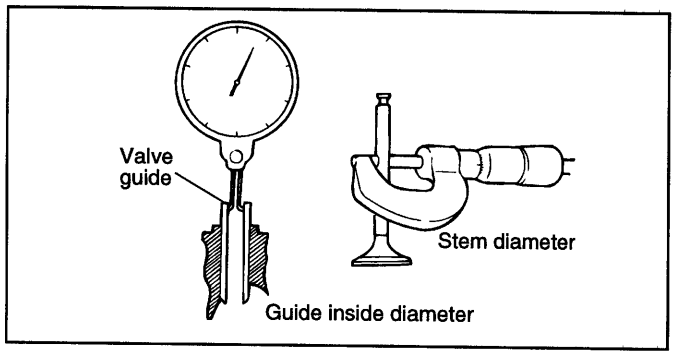

ECA9281D

VALVE

1. Replace the valve if its stem is bent, worn or damaged. Also replace it if the stem end (the surface contacting the hydraulic-lash adjuster) is hollowed out.
2. Check the valve face contact area, and recondition or replace as necessary.

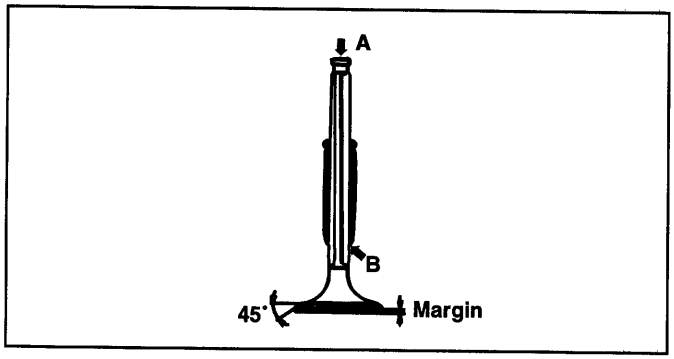

ECA9281B

3. Replace the valve if the width of the margin (thickness of the valve head) is less than the minimum specified.

Valve margin

Standard value

Intake : 1.0mm(0.0394 in.)

Exhaust : 1.3mm(0.0512 in.)

Service limit

Intake : 0.5mm(0.0197 in.)

Exhaust : 0.8mm(0.0315 in.)

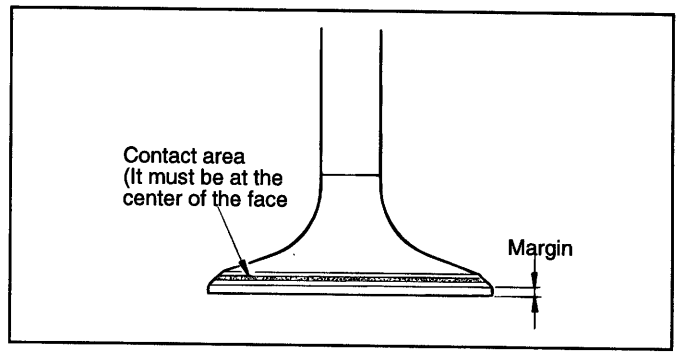

EDA9300D

VALVE SPRING

1. Check the free height of each valve spring and replace if necessary.
2. Using a square, test the squareness of each valve spring. If the spring is excessively out-of-square, replace it.

Valve spring

Standard value

Free height : 42.5mm(1.6732 in.)

Load : 21.9kg/35mm(48.4 lb/1.3780 in.)

Out of squareness : Max. 1.5°

Service limit

Free height : .41.5mm(1.6339 in.)

Load : 21.9kg/34mm(48.4 lb/1.3386 in.)

Out of squareness : Max. 3°

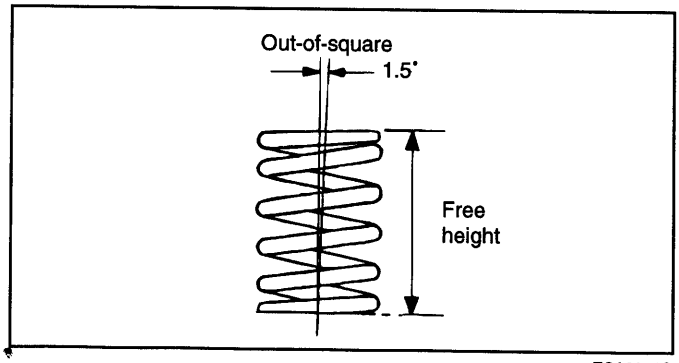

ECA9281C

RECONDITIONING VALVE SEAT

1. Before reconditioning, check the valve guide for wear. Replace worn guides if necessary and then recondition the valve seats.
2. Recondition the valve seat using the Valve Seat Cutter and Pilot.
3. After reconditioning, the valve and valve seat should be lapped lightly with a lapping compound.

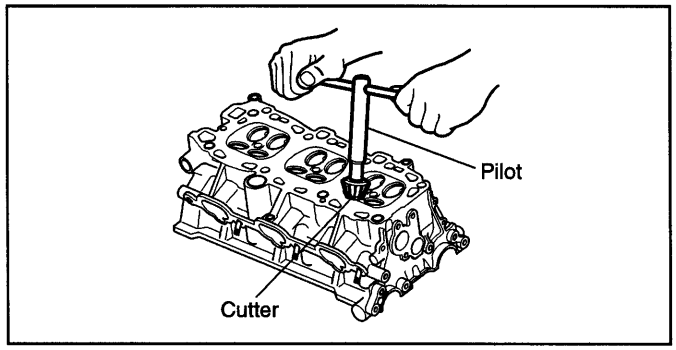

KFW3048A

REPLACING VALVE GUIDE

1. Using the special tool (09221-29000), withdraw the old valve guide out the bottom of the cylinder head.
2. Recondition the valve guide hole so that it can receive the newly press-fitted oversize valve guide.

VALVE GUIDE OVERSIZES

Size mm (in.)	Size Mark	Oversize valve guide hole size mm (in.)
0.05 (0.002) O.S.	5	11.050-11.068 (0.435-0.4357)
0.25 (0.010) O.S.	25	11.250-11.268 (0.443-0.4436)
0.50 (0.020) O.S.	50	11.500-11.518 (0.453-0.4535)

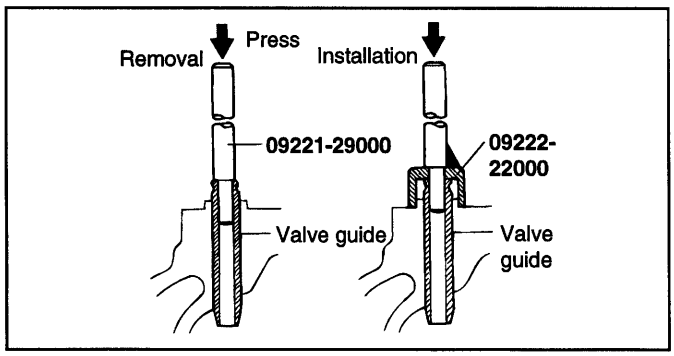

EDA9300G

3. Using the special tool (09221-29000(A), 09222-22000(B)) press-fit the valve guide. The valve guide must be press-fitted from the upper side of the cylinder head. Keep in mind that the intake and exhaust valve guides are different in length.
4. After the valve guide is press-fitted, insert a new valve and check for proper clearance.
5. After the valve guide is replaced, check that the valve is fully seated. Recondition the valve seats as necessary.

NOTE

Do not install a valve guide unless it is oversize.

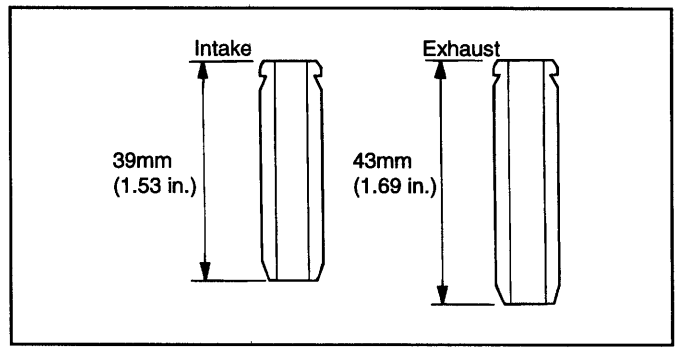

EOY168A

REPLACING VALVE SEAT RING

1. Cut away the inner face of the valve seat to reduce the wall thickness.

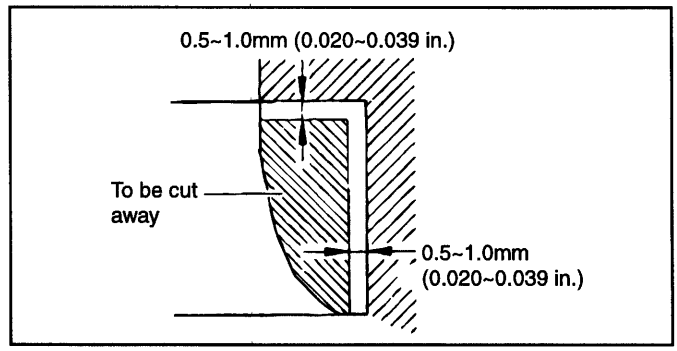

EOYR3940

2. Enlarge the diameter of the valve seat so that it matches the specified hole diameter of the new valve seat ring.

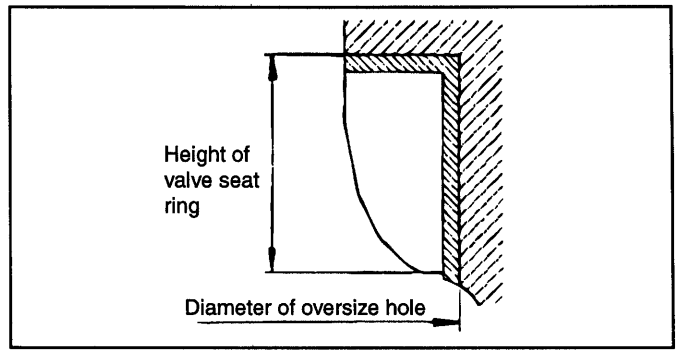

EOY167A

VALVE SEAT RING OVERSIZES

Description	Size mm (in.)	Size Mark	Seat ring height H mm (in.)	Oversize hole diameter I.D. mm (in.)
Intake valve seat ring	0.3 (0.012) O.S.	30	7.9-8.1 (0.311-0.319)	33.300-33.325 (1.311-1.312)
Exhaust valve seat ring	0.3 (0.012) O.S.	30	7.9-8.1 (0.311-0.319)	28.600-28.625 (1.126-1.127)

3. Heat the cylinder head to about 250°C (480°F) and press-fit an oversize seat ring for the bore in the cylinder head.
4. Using lapping compound, lap the valve to the new seat.

Valve seat contact width

Intake : 1.1-1.5mm(0.043-0.059 in.)

Exhaust : 1.3-1.7mm(0.051-0.067 in.)

REASSEMBLY EDHAC300

1. Install the spring seats.
2. Using special tool (09222-22001), lightly tap the seal in position.

NOTE

- **Do not reuse old valve stem seals.**
- **Incorrect installation of the seal could result in oil leakage of from the valve guides.**

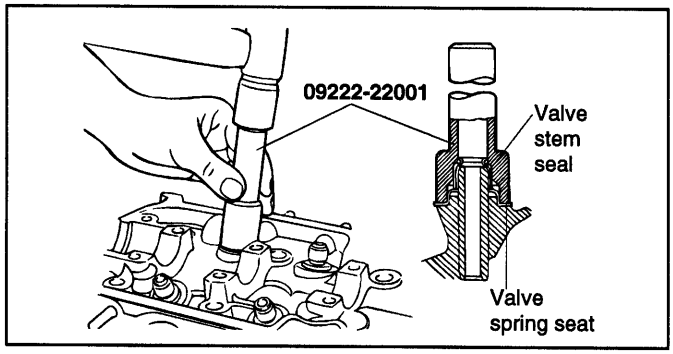

EDHAC30A

3. Apply engine oil to each valve. Insert the valve into their guides. Avoid pushing the valve into the seal by force. After installing the valve, check that it moves smoothly.
4. Place valve springs so that the side coated with enamel faces toward the valve spring retainer.

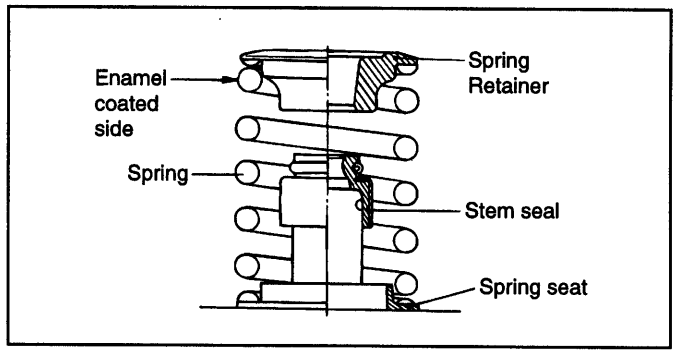

ECA9290B

5. Using the special tool (09222–28000, 09222–28100), compress the spring and install the retainer locks. After installing the valves, ensure that the retainer locks are correctly in place before releasing the valve spring compressor.

NOTE

When the spring is compressed, check that the valve stem seal is not pressed against the bottom of the retainer.

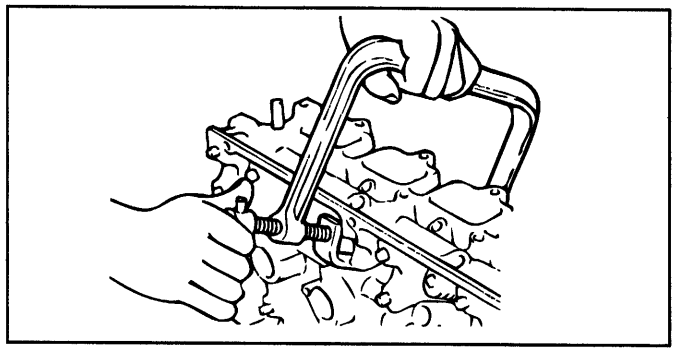

EDAA040B

6. Clean both gasket surfaces of the cylinder head and cylinder block.
7. Verify the identification marks on the cylinder head gasket.

8. Install the gasket so that the surface with the identification mark faces toward the cylinder head.

NOTE

Do not apply sealant to these surfaces.

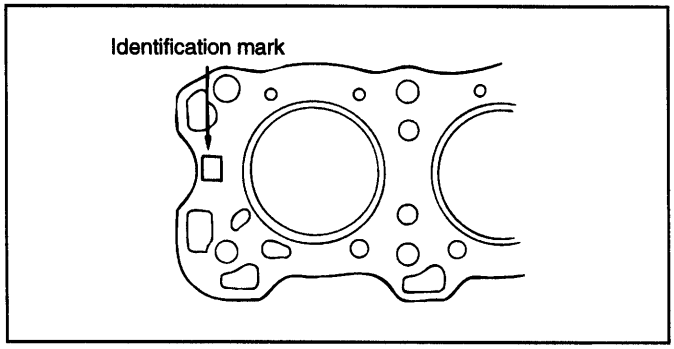

EDA9310D

9. Tighten the cylinder head bolts in the sequence shown in the illustration with a torque wrench.

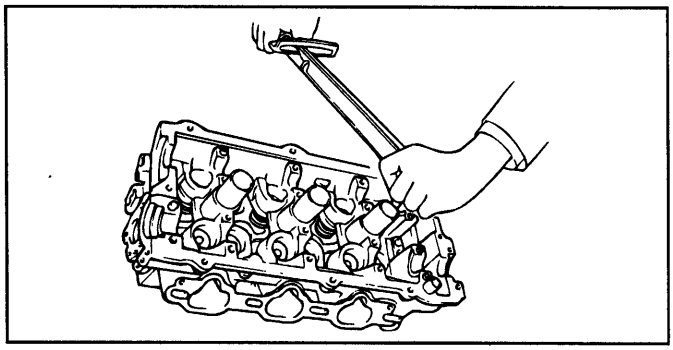

EDA9010A

10. Tighten the cylinder head bolts using the torque - angle method. Starting at top center, tighten all cylinder head bolts in sequence as shown in the illustration, using the 12 mm socket.

Tightening procedure

Cylinder head bolt :

25 Nm (250kg.cm, 18.1 lb.ft)+(58°-62°)+(43°-47°)

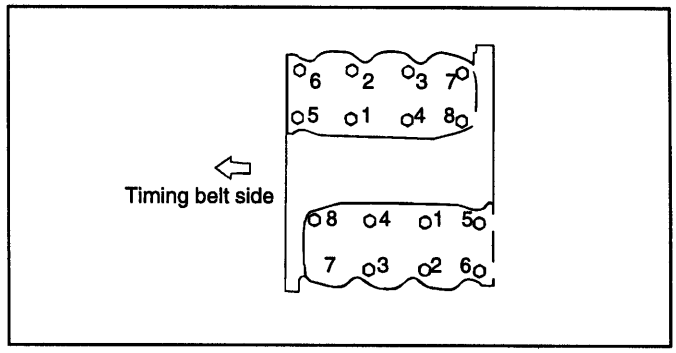

EDA9960B

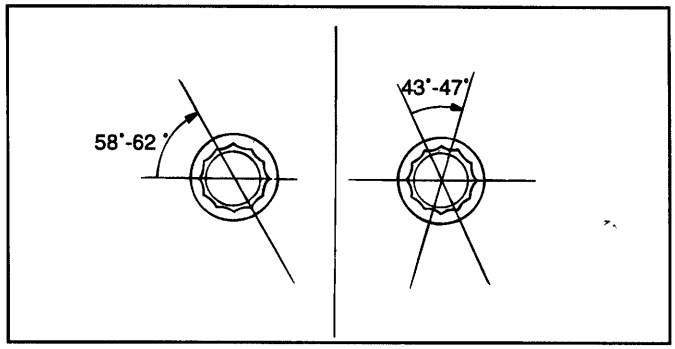

EDAA086B

TIMING SYSTEM

TIMMING BELT

TIMING BELT EDHAD000

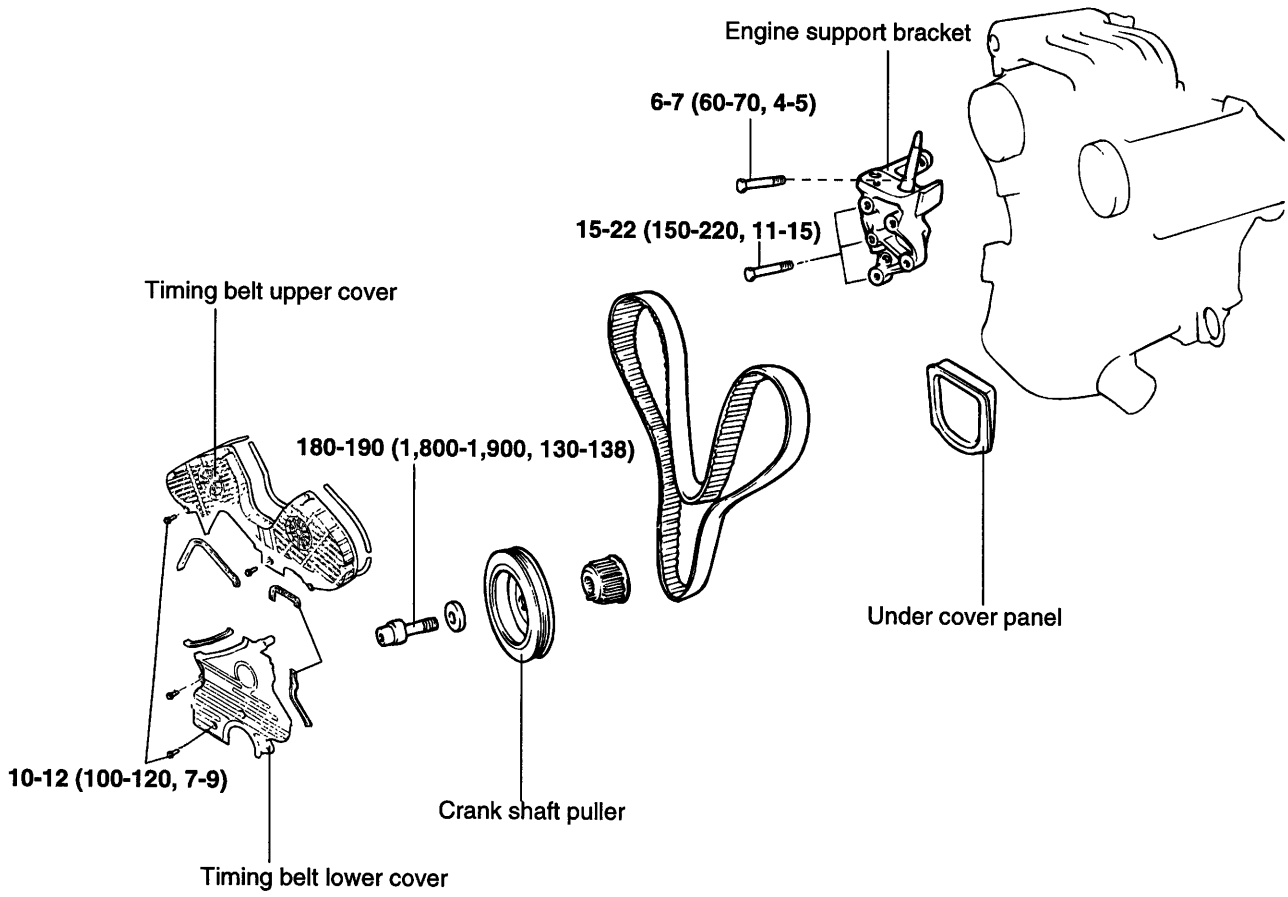

TORQUE : Nm (kg.cm, lb.ft)

EDA9021A

REMOVAL EDJAA600

1. Remove the engine cover.

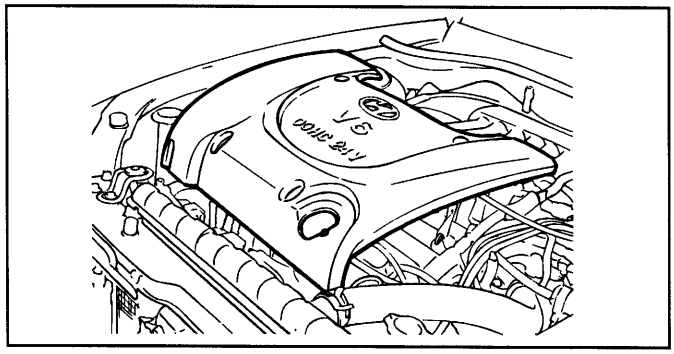

EDA9022A

2. Using a [16 mm], rotate the tensioner arm clockwise (about 14°)and remove the belt from the pulley.

3. Remove the power steering pump pulley, idler pulley, tensioner pulley and crankshaft pulley.

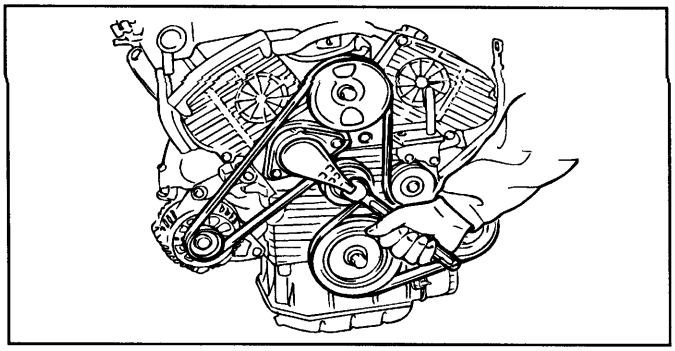

EDA9031B

4. Remove the upper and lower timing belt covers.

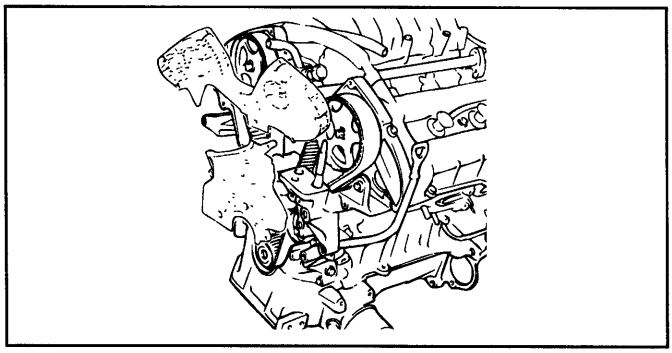

EDA9027A

5. Remove the auto tensioner.

NOTE

Rotate the crankshaft clockwise and align the timing mark to set the No.1 cylinder's piston to TDC (compression stroke).

At this time, the timing marks of the camshaft sprocket and cylinder head cover should coincide with each other.

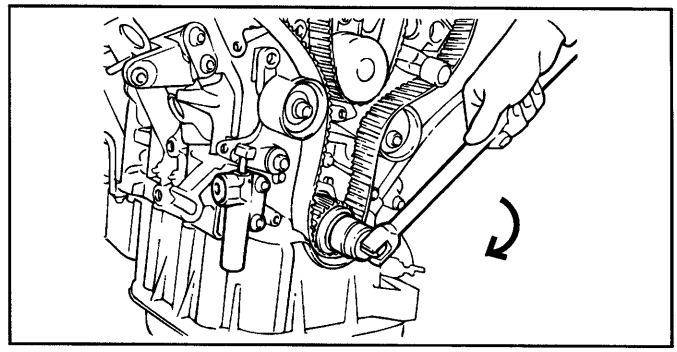

EDA9024A

6. Unbolt the tensioner to remove the timing belt.

NOTE

If you plan to use the timing belt again, mark the rotation direction on the belt so you reinstall it correctly.

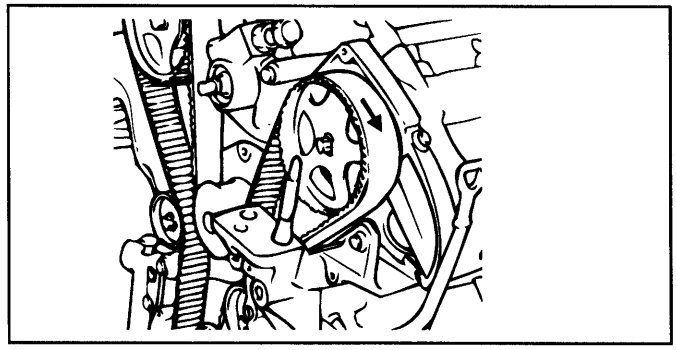

EDA9023A

INSPECTION EDHAD200

1. Inspect the belt closely. If the following problems are evident, replace the belt with a new one.

   1) Hardened back surface of rubber

      Back surface is glossn, non-elastic and so hard that when the nail of your finger is pressed into it, no mark is produced.

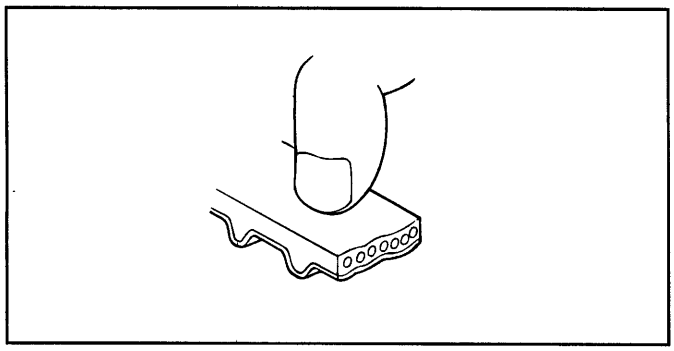

ECA9200B

   2) Cracked back surface of rubber.

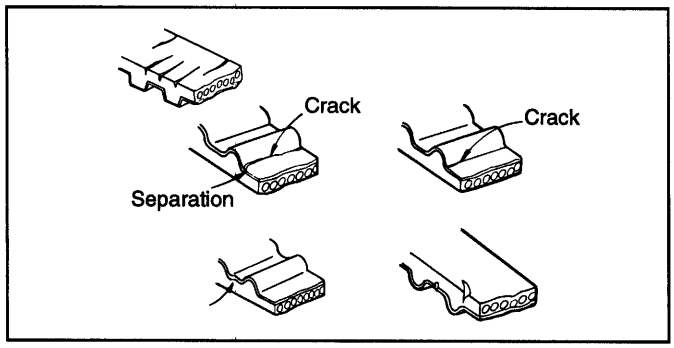

EDA9220B

   3) Side of belt is badly worn.

NOTE

A belt in good condition should have clear-cut sides as if it were cut with a sharp knife.

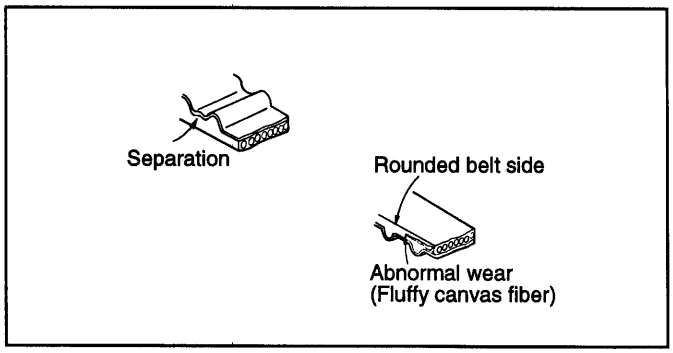

EDA9220C

   4) Teeth are badly worn out.

      Initial stage : Canvas on load side of the tooth flank worn (fluffy canvas fibers, rubber gone, color changed to white, and unclear canvas texture)

      Last stage : Canvas on the load side of the tooth flank worn down and rubber exposed (tooth width reduced).

   5) Missing tooth

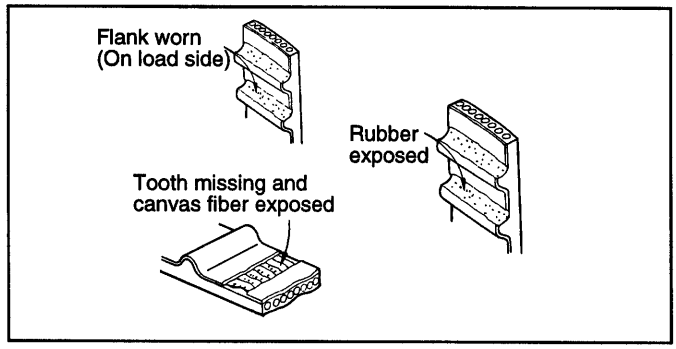

EDA9220D

2. If backlash or an irregular noise is observed when rotating the pulley, replace the timing belt tensioner and idler pulley.

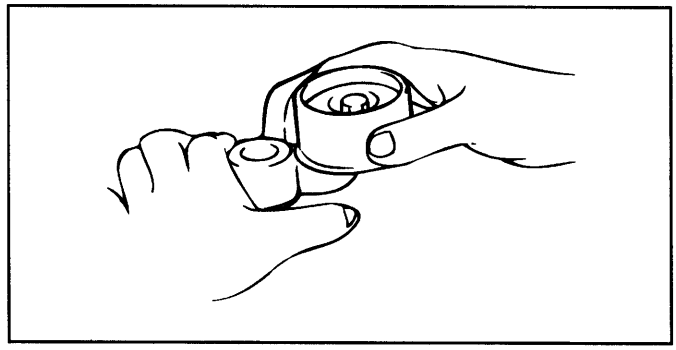

EDA9025A

TIMING BELT EDHAD500

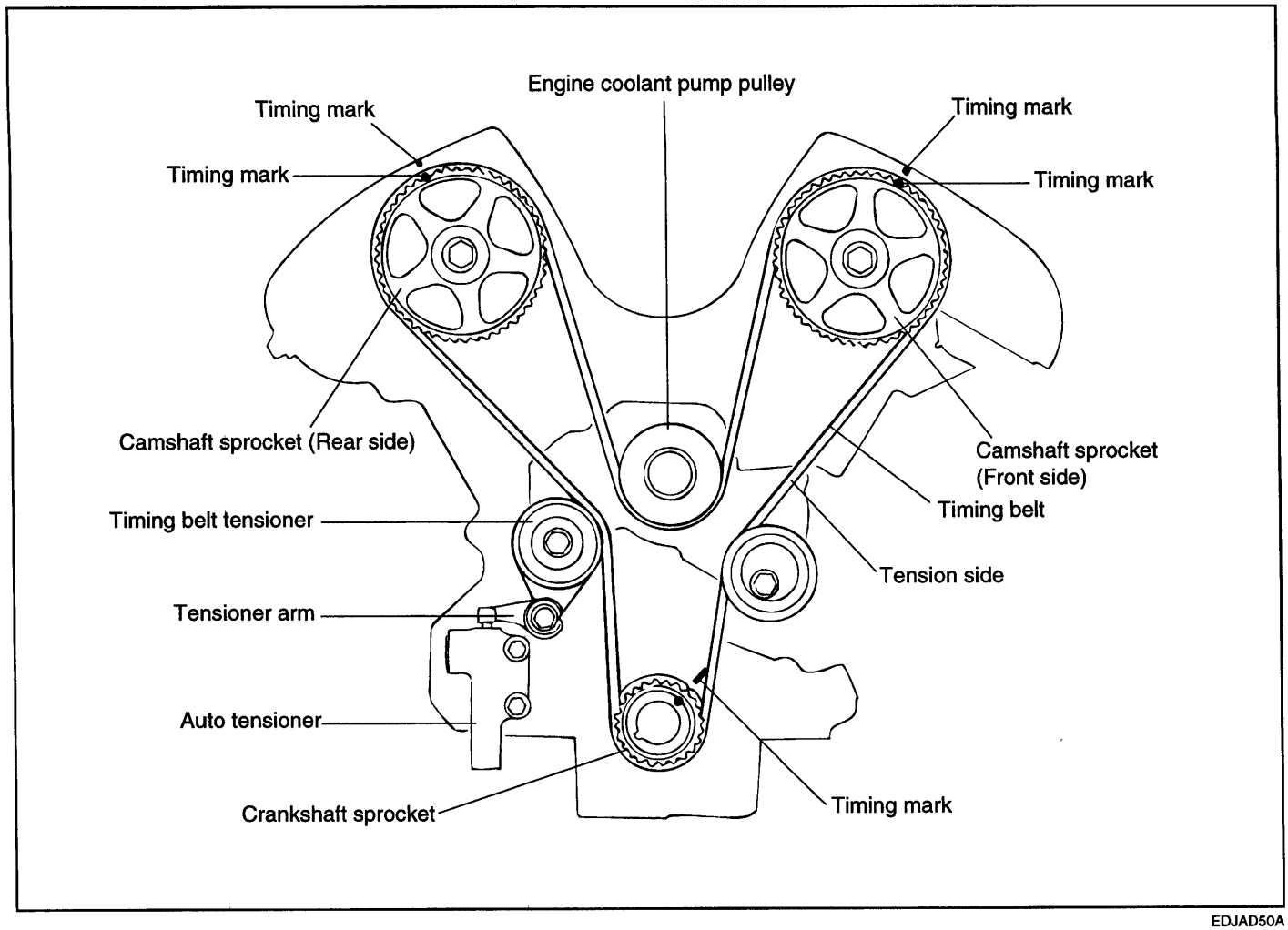

EDJAD50A

INSTALLATION EDJAB100

1. Install the idler pulley to water pump boss.

NOTE

Insert and install the idler pulley to the roll pin that is pressed in the water pump boss.

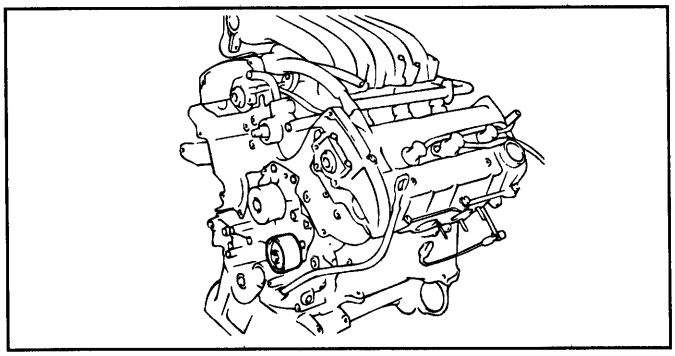

EDA9028A

2. Install the tensioner arm and plain washer to the cylinder block.
3. Install the tensioner pulley to the tensioner arm.
4. Install the camshaft sprockets and align the timing marks.

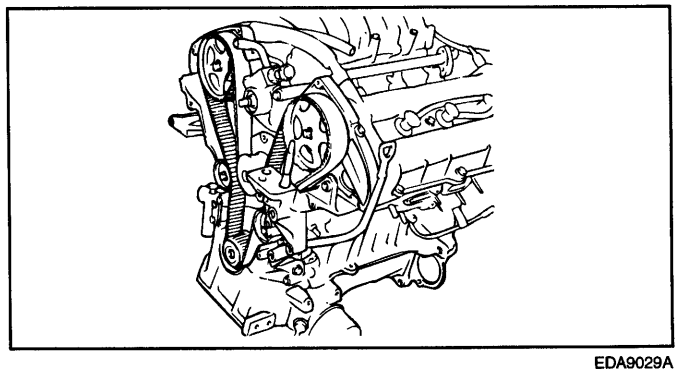

EDA9029A

NOTE

- **When installing the camshaft sprockets, fasten them tightly while holding the hexagonal part of the camshaft.**

- **Before installing the timing belt, if the timing marks of the cam sprocket and the cylinder head cover do not coincide, do not rotate the cam sprocket more than 3 teeth in either direction.**
- **Rotating the sprocket more than 3 teeth may allow the valve and piston to touch each other.**
- **If the cam sprocket is rotated more than 3 teeth unavoidably, rotate the crankshaft counter - clock wise a bit before rotating the cam sprocket.**

5. Install the auto tensioner to the front case.

NOTE

At this time auto tensioner's set pin should be compressed and secured with set pin.

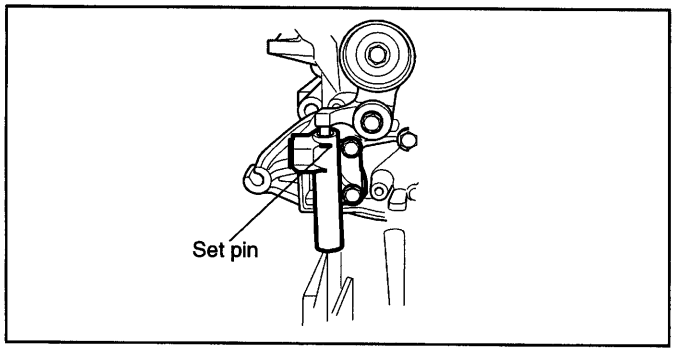

KFW3026C

6. Align the timing marks of each sprocket and install the timing belt in the following order.

   Crankshaft sprocket ⇒ Idler pulley ⇒ camshaft sprocket (LH side) ⇒ Water pump pulley ⇒ camshaft sprocket (RH side) ⇒ Tensioner pulley.

NOTE

- **In this step, No. 1 cylinder is in the TDC (Compression stroke).**
- **Be very careful if you use your fingers.**

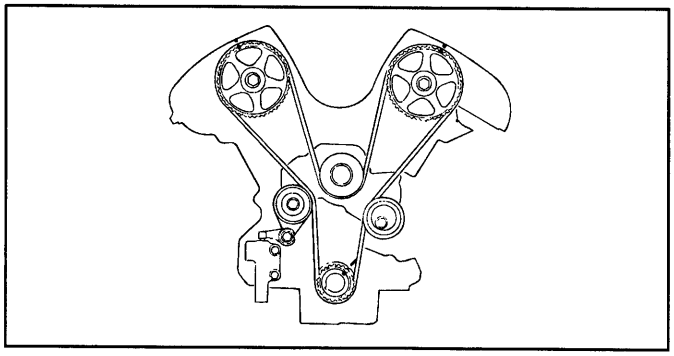

EDJAD90A

7. Pull out the set pin of the auto tensioner.

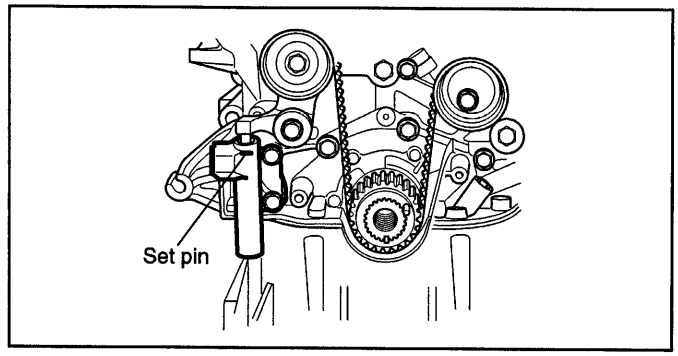

KFW3026A

8. Install the upper and lower timing belt covers.
9. Install the power steering pump pulley, idler pulley, tensioner pulley and crankshaft pulley.
10. Using the wrench [16mm], rotate the tensioner arm clockwise (about 14°) and install the belt to the pulley.
11. Install the engine cover.

HOW TO ADJUST THE TENSION OF THE TIMING BELT

1. Rotate the crankshaft 2 turns clockwise and measure the projected length of the auto tensioner at TDC (# 1 Compression stroke) after 5 minutes.
2. The projected length should be 6-8 mm.
3. Verify that the timing marks of each sprocket are in their specified position.

NOTE

If the timing marks are not in their specified position, repeat from 6 above.

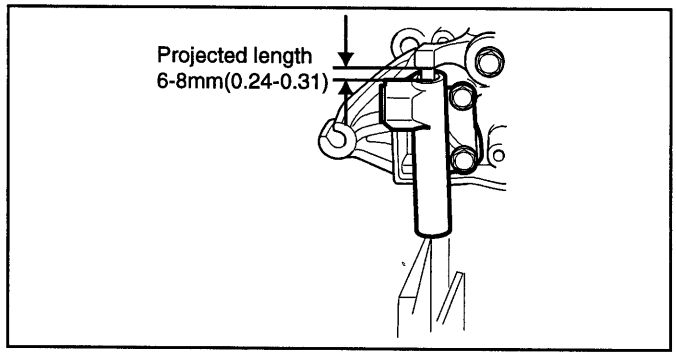

KFW3026B

Engine Electrical System

GENERAL ..... EE -2

IGNITION SYSTEM ..... EE -10

IGNITION SYSTEM (I4) ..... EE -11

IGNITION SYSTEM (V6) ..... EE -14

CHARGING SYSTEM (I4 AND V6) ..... EE -17

STARTING SYSTEM ..... EE -37

CRUISE CONTROL SYSTEM ..... EE -45

GENERAL

SPECIFICATIONS EBJB0010

IGNITION

	2.4 I4 Engine	2.7 V6 Engine
Type	Molded coil	Molded coil
Primary coil resistance	0.86 ± 0.09 (Ω)	0.74 ± 10% (Ω)
Secondary coil resistance	12.1 ± 1.8 (KΩ)	13.3 ± 15% (KΩ)

SPARK PLUG

	2.4 I4	2.7 V6
Type	PGR5C-11	PFR5N-11
Champion	RN10PYP4	RC10PYP4
Plug gap	1.0-1.1 mm (0.039-0.043 in.)	

STARTER MOTOR

	All Engines
Type	Reduction drive (with planetary gear)
Voltage	12V
Output	1.2 KW
No-load characteristics	
Terminal voltage	11V
Amperage	90A or below
Speed	2,800 RPM
Number of pinion teeth	8
Pinion gap	0.5-2.0 mm (0.0197-0.079 in.)

GENERATOR

	All Engines
Type	Battery voltage sensing
Rated output	13.5V / 95A
Voltage regulator type	Electronic built-in
Regulator setting voltage	14.4 ± 0.3 V
Temperature compensated	-10 ± 3 mV/°C

BATTERY

	2.4 I4 Engine	2.7 V6 Engine
Type	MF60AH	MF 68 AH
Ampere hours		
5HR	48 AH or more	55 AH or more
Cold cranking [at -17.8°C (0°F)]	550 A or more	540 AH or more
Reserve capacity	92 min.	122 min.
Specific gravity [at 25°C (77°F)]	1.280 ± 0.01	1.280 ± 0.01

NOTE

COLD CRANKING AMPERAGE is the amperage a battery can deliver for 30 seconds and maintain a terminal voltage of 7.2 or greater at a specified temperature. RESERVE CAPACITY RATING is the amount of time a battery can deliver 25A and maintain a minimum terminal voltage of 10.5 at 26.7°C (80°F).

CRUISE CONTROL SYSTEM

Speed control module	
Operating voltage range	DC 10 - 16V
Operating temperature	-30 - +75°C (-22 - +167°F)
Voltage drop between unit and actuator	0.4V
Operating speed range	Low speed limit : 40 ± 3 km/h (25 ± 2 mph)
	High speed limit : 145 ± 5 km/h (90 ± 3 mph)
Actuator	
Rated voltage	DC 12V
Operating temperature	-30 - +90°C (-22 - +194°F)
Operating consumption	3A or less (at 12V 20°C)
Insulating resistance	1MΩ or less (at 500V)
Cruise main switch	
Rated voltage	DC 12V
Operating force	0.3 - 1.0 kg
Voltage drop	0.15 V or less
Stop lamp switch	
Rated voltage	DC 12V
Rated load	
Stop lamp	27 x 5W (lamp load)
Cruise control	0.1 - 0.5A (relay load)
Insulating resistance	Min 3 MΩ (by 500V)

TIGHTENING TORQUE

Items	Nm	Kg·cm	lb·ft
Generator terminal (B+)	5-7	50-70	3.6-5.1
Starter motor terminal (B+)	10-12	100-120	7.3-8.8
Battery terminal	4-6	40-60	2.9-4.3
Spark plug	20-30	200-300	15-22

TROUBLESHOOTING EBJB0030

IGNITION SYSTEM

Trouble symptom	Probable cause	Remedy
Engine will not start or is hard to start (Cranks OK)	Ignition lock switch faulty	Replace ignition lock switch
	Ignition coil faulty	Inspect ignition coil
	Power transistor faulty	Inspect power transistor
	Spark plugs faulty	Replace plugs
	Ignition wiring disconnected or broken	Inspect wiring
	Spark plugs faulty	Replace plugs
Rough idle or stalls	Ignition wiring faulty	Inspect wiring
	Ignition coil faulty	Replace ignition coil
	Spark plug cable faulty	Replace spark plug cable
Engine hesitates/poor acceleration	Spark plugs faulty	Replace plugs
	Ignition wiring faulty	Inspect ignition coil and wires
Poor mileage	Spark plugs faulty	Replace plugs

CHARGING SYSTEM

Trouble symptom	Probable cause	Remedy
Charging warning indicator does not light with ignition switch "ON" and engine off	Fuse blown	Check fuses
	Light burned out	Replace light
	Wiring connection loose	Tighten loose connections
	Electronic voltage regulator faulty	Replace voltage regulator
Charging warning indicator does not go out with engine running (Battery requires frequent recharging)	Drive belt loose or worn	Adjust tension or replace drive belt
	Battery cables loose, corroded or worn	Repair or replace cables
	Fuse blown	Check fuses
	Fusible link blown	Replace fusible link
	Electronic voltage regulator or generator faulty	Test generator
	Wiring faulty	Repair wiring

Trouble symptom	Probable cause	Remedy
Engine hesitates/poor acceleration Overcharge	Drive belt loose or worn	Adjust tension or replace drive belt
	Wiring connection loose or open circuit	Tighten loose connection or repair wiring
	Fusible link blown	Replace fusible link
	Poor grounding	Repair
	Electronic voltage regulator or generator faulty	Test generator, if faulty, repair or replace.
	Faulty battery	Replace battery
	Electronic voltage regulator faulty	Replace voltage regulator
	Voltage sensing wire faulty	Repair wire

STARTING SYSTEM

Trouble symptom	Probable cause	Remedy
Engine will not crank	Battery discharged	Charge or replace battery
	Battery cables loose, corroded or worn out	Repair or replace cables
	Transaxle range switch faulty (Vehicle with automatic transaxle only)	Adjust or replace switch
	Fusible link blown	Replace fusible link
	Starter motor faulty	Repair starter motor
	Ignition switch faulty	Replace ignition switch
	Ignition lock switch faulty	Replace ignition lock switch
Engine cranks slowly	Battery discharged	Charge or replace battery
	Battery cables loose, corroded or worn out	Repair or replace cables
	Starter motor faulty	Repair starter motor
Starter keeps running	Starter motor faulty	Repair starter motor
	Ignition switch faulty	Replace ignition switch
Starter spins but engine will not crank	Short in wiring	Repair wiring
	Pinion gear teeth broken or starter motor faulty	Repair starter motor
	Ring gear teeth broken	Replace flywheel ring gear or torque converter

CRUISE CONTROL SYSTEM PRE-TROUBLESHOOTING

PRE-TROUBLESHOOTING

Before starting troubleshooting, inspect each of the following sections, and if there is an abnormality, carry out a repair.

1. Check if the installation and connection routes of the cables and vacuum hoses of the cruise vacuum pump assembly, actuator and pulley assembly are all normal.
2. Check if the pulley assembly and the movement of cables are working smoothly.
3. Check if there is excessive play or tension in each cable.

TROUBLESHOOTING PROCEDURES

First, select the applicable malfunction symptom from the "TROUBLE SYMPTOM CHARTS" shown on the next pages. Determine the condition of all circuits.

1. Make the following preliminary inspections :
   - Check that the installation of the actuator and accelerator cable are correct, and that the cables and links are securely connected.
   - Check that the accelerator pedal moves smoothly.
   - Adjust the cable so there is no excessive tension or excessive play on the accelerator cable.
   - Check that the actuator and unit assembly, cruise main, control switch and the connector of each cancel switch are all connected securely.
2. Check in the sequence indicated in the "TROUBLE SYMPTOM CHARTS".
3. If all components test good, replace the cruise control module.

TROUBLE SYMPTOM CHARTS

TROUBLE SYMPTOM 1

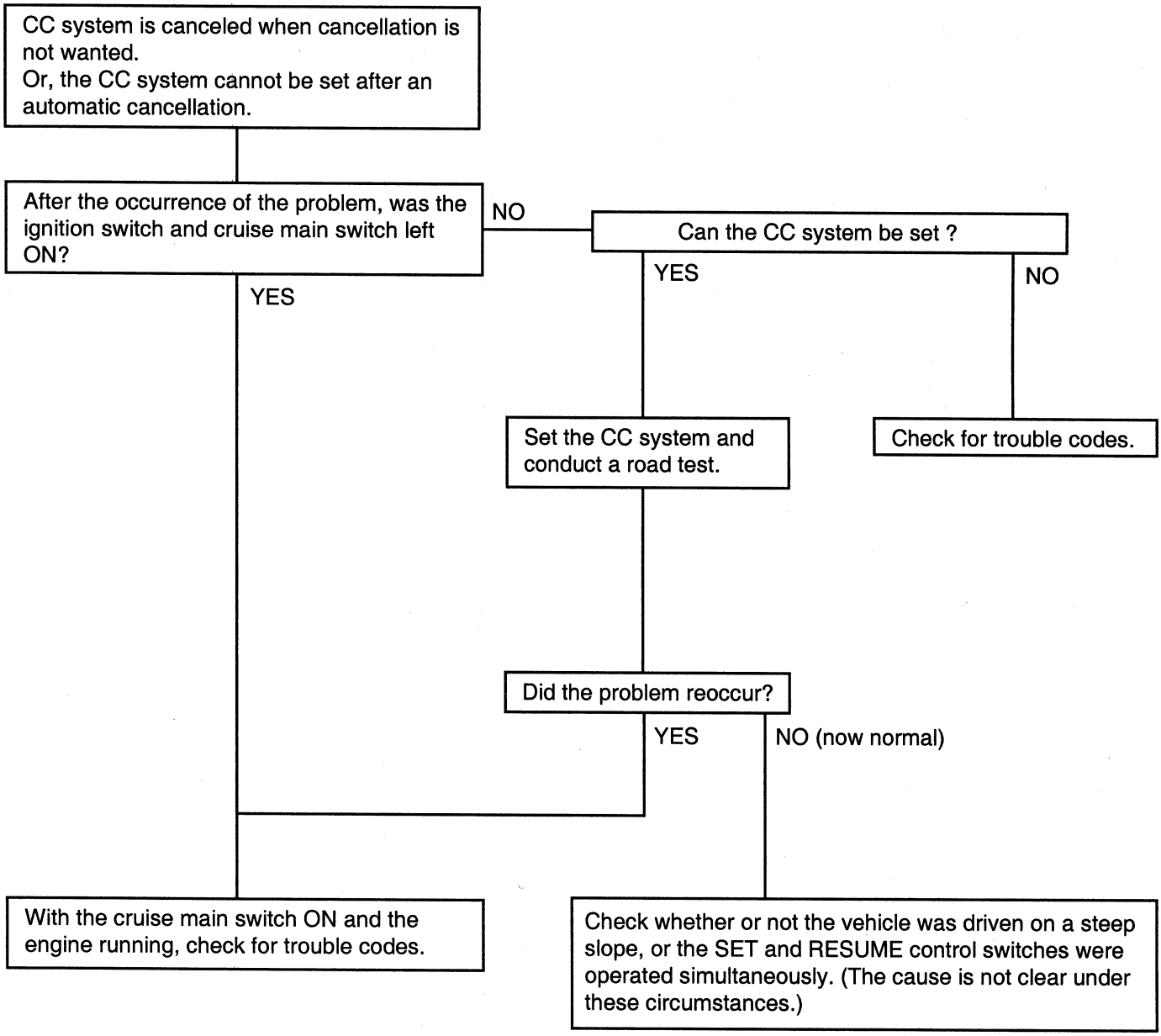

CC : Cruise Control

EBA9003A

TROUBLE SYMPTOM 2

Trouble symptom	Probable cause	Remedy
The set vehicle speed varies greatly upward or downward "Surging" (repeated alternating acceleration and deceleration) occurs after setting	Malfunction of the vehicle speed sensor circuit	Repair the vehicle speed sensor system, or replace the unit
	Malfunction of the speedometer cable or speedometer drive gear	
	Cruise vacuum pump circuit poor contact	Repair the actuator system, or replace the part
	Malfunction of the acutator and unit	Replace the actuator and unit

TROUBLE SYMPTOM 3

Trouble symptom	Probable cause	Remedy
The CC system is not canceled when the brake pedal is depressed	Damaged or disconnected wiring to the stop lamp switch	Repair the harness or replace the stop lamp switch
	Cruise vacuum pump drive circuit short-circuit	Repair the harness or replace the vacuum pump
	Malfunction of the actuator and unit	Replace the actuator and unit

TROUBLE SYMPTOM 4

Trouble symptom	Probable cause	Remedy
The CC system is not canceled when the shift lever is moved to the "N" position (It is canceled, however, when the brake pedal is depressed)	Damaged or disconnected wiring of inhibitor switch input circuit	Repair the harness or repair or replace the inhibitor switch
	Improper adjustment of inhibitor switch	
	Malfunction of the actuator and unit	Replace the actuator and unit

TROUBLE SYMPTOM 5

Trouble symptom	Probable cause	Remedy
Cannot decelerate (coast) using the SET switch	Temporarily damaged or disconnected wiring of SET switch input circuit	Repair the harness or replace the SET switch
	Actuator circuit poor contact	Repair the harness or replace the actuator
	Malfunction of the actuator	
	Malfunction of the actuator and unit	Replace the actuator and unit

TROUBLE SYMPTOM 6

Trouble symptom	Probable cause	Remedy
Cannot accelerate or resume speed by using the RESUME switch	Damaged or disconnected wiring, short circuit, or faulty RESUME switch	Repair the harness or replace the RESUME switch
	Actuator circuit poor contact	Repair the harness or replace the actuator
	Malfunction of the actuator	
	Malfunction of the actuator and unit	Replace the actuator and unit

TROUBLE SYMPTOM 7

Trouble symptom	Probable cause	Remedy
CC system can be set while driving at a vehicle speed of less than 40km/h (25mph), or there is no automatic cancellation at that speed	Malfunction of the vehicle speed sensor circuit	Repair the vehicle speed sensor system, or replace the part
	Malfunction of the speedometer cable or the speedometer drive gear	
	Malfunction of the actuator and unit	Replace the actuator and unit

TROUBLE SYMPTOM 8

Trouble symptom	Probable cause	Remedy
The cruise main switch indicator lamp does not illuminate (But CC system is normal)	Damaged or disconnected bulb	Repair or replace the harness or replace the bulb.
	Harness damaged or disconnected	

TROUBLE SYMPTOM 9

Trouble symptom	Probable cause	Remedy
Malfunction of control function by ON/OFF switching of idle switch	Malfunction of circuit related to idle switch function	Repair the harness or replace the part
	Malfunction of the actuator and unit	

TROUBLE SYMPTOM 10

Trouble symptom	Probable cause	Remedy
Overdrive is not canceled during cruise	Malfunction of circuit related to overdrive cancelation, or malfunction of actuator and unit	Repair the harness or replace the part
No shift to overdrive during manual driving		

IGNITION SYSTEM

GENERAL INFORMATION EBA90040

Ignition timing is controlled by the Engine control module (ECM). The ignition timing data for the engine operating conditions are programmed in the memory of the ECM.

Engine operating conditions (speed, load, warm-up condition, etc.) are detected by the various sensors. Based upon these sensor signals and the data stored in the ECM, signals to interrupt the primary current are sent to the power transistor. The ignition coil is activated and timing is controlled at the optimum point.

*CKP : Crankshaft Position

*CMP : Camshaft Position

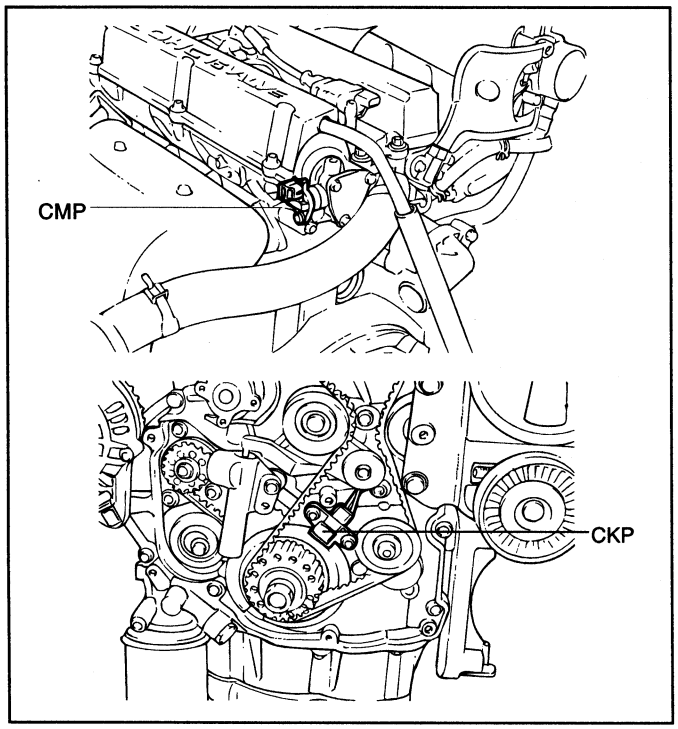

EBA9004A

IGNITION SYSTEM (I4)

IGNITION COIL (2.4 I4 ENGINE : POWER TRANSISTOR BULILT-IN) EBJB0070

1. **Measurement of the primary coil resistance**

   Connect the negative (-) terminal of a 3V power supply to terminal 2 of the power transistor; then check whether there is continuity between terminal 3 and terminal 2 when terminal 1 and the positive (+) terminal are connected and disconnected.

Terminal 3 and (+) terminal	Terminal 1 and (+) terminal 2
Connected	Continuity (Approximately 0.86Ω)
Disconnected	Non continuity

Replace the power transistor if there is malfunction.

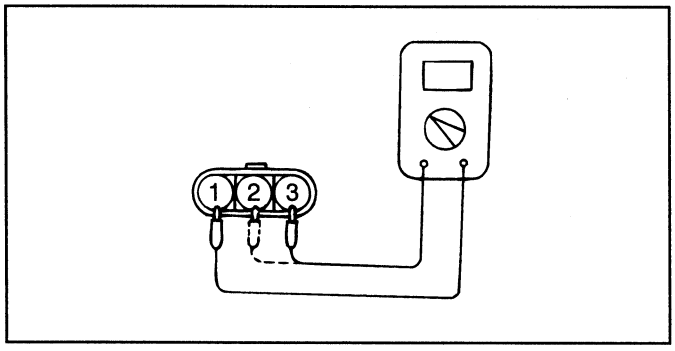

EBHA007A

2. **Measurement of the secondary coil resistance**

   Measure the resistance between the high-voltage terminals of the ignition coil.

   Standard value: Approximately 12.1 kΩ

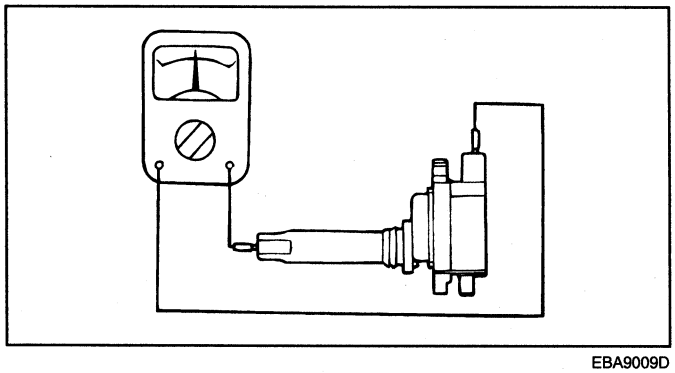

EBA9009D

IGNITION SWITCH EBA90070

REMOVAL AND INSTALLATION

1. Disconnect the negative battery terminal.
2. Remove the air bag module.

CAUTION

The SRS system is designed to retain enough power to deploy air bag for about 30 seconds even after the battery has been disconnected, so serious injury may result from unintended air bag deployment if service is done on the SRS system immediately after the battery cable is disconnected.

3. Romove the self-tapping screw and lift up horn pad and remove.
4. Remove the lock nut and the washer.
5. Pulling the dynamic damper forward, lift it up and remove it.

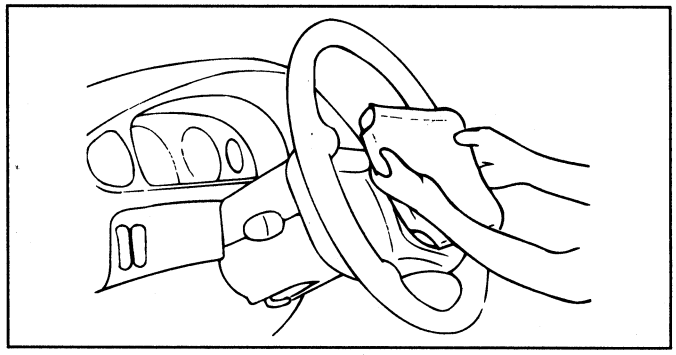

EBA9010A

6. Install the special tool (09561–11001) and remove the steering wheel.

CAUTION

Do not hammer on the steering wheel to remove it.

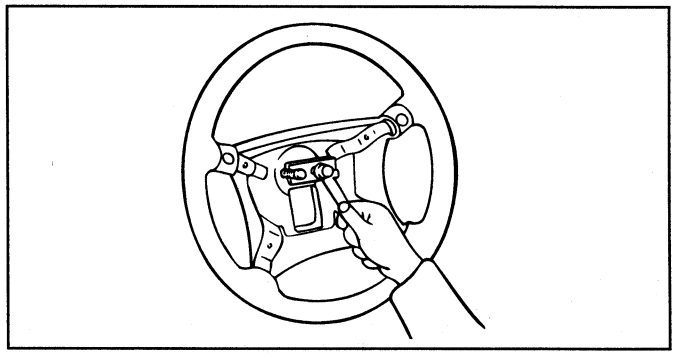

EBA9010B

7. Remove the steering column lower and upper shrouds.

8. Remove the lower cover.

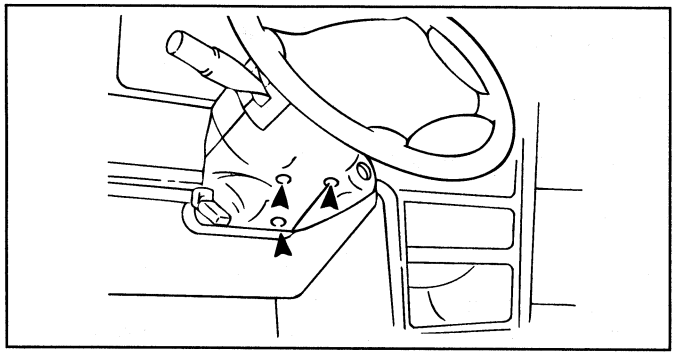

EBA9010C

9. Disconnect the connectors and remove the multi-function switch.

10. Remove the mounting bolts and separate the ignition switch from steering column.

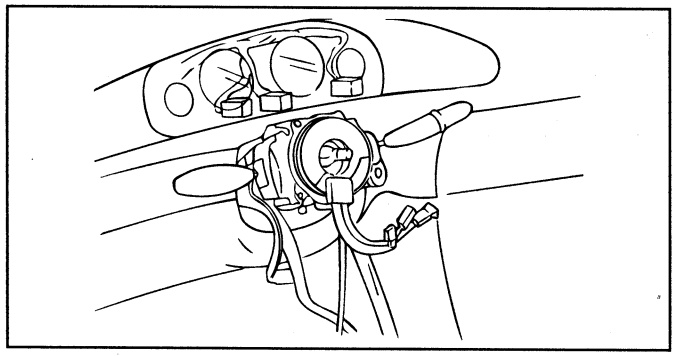

EBA9010D

INSPECTION EBHA0080

1. Separate the connector located under the steering column.
2. Inspect the switch continuity between the terminals.
3. If continuity is not as specified, replace the switch.

Position \ Terminal / Key		Ignition switch 6	5	4	3	2	1	Door warning switch and key illumination 4	3	2	1	Lock RO	RE
LOCK	Removed									O—O		L	L
	Inserted											L	F
ACC				O	—	—	O					F	F
ON1			O	—	O	—	O					F	F
START					O	—	O					F	F
ON2			O	—	—	—	O					F	F

NOTE

O—O indicates that there is continuity between the terminal.

RO : Round the locking bar
RE : Return the locking bar
L : Lock
F : Free

EBHA080A

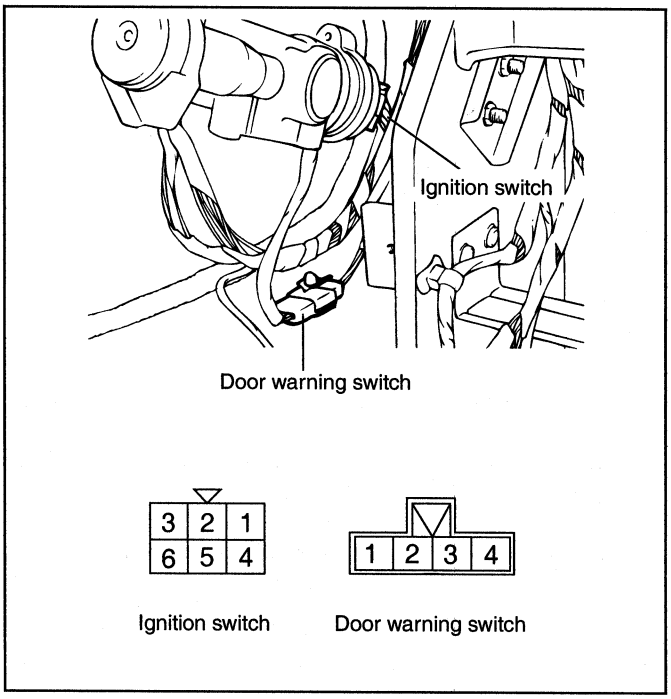

EBHA080B

HINTS

If the engine will not crank, determine whether the condition exists with the transaxle range switch in the "PARK" or in the "NEUTRAL" position.

If the "NO-CRANK" condition occurs in one shift lever position but not the other, a more probable cause is a misadjusted or faulty transaxle range switch.

SPARK PLUG TEST EBHA0090

1. Remove the spark plug and reconnect it to the spark plug cable.
2. Ground the spark plug outer electrode and crank the engine.
3. Verify that there is an electrical discharge between the electrodes.

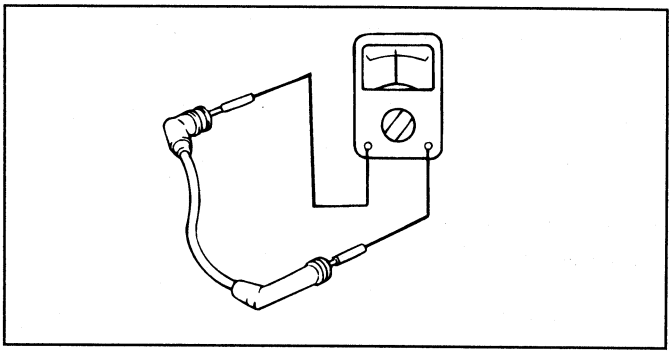

EBA9009G

CAUTION

When replacing the spark plug, use a resistor type.

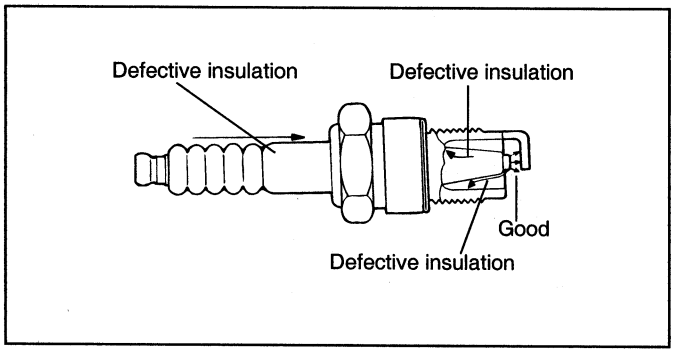

EBA9009F

SPARK PLUG CABLES TEST

1. Disconnect one at a time each of the spark plug cables while the engine is idling to check whether the engine's running performance changes or not.
2. Spray a fine mist of water on the secondary wires to observe any flashover.

CAUTION

Wear rubber gloves while operating.

3. If the engine performance does not change, check the resistance of the spark plug, and check the spark plug itself.
4. Check the cap and outer shell for cracks.
5. Measure the resistance.

FOR 2.7 LITER ENGINE

Spark plug cable (KΩ)					
No. 1	No. 2	No. 3	No. 4	No. 5	No. 6
4.39 ~6.59	2.28 ~ 3.43	3.49 ~5.24	1.9 ~2.86	3.25 ~ 4.87	1.3 ~ 1.95

NOTE

Resistance should not be higher than 10,000Ω-per foot of cable. If resistance is higher, replace the cable.

IGNITION SYSTEM (V6)

INSTALLATION OF SPARK PLUG CABLE (V6 2.7 LITER ENGINE) EBHA0100

Improper arrangement of spark plug cables will induce flashoverbetween the cables, causing misfiring and surging at acceleration in high-speed operations.

Therefore, be careful to arrange the spark plug cables properly as shown in the illustration.

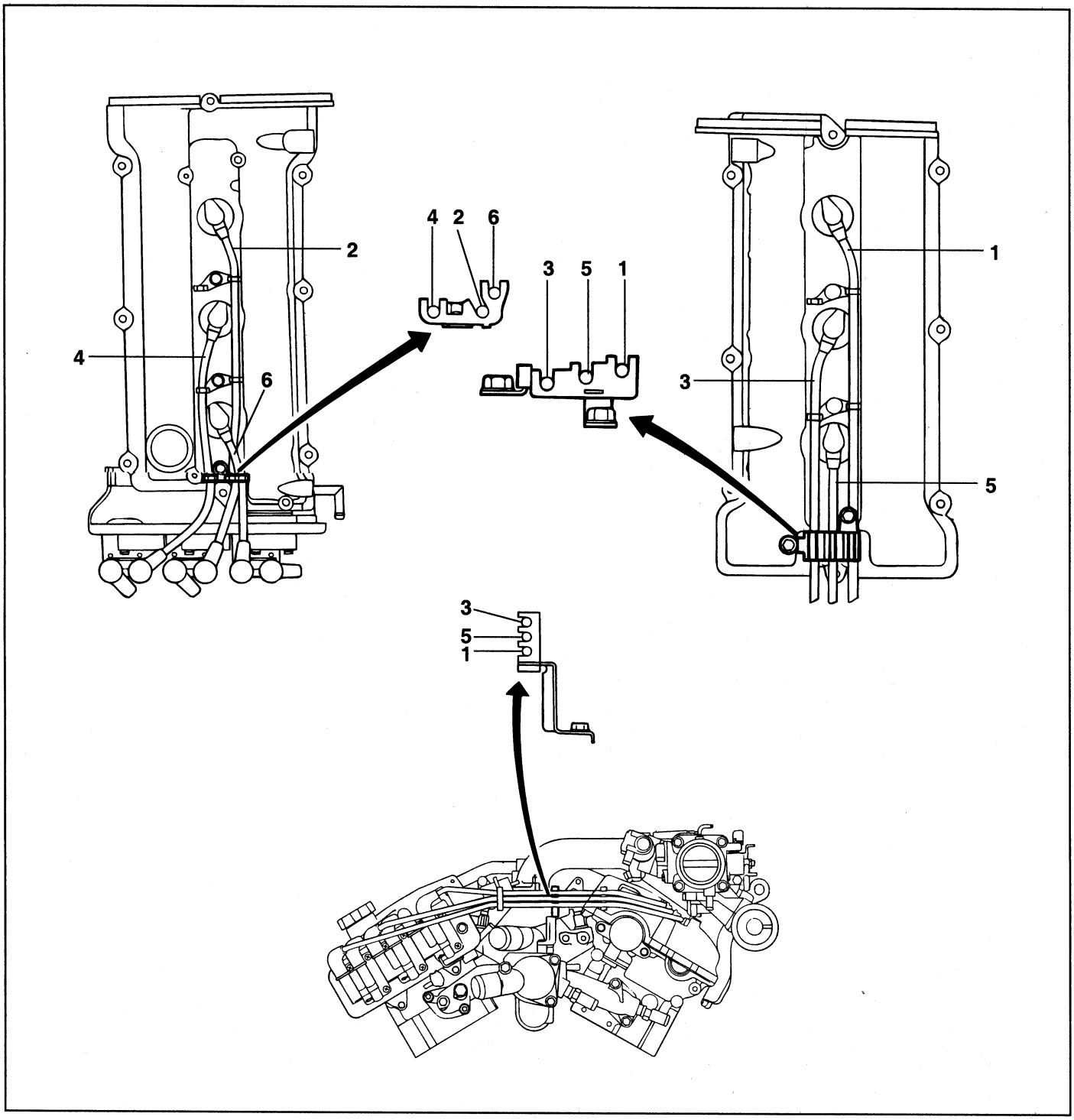

EBA9010E

IGNITION COIL (2.7L V6 ENGINE) EBHA0060

1. **Measurement of the primary coil resistance**

   Measure the resistance between connector terminals 1 and 2 (the coils at the No. 3 and No. 6 cylinder sides) of the ignition coil, and between terminals 2 and 4 (the coils at the No. 1 and No. 4 cylinder sides), and between terminals 2 and 3 (the coils at the No.2 and No.5 cylinder sides).

   Standard value : 0.74 ± 10% (Ω)

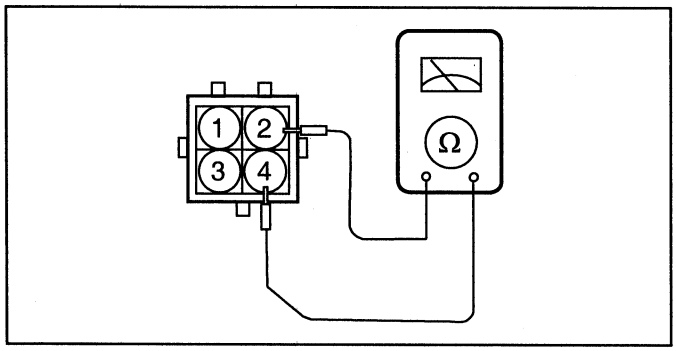

EBHA006A

2. **Measurement of the secondary coil resistance**

   Measure the resistance between the high-voltage terminal for the No. 3 and No. 6 cylinders, between the high-voltage terminals for the No. 1 and No. 4 cylinders and between the high-voltage terminals for the No.2 and No.5 cylinders.

   Standard value : 13.3 ± 15% (KΩ)

CAUTION

When measuring the resistance of the secondary coil, be sure to disconnect the connector of the ignition coil.

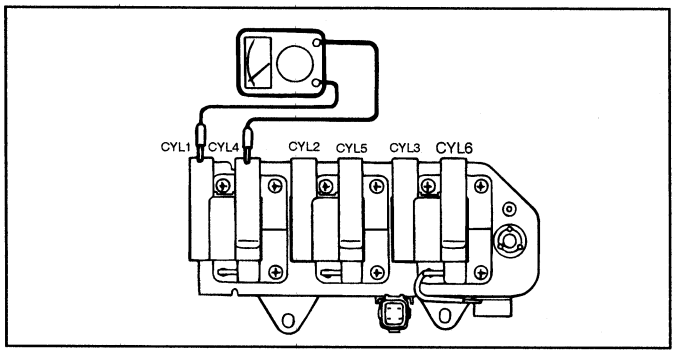

EBA9009B

INSPECTION AND CLEANING EBHA0110

1. Disconnect the spark plug cable from the spark plug.

NOTE

Pull on the spark plug cable boot when removing the spark plug cable, not the cable, as it may be damaged.

2. Using the spark plug wrench, remove all of the spark plugs from the cylinder head.

NOTE

Take care not to allow contaminants to enter through the spark plug holes.

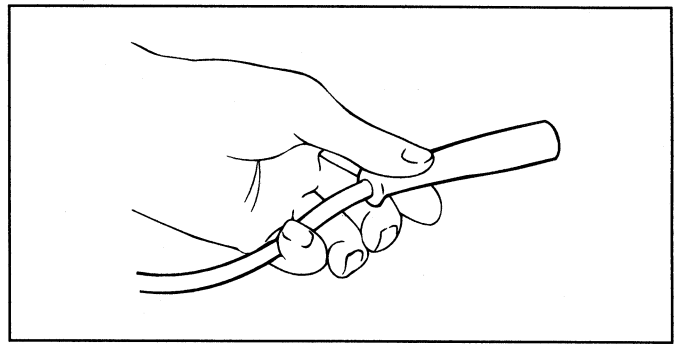

EBA9015A

3. Check the spark plugs for the following:
   1) Broken insulator
   2) Worn electrode
   3) Carbon deposits
   4) Damaged or broken gasket
   5) Condition of the porcelain insulator at the tip of the spark plug (carbon tracking)

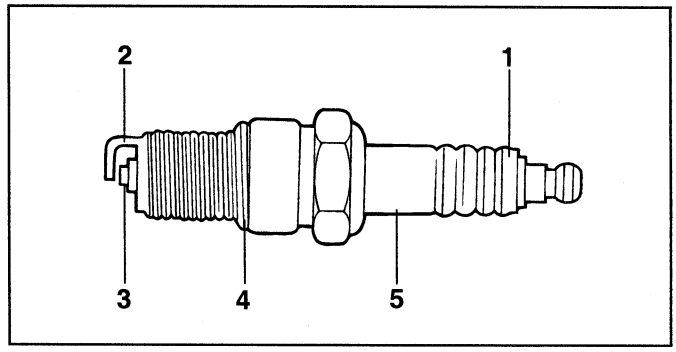

EBA9015B

4. Check the spark plug gap using a wire gap gauge, and adjust if necessary.

Standard value

Spark plug gap : 1.0-1.1 mm (0.039-0.043 in.)

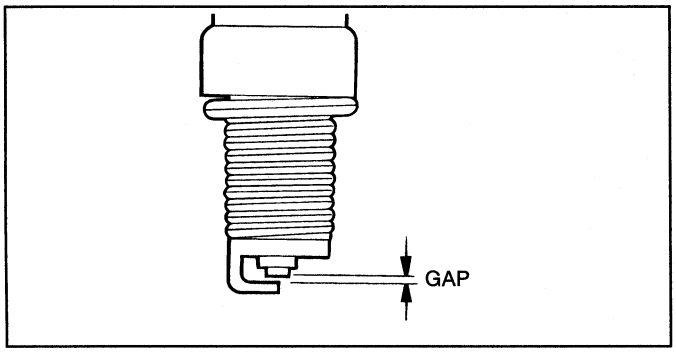

EBA9015C

5. Re-insert the spark plug and tighten to the specified torque. If it is overtorqued, damage to the threaded portion of cylinder head may result.

Tightening torque

Spark plug : 20-30Nm (200-300kg·cm, 15-22 lb·ft)

NOTE

When replacing the spark plug, use resistance plugs.

CHARGING SYSTEM (I4 AND V6)

GENERAL INFORMATION EBA90120

The charging system includes a battery, generator with a built-in regulator, the charging indicator light and connecting wiring. The generator has six built-in diodes (three positive and three negative), each rectifying AC current to DC current. Therefore, DC current appears at generator "B" terminal.

In addition, the charging voltage of the generator is regulated by the battery voltage detection system. The main components of the generator are the rotor, stator, rectifier, capacitor brushes, bearings and V-ribbed belt pulley. The brush holder contains a built-in electronic voltage regulator.

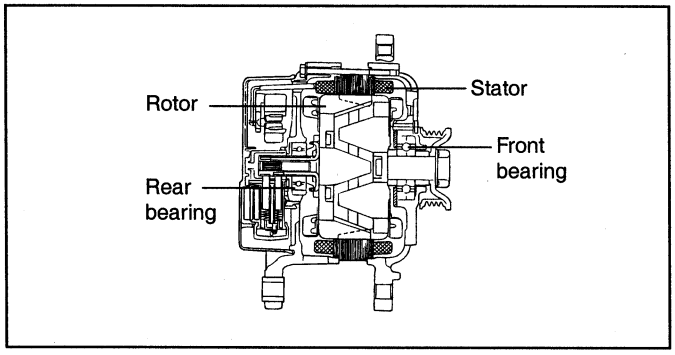

EBA9130A

INSPECTION EBJB0130

VOLTAGE DROP TEST OF GENERATOR OUTPUT

This test determines whether or not the wiring between the generator "B" terminal and the battery (+) terminal is good using the voltage drop method.

PREPARATION

1. Turn the ignition switch to "OFF".

NOTE

To identify any abnormal conditions test the two terminals and each connection before making any repairs.

2. Connect a digital voltmeter between the generator "B" terminal and battery (+) lead wire at the battery. Connect the (+) lead wire of the voltmeter to the "B" terminal and the (-) lead wire to the battery (+) terminal.

[2.4 I4]

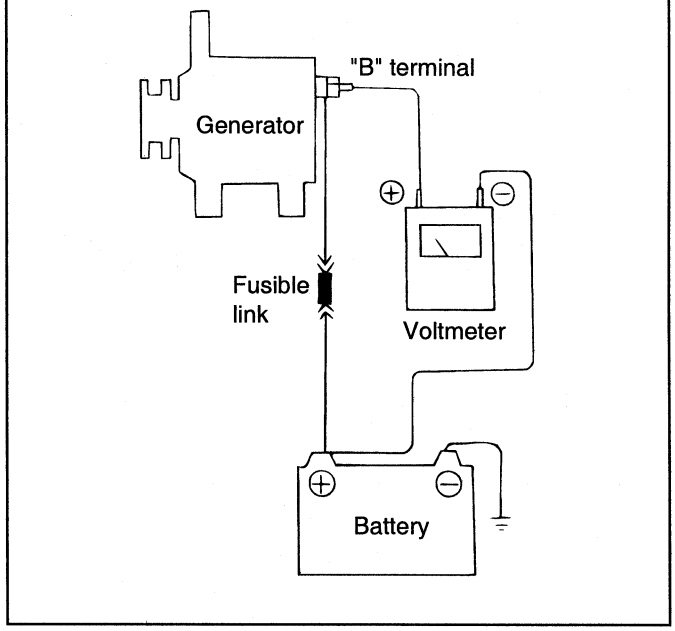

EBJB013A

[2.7 V6]

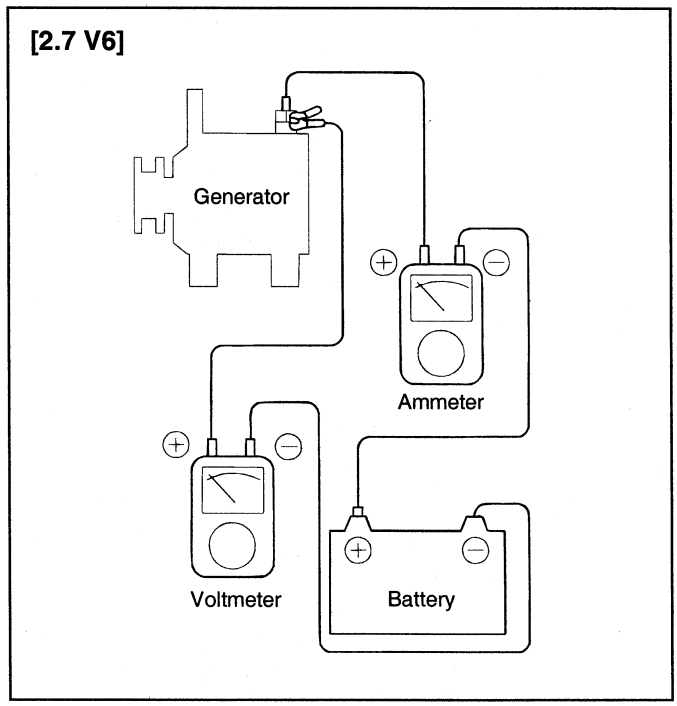

EBHA013B

CONDITIONS FOR THE TEST

1. Start the engine.
2. Switch on the headlamps, blower motor and other accessories. Then, read the voltmeter.

RESULT

1. The voltmeter should indicate the standard value.

   Standard value : 0.2V max.

2. If the value of the voltmeter is higher than expected (above 0.2V max.), poor wiring is suspected. In this case, check the wiring from the generator "B" terminal to the fusible link to the battery (+) terminal. Check for loose connections, color change due to an overheated harness, etc. Correct any conditions before testing again.

3. Upon completion of the test, let the engine idle. Turn off the head lamps, blower motor and the ignition switch.

OUTPUT CURRENT TEST

This test determines whether or not the generator gives the correct output current.

PREPARATION

1. Prior to the test, check the following items and correct as necessary.

    1) Check the battery installed in the vehicle to ensure that it is in good condition. The battery checking method is described in "BATTERY" page EE-33.

The battery that is used to test the output current should be one that has been partially discharged. With a fully charged battery, the test may not be conducted correctly due to an insufficient load.

    2) Check the tension of the generator drive belt. The belt tension check method is described in the section "COOLING".

2. Turn off the ignition switch.

3. Disconnect the battery ground cable.

4. Disconnect the generator output wire from the generator "B" terminal.

5. Connect a DC ammeter (0 to 100A) in series between the "B" terminal and the disconnected output wire. Be sure to connect the (-) lead wire of the ammeter to the disconnected output wire.

NOTE

Tighten each connection securely, as a heavy current will flow. Do not rely on clips.

6. Connect a voltmeter (0 to 20V) between the "B" terminal and ground. Connect the (+) lead wire to the generator "B" terminal and the (-) lead wire to a good ground.

7. Attach an engine tachometer and connect the battery ground cable.

8. Leave the engine hood open.

[2.4 I4]

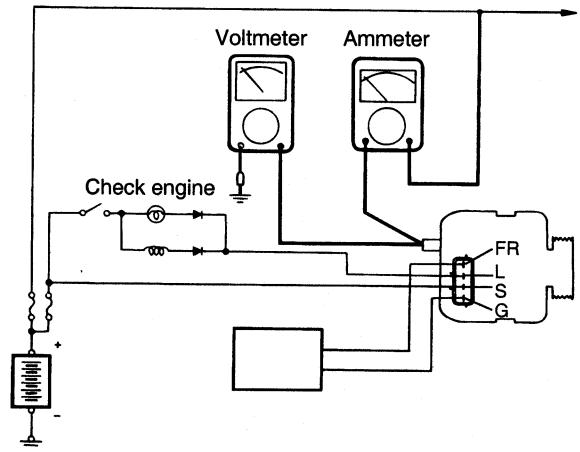

EBJB013B

[2.7 V6]

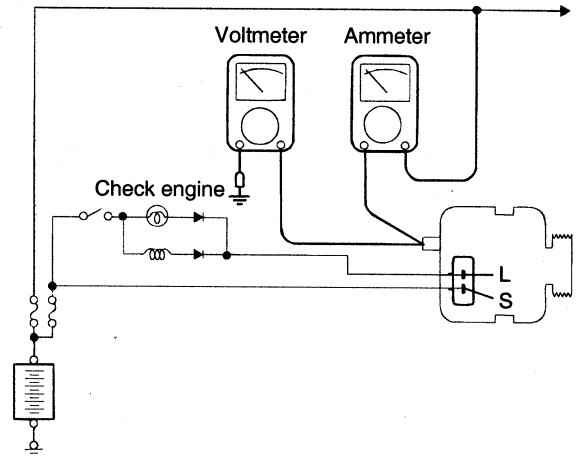

EBHA203B

TEST

1. Check to see that the voltmeter reads the same value as the battery voltage. If the voltmeter reads 0V, there is an open circuit in the wire between the generator "B" terminal and battery (-) terminal. Check for a blown fusible link or poor ground.

2. Start the engine and turn on the headlights.

3. Set the headlights to high beam and the heater blower switch to HIGH. Quickly increase the engine speed to 2,500 rpm and read the maximum output current value indicated by the ammeter.

NOTE

After the engine starts up, the charging current will quickly drop. Therefore, the above operation must be done quickly to read the maximum current value correctly.

RESULT

1. The ammeter reading must be higher than the limit value. If it is lower, but the generator output wire is in good condition, remove the generator from the vehicle and test it.

Limit value (95A generator) : 63A min.

NOTE

- **The nominal output current value is shown on the nameplate affixed to the generator body.**
- **The output current value changes with the electrical load and the temperature of the generator itself. Therefore, the nominal output current may not be obtained. If such is the case, keep the headlights on to discharge the battery.**
  The nominal output current may not be obtained if the temperature of the generator itself or the ambient temperature is too high.
  In such a case, reduce the generator's temperature before testing again.

2. Upon completion of the output current test, lower the engine speed to idle and turn off the ignition switch.
3. Disconnect the battery ground cable.
4. Remove the ammeter, voltmeter and the engine tachometer.
5. Connect the generator output wire to the generator "B" terminal.
6. Connect the battery ground cable.

REGULATED VOLTAGE TEST

The purpose of this test is to check that the electronic voltage regulator controls voltage correctly.

PREPARATION

1. Prior to the test, check the following items and correct if necessary.
   1) Check that the battery installed on the vehicle is fully charged. For battery checking method, see "BATTERY."
   2) Check the generator drive belt tension. For belt tension check, see "COOLING" section.
2. Turn the ignition switch to "OFF."
3. Disconnect the battery ground cable.
4. Connect a digital voltmeter between the "S(L)" terminal of the generator and ground. Connect the (+) lead of the voltmeter to the "S(L)" terminal of the generator. Connect the (-) lead to a good ground or the battery (-) terminal.
5. Disconnect the generator output wire from the generator "B" terminal.
6. Connect a DC ammeter (0 to 100A) in series between the "B" terminal and the disconnected output wire. Connect the (-) lead wire of the ammeter to the disconnected output wire.
7. Attach an engine tachometer and connect the battery ground cable.

[2.4 I4]

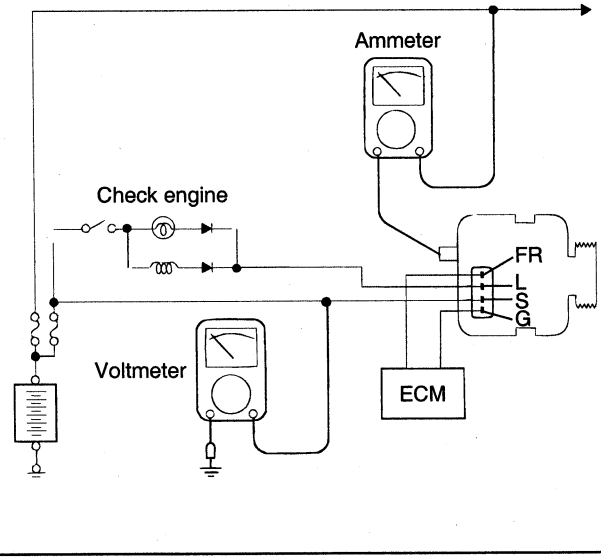

EBJB013C

[2.7 V6]

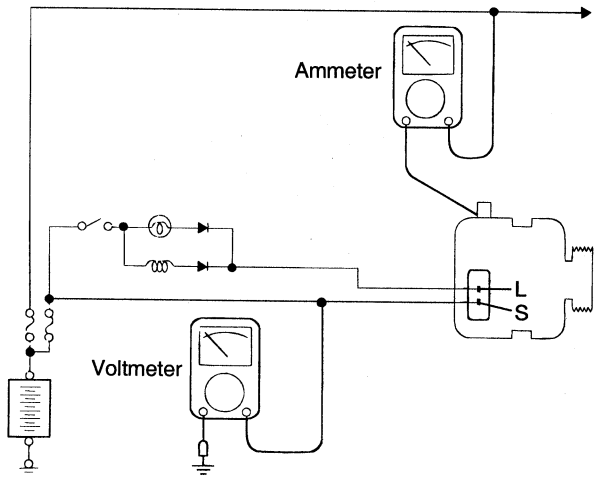

EBHA204B

TEST

1. Turn on the ignition switch and check to see that the voltmeter indicates the following value.

Voltage : Battery voltage

If it reads 0V, there is an open circuit in the wire between the generator "S(L)" terminal and the battery and the battery (+), or the fusible link is blown.

2. Start the engine. Keep all lights and accessories off.
3. Run the engine at a speed of about 2,500 rpm and read the voltmeter when the generator output current drops to 10A or less.

RESULT

1. If the voltmeter reading agrees with the value listed in the Regulating Voltage Table, the voltage regulator is functioning correctly. If the reading is other than the indicated value, the voltage regulator or the generator is faulty.

REGULATING VOLTAGE TABLE

Voltage regulator ambient temperature °C(°F)	Regulating voltage (V)
-20 (-4)	14.2-15.4
20 (68)	13.9-14.9
60 (140)	13.4-14.6
80 (176)	13.1-14.5

2. Upon completion of the test, reduce the engine speed to idle, and turn off the ignition switch.
3. Disconnect the battery ground cable.
4. Remove the voltmeter, ammeter and the engine tachometer.
5. Connect the generator output wire to the generator "B" terminal.
6. Connect the battery ground cable.

GENERATOR OUTPUT LINE VOLTAGE DROP TEST EBA90140

This test determines the condition of the wiring from the generator "B" terminal to the battery (+) terminal (including the fusible link).

1. Be sure to check the following before testing:
   - Generator installation and wiring connections
   - Generator drive belt tension
   - Fusible link
   - Abnormal noises from the generator while the engine is running.
2. Turn the ignition switch to the OFF position.
3. Disconnect the negative battery cable.
4. Disconnect the generator output wire from the generator "B" terminal. Connect a DC test ammeter with a range of 0-100A in series between the "B" terminal and the disconnected output wire. (Connect the (+) lead of the ammeter to the "B" terminal. Connect the (-) lead of the ammeter to the disconnected output wire.)

NOTE

An inductive-type ammeter which enables measurements to be taken without disconnecting the generator output wire is recommended. Using this equipment will lessen the possibility of a voltage drop caused by a loose "B" terminal connection.

5. Connect a digital-type voltmeter between the generator "B" terminal and the battery (+) terminal. (Connect the (+) lead of the voltmeter to the "B" terminal. Connect the (-) lead of the voltmeter to the battery (+) cable.)
6. Reconnect the negative battery cable.
7. Connect a tachometer or the scan tool.
8. Start the engine.
9. With the engine running at approx. 2500 rpm, turn the headlights and other lights on and off to adjust the generator load on the ammeter slightly above 30A.

   Limit: max. 0.3V

NOTE

When the generator output is high and the value displayed on the ammeter does not decrease to 30A, set the value to 40A. Read the value displayed on the voltmeter. In this case the limit becomes max. 0.4V.

10. If the value displayed on the voltmeter is still above the limit, a fault in the generator output wire may exist. Check the wiring between the generator "B" terminal and the battery (+) terminal (including fusible link). If a terminal is not sufficiently tight or if the harness has become discolored due to overheating, repair, then test again.
11. After the test, run the engine at idle.
12. Turn off all lights and turn the ignition switch to the OFF position.
13. Disconnect the tachometer or the scan tool.
14. Disconnect the negative battery cable.
15. Disconnect the ammeter and voltmeter.
16. Connect the generator output wire to the generator "B" terminal.
17. Connect the negative battery cable.

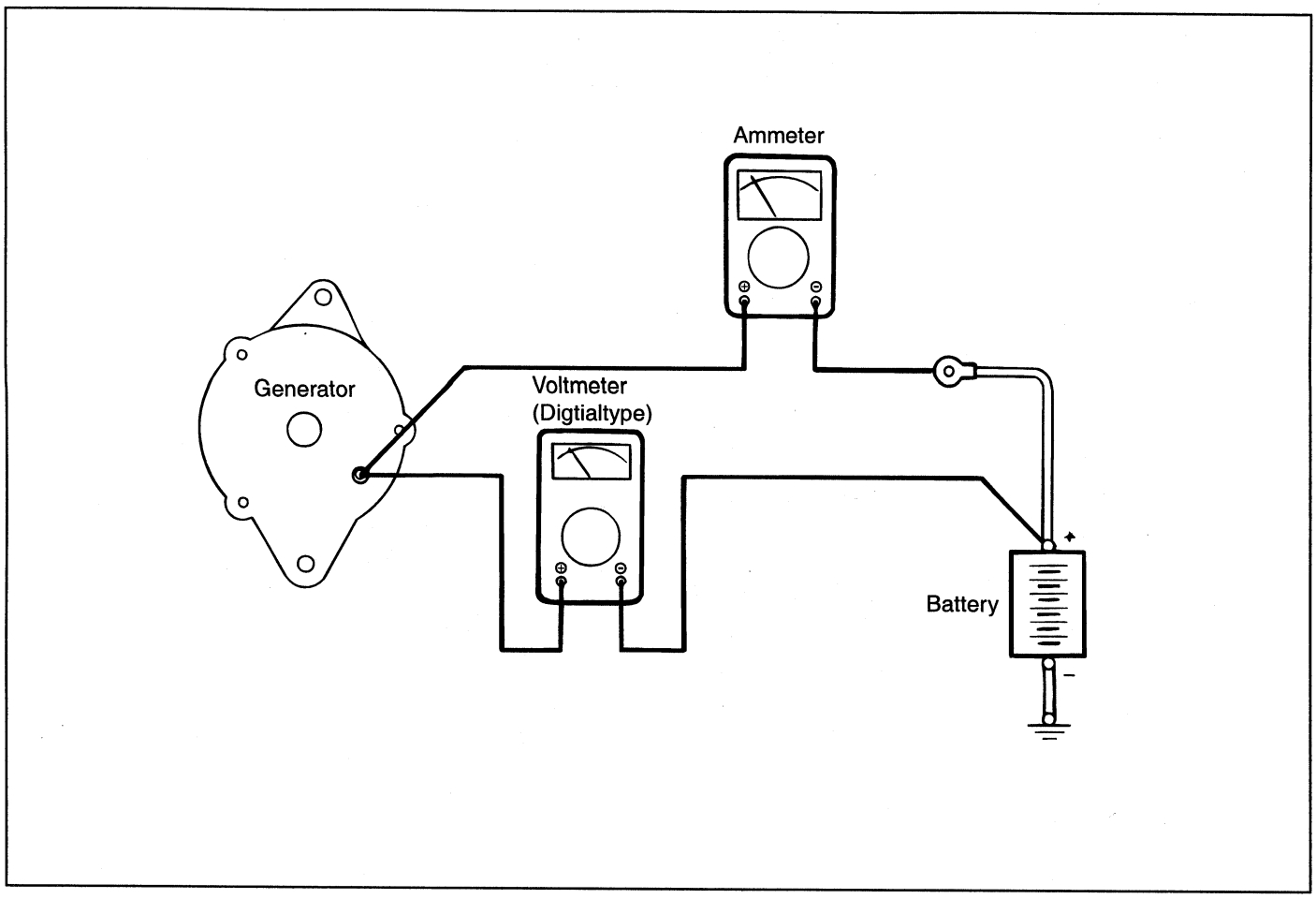

EBA9020C

OUTPUT CURRENT TEST

This test determines if the generator output current is normal.

1. Before testing, be sure to check the following :
   - Generator installation and wiring connections
   - Battery
   - Generator drive belt tension
   - Fusible link
   - Abnormal noise from the generator while the engine is running

NOTE

The battery used should be slightly discharged. The load needed by a fully-charged battery is insufficient for an accurate test.

2. Turn the ignition switch to the OFF position.
3. Disconnect the negative battery cable.
4. Disconnect the generator output wire from the generator "B" terminal. Connect a DC test ammeter with a range of 0-100 A in series between the "B" terminal and the disconnected output wire. (Connect the (+) lead of the ammeter to the "B" terminal. Connect the (-) lead of the ammeter to the disconnected output wire.)

CAUTION

Never use clips. Use bolts and nuts to connect the line. Otherwise, loose connections (e.g. using clips) may lead to a serious accident because of high current.

NOTE

An inductive-type ammeter which enables measurements to be taken without disconnecting the generator output wire is recommended.

5. Connect a voltmeter with a range of 0-20V between the generator "B" terminal and the ground. (Connect the (+) lead of the voltmeter to the "B" terminal, and then connect the (-) lead of the voltmeter to the ground.)
6. Connect the negative battery cable.
7. Connect a tachometer or the scan tool.
8. Leave the hood open.

9. Check that the reading on the voltmeter is equal to battery voltage.

NOTE

If the voltage is 0 V, the cause is probably an open circuit in the wire or fusible link between the generator "B" terminal and the battery (+) terminal.

10. Start the engine, and turn the headlights on.

11. Switch the headlights to high beam, turn the heater blower switch to high, increase the engine speed to approx. 2,500 rpm, and read the maximum current output displayed on the ammeter.

    Limit : 70% of nominal output current

NOTE

- **For the nominal current output, refer to the Generator Specifications page EE-2.**
- **Because the current from the battery will drop soon after the engine is started, steps 10 and 11 should be carried out as quickly as possible in order to obtain the maximum current output value.**
- **The current output value will depend on the electrical load and the temperature of the generator body.**
- **If insufficient electrical load is used while testing, the specified level of current may not be output, even though the generator is normal. In such a case, increase the electrical load by leaving the headlights on with the engine off to discharge the battery before testing.**
- **The specified level of current may not be output if the temperature of the generator body and/or ambient temperature is too high. In such a case, allow the generator to cool before testing.**

12. The reading on the ammeter should be above the limit value. If the reading is below the limit value and the generator output wire is OK, remove the generator from the engine and check the generator.

13. Run the engine at idle speed after the test.

14. Turn the ignition switch to the OFF position.

15. Disconnect the tachometer or the scan tool.

16. Disconnect the negative battery cable.

17. Disconnect the ammeter and voltmeter.

18. Connect the generator output wire to the generator "B" terminal.

19. Connect the negative battery cable.

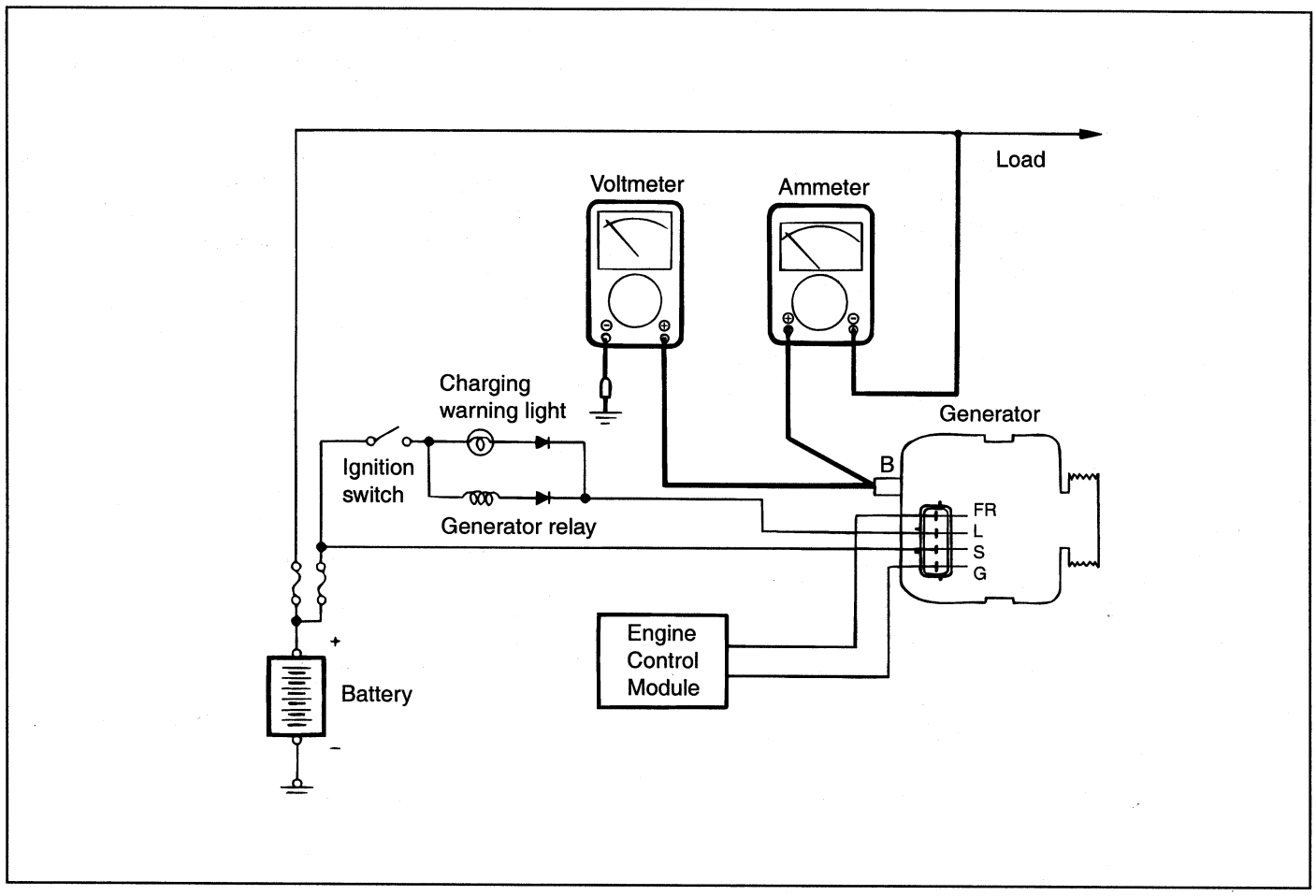

EBA9020B

REGULATED VOLTAGE TEST

This test determines if the voltage regulator is correctly controlling the generator output voltage.

1. Be sure to check the following:
   - Generator installation and wiring connections
   - Battery fully charged
   - Generator drive belt tension
   - Fusible link
   - Abnormal noise from the generator while the engine is running
2. Turn the ignition switch to the OFF position.
3. Disconnect the negative battery cable.
4. Connect a digital-type voltmeter between the generator "S" terminal and the ground. (Connect he (+) lead of the voltmeter to the "S" terminal. Connect the (-) lead of the voltmeter to a secure ground or to the battery (-) terminal.)
5. Disconnect the generator output wire from the generator "B" terminal.
6. Connect a DC test ammeter with a range of 0-100A in series between the "B" terminal and the disconnected output wire.

   (Connect the (+) lead of the ammeter to the "B" terminal. Connect the (-) lead of the ammeter to the disconnected output wire.)
7. Reconnect the negative battery cable.
8. Connect a tachometer or the scan tool. Check that the reading on the voltmeter is equal to the battery voltage.

NOTE

If the voltage is 0 V, the cause is probably an open circuit in the wire or fusible link between the generator "S" terminal and the battery (+) terminal.

9. Make sure all lights and accessories are off.
10. Start the engine.
11. Increase the engine speed to approx. 2,500 rpm.
12. Read the voltmeter when the current output of the generator becomes 10 A or less.

13. If the voltage reading conforms to the value in the voltage regulation table, the voltage regulator is operating normally. If the voltage is not within the standard value, a malfunction of the voltage regulator or of the generator exists.

REMOVAL AND INSTALLATION EBJB0150

[2.4 I4]

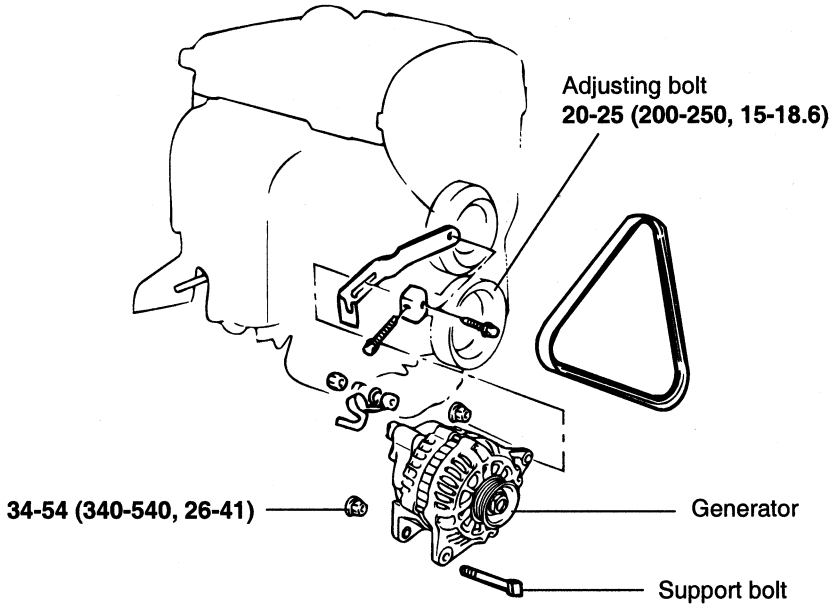

[2.7 V6]

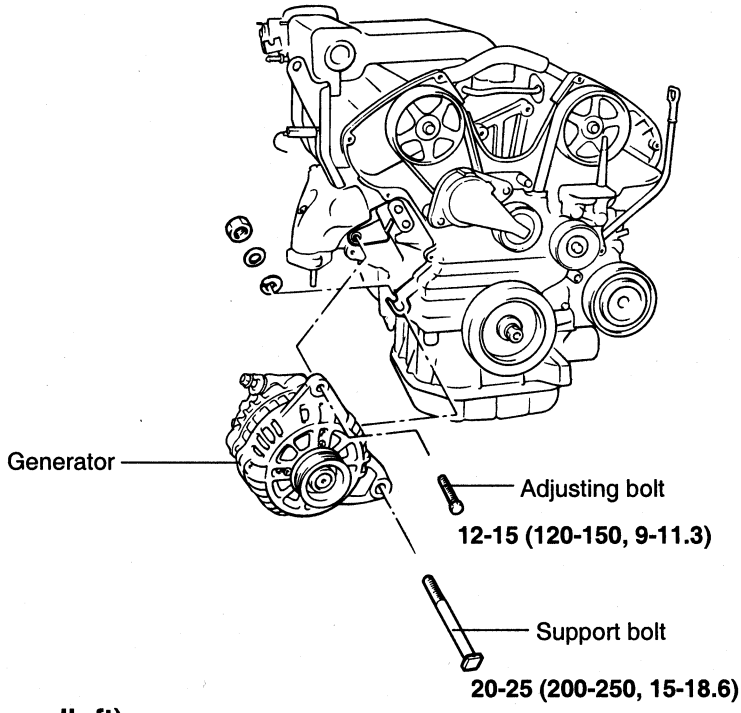

TORQUE : Nm (kg·cm, lb·ft)

EBJB015A

DISASSEMBLY AND REASSEMBLY EBJB0160

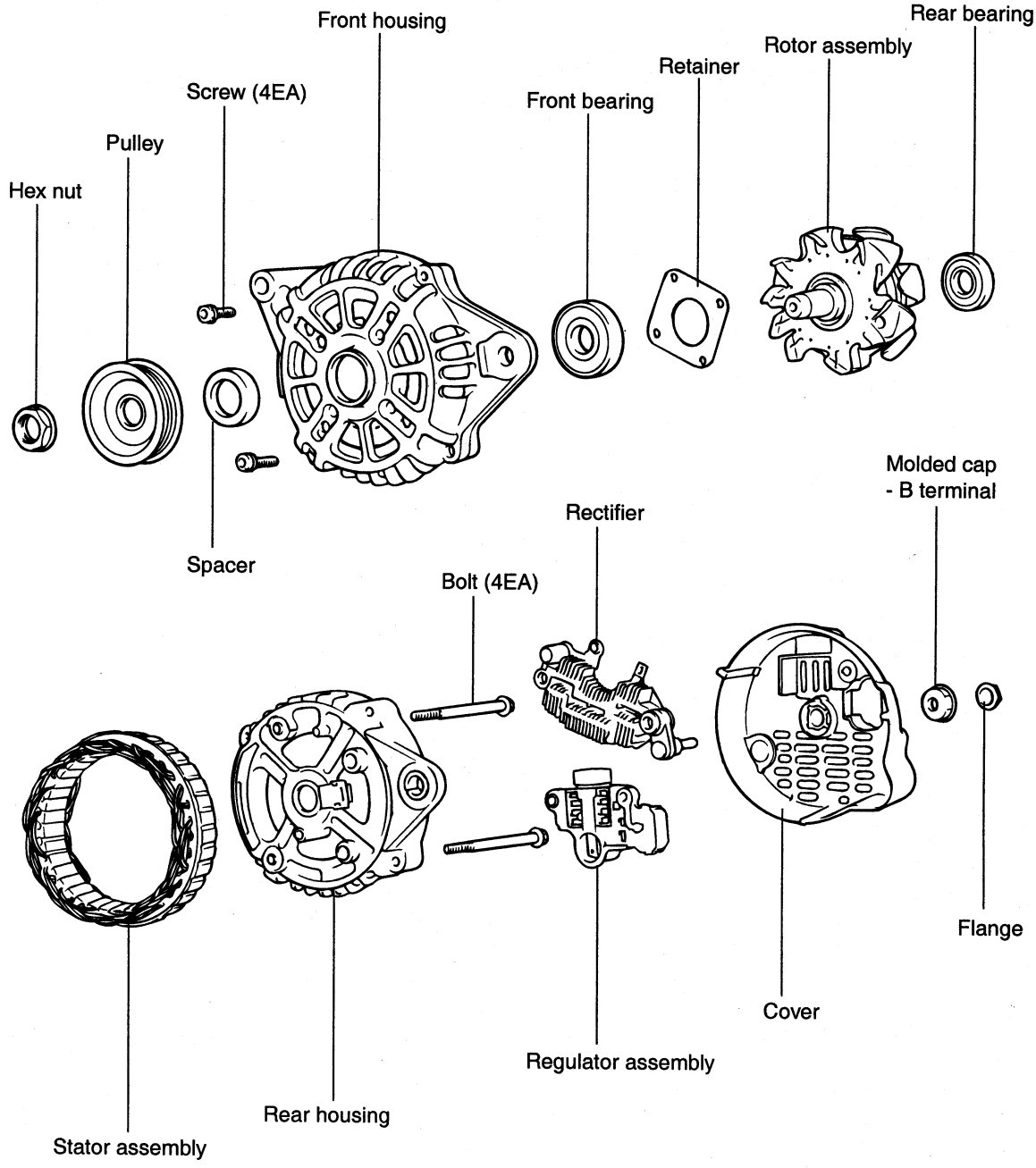

EBA9030A

DISASSEMBLY [2.4 I4]

1. Remove the four through bolts.

2. Insert a flat screwdriver between the front bracket and stator core, and pry downward.

CAUTION

1. **Do not insert the screwdriver too deeply, as there is a danger of damaging the stator coil.**
2. **The rear cover may be hard to remove because a ring is used to lock the outer race of the rear bearing. To facilitate removal of rear cover, heat just the bearing box section with a 200-watt soldering iron. Do not use a heat gun as it may damage the diode assembly.**

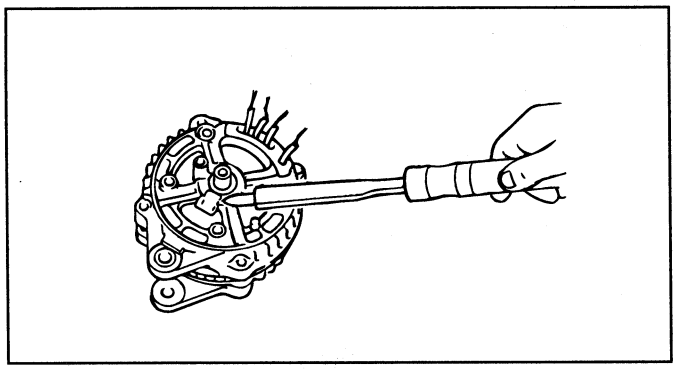

EBHA206A

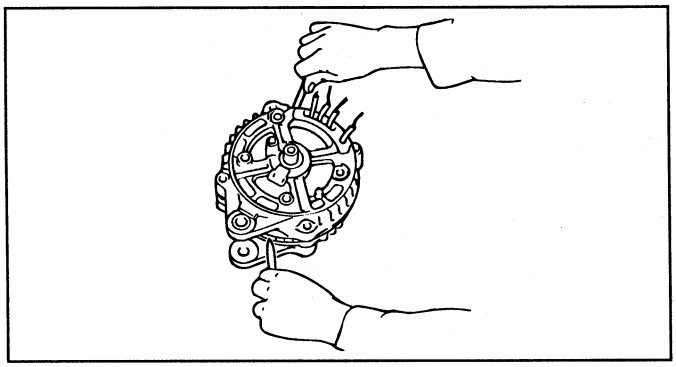

EBHA206B

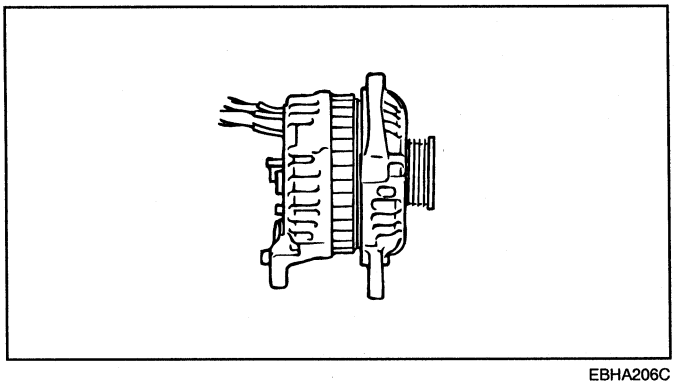

EBHA206C

3. Secure the rotor in a soft-jaw vise with the pulley side up.

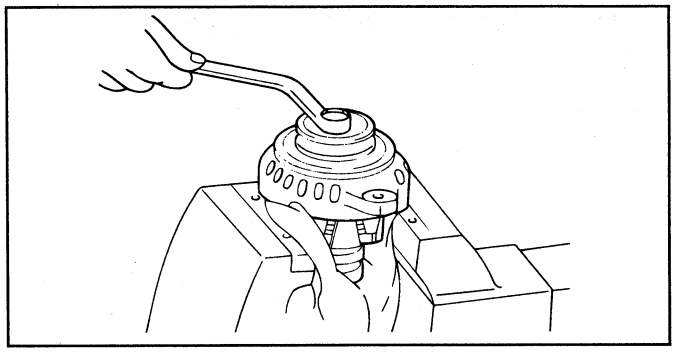

EBA9016D

CAUTION

Be careful that the vise jaws do not damage the rotor.

4. Remove the pulley nut, spring washer, pulley, and spacer.

5. Remove the front bracket and two seals.

6. Remove the rotor from the vise.

7. Remove the brush holder screws, rectifier screws, and nut from the "B" terminal.

8. Remove the stator assembly from the rear bracket.

9. Detach the slinger from the brush holder.

10. If the stator is to be removed, unsolder the three stator leads to the main diodes on the rectifier.

CAUTION

1. **When soldering or unsoldering, make sure that heat from soldering iron is not transmitted to the diodes for a long period.**
2. **Do not exert excessive force on the leads of the diodes.**

11. When separating the rectifier from the brush holder, unsolder the two plates soldered to the rectifier.

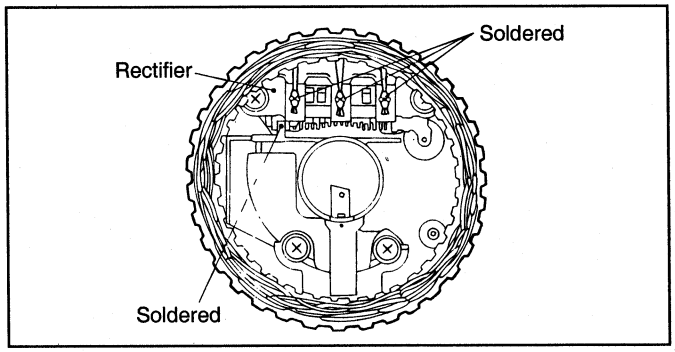

EBA9016E

INSPECTION

ROTOR

1. Check the rotor coil for continuity. Make sure there is continuity between the slip rings.

   If resistance is extremely low, there is a short. If there is no continuity or if there is a short circuit, replace the rotor assembly.

   Resistance value : Approx. 3.1Ω

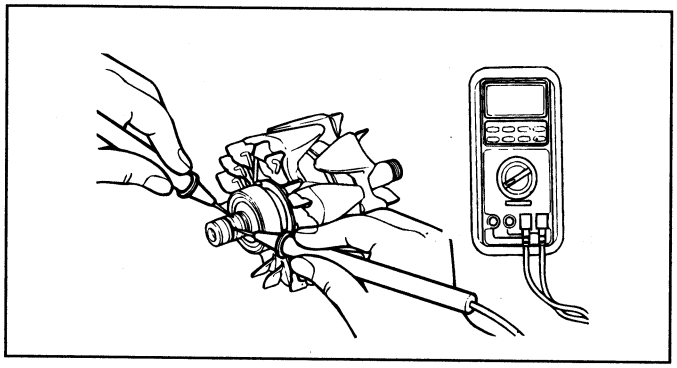

KFW2021A

2. Check the rotor coil for a ground. Check that there is no continuity between the slip ring and the core. If there is continuity, replace the rotor assembly.

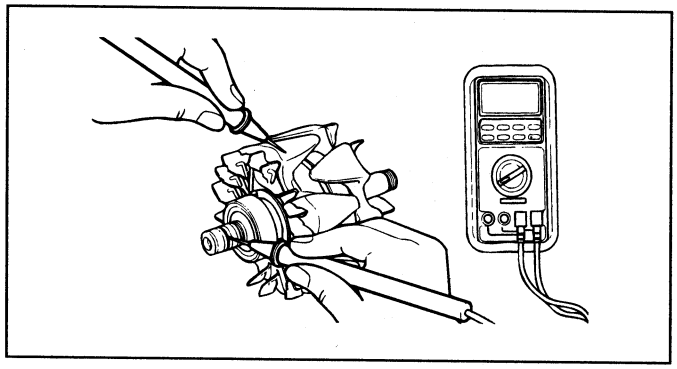

KFW2022A

STATOR

1. Make a continuity check on the stator coil. Check that there is continuity between the coil leads. If there is no continuity, replace the stator assembly.

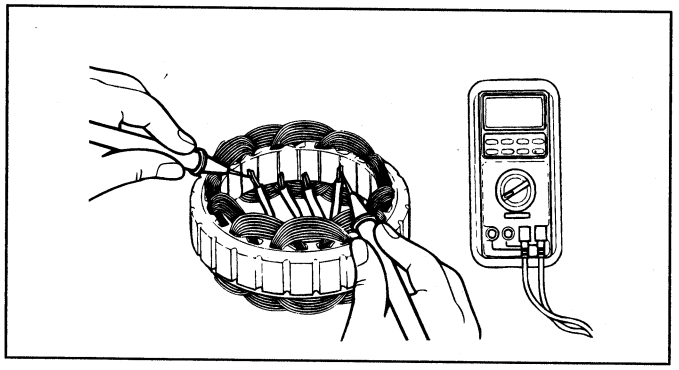

KFW2023A

2. Check the coil for grounding. Check that there is no continuity between the coil and the core. If there is continuity, replace the stator assembly.

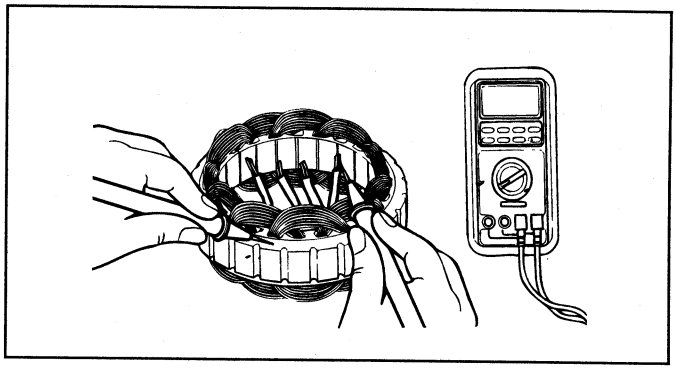

KFW2024A

RECTIFIERS

Positive rectifier test

Check for continuity between the positive rectifier and stator coil lead connection terminal with an ohmmeter. The ohmmeter should read continuity in only one direction. If there is continuity in both directions, a diode is shorted. Replace the rectifier assembly.

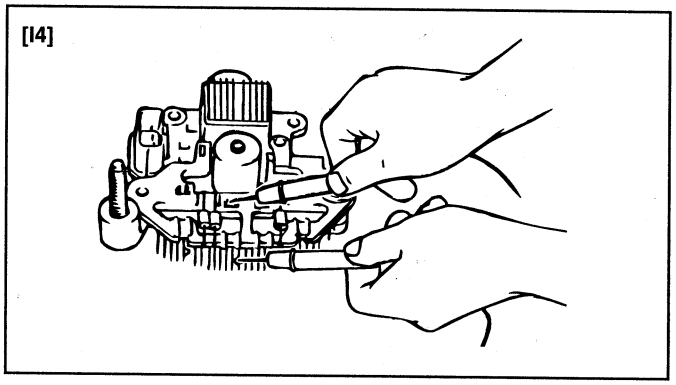

EBHA206E

Negative rectifier test

Check for continuity between the negative rectifier and the stator coil lead connection terminal. The ohmmeter should read continuity in only one direction. If there is continuity in both directions, the diode is shorted, and the rectifier assembly must be replaced.

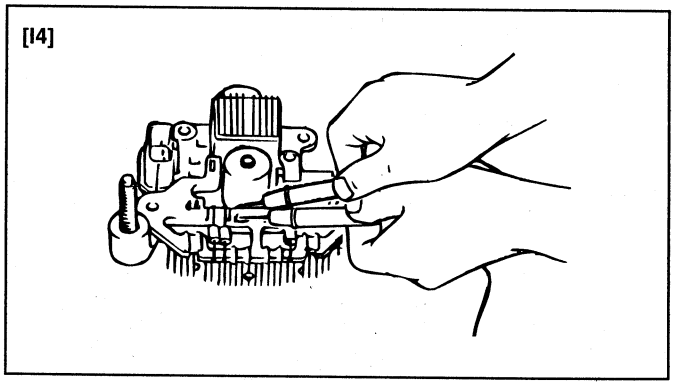

EBHA206F

Diode trio test

Check the three diodes for continuity by connecting an ohmmeter to both ends of each diode. Each diode should have continuity in only one direction.

If continuity is present in both directions, the diode is defective and the heatsink assembly must be replaced.

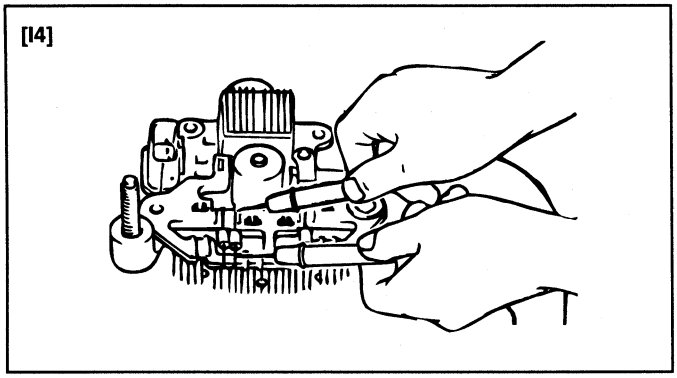

EBHA206G

BRUSH REPLACEMENT

1. Measure the length of the brush protrusion shown in the illustration, and replace the brush if the measured value is below the limit value.

Limit : 2mm (0.8 in.) or less

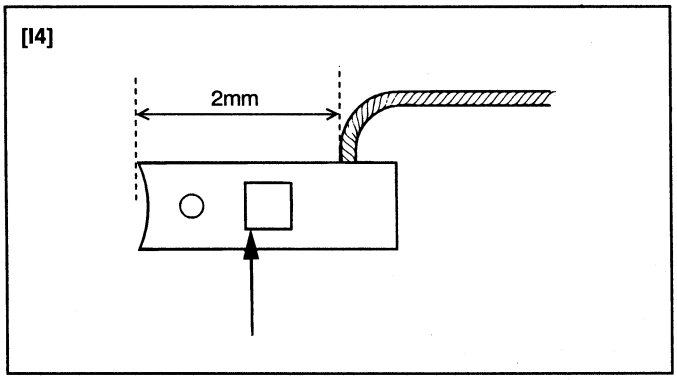

KFW2028A

2. The brush can be removed if the solder of the brush lead wire is removed.
3. When installing a new brush, insert the brush into the holder, and then solder the lead wire.

REASSEMBLY

Reassembly is the reverse of disassembly. Pay attention to the following:

Before the rotor is attached to the rear bracket, insert a wire through the small hole in the rear bracket to hold the brush. After the rotor has been installed, the wire can be removed.

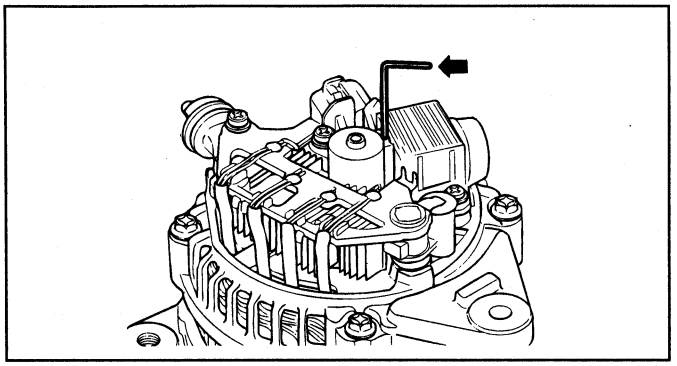

KFW2029A

BATTERY EBA90170

DESCRIPTION

1. The maintenance-free battery is, as the name implies, totally maintenance free and has no removable battery cell caps. The battery is completely sealed, except for small vent holes in the cover.

2. Water is never added to the maintenance-free battery.

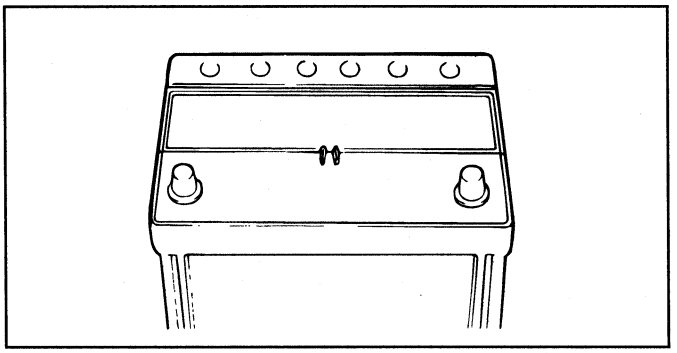

EBA9017D

DISASSEMBLY [2.7 V6] EBHA0180

1. Remove the four through bolts.

2. Insert a flat screwdriver between the front bracket and stator core, and pry downward.

CAUTION

1. **Do not insert the screwdriver too deeply, as there is a danger of damaging the stator coil.**
2. **The rear cover may be hard to remove because a ring is used to lock the outer race of the rear bearing. To facilitate removal of rear cover, heat just the bearing box section with a 200-watt soldering iron. Do not use a heat gun as it may damage the diode assembly.**

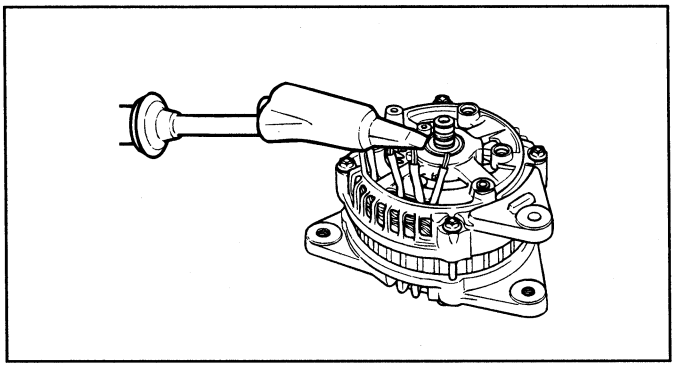

KFW2018A

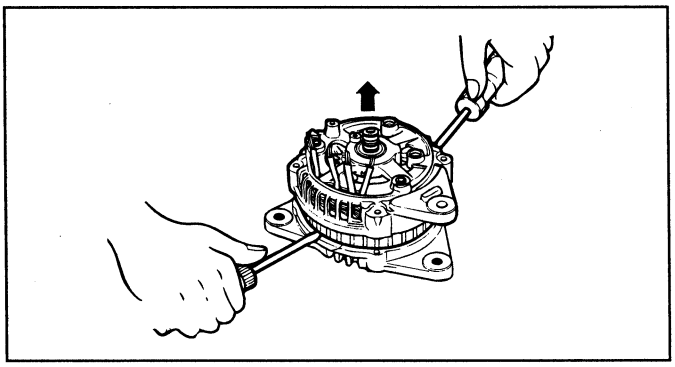

KFW2017A

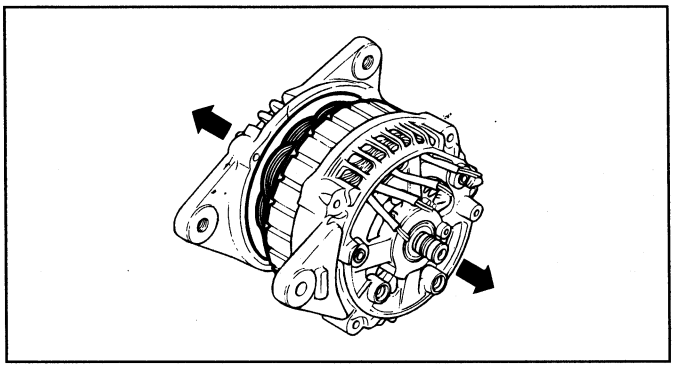

KFW2019A

3. Secure the rotor in a soft-jaw vise with the pulley side up.

CAUTION

Be careful that the vise jaws do not damage the rotor.

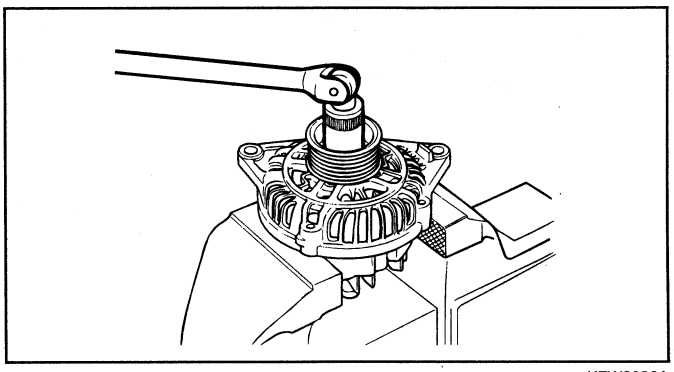

KFW2020A

4. Remove the pulley nut, spring washer, pulley, and spacer.

5. Remove the front bracket and two seals.

6. Remove the rotor from the vise.

7. Remove the brush holder screws, rectifier screws, and nut from the "B" terminal.

8. Remove the stator assembly from the rear bracket.

9. Detach the slinger from the brush holder.

10. If the stator is to be removed, unsolder the three stator leads to the main diodes on the rectifier.

CAUTION

1. **When soldering or unsoldering, make sure that heat from soldering iron is not transmitted to the diodes for a long period.**
2. **Do not exert excessive force on the leads of the diodes.**

11. When separating the rectifier from the brush holder, unsolder the two plates soldered to the rectifier.

INSPECTION

ROTOR

1. Check the rotor coil for continuity. Make sure there is continuity between the slip rings.

   If resistance is extremely low, there is a short. If there is no continuity or if there is a short circuit, replace the rotor assembly.

   Resistance value : Approx. 3.1Ω

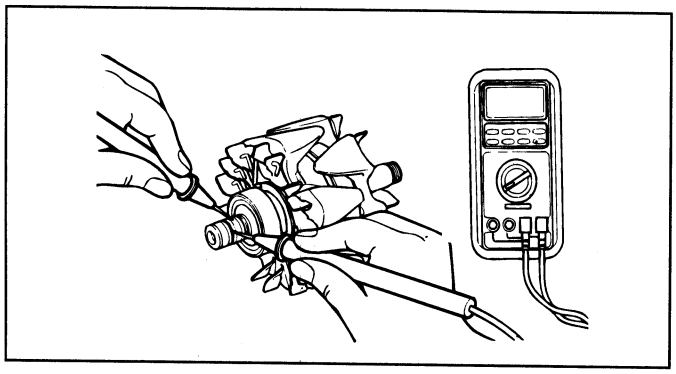

KFW2021A

2. Check the rotor coil for a ground. Check that there is no continuity between the slip ring and the core. If there is continuity, replace the rotor assembly.

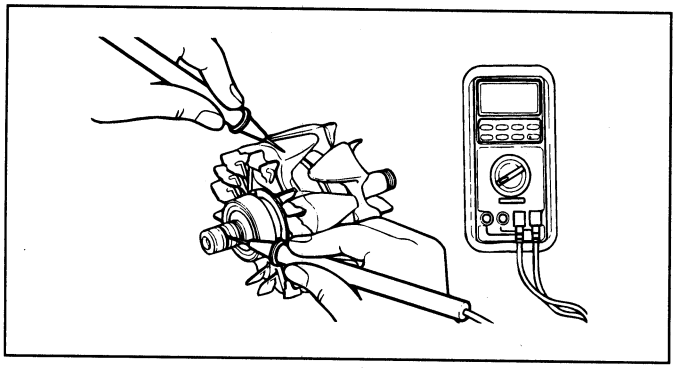

KFW2022A

STATOR

1. Make a continuity check on the stator coil. Check that there is continuity between the coil leads. If there is no continuity, replace stator assembly.

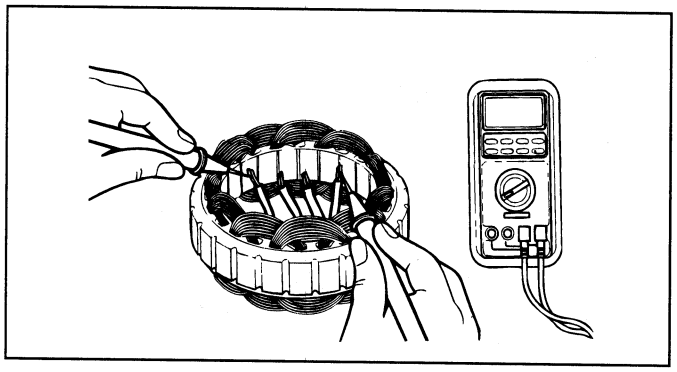

KFW2023A

2. Check the coil for grounding. Check that there is no continuity between the coil and the core. If there is continuity, replace the stator assembly.

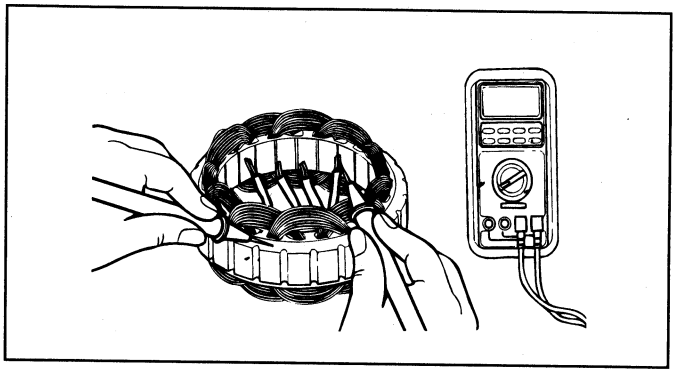

KFW2024A

RECTIFIERS

Positive rectifier test

Check for continuity between the positive rectifier and stator coil lead connection terminal with an ohmmeter. The ohmmeter should read continuity in only one direction. If there is continuity in both directions, a diode is shorted. Replace the rectifier assembly.

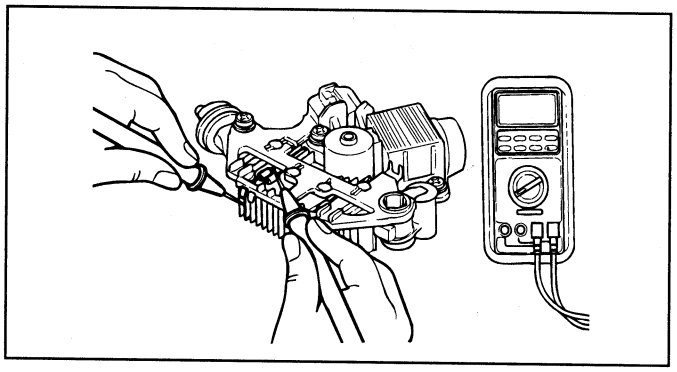

KFW2025A

Negative rectifier test

Check for continuity between the negative rectifier and the stator coil lead connection terminal. The ohmmeter should read continuity in only one direction. If there is continuity in both directions, the diode is shorted, and the rectifier assembly must be replaced.

[V6]

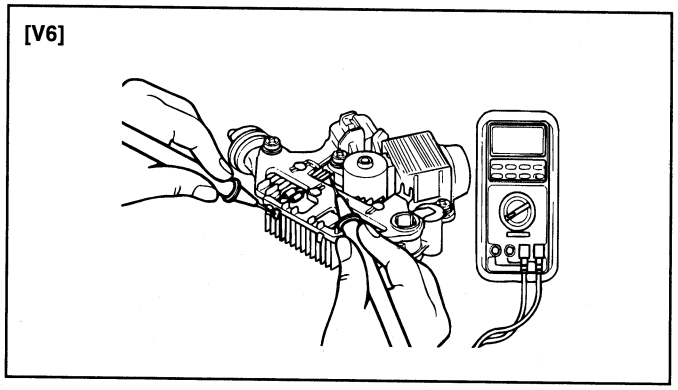

KFW2026A

Diode trio test

Check the three diodes for continuity by connecting an ohmmeter to both ends of each diode. Each diode should have continuity in only one direction.

If continuity is present in both directions, the diode is defective and the heatsink assembly must be replaced.

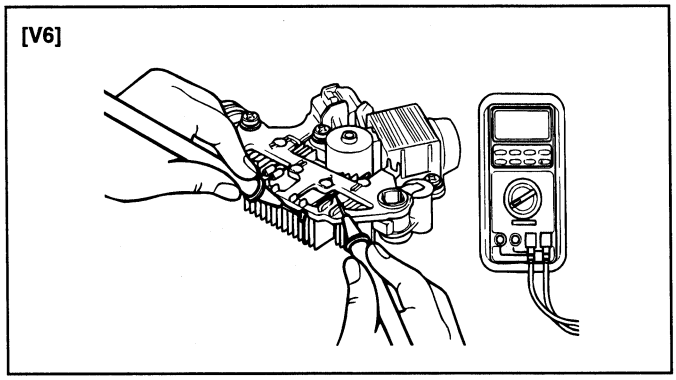

KFW2027A

BRUSH REPLACEMENT

1. Measure the length of the brush protrusion shown in the illustration, and replace the brush if the measured value is below the limit value.

Limit : 2mm (0.8 in.) or less

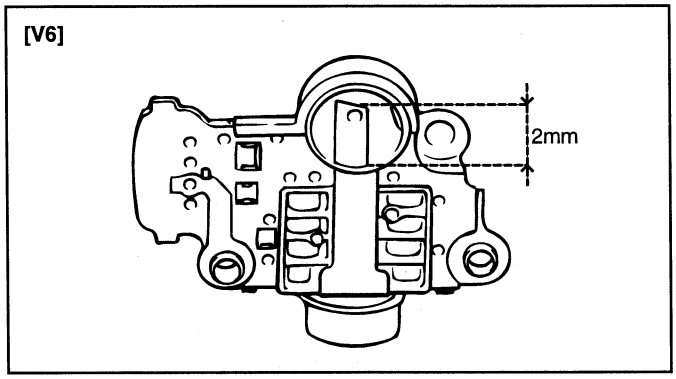

EBA9030E

2. The brush can be removed if the solder of the brush lead wire is removed.

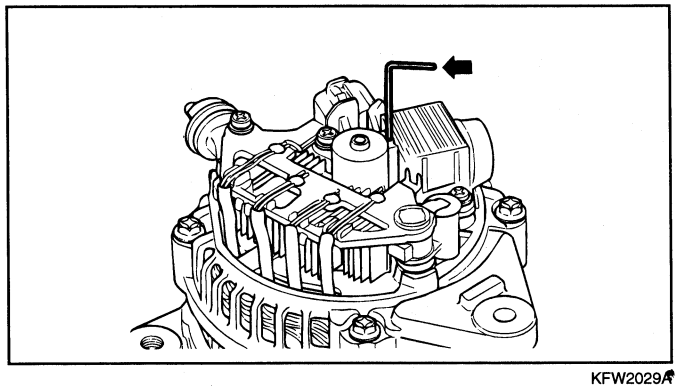

KFW2029A

3. When installing a new brush, insert the brush into the holder, and then solder the lead wire.

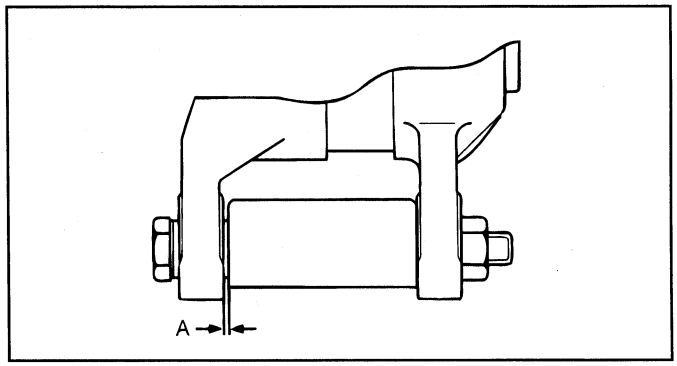

KFW2009A

REASSEMBLY

Reassembly is the reverse of disassembly. Pay attention to the following:

Before the rotor is attached to the rear bracket, insert a wire through the small hole in the rear bracket to hold the brush. After the rotor has been installed, the wire can be removed.

BATTERY VISUAL INSPECTION (1)

1. CHECKING FLOW

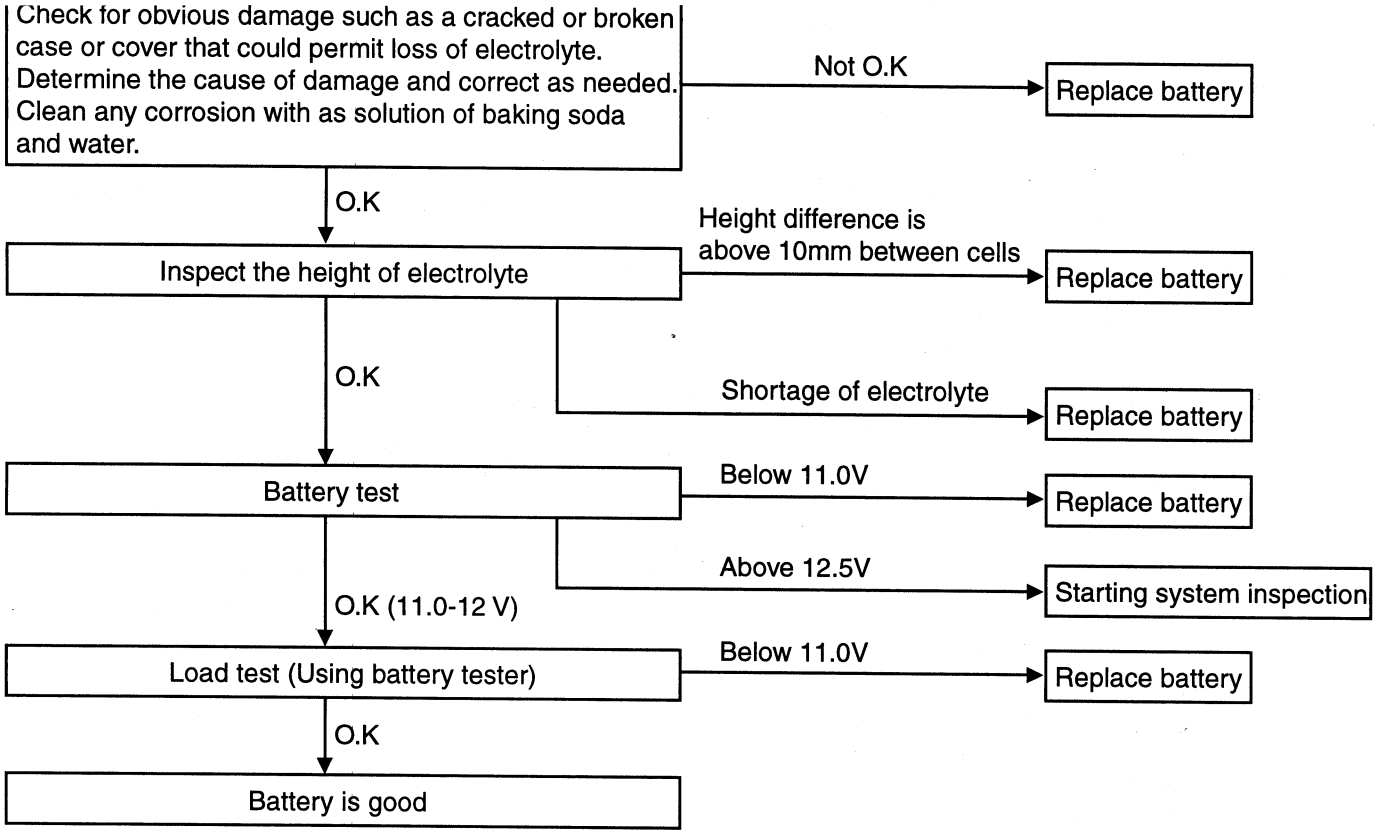

EBA9018B

2. CHECKING SHEET

Item	Trouble	Cause	Remedy	Responsibility	
				User	Manufacturer
1. Visual inspection	* Battery terminal damage	* Carelessness * Over tightening the battery cable	Replace	O	
	Cover Breakage	* Carelessness	Replace	O	
	* Electrolyte leakage				
	- Cover breakage	* Carelessness	Replace	O	
	- Cover leakage	* Bad cover seal	Replace		O
2. Electrolyte height inspection	* Electrolyte height between cells is over 10mm	* Cell shorted electrically * Vaporization caused by excessive temperature	Replace Replace	O	O
	* Shortage of electrolyte	* Electrolyte loss caused by over-charge	Replace	O	

Item	Trouble	Cause	Remedy	Responsibility	
				User	Manufacturer
3. Voltage inspection	1. Battery voltage >13.2V	1. Over charge	Replace * Check the electric system	O	
	2. 12.5V < Battery voltage < 12.9	2. Normal			
	3. 12.0V < Battery voltage < 12.4V (Simple discharge)	1. Insufficient charge	* Battery Load Test (Refer to Load Test below)	O	
	4. 11.0 V <Battery voltage <12.0 (Over discharge)	2. Internal failure		O	
	5. Battery voltage : 11.0V or less	1. Charge condition failure	Replace	O	
		2. Battery discharged for a long period		O	
		3. Internal circuit open			O

3. LOAD TEST

1. When discharging the battery during 15 seconds at half currency of Cold Cranking Power (CCP), the voltage of the battery should be as shown below.

REGULATING VOLTAGE TABLE

Ambient Temperature	Voltage
above 20°C	9.6V
~ 18°C	9.5V
~ 10°C	9.4V
~ 4°C	9.3V
~ -1°C	9.1V
~ -7°C	8.9V
~ -12°C	8.7V

2. When the voltage is not within specification, repeat the load test again, and re-charge.

3. If the battery is left alone for 2 hours after re-charging and its output is over 12.5V, and the voltage after a load test is over the standard value, the battery can be used.

BATTERY VISUAL INSPECTION (2)

1. Make sure the ignition switch and all accessories are in the OFF position.

2. Disconnect the battery cables (negative first).

3. Remove the battery from the vehicle.

CAUTION

Care should be taken in the event the battery case is cracked or leaking, to protect your skin from the electrolyte. Heavy rubber gloves (not the household type) should be worn when removing the battery.

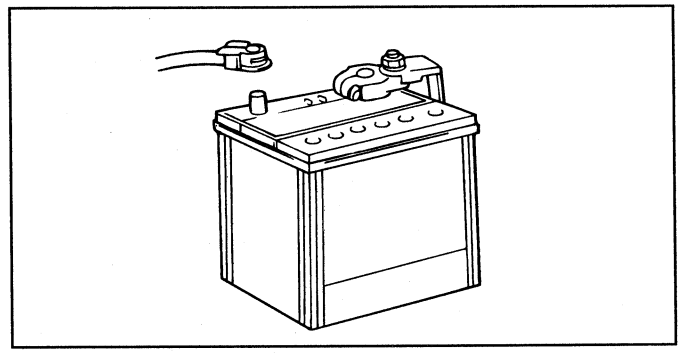

EBA9018C

4. Inspect the battery carrier for damage caused by the loss of electrolyte. If acid damage is present, it will be necessary to clean the area with a solution of clean warm water and baking soda. Scrub the area

with a stiff brush and wipe off with a cloth moistened with baking soda and water.

5. Clean the top of the battery with the same solution as described in Step(4).

6. Inspect the battery case and cover for cracks. If cracks are present, the battery must be replaced.

7. Clean the battery posts with a suitable battery post tool.

8. Clean the inside surface of the terminal clamps with a suitable battery cleaning tool. Replace damaged or frayed cables and broken terminal clamps.

9. Install the battery in the vehicle.

10. Connect the cable terminals to the battery post, making sure the tops of the terminals are flush with the tops of the posts.

11. Tighten the terminal nuts securely.

12. Coat all connections with light mineral grease after tightening.

CAUTION

When batteries are being charged, an explosive gas forms beneath the cover of each cell. Do not smoke near batteries being charged or which have recently been charged. Do not break live circuits at the terminals of batteries being charged. A spark will occur when the circuit is broken. Keep open flames away from the battery.

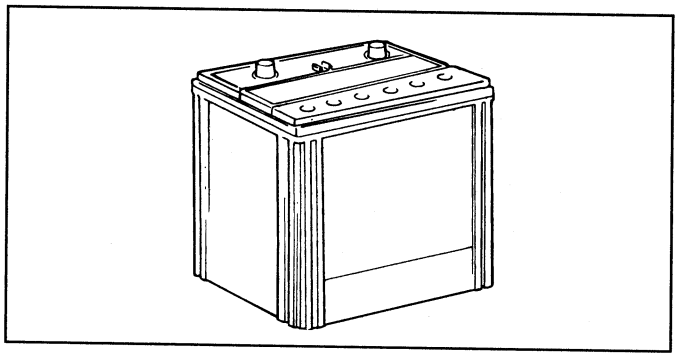

EBA9018D

STARTING SYSTEM

GENERAL INFORMATION EBJB0190

The starting system includes the battery, starter motor, solenoid switch, ignition switch, inhibitor switch (A/T only), connecting wires and the battery cables.

When the ignition key is turned to the start position, current flows and energizes the starter motor's solenoid coil. The solenoid plunger and clutch shift lever are activated, and the clutch pinion engages the ring gear. The contacts close and the starter motor cranks.

In order to prevent damage caused by excessive rotation of the starter armature when the engine starts, the clutch pinion gear has overrun protection.

[2.4 I4]

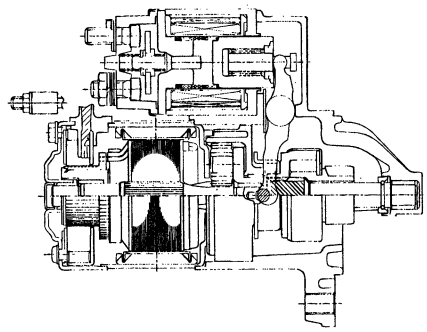

EBJB019A

[2.7 V6]

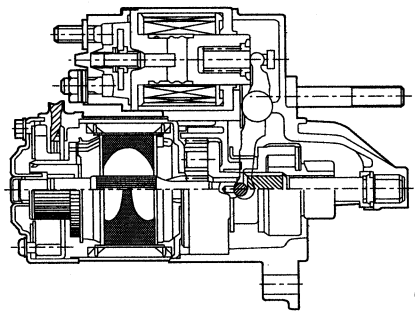

KFW2010A

EBHA0200

CHECK CLUTCH PEDAL (M/T)

Check that pedal height, pedal freeplay and clutch pedal clevis pin play are correct. (Refer to clutch group)

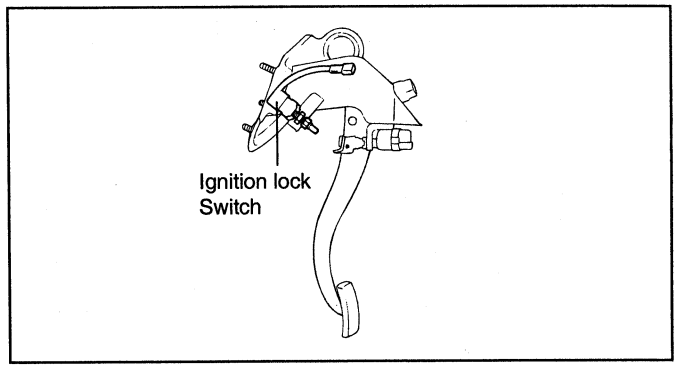

EBA9020D

CHECK STARTER RELAY

Remove the starter relay and check continuity between the terminals. If the continuity is not as specified, replace the relay.

Condition \ Terminal No.	85	86	87	30
When de-energized	○	○		
When energized	○	○	○	○

EBA9020E

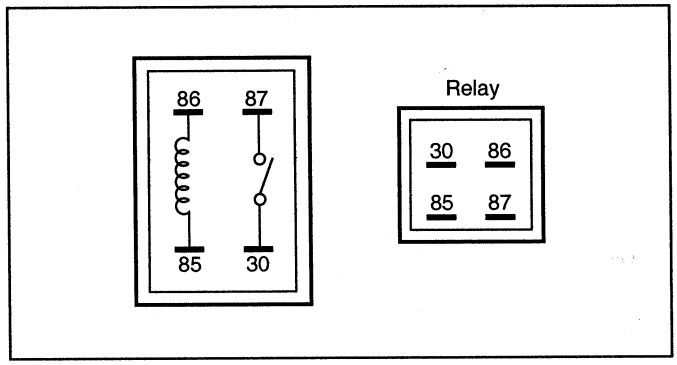

EBA9020F

CHECK IGNITION LOCK SWITCH

Remove the ignition lock switch and check continuity between the terminals. If the continuity is not as specified, replace the switch.

Condition \ Terminal	1	2
Pushed	○	○
Free		

EBA9020G

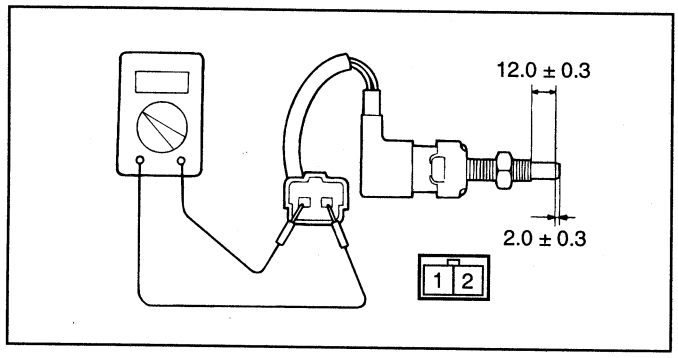

EBHA020A

REMOVAL AND INSTALLATION EBHA0210

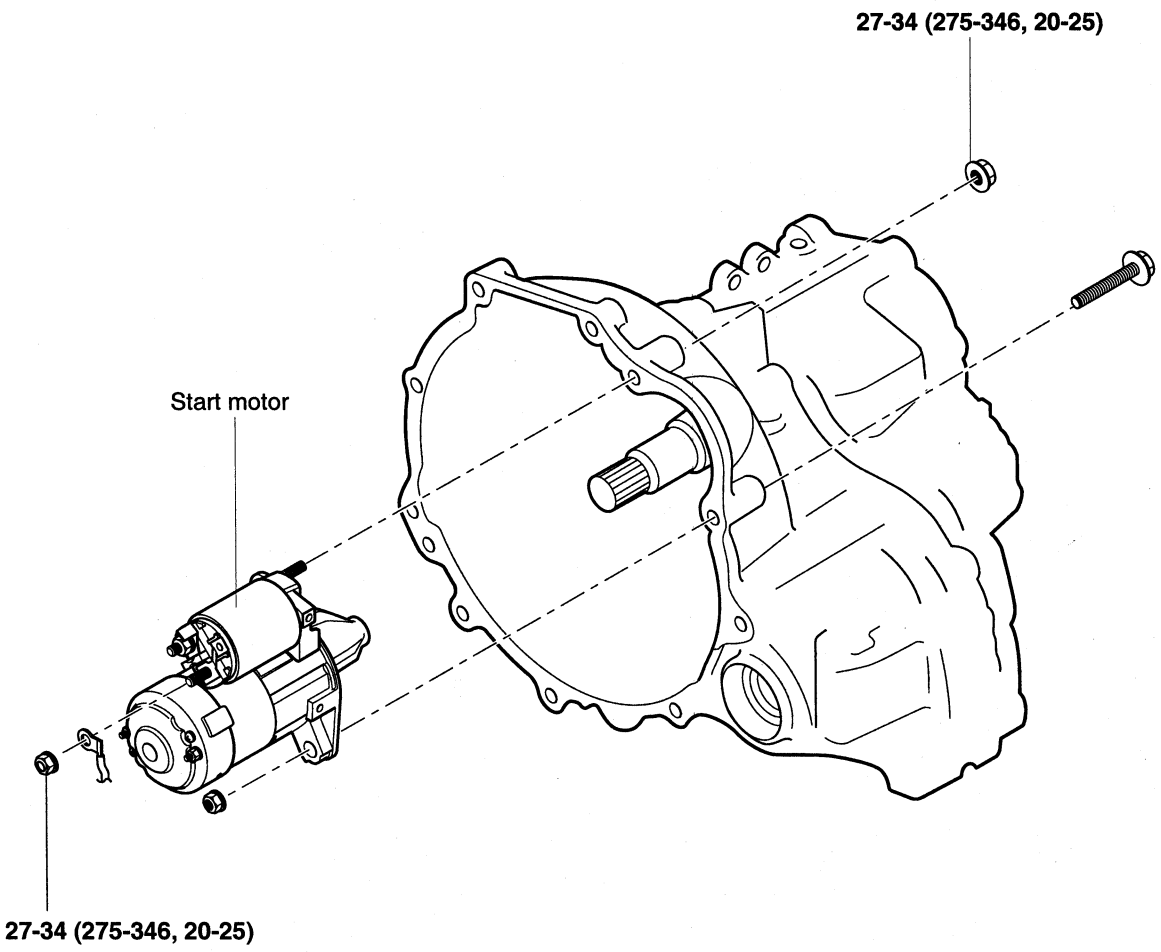

TORQUE : Nm (kg.cm, lb.ft)

KFW2011A

1. Disconnect the battery ground cable.
2. Remove the speedometer cable and the shift cable.
3. Disconnect the starter motor connector and terminal.
4. Remove the starter motor assembly.
5. Installation is the reverse of removal.

COMPONENTS EBHA0220

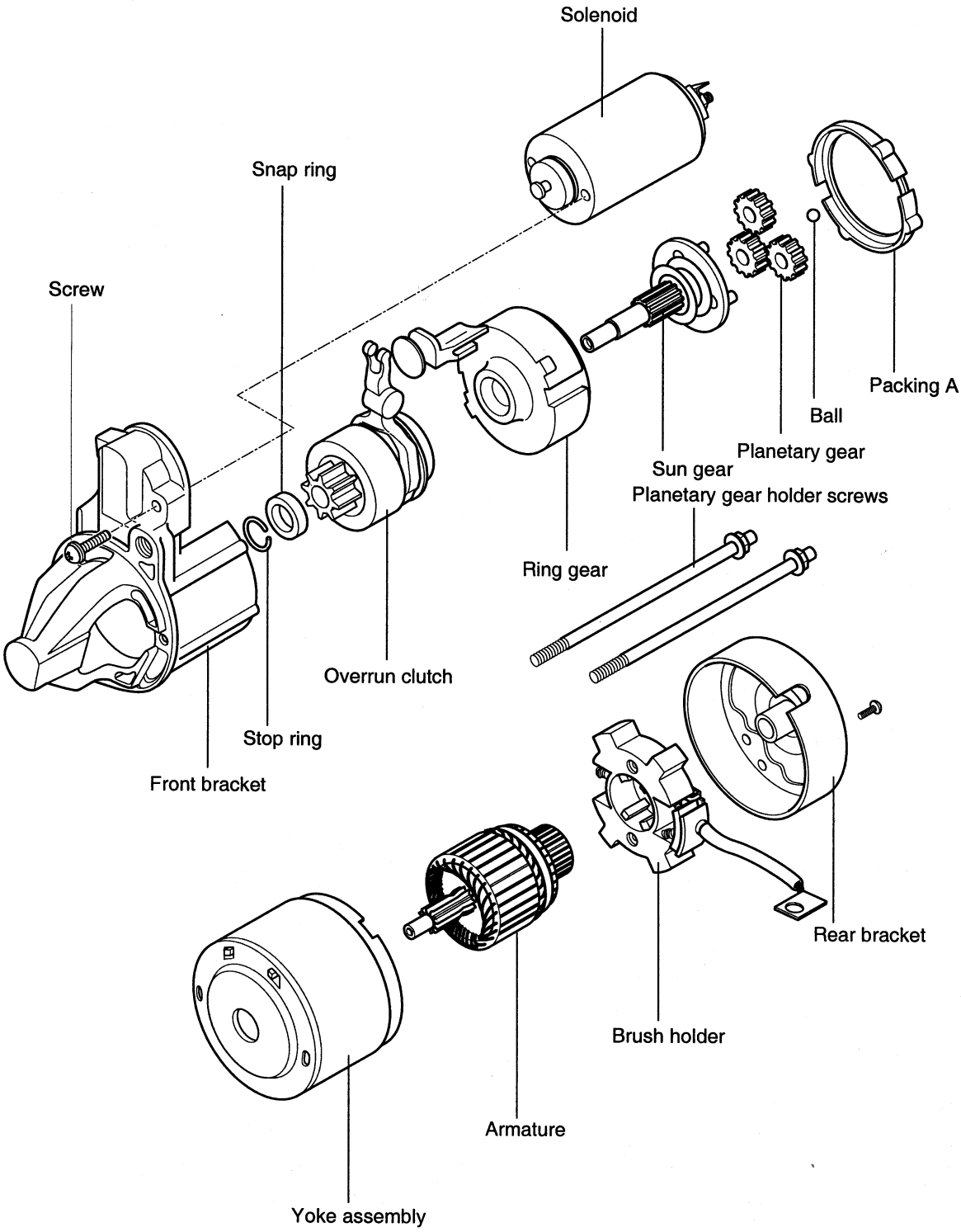

EBHA306A

CHECKING FOR OPERATION EBHA0230

SERVICE ADJUSTMENT PROCEDURES FOR PINION GAP ADJUSTMENT

1. Disconnect the field coil wire from the M-terminal of the solenoid.
2. Connect a 12V battery the S-terminal and the M-terminal.
3. The pinion should move out.

CAUTION

This test must be performed quickly (in less than 10 seconds) to prevent the coil from overheating.

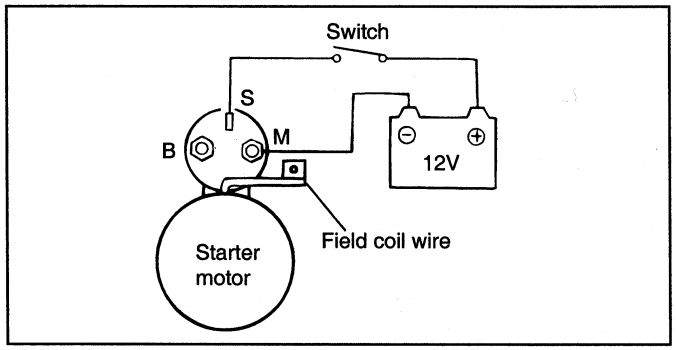

EBA9023A

4. Check the pinion for stopper clearance (pinion gap) with a feeler gauge.

   Pinion gap : 0.5-2.0 mm (0.02-0.079 in.)

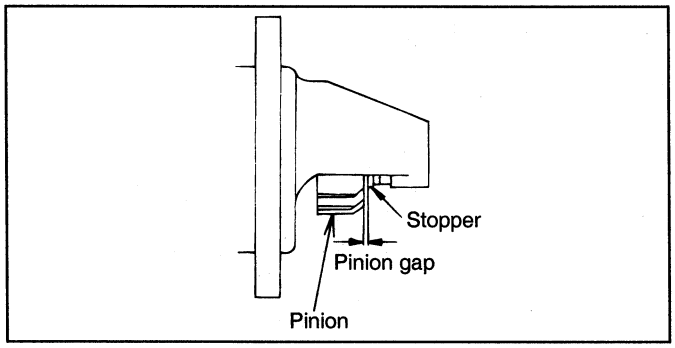

EBA9023B

5. If the pinion gap is out of specification, adjust by adding or removing gaskets between the solenoid and the front bracket.

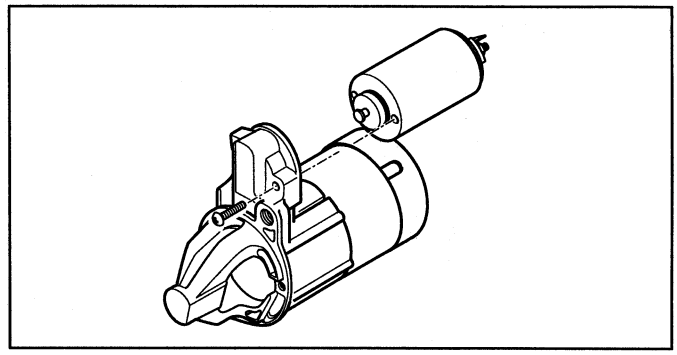

EBHA306D

MAGNETIC SWITCH PULL-IN TEST

1. Disconnect the field coil wire from the M-terminal of the magnetic switch.
2. Connect a 12V battery between the S-terminal and the M- terminal.

CAUTION

This test must be performed quickly (in less than 10 seconds) to prevent the coil from burning.

3. If the pinion moves out, then the pull-in coil is good. If it doesn't move out, replace the magnetic switch.

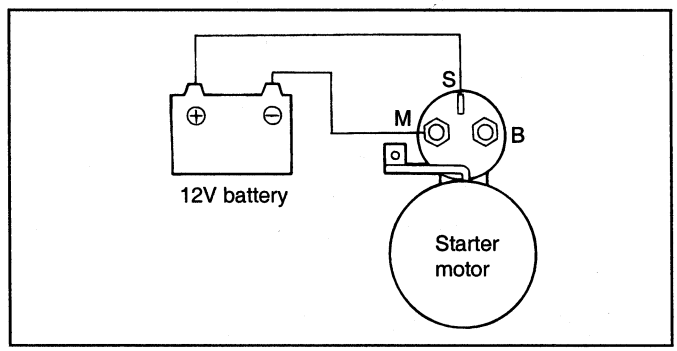

EBA9023D

MAGNETIC SWITCH HOLD-IN TEST

1. Disconnect the field coil wire from the M-terminal of the magnetic switch.
2. Connect a 12V battery between the S-terminal and the body.

CAUTION

This test must be performed quickly (in less than 10 seconds) to prevent the coil from burning.

3. If the pinion moves out, everything is in order. If the pinion moves back and forth repeatedly, the hold-in circuit is open. If it is open, replace the magnetic switch.

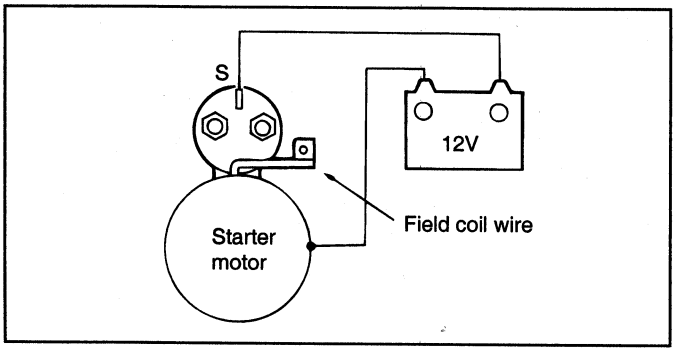

EBA9023E

FREE RUNNING TEST

1. Place the starter motor in a vise equipped with soft jaws and connect a fully-charged 12-volt battery to the starter motor as follows:
2. Connect a test ammeter (100-ampere scale) and carbon pile rheostat as shown in the illustration.

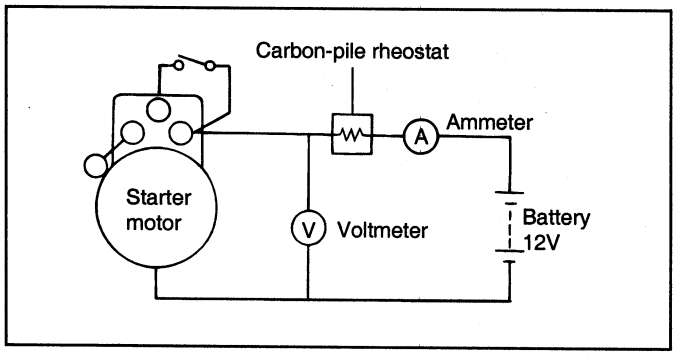

EBA9023F

3. Connect a voltmeter (15-volt scale) across the starter motor.
4. Rotate the carbon pile to the off position.
5. Connect the battery cable from battery's negative post to the starter motor body.
6. Adjust the carbon pile until battery voltage reads 11 volts.
7. Confirm that the maximum amperage is within the specifications and that the starter motor turns smoothly and freely:

   Current : Max. 90 Amps

   Speed : Min. 3,000 rpm

MAGNETIC SWITCH RETURN TEST

1. Disconnect field coil wire from the M-terminal of the magnetic switch.
2. Connect a 12V battery between M-terminal and the body.

NOTE

This test must be performed quickly (in less than 10 seconds) to prevent the coil from burning.

3. Pull the pinion out and release it. If the pinion returns quickly to its original position, everything is in order. If it doesn't, replace the magnetic switch.

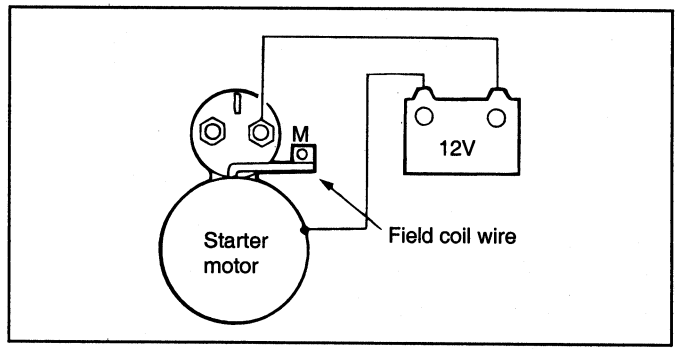

EBA9023G

INSPECTION EBHA0240

CHECKING THE COMMUTATOR

1. Place the armature on a pair of V-blocks, and check the run - out by using a dial gauge.

Standard value

Armature run - out : 0.05 mm (0.002 in.)

Limit

Armature run - out : 0.1 mm (0.0039 in.)

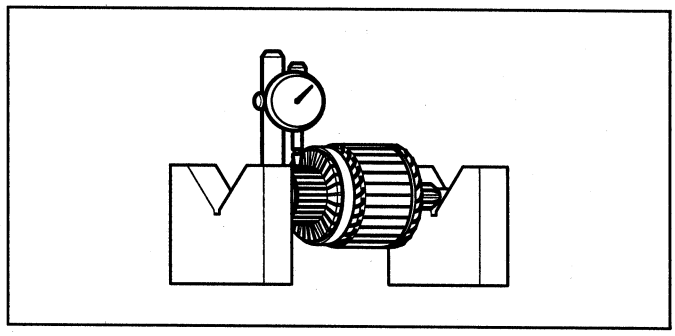

KFW2033A

2. Check the outer diameter of the commutator.

Standard value

Outer diameter of the commutator : 29.4 mm (1.157 in.)

Limit

Outer diameter of the commutator : 28.4 mm (1.118 in.)

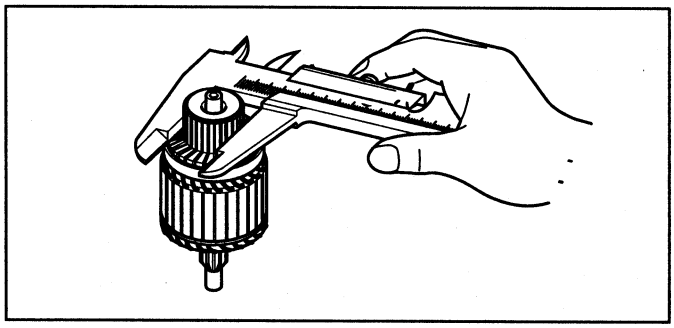

KFW2034A

3. Check the depth of the undercut between segments.

Standard value

Depth of the undercut between segments : 0.5mm (0.020 in.)

Limit

Depth of the undercut between segments : 0.2mm (0.079 in.)

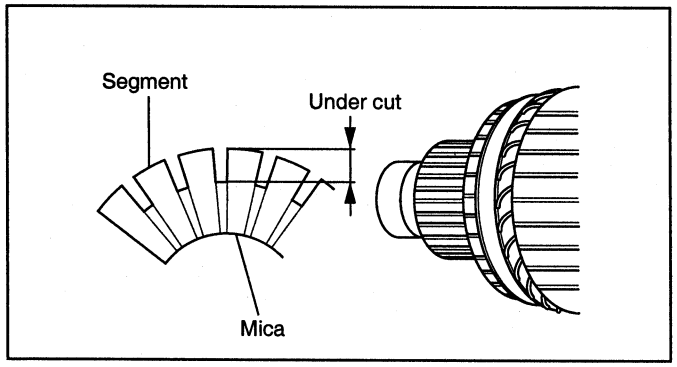

KFW2035A

BRUSH HOLDER

Check for continuity between the brush holder plate and the brush holder.

The normal condition is no continuity.

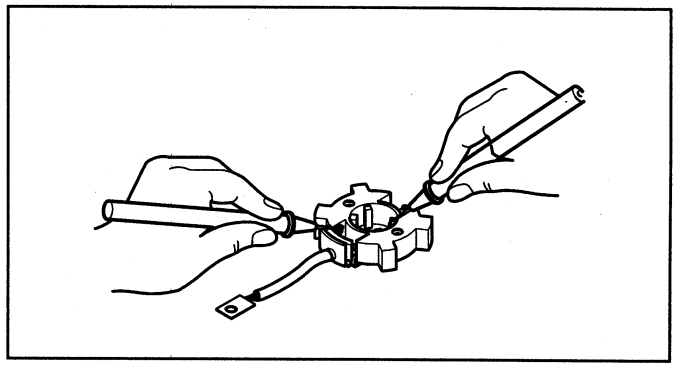

KFW2036A

OVERRUNNING CLUTCH

1. While holding the clutch housing, rotate the pinion. The drive pinion should rotate smoothly in one direction, but should not rotate in the opposite direction. If the clutch does not function properly, replace the overrun clutch assembly.

2. Inspect the pinion for wear or burrs. If the pinion is worn or burred, replace the overrun clutch assembly. If the pinion is damaged, also inspect the ring gear for wear or burrs.

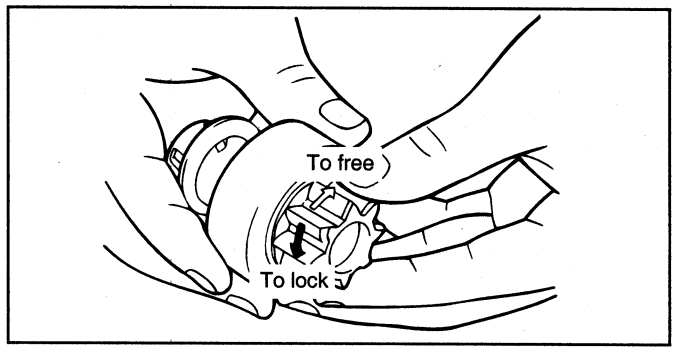

EBA9024E

FRONT AND REAR BRACKET BUSHING

Inspect the bushing for wear or burrs. If the bushing is worn or burred, replace the front bracket assembly or the rear bracket assembly.

REASSEMBLY OF THE STOP RING AND SNAP RING EBHA0250

Using a suitable pulling tool, pull the overrunning clutch stop ring over the snap ring.

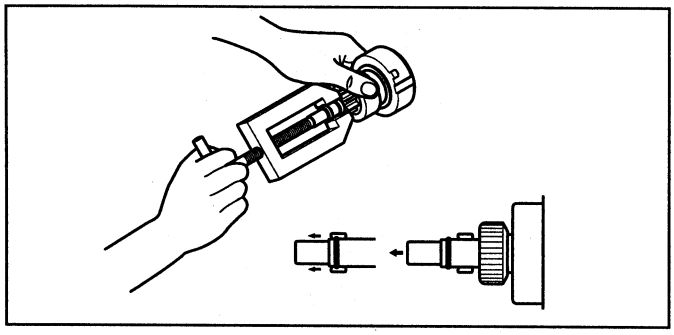

KFW2043A

CLEANING THE STARTER MOTOR PARTS EBA90260

1. Do not immerse parts in cleaning solvent. Immersing the yoke and field coil assembly and/or armature will damage the insulation. Wipe these parts with a cloth only.
2. Do not immerse the drive unit in cleaning solvent. The overrun clutch is pre-lubricated at the factory and solvent will wash lubrication from the clutch.
3. The drive unit may be cleaned with a brush moistened with cleaning solvent and wiped dry with a cloth.

REPLACEMENT OF BRUSHES AND SPRINGS EBA90270

1. Brushes that are worn out, or oil-soaked, should be replaced.
2. When replacing field coil brushes, crush worn out brushes with pliers, taking care not to damage the pigtail.

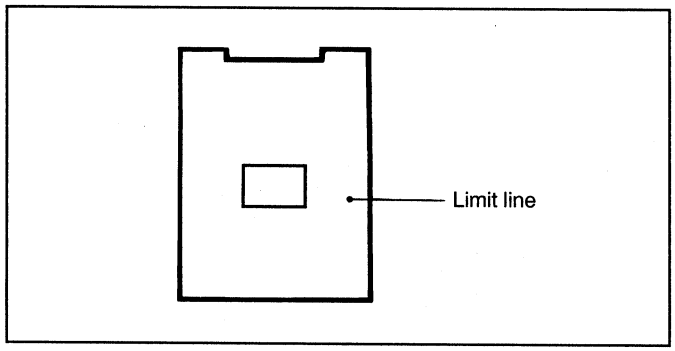

EBA9027A

3. Sand the pigtail end with sandpaper to ensure good soldering.
4. Insert the pigtail into the hole provided in the new brush and solder it. Make sure that the pigtail and excess solder do not come out onto the brush surface.
5. When replacing the ground brush, slide the brush from the brush holder by prying the retaining spring back.

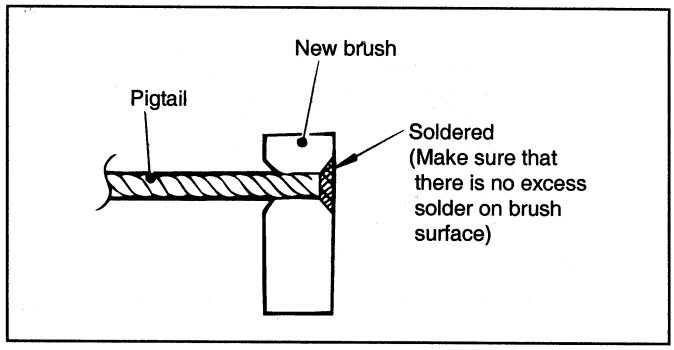

EBA9027B

DISASSEMBLY EBHA0280

REMOVAL OF THE SNAP RING AND STOP RING

1. Press the stop ring using a socket.

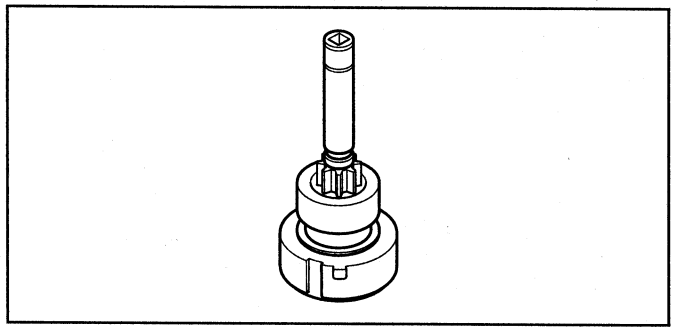

KFW2031A

2. After removing the snap ring (using snap-ring pliers), remove the stop ring and the overrunning clutch.

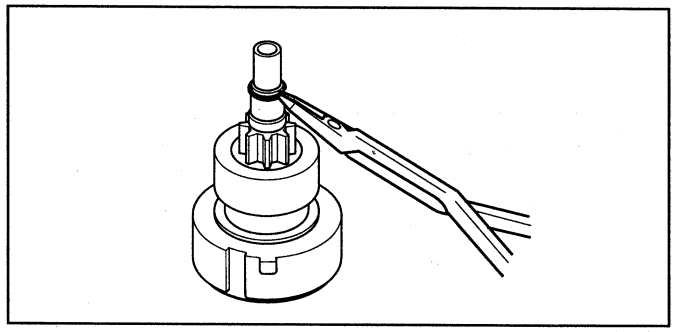

KFW2032A

CRUISE CONTROL SYSTEM

SYSTEM BLOCK DIAGRAM EBA90290

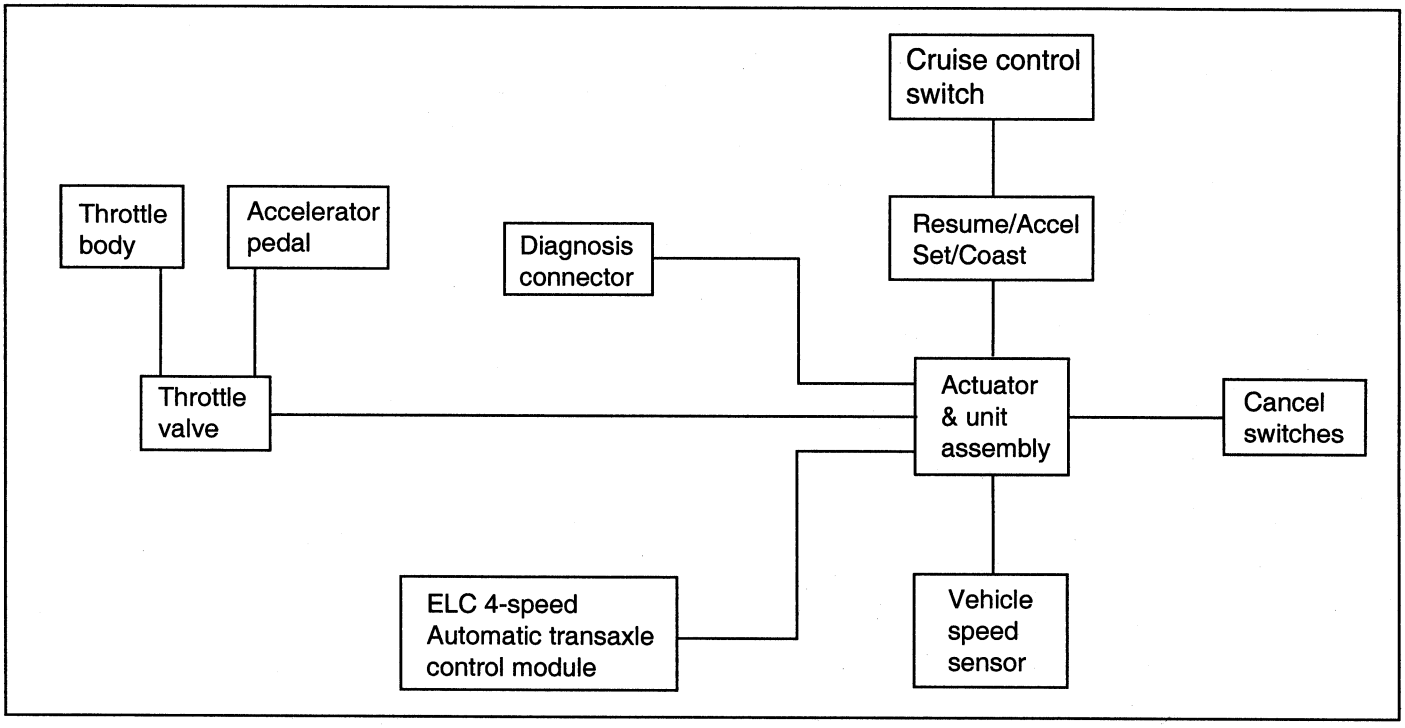

EBA9029A

COMPONENT PARTS AND FUNCTION OUTLINE

COMPONENT PART	FUNCTION
Vehicle speed sensor	Converts vehicle speed to pulses.
Cruise control module (CCM)	Receives signals from sensor and control switch; CCM controls all automatic speed control function.
Actuator	Regulates the throttle valve to the set opening by signals from the CCM.
Control switch	
CRUISE main switch	Switch for automatic speed control power supply.
SET/RESUME switch	Controls automatic speed control functions by SET (COAST) and RESUME (ACCEL).
CRUISE main switch indicator	Illuminates when CRUISE main switch is ON (Built into cluster).
Cancel switch	Sends cancel signals to the CCM
Stop lamp switch/Clutch switch (M/T)	Cancels cruise
Transaxle range switch	Controls the overdrive ON and OFF, based on signals from the CCM for the CC.
Data link connector	By connecting the voltmeter or scan tool, control module diagnostic codes may be read.

*CC : Cruise Control

COMPONENTS LOCATION

EBHA0300

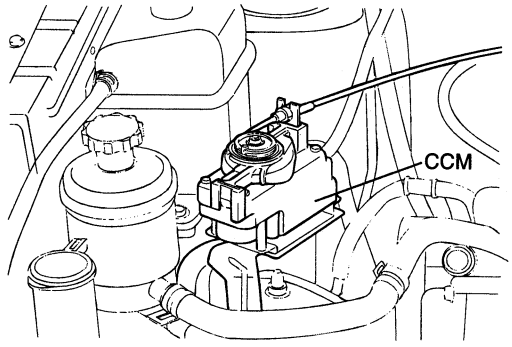

EBHA031C

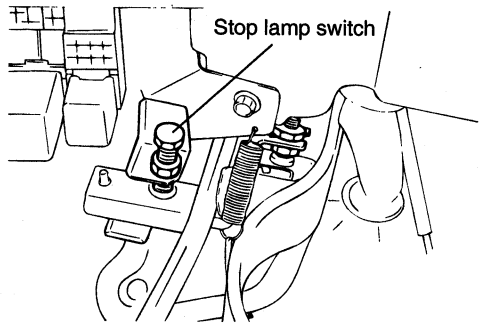

EBA9030G

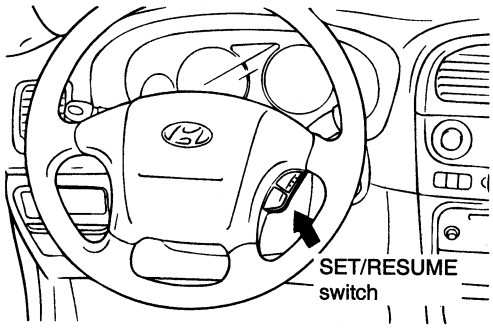

EBAA030B

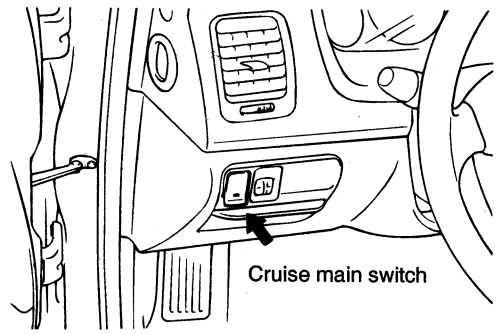

EBAA030C

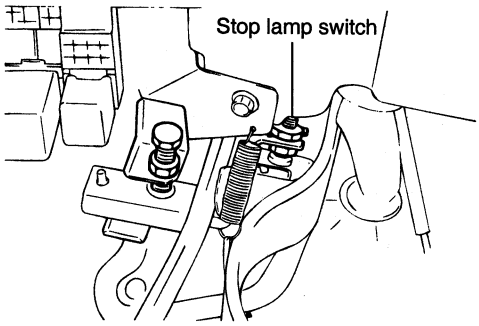

EBA9030L

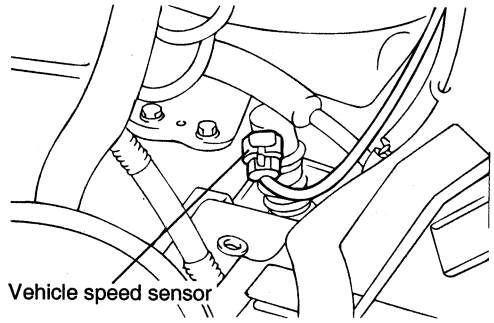

EBA9030N

COMPONENTS EBHA0310

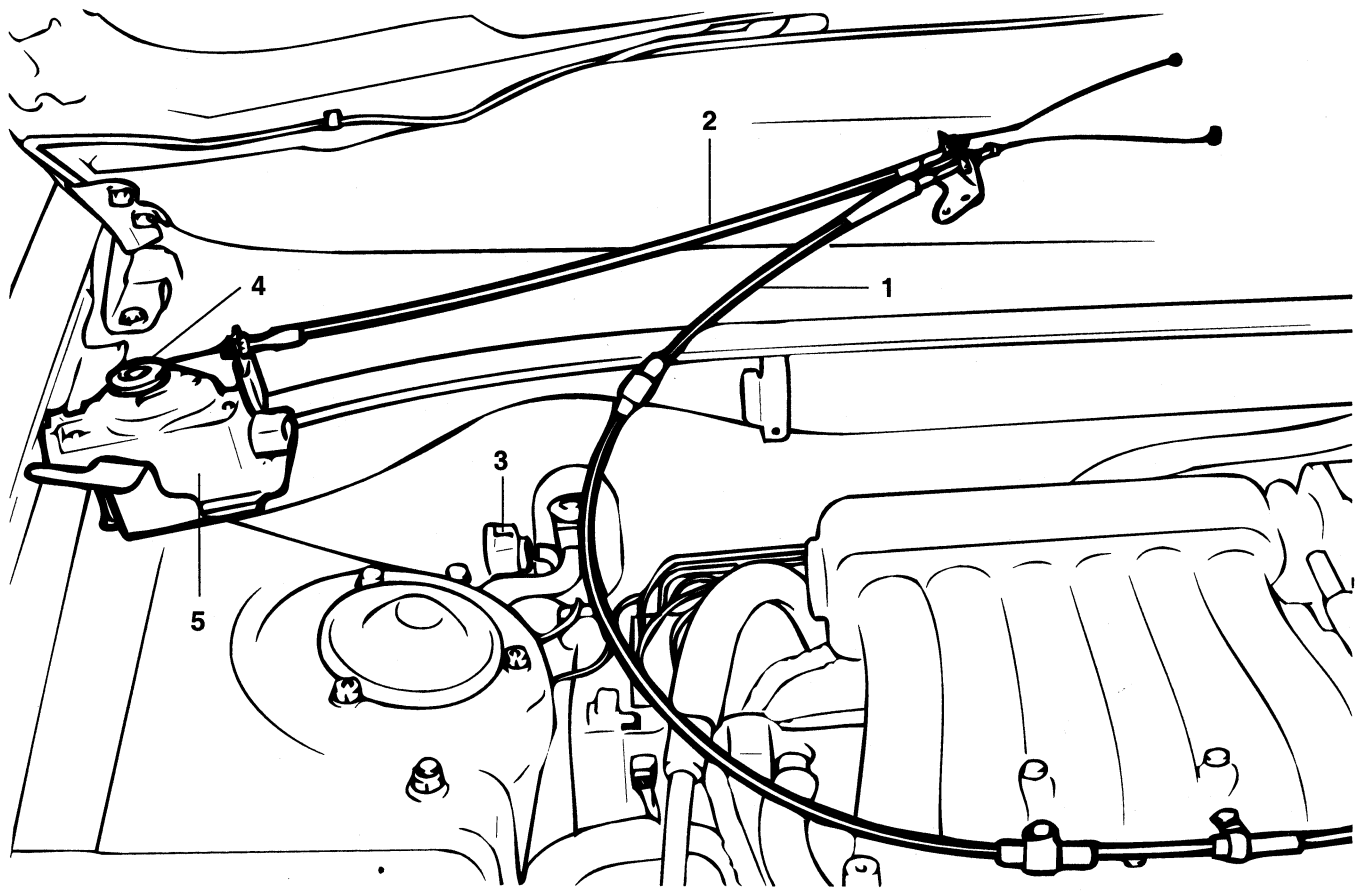

1. Accelerator cable and throttle assembly connection
2. Cruise control cable and pulley assembly connection
3. Actuator unit connector
4. Pulley assembly
5. Actuator unit

EBAA031A

REMOVAL AND INSTALLATION

1. Remove the battery negative terminal.
2. Disconnect the accelerator cable and cruise control cable from throttle assembly by turing the throttle bellcrank to full open position.
3. Disconnect the accelerator cable from the accelerator pedal connection.
4. Remove the accelerator cable mounting bolts.

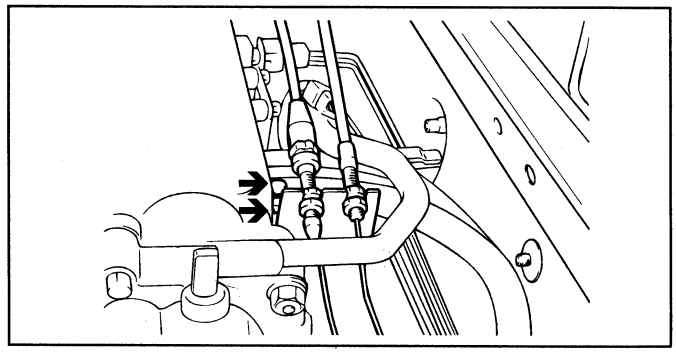

EBAA031B

5. Remove the actuator unit mounting bolt.

6. Installation is the reverse of removal.

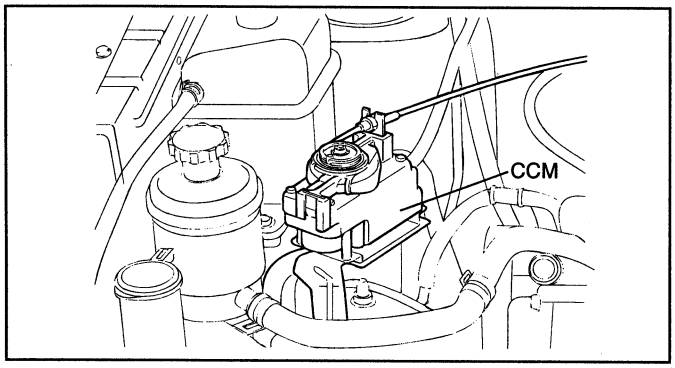

EBHA031C

PARTS INSPECTION EBAA0320

CRUISE CONTROL MAIN SWITCH

1. Operate the switch and check for continuity between the terminals.

2. If continuity is not as specified, replace the switch.

Terminal / Position	1	2	3	4	5	6
ON	○		○	○	○	
OFF	○			○		

EBAA032A

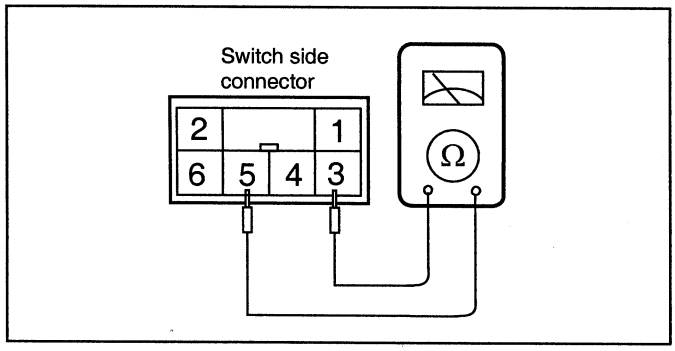

EBAA032B

STOP LAMP SWITCH

After operating the stop lamp switch, check for continuity between the terminals.

Terminal / Position	1	2	3	4
Not pushed			○	○
Pushed	○	○		

EBAA032C

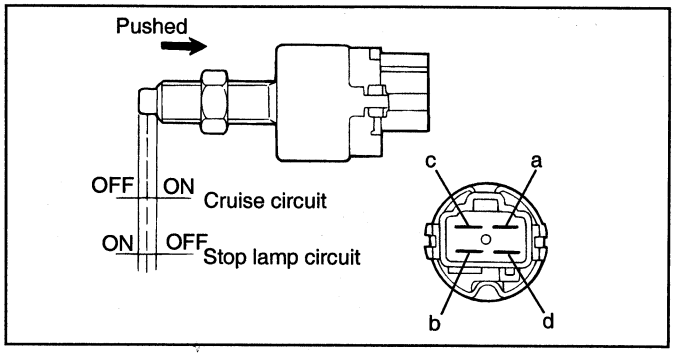

EBA9032C

INSPECTION EBAA0330

CONDITION

- Turn A/C and all lights OFF. Inspect and adjust at no load.
- Warm the engine until idle is stabilized. Confirm that the idle speed is at the specified RPM.
- Turn the ignition switch OFF.

1. Confirm there are no sharp bends in the cables.

2. Depress the accelerator pedal and check if the throttle lever moves smoothly from fully closed to fully open.

3. Check the inner cables for correct slack.

4. If there is too much slack or no slack, adjust the play by the following procedures :

SERVICE HINT

1. If the cable is very loose, the loss of speed going uphill will be large.

2. If the cable is too tight, idle RPM will be high.

CABLE ADJUSTMENT

1. Assemble the cable to actuator and unit assembly.
2. Tighten nut “b” after pulling the cable tightly.
3. Back nut “b” off one turn.
4. Tighten nut “a”.
5. Cable should have approximately 1mm of slack with the actuator and unit against the stop.

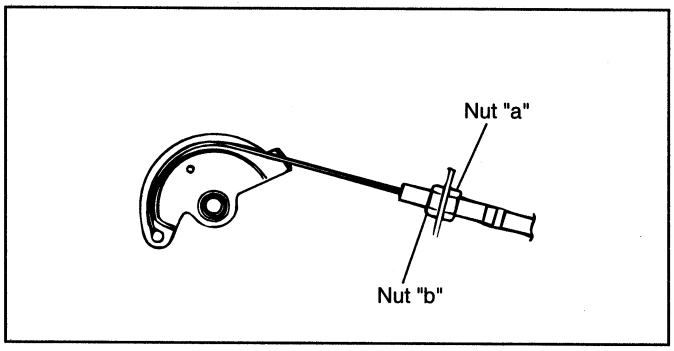

EBAA033A

Emissions Control System

GENERAL ..... EC -2

CRANKCASE EMISSION CONTROL SYSTEM ..... EC -14

EVAPORATIVE EMISSION CONTROL SYSTEM ..... EC -18

EXHAUST EMISSION CONTROL SYSTEM ..... EC -22

GENERAL

EEJB0010

SPECIFICATIONS

Components	Function	Remarks
Crankcase Emission System Positive crankcase ventilation (PCV) valve	HC reduction	Variable flow rate type
Evaporative Emission System EVAP Canister EVAP Canister Purge Solenoid Valve	HC reduction	Duty control solenoid valve
Exhaust Emission System MFI system (air-fuel mixture control device) Three-way catalytic converter Exhaust gas recirculation system [2.4 I4 only] EGR valve MAP sensor	CO, HC, NOx reduction CO, HC, NOx reduction NOx reduction EGR Monitoring	Heated oxygen sensor feedback type Monolithic type Single type Electric pressure type

EVAP : Evaporative Emission

SERVICE STANDARD

EVAP Canister Purge Solenoid Valve Coil current	0.45A or below (at 12V)

TIGHTENING TORQUE

Item	Nm	kg·cm	lb·ft
Positive crankcase ventilation valve	8-12	80-120	6-9

TROUBLESHOOTING

Symptom	Probable cause	Remedy
Engine will not start or hard to start	Vacuum hose disconnected or damaged EGR valve does not close Malfunction of the EVAP Canister Purge Solenoid Valve	Repair or replace Repair or replace Repair or replace
Rough idle or engine stalls	Vacuum hose disconnected or damaged EGR valve does not close Malfunction of the PCV valve Malfunction of the EVAP Canister Purge System	Repair or replace Repair or replace Replace Check the system; if there is a problem, check its component parts
Excessive oil consumption	Positive crankcase ventilation line clogged	Check positive crankcase ventilation system
Poor fuel mileage	Malfunction of the exhaust gas recirculation system	Check the system; if there is a problem, check its component parts

EMISSION CONTROLS LOCATION EEJB0050

[2.4 I4]

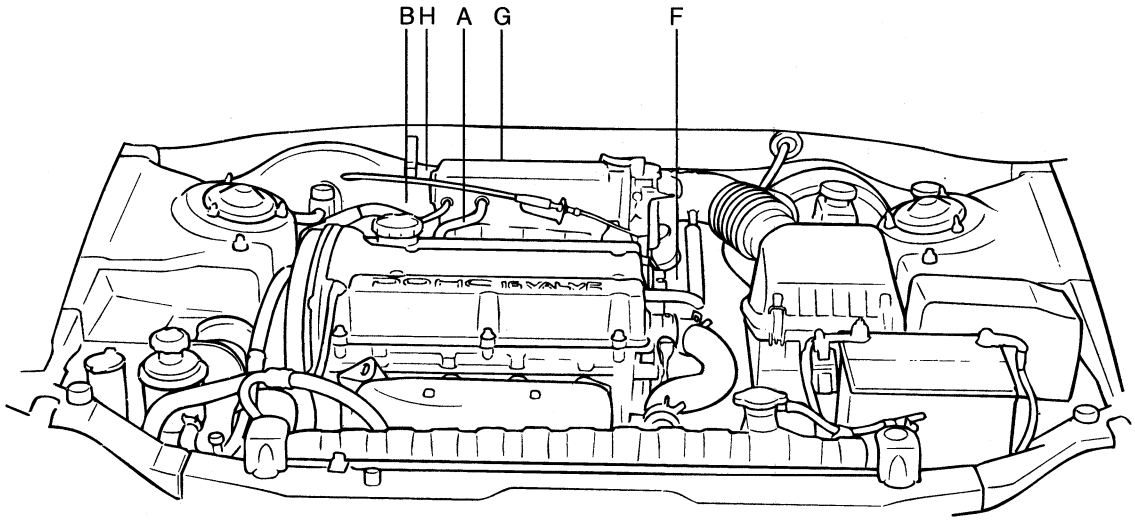

EEA9005A

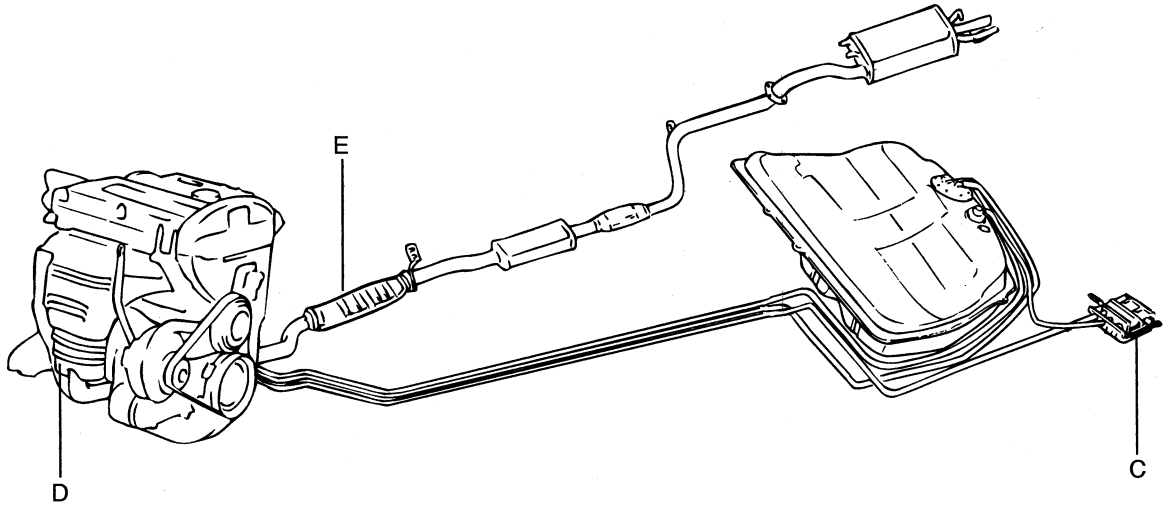

EEA9005B

A. PCV Valve
B. EVAP Canister Purge Solenoid Valve
C. EVAP Canister
D. Manifold-mounted catalytic converter (MCC)
E. Under-vehicle catalytic converter (UCC)
F. EGR valve
G. EGR solenoid valve
H. Manifold absolute pressure (MAP) sensor (for EGR monitoring)

EEJB005A

A. PCV valve

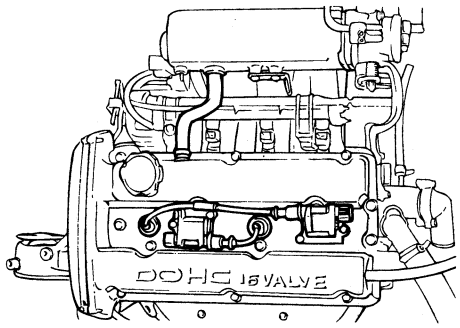

EEA9005C

B. EVAP Canister Purge Solenoid Valve

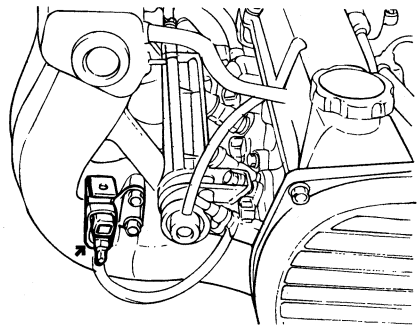

EEA9005D

C. EVAP. Canister

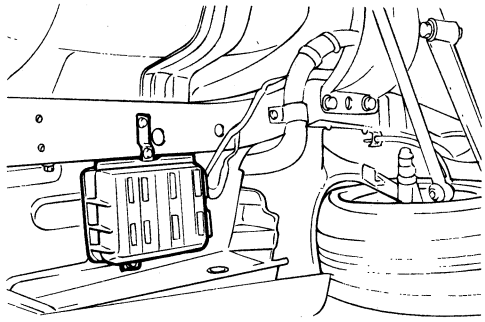

EEA9005E

D. Catalytic Converter (MCC)

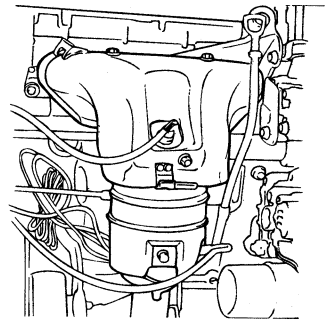

EEA9005G

E. Catalytic Converter (UCC)

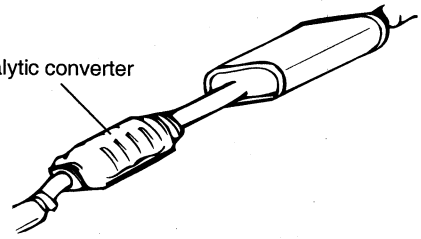

EEA9005F

F. EGR valve

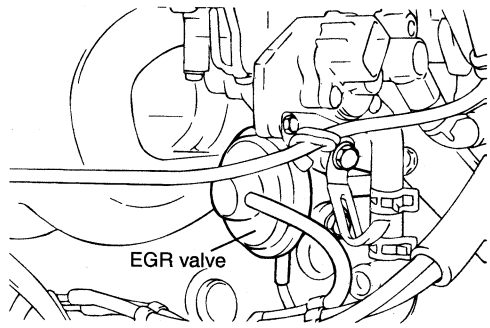

S5EC002D

G. EGR solenoid valve

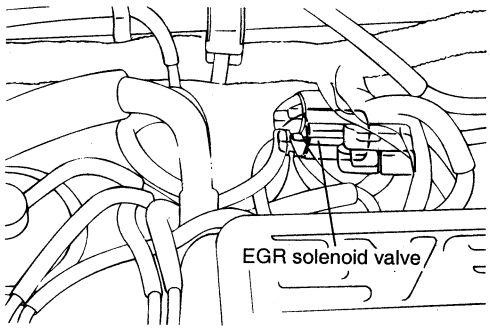

S5EC500G

EMISSION CONTROLS LOCATION EEJB0060

[2.7 V6]

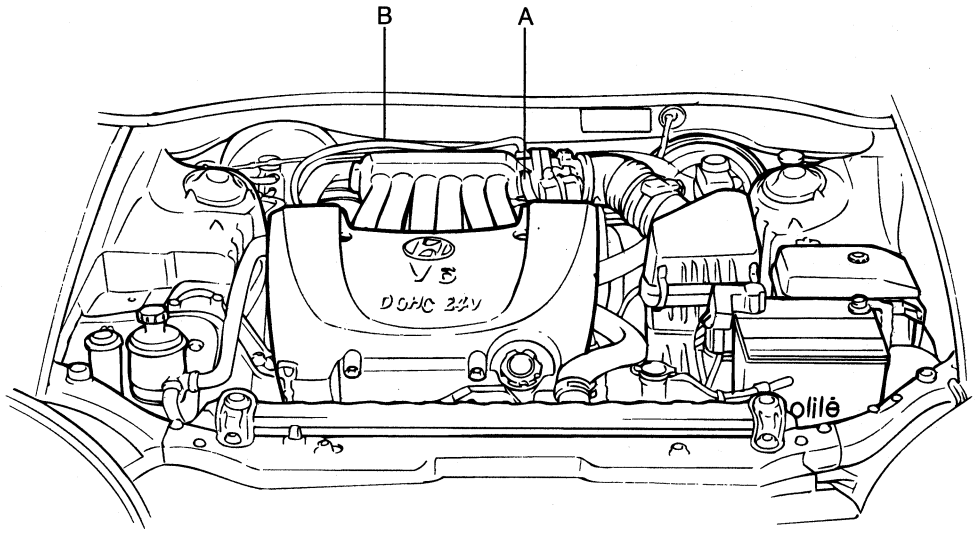

EEA9006A

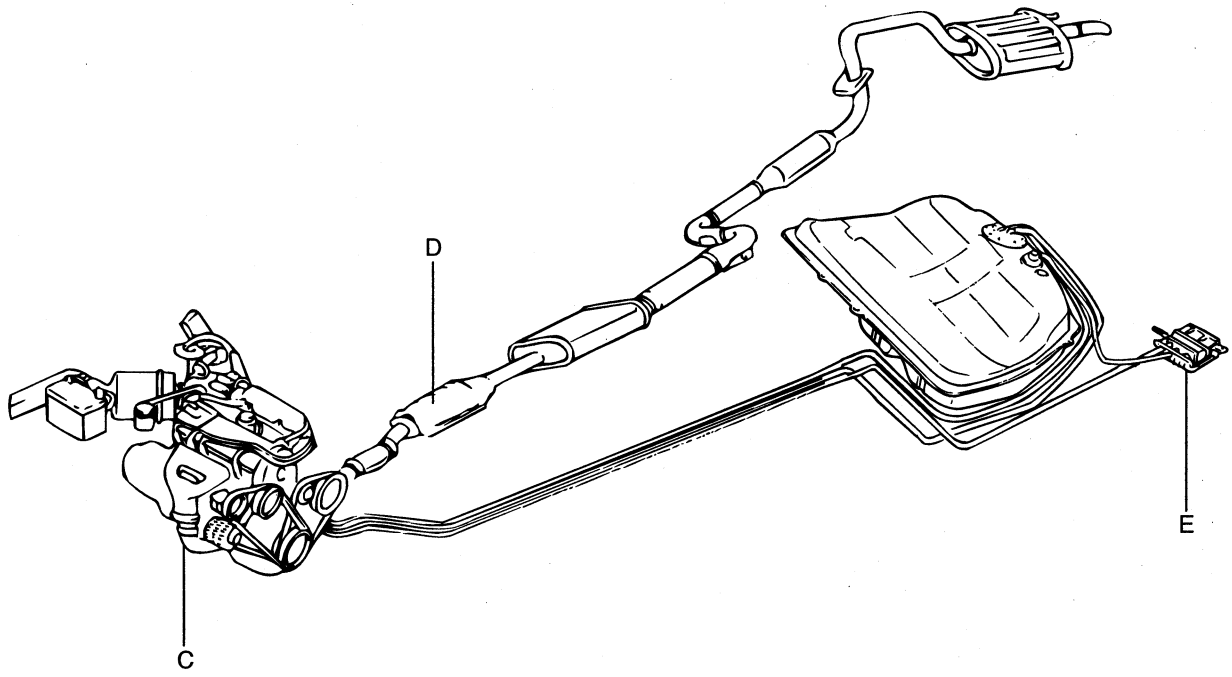

EEHA006A

A. PCV Valve
B. EVAP Canister Purge Solenoid Valve
C. Manifold-mounted catalytic converter (MCC)
D. Under-vehicle catalytic converter (UCC)
E. EVAP Canister

EEJB006A

A. PCV valve	B. EVAP Canister Purge Solenoid Valve
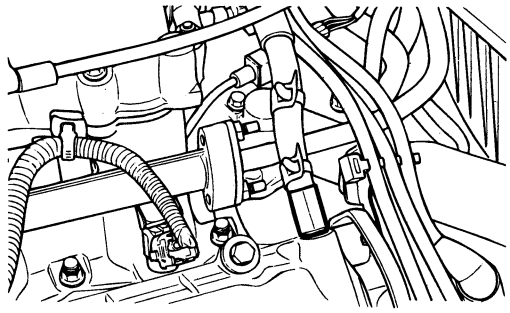 KFW4002A	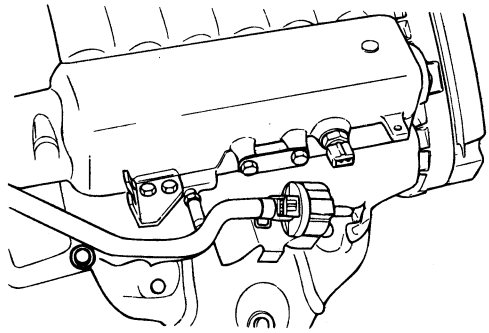 KFW5011A
C. Catalytic Converter (MCC)	D. Catalytic Converter (UCC)
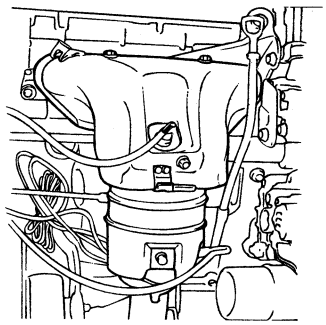 EEA9005G	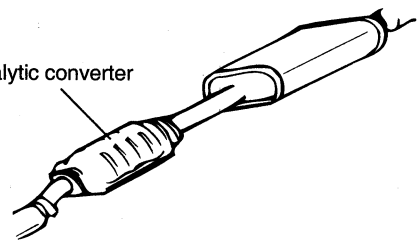 EEA9005F
E. Evap. Canister	
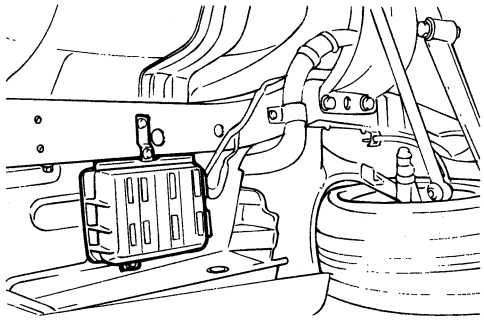 EEA9005E	

SCHEMATIC DRAWING (2.4 I4) EEJB073A

[UNLEADED, OBD-II]

*1. HEATED OXYGEN SENSOR (HO2S) *2. HOT FILM SENSOR *3. THROTTLE POSITION SENSOR *4. CAMSHAFT POSITION SENSOR (CMP SENSOR) *5. CRANKSHAFT POSITION SENSOR (CKP SENSOR) *6. ENGINE COOLANT TEMP. SENSOR (ECT Sensor) *7. KNOCK SENSOR *8. MANIFOLD ABSOLUTE PRESSURE SENSOR (FOR EGR)	o IGNITION SWITCH o VEHICLE SPEED SENSOR o A/C LOAD SIGNAL o "PNP" SWITCH (A/T ONLY) o POWER STEERING SWITCH o IGNITION DETECT SIGNAL o BATTERY VOLTAGE	INPUT → PCM → OUTPUT	**1. FUEL INJECTOR **2. IGNITION COIL **3. ISC ACTUATOR (Linear Solenoid Type) **4. EVAP Canister Purge Solenoid Valve **5. EGR CONTROL SOLENOID VALVE o FUEL PUMP CONTROL o MFI CONTROL RELAY o A/C RELAY o IGNITION TIMING CONTROL o DIAGNOSIS

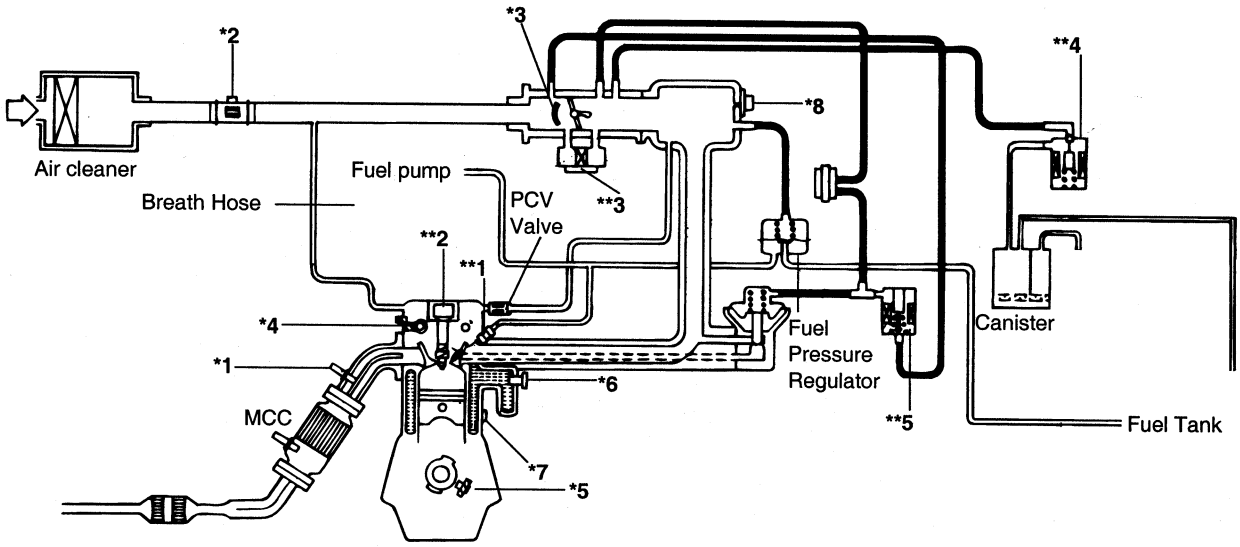

PCM : Powertrain Control Module
EVAP : Evaporative Emission
MCC : Manifold Catalytic Converter
UCC : Under floor Catalytic Converter

EEJB073B

SCHEMATIC DRAWING (2.4 I4) EEJB0074

[UNLEADED]

*1. HEATER OXYGEN SENSOR (HO2S) *2. MAP & IAT SENSOR *3. THROTTLE POSITION SENSOR (With Idle Switch) *4. CAMSHAFT POSITION SENSOR (CMP SENSOR) *5. CRANKSHAFT POSITION SENSOR (CKP SENSOR) *6. ENGINE COOLANT TEMP. SENSOR (ECT Sensor) *7. KNOCK SENSOR	o IGNITION SWITCH o VEHICLE SPEED SENSOR o COOLER LOAD SIGNAL o "PNP" SWITCH (A/T ONLY) o POWER STEERING SWITCH o IGNITION DETECT SIGNAL o BATTERY VOLTAGE	INPUT → ECM → OUTPUT	**1. FUEL INJECTOR **2. IGNITION COIL **3. ISC MOTOR (Linear Solenoid Type) **4. EVAP Canister Purge Solenoid Valve o FUEL PUMP CONTROL o MFI CONTROL RELAY o COOLER RELAY o IGNITION TIMING CONTROL o DIAGNOSIS

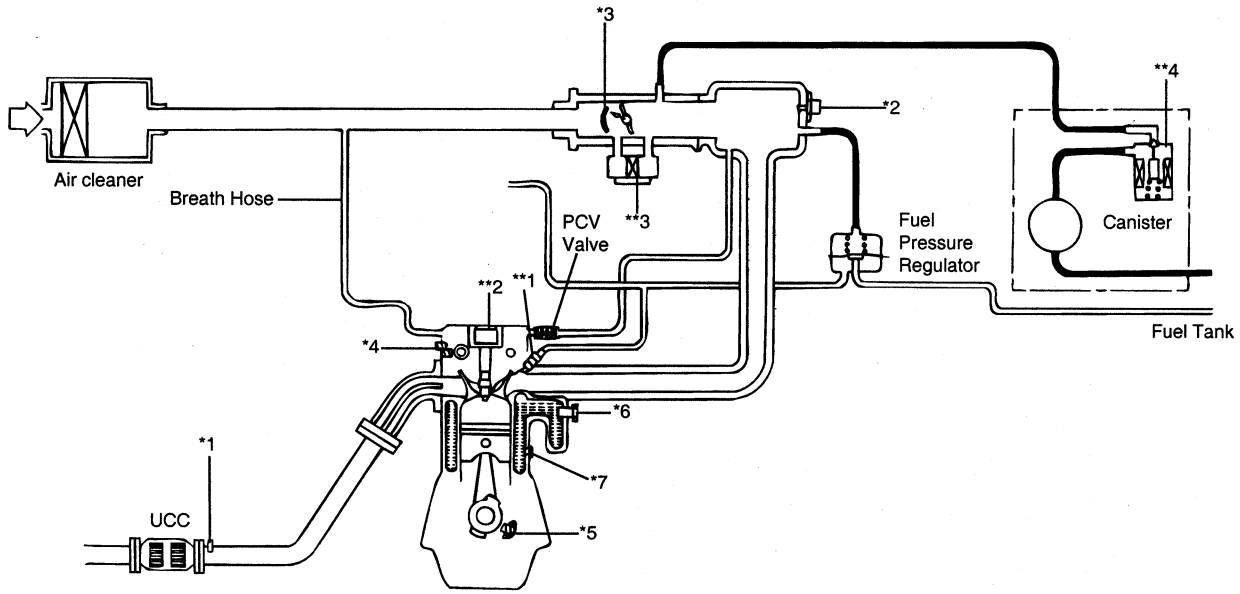

ECM : Engine Control Module
EVAP : Evaporative Emission
UCC : Under floor Catalytic Converter

EEHA007B

SCHEMATIC DRAWING (2.4 I4) EEJB0075

[LEADED]

*1. MAP & IAT SENSOR *2. THROTTLE POSITION SENSOR (With Idle Switch) *3. CAMSHAFT POSITION SENSOR (CMP SENSOR) *4. CAMSHAFT POSITION SENSOR (CKP SENSOR) *5. ENGINE COOLANT TEMP. SENSOR (ECT SENSOR) *6. KNOCK SENSOR	o IGNITION SWITCH o VEHICLE SPEED SENSOR o COOLER LOAD SIGNAL o "PNP" SWITCH (A/T ONLY) o POWER STEERING SWITCH o IGNITION DETECT SIGNAL o BATTERY VOLTAGE o VARIABLE REGISTER	INPUT → ECM → OUTPUT	**1. FUEL INJECTOR **2. IGNITION COIL **3. ISC MOTOR (Linear Solenoid Type) **4. EVAP Canister Purge Solenoid Valve o FUEL PUMP CONTROL o MFI CONTROL RELAY o COOLER RELAY o IGNITION TIMING CONTROL o DIAGNOSIS

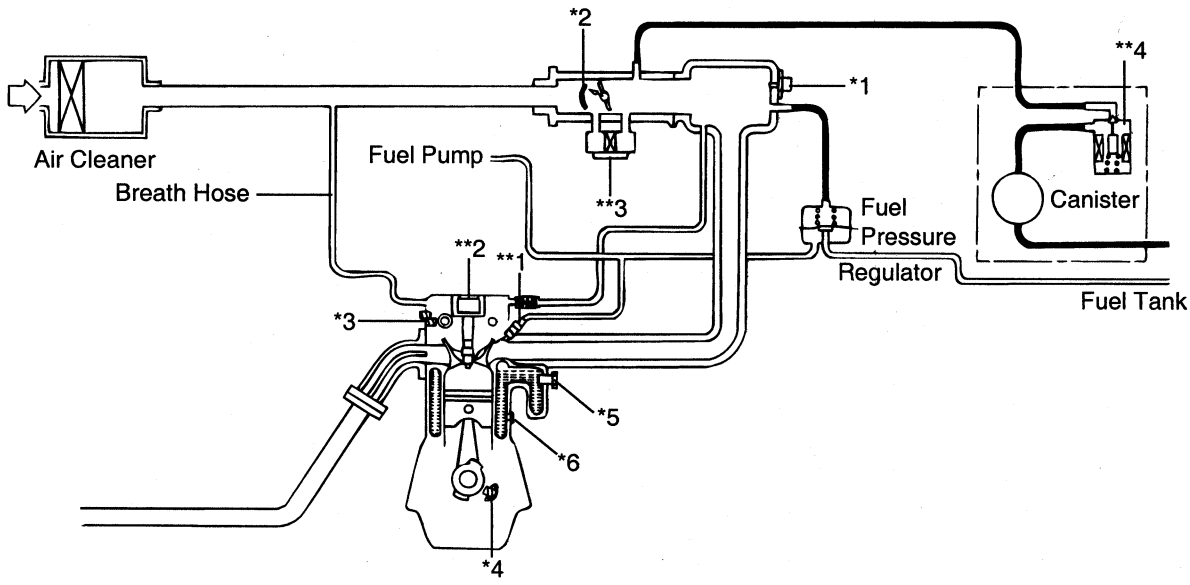

ECM : Engine Control Module
EVAP : Evaporative Emission

EEA9008A

SCHEMATIC DRAWING (2.7 V6) EEJB093A

[UNLEADED, OBD-II]

*1. HEATED OXYGEN SENSOR (H02S) *2. HOT FILM SENSOR *3. INTAKE AIR TEMP. SENSOR (IAT SENSOR) *4. ENGINE COOLANT TEMP. SENSOR (ECT SENSOR) *5. THROTTLE POSITION SENSOR (TP SENSOR) *6. CAMSHAFT POSITION SENSOR (CMP SENSOR) *7. CRANKSHAFT POSITION SENSOR (CKP SENSOR) *8. KNOCK SENSOR	o IGNITION SWITCH o BATTERY VOLTAGE o VEHICLE SPEED SENSOR o A/C LOAD SIGNAL o "PNP" SWITCH (A/T ONLY) o FUEL PUMP RELAY SIGNAL	INPUT → PCM → OUTPUT	**1. FUEL INJECTOR **2. IGNITION COIL **3. ISC MOTOR (Linear Solenoid Type) **4. EVAP Canister Purge Solenoid Valve o FUEL PUMP CONTROL o MFI CONTROL RELAY o A/C RELAY o IGNITION TIMING CONTROL o DIAGNOSIS

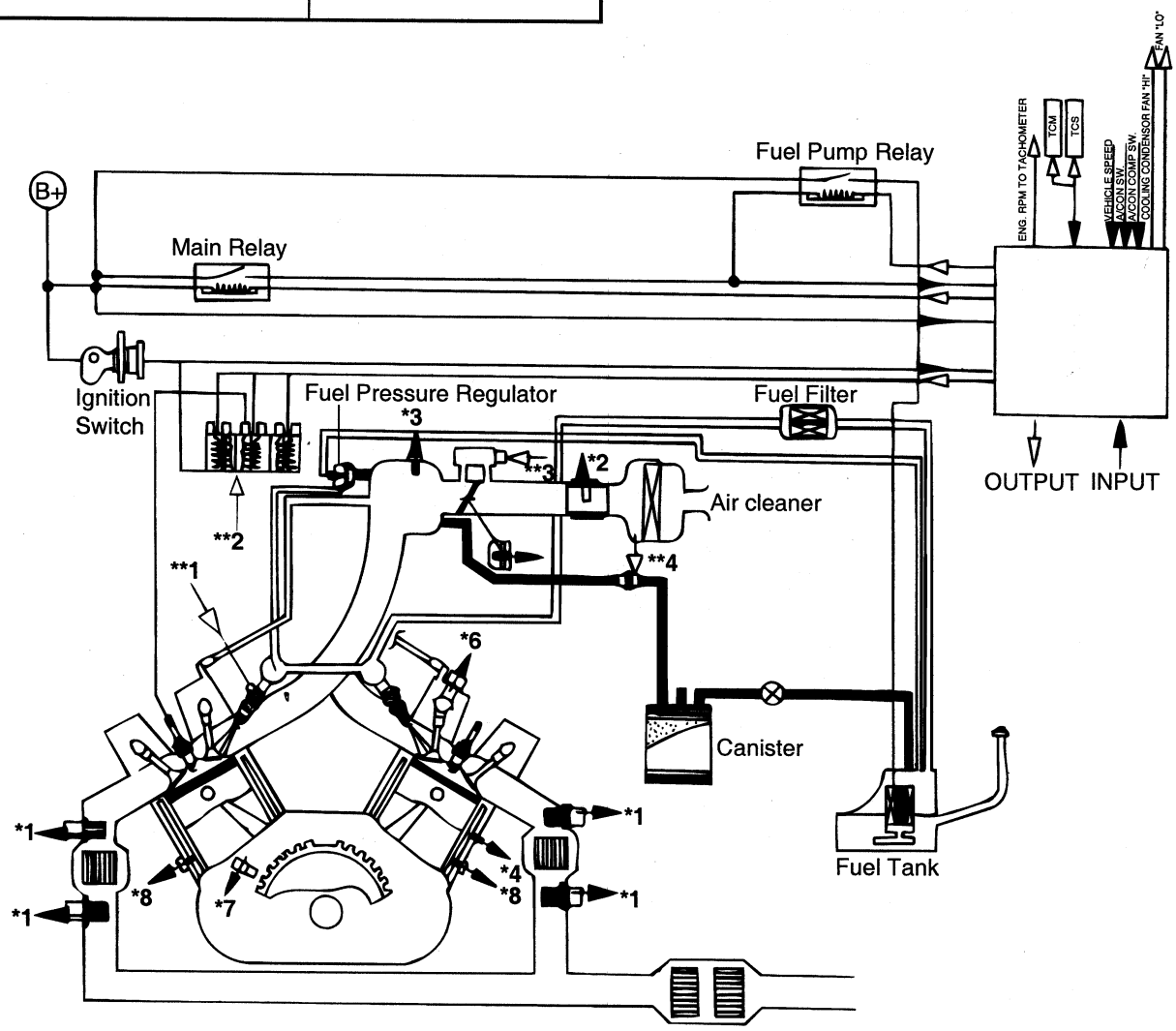

PCM : Powertrain Control Module
EVAP : Evaporative Emission
UCC : Underbody Catalytic Converter
MCC : Manifold Catalytic Converter

EEJB093B

SCHEMATIC DRAWING (2.7 V6) EEJB0094

[UNLEADED]

*1. HEATED OXYGEN SENSOR (H02S) *2. HOT FILM SENSOR *3. INTAKE AIR TEMP. SENSOR (IAT SENSOR) *4. ENGINE COOLANT TEMP. SENSOR (ECT SENSOR) *5. THROTTLE POSITION SENSOR (TP SENSOR) *6. CAMSHAFT POSITION SENSOR (CMP SENSOR) *7. CRANKSHAFT POSITION SENSOR (CKP SENSOR) *8. KNOCK SENSOR	o IGNITION SWITCH o BATTERY VOLTAGE o VEHICLE SPEED SENSOR o COOLER LOAD SIGNAL o "PNP" SWITCH (A/T ONLY) o FUEL PUMP RELAY SIGNAL	INPUT → ECM → OUTPUT	**1. FUEL INJECTOR **2. IGNITION COIL **3. ISC MOTOR (Linear Solenoid Type) **4. EVAP Canister Purge Solenoid Valve o FUEL PUMP CONTROL o MFI CONTROL RELAY o COOLER RELAY o IGNITION TIMING CONTROL o DIAGNOSIS

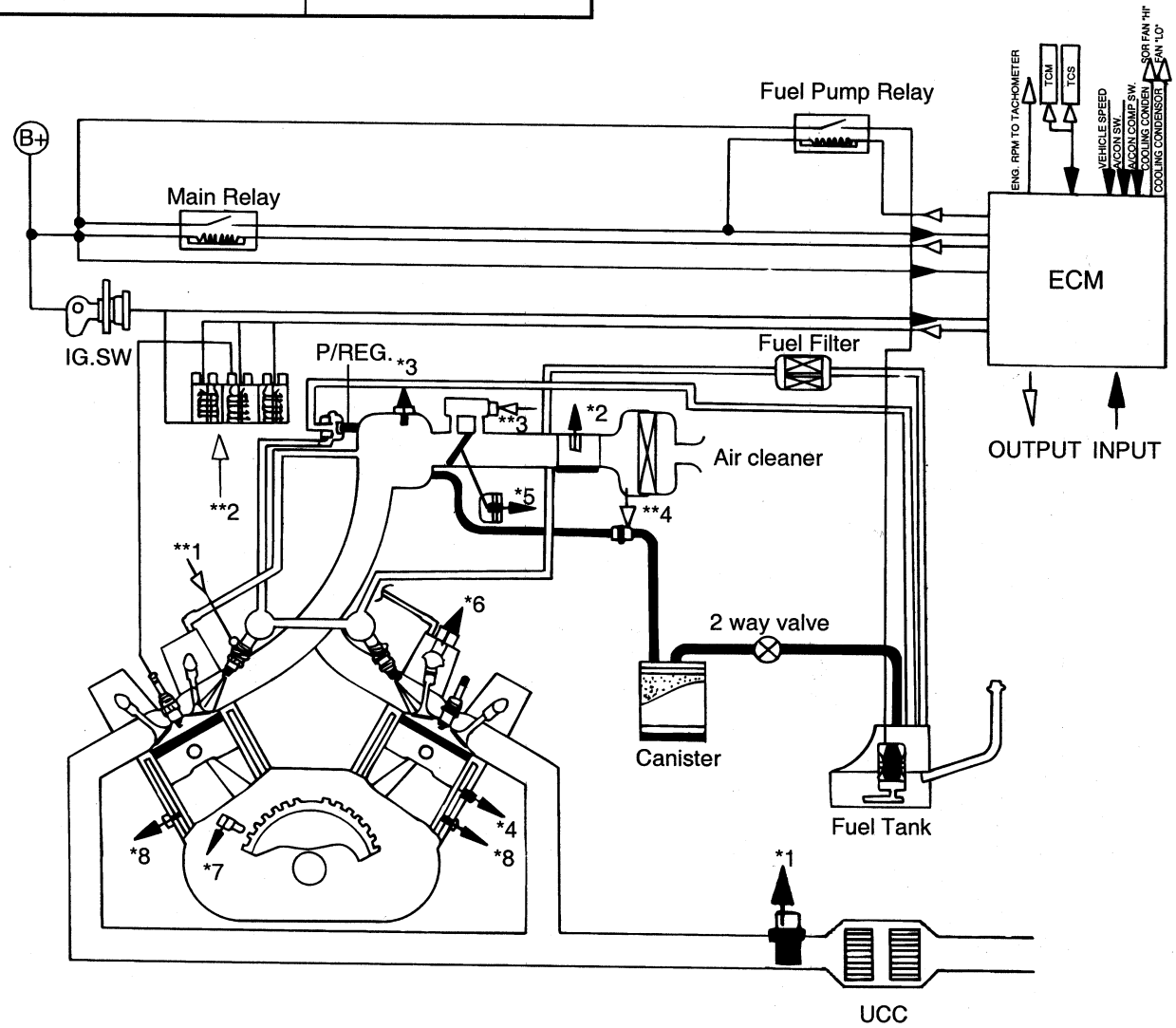

ECM : Engine Control Module
EVAP : Evaporative Emission
UCC : Under floor catalytic converter

EEHA009B

SCHEMATIC DRAWING (2.7 V6) EEJB0095

[LEADED]

*1. HOT FILM SENSOR *2. INTAKE AIR TEMP. SENSOR (IAT SENSOR) *3. ENGINE COOLANT TEMP. SENSOR (ECT SENSOR) *4. THROTTLE POSITION SENSOR (TP SENSOR) *5. CAMSHAFT POSITION SENSOR (CMP SENSOR) *6. CRANKSHAFT POSITION SENSOR (CKP SENSOR) *7. KNOCK SENSOR	o IGNITION SWITCH o BATTERY VOLTAGE o VEHICLE SPEED SENSOR o COOLER LOAD SIGNAL o "PNP" SWITCH (A/T ONLY) o FUEL PUMP RELAY SIGNAL o VARIABLE REGISTER	INPUT → ECM → OUTPUT	**1. FUEL INJECTOR **2. IGNITION COIL **3. ISC MOTOR (Linear Solenoid Type) **4. EVAP Canister Purge Solenoid Valve o FUEL PUMP CONTROL o MFI CONTROL RELAY o COOLER RELAY o IGNITION TIMING CONTROL o DIAGNOSIS

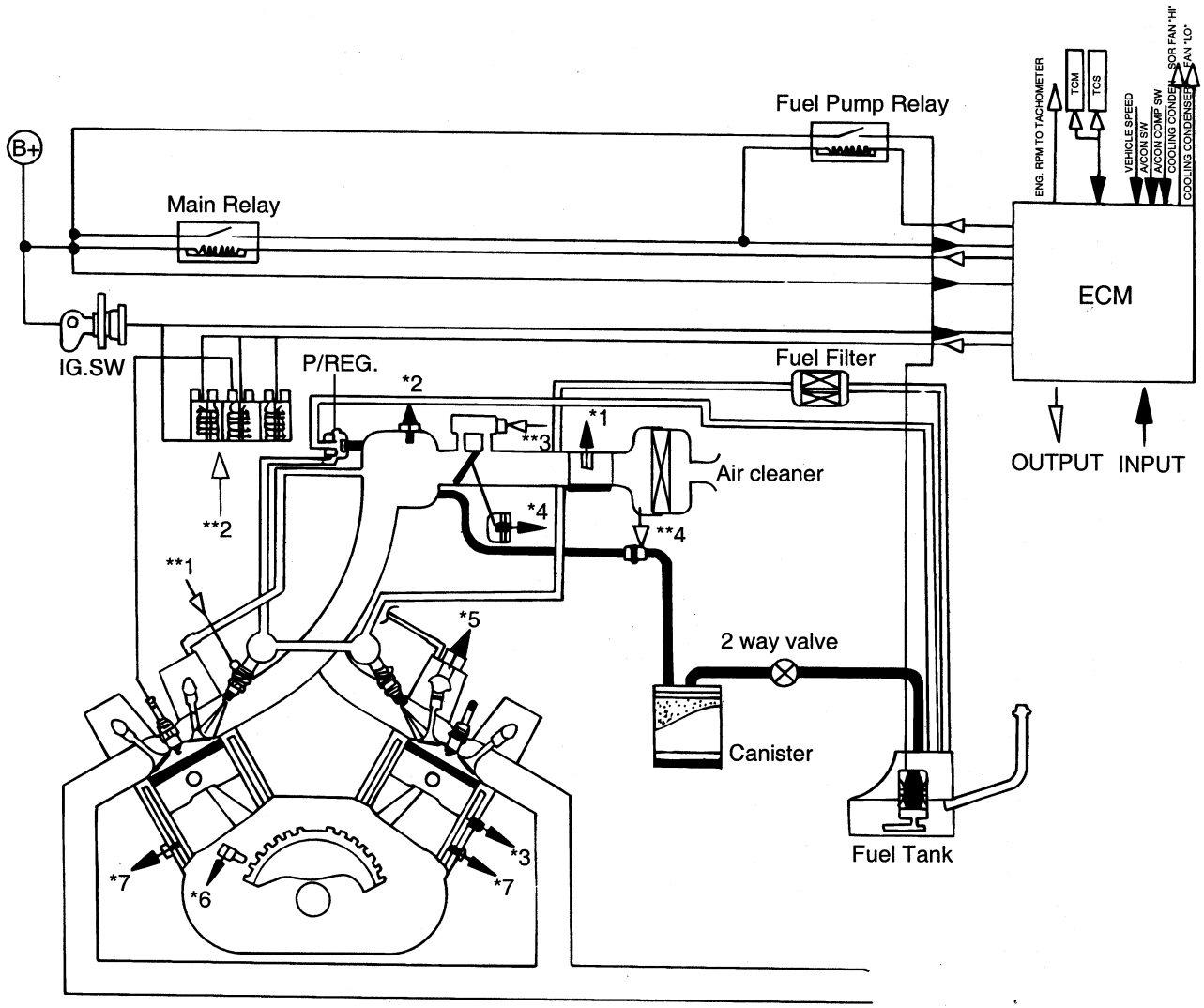

ECM : Engine Control Module
EVAP : Evaporative Emission

EEA9009B

VACUUM HOSES LAYOUT EEJB0110

[2.4 I4]

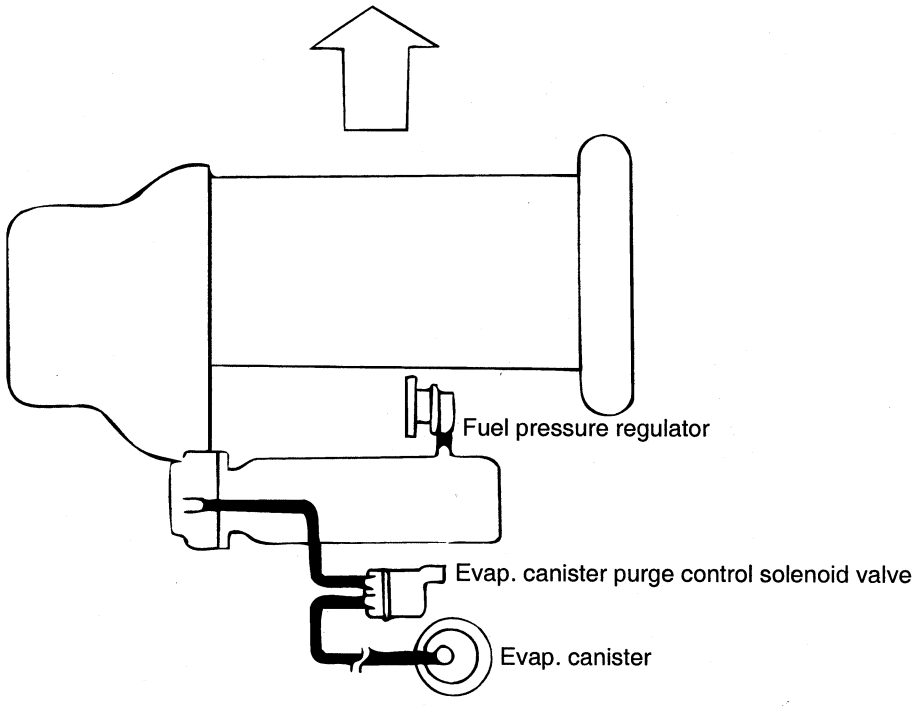

[2.7 V6]

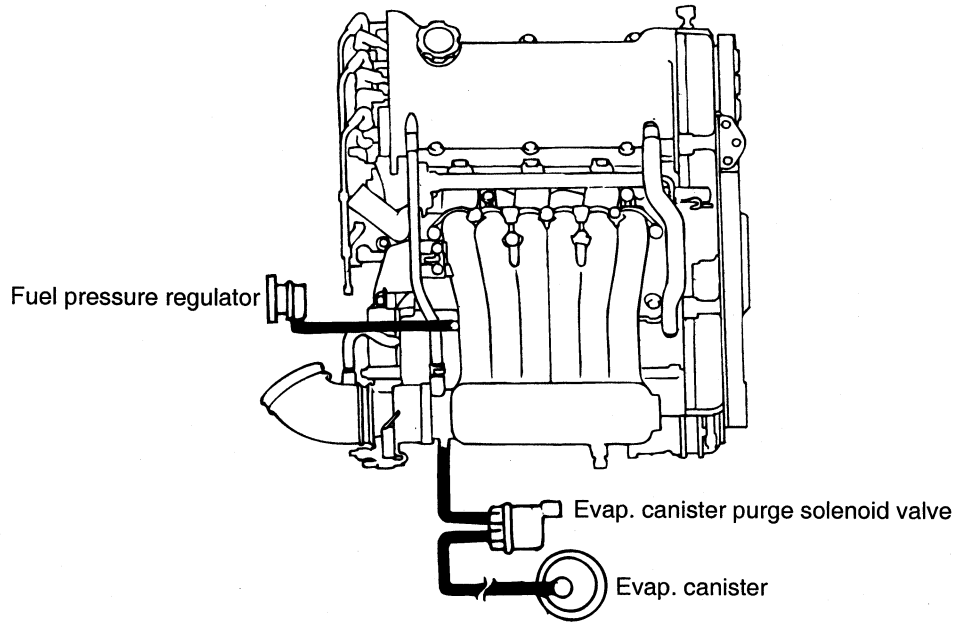

EEJB011A

CRANKCASE EMISSION CONTROL SYSTEM

POSITIVE CRANKCASE VENTILATION (PCV) VALVE EEJB0120

COMPONENTS

[2.4 I4]

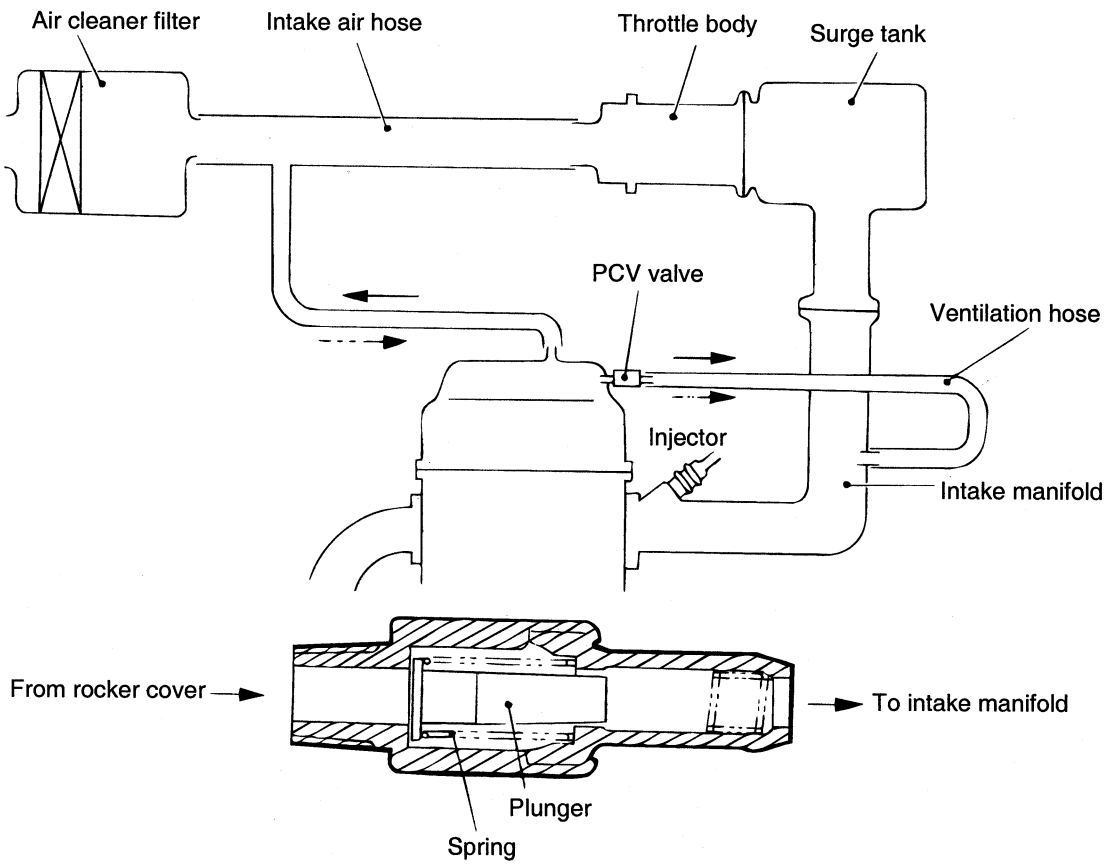

EEJB012A

POSITIVE CRANKCASE VENTILATION (PCV) VALVE EEHA0130

COMPONENTS

[2.7 V6]

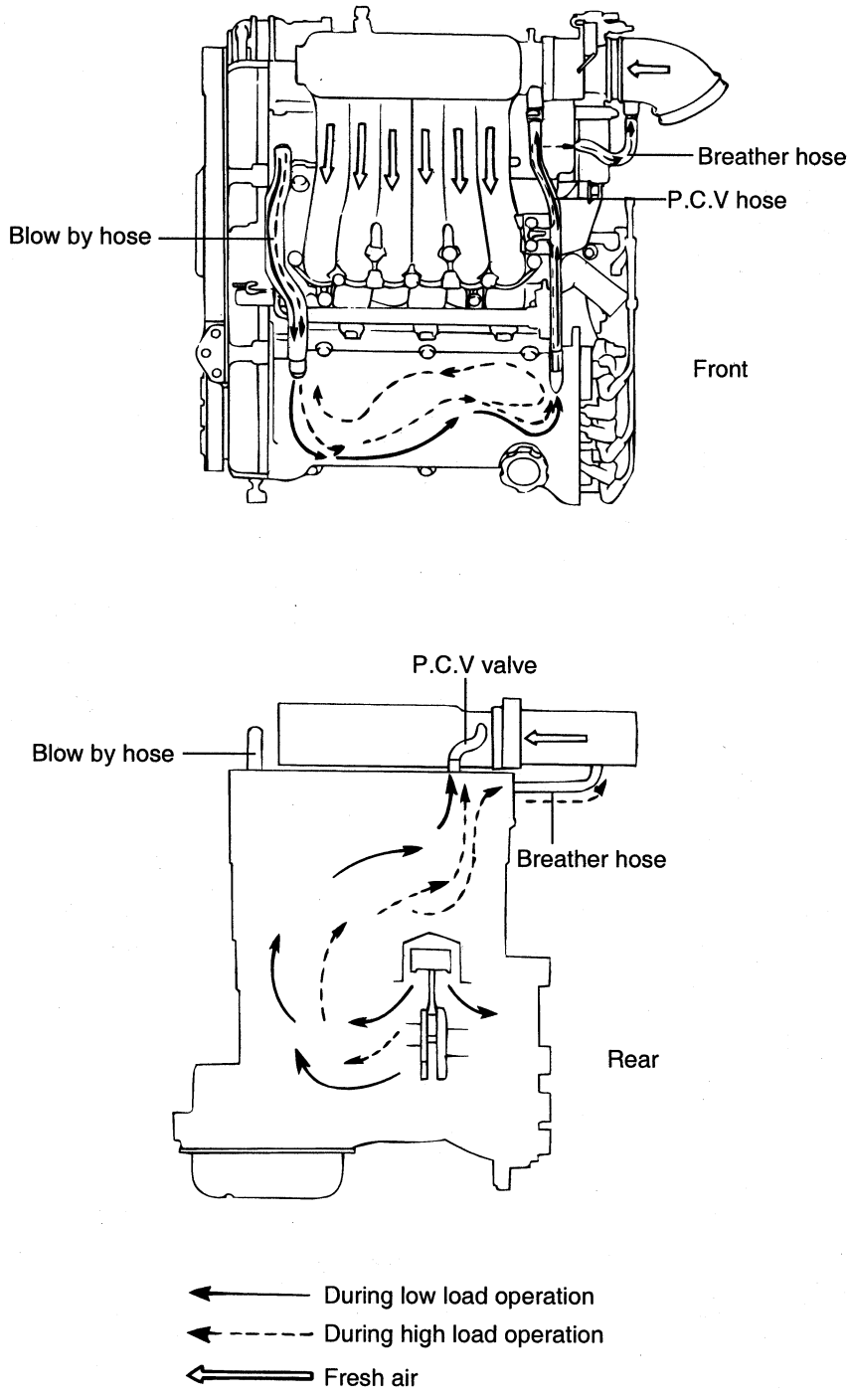

EEHA013A

PCV VALVE OPERATING

EEA90140

Intake manifold side (No vacuum)

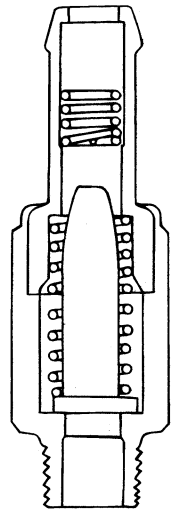

EEA9014A

Rocker cover side

Engine condition	Not running
PCV valve	Not operating
Vacuum passage	Restricted

Intake manifold side (High vacuum)

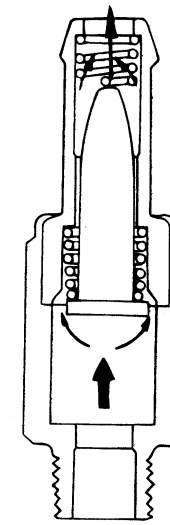

EEA9014B

Rocker cover side

Engine condition	Idling or decelerating
PCV valve	Fully operating
Vacuum passage	Small

Intake manifold side (Moderate vacuum)

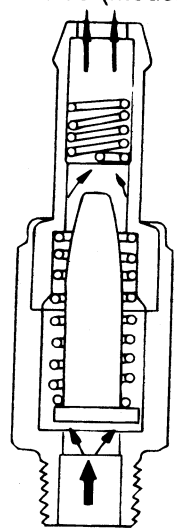

EEA9014C

Rocker cover side

Engine condition	Normal operation
PCV valve	Properly operating
Vacuum passage	Large

Intake manifold side (Low vacuum)

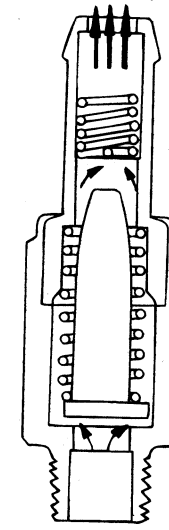

EEA9014D

Rocker cover side

Engine condition	Accelerating and high load
PCV valve	Slightly operating
Vacuum passage	Much large

DISASSEMBLY EEA90150

1. Disconnect the ventilation hose from the positive crankcase ventilation (PCV) valve. Remove the PCV valve from the rocker cover and reconnect it to the ventilation hose.

2. Run the engine at idle and put a finger on the open end of the PCV valve and make sure that intake manifold vacuum is felt.

NOTE

The plunger inside the PCV valve should move back and forth.

3. If vacuum is not felt, clean the PCV valve and ventilation hose in cleaning solvent, or replace if necessary.

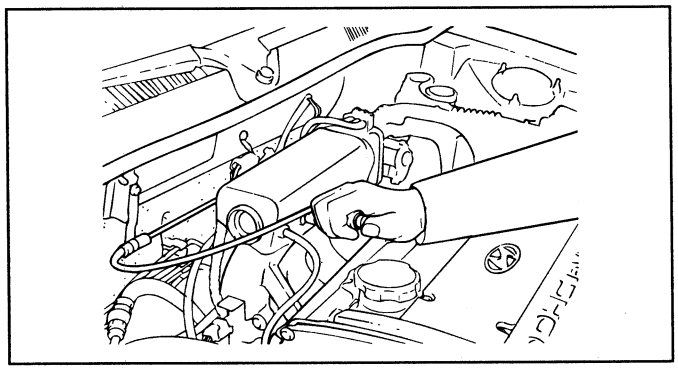

EEA9015A

INSPECTION

1. Remove the positive crankcase ventilation valve.

2. Insert a thin stick into the positive crankcase ventilation valve from the threaded side to check that the plunger moves.

3. If the plunger does not move, the positive crankcase ventilation valve is clogged. Clean or replace it.

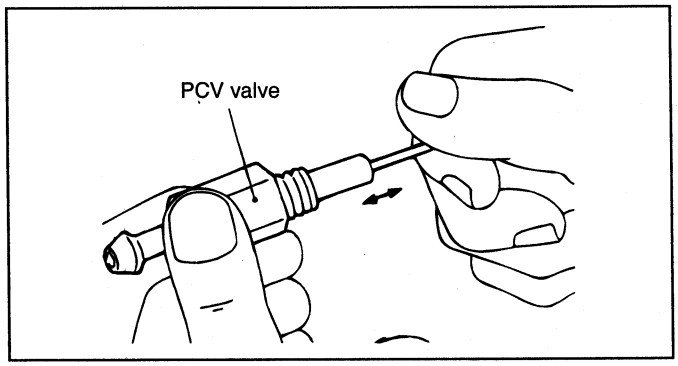

EEA9015B

INSTALLATION

Install the positive crankcase ventilation valve and tighten to the specified torque.

Tightening torque PCV valve : 8-12 Nm(80-120 kg.cm, 6-8 lb.ft)

EVAPORATIVE EMISSION CONTROL SYSTEM

COMPONENTS EEJB0180

[2.4 I4]

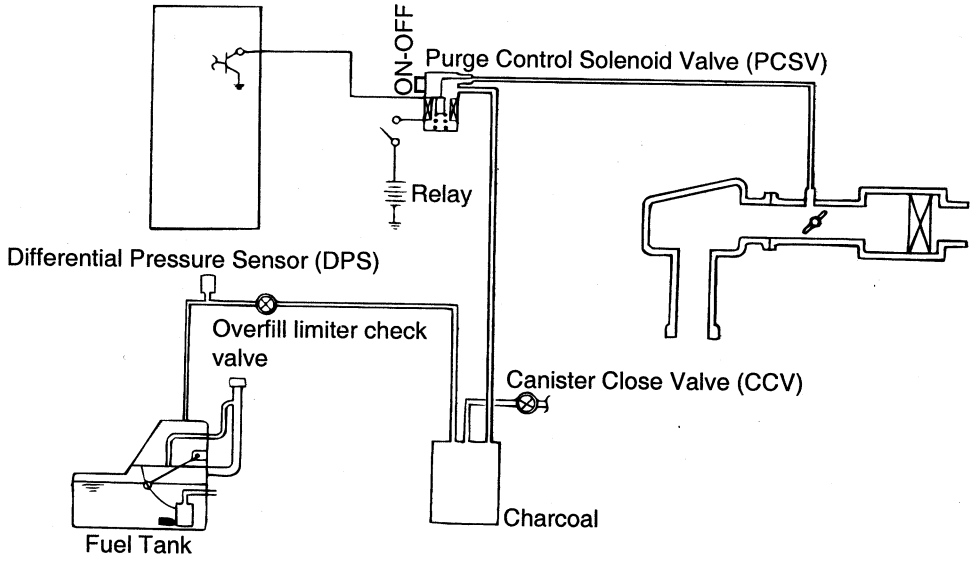

[2.7 V6]

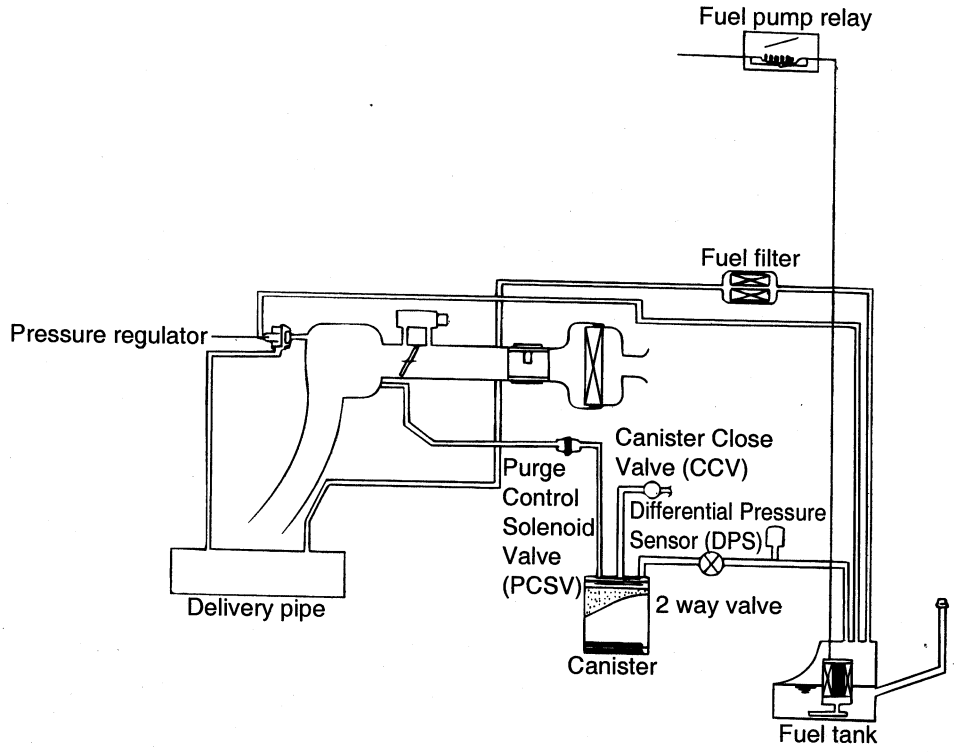

CCV : Caonister close valve
DPS : Differential Pressure Sensor
PCSV : Purge Control Solenoid Valve

EEJB018A

EVAPORATIVE (EVAP) CANISTER PURGE SOLENOID VALVE EEJB0200

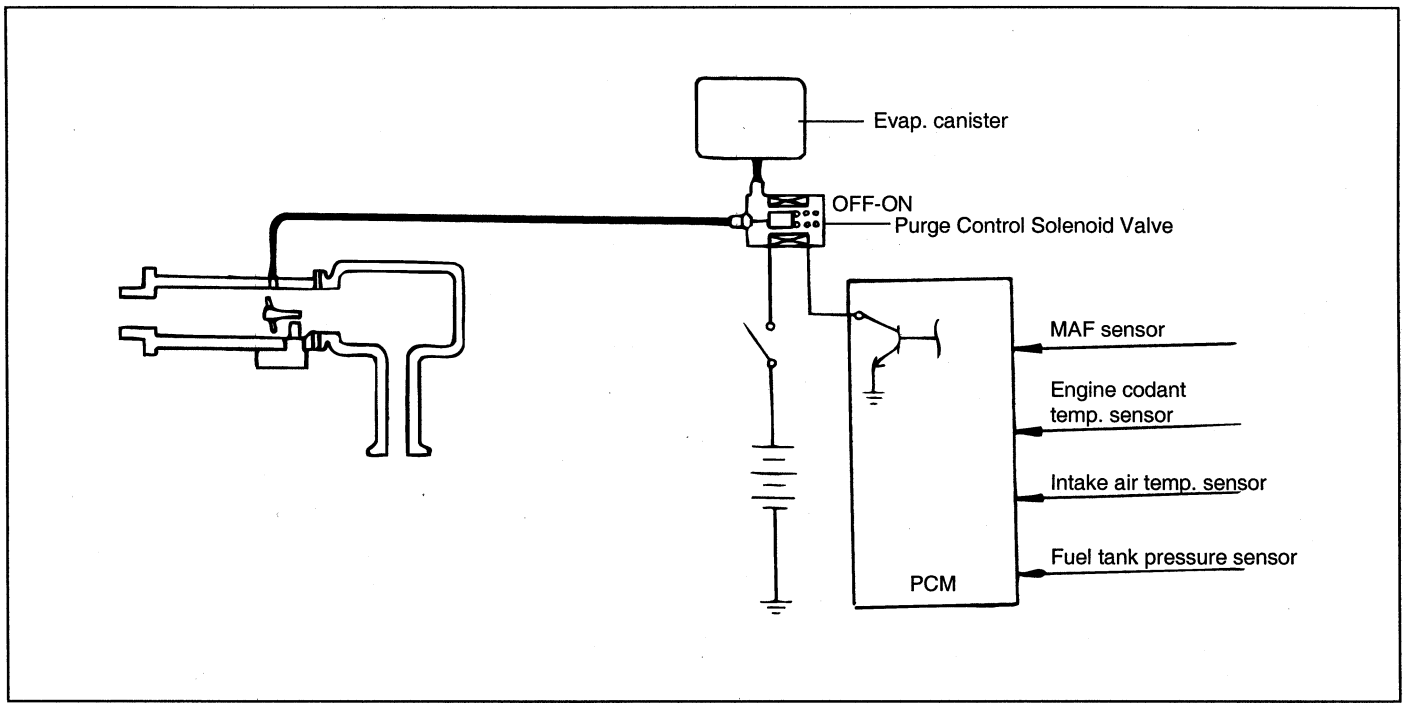

V7EC202A

EVAP CANISTER PURGE CONTROL SOLENOID VALVE

NOTE

The Purge Control Solenoid Valve is controlled by the ECM; when the engine coolant temperature is low, and also during idling, the valve closes so that evaporated fuel is not drawn into the surge tank. After the engine warms up during ordinary driving, the valve opens to draw the stored vapors into the surge tank.

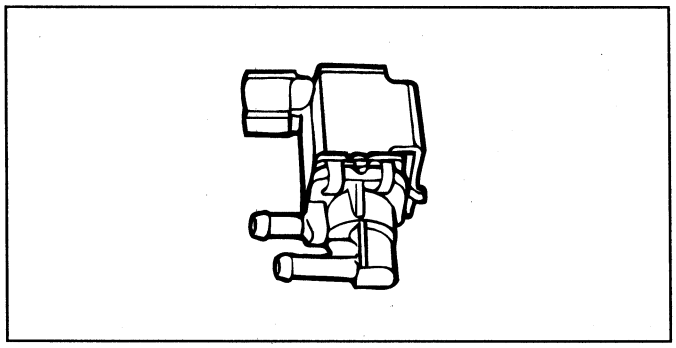

EEAA024A

INSPECTION

NOTE

When disconnecting the vacuum hose, make an identification mark on it so that it can be reconnected to its original position.

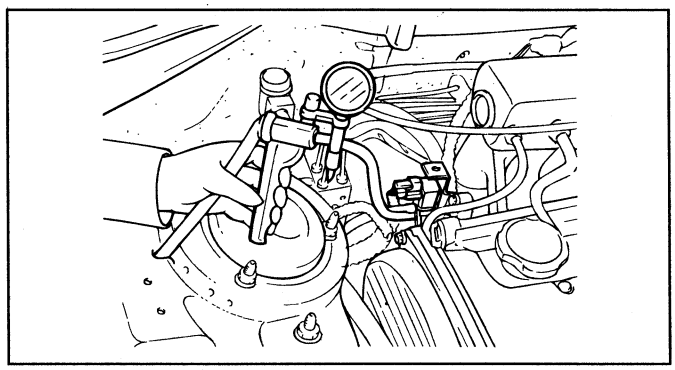

EEA9020B

1. Disconnect the vacuum hose (black with red stripe) from the solenoid valve.
2. Detach the harness connector.
3. Connect a vacuum pump to the nipple to which the red-striped vacuum hose was connected.
4. Apply vacuum and check when voltage is applied to the Purge Control Solenoid Valve and when the voltage is disconnected.

Battery voltage	Normal condition
When applied	Vacuum is released
When disconnected	Vacuum is maintained

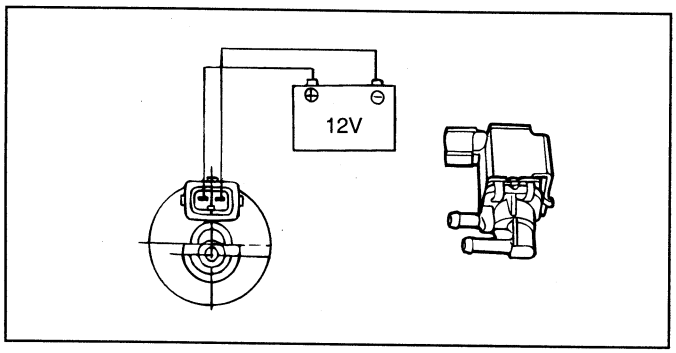

EEAA020C

5. Measure the current between the terminals of the solenoid valve.

Purge Control Solenoid Valve:
Coil at 20°C (68°F) : 0.45A or below (at 12V)
Coil resistance : 26Ω [at 20°C (68°F)]

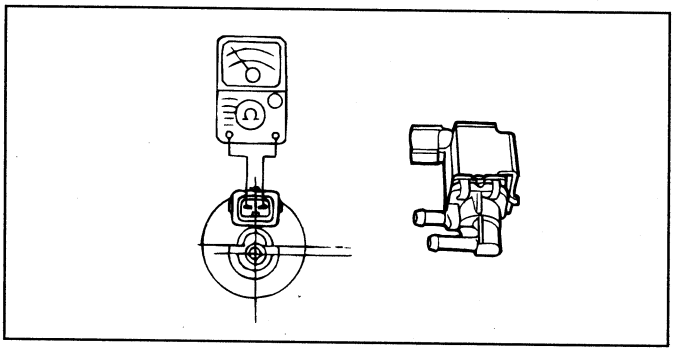

EEAA020D

VACUUM HOSE

Engine coolant temperature : 80-95°C (176-205°F)

1. Disconnect the vacuum hose from the intake manifold purge hose nipple and connect a hand vacuum pump to the nipple.

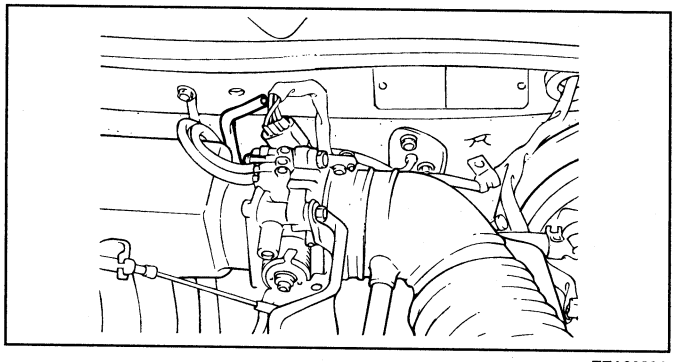

EEA9023A

2. Start the engine and check that, after raising the engine speed by racing the engine, vacuum remains fairly constant.

NOTE

If there is no vacuum created, the intake manifold port may be clogged and require cleaning.

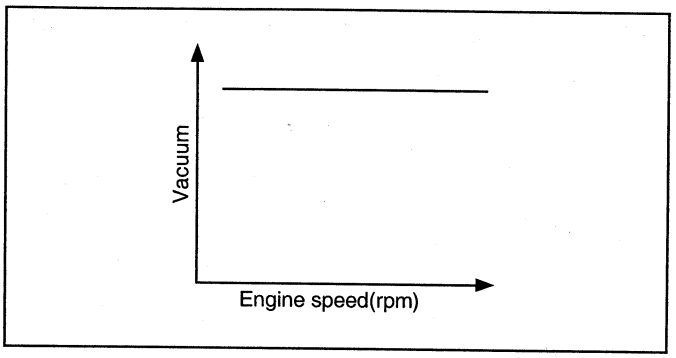

EEA9023B

EVAPORATIVE (EVAP) CANISTER EEJB0240

CANISTER

Inspect the Canisfer Close Valve (CCV) and its air filter as shown in the illustration.

1. Look for loose connections, and sharp bends or damage to the fuel vapor lines.
2. Look for distortion, cracks or fuel leakage.
3. After removing the EVAP Canister, inspect for cracks or damage.

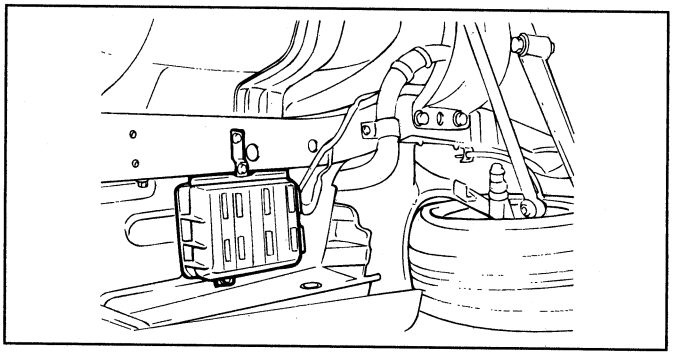

EEA9005E

TWO-WAY VALVE

1. Inspect that air flows as shown.
2. Check that the valve is connected correctly noting the arrow mark on the valve.

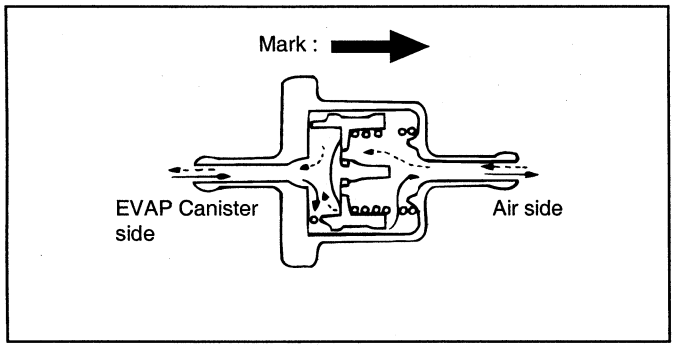

V5EC201D

OVERFILL LIMITER (TWO WAY VALVE) EEAA0250

To inspect the overfill limiter (two-way valve), refer to the Fuel tank.

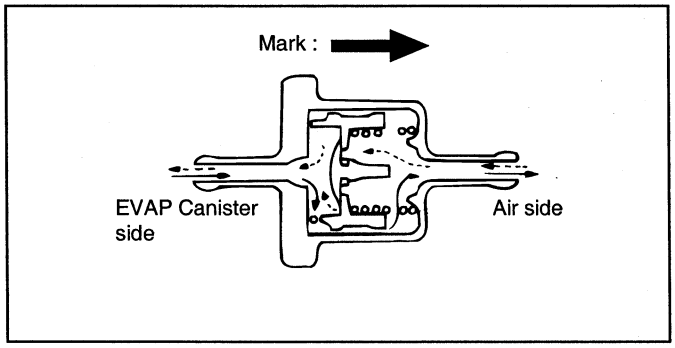

V5EC201D

FUEL FILER CAP EEAA0260

Check the gasket of the fuel filler cap, and the filler cap itself, for damage or deformation. Replace the cap if necessary.

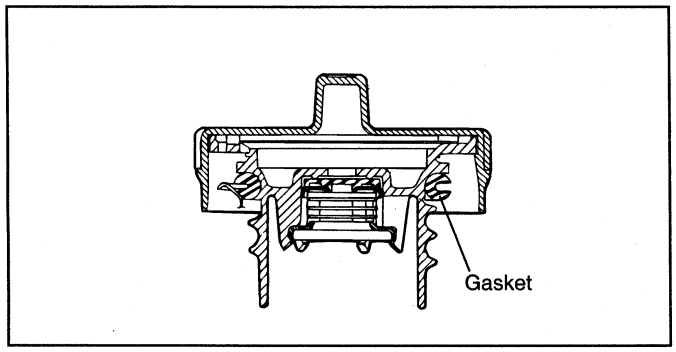

V5EC205A

EXHAUST EMISSION CONTROL SYSTEM

VEHICLES WITH CATALYTIC CONVERTER EEA90270

Exhaust emissions (CO, HC, NOx) are controlled by a combination of engine modifications and the addition of special control components in the fuel.

Modifications to the combustion chamber, intake manifold, camshaft and ignition system form the basic control system. Additional control devices include a catalytic converter and the oxygen sensors which monitor mixture richness.

These systems have been integrated into a highly effective system which controls exhaust emissions while maintaining good driveability and fuel economy.

AIR/FUEL MIXTURE RATIO CONTROL SYSTEM [MULTIPORT FUEL INJECTION (MFI) SYSTEM] EEA90280

The MFI system employs the signals from the heated oxygen sensor to activate and control the injector installed in the manifold for each cylinder, precisely regulating the air/ fuel mixture ratio and reducing emissions.

This allows the engine to produce exhaust gases of the proper composition to permit the use of a three-way catalyst. The three-way catalyst is designed to convert the three pollutants (1) hydrocarbons (HC), (2) carbon monoxide (CO), and (3) oxides of nitrogen (NOx) into harmless substances. The two operating modes in the MFI system are as follows:

1. Open loop-air/fuel ratio is controlled by information programmed into the PCM during the manufacturing process.
2. Closed loop-air/fuel ratio varies by the PCM based on information supplied by the heated oxygen sensor.

Fuel System

GENERAL ..... FL -2

MFI CONTROL SYSTEM ..... FL -21

FUEL DELIVERY SYSTEM ..... FL -91

TROUBLESHOOTING FOR DTC ..... FL -102

GENERAL

EFJB0010

GENERAL SPECIFICATIONS

Items				Specifications
Throttle body	Throttle position sensor (TPS)	Type		Variable resistor
		Resistance at curb idle	2.4 I4	3.5 ~ 6.5 KΩ
			2.7 V6	1.6 ~ 2.4 KΩ
		Output voltage at curb idle	2.4 I4	300 ~ 900 mV
			2.7 V6	250 ~ 800 mV
	Idle speed control (ISC) actuator	Type		Double Coil
		Resistance		90 ~ 110 Hz
Sensors	Air flow sensor	Type	2.4 I4	Hot Film sensor
			2.7 V6	Hot Film sensor
	Intake air temperature (IAT) sensor	Type	2.4 I4 & 2.7 V6	Thermistor
		Resistance		2.33 ~ 2.97 KΩ at 20°C (68°F)
	Engine coolant temperature (ECT) sensor	Type		Thermistor
		Resistance		2.5 KΩ at 20°C (68°F)
				0.3 KΩ at 80°C (176°F)
	Heated oxygen sensor (HO2S)	Type	2.4 I4	Zirconium
			2.7 V6	Titanium
	Vehicle speed sensor	Type		Hall effect
	Camshaft position (CMP) sensor	Type		Hall effect
	Crankshaft position (CKP) sensor	Type		Hall effect
Actuators	Injectors	Type, number	2.4 I4	Electromagnetic type, 4
			2.7 V6	Electromagnetic type, 6
		Resistance		13 ~ 16Ω at 20°C (68°F)
	Evaporative emission purge control solenoid valve	Type		Duty cycle type
Fuel pressure regulator	Pressure regulator			300 ± 1.5 kPa (3.35 ± 0.06 kg/cm^2)
Fuel tank	Tank capacity Return system			65 lit (14.3 Imp.gal) Equipped
Canister	Volume/Nominal working capacity			3.0 liter/150g

SEALANT

EFA90020

Item	Specified sealant
Engine coolant temperature sensor	LOCTITE 962T or equivalent

SERVICE STANDARDS

EFJB0030

Items			Standard value
Basic ignition timing	2.4 I4		BTDC 7° ± 5° at curb idle
	2.7 V6		BTDC 12° ± 5° at curb idle
Curb idle speed (rpm)	2.4 I4	D-range (A/T)	700 ± 100
		P,N-range (A/T, M/T)	800 ± 100 (A/C OFF)
			800 ± 100 (A/C ON)
	2.7 V6	D-range (A/T)	820 ± 100
		P,N-range (A/T, M/T)	700 ± 100 (A/C OFF)
			870 ± 100 (A/C ON)
Fuel pressure kPa (psi)	Vacuum hose disconnection		330 ~ 350 (47-50) at curb idle
	Vacuum hose connection		Approx. 270 (38) at curb idle
Evap canister purge control solenoid valve resistance			20-32Ω

TIGHTENING TORQUE

EFJB0040

Item	Nm	Kg·cm	lb·ft
Delivery pipe installation bolt	10-15	100-150	7-11
Engine coolant temperature sensor	20-40	200-400	14-29
Heated oxygen sensor	40-50	400-500	29-36
Heated oxygen sensor connector bracket bolt	8-12	80-120	5.8-8.7
Fuel pressure regulator installation bolt	4-6	40-60	2.9-4.4
High pressure hose and fuel main pipe	30-40	300-400	22-29
High pressure hose and fuel filter	25-35	250-350	18-25
High pressure hose to delivery pipe	3-4	30-40	2.2-3
Fuel pump assembly to fuel tank	2-3	20-30	1.4-2.2
High pressure hose at fuel tank	30-40	300-400	22-29
Throttle body to surge tank	15-20	150-200	11-14
Accelerator arm bracket bolts	8-12	80-120	5.8-8.7
ISC actuator	6-8	60-80	4.4-5.8
Fuel sender to fuel tank	2-3	20-30	1.4-2.2

SPECIAL TOOLS

EFA90050

Tool (Number and name)	Illustration	Use
09353-38000 Fuel pressure gauge adapter	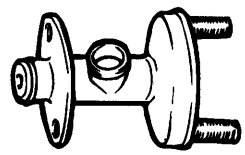 EFA9005A	Connection of fuel pressure gauge to delivery pipe for measurement of fuel pressure.
09353-24100 Fuel pressure gauge & hose	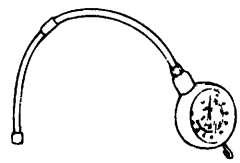 EFA9005B	

TROUBLESHOOTING EFA90060

When checking engine trouble, it is important to start with an inspection of the basic systems. If one of the following conditions exists, (A) engine start failure, (B) unstable idling or (C) poor acceleration, begin by checking the following basic systems.

1. Power supply
    - Battery
    - Fusible link
    - Fuse
2. Body ground
3. Fuel supply
    - Fuel line
    - Fuel filter
    - Fuel pump
4. Ignition system
    - Spark plug
    - High-tension cable
    - Ignition coil
5. Emission control system
    - PCV system
    - Vacuum leak
6. Others
    - Ignition timing
    - Idle speed

Trouble with the MFI system is often caused by poor contact of the harness connectors. It is important to check all harness connectors and verify that they are securely connected.

TROUBLESHOOTING GUIDE

CHART EFDA0070

Main Symptoms / Sub-Symptoms / Check points	STARTING							Poor Idling					Poor Driving	
	Unable to start			Difficult to start										
	Engine does not turn over	Starter runs but engine does not turn over	Incomplete combustion	Engine turns over	Always	When the engine is cold	When the engine is hot	Incorrect fast idle	High idle speed	Low idle speed	Rough idling	Engine hesitates or accelerates poorly	Surging	Knocking
Starter relay	1													
Starter	2	2		1										
Park/Neutral SW [A/T] or Clutch start SW [M/T]	3													
Flywheel [M/T] or Drive plate [A/T]		4												
Mass air flow sensor circuit			3							3	10	7		
Idle speed control actuator			4		3	3	3	3	3	2	7			2
Fuel pressure regulator			5		5	5	5				4	11	1	
ECT sensor circuit			6		4	1	1	2	2	1	2	8	6	
Compression			7		8						8	5		
Piston rings			8		9						9			
Ignition timing					10						11	14		
Timing mark			9								12			
Injectors			10		13	8	8		7	4	13	15	4	
PCM			11		14	9	9	4	8	5	14	16	5	
A/C circuit				2					6					
Connecting rod bearing				3										
Crankshaft bearing				4										
Fuel quality					1	2	2				1	3	3	
Spark plugs					2						3	4	2	
Fuel pump					6	6	6				5	12		
Fuel lines					7	7	7				6	13		
Ignition circuit			2		11									3
Intake air temp. sensor circuit					12	4	4		4			9		1
Accelerator pedal link								1	1					
TP Sensor circuit									5			6		
Cylinder head											15			
Clutch [M/T]												1		
Brakes not releasing properly												2		
Oxygen sensor circuit												10		
Crankshaft position sensor		3												
Battery voltage		1	1											

EFDA007A

Main Symptoms / Sub-Symptoms / Check points	Engine Stalls				Others			Refueling
	Soon after starting	After accelerator pedal is depressed	After accelerator pedal is released	During A/C ON	Excessive fuel consumption	Engine overheats	Engine too cool	Hard to refuel Overflowing spit-Back
Fuel quality	1							
Fuel pressure regulator	2	4			2			
Fuel pump	3							
Fuel lines	4	5						
ISC actuator	5		1	2				
MAF sensor circuit	6	1	2		13			
ECT sensor circuit	7				11			
Injectors	8	6			10			
ECM	9	7	3	3	17			
TP Sensor circuit		2			12			
Spark plug		3			6	8		
A/C circuit				1	14			
Fuel leakage					1			
Accelerator pedal link					3			
Clutch [M/T]					4			
Brakes drag when pedal released					5			
Compression					7			
Piston ring					8			
Ignition timing					9			
Oxygen sensor circuit					15			
Intake air temp. sensor circuit					16			
Coolant leakage						1		
Cooling fan						2	1	
Thermo switch						3		
Radiator and radiator cap						4	2	
Thermostat						5		
Timing belt						6		
Engine coolant pump						7		
Oil pump						9		
Cylinder head						10		
Cylinder block						11		
ECT sender						12	3	
Crankshaft position sensor	11	8	4	4				
Fill vent valve hose-clogging								1
Canister fillter-Contamination								2
Fuel shut off valve-operation								3

EFDA007B

NOTE

The number herein means the check order.

MFI TROUBLESHOOTING PROCEDURES EFA90080

PROBLEM

Communication with scan tool is not possible.
(Cannot communicate with any system)

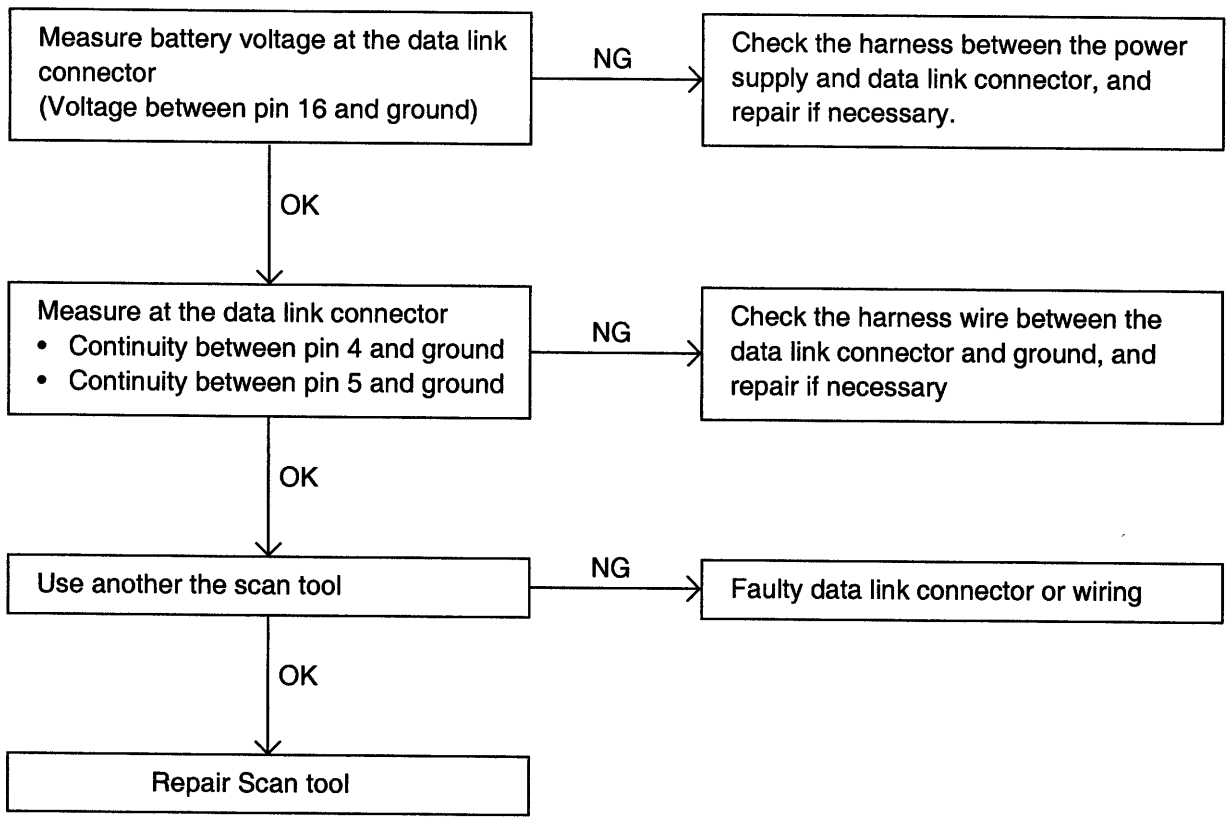

EFA9008A

SCAN TOOL COMMUNICATION WITH PCM IS NOT POSSIBLE EFA90090

Comment	Probable cause
One of the following causes may be suspected • No power supply to PCM • Defective ground circuit of PCM • Defective PCM • Improper communication line between PCM and scan tool	• Malfunction of PCM power supply circuit. • Malfunction of the PCM. • Open circuit between PCM and DLC.

ENGINE WILL NOT START EFA90100

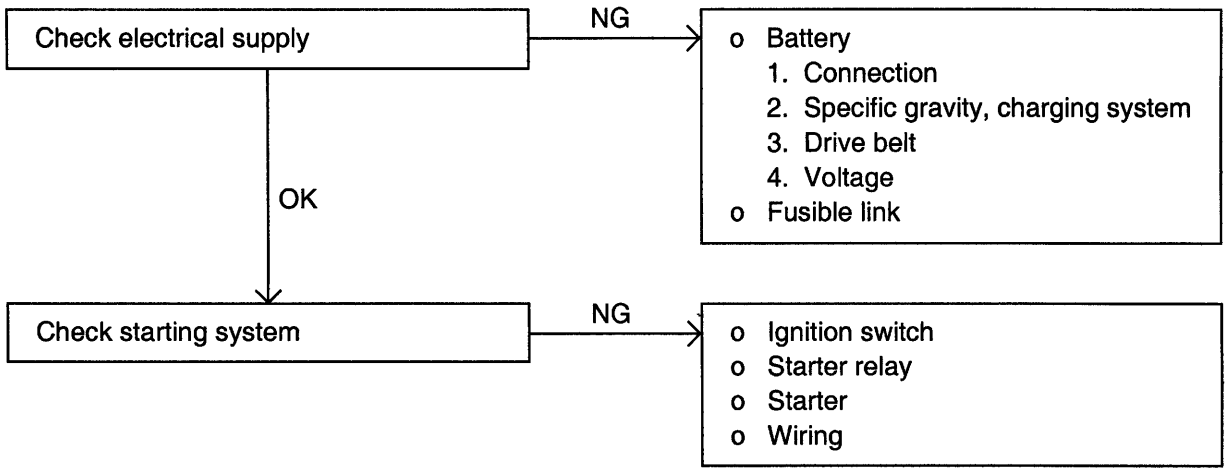

EFA9010A

DIFFICULT TO START (ENGINE CRANKS) EFJB0110

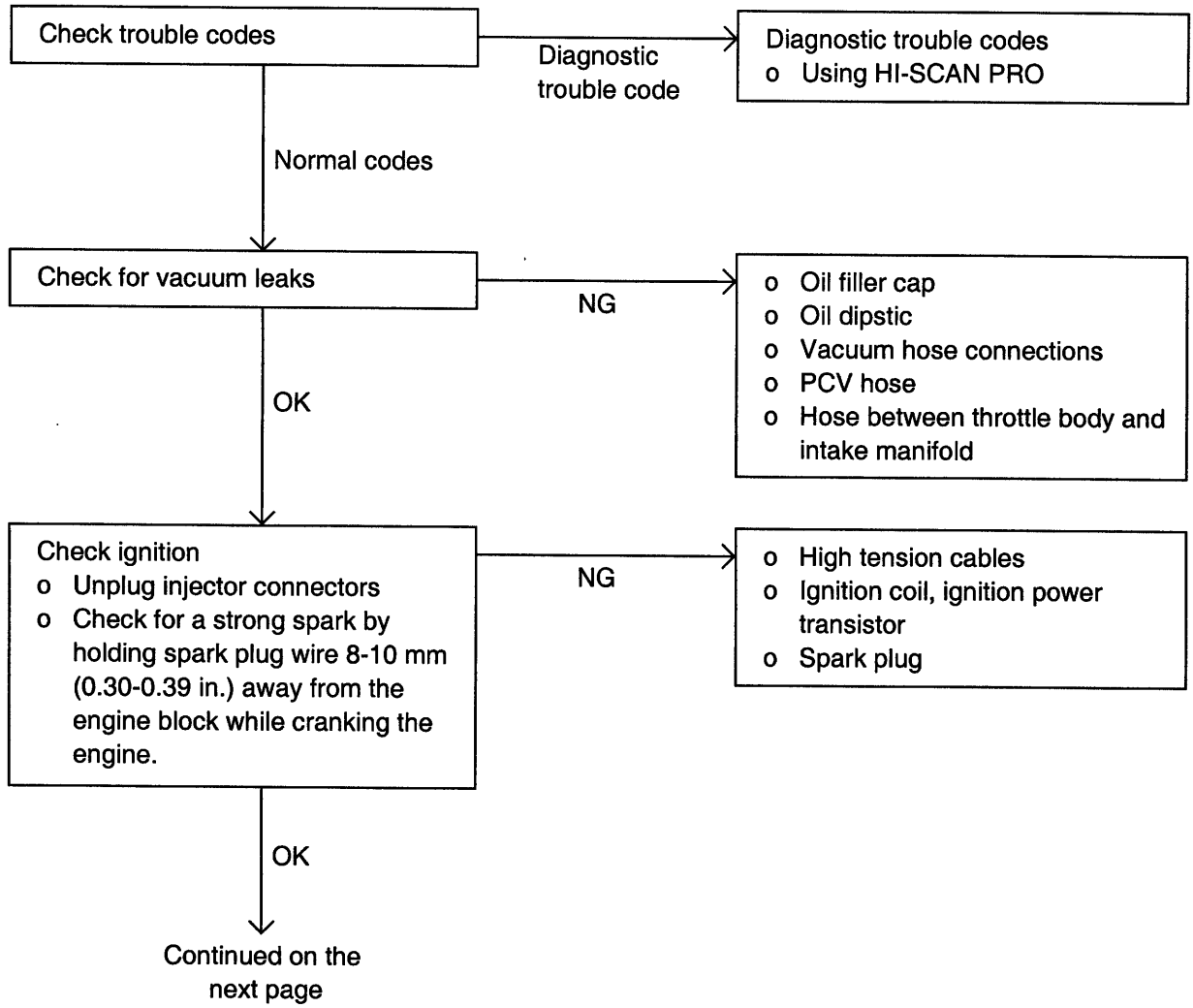

EFA9011A

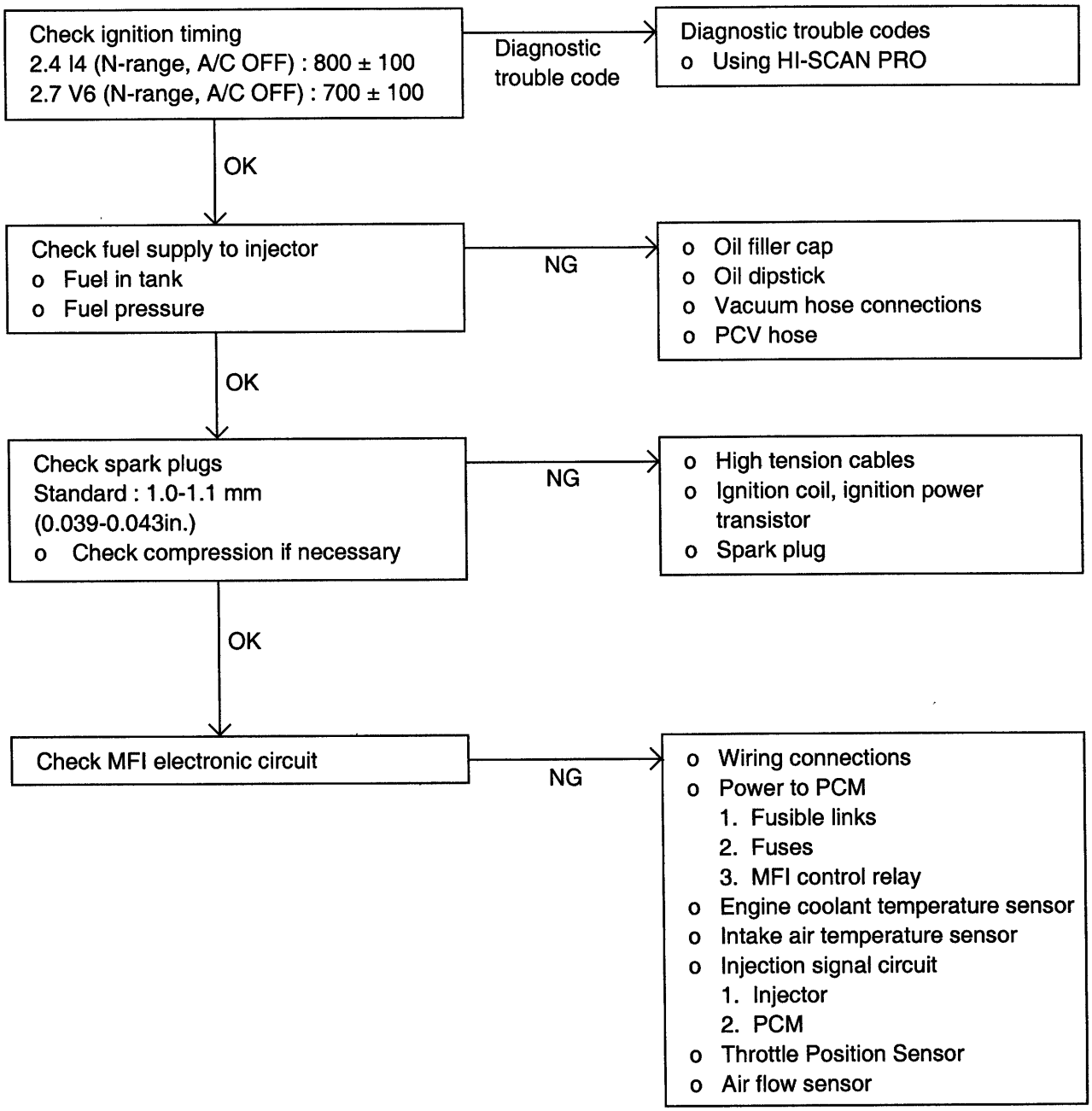
Check ignition timing
2.4 I4 (N-range, A/C OFF) : 800 ± 100
2.7 V6 (N-range, A/C OFF) : 700 ± 100
Diagnostic trouble code
Diagnostic trouble codes
o Using HI-SCAN PRO
OK
Check fuel supply to injector
o Fuel in tank
o Fuel pressure
NG
o Oil filler cap
o Oil dipstick
o Vacuum hose connections
o PCV hose
OK
Check spark plugs
Standard : 1.0-1.1 mm
(0.039-0.043in.)
o Check compression if necessary
NG
o High tension cables
o Ignition coil, ignition power transistor
o Spark plug
OK
Check MFI electronic circuit
NG
o Wiring connections
o Power to PCM
1. Fusible links
2. Fuses
3. MFI control relay
o Engine coolant temperature sensor
o Intake air temperature sensor
o Injection signal circuit
1. Injector
2. PCM
o Throttle Position Sensor
o Air flow sensor

EFJB011B

ROUGH IDLE OR ENGINE STALLS EFJB0120

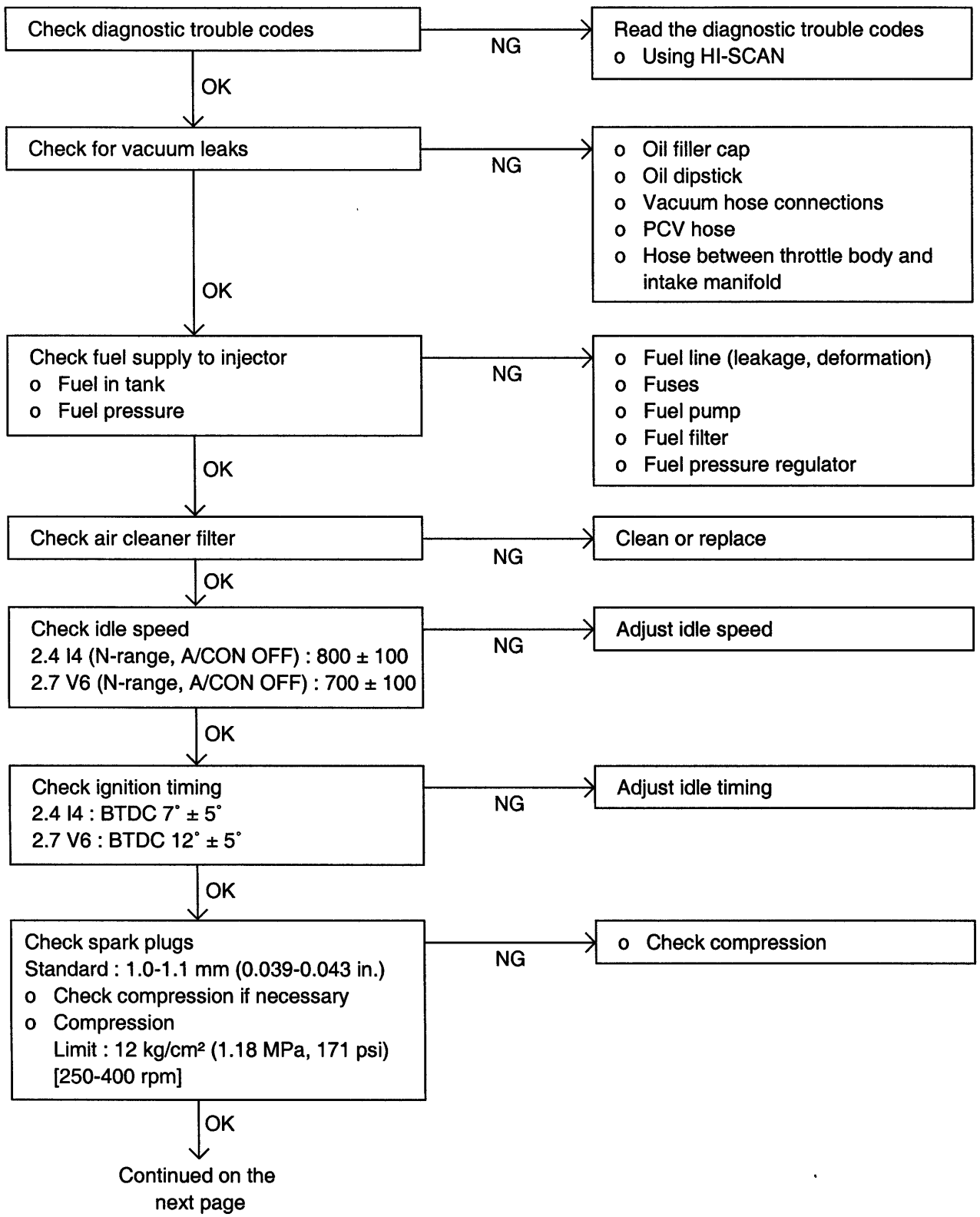

EFJB012A

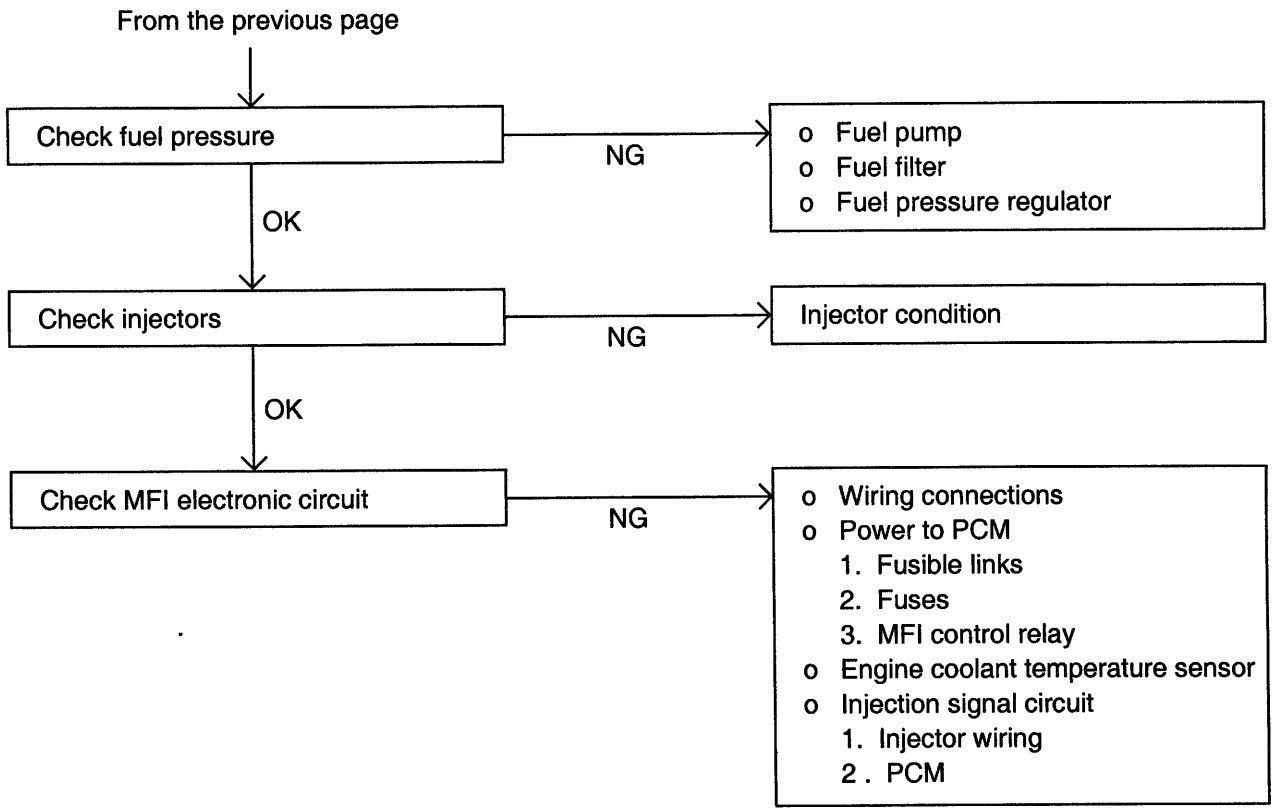
From the previous page
Check fuel pressure
NG
o Fuel pump
o Fuel filter
o Fuel pressure regulator
OK
Check injectors
NG
Injector condition
OK
Check MFI electronic circuit
NG
o Wiring connections
o Power to PCM
1. Fusible links
2. Fuses
3. MFI control relay
o Engine coolant temperature sensor
o Injection signal circuit
1. Injector wiring
2 . PCM

EFA9012B

ENGINE HESITATES OR ACCELERATES POORLY EFJB0130

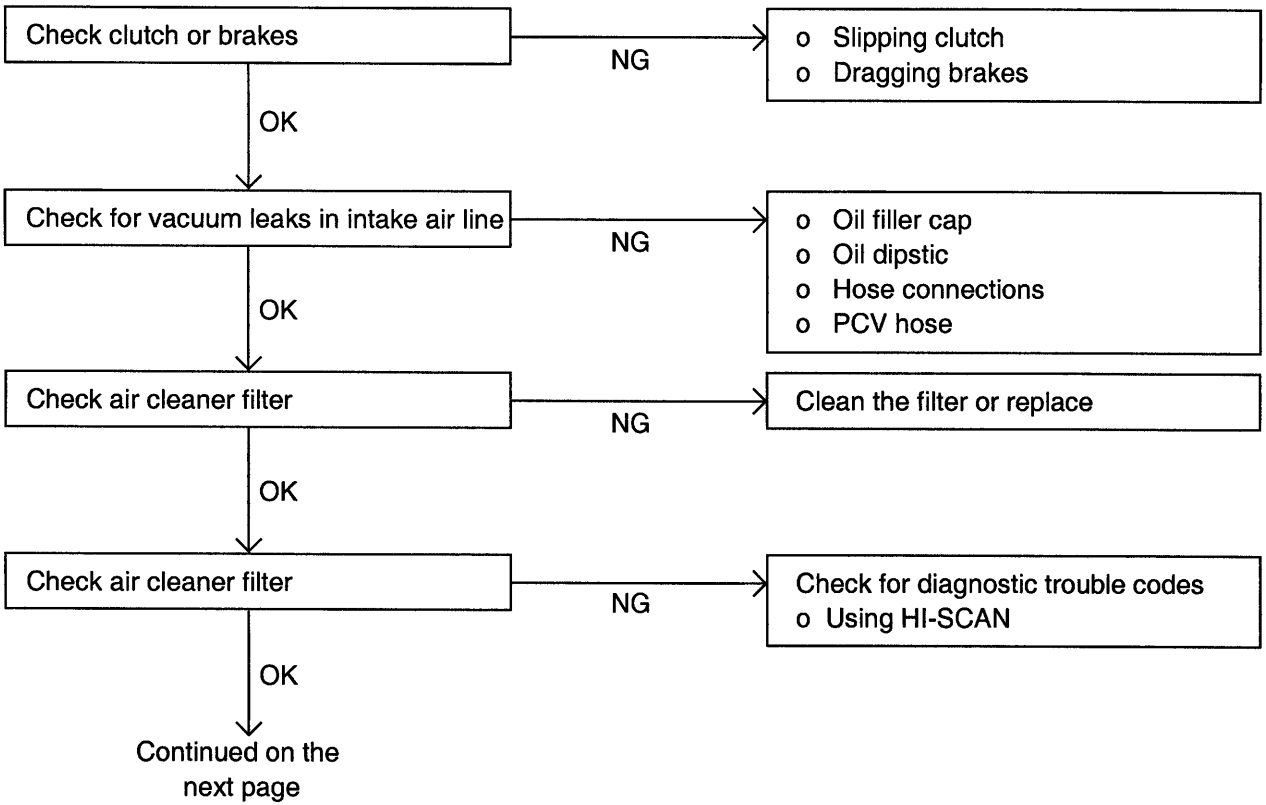

EFA9013A

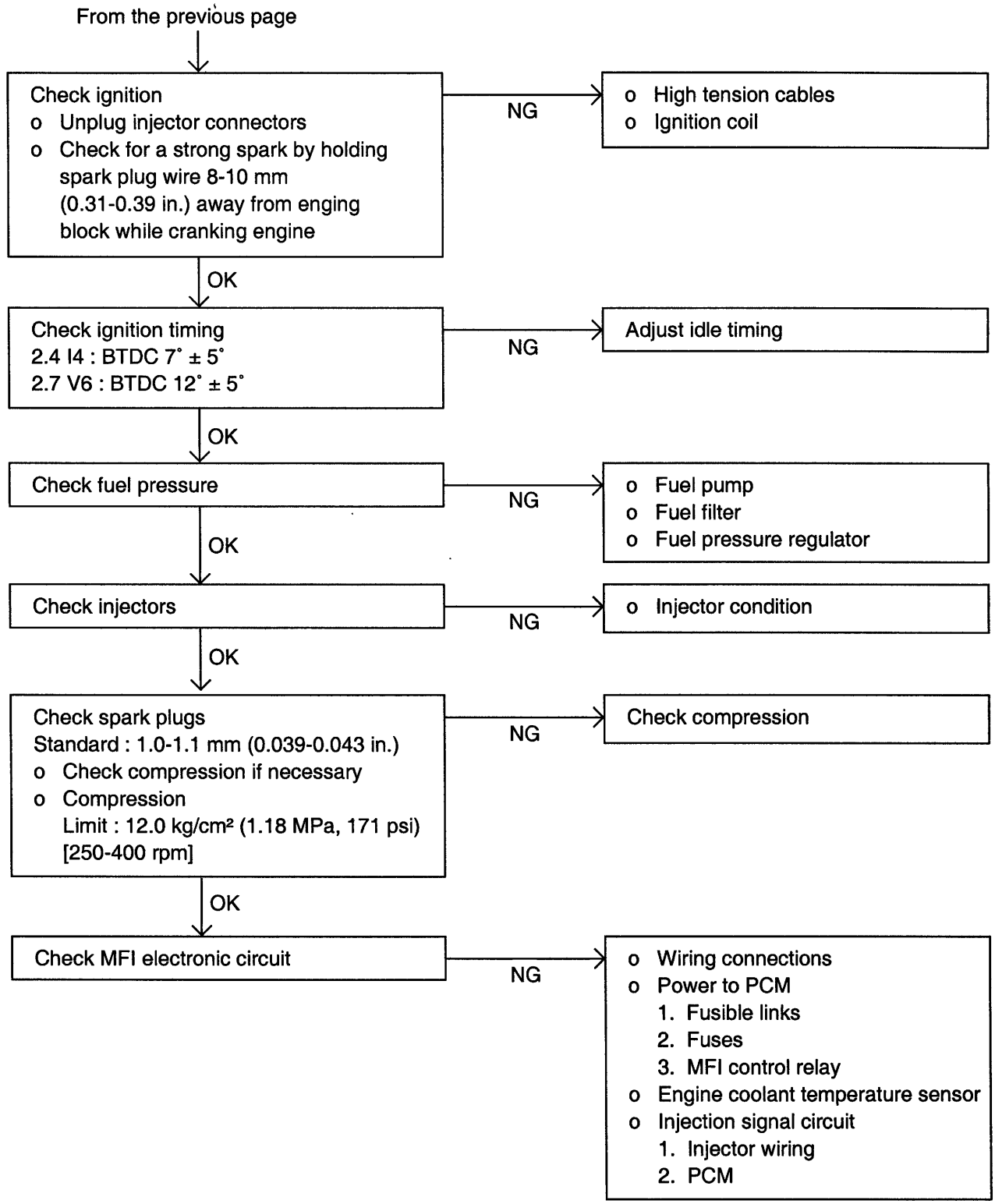
From the previous page
Check ignition
o Unplug injector connectors
o Check for a strong spark by holding spark plug wire 8-10 mm (0.31-0.39 in.) away from enging block while cranking engine
NG
o High tension cables
o Ignition coil
OK
Check ignition timing
2.4 I4 : BTDC 7° ± 5°
2.7 V6 : BTDC 12° ± 5°
NG
Adjust idle timing
OK
Check fuel pressure
NG
o Fuel pump
o Fuel filter
o Fuel pressure regulator
OK
Check injectors
NG
o Injector condition
OK
Check spark plugs
Standard : 1.0-1.1 mm (0.039-0.043 in.)
o Check compression if necessary
o Compression
Limit : 12.0 kg/cm² (1.18 MPa, 171 psi) [250-400 rpm]
NG
Check compression
OK
Check MFI electronic circuit
NG
o Wiring connections
o Power to PCM
1. Fusible links
2. Fuses
3. MFI control relay
o Engine coolant temperature sensor
o Injection signal circuit
1. Injector wiring
2. PCM

EFJB013B

TROUBLESHOOTING

EFA90140

Trouble symptom	Probable cause	Remedy
Engine will not crank.	Battery charge low	Charge or replace battery
	Battery cables loose, corroded or worn	Repair or replace cables
	Transaxle range switch faulty (Vehicle with automatic transaxle only)	Adjust or replace switch
	Fusible link blown	Replace fusible link
	Starter motor faulty	Repair starter motor
	Ignition switch faulty	Replace ignition switch
Engine cranks slowly	Battery charge low	Charge or replace battery
	Battery cables loose, corroded or worn	Repair or replace cables
	Starter motor faulty	Repair starter motor
Starter keeps running	Starter motor faulty	Repair starter motor
	Ignition switch faulty	Replace ignition switch
Starter spins but engine will not crank	Pinion gear teeth broken or starter motor faulty	Repair starter motor
	Ring gear teeth broken	Replace flywheel ring gear or torque converter

FUEL TANK AND FUEL LINE

EFA90150

Trouble symptom	Probable cause	Remedy
Engine malfunctions due to insufficient fuel supply	Bent or kinked fuel pipe or hose	Repair or replace
	Clogged fuel pipe or hose	Clean or replace.
	Clogged fuel filter of in-tank fuel filter	Replace
	Water in fuel filter	Replace the fuel filter or clean the fuel tank and fuel lines
	Dirty or rusted fuel tank interior	Clean or replace
	Malfunctioning fuel pump (clogged filter in the pump)	Replace
Evaporative emission system malfunction (when fuel filler cap is removed, pressure is released)	Incorrect routing of a vapor line	Correct
	Disconnected vapor line	Correct
	Folded, bent, cracked or clogged vapor line	Replace
	Faulty fuel tank cap	Replace
	Malfunctioning overfill limiter (two-way valve)	Replace

MULTIPORT FUEL INJECTION (MFI) EFJB0160

GENERAL INFORMATION

The Multiport Fuel Injection System consists of sensors which detect the engine conditions, the POWERTRAIN CONTROL MODULE (PCM) which controls the system based on signals from these sensors, and actuators which operate under the control of the PCM. The PCM carries out activities such as fuel injection control, idle air control and ignition timing control. In addition, the PCM is equipped with several diagnostic test modes which simplify troubleshooting when a problem occurs.

FUEL INJECTION CONTROL

The injector drive times and injector timing are controlled so that the optimum air/fuel mixture is supplied to the engine to correspond to the continually-changing engine operation conditions. A single injector is mounted at the intake port of each cylinder. Fuel is sent under pressure from the fuel tank by the fuel pump. with the pressure being regulated by the fuel pressure regulator. The fuel thus regulated is distributed to each of the injectors. This is called multiport. Fuel injection is normally carried out once for each cylinder for every two rotations of the crankshaft. The PCM provides a richer air/fuel mixture by carrying out "open-loop" control when the engine is cold or operating under high load conditions in order to maintain engine performance. In addition, when the engine is warm or operating under normal conditions, the PCM controls the air/fuel mixture by using the heated oxygen sensor signal to carry out "closed-loop" control in order to obtain the theoretical air/fuel mixture ratio that provides the maximum cleaning performance from the three way catalyst.

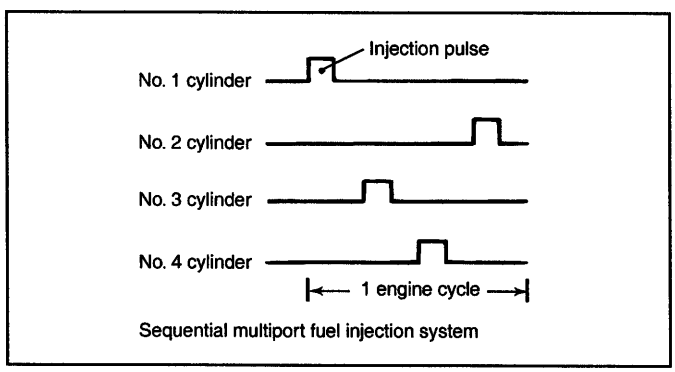

Sequential multiport fuel injection system

EFJB016A

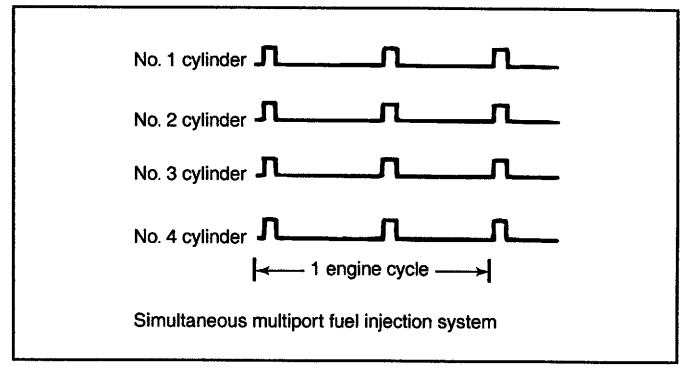

Simultaneous multiport fuel injection system

EFJB016B

IDLE SPEED CONTROL

The idle speed is kept at the optimum speed by controlling the amount of air that bypasses the throttle valve in accordance with changes in idling conditions and engine load during idling. The PCM drives the idle speed control (ISC) motor to keep the engine running at the pre-set idle target speed in accordance with the engine coolant temperature and air conditioning load. In addition, when the air conditioning switch is turned off and on while the engine is idling, the ISC motor operates to adjust the throttle valve bypass air amount in accordance with the engine load conditions in order to avoid fluctuations in the engine speed.

IGNITION TIMING CONTROL

The ignition power transistor located in the ignition primary circuit turns ON and OFF to control the primary current flow to the ignition coil. This controls the ignition timing in order to provide the optimum ignition timing with respect to the engine operating conditions. The ignition timing is determined by the PCM from the engine speed, intake air volume, engine coolant temperature and atmospheric pressure.

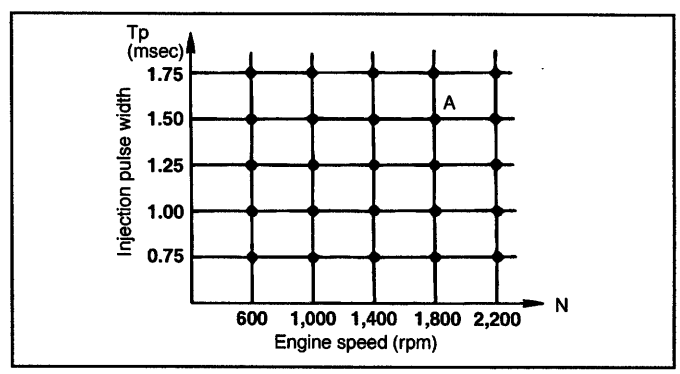

EFJB016C

OTHER CONTROL FUNCTIONS EFA90170

1. Fuel Pump Control :
   Turns the fuel pump relay ON so that current is supplied to the fuel pump while the engine is cranking or running.
2. A/C Compressor Clutch Relay Control :
   Turns the compressor clutch of the A/C ON and OFF.
3. Fan Relay Control :
   The radiator fan and condenser fan speeds are controlled in response to the engine coolant temperature and vehicle speed.
4. Evaporative Emission Purge Control (Refer to GROUP EC).

DIAGNOSTIC TEST MODE EFA90180

- When an abnormality is detected in one of the sensors or actuators related to emission control, the CHECK ENGINE/MALFUNCTION INDICATOR LAMP illuminates as a warning to the driver.
- When an abnormality is detected in one of the sensors or actuators, a diagnostic trouble code corresponding to the abnormality is output.
- The RAM data inside the ECM that is related to the sensors and actuators can be read by means of the scan tool. In addition, the actuators can be controlled under certain circumstances.

HOW TO COPE WITH INTERMITTENT MALFUNCTIONS EFA90190

Most intermittent malfunctions occur under certain conditions. If those conditions can be identified, the cause will be easier to find.

TO COPE WITH INTERMITTENT MALFUNCTION:

1. Ask the customer about the malfunction.
   Ask what it feels like, what it sounds like, etc. Then ask about driving conditions, weather, frequency of occurrence, and so on.
2. Determine the conditions from the customer's responses.
   Typically, almost all intermittent malfunctions occur from conditions like vibration, temperature and/or moisture change, poor connections. From the customer's replies, it should be deduced which condition exists.
3. Use the simulation test
   In the cases of vibration or poor connections, use the simulation tests below to attempt to duplicate the customer's complaint. Determine the most
   for diagnostic trouble codes and trouble symptoms. For temperature and/or moisture conditions related intermittent malfunctions, using common sense, try to change the conditions of the suspected circuit components, then use the simulation tests below.
4. Verify that the intermittent malfunction is eliminated. Repair the malfunctioning part and try to duplicate the condition(s) again to verify that the intermittent malfunction has been eliminated.

SIMULATION TESTS

For these simulation tests, shake, then gently bend, pull and twist the wiring of each of these examples to duplicate the intermittent malfunction.

- Shake the connector up-and-down, right-and-left.
- Shake the wiring harness up-and-down, right-and-left.
- Vibrate the part or sensor.

SERVICE POINTS IN INSPECTING A BLOWN FUSE EFAA0200

Remove the fuse and measure the resistance between the load side of the fuse and ground. Set the switches of all circuits which are connected to this fuse to a condition of continuity. If the resistance is almost 0Ω at this time, there is a short somewhere between these switches and the load. If the resistance is not 0Ω, there is no short at the present time, but a momentary shortage has probably caused the fuse to blow.

The main causes of a short circuit are the following.

- Harness being crushed by the vehicle body.
- Damage to the outer casing of the harness due to wear or heat.
- Water getting into the connector or circuitry.
- Human error (mistakenly shorting a circuit, etc.).

INSPECTING THE MFI SYSTEM EFJB0210

If the MFI system components (sensors, PCM, injector, etc.) fail, the interruption or failure to supply the proper amount of fuel for various engine operating conditions will result. The following situations may be encountered:

1. Engine is hard to start or does not start at all
2. Unstable idle
3. Poor driveability

If any of the above conditions is noted, first check for

ON-BOARD DIAGNOSTICS

- Diagnostic trouble codes are set as follows:
  After the PCM first detects a malfunction, a diagnostic trouble code is recorded when the engine is restarted and the same malfunction is re-detected. (The malfunction is detected in driving cycle). However, for fuel system rich/lean misfiring, a diagnostic trouble code is recorded on the first detection of the malfunction.
- Erasing diagnostic trouble codes:
  After recording the diagnostic trouble code, if the PCM does not re-detect the malfunction for 40 driving cycles, the diagnostic trouble code will be erased from the PCM memory. However, for fuel system rich/lean or misfiring, the diagnostic trouble code will be erased if both of the following conditions are met:
  - When driving conditions (engine speed, engine coolant temperature, etc.) are identical to those when the malfunction was first recorded.
  - When the PCM does not re-detect the malfunction for 80 driving cycles.

NOTE

A "driving cycle" is complete as soon as the vehicle goes into closed-loop operation.

MALFUNCTION INDICATOR LIGHT (MIL)

The MIL lights up to notify the driver that there is a problem with the vehicle.

However the MIL will go off automatically after 3 subsequent sequential driving cycles that do not redetected the same malfunctions.

Immediately after the ignition switch is turned on, the MIL is lit for 5 seconds to indicate that the light operates normally.

The following Items can be indicated by the MIL:

- Catalyst
- Fuel system
- Air flow sensor (MAF sensor)
- Intake Air Temperature Sensor (IAT sensor)
- Engine Coolant Temperature Sensor (ECT sensor)
- Throttle Position Sensor (TPS)
- Front Oxygen Sensor
- Rear Oxygen Sensor Heater
- Rear Oxygen Sensor
- Front Oxygen Sensor Heater
- Injector
- Misfire
- Crankshaft Position Sensor (CKP sensor)
- Camshaft Position Sensor (CMP sensor)
- Evaporative Emission Control System
- Vehicle Speed Sensor (VSS)
- Idle Speed Control
- PCM
- Manifold Absolute Pressure (MAP) Sensor (Except 2.7L V6 engine)
- Idle Switch
- EGR System (Except 2.7L V6 engine).

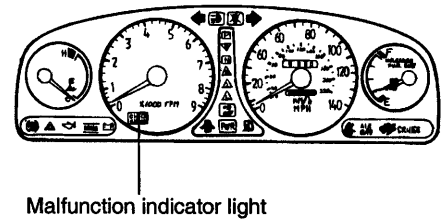

EFA9021A

INSPECTING THE MALFUNCTION INDICATOR LAMP (MIL)

1. After turning the ignition key on, check that the light illuminates for 5 seconds without the engine running.
2. If the light does not illuminate, check for an open circuit in the harness, blown fuse and blown bulb.

SELF-DIAGNOSIS

The PCM monitors the input/output signals (some signals at all times and others under specified conditions). When the PCM detects an irregularity, it memorizes the diagnostic trouble code, and outputs the signal to the self-diagnosis output terminal. The diagnosis results can be read by a Generic Scan Tool (GST) or Hi-Scan Pro. A diagnostic trouble code (DTC) will remain in the PCM as long as battery power is maintained. The diagnostic trouble code will however be erased when the battery terminal or the powertrain control module (PCM) connector is disconnected or erased using the Generic Scan Tool.

CHECKING PROCEDURE (SELF-DIAGNOSIS)

NOTE

1. **When battery voltage is excessively low, diagnostic trouble codes can not be read. Be sure to check the battery for voltage and the charging system before starting the test.**
2. **Codes are erased if the battery or the PCM connector is disconnected. Do not disconnect the battery before the diagnostic trouble codes are completely read and recorded.**

Inspection Procedure (Using Generic Scan Tool)

1. Turn OFF the ignition switch.
2. Connect the scan tool to the data link connector on the lower crash pad.
3. Turn ON the ignition switch.
4. Use the Hi-Scan Pro to check the diagnostic trouble code.
5. Repair the faulty part from the diagnosis chart.
6. Erase the diagnostic trouble code.
7. Disconnect the Hi-Scan Pro.

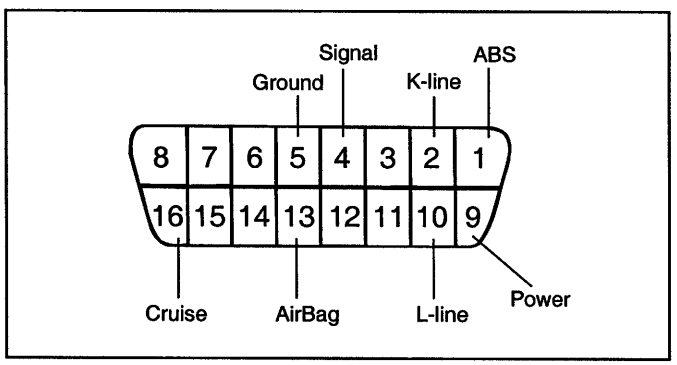

EFHA021B

MFI CONTROL SYSTEM

TROUBLESHOOTING EFJB0220

DIAGNOSTIC TROUBLESHOOTING FLOW

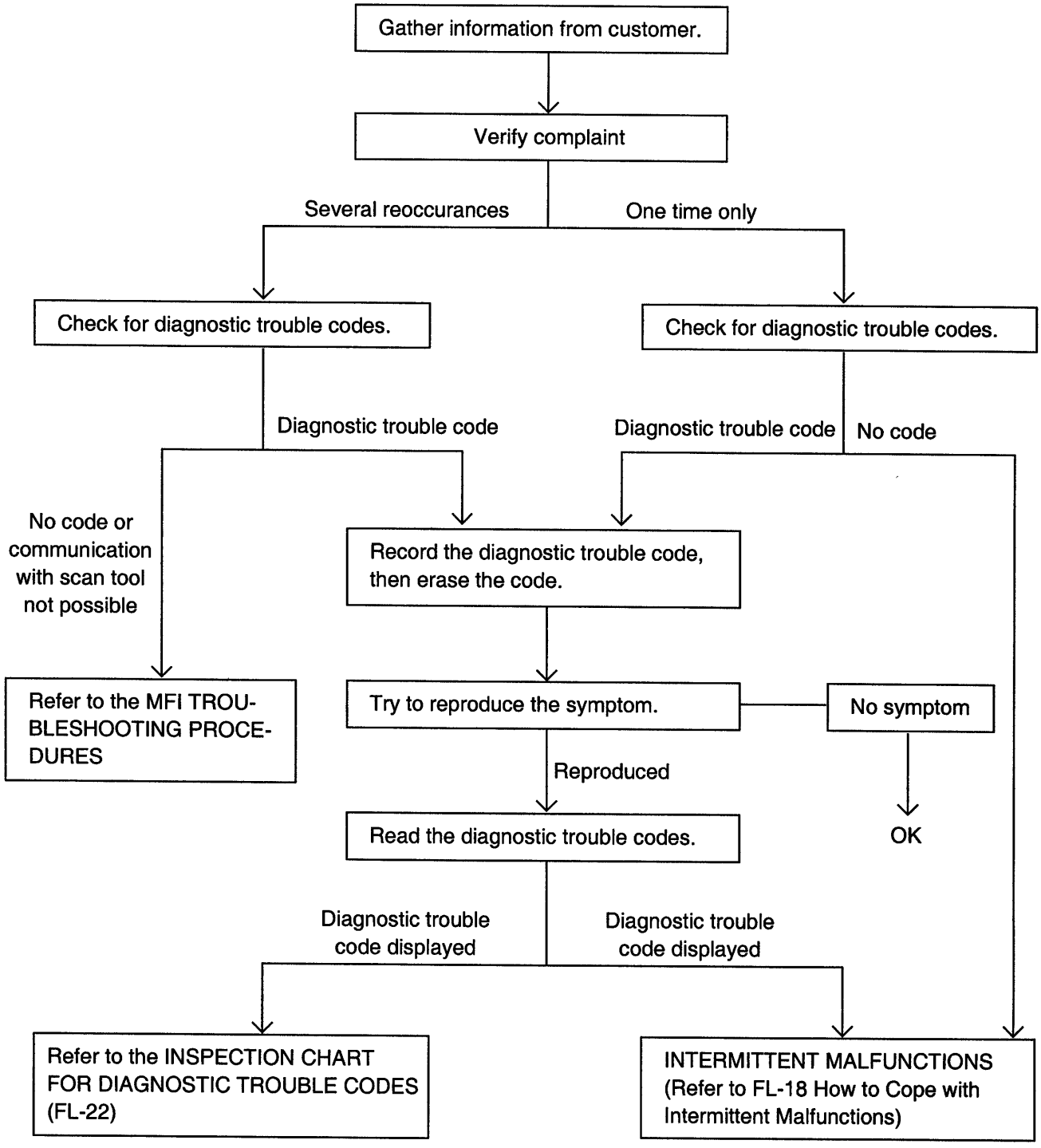

EFJB022A

INSPECTION CHART FOR DIAGNOSTIC TROUBLE CODES (FOR 2.4 I4-EOBD)

EFJB0246

DTC NO.	CONTENT	Memory	MIL
P0101	Mass or Volume Air Flow Circuit Range/Performance Problem	O	O
P0102	Mass or Volume Air Flow Circuit Low Voltage	O	O
P0103	Mass or Volume Air Flow Circuit High Voltage	O	O
P0112	Intake Air Temp. Circuit Low Voltage	O	O
P0113	Intake Air Temp. Circuit High Voltage	O	O
P0115	Engine Coolant Temp. Circuit Malfunction (open/short)	O	O
P0116	Engine Coolant Temp. Circuit Drift	O	O
P0122	Throttle Position Sensor Circuit Low Voltage	O	O
P0123	Throttle Position Sensor Circuit High Voltage	O	O
P0125	Excessive Time to Enter Closed Loop Control (ECT sensor)	O	O
P0134	Oxygen Sensor Circuit Malfunction (No Activity)	O	O
P0133	Oxygen Sensor Circuit Malfunction (Bank 1, Sensor 1)	O	O
P0132	Oxygen Sensor Circuit Malfunction (Open) (Bank 1, Sensor 1)	O	O
P0135	Oxygen Sensor Heater Circuit Malfunction (Bank 1, Sensor 1)	O	O
P0136	Oxygen Sensor Circuit Malfunction (Bank 1, Sensor 2)	O	O
P0140	Oxygen Sensor Circuit Malfunction (Short) (Bank 1, Sensor 2)	O	O
P0141	Oxygen Sensor Heater Circuit Malfunction (Bank 1, Sensor 2)	O	O
P0171	Fuel System Too Lean	O	O
P0172	Fuel System Too Rich	O	O
P0201	Injector Circuit Malfunction (Injector -1)	O	O
P0202	Injector Circuit Malfunction (Injector -2)	O	O
P0203	Injector Circuit Malfunction (Injector -3)	O	O
P0204	Injector Circuit Malfunction (Injector -4)	O	O
P0300	Random Misfire Detected	O	O
P0301	Misfire Detected (Cylinder -1)	O	O
P0302	Misfire Detected (Cylinder -2)	O	O
P0303	Misfire Detected (Cylinder -3)	O	O
P0304	Misfire Detected (Cylinder -4)	O	O
P0320	Ignition Failure Sensor Malfunction	O	X
P0325	Knock Sensor Circuit Malfunction	O	X
P0335	Crankshaft Position Sensor Circuit Malfunction	O	O
P0340	Camshaft Position Sensor Circuit Malfunction	O	O
P0350	Ignition Coil Malfunction	O	O
P0421	Warm-up Catalyst Efficiency Below Threshold	O	O

DTC NO.	CONTENT	Memory	MIL
P0403	EGR Solenoid Circuit Malfunction	O	O
P0443	Purge Control Solenoid Valve Malfunction	O	O
P0500	Vehicle Speed Sensor Malfunction	O	O
P0506	Idle Speed Control - Low RPM	O	O
P0507	Idle Speed Control - High RPM	O	O
P0700	PCM Malfunction with Transaxle control	O	O
P1330	Spark Timing Adjust Malfunction	O	O
P1609	Immobilizer system Malfunction	O	X

INSPECTION CHART FOR DIAGNOSTIC TROUBLE CODES (FOR 2.4 I4-NON EOBD)

EFJB0247

DTC NO.	CONTENT	Memory	MIL
P0100	Mass or Volume Air Flow Circuit Malfunction	O	O
P0110	Intake Air Temperature Circuit Malfunction	O	X
P0115	Engine Coolant Temperature Circuit Malfunction	O	O
P0120	Throttle/Pedal Position Circuit Malfunction	O	O
P0130	O2 Sensor Circuit Malfunction (Bank 1 Sensor 1)	O	X
P0201	Injector Circuit Malfunction (Injector -1)	O	O
P0202	Injector Circuit Malfunction (Injector -2)	O	O
P0203	Injector Circuit Malfunction (Injector -3)	O	O
P0204	Injector Circuit Malfunction (Injector -4)	O	O
P0325	Knock Sensor Circuit Malfunction	O	X
P0335	Crankshaft Position Sensor Circuit Malfunction	O	X
P0340	Camshaft Position Sensor Circuit Malfunction	O	X
P0350	Ignition Coil Malfunction	O	O
P0500	Vehicle Speed Sensor Malfunction	O	X
P1330	Spark Timing Adjust Malfunction	O	O
P1609	Immobilizer system Malfunction	O	X

INSPECTION CHART FOR DIAGNOSTIC TROUBLE CODES (FOR 2.7 V6-EOBD)

EFJB0248

DTC NO.	CONTENT	Memory	MIL
P0100	Mass or Volume Air Flow Circuit Malfunction	O	O
P0101	Mass or volume Air Flow Circuit Range/Performance Problem	O	X
P0110	Intake Air Temperature Circuit Malfunction	O	O

DTC NO.	CONTENT	Memory	MIL
P0115	Engine Coolant Temperature Circuit Malfunction	O	O
P0116	Engine Coolant Temperature Circuit Range/Performance	O	X
P0120	Throttle/Pedal Position Circuit Malfunction	O	O
P0121	Throttle/Pedal Position Circuit Range/Performance problem	O	X
P0130	O2 Sensor Circuit Malfunction (Bank 1 Sensor 1)	O	O
P0150	O2 Sensor Circuit Malfunction (Bank 2 Sensor 1)	O	O
P0133	O2 Sensor Circuit Slow Response (Bank 1 Sensor 1)	O	O
P0153	O2 Sensor Circuit Slow Response (Bank 2 Sensor 1)	O	O
P0134	O2 Sensor Circuit No Activity Detected (Bank 1 Sensor 1)	O	X
P0154	O2 Sensor Circuit No Activity Detected (Bank 2 Sensor 1)	O	X
P0135	O2 Sensor Heater Circuit Malfunction (Bank 1 Sensor 1)	O	O
P0155	O2 Sensor Heater Circuit Malfunction (Bank 2 Sensor 1)	O	O
P0136	O2 Sensor Circuit Malfunction (Bank 1 Sensor 2)	O	O
P0156	O2 Sensor Circuit Malfunction (Bank 2 Sensor 2)	O	O
P0140	O2 Sensor Circuit No Activity Detected (Bank 1 Sensor 2)	O	O
P0160	O2 Sensor Circuit No Activity Detected (Bank 2 Sensor 2)	O	O
P0141	O2 Sensor Heater Circuit Malfunction (Bank 1 Sensor 2)	O	O
P0161	O2 Sensor Heater Circuit Malfunction (Bank 2 Sensor 2)	O	O
P0170	Fuel Trim Malfunction (Bank 1)	O	O
P0173	Fuel Trim Malfunction (Bank 2)	O	O
P0201	Cylinder 1 - Injector Circuit Malfunction	O	O
P0202	Cylinder 2 - Injector Circuit Malfunction	O	O
P0203	Cylinder 3 - Injector Circuit Malfunction	O	O
P0204	Cylinder 4 - Injector Circuit Malfunction	O	O
P0205	Cylinder 5 - Injector Circuit Malfunction	O	O
P0206	Cylinder 6 - Injector Circuit Malfunction	O	O
P0230	Fuel Pump Circuit Malfunction	O	X
P0300	Multiple Cylinder Misfire Detected	O	O
P0301	Cylinder 1 - Misfire Detected	O	O
P0302	Cylinder 2 - Misfire Detected	O	O
P0303	Cylinder 3 - Misfire Detected	O	O
P0304	Cylinder 4 - Misfire Detected	O	O
P0305	Cylinder 5 - Misfire Detected	O	O
P0306	Cylinder 6 - Misfire Detected	O	O
P0325	Knock Sensor 1 Circuit Malfunction	O	X
P0330	Knock Sensor 2 Circuit Malfunction	O	X

DTC NO.	CONTENT	Memory	MIL
P0335	Crankshaft Position Sensor Circuit Malfunction	O	O
P0340	Camshaft Position Sensor (TDC Sensor) Circuit Malfunction	O	O
P0350	Ignition Coil Primary/Secondary Circuit Malfunction	O	X
P0351	Ignition Coil 'A' Primary/Secondary Circuit Malfunction	O	X
P0352	Ignition Coil 'B' Primary/Secondary Circuit Malfunction	O	X
P0353	Ignition Coil 'C' Primary/Secondary Circuit Malfunction	O	X
P0354	Ignition Coil 'D' Primary/Secondary Circuit Malfunction	O	X
P0355	Ignition Coil 'E' Primary/Secondary Circuit Malfunction	O	X
P0356	Ignition Coil 'F' Primary/Secondary Circuit Malfunction	O	X
P0420	Catalyst System Efficiency Below Threshold (Bank 1)	O	O
P0430	Catalyst System Efficiency Below Threshold (Bank 2)	O	O
P0443	Purge Control Valve Circuit Malfunction	O	O
P0500	For OBD2 Rough Road Detection, Vehicle Speed Malfunction From ABS/TCS	O	O
	For OBD2 Rough Road Detection, Vehicle Speed Malfunction From Front Right Inductive Wheel Sensor	O	O
P0506	Idle Speed Control RPM Lower Than Expected	O	X
P0507	Idle Speed Control RPM Higher Than Expected	O	X
P1134	O2 Sensor Circuit - Transition Switch Time Malfunction/Slop (Bank 1 Sensor 1)	O	O
P1154	O2 Sensor Circuit - Transition Switch Time Malfunction/Slop (Bank 2 Sensor 1)	O	O
P1166	O2 Sensor - Controller Adaption Diagnosis Malfunction (Bank 1)	O	O
P1167	O2 Sensor - Controller Adaption Diagnosis Malfunction (Bank 2)	O	O
P1372	Segment Time Acquisition Incorrect	O	O
P1510	Idle Charge Actuator Command Signal Incorrect (Coil 1)	O	O
P1511	Idle Charge Actuator Command Signal Incorrect (Coil 2)	O	O
P1521	Power Steering Switch Circuit Malfunction	O	X
P1529	TCU Request for MIL On/Freeze Frame to PCM via CAN	O	O
P1602	Serial Communication Problem With TCU (TIMEOUT)	O	O
P1613	PCM - Selftest Failed	O	X
P1616	Main Relay Malfunction	O	X
P1623	Diagnostic Lamp Powerstage Malfunction	O	X
P1624	Cooling Fan Relay - Circuit Malfunction ("LOW" Circuit)	O	X
P1625	Cooling Fan Relay - Circuit Malfunction ("HIGH" Circuit)	O	X
P1642	Non-Immobilizer-EMS connected to an Immobilizer	O	X

INSPECTION CHART FOR DIAGNOSTIC TROUBLE CODES (FOR 2.7 V6-NON EOBD)

EFJB0249

DTC NO.	CONTENT	Memory	MIL
P0100	Mass or Volume Air Flow Circuit Malfunction	O	X
P0110	Intake Air Temperature Circuit Malfunction	O	X
P0115	Engine Coolant Temperature Circuit Malfunction	O	X
P0120	Throttle/Pedal Position Circuit Malfunction	O	X
P0130	O2 Sensor Circuit Malfunction (Bank 1 Sensor 1)	O	X
P0150	O2 Sensor Circuit Malfunction (Bank 2 Sensor 1)	O	X
P0134	O2 Sensor Circuit No Activity Detected (Bank 1 Sensor 1)	O	X
P0154	O2 Sensor Circuit No Activity Detected (Bank 2 Sensor 1)	O	X
P0135	O2 Sensor Heater Circuit Malfunction (Bank 1 Sensor 1)	O	X
P0155	O2 Sensor Heater Circuit Malfunction (Bank 2 Sensor 1)	O	X
P0201	Cylinder 1 - Injector Circuit Malfunction	O	X
P0202	Cylinder 2 - Injector Circuit Malfunction	O	X
P0203	Cylinder 3 - Injector Circuit Malfunction	O	X
P0204	Cylinder 4 - Injector Circuit Malfunction	O	X
P0205	Cylinder 5 - Injector Circuit Malfunction	O	X
P0206	Cylinder 6 - Injector Circuit Malfunction	O	X
P0230	Fuel Pump Circuit Malfunction	O	X
P0325	Knock Sensor 1 Circuit Malfunction	O	X
P0330	Knock Sensor 2 Circuit Malfunction	O	X
P0335	Crankshaft Position Sensor Circuit Malfunction	O	X
P0340	Camshaft Position Sensor (TDC Sensor) Circuit Malfunction	O	X
P0350	Ignition Coil Primary/Secondary Circuit Malfunction	O	X
P0351	Ignition Coil 'A' Primary/Secondary Circuit Malfunction	O	X
P0352	Ignition Coil 'B' Primary/Secondary Circuit Malfunction	O	X
P0353	Ignition Coil 'C' Primary/Secondary Circuit Malfunction	O	X
P0354	Ignition Coil 'D' Primary/Secondary Circuit Malfunction	O	X
P0355	Ignition Coil 'E' Primary/Secondary Circuit Malfunction	O	X
P0356	Ignition Coil 'F' Primary/Secondary Circuit Malfunction	O	X
P0500	Vehicle Speed Circuit Malfunction	O	X
P1166	O2 Sensor - Controller Adaption Diagnosis Malfunction (Bank 1)	O	X
P1167	O2 Sensor - Controller Adaption Diagnosis Malfunction (Bank 2)	O	X
P1510	Idle Charge Actuator Command Signal Incorrect (Coil 1)	O	X
P1511	Idle Charge Actuator Command Signal Incorrect (Coil 2)	O	X

DTC NO.	CONTENT	Memory	MIL
P1521	Power Steering Switch Circuit Malfunction	O	X
P1602	Serial Communication Problem With TCU (TIMEOUT)	O	X
P1613	PCM - Selftest Failed	O	X
P1616	Main Relay Malfunction	O	X
P1624	Cooling Fan Relay - Circuit Malfunction ("LOW" Circuit)	O	X
P1625	Cooling Fan Relay - Circuit Malfunction ("HIGH" Circuit)	O	X
P1642	Non-Immobilizer-EMS connected to an Immobilizer	O	X

TROUBLE AREA RELATED TO DTC
(FOR 2.4 I4) EFJB0243

Note : Check items for each diagnostic items do not list all probable causes.

DTC No.	Diagnostic items	Check items (Remedy)
P0110	Intake Air Temperature Circuit Malfunction	• Harness and connector • Intake air temperature sensor • Open or short in intake air temp. sensor circuit • Intake air temp. sensor • PCM
P0115	Engine Coolant Temperature Circuit Malfunction	• Harness and connector • Engine coolant temperature sensor • Open or short in engine coolant temp. sensor circuit • PCM
P0120	Throttle Position Circuit Malfunction	• Harness and connector • Throttle position sensor • Open or short in throttle position sensor circuit • PCM
P0130	Oxygen Sensor Circuit Malfunction (Bank 1 Sensor 1)	• Harness and connector • Oxygen sensor (front)
P0133	Oxygen Sensor Circuit Malfunction (Bank 1 Sensor 1)	
P0136	Oxygen Sensor Circuit Malfunction (Bank 1 Sensor 2)	• Harness and connector • Oxygen sensor (rear)
P0201	Injector Circuit Malfunction - Cylinder 1	• Harness and connector • Injector
P0202	Injector Circuit Malfunction - Cylinder 2	
P0203	Injector Circuit Malfunction - Cylinder 3	
P0204	Injector Circuit Malfunction - Cylinder 4	
P0325	Knock Sensor 1 Circuit Malfunction	• Open or short between knock sensor and PCM • Harness and connector • Knock sensor

DTC No.	Diagnostic items	Check items (Remedy)
P0335	Crankshaft Position Sensor Circuit Malfunction	• Harness and connector • Open or short in crankshaft position sensor • Crankshaft position sensor • PCM
P0340	Camshaft Position Sensor Circuit Malfunction	• Harness and connector (If harness and connector are normal replace camshaft position sensor)
P0500	Vehicle Speed Sensor Malfunction	• Harness and connector • Vehicle speed sensor

TROUBLE AREA RELATED TO DTC (FOR 2.7 V6) EFJB0244

Note : Check items for each diagnostic items do not list all probable causes.

DTC No.	Diagnostic items	Check items (Check Point)
P0100	Mass or Volume Air Flow Circuit Malfunction	• Open or short between the sensor and PCM • Bad connection of connectors/bad wiring • Malfunction of the sensor
P0101	Mass or Volume Air Flow Circuit Range/Performance Problem	• Foreign material deposit in the sensor • Bad connection of connectors/bad wiring
P0110	Intake Air Temperature Circuit Malfunction	• Open or short between the sensor and PCM • Bad connection of connectors/bad wiring • Malfunction of the sensor
P0115	Engine Coolant Temperature Circuit Malfunction	• Open or short between the sensor and PCM • Bad connection of connectors/bad wiring • Malfunction of the sensor
P0120	Throttle/Pedal Position Circuit Malfunction	• Open or short between the sensor and PCM • Bad connection of connectors/bad wiring • Malfunction of the sensor
P0121	Throttle/Pedal Position Circuit Range/ Performance Problem	• Sensor's wearness or improper installation • Bad connection of connectors/bad wiring • Malfunction of the sensor
P0130	O2 Sensor Circuit Malfunction (Bank 1 Sensor 1)	• Open or short between the sensor and PCM • Bad connection of connectors/bad wiring • Malfunction of the sensor (B1/S1)
P0135	O2 Sensor Heater Circuit Malfunction (Bank 1 Sensor 1)	• Open or short between the sensor and PCM • Bad connection of connectors/bad wiring • Malfunction of the sensor (B1/S1)
P0150	O2 Sensor Circuit Malfunction (Bank 2 Sensor 1)	• Open or short between the sensor and PCM • Bad connection of connectors/bad wiring • Malfunction of the sensor (B2/S1)
P0133	O2 Sensor Circuit Slow Response (Bank 1 Sensor 1)	• Sensor deteriorated or contaminated • Sensor pin corrosion
P0153	O2 Sensor Circuit Slow Response (Bank 2 Sensor 1)	• Sensor deteriorated or contaminated (B2/S1) • Sensor pin corrosion

DTC No.	Diagnostic items	Check items (Check Point)
P0134	O2 Sensor Circuit No Activity Detected (Bank 1 Sensor 1)	• Sensor deteriorated or contaminated (B1/S1) • Sensor pin corrosion
P0154	O2 Sensor Circuit No Activity Detected (Bank 2 Sensor 1)	• Sensor deteriorated or foreign material deposit (B2/S1) • Sensor pin corrosion
P0136	O2 Sensor Circuit Malfunction (Bank 1 Sensor 2)	• Open or short between the sensor and PCM • Bad connection of connectors/bad wiring • Malfunction of the sensor (B1/S2)
P0155	O2 Sensor Heater Circuit Malfunction (Bank 2 Sensor 1)	• Open or short between the sensor and PCM • Bad connection of connectors/bad wiring • Malfunction of the sensor (B2/S1)
P0156	O2 Sensor Circuit Malfunction (Bank 2 Sensor 2)	• Open or short between the sensor and PCM • Bad connection of connectors/bad wiring • Malfunction of the sensor (B2/S2)
P0140	Downstream O2 Sensor Circuit No Activity Detected (Bank 1 Sensor 2)	• Sensor deteriorated or contaminated
P0160	Downstream O2 Sensor Circuit No Activity Detected (Bank 2 Sensor 2)	• Sensor deteriorated or contaminated
P0141	O2 Sensor Heater Circuit Malfunction (Bank 1 Sensor 2)	• Open or short between the sensor and PCM • Bad connection of connectors/bad wiring • Malfunction of the sensor (B1/S2)
P0161	O2 Sensor Heater Circuit Malfunction (Bank 2 Sensor 2)	• Open or short between the sensor and PCM • Bad connection of connectors/bad wiring • Malfunction of the sensor (B2/S2)
P0170	Fuel Trim Malfunction (Bank 1)	• Fuel system (Fuel tank/Press. regulator/Fuel pump/PCSV) • Connection of the fuel line hose/sealing/cut • Sealing between the purge valve and fuel tank • Air leak in the exhaust system • Ignition system • Engine
P0173	Fuel Trim Malfunction (Bank 2)	• Fuel system (Fuel tank/Press. regulator/Fuel pump/PCSV) • Connection of the fuel line hose/seatling/cut • Sealing between the purge valve and fuel tank • Air leak in the exhaust system • Ignition system • Engine
P0201	Cylinder 1 - Injector Circuit Malfunction	• Open or short between the injector and PCM • Bad connection of connectors/bad wiring • Bad No.1 injector
P0202	Cylinder 2 - Injector Circuit Malfunction	• Open or short between the injector and PCM • Bad connection of connectors/bad wiring • Bad No.2 injector
P0203	Cylinder 3 - Injector Circuit Malfunction	• Open or short between the injector and PCM • Bad connection of connectors/bad wiring • Bad No.3 injector

DTC No.	Diagnostic items	Check items (Check Point)
P0204	Cylinder 4 - Injector Circuit Malfunction	• Open or short between the injector and PCM • Bad connection of connectors/bad wiring • Bad No.4 injector
P0205	Cylinder 5 - Injector Circuit Malfunction	• Open or short between the injector and PCM • Bad connection of connectors/bad wiring • Bad No.5 injector
P0206	Cylinder 6 - Injector Circuit Malfunction	• Open or short between the injector and PCM • Bad connection of connectors/bad wiring • Bad No.6 injector
P0230	Fuel Pump Circuit Malfunction	• Open or short between the pump and PCM • Bad connection of connectors/bad wiring • Bad pump relay
P0301	Cylinder 1 - Misfire Detected	• Bad ignition system (Spark plug to PCM) • Check the injector #1 • Check the condition of the HLA
P0302	Cylinder 2 - Misfire Detected	• Bad ignition system (Spark plug to PCM) • Check the injector #2 • Check the condition of the HLA
P0303	Cylinder 3 - Misfire Detected	• Bad ignition system (Spark plug to PCM) • Check the injector #3 • Check the condition of the HLA
P0304	Cylinder 4 - Misfire Detected	• Bad ignition system (Spark plug to PCM) • Check the injector #4 • Check the condition of the HLA
P0305	Cylinder 5 - Misfire Detected	• Bad ignition system (Spark plug to PCM) • Check the injector #5 • Check the condition of the HLA
P0306	Cylinder 6 - Misfire Detected	• Bad ignition system (Spark plug to PCM) • Check the injector #6 • Check the condition of the HLA
P0325	Knock Sensor 1 Circuit Malfunction	• Open or short between the sensor and PCM • Bad connection of connectors/bad wiring • Bad knock sensor in bank 1
P0330	Knock Sensor 2 Circuit Malfunction	• Open or short between the sensor and PCM • Bad connection of connectors/bad wiring • Bad knock sensor in bank 2
P0335	Crankshaft Position Sensor 'A' Circuit Malfunction	• Open or short between the sensor and PCM • Bad connection of connectors/bad wiring • Bad CKP sensor
P0340	Camshaft Position Sensor (TDC Sensor) Circuit Malfunction	• Open or short between the sensor and PCM • Bad connection of connectors/bad wiring • Bad CMP sensor
P0350	Ignition Coil Primary/Secondary Circuit Malfunction	• Bad ignition system (Spark plug to PCM) • Bad connection of connectors/bad wiring
P0351	Ignition Coil 'A' Primary/Secondary Circuit Malfunction	• Bad ignition system (Spark plug to PCM) • Bad connection of connectors/bad wiring

DTC No.	Diagnostic items	Check items (Check Point)
P0352	Ignition Coil 'B' Primary/Secondary Circuit Malfunction	• Bad ignition system (Spark plug to PCM) • Bad connection of connectors/bad wiring
P0353	Ignition Coil 'C' Primary/Secondary Circuit Malfunction	• Bad ignition system (Spark plug to PCM) • Bad connection of connectors/bad wiring
P0354	Ignition Coil 'D' Primary/Secondary Circuit Malfunction	• Bad ignition system (Spark plug to PCM) • Bad connection of connectors/bad wiring
P0355	Ignition Coil 'E' Primary/Secondary Circuit Malfunction	• Bad ignition system (Spark plug to PCM) • Bad connection of connectors/bad wiring
P0356	Ignition Coil 'F' Primary/Secondary Circuit Malfunction	• Bad ignition system (Spark plug to PCM) • Bad connection of connectors/bad wiring
P0420	Catalyst System Efficiency Below Threshold (Bank 1)	• Catalytic converter melted/broken
P0430	Catalyst System Efficiency Below Threshold (Bank 2)	• Catalytic converter melted/broken
P0443	Evap. Emission Control System - Purge Control Valve Circuit Malfunction	• Open or short between the PCSV and PCM • Bad connection of connectors/bad wiring • Bad PCSV
P0500	For OBD2 Rough Road Detection, Vehicle Speed Malfunction From ABS/ TCS	• Open or short between the TCS or ABS and PCM • Check the connections of related parts • Check for opens or shorts • Bad wheel sensor or TCS/ABS
	For OBD2 Rough Road Detection, Vehicle Speed Malfunction From Front Right Inductive Wheel Sensor	• Check the connection of related parts • Check for opens or shorts • Bad wheel sensor
P0506	Idle Speed Control RPM Lower Than Expected	• Bad opening circuit of ISA or foreign material deposit
P0507	Idle Speed Control RPM Higher Than Expected	• Bad closing circuit of ISA or foreign material deposit
P1134	O2 Sensor circuit - Transition Switch Time Malfunction/Slop (B1/S1)	• O2 sensor deteriorated or foreign material deposit
P1154	O2 Sensor circuit - Transition Switch Time Malfunction/Slop (B2/S1)	• O2 sensor deteriorated or foreign material deposit
P1166	O2 Sensor - Controller Adaption diagnosis Malfunction (Bank 1)	• Fuel system (Fuel tank/Press. regulator/Fuel pump/PCSV) • Connection of the fuel line hose/sealing/cut • Sealing between the purge valve and fuel tank • Air leak in the exhaust system • Ignition system • Engine
P1167	O2 Sensor - Controller Adaption diagnosis Malfunction (Bank 2)	• Fuel system (Fuel tank/Press. regulator/Fuel pump/PCSV) • Connection of the fuel line hose/sealing/cut • Sealing between the purge valve and fuel tank • Air leak in the exhaust system • Ignition system • Engine

DTC No.	Diagnostic items	Check items (Check Point)
P1372	Segment Time Acquisition Incorrect	• Bad installation of tone wheel to crankshaft • Bad signal of the CKP sensor • Bad connection of connectors/bad wiring
P1510	Idle Speed Actuator Command Signal Incorrect (Coil 1)	• Open or short between the ISA and PCM • Bad connection of connectors/bad wiring • Bad ISA
P1511	Idle Speed Actuator Command Signal Incorrect (Coil 2)	• Open or short between the ISA and PCM • Bad connection of connectors/bad wiring • Bad ISA
P1529	Freeze Frame Request Via Can	• TCM error (check for TCM DTCs)
P1602	Serial Communication Problem With TCU (Timeout)	• Open or short of CAN wire • Bad TCM
P1616	Main Relay Malfunction	• Bad main relay • Open fusible link • Bad connection of connectors/bad wiring
P1623	Diagnostic Lamp Powerstage Malfunction	• Open or short between the MIL lamp and PCM • Bad MIL lamp • Bad connection of connectors/bad wiring
P1624	Cooling Fan Relay - Circuit Malfunction ("LOW" Circuit)	• Open or short between the cooling fan and PCM • Bad main relay • Bad connection of connectors/bad wiring
P1625	Cooling Fan Relay - Circuit Malfunction ("HIGH" Circuit)	• Open or short between the cooling fan and PCM • Bad main relay • Bad connection of connectors/bad wiring

MAJOR SENSOR REFERENCE WAVEFORMS EFJB0245

The followings are the major sensor reference waveforms. Below is the data for CMP, Mass Air Flow Sensor, Throttle Position Sensor, Rear O2 Sensor, Front O2 Sensor and Injection Pulse when revving quickly up to 4800rpm under no load after warming up engine sufficiently. Each value is for reference, the exact values may vary.

* CMP AND CKP

Should increase gradually while depressing the accelerator pedal and should decrease gradually after releasing the pedal without any intermittent drop or rise.

[2.4 I4]

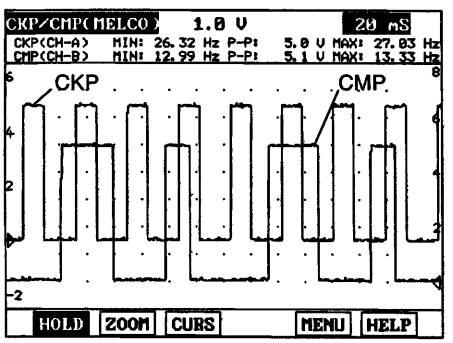

EFJB245A

[2.7 V6]

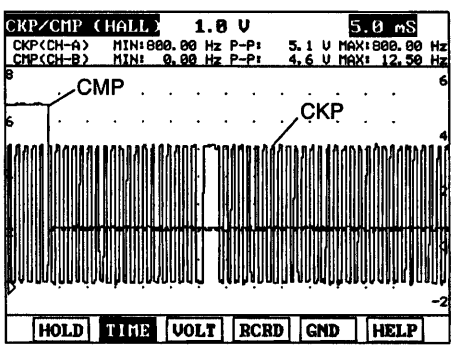

EFJB245B

* MAF SENSOR AND TPS

MAF should increase when depressing the accelerator pedal and should decrease at the moment "THRTL POS SEN" is closed (accelerator pedal is released).

TPS should increase while depressing the accelerator pedal and should decrease while releasing it.

[2.4 I4]

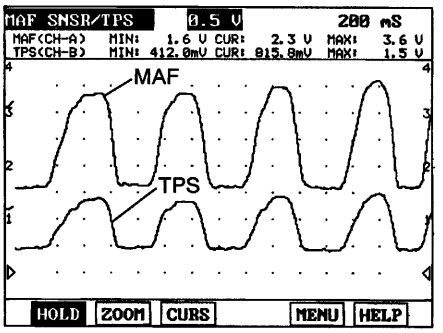

EFJB245C

[2.7 V6]

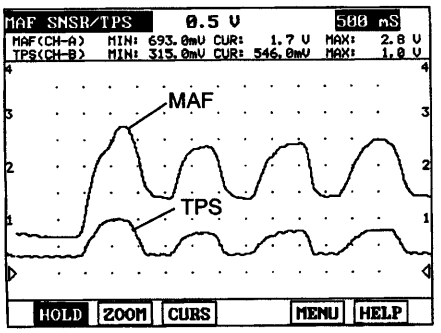

EFJB245D

* FR O2 SENSOR AND RR O2 SENSOR

FR O2 and RR O2 sensor may increase immediately after depressing the accelerator pedal and may decrease after releasing the pedal.

[2.4 I4]

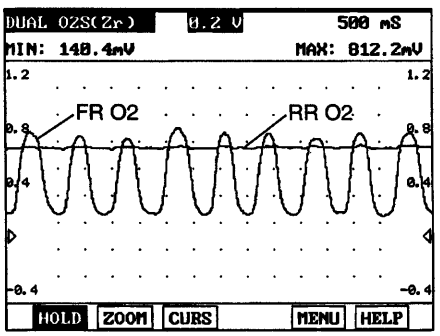

EFJB245E

[2.7 V6]

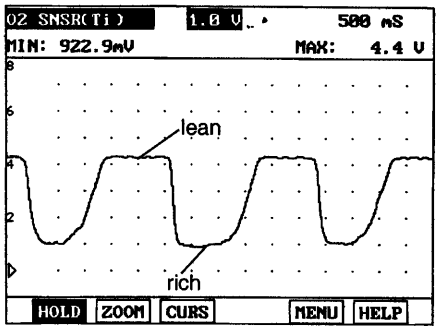

EFJB245F

* INJ PULSE

Should increase when depressing the accelerator pedal and should decrease when the pedal is released.

[2.4 I4]

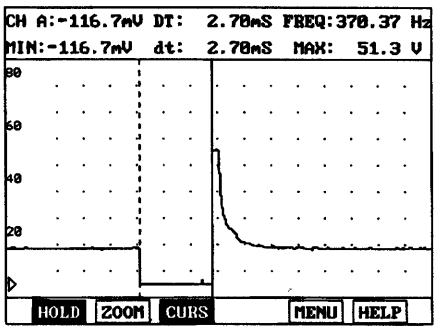

EFJB245G

[2.7 V6]

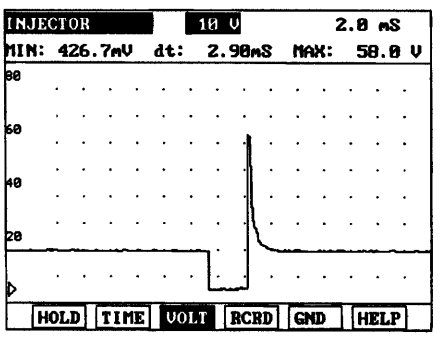

EFJB245H

MFI COMPONENT INSPECTION EFJB0250

LOCATION OF MFI COMPONENTS

[2.4 I4]

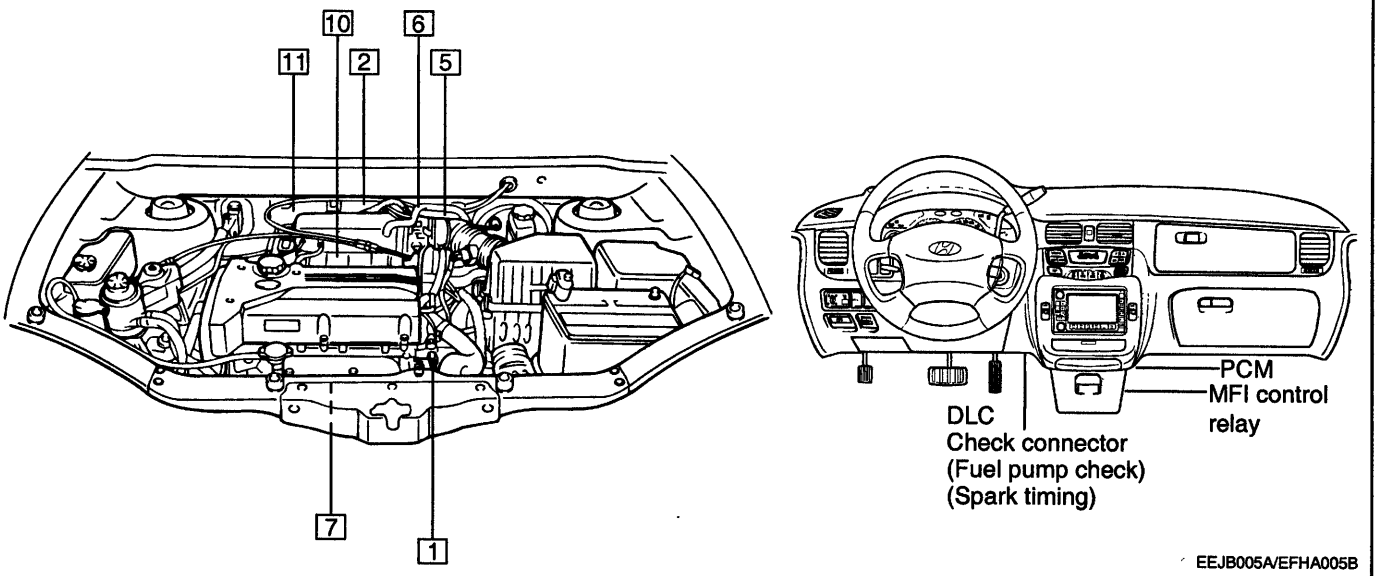

EEJB005A/EFHA005B

[2.7 V6]

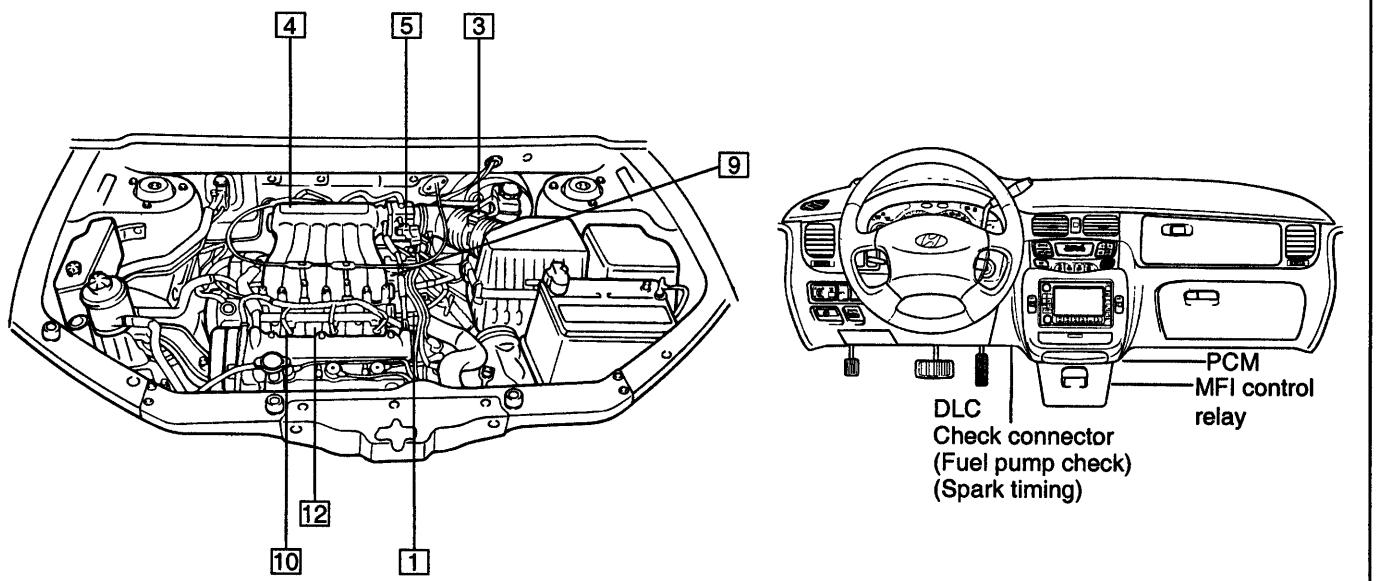

EEJB005C/EFHA005B

1 Engine coolant temperature (ECT) sensor. (FL-38)
2 Mass air flow sensor and Intake air temp. sensor for 2.4 I4. (FL-42)
3 Mass air flow sensor for 2.7 V6 (FL-46)
4 Intake air temp. (IAT) sensor for 2.7 V6 (FL-49)
5 Throttle position sensor (TPS) (FL-52)
6 Idle speed actuator (ISA) (FL-55)
7 Heated oxygen sensor (HO2S) (FL-58, 61)
8 Camshaft position sensor (CMP) (FL-64)
9 Crankshaft position sensor (CKP) (FL-68)
10 Injector (FL-72, 74)
11 Evap. canister purge control solenoid valve (PCSV) (FL-77)
12 Knock sensor (FL-80)
13 Power steering oil pressure switch (FL-83)

EFJB025B

ECT Sensor

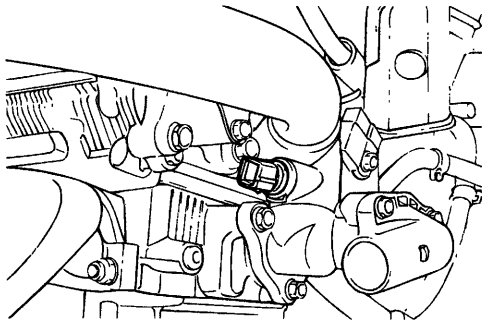

EFA9025C

Power Steering Oil Pressure Switch

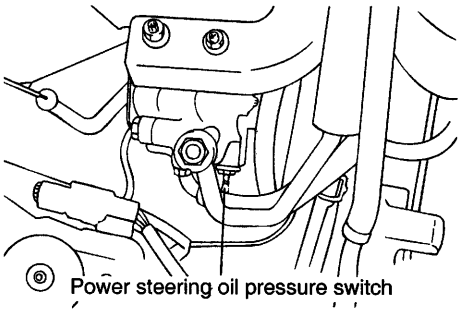

EFA9025D

Vehicle Speed Sensor

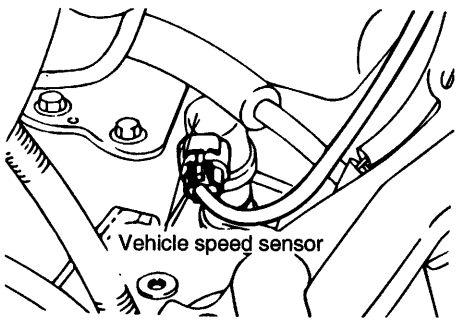

EFA9025E

Ignition Timing Adjustment Terminal

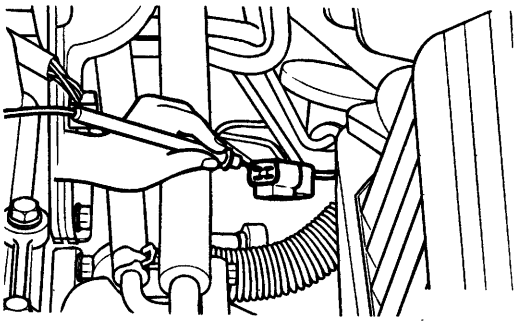

HEW31002

EVAP Solenoid Valve

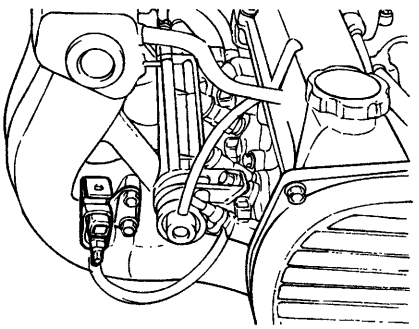

EFA9025G

MAP, TPS, ISA, TR

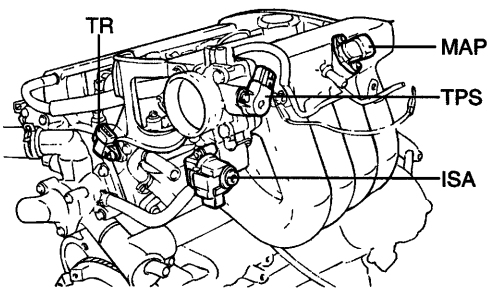

EFA9025H

CMP Sensor

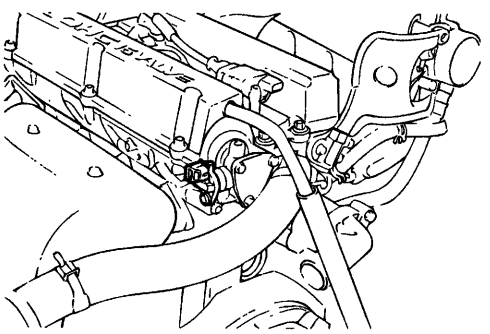

EFA9025I

CKP

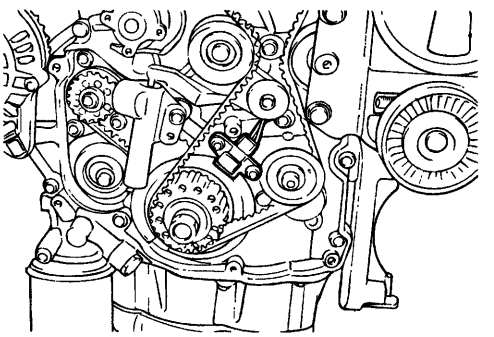

EFA9025J

Data Link Connector	Heated Oxygen Sensor (HO2S)
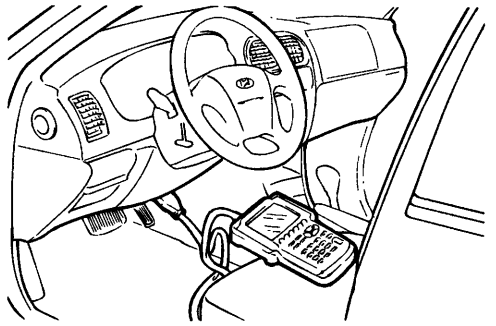 EFA9025K	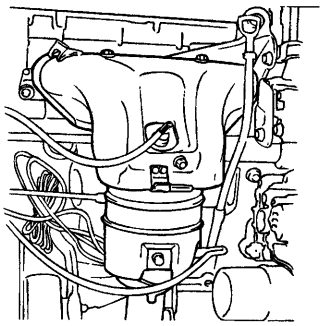 EFA9025L
Transaxle Range (TR) Switch	**Injectors**
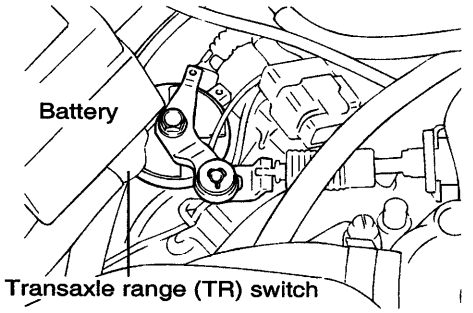 EFA9025M	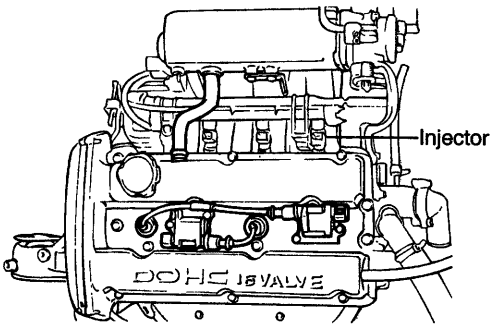 EFA9025N
Knock Sensor	
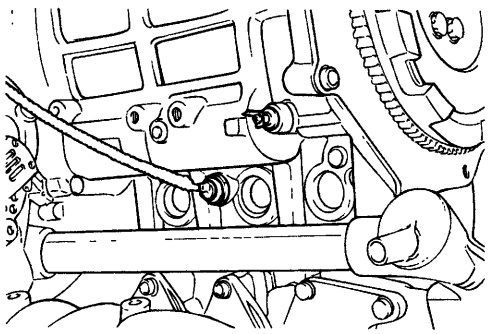 EFA9025O	

ENGINE COOLANT TEMPERATURE (ECT) SENSOR EFJB7030

The engine coolant temperature sensor installed in the engine coolant passage of the cylinder head detects the engine coolant temperature and emits signals to the PCM. This part employs a thermistor which is sensitive to changes in temperature. The electric resistance of the thermistor decreases in response to a temperature rise (NTC). The PCM determines engine coolant temperature by the sensor output voltage and provides optimum fuel enrichment when the engine is cold.

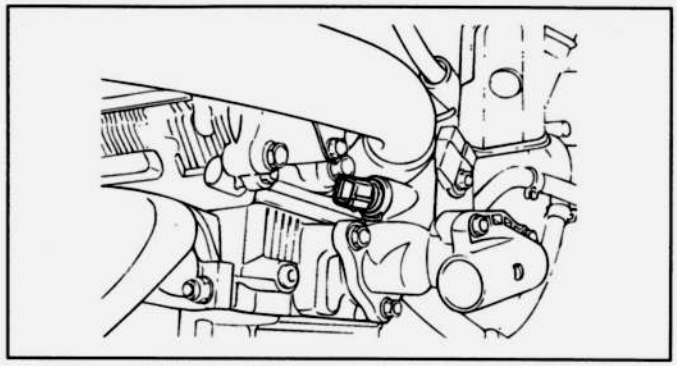

EFA9026A

CIRCUIT DIAGRAM

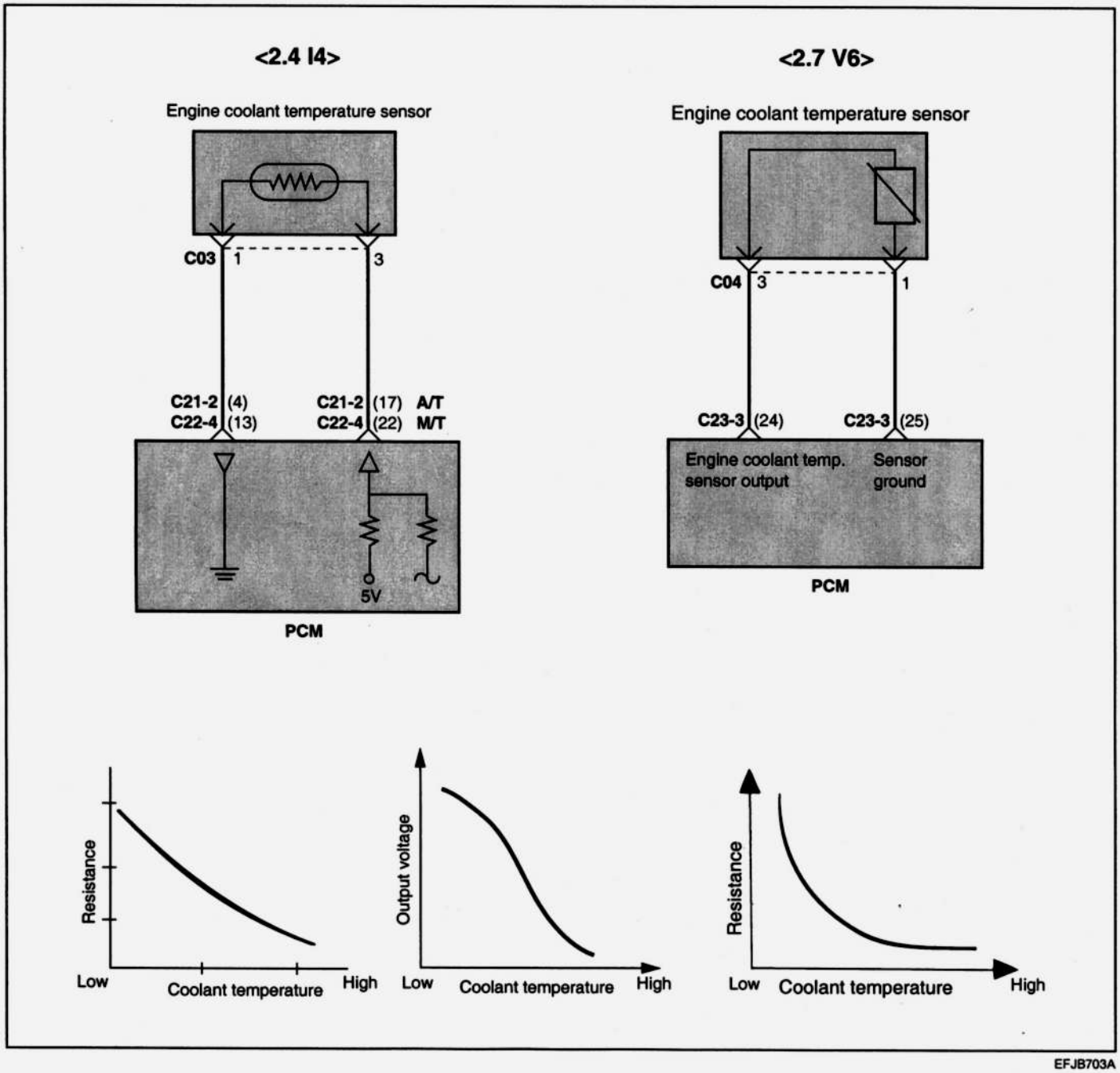

EFJB703A

SENSOR CHECKING

USING HI-SCAN PRO

Check item	Data display	Check conditions	Intake air temperature	Test specification
Engine coolant temperature sensor	Sensor temperature	Ignition switch : ON or engine running	When -20°C (-4°F)	-20°C
			When 0°C (32°F)	0°C
			When 20°C (68°F)	20°C
			When 40°C (104°F)	40°C
			When 80°C (176°F)	80°C

USING MULTI-METER

1. Remove the engine coolant temperature sensor from the intake manifold.
2. With the temperature sensing portion of the engine coolant temperature sensor immersed in hot engine coolant, check the resistance.

Temperature [°C (°F)]	Resistance (kΩ)
0 (32)	5.9
20 (68)	2.5
40 (104)	1.1
80 (176)	0.3

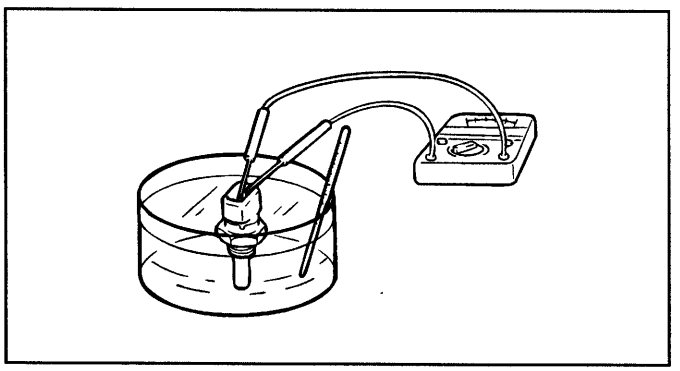

EFA9028A

3. If the resistance deviates from the standard value greatly, replace the sensor.

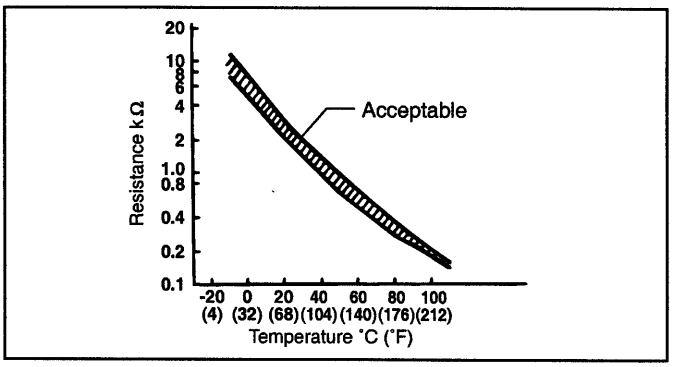

EFJB703D

HARNESS INSPECTION

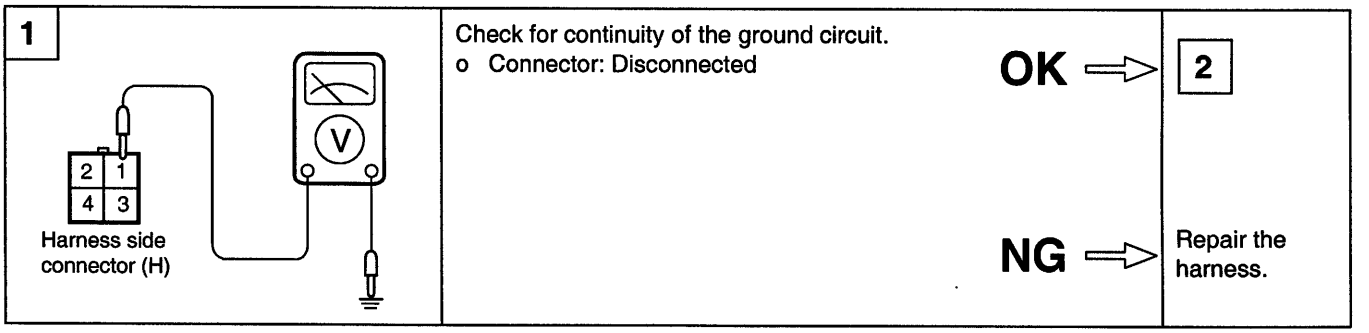

EFJB703B

2 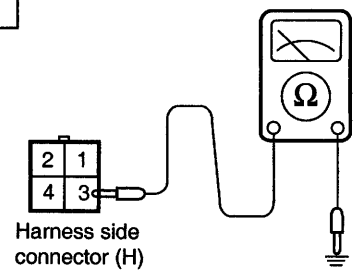	Measure the power supply voltage. o Connector: Disconnected o Ignition switch: ON o Voltage (V): 4.5-4.9V	OK ⇨	END ! NG ⇨ Repair the harness.

EFJB703C

TROUBLESHOOTING PROCEDURES

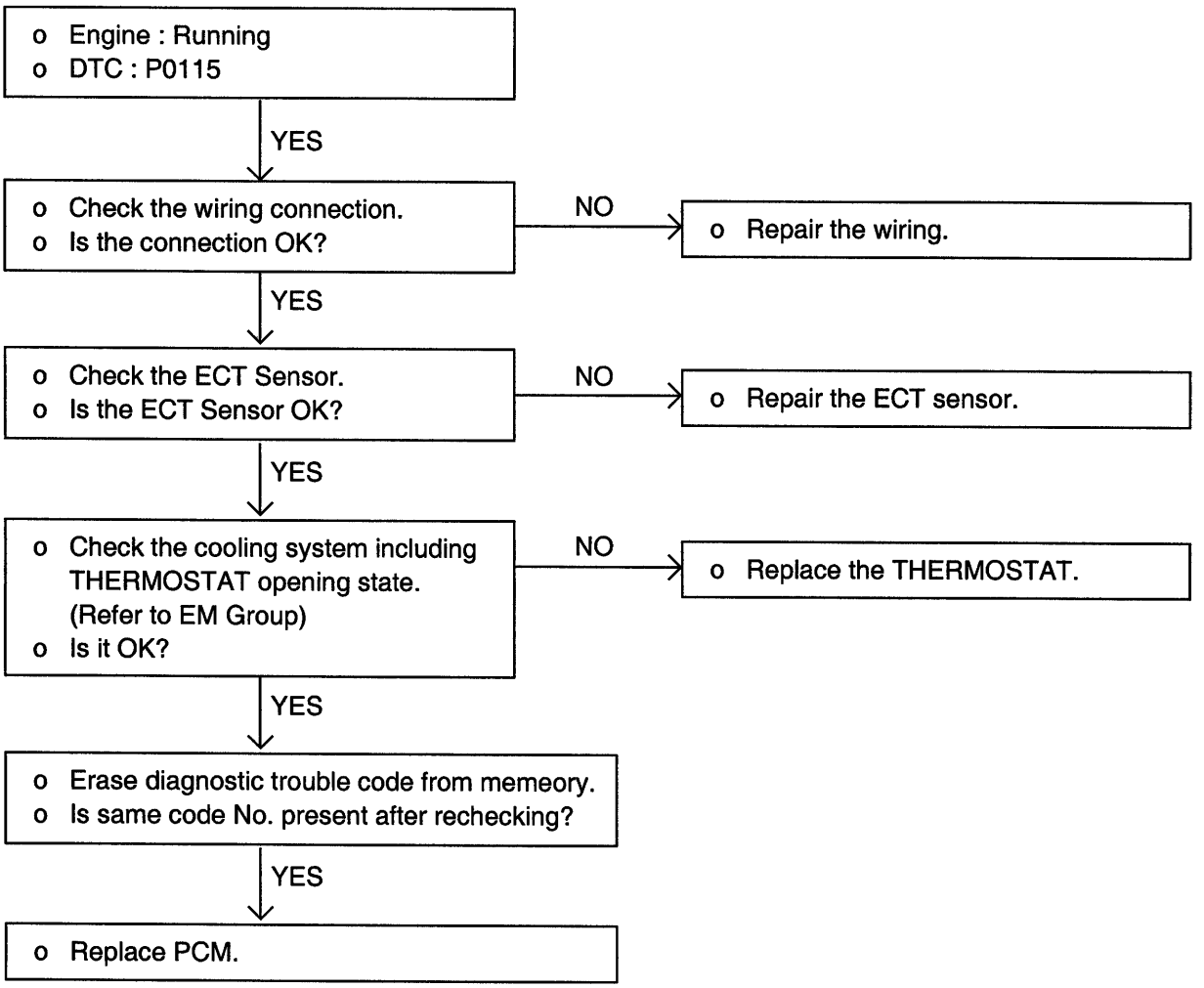

DTC : Diagnosis Trouble Code
PCM : Powertrain Control Module
ECT : Engine coolant Temperature

EFA9030A

USING VOLTMETER

Check item	Coolant temperature	Test specification
Engine coolant temperature sensor output voltage	When 0°C	4.05V
	When 20°C	3.44V
	When 40°C	2.72V
	When 80°C	1.25V

TROUBLEHSOOTING HINTS

If the fast idle speed is not adequate or the engine gives off dark smoke during warm-up, the engine coolant temperature sensor might be the cause.

INSTALLATION

1. Apply sealant LOCTITE 962T or the equivalent to the threaded portion.
2. Install the engine coolant temperature sensor and tighten it to the specified torque.

Tightening torque
Engine coolant temperature sensor :
20-40 Nm (200-400 kg.cm, 14-29 lb.ft)

3. Securely connect the harness connector.

MASS AIR FLOW(MAF) SENSOR & INTAKE AIR TEMP.(IAT) SENSOR EFJB7050

This hot film type air flow sensor is composed of a hot film sensor, housing and metering duct (hybrid sensor element). Mass air flow rate is measured because the change of the mass air flow rate causes a change in the amount of heat being transferred from the hot film probe surface to the air flow. The air flow sensor generates a pulse so it repeatedly opens and closes between the 5V voltage supplied from the powertrain control module.

The intake air temperature sensor (IAT Sensor), located in the intake air hose, is a resistor-based sensor for detecting the intake air temperature. The intake air temperature information from the sensor helps the PCM provide the necessary fuel injection.

CIRCUIT DIAGRAM <2.4 I4>

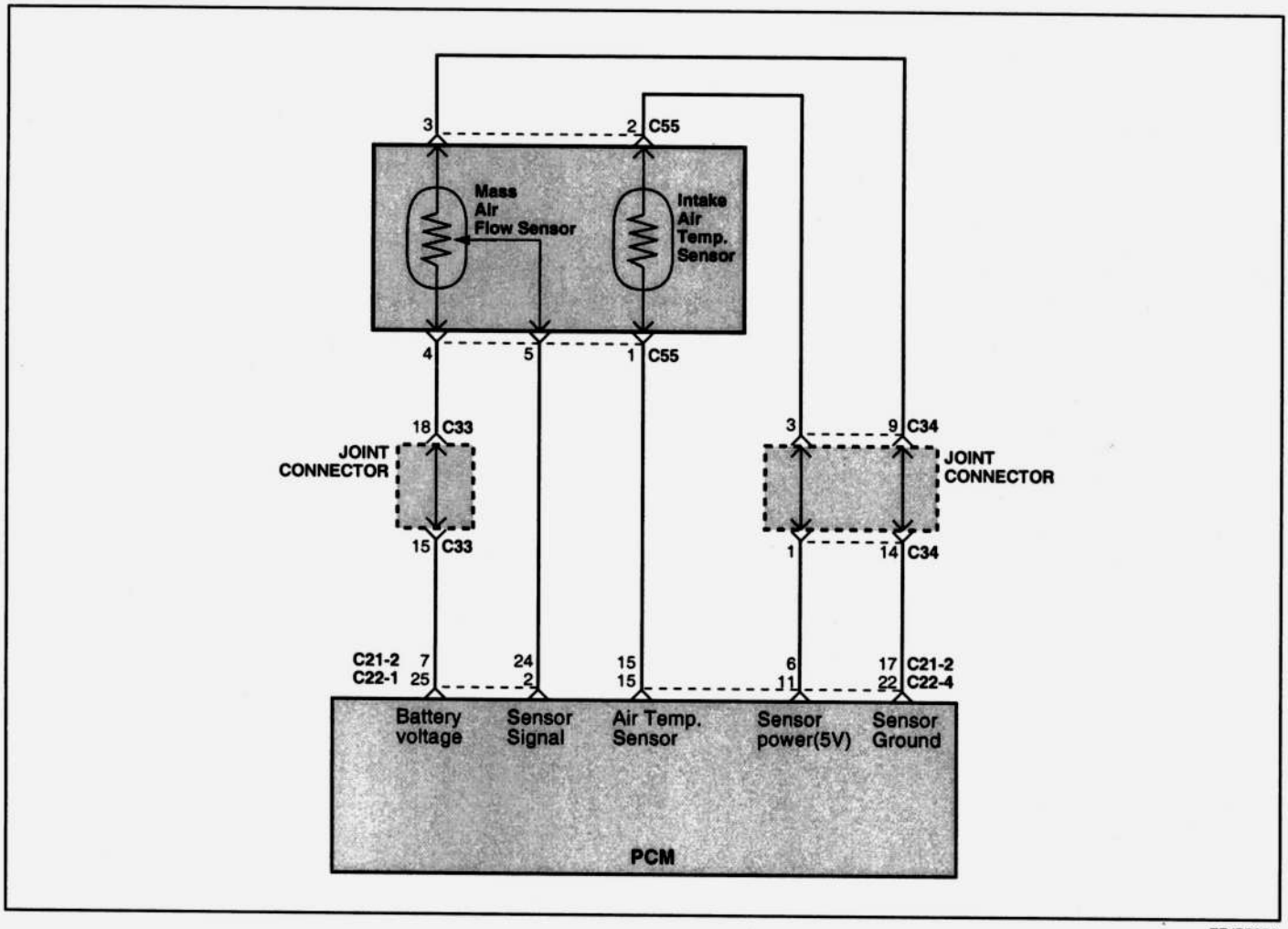

EFJB705A

HARNESS INSPECTION PROCEDURE

1

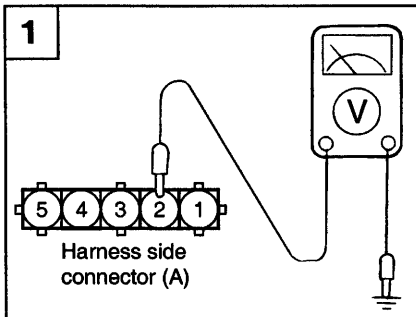

Measure the power supply voltage for the IAT sensor.
- o Connector: Disconnected.
- o Ignition switch : ON.
- o Voltage (V) : 4.8-5.2 V.

OK ⇒ 2

NG ⇒ Repair the harness.

EFJB705B

2

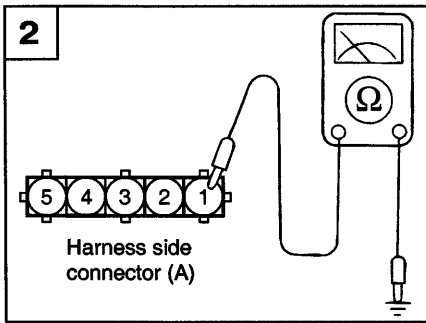

Check for an open circuit, or a short circuit to ground between the powertrain control module and the IAT sensor.
- o Connector : Disconnected
- o PCM connector : Disconnected

OK ⇒ 3

NG ⇒ Repair the harness.

EFJB705C

3

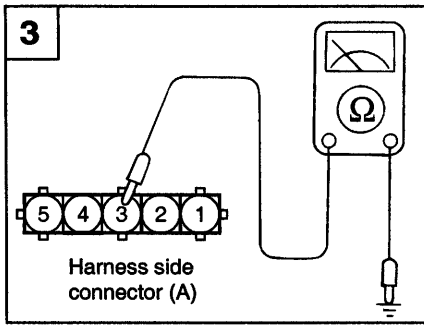

Check for continuity of the ground circuit.
- o Connector : Disconnected.

OK ⇒ 4

NG ⇒ Repair the harness.

EFJB705D

4

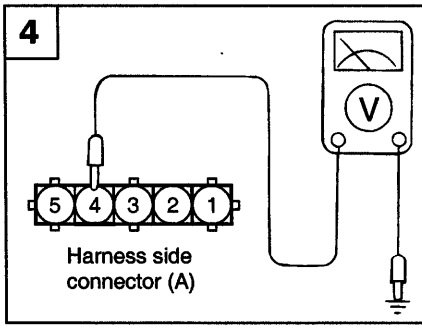

Check the power supply(Bat) voltage for MAF sensor.
- o Connector : Disconnected
- o PCM connector : Connected
- o Voltage : Battery voltage

OK ⇒ 5

NG ⇒ Repair the harness.

EFJB705E

5 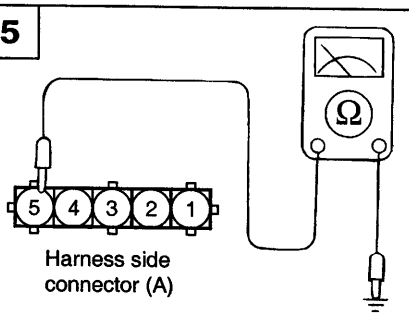	Check for an open-circuit, or a short-circuit to ground between the PCM and MAF sensor. o Connector : Disconnected o PCM connector : Disconnected	OK ⇨	END !
		NG ⇨	Repair the harness.

EFJB705F

TROUBLESHOOTING PROCEDURES

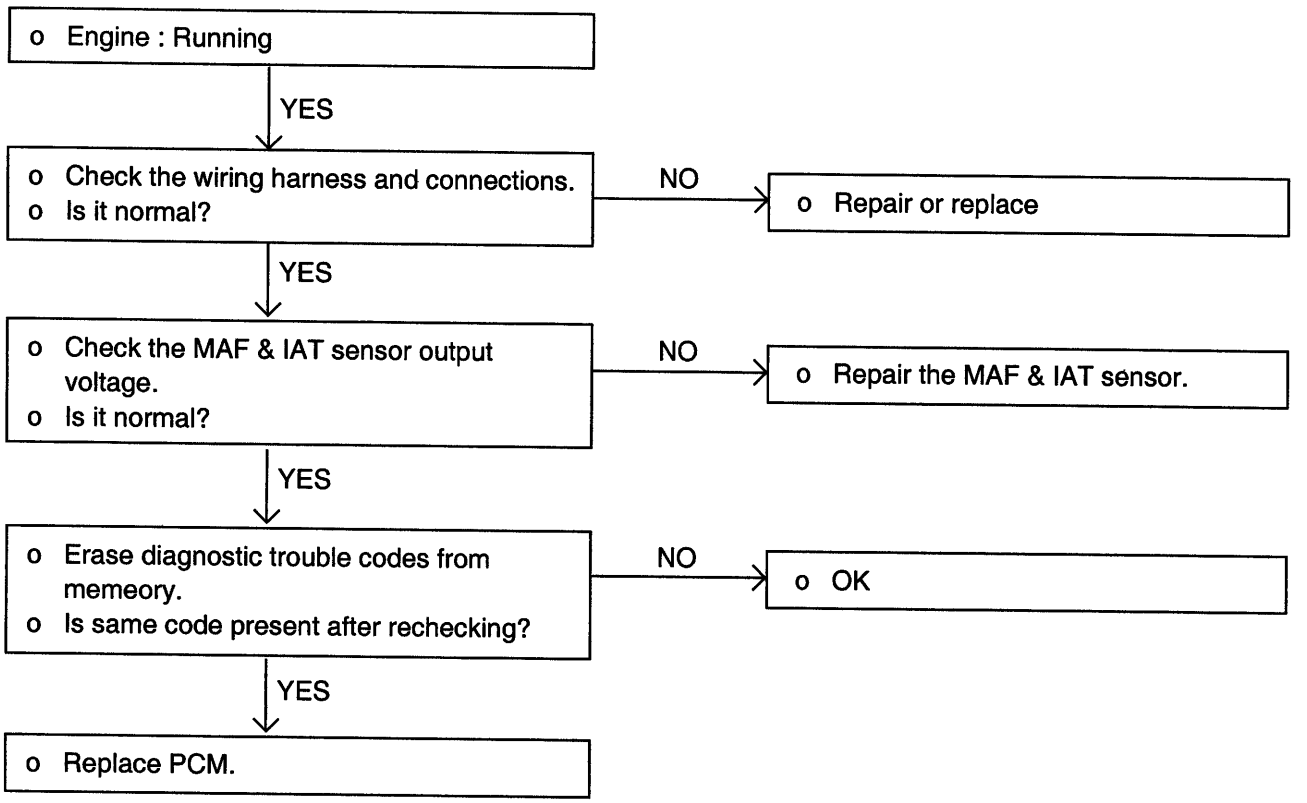

DTC : Diagnosis Trouble Code
PCM : Powertrain Control Module

EFJB705G

TROUBLESHOOTING HINTS

1. If the engine stalls occasionally, start the engine and shake the MAF sensor harness. If the engine stalls, check for poor contact at the MAF sensor connector.
2. If the MAF sensor output voltage is other than 0 when the ignition switch is turned on (do not start the engine), check for a faulty MAF sensor or PCM.
3. If the engine can idle even if the MAF sensor output voltage is out of specification, check for the following conditions;
   - Disturbed air flow in the MAF sensor, disconnected air duct, and clogged air cleaner filter.
   - Poor combustion in the cylinder, faulty ignition plug, ignition coil, injector, and incorrect comparison.
4. Even if no AFS malfunction occurs, check the mounting direction of the AFS.

Check item	Check condition	Test specification
Mass air flow sensor output voltage	Idle rpm	0.5V
	2000 rpm	1.0V

NOTE

1. **When the vehicle is new [within initial operation of about 500 km (300 miles)], the mass air flow sensor air quantity will be about 10% higher.**
2. **Use an accurate digital voltmeter.**
3. **Before checking, warm up the engine until the engine coolant temperature reaches 80 to 90°C (176 to 198°F).**

MASS AIR FLOW (MAF) SENSOR

[2.7 V6] EFJB7090

This hot film type air flow sensor is composed of a hot film sensor, housing and metering duct (hybrid, sensor element). Mass air flow rate is measured because the change of the mass air flow rate causes of heat being transferred from the hot film probe surface to the air flow. The air flow sensor generates a pulse so it repeatedly opens and closes between the 5V voltage supplied from the powertrain control module.

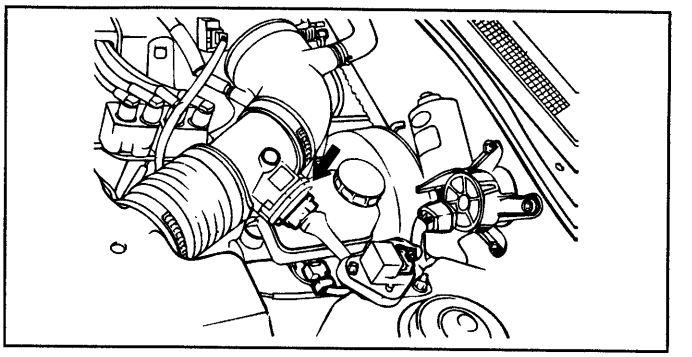

EFA9040A

CIRCUIT DIAGRAM <2.7 V6>

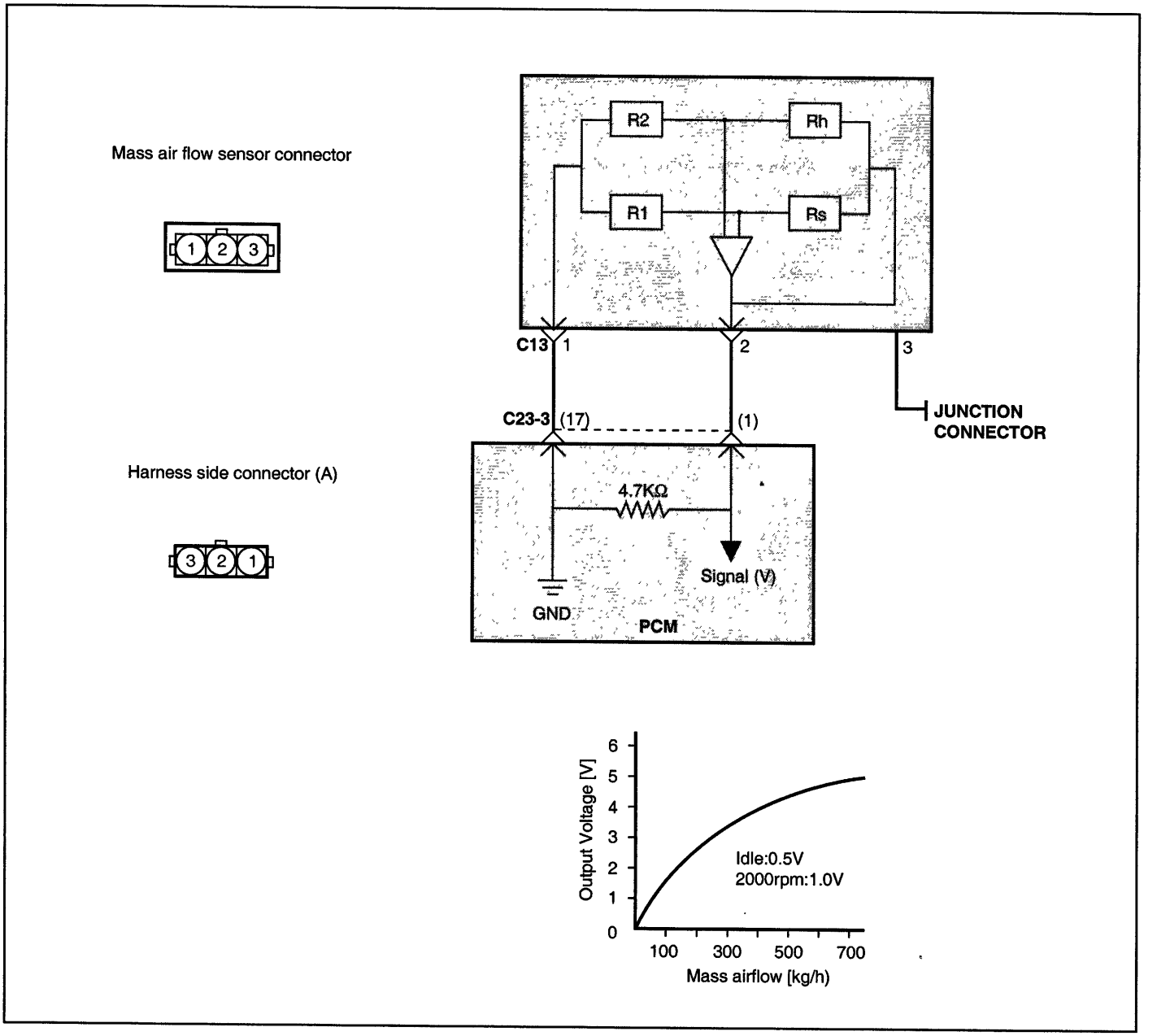

EFJB709A

TROUBLESHOOTING PROCEDURES

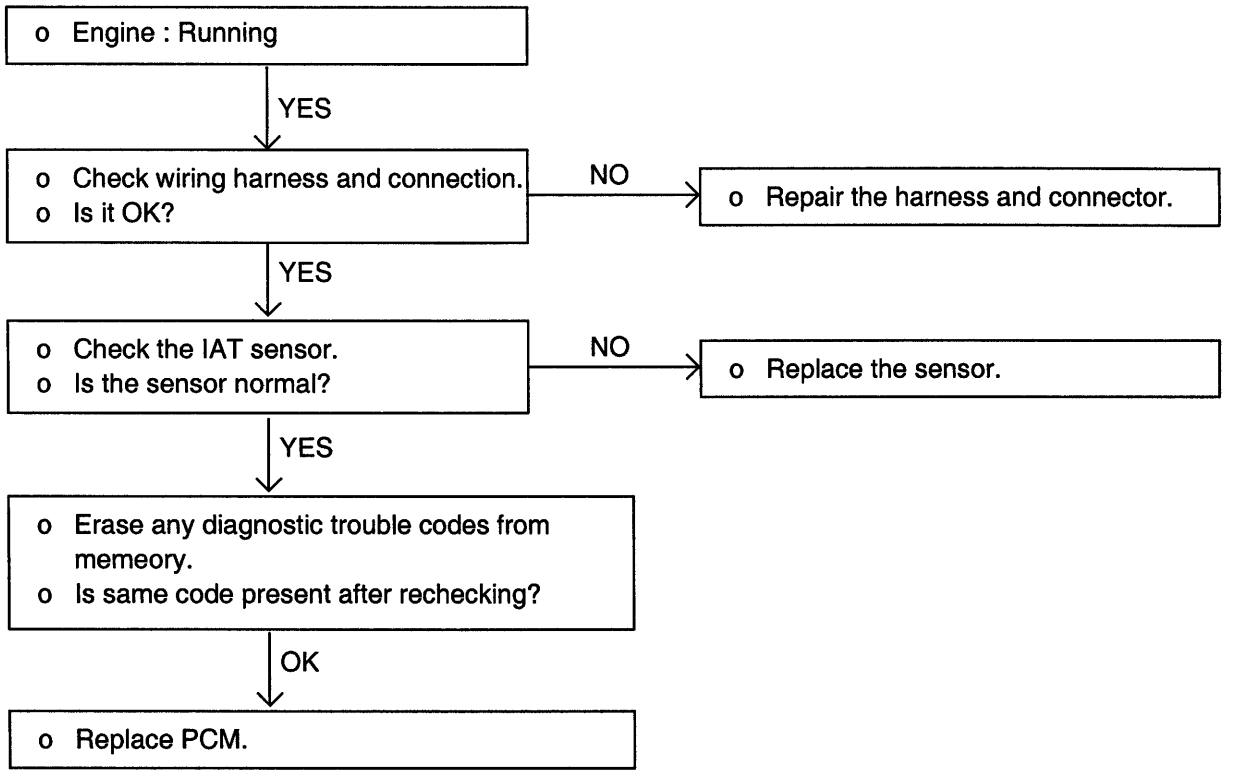

DTC : Diagnosis Trouble Code
PCM : Powertrain Control Module

EFAA709E

TROUBLESHOOTING HINTS

1. If the engine stalls occasionally, start the engine and shake the MAF sensor harness. If the engine stalls, check for poor contact at the MAF sensor connector.
2. If the MAF sensor output voltage is other than 0 when the ignition switch is turned on (do not start the engine), check for a faulty MAF sensor or PCM.
3. If the engine can idle even if the MAF sensor output voltage is out of specification, check for the following conditions;
   - Disturbed air flow in the MAF sensor, disconnected air duct, and clogged air cleaner filter.
   - Poor combustion in the cylinder, faulty ignition plug, ignition coil, injector, and low compression.
4. Even if no AFS malfunction occurs, check the mounting direction of the AFS.

Check item	Check condition	Test specification
Mass air flow sensor output voltage	Idle rpm	0.5V
	2000 rpm	1.0V

NOTE

1. **When the vehicle is new [within about 500 km (300 miles)], the mass air flow sensor reading will be about 10% higher.**
2. **Use an accurate digital voltmeter.**
3. **Before checking, warm up the engine until the engine coolant temperature reaches 80 to 90°C (176 to 198°F).**

HARNESS INSPECTION PROCEDURE

1	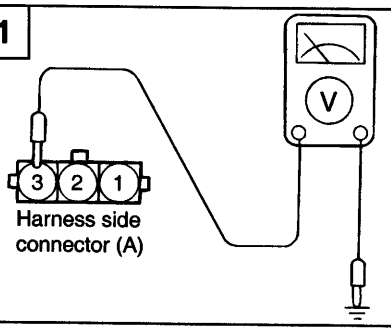	Measure the power supply voltage. o Connector : Disconnected. o Ignition switch : ON. o Voltage (V) : Battery voltage.	OK ⇒ 2 NG ⇒ Repair the harness

EFHA709B

2	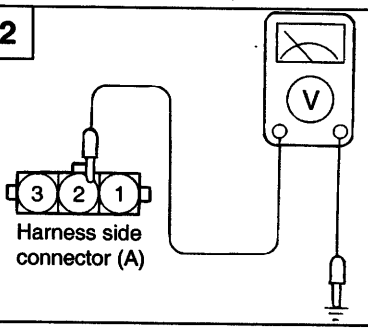	Check for an open circuit, or a short circuit to ground between the powertrain control module and the mass air flow sensor. o PCM connector : Disconnected. o Mass air sensor connector : Disconnected.	OK ⇒ 3 NG ⇒ Repair the harness

EFAA709C

3	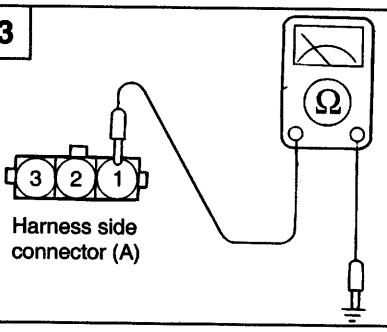	Check for continuity of the ground circuit. o Connector : Disconnected.	OK ⇒ END ! NG ⇒ Repair the harness

EFAA709D

INTAKE AIR TEMPERATURE (IAT) SENSOR EFJB7110

The intake air temperature sensor (IAT Sensor), located in the intake air hose, is a resistor-based sensor for detecting the intake air temperature. The intake air temperature information from the sensor helps the PCM provide the necessary fuel injection quantity.

CIRCUIT DIAGRAM

< 2.7 V6 >

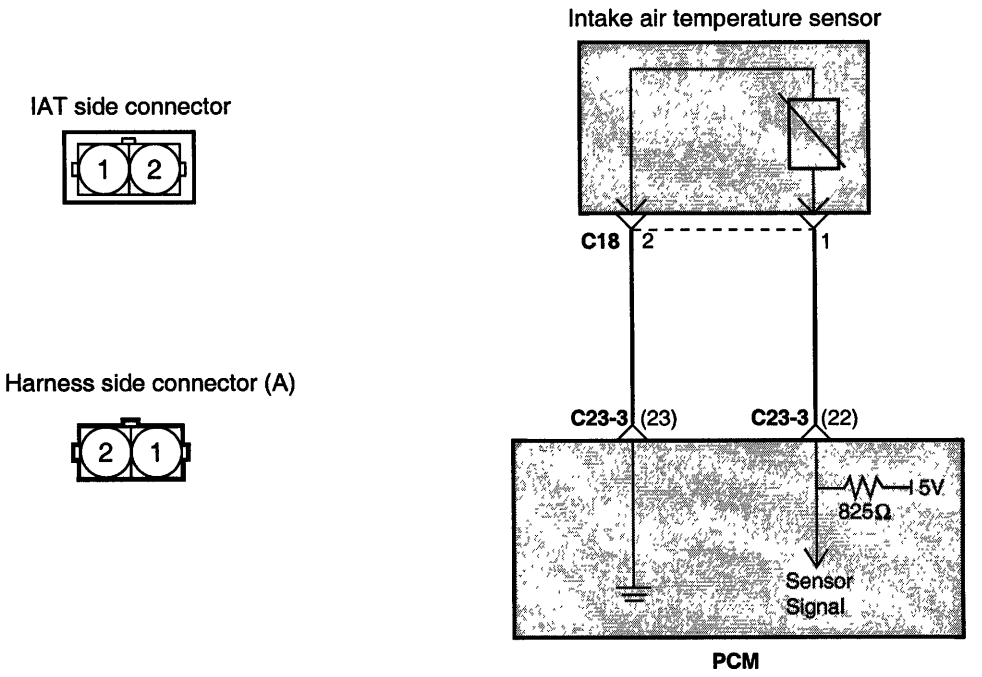

EFJB711A

TROUBLESHOOTING PROCEDURES

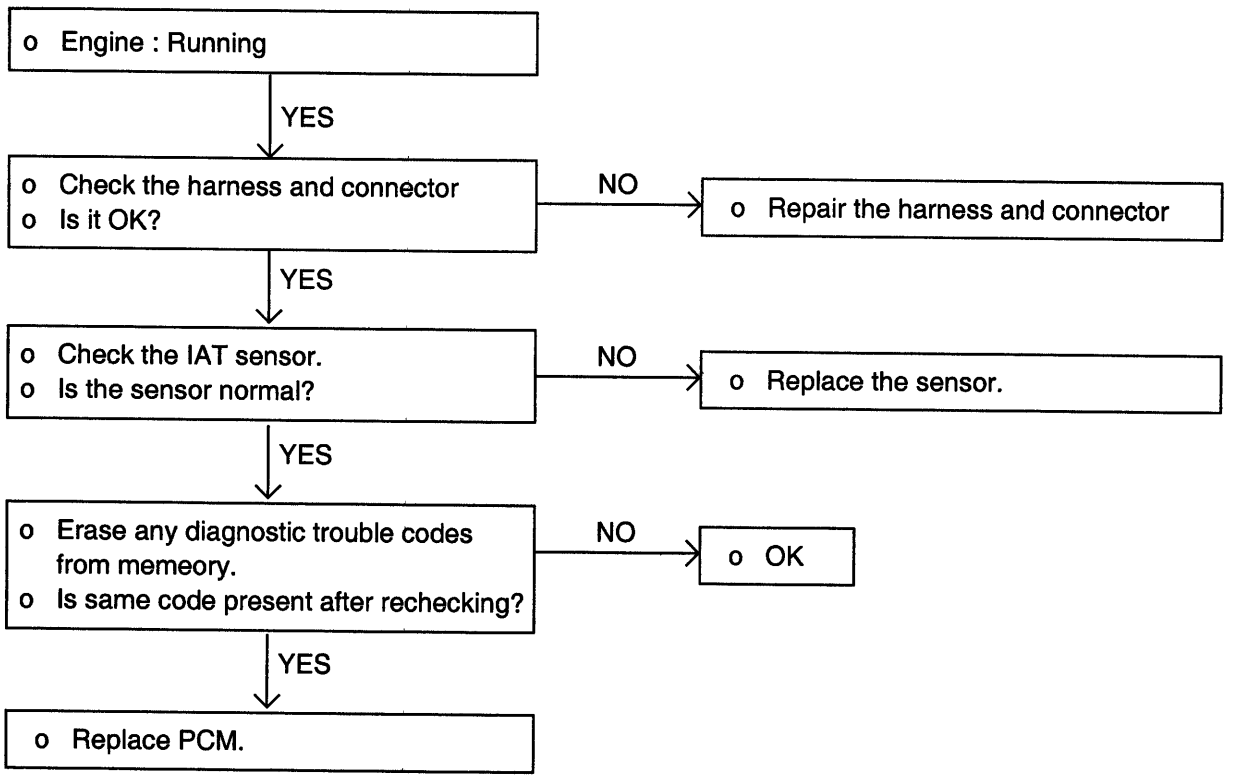

DTC : Diagnosis Trouble Code
PCM : Powertrain Control Module

EFAA711D

TROUBLESHOOTING HINTS

The MIL is ON or the DTC is displayed on the HI-SCAN under the following conditions:

1. When the intake air temperature is detected as below -40°C or higher than 120°C
2. When the input from the intake air temperature sensor is below 0.1V or above 4.8V when the engine is in a full warm-up condition.

USING HI-SCAN

Check item	Data display	Check conditions	Intake air temperature	Test specification
Intake air temperature sensor	Air temperature	Ignition switch : ON or engine running	When -20°C (-4°F)	-20°C
			When 0°C (32°F)	0°C
			When 20°C (68°F)	20°C
			When 40°C (104°F)	40°C
			When 80°C (176°F)	80°C

HARNESS INSPECTION PROCEDURE <2.7 V6>

1	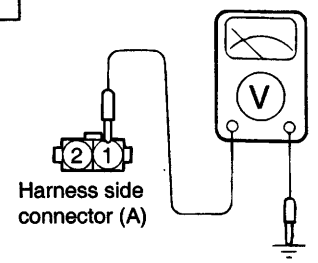	Measure the power supply voltage of the IAT Sensor. o Connector : Connected. o Ignition switch : ON. o Voltage : 4.8-5.2 V.	OK ⇒ 2 NG ⇒ Repair the harness.

EFJB711B

2	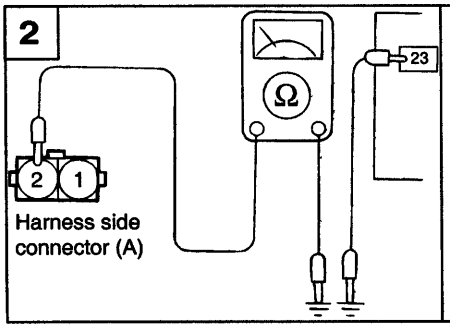	Check for an open circuit, or a short circuit to ground between the powertrain control module and the IAT sensor o PCM connector : Disconnected o IAT sensor connector : Disconnected	OK ⇒ END ! NG ⇒ Repair the harness.

EFAA711C

SENSOR INSPECTION

1. Using a multimeter, measure the sensor voltage.
2. Measure the voltage between the IAT sensor terminal 1 and 2.

IG.SW. ON	Temperature °C (°F)	Voltage (V)
	0 (32)	4.3V
	20 (68)	3.44V

3. If the voltage deviates from the standard value, replace the intake air temperature sensor assembly.

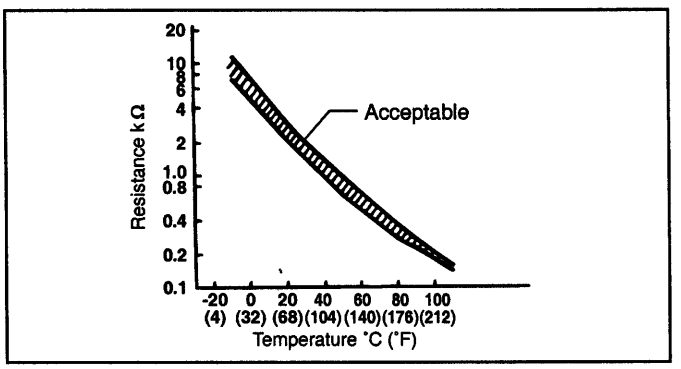

EFJB703D

THROTTLE POSITION SENSOR (TPS) EFJB7130

The TPS is a variable resistor type that rotates with the throttle shaft to sense the throttle valve angle. As the throttle shaft rotates, the output voltage of the TPS changes. The PCM detects the throttle valve opening based on this voltage change.

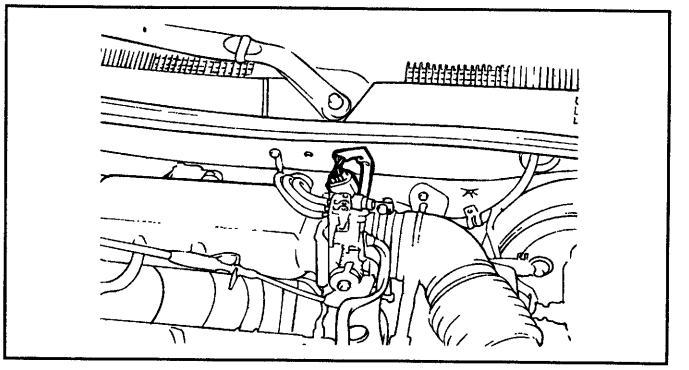

EFA9049A

CIRCUIT DIAGRAM

< 2.7 V6>

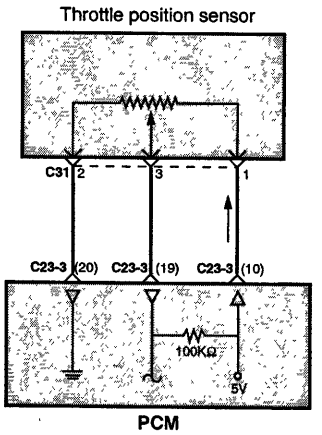

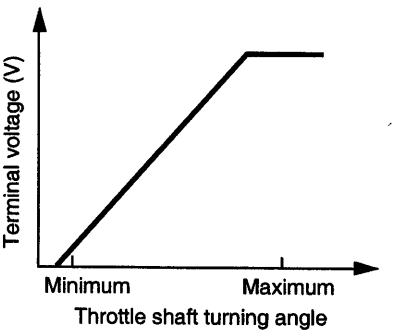

< 2.4 I4 >

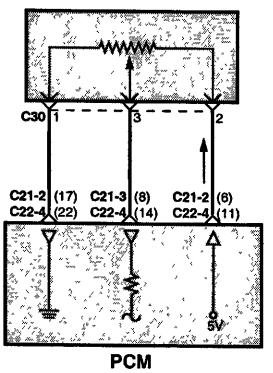

EFJB713A

SENSOR CHECKING

USING HI-SCAN

Check item	Data display	Check conditions	Throttle valve	Test specification
Throttle position sensor	Sensor voltage	Ignition switch : ON	At idle position	300-900 mV (2.4 I4) 250-800 mV (2.7 V6)
			Open slowly	Increases with valve opening
			Open wide	4,250-4,700 mV

Using voltmeter

1. Disconnect the throttle position sensor connector.
2. For 2.4 I4 measure the resistance between terminal 1 (sensor ground) and terminal 2 (sensor power), for 2.7 V6 between terminal 2 (sensor ground) and terminal 1 (sensor power).

Standard value : 3.5 - 6.5 kΩ

3. Connect a pointer type ohmmeter between terminal 1 (sensor ground) and terminal 3 (sensor output) for 2.4 I4 and between terminal 2 (sensor ground) and terminal 3 (sensor output) for 2.7 V6.

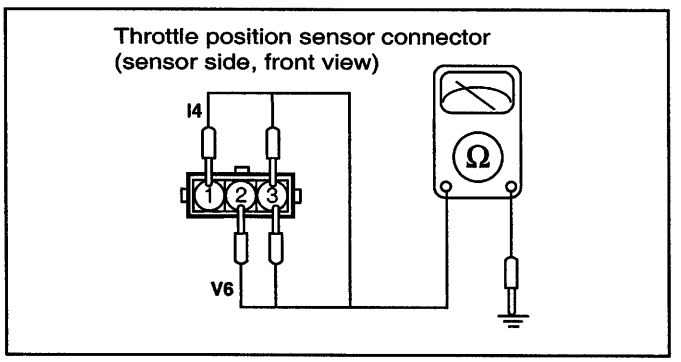

EFJB713E

4. Operate the throttle valve slowly from the idle position to the full open position and check that the resistance changes smoothly in proportion with the throttle valve opening angle.
5. If the resistance is out of specification, or fails to change smoothly, replace the throttle position sensor.

Tightening torque
TP Sensor : 1.5-2.5 Nm (15-25 kg.cm, 1.1-1.8 lb.ft)

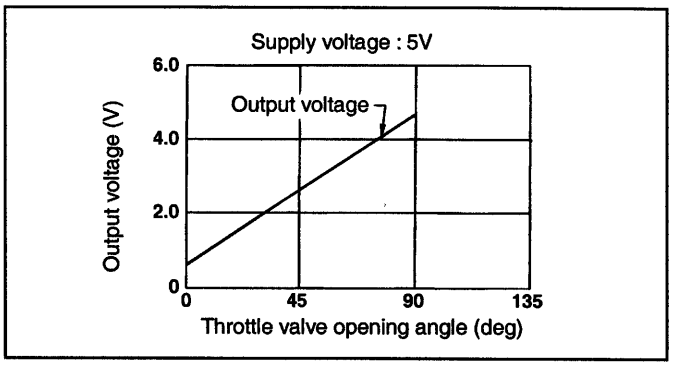

EFJB713F

HARNESS INSPECTION

1 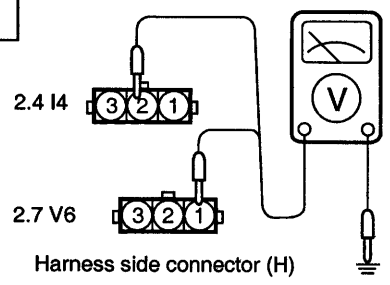	Measure the power supply voltage of the throttle position sensor. o Connector: Disconnected o Ignition switch: ON o Voltage (V): 4.25-4.7	OK ⇨ NG ⇨	2 Repair the harness.

EFJB713B

2 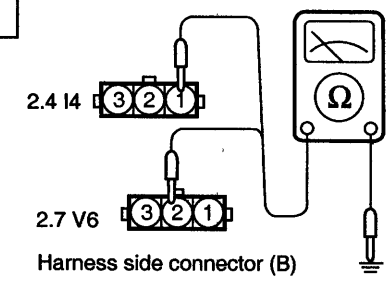	Check for continuity of the ground circuit. o Connector : Disconnected	OK ⇨ NG ⇨	3 Repair the harness.

EFJB713C

3 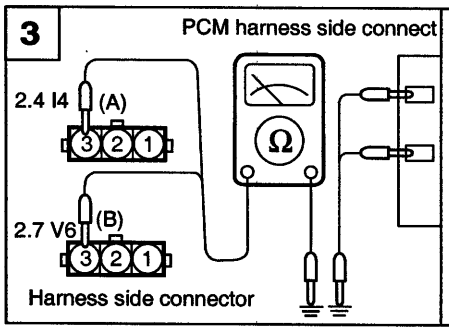	Check for an open-circuit, or a short-circuit or ground between the powertrain control module and the throttle position sensor. o Throttle position sensor connector : Disconnected o PCM connector : Disconnected	OK ⇨ NG ⇨	END ! Repair the harness. A3-C21-3 (8) A3-C22-4 (14) B3-C23-3 (19)

EFJB713D

TROUBLESHOOTING HINTS

The TPS signal is important in the control of the automatic transaxle. Shift shock and other trouble will occur if the sensor is defective.

IDLE SPEED CONTROL ACTUATOR EFJB7170

The idle speed control actuator is the double coil type. The two coils are driven by separate driver stages in the PCM. Depending on the pulse duty cycle, the equilibrium of the magnetic forces of the two coils will result in different angles of the motor. In parallel to the throttle valve, a bypass line is controlled by the idle speed actuator.

CIRCUIT DIAGRAM

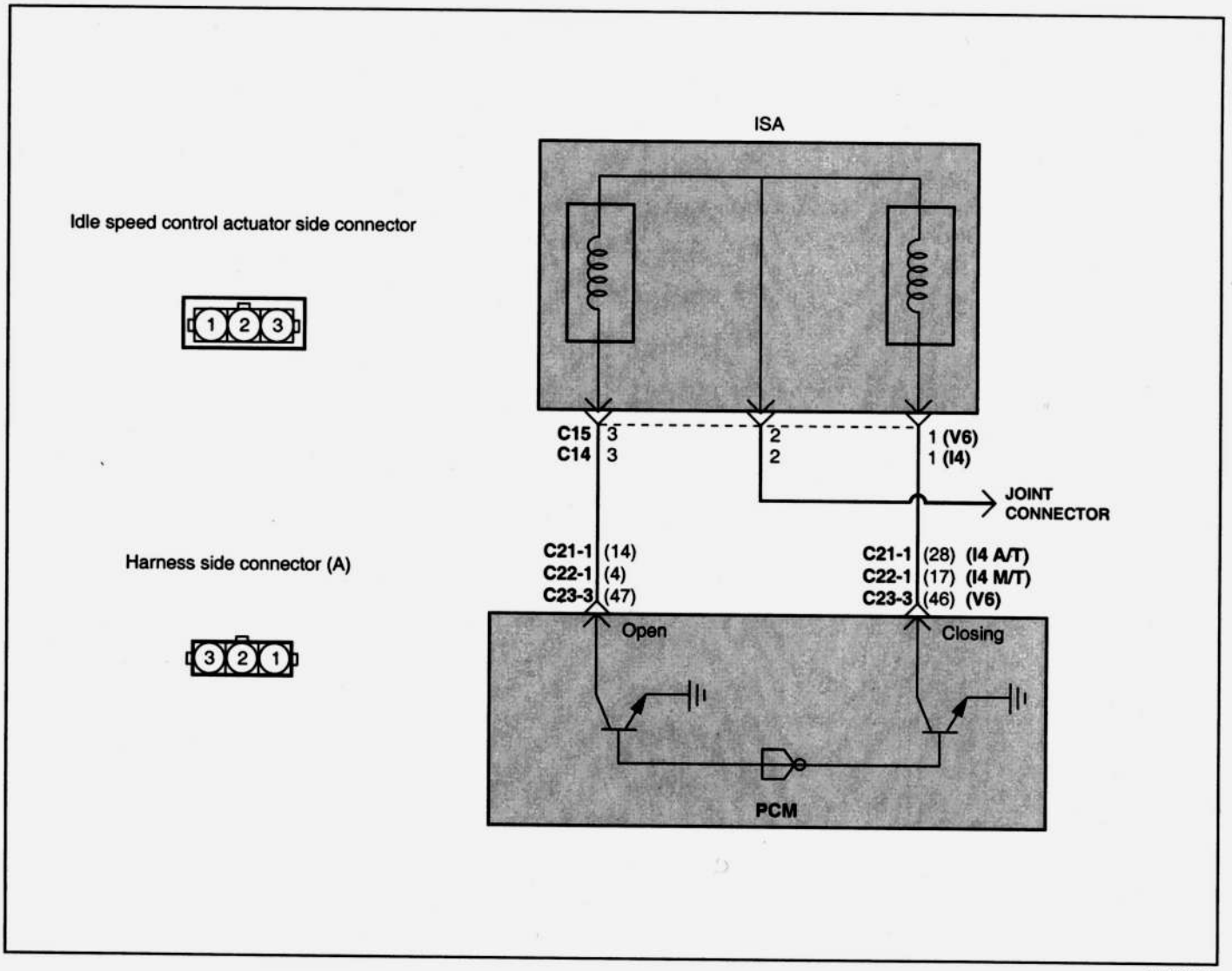

EFJB717A

TROUBLESHOOTING PROCEDURES

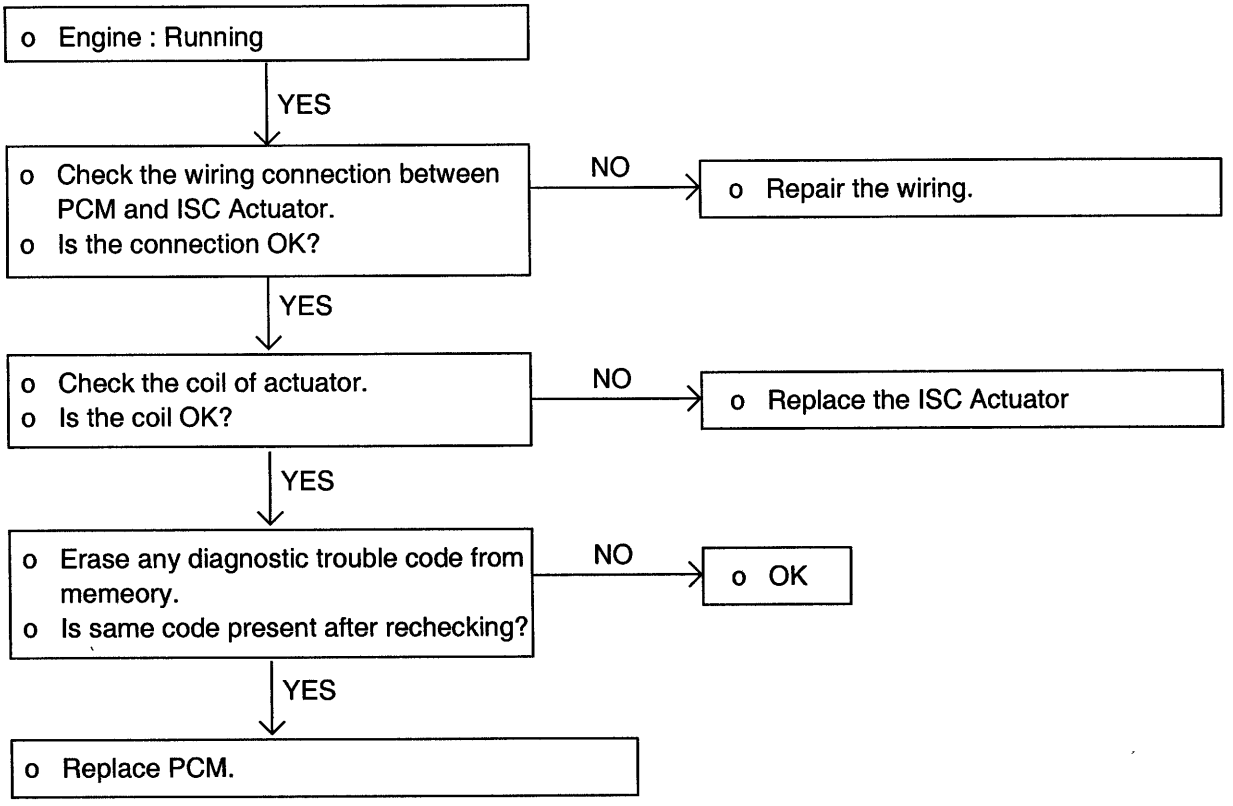

DTC : Diagnosis Trouble Code
PCM : Powertrain Control Module

EFAA717E

TROUBLESHOOTING HINTS

The MIL turns ON or the DTC is displayed on the HI-SCAN PRO under the following conditions;

- When the primary voltage side in PCM is in short or open circuit.
- The ignition control by the PCM is malfunctioning.
- Open or short circuit is observed in idle air control system when ignition switch is turned on.

USING HI-SCAN

Check item	Check condition	HI-SCAN display	Type
Idle speed control actuator o Actuator	Start the engine	ISA	Activate Result: RPM should increase or decrease

HARNESS INSPECTION PROCEDURE

1	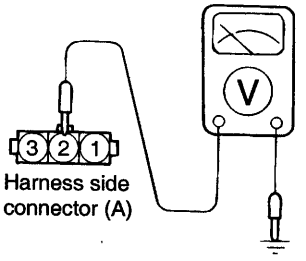	Measure the power supply voltage of the actuator. o Connector: Disconnected o Ignition switch: ON o Voltage (V): Battery voltage	OK ⇒ 2 NG ⇒ Repair the harness. Check the power supply

EFHA717B

2	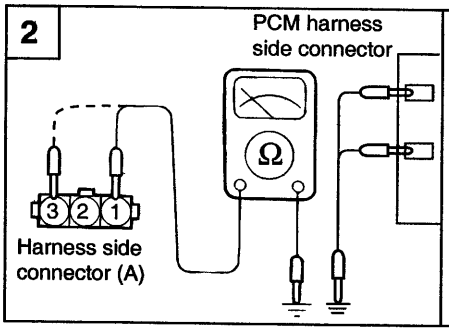	Check for an open circuit, or a short circuit to ground between the PCM and the idle speed control actuator. o PCM connector : Disconnected o Idle speed actuator connector : Disconnected	OK ⇒ END ! NG ⇒ Repair the harness. <CLOSING> A1-C21-1(28) A1-C22-1(17) A1-C74-3(46) <OPEN> A3-C21-1(14) A3-C22-1(4) A3-C23-3(47)

EFJB717C

ACTUATOR INSPECTION

1. Disconnect the connector at the idle speed control actuator.
2. Measure the resistance between terminals.

Standard value
Terminal 3 and 2 : 10.5 - 14Ω
Terminal 1 and 3 : 10 - 12.5Ω [at 20°C (68°F)]

3. Re-connect the connector to the idle speed control actuator

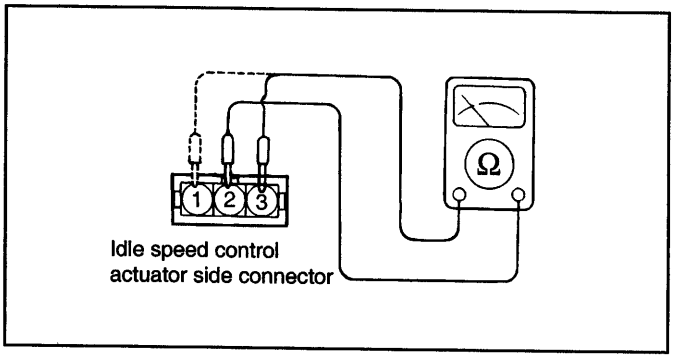

EFAA717D

HEATED OXYGEN SENSOR (HO2S)

- I4 EFJB7190

The heated oxygen sensor senses the oxygen concentration in exhaust gas and converts it into a voltage which is sent to the PCM. For Zirconium type sensors, (I4) the oxygen sensor outputs about 1V when the air fuel ratio is richer than the theoretical ratio, and outputs about 0V when the ratio is leaner (higher oxygen concentration in exhaust gas.). The PCM controls the fuel injection ratio based on this signal so that the air fuel ratio is maintained at the stoichiometric ratio. The oxygen sensor has a heating element which ensures sensor performance during all driving conditions.

CIRCUIT DIAGRAM <2.4 I4>

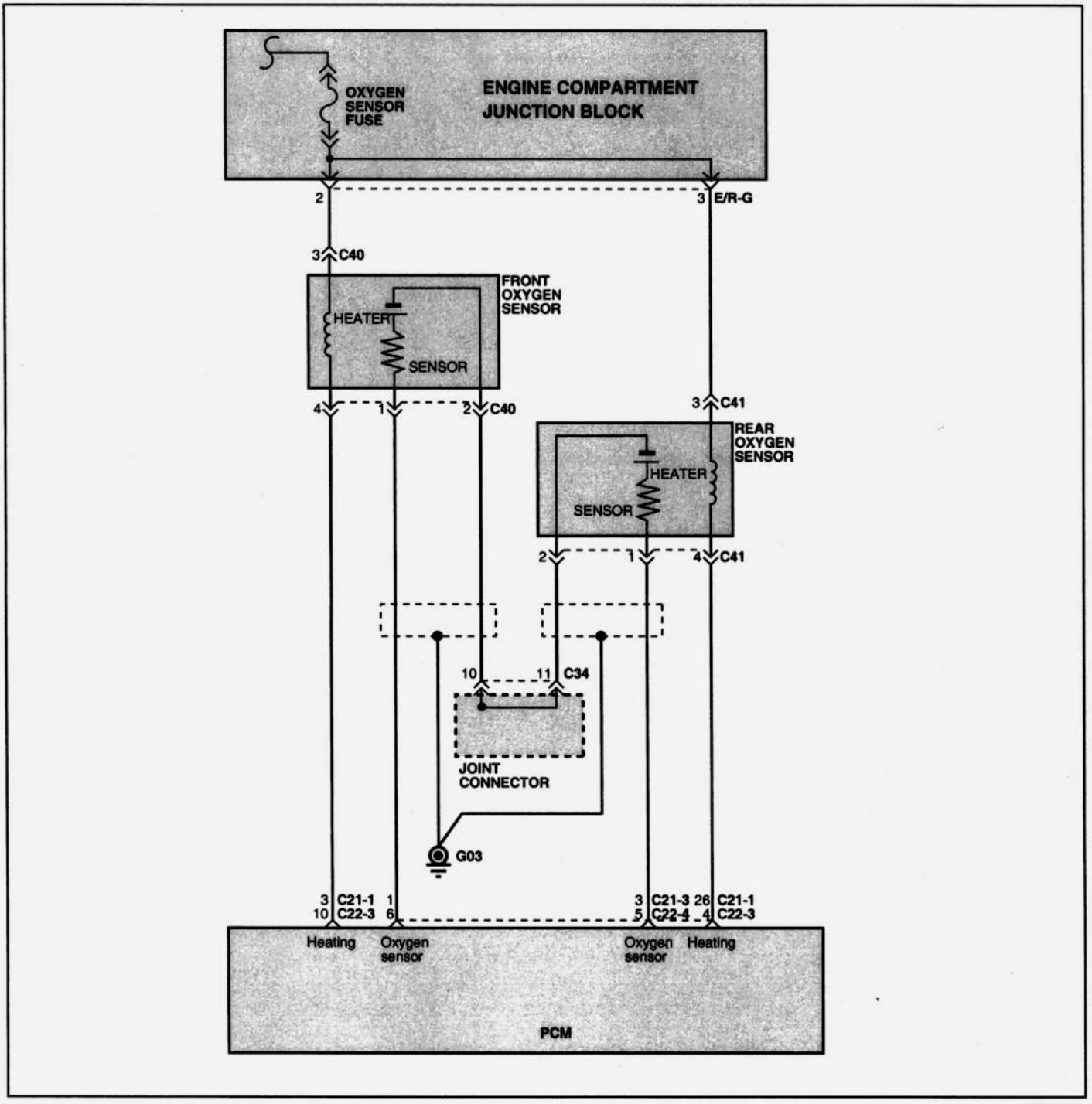

EFJB719A

1. If the HO2S is defective, abnormally high emissions may occur.
2. If the HO2S check results are normal, but the sensor output voltage is out of specification, check for the following items (related to air fuel ratio control system):
   - Defective injector
   - Air leaks in the intake manifold
   - Defective volume air flow sensor, intake air temperature sensor, barometric pressure sensor and engine coolant temperature sensor.

Check item	Check conditions	Engine state	Test specification (I4)
Oxygen sensor	Engine: Warm-up (make the mixture lean by engine speed reduction, and rich by racing)	When sudden deceleration from 4,000 rpm	200mV or lower
		When engine is suddenly raced	600-1,000 mV
	Engine: Warm-up (using the heated oxygen sensor signal, check the air/ fuel mixture ratio, and also check the condition of control by the PCM)	Idle	400 mV or lower - (oscilate) 600-1,000 mV
		2,000 rpm	

INSPECTION

NOTE

- **Before checking, warm up the engine until the engine coolant temperature reaches 80 to 95°C (176 to 205°F).**
- **Use an accurate digital voltmeter.**

1. Disconnect the oxygen sensor connector, and measure the resistance between terminal 3 and terminal 4.

Standard value

Temperature °C (°F)	Resistance (Ω)
400 (752)	30 or more

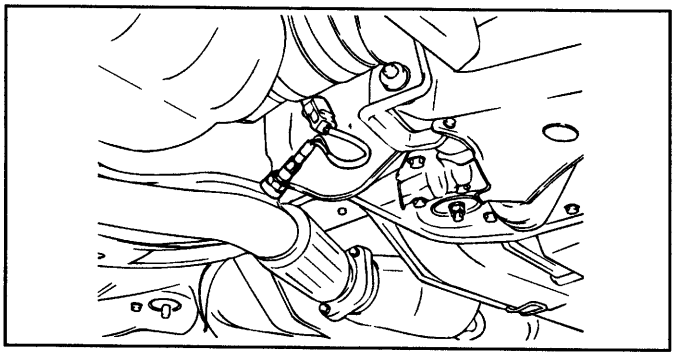

EFAA719E

2. Replace the oxygen sensor if there is a malfunction.
3. Apply battery voltage directly between terminal 3 and terminal 4.

NOTE

Be careful when applying the voltage. Damage will result if terminals 1 and 2 are connected to any voltage.

4. Connect a high-impedance digital-type volmeter between terminal 1 and terminal 2.

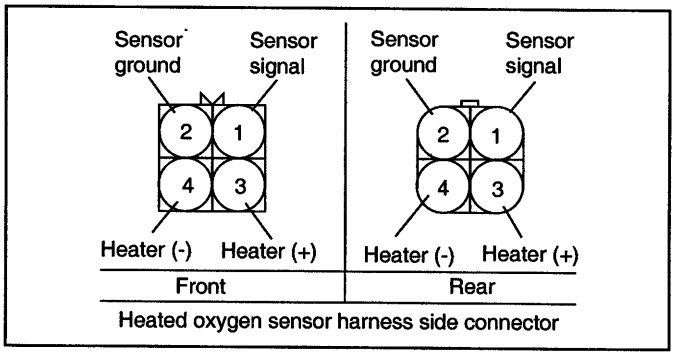

EFAA719F

5. While repeatedly racing the engine, measure the oxygen sensor output voltage.

Engine	Oxygen sensor output voltage	Resistance (Ω)
Race	Min. 0.6V	30 or more

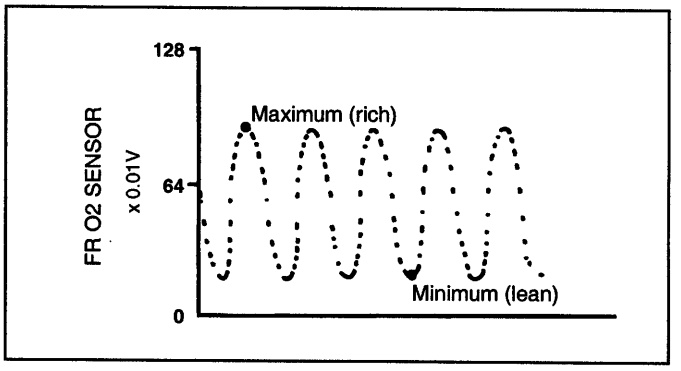

EFJB719H

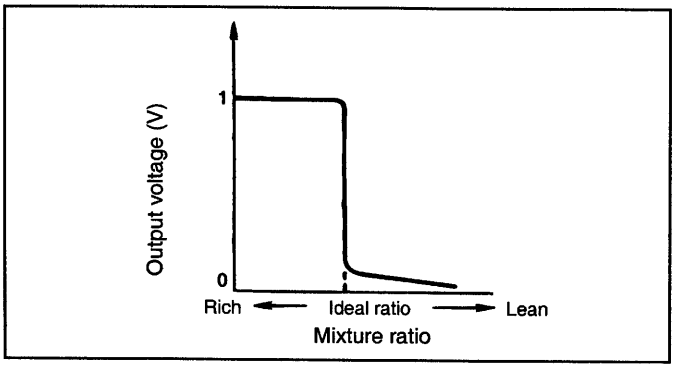

EFJB719I

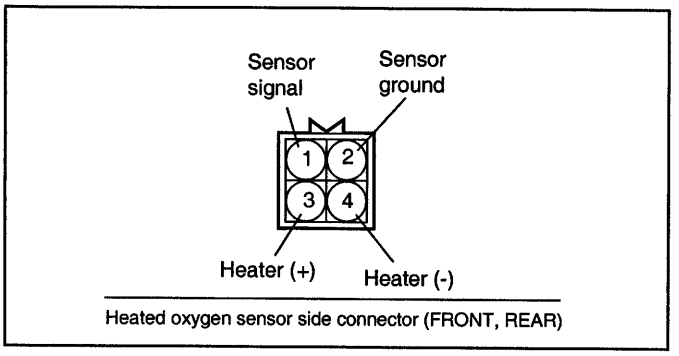

Heated oxygen sensor side connector (FRONT, REAR)

EFAA719G

6. If there is a problem, there may be an oxygen sensor malfunction.

Tightening torque
Heated oxygen sensor :
40-50 Nm (400-500 kg.cm, 29-36 lb.ft)

HARNESS INSPECTION PROCEDURES

1

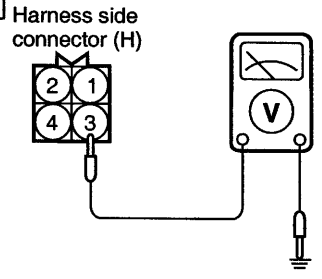

Measure the power supply voltage of the heated oxygen sensor.
- o Connector: Disconnected
- o Ignition switch: ON
- o Voltage (V): Battery voltage

OK ⇒ **2**

NG ⇒ Repair the harness.

EFHA719B

2

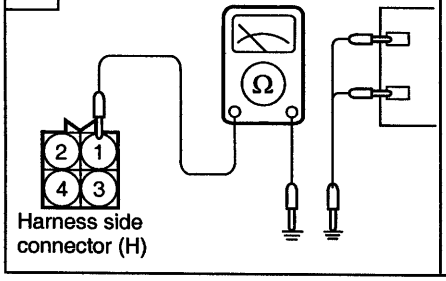

Check for open circuit, or a short circuit to ground between the PCM and the oxygen sensor.
- o Oxygen sensor connector : Disconnected
- o PCM connector : Disconnected

OK ⇒ **3**

NG ⇒ Repair the harness.

EFHA719C

3

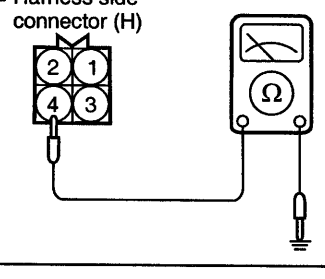

Check for continuity of the ground circuit.
- o Connector : Disconnected

OK ⇒ **END !**

NG ⇒ Repair the harness.

EFHA719D

HEATED OXYGEN SENSOR (HO2S) [2.7 V6] EFJB7210

The heated oxygen sensor senses the oxygen concentration in exhaust gas and converts it into a voltage which is sent to the PCM. The oxygen sensor outputs about 0V when the air fuel ratio is richer than the theoretical ratio, and outputs about 5V when the ratio is more lean (higher oxygen concentration in exhaust gas.). The PCM controls the fuel injection ratio based on this signal so that the air fuel ratio is maintained at the stoichiometric ratio. The oxygen sensor has a heating element which ensures sensor performance during all driving conditions.

CIRCUIT DIAGRAM

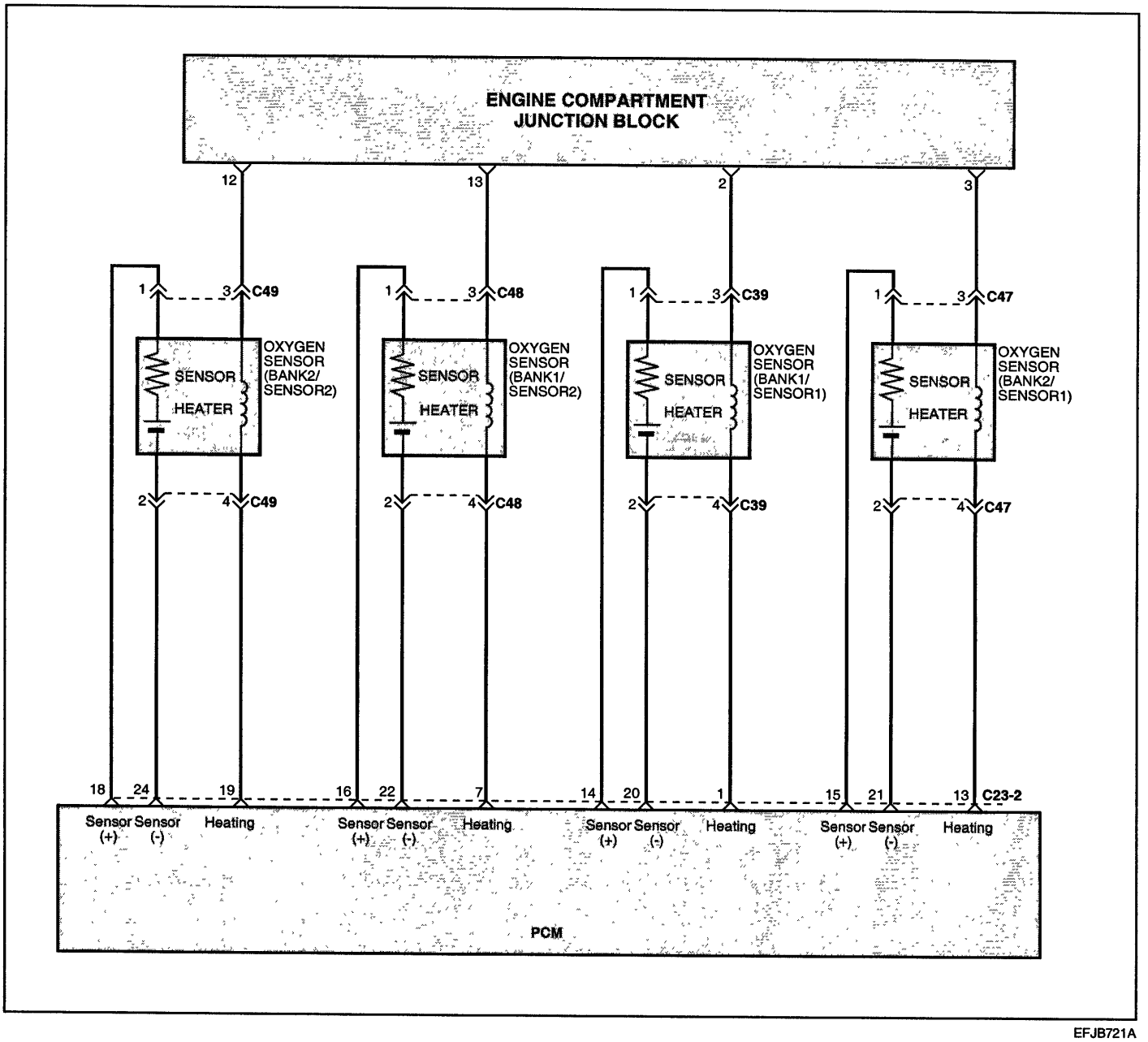

EFJB721A

TROUBLESHOOTING HINTS

1. If the HO2S is defective, abnormally high emissions may occur.
2. If the HO2S check results were normal, but the sensor output voltage is out of specification, check for the following items (related to air fuel ratio control system):
   - Defective injector
   - Air leaks in the intake manifold.
   - Defective air flow sensor, intake air temperature sensor, and engine coolant temperature sensor.

USING GST

Check Item	Check conditions	Engine state	Test specification
Oxygen sensor	Engine: Warm-up (make the mixture lean by engine speed reduction, and rich by racing)	When sudden deceleration from 4,000 rpm	4000-4500 mV
		When engine is suddenly raced	500-1000 mV
	Engine: Warm-up (using the heated oxygen sensor signal, check the air/fuel mixture ratio, and also check the condition of control by the PCM)	At Idle rpm	500-4500 mV
		2,000 rpm	500-4500 mV

INSPECTION (USING VOLTMETER)

1. Disconnect the oxygen sensor connector, and measure the resistance between terminal 3 and terminal 4.

Standard value

Temperature °C (°F)	Resistance (Ω)
23	4.0 - 5.2
400 (752)	8.2 - 11.1

NOTE

Before checking, warm up the engine until the engine coolant temperature reaches 80 to 95°C (176 to 205°F).

2. Apply battery voltage directly between terminal 3 and terminal 4.

NOTE

Be careful when applying the voltage. Damage will result if the terminals are incorrect or are short circuited.

3. Connect a digital-type voltmeter between terminal 1 and terminal 2.

4. While repeatedly racing the engine, measure the oxygen sensor output voltage.

Engine	Oxygen sensor output voltage	Remarks
Race	4000-4500mV	Makes the air/fuel mixture rich by increasing engine speed

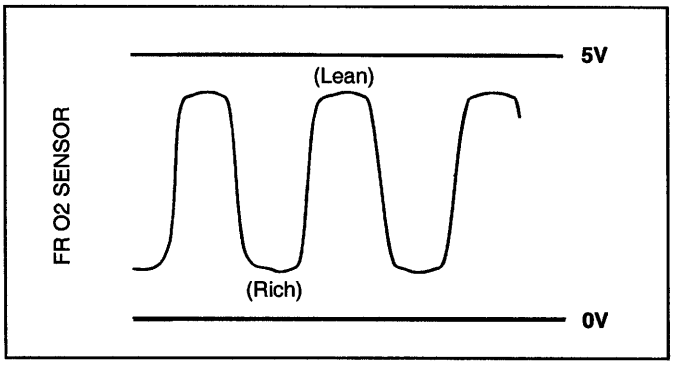

EFJB719X

5. If there is a problem, there may be an oxygen sensor malfunction.

Tightening torque
Heated oxygen sensor :
40-50 Nm (400-500 kg·cm, 29-36 lb·ft)

HARNESS INSPECTION PROCEDURES

1	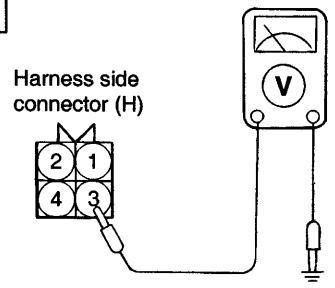	Measure the power supply voltage of the heated oxygen sensor. o Connector : Disconnected o Ignition switch : ON o Voltage (V) : Battery voltage	OK ⇒ 2 NG ⇒ Repair the harness.

EFHA721B

2	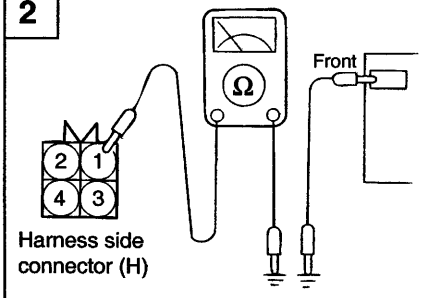	Check for open circuit, or a short circuit to ground between the powertrain control module and the heated oxygen sensor. o Heated oxygen sensor connector: Disconnected o PCM connector : Disconnected	OK ⇒ 3 NG ⇒ Repair the harness.

EFJB721C

3	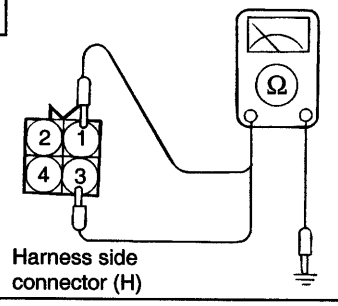	Check for continuity of the ground circuit. o Connector : Disconnected	OK ⇒ END ! NG ⇒ Repair the harness.

EFHA721D

CAMSHAFT POSITION SENSOR EFJB7230

The CMP is a Hall-effect sensor that detects the camshaft position on the compression stroke of the No.1 and No.4 cylinders, converts it into a pulse signal, and inputs it to the PCM. The PCM then computes the fuel injection sequence, etc. based on the input signal.

CIRCUIT DIAGRAM

<2.4 I4>

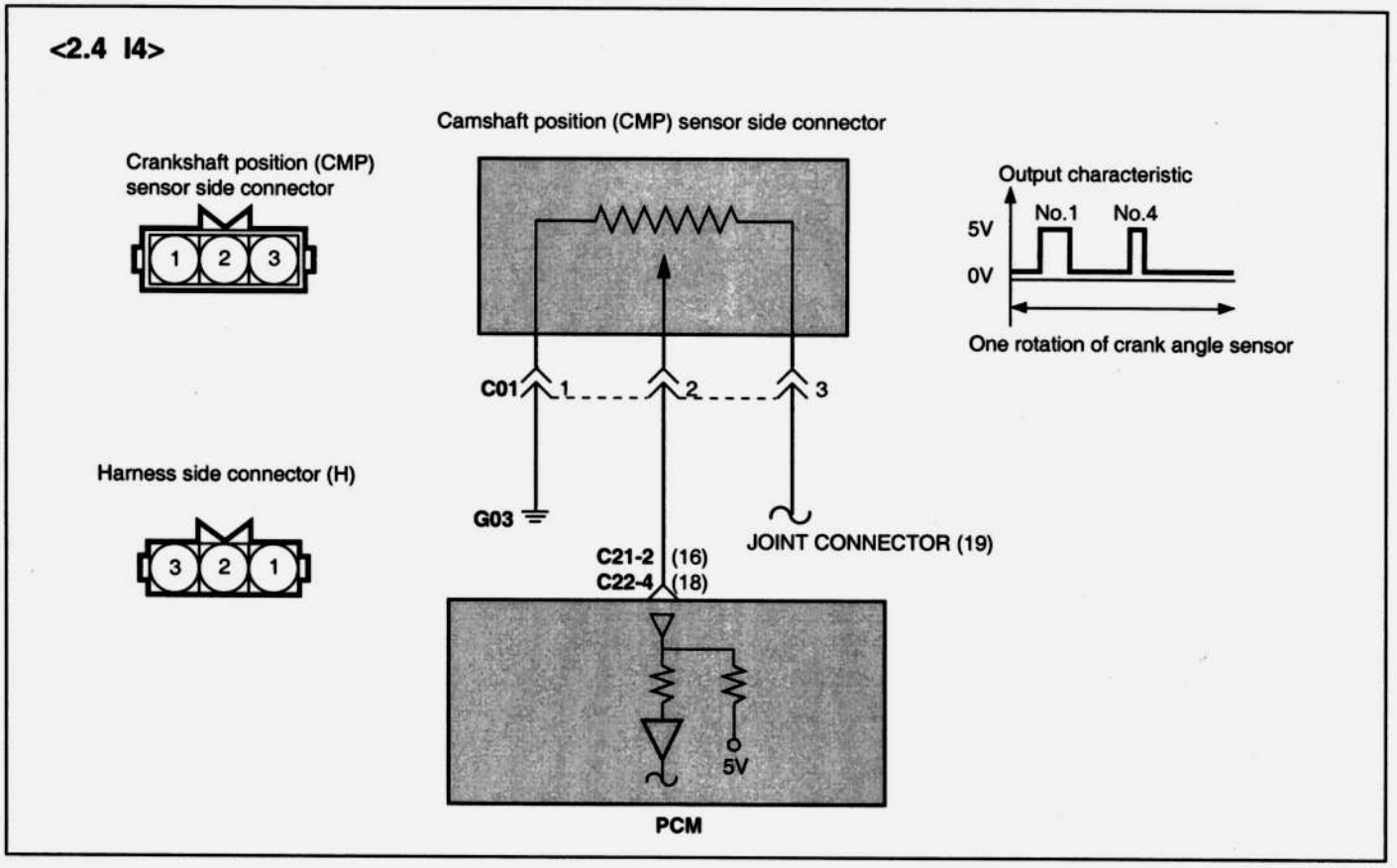

EFJB723A

<2.7 V6>

CMP Sensor side connector

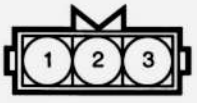

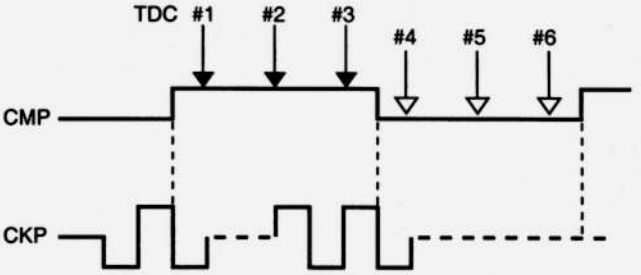

Harness side connector (H)



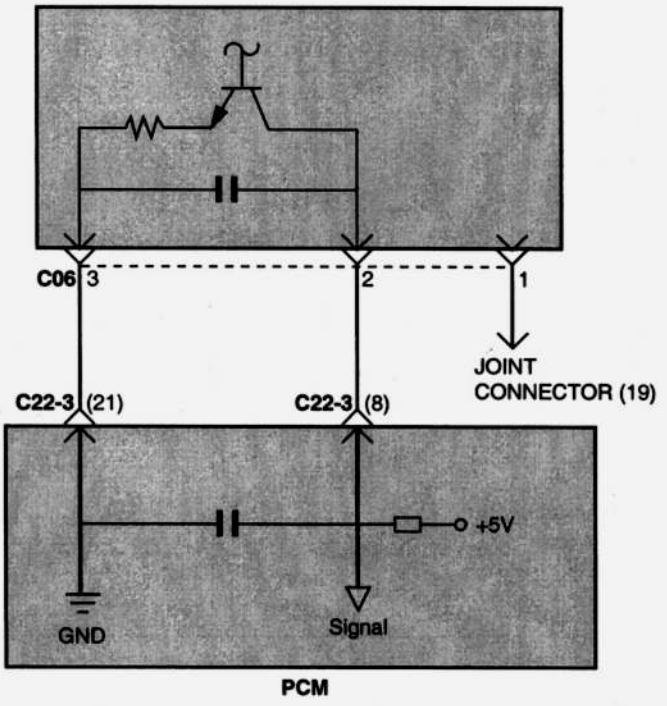

EFJB723E

HARNESS INSPECTION PROCEDURE [2.4 I4]

1 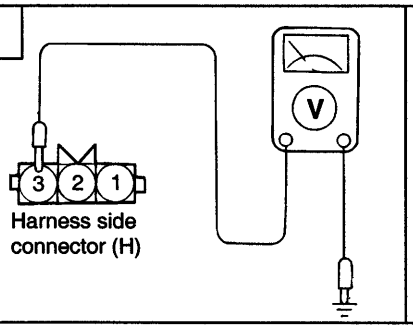	Measure the power supply voltage. o Connector: Disconnected o Ignition switch: ON o Voltage (V): Battery voltage	OK ⇨ NG ⇨	2 Repair the harness.

EFHA723B

2 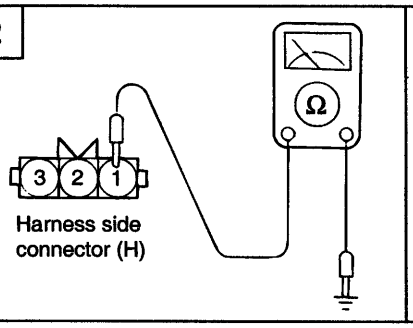	Check for continuity of the ground circuit. o Connector : Disconnected	OK ⇨ NG ⇨	3 Repair the harness.

EFHA723C

3 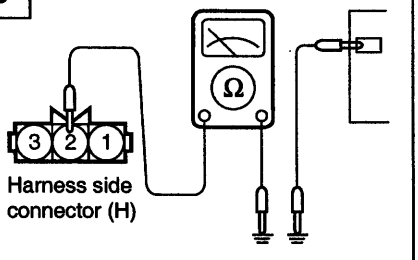	Check the signal voltage. o Connector: Disconnected o Ignition switch : ON o Voltage : 4.8-5.2 V	OK ⇨ NG ⇨	END ! Repair the harness.

EFHA723D

TROUBLESHOOTING HINTS

If the CMP Sensor does not operate correctly, sequential injection is may not occur and the engine may stall or run irregularly at idle or fail to accelerate normally.

HARNESS INSPECTION PROCEDURE [2.7 V6]

1	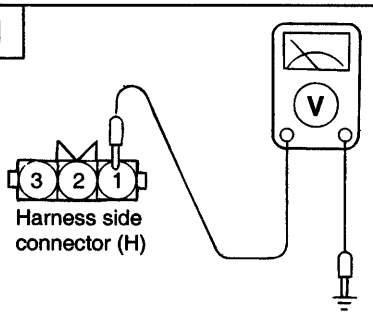	Measure the power supply voltage. o Connector: Disconnected o Ignition switch: ON o Voltage (V): Battery voltage	OK ⇒ 2 NG ⇒ Repair the harness.

EFAA723F

2	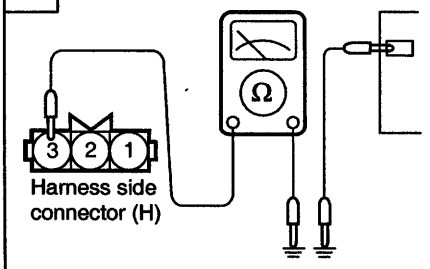	Check for continuity of the ground circuit. o Connector : Disconnected	OK ⇒ 3 NG ⇒ Repair the harness.

EFHA723G

3	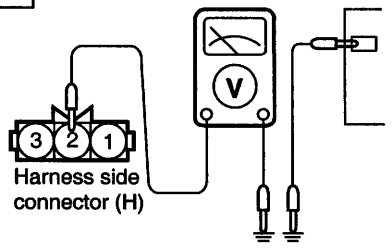	Check the signal voltage. o Connector : Disconnected o Ignition ON o Voltage : 4.8-5.2V	OK ⇒ END ! NG ⇒ Repair the harness.

EFHA723H

CRANKSHAFT POSITION SENSOR EFJB7250

The crankshaft position sensor is a Hall-effect sensor that senses the crank angle (piston position) of each cylinder and converts it into a pulse signal. Based on the input signal, the PCM computes the engine speed and controls the fuel injection timing and ignition timing.

CIRCUIT DIAGRAM

[2.4 I4]

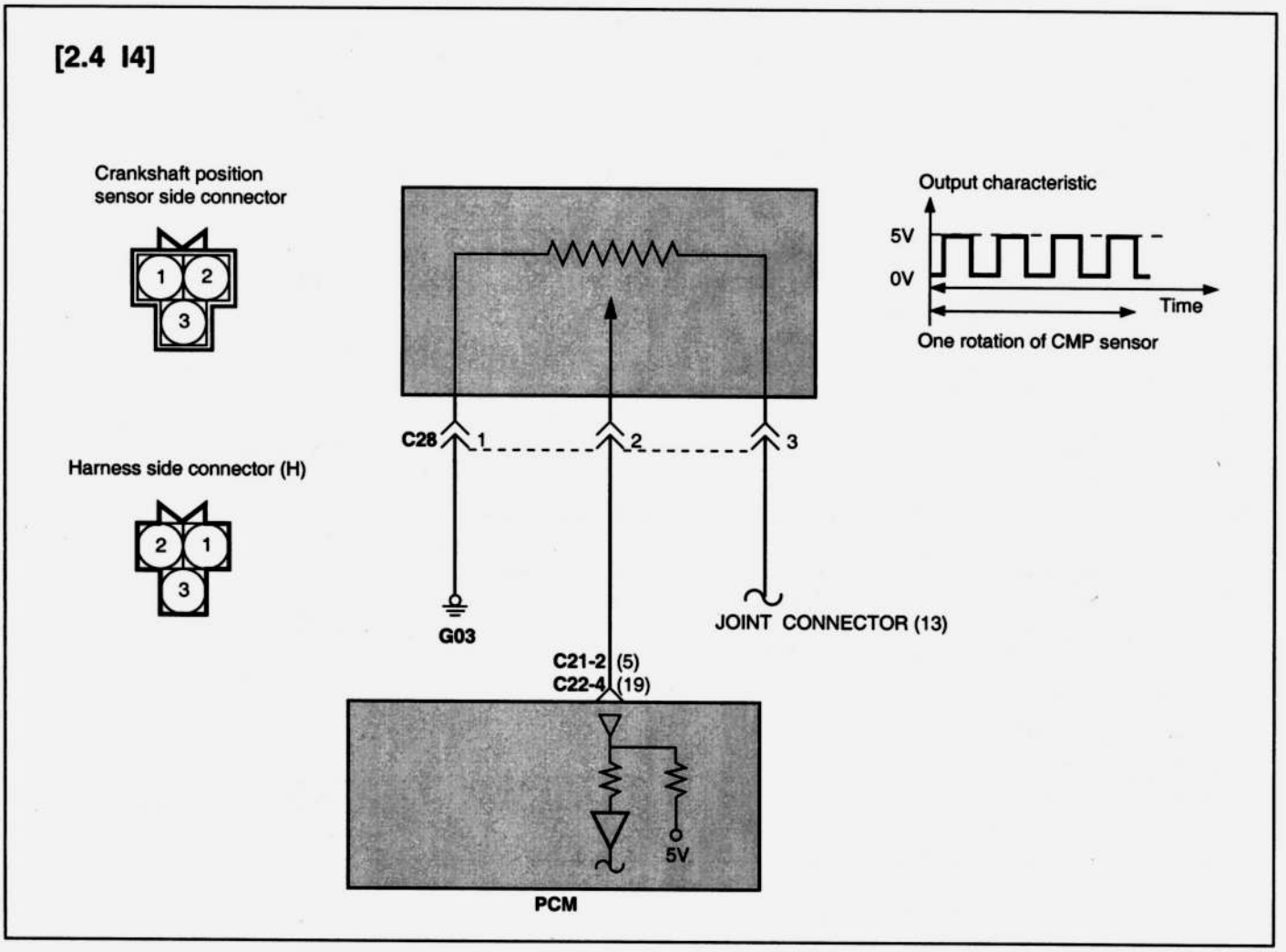

EFJB725A

<2.7 V6>

CMP Sensor side connector

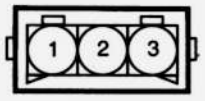

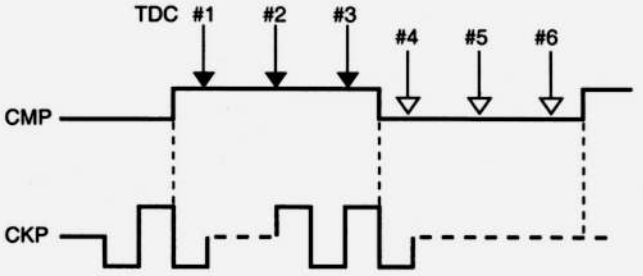

Harness side connector (H)

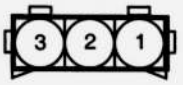

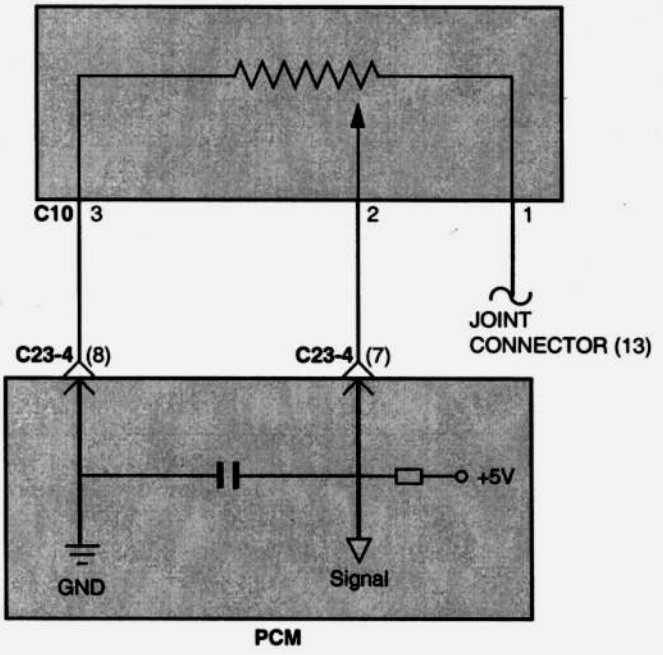

EFJB725B

TROUBLESHOOTING HINTS

1. If unexpected shocks are felt during driving or the engine stalls suddenly, shake the crankshaft position sensor harness. If this causes the engine to stall, check for poor sensor connector contact.
2. If the tachometer reads 0 rpm when the engine is cranked, check for faulty crank angle sensor, broken timing belt or ignition system problems.
3. If the engine can be run at idle even if the crank angle sensor reading is out of specification, check the following:
   - Faulty engine coolant temperature sensor
   - Faulty idle speed control motor
   - Poorly adjusted reference idle speed
4. The engine will run without a crank angle sensor signal, but will not start. Once the sensor detects TDC, the data is stored until the next re-start.

USING GST

Check Item	Check conditions	Check content	Normal state
Crankshaft position sensor	• Engine cranking • Tachometer connected (check on and off ignition coil by tachometer)	Compare cranking speed and multi-tester reading	Indicated speed agrees

Check Item	Check conditions	Coolant temperature	Test specification
Crankshaft position sensor	• Engine: Running at idle • Idle position switch: ON	When -20°C (-4°F)	1,500-1,700 rpm
		When 0°C (-32°F)	1,350-1,550 rpm
		When 20°C (-68°F)	1,200-1,400 rpm
		When 40°C (-104°F)	1,000-1,200 rpm
		When 80°C (-176°F)	Idle rpm

HARNESS INSPECTION PROCEDURE <2.4 I4>

1

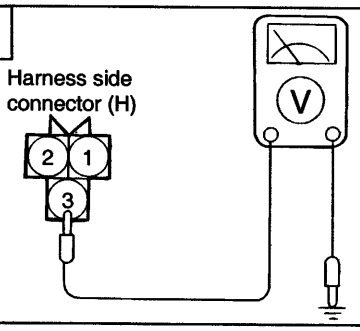

Measure the power supply voltage.
o Connector: Disconnected
o Ignition switch: ON
o Voltage (V): Battery voltage

OK ⇨ 2

NG ⇨ Repair the harness.

EFAA725C

2

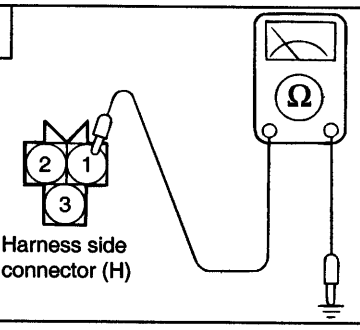

Check for continuity of the ground circuit.
o Connector : Disconnected

OK ⇨ 3

NG ⇨ Repair the harness.

EFAA725D

3

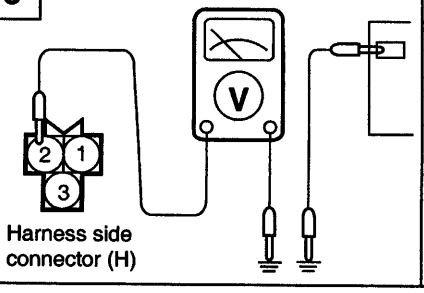

Check for continuity of the ground circuit.
o Connector : Disconnected
o Ignition switch : ON
o Voltage : 4.8-5.2 V

OK ⇨ END !

NG ⇨ Repair the harness.

EFHA725E

HARNESS INSPECTION PROCEDURE <2.7 V6>

1

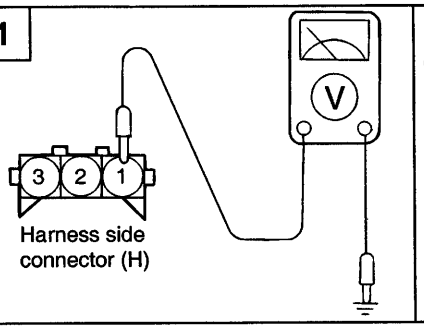

Measure the power supply voltage.
o Connector: Disconnected
o Ignition switch: ON
o Voltage (V): Battery voltage

OK ⇒ 2

NG ⇒ Repair the harness.

EFAA725F

2

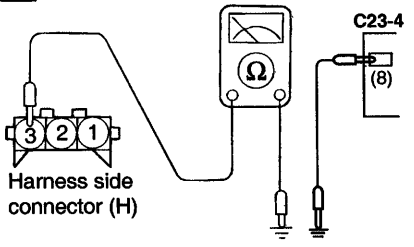

Check for continuity of the ground circuit.
o Connector : Disconnected
o Continuity

OK ⇒ 3

NG ⇒ Repair the harness.

EFJB725G

3

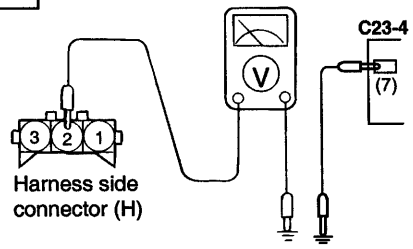

Check for continuity of the ground circuit.
o Connector : Disconnected
o Ignition switch : ON
o Voltage : 4.8-5.2 V

OK ⇒ END !

NG ⇒ Repair the harness.

EFJB725H

FUEL INJECTOR [2.4 I4] EFJB7270

The injectors inject fuel according to a signal coming from the PCM. The amount of fuel injected by the injectors is determined by the time which the solenoid valve is energized. The amount of time the solenoid value is energized is determined by the pulse width of the signal from the PCM.

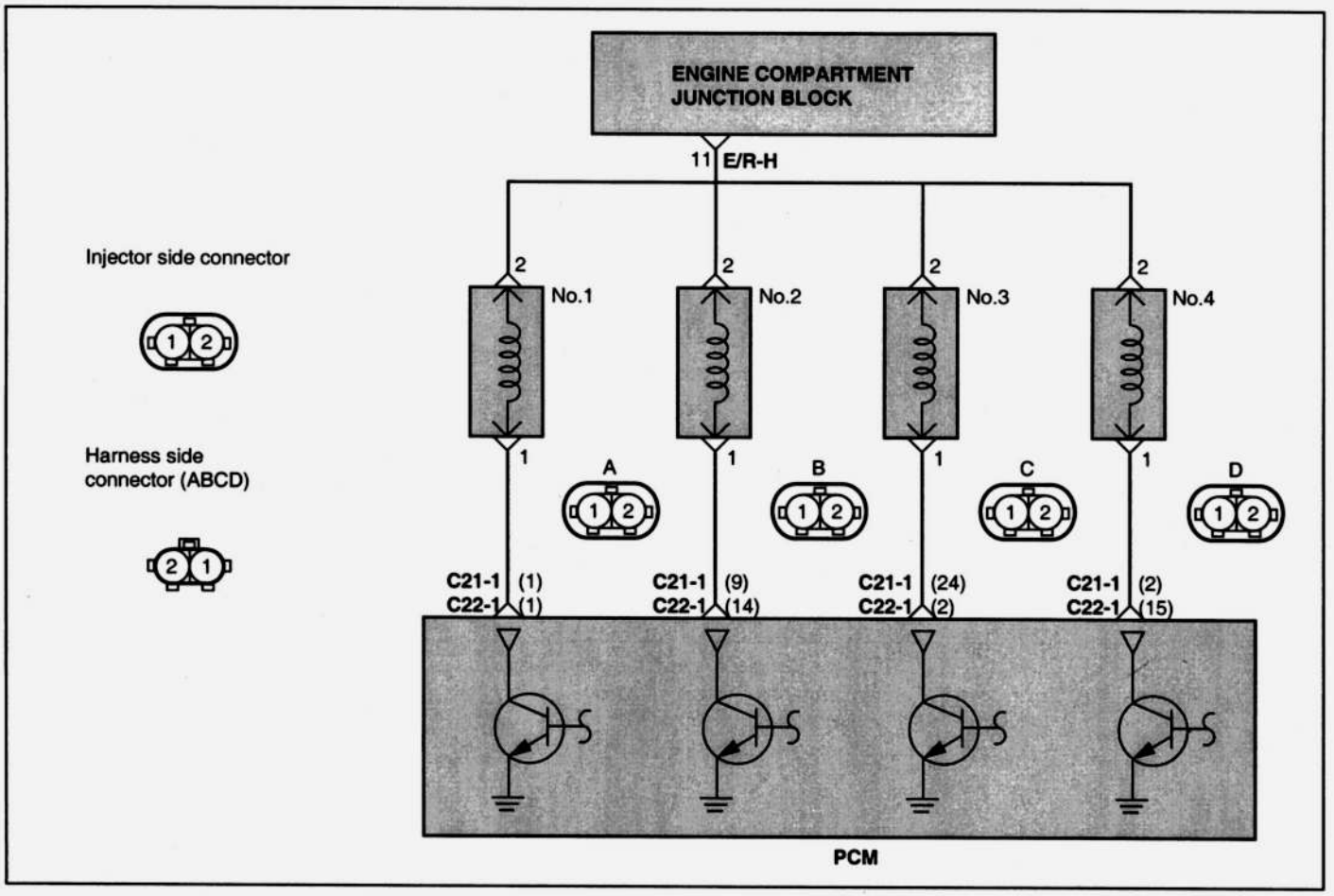

EFJB727A

INJECTOR CHECKING

USING HI-SCAN PRO

Check Item	Data display	Check conditions	Check content	Test specification
Injector	Drive time	Engine: Cranking	0°C (32°F)	Approx. 17 ms
			20°C (68°F)	Approx. 35 ms
			80°C (176°F)	Approx. 8.5 ms

Check Item	Data display	Check conditions	Engine state	Test specification
Injector	Drive time	• Engine coolant temperature: 80 to 95°C (176 to 205°F) • Lamps, electric cooling fan, accessory modules: All OFF • Transaxle: Neutral (P range for vehicle with A/T) • Steering wheel: Neutral	Idle rpm	2.2-2.9 ms
			2,000 rpm	1.8-2.6 ms
			Rapid racing	To increase

NOTE

1. **The injector drive time is when the supply voltage is (greater than) 11V and the cranking speed is less than 250 rpm.**
2. **When the engine coolant temperature is lower than 0°C (32°F), the PCM fires all four cylinders simultaneously.**
3. **When the vehicle is new (within initial operation of about 500 km [300 miles]), the injector drive time may be about 10% longer.**

Check Item	Item No.	Drive content	Check condition	Normal state
Injector • Actuator test	01	No. 1 injector shut off	Engine: Idling after warm-up (Shut off the injectors in sequence during and after engine warm-up; check the idle condition)	Idle should become unstable as injector shuts off.
	02	No. 2 injector shut off		
	03	No. 3 injector shut off		
	04	No. 4 injector shut off		
	05	No. 5 injector shut off		
	06	No. 6 injector shut off		

HARNESS INSPECTION

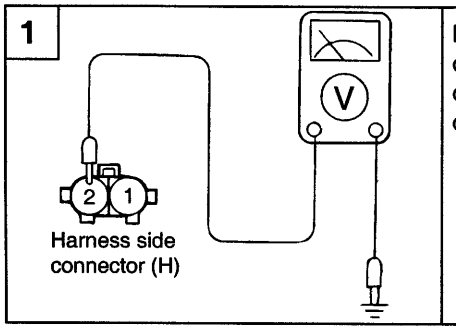

Measure the power supply voltage.
o Connector: Disconnected
o Ignition switch: ON
o Voltage (V): Battery voltage

OK ⇒ 2

NG ⇒ Repair the harness.

EFAA727B

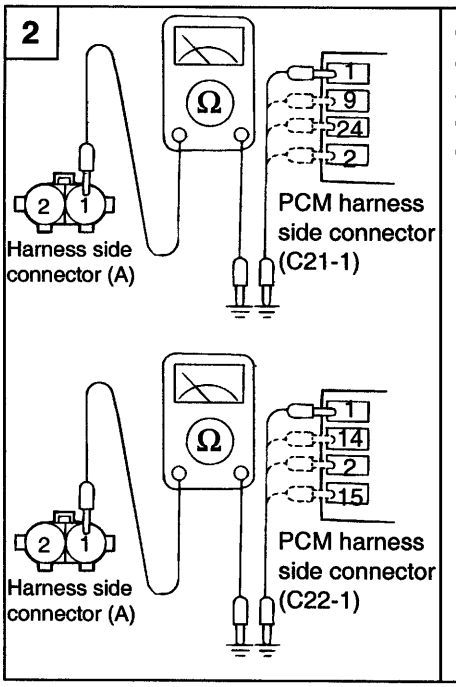

Check for an open circuit, or a short circuit to ground between the powertrain control module and the injector.
o PCM connector : Disconnected
o Injector connector : Disconnected

OK ⇒ END !

NG ⇒ Repair the harness.

EFHA727C

TROUBLESHOOTING HINTS

1. If the engine is hard to start when hot, check for fuel pressure and injector leaks.
2. If the injectors do not operate when the engine is cranked, then check the followings:
   - Defective power supply circuit to the PCM, faulty ground circuit
   - Defective control relay
   - Defective crankshaft position (CKP) sensor or camshaft position (CMP) sensor
3. If there is any cylinder whose idle state remains unchanged when the fuel injectors are cut one after another during idling, check for the following items about that a cylinder.
   - Injector and harness
   - Ignition plug and high tension cable
   - Compression pressure
4. If the injection system is OK but the injector drive time is out of specification, check for the following items.
   - Poor combustion in the cylinder (faulty ignition plug, ignition coil, compression pressure, etc.)
   - Loose EGR valve seating

FUEL INJECTOR [2.7 V6] EFJB7290

The injectors inject fuel according to a signal coming from the PCM. The amount of fuel injected by the injectors is determined by the time during which the solenoid valve is energized. The amount of time the solenoid value is energized is determined by the pulse width of the signal from the PCM.

CIRCUIT DIAGRAM

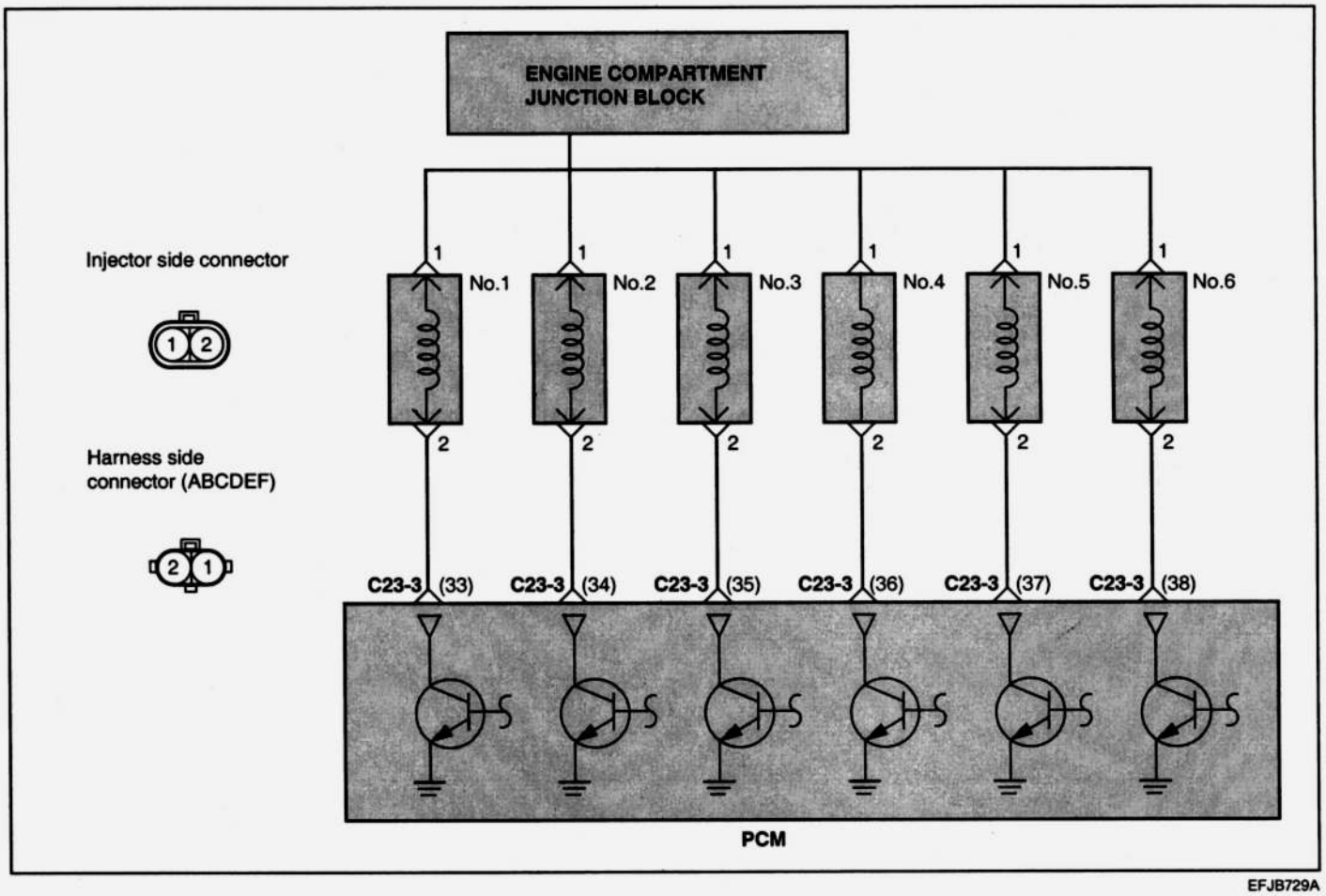

EFJB729A

INJECTOR CHECKING

USING HI-SCAN

Check Item	Data display	Check conditions	Check content	Test specification
Injector	Drive time	Engine: Cranking	0°C (32°F)	Approx. 17 ms
			20°C (68°F)	Approx. 35 ms
			80°C (176°F)	Approx. 8.5 ms

Check Item	Data display	Check conditions	Engine state	Test specification
Injector	Drive time	• Engine coolant temperature: 80 to 95°C (176 to 205°F) • Lamps, electric cooling fan, accessory modules: All OFF • Transaxle: Neutral (P range for vehicle with A/T) • Steering wheel: Neutral	Idle rpm	2.2-2.9 ms
			2,000 rpm	1.8-2.6 ms
			Rapid racing	To increase

NOTE

1. **The injector drive time is when the supply voltage is 11V and the cranking speed is less than 250 rpm.**
2. **When engine coolant temperature is lower than 0°C (32°F), the PCM fires all four cylinders simultaneously.**
3. **When the vehicle is new (within initial operation of about 500 km [300 miles]), the injector drive time may be about 10% longer.**

Check Item	Item No.	Drive content	Check condition	Normal state
Injector • Actuator test	01	No. 1 injector shut off	Engine: Idling after warm-up (Shut off the injectors in sequence during and after engine warm-up; check the idle condition)	Idle should become unstable as injector shuts off.
	02	No. 2 injector shut off		
	03	No. 3 injector shut off		
	04	No. 4 injector shut off		
	05	No. 5 injector shut off		
	06	No. 6 injector shut off		

USING STETHOSCOPE AND VOLTMETER

Operation Sound Check

1. Using a stethoscope, check the injectors for a clicking sound at idle. Check that the sound is produced at shorter intervals as the engine speed increases.

NOTE

Ensure that the sound from an adjacent injector is not being transmitted along the delivery pipe to an inoperative injector.

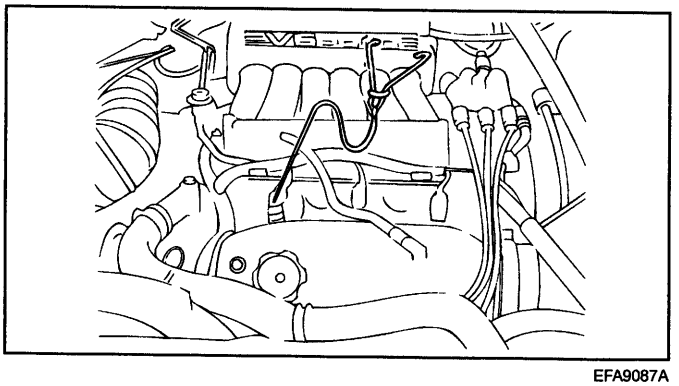

EFA9087A

2. If a stethoscope is not available, check the injector operation with your finger. If no vibration is felt, check the wiring connector, injector or injection signal from the PCM.

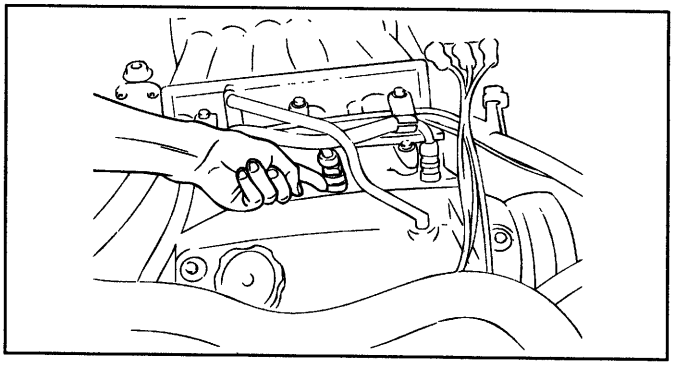

EFA9087B

Resistance Measurement Between Terminals

3. Disconnect the connector at the injector.
4. Measure the resistance between terminals.

Standard value : 13–16Ω[at20°C(68°F)]

5. Re-connect the connector to the injector.

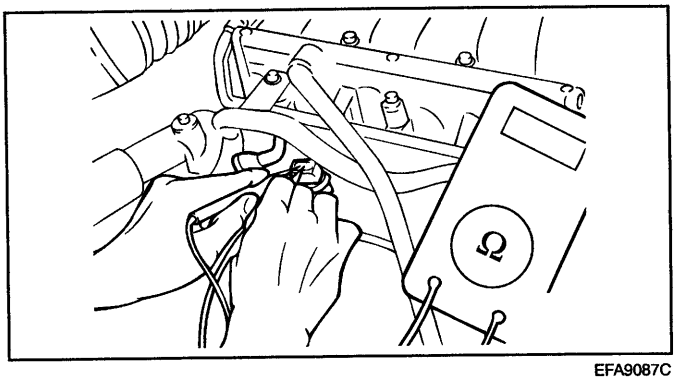

EFA9087C

HARNESS INSPECTION

1 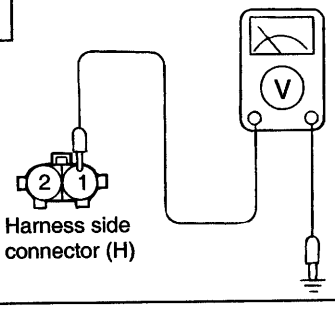 Harness side connector (H)	Measure the power supply voltage. o Connector: Disconnected o Ignition switch: ON o Voltage (V): Battery voltage	OK ⇨	2
		NG ⇨	Repair the harness.

EFHA729B

2 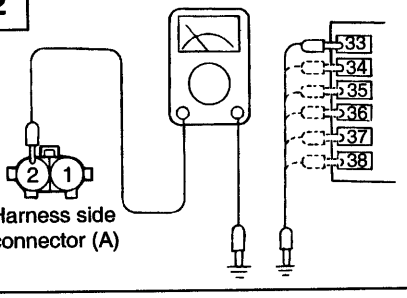 Harness side connector (A)	Check for an open circuit, or a short circuit to ground between the powertrain control module and the injector. o PCM connector : Disconnected o Injector connector : Disconnected	OK ⇨	END !
		NG ⇨	Repair the harness.

EFHA729C

EVAPORATIVE EMISSION CANISTER PURGE CONTROL SOLENOID VALVE EFJB7310

The evaporative emission canister purge control solenoid valve is a duty control type, which controls purge air from the evaporative emission canister.

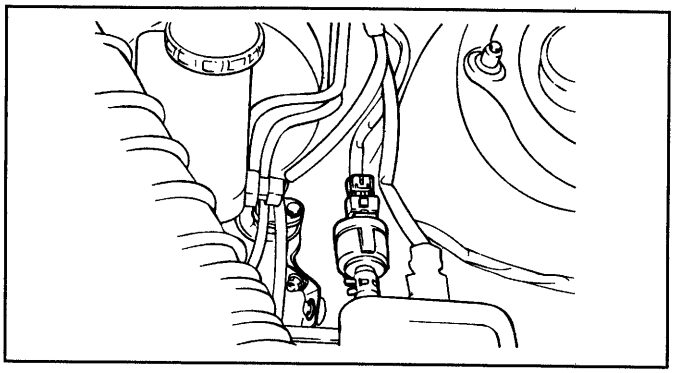

EFA9089A

CIRCUIT DIAGRAM

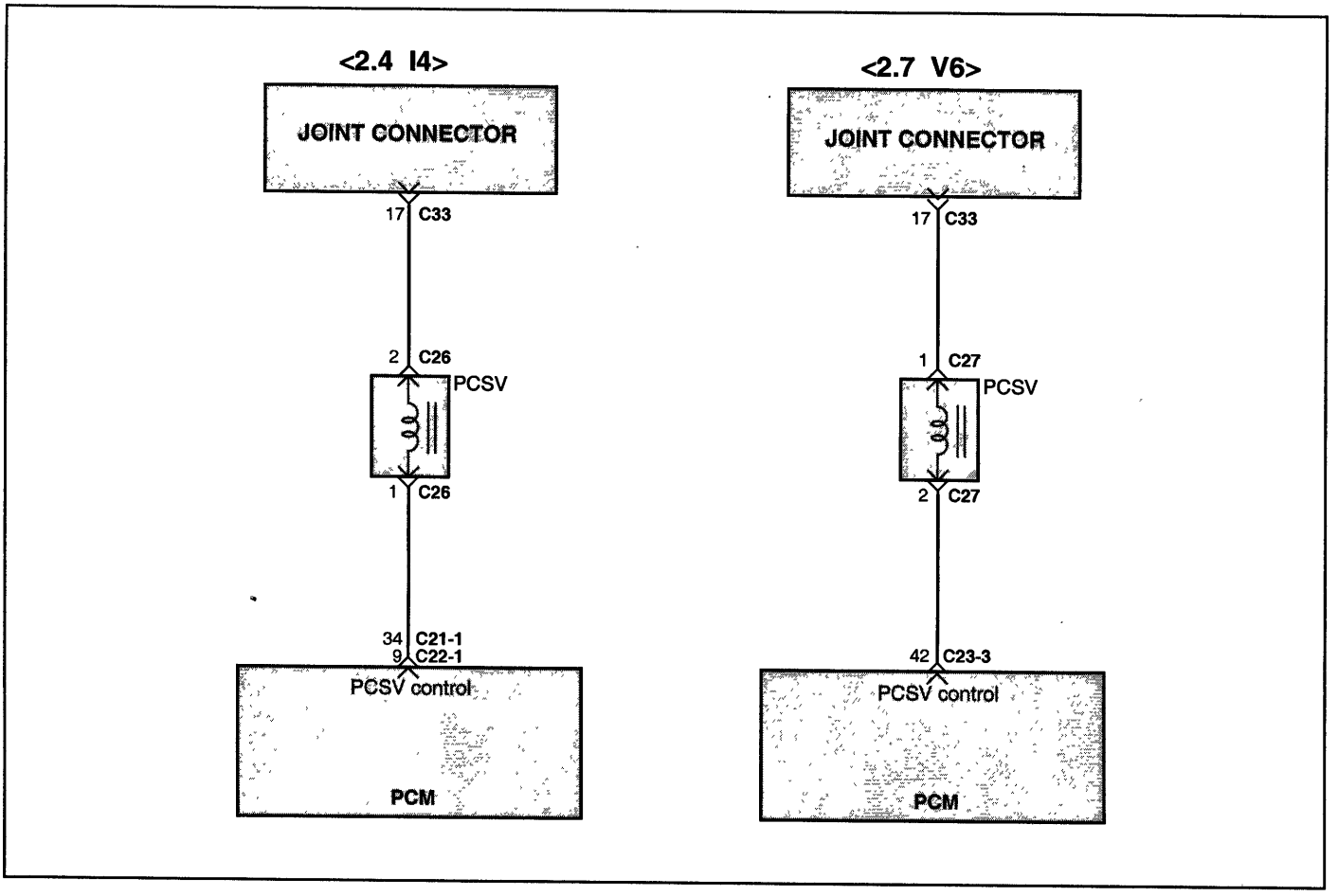

EFJB731A

TROUBLESHOOTING PROCEDURES

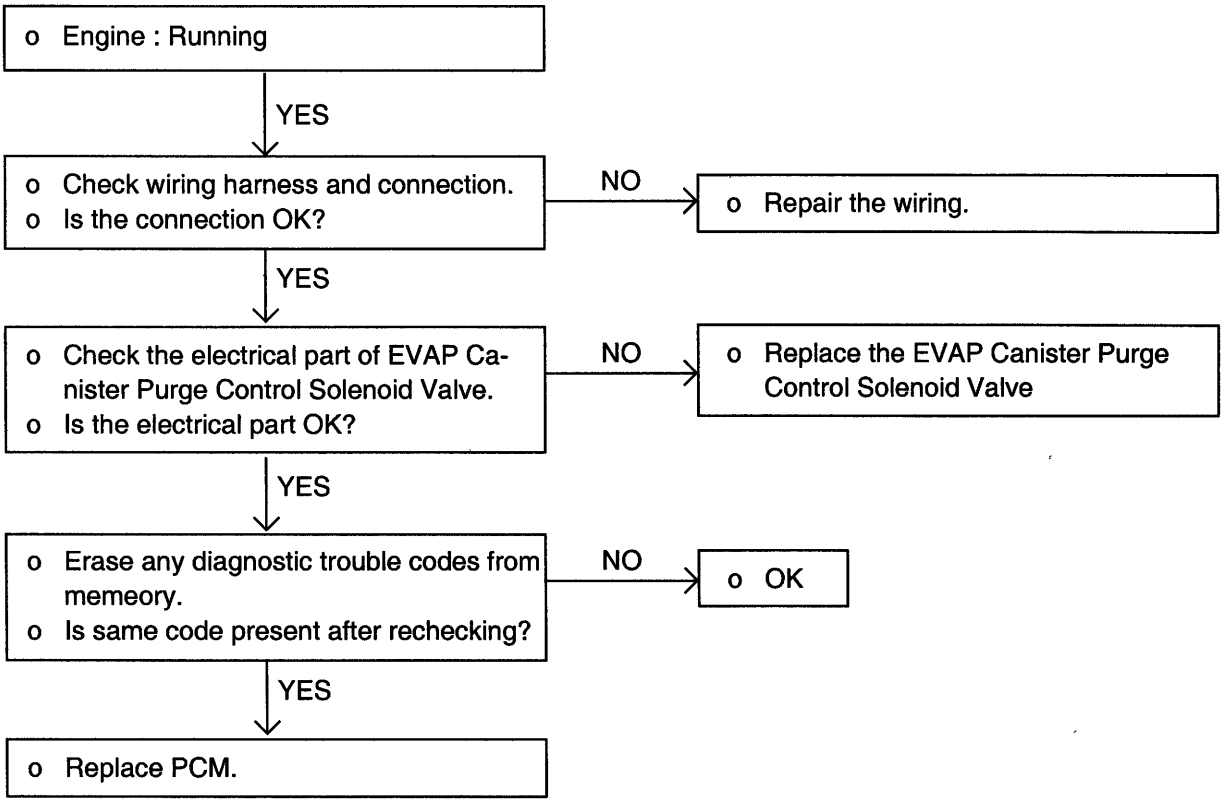

DTC : Diagnosis Trouble Code
PCM : Powertrain Control Module

EFAA731B

USING HI-SCAN

Check Item	Check conditions	HI-SCAN display	Type
Evaporative emission canister purge solenoid valve • Actuator test	IG. S/W ON (Do not start)	PCSV	Activate

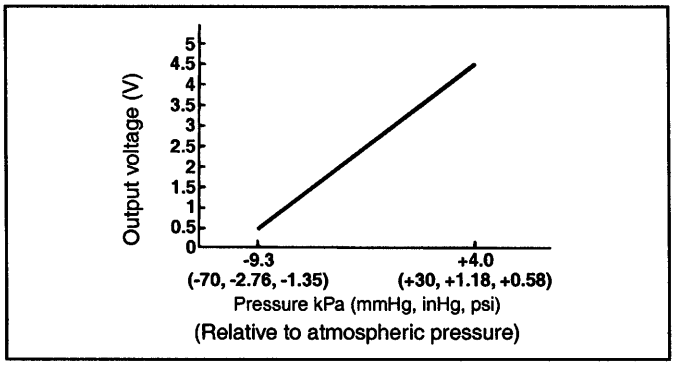

EFJB731E

HARNESS INSPECTION

1 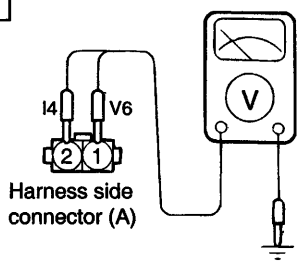	Measure the power supply voltage. o Connector: Disconnected o Ignition switch: ON o Voltage (V): Battery voltage	OK ⇒ 2 NG ⇒ Repair the harness.

EFHA731C

2 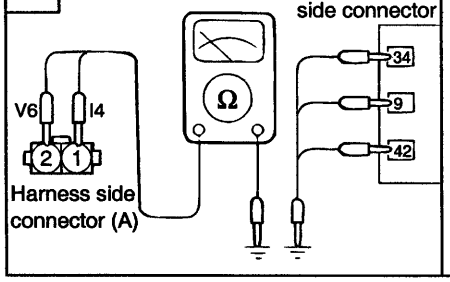	Check for an open circuit, or a short circuit to ground between the evaporative emission canister purge solenoid valve and the powertrain control module. o PCM connector : Disconnected o Evaporative emission canister purge solenoid valve connector : Disconnected	OK ⇒ END ! NG ⇒ Repair the harness. H2-C21-1:34 H2-C22-1:9 H1-C23-3:42

EFJB731D

KNOCK SENSOR EFJB7330

The knock sensor is a piezoelectric device attached to the cylinder block that senses pressure from engine knocking conditions. This vibrational pressure is then converted into a voltage signal which is delivered as output. If engine knock occurs, ignition timing is retarded to suppress it.

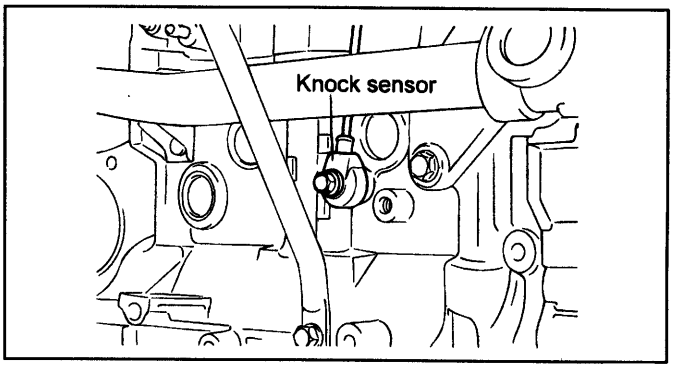

EFA9094A

CIRCUIT DIAGRAM

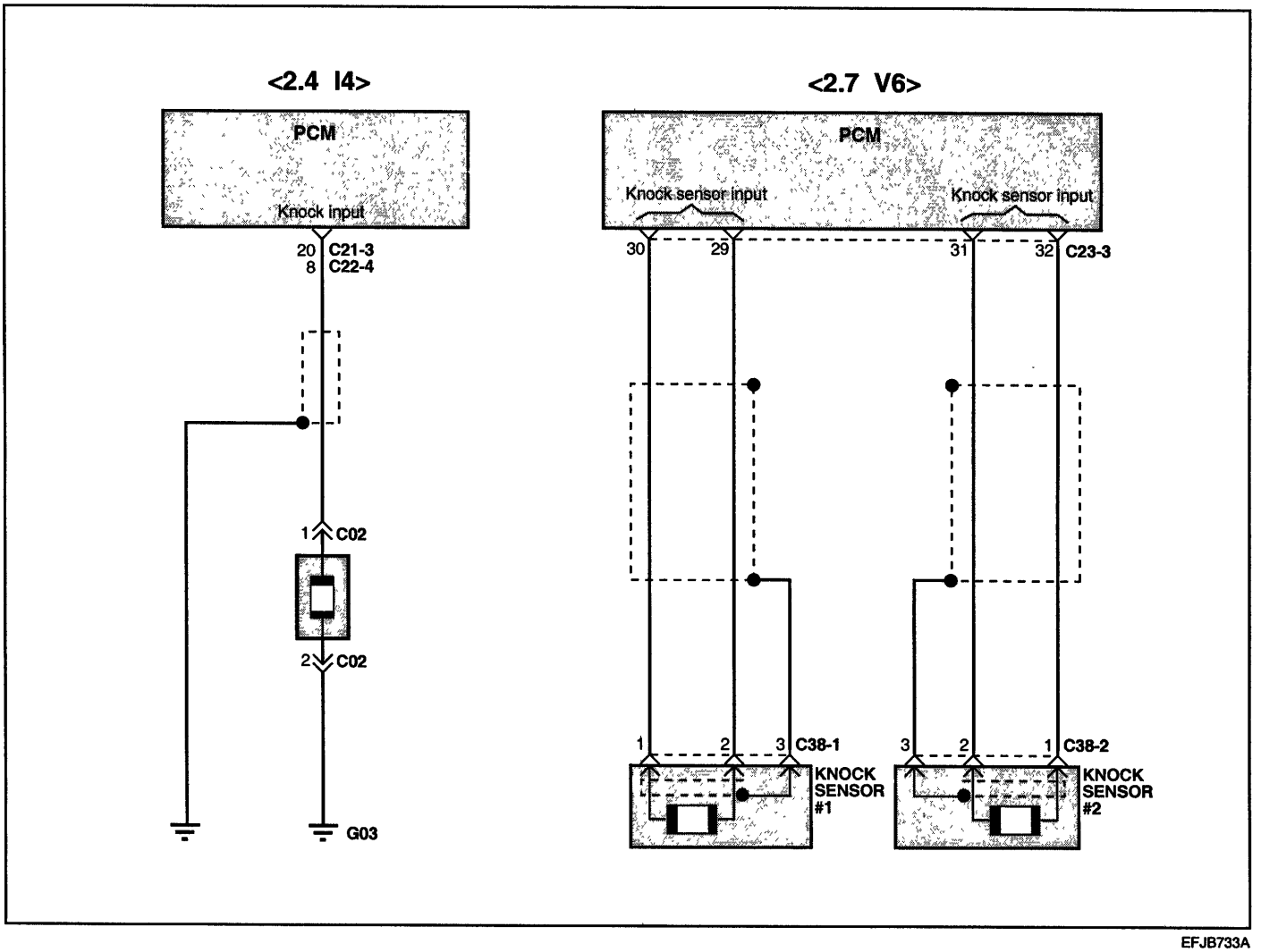

EFJB733A

TROUBLESHOOTING PROCEDURES

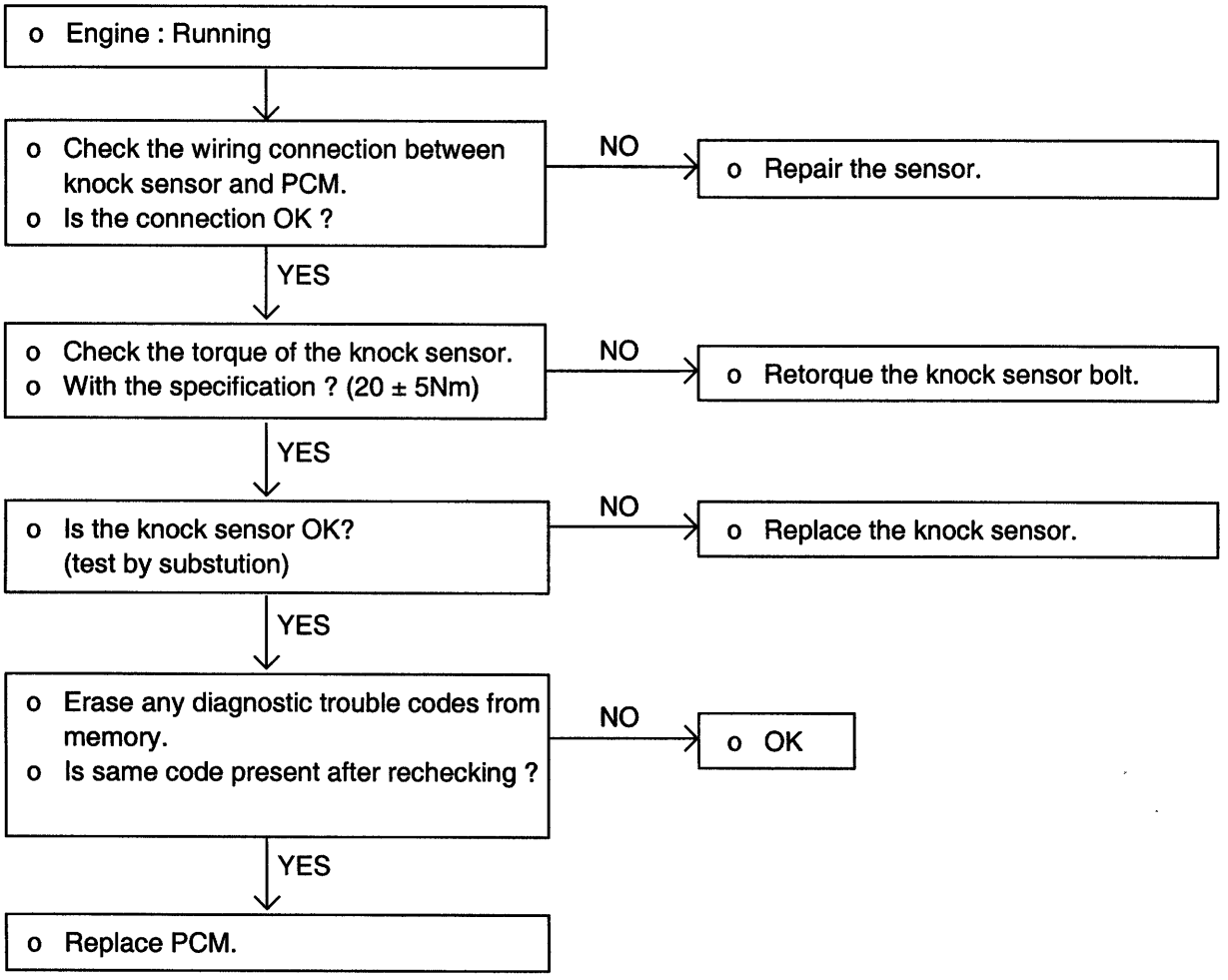

DTC : Diagnosis Trouble Code
PCM : Powertrain Control Module

EFAA733B

TROUBLESHOOTING HINTS

1. The MIL is ON or the DTC is displayed on the HI-SCAN PRO under the following condition:
   - When the knock sensor signal is not detected, even though the engine is in an overload condition.
   - When the knock sensor signal is abnormally low.

HARNESS INSPECTION PROCEDURE <2.7 V6>

1 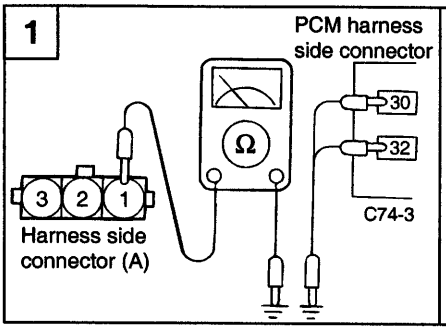	Check for an open circuit, or a short circuit to ground between the PCM and the knock sensor o PCM connector : Disconnected o Knock sensor connector : Disconnected	OK ⇒ NG ⇒	2 Repair the harness. A1 - C23-3 : 30 A1 - C23-3 : 32

EFJB733C

2 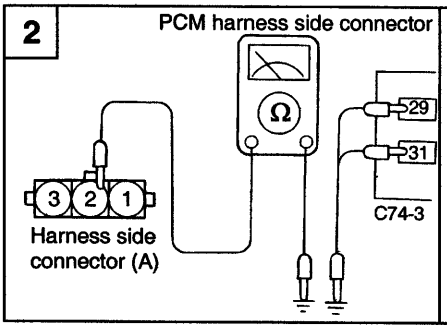	Check for continuity of the ground circuit o PCM Connector : Disconnected o Knock sensor connector : Disconnected	OK ⇒ NG ⇒	3 Repair the harness.

EFHA733D

3 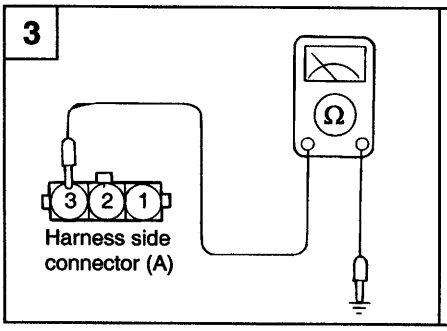	Check for continuity of the ground circuit o Continuity	OK ⇒ NG ⇒	END ! Repair the harness.

EFHA733F

SENSOR INSPECTION

1. Disconnect the knock sensor connector.
2. Measure the resistance between terminals 2 and 3.

Standard value : about 5MΩ [at 20°C (68°F)]

3. If the resistance is zero, replace the knock sensor.

Knock sensor :
16-28Nm (160-250 kg·cm, 11.8-18.4 lb·ft)

4. Measure the capacitance between the terminal 2 and 3.

Standard value : 800-1600 pF

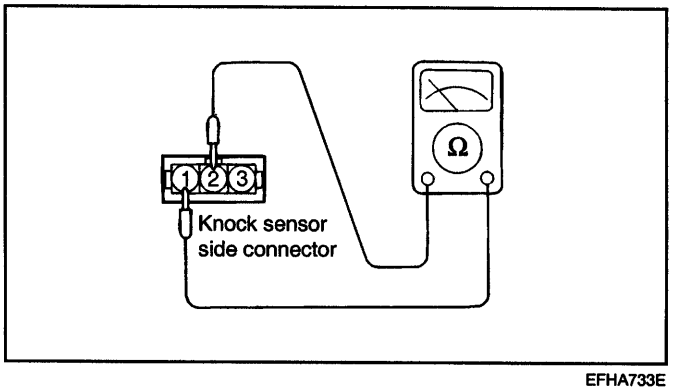

EFHA733E

POWER STEERING PRESSURE SWITCH EFJB7350

The power steering oil pressure switch senses the power steering load and inputs it to PCM, which then adjusts the idle speed control motor to maintain idle speed when the power steering pump puts a load on the engine.

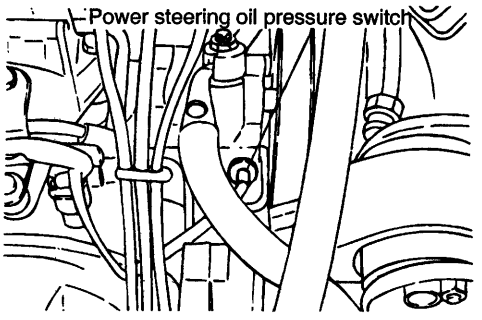

EFA9103A

CIRCUIT DIAGRAM

<2.4 I4 / 2.7 V6>

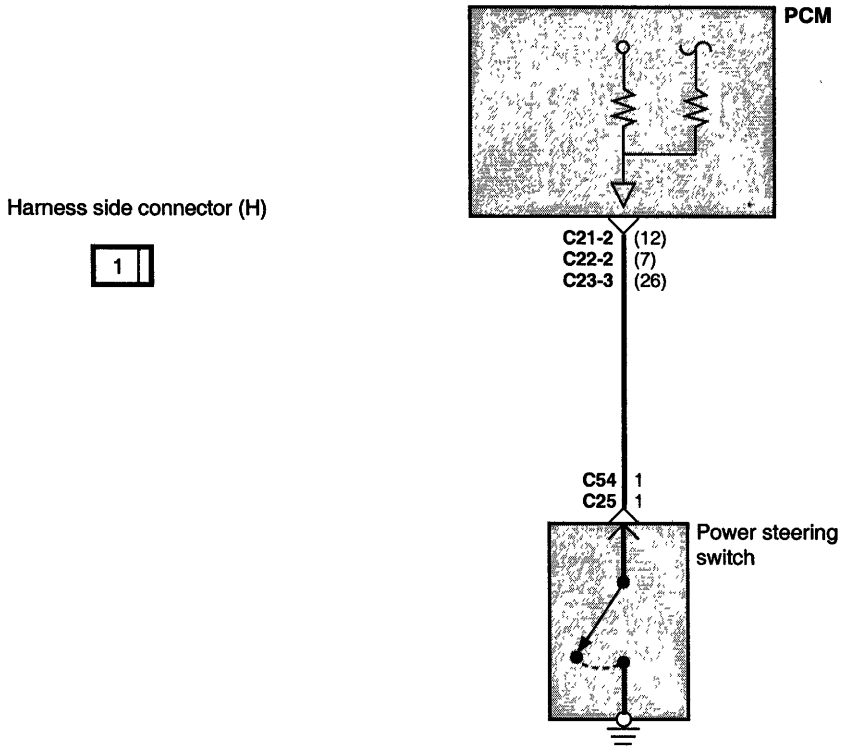

EFJB735A

USING HI-SCAN

Check item	Data display	Check conditions	Steering wheel	Normal indication
Power steering oil pressure switch	Switch state	Engine : Idling	Steering wheel neutral position (wheels straightahead direction)	OFF
			Steering wheel half turn	ON

HARNESS INSPECTION

1 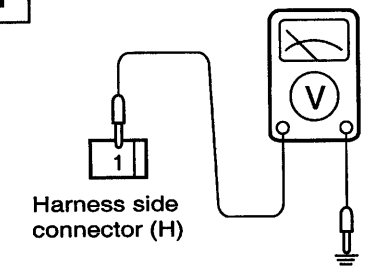 Harness side connector (H)	Measure the power supply voltage. o Connector: Disconnect o Ignition switch: ON o Voltage (V): Battery voltage	OK ⇨	END !
		NG ⇨	Repair the harness.

EFAA735B

THROTTLE POSITION SENSOR(TPS)

INSPECTION EFJB1060

1. Connect a HI-SCAN to the data link connector.

NOTE

Before inspecting the TPS, complete the basic idle speed adjustment.

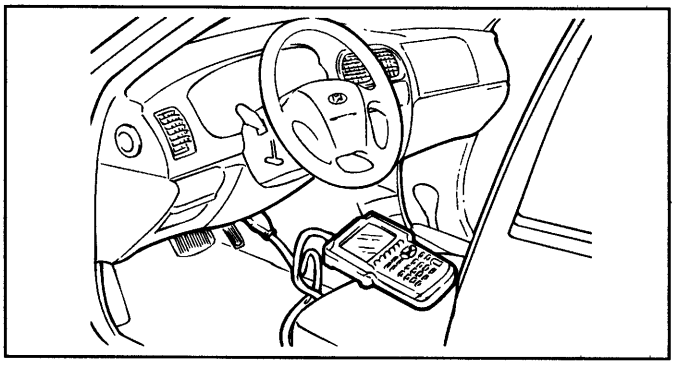

EFA9100A

2. If a HI-SCAN is not used, connect a digital type voltmeter between ground and TPS output terminal.

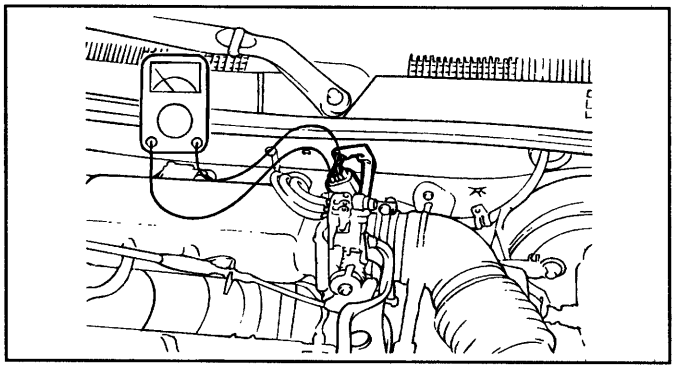

EFA9106A

3. Turn the ignition switch to the ON position(do not start engine) and check that TPS output voltage is as specified. If a HI-SCAN is used, read the TPS voltage.

Standard value :
300-900mV (2.4 I4)
250-800mV (2.7 V6)

4. If it is out of specification, check that the resistance between ground and TPS output terminal is as specified.

Standard value :
3.5 ~ 6.5 KΩ (2.4 I4)
1.6 ~ 2.4 KΩ (2.7 V6)

5. If it is out of specification, replace TPS with new one.

NOTE

Tighten the screws securely after replacement.

FUEL SENDER & FUEL FILTER

REPLACEMENT EFJB1070

1. Remove the fuel tank cap to lower the fuel tank's internal pressure.
2. Raise the vehicle and disconnect the fuel pump connector, then remove the fuel feed and return line from the fuel pump assembly.
3. Remove the fuel pump installation screws, then remove the fuel pump assembly from the fuel tank.

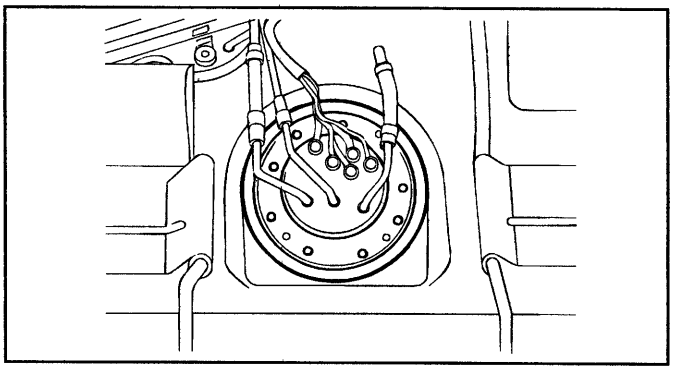

EFHA006A

4. Remove the fuel sender & fuel filter from the fuel pump assembly.
5. Inspect and replace, if necessary.

FUEL PUMP OPERATION CHECK EFHA1080

1. Turn the ignition switch to the OFF position.
2. Apply battery voltage to the fuel pump drive connector to check that the pump operates.

NOTE

The fuel pump is an in-tank type and its operating sound is hard to hear without removing the fuel tank cap.

3. Pinch the hose to check that fuel pressure is felt.

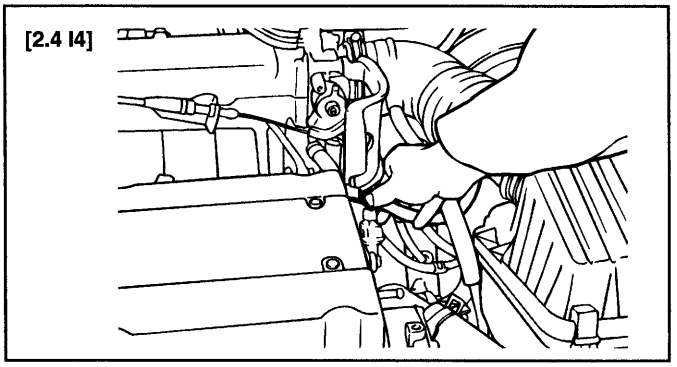

EFA9108A

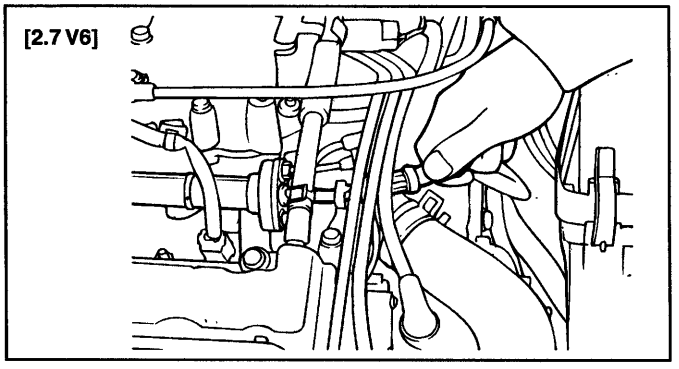

EFA9115A

EVAP CANISTER PURGE PORT VACUUM CHECK EFHA1090

CHECKING CONDITION

Engine coolant temperature : 80-95°C (176-205°F)

1. Disconnect the vacuum hose from the throttle body EVAP Canister purge hose fitting and connect a vacuum pump.

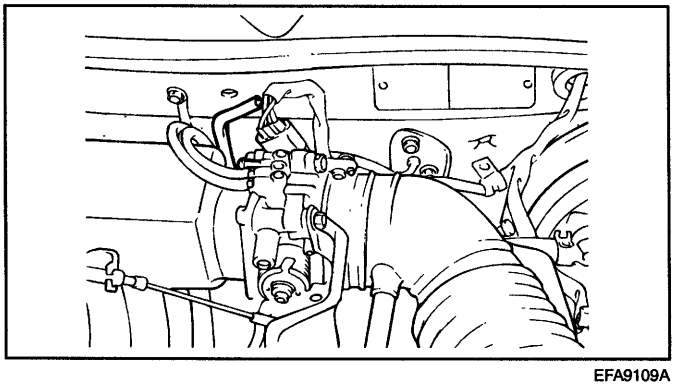

EFA9109A

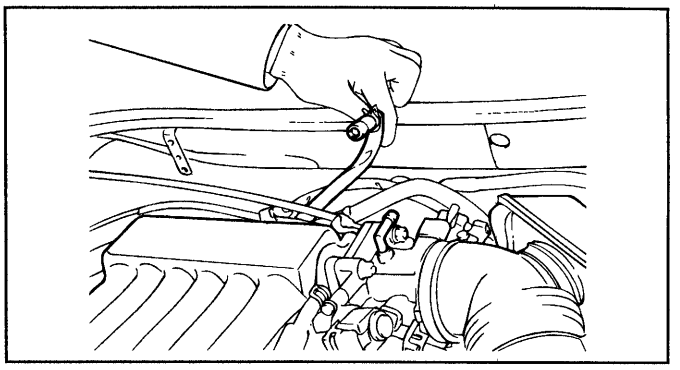

EFA9113A

2. Start the engine and check to see that, after increasing the engine speed, vacuum rises fairly constantly.

NOTE

If there is no vacuum, it is possible that the throttle body port may be restricted and may require cleaning.

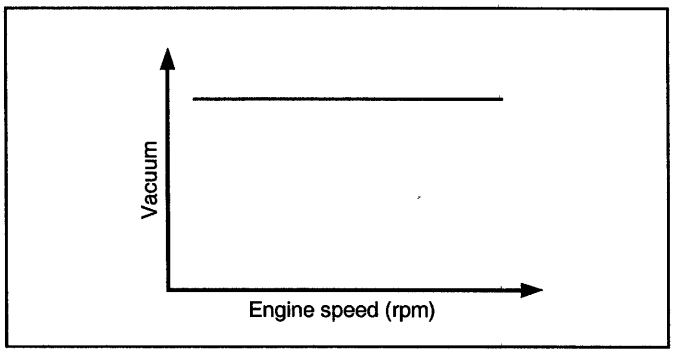

EFA9109B

FUEL PRESSURE TEST EFJB1100

1. Reduce the internal pressure of the fuel lines and hoses:
   - Disconnect the fuel pump harness connector
   - Start the engine and after it stalls, turn the ignition switch to the OFF position
   - Disconnect the battery negative (-) terminal
   - Connect the fuel pump harness connector
2. Remove the bolt connecting the fuel line to the fuel delivery pipe.

CAUTION

Cover the hose connection with a shop towel to prevent splashing of fuel caused by residual pressure in the fuel line.

3. Using the fuel pressure gauge adapter, install the fuel pressure gauge to the fuel pressure gauge adaptor. Tighten the bolt to the specified torque.

Fuel pressure gauge to fuel delivery pipe
25-35 Nm (250-350 kg·cm, 18-26 lb·ft)

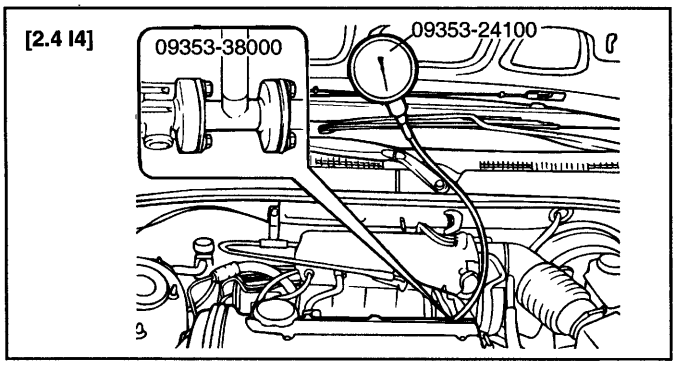

EFA9110A

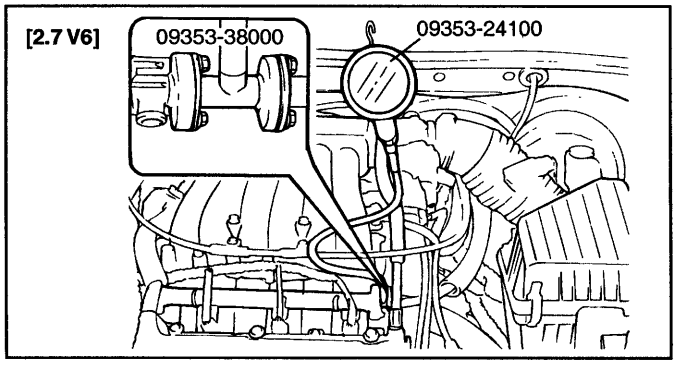

EFA9116B

4. Connect the battery's negative (-) terminal.
5. Apply battery voltage to the terminal for the pump drive and activate the fuel pump. With fuel pressure applied, check that there is no fuel leakage from the pressure gauge or connection part.
6. Start and run the engine at curb idle speed.
7. Disconnect the vacuum hose from the pressure regulator, and plug the hose end. Measure the fuel pressure at idle.

Standard value :
320-340 kPa (3.26-3.47 kg/cm^2, 46-49 psi)

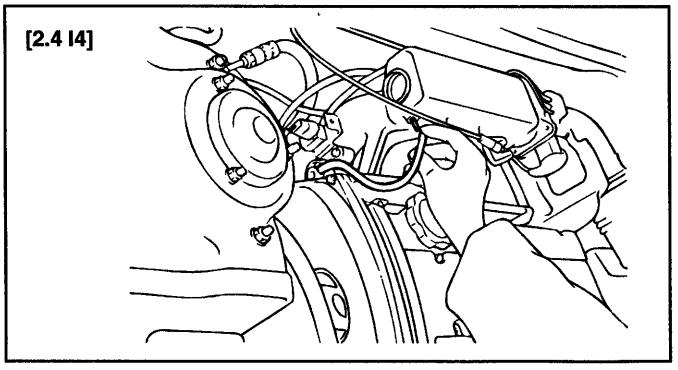

EFA9110B

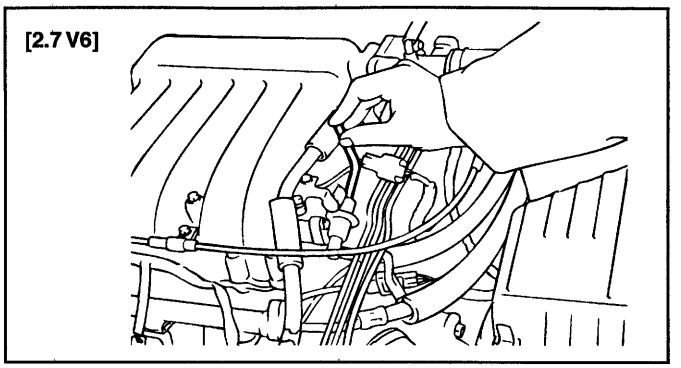

EFA9116C

8. Measure the fuel pressure when the vacuum hose is connected to the pressure regulator.

Standard value :
Approx.255 kPa (2.57 kg/cm^2, 37 psi)

9. If the results of the measurements made in steps (7) and (8) are not within the standard value, use the table below to determine the probable cause, and make the necessary repairs.

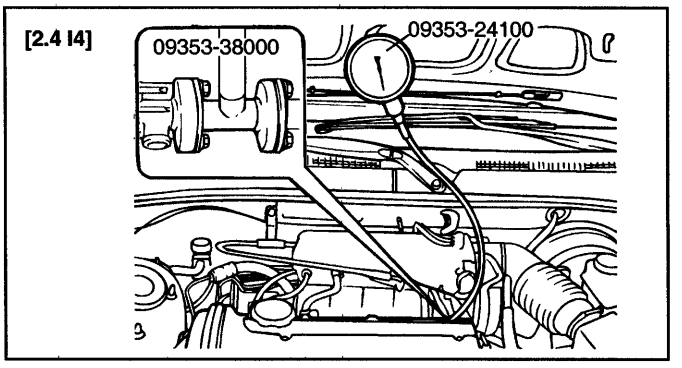

EFA9110A

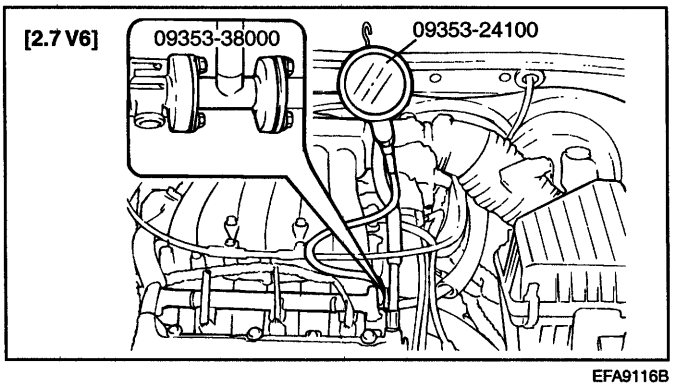

EFA9116B

Condition	Probable cause	Remedy
Fuel pressure is too low	• Clogged fuel filter • Fuel leakage to the return side, caused by poor seating of the fuel-pressure regulator	• Replace fuel filter • Replace fuel pressure regulator
	• Low discharge pressure of the fuel pump	• Check the in-tank fuel hose for lage or replace the fuel pump
Fuel pressure is too high	• Sticking fuel pressure regulator • Clogged or bent fuel return hose or pipe	• Replace fuel pressure regulator • Repair or replace hose or pipe
There is no difference in fuel pressure when the vacuum hose is connected and when it is not.	• Clogged, or damaged vacuum hose or nipple • Sticking or poor seating of the fuel pressure regulator	• Repair or replace the vacuum hose or the nipple • Repair or replace hose or pipe

10. Stop the engine and check for a change in the fuel pressure gauge reading, which should hold for approximately 5 minutes. If the gauge indication drops, observe the rate at which it drops. Determine and remove the causes according to the following table.

Condition	Probable cause	Remedy
Fuel pressure drops slowly after engine is stopped	• Injector leakage	• Replace injector
Fuel pressure drops immediately after engine is stopped	• The check valve within the fuel pump is open	• Replace fuel pump

11. Reduce the pressure in the fuel line.
12. Disconnect the hose and the gauge.

CAUTION

Cover the hose connection with a shop towel to prevent splashing of fuel caused by fuel residual pressure in the fuel line.

13. Replace the O-ring at the end of the hose.
14. Connect the fuel hose to the delivery pipe and tighten to the specified torque.
15. Check for fuel leakage.

THROTTLE BODY CLEANING EFJB1120

NOTE

Disconnect the intake air hose from the throttle body, and check the throttle valve surface for dirt. Spray cleaning solvent on the face of the valve to remove dirt.

1. Warm up the engine, then stop it.
2. Remove the intake air hose from the throttle body.
3. Plug the bypass passage inlet of the throttle body.

NOTE

Make sure the solvent does not enter the by-pass passage.

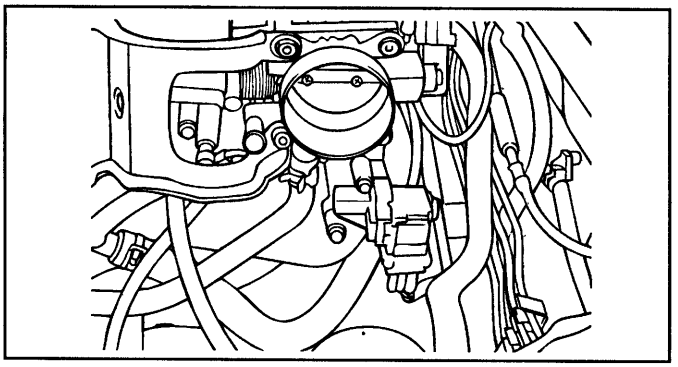

EFA9112A

4. Spray cleaning solvent into the valve through the throttle body intake port and let it soak for about 5 minutes. After 5 minutes open the valve and wipe it clean with a soft rag.

CAUTION

Keep the throttle valve closed while spraying to avoid charging the intake path with solvent.

5. Start the engine, race it several times and allow the engine to run near idle for 1 minute.
6. Repeat Steps 4 and 5.
7. Unplug the bypass passage inlet.
8. Attach the intake air hose.
9. Disconnect the battery ground cable for more than 10 seconds.

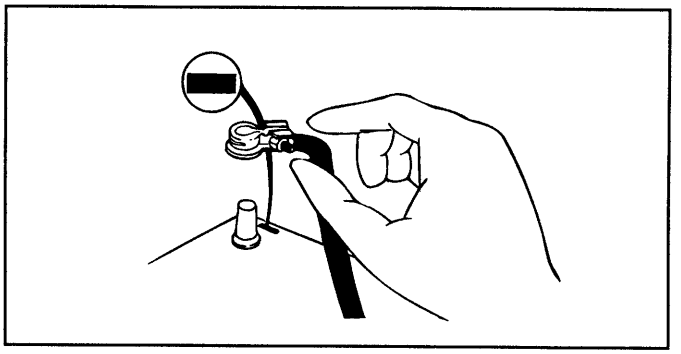

EFA9112B

FUEL DELIVERY SYSTEM

ACCELERATOR PEDAL EFA91190

COMPONENTS

[2.4 I4]

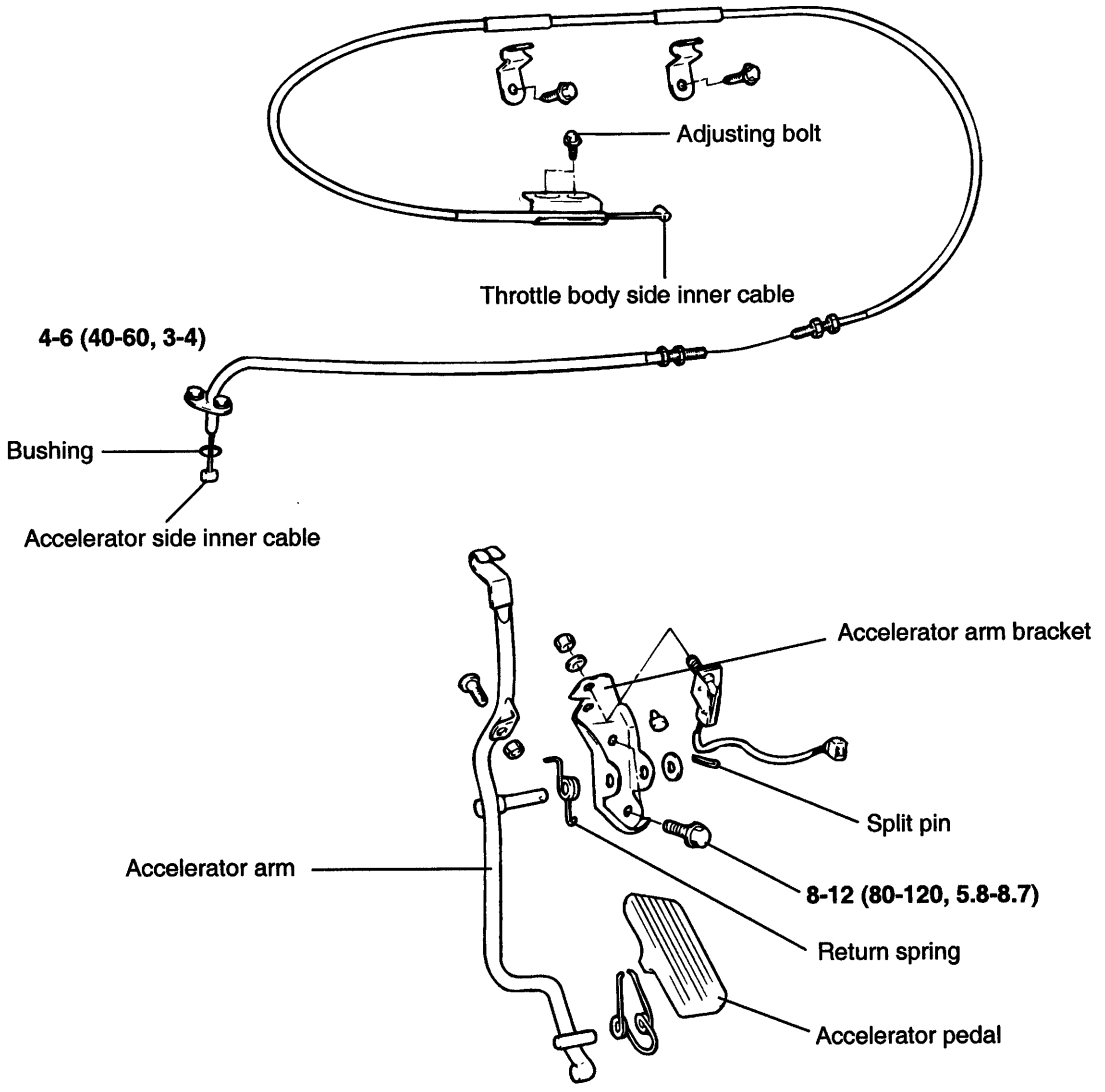

TORQUE : Nm (Kg·cm, lb·ft)

EFA9119A

COMPONENTS EFA91200

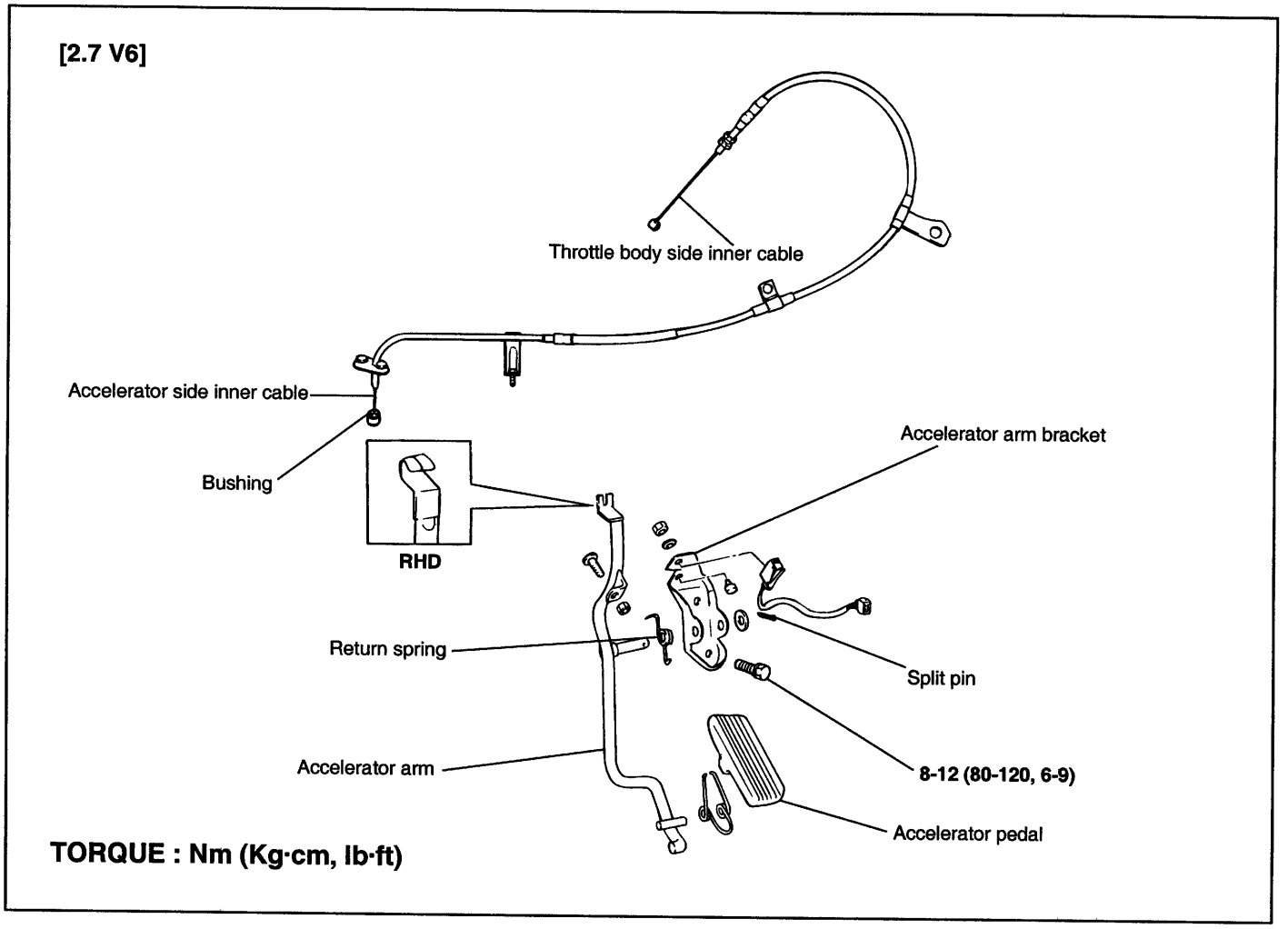

EFA9120A

REMOVAL EFA91220

1. Remove the bushing and inner cable of the accelerator arm.
2. Pull the left side of the accelerator pedal toward you, and then remove the accelerator pedal from the accelerator arm.

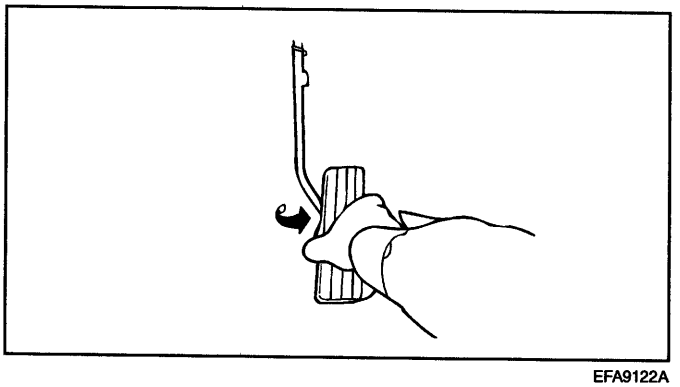

EFA9122A

3. Loosen the bolts of the accelerator arm bracket and remove.

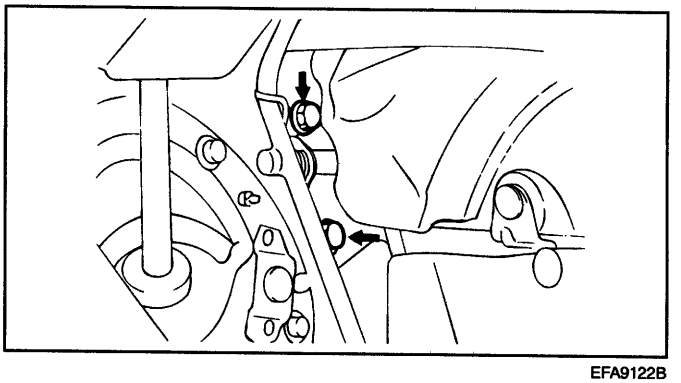

EFA9122B

INSPECTION EFA91230

1. Check the inner and outer cable for damage.
2. Check the cable for smooth movement.
3. Check the accelerator arm for deformation.
4. Check the return spring for deterioration.
5. Check the connection of the bushing to the inner cable.
6. Check the accelerator for proper operation.

INSTALLATION EFA91240

1. When installing the return spring and accelerator arm, apply multi-purpose grease around each moving point of the accelerator arm.

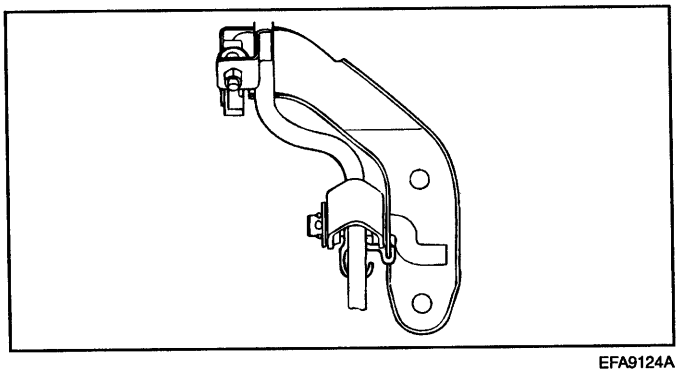

EFA9124A

2. Apply sealant to the bolt mounting hole and tighten the accelerator arm bracket.

Tightening torque
Accelerator arm bracket bolts :
8–12 Nm(80–120 kg·cm, 6–7 lb·ft)

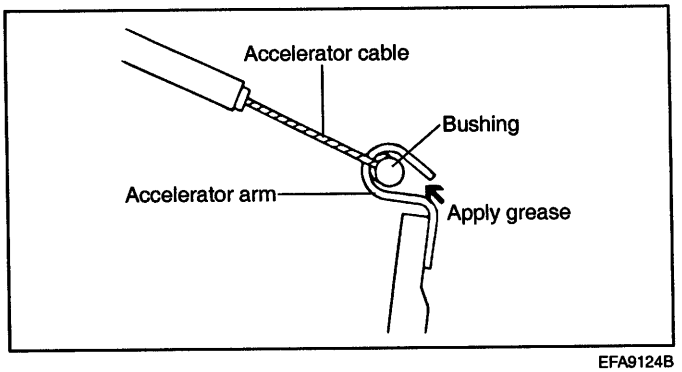

EFA9124B

3. Securely install the resin bushing of the accelerator cable on the end of the accelerator arm.

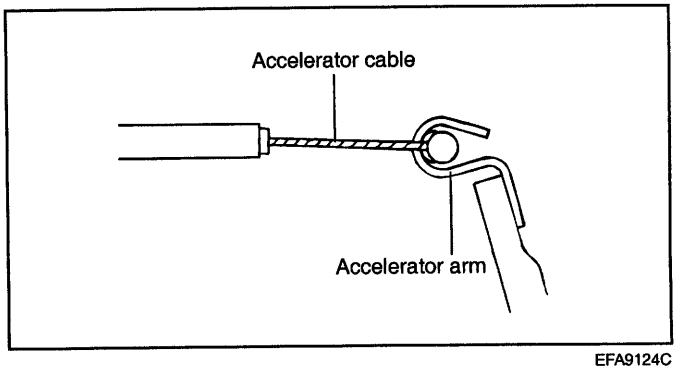

EFA9124C

FUEL INJECTOR EFA91260

INSPECTION

1. Measure the resistance of the injectors between the terminals using an ohmmeter.

Resistance : 13–16Ω[at 20°C (68°F)]

2. If the resistance is not within specification, replace the injector.

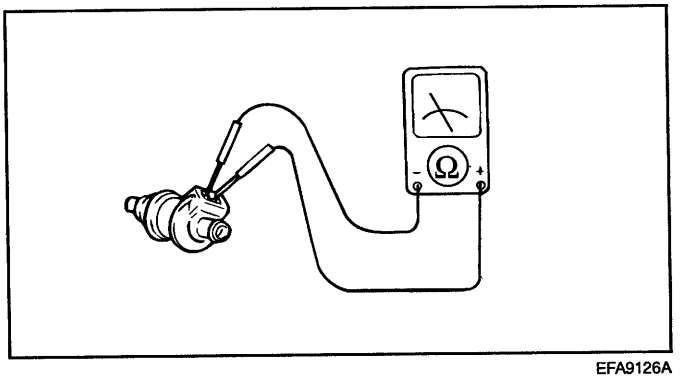

EFA9126A

FUEL LINE EFJB1270

COMPONENTS

<2.4 I4>

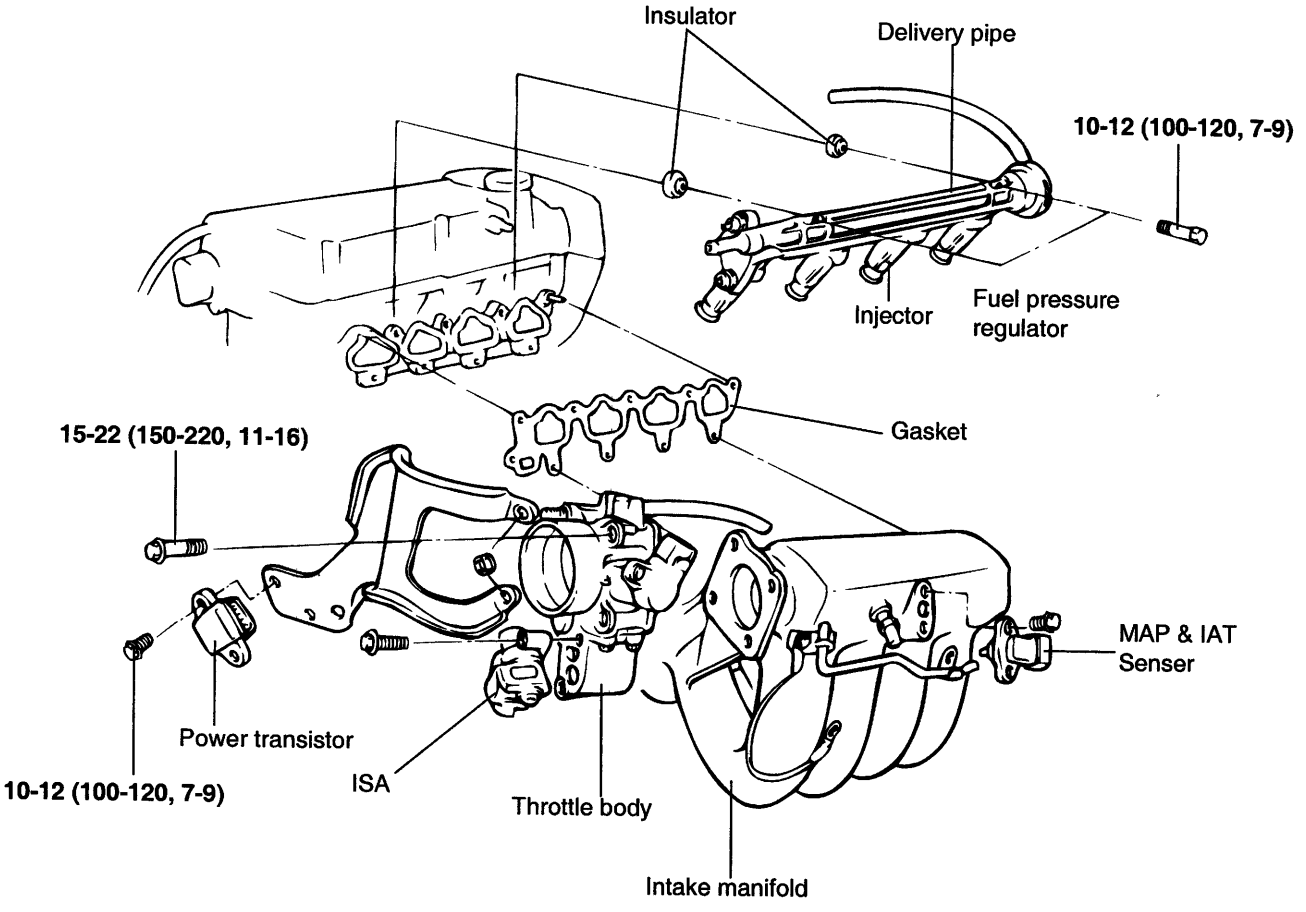

TORQUE : Nm (kg·cm, lb·ft)

EFJB127A

COMPONENTS EFHA1280

<2.7 V6>

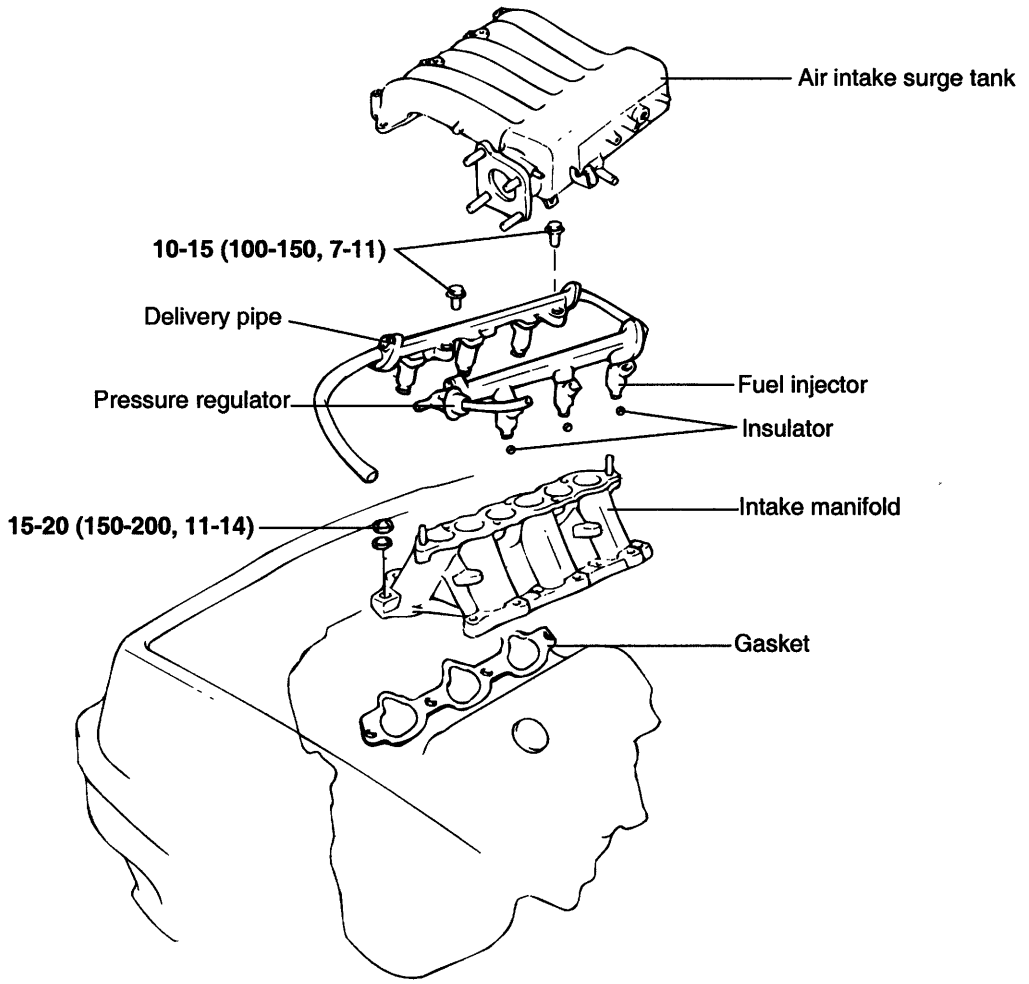

TORQUE : Nm (kg·cm, lb·ft)

EFHA128A

REMOVAL EFA91290

1. Release residual pressure from the fuel line to prevent fuel from spilling.

CAUTION

Cover the hose connection with rags to prevent splashing of fuel from residual pressure in the fuel line.

2. Remove the delivery pipe with the fuel injector and pressure regulator.

INSTALLATION EFA91300

1. Install a new grommet and O-ring to the injector.
2. Apply a coating of solvent, spindle oil or gasoline to the injector O-ring.

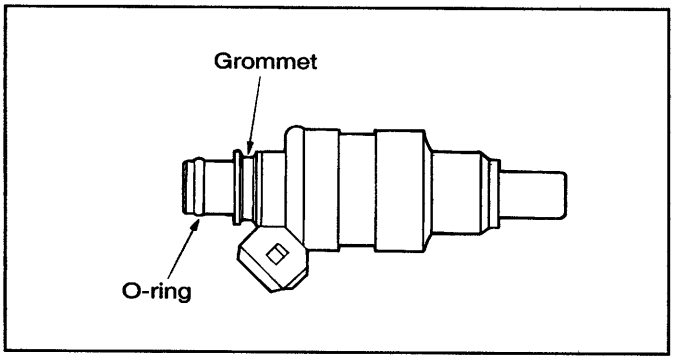

EFA9130A

3. While turning the injector left and right, install it onto the delivery pipe.
4. Be sure the injector turns smoothly.

NOTE

If injector does not turn smoothly, the O-ring may be jammed. Remove the injector and re-insert it into the delivery pipe and re-check.

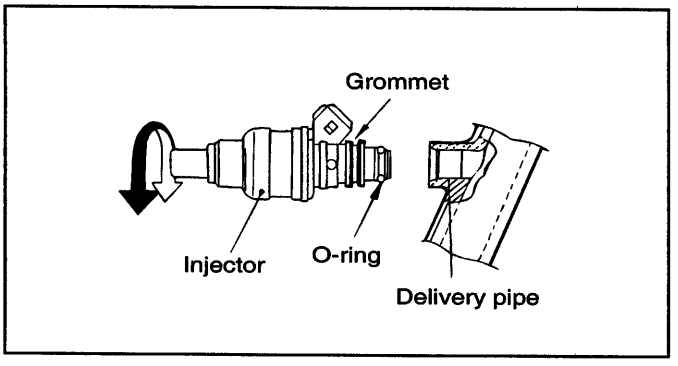

EFA9130B

FUEL LINE AND VAPOR LINE EFJB1310

COMPONENTS

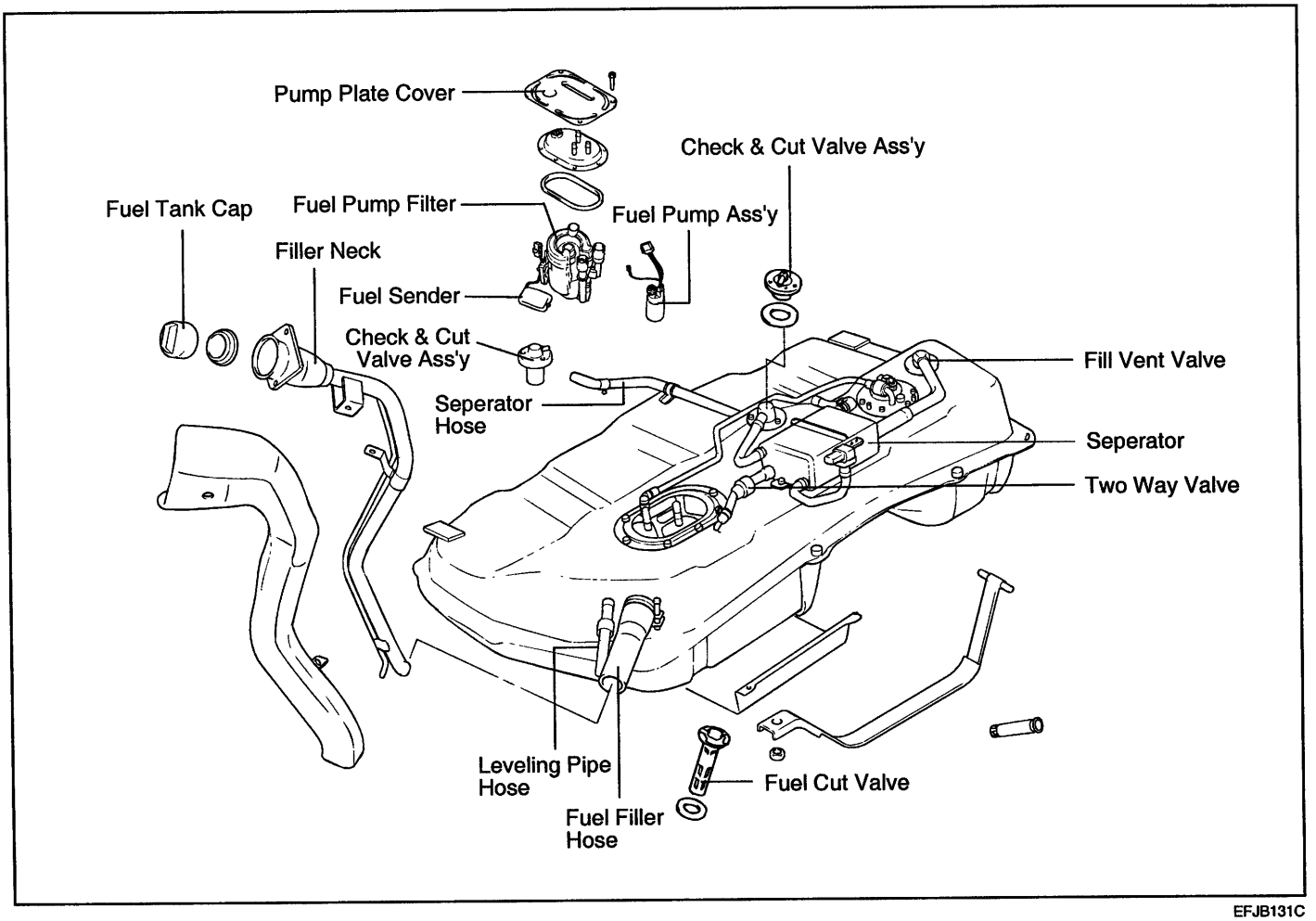

EFJB131C

REMOVAL EFJB1320

1. Remove the fuel tank cap to lower the fuel tank's internal pressure. Raise the vehicle and disconnect the fuel pump connector.

CAUTION

1. **Reduce the fuel pressure before disconnecting the fuel line and hose, or fuel will spill out.**
2. **Cover the pipe connection with a shop towel to prevent splashing of fuel from residual pressure in the fuel line.**

2. Remove the fuel pump installation screws, then remove the fuel pump assembly from the fuel tank

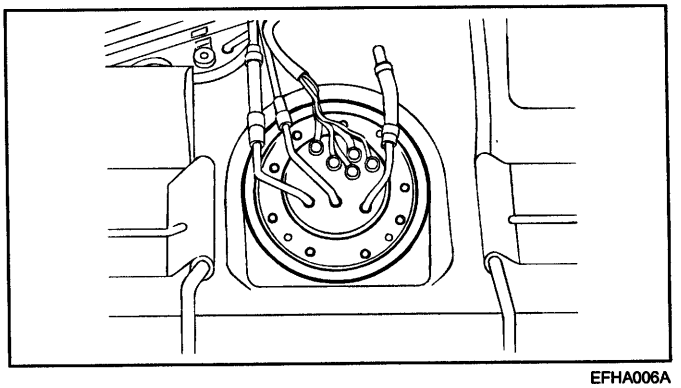

EFHA006A

3. Remove the fuel return hose and line.
4. Remove the fuel vapor hose and line

INSPECTION EFJB1330

1. Check the hoses and pipes for cracking, bending, deformation or restrictions.
2. Check the EVAP Canister for restrictions.
3. Check the fuel pump assembly for restrictions and damage.

INSTALLATION EFJB1340

1. Install the fuel vapor hose and return hoses.
   - If the fuel line has a stepped section, connect the fuel hose to the line securely, as shown in the illustration.
   - If the fuel line does not have a stepped section, connect the fuel hose to the line securely.

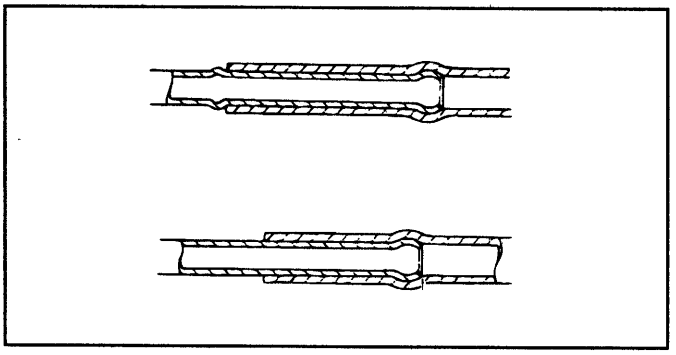

EFA9134A

2. Install the fuel pump assembly and tighten the fuel pump installation screws.

FUEL TANK EFJB1350

COMPONENTS

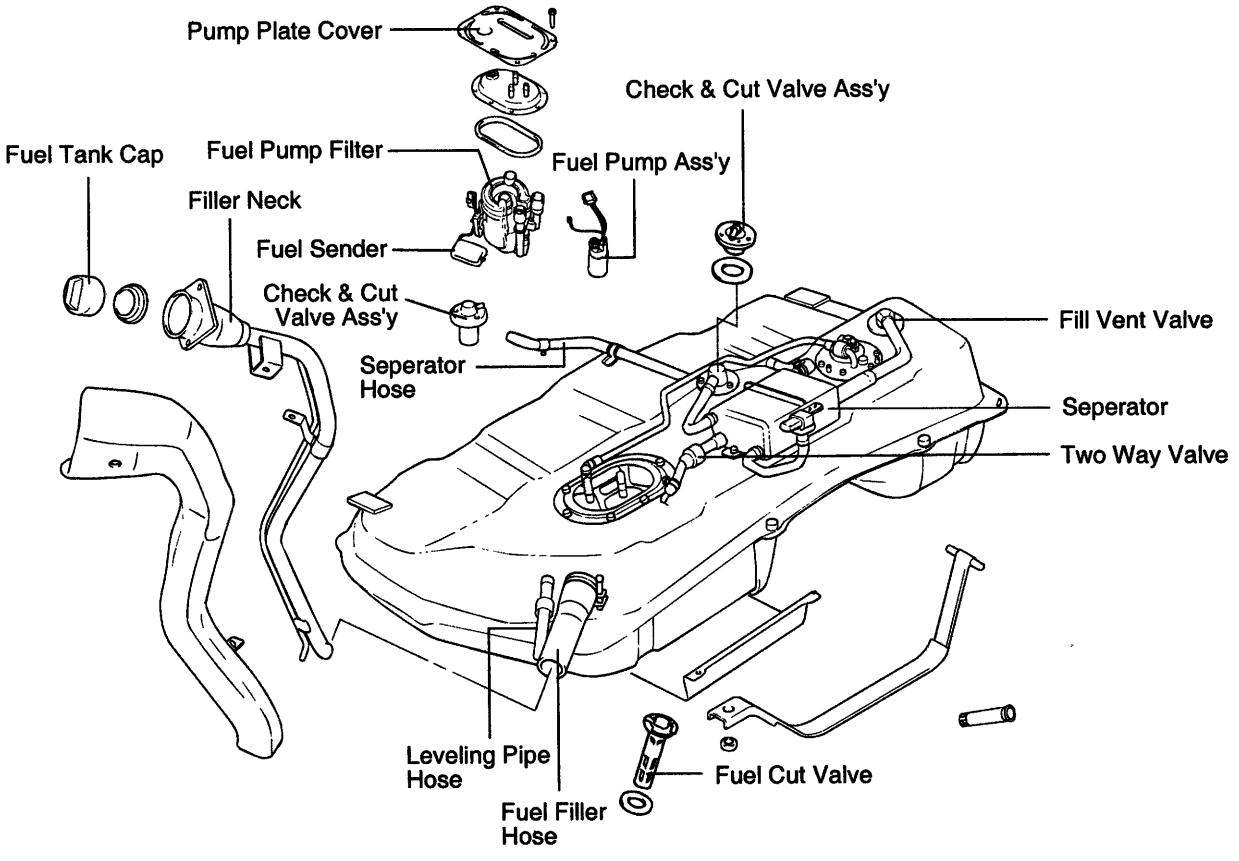

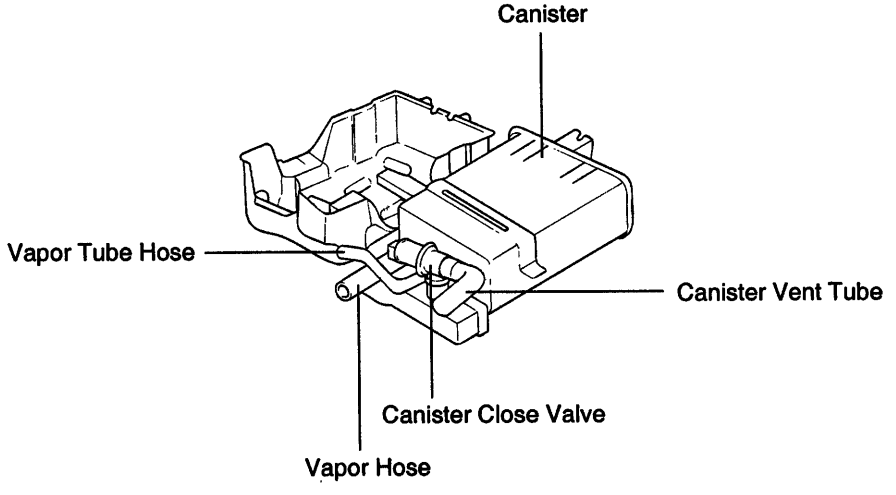

EFJB131C/EFJB131D

EFJB135A

REMOVAL EFJB1360

1. To reduce the internal pressure of the fuel main pipes and hose, first start the engine and then disconnect the electrical fuel pump connector located near the fuel tank.

CAUTION

Be sure to reduce the fuel pressure before disconnecting the fuel main pipe and hose, otherwise fuel will spill out.

2. Disconnect the battery cable from the negative terminal of the battery.

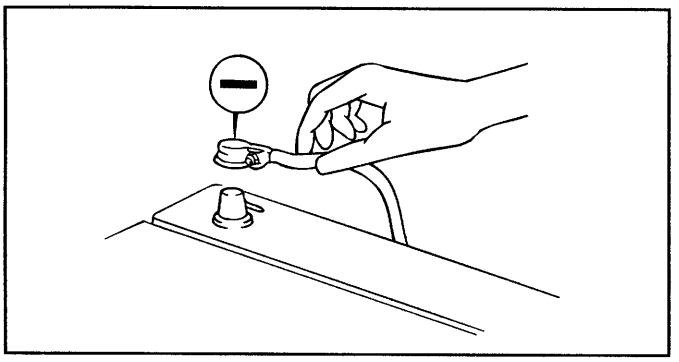

EFA9136A

3. Remove the fuel tank cap.

4. Disconnect the return hose and vapor hose.

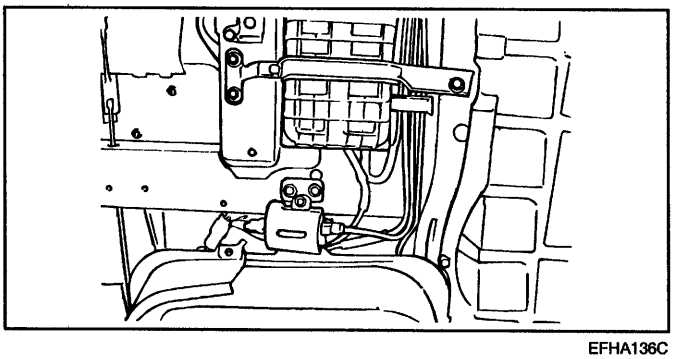

EFHA136C

5. Disconnect the fuel pump connector.

6. Disconnect the high pressure hose from the fuel tank.

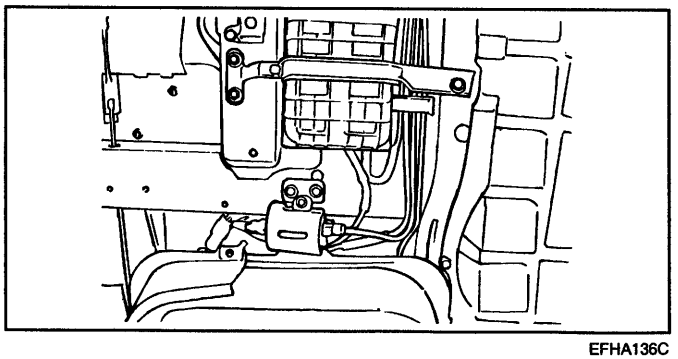

EFHA136C

7. Loosen the two self-locking nuts that hold the tank in position and remove the two tank bands.

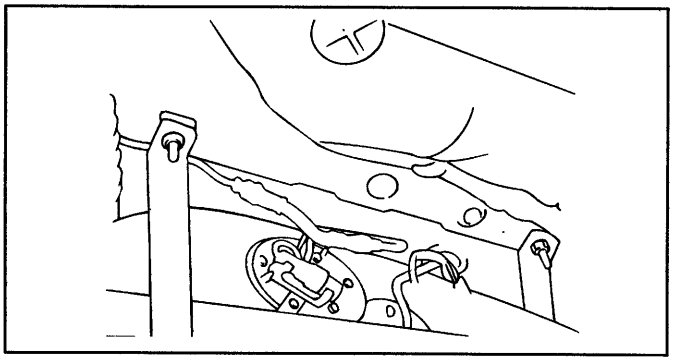

EFA9136D

8. Detach the fuel filler hose and leveling hose.

9. Remove the fuel vapor hose and the fuel tank.

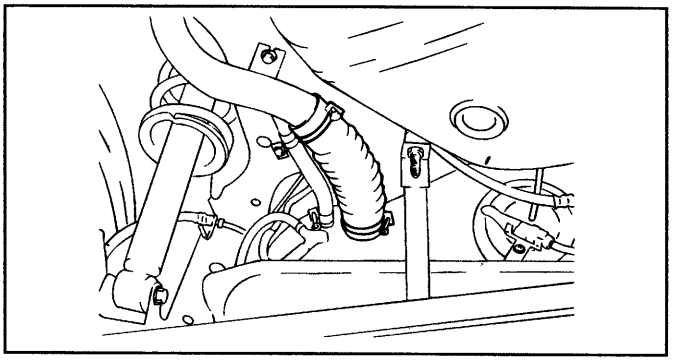

EFA9136E

INSPECTION EFA91370

1. Check the hoses and the pipes for cracks or damage.

2. Check the fuel tank cap for proper operation.

3. Check the fuel tank for deformation, corrosion or cracking.

4. Check the fuel tank inside for dirt or contamination.

5. Check the in-tank fuel filter for damage or restriction.

6. Test the two-way valve for proper operation.

7. Using a vacuum hand pump, check the operation of the two-way valve.

Valve pump	Guide lines for acceptance or rejection
When connected to inlet side	Negative pressure generated and vacuum maintained
When connected to outlet side	No negative pressure generated

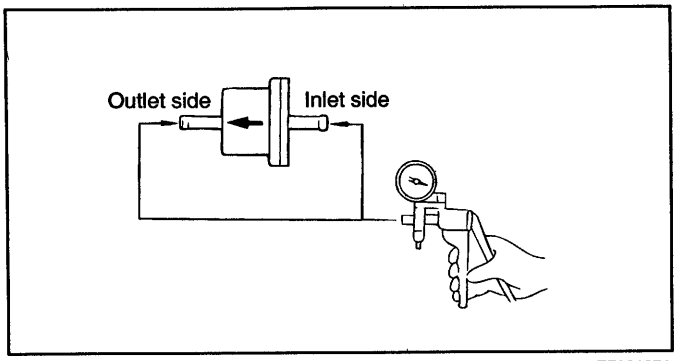

EFA9137A

INSTALLATION EFJB1380

1. Connect the leveling hose to the tank at approximately 40 mm (1.6 in.) of the filler neck.
2. When connecting the filler hose, connect the end with the shorter straight pipe to the tank side.

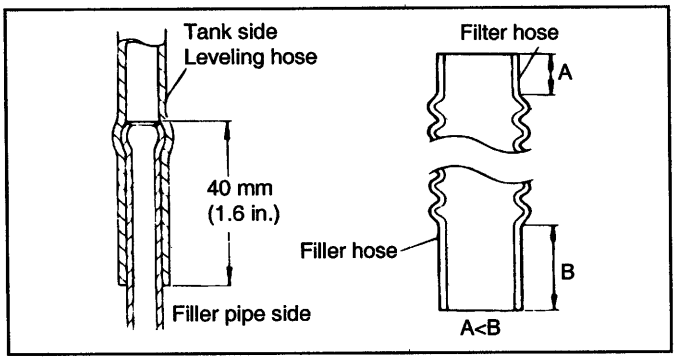

EFA9138A

3. Confirm that the pad is fully bonded to the fuel tank. Install the fuel tank by tightening the self-locking nuts to the tank bands until the rear end of the tank band contacts the body.

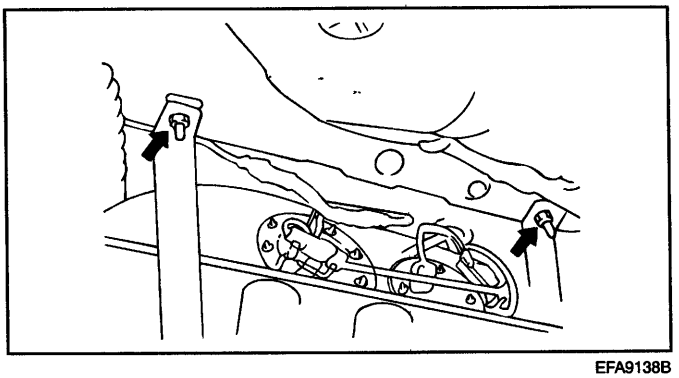

EFA9138B

4. Connect the vapor hose and return hose. Attach the fuel hose to the line as shown in the illustration.

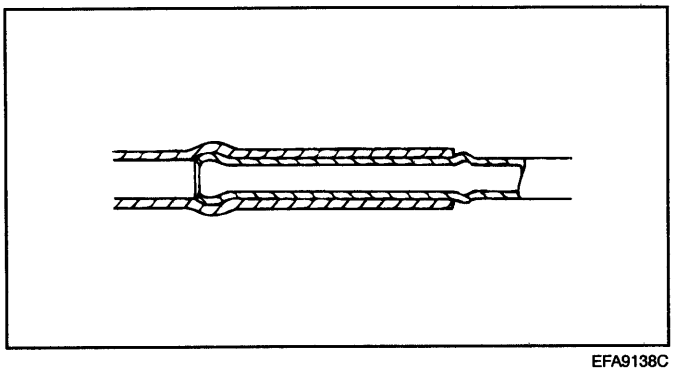

EFA9138C

5. To connect the high pressure hose to the fuel pump, temporarily tighten the flare nut by hand, and then tighten it to the specified torque. Be careful that the fuel hose does not twist.

Tightening torque
High pressure hose flare nut :
30–40 Nm(300–400 kg·cm, 22–29 lb·ft)

NOTE

When tightening the flare nut, be careful not to bend or twist the line to prevent damage to the fuel pump connection.

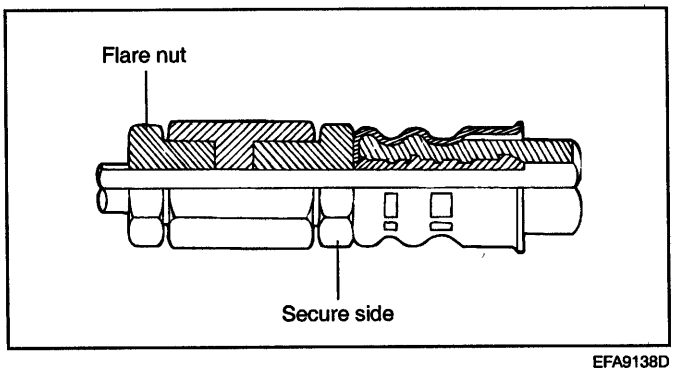

EFA9138D

6. Connect the electrical fuel pump assembly connector.

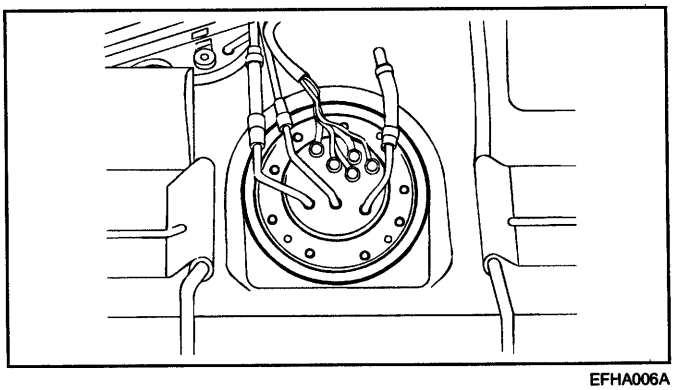

EFHA006A

TROUBLESHOOTING FOR DTC

EFJB5000

DIAGNOSTIC ITEM

DTC	Diagnostic item
P0101	Mass Air Flow Circuit Rang/Performance Problem
P0102	Mass Air Flow Circuit Low Voltage
P0103	Mass Air Flow Circuit High Voltage

DESCRIPTION

The Mass Air Flow (MAF) sensor is located near the air cleaner.
The sensor measures the mass of air passing through the air intake and generates a voltage signal. The Engine Control Module(ECM) receives the voltage generated by the sensor and uses the signal to set fuel injector base pulse width and ignition timing.
The voltage of the sensor increases as mass air flow increases.

TROUBLESHOOTING GUIDE

DTC detection condition	Probable cause
Background • While the engine is running, the mass air flow sensor outputs a voltage signal which corresponds to the mass of air flow. • The engine control module checks whether the voltage of this signal output by the mass air flow sensor while the engine is running at of above the set value. Check Area • At idle rpm • Or engine speed is 3000 r/min or more Judgment Criteria • Sensor output voltage has continued to be 0.5V or lower for 4 sec. Check Area • Throttle position sensor voltage is 12V or lower. • Engine speed is 2000 r/min or less. Judgment Criteria • Sensor output voltage has continued to be 4.5V or higher for 4 sec.	• Mass air flow sensor failed • Open or shorted mass air flow sensor circuit, or loose connector • Engine control module failed

CIRCUIT DIAGRAM

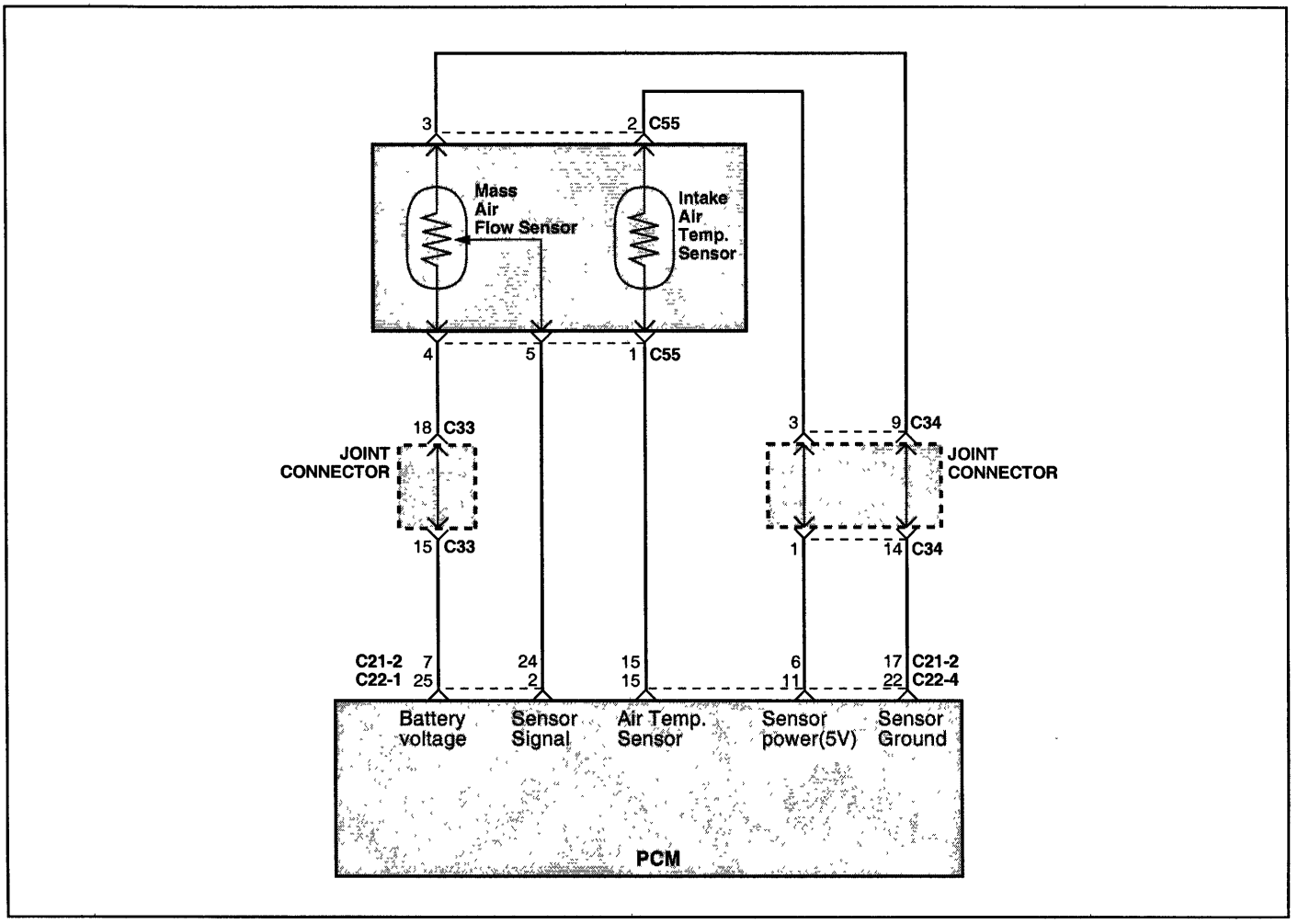

EFJB705A

TEST PROCEDURE

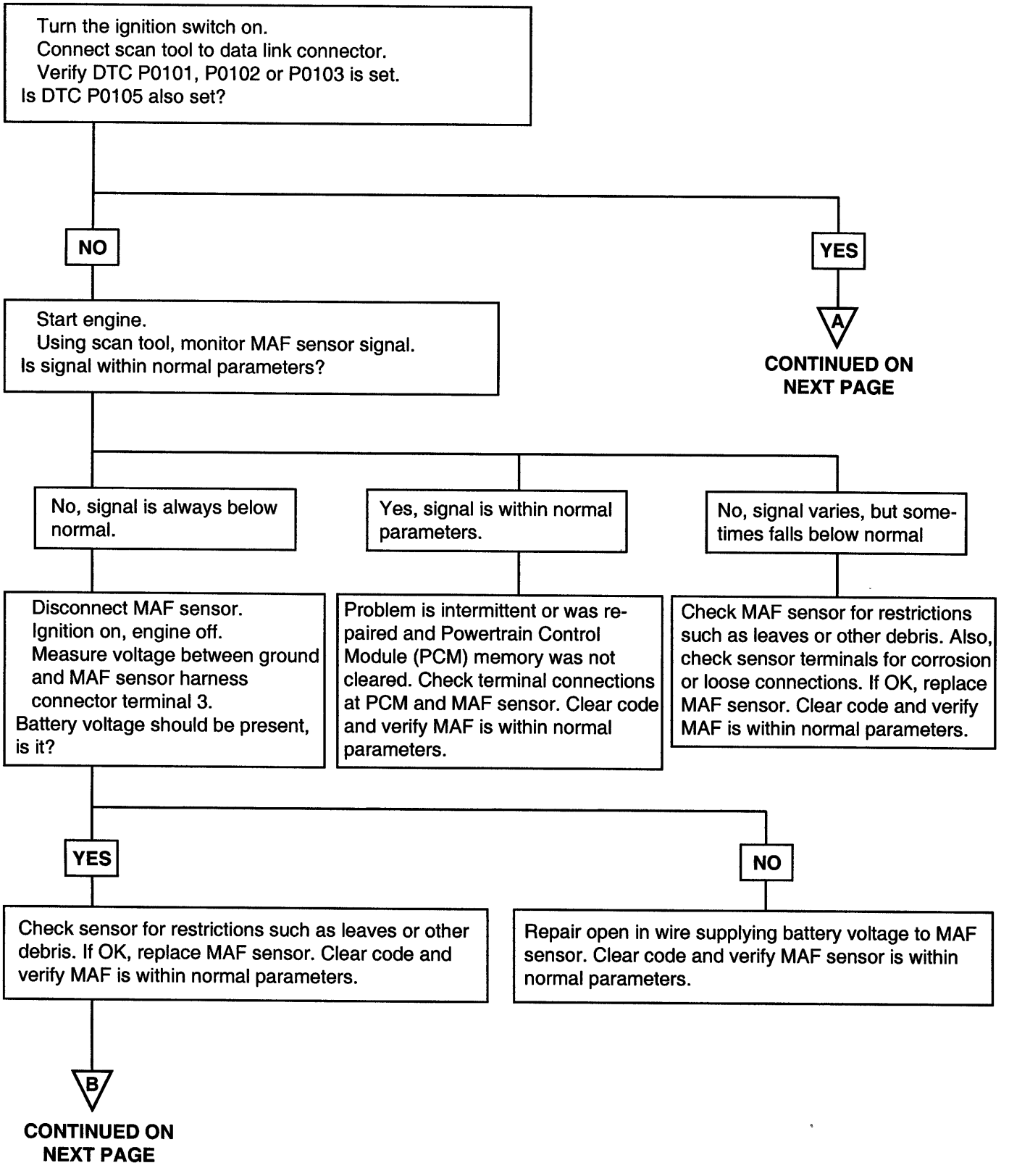

JP0101B

CONTINUED FROM PREVIOUS PAGE

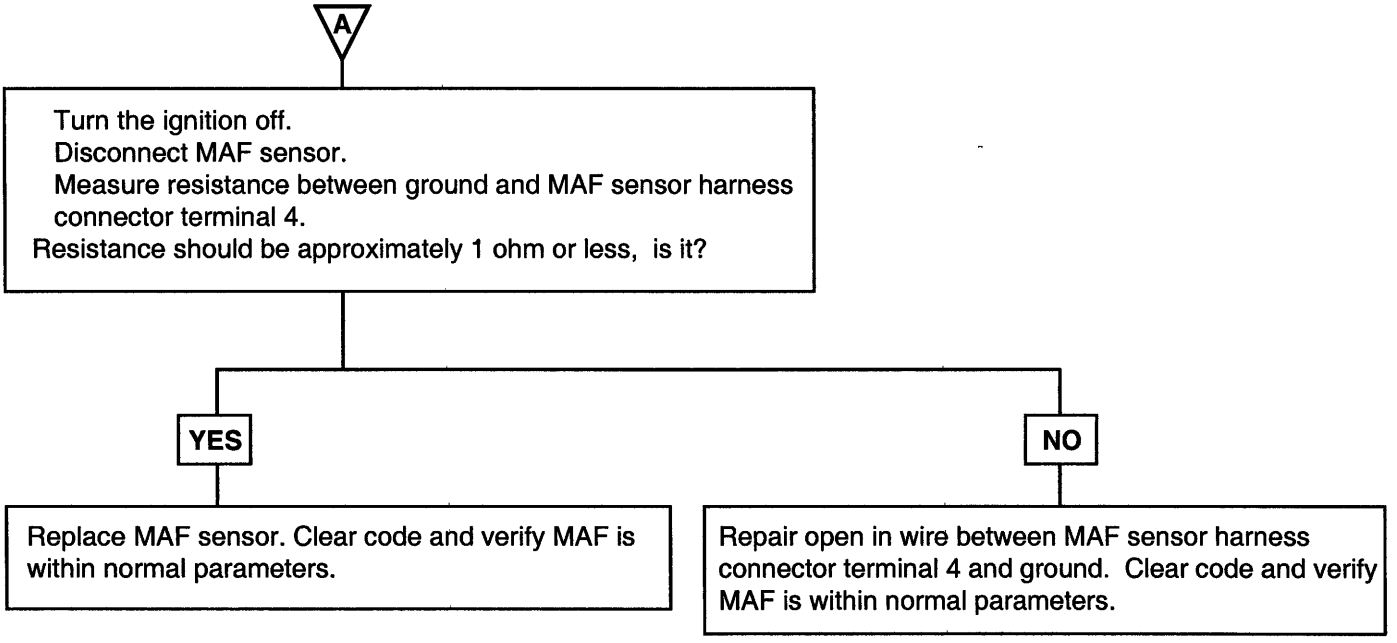

CONTINUED FROM PREVIOUS PAGE

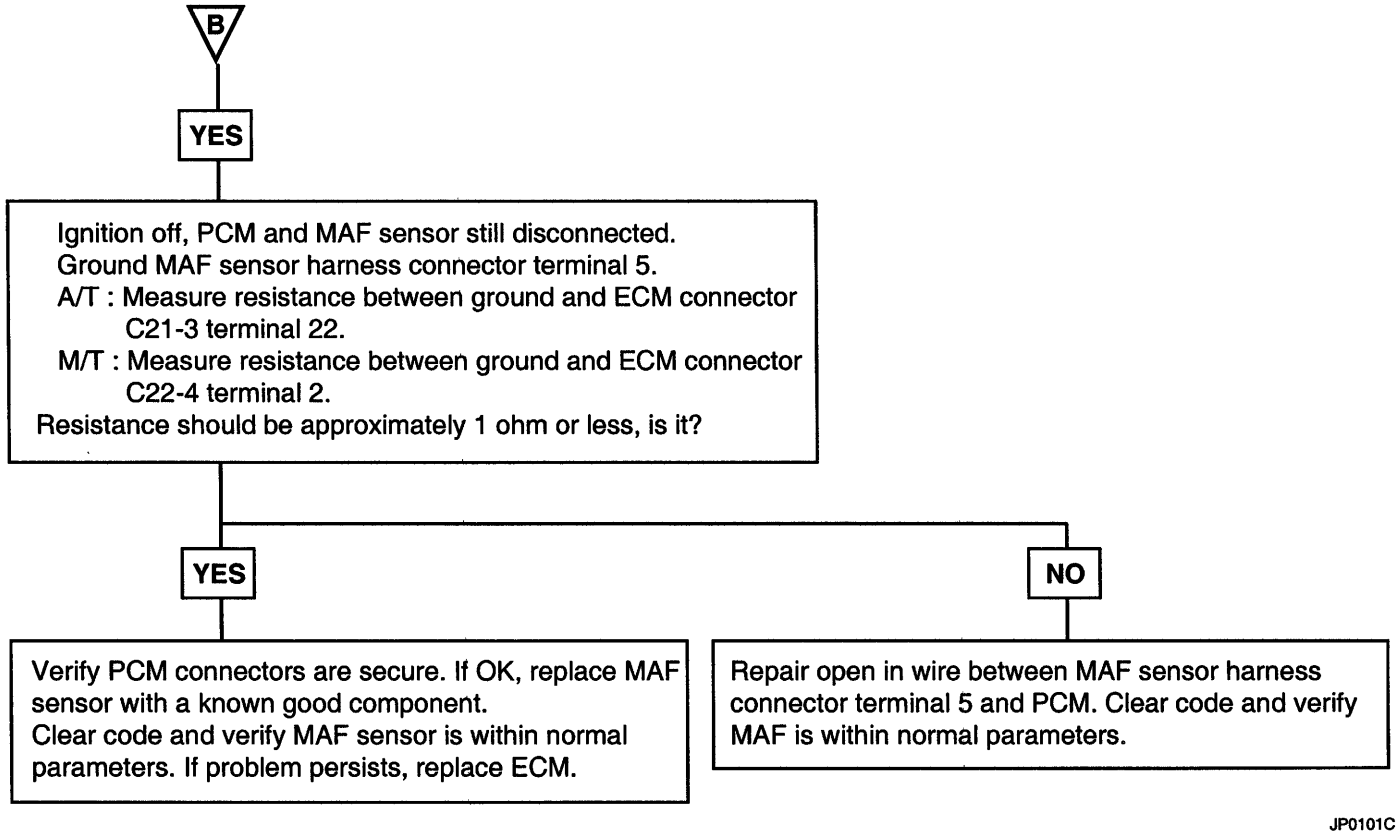

JP0101C

EFJB5020

DTC	Diagnostic item
P0112 P0113	Intake Air temperature Circuit Low Voltage Intake Air temperature Circuit High Voltage

DESCRIPTION

The Intake Air Temperature (IAT) sensor is in the MAF sensor. The IAT sensor is a variable resistor whose resistance changes as the temperature of the air flowing through the air intake changes. The Engine Control Module (ECM) uses the IAT sensor input to adjust fuel injector pulse width. When the temperature sensed is cold, the ECM enriches fuel mixture by increasing injector pulse width; as the air warms, the injector pulse width time is shortened.

TROUBLESHOOTING GUIDE

DTC detection condition	Probable cause
Background • The intake air temperature sensor converts the intake air temperature to a voltage and outputs it. • The engine control module checks whether the voltage is within a specified range. Check Area • Sixty seconds or more have passed since the starting sequence was completed. Judgment Criteria • Sensor output voltage has continued to be 4.6V or higher [corresponding to an intake air temperature of -45°C (-49°F) or lower] for 4 sec. • Sensor output voltage has continued to be 0.2V or lower [corresponding to an intake air temperature of 125°C (257°F) or higher] for 4 sec.	• MAF sensor failed • Open or shorted mass air flow sensor circuit, or loose connector • Engine control module failed

CIRCUIT DIAGRAM

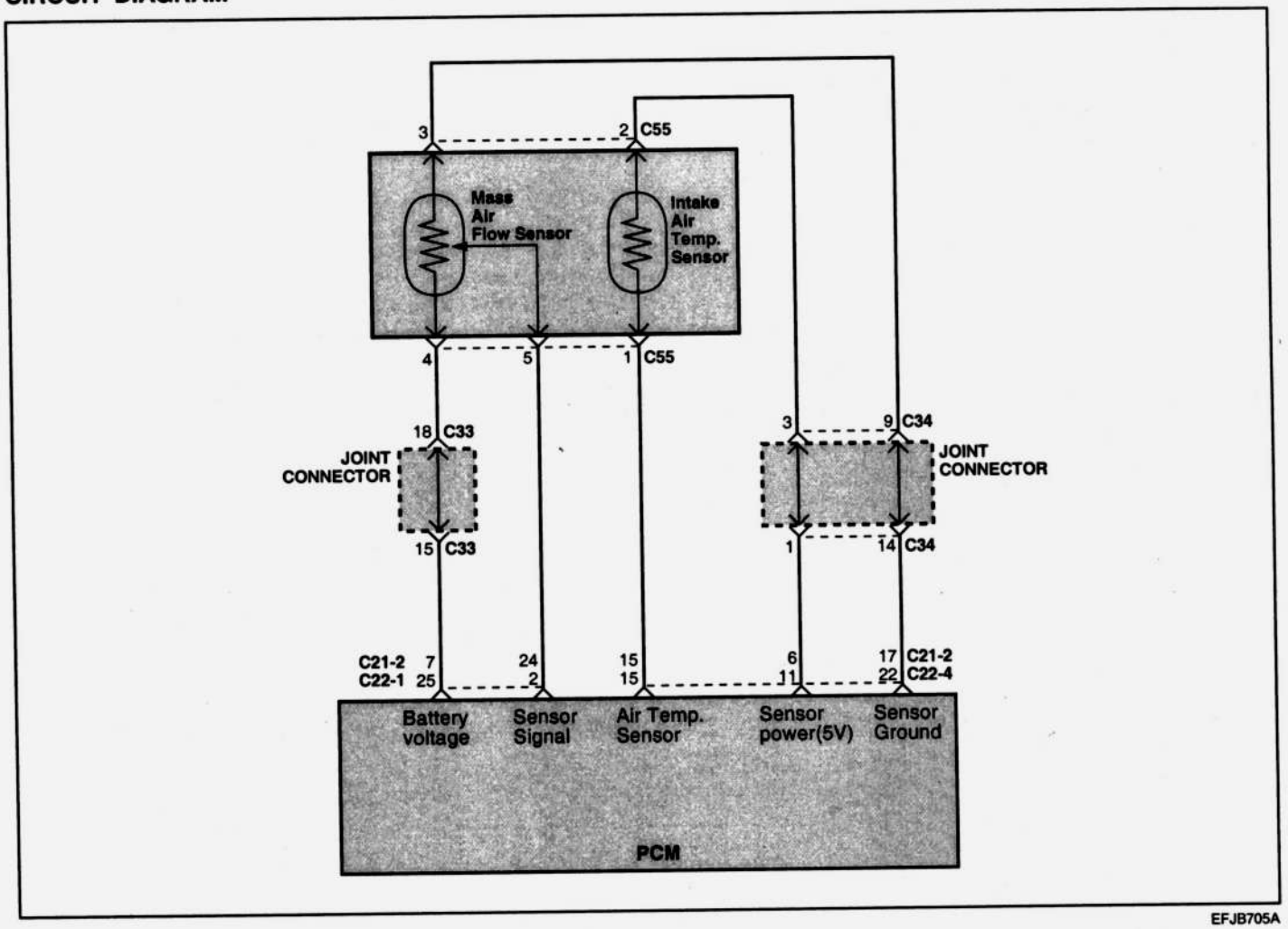

EFJB705A

TEST PROCEDURE

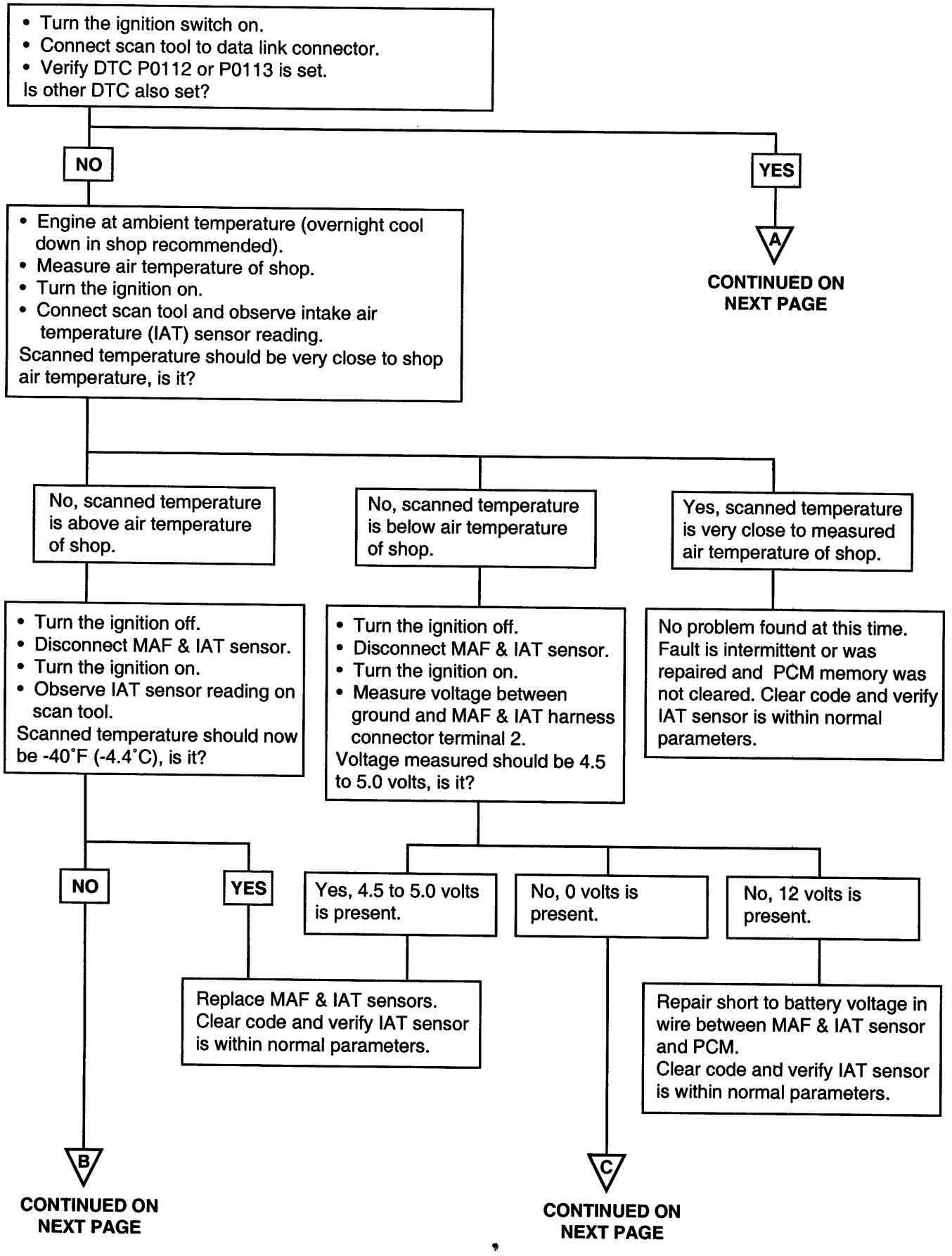

JP0112B

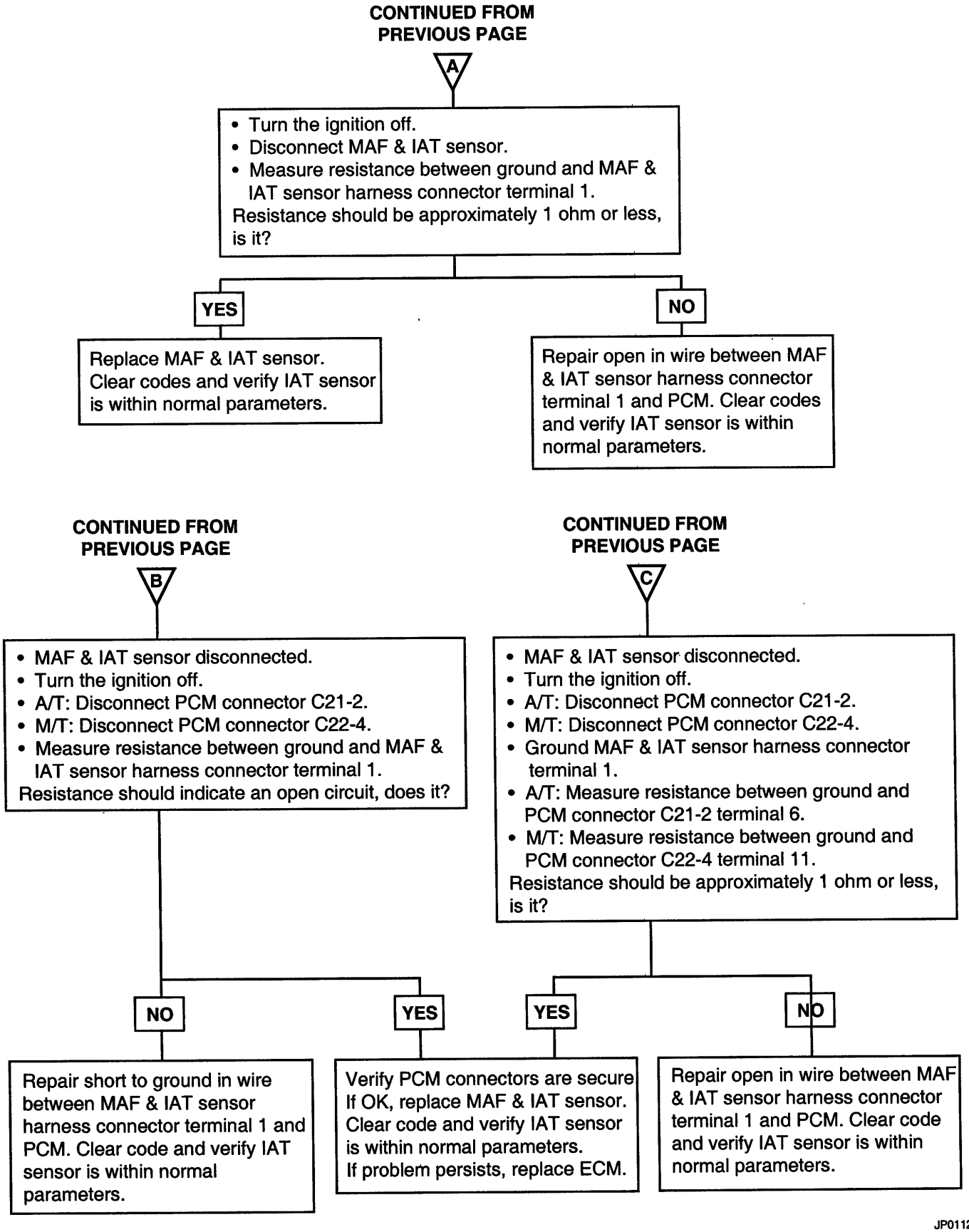
CONTINUED FROM PREVIOUS PAGE
A
• Turn the ignition off.
• Disconnect MAF & IAT sensor.
• Measure resistance between ground and MAF & IAT sensor harness connector terminal 1.
Resistance should be approximately 1 ohm or less, is it?
YES
Replace MAF & IAT sensor. Clear codes and verify IAT sensor is within normal parameters.
NO
Repair open in wire between MAF & IAT sensor harness connector terminal 1 and PCM. Clear codes and verify IAT sensor is within normal parameters.
CONTINUED FROM PREVIOUS PAGE
B
• MAF & IAT sensor disconnected.
• Turn the ignition off.
• A/T: Disconnect PCM connector C21-2.
• M/T: Disconnect PCM connector C22-4.
• Measure resistance between ground and MAF & IAT sensor harness connector terminal 1.
Resistance should indicate an open circuit, does it?
NO
Repair short to ground in wire between MAF & IAT sensor harness connector terminal 1 and PCM. Clear code and verify IAT sensor is within normal parameters.
YES
Verify PCM connectors are secure If OK, replace MAF & IAT sensor. Clear code and verify IAT sensor is within normal parameters. If problem persists, replace ECM.
CONTINUED FROM PREVIOUS PAGE
C
• MAF & IAT sensor disconnected.
• Turn the ignition off.
• A/T: Disconnect PCM connector C21-2.
• M/T: Disconnect PCM connector C22-4.
• Ground MAF & IAT sensor harness connector terminal 1.
• A/T: Measure resistance between ground and PCM connector C21-2 terminal 6.
• M/T: Measure resistance between ground and PCM connector C22-4 terminal 11.
Resistance should be approximately 1 ohm or less, is it?
YES
NO
Repair open in wire between MAF & IAT sensor harness connector terminal 1 and PCM. Clear code and verify IAT sensor is within normal parameters.

JP0112C

EFJB5030

DTC	Diagnostic item
P0115 P0116	Engine Coolant Temperature Circuit Malfunction (Open/Short) Engine Coolant Temperature Circuit Drift

DESCRIPTION

The Engine Coolant Temperature (ECT) sensor is located in the coolant passage of the cylinder head. The ECT sensor is a variable resistor whose resistance changes as the temperature of the engine coolant flowing past the sensor changes. When the coolant temperature is low, the sensor resistance is high; when the coolant temperature is high, the sensor resistance is low. The Engine Control Module (ECM) checks ECT voltage fifty times per second and uses the information to adjust the fuel injector pulse width and ignition timing. When the temperature sensed is very cold, the ECM enriches the fuel mixture.

TROUBLESHOOTING GUIDE

DTC detection condition	Probable cause
Background • The engine coolant temperature sensor converts the engine coolant temperature to a voltage and outputs it. • The Engine Control Module checks whether the voltage is within a specified range. In addition, it checks that the engine coolant temperature (signal) does not drop while the engine is warming up. Check Area, Judgment Criteria • Sensor output voltage has continued to be 4.6V or higher [corresponding to a coolant temperature of -45°C (-49°F) or lower] for 4 sec. • Sensor output voltage has continued to be 0.1V or lower [corresponding to a coolant temperature of 140°C (284°F) or higher] for 4 sec. Check Area, Judgment Criteria • Sensor output voltage increased from a value lower than 1.6V to a value higher than 1.6V [Coolant temperature decreases from a higher than 40°C (104°F) temperature to a lower than 40°C (104°F) temperature.]. • Then the sensor output voltage has continued to be 1.6V or higher for 5 min. Check Area • The Engine Coolant Temperature is approx. 40°C (104°F) or less after starting sequence is completed. Judgment Criteria • Approx. 60 - 300 seconds have passed for the engine coolant temperature to rise to about 40°C (104°F) after starting sequence was completed.	• Engine Coolant Temperature sensor failed. • Open or shorted Engine Coolant Temperature sensor circuit, or loose connector. • Engine Control Module failed.

CIRCUIT DIAGRAM

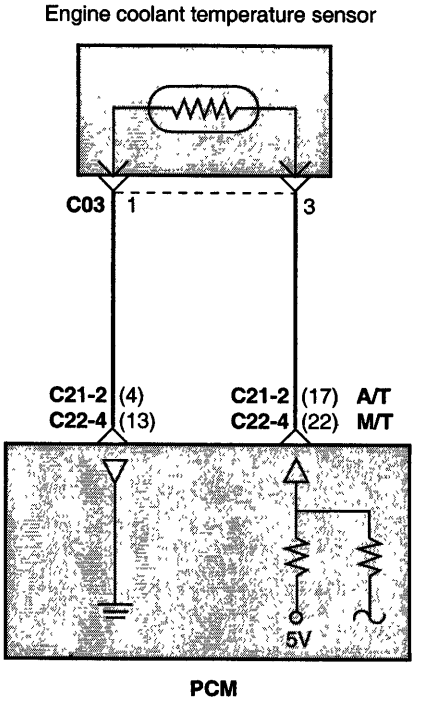

JP0115A

TEST PROCEDURE

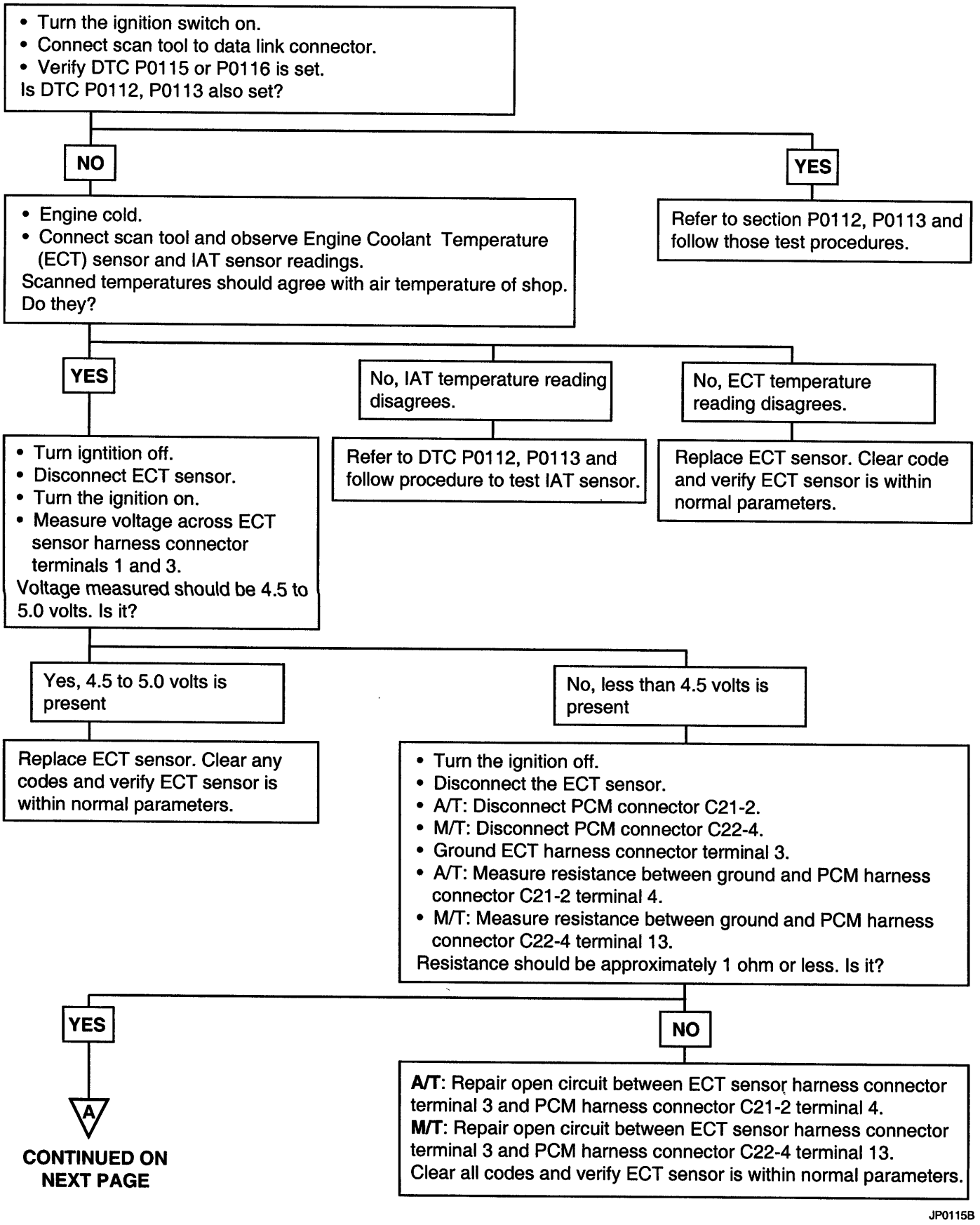

JP0115B

CONTINUED FROM PREVIOUS PAGE

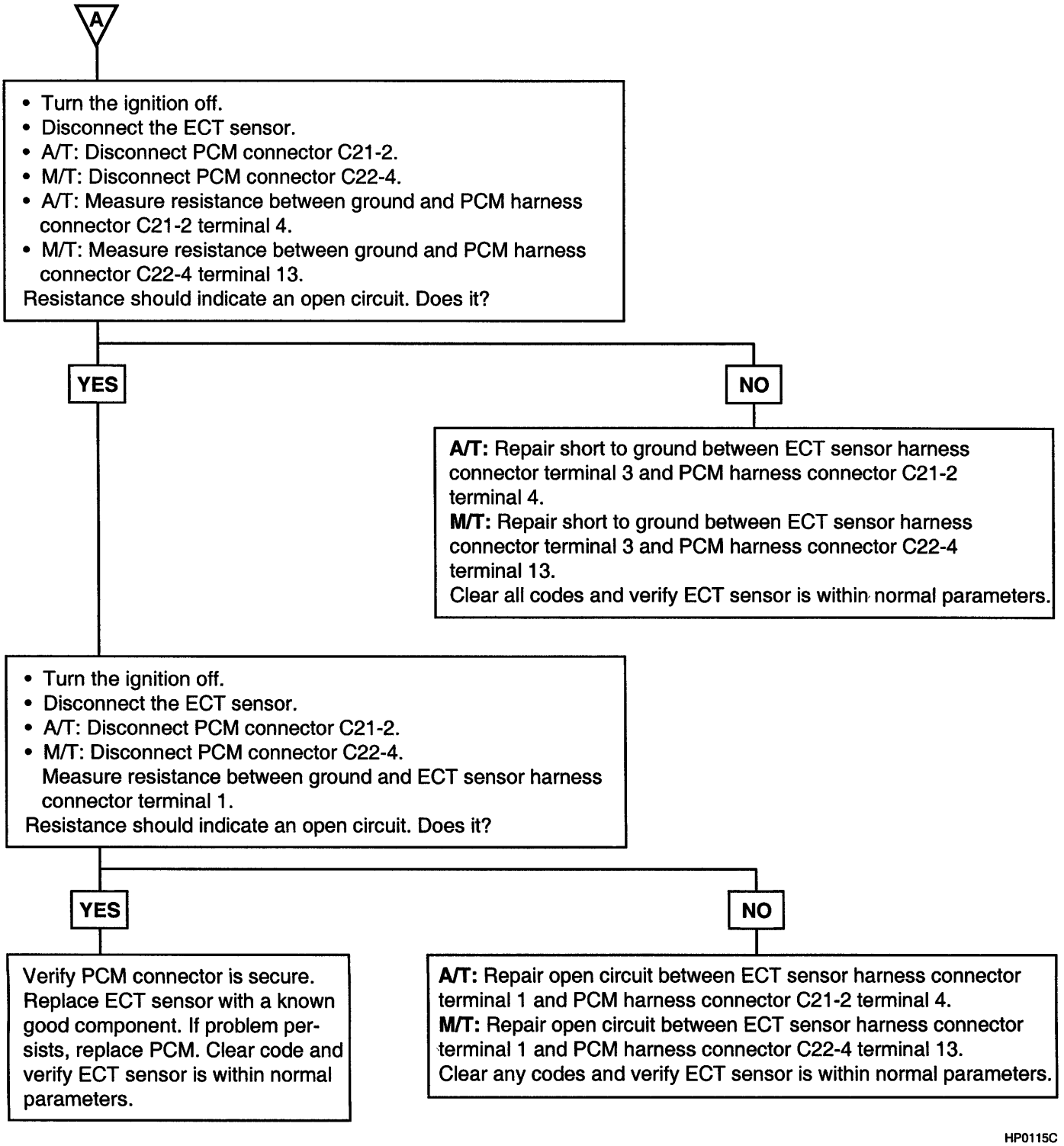

HP0115C

EFJB5040

DTC	Diagnostic item
P0121	Throttle Position Circuit Range/Performance Problem
P0122	Throttle Position Circuit Low Voltage
P0123	Throttle Position Circuit High Voltage

DESCRIPTION

The throttle position (TP) sensor mounts on the side of the throttle body and is connected to the throttle blade shaft. The TP sensor is a variable resistor (potentiometer) whose resistance changes according to the throttle blade shaft position. During acceleration, the TP sensor resistance decreases; during deceleration, the TP sensor resistance increases. The TP sensor also includes an idle position switch. The switch is closed in the idle position. The Engine Control Module (ECM) applies a reference voltage to the TP sensor and then measures the voltage that is present on the TP sensor signal circuit. The ECM uses the TP sensor signal to adjust the timing and injector pulse width. The TP sensor signal along with the MAP sensor signal is used by the ECM to calculate the engine load.

TROUBLESHOOTING GUIDE

DTC detection condition	Probable cause
Background • The Throttle Position sensor outputs a voltage which is proportional to the throttle valve opening angle. • The Engine Control Module checks whether the voltage output by the throttle position sensor is within a specified range. In addition, it checks that the voltage output does not become too large while the engine is idling. Check Area, Judgment Criteria • With the close Throttle Position switch se to ON, the sensor output voltage has continued to be 2V or higher for 4 sec. • Sensor output voltage has continued to be 0.2V or lower for 4 sec. Check Area • Engine speed is between 500 and 3,000 r/min. • Engine load is lower than 30%. Judgment Criteria • Sensor output voltage has continued to be 4.6V or higher for 4 sec.	• Throttle Position sensor failed or maladjusted. • Open or shorted Throttle Position sensor circuit, or loose connector. • Closed Throttle Position switch ON malfunction. • Closed Throttle Position switch signal wire shorted. • Engine control module failed.

CIRCUIT DIAGRAM

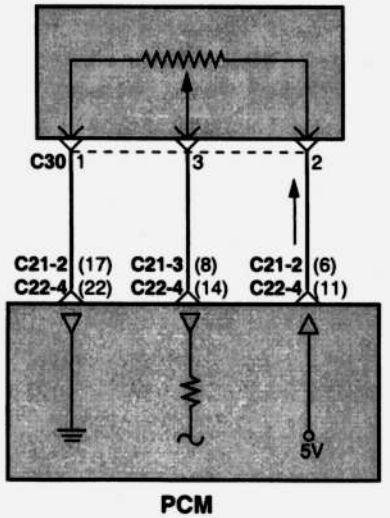

JP0121A

TEST PROCEDURE

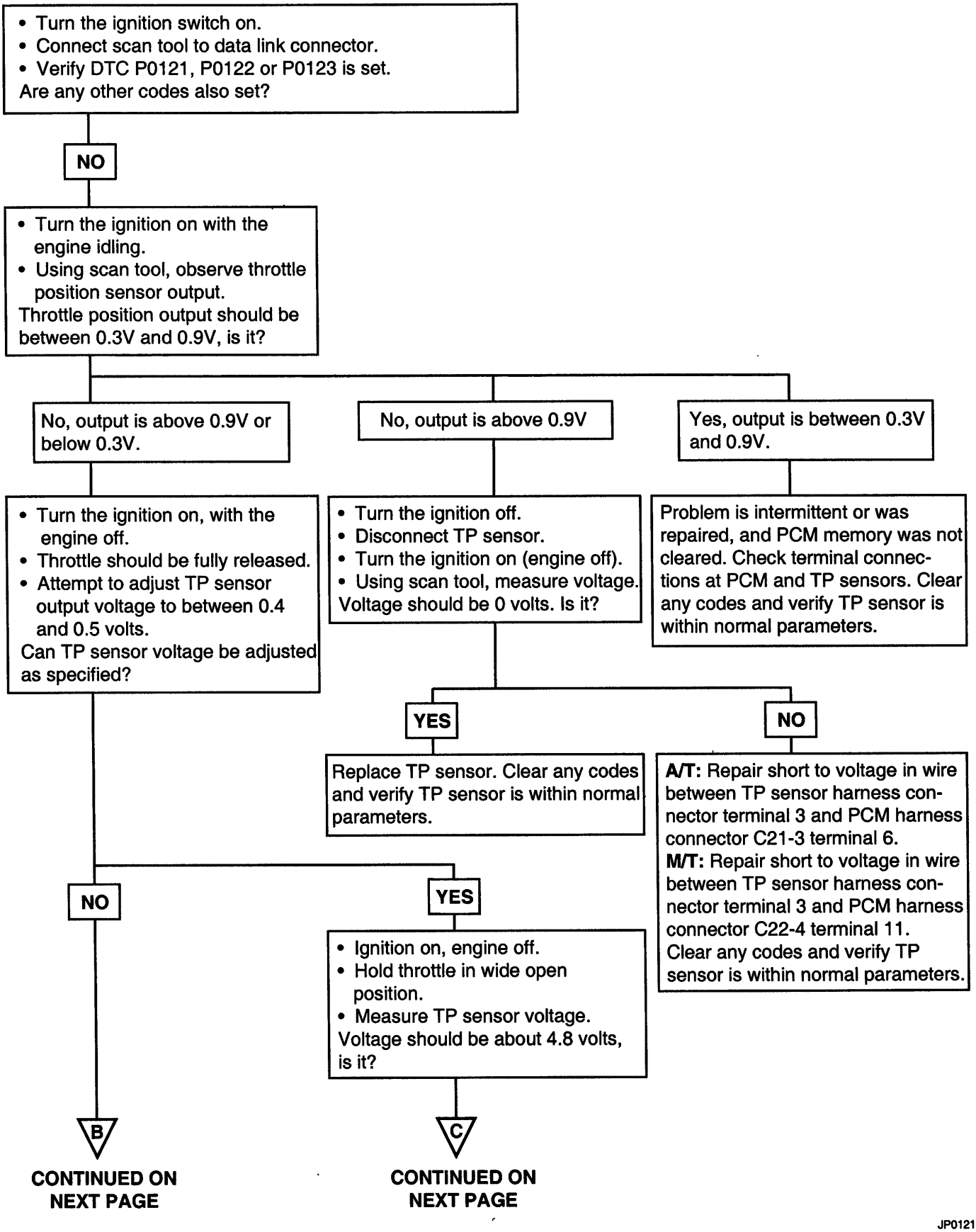

JP0121B

CONTINUED FROM PREVIOUS PAGE

B

- Turn the ignition off.
- Disconnect TP sensor.
- Turn the ignition on.
- Using a voltmeter, measure voltage between ground and TP sensor harness connector terminal 2.

5 volts should be present. Is it?

YES

- Turn the ignition on with the engine off.
- Disconnect the TP sensor.
- Measure resistance between ground and TP sensor harness connector terminal 1.

Resistance should be approximately 1 ohm or less. Is it?

NO

A/T: Repair open in wire between TP sensor harness connector terminal 2 and PCM harness connector C21-2 terminal 6.
M/T: Repair short to voltage in wire between TP sensor harness connector terminal 2 and PCM harness connector C22-4 terminal 11.
Clear any codes and verify TP sensor is within normal parameters.

YES

- Connect a fused jumper across TP sensor harness connector terminals 1 and 2.
- Using scan tool, observe TP sensor's output voltage.

Voltage should be above 4.8 volts. Is it?

NO

A/T: Repair poor ground or open in wire between TP sensor harness connector terminal 1 and PCM harness connector C21-3 terminal 17.
M/T: Repair poor ground or open in wire between TP sensor harness connector terminal 1 and PCM harness C22-4 terminal 22.
Clear code and verify TP sensor is within normal parameters.

NO

- Turn the ignition off.
- Fused jumper in place.
- A/T: Measure voltage (backprobe) between ground and PCM connector C21-2 terminal 6.
- M/T: Measure voltage (backprobe) between ground and PCM connector C22-4 terminal 11.

5 volts should be present. Is it?

YES

Replace TP sensor.
Clear code and verify TP sensor is within normal parameters.

D

CONTINUED ON NEXT PAGE

JP0121C

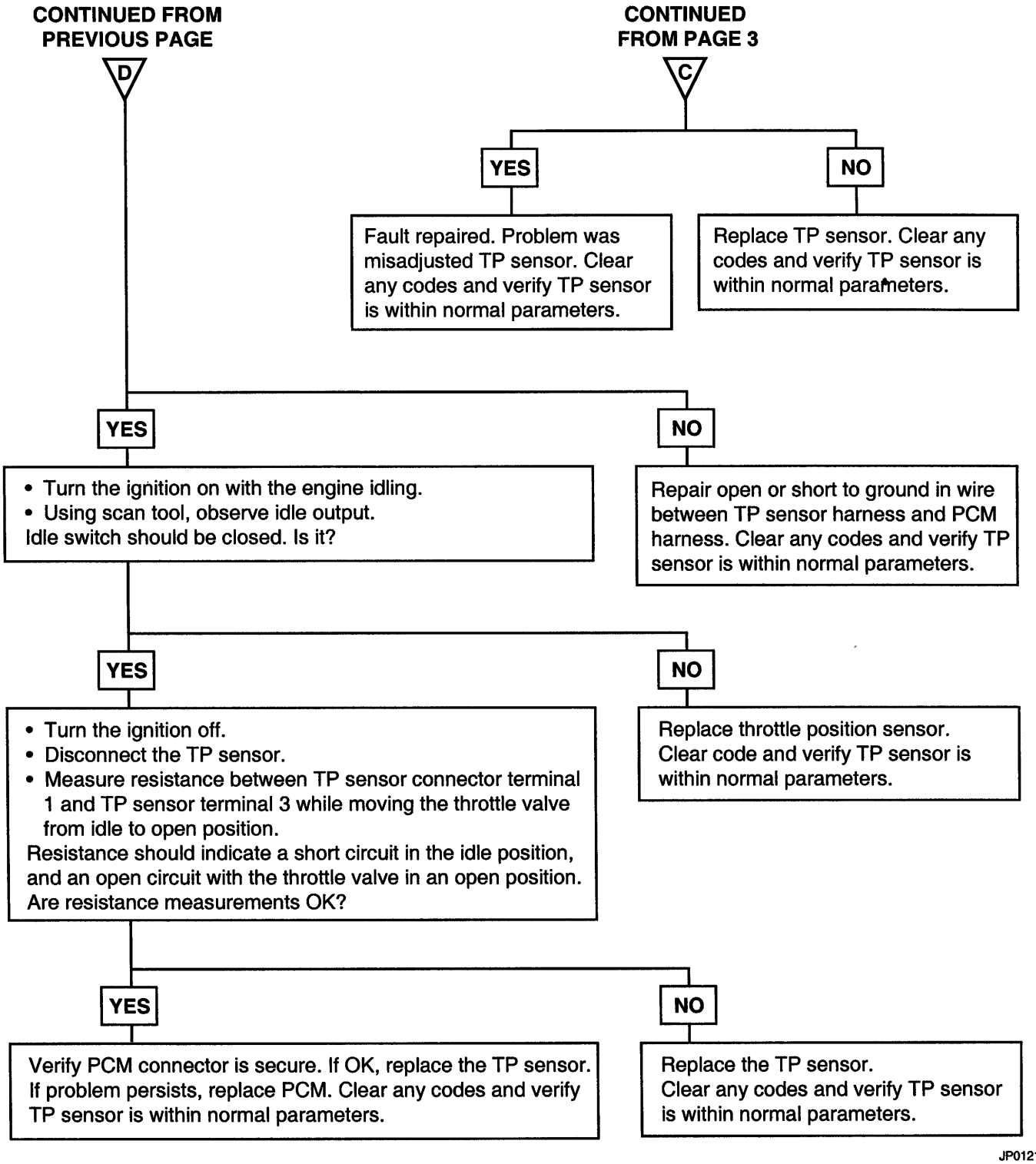
CONTINUED FROM PREVIOUS PAGE
D
CONTINUED FROM PAGE 3
C
YES
NO
Fault repaired. Problem was misadjusted TP sensor. Clear any codes and verify TP sensor is within normal parameters.
Replace TP sensor. Clear any codes and verify TP sensor is within normal parameters.
YES
NO
• Turn the ignition on with the engine idling.
• Using scan tool, observe idle output.
Idle switch should be closed. Is it?
Repair open or short to ground in wire between TP sensor harness and PCM harness. Clear any codes and verify TP sensor is within normal parameters.
YES
NO
• Turn the ignition off.
• Disconnect the TP sensor.
• Measure resistance between TP sensor connector terminal 1 and TP sensor terminal 3 while moving the throttle valve from idle to open position.
Resistance should indicate a short circuit in the idle position, and an open circuit with the throttle valve in an open position.
Are resistance measurements OK?
Replace throttle position sensor. Clear code and verify TP sensor is within normal parameters.
YES
NO
Verify PCM connector is secure. If OK, replace the TP sensor. If problem persists, replace PCM. Clear any codes and verify TP sensor is within normal parameters.
Replace the TP sensor. Clear any codes and verify TP sensor is within normal parameters.

JP0121D

EFJB5060

DTC	Diagnostic item
P0132	Oxygen Sensor Circuit Malfunction (Open)
P0133	Oxygen Sensor Circuit Malfunction (Bank 1, Sensor 1)
P0134	Oxygen Sensor Circuit Malfunction (No Activity)

DESCRIPTION

To obtain a high purification rate for the CO, HC and NOx components of the exhaust gas, a three way catalytic converter is used, but for the most efficient use of the three-way catalytic inverter, the ratio of the air must be precisely controlled so that it is always close to the stoichiometric air-fuel ratio. The oxygen sensor has the characteristic whereby its output voltage changes suddenly in the vicinity of the stoichiometric air-fuel ratio. This characteristic is used to detect the oxygen concentration in the exhaust gas and provide feedback to the computer for control of the air-fuel ratio. When the air-fuel ratio becomes LEAN, the oxygen concentration in the exhaust increases and the oxygen sensor informs the ECM of the LEAN condition (small electromotive force: 0V). When the air-fuel ratio is RICHER than the stoichiometric air-fuel ratio the oxygen concentration in the exhaust gas is reduced and the oxygen sensor informs the ECM of the RICH condition (large electromotive force: 1V).
The ECM determined by the electromotive force from the oxygen sensor whether the air-fuel ratio is RICH or LEAN and controls the injection time accordingly. However, if malfunction of the oxygen sensor causes output of abnormal electromotive force, the ECM is unable to perform an accurate air-fuel ratio control. The heated oxygen sensors include a heater which heats the Zirconia element. The heater is controlled by the ECM. When the intake air volume is low (the temperature of the exhaust gas is low), current flows to the heater to heat the sensor for accurate oxygen concentration detection.

TROUBLESHOOTING GUIDE

DTC detection condition	Probable cause
Background • When the heated oxygen sensor begins to deteriorate, the oxygen sensor signal response becomes poor. • The Engine Control Module forcibly varies the air/fuel mixture to make it leaner and richer and checks the response speed of the heated oxygen sensor. In addition, the Engine Control Module also checks for an open circuit in the heated oxygen sensor output line. Check Area • Coolant temperature sensor: Normal. • Heated oxygen sensor signal voltage has continued to be 0.1V or lower for 3 min. or more after the staring sequence was completed. • Engine Coolant Temperature is higher than 80°C (176°F). • Engine speed is higher than 1,200 r/min. • Engine load is 25% or more. Judgment Criteria • Input voltage supplied to the engine control module interface circuit is 4.5V or more when 5V is applied to the heated oxygen sensor output line via a resistor. Check Area • Coolant temperature sensor: Normal. • Engine Coolant Temperature is 50°C (122°F) or more. • Engine speed is between 1,500 and 3,000 r/min or 1,100 and 3,000 r/min. • Engine load is 25 - 60%. • Intake air temperature is -10°C (14°F) or more. • Under the closed loop air-fuel control. • Monitoring Time: 8sec. Judgment Criteria • When the air-fuel ratio is focibly changed (lean to rich and rich to lean), the heated oxygen sensor signal doesn't provide response within 1.28 sec. • Monitored only once per trip.	• Heated oxygen sensor deteriorated • Open circuit in heated oxygen sensor output line • Engine control module failed

CIRCUIT DIAGRAM

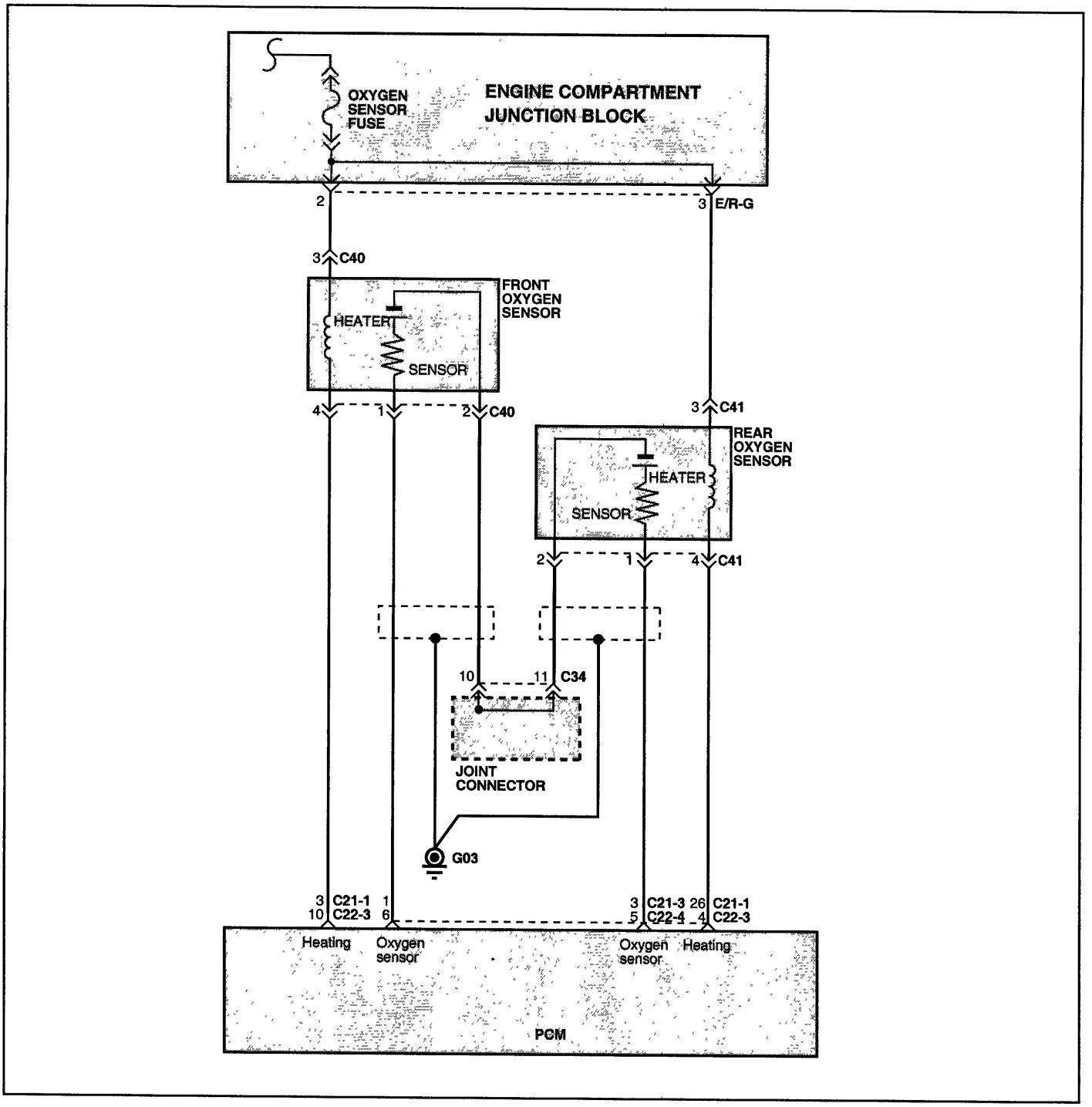

EFJB719A

TEST PROCEDURE

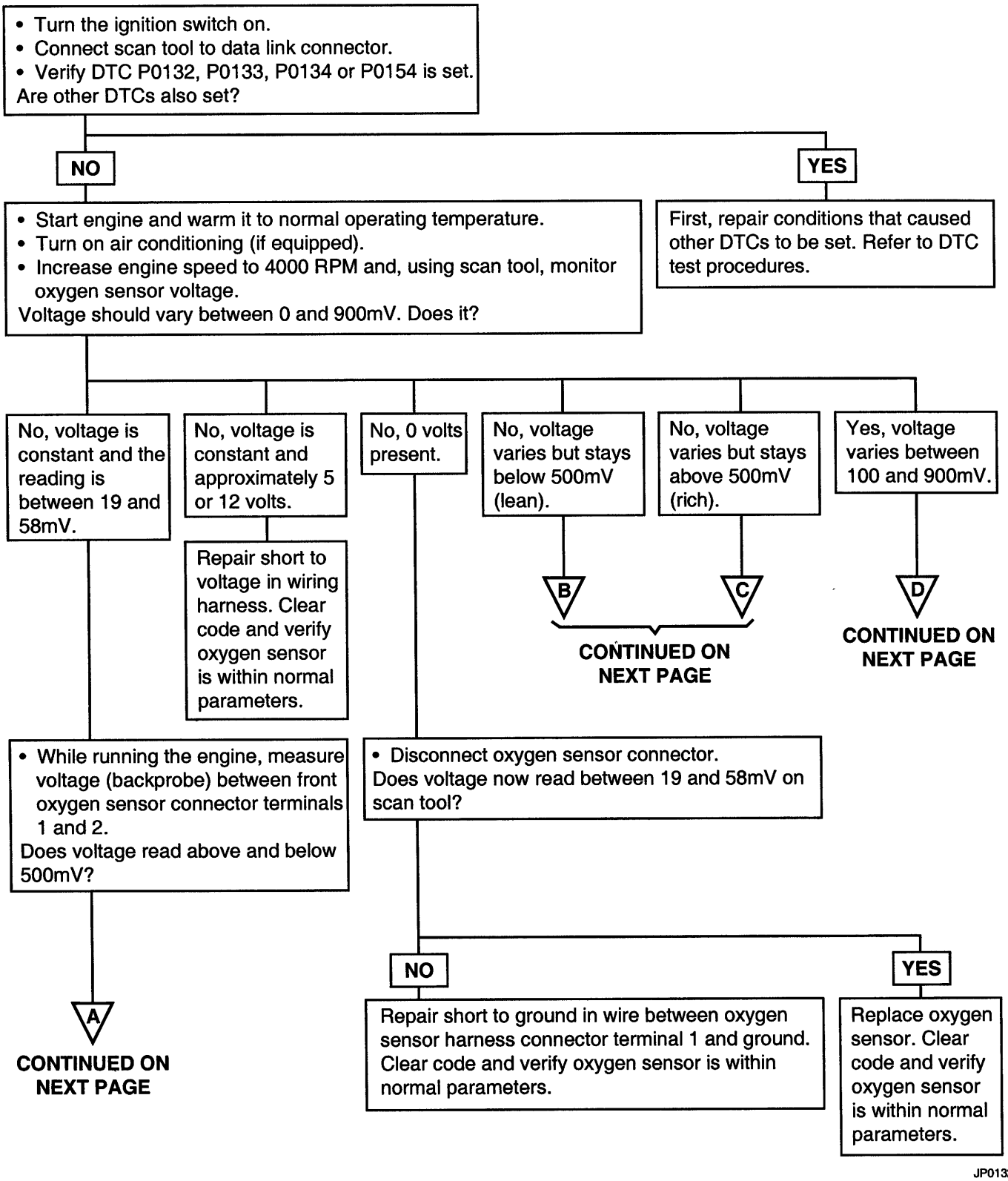

JP0132B

CONTINUED FROM PREVIOUS PAGE

A

YES

- Turn the ignition off.
- Disconnect front oxygen sensor.
- A/T: Disconnect PCM connector C21-3.
- M/T: Disconnect PCM connector C22-4.
- Ground front oxygen sensor harness connector terminal 2.
- A/T: Measure resistance between ground and PCM harness connector C21-2 terminal 17.
- M/T: Measure resistance between ground and PCM harness connector C22-4 terminal 22.

Resistance measured should be approximately 1 ohm or less. Is it?

NO

Replace oxygen sensor. Clear code and verify oxygen sensor is within normal parameters.

YES

Verify PCM connectors are secure. If OK, replace Front Oxygen sensor with a known component of good quality. Clear code and verify oxygen sensor is within normal parameters.
If problem persists, replace PCM.

NO

Repair open wire or cause of high resistance. Clear code and verify oxygen sensor is within normal parameters.

CONTINUED FROM PREVIOUS PAGE

B

Voltage varies but stays below 500mV (lean).

- Inspect air inlet downstream of air flow sensor for leaks or damage.
- Inspect exhaust manifold for cracks.

Are any leaks or damage found?

YES

Repair leaks or replace exhaust manifold. Clear code and verify oxygen sensor is within normal parameters.

NO

CONTINUED FROM PREVIOUS PAGE

C

Voltage varies but stays above 500mV (rich).

- Perform a fuel pressure test

Is fuel pressure within specification and no pressure leak down is observed?

E

CONTINUED ON NEXT PAGE

HP0133C

CONTINUED FROM PREVIOUS PAGE

D

Voltage varies between 0 and 900mV.

CONTINUED FROM PREVIOUS PAGE

E

YES

- Turn the ignition off.
- Disconnect the connector at the ignition coil.
- Measure voltage drop across negative battery cable by connecting voltmeter between negative battery post and cable attachment point on engine while cranking the engine.

Measured voltage drop should be less than 0.5 volts, is it?

NO

Follow diagnostic procedures. Clear code and verify oxygen sensor is within normal parameters.

YES

- Disconnect negative battery terminal.
- Measure resistance between generator case and an engine ground point.

Resistance measured should be approximately 1 ohm or less. Is it?

NO

Replace negative battery cable. Clear code and verify oxygen sensor is within normal parameters.

YES

- If Malfunction Indicator Lamp (MIL) is turned on intermittently and DTC P0133 is set, the problem is most likely a poor ground circuit. Clean negative battery terminal and engine ground. Also clean mating surfaces of generator housing and engine block.
- If Malfunction Indicator Lamp (MIL) was on and DTC P0133 is set, replace oxygen sensor.
- Clear code and verify oxygen sensor is within normal parameters.

NO

Clean mating surfaces of generator housing and engine block. Clear code and verify oxygen sensor is within normal parameters.

HP0133D

EFJB5070

DTC	Diagnostic item
P0135	Oxygen Sensor Heater Circuit Malfunction (Bank 1, Sensor 1)

DESCRIPTION

To obtain a high purification rate for the CO, HC and NOx components of the exhaust gas, a three way catalytic converter is used, but for the most efficient use of the three-way catalytic inverter, the ratio of the air must be precisely controlled so that it is always close to the stoichiometric air-fuel ratio. The oxygen sensor has the characteristic whereby its output voltage changes suddenly in the vicinity of the stoichiometric air-fuel ratio. This characteristic is used to detect the oxygen concentration in the exhaust gas and provide feedback to the computer for control of the air-fuel ratio. When the air-fuel ratio becomes LEAN, the oxygen concentration in the exhaust increases and the oxygen sensor informs the ECM of the LEAN condition (small electromotive force: 0V). When the air-fuel ratio is RICHER than the stoichiometric air-fuel ratio the oxygen concentration in the exhaust gas is reduced and the oxygen sensor informs the ECM of the RICH condition (large electromotive force: 1V).
The ECM determined by the electromotive force from the oxygen sensor whether the air-fuel ratio is RICH or LEAN and controls the injection time accordingly. However, if malfunction of the oxygen sensor causes output of abnormal electromotive force, the ECM is unable to perform an accurate air-fuel ratio control. The heated oxygen sensors include a heater which heats the Zirconia element. The heater is controlled by the ECM. When the intake air volume is low (the temperature of the exhaust gas is low), current flows to the heater to heat the sensor for accurate oxygen concentration detection.

TROUBLESHOOTING GUIDE

DTC detection condition	Probable cause
Background • The Engine Control Module checks whether the heater current is within a specified range when the heater is energized. Check Area • Battery voltage is between 12 and 16V. Judgment Criteria • Heater current of the front heated oxygen sensor heater (Bank 1 Sensor 1) has continued to be 0.2 A or less, or 3.5 A or higher for 6 sec. • Monitored only once per trip.	• Open or shorted oxygen sensor heater circuit • Open circuit in oxygen sensor heater • Engine control module failed

CIRCUIT DIAGRAM

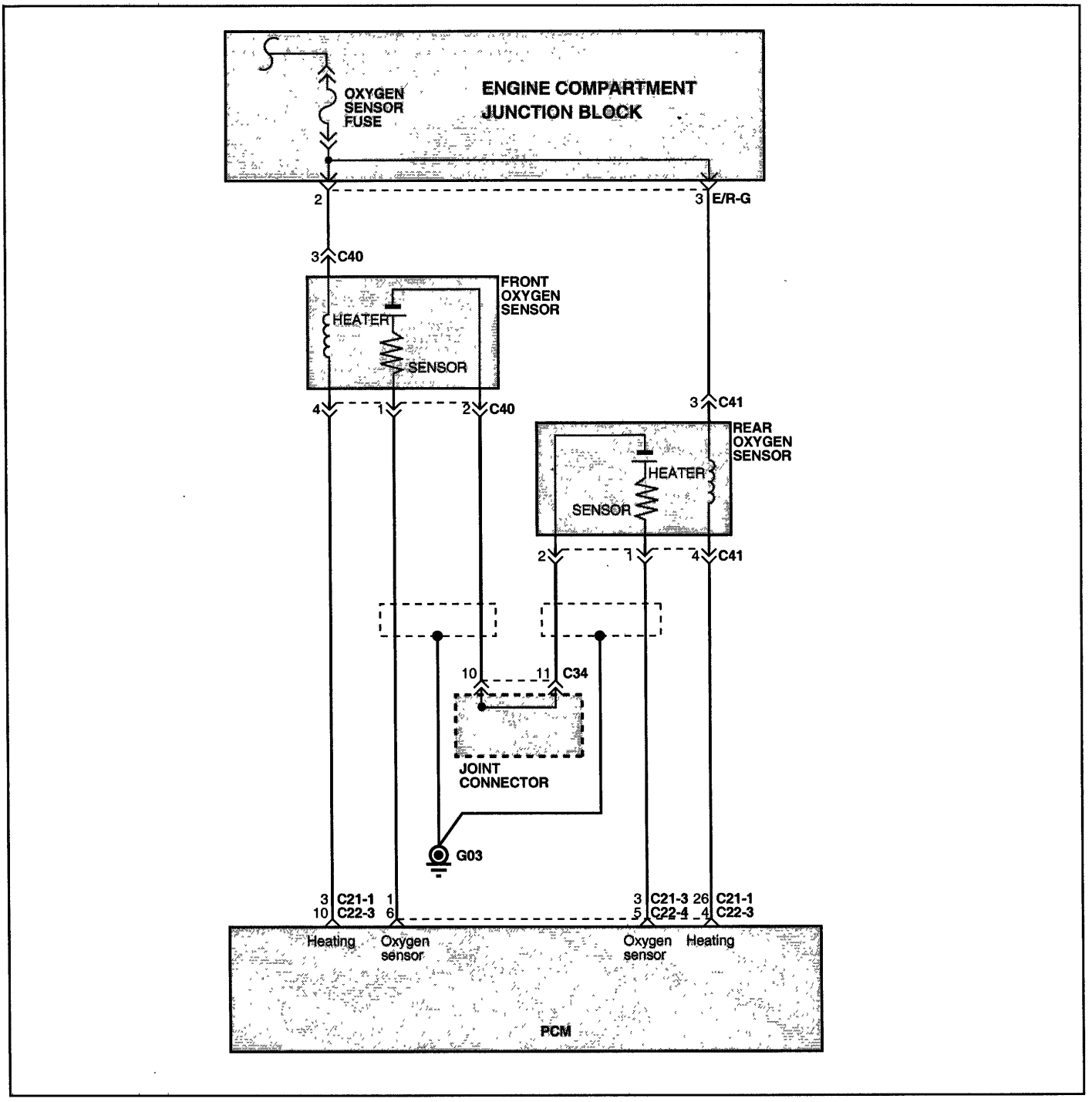

EFJB719A

TEST PROCEDURE

- Turn the ignition switch on.
- Connect scan tool to data link connector.
- Verify DTC P0135 or P0155 is set.

- Disconnect front oxygen sensor.
- Start engine.
- Measure voltage between oxygen sensor harness connector terminal 3 and ground.

Voltage should between 12 and 16 volts. Is it?

YES

- Turn the ignition switch off.
- Disconnect the front oxygen sensor.
- A/T: Disconnect PCM connector C21-1.
- Ground front oxygen sensor harness terminal 4.
- Measure resistance between ground and PCM harness connector C21-2 terminal 17.
- M/T: Disconnect PCM connector C22-3.
- Ground front oxygen sensor harness terminal 4.
- Measure resistance between ground and PCM harness connector C22-4 terminal 22.

Resistance should be 1 ohm or less. Is it?

YES

- Turn the ignition switch off.
- Disconnect the front oxygen sensor.
- A/T: Disconnect PCM connector C21-1. Measure resistance between ground and oxygen sensor harness connector terminal 4.
- M/T: Disconnect PCM connector C22-3. Measure resistance between ground and oxygen sensor harness connector terminal 4.

Resistance should indicate an open circuit. Does it?

A

CONTINUED ON NEXT PAGE

NO

A/T: Repair open or short to ground in wire between engine compartment junction block terminal and oxygen sensor harness connector terminal 3.
M/T: Repair open or short to ground in wire between engine compartment junction block terminal and oxygen sensor harness connector terminal 3.
Clear code and verify oxygen sensor is within normal parameters.

NO

A/T: Repair open in wire between oxygen sensor harness connector terminal 4 and PCM harness connector C21-1 terminal 3.
M/T: Repair open in wire between oxygen sensor harness connector terminal 4 and PCM harness connector C22-3 terminal 10.
Clear code and verify oxygen sensor is within normal parameters.

JP0135B

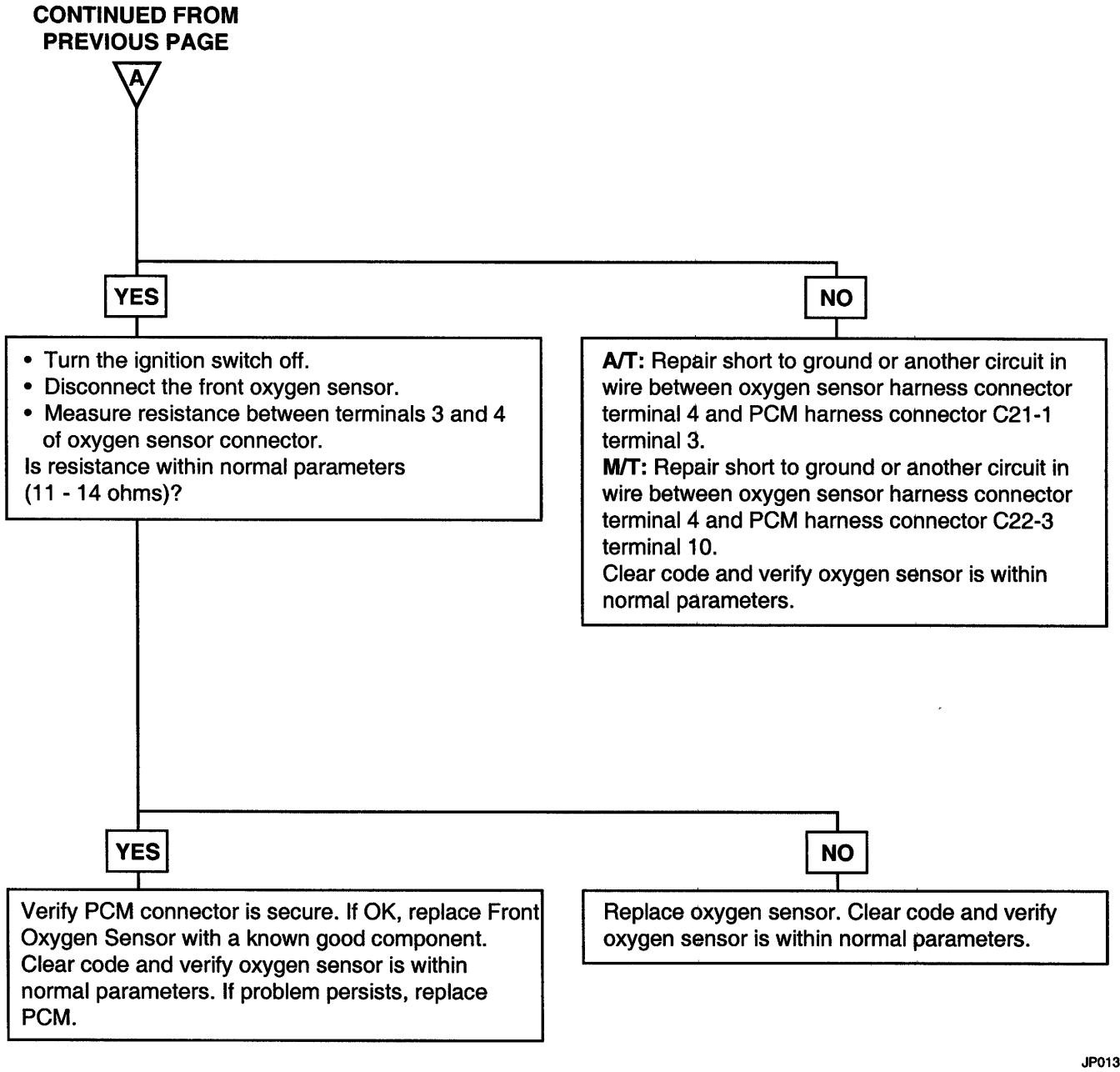
CONTINUED FROM PREVIOUS PAGE
A
YES
NO
• Turn the ignition switch off.
• Disconnect the front oxygen sensor.
• Measure resistance between terminals 3 and 4 of oxygen sensor connector.
Is resistance within normal parameters (11 - 14 ohms)?
A/T: Repair short to ground or another circuit in wire between oxygen sensor harness connector terminal 4 and PCM harness connector C21-1 terminal 3.
M/T: Repair short to ground or another circuit in wire between oxygen sensor harness connector terminal 4 and PCM harness connector C22-3 terminal 10.
Clear code and verify oxygen sensor is within normal parameters.
YES
NO
Verify PCM connector is secure. If OK, replace Front Oxygen Sensor with a known good component. Clear code and verify oxygen sensor is within normal parameters. If problem persists, replace PCM.
Replace oxygen sensor. Clear code and verify oxygen sensor is within normal parameters.

JP0135C

EFJB5080

DTC	Diagnostic item
P0136	Oxygen Sensor Circuit Malfunction (Bank 1, Sensor 2)

DESCRIPTION

To obtain a high purification rate for the CO, HC and NOx components of the exhaust gas, a three way catalytic converter is used, but for the most efficient use of the three-way catalytic inverter, the ratio of the air must be precisely controlled so that it is always close to the stoichiometric air-fuel ratio. The oxygen sensor has the characteristic whereby its output voltage changes suddenly in the vicinity of the stoichiometric air-fuel ratio. This characteristic is used to detect the oxygen concentration in the exhaust gas and provide feedback to the computer for control of the air-fuel ratio. When the air-fuel ratio becomes LEAN, the oxygen concentration in the exhaust increases and the oxygen sensor informs the ECM of the LEAN condition (small electromotive force: 0V). When the air-fuel ratio is RICHER than the stoichiometric air-fuel ratio the oxygen concentration in the exhaust gas is reduced and the oxygen sensor informs the ECM of the RICH condition (large electromotive force: 1V).
The ECM determined by the electromotive force from the oxygen sensor whether the air-fuel ratio is RICH or LEAN and controls the injection time accordingly. However, if malfunction of the oxygen sensor causes output of abnormal electromotive force, the ECM is unable to perform an accurate air-fuel ratio control. The heated oxygen sensors include a heater which heats the Zirconia element. The heater is controlled by the ECM. When the intake air volume is low (the temperature of the exhaust gas is low), current flows to the heater to heat the sensor for accurate oxygen concentration detection.

TROUBLESHOOTING GUIDE

DTC detection condition	Probable cause
Background • The Engine Control Module checks for an open circuit in the heated oxygen sensor output line. Check Area • Coolant temperature sensor: Normal. • Heated oxygen sensor signal voltage has continued to be 0.1V or lower for 3 min. or more after the staring sequence was completed. • Engine coolant temperature is 80°C (176°F) or more. • Engine speed is higher than 1,200 r/min. • Engine load is 25% or more. • Monitoring Time: 7 - 10 sec. Judgment Criteria • Input voltage supplied to the engine control module interface circuit is 4.5V or more when 5V is applied to the heated oxygen sensor output line via a resistor. • Making the air-fuel ratio 15% richer doesn't result in raising the heated oxygen sensor output voltage beyond 0.1V.	• Heated oxygen sensor failed • Open circuit in heated oxygen sensor output line • Engine control module failed

CIRCUIT DIAGRAM

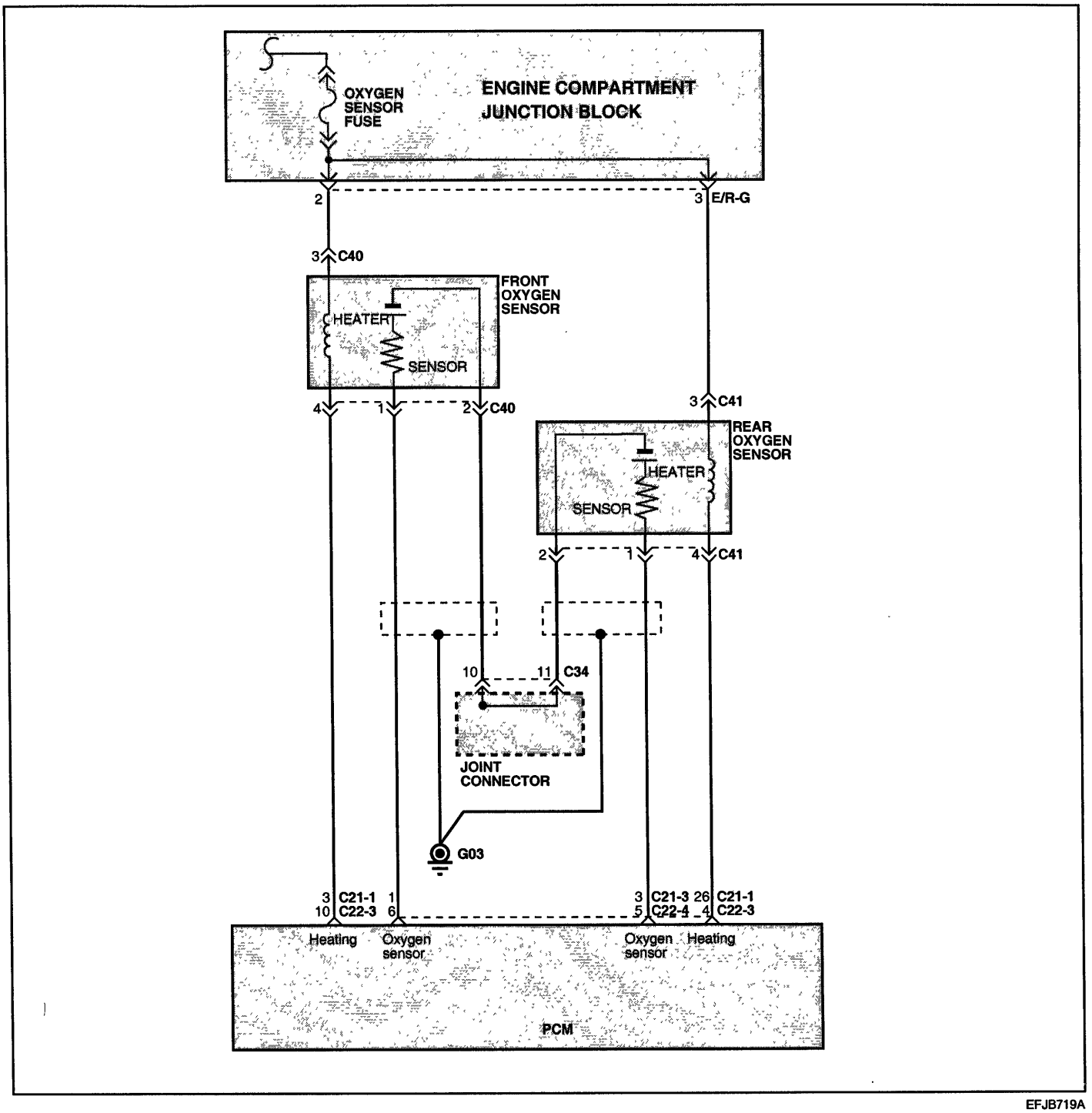

EFJB719A

TEST PROCEDURE

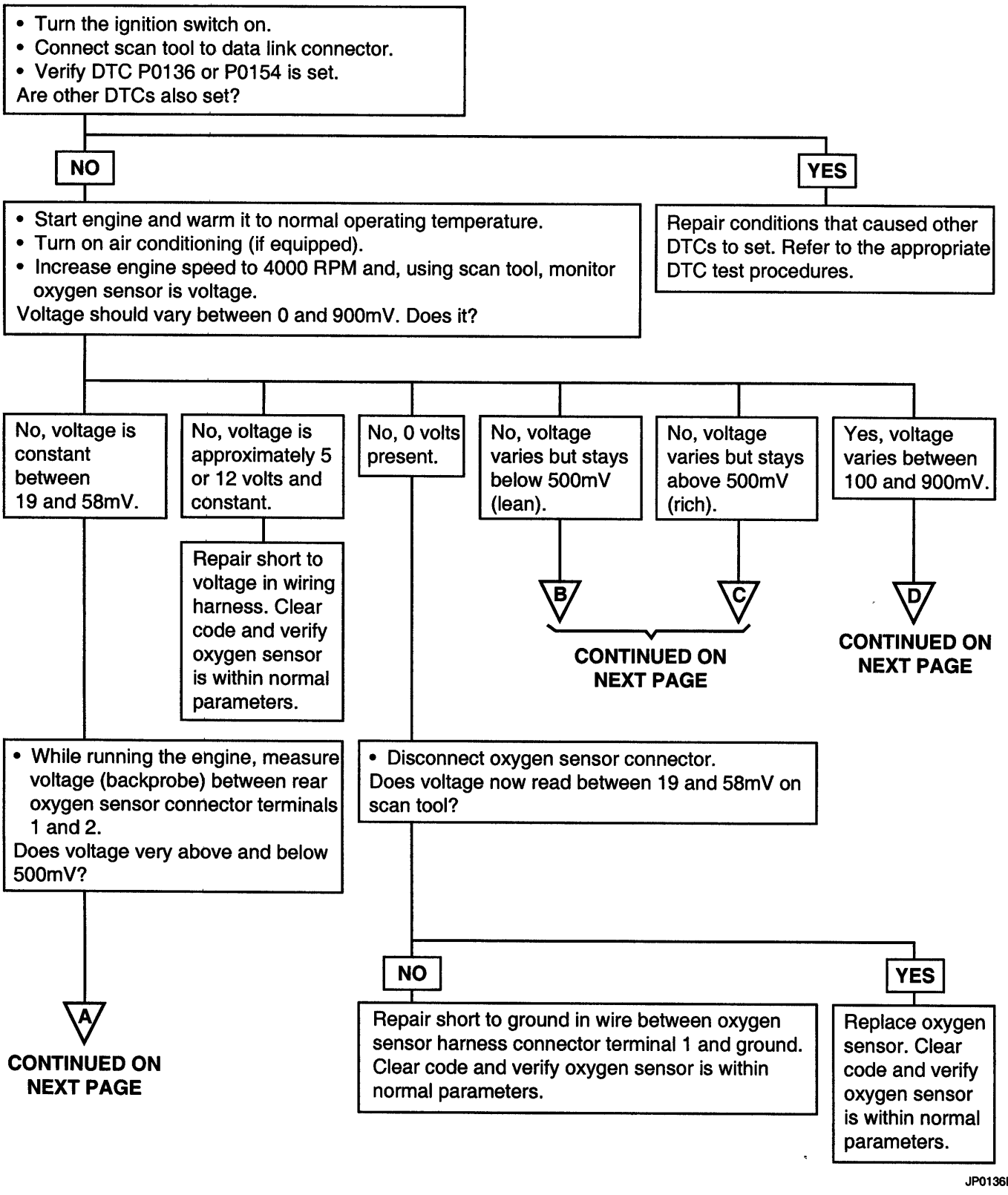

JP0136B

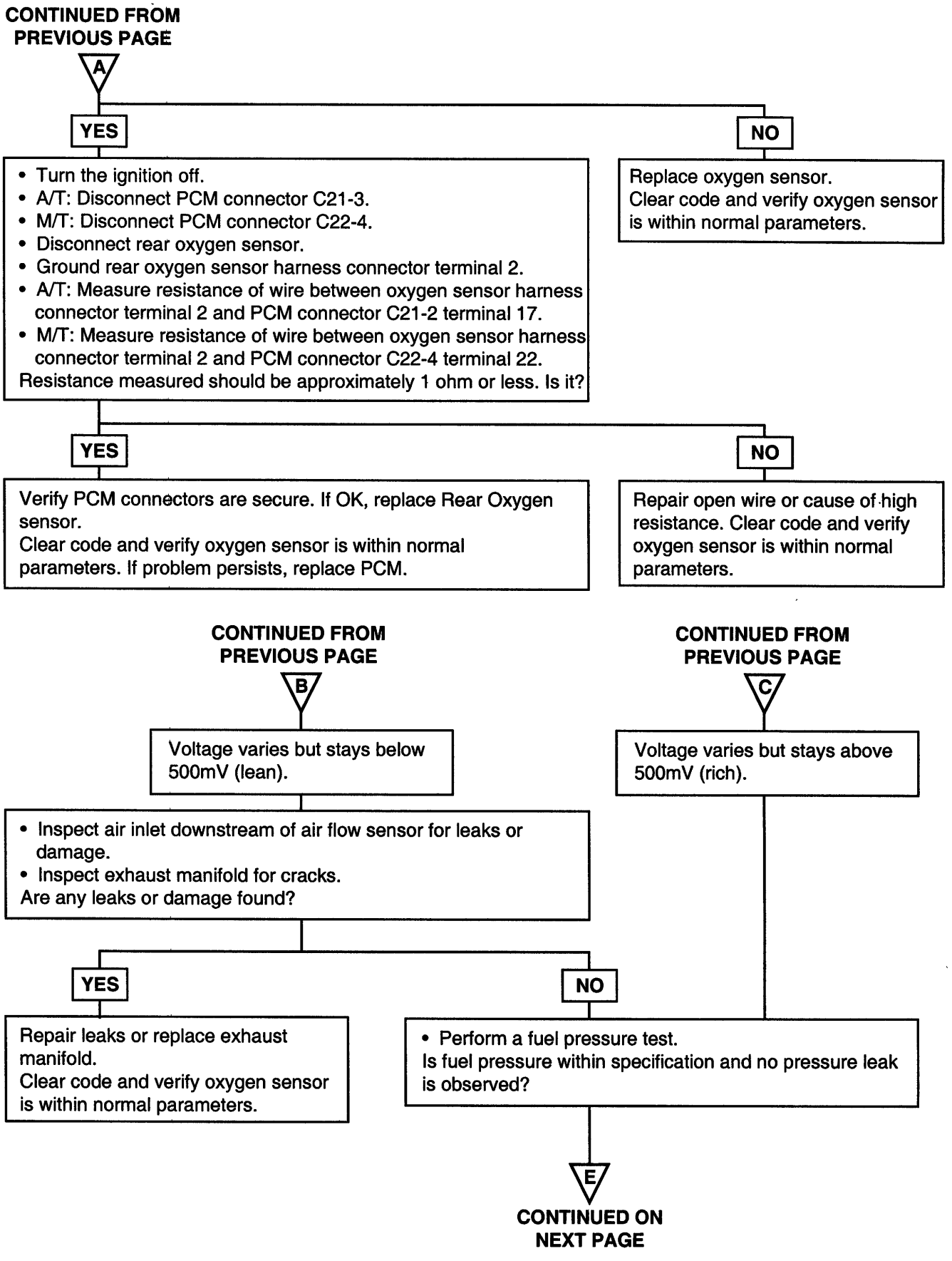
CONTINUED FROM PREVIOUS PAGE
A
YES
NO
• Turn the ignition off.
• A/T: Disconnect PCM connector C21-3.
• M/T: Disconnect PCM connector C22-4.
• Disconnect rear oxygen sensor.
• Ground rear oxygen sensor harness connector terminal 2.
• A/T: Measure resistance of wire between oxygen sensor harness connector terminal 2 and PCM connector C21-2 terminal 17.
• M/T: Measure resistance of wire between oxygen sensor harness connector terminal 2 and PCM connector C22-4 terminal 22.
Resistance measured should be approximately 1 ohm or less. Is it?
Replace oxygen sensor.
Clear code and verify oxygen sensor is within normal parameters.
YES
NO
Verify PCM connectors are secure. If OK, replace Rear Oxygen sensor.
Clear code and verify oxygen sensor is within normal parameters. If problem persists, replace PCM.
Repair open wire or cause of high resistance. Clear code and verify oxygen sensor is within normal parameters.
CONTINUED FROM PREVIOUS PAGE
B
Voltage varies but stays below 500mV (lean).
CONTINUED FROM PREVIOUS PAGE
C
Voltage varies but stays above 500mV (rich).
• Inspect air inlet downstream of air flow sensor for leaks or damage.
• Inspect exhaust manifold for cracks.
Are any leaks or damage found?
YES
NO
Repair leaks or replace exhaust manifold.
Clear code and verify oxygen sensor is within normal parameters.
• Perform a fuel pressure test.
Is fuel pressure within specification and no pressure leak is observed?
E
CONTINUED ON NEXT PAGE

HP0136C

CONTINUED FROM PREVIOUS PAGE

D

Voltage varies between 0 and 900mV.

CONTINUED FROM PREVIOUS PAGE

E

YES

- Turn the ignition off.
- Disconnect ignition coil connector.
- Measure voltage drop across negative battery cable by connecting voltmeter between negative battery post and cable attachment point on engine while cranking the engine.

Voltage drop measured should be less than 0.5 volts, is it?

NO

Follow diagnostic procedures outlined in shop manual. Clear code and verify oxygen sensor is within normal parameters.

YES

- Disconnect negative battery terminal.
- Measure resistance between generator case and engine ground point.

Resistance measured should be approximately 1 ohm or less, is it?

NO

Replace negative battery cable. Clear code and verify oxygen sensor is within normal parameters.

YES

- If Malfunction Indicator Lamp (MIL) is turning on intermittently and DTC P0133 is set, problem is most likely a poor ground circuit. Clean negative battery terminal and engine ground. Also clean mating surfaces of generator housing and engine block.
- If Malfunction Indicator Lamp (MIL) was on and DTC P0136 is set, replace oxygen sensor.
- Clear code and verify oxygen sensor is within normal parameters.

NO

Clean mating surfaces of generator housing and engine block. Clear code and verify oxygen sensor is within normal parameters.

HP0136D

EFJB5090

DTC	Diagnostic item
P0141	Oxygen Sensor Heater Circuit Malfunction (Bank 1, Sensor 2)

DESCRIPTION

To obtain a high purification rate for the CO, HC and NOx components of the exhaust gas, a three way catalytic converter is used, but for the most efficient use of the three-way catalytic inverter, the ratio of the air must be precisely controlled so that it is always close to the stoichiometric air-fuel ratio. The oxygen sensor has the characteristic whereby its output voltage changes suddenly in the vicinity of the stoichiometric air-fuel ratio. This characteristic is used to detect the oxygen concentration in the exhaust gas and provide feedback to the computer for control of the air-fuel ratio. When the air-fuel ratio becomes LEAN, the oxygen concentration in the exhaust increases and the oxygen sensor informs the ECM of the LEAN condition (small electromotive force: 0V). When the air-fuel ratio is RICHER than the stoichiometric air-fuel ratio the oxygen concentration in the exhaust gas is reduced and the oxygen sensor informs the ECM of the RICH condition (large electromotive force: 1V).
The ECM determined by the electromotive force from the oxygen sensor whether the air-fuel ratio is RICH or LEAN and controls the injection time accordingly. However, if malfunction of the oxygen sensor causes output of abnormal electromotive force, the ECM is unable to perform an accurate air-fuel ratio control. The heated oxygen sensors include a heater which heats the Zirconia element. The heater is controlled by the ECM. When the intake air volume is low (the temperature of the exhaust gas is low), current flows to the heater to heat the sensor for accurate oxygen concentration detection.

TROUBLESHOOTING GUIDE

DTC detection condition	Probable cause
Background • The Engine Control Module checks whether the heater current is within a specified range when the heater is energized. Check Area • Battery voltage is between 12 and 16V. Judgment Criteria • Heater current of the front heated oxygen sensor heater (Bank 1 Sensor 2) has continued to be 0.2 A or less, or 3.5 A or more for 6 sec. • Monitored only once per trip.	• Open or shorted oxygen sensor heater circuit • Open circuit in oxygen sensor heater • Engine control module failed

CIRCUIT DIAGRAM

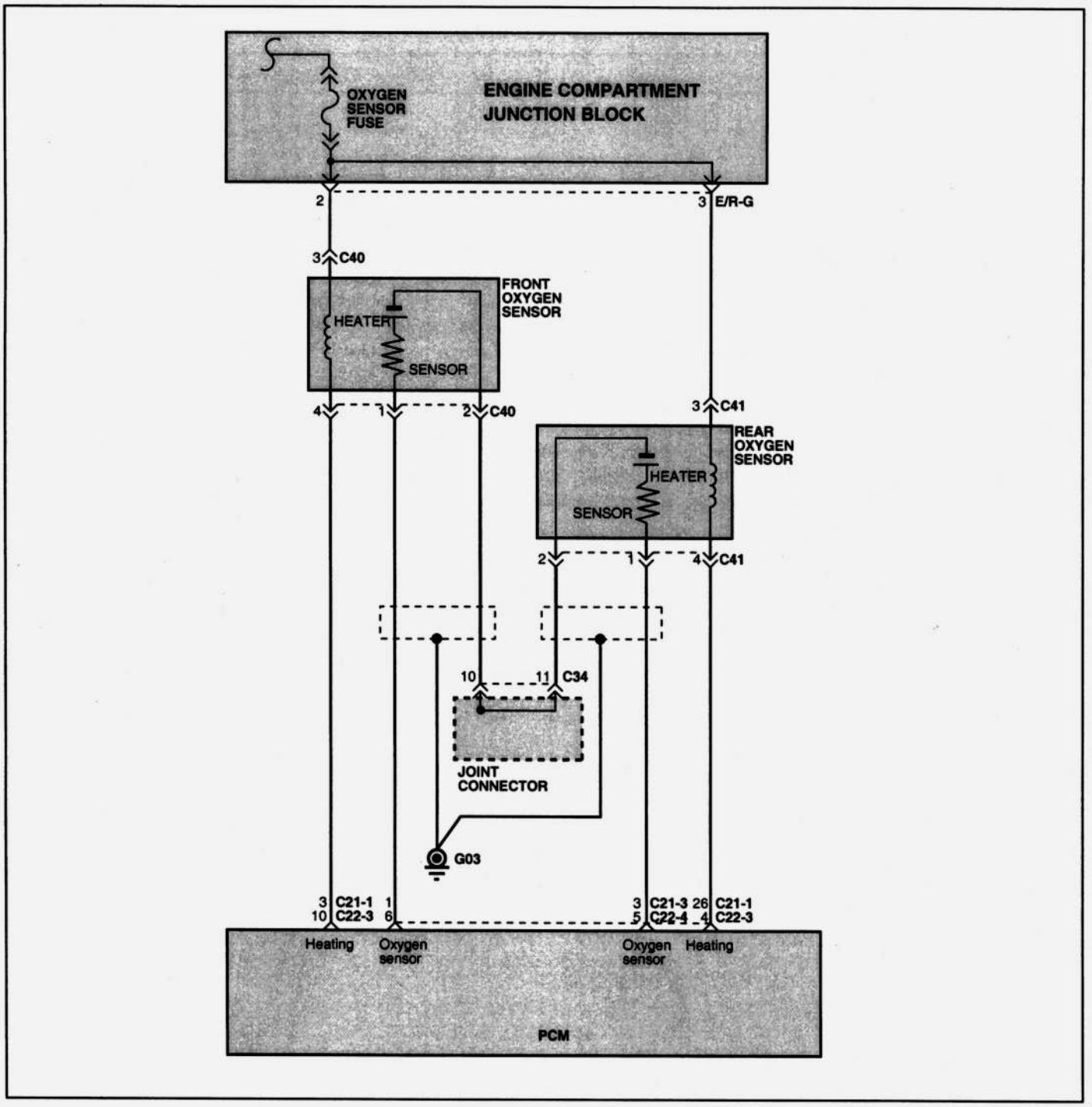

EFJB719A

TEST PROCEDURE

- Turn the ignition switch on.
- Connect scan tool to data link connector.
- Verify DTC P0141 is set.

- Disconnect rear oxygen sensor.
- Start engine.
- Measure voltage between oxygen sensor harness connector terminal 3 and ground.

Voltage should be between 12 and 16 volts. Is it?

YES

- Turn the ignition switch off.
- Disconnect the rear oxygen sensor disconnected.
- A/T: Disconnect PCM connector C21-1. Ground rear oxygen sensor harness connector terminal 4.
- Measure resistance between ground and PCM connector C21-2 terminal 17.
- M/T: Disconnect PCM connector C22-3. Ground rear oxygen sensor harness connector terminal 4.
- Measure resistance between ground and PCM connector C22-4 terminal 22.

Resistance measured should be approximately 1 ohm or less. Is it?

YES

- Turn the ignition switch off.
- Disconnect the rear oxygen sensor disconnected.
- A/T: Disconnect PCM connector C21-1. Measure resistance between ground and oxygen sensor harness connector terminal 4.
- M/T: Disconnect PCM connector C22-3. Measure resistance between ground and oxygen sensor harness connector terminal 4.

Resistance should indicate an open circuit. Does it?

YES

- Ignition switch off.
- Rear oxygen sensor disconnected.
- Measure resistance between terminals 3 and 4 of oxygen sensor connector.

Is resistance within normal parameters (7-9 ohms)?

YES

Verify PCM connector is secure. If OK, replace Rear Oxygen sensor. Clear code and verify oxygen sensor is within normal parameters. If problem persists, replace PCM.

NO

Replace oxygen sensor. Clear code and verify oxygen sensor is within normal parameters.

NO

A/T: Repair short to ground or another circuit in wire betweenPCM harness connector C21-1 terminal 17 and oxygen sensor harness connector terminal 4.
M/T: Repair short to ground or another circuit in wire between PCM harness connector C22-4 terminal 22 and oxygen sensor harness connector terminal 4.
Clear code and verify oxygen sensor is within normal parameters.

NO

A/T: Repair open in wire between PCM harness connector C21-1 terminal 26 and oxygen sensor harness connector terminal 4.
M/T: Repair open in wire between PCM harness connector C22-3 terminal 4 and oxygen sensor harness connector terminal 4.
Clear code and verify oxygen sensor is within normal parameters.

NO

A/T: Repair open in wire between engine comportment junction block terminal and oxygen sensor harness connector terminal 3.
M/T: Repair open in wire between engine comporment junction block terminal and oxygen sensor harness connector terminal 3.
Clear code and verify oxygen sensor is within normal parameters.

JP0141B

EFJB5100

DTC	Diagnostic item
P0201, P0202 P0203, P0204	Injector Circuit Malfunction (Cylinder-1, Cylinder-2, Cylinder-3, Cylinder-4)

DESCRIPTION

The fuel injectors are solenoid operated valves that are normally closed. When a fuel injector solenoid is energized (pulsed) the injector needle valve moves, allowing pressurized fuel to pass through the injector and mix with the air entering the engine. Each fuel injector (there is one for each engine cylinder) is mounted in the intake manifold and is positioned to spray fuel into a cylinder head intake port.
The Engine Control Module (ECM) controls injector timing and pulse width (how long the fuel injectors are turned on). The ECM pulses the fuel injectors based on information provided by its network of engine sensors. The ECM uses the crankshaft position sensor to determine when to pulse the injectors. Engine coolant temperature, intake air temperature, air flow and throttle position data are all used by the ECM to calculate injector pulse width.
The ECM also uses its network of sensors to determine whether all injectors should be pulsed at the same time (simultaneous injection) or each injector should be pulsed individually (sequential injection). Sequential injection is almost always used during normal engine operation and simultaneous injection may be used when the engine is being cranked.

TROUBLESHOOTING GUIDE

DTC detection condition	Probable cause
Background • A surge voltage is generated when the injectors are driven and the current flowing to the injector coil, is shut off. • The engine control module checks this surge voltage. Check Area • Engine speed is between 50 and 1,000 r/min • Throttle position sensor output voltage is 1.16V or less. • Monitoring Time: 4 sec. Judgment Criteria • Injector coil surge voltage (system voltage +2V) has not been detected for 4 sec.	• Injector failed • Open or shorted injector circuit, or loose connector • Engine control module failed

CIRCUIT DIAGRAM

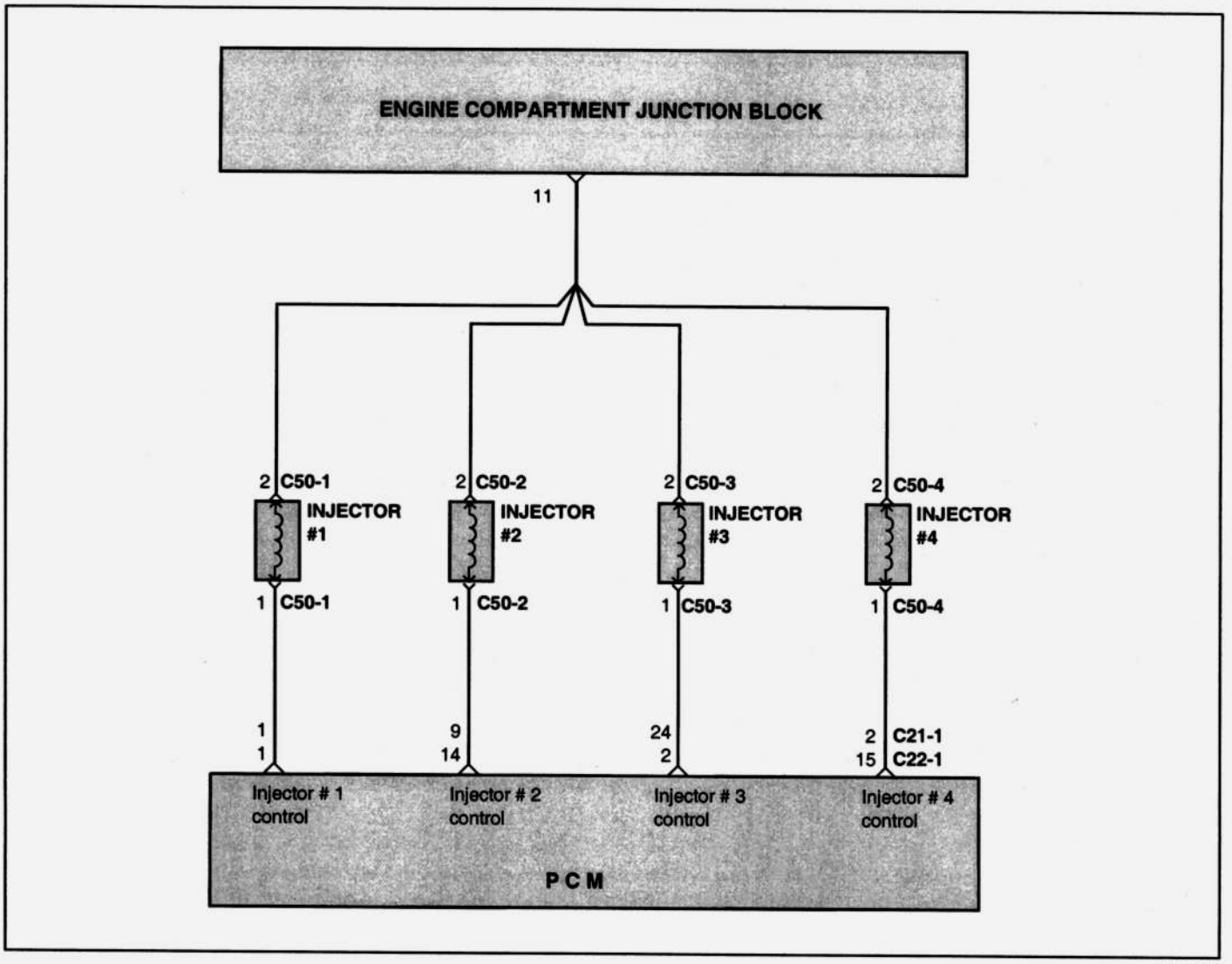

JP0201A

TEST PROCEDURE

- Turn the ignition switch on.
- Connect scan tool to data link connector.
- Verify DTC P0201, P0202, P0203 or P0204 is set.

- Engine idling at normal operating temperature, Disconnect the fuel injectors, one at a time, and note the drop in engine speed for each one.

Engine speed should drop the same amount for each fuel injector, does it?

NO

- Turn the ignition off.
- Disconnect fuel injector connector.
- Turn the ignition on.
- Measure voltage between ground and fuel injector harness connector terminal 2.

Battery voltage should be present. Is it?

YES

- Disconnect the fuel inector.
- Turn the ignition off.
- A/T: Disconnect PCM connector C21-1. Ground fuel injector harness connector terminal 1. Measure resistance between ground and PCM connector C21-1.
- M/T: Disconnect PCM connector C22-1. Ground fuel injector harness connector terminal 1. Measure resistance between ground and PCM connector C22-1.

Resistance measured should be approximately 1 ohm or less. Is it?

YES

- Turn the ignition off.
- Disconnect the fuel injector.
- A/T: PCM connector C21-1 disconnected. Measure resistance between ground and fuel injector harness connector terminal 1.
- M/T: PCM connector C22-1 disconnected.
- Measure resistance between ground and fuel injector harness connector terminal 1.

Resistance should indicate an open circuit. Does it?

A

CONTINUED ON NEXT PAGE

YES

Problem is intermittent or was repaired and Engine Control Module (PCM) memory was not cleared. Clear code and verify fuel injector functions.

NO

Repair open in wire between engine compartment junction block terminal 11 and fuel injector's harness connector terminal 2.
Clear code and verify fuel injector functions.

NO

A/T: Repair open in wire between PCM harness connector C21-1 terminal and fuel injector harness connector terminal 1.
M/T: Repair open in wire between PCM harness connector C22-1 terminal and fuel injector harness connector terminal 1.
Clear code and verify fuel injector functions.

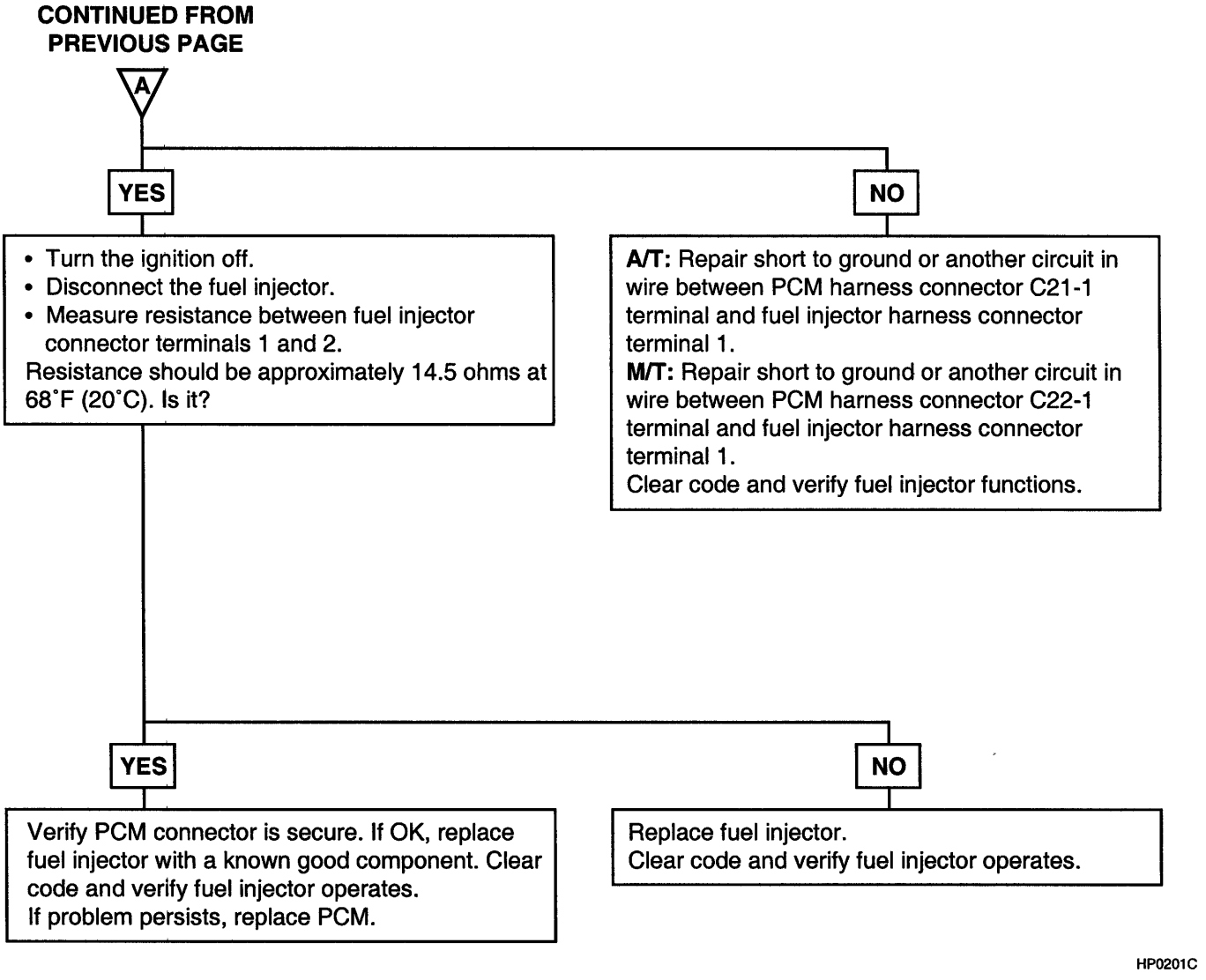
CONTINUED FROM PREVIOUS PAGE
A
YES
NO
• Turn the ignition off.
• Disconnect the fuel injector.
• Measure resistance between fuel injector connector terminals 1 and 2.
Resistance should be approximately 14.5 ohms at 68°F (20°C). Is it?
A/T: Repair short to ground or another circuit in wire between PCM harness connector C21-1 terminal and fuel injector harness connector terminal 1.
M/T: Repair short to ground or another circuit in wire between PCM harness connector C22-1 terminal and fuel injector harness connector terminal 1.
Clear code and verify fuel injector functions.
YES
NO
Verify PCM connector is secure. If OK, replace fuel injector with a known good component. Clear code and verify fuel injector operates.
If problem persists, replace PCM.
Replace fuel injector.
Clear code and verify fuel injector operates.
HP0201C

EFJB5110

DTC	Diagnostic item
P0300	Random Misfire Detected

DESCRIPTION

With the ignition switch ON or START, voltage is applied to the ignition coil. The ignition coil consists of two coils. High tension leads go to each cylinder from the ignition coil. The ignition coil fires two spark plugs every power stroke (the cylinder under compression and the cylinder on the exhaust stroke). Coil number one fires cylinders 1 and 4. Coil number two fires cylinders 2 and 3.
The ignition power transistor, controlled by the Engine Control Module (ECM), provides a switching circuit to ground for energizing the primary ignition coils. When a primary ignition coil is energized and deenergized, the secondary coil produces a high voltage spike across the attached spark plugs. At the same time, the tach interface (part of the ignition power transistor) provides the ECM and Transaxle Control Module (TCM) with an RPM signal.

TROUBLESHOOTING GUIDE

DTC detection condition	Probable cause
Background • If a misfiring occurs while the engine is running, the engine speed suddenly changes. • The Engine Control Module checks for changes in the engine speed. Check Area • Five seconds or more have passed after the engine was started. • Engine speed is between 500 and 6,000 r/min. • Engine Coolant Temperature is higher than -10°C(14°F). • Intake air temperature is higher than -10°C (14°F). • Running free from sudden accelerations/decelerations such as shift change. Judgment Criteria (change in the angular acceleration of the crankshaft is used for misfire detection.) • Misfire has occurred more frequently than allowed during the last 200 revolutions [when the catalyst temperature is higher than 950°C (1,742°F)]. • Misfire has occurred more frequently than the allowed number of times (2%) during 1,000 motor revolutions.	• Ignition system related part(s) failed • Poor crankshaft position sensor signal • Incorrect air/fuel ratio • Low compression pressure • Engine coolant temperature sensor failed • Timing belt missing teeth • Injector failed • Engine control module failed

CIRCUIT DIAGRAM

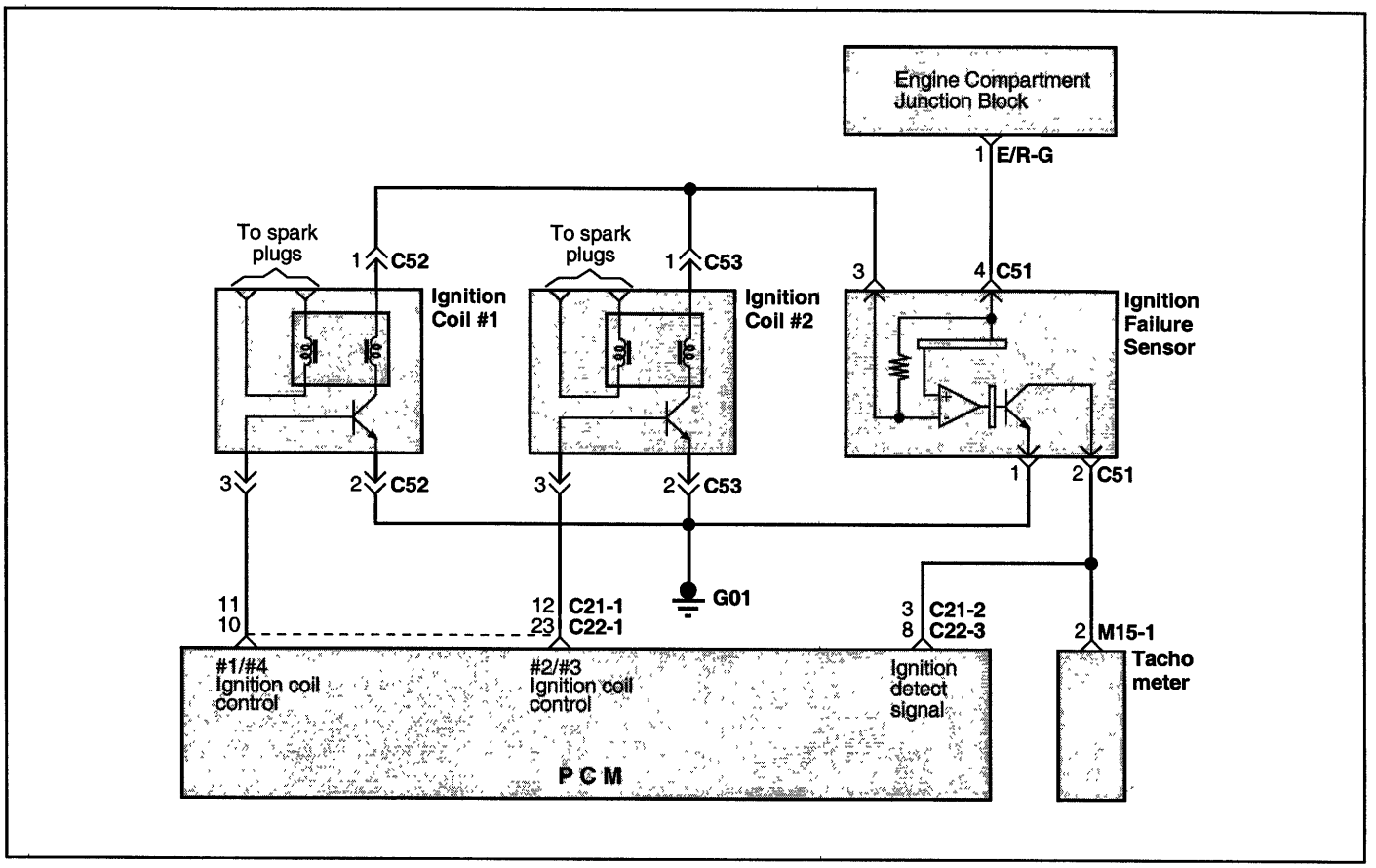

JP0300A

TEST PROCEDURE

- Check the fuel quality.
- Turn ignition switch on.
- Connect scan tool to data link connector.
- Verify DTC P0300 is set.

Is DTC P0300 the only code set and fuel at least 87 octane?

NO

Refer to the appropriate section and follow test procedures for the other set codes. Refuel vehicle with 87 or higher octane fuel. Clear codes and verify DTC P0300 is no longer set.

YES

- Ignition on.
- Disconnect ignition coil connector. Measure voltage between ground and ignition coil connector terminal 1.

Battery voltage should be present, is it?

NO

Repair wire between engine compartment junction block and ignition coil connector terminal 1. Clear code and verify code does not reappear.

YES

- Turn ignition off.
- A/T: Disconnect ECM connector C21-1
- M/T: Disconnect ECM connector C22-1
- A/T: Ground ignition coil harness connector terminals 3. Measure resistance between ground and ECM connector C21-1 terminals 11 and 12.
- M/T: Ground ignition coil harness connector terminal 3. Measure resistance between ground and ECM harness connector C22-1 terminal 10 and 23.

Resistance measured should be approximately 1 ohm or less, is it?

NO

A/T: Repair open in wire(s) between ignition coil connector terminal 3 and ECM connector C21-1 terminal 11 and 12.
M/T: Repair open in wire between ignition coil connector terminal 3 and ECM connector C22-1 connector terminal 10 and 23.
Clear code and verify code does not reappear.

YES

- Ignition off.
- Measure resistance of wire between ignition failure sensor harness connector terminal 1 and ignition coil harness connector terminal 2.

Resistance measured should be approximately 1 ohm or less, is it?

A

CONTINUED ON NEXT PAGE

JP0300B

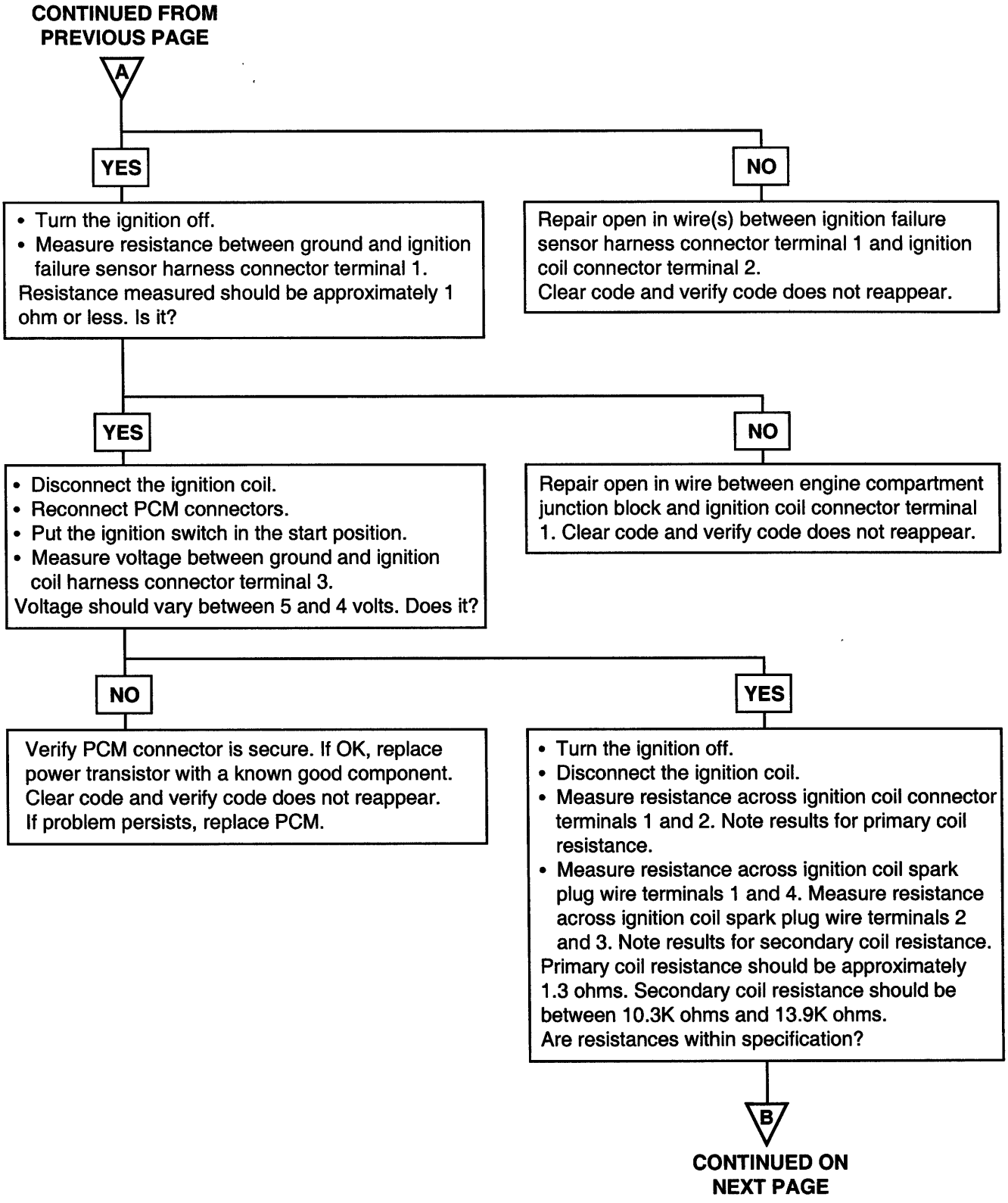
CONTINUED FROM PREVIOUS PAGE
A
YES
NO
• Turn the ignition off.
• Measure resistance between ground and ignition failure sensor harness connector terminal 1.
Resistance measured should be approximately 1 ohm or less. Is it?
Repair open in wire(s) between ignition failure sensor harness connector terminal 1 and ignition coil connector terminal 2.
Clear code and verify code does not reappear.
YES
NO
• Disconnect the ignition coil.
• Reconnect PCM connectors.
• Put the ignition switch in the start position.
• Measure voltage between ground and ignition coil harness connector terminal 3.
Voltage should vary between 5 and 4 volts. Does it?
Repair open in wire between engine compartment junction block and ignition coil connector terminal 1. Clear code and verify code does not reappear.
NO
YES
Verify PCM connector is secure. If OK, replace power transistor with a known good component. Clear code and verify code does not reappear. If problem persists, replace PCM.
• Turn the ignition off.
• Disconnect the ignition coil.
• Measure resistance across ignition coil connector terminals 1 and 2. Note results for primary coil resistance.
• Measure resistance across ignition coil spark plug wire terminals 1 and 4. Measure resistance across ignition coil spark plug wire terminals 2 and 3. Note results for secondary coil resistance.
Primary coil resistance should be approximately 1.3 ohms. Secondary coil resistance should be between 10.3K ohms and 13.9K ohms.
Are resistances within specification?
B
CONTINUED ON NEXT PAGE

JP0300C

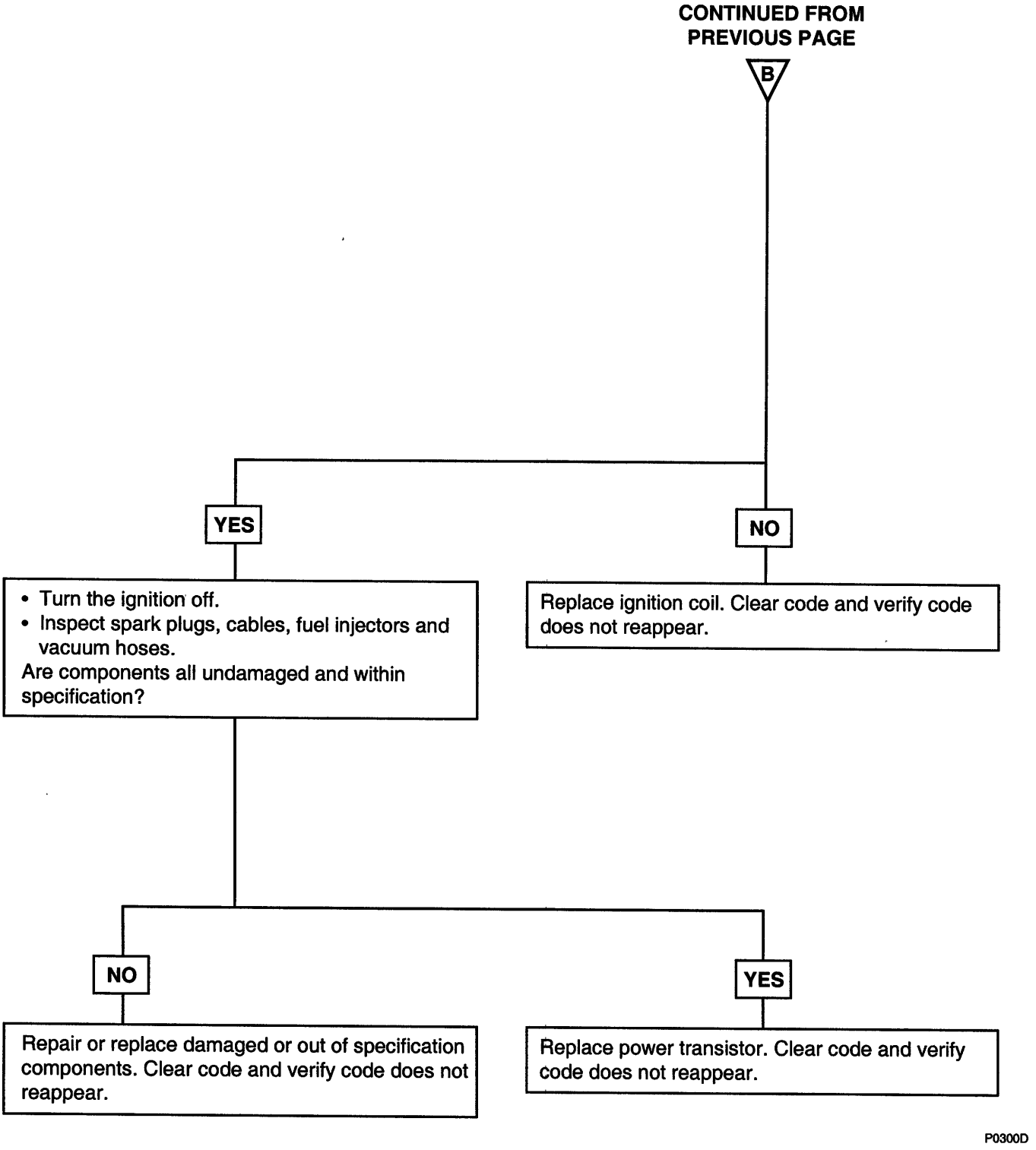
CONTINUED FROM PREVIOUS PAGE
B
YES
NO
• Turn the ignition off.
• Inspect spark plugs, cables, fuel injectors and vacuum hoses.
Are components all undamaged and within specification?
Replace ignition coil. Clear code and verify code does not reappear.
NO
YES
Repair or replace damaged or out of specification components. Clear code and verify code does not reappear.
Replace power transistor. Clear code and verify code does not reappear.
P0300D

EFJB5120

DTC	Diagnostic item
P0301, P0302, P0303, P0304,	Misfire detected (Cylinder-1, Cylinder-2, Cylinder-3, Cylinder-4)

DESCRIPTION

Refer to Random Misfire Detected (P0300).

TROUBLESHOOTING GUIDE

DTC detection condition	Probable cause
Background • If a misfiring occurs while the engine is running, the engine speed suddenly changes. • The Engine Control Module checks for changes in the engine speed. Check Area • Five seconds or more have passed after the engine was started. • Engine speed is between 500 and 6,000 r/min. • Engine Coolant Temperature is higher than -10°C (14°F). • Intake air temperature is higher than -10°C (14°F). • Running free from sudden accelerations/decelerations such as shift change. Judgment Criteria (change in the angular acceleration of the crankshaft is used for misfire detection.) • Misfire has occurred more frequently than allowed for during the last 200 revolutions [when the catalyst temperature is higher than 950°C (1,742°F)]. • Misfire has occurred more frequently than the allowed number of times (2%) during 1,000 motor revolutions.	• Ignition system related part(s) failed • Poor crankshaft position sensor signal • Incorrect air/fuel ratio • Low compression pressure • Engine coolant temperature sensor failed • Timing belt missing teeth • Injector failed • EGR valve failed • Engine control module failed

CIRCUIT DIAGRAM

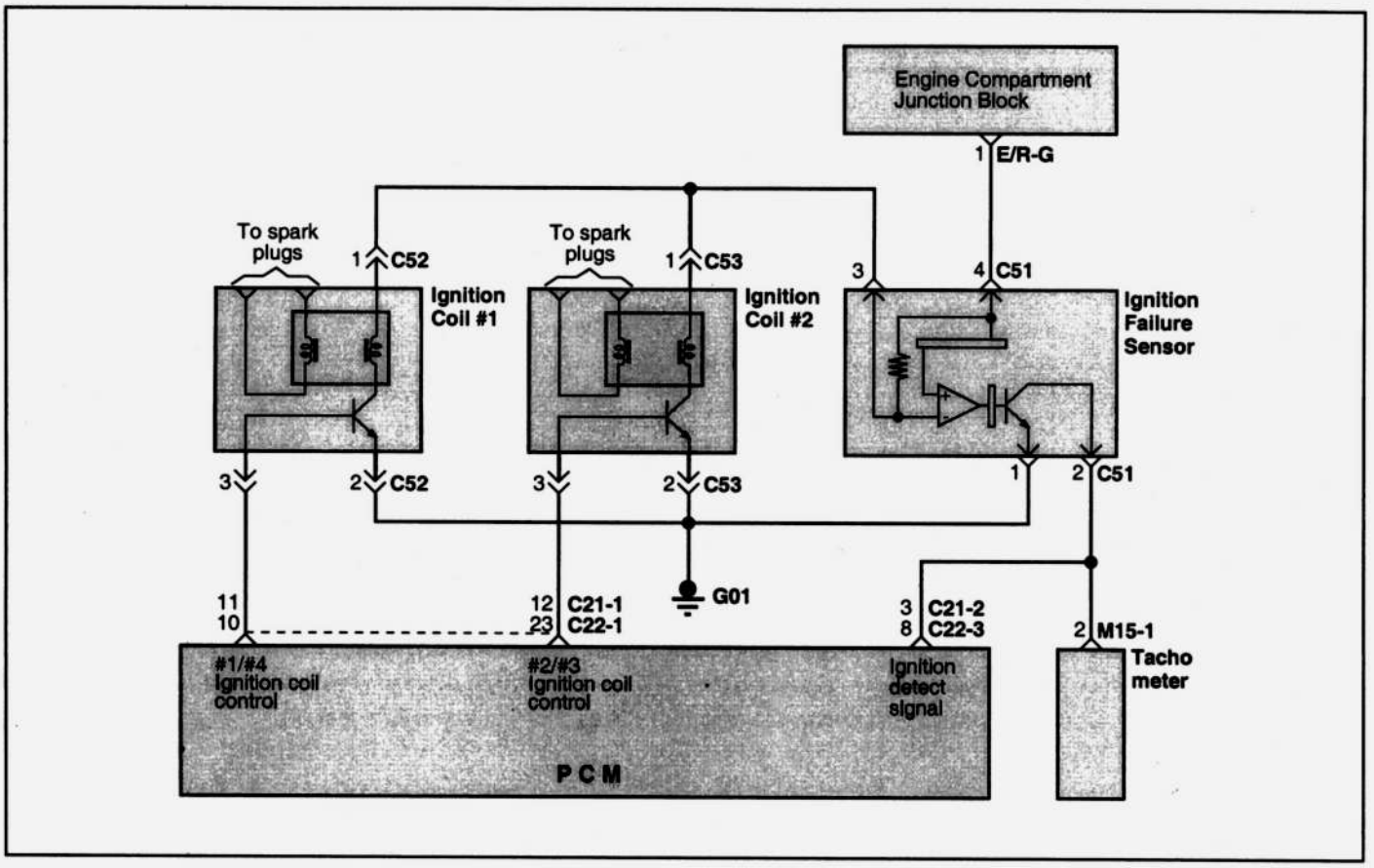

JP0300A

TEST PROCEDURE

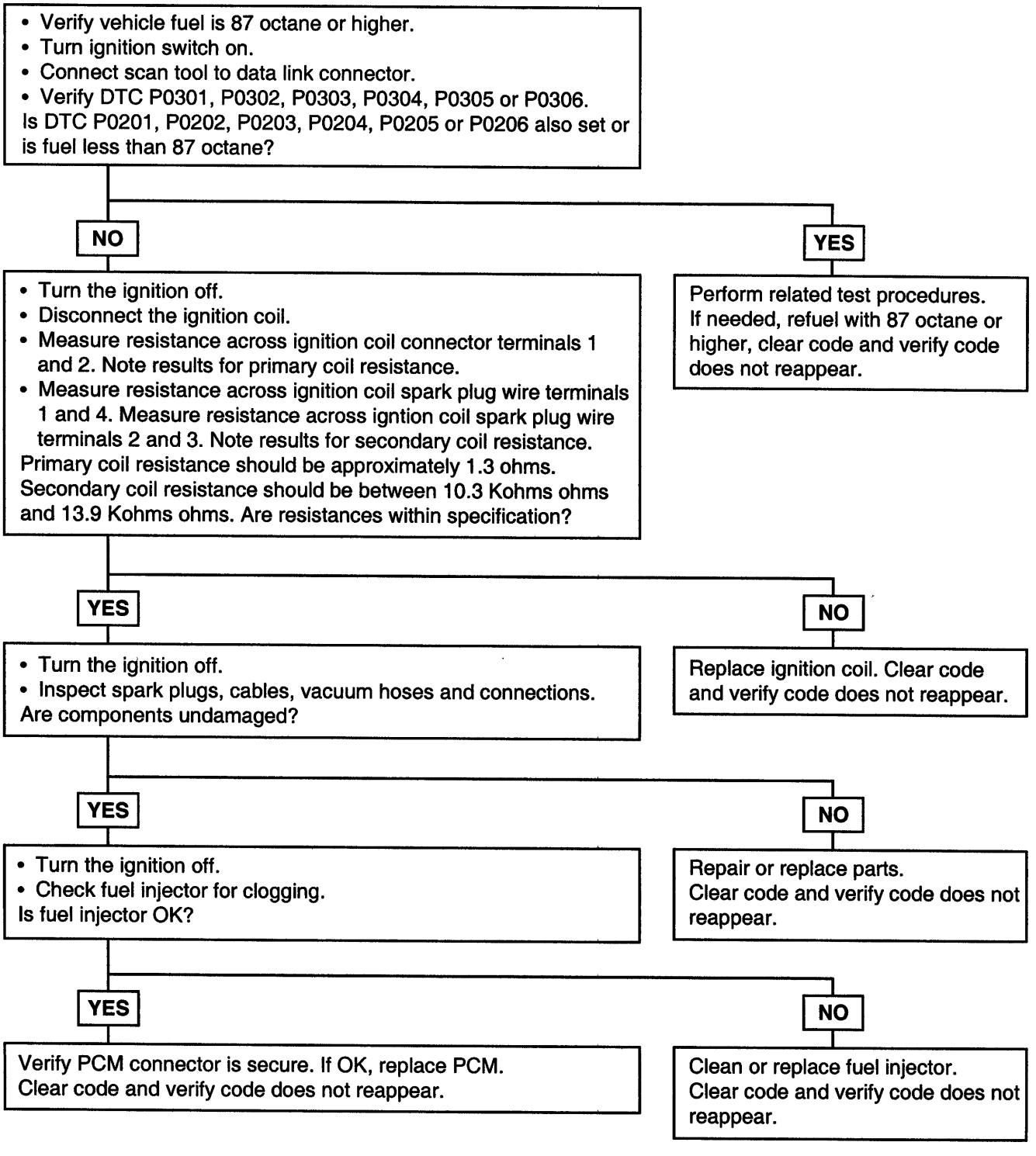

P0301B

EFJB5130

DTC	Diagnostic item
P0335	Crankshaft Position Sensor Circuit Malfunction

DESCRIPTION

The Crankshaft Position (CKP) sensor consists of a magnet and coil located next to the flywheel. The voltage signal from the CKP sensor allows the Engine Control Module (ECM) to determine the engine of the RPM and Crankshaft Position.

TROUBLESHOOTING GUIDE

DTC detection condition	Probable cause
Background • When the engine is running, the Crankshaft Position sensor outputs a pulse signal. • The Engine Control Module checks whether the pulse signal is input while the engine is cranking. Check Area • Engine is being cranked. Judgment Criteria • Sensor output voltage has not changed (no pulse signal is input) for 4 sec. Check Area, Judgment • Normal signal pattern has not been input for cylinder identification from the crankshaft position sensor signal and camshaft position sensor signal for 4 sec.	• Crankshaft position sensor failed • Open or shorted crankshaft position sensor circuit • Engine control module failed

CIRCUIT DIAGRAM

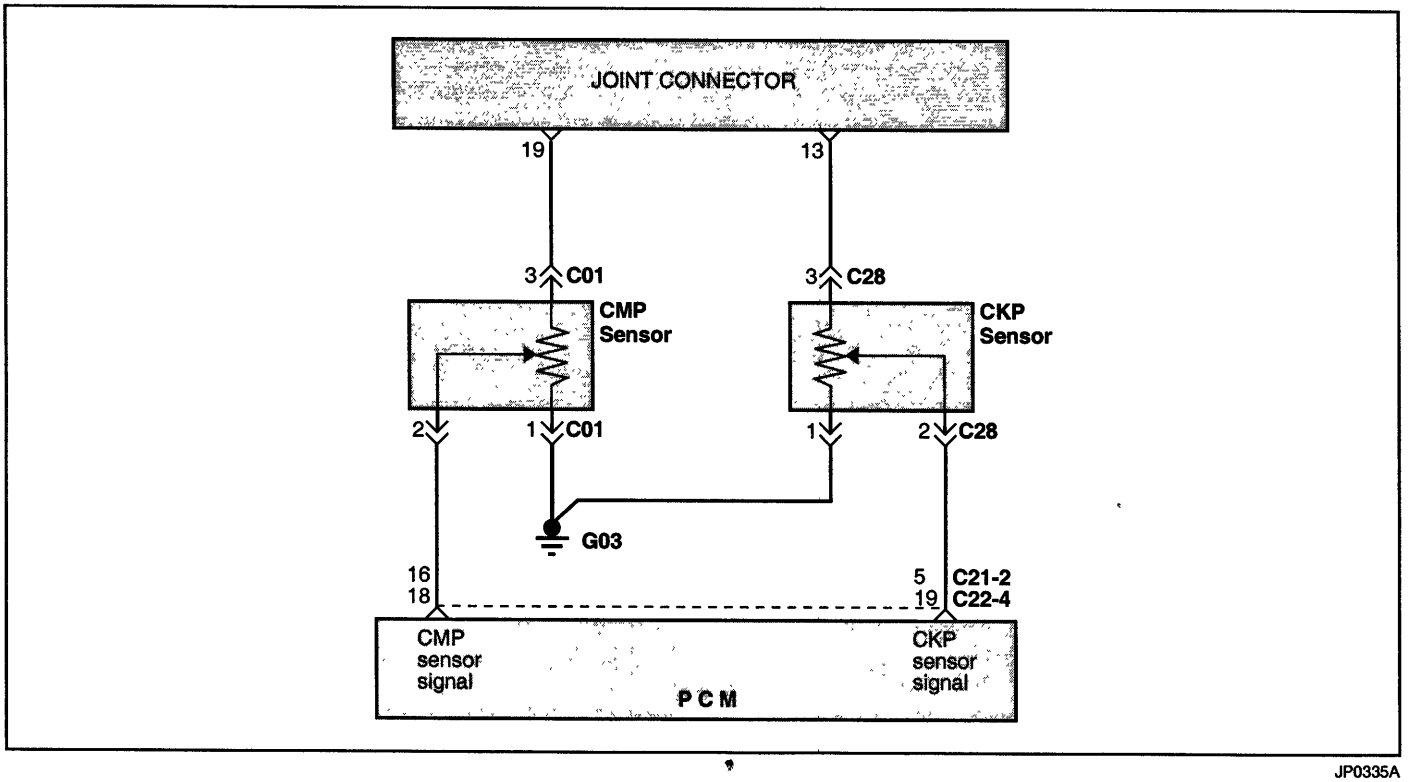

JP0335A

TEST PROCEDURE

- Turn the ignition switch on.
- Connect scan tool to data link connector.
- Verify DTC P0335 is set.

- Turn the ignition on.
- Disconnect Crankshaft Position (CKP) sensor.
- Measure voltage between ground and CKP sensor harness connector terminal 3.

Battery voltage should be present. Is it?

YES

- Turn the ignition off.
- Disconnect the CKP sensor.
- A/T: Disconnect PCM connector C21-2.
- M/T: Disconnect PCM connector C22-4.
- A/T: Ground CKP sensor harness connector terminal 2. Measure resistance between ground and PCM harness connector C21-2 terminal 17.
- M/T: Ground CKP sensor harness connector terminal 2. Measure resistance between ground and PCM harness connector C22-4 terminal 22.

Resistance measured should be approximately 1 ohm or less. Is it?

YES

- Turn the ignition off.
- Disconnect the CKP sensor.
- A/T: Disconnect PCM connector C21-2. Measure resistance between ground and CKP sensor harness connector terminal 2.
- M/T: Disconnect PCM connector C22-4. Measure resistance between ground and CKP sensor harness connector terminal 2.

Resistance should indicate an open circuit. Does it?

YES



CONTINUED ON NEXT PAGE

NO

Repair open in wire between CKP sensor harness connector terminal 3 and Joint connector terminal 13.
Clear code and verify CKP sensor is within normal parameters.

NO

A/T: Repair open in wire between CKP sensor harness connector terminal 2 and PCM harness connector C21-2 terminal 5.
M/T: Repair open in wire between CKP sensor harness connector terminal 2 and PCM harness connector C22-4 terminal 19.
Clear code and verify CKP sensor is within normal parameters.

NO

A/T: Repair short to ground or another circuit in wire between CKP sensor harness connector terminal 2 and PCM harness connector C21-2 terminal 5.
M/T: Repair short to ground or another circuit in wire between CKP sensor harness connector terminal 2 and PCM harness connector C22-4 terminal 19.
Clear code and verify CKP sensor is within normal parameters.

JP0335B

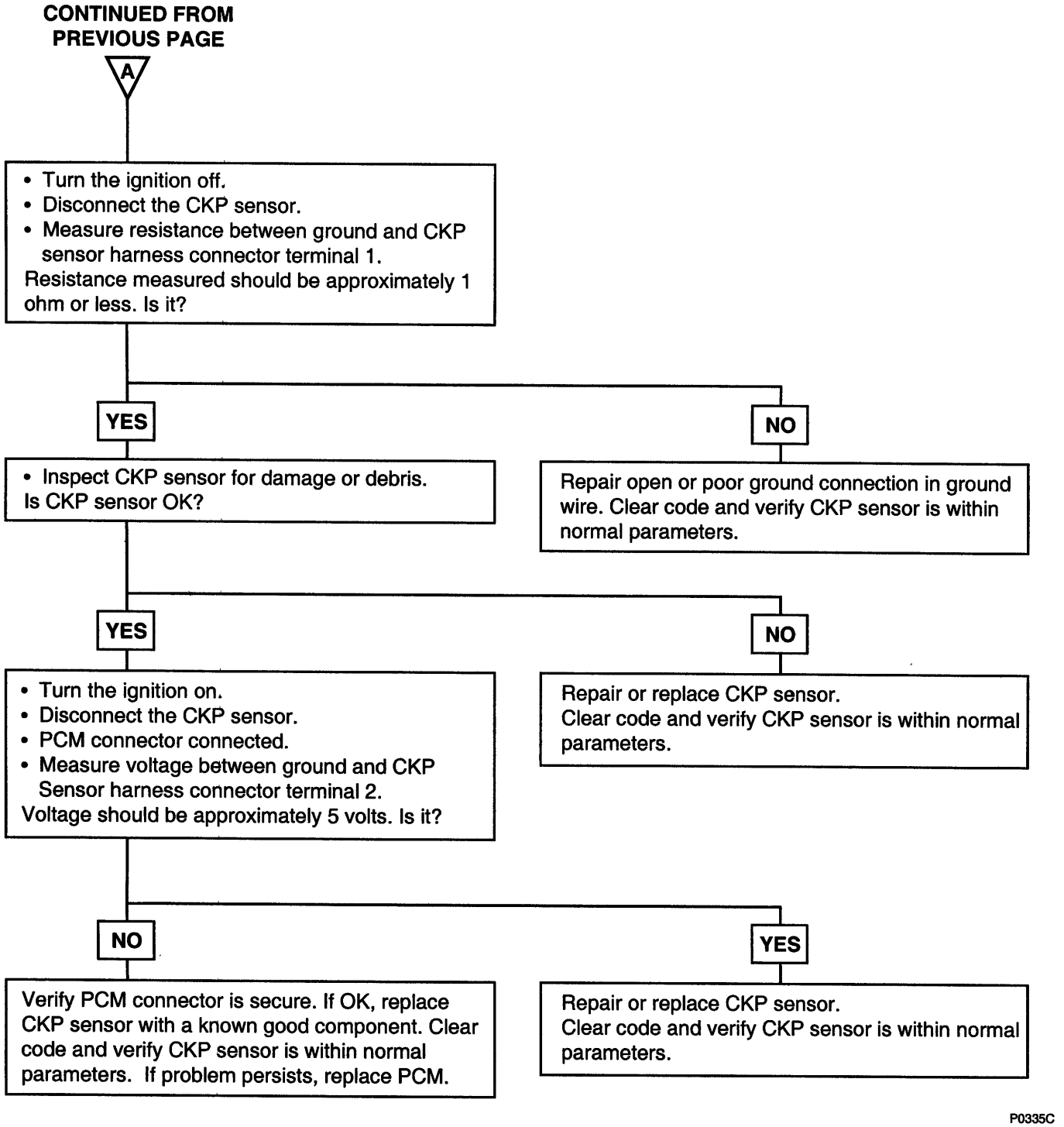
CONTINUED FROM PREVIOUS PAGE
A
• Turn the ignition off.
• Disconnect the CKP sensor.
• Measure resistance between ground and CKP sensor harness connector terminal 1.
Resistance measured should be approximately 1 ohm or less. Is it?
YES
NO
• Inspect CKP sensor for damage or debris.
Is CKP sensor OK?
Repair open or poor ground connection in ground wire. Clear code and verify CKP sensor is within normal parameters.
YES
NO
• Turn the ignition on.
• Disconnect the CKP sensor.
• PCM connector connected.
• Measure voltage between ground and CKP Sensor harness connector terminal 2.
Voltage should be approximately 5 volts. Is it?
Repair or replace CKP sensor.
Clear code and verify CKP sensor is within normal parameters.
NO
YES
Verify PCM connector is secure. If OK, replace CKP sensor with a known good component. Clear code and verify CKP sensor is within normal parameters. If problem persists, replace PCM.
Repair or replace CKP sensor.
Clear code and verify CKP sensor is within normal parameters.

P0335C

EFJB5140

DTC	Diagnostic item
P0340	Camshaft Position Sensor Circuit Malfunction

DESCRIPTION

The Camshaft Position (CMP) sensor senses the Top Dead Center (TDC) point of the #1 cylinder in the compression stroke. The CMP sensor signal allows the ECM to determine the fuel injector sequence starting point.

TROUBLESHOOTING GUIDE

DTC detection condition	Probable cause
Background • When the engine is running, the Camshaft Position sensor outputs a pulse signal. • The Engine Control Module checks whether the pulse signal is input. Check Area, Judgement Criteria • Sensor output voltage has not changed (no pulse signal is input) for 4 sec. Check Area, Judgement Criteria • Normal signal pattern has not been input for cylinder identification from the camshaft position sensor signal for 4 sec.	• Camshaft Position sensor malfunction • Open or shorted camshaft position sensor circuit or loose connector • Engine control module failed

CIRCUIT DIAGRAM

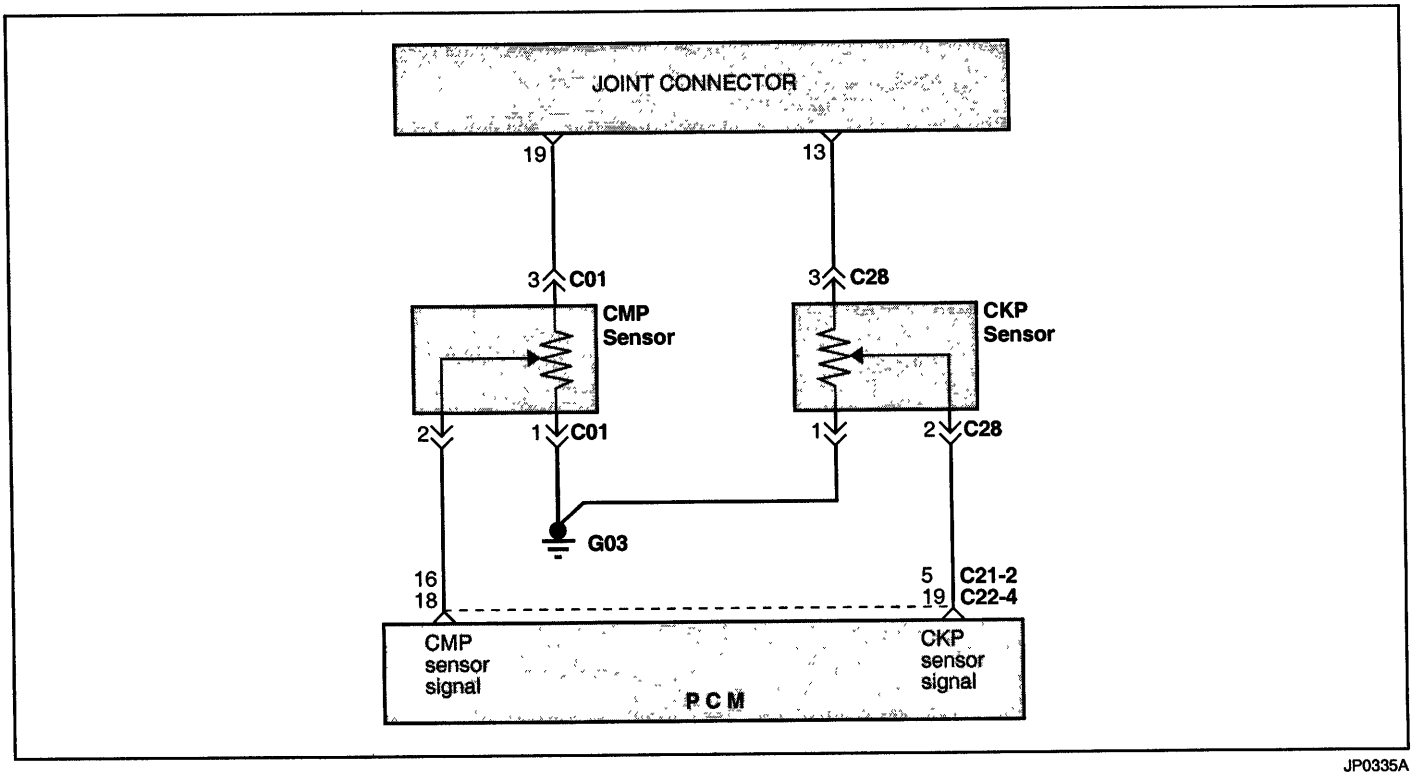

JP0335A

TEST PROCEDURE

- Turn the ignition switch on.
- Connect scan tool to data link connector.
- Verify DTC P0340 is set.

- Turn the ignition on.
- Disconnect Camshaft Position (CMP) sensor.
- Measure voltage between ground and CMP sensor harness connector terminal 3.

Battery voltage should be present. Is it?

YES

- Turn the ignition off.
- Disconnect the CMP sensor.
- A/T: Disconnect PCM connector C21-2.
- M/T: Disconnect PCM connector C22-4.
- Ground CMP sensor harness connector terminal 2.
- Measure resistance between ground and PCM harness connector terminal 17 (for A/T) or 22 (for M/T).

Resistance measured should be approximately 1 ohm or less. Is it?

YES

- Turn the ignition off.
- Disconnect the CMP sensor.
- A/T: Disconnect PCM connector C21-2.
- M/T: Disconnect PCM connector C22-4.
- Measure resistance between ground and CMP sensor harness connector terminal 2.

Resistance should indicate an open circuit. Does it?

YES

- Turn the ignition off.
- Disconnect the CMP sensor.
- Measure resistance between ground and CMP sensor harness connector terminal 1.

Resistance measured should be approximately 1 ohm or less. Is it?

YES

- Inspect CMP sensor for debris or misadjustment. Also verify timing is adjusted properly.

Is CMP sensor and timing OK?

YES

Verify PCM connector is secure. If OK, replace PCM. Clear code and verify CMP sensor signal is within normal parameters.

NO

Repair or replace CMP sensor as needed. Clear code and verify CMP sensor signal is within normal parameters.

NO

Repair open in wire between CMP sensor harness connector terminal 1 and ground. Clear code and verify CMP sensor signal is within normal parameters.

NO

Repair short to ground in wire between CMP sensor harness connector terminal 2 and PCM harness connector terminal. Clear code and verify CMP sensor signal is within normal parameters.

NO

Repair open in wire between CMP sensor harness connector terminal 2 and PCM harness connector terminal. Clear code and verify CMP sensor signal is within normal parameters.

NO

Repair open in wire between CMP sensor harness connector terminal 3 and Joint connector terminal 19. Clear code and verify CMP sensor signal is within normal parameters.

JP0340B

EFHA5170

DTC	Diagnostic item
P0421	Warm Up Catalyst Efficiency Below Threshold (Bank 1)

DESCRIPTION

The ECM compares the waveform of the oxygen sensor located in front of the catalyst with the waveform of the oxygen sensor located after the catalyst to determine whether or not catalyst performance has deteriorated. Air-fuel ratio feedback compensation keeps the waveform of the oxygen sensor in front of the catalyst repeatedly changing back and forth from rich to lean.
If the catalyst is functioning normally, the waveform of the oxygen sensor after the catalyst switches back and forth between rich and lean much more slowly than the waveform of the oxygen sensor in front of the catalyst. But when both waveforms change at a similar rate, it indicates that catalyst performance has deteriorated.

TROUBLESHOOTING GUIDE

DTC detection condition	Probable cause
Background • The signal from the heated oxygen sensor which follows the catalytic converter differs from that which precedes the catalytic converter. This is because the catalytic converter purifies exhaust gas. When the catalytic converter has deteriorated, the signal from the heated oxygen sensor which follows the catalytic converter becomes similar to that which precedes the catalytic converter. • The Engine Control Module checks the outputs of the heated oxygen sensor signals. Check Area • Engine speed is 3,000 r/min or higher. • Closed throttle position switch: OFF • Under the closed loop air-fuel ratio control • Monitoring Time: 140 sec. Judgment Criteria • The front or rear heated oxygen sensor signal is abnormal.	• Catalytic converter deteriorated • Heated oxygen sensor failed • Engine control module failed

TEST PROCEDURE

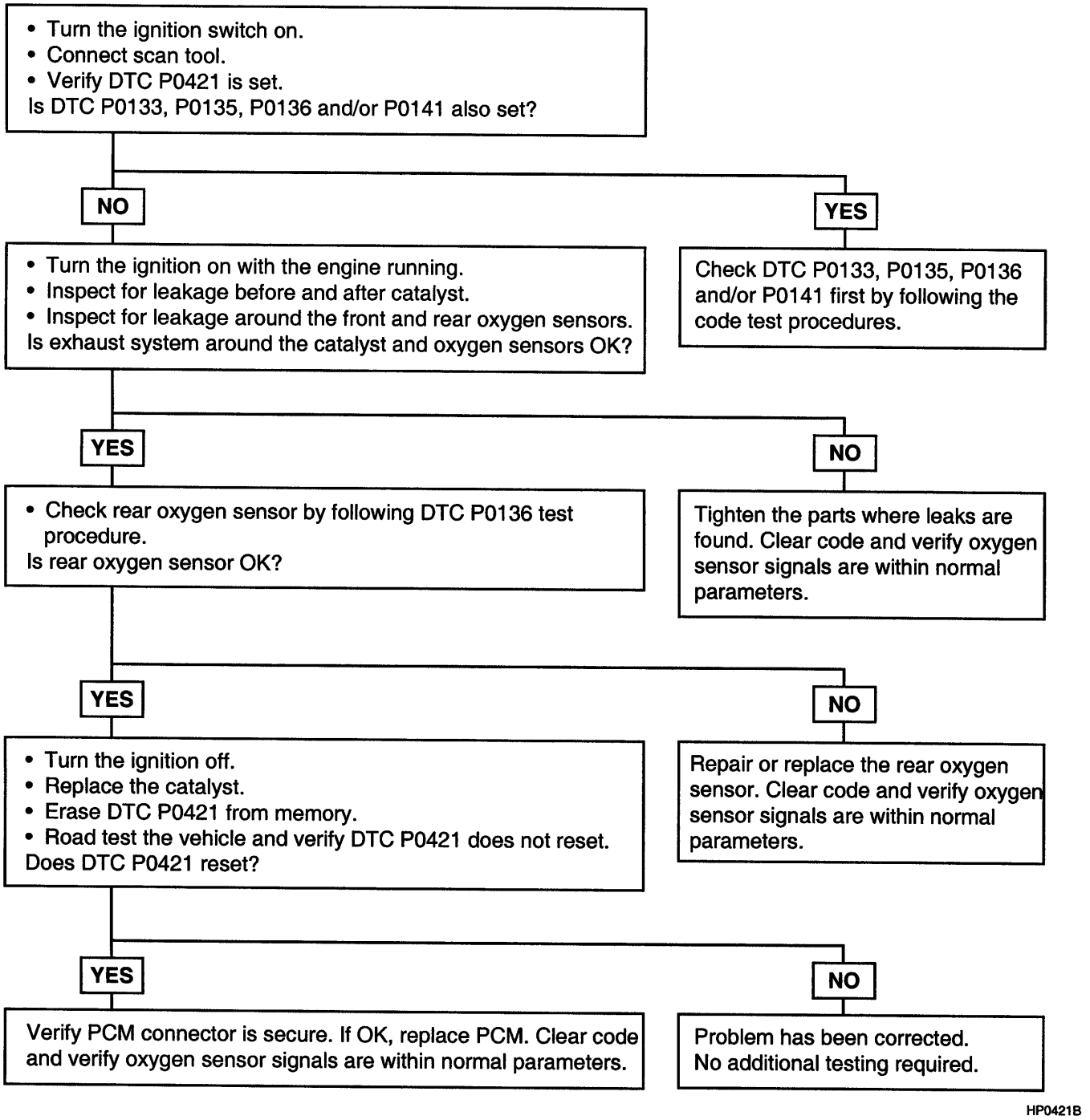

HP0421B

EFJB5190

DTC	Diagnostic item
P0443	Purge Control Solenoid Valve Malfunction

DESCRIPTION

The evaporative system reduces hydrocarbon emission by trapping fuel tank vapors until they can be burned as part of the incoming fuel charge. Evaporating fuel is stored in a charcoal canister until it can be flushed into the intake manifold.

TROUBLESHOOTING GUIDE

DTC detection condition	Probable cause
Background • The engine control module checks current flows in the evaporative emission purge solenoid drive circuit when the solenoid is ON and OFF. Check Area • Battery voltage is 10V or higher. Judgment Criteria • Solenoid coil surge voltage (system voltage +2V) is not detected when the EVAP emission vent solenoid is turned on/off.	• Evaporative emission purge solenoid failed • Open or shorted evaporative emission purge solenoid circuit, or loose connector • Engine control module failed

CIRCUIT DIAGRAM

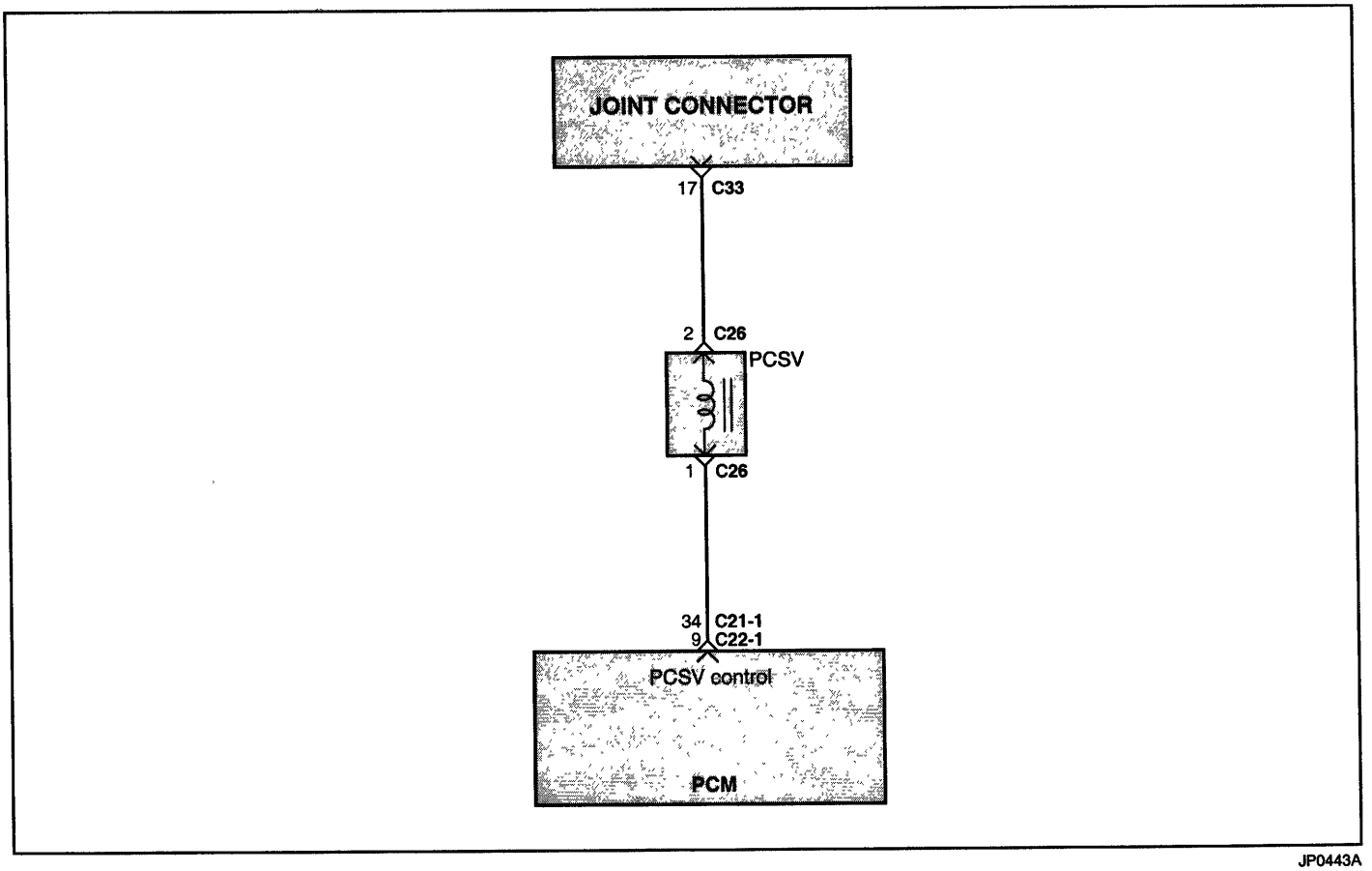

JP0443A

TEST PROCEDURE

- Turn the ignition switch on.
- Connect scan tool to data link connector.
- Verify DTC P0443 is set.

- Turn the ignition off
- Disconnect PCSV(Purge Control Solenoid Valve) connector.
- Turn the ignition on.
- Measure voltage between ground and PCSV harness connector terminal 2.

Battery voltage should be present. is it?

YES

- Turn the ignition off.
- Disconnect the PCSV.
- A/T: Disconnect PCM connector C21-1. Ground PCSV harness connector terminal 1.
- Measure resistance between ground and PCM harness connector C21-1 terminal 34.
- M/T: Disconnect PCM connector C22-1. Ground PCSV harness connector terminal 1. Measure resistance between ground and PCM harness connector C22-1 terminal 9.

Resistance measured should be approximately 1 ohm or less. is it?

YES

- Turn the ignition off.
- Disconnect the PCM.
- Disconnect the PCSV solenoid valve.
- Measure resistance between ground and purge control solenoid valve harness connector terminal 1.

Resistance should indicate an open circuit. Does it?

A

CONTINUED ON NEXT PAGE

NO

Repair open or short to ground in wire between Joint connector terminal 17 and PCSV connector terminal 2.
Clear codes and verify PCSV is within normal parameters.

NO

A/T: Repair open in wire between PCM connector C21-1 terminal 34 and PCSV harness connector terminal 1.
M/T: Repair open in wire between PCM connector C22-1 terminal 9 and PCSV harness connector terminal 1.
Clear code and verify PCSV is within normal parameters.

JP0443B

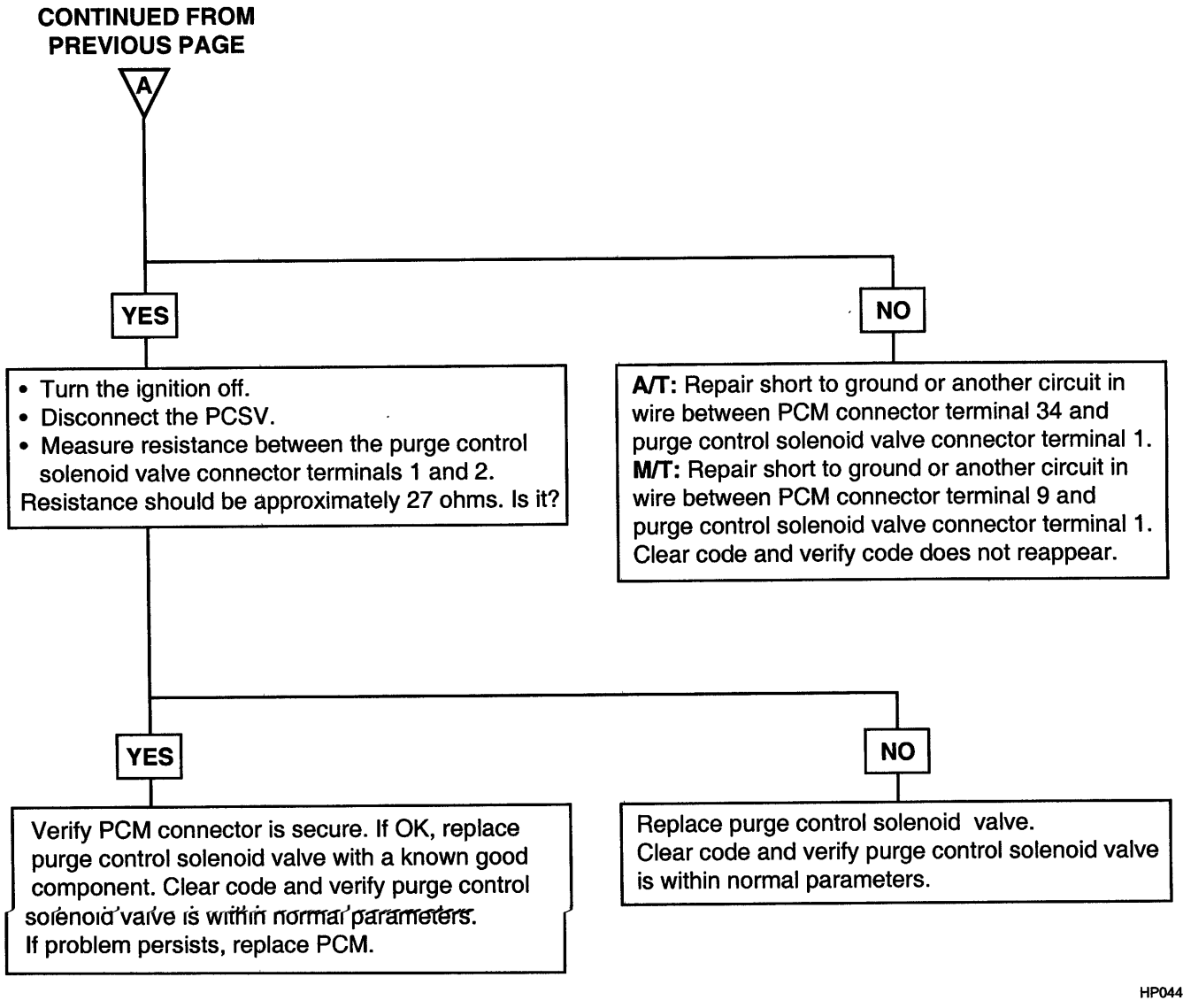
CONTINUED FROM PREVIOUS PAGE
A
YES
NO
• Turn the ignition off.
• Disconnect the PCSV.
• Measure resistance between the purge control solenoid valve connector terminals 1 and 2.
Resistance should be approximately 27 ohms. Is it?
A/T: Repair short to ground or another circuit in wire between PCM connector terminal 34 and purge control solenoid valve connector terminal 1.
M/T: Repair short to ground or another circuit in wire between PCM connector terminal 9 and purge control solenoid valve connector terminal 1.
Clear code and verify code does not reappear.
YES
NO
Verify PCM connector is secure. If OK, replace purge control solenoid valve with a known good component. Clear code and verify purge control solenoid valve is within normal parameters.
If problem persists, replace PCM.
Replace purge control solenoid valve.
Clear code and verify purge control solenoid valve is within normal parameters.
HP0443C

EFJB5220

DTC	Diagnostic item
P0500	Vehicle Speed Sensor Malfunction

DESCRIPTION

The vehicle speed sensor outputs a pulse signal while the vehicle is driven.
The engine control module checks whether the pulse signal is output.

TROUBLESHOOTING GUIDE

DTC detection condition	Probable cause
Background • The vehicle speed sensor outputs a pulse signal while the vehicle is driven. • The engine control module checks whether the pulse signal is outputted. Check Area • Closed throttle position switch: OFF • Engine speed is 3,000 r/min or more. • Engine load is 70% or more. Judgment Criteria • Sensor output voltage has not changed (no pulse signal is input) for 4 sec.	• Vehicle speed sensor failed • Open or shorted vehicle-speed sensor circuit, or loose connector • Engine control module failed

CIRCUIT DIAGRAM

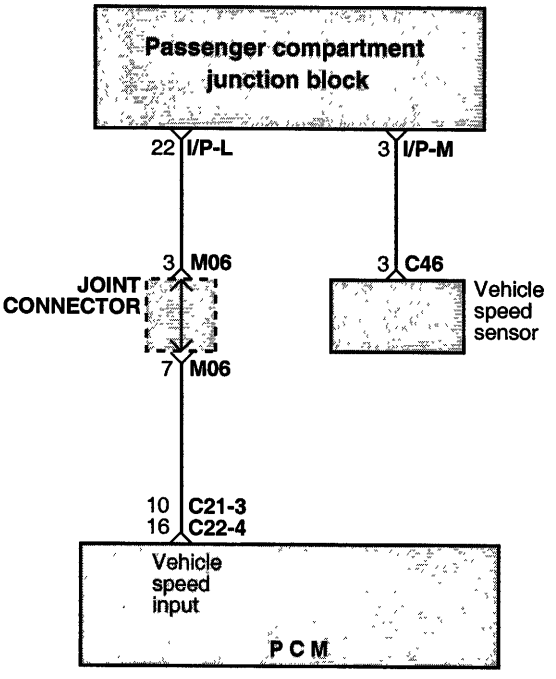

JP0500A

TEST PROCEDURE

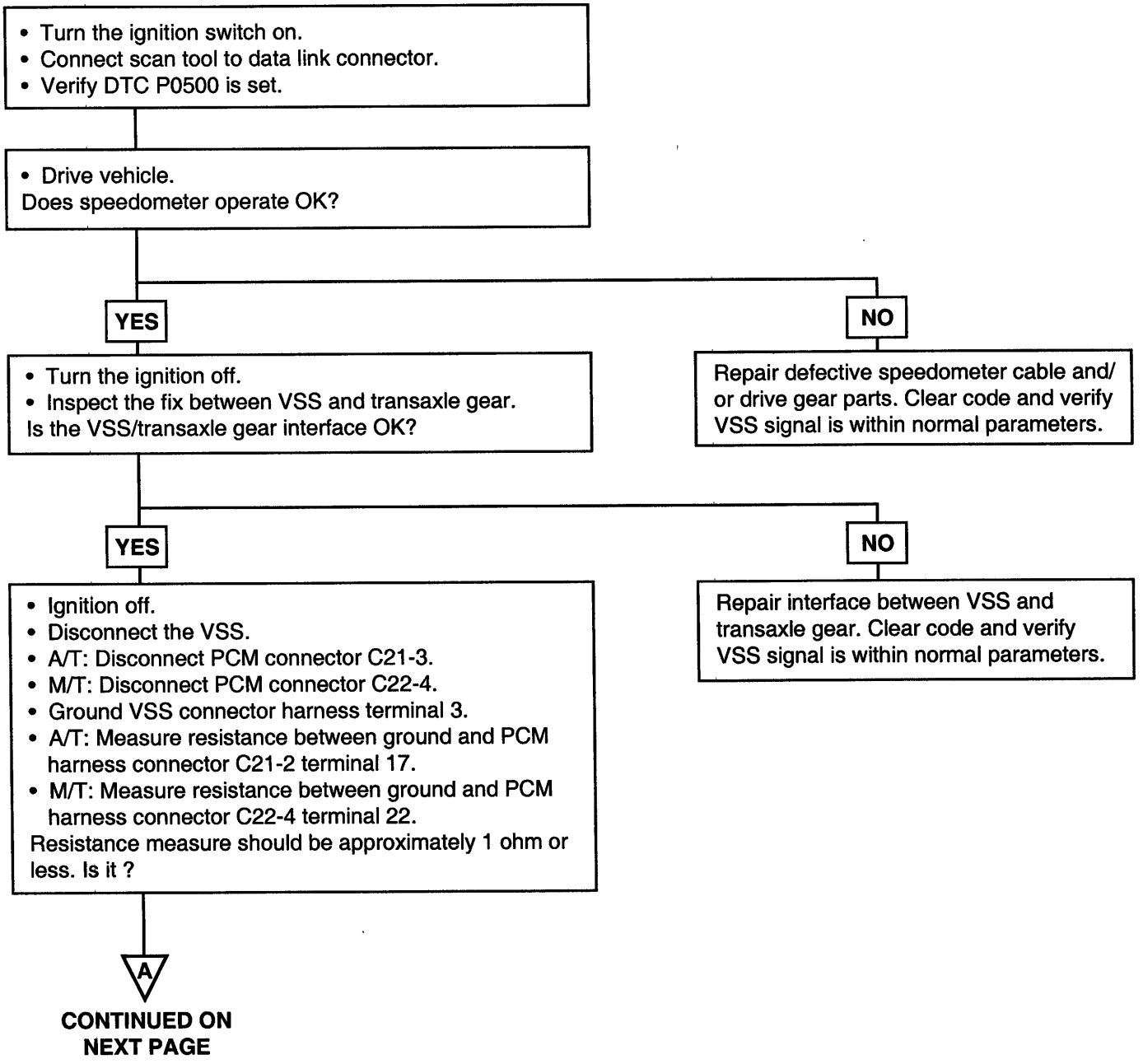

CONTINUED ON NEXT PAGE

JP0500B

CONTINUED FROM PREVIOUS PAGE

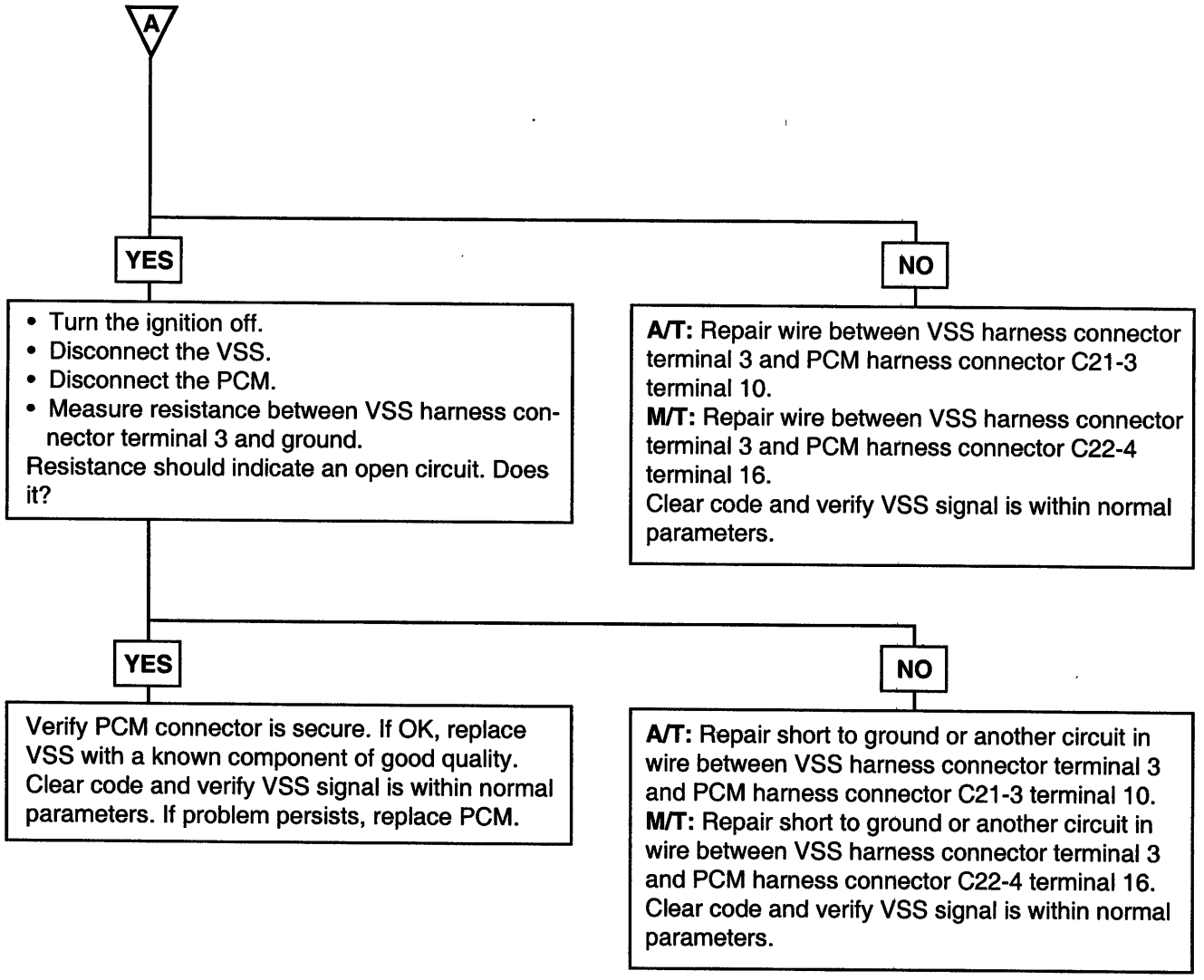

HP0500C

Clutch System

GENERAL ..... CH -2

CLUTCH SYSTEM ..... CH -6

GENERAL

EOJA0010

SPECIFICATIONS

Clutch operating method	Hydraulic type
Clutch disc	
Type	Single, dry with diaphragm.
Facing diameter (Outside x Inside) mm (in.)	225 x 155 (8.9 x 5.9)
Clutch cover assembly	
Type	Diaphragm spring strap
Setting load N (lb)	4500-4900 (1009-1097)
Clutch release cylinder	
I.D.mm (in.)	20.64 (0.809)
Clutch master cylinder	
I.D.mm (in.)	15.87(0.62)

SERVICE STANDARD

EOJA0020

Standard value	
Clutch disc thickness [When free]	8.3-8.9 mm (0.326-0.350 in.)
Clutch pedal height	218.9 mm (8.597 in.)
Clutch pedal free play	6-13 mm (0.24-0.51 in.)
Clutch pedal stroke	140 mm (5.50 in.)
Limit	
Clutch disc rivet inset	0.3 mm (0.012 in.)
Diaphragm spring end height difference	0.5 mm (0.02 in.)
Clutch release cylinder clearance to piston	0.15 mm (0.006 in.)
Clutch master cylinder clearance to piston	0.15 mm (0.006 in.)

TIGHTENING TORQUE

EOJA0030

Item	Nm	kg·cm	lb·ft
Clutch pedal to pedal support member (clutch pedal bracket)	8 - 10	80 - 100	6 - 7
Clutch master cylinder mounting bolt	8 - 10	80 - 100	6 - 7
Clutch tube flare nut	13 - 17	130 - 170	9 - 12
Clutch release cylinder mounting bolt	15 - 22	150 - 220	11 - 16
Clutch release cylinder union bolt	20 - 25	200 - 250	14 - 18
Clutch cover assembly	15 - 22	150 - 220	11 - 16
Clutch master cylinder push rod lock nut	9 - 14	90 - 140	6 - 11
Clutch master cylinder reservoir	8 - 10	80 - 100	6 - 7
Ignition lock switch	8 - 10	80 - 100	6 - 7
Clutch member	8 - 12	80 - 120	6 - 9

LUBRICANTS

EOA90040

Items	Specified lubricants	Quantity
Contact surface of release bearing and fulcrum of clutch release fork	CASMOLY L 9508	As required
Inner surface of clutch release bearing	CASMOLY L 9508	As required
Inner surface of clutch release cylinder and outer circumference of piston and cup	Brake fluid DOT3	As required
Inner surface of clutch disc spline	CASMOLY L 9508	As required
Inner surface of clutch master cylinder and outer circumference of piston assembly	Brake fluid DOT 3	As required
Clutch master cylinder push rod, clevis pin and washer	Wheel bearing grease SAE J310, NLGI No.2	As required
Clutch pedal shaft and bushings	Chassis grease SAE J310, NLGI No.1	As required
Contact portion of release fork to release cylinder push rod	CASMOLY L9508	As required
Input shaft spline	CASMOLY L 9508	As required

SPECIAL TOOLS

EOA90050

Tool (Number and name)	Illustration	Use
09411-11000 Clutch disc guide	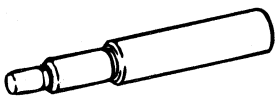 EOA9005A	Installation of the clutch disc

TROUBLESHOOTING

EOA90060

Trouble symptom		Probable cause	Remedy
Clutch slipping • Car will not respond to engine speed during acceleration • Insufficient car speed • Lack of power driving uphill		Insufficient pedal free play	Adjust
		Clogged hydraulic system	Correct or replace parts
		Excessive wear of clutch disc facing	Replace
		Hardened clutch disc facing, or oil on surface	Replace
		Damaged pressure plate or flywheel	Replace
		Weak or broken pressure spring	Replace
Difficult gear shifting (gear noise during shifting)		Excessive pedal free play	Adjust
		Hydraulic system fluid leaks, air trapped or lines clogged	Repair or replace parts
		Unusual wear or corrosion of the clutch disc spring	Replace
		Excessive vibration (distortion) of the clutch disc	Replace
Clutch noisy	When the clutch is not used	Insufficient play of the clutch pedal	Adjust
		Excessive wear of the clutch disc facing	Replace
	A noise is heard after the clutch is disengaged	Unusual wear and/or damage of the release bearing	Replace
	A noise is heard when the clutch is disengaged	Insufficient grease on the sliding surface of the bearing sleeve	Repair
		Improperly installed the clutch assembly or bearing	Repair
	A noise is heard when the car suddenly jump starts with the clutch partially engaged	Damaged pilot bushing	Replace
Hard pedal effort		Insufficient lubrication of the clutch pedal	Repair
		Insufficient lubrication of the spline part of clutch disc	Repair
		Insufficient lubrication of the clutch release lever shaft	Repair
		Insufficient lubrication of the front bearing retainer	Repair
Hard to shift or will not shift		Excessive clutch pedal free play	Adjust the pedal free play
		Faulty clutch release cylinder	Repair the release cylinder
		Clutch disc out of place, runout is excessive or lining broken	Inspect the clutch disc
		Dirty spline on input shaft or the clutch disc	Repair as necessary
		Faulty clutch pressure plate	Replace the clutch cover

Trouble symptom	Probable cause	Remedy
Clutch slips	Insufficient clutch pedal free play	Adjust the pedal free play
	Clogged hydraulic system	Repair or replace parts
	Clutch disc lining oily or worn out	Inspect the clutch disc
	Faulty pressure plate	Replace the clutch cover
	Binding release fork	Inspect the release fork
Clutch grabs/chatters	Clutch disc lining oily or worn out	Inspect the clutch disc
	Faulty pressure plate	Replace the clutch cover
	Bent clutch diaphragm spring	Replace the clutch cover
	Worn or broken torsion spring	Replace the clutch disc
	Loose engine mounts	Repair as necessary
Noisy clutch	Damaged the clutch pedal bushing	Replace the clutch pedal bushing
	Loose part inside housing	Repair as necessary
	Worn or dirty release bearing	Replace the release bearing
	Sticking release fork or linkage	Repair as necessary

CLUTCH SYSTEM

SERVICE ADJUSTMENT PROCEDURE EOJA0070

CLUTCH PEDAL INSPECTION AND ADJUSTMENT

1. Measure the clutch pedal height (From the face of the pedal pad to the floorboard) and the clutch pedal clevis pin play (measured at the face of the pedal pad).

Standard value :

(A) 1-3 mm (0.04-0.11 in.)

(A') 218.9 mm

Clutch pedal clevis pin play (A) and Pedal height (A')

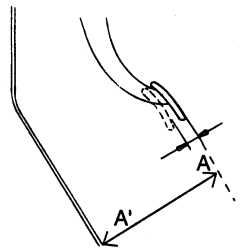

EOA9007A

2. If the clutch pedal clevis pin free-play is not within the standard value range, adjust as follows :

   a. Turn and adjust the bolt, then secure it by tightening the lock nut.

NOTE

After the adjustment, tighten the bolt until it reaches the pedal stopper, and then tighten the lock nut.

   b. Turn the push rod to coincide with the standard value and then secure the push rod with the lock nut.

CAUTION

When adjusting the clutch pedal height or the clutch pedal clevis pin play, be careful not to push the push rod toward the master cylinder.

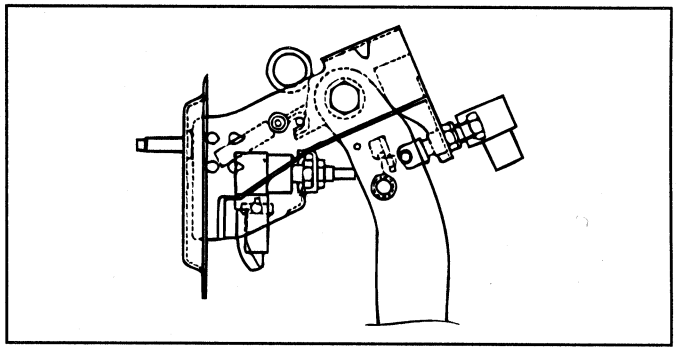

EOA9030A

3. After completing the adjustments, check that the clutch pedal free play (measured at the face of the pedal pad) falls within the standard value ranges.

Standard value : 6-13 mm (0.2-0.5 in.)

4. If the clutch pedal free play and the distance between the clutch pedal and the floor board when the clutch is disengaged do not meet the standard values, the cause may be either air in the hydraulic system or a faulty master cylinder clutch. Bleed the system or disassemble and inspect the master cylinder or clutch.

Clutch pedal free play

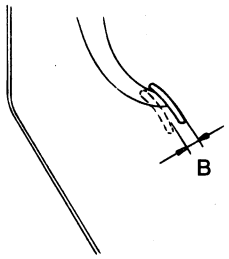

EOA9007C

BLEEDING EOA90080

Bleed the system whenever the clutch tube, the clutch hose, and/or the clutch master cylinder have been removed, or if the clutch pedal is spongy.

CAUTION

Use the specified fluid. Avoid mixing different brands of fluid.

Specified fluid : SAE J1703 (DOT3)

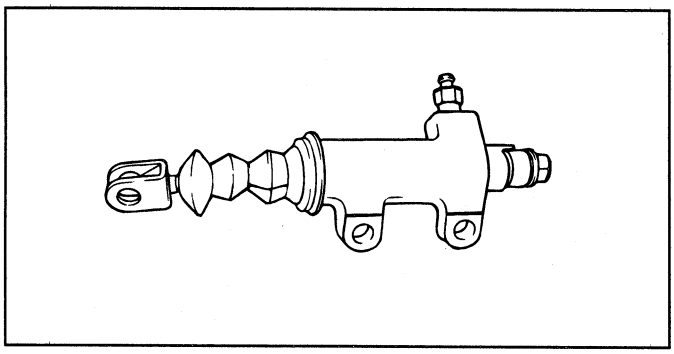

EOA9008A

1. Loosen the bleeder screw on the clutch release cylinder.
2. Pump the clutch pedal slowly until all air is expelled.
3. Hold the clutch pedal down until the bleeder is retightened.
4. Refill the clutch master cylinder with the specified fluid.

CAUTION

The rapidly-repeated operation of the clutch pedal in B-C range may disrupt the release cylinder's position. During the bleeding operation, press the clutch pedal to the floor after it returns to the "A" point.

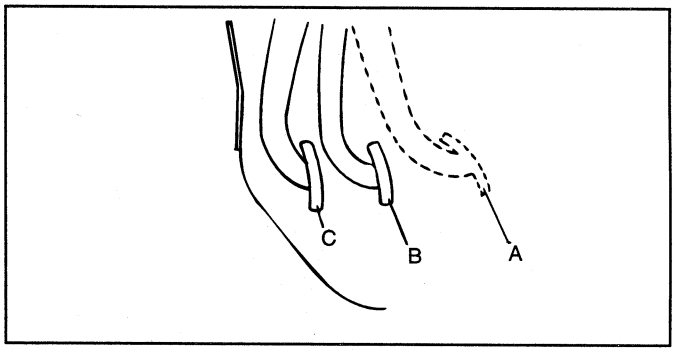

EOA9008B

CLUTCH COVER AND DISC

COMPONENTS EOA90270

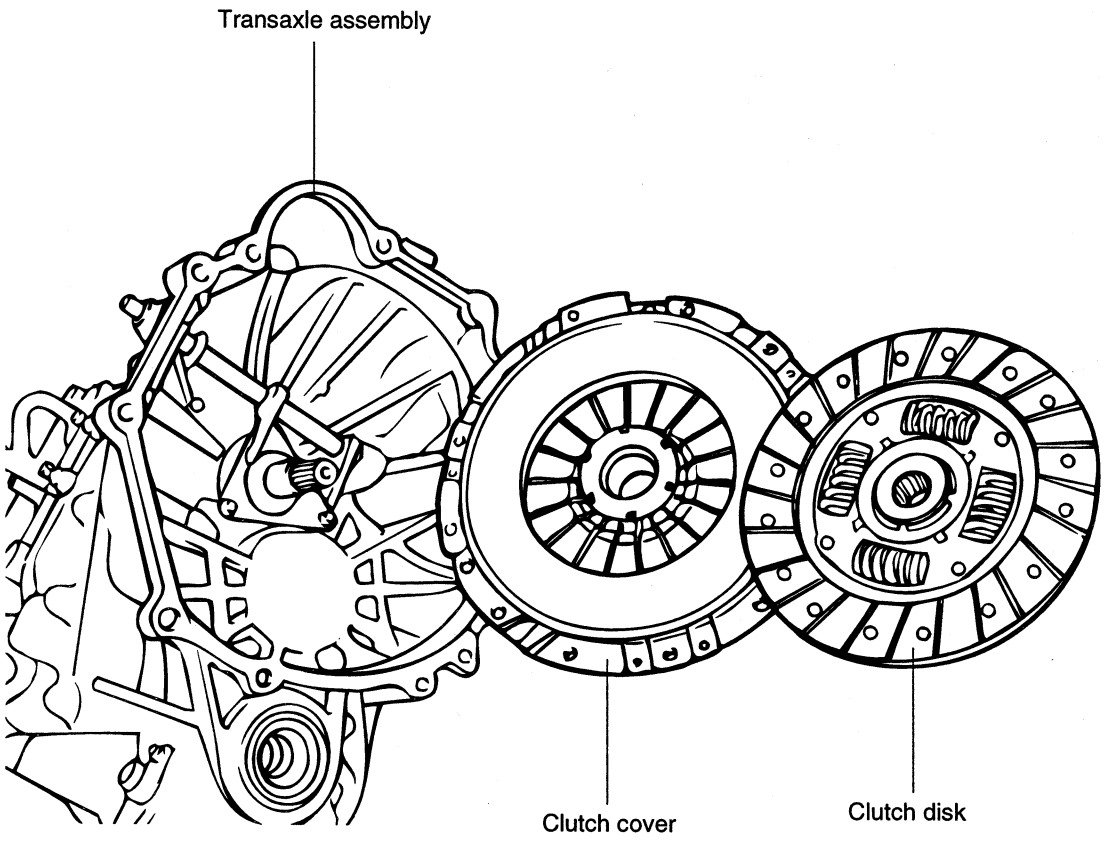

EOA9027A

REMOVAL EOA90280

1. To remove the transaxle assembly, first remove the air cleaner joint, then the mounting bracket, and wiring etc.

2. Remove the clutch release lever.

    1. Loosen the release lever nut and washer.
    2. Remove the clevis pin and snap ring from the release cylinder.
    3. Remove the release lever.

NOTE

It is impossible to remove the transaxle assembly without performing this step because the clutch cover assembly, release bearing and release fork are held together.

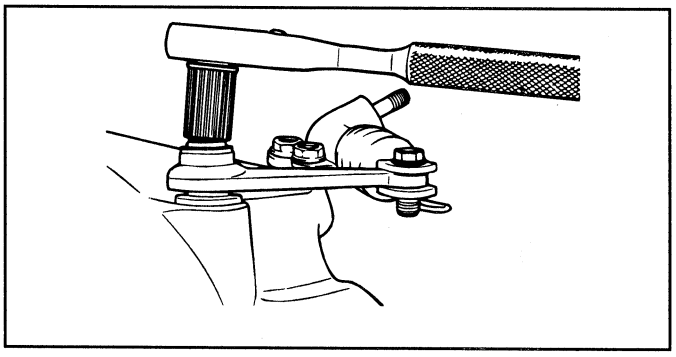

EOA9028B

3. Loosen the bolts attached to the release cylinder and remove the release cylinder.

4. Remove the transaxle assembly, after removing each bolt which connects the transaxle assembly and engine.

5. If the clutch cover is attached to the flywheel, remove the release bearing using snap-ring pliers.

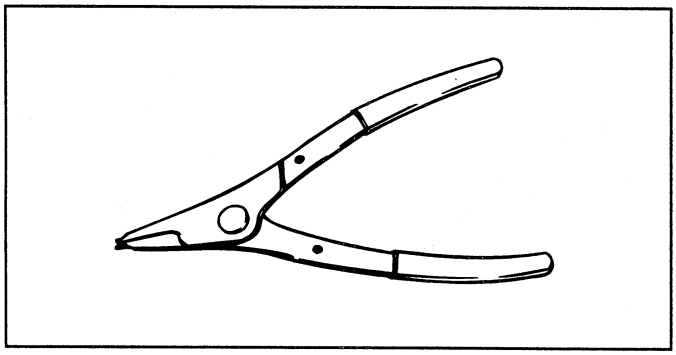

EMA9025B

1) Rotate the release bearing in an easy direction in order to examine the snap ring.

2) Insert the pliers under the wave washer as shown in the illustration and place it in the center of the snap ring.

3) Spread the snap ring by pushing down on the bearing as shown in the illustration.

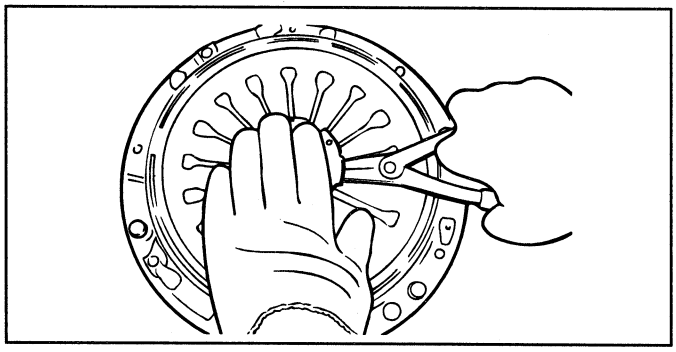

EOA9028C

4) The snap ring expanded state is shown in the figure.

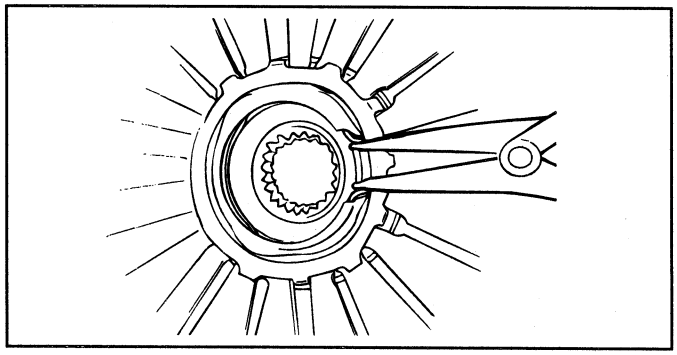

EOA9028D

5) With In the snap ring expanded, pull out the release bearing and remove it.

6. Insert the special tool (09411-11000) in the clutch disc to prevent the disc from shifting.

7. Loosen the bolts which attach the clutch cover to the flywheel in a star pattern. Loosen the bolts in succession, one or two turns at a time, to avoid bending the cover.

NOTE

Do not clean the clutch disc or the release bearing with cleaning solvent.

8. Remove the release fork shaft and bushing.

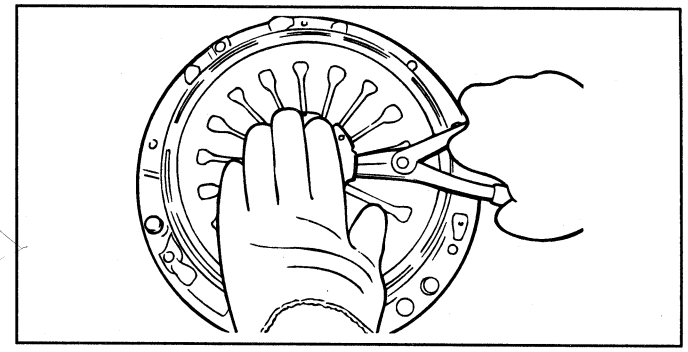

EOA9028E

INSPECTION EOA90290

CLUTCH COVER ASSEMBLY

1. Clean the dust from the clutch housing using a vacuum or cloth, Do not use compressed air. Check for oil leakage from the engine rear bearing oil seal and transaxle front oil seal. If leaky, repair them.

2. The friction surface of the pressure plate must be uniform over the entire disc surface. If any part shows excessive wear, the pressure plate is installed badly.

3. Check the friction surface of the flywheel for color change, partial damage, small cracks, and wear.

4. Don't touch the clutch disc with contaminated hands or gloves. Replace the clutch disc if the facing is stained with oil or grease. Measure the rivet depth. Replace the clutch disc if the rivet depth is less than 3 mm.

Limit : 0.3 mm (0.012 in.)

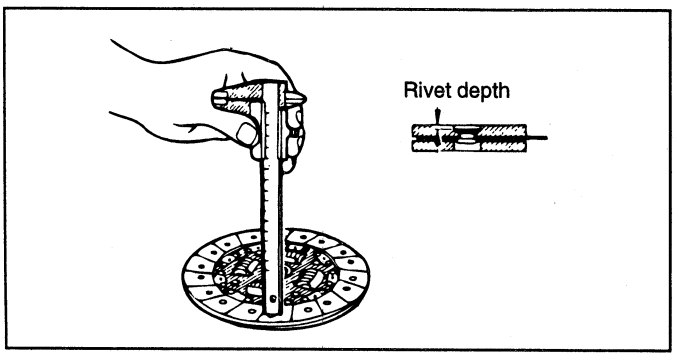

EOA9029B

5. Check the hub spline and torsion spring of the clutch disc for excessive wear.
6. Clean the friction surface of the pressure plate with cleaning solvent.
7. Measure the flatness of the pressure plate with a square. If it exceeds 0.5 mm, replace it. Check the pressure plate surface of wear, cracks, and color change.
8. Check that the three-dowel on the flywheel is installed completely.

CLUTCH RELEASE BEARING

CAUTION

The release bearing is packed with grease. Do not use cleaning solvent or oil on it.

1. Check the bearing for seizure, damage or abnormal noise. Also check the diaphragm spring contact points for wear.
2. Replace the bearing if the release fork contacting points are worn out.

CLUTCH RELEASE FORK

If there is abnormal wear at the point of contact with the bearing, replace the release fork.

INSTALLATION EOA90300

1. Apply multipurpose grease to the spline of the disc.

   Grease : CASMOLY L 9508

CAUTION

When installing the clutch, apply grease to each part, but be careful not to apply excessive grease. It can cause clutch slippage and judder.

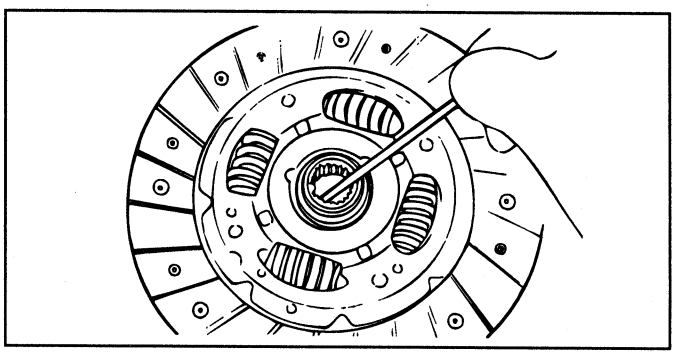

EOA9030F

2. Install the clutch disc assembly to the flywheel using the special tool (09411-11000).
3. Install the clutch cover assembly to the flywheel and temporarily tighten the bolts one or two steps at a time in a star pattern.

Tightening torque

Clutch cover bolt :

15-22 Nm (150-220 kg·cm, 11-16 lb·ft)

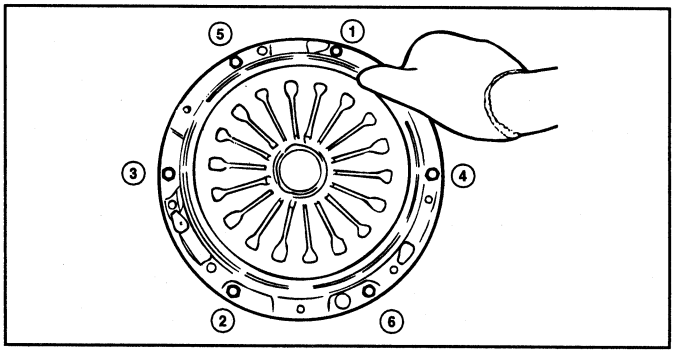

EOA9030B

4. Align the bearing to the release fork and then install it to the sleeve of the housing.

CAUTION

Apply multipurpose grease (CASMOLY L9508) to the bearing sleeve and contact point of the release fork.

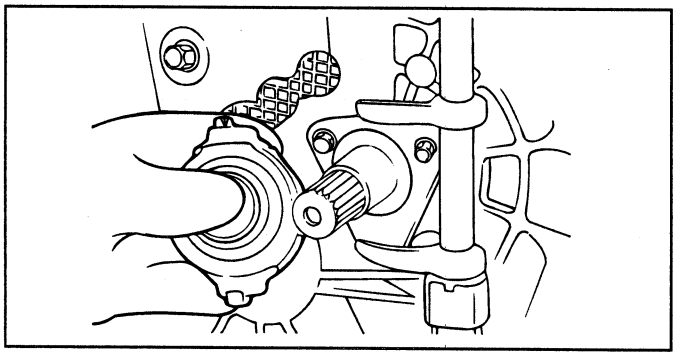

EOA9030C

5. Install the release lever to the release fork.

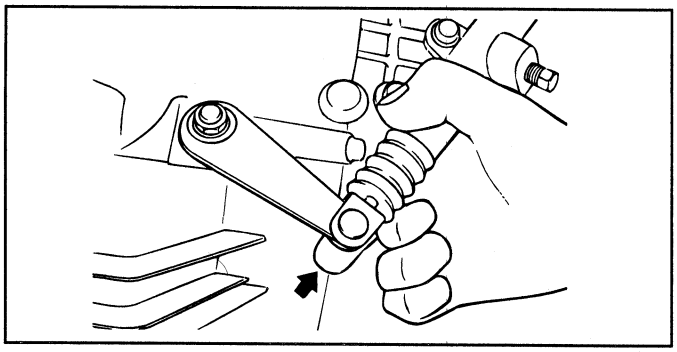

EOA9030D

6. Install the transaxle assembly to the engine.

CAUTION

If the transaxle assembly is installed to the engine without performing this step, the release bearing can be separated, as the release fork rotates freely.

7. After finishing step 6, push the release lever to the arrow mark. If there is a click sound, the release bearing and clutch cover are aligned correctly. If the Assembly does not snap into place, start with step 1 again.

   Release lever operating range is 3° or less. If the range is over 3°, the release bearing and clutch cover are not aligned correctly. Push the release lever to the arrow mark one more time.

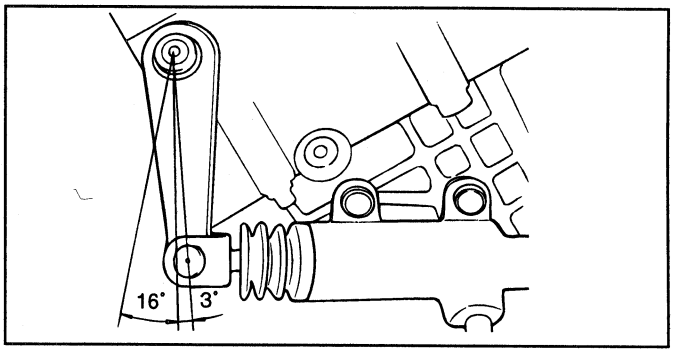

EOA9030E

CLUTCH MASTER CYLINDER

COMPONENTS EOJA0140

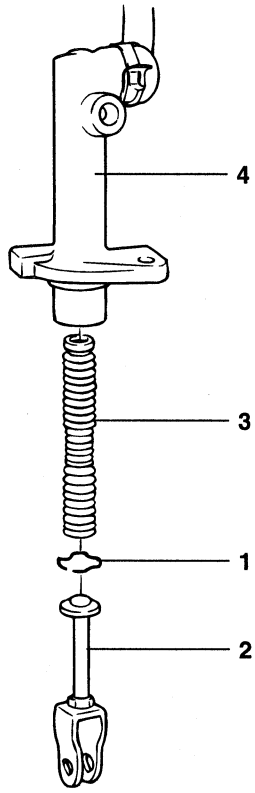

*** Disassembly steps**
1. Piston stopper ring
2. Push rod
3. Piston assembly
4. Clutch master cylinder

NOTE
Reverse the disassembly procedures to reassemble.

H7CL0100

REMOVAL EOHA0150

1. Drain the clutch fluid through the bleed plug.
2. Remove the clevis pin, split pin (cotter pin), and washer.
3. Disconnect the clutch line (master cylinder side).
4. Remove the master cylinder mounting bolt.

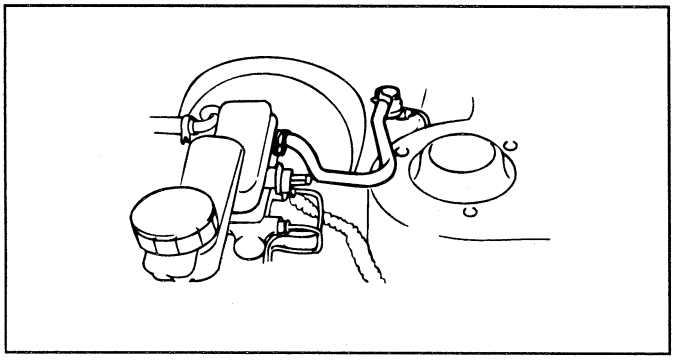

EOHA010A

5. Remove the clutch line clips.
6. Hold the nut on the clutch line and loosen the flare nut on the clutch tube.

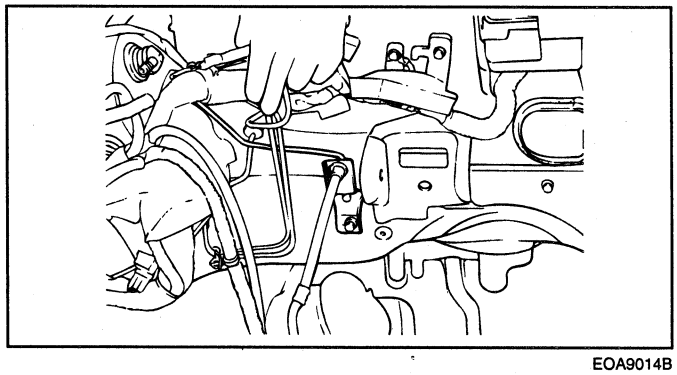

EOA9014B

7. Remove the clip from the clutch hose to remove the clutch hose from bracket.

8. Remove the clutch line.

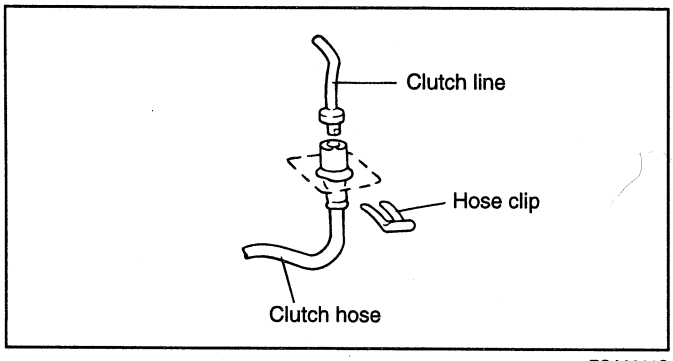

EOA9014C

9. Disconnect the clutch line (release cylinder side).

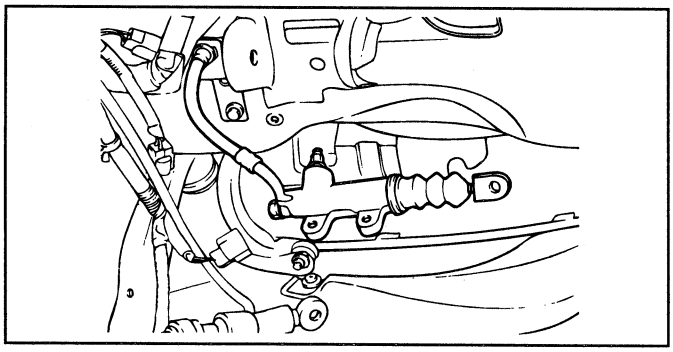

EOA9014D

INSPECTION EOHA0160

Check the clutch hose or line for cracks or clogging.

REASSEMBLY EOJA0170

1. Connect the clutch line (release cylinder side).

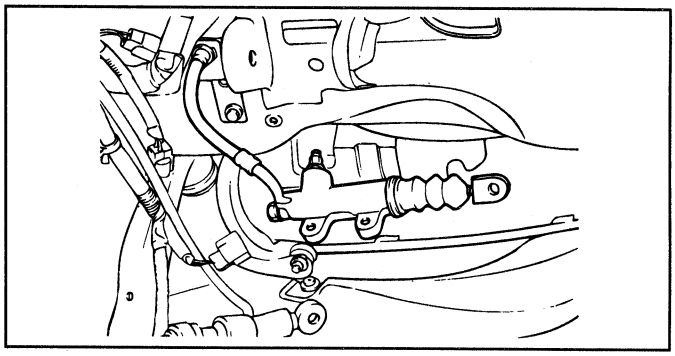

EOA9014D

2. Temporarily tighten the flare nut by hand, then tighten it to the specified torque, being careful that the clutch hose does not become twisted.

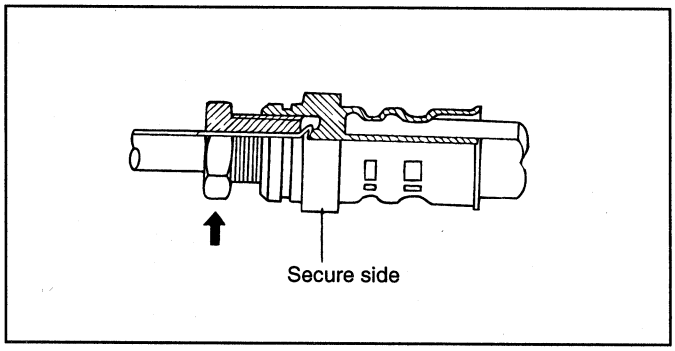

EOA9017A

3. Install the clutch line and clips.

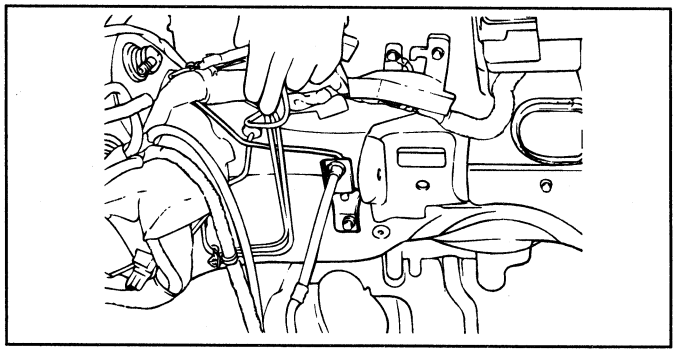

EOA9014B

4. Install the master cylinder.

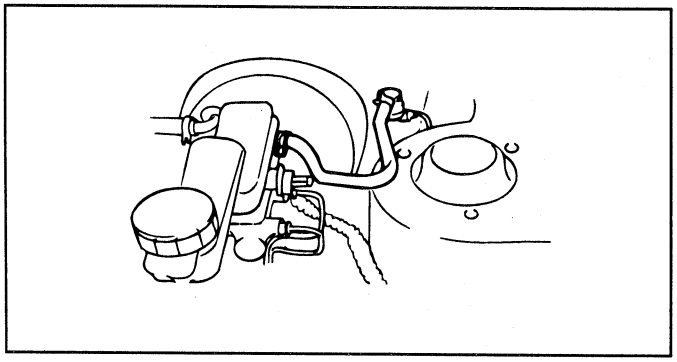

EOHA010A

5. Apply the specified grease to the clevis pin and washer.

Wheel bearing grease : SAE J310a, NLGI NO.2

6. Install the push rod to the clutch pedal.

7. Pour clutch fluid into the clutch master cylinder.

8. Bleed the clutch system.

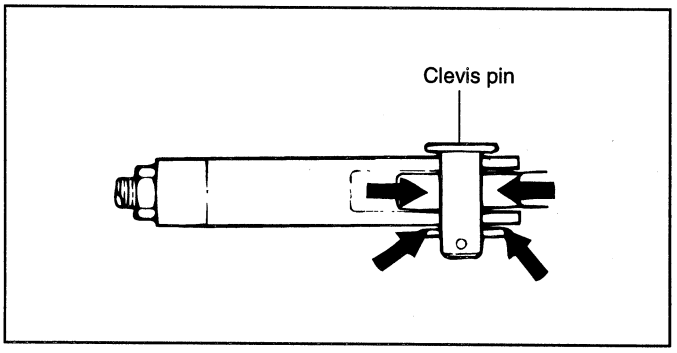

EOJA017A

CLUTCH MASTER CYLINDER EOJA0180

COMPONENTS

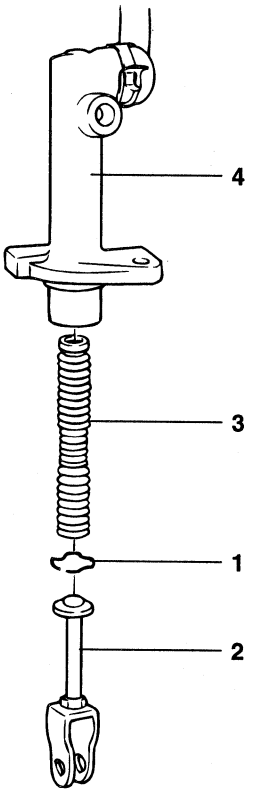

*** Disassembly steps**
1. Piston stopper ring
2. Push rod
3. Piston assembly
4. Clutch master cylinder

NOTE
Reverse the disassembly procedures to reassemble.

H7CL0100

DISASSEMBLY EOJA0190

1. Remove the piston stop ring.
2. Pull out the push rod and piston assembly.
3. Remove the reservoir band, reservoir cap, and reservoir.

NOTE

1. **Use care not to damage the master cylinder body and piston assembly.**
2. **Do not disassemble the piston assembly itself (item 3).**

INSPECTION EOA90200

1. Check the inside of the cylinder body for rust, pitting or scoring.
2. Check the piston cup for wear or distortion.
3. Check the piston for rust, pitting or scoring.
4. Check the clutch tube line for clogged.
5. Measure the master cylinder inside diameter and the piston outside diameter with a cylinder gauge micrometer.

NOTE

Measure the inside diameter of the master cylinder at three places (bottom, middle, and top) in a perpendicular direction.

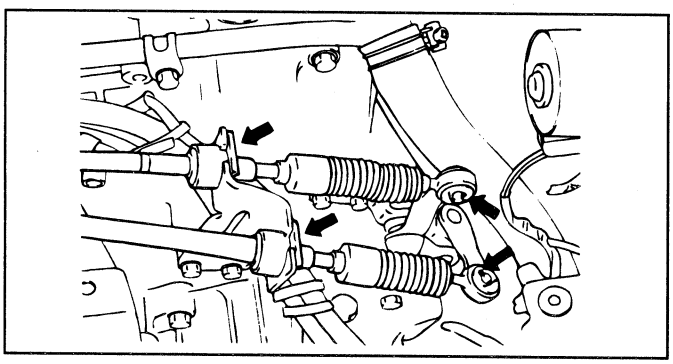

EOA9019B

6. If the master cylinder-to-piston clearance exceeds the limit, replace the master cylinder and/or piston assembly.

Limit : 0.15 mm (0.006 in.)

REASSEMBLY EOJA0210

1. Apply brake fluid to the inner surface of the master cylinder body and to the entire periphery of the piston assembly.
2. Install the piston assembly.

Specified fluid : Brake fluid DOT 3

CLUTCH PEDAL

COMPONENTS EOA90090

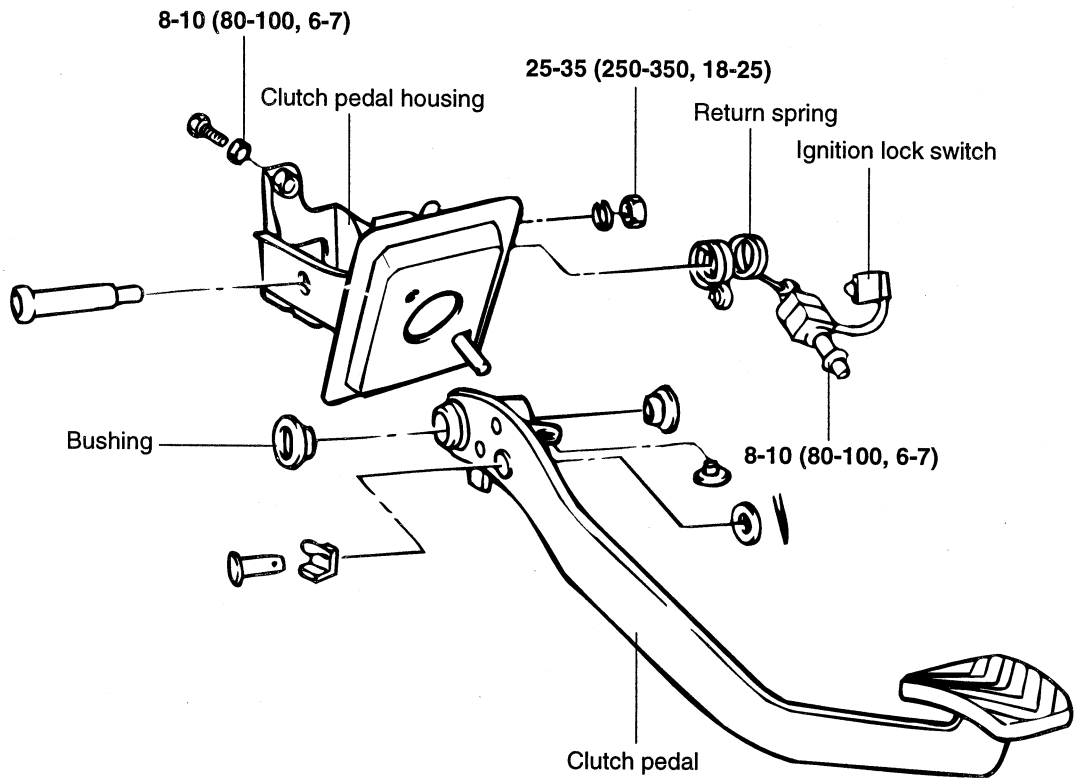

TORQUE : N.m (kg.cm, lb.ft)

EOA9009A

DISASSEMBLY EOJA0100

1. Disassemble the cotter pin, washer, and clevis pin.
2. Remove the clutch pedal mounting bolt.

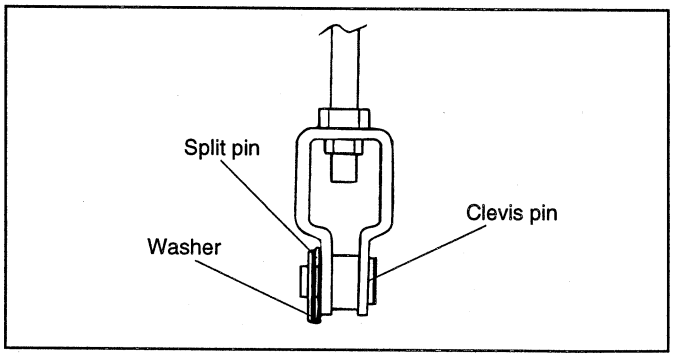

H6CH004B

INSPECTION EOA90110

1. Check the pedal shaft and bushing for wear.
2. Check the clutch pedal for bending or torsion.
3. Check the return spring for damage or deterioration.
4. Check the pedal pad for damage or wear.

IGNITION LOCK SWITCH INSPECTION

Remove the ignition lock switch and check for continuity between the terminals. If the continuity is not as specified, replace the switch.

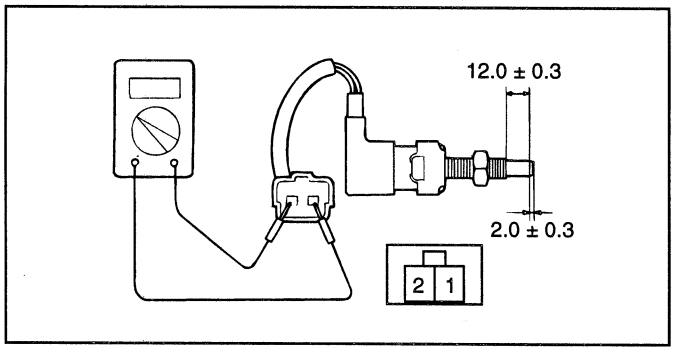

EOA9012A

REASSEMBLY EOJA0130

1. Apply the specified grease to the clutch pedal and bushings.

Chassis grease : SAE J310a, NLGI No.1

2. Install the clutch pedal mounting bolt.

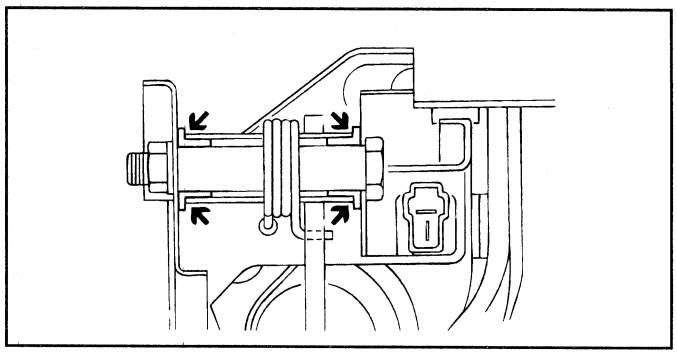

EODA009B

3. Apply the specified grease to the clevis pin and washer.

Wheel bearing grease : SAE J310, NLGI No.2

4. Install the push rod to the clutch pedal.
5. Adjust the clutch pedal clevis pin play.

CLUTCH RELEASE CYLINDER

COMPONENTS EOA90220

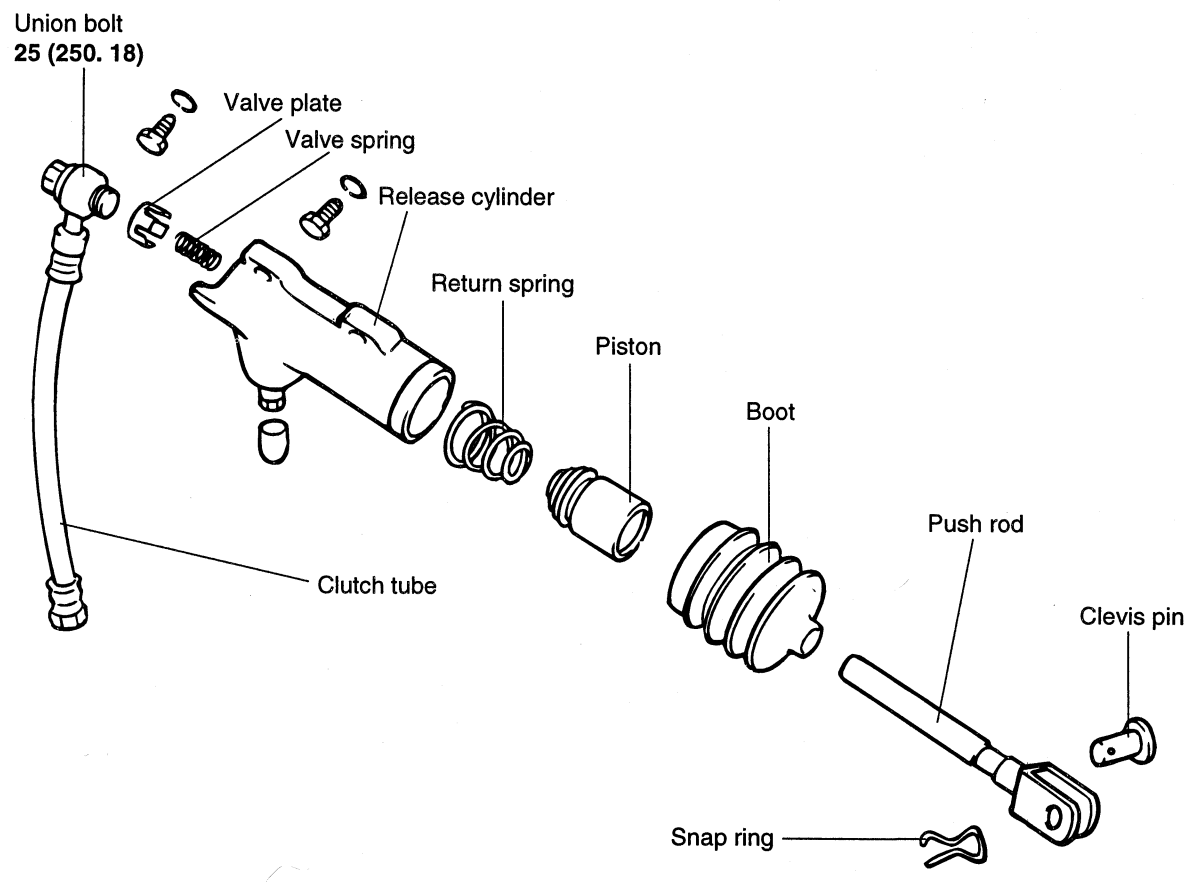

TORQUE : N.m (kg.cm, lb.ft)

EOA9022A

REMOVAL EOA90230

1. Remove the clutch hose, valve plate, spring, push rod, and boot.
2. Remove any dirt from the piston bore opening of the release cylinder.
3. Remove the piston from the release cylinder using compressed air.

CAUTION

1. **Use rags to prevent the piston from popping out and causing injury.**
2. **Apply compressed air slowly. Keep the fluid from splashing in your eyes or on your skin.**

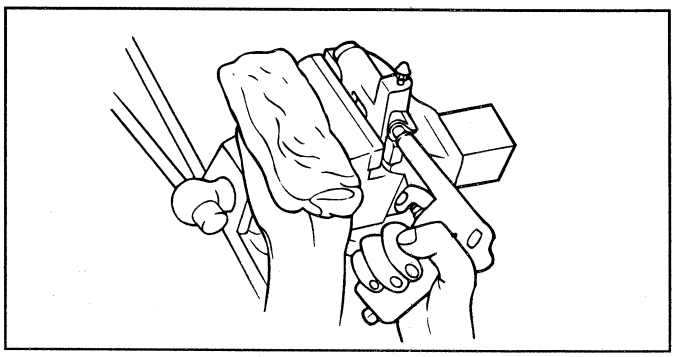

EOA9023A

INSPECTION EOA90240

1. Check the clutch release cylinder for fluid leakage.
2. Check the clutch release cylinder boots for damage.
3. Check the release cylinder bore for rust and damage.
4. Measure the release cylinder bore at three locations (bottom, middle, and top) with a cylinder gauge and replace the release cylinder assembly if the bore-to-piston clearance exceeds the limit.

Limit :

Clearance to pistion .. 0.15 mm (0.006 in.)

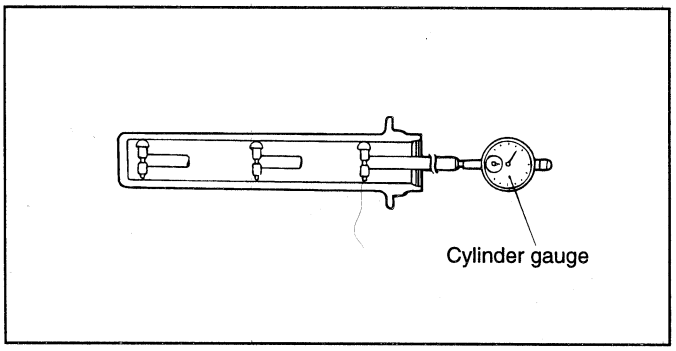

EOA9024A

REASSEMBLY EOA90250

1. Apply specified brake fluid to the release cylinder bore and the outer surface of the piston and piston cup. Push the piston cup assembly in to the cylinder.

Use the specified fluid : Brake fluid DOT 3

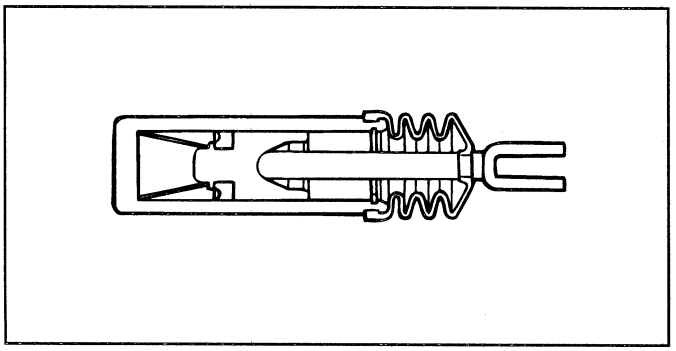

EOA9025A

2. Install the clutch hose, valve plate, spring, push rod, and boot.

INSTALLATION EOA90260

1. Coat the clevis pin with the specified grease. Align the hose at the end of the release cylinder push rod with that of the clutch release fork shaft, and insert the clevis pin into the holes.

   Specified grease : CASMOLY L9508

2. Install the clutch release cylinder and the clutch tube.

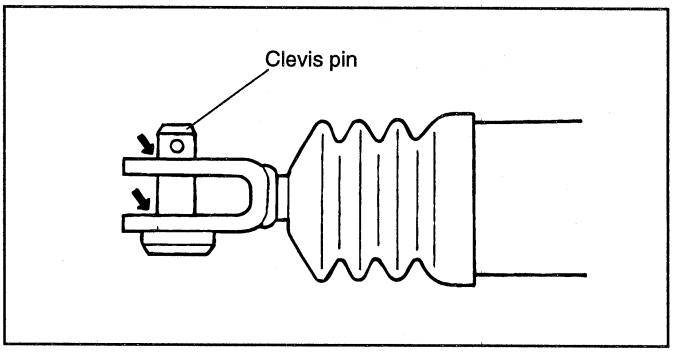

EOA9026A

Transaxle/ Transmission

GENERAL TR-2

AUTOMATIC TRANSAXLE SYSTEM TR-18

MANUAL TRANSAXLE SYSTEM TR-87

TRANSFER CASE ASSEMBLY TR-105

NOTE : Overhaul procedures for automatic transaxle is given in separate manual.

GENERAL

EMJA0010

SPECIFICATIONS(M/T)

Model		HTX
Type		5 speeds forward, 1 reverse
Gear ratio	First	3.917
	Second	1.950
	Third	1.300
	Fourth	0.941
	Fifth	0.750
	Reverse	3.462
Final gear ratio		4.563

SERVICE STANDARD

EMJA0020

Standard value	mm (in.) (T=tightness, L=losseness)
Differential side bearing end play	0.10T-0.20T (0.0039T-0.0078T)
Gear backlash in differential	0.025L-0.150L (0.00095L-0.0057L)
Input rear bearing snap ring end play	0-0.1L (0-0.0039L)
Output rear bearing snap ring end play	0.03L-0.1L (0.00114L-0.0039L)

TIGHTENING TORQUE

EMJA0030

Item	Nm	Kg.cm	lb.ft
Release bearing sleeve bolt	6-8	60-80	4-6
Release cylinder assembly	15-22	150-220	11-16
Select lever	20-27	200-270	15-20
Oil drain plug	40-60	400-600	29-43
Interlock bolt	43-50	430-500	32-36
Clutch housing case	44-55	440-550	32-40
Speedometer driven gear	4-6	40-60	3-4
Reverse idler bolt	43-55	430-550	32-40
Rear cover	20-25	200-250	15-18
Shift control cable bracket	20-27	200-270	15-20
Transaxle case bolt	44-55	440-550	26-40
Shift lever mounting bolt	20-27	200-270	15-20
Front roll stopper bracket to subframe bolts	40-50	400-500	29-36
Front roll stopper insulator bolt and nut	50-65	500-650	36-47
Front roll stopper bracket to transaxle bolts	60-80	600-800	43-58
Rear roll stopper bracket to subframe bolts	40-55	400-550	29-40
Rear roll stopper insulator bolt and nut	50-65	500-650	36-47
Rear roll stopper bracket to transaxle bolts	60-80	600-800	43-58
Transaxle mounting sub bracket nut	60-80	600-800	43-58
Transaxle mounting bracket bolts	40-55	400-550	29-40
Transaxle mounting insulator bolt	90-110	900-1100	65-80
Front bearing retainer & detent body cover bolt	15-22	150-220	10-16
Detent spring lock nut	15-21	150-210	10-16
Output shaft lock nut	150-220	1500-2200	10-16

LUBRICATIONS

EMJA0040

Item	Recommended lubricant	Quantity
Transaxle gear oil lit. (U.S. Imp.qts.)	Hypoid gear oil, SAE 75W/90, API-GL4	2.3 (2.4, 1.9)
Transaxle input shaft spline	CASMOLY L9508	As required
Transaxle oil seal lip	RETINAX AM, MOLYTEX GREASE EP-2	As required
Transaxle case and clutch housing alignment surface	THREE BOND 1216	As required
Transaxle case and rear cover alignment surface	THREE BOND 1216	As required
Bearing retaining bolt (flush bolt only)	THREE BOND1303	As required

SPECIAL TOOLS

EMJA0050

Tool(Number and Name)	Illustration	Use
09431-39000 Oil seal installer	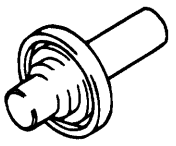 EMJA005A	Installation of differential oil seal (use with 09500–11000)
09455-33200 Bearing installer	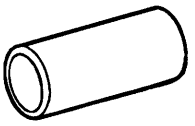 EMJA005B	Installation of output gear, bearing, sleeve
09433-21000 Bearing plate	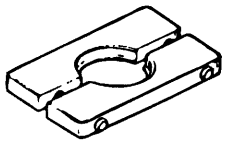 EMJA005C	Removal of differential bearing
09455-33200 Bearing installer	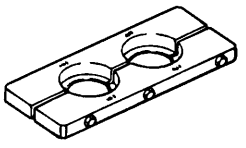 V5MT007E	Removal of input shaft bearing Removal of output shaft bearing
09457-22100 Bearing installer	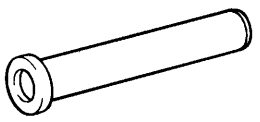 EMJA005D	Installation of input shaft bearing
09432-21500 Oil seal installer	 EMJA005E	Installation of input shaft oil seal
09532-11500 Outer race installer	 EMJA005F	Installation of differential bearing race (use with 09500 -11000)
09500-11000 Driver	 EMJA005G	Installation of bearing outer race

Tool(Number and Name)	Illustration	Use
09495-33000 Bearing and gear puller	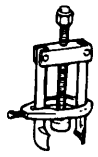 V5MT077G	Removal of ball bearing and gear
09500-21000 Driver	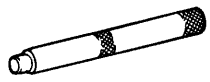 EMJA005H	Installation of input shaft bearing
09532-32000 Pinion bearing outer race installer	 EMJA005I	Installation of bearing outer race (use with 09500–21000)
09200-38001 Engine support fixture	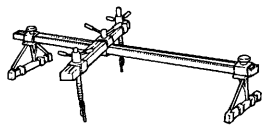 D0038001	Removal and installation of transaxle
09432-3A000 Output shaft puller	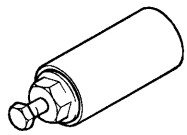 EMJA005J	Removal of output shaft

TROUBLESHOOTING

EMA90060

Symptom	Probable cause	Remedy
Vibration, noise	Loose or damaged transaxle and engine mounts	Tighten or replace the mounts
	Inadequate shaft end play	Correct end play
	Worn or damaged gears	Replace gears
	Use of an inadequate grade of oil	Replace with specified oil
	Low oil level	Replenish
	Inadequate engine idle speed	Adjust idle speed
Oil leakage	Broken or damaged oil seal or O-ring	Replace oil seal or O-ring
Hard shift	Faulty control cable	Replace control cable
	Poor contact or wear of synchronizer ring and gear cone	Correct or replace
	Weakened synchronizer spring	Replace synchronizer spring
	Use of an inadequate grade of oil	Replace with specified oil
Jumps out of gear	Worn gear shift fork or broken poppet spring	Replace shift fork or popet spring
	Synchronizer hub to sleeve spline clearance too large	Replace synchronizer hub and sleeve

SPECIFICATIONS(A/T)

EKJB0010

Item	F4A42-2	F4A51-2
Torque converter type	3-element, 1-stage, 2-phase type	
Transmission type	4-speed forward, 1-speed reverse	
Engine displacement	2.0D	2.4D, 2.7D
Gear ratio		
1st	2.842	2.842
2nd	1.529	1.495
3rd	1.000	1.000
4th	0.712	0.731
Reverse	2.480	2.720
Final gear ratio	4.407	4.520

SERVICE SPECIFICATIONS

EKJA0020

Items	Standard value
Output shaft preload	0.01-0.09 mm
Brake reaction plate end play	0-0.16 mm
Low-reverse brake end play	1.65-2.11 mm
Second brake end play	0.79-1.25 mm
Underdrive sun gear end play	0.25-0.45 mm
Input shaft end play	0.25-0.45 mm
Differential case preload	0.045-0.105 mm
Underdrive clutch end play	1.65-1.85 mm
Reverse and overdrive clutch return spring end play	0-0.09 mm
Overdrive clutch end play	1.6-1.8 mm
Reverse clutch end play	1.5-1.7 mm
Backlash between differential side gear and pinion	0.025-0.150 mm

TIGHTENING TORQUE

EKJA0030

Item	Nm	kg·cm	lb·ft
Wiring harness bracket	20-26	200-260	14-18
Control cable bracket bolt	20-26	200-260	14-18
Fluid temperature sensor	27-33	270-330	19-23
Eye bolt	10-12	100-120	7-8
Oil cooler feed tube	11-13	110-130	8-9
Oil filter	10-12	100-120	7-8
Input shaft speed sensor	10-12	100-120	7-8
Output shaft speed sensor	18-25	180-250	13-18
Manual control lever	10-12	100-120	7-8
Transaxle range switch	4-6	40-60	3-4
Speedometer gear	8-10	80-100	6-7
Valve body cover	10-12	100-120	7-8
Valve body mounting bolt	10-12	100-120	7-8
Manual control shaft detent	5-7	50-70	4-5
Rear cover	20-26	200-260	14-18
Torque converter housing	42-54	420-540	29-38
Oil pump	20-261	200-260	14-18
Transfer drive gear	6-22	160-220	11-15
Output shaft lock nut	160-180	1600-1800	110-126
Output shaft bearing retainer	20-26	200-260	14-18
Oil filler plug	29-34	290-340	20-24
Oil drain plug	29-34	290-340	20-24
Transfer drive gear lock nut	180-210	1800-2100	126-147
Differential drive gear to subframe bolts	130-140	1300-1400	91-98
Valve body	10-12	100-120	7-8
Solenoid valve support	5-7	50-70	4-5
Plate	5-7	50-70	4-5
Pressure check plug	8-10	80-100	6-7
Front roll stopper bracket to subframe bolts	40-55	400-550	29-38
Front roll stopper insulator bolt and nut	50-65	500-650	36-47
Front roll stopper bracket to transaxle bolts	60-80	600-800	43-58
Rear roll stopper bracket	40-55	400-550	29-38
Rear roll stopper insulator bolt and nut	50-60	500-650	36-47
Rear roll stopper bracket to transaxle bolts	60-80	600-800	43-58

Item	Nm	kg·cm	lb·ft
Transfer case assembly to transaxle mounting bolt	64-70	640-700	47-51
Transfer case bracket bolt	24-28	240-280	17-20
Transfer case assembly to engine block	50-54	500-540	36-39
Transfer case oil drain plug	34-38	340-380	25-28
Transfer case oil filler plug	34-38	340-380	25-28
Transfer case flange bolt	34-37	340-370	25-28
Pinion case flange bolt	34-37	340-370	25-28
Transaxle mounting sub bracket nut	60-80	600-800	43-58
Transaxle mounting bracket bolts	40-55	400-550	29-38
Transaxle mounting insulator bolt	90-110	900-1100	65-80

EKJB0040

LUBRICATIONS

Items	Specified lubricant	Quantity
Transaxle fluid lit. (U.S. qts., Imp,qts.)	GENUINE DIAMOND ATF SP-II M	8.5 (8.9,7.5) : F4A51 7.8 (8.2,6.9) : F4A42
Transfer case oil	SHELL SPIRAX AX (SAE 80W/90, API GL-5)	0.8L
Inner Hollow shaft	KLUBER MICROLUBE GNY 202	As required
Outer Hollow shaft	KLUBER MICROLUBE GNY 202	As required

SEALANTS

Items	Specified sealant
Rear cover	Hyundai genuine sealant TB1281B or equivalent
Torque converter housing	Hyundai genuine sealant TB1281B or equivalent
Valve body cover	Hyundai genuine sealant TB1281B or equivalent

SNAP RING FOR ADJUSTMENT AND SPACER

EKJA0050

Part name	Thickness mm	Identification Symbol
Thrust washer (For adjustment of input shaft end play)	1.8	18
	2.0	20
	2.2	22
	2.4	24
	2.6	26
	2.8	28
Snap ring (For adjustment of underdrive clutch and overdrive clutch end plays)	1.6	None
	1.7	Blue
	1.8	Brown
	1.9	None
	2.0	Blue
	2.1	Brown
	2.2	None
	2.3	Blue
	2.4	Brown
	2.5	None
	2.6	Blue
	2.7	Brown
	2.8	None
	2.9	Blue
	3.0	Brown
Snap ring (For adjustment of low-reverse brake and second brake reaction plates end plays)	2.2	Blue
	2.3	Brown
	2.4	None
	2.5	Blue
Pressure plate (For adjustment of low-reverse brake and second brake end plays)	1.6	6
	1.8	1
	2.0	0
	2.2	2
	2.4	4
	2.6	6
	2.8	8
	3.0	D

Part name	Thickness mm	Identification Symbol
Snap ring (For adjustment of reverse cluth end play)	1.9	None
	2.0	Blue
	2.1	Brown
	2.2	None
	2.3	Blue
	2.4	Brown
	2.5	None
	2.6	Blue
	2.7	Brown
	2.8	None
Snap ring (For adjustment of reverse clutch and overdrive clutch spring retainers end plays)	1.48	Brown
	1.53	None
	1.58	Blue
	1.63	Brown
Thrust race (For adjustment of underdrive sun gear end play)	1.6	-
	1.7	-
	1.8	-
	1.9	-
	2.0	-
	2.1	-
	2.2	-
	2.3	-
	2.4	-
	2.5	-
	2.6	-

Part name	Thickness mm	Identification Symbol
Spacer (For adjustment of output shaft preload)	1.88	88
	1.92	92
	1.96	96
	2.00	00
	2.04	04
	2.08	08
	2.12	12
	2.16	16
	2.20	20
	2.24	24
	2.28	28
	2.32	32
	2.36	36
	2.40	40
	2.44	44
	2.48	48
	2.52	52
	2.56	56
	2.60	60
	2.64	64
	2.68	68
	2.72	72
	2.76	76

Part name	Thickness mm	Identification Symbol
Spacer (For adjustment of differential case preload)	0.71	71
	0.74	74
	0.77	77
	0.80	80
	0.83	83
	0.86	86
	0.89	89
	0.92	92
	0.95	95
	0.98	98
	1.01	01
	1.04	04
	1.07	07
	1.10	J
	1.13	D
	1.16	K
	1.19	L
	1.22	G
	1.25	M
	1.28	N
	1.31	E
	1.34	O
	1.37	P
Spacer (For adjustment of backlash between differential side gear and pinion)	0.75 - 0.82	-
	0.83 - 0.92	-
	0.93 - 1.00	-
	1.01 - 1.08	-
	1.09 - 1.16	-

Part name	Thickness mm	Identification Symbol
Spacer (For adjustment of pinion assembly endplay equipped with transfer case)	1.25 - 1.28	-
	1.29 - 1.32	-
	1.33 - 1.36	-
	1.37 - 1.40	-
	1.41 - 1.44	-
	1.45 - 1.48	-
	1.49 - 1.52	-
	1.53 - 1.56	-
	1.57 - 1.60	-
	1.61 - 1.64	-
	1.65 - 1.68	-
	1.69 - 1.72	-
	1.73 - 1.76	-
	1.77 - 1.80	-
	1.81 - 1.84	-
	1.85 - 1.88	-
	1.89 - 1.92	-
	1.93 - 1.96	-
	1.97 - 2.00	-
	2.01 - 2.04	-
	2.05 - 2.08	-
	2.09 - 2.12	-
	2.13 - 2.16	-
	2.17 - 2.20	-
	2.21 - 2.24	-
	2.25 - 2.28	-
	2.29 - 2.32	-
	2.33 - 2.36	-

Part name	Thickness mm	Identification Symbol
Spacer (For adjustment of hypoid gear side end play equipped with transfer case)	1.30 - 1.33	-
	1.34 - 1.37	-
	1.38 - 1.41	-
	1.42 - 1.45	-
	1.46 - 1.49	-
	1.50 - 1.53	-
	1.54 - 1.57	-
	1.58 - 1.61	-
	1.62 - 1.65	-
	1.66 - 1.69	-
	1.70 - 1.73	-
	1.74 - 1.77	-
	1.78 - 1.81	-
	1.82 - 1.85	-
	1.86 - 1.89	-
	1.90 - 1.93	-
	1.94 - 1.97	-
	1.98 - 2.01	-
	2.02 - 2.05	-
	2.06 - 2.09	-
	2.10 - 2.13	-
	2.14 - 2.17	-
	2.18 - 2.21	-
	2.22 - 2.25	-
	2.26 - 2.29	-
	2.30 - 2.33	-
	2.34 - 2.37	-
	2.38 - 2.41	-
	2.42 - 2.45	-
	2.46 - 2.49	-
	2.50 - 2.53	-

Part name	Thickness mm	Identification Symbol
Spacer (For adjustment of viscous coupling right side end play equipped transfer case)	1.53 - 1.56	-
	1.57 - 1.60	-
	1.61 - 1.64	-
	1.65 - 1.68	-
	1.69 - 1.72	-
	1.73 - 1.76	-
	1.77 - 1.80	-
	1.81 - 1.84	-
	1.85 - 1.88	-
	1.89 - 1.92	-
	1.93 - 1.96	-
	1.97 - 2.00	-
	2.01 - 2.04	-
	2.05 - 2.08	-
	2.09 - 2.12	-
	2.13 - 2.16	-
	2.17 - 2.20	-
	2.21 - 2.24	-
	2.25 - 2.28	-
	2.29 - 2.32	-
	2.33 - 2.36	-

SPECIAL TOOLS

EKJA0060

Tool (Number and name)	Illustration	Use
09200-38001 Engine support fixture	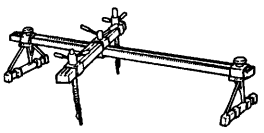 D0038001	Removal and installation of transaxle.
09452-21001 Oil pressure gauge adapter	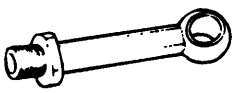 EKAA006A	Measurement of the oil pressure. (use with 09452-21500 and 09452-21002)
09452-21002 Oil pressure gauge adapter	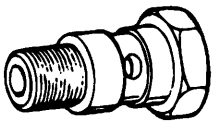 EKAA006B	Measurement of the oil pressure. (use with 09452-21500 and 09452-21001)
09452-21500 Oil pressure gauge	 EKAA006C	Measurement of the oil pressure. (use with 09452-21002 and 09452-21002)
09216-21300 Bearing installer	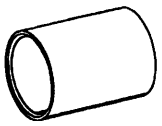 EKJA006A	Installation of viscous coupling taper roller bearing
09452-21200 Oil pump oil seal installer	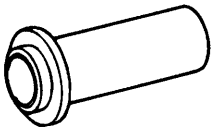 EKJA006B	Installation of transfer housing oil seal (Transfer case)
09455-33200 Bearing installer	 EKJA006C	Installation of inner drive shaft bearing and hypoid gear bearing
09495-33000 Drive shaft bearing removerr	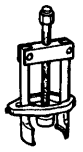 EKJA006D	Removal of taper roller bearing and inner drive shaft

AUTOMATIC TRANSAXLE SYSTEM

TROUBLESHOOTING (A/T) EKA90070

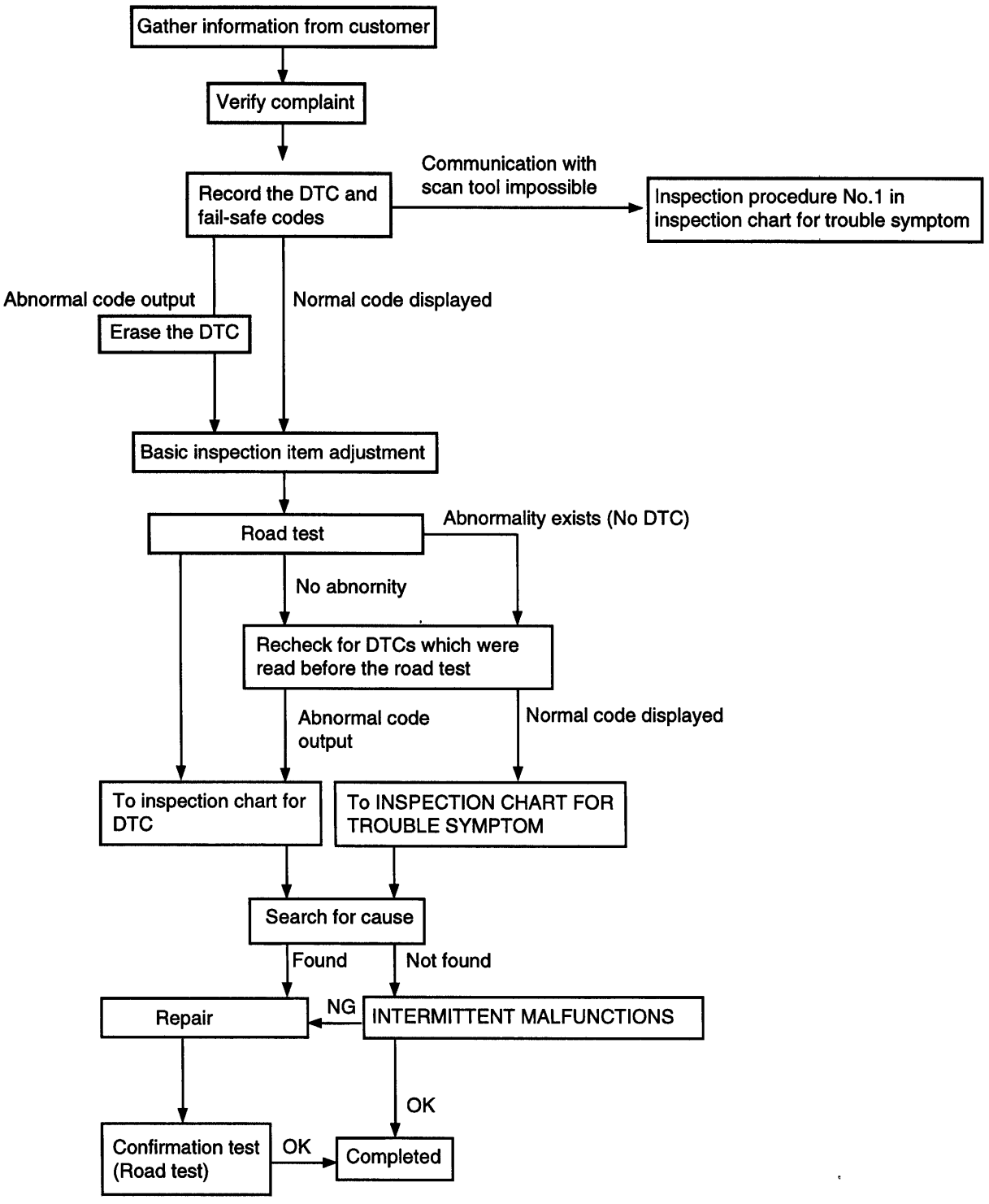

EKA9007D

BASIC INSPECTION ITEM ADJUSTMENT EKJA0080

AUTOMATIC TRANSMISSION FLUID CHECK

1. Drive the vehicle until the fluid temperature rises to the normal temperature (70-80°C).
2. Park the vehicle on a level surface.
3. Move the selector lever through all positions to fill the torque converter and the hydraulic circuits with fluid, and then move the selector lever to the N position.
4. After wiping off any dirt around the dipstick, remove the dipstick and check the condition of the fluid.

NOTE

If the fluid smells as if it is burning, it means that the fluid has been contaminated by fine particles from the friction materials. A transmission overhaul may be necessary.

5. Check that the fluid level is at the HOT mark on the dipstick. If the fluid level is lower than this, pour in more fluid until the level reaches the HOT mark. Automatic transmission fluid : GENUINE HYUNDAI ATF SP-II M.

NOTE

If the fluid level is low, the oil pump will draw in air along with the fluid, which will cause bubbles to form inside the hydraulic circuit. This will in turn cause the hydraulic pressure to drop, which will result in late shifting and slipping of the clutches and brakes. If there is too much fluid, the gears can churn it up into foam and cause the same conditions that can occur with low fluid levels. In either case, air bubbles can cause overheating and oxidation of the fluid which can interfere with normal valve, clutch, and brake operation. Foaming can also result in fluid escaping from the transmission vent, in which case it may be mistaken for a leak.

6. Insert the dipstick securely.
7. The fluid and the oil filters should always be replaced when overhauling the transmission or after the vehicle has been driven under severe conditions. The replacement procedures are given below.

CAUTION

The oil filters are special filters which are only to be used for the automatic transmission.

AUTOMATIC TRANSMISSION FLUID

REPLACEMENT

If you have a fluid changer, use this changer to replace the fluid. If you do not have a fluid changer, replace the fluid by the following procedure.

1. Disconnect the hose which connects the transmission and the oil cooler (inside the radiator).
2. Start the engine and let the fluid drain out.

   Running conditions : N range with engine idling.

CAUTION

The engine should be stopped within one minute after it is started. If the fluid has all drained out before then, the engine should be stopped at that point.

3. Remove the drain plug from the bottom of the transmission case to drain the remaining fluid.
4. Replace the oil filter.
5. Install the drain plug and its gasket, and tighten it the specified torque.

   Tightening torque : 32 Nm

6. Pour the new fluid in through the oil filler tube.

CAUTION

Stop pouring whenever the fluid overflows.

7. Start the engine and let the fluid drain out.

NOTE

Check the old fluid for contamination. If it has been contaminated, repeat the steps (6) and (7).

8. Pour the new fluid in through the oil filler tube.
9. Reconnect the hose which was disconnected in step (1) above, and firmly replace the oil level gauge.
10. Start the engine and let it idle for 1-2 minutes.
11. Move the select lever through all positions, and then move it to the N position.
12. Drive the vehicle until the fluid temperature rises to the normal temperature (70-80°C), and then check the fluid level again. The fluid level must be at the HOT Mark.
13. Firmly insert the dipstick into the oil filler tube.

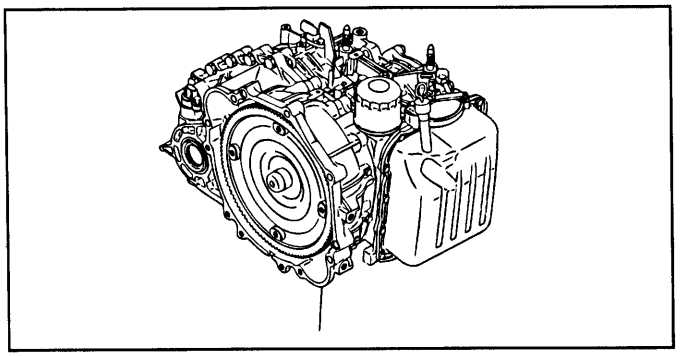

EKA9009E

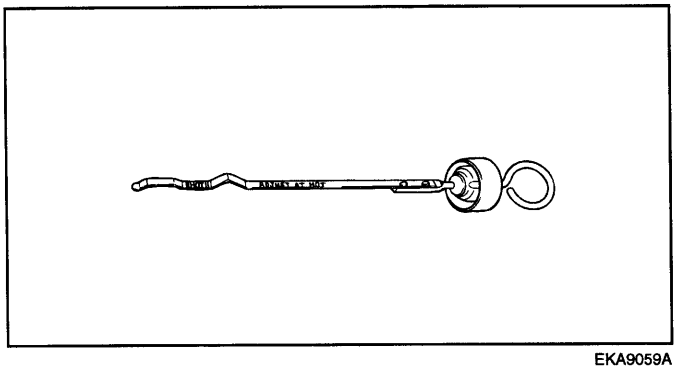

EKA9059A

OIL FILTER REPLACEMENT

1. Remove the automatic transmission oil filter using a filter wrench (chain, etc,) if available, after removing the air cleaner assembly.
2. After removing the filter, clean away any automatic transaxle fluid, mud etc. around the transaxle using cloth gloves or rags.
3. Clean the filter bracket side mounting surface.
4. Apply a small amount of automatic transmission fluid to the O-ring of the new oil filter.
5. Install the automatic transmission oil filter hand tight.

NOTE

Tightening torque : 11-13 Nm

6. Check the level of the automatic transmission fluid.

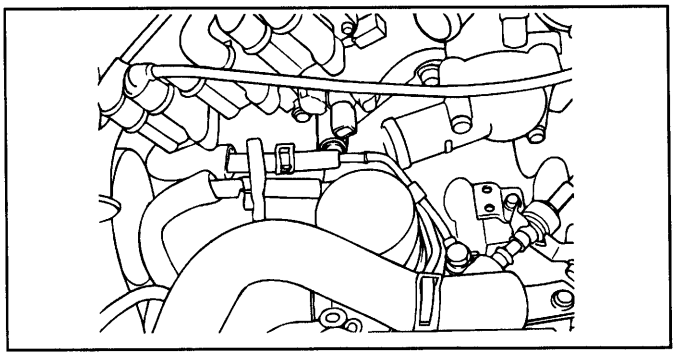

EKA9009C

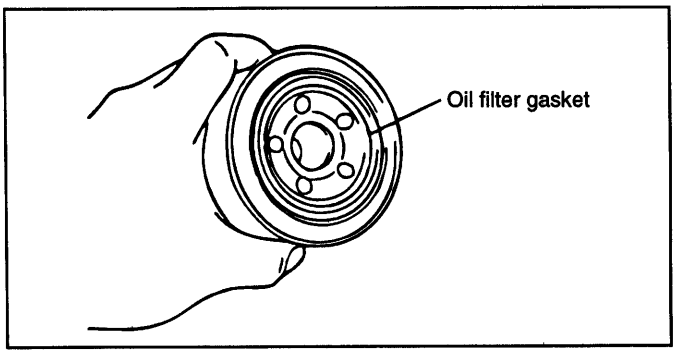

EKA9001A

TRANSAXLE RANGE SWITCH CONTINUITY CHECK

Items	Terminal No.									
	6	5	4	3	2	1	10	9	8	7
P				○			○	○	○	
R									○	○
N			○				○	○	○	
D						○			○	

EKJA008A

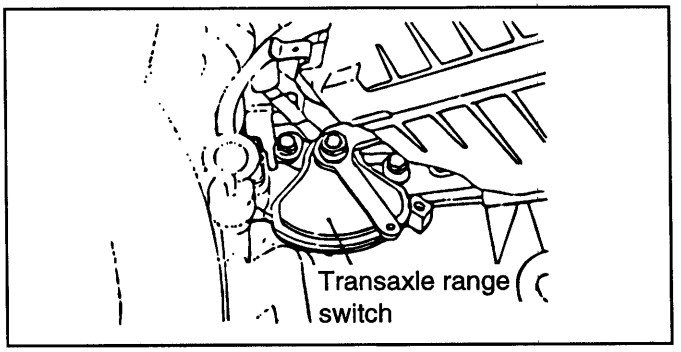

EKA9002A

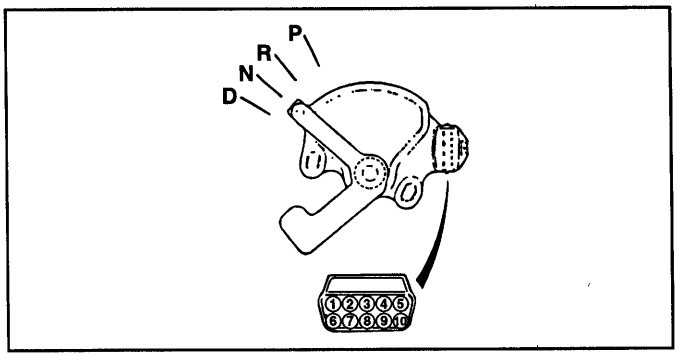

EKJA008B

TRANSAXLE RANGE SWITCH AND CONTROL CABLE ADJUSTMENT

1. Set the selector lever to the "N" position.
2. Loosen the control cable to the manual control lever coupling nut to free the cable and lever.

3. Set the manual control lever to the neutral position.

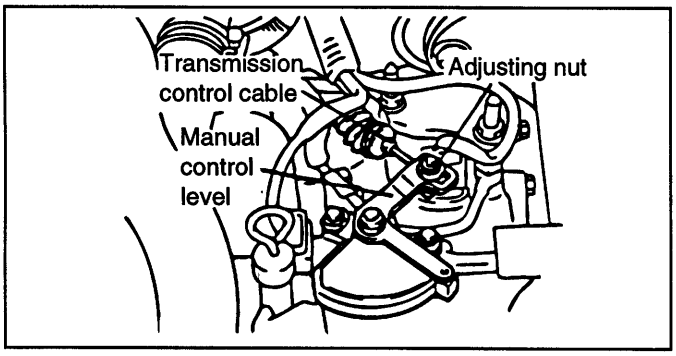

EKA9002C

4. Loosen the transaxle range switch mounting bolts and then turn the transaxle range switch body so the hole in the end of the manual control lever and the hole (cross section A-A in the figure) in the flange of the transaxle range switch body are aligned.

5. Tighten the transaxle range switch body mounting bolts to the specified torque. Be careful at this time not to change the position of the switch body.

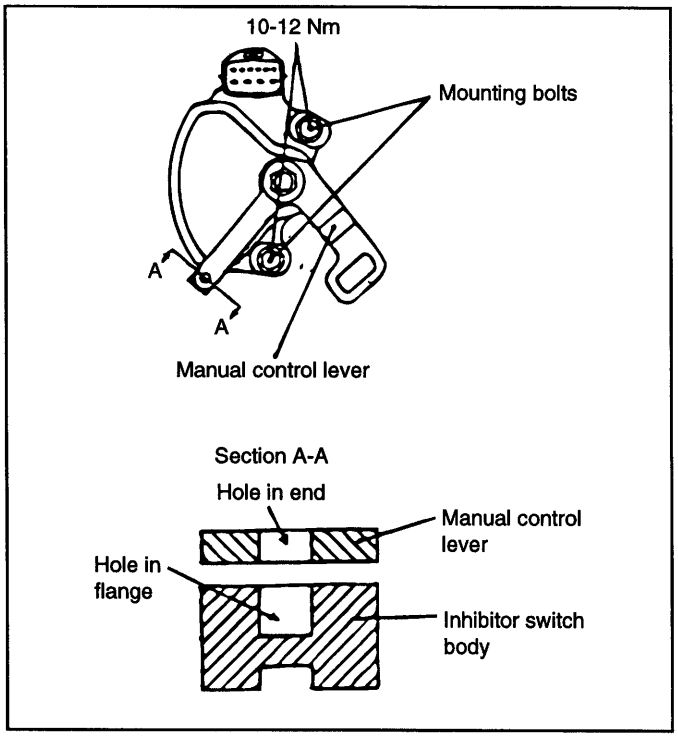

EKA9003A

6. Gently pull the transmission control cable in the direction of the arrow, and then tighten the adjusting nut.

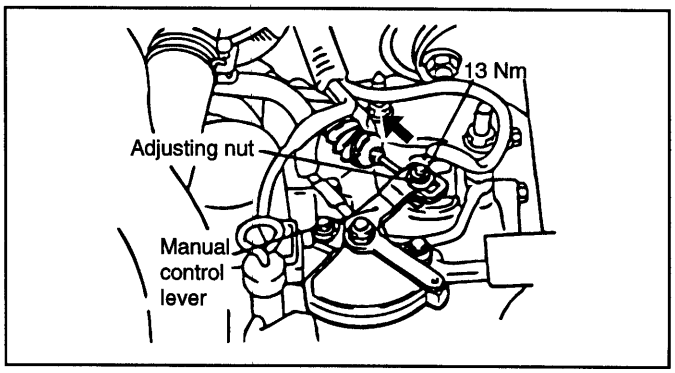

EKA9003B

7. Check that the selector lever is in the "N" position.

8. Check that each range on the transmission side operates and functions correctly for each position of the selector lever.

A/T CONTROL COMPONENT CHECK

1. THROTTLE POSITION SENSOR CHECK.

   The TP Sensor is a variable resistor type that rotates with the throttle body shaft to sense the throttle valve angle. As the throttle shaft rotates, the output voltage of the TP Sensor changes. The ECM detects the throttle valve opening based on voltage change. (Refer to FL-section).

2. OIL TEMPERATURE SENSOR CHECK

   a. Remove the oil temperature sensor.
   b. Measure the resistance between terminals No.1 and No.2 of the oil temperature sensor connector.

   Standard value :

Oil temperature (°C)	Resistance (KΩ)
0	16.7-20.5
100	0.57-0.69

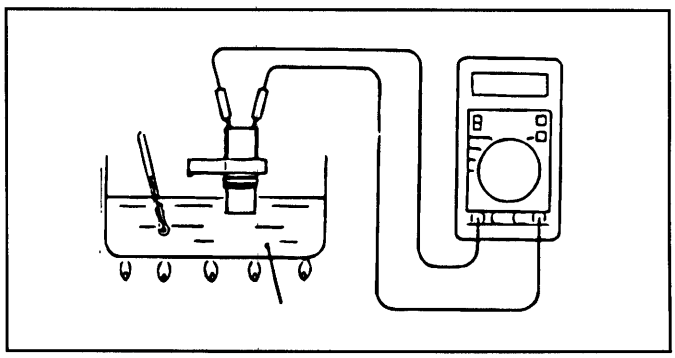

EKA9004A

3. VEHICLE SPEED SENSOR CHECK

a. Remove the vehicle speed sensor and connect a 3-10 KΩ resistance as shown in the illustration.
b. Turn the shaft of the vehicle speed sensor and check that there is voltage between terminals 2-3 (1 turn=4 pulses).

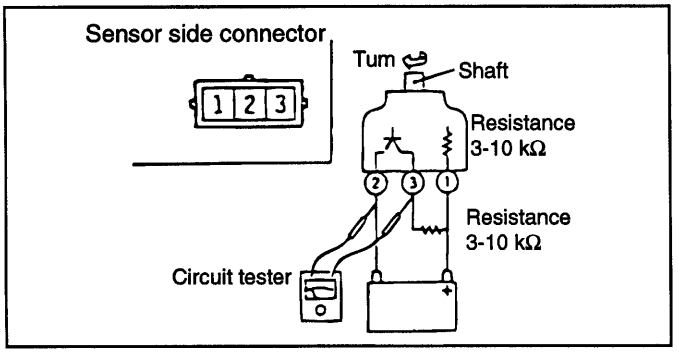

EKA9004B

4. A/T CONTROL RELAY CHECK

a. Remove the A/T control relay.
b. Use jumper wires to connect the A/T control relay terminal (2) to the battery (+) terminal and terminal (4) to the battery (-) terminal.
c. Check the continuity between terminal (1) and terminal (3) of the A/T control relay when the jumper wires are connected to and then disconnected from the battery.
d. If there is a problem, replace the A/T control relay.

Jumper wire	Continuity between terminal No.1
Connected	Continuity
Disconnected	No continuity

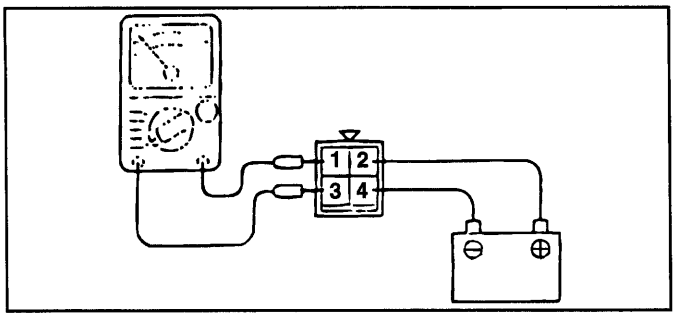

EKJA008C

5. SOLENOID VALVE CHECK

a. Remove the valve body cover.
b. Disconnect the connectors of each solenoid valve.

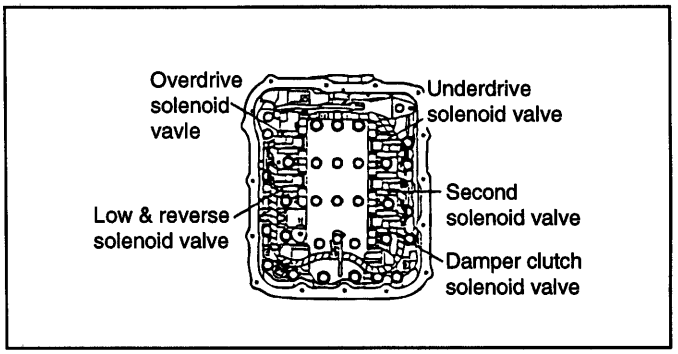

EKA9005C

c. Measure the resistance between terminals 1 and 2 of each solenoid valve.
Standard value :

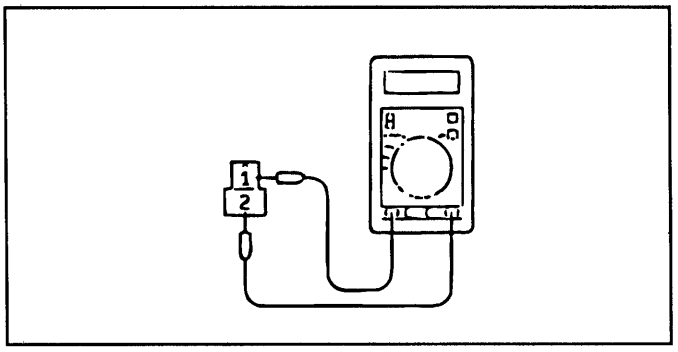

EKA9005D

d. If the resistance is outside the standard value, replace the solenoid valve.

NOTE

Resistance of the solenoid valve connector.

Terminal No.	Name	Resistance
7 & 10	Damper clutch solenoid valve	2.7-3.4 Ω (at 20°C)
10 & 6	Low and reverse solenoid valve	
9 &4	Second solenoid valve	
9 & 3	Underdrive solenoid valve	
9 & 5	Overdrive solenoid valve	

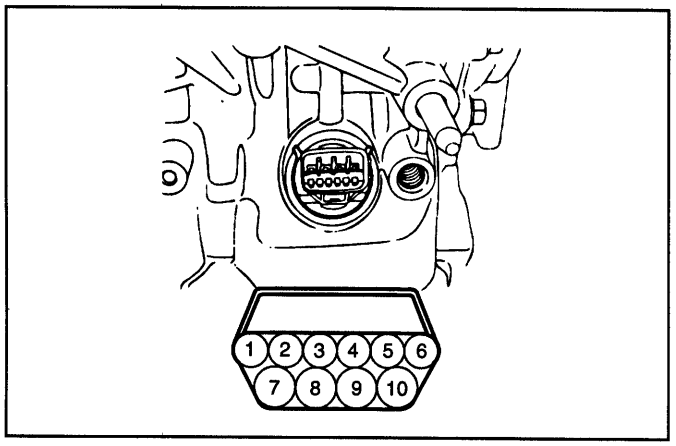

EKA9017B

TORQUE CONVERTER STALL TEST

This test measures the maximum engine speed when the selector lever is at the D or R position. The torque converter stalls to test the operation of the torque converter, starter motor, one-way clutch operation, the holding performance of the clutches, and brakes in the transmission.

CAUTION

Do not let anybody stand in front of or behind the vehicle while this test is being carried out.

a. Check the automatic transmission fluid level and temperature and the engine coolant temperature.
   - Fluid level : At the HOT mark on the oil level gauge
   - Fluid temperature : 80-100°C
   - Engine coolant temperature : 80-100°C

b. Chock both rear wheels (left and right).
c. Pull the parking brake lever on with the brake pedal fully depressed.
d. Start the engine.
e. Move the selector lever to the D position, fully depress the accelerator pedal and take a reading of the maximum engine speed at this time.

CAUTION

1. **The throttle should not be left fully open for more than eight seconds.**
2. **If carrying out the stall test two or more times, move the selector lever to the N position and run the engine at 1,000 rpm to let the automatic transmission fluid cool down before carrying out subsequent tests.**
   Standard value
   Stall speed : 2,100–2,900 r/min
3. **Move the selector lever to the R position and carry out the same test again.**
   Standard value Stall speed : 2,100–2,900 r/min

TORQUE CONVERTER STALL TEST RESULTS

1. Stall speed is too high in both D and R ranges
   - Low line pressure
   - Low & reverse brake Slippage
2. Stall speed is too high in D range only
   - Underdrive clutch slippage
3. Stall speed is too high in R range only
   - Reverse clutch slippage
4. Stall speed too low in both D and R ranges
   - Malfunction of torque converter
   - Insufficient engine output

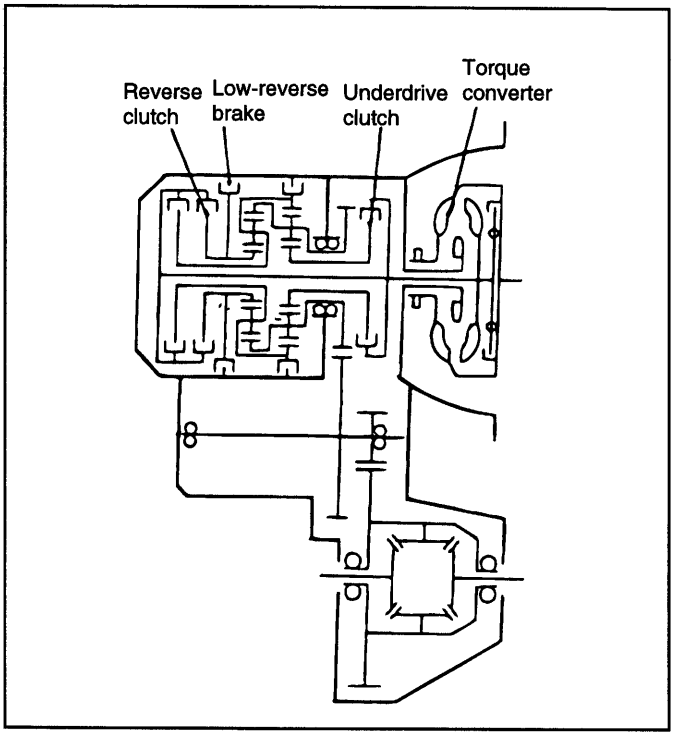

EKA9006A

HYDRAULIC PRESSURE TEST

1. Warm up the engine until the automatic transmission fluid temperature is 80-100°C.
2. Jack up the vehicle so that the wheels are free to turn.
3. Connect an oil pressure gauge set to each pressure discharge port.
4. Measure the hydraulic pressure at each port under the conditions given in the standard hydraulic pressure table, and check that the measured values are within the standard value ranges.

5. If a value is outside the standard range, correct the problem while referring to the hydraulic pressure test diagnosis table.

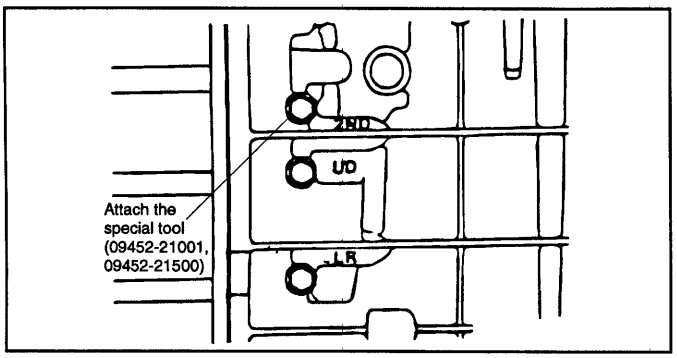

EKA9007A

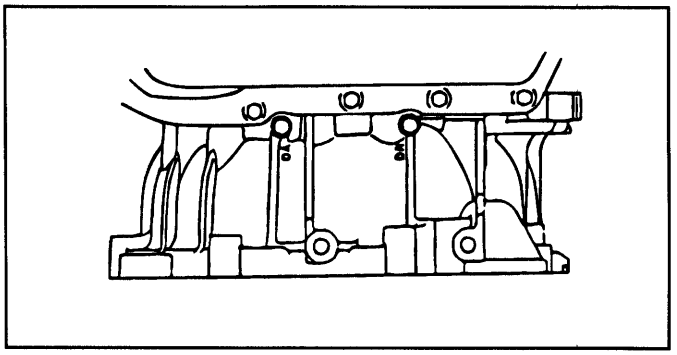

EKA9007B

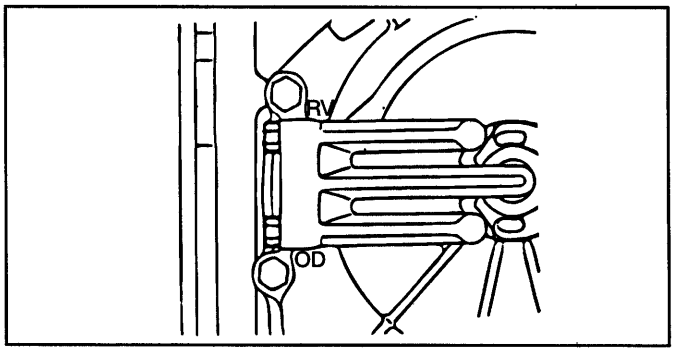

EKA9007C

STANDARD HYDRAULIC PRESSURE TEST

Measurement condition			Standard hydraulic pressure kPa						
Selector lever position	Shift position	Engine speed (rpm)	Under drive clutch pressure(UD)	Reverse clutch pressure(REV)	Over-drive clutch pressure(OD)	Low and reverse brake pressure(LR)	Second brake pressure(2ND)	Damper clutch apply pressure(DA)	Damper clutch release pressure(DR)
P	-	2,500	-	-	-	260-340	-	-	220-360
R	Reverse	2,500	-	1,270-1,770	-	1,270-1,770	-	-	500-700
N	Neutral	-	-	-	-	260-340	-	-	220-360
D	1st gear	2,500	1,010-1,050	-	-	1,010-1,050	-	-	500-700
	2nd gear	2,500	1,010-1,050	-	-	-	1,010-1,050	-	500-700
	3rd gear	2,500	780-880	-	780-880	-	-	More than 750	450-650
	4th gear	2,500	-	-	780-880	-	780-880	More than 750	450-650

HYDRAULIC PRESSURE TEST DIAGNOSIS TABLE

Trouble symptom	Probable cause
All hydraulic pressures are high	Incorrect transmission control cable adjustment
	Malfunction of the regulator valve
All hydraulic presures are low	Incorrect transmission control cable adjustment
	Malfunction of the oil pump
	Clogged internal oil filter
	Clogged external oil filter
	Clogged oil cooler
	Malfunction of the regulator valve
	Malfunction of the relief valve
	Incorrect valve body installation
Hydraulic pressure is abnormal in "R" range only	Malfunction of the regulator valve
	Clogged orifice
	Incorrect valve body installation
Hydraulic pressure is abnormal in "3" or "4" range only	Malfunction of the regulator valve
	Clogged orifice
	Incorrect valve body installation
	Malfunction of the overdrive solenoid valve
	Malfuction of the overdrive pressure control valve
	Malfunction of the regulator valve
	Malfunction of the switch valve
	Clogged orifice
	Incorrect valve body installation
Only underdrive hydraulic pressure is abnormal	Malfunction of the oil seal K
	Malfunction of the oil seal L
	Malfunction of the oil seal M
	Malfunction of the underdrive solenoid valve
	Malfunction of the underdrive pressure control valve
	Malfunction of check ball
	Clogged orifice
	Incorrect valve body installation
Only reverse clutch hydraulic pressure is abnormal	Malfunction of the oil seal A
	Malfunction of the oil seal B
	Malfunction of the oil seal C
	Clogged orifice
	Incorrect valve body installation

Trouble symptom	Probable cause
Only overdrive hydraulic pressure is abnormal	Malfunction of the oil seal D
	Malfunction of the oil seal E
	Malfunction of the oil seal F
	Malfunction of the overdrive solenoid valve
	Malfunction of the overdrive pressure control valve
	Malfunction check ball
	Clogged orifice
	Incorrect valve body installation
Only low and reverse hydraulic pressure is abnormal	Malfunction of the oil seal I
	Malfunction of the oil seal J
	Malfunction of the low and reverse solenoid valve
	Malfunction of the low and reverse pressure control valve
	Malfunction of the switch valve
	Malfunction of the fail safe valve A
	Malfunction of check ball
	Clogged orifice
	Incorrect valve body installation
Only second hydraulic pressure is abnormal	Malfunction of the oil seal G
	Malfunction of the oil seal H
	Malfunction of the oil seal O
	Malfunction of the second solenoid valve
	Malfunction of the second pressure control valve
	Malfunction of the fail safe valve B
	Clogged orifice
	Incorrect valve body installation
Only reverse clutch hydraulic pressure is abnormal	Malfunction of the oil cooler
	Malfunction of the oil seal N
	Malfunction of the damper clutch control solenoid valve
	Malfunction of the damper clutch control valve
	Malfunction of the torque converter pressure control valve
	Clogged orifice
Pressure applied to non - operating element	Incorrect valve body installation
	Incorrect transmission control cable adjustment
	Malfunction of the manual valve
	Malfunction of check ball
	Incorrect valve body installation

DIAGNOSIS FUNCTION EKAA0090

1. Connect the HI-SCAN PRO to the diagnostic connector (DLC).

2. Read the diagnostic trouble codes. Follow the remedy procedures according to the "DIAGNOSTIC TROUBLE CODE DESCRIPTION" on the following page.

NOTE

- **A maximum of 8 diagnostic trouble codes (in the sequence of occurrence) can be stored in the Random Access Memory (RAM) incorporated within the control module.**
- **The same diagnostic trouble code can not be stored more than one time.**
- **If the number of stored diagnostic trouble codes or diagnostic trouble patterns exceeds 8, already stored diagnostic trouble codes will be erased in sequence, beginning with the oldest.**
- **Do not disconnect the battery until all diagnostic trouble codes or diagnostic trouble patterns have been read out, because all stored diagnostic trouble codes or diagnostic trouble patterns will be cancelled when the battery is disconnected.**

3. If the fail-safe system is activated and the transaxle is locked in third gear, the diagnostic trouble code for Fail-safe will be stored. Three of these diagnostic trouble codes can be stored.

4. With the transaxle locked in third gear and, the ignition key turned to the OFF position, the diagnostic trouble code will be stored in RAM.

5. Memorization.

   - Up to 8 diagnostic items and 3 fail-safe items can be memorized.
   - If the memory capacity is exceeded, diagnosis and fail-safe items in the memory are overwritten, starting with the oldest.
   - No code can be memorized more than once.

6. Diagnosis Code Deletion.

   1) Automatic Deletion

      All diagnosis codes are deleted from memory the 200th time the ATF temperature reaches 50°C after memorization of the most recent diagnosis code.

   2) Forced Deletion.

Memorized diagnosis codes can be deleted using the provided the following conditions are satisfied :

- The ignition switch is ON.
- There is no pulse from the crank angle sensor.
- There is no pulse from the output shaft speed sensor.
- There is no pulse from the vehicle speed sensor.
- The fail-safe function is not operational.

EKJA0100

ROAD TEST

No	Condition	Operation	Judgement : Value	Check item
1	Ignition switch OFF	Ignition switch (1) ON	Battery voltage (mV)	Control relay
2	Ignition switch : ON Engine Stoped Select lever position P	Selector lever position (1) P, (2) R, (3) N, (4) D	(1) P, (2) R, (3) N, (4) D	Transaxle rangs switch
		Accelerator pedal 1. Released 2. Half depressed 3. Depressed	1. 400-1,000 mV 2. Gradually rises from (1) 3. 4,500-5,000 mV	Throttle position sensor
		Brake pedal • Depressed • Released		Stop lamp switch
3	Ignition switch ST Engine Stopped	Starting test with lever P or N range	Starting should be possible	Starting possible or impossible
4	Warming up	Drive for 15 minutes or more so that the automatic fluid temperature becomes 70-90°C	Gradually rises to 70-90°C	Oil temperature sensor
5	Engine Idling Selector lever position N	A/C switch 1. ON 2. OFF	1. ON 2. OFF	Triple pressure switch
		Accelerator pedal 1. Released 2. Half depressed	1. ON 2. OFF	Idle position
			1. 600-900 rpm 2. Gradually rises form (1)	
			1. Data changes	Communication with engine-ECU
		Selector lever position 1. N → D 2. N →R	Should be no abnormal shift shock Time lag should be within 2 seconds	Malfunction when starting
				Malfunction when starting

No	Condition	Operation	Judgement : Value	Check item
6	Selector lever position D (Carry out on a flat and straight road)	Selector lever position and vehicle speed 1. Idling in 1st gear (Vehicle stopped) 2. Driving at constant speed of 20 km/h 1st gear 3. Driving at constant speed of 30 km/h in 2nd gear 4. Driving at 50 km/h in 3rd gear with accelerator fully closed 5. Driving at constant speed of 50 km/h in 4th gear	(2) 1st, (4) 3rd, (3) 2nd, (5) 4th	Shift condition
			(2) 0%, (4) 100%, (3) 100%, (5) 100%	Low and reverse solenoid valve
			(2) 0%, (4) 0%, (3) 0%	Underdrive solenoid valve
			(1)100%, (2)0%, (3) 100%	Second solenoid valve
			(2) 100%, (3) 100%, (4)0%	Overdrive solenoid valve
			(1) 0 km/h (4) 50 km/h	Vehicle speed sensor
			(4) 1,800-2,100 rpm	Input shaft speed sensor
			(4) 1,800-2,100 rpm	Output shaft speed sensor
7	Seletor lever position D (Carry out on a flat and straight road)	1. Accelerator to 4th gear at a throttle position sensor output of 1.5V (accelerator opening angle of 30 %). 2. Gently decelerate to a standstill 3. Accelerate to 4th gear at a throttle position sensor output of 2.5 V (accelerator opening angle of 50%). 4. While driving at 40 km/h in 4th gear, shift down to 3rd gear. 5. While driving at 30 km/h in 3rd gear, shift down to 2nd gear. 6. While driving at 20 km/h in 2nd gear, shift down to 1st gear.	For (1),(2), and (3), the reading should be the same as the specified output shaft torque, and no abnormal shocks should occur. For (4),(5), and (6), downshifting should occur immediately after the shifting operation is made.	Malfunction when shifting
				Displaced shift points
				Does not shift
				Does not shift from 1 to 2 or 2 to 1
				Does not shift from 2 to 3 or 3 to 2
				Does not shift from 3 to 4 or 4 to 3
8	Selector lever position N (Carry out on a flat and straight road).	Move selector lever to R range drive at constant speed of 10 km/h	The ratio between input and output speed sensor data should be the same as the gear ratio when reversing.	Does not shift

DIAGNOSTIC TROUBLE CODE DESCRIPTION

EKA90110

DTC No	Diagnosis item		Probable cause
P1704	Throttle position sensor	Short circuit	TPS output > 4.8 V with engine idling
P1703		Open circuit	TPS output<0.2V with engine not idling
P1702		Sensor Faulty	TPS output < 0.2V or >1.2V with engine idling
P0713	Fluid temperature sensor	Open circuit	Oil temperature sensor output > 4.57 V for 1 second or longer (oil temperature does not increase)
P0712		Short circuit	Output < 0.49V for 1 second
P0725	CKP sensor	Open circuit	No crank angle sensor output detected for 5 seconds at a vehicle speed of 25 km/h
P0715	Input speed sensor	Short circuit/open circuit	No input speed sensor output pulse detected for > 1 second at vehicle speed of > 30 km/h
P0720	Output speed sensor	Short circuit/open circuit	At vehicle speed of > 30 km/h, output speed sensor output < 50% of vehicle speed sensor output for > 1 second.
P0703	Stop lamp switch	Short circuit/open circuit	At vehicle speed of 6 km/h, stop lamp switch is ON continuously for 5 minutes.
P0750	LR solenoid valve	Short circuit/open circuit	With relay voltage>10V, open or short circuit is continuous for 5 minutes.
P0755	UD solenoid valve	Short circuit/open circuit	
P0760	2nd solenoid valve	Short circuit/open circuit	
P0765	UD solenoid valve	Short circuit/open circuit	
P0743	TCC solenoid valve	Short circuit/open circuit	
P0731	Gear shift incomplete	1st	After gear shift, output shaft speed sensor output x gear ratio of new gear= input shaft speed sensor output
P0732		2nd	
P0733		3rd	
P0734		4th	
P0736		Reverse	
P1749	Serial communication	Short circuit/open circuit	With ignition ON, battery voltage > 10V, and engine speed > 450 r/min, communication is continuously irregular for 1 second or communication error signal is received for > 4 seconds continuously
P0740	TCC solenoid valve	System defect/stuck on	DCC solenoid valve drive duty ratio is 100% for 4 seconds continuously
P1723	A/T control relay	Earth short circuit/open circuit	After ignition ON, A/T control relay voltage < 7V

DTC No	Diagnosis item		Probable cause
P0707	Transaxle range switch	Open circuit	No signal for > 30 seconds
P0708		Short circuit	More than 2 kinds signals are continuous for 30 seconds
P1630	CAN-BUS OFF	TCU Fail/open/short	Receive BUS-OFF information from CAN CONTROLLER
P1631	CAN-TIME OUT ECU	ECU Fail/open/short	No output signal for 1.5 second
P1764	CAN CONTROLLER CIRCUIT	Circuit malfunction	Communication error output is continuously for > 1 second

INSPECTION CHART FOR DIAGNOSIS CODES

EKHA0120

Code	Diagnosis item		Probable cause
P1704	**Throttle position sensor system**If the TPS output voltage is 4.8 V or higher when the engine is idling, the output is judged to be too high and diagnosis code P1704 is the output. If the TPS output voltage is 0.2 V or lower at times other than when the engine is idling the output is judged to be too low and diagnosis code P1703 is the output. If the TPS output voltage is 0.2 V or lower or if it is 1.2 V or higher when the engine is idling, the TPS adjustment is judged to be incorrect and diagnosis code P1702 is the output.	Short circuit	Malfunction of the throttle position sensor Malfunction of connector Malfunction of the TCM
P1703		Open circuit	
P1702		Sensor Maladjustment	
P0713 P0712	**Fluid temperature sensor system**If the fluid temperature sensor output voltage is 4.57 V or more even after driving for 10 minutes or more (if the fluid temperature does not increase), it is judged that there is an open circuit in the fluid temperature sensor and diagnosis code P0713 is the output.	Open circuit	Malfunction of the oil temperature sensor Malfunction of connector Malfunction of the TCM
P0725	**CKP sensor system**If no output pulse is detected from the crank angle sensor for 5 seconds or more while driving at 25 km/h or more, it is judged that there is an open circuit in the crank angle sensor and diagnosis code P0725 is the output.	Open circuit	Malfunction of the crank angle sensor Malfunction of connector Malfunction of the TCM
P0715	**Input speed sensor system**If no output pulse is detected from the input shaft speed sensor for 1 second or more while driving in 3rd or 4th gear at a speed of 30 km/h or more, there is judged to be an open circuit or short. Circuit in the input shaft speed sensor and diagnosis code P0715 is the output. If diagnosis code P0715 is the output four times, the transmission is locked into 3rd gear (D range) or 2nd gear as a fail-safe measure.	Short circuit/open circuit	Malfunction of the input shaft speed sensor Malfunction of the underdrive clutch retainer Malfunction of connector Malfunction of the TCM
P0720	**Output speed sensor system**If the output from the output shaft speed sensor is continuously 50% lower than the vehicle speed for 1 second or more while driving in 3rd or 4th gear at a speed of 30 km/h or more, there is judged to be an open circuit or short-circuit in the output shaft speed sensor and diagnosis code P0720 is output. If diagnosis code P0720 is output four times, the transmission is locked into 3rd gear (D range) or 2nd gear as a fail-safe measure, and the N range lamp flashes at a frequency of 1 Hz.Malfunction of the input shaft speed sensor Malfunction of the underdrive clutch retainer Malfunction of connector Malfunction of the TCM	Short circuit/open circuit	Malfunction of the wide open throttle switch Malfunction of connector Malfunction of the TCM Malfunction of solenoid valve Malfunction of connector Malfunction of the TCM

Code	Diagnosis item		Probable cause
P0703	**Stop lamp switch system**If the stop lamp switch is on for 5 minutes or more while driving, it is judged that there is a short circuit in the stop lamp switch and diagnosis code P0703 is the output.	Short circuit/open circuit	Malfunction of the stop lamp switch Malfunction of connector Malfunction of the TCM
P0750	**Low and reverse solenoid valve system**	Short circuit/Open circuit	Malfunction of solenoid valve Malfunction of connector Malfunction of the TCM
P0755	**Underdrive solenoid valve system**	Short circuit/Open circuit	
P0760	**Second solenoid valve system**	Short circuit/Open circuit	
P0765	**Overdrive solenoid valve system**If the resistance value for a solenoid valve is tool large or too small, it is judged that there is a short-circuit or an open circuit in the solenoid valve and the respective diagnosis code is output. The transmission is locked into 3rd gear as a fail-safe measure.	Short circuit/Open circuit	
P0743	**Torque converter clutch solenoid valve system**	Short circuit/Open circuit	Malfunction of solenoid valve Malfunction of connector Malfunction of the TCM
P0740	If the resistance value for a solenoid valve is tool large or too small, it is judged that there is a short-circuit or an open circuit in the solenoid valve and the respective diagnosis code is output. The transmission is locked into 3rd gear as a fail-safe measure.	Defective system	
P0731	**1st gear ratio does not meet the specification**If the output from the output shaft speed sensor multiplied by the 1st gear ratio is not the same as the output from the input shaft speed sensor after shifting to 1st gear has been completed, diagnosis code P0731 is the output. If diagnosis code P0731 is output four times, the transmission is locked into 3rd gear as a fail-safe measure.		Malfunction of the input shaft speed sensor Malfunction of the output shaft speed sensor Malfunction of the underdrive clutch retainer Malfunction of the transfer drive gear or driven gear Malfunction of the low ad reverse brake system Malfunction of the underdrive clutch system Noise generated
P0732	**2nd gear ratio does not meet the specification**If the output from the output shaft speed sensor multiplied by the 3rd gear ratio is not the same as the output from the input shaft speed sensor after shifting to 3rd gear has been completed, diagnosis code P0732 is the output. If diagnosis code P0732 is the output four times, the transmission is locked into 3rd gear as a fail-safe measure.		Malfunction of the input shaft speed sensor Malfunction of the output shaft speed sensor Malfunction of the underdrive clutch retainer Malfunction of the transfer drive gear or driven gear malfunction of the underdrive clutch system Malfunction of the overdrive clutch system Noise generated

Code	Diagnosis item		Probable cause
P0733	**3rd gear ratio does not meet the specification**If the output from the output shaft speed sensor multiplied by the 3rd gear ratio is not the same as the output from the input shaft speed sensor after shifting to 3rd gear has been completed, diagnosis code P0733 is the output. If diagnosis code P0733 is the output four times, the transmission is locked into 3rd gear as a fail-safe measure.		Malfunction of the input shaft speed sensor Malfunction of the output shaft speed sensor Malfunction of the underdrive clutch retainer alfunction of the transfer drive gear or driven gear malfunction of the second brake system Malfunction of the overdrive clutch system Noise generated
P0734	**4th gear ratio does not meet the specification**If the output from the output shaft speed sensor multiplied by the 4th gear ratio is not the same as the output from the input shaft speed sensor after shifting to 4th gear has been completed, diagnosis code P0734 is the output. If diagnosis code P0734 is the output four times, the transmission is locked into 3rd gear as a fail-safe measure.		Malfunction of the input shaft speed sensor Malfunction of the output shaft speed sensor Malfunction of the underdrive clutch retainer Malfunction of the transfer drive gear or driven gear Malfunction of the low and reverse brake system Malfunction of the reverse clutch system Noise generated
P0736	**Reverse gear ratio does not meet the specification**If the output from the output shaft speed sensor multiplied by the reverse gear ratio is not the same as the output from the input shaft speed sensor after shifting to reverse gear has been completed, diagnosis code P0736 is the output. If diagnosis code P0736 is the output four times, the transmission is locked into 3rd gear as a fail-safe measure.		Malfunction of the input shaft speed sensor Malfunction of the output shaft speed sensor Malfunction of the underdrive clutch retainer Malfunction of the transfer drive gear or driven gear Malfunction of the low and reverse brake system Malfunction of the reverse brake system Malfunction of the reverse clutch system Noise generated
P1749	**Serial communication**If normal communication is not possible for a continuous period of 1 second or more when the ignition switch is at the ON position, the battery voltage is 10 V ore more and the engine speed is 450 r/min or more, diagnosis code No.51 is the output. Diagnosis code No.51 is also output if the data being received is abnormal for a continuous period of 4 seconds under the same conditions.		Malfunction of connector Malfunction of the engine-ECU Malfunction of the TCM
P1723	**A/T control relay system**If the A/T control relay voltage is less than 7 V after the ignition switch has been turned ON, it is judged that there is an open circuit or a short-circuit in the A/T control relay earth and iagnosis code P1723 is the output. Then the transmission is locked into 3rd gear as a fail-safe measure.	Short circuit to earth/ Open circuit	Malfunction of the A/T control relay Malfunction of connector Malfunction of the TCM

Code	Diagnosis item		Probable cause
P0707	**Transaxle range switch**	Open circuit	No signal is continuous for > 30 seconds
P0708		Short circuit	Above 2 kinds signals are continuous for 30 seconds
P1630	**CAN-BUS OFF** • No 3 speed hold fail • No PGA, B fail • Battry voltage > 10V continuously for 0.5 second • No engine stop • Receive BUS OFF information from CAN CONTROLLER		• TCM Fail • TCM side open & short
P1631	**CAN-TIME OUT ECM** • No 3 speed hold fail • No PGA, B fail o Battry voltage > 10V continuously for 0.5 second • No engine stop • No output signal for 1.5 second		• ECM fail • ECM side open & short
P1764	**TCM CAN CAN CONTROLLER** • No 3 speed hold fail • No PGA, B fail • Battry voltage > 10V continuously for 0.5 second • No engine stop • Communication error output is continuously for > 1 second		• CAN CONTROLLER circuit malfunction

INSPECTION CHART FOR THROUBLE SYMPTOMS

EKJA0130

Trouble symptom		Probable cause
Communication with HI-SCAN PRO is not possible If communication with the HI-SCAN PRO is not possible, the cause is probably a defective diagnosis line or the **ECM or TCM** is not functioning.		Malfunction diagnosis line Malfunction of connector Malfunction of the TCM or ECM
Driving impossible	**Starting impossible** Starting is not possible when the selector lever is in P or N range. In such cases, the cause is probably a defective range switch, engine system, torque converter or oil pump.	Malfunction of the engine system Malfunction of the torque converter Malfunction of the oil pump Malfunction of the rauge switch
	Does not move forward If the vehicle does not move forward when the selector lever is shifted from N to D while the engine is idling, the cause is probably abnormal line pressure or a malfunction of the underdrive clutch or valve body.	Abnormal line pressure Malfunction of the underdrive solenoid valve Malfunction of the underdrive clutch Malfunction of the valve body Malfunction of the torque converter No transmission fluid Malfunction of the end clutch
	Does not reverse If the vehicle does not reverse when the selector lever is shifted from N to R range while the engine is idling, the cause is probably abnormal pressure in the reverse clutch or low and reverse brake, or a malfunction of the reverse clutch, low and reverse brake or valve body.	Abnormal reverse clutch pressure Abnormal low and reverse brake pressure Malfunction of the low and reverse brake solenoid valve Malfunction of the reverse clutch Malfunction of the low and reverse brake Malfunction of the valve body
	Does not move (forward or reverse) If the vehicle does not move forward or reverse when the selector lever is shifted to any position while the engine is idling, the cause is probably abnormal line pressure or a malfunction of the power train, oil pump or valve body.	Abnormal line pressure Malfunction of power train Malfunction of the oil pump Malfunction of the valve body
Malfunction when starting	**Engine stalling when shifting** If the engine stalls when the selector lever is shifted from N to D or R range while the engine is idling, the cause is probably a malfunction of the engine system, damper clutch solenoid valve, valve body or torque converter (damper clutch malfunction).	Malfunction of the engine system Malfunction of the damper clutch control solenoid valve Malfunction of the valve body Malfunction of the torque converter Malfunction of the damper clutch
	Shift shock when changing from N to D and large time lag If abnormal shocks or a time lag of 2 seconds or more occur when the selector lever is shifted from N to D range while the engine is idling, the cause is probably abnormal underdrive clutch pressure or a malfunction of the underdrive clutch, valve body or idle position switch.	Abnormal underdrive clutch pressure Abnormal low and reverse brake pressure Malfunction of the underdrive solenoid valve Malfunction of the valve body Malfunction of the idle position switch

Trouble symptom		Probable cause
Malfunction when starting	**Shift shock when changing from N to R and large time lag.** If abnormal shock or a time lag of 2 seconds or more occur when the selector lever is shifted from N to R range while the engine is idling, the cause is probably abnormal reverse clutch pressure or low and reverse brake pressure, or a malfunction of the reverse clutch, low and reverse brake, valve body or idle position switch.	Abnormal reverse clutch pressure Abnormal low and reverse brake pressure Malfunction of the low and reverse solenoid valve Malfunction of the reverse clutch Malfunction of the low and reverse brake Malfunction of the valve body Malfunction of the idle position switch
	Shift shock when changing from N to D, N to R and large time lag. If abnormal shock or a time lag of 2 seconds or more occur when the selector lever is shifted from N to D range and from N to R range while the engine is idling, the cause is probably abnormal line pressure or a malfunction of the oil pump or valve body.	Abnormal line pressure Malfunction of the oil pump Malfunction of the valve body
Malfunction when shifting	**Shift shock and rpm increase.** If shocks occur when driving due to upshifting or downshifting and the transmission speed becomes higher than the engine speed, the cause is probably abnormal line pressure or a malfunction of a solenoid valve, oil pump, valve body or of a brake or clutch.	Abnormal line pressure Malfunction of each solenoid valve Malfunction of the oil pump Malfunction of the valve body Malfunction of each brake or each clutch
Displaced shifting points	**All points.** If all shift points are displaced while driving, the cause is probably a malfunction of the output shaft speed sensor, TPS or a solenoid valve.	Malfunction of the output shaft speed sensor Malfunction of the throttle position sensor Malfunction of each solenoid valve Abnormal line pressure Malfunction of the valve body Malfunction of the TCM
	Some points. If some of the shift points are displaced while driving, the cause is probably a malfunction of the valve body, or it is related to adapfive control and is not an abnormality.	Malfunction of the valve body
Does not shift	**No diagnosis codes.** If shifting does not occur while driving and no diagnosis codes are output, the cause is probably a malfunction of the transaxle range switch, or TCM	Malfunction of the transaxle range Malfunction of the TCM
Malfunction while driving	**Poor a acceleration.** If acceleration is poor even if downshifting occurs while driving, the cause is probably a malfunction of the engine system, Transaxle in fail-safe a brake or clutch or the transaxle is in fail-safe.	Malfunction of the engine system Malfunction of the brake of clutch
Malfunction while driving	**Vibration.** If vibration occurs when driving at constant speed or when accelerating and deceleration in top range, the cause is probably abnormal damper clutch pressure or a malfunction of the engine system, damper clutch control solenoid valve, torque converter or valve body.	Abnormal damper clutch pressure Malfunction of the engine system Malfunction of the damper clutch control solenoid valve Malfunction of the torque converter Malfunction of the valve body

Trouble symptom	Probable cause
Transaxle range switch system. The cause is probably a malfunction of the inhibitor switch circuit, ignition switch circuit or a defective TCM.	Malfunction of the transaxle range switch Malfunction of the ignition switch Malfunction of connector Malfunction of the TCM
Idle position switch system. The cause is probably a defective idle position switch circuit, or a defective TCM.	Malfunction of the triple pressure switch Malfunction of connector Malfunction of the TCM
Triple pressure switch system. The cause is probably a defective triple pressure switch circuit or a defective TCM.	Malfunction of the triple pressure switch Malfunction of connector Malfunction of A/C system Malfunction of the TCM
Vehicle speed sensor system. The cause is probably a defective vehicle speed sensor circuit or a defective TCM.	Malfunction of the vehicle speed sensor Malfunction of connector Malfunction of the TCM

ELEMENT IN USE AT EACH POSITION OF SELECTOR LEVER

EKA90140

Operating element / Selector lever position		Underdrive clutch (UD)	Reverse clutch (REV)	Overdrive clutch (OD)	Lowand reverse brake (LR)	Second brake (2nd)	One way clutch(OWC)
P	Parking	-	-	-	O	-	-
R	Reverse	-	O	-	O	-	-
N	Neutral	-	-	-	O	-	-
D	1st	O	-	-	O	-	O
	2nd	O	-	-	-	O	-
	3rd	O	-	O	-	-	-
	4th	-	-	O	-	O	-
3	1st	O	-	-	O	-	O
	2nd	O	-	-	-	O	-
	3rd	O	-	O	-	-	-
2	1st	O	-	-	O	-	O
	2nd	O	-	-	-	O	-
L	1st	O	-	-	O	-	O

OPERATING ELEMENT AND THEIR FUNCTIONS

Operating element	Code	Function
Underdrive clutch	UD	Connects the input shaft to the underdrive sun gear
Reverse clutch	REV	Connects the input shaft and reverse sun gear
Overdrive clutch	OD	Connects the input shaft and overdrive planetary carrier
Low-and-reverse brake	LR	Locks low-and-reverse annulus gear and overdruve planetary carrier
Second brake	2ND	Locks reverse sun gear

INSPECTION PROCESS FOR DIAGNOSTIC TROUBLE CODES

EKJA0270

Code P1704, P1703, P1702 (throttle position sensor)	Probable cause
If the TPS output voltage is 4.8 V or higher when the engine is idling, the output is judged to be too high and diagnostic trouble code P1704 is output. If the TPS output voltage is 0.2 V or lower at times other than when the engine is idling, the output is judged to be too low and diagnostic trouble code P1703 is output. If the TPS output voltage is 0.2 V or lower or if it is 1.2 V or higher when the engine is idling, the TPS adjustment is judged to be incorrect and diagnostic trouble code P1702 is output.	Malfunction of the throttle position sensor Malfunction of connector Malfunction of the TCM

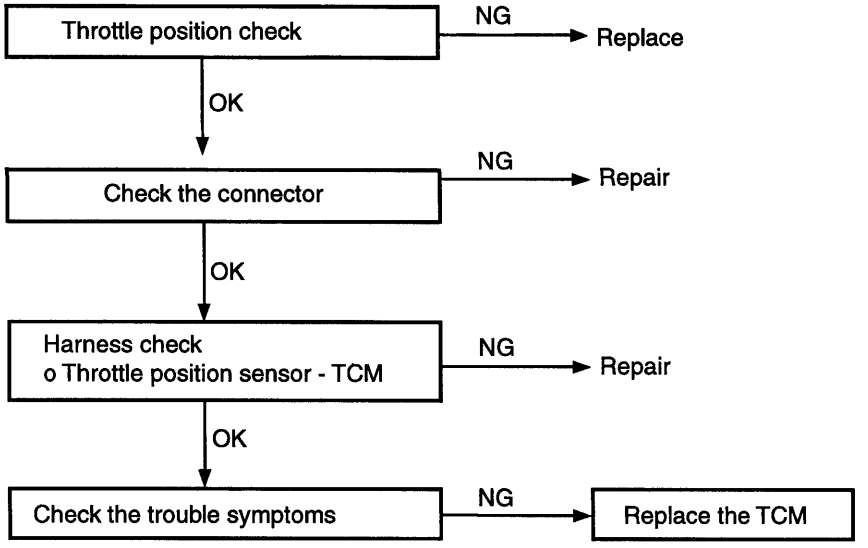

EKAA010A

Code P0710,Oil temperature sensor system	Probable cause
If the oil temperature sensor output voltage is 2.6 V or more even after driving for 10 minutes or more (If the oil temperature does not increase), it is judged that there is an open circuit in the oil temperature sensor and diagnostic trouble code P0710 is output. If the oil temperature sensor output detects the voltage which corresponds to 200°C(392°F) or more for more than one second, it is judged that there is an open circuit in oil temperature sensor and diagnostic trouble code P0710 is output.	Malfunction of the oil temperature sensor Malfunction of connector Malfunction of the TCM

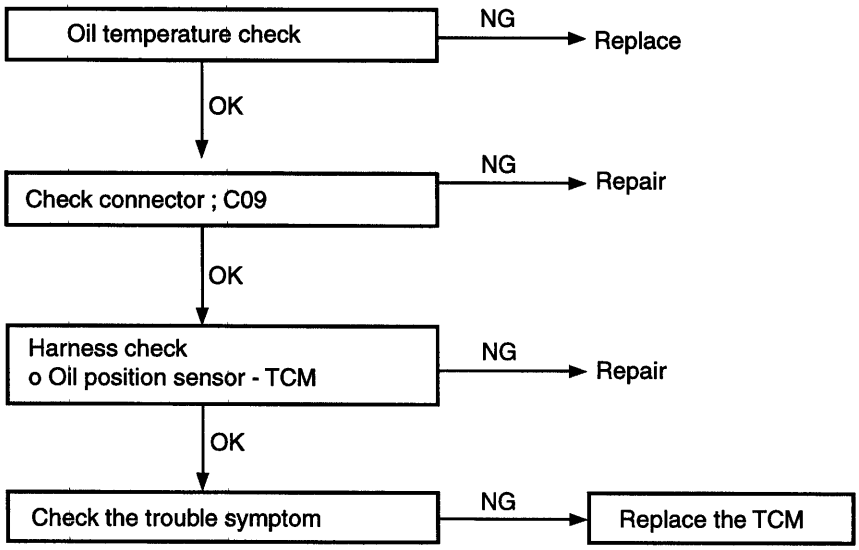

EKAA010B

Code No. P0725 Crankshaft position sensor system	Probable cause
If no output pulse is detected from the crankshaft position sensor for 5 seconds or more while driving at 25 km/h (16 mph) or more, it is judged that there is an open circuit in the crankshaft position sensor and diagnostic trouble code P0725 is output.	Malfunction of the crankshaft position sensor Malfunction of connector Malfunction of the TCM

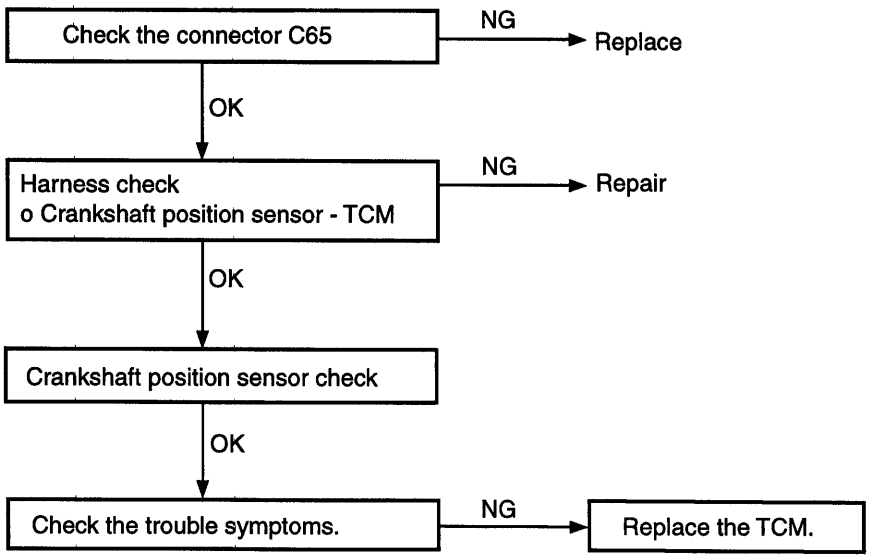

EKAA010C

Code P0715 input shaft speed sensor system (Pulse generator 'A')	Probable cause
If no output pulse is detected from the input shaft speed sensor for 1 second or more while driving in 3rd or 4th gear at a speed of 30 km/h (19 mph) or more, it is judged to be an open circuit or short-circuit in the input shaft speed sensor and diagnostic trouble code P0715 is output. If diagnostic trouble code P0715 is the output four times, the transaxle is locked into 3rd gear or 2nd gear as a fail-safe measure.	Malfunction of the input shaft speed sensor Malfunction of underdrive clutch retainer Malfunction of connector Malfunction of the TCM

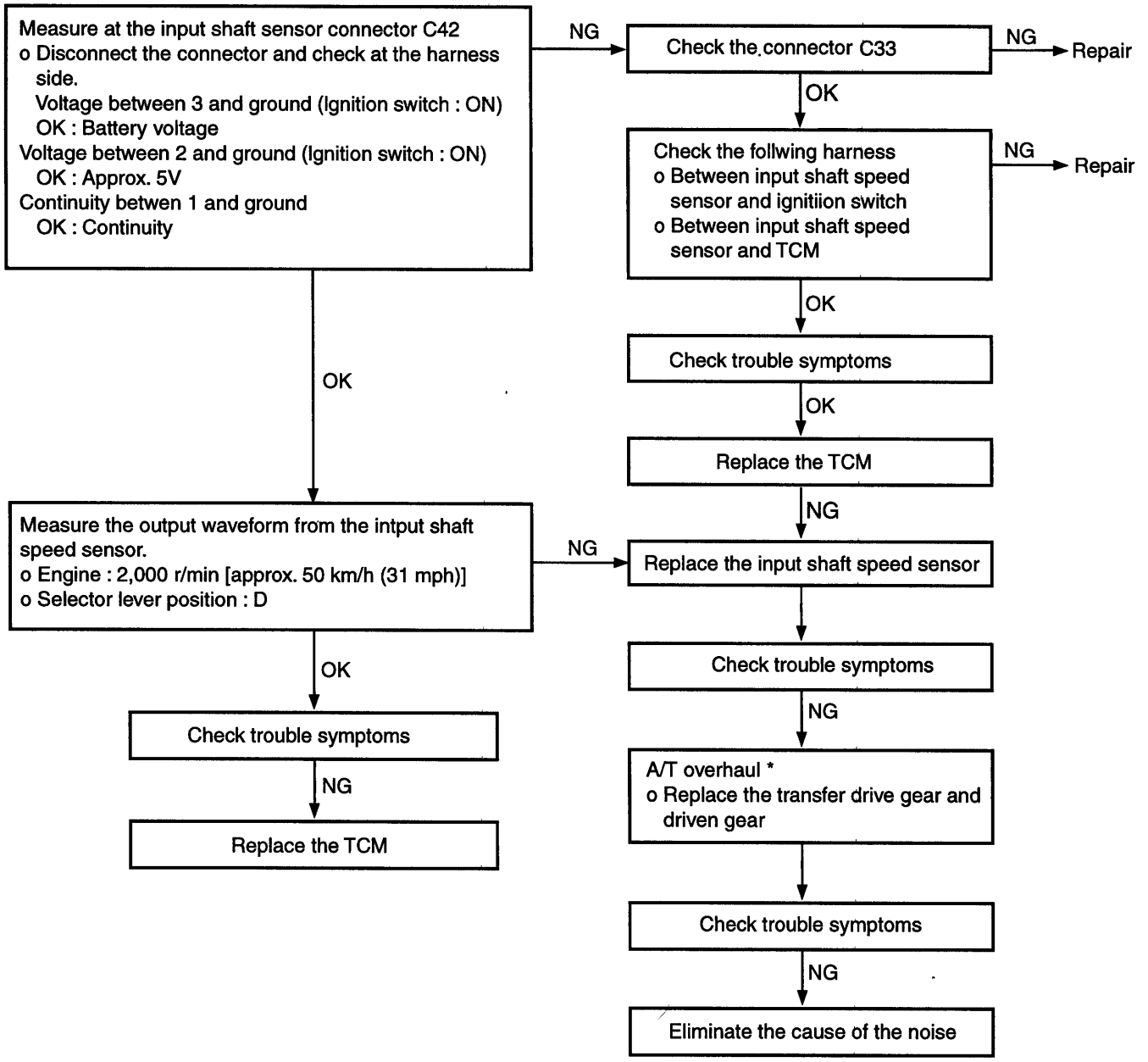

EJAA010D

Code P0720 Output shaft sensor system (Pulse generator 'B')	Probable cause
If the output from the output shaft speed sensor is continuously 50% lower than the vehicle speed for 1 second or more, it is judged to be an open circuit or short circuit in the output shaft speed sensor and diagnostic trouble code P0720 is output.	Malfunction of the throttle position sensor Malfunction of connector Malfunction of the TCM

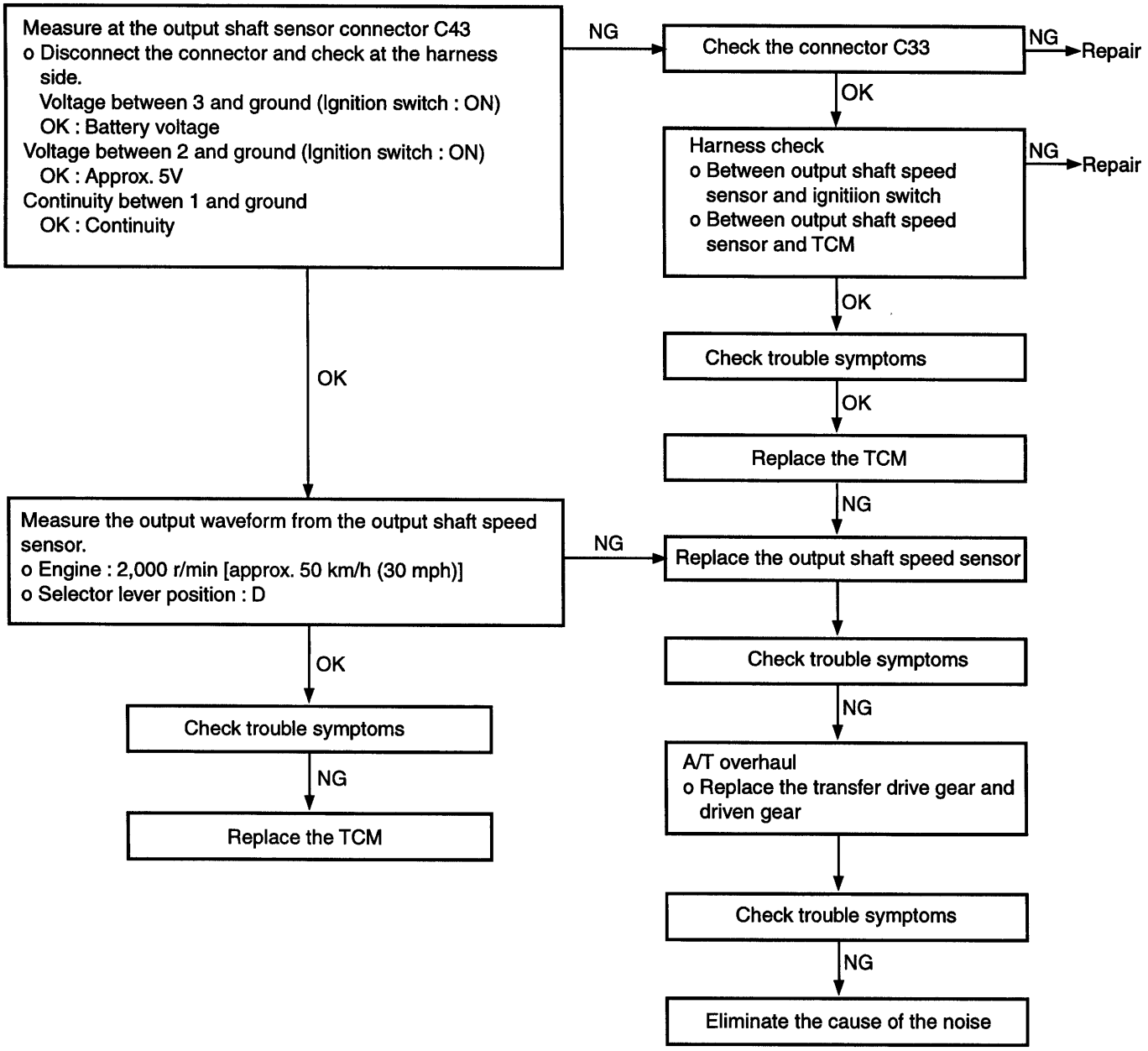

EJAA010E

Code P0703 Stop light switch system	Probable cause
If the stop light switch is on for 5 minutes or more while driving, it is judged that there is a short circuit in the stop light switch and diagnostic trouble code P0703 is output.	Malfunction of the stop light switch Malfunction of connector Malfunction of the TCM

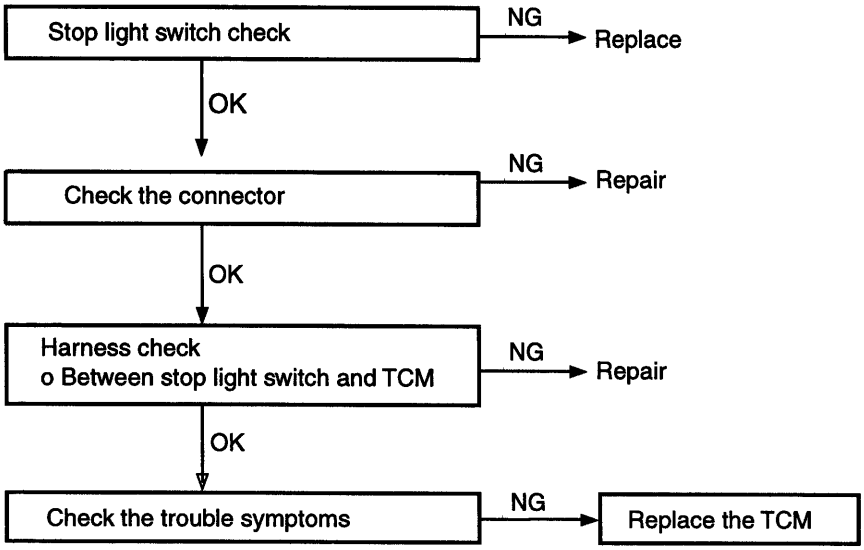

EJAA010F

Code P0750 Low and reverse solenoid valve system	Probable cause
Code P0755 Underdrive solenoid valve system	
Code P0760 Second solenoid valve system	
Code P0765 Overdrive solenoid valve system	
If the resistance value for a solenoid valve is too large or too small, it is judged that there is a shortcircuit or an open circuit in the solenoid valve and the respective diagnostic trouble code is output. The transaxle is locked into 3rd gear as a fail-safe measure.	Malfunction of the solenoid valve Malfunction of connector Malfunction of the TCM

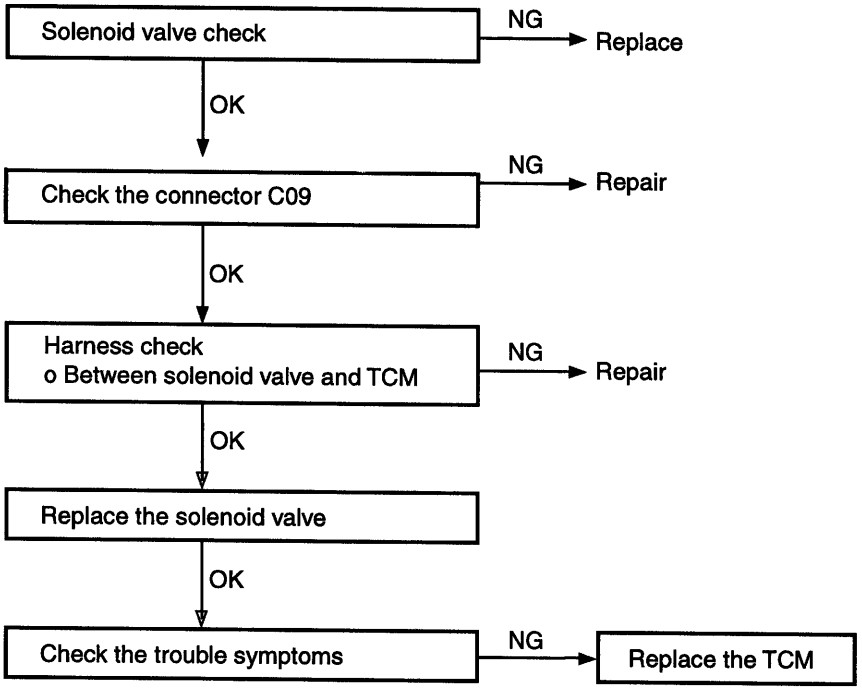

EKAA010G

Code P0743, P0740 Torque converter clutch solenoid system	Probable cause
If the resistance value for the torque converter clutch solenoid is too large or too small, it is judged that there is a short-circuit or an open circuit in the torque converter clutch solenoid and diagnostic trouble code P0743 is output. If the drive duty rate for the torque converter clutch solenoid is 100% for a continuous period of 4 seconds or more, it is judged that there is an abnormality in the torque converter clutch system and diagnostic trouble code P0740 is output. When diagnostic trouble code P0743 is output, the transaxle is locked into 3rd gear as a fail-safe measure. If the lock-up clutch remains engaged for a continuous period of 10 seconds when the TCM is attempting to disengage the lock-up clutch, it is judged that the torque converter clutch is stuck on and diagnostic trouble code P0740 is output.	Malfunction of the torque converter clutch solenoid Malfunction of connector Malfunction of the TCM

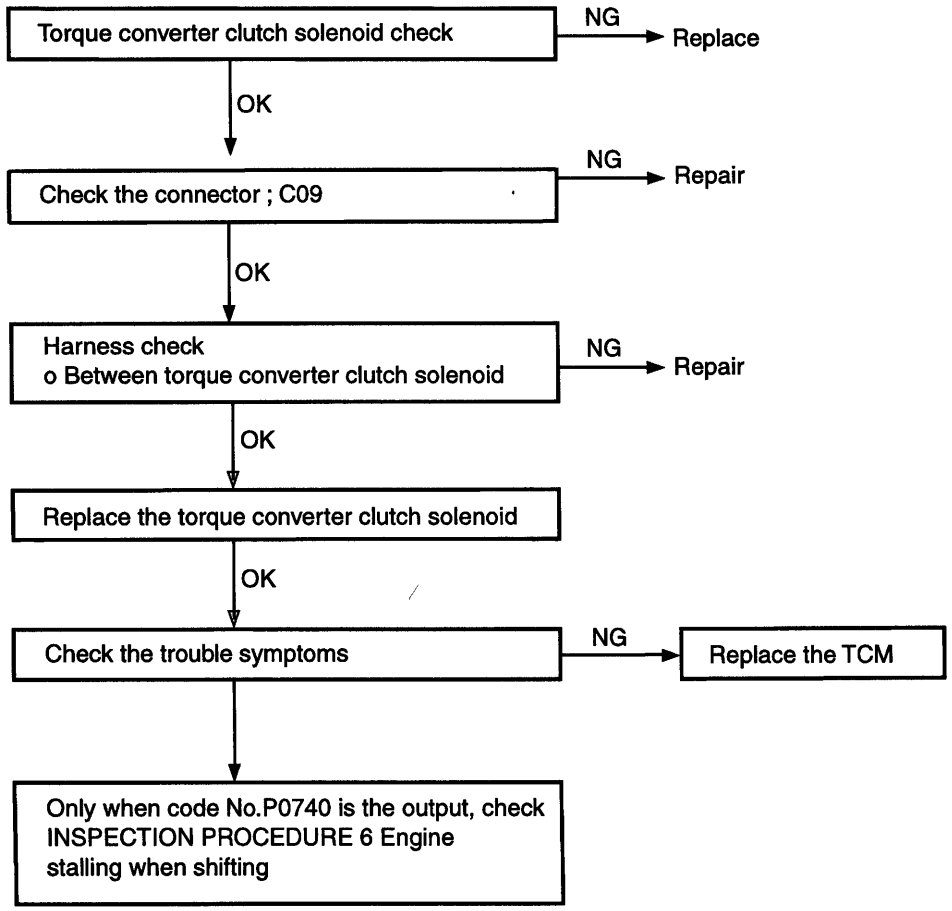

EKAA010H

Code P0731 1st gear incorrect ratio	Probable cause
If the output from the output shaft speed sensor multiplied by the 2nd gear ratio is not the same as the output from the input shaft speed sensor after shifting to 2nd gear has been completed, and diagnostic trouble code P0732 is output four times, the transaxle is locked into 3rd gear as a fail-safe measure.	Malfunction of the input shaft speed sensor Malfunction of the output shaft speed sensor Malfunction of the underdrive clutch retainer Malfunction of the transfer drive gear or driven gear Malfunction of the low and reverse brake system Malfunction of the underdrive clutch system Noise generated

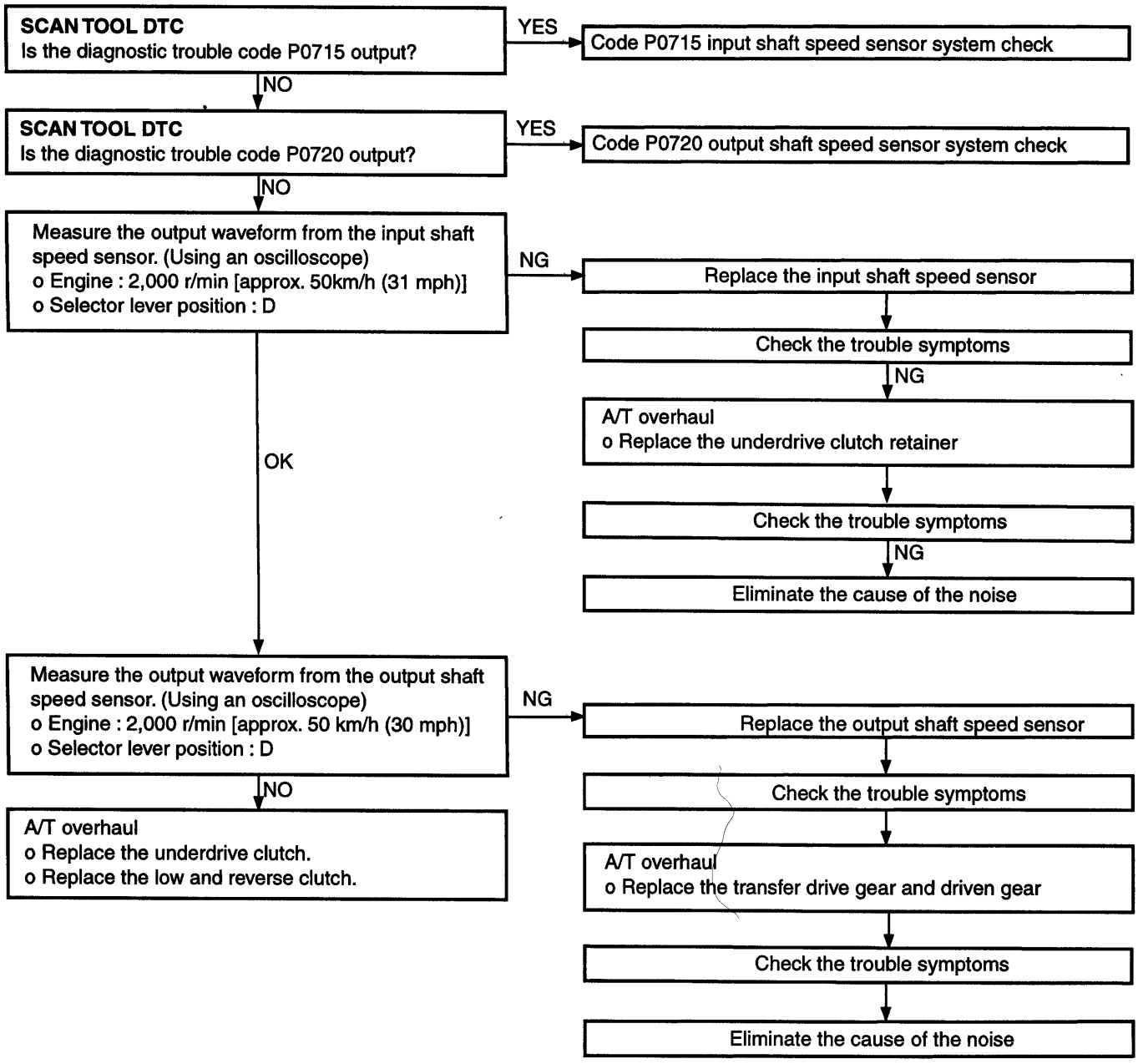

EJAA010I

Code P0732 2nd gear incorrect ratio	Probable cause
If the output from the output shaft speed sensor multiplied by the 2nd gear ratio is not the same as the output from the input shaft speed sensor after shifting to 2nd gear has been completed, diagnostic trouble code P0732 is output. If diagnostic trouble code P0732 is output four times, the transaxle is locked into 3rd gear as a fail-safe measure.	Malfunction of the input shaft speed sensor Malfunction of the output shaft speed sensor Malfunction of the underdrive clutch retainer Malfunction of the transfer drive gear or driven gear Malfunction of the second brake system Malfunction of the underdrive clutch system Noise generated

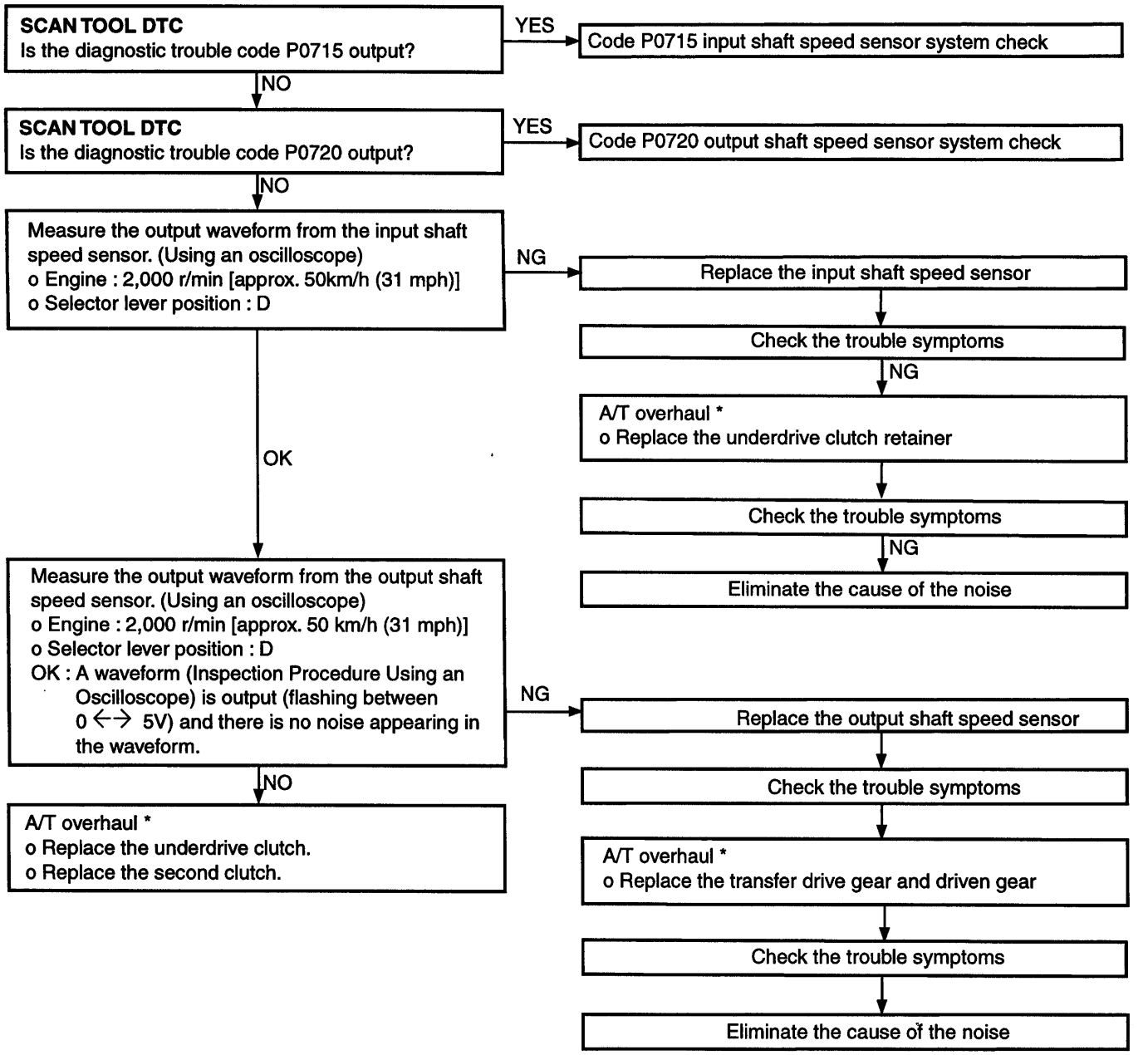

EJAA010J

Code P0733 3rd gear incorrect ratio	Probable cause
If the output from the output shaft speed sensor multiplied by the 3rd gear ratio is not the same as the output from the input shaft speed sensor after shifting to 3rd gear has been completed, diagnostic trouble code P0733 is output. If diagnostic trouble code P0733 is output four times, the transaxle is locked into 3rd gear as a fail-safe measure.	Malfunction of the input shaft speed sensor Malfunction of the output shaft speed sensor Malfunction of the underdrive clutch retainer Malfunction of the transfer drive gear or driven gear Malfunction of the overdrive clutch system Malfunction of the underdrive clutch system Noise generated

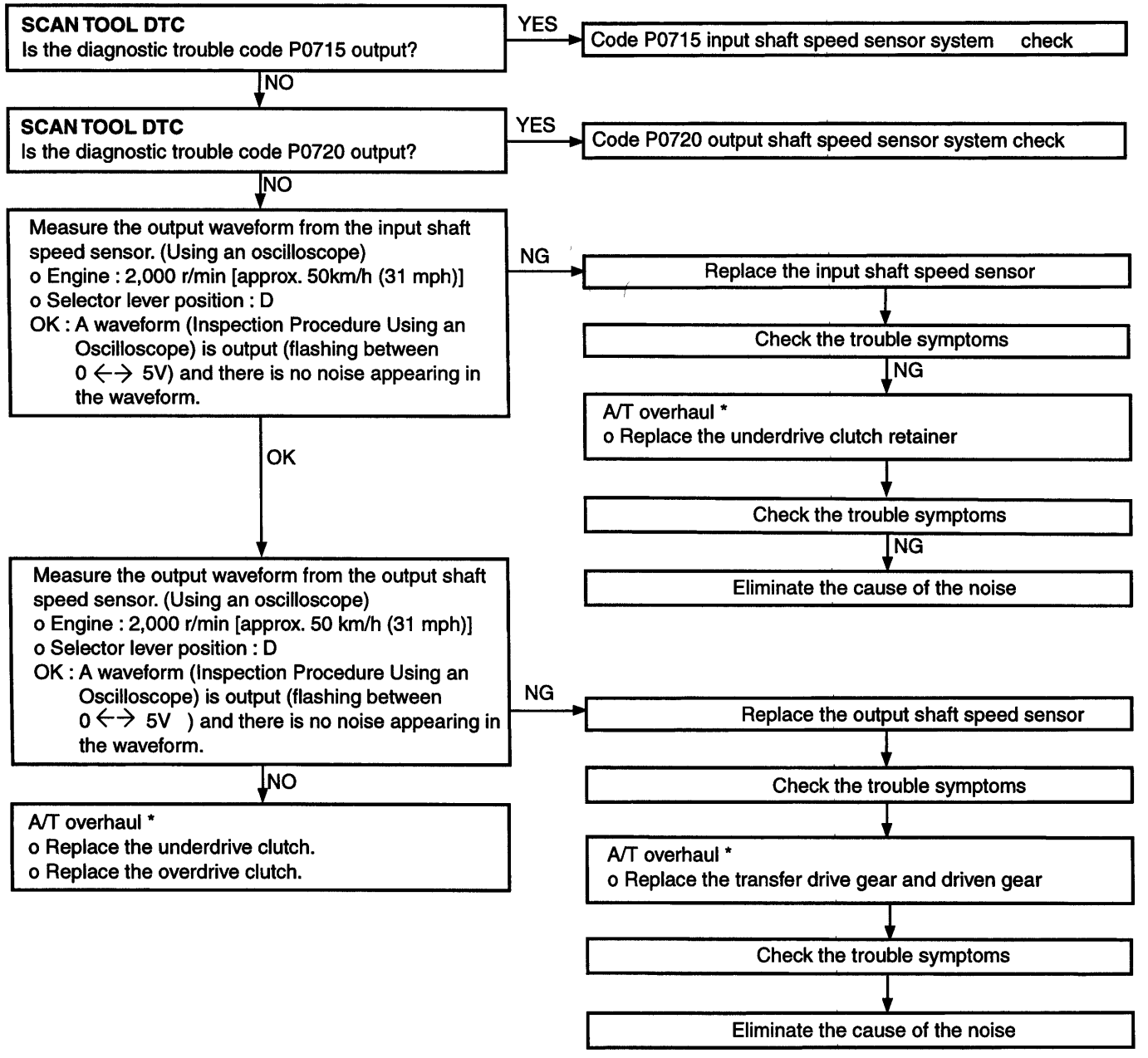

EJAA010K

Code P0734 4th gear incorrect ratio	Probable cause
If the output from the output shaft speed sensor multiplied by the 4th gear ratio is not the same as the output from the input shaft speed sensor after shifting to 4th gear has been completed, diagnostic trouble code P0734 is output. If diagnostic trouble code P0734 is output four times, the transaxle is locked into 3rd gear as a fail-safe measure.	Malfunction of the input shaft speed sensor Malfunction of the output shaft speed sensor Malfunction of the underdrive clutch retainer Malfunction of the transfer drive gear or driven gear Malfunction of the second brake system Malfunction of the overdrive clutch system Noise generated

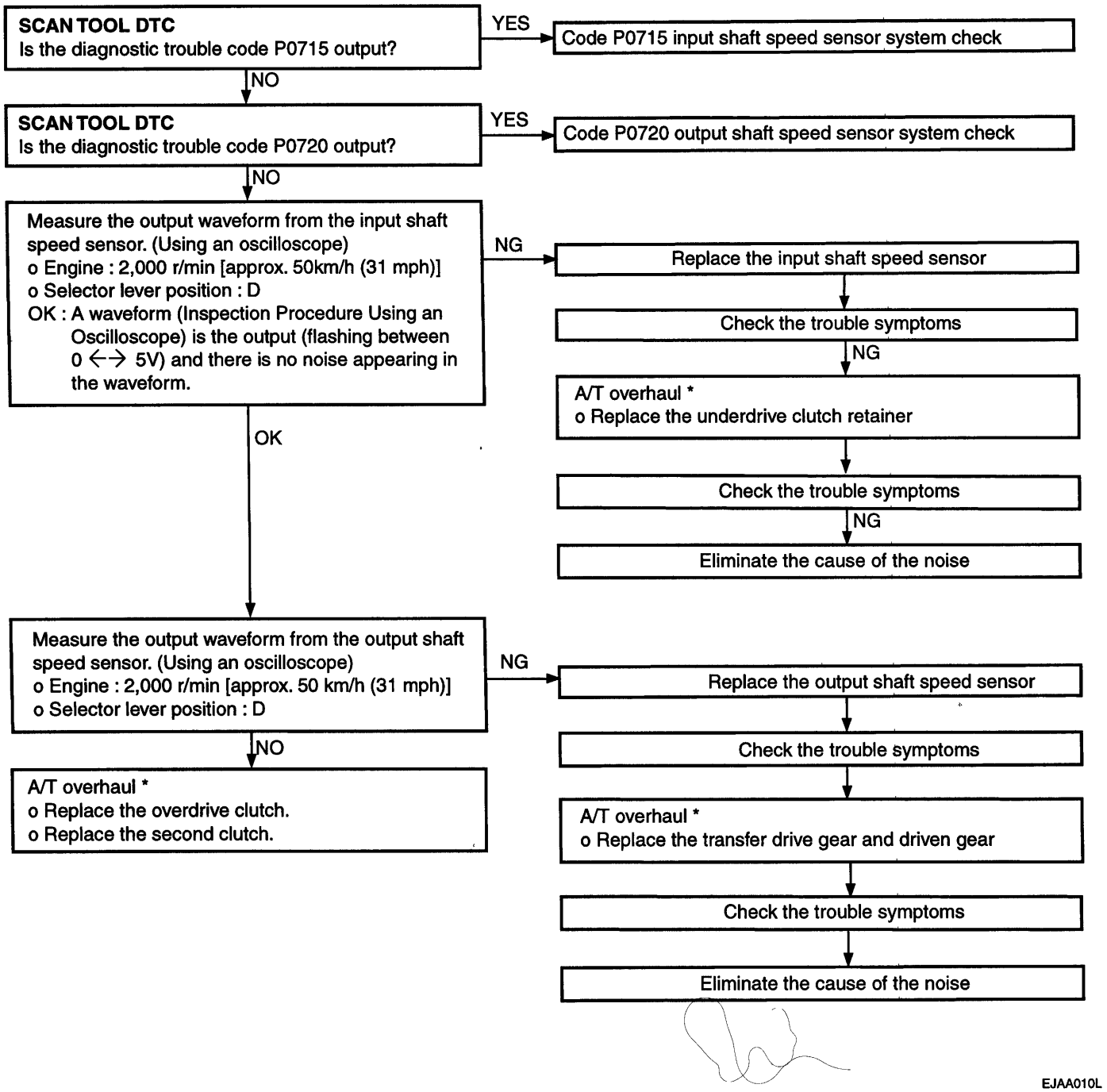

EJAA010L

Code P0736 reverse gear incorrect ratio	Probable cause
If the output from the output shaft speed sensor multiplied by the reverse gear ratio is not the same as the output from the input shaft speed sensor after shifting to reverse gear has been completed, diagnostic trouble code P0736 is output. If diagnostic trouble code P0736 is output four times, the transaxle is locked into 3rd gear as a fail-safe measure	Malfunction of the input shaft speed sensor Malfunction of the output shaft speed sensor Malfunction of the underdrive clutch retainer Malfunction of the transfer drive gear or driven gear Malfunction of the low and reverse brake system Malfunction of the reverse clutch systme Noise generated

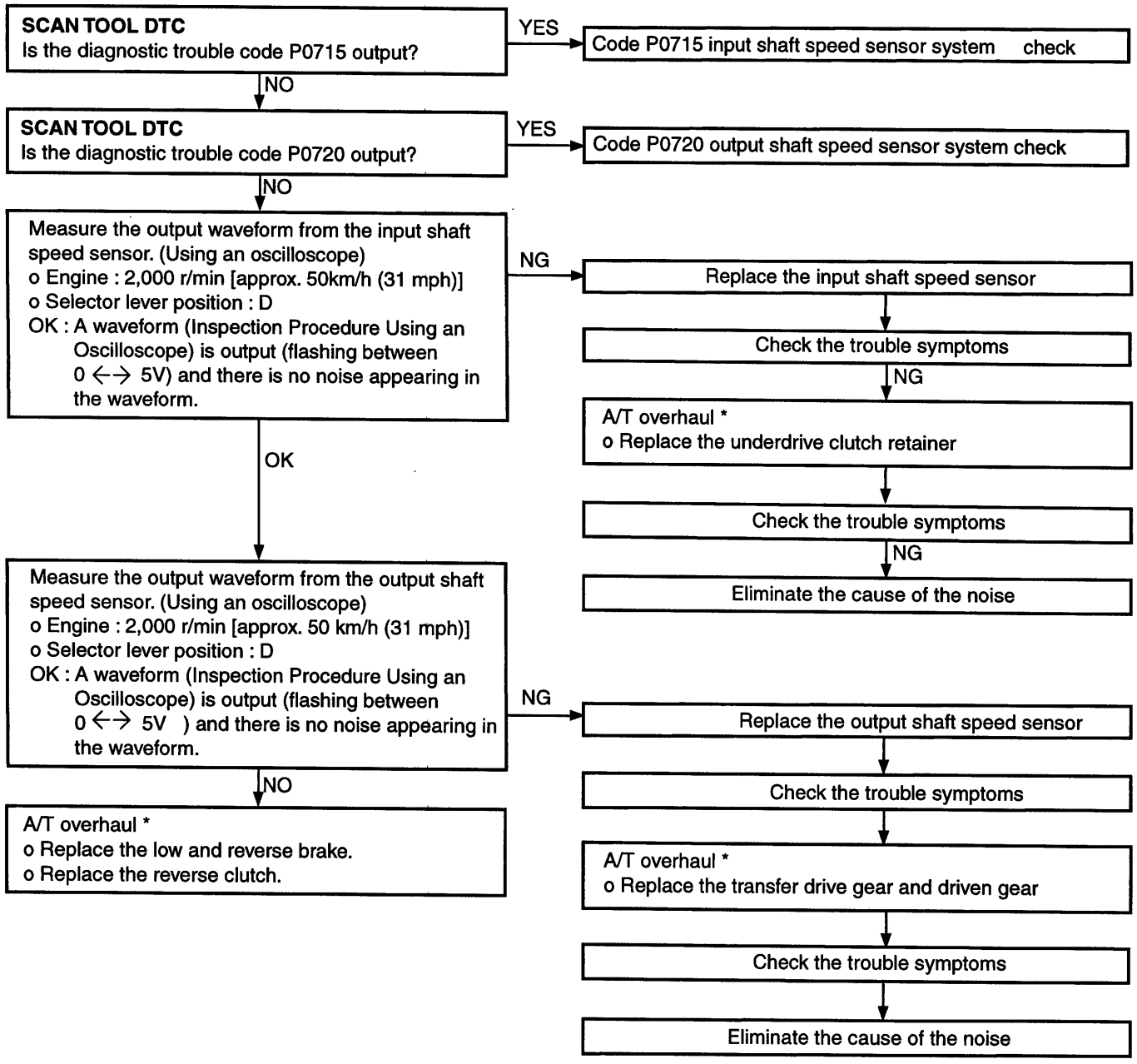

EJAA010M

Code P1723 A/T Control relay system	Probable cause
If the relay voltage is less than 7 V after the ignition switch has been turned to ON, it is judged that there is an oped circuit or a short-circuit in the A/T control relay earth and diagnostic trouble code P1723 is output. The transaxle is locked into 3rd gear as a fail-safe measure.	Malfunction of the A/T control relay Malfunction of connector Malfunction of the TCM

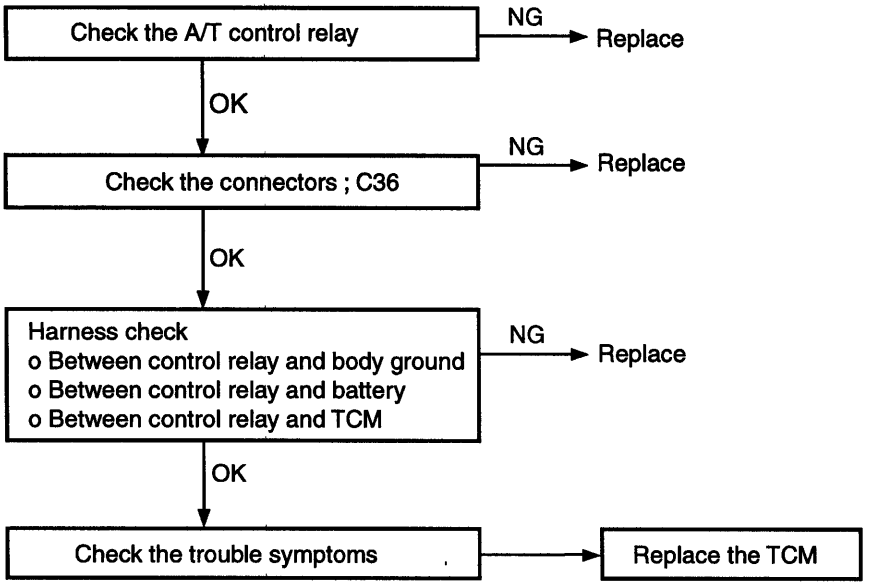

EJAA010N

INSPECTION PROCESS FOR TROUBLE SYMPTOMS EKJA0280

INSPECTION PROCEDURE 1

No communication with the scan tool	Probable cause
If communication with the scan tool is not possible, the cause is probably a defective diagnostic trouble line or the TCM is not functioning.	Malfunction of diagnostic trouble line Malfunction of connector Malfunction of the TCM

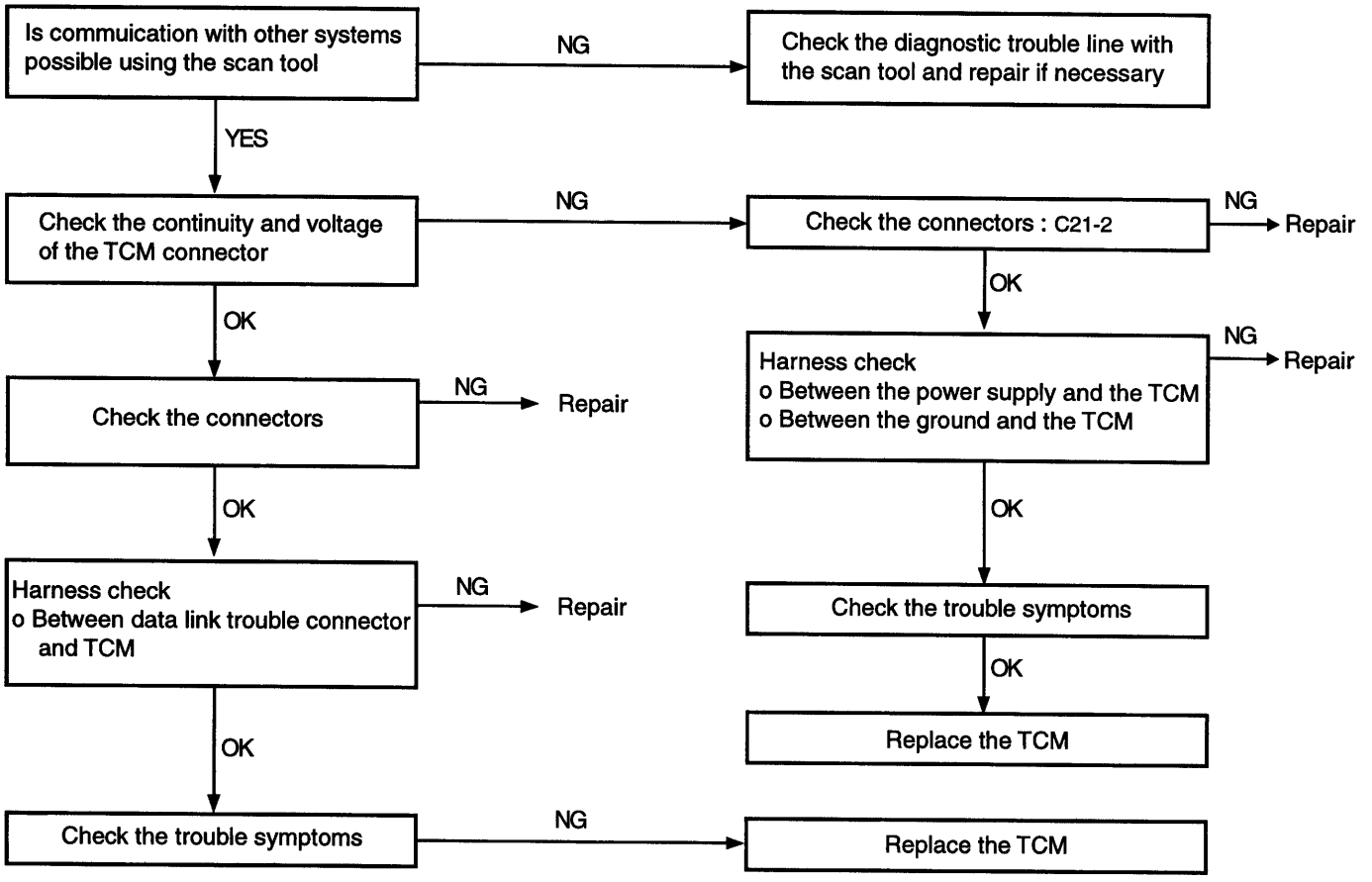

EJAA011A

INSPECTION PROCEDURE 2

Starting impossible	Probable cause
Starting is not possible when the selector lever is in P or N range. In such cases, the cause is probably a defective engine, torque converter or oil pump.	Malfunction of the engine Malfunction of the torque converter Malfunction of the oil pump

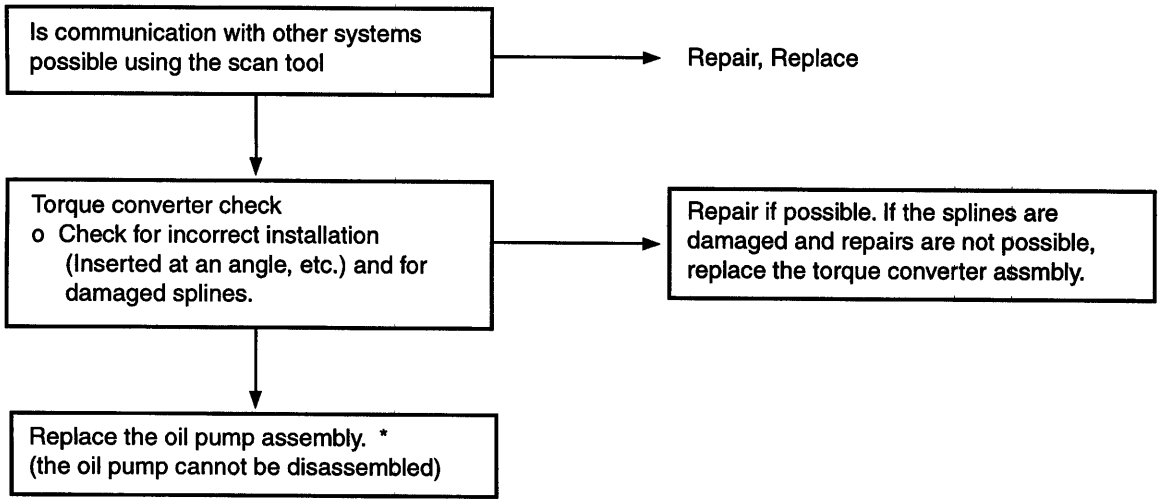

EKAA011B

INSPECTION PROCEDURE 3

Vehicle cannot move	Probable cause
If the vehicle does cannot move forward when the selector lever is shifted from N to D or L range while the engine is idling, the cause is probably abnormal line pressure or a malfunction of the underdrive clutch or valve body.	Abnormal line pressure Malfunction of the underdrive solenoid valve Malfunction of the underdrive clutch Malfunction of the valve body

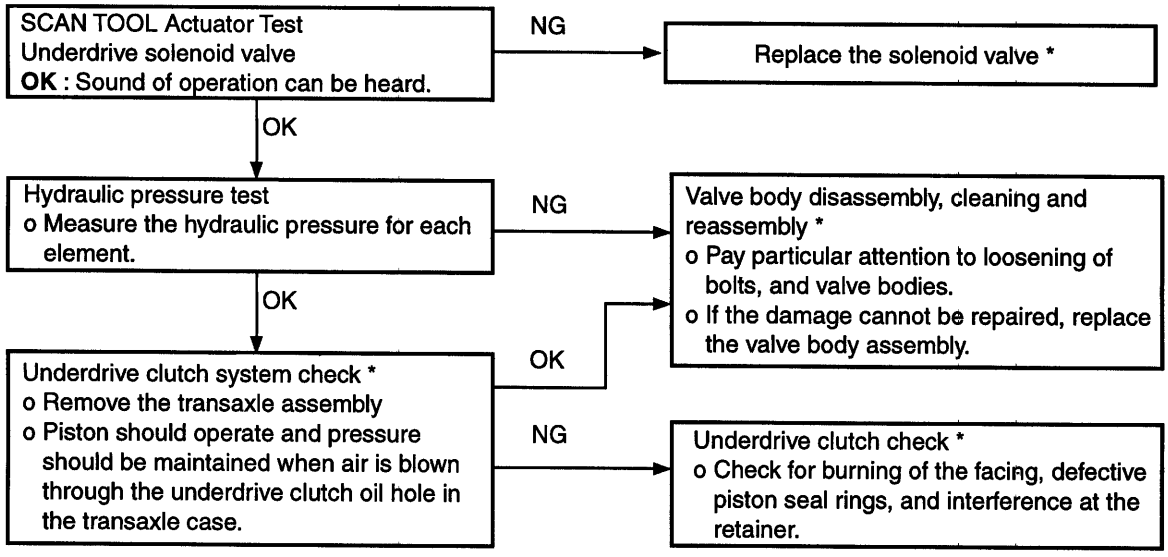

EKAA011C

INSPECTION PROCEDURE 4

Vehicle does not reverse	Probable cause
If the vehicle does not reverse when the selector lever is shifted from N to R range while the engine is idling, the cause is probably abnormal pressure in the reverse clutch or low reverse brake or a malfunction of the reverse clutch, low reverse brake or valve body.	Abnormal reverse clutch pressure Abnormal low reverse brake pressure Malfunction of the low reverse solenoid valve Malfunction of the reverse clutch Malfunction of the low reverse brake Malfunction of the valve body

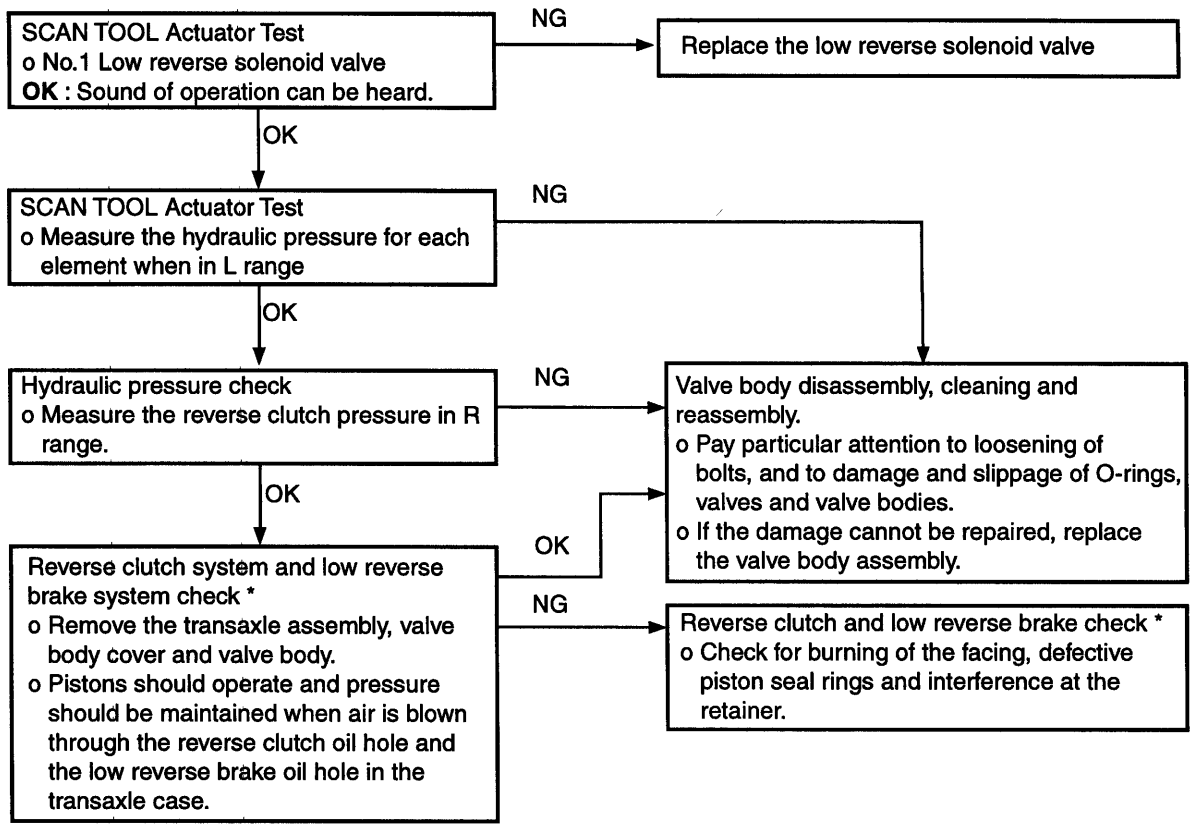

EKAA011D

INSPECTION PROCEDURE 5

Vehicle does not move (forward or reverse)	Probable cause
If the vehicle does not move forward or reverse when the selector lever is shifted to any position while the engine is idling, the cause is probably abnormal line pressure, or a malfunction of the power train, oil pump or valve body.	Abonormal line pressure Malfunction of the underdrive solenoid valve Malfunction of the underdrive clutch Malfunction of the valve body Malfunction of the power train

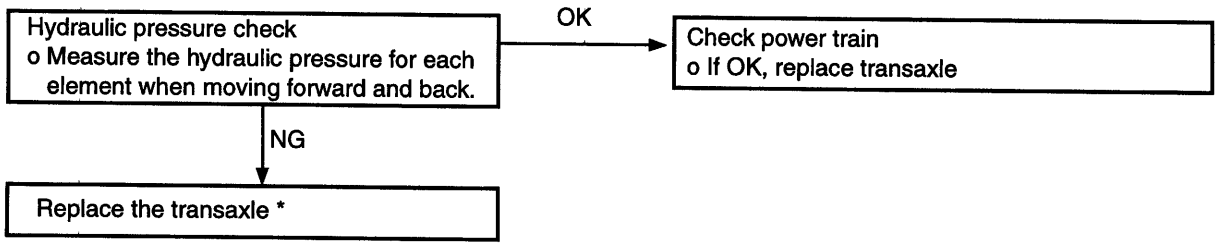

EKAA011E

INSPECTION PROCEDURE 6

Engine stalls when shifting	Probable cause
If the engine stalls when the selector lever is shifted from N to D or R range while the engine is idling, the cause is probably a malfunction of the engine, torque converter clutch soledoid, valve body or torque converter (torque converter clutch malfunction).	Malfunction of the engine Malfunction of the torque converter clutch solenoid Malfunction of the valve body Malfunction of the torque converter (Malfunction of the torque converter clutch)

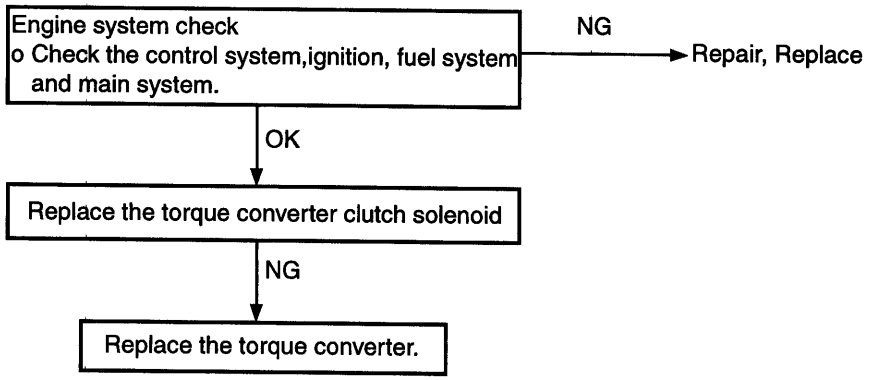

EKAA011F

INSPECTION PROCEDURE 7

Shock or delay when changing from N to D	Probable cause
If abnormal shocks or a time lag of 2 second or more occurs when the selector lever is shifted from N to D range while the engine is idling, the cause is probably abnormal underdrive clutch pressure or a malfunction of the underdrive clutch, valve body or closed throttle position switch.	Abnormal line pressure Malfunction of the underdrive solenoid valve Malfunction of the underdrive clutch Malfunction of the valve body Malfunction of the closed throttle position switch

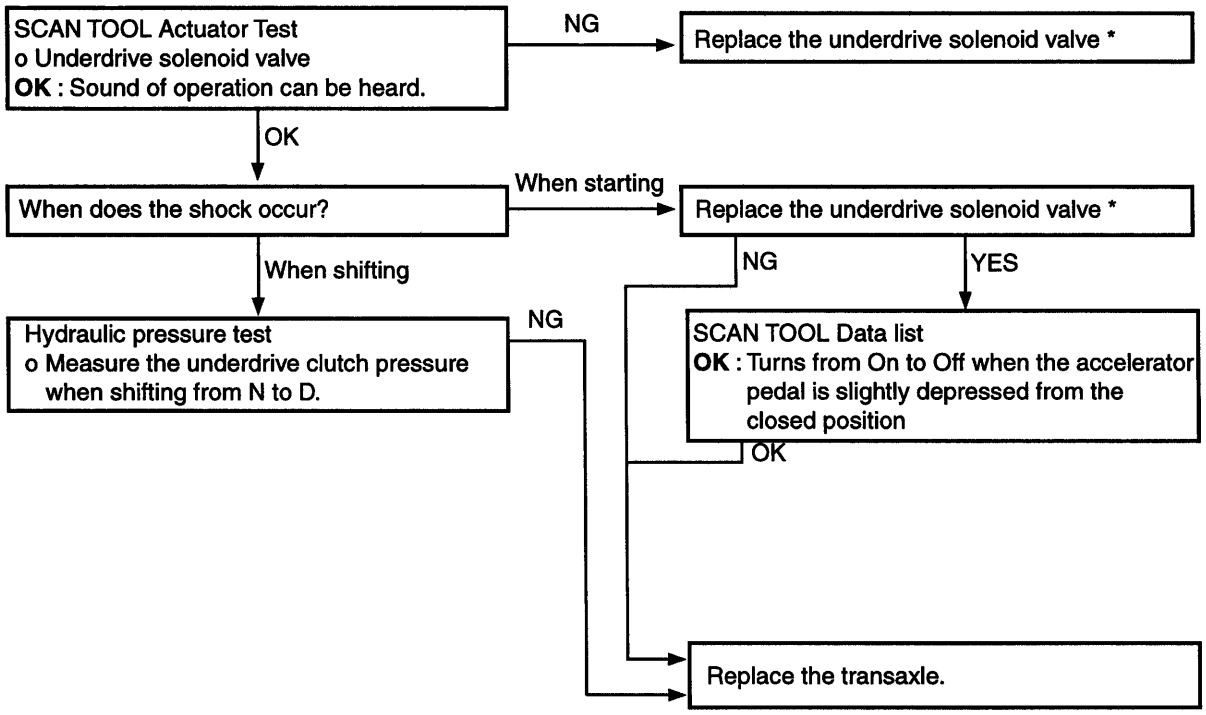

EJAA011G

INSPECTION PROCEDURE 8

Shock or delay when changing from N to R	Probable cause
If abnormal shock or a time lag of 2 seconds or more occurs when the selector lever is shifted from N to R range while the engine is idling, the cause is probably abnormal reverse clutch pressure or low and reverse brake pressure, or a malfunction or the reverse clutch, low and reverse brake, valve body.	Abnormal reverse clutch pressure Abnormal low and reverse brake pressure Malfunction of the low and reverse solenoid valve Malfunction of the reverse clutch Malfunction of the low and reverse brake Malfunction of the valve body

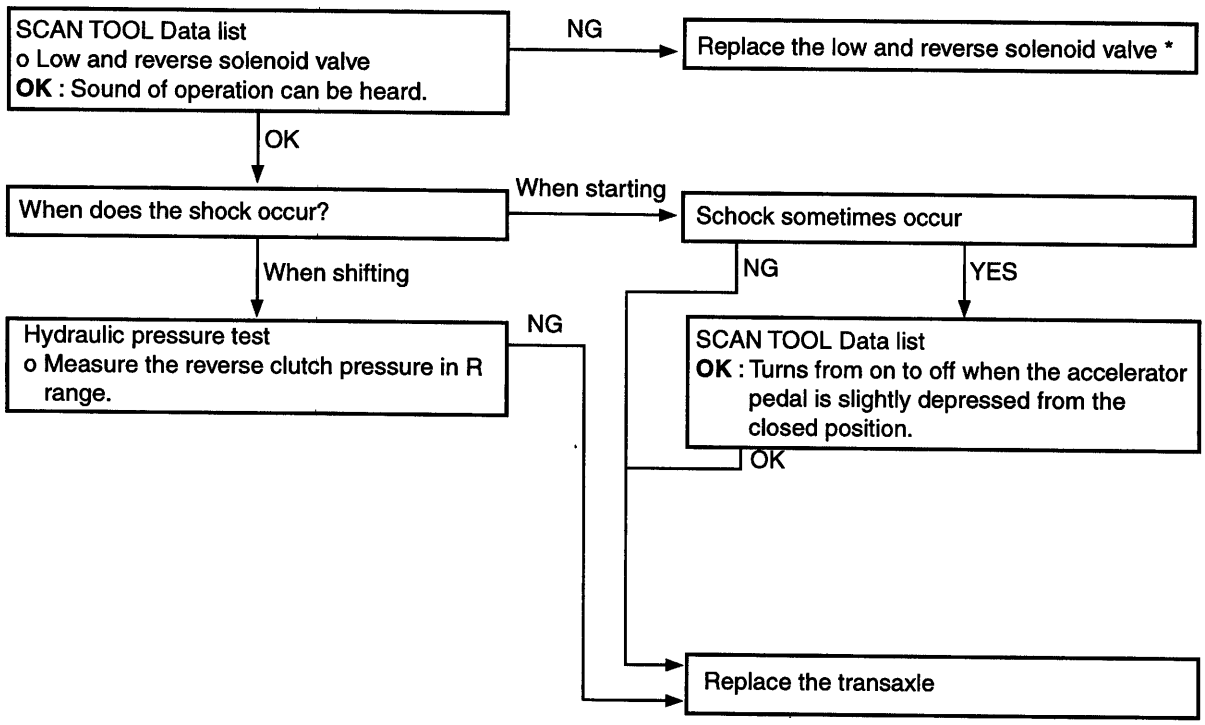

EKAA011H

INSPECTION PROCEDURE 9

Shock or delay when changing from N to D, N to R	Probable cause
If abnormal shock or a time lag of 2 seconds or more occurs when the selector lever is shifted from N to D, N to R range while the engine is idling, the cause is probably abnormal line pressure or a malfunction of the oil pump or valve body.	Abnormal line pressure Malfunction of the oil pump Malfunction of the valve body

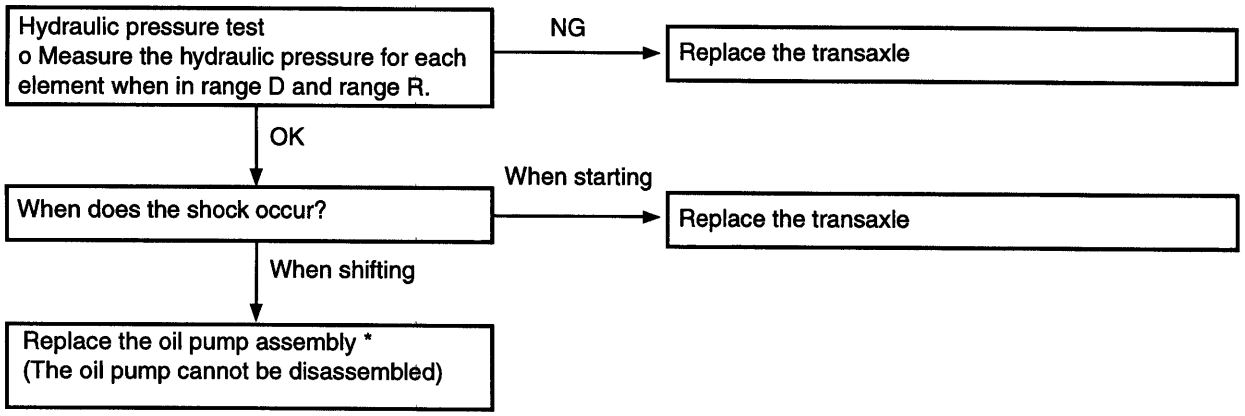

EKAA011I

INSPECTION PROCEDURE 10

Shocks and transaxle flare	Probable cause
If shocks occur when driving due to upshifting or downshifting and the transaxle speed becomes higher than the engine speed, the cause is probably abnormal line pressure or a malfunction of a solenoid valve, oil pump, valve body or of a brake or clutch.	Abnormal line pressure Malfunction of each solenoid valve Malfunction of the oil pump Malfunction of the valve body Malfunction of each brake or each clutch

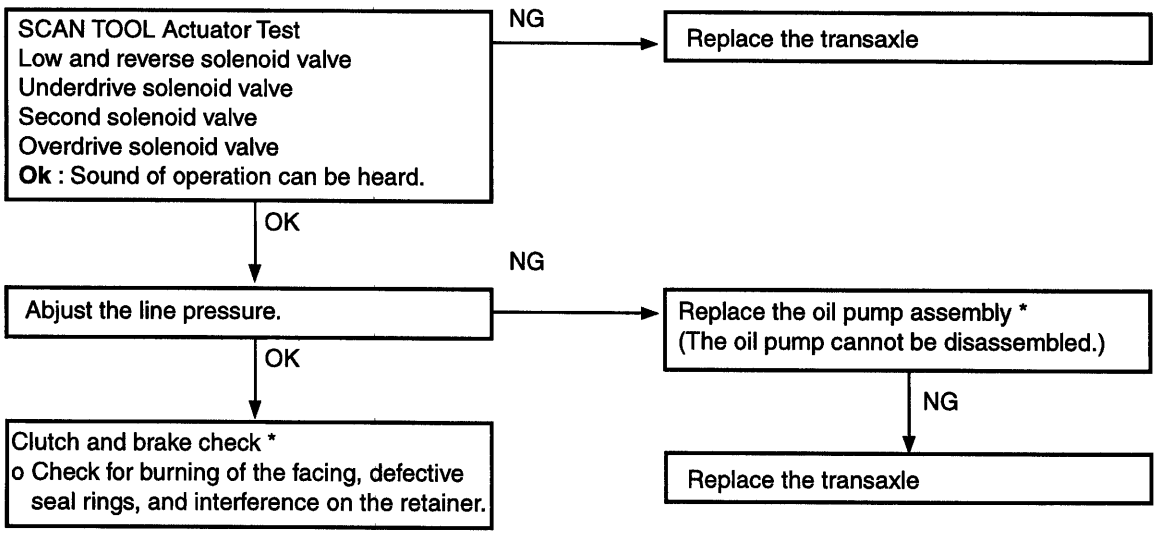

EJAA011J

INSPECTION PROCEDURE 11

Changed shift points	Probable cause
If all shift points are changed while driving, the cause is probably a malfunction of the output shaft speed sensor, TPS or a solenoid valve.	Malfunction of the output shaft speed sensor Malfunction of the throttle position sensor Malfunction of each solenoid valve Abnormal line pressure Malfunction of the valve body Malfunction of the TCM

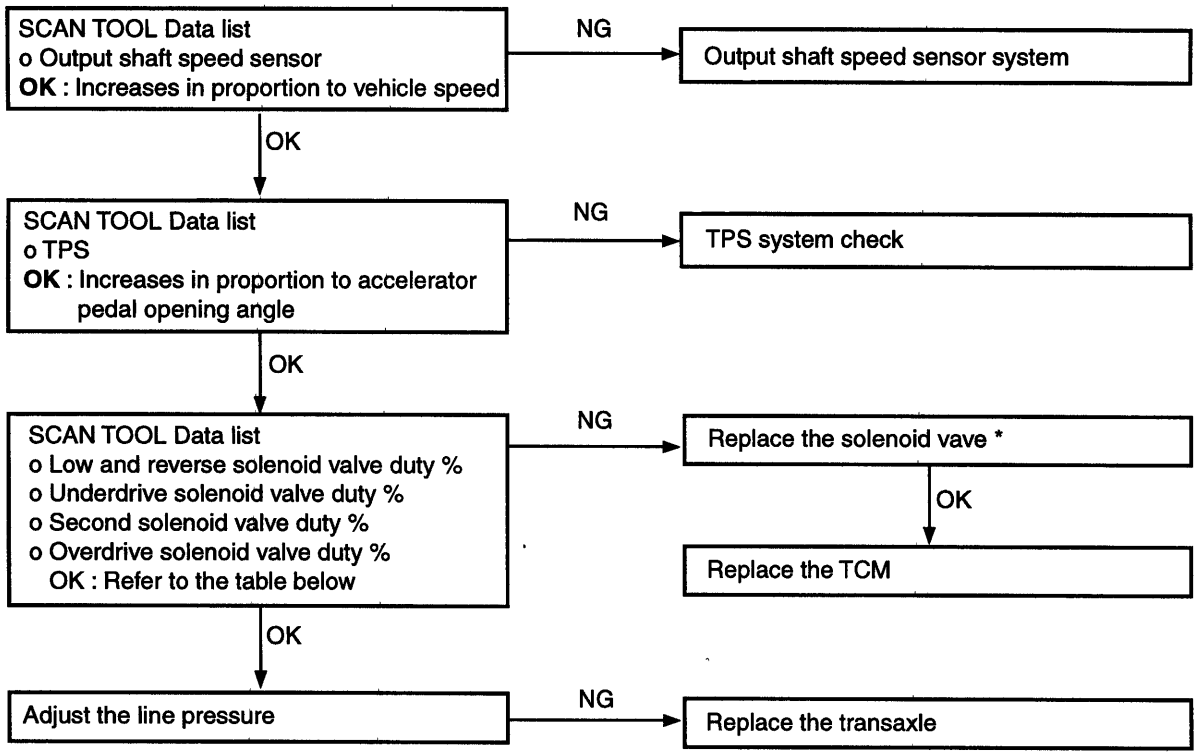

EJAA011K

INSPECTION PROCEDURE 12

Displaced shift points	Probable cause
If some of the shift points are changed while driving, the cause is probably a malfunction of the valve body, or it is related to adaptive logic control and is not an abnormality.	Malfunction of the valve body

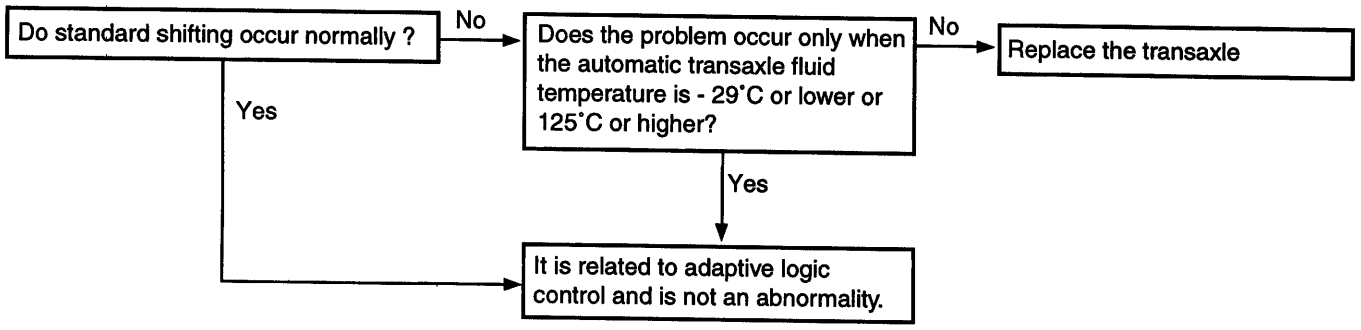

EKAA011L

INSPECTION PROCEDURE 13

No diagnostic trouble codes (Does not shift)	Probable cause
If shifting does not occur while driving and no diagnostic trouble codes are given, the cause is probably a malfunction of the Park/Neutral switch, or the TCM.	Malfunction of the Park/Neutral switch Malfunction of the TCM

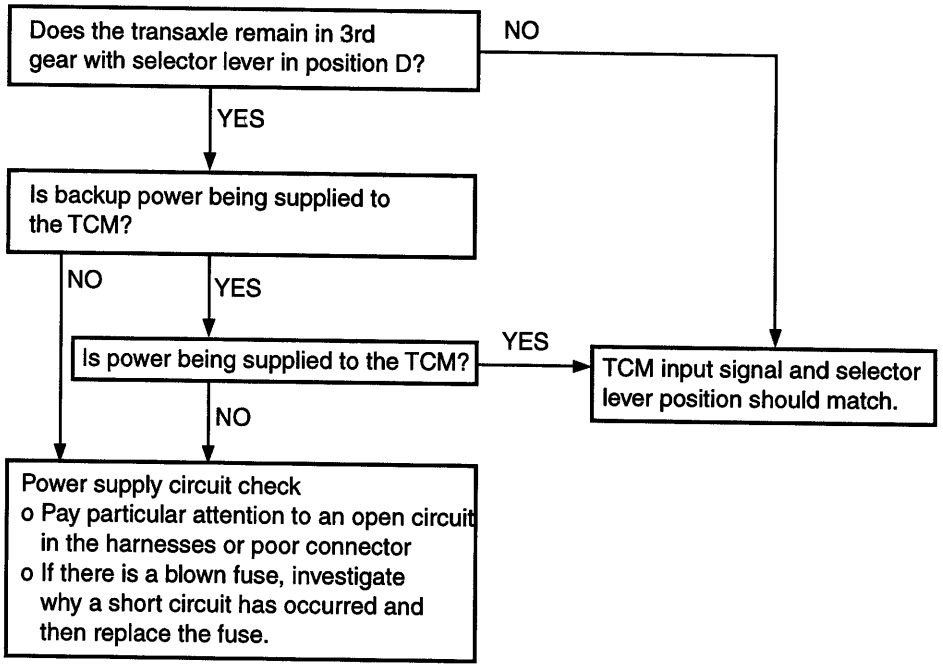

EKAA011M

INSPECTION PROCEDURE 14

Poor acceleration	Probable cause
If acceleration is poor even if downshifting occurs while driving, the cause is probably a malfunction of the engine system, a brake or clutch, or the transaxle is in fail-safe.	Malfunction of the engine system Malfunction of the brake or clutch Transaxle in fail-safe

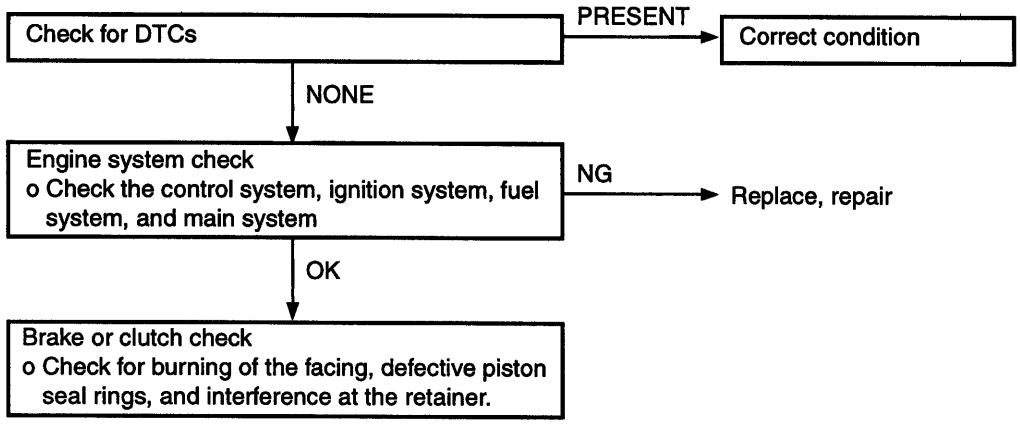

EKAA011N

INSPECTION PROCEDURE 15

Vibration	Probable cause
If vibration occurs when driving at constant speed or when accelerating in top range, the cause is probably abnormal torque converter clutch pressure or a malfunction of the engine, torque converter clutch solenoid, torque converter or valve body.	Abnormal torque converter clutch pressure Malfunction of the engine Malfunction of the torque converter clutch solenoid Malfunction of the torque converter Malfunction of the valve body

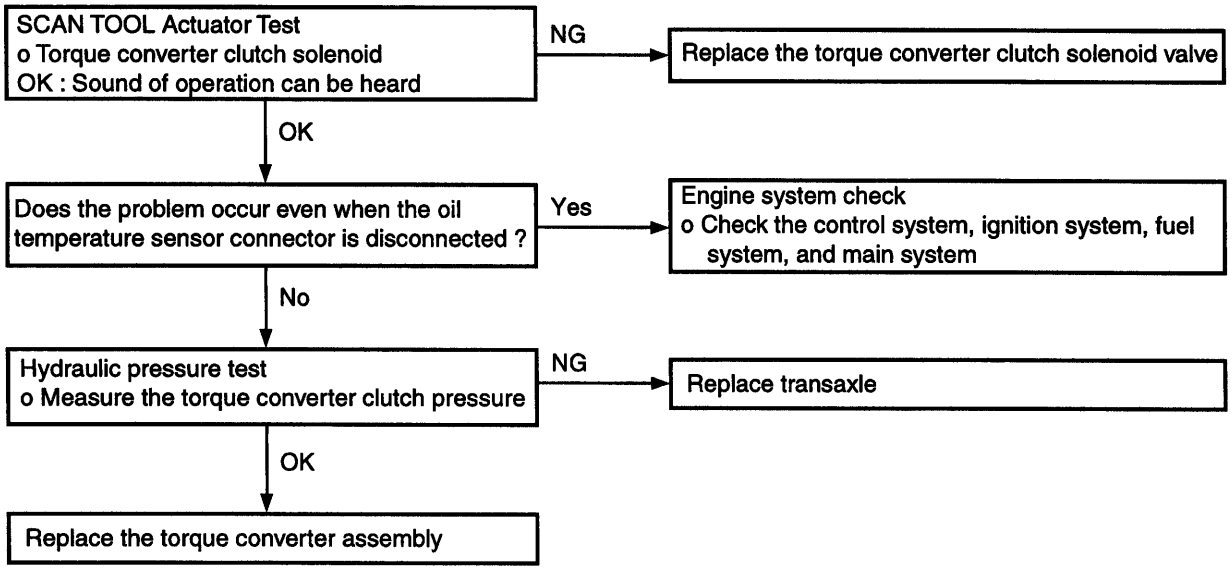

EKAA011O

SERVICE ADJUSTMENT PROCEDURES EKHA0150

BRAKE REACTIONPLATE END PLAY ADJUSTMENT

Replace the pressure plate of the low-reverse brake with the special tool, and then install the brake disc, brake plate, and snap ring as shown in the figure. Install the reaction plate and the used snap ring. Move the special tool to measure the end play, and then replace the snap ring to adjust the end play to standard value.

Standard value : 0-0.16 mm

(Refer to the "Snap ring and spacer for adjustment")

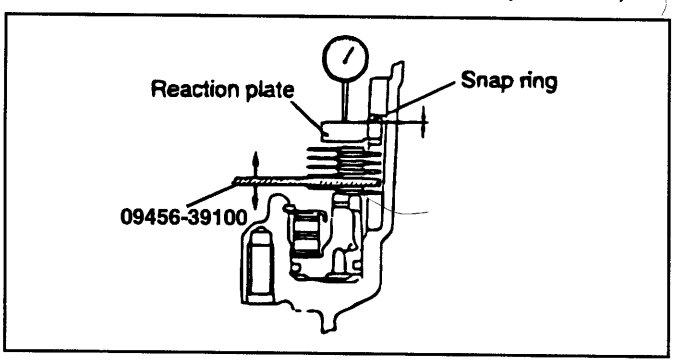

EKA9011A

SECOND BRAKE END PLAY ADJUSTMENT

Replace the pressure plate of the second brake with the special tool, and then install the brake disc and brake plate as shown in the figure. Install the return spring, second brake piston, and snap ring.

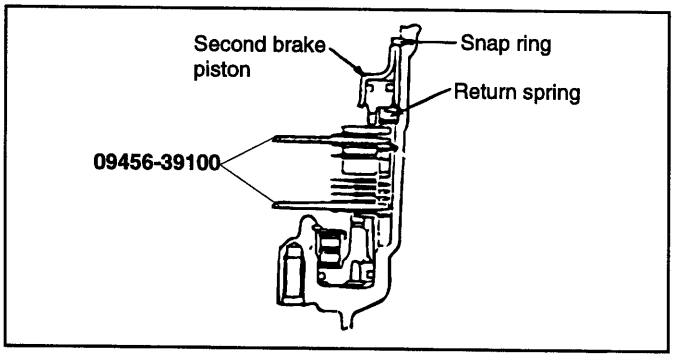

EKA9011B

Standard value : 0.79-1.25 mm

Reference Select a pressure plate whose thickness is within the following value. [A (moving amount) + thickness of the special tool — 1.25] to [A (moving amount) + thickness of the special tool — 0.79]. (Refer to the "Snap ring and spacer for adjustment")

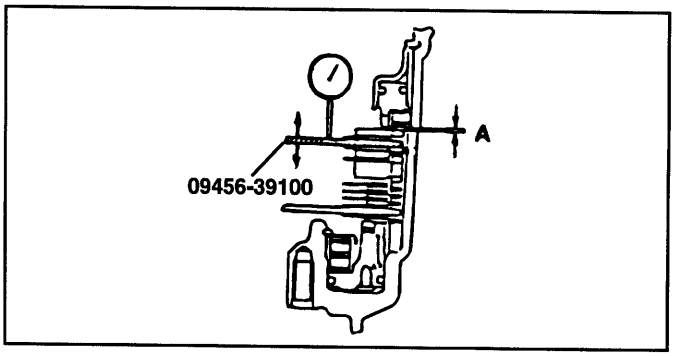

EKA9011E

LOW-REVERSE BRAKE END PLAY ADJUSTMENT

Reverse the transmission and install the dial gauge. Move the special tool up and down to measure the end play.

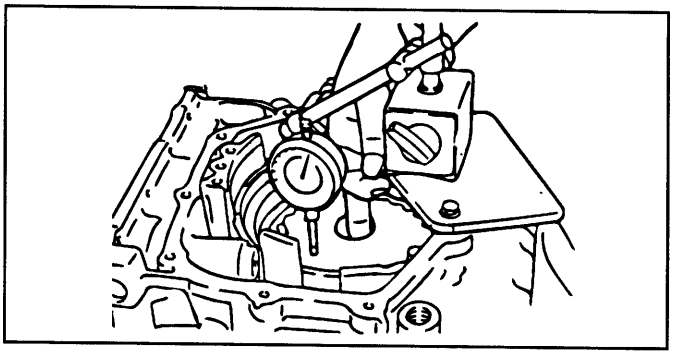

EKA9011D

Standard value : 1.35-1.81 mm

Reference Select a pressure plate whose thickness is within the following value. [A (moving amount) + thickness of the special tool — 1.81] to [A (moving amount) + thickness of the special tool — 1.35]. (Refer to the "Snap ring and spacer for adjustment").

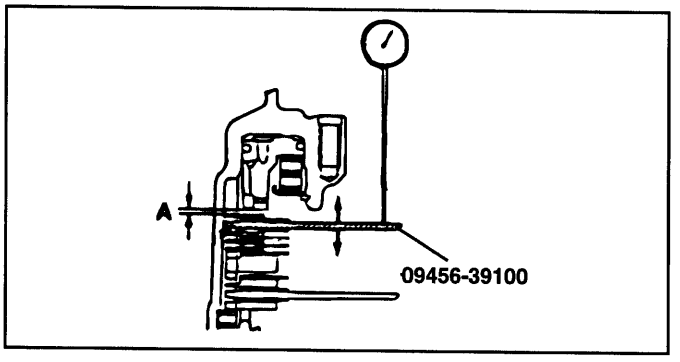

EKA9011F

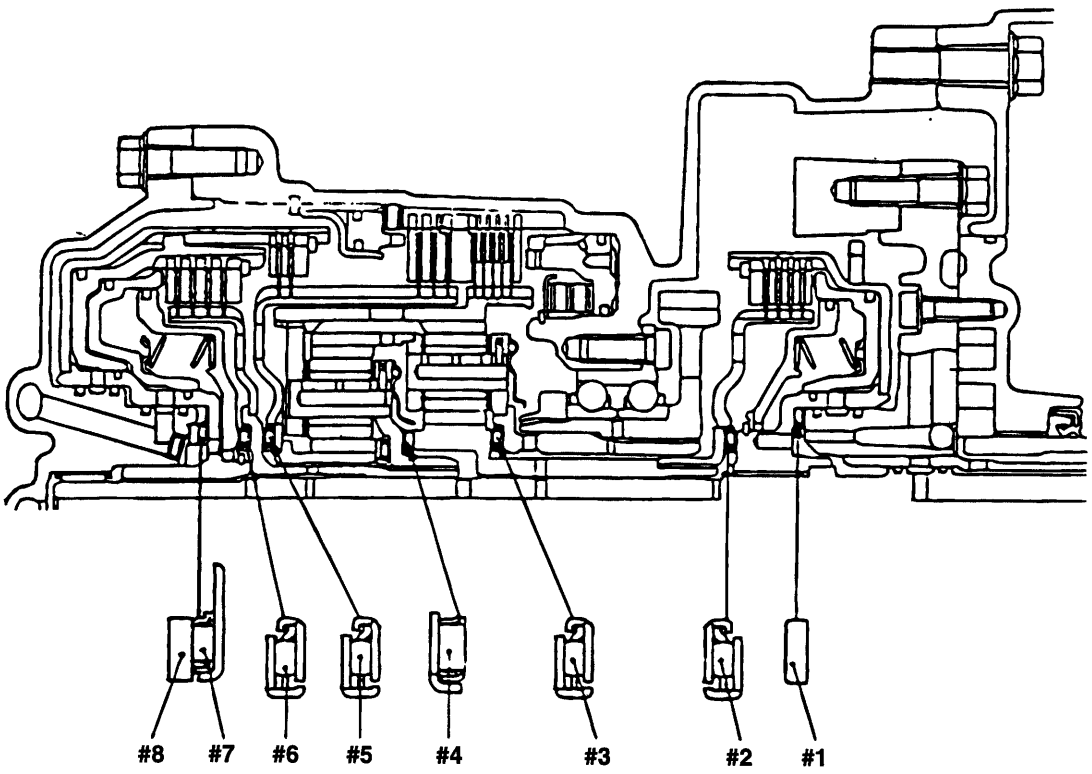

EKA9012A

IDENTIFICATION OF THRUST BEARING, THRUST RACES, AND THRUST WASHERS

O.D.	I.D.	Thickness	Symbol	O.D.	I.D.	Thickness	Symbol
59	47	1.8	#1	48.9	37	1.6	#8
59	47	2.0	#1	48.9	37	1.7	#8
59	47	2.2	#1	48.9	37	1.8	#8
59	47	2.4	#1	48.9	37	1.9	#8
59	47	2.6	#1	48.9	37	2.0	#8
59	47	2.8	#1	48.9	37	2.1	#8
49	36	3.6	#2	48.9	37	2.2	#8
49	36	3.6	#3	48.9	37	2.3	#8
45.3	31	3.3	#4	48.9	37	2.4	#8
49	36	3.6	#5	48.9	37	2.5	#8
49	36	3.6	#6	48.9	37	2.6	#8
59	37	2.8	#7	-	-	-	-

UNDERDRIVE SUN GEAR END PLAY ADJUSTMENT

Install the used thrust race #8, and then the rear cover. Measure end play of the underdrive sun gear. Replace thrust race #8 to adjust the play to the standard value.

Standard value : 0.25-0.45 mm

NOTE

Installing the underdrive clutch hub makes it easy to measure the end play of the underdrive sun gear.

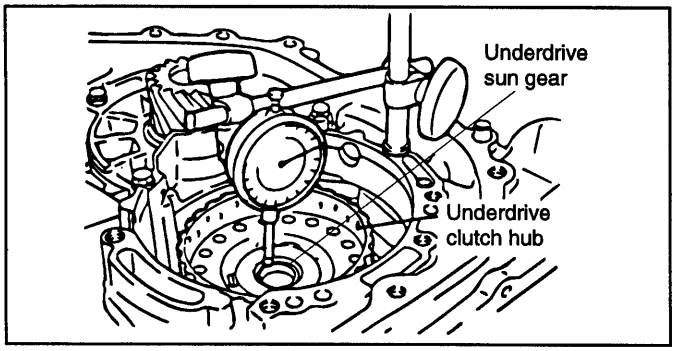

EKA9013A

DIFFERENTIAL CASE PRELOAD ADJUSTMENT

Place a solder (approx. 10 mm in length, 3 mm in diameter) on the torque converter housing as shown in the figure.

Install the torque converter housing to the transmission case without applying sealant. Tighten its mounting bolts to the specified torque. Loosen the bolts, and remove the solder. Use a micrometer to measure the thickness (T) of the pressed solder. Select a-spare with a thickness that is within the following value.

Standard value : (T+0.045 mm) to (T+0.105 mm)

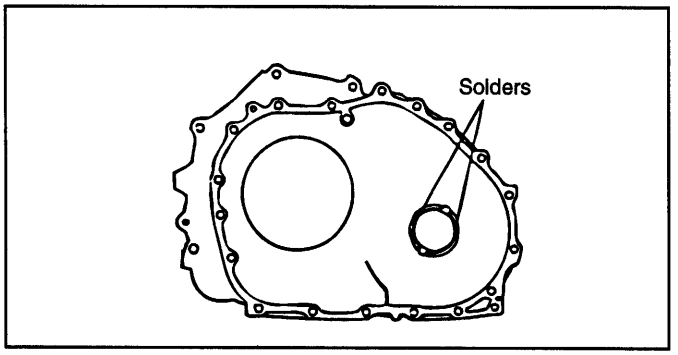

EKA9013B

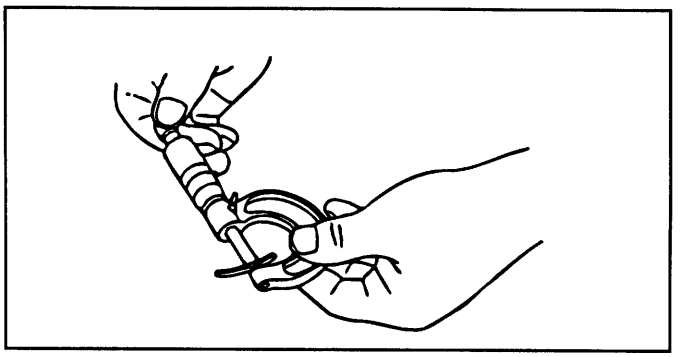

EKA9013C

AUTOMATIC TRANSAXLE HYDRAULIC CIRCUIT EKA90170

PARKING & NEUTRAL

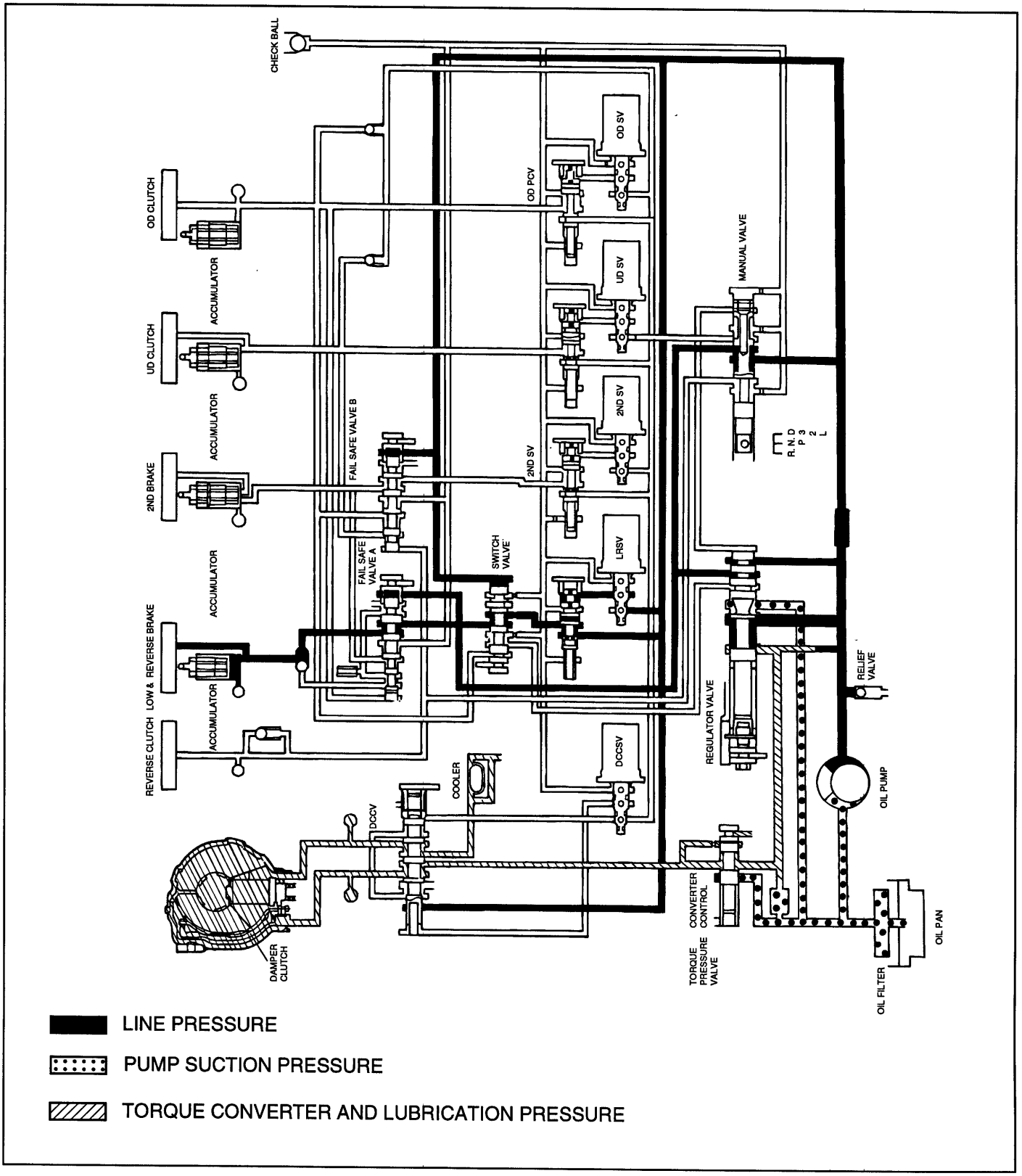

EKA9050A

FIRST

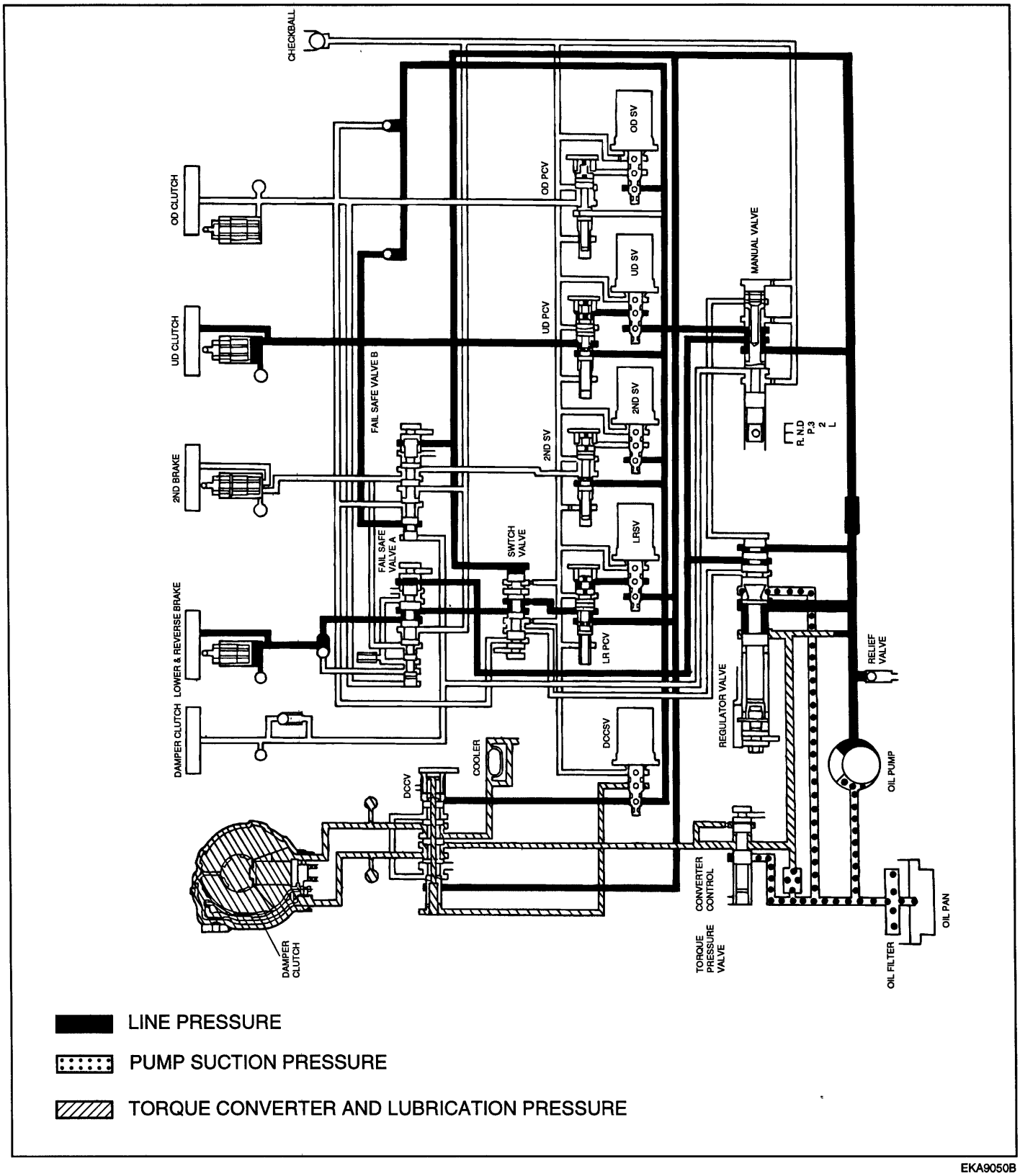

EKA9050B

SECOND

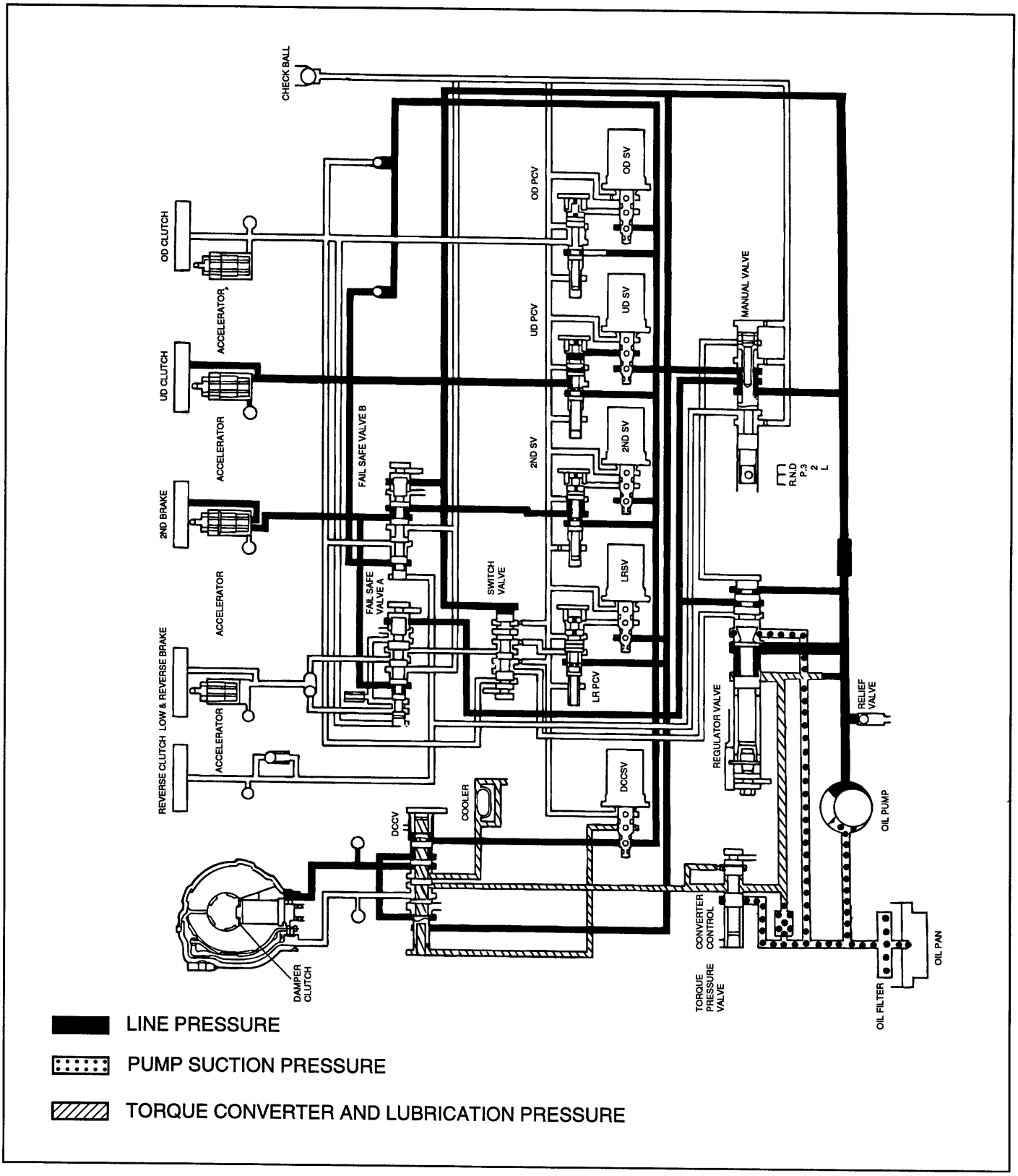

EKA9050C

THIRD

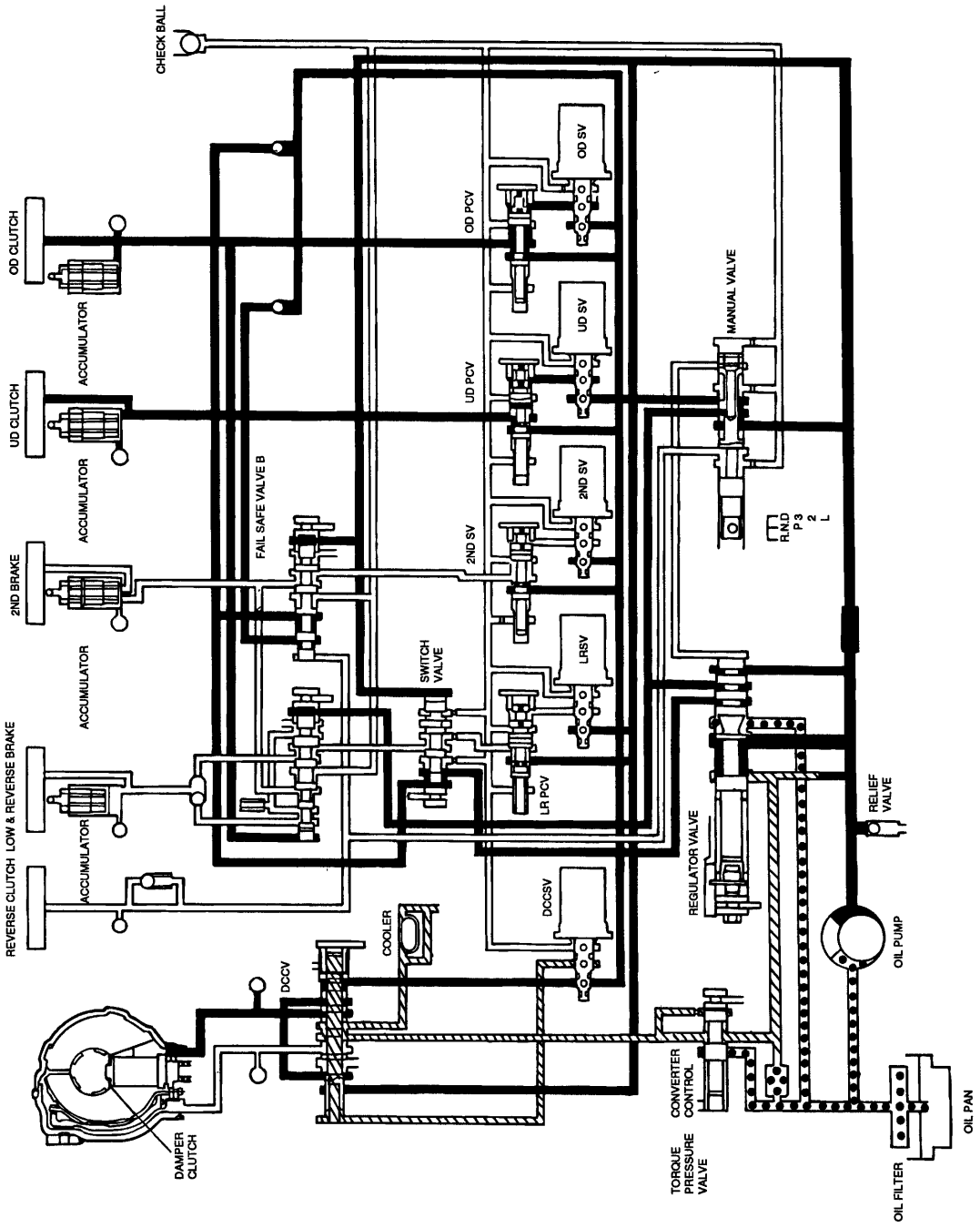

EKA9050D

FOURTH

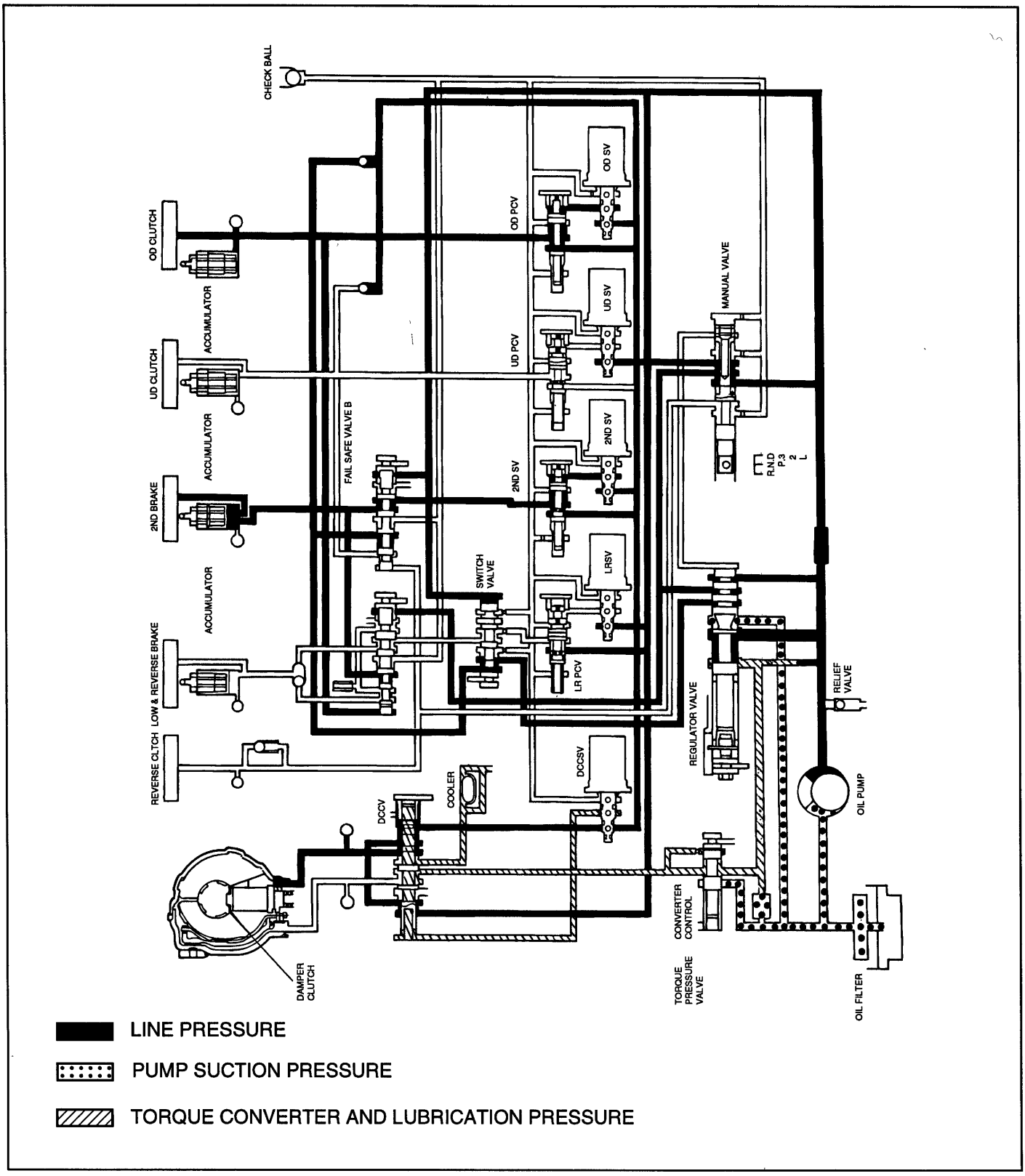

EKA9050E

REVERSE

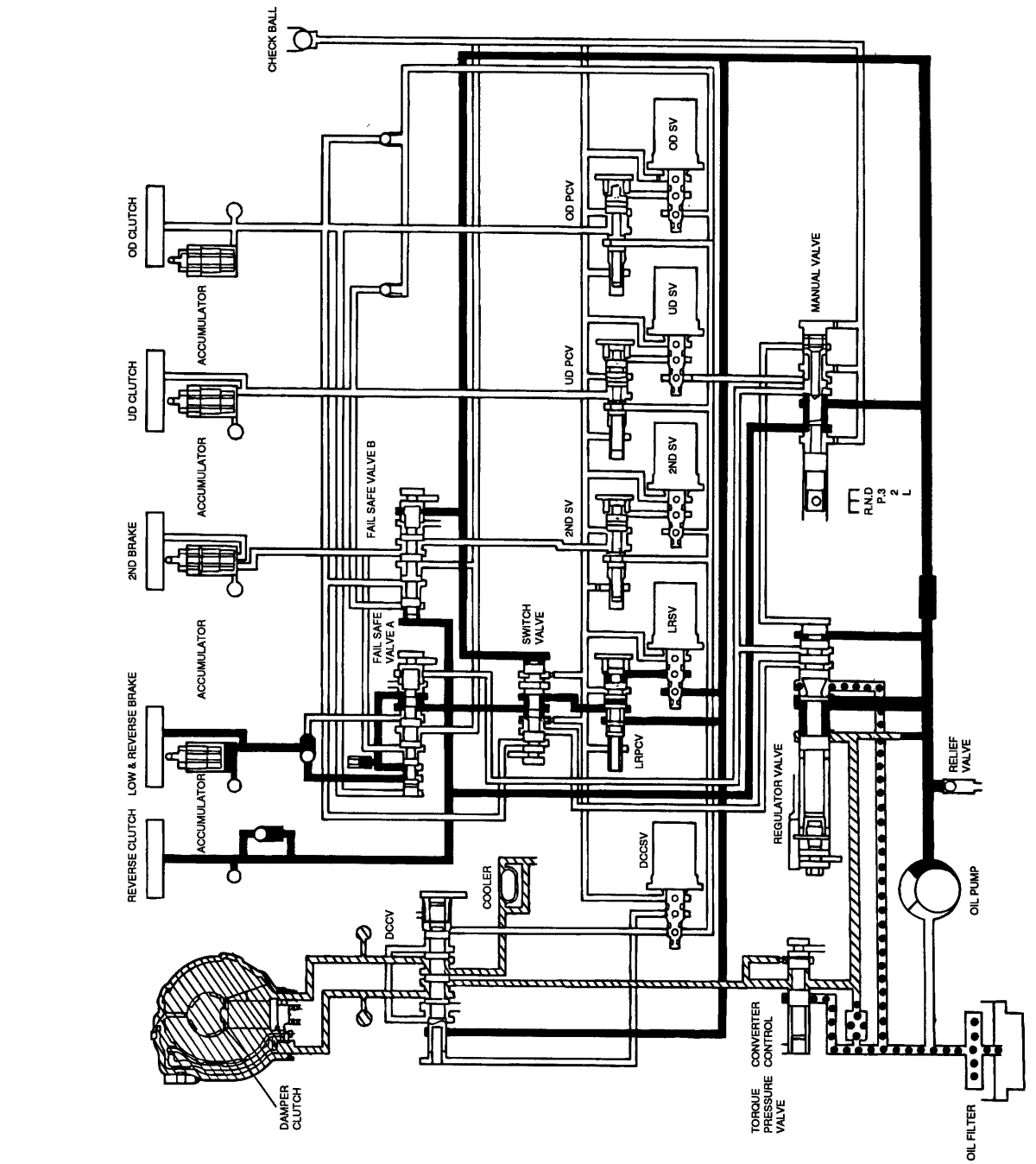

EKA9050F

TCM CIRCUIT DIAGRAM (2.4L) (1) EKJA0300

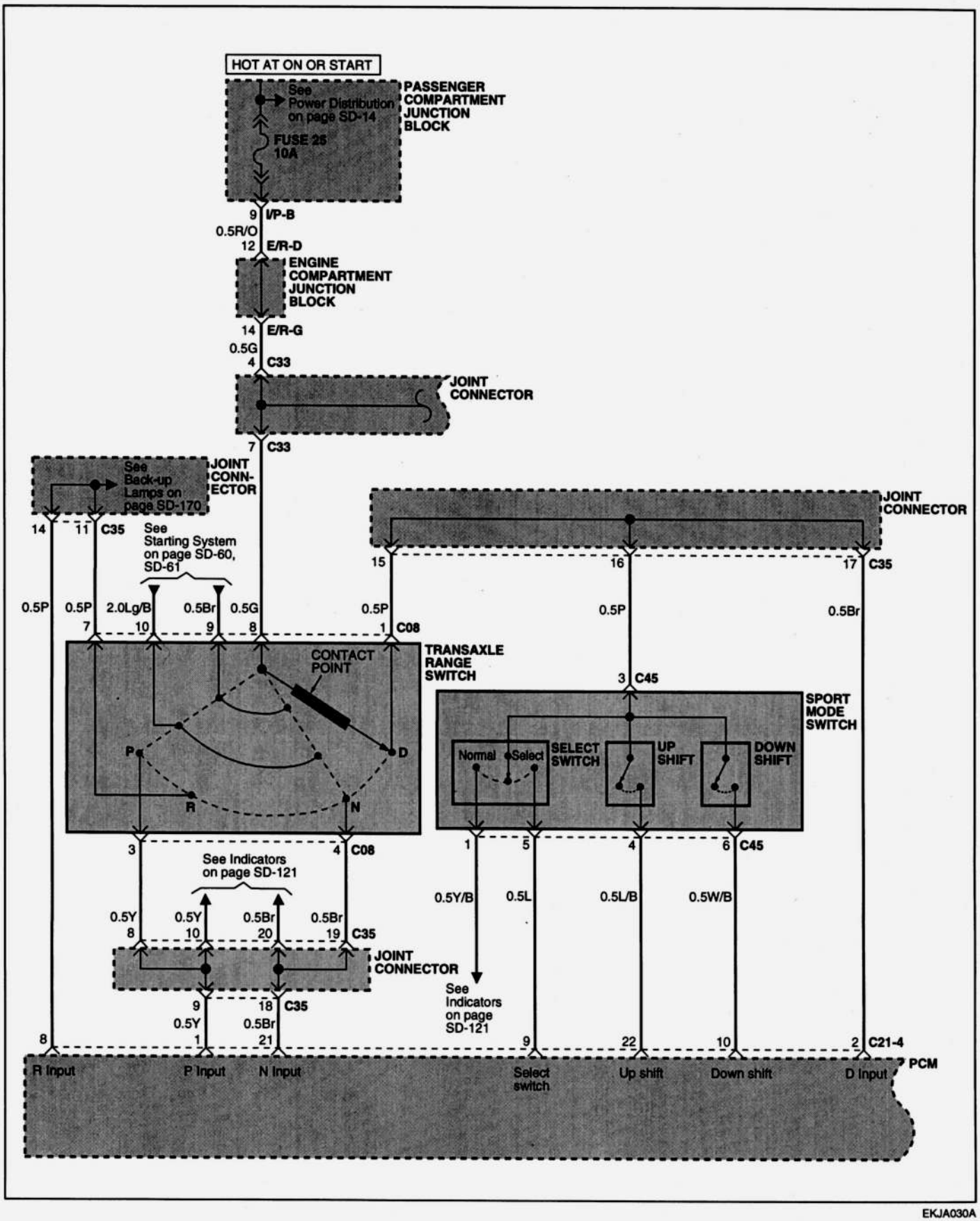

EKJA030A

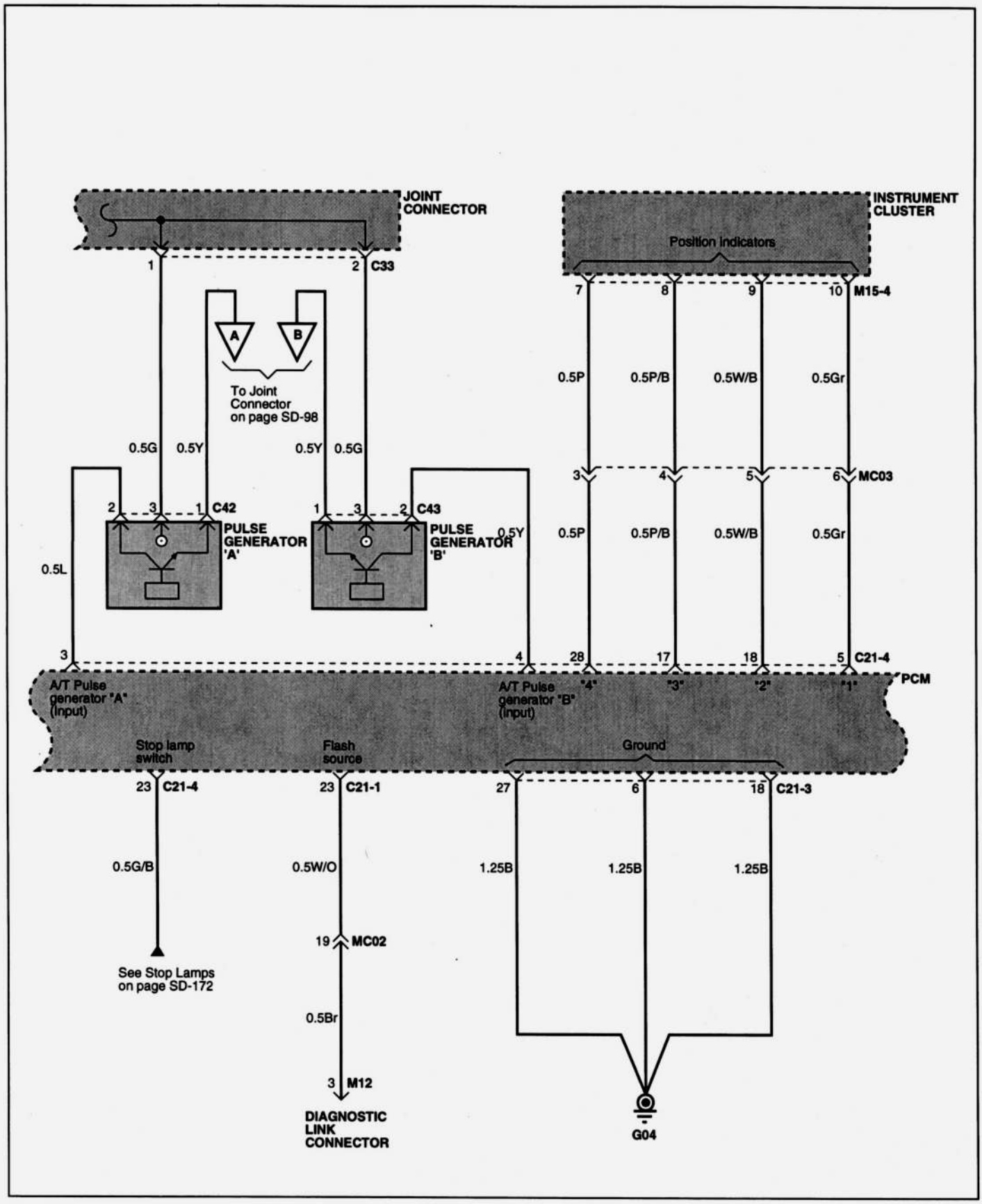
JOINT CONNECTOR
1
2 C33
A
B
To Joint Connector on page SD-98
0.5G
0.5Y
0.5Y
0.5G
2 3 1 C42
PULSE GENERATOR 'A'
1 3 2 C43
PULSE GENERATOR 'B'
0.5Y
0.5L
3
4
A/T Pulse generator "A" (Input)
A/T Pulse generator "B" (Input)
INSTRUMENT CLUSTER
Position indicators
7 8 9 10 M15-4
0.5P
0.5P/B
0.5W/B
0.5Gr
3 4 5 6 MC03
0.5P
0.5P/B
0.5W/B
0.5Gr
28 17 18 5 C21-4
"4" "3" "2" "1"
PCM
Stop lamp switch
Flash source
Ground
23 C21-4
23 C21-1
27 6 18 C21-3
0.5G/B
0.5W/O
1.25B
1.25B
1.25B
See Stop Lamps on page SD-172
19 MC02
0.5Br
3 M12
DIAGNOSTIC LINK CONNECTOR
G04

EKJA030B

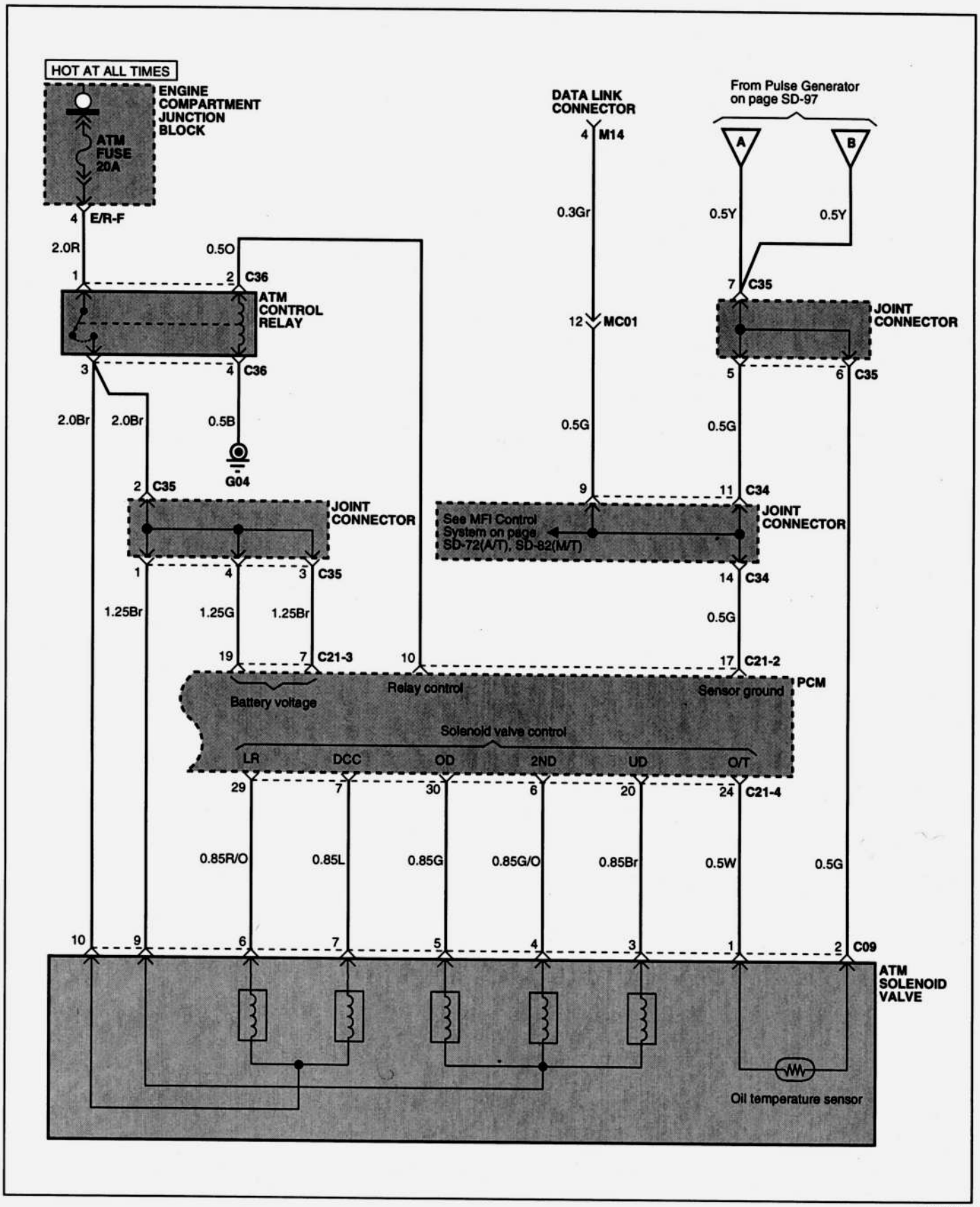
HOT AT ALL TIMES
ENGINE COMPARTMENT JUNCTION BLOCK
ATM FUSE 20A
4 E/R-F
2.0R
0.5O
1
2 C36
ATM CONTROL RELAY
3
4 C36
2.0Br
2.0Br
0.5B
G04
2 C35
JOINT CONNECTOR
1
4
3 C35
1.25Br
1.25G
1.25Br
19
7 C21-3
10
17 C21-2
Battery voltage
Relay control
Sensor ground
PCM
Solenoid valve control
LR
DCC
OD
2ND
UD
O/T
29
7
30
6
20
24 C21-4
0.85R/O
0.85L
0.85G
0.85G/O
0.85Br
0.5W
0.5G
10
9
6
7
5
4
3
1
2 C09
ATM SOLENOID VALVE
Oil temperature sensor
DATA LINK CONNECTOR
4 M14
0.3Gr
12 MC01
0.5G
9
11 C34
See MFI Control System on page SD-72(A/T), SD-82(M/T)
JOINT CONNECTOR
14 C34
0.5G
From Pulse Generator on page SD-97
A
B
0.5Y
0.5Y
7 C35
JOINT CONNECTOR
5
6 C35
0.5G

EKJA030C

TCM CIRCUIT DIAGRAM (2.7L) (1)

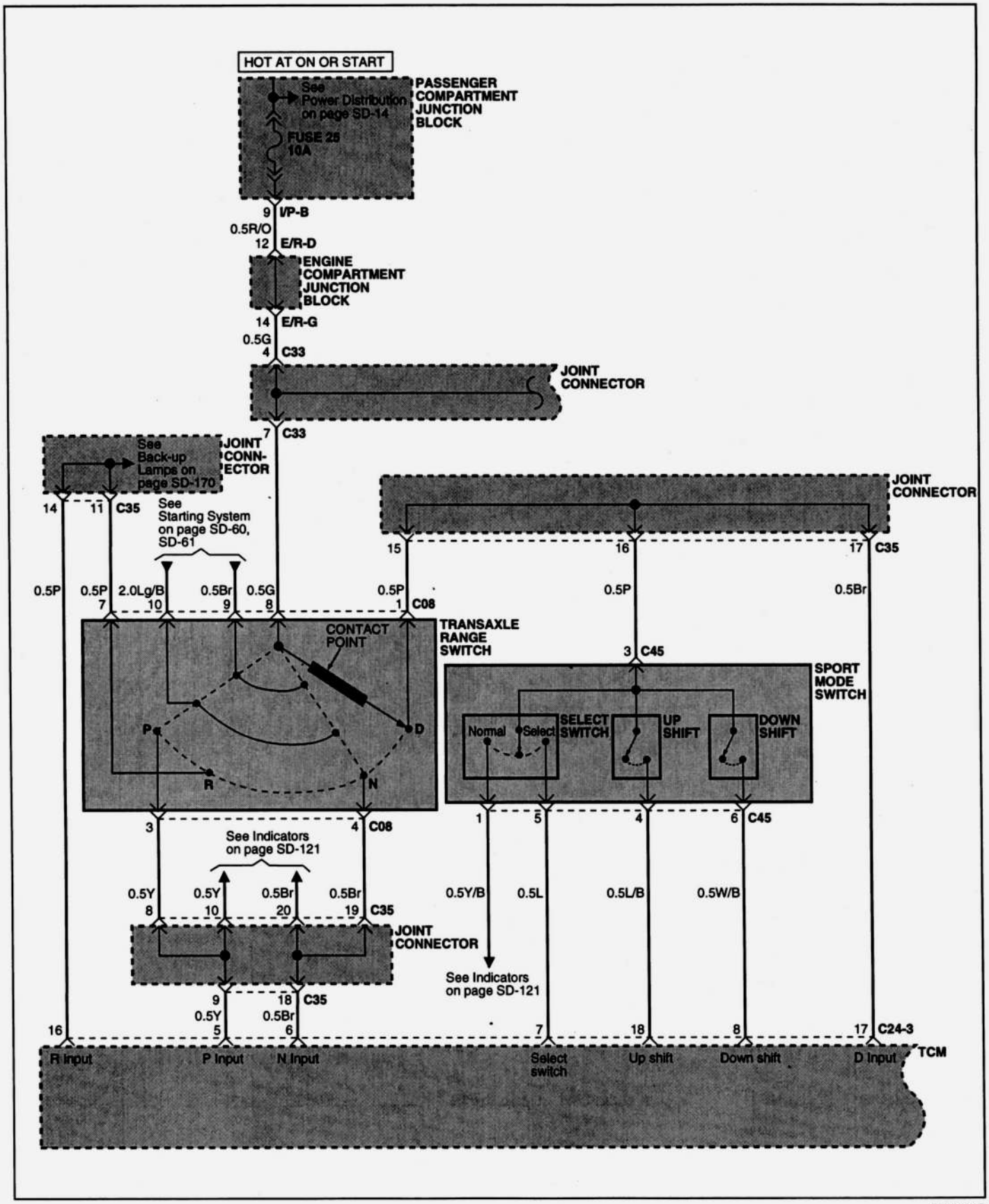

EKJA030D

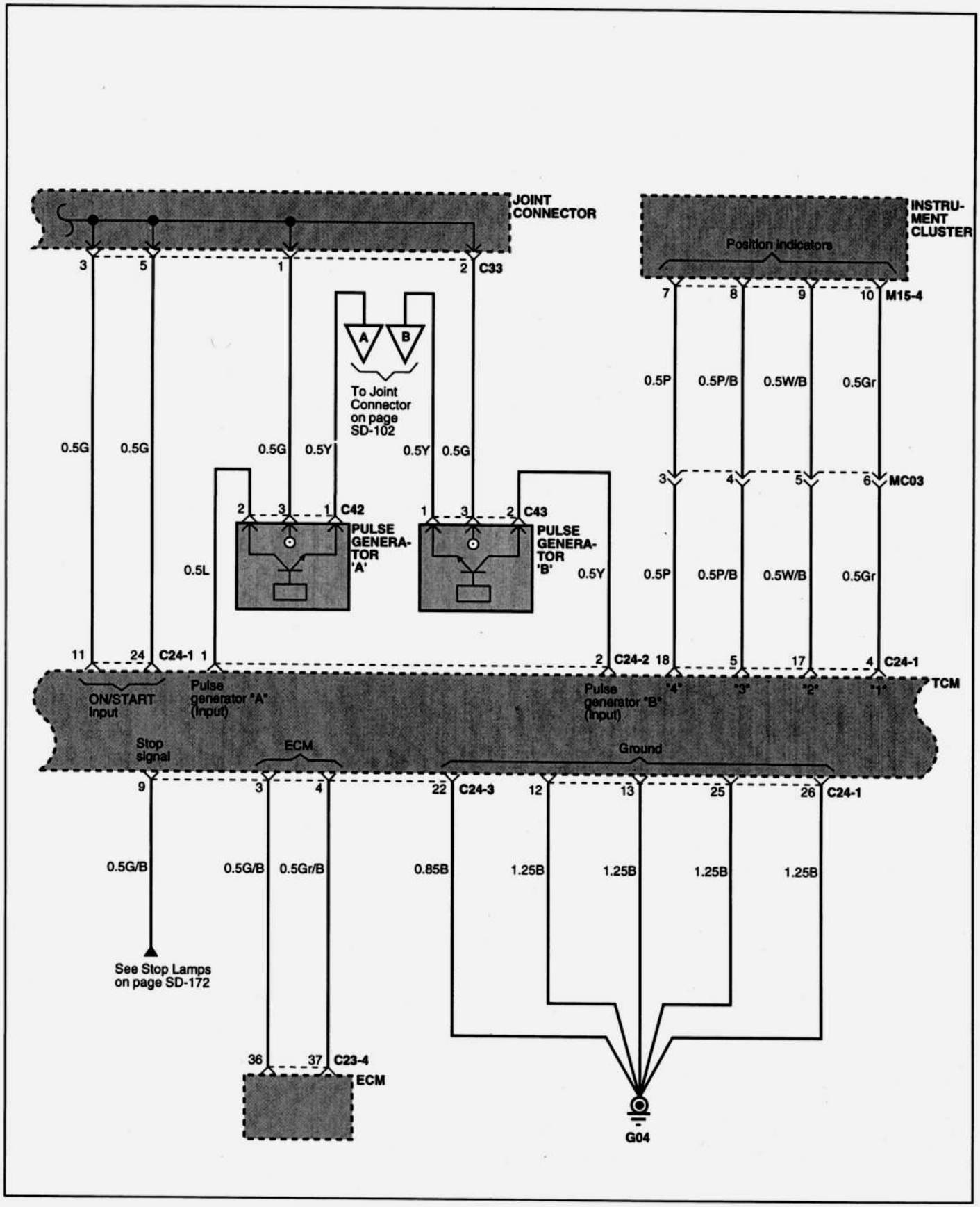
JOINT CONNECTOR
INSTRU-MENT CLUSTER
Position indicators
C33
M15-4
MC03
C42
C43
PULSE GENERA-TOR 'A'
PULSE GENERA-TOR 'B'
To Joint Connector on page SD-102
A
B
0.5G
0.5L
0.5Y
0.5P
0.5P/B
0.5W/B
0.5Gr
C24-1
C24-2
TCM
ON/START Input
Pulse generator "A" (Input)
Pulse generator "B" (Input)
Stop signal
ECM
Ground
0.5G/B
0.5Gr/B
0.85B
1.25B
See Stop Lamps on page SD-172
C23-4
ECM
G04
EKJA030E

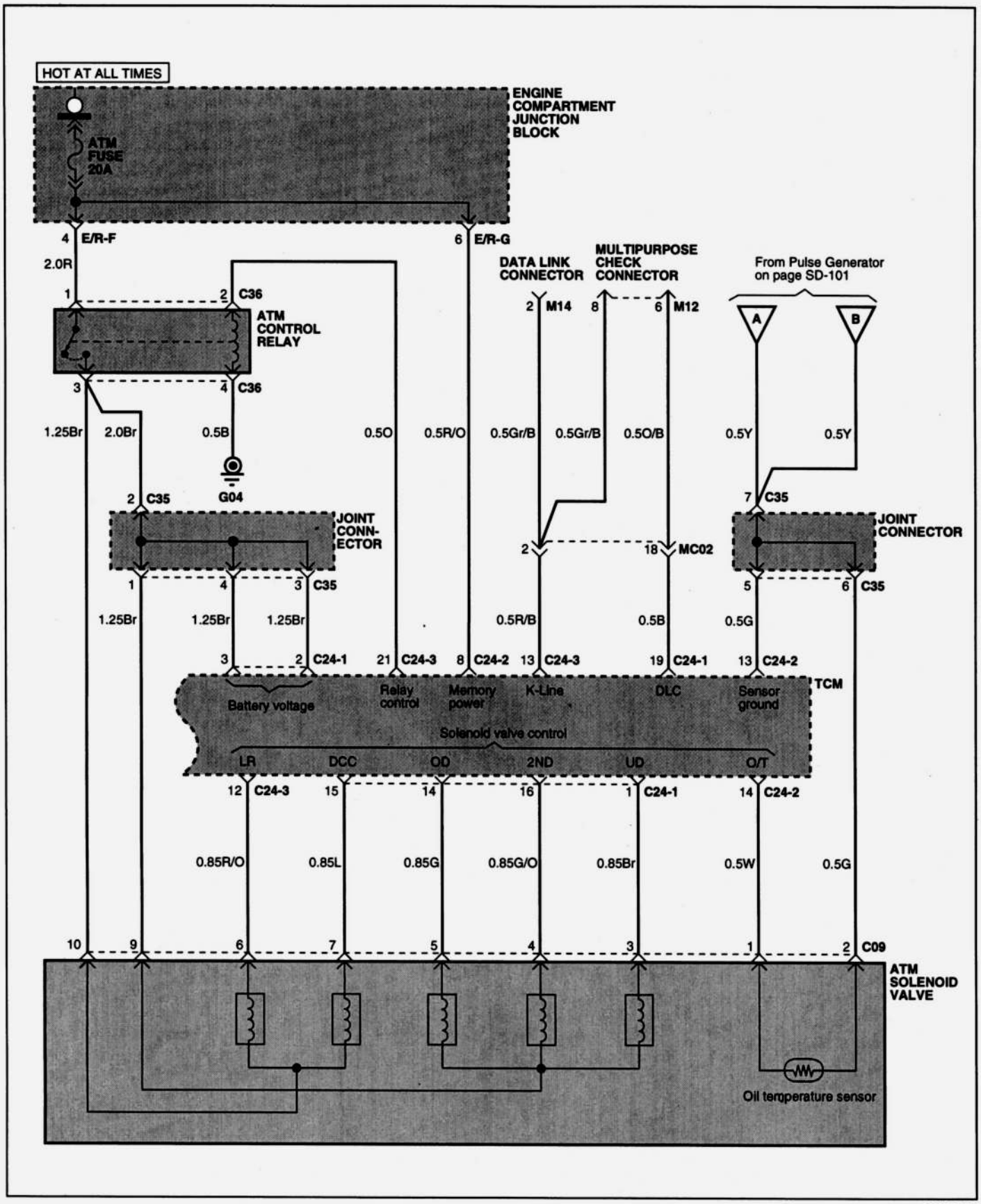
HOT AT ALL TIMES
ENGINE COMPARTMENT JUNCTION BLOCK
ATM FUSE 20A
4 E/R-F
6 E/R-G
2.0R
1
2 C36
ATM CONTROL RELAY
3
4 C36
1.25Br
2.0Br
0.5B
G04
0.5O
0.5R/O
DATA LINK CONNECTOR
MULTIPURPOSE CHECK CONNECTOR
2 M14
8
6 M12
0.5Gr/B
0.5Gr/B
0.5O/B
From Pulse Generator on page SD-101
A
B
0.5Y
0.5Y
2 C35
JOINT CONN-ECTOR
7 C35
JOINT CONNECTOR
2
18 MC02
1
4
3 C35
5
6 C35
1.25Br
1.25Br
1.25Br
0.5R/B
0.5B
0.5G
3
2 C24-1
21 C24-3
8 C24-2
13 C24-3
19 C24-1
13 C24-2
TCM
Battery voltage
Relay control
Memory power
K-Line
DLC
Sensor ground
Solenoid valve control
LR
DCC
OD
2ND
UD
O/T
12 C24-3
15
14
16
1 C24-1
14 C24-2
0.85R/O
0.85L
0.85G
0.85G/O
0.85Br
0.5W
0.5G
10
9
6
7
5
4
3
1
2 C09
ATM SOLENOID VALVE
Oil temperature sensor

EKJA030F

AUTOMATIC TRANSAXLE

COMPONENTS EKJA0240

<F4A42>

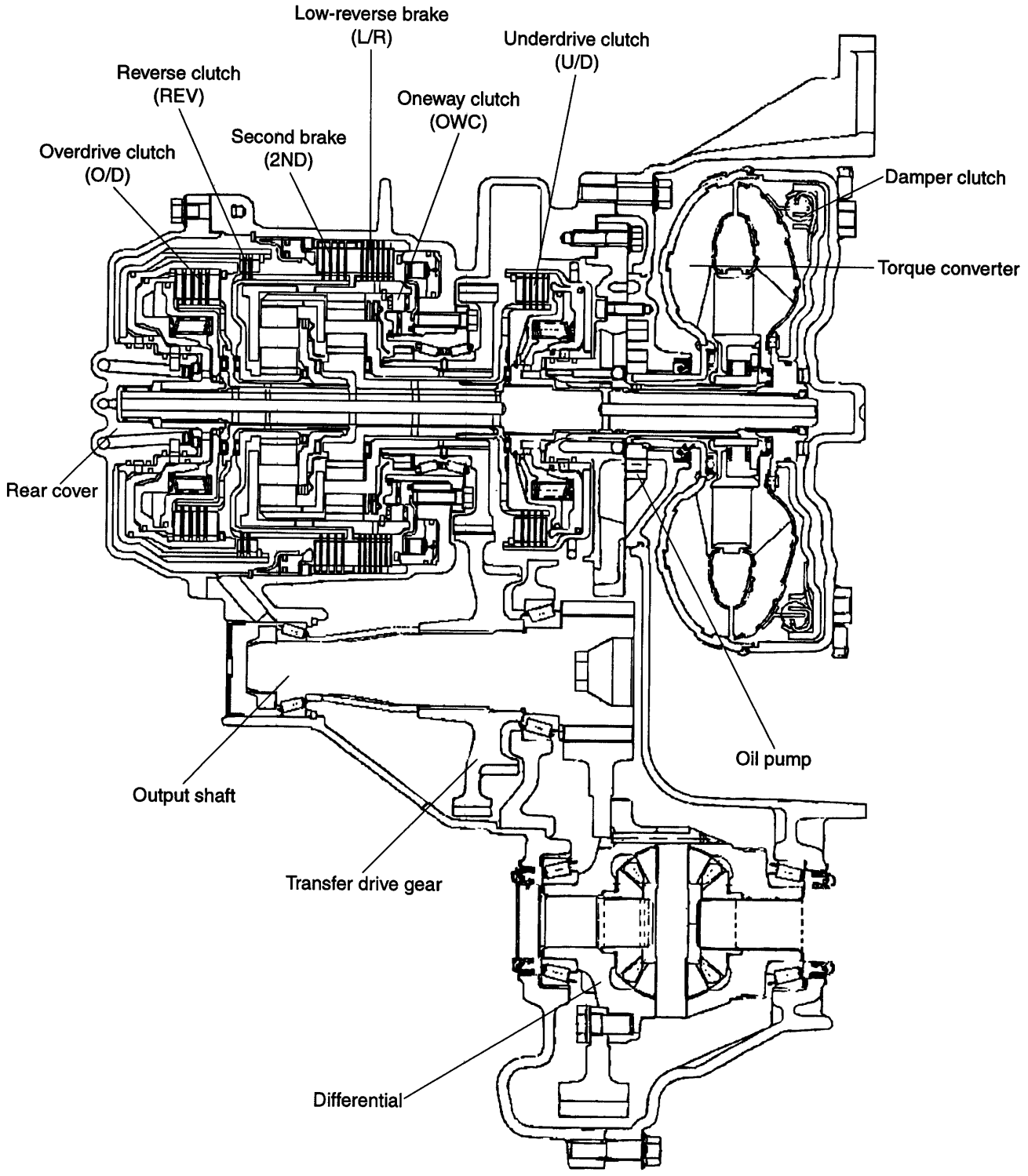

EKJA024A

REMOVAL EKJA0250

1. Remove the drain plug and drain the automatic transaxle fluid.
2. Remove the air cleaner assembly.

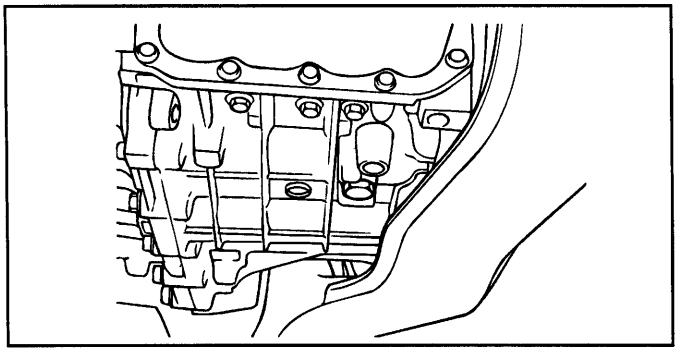

EKA9009A

3. Remove the control cable.
4. Disconnect the speedometer sensor connector.
5. Disconnect the transaxle range switch connector, solenoid connector, and oil temperature sensor connector.

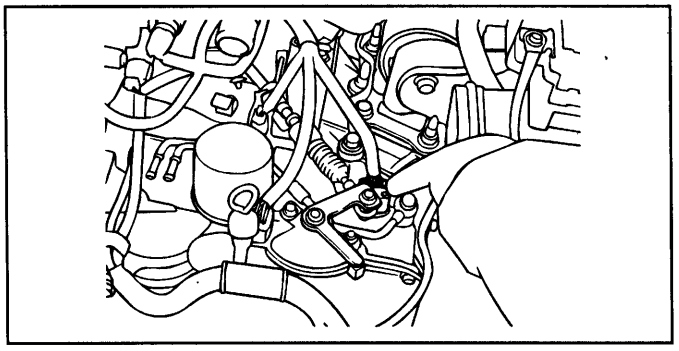

EKA9009B

6. Remove the oil cooler hose.

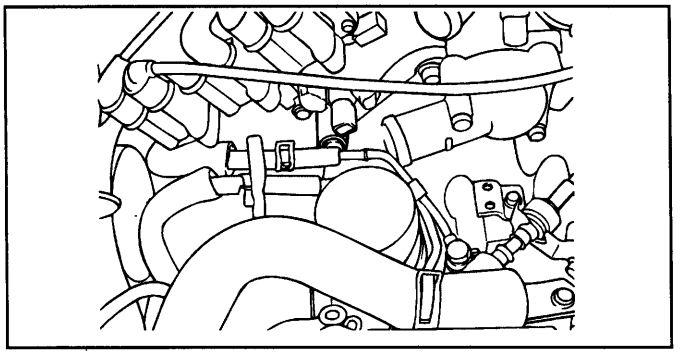

EKA9009C

7. Attach the special tool (09200–38001), an engine support fixture to the engine hooks.

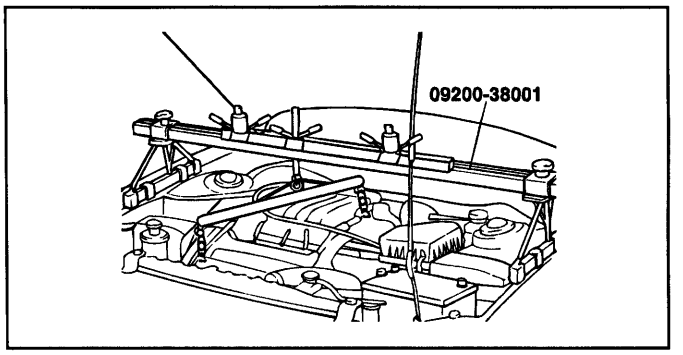

EKJA025A

8. Lift up the vehicle.
9. Remove the gear box, stabilizer bar, tie rod end, lower arm ball joint, and drive shaft.
10. Remove the steering u-joint bolt and return tube mounting bolts.

NOTE

Mark a mating line on the steering column universal joint and the gear box before disassembling to make the installation easier.

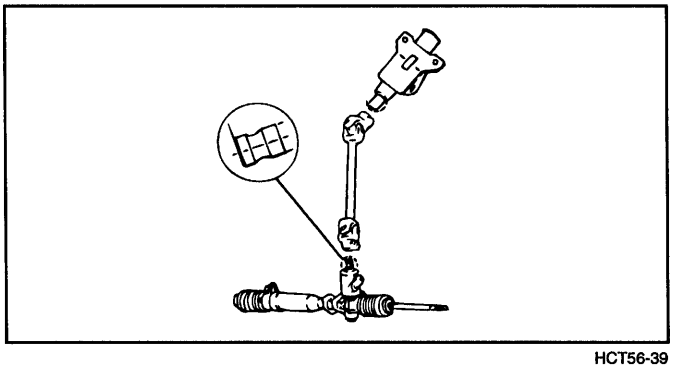

HCT56-39

11. Remove the subframe mounting bolts and the sub-frame.

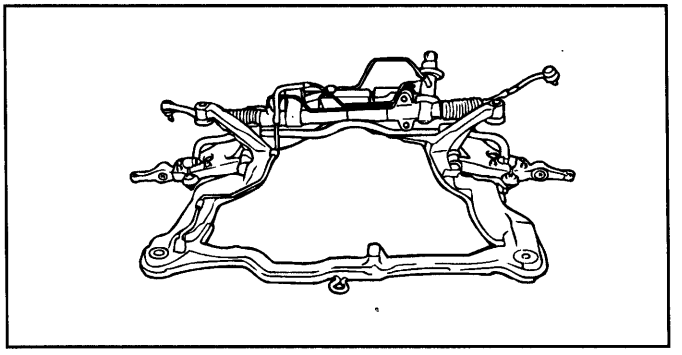

EKA9009F

12. Remove the starter motor.
13. Remove the automatic tranaxle mounting bolts.
14. Remove the engine to automatic transaxle bolts.
15. Remove the automatic transaxle assembly by jack.

CAUTION

a. Engine and transmission mounting insulators should be installed as specified them.
b. Mounting bracket installation procedures.

- **Engine mounting bracket.**
- **T/M mounting bracket.**
- **Rear roll stopper mounting bracket.**
- **Front roll stopper mounting bracket.**

c. When installing the front roll stopper mounting bracket, be especially careful not to crush the insulator. If crushed, idle vibration will most probably occur..

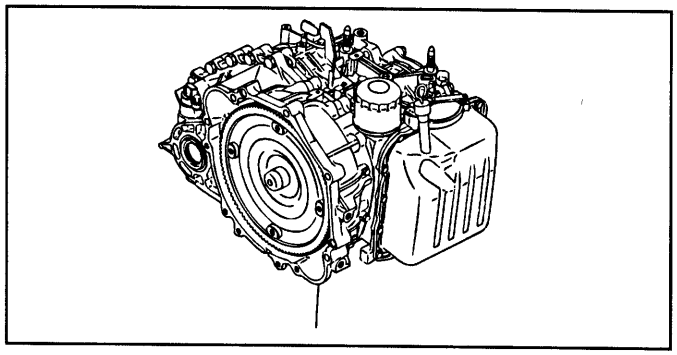

EKA9009E

INSTALLATION EKHA0260

1. Attach the torque converter on the transaxle side and mount the transaxle assembly onto the engine.

CAUTION

If the torque conveter is mounted first on the engine, the oil seal on the transaxle may be damaged. Therefore, first be sure to assemble the torque converter to the transaxle.

2. Install the transaxle control cable and adjust as follows:

   a. Move the shift lever and the transaxle range swth to the "N" position and install the control cale.
   b. When connecting the control cable to the transaxle mounting bracket, install the clip until it contacts to the control cable.
   c. Remove any free-play in the control cable by adjusting the nut and then check to see that the selected lever moves smoothly.
   d. Check to see that the control cable has been adjusted correctly.

3. Installation is the reverse of removal.

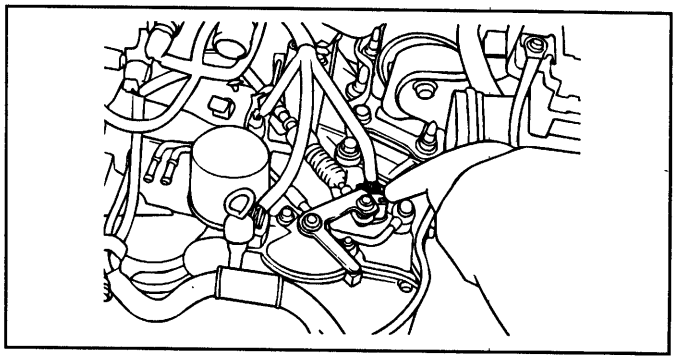

EKA9009B

NOTE

For Automatic Transaxle overhaul, please refer to the "Overhaul Manual".

AUTOMATIC TRANSAXLE SHIFT CONTROL

AUTOMATIC TRANSAXLE CONTROL SYSTEM EKJA0180

AUTOMATIC TRANSAXLE SHIFT CONTROL

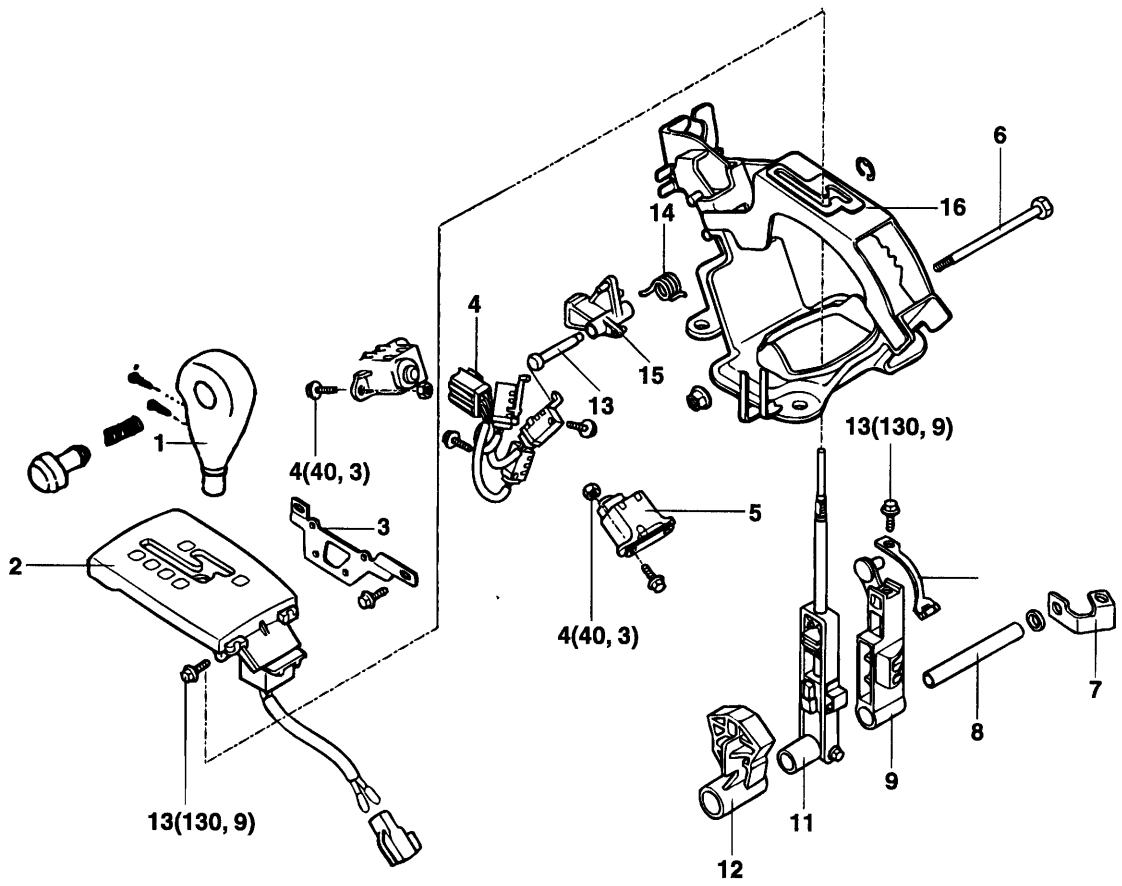

<Disassebly step>
1. Shift knob
2. Indicator panel
3. Switch bracket
4. Magnetic switch
5. Detent
6. Bolt
7. Parking brake cable bracket
8. Shaft
9. Cable lever
10. Detent spring
11. Lever assembly
12. Switch lever
13. Clevis pin
14. Cam spring
15. Lock cam
16. Bracket assembly

TORQUE : N·m (kg·cm, lb·ft)

KFW9002A

INSTALLATION EKJA0200

PROCEDURE TO INSTALL THE LOCK CAM

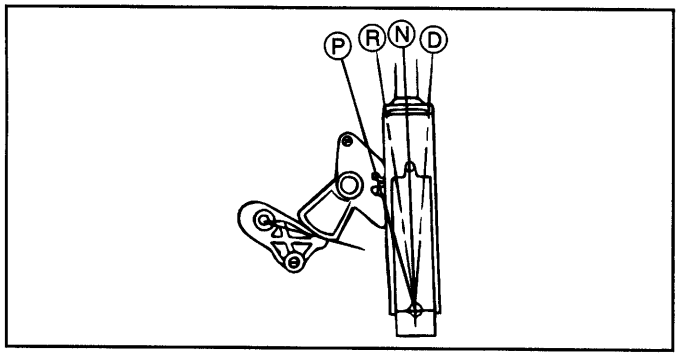

EKB9037A

1. Move A/T lever to "P" position to set the key lock cam and the shift lock cam as shown in the figure.
   - Check that the key lock cam is located at "B"by the detent pin.
   - Check that the shift lock cam is located at "A".

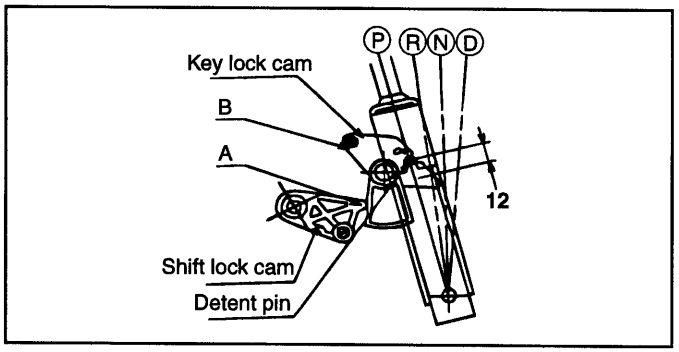

EKB9037B

2. Check that the key cylinder is at "LOCK".

PROCEDURE FOR ADJUSTING SHIFT LOCK AND KEY LOCK CABLE

1. Check that each lock cam is as shown in the figure.
2. Install the shift lock and key lock cable in position. In this case, the shift lock cable must be fixed to the brake pedal and the key lock cable must be fixed to the key cylinder.
3. Temporarily install each cable to the A/T lever assembly as shown in the figure. Securely insert the cable end into the fixing pin of each cam.

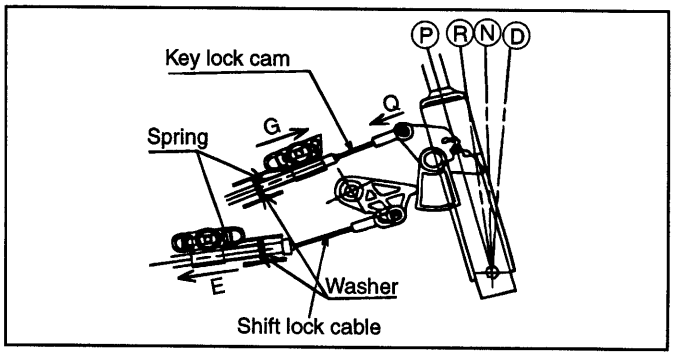

EKB9037C

4. Slightly pull the shift lock cable in the direction "E".
5. After checking that the portion of the cable end touches the cable fixing pin, fix with the self-tapping bolt.
6. Slightly push the key lock cam to direction "Q".
7. Slightly pull the key lock cable in the direction "G"to stretch the cable. Then fix the cable with the self-tapping bolt.
8. Check that the key lock and the shift lock cable are secure.

PROCEDURE FOR CHECKING THE SHIFT LOCK

1. When the brake pedal is not depressed, the push button of the shift lever at "P" position must not be operable. (Shift lever cannot be shifted at the other positions from "P".)
2. When the brake pedal stroke is 15~22mm (with shift lever at "P" position), the push button should be operable without catching and the shift lever should be shift smoothly to other positions.
3. When the brake pedal is not depressed, the shift lever should shift smoothly to "P" position from all heading other positions.
4. The brake pedal must operate smoothly without catching.
5. When the ignition key is at the "LOCK" position, although brake pedal is depressed, the push button should be operable.
6. The Ignition key must not be able to be turned to the "LOCK" position except in the "P" position.
7. If the shift lever is shifted to the "P" position, the ignition key must turn to the "LOCK" position smoothly.

DOUBLE DIFFERENTIAL UNIT

DOUBLE DIFFERENTIAL UNIT-4WD EKJA0380

SECTION VIEW

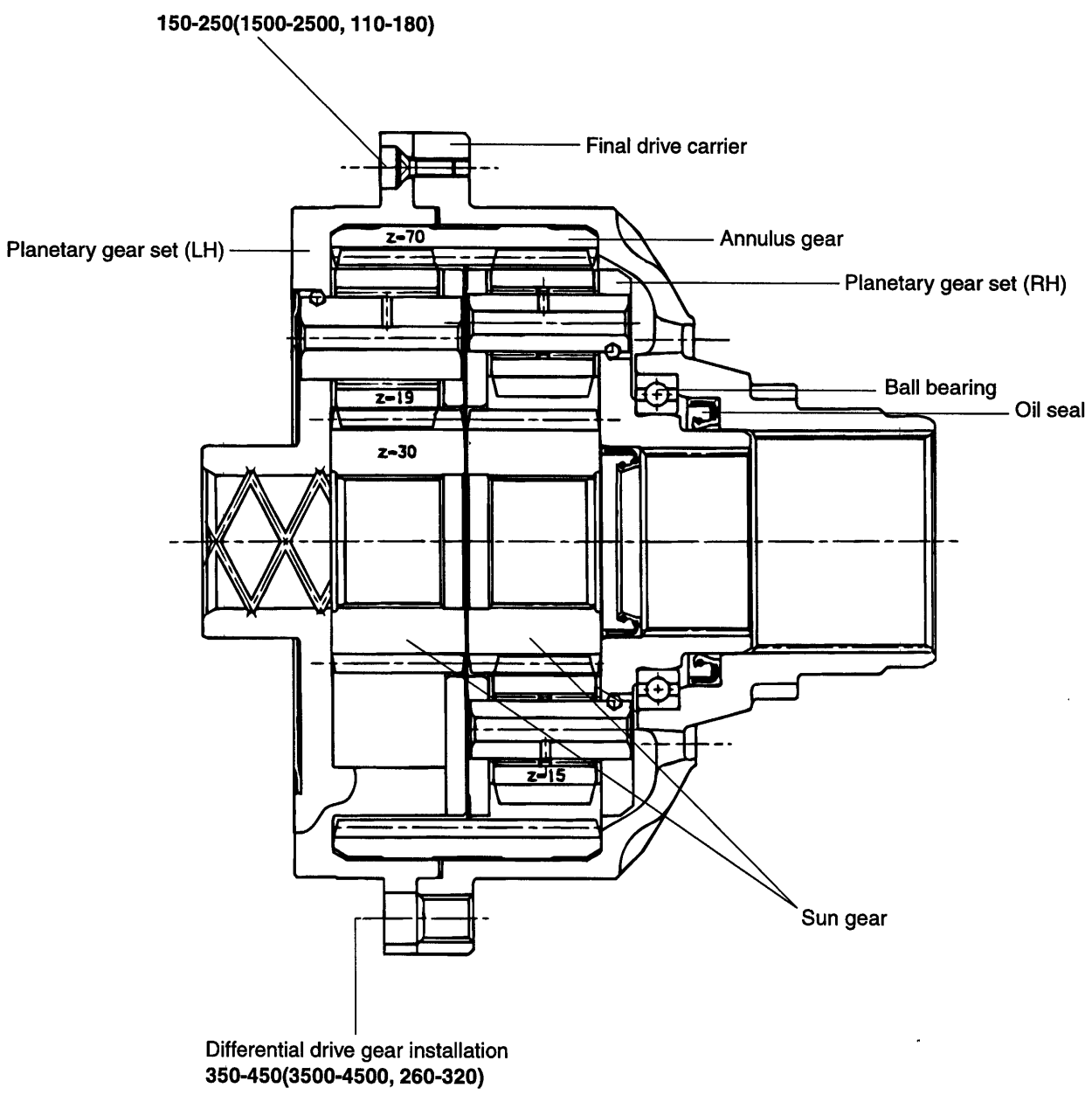

TORQUE : N·m (kg·cm, lb·ft)

EKJA038A

DOUBLE DIFFERENTIAL UNIT-4WD EKJA0390

COMPONENTS

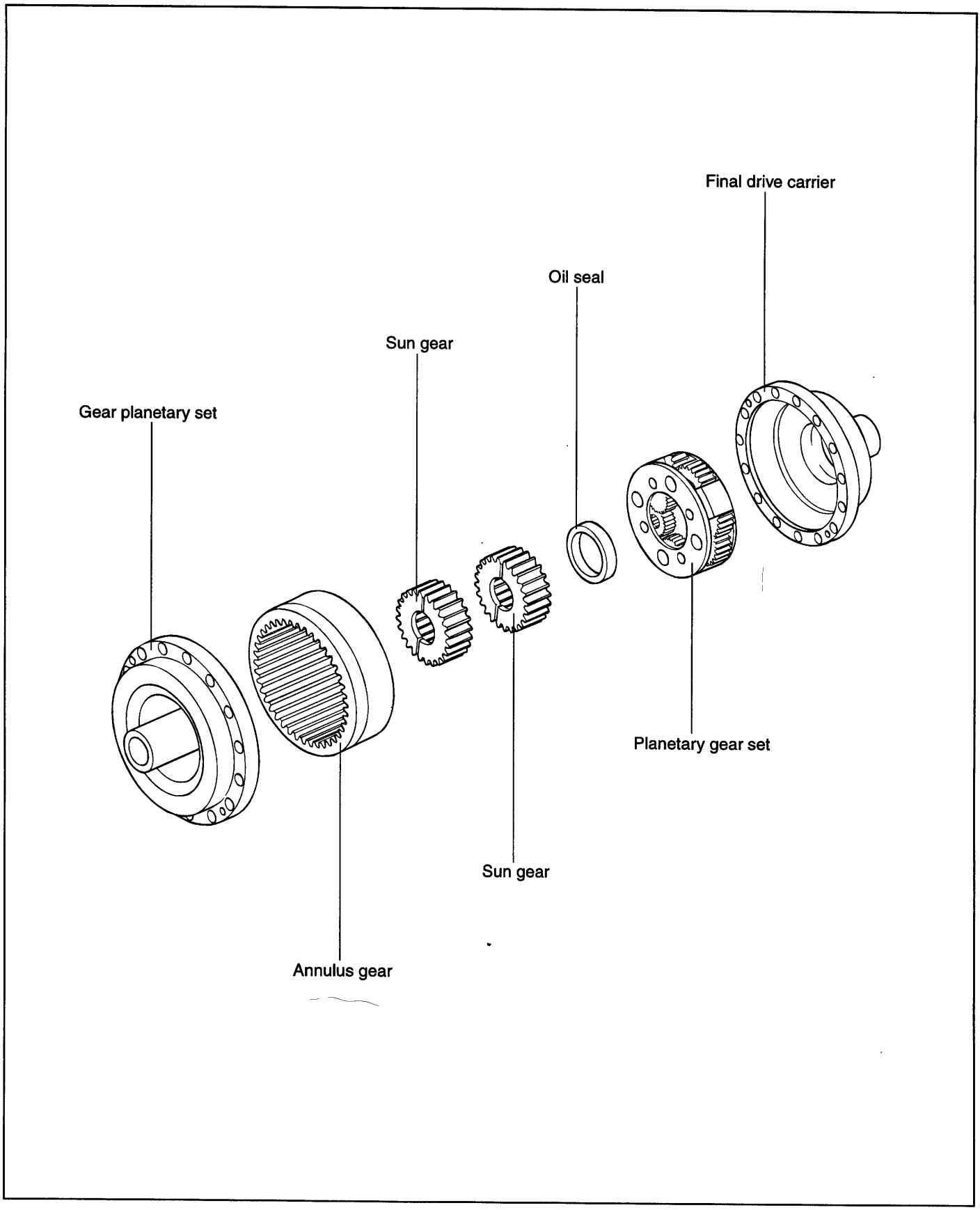

REASSEMBLY EKJA0400

1. When reassembling the planetary gear (LH, RH), apply LOCTITE 242e or equivalent.

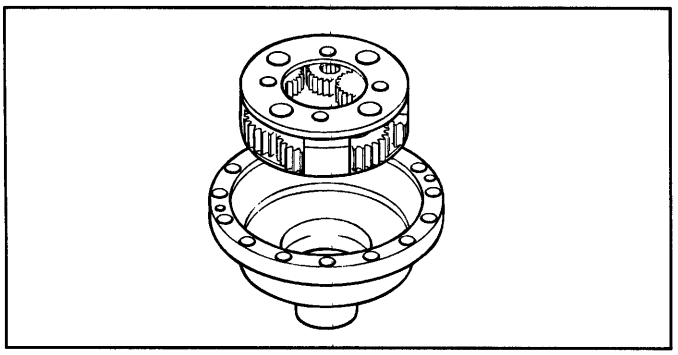

EKJA001D

2. Be careful not to damage on the oil seal

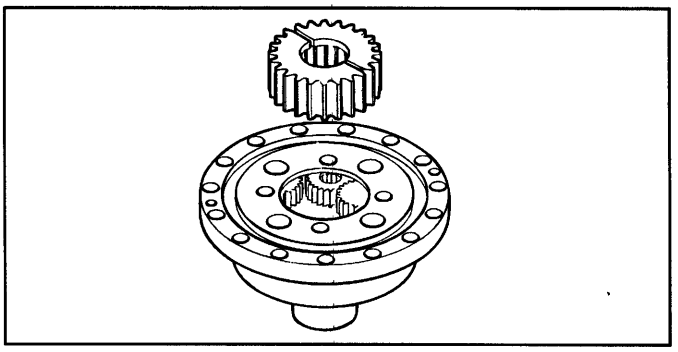

EKJA001E

MANUAL TRANSAXLE SYSTEM

SERVICE ADJUSTMENT PROCEDURES EMJA0070

TRANSAXLE GEAR OIL INSPECTION

Inspect each component for evidence of leakage. Check the gear oil level by removing the speedometer driven gear. If the oil is contaminated, replace it with new oil.

1. Remove the speedometer driven gear and check the level with your finger.
2. Verify that the oil level is between 'F' and 'L' on the speedometer driven gear.

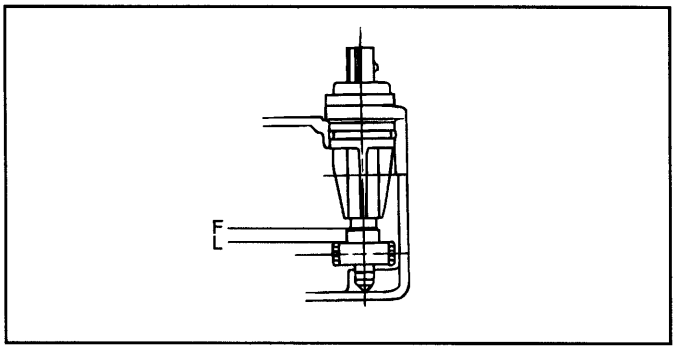

EMJA007A

3. If oil level is 'L', fill with the specified type of oil until the level reaches 'F'.

REPLACEMENT OF TRANSAXLE GEAR OIL EMJA0080

Use HP Gear Oil SAE 75W/90 (API-GL-4).

1. With the vehicle parked on a level surface, remove the drain plug and drain the transaxle oil.
2. Replace the gasket with a new one and install the drain plug.
3. Remove the speedometer gear.
4. Add the specified amount and type of oil into the speedometer gear hole until the level reaches 'F' on the speedometer driven gear.

   Capacity : 2.43 US qt (2.3 lit, 2.1 Imp qt)

5. Verify that the oil level is between 'F' and 'L' on the speedometer gear.
6. Install the speedometer gear on the clutch housing of the transaxle.
7. Warm up the vehicle until the transaxle oil reaches its normal temperature, then check for leakage of transaxle oil.

DRIVE SHAFT OIL SEAL REPLACEMENT EMJA0090

1. Disconnect the drive shaft form the transaxle (Refer to "DS" group).
2. Using a flat-tip screwdriver, remove the oil seal.
3. Using the special tool (09431-21200), tap the drive shaft oil seal into the transaxle.
4. Apply a coating of gear oil to the oil seal.

   Transaxle gear oil : Hypoid gear oil, SAE 75W/90 conforming to API GL-4 or higher. Disconnect the drive shaft form the transaxle (Refer to "DS" group).

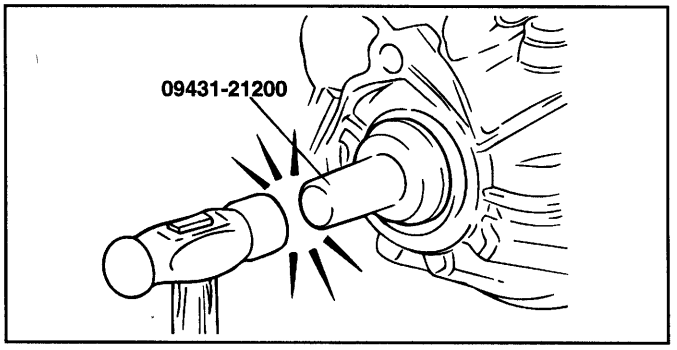

EMA9009G

MANUAL TRANSAXLE

COMPONENTS EMJA0180

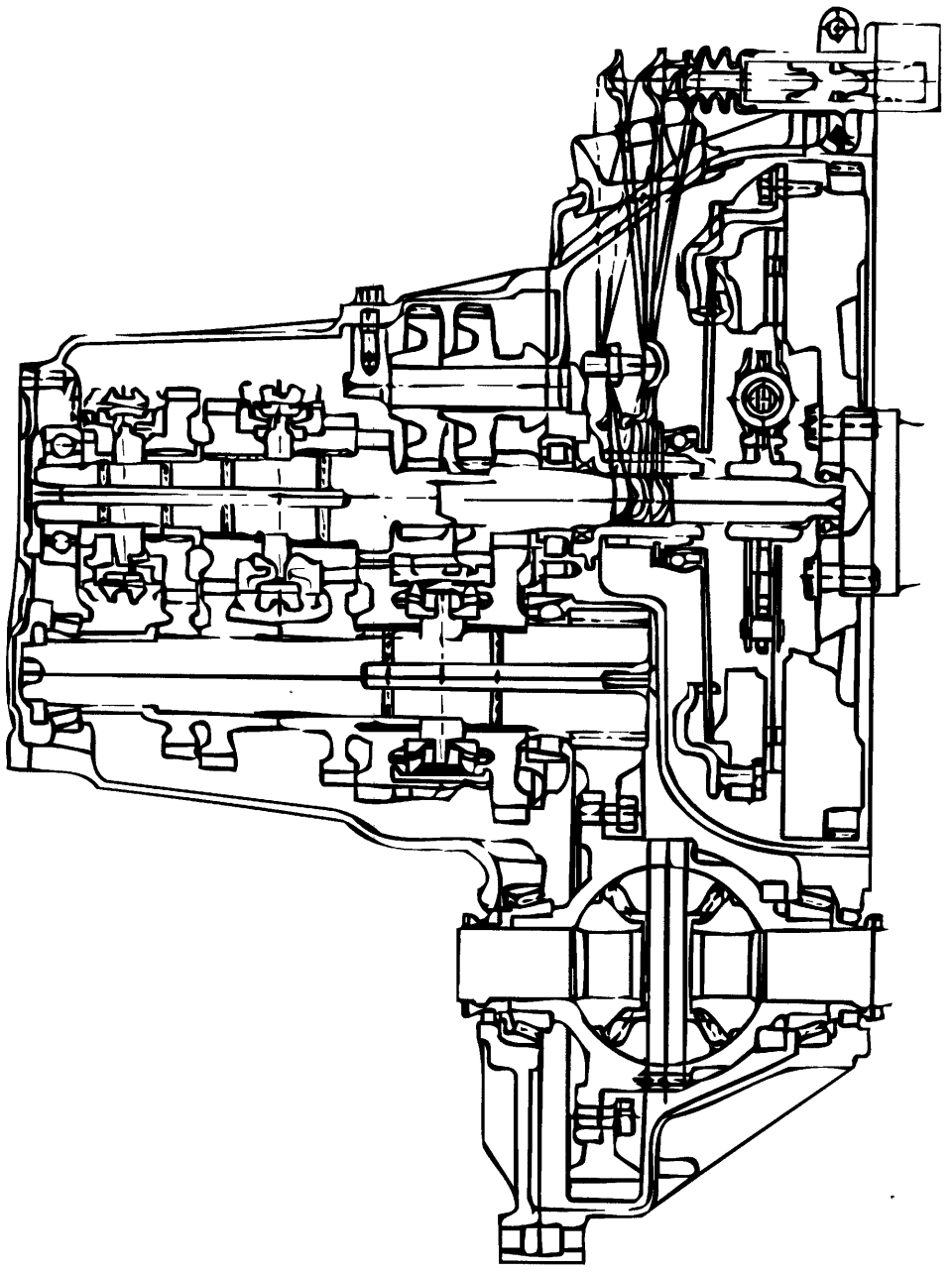

EMHA003A

REMOVAL EMJA0190

1. Remove the battery (-) cable.

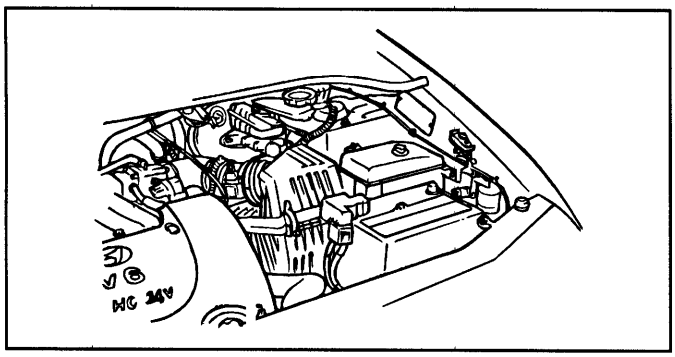

EMHA004A

2. Remove the air cleaner duct.
3. Remove the air cleaner and air flow hose assembly.
4. Disconnect the backup light switch connector.
5. Disconnect the clutch line and clip.
6. Remove the clutch release cylinder.

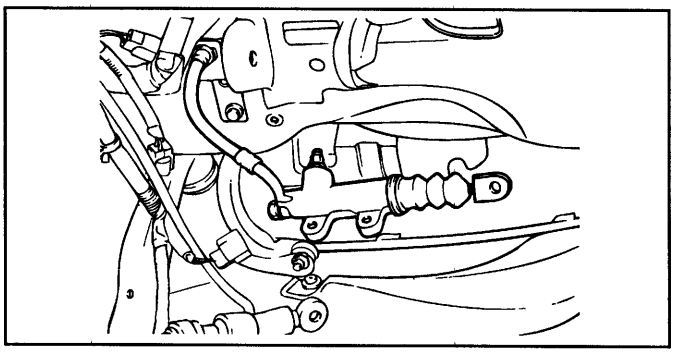

EOA9014D

7. Remove the speedometer cable.
8. Remove the select or cable and shift cable.

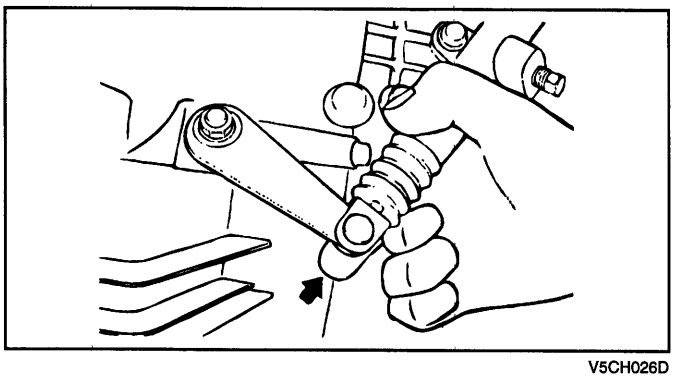

V5CH026D

9. Remove the starter motor mounting bolts, and remove the transaxle assembly upper connecting bolts.
10. Attach engine hooks using special tool (09200–38001).
11. Remove the transaxle mounting bracket and insulator.
12. Lift the vehicle up.
13. Remove the front tire.
14. Remove the drain plug and drain the transaxle gear oil.
15. Disconnect the tie rod end, lower arm ball joint and drive shaft. (Refer to "DS" Group).
16. Remove the gear box u-joint bolt and the return tube mounting bolts.
17. Remove the front muffler.
18. Remove the sub-frame mounting bolts and the sub-frame.
19. Remove the transaxle front and rear mounting bracket.
20. Remove the transaxle side mounting bolts.

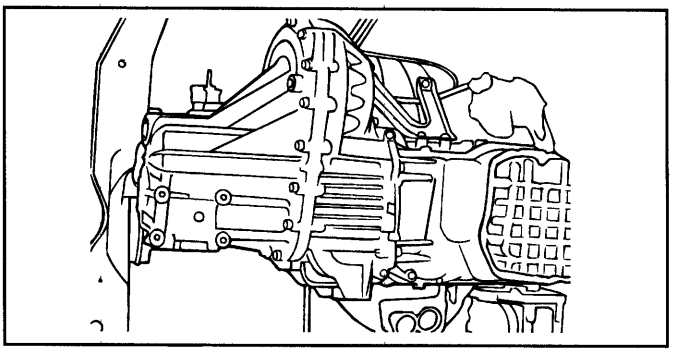

EMA9019B

21. Lower the transaxle assembly, supporting it with a jack.

NOTE

When supporting the transaxle assembly, make sure that the lifting force is applied to a wide area and, not to a small localized area.

CAUTION

1. **Engine and transmission mounting insulators should be installed in the following order :**

   1) Engine mounting bracket.
   2) T/M mounting bracket.
   3) Rear roll stopper mounting bracket.
   4) Front roll stopper mounting bracket.

2. **When installing the front roll stopper mounting bracket, be especially careful not to crush the insulator. If crushed, idle vibration will most probably result.**

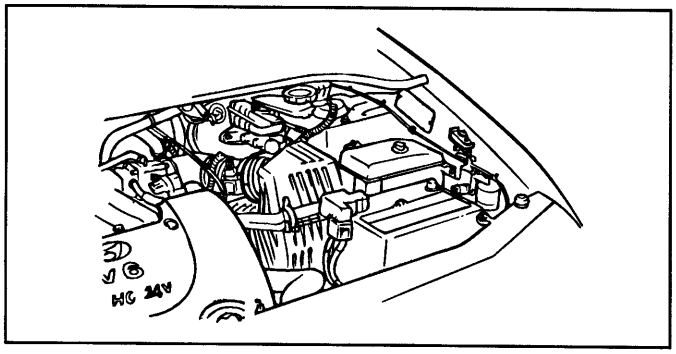

EMHA004A

INSTALLATION EMA90200

1. Installation is the reverse of removal.

COMPONENTS EMJA0220

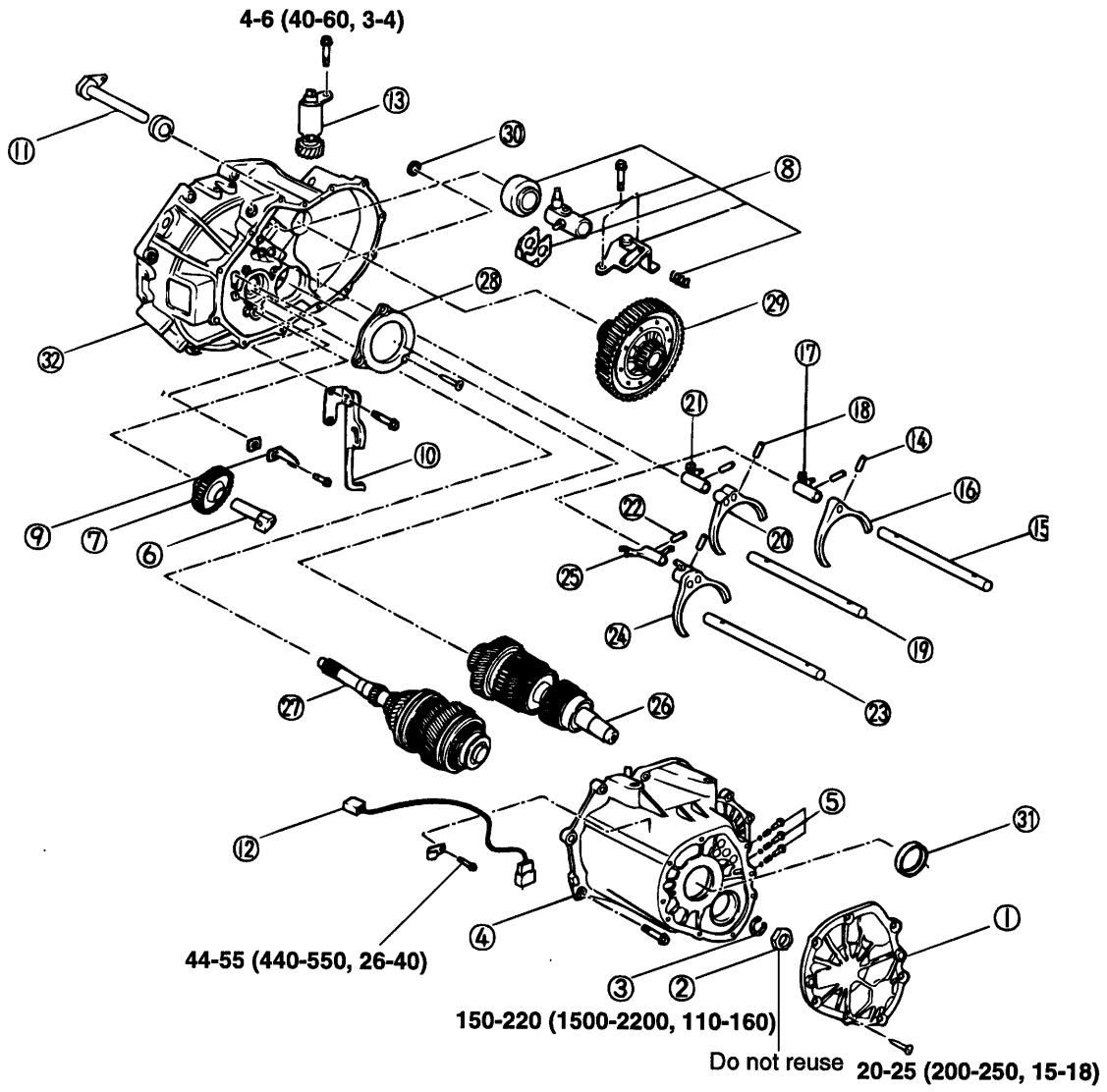

1. Rear cover
2. Lock nut
3. Retainer ring
4. Transaxle case
5. Detent plug & spring, steel ball
6. Reverse idle shaft
7. Reverse idle gear
8. Control case assembly
9. Reverse lever spring set
10. Reverse shift lever
11. Change rod
12. Back lamp switch
13. Speedometer driven gear
14. Roll pins
15. 1/2 shift rod
16. 1/2 shift fork
17. 1/2 shift rod end
18. Roll pins
19. 3/4 shift rod
20. 3/4 shift fork
21. 3/4 shift rod end
22. Roll pins
23. 5/R shift rod
24. 5/R shift fork
25. 5/R shift rod end
26. Input shaft
27. Output shaft
28. Bearing cover
29. Differential assembly
30. Magnet
31. Oil seal
32. Clutch housing

TORQUE : N·m (kg·cm, lb·ft)

EMJA022A

DISASSEMBLY EMJA0230

1. Remove the rear cover, lock nut and retainer ring.

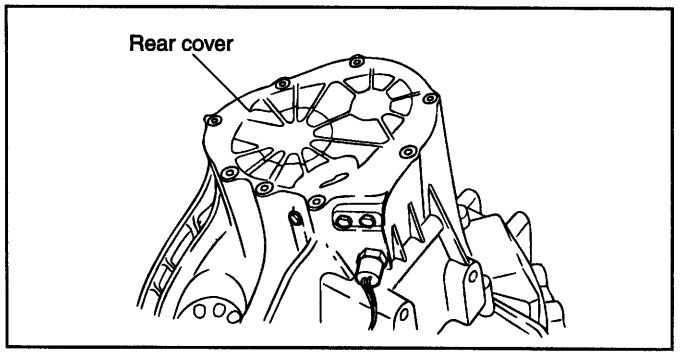

EMJA023A

2. Remove the detent plug, spring and steel ball.
3. Remove the back-up lamp switch.

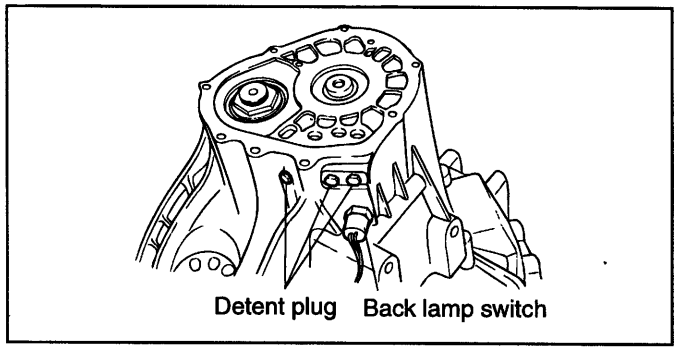

EMJA023B

4. Remove the bolts holding the rear case to the main case.
5. Remove the reverse idler shaft and gear.
6. Remove the reverse lever spring set.

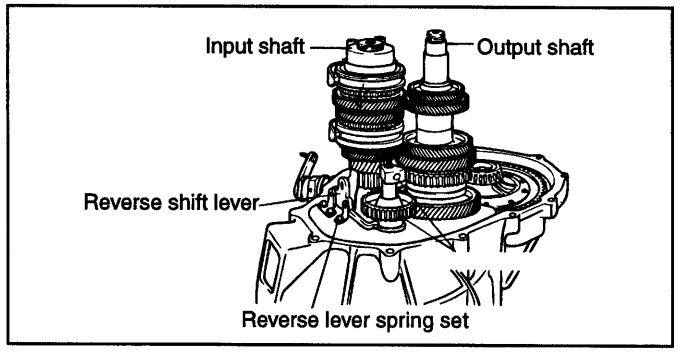

EMJA023C

7. Remove the change rod and the control case.

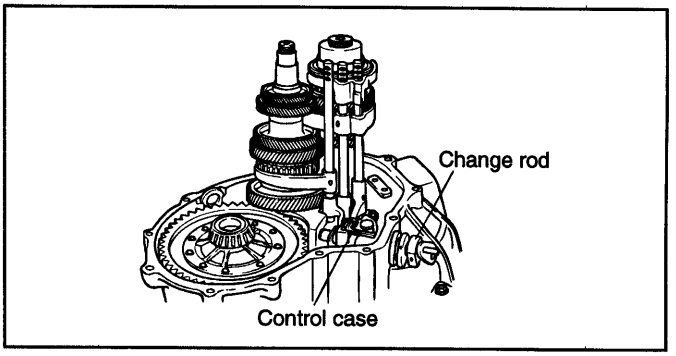

EMJA023D

8. Carefully remove the roll pins from the rod/fork assembly with a pin punch.

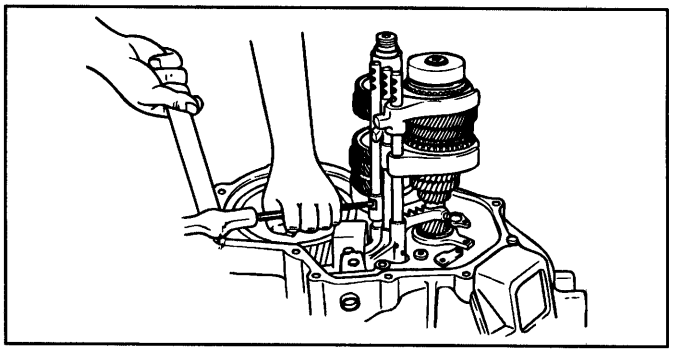

EMHA010A

9. Refer to the order of removal in the figure. Discard the used pins.

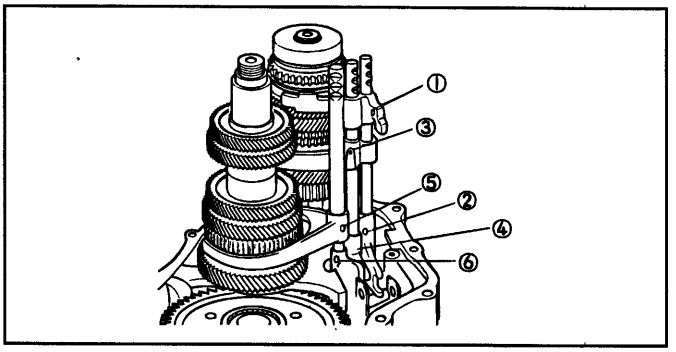

EMHA011A

10. Remove the 5/R shift rod, 5/R shift fork and 5/R shift rod end.

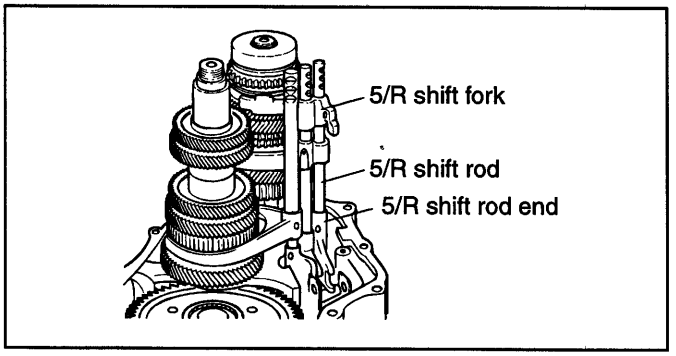

EMJA023E

11. Remove the 3/4 shift rod, 3/4 shift fork, 3/4 shift rod end.

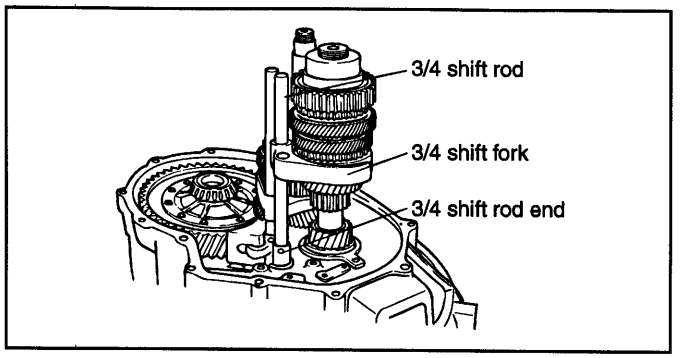

EMJA023F

12. Remove the 1/2 shift rod, 1/2 shift fork and 1/2 shift rod end.

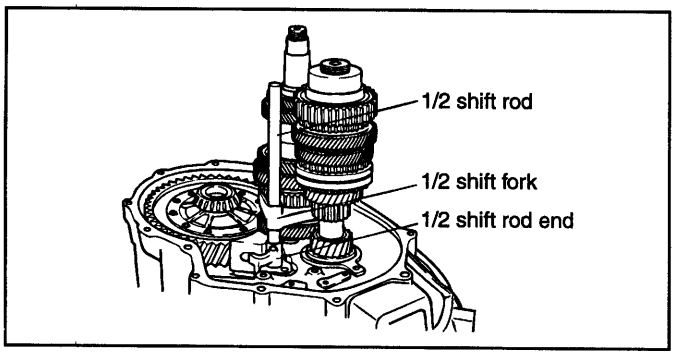

EMJA023G

13. Remove gears and clutch hub assemblies of the input and output shaft in order and then remove the primary shaft (Remove the gears and hubs from both the input shaft and output shaft).

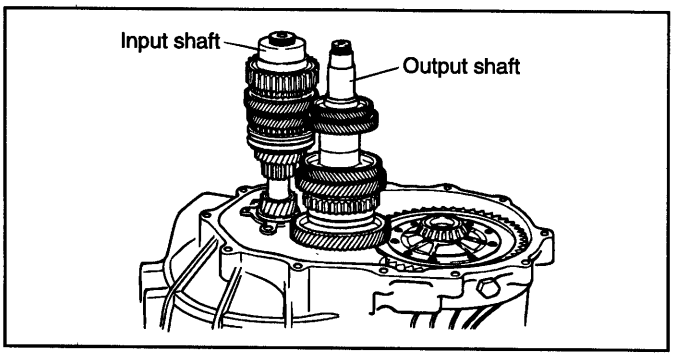

EMJA023H

14. Remove the rings, bearings, and clutch hub assemblies of the input shaft. Loosen the four bearing cover screws and then remove the output shaft.

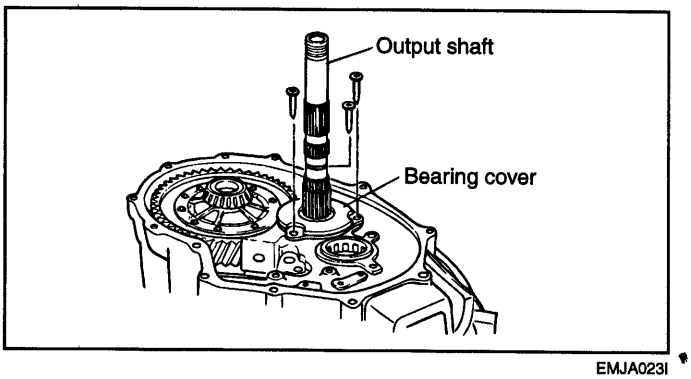

EMJA023I

15. Remove the differential assembly.

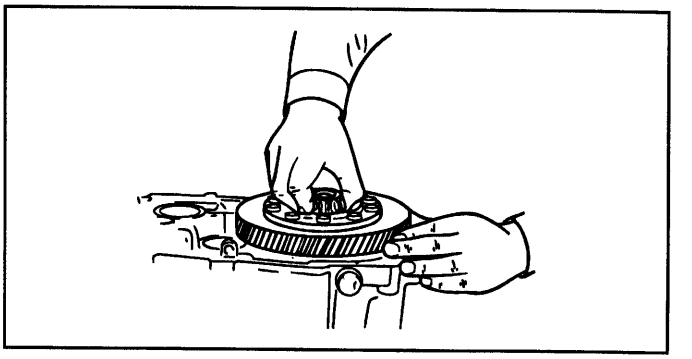

EMHA013B

16. Remove the speedometer driven gear after loosening the bolt.

17. Remove the input shaft oil seal with a screwdriver or suitable tool.

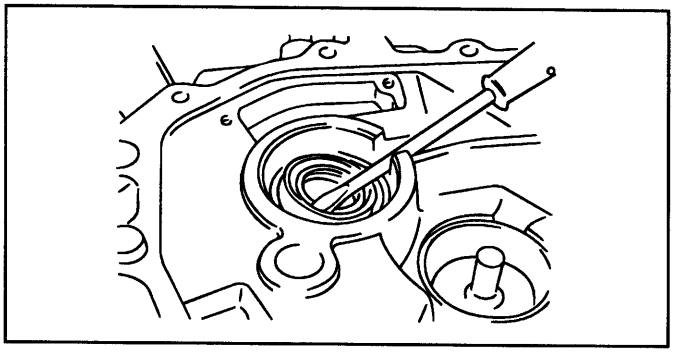

EMHA013C

18. Remove the sealing cap.

19. Remove the change rod oil seal with a screwdriver or suitable tool.

20. Remove the differential oil seal with a screwdriver or suitable tool.

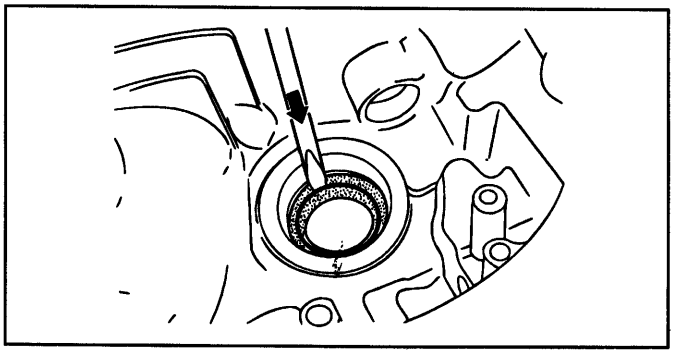

EMHA013D

21. Remove the output shaft bearing outer race of the transaxle case with a screwdriver or suitable tool.

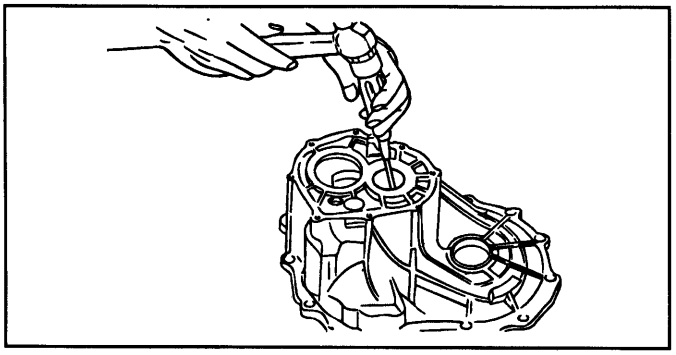

EMHA013E

EMJA0240

REASSEMBLY

1. Install the drive shaft oil seal.

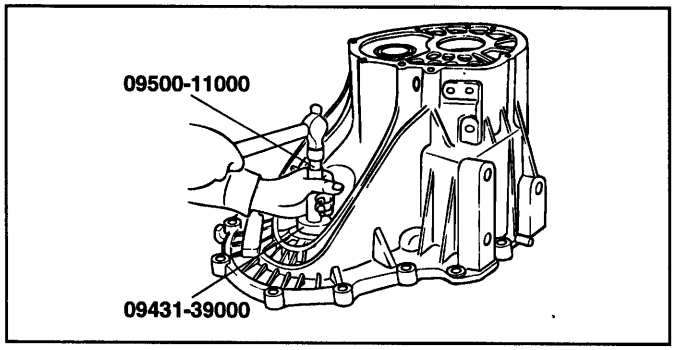

EMHA014A

2. Apply transaxle oil to the bearing, and install in the differential case using the special tool.

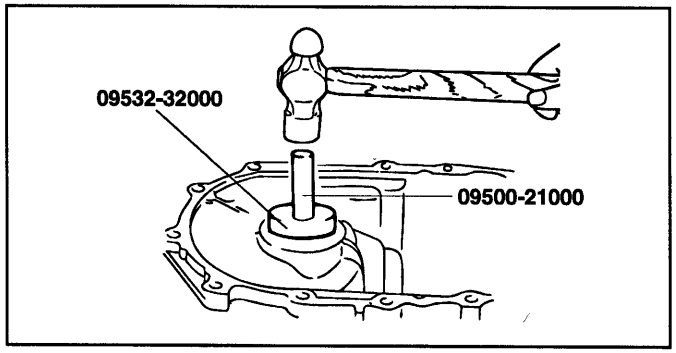

EMHA014B

3. Apply transaxle oil to each bearing race, and install them to the transaxle case using the special tool.

4. Install the oil seal

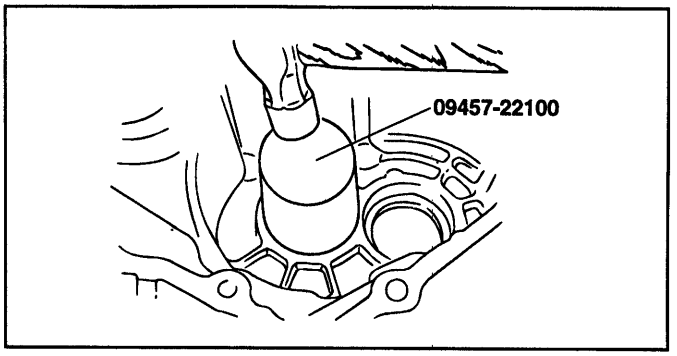

EMHA014C

5. Install the speedometer driven gear.

6. Apply transaxle oil to the input shaft oil seal, and install it to transaxle case using the special tool.

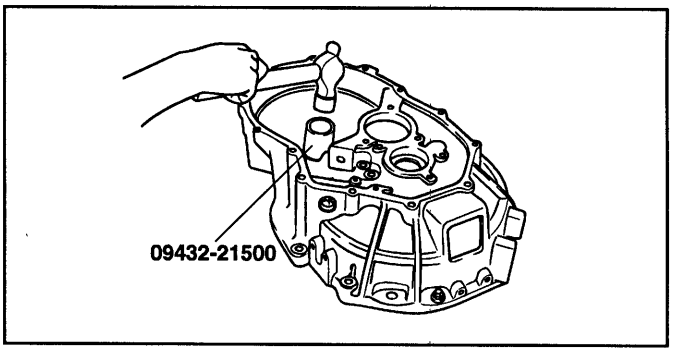

EMHA014D

7. Set the differential into the clutch housing.

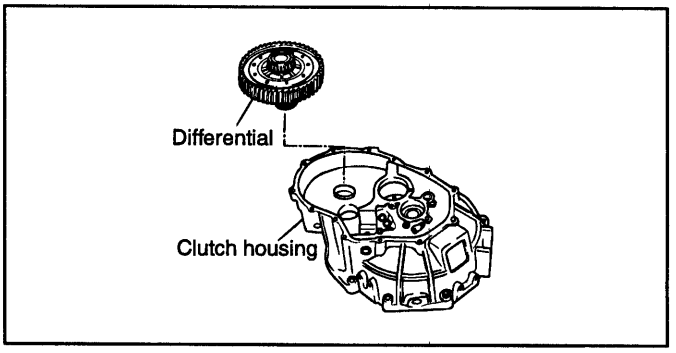

EMJA024A

8. Install the input and output shafts in the clutch housing.

9. Install the gears and clutch hub assemblies into the input and output shaft in order.

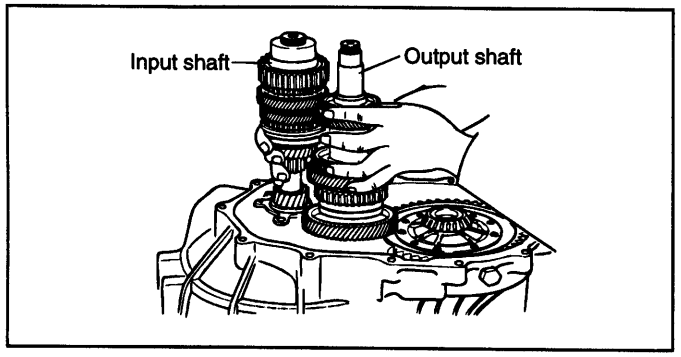

EMJA024B

10. Install the 1/2 shift rod, 1/2 shift fork and 1/2 shift rod end.

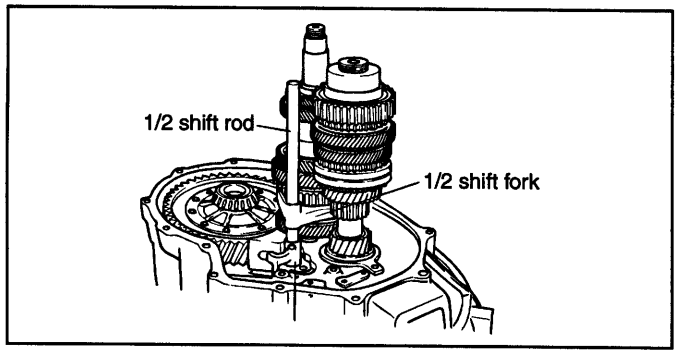

EMJA024C

11. Install the 3/4 shift rod, 3/4 shift fork and 3/4 shift rod end.

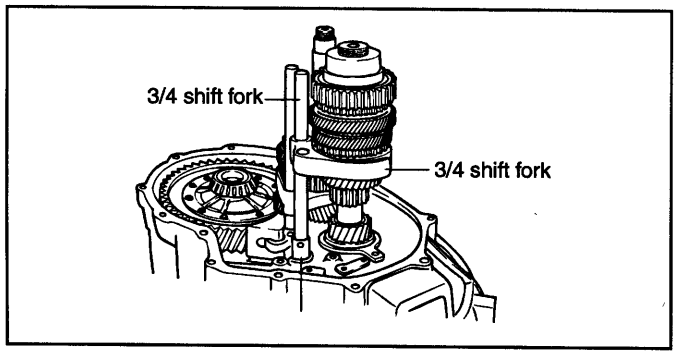

EMJA024D

12. Install the 5/R shift rod, 5/R shift fork and 5/R shift rod end.

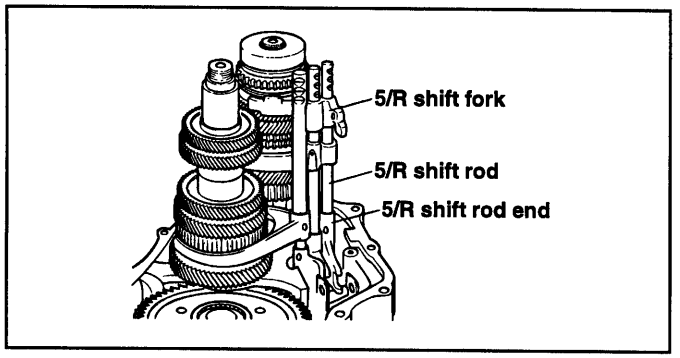

EMJA024E

13. Install the roll pins to the rod/fork assembly with a pin punch in the order shown in the figure.

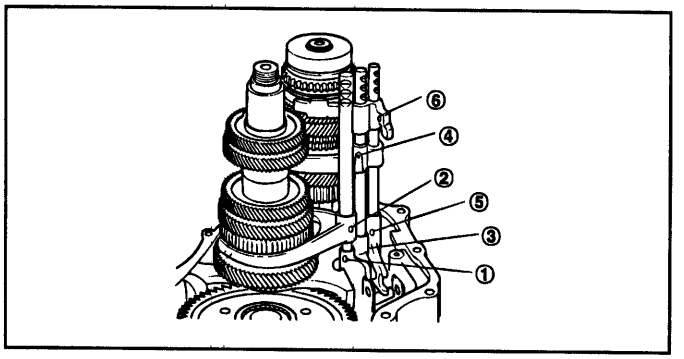

EMHA015E

14. Install the control case assembly and the change rod and then tighten the two control case assembly bolts.

15. Install the reverse shift lever and tighten the two reverse shift lever bolts.

16. Install the reverse lever spring set.

17. Install the reverse idler shaft and gear.

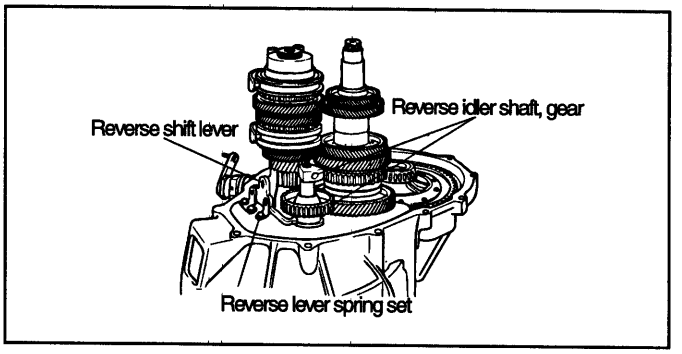

EMJA024F

18. Attach the magnet to the clutch housing.

19. Apply a thin coat of sealant to the contact surfaces of the clutch housing and transaxle case.

20. Tighten the transaxle installation bolts.

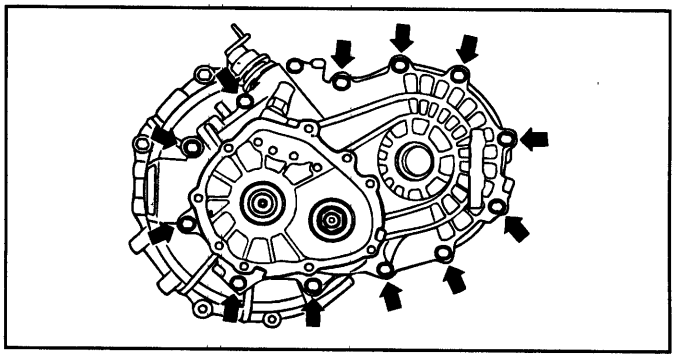

EMHA016B

21. Install the backup lamp switch.

22. Install the detent plug, spring and steel ball.

23. Install the output shaft lock nut.

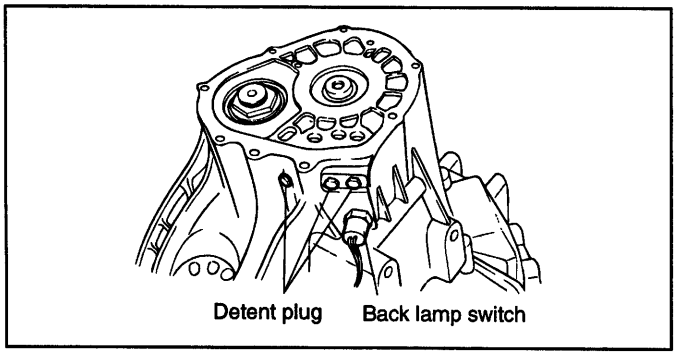

EMJA024G

24. Install the rear cover.

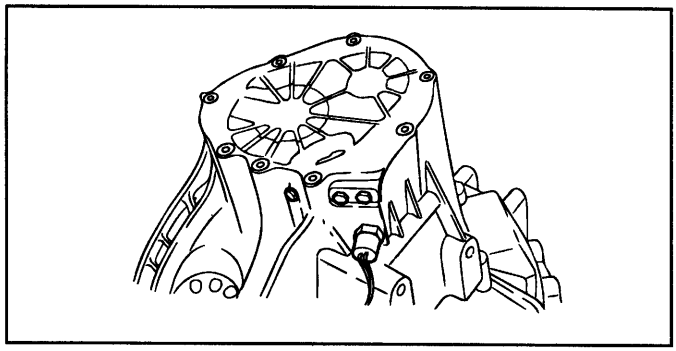

EMHA006A

INPUT SHAFT

COMPONENTS EMJA0250

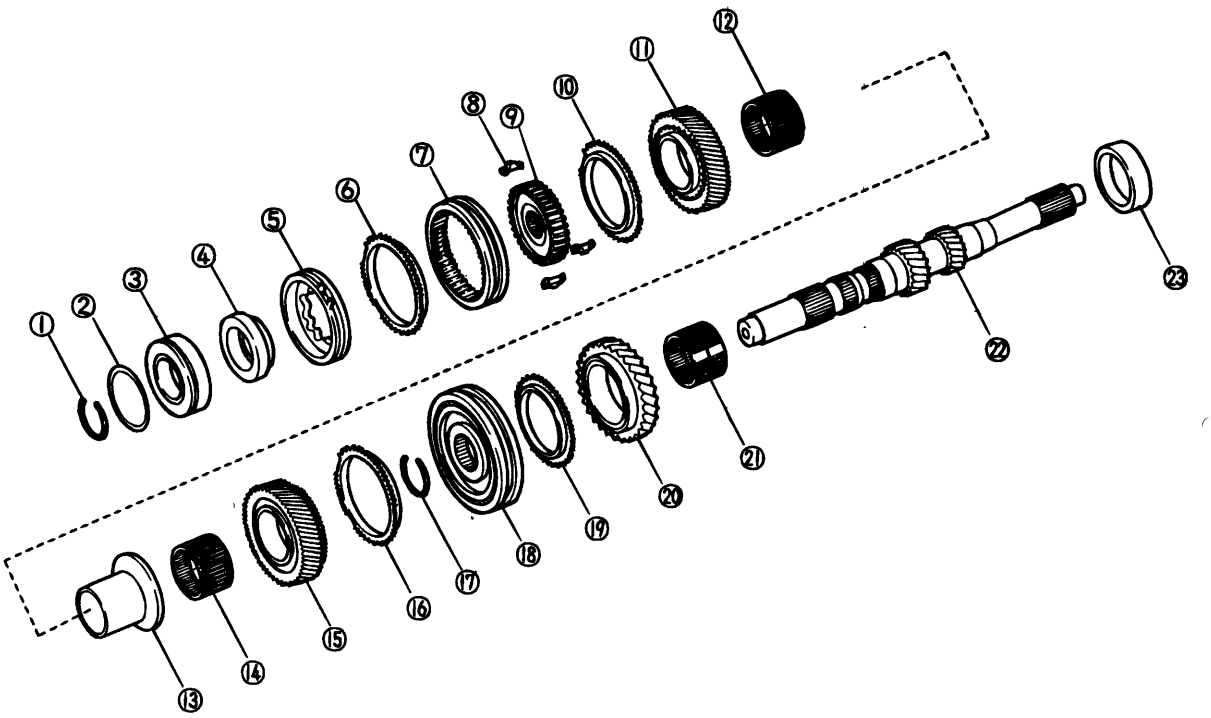

1. Retainer ring
2. Shim
3. Bearing
4. Reverse cone sleeve
5. Reverse cone
6. Synchronizer ring
7. Clutch hub sleeve
8. Syncgronizer key
9. Clutch hub
10. Synchronizer ring
11. 5th gear
12. Needle bearing
13. Gear sleeve
14. Needle bearing
15. 4th gear
16. Synchronizer ring
17. Retainer ring
18. Clutch hub sleeve
19. Syncgronizer ring
20. 3rd gear
21. Needle bearing
22. Input shaft
23. Bearing

EMJA025A

INSPECTION EMJA0260

1. Measure the clearance between 3rd gear and 2nd gear.
2. If the clearance exceeds the maximum specified, check the contact surface of 3rd gear, 2nd gear and clutch hub (3rd/4th). Replace worn and damaged parts.

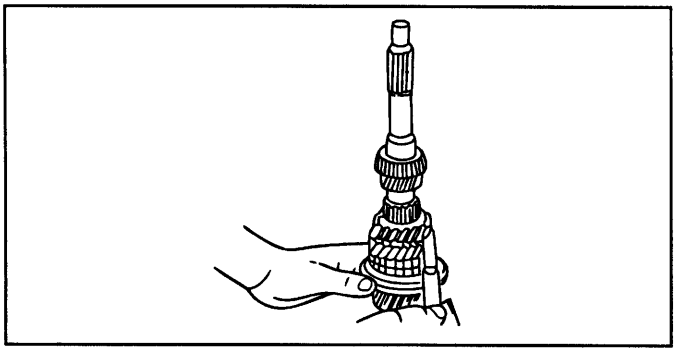

EMHA018B

3. Measure the clearance between 4th gear and 5th gears.
4. If the clearance exceeds the maximum, check the contact surfaces of 4th gear, 5th gear, clutch hub (3rd/4th), and clutch hub(5th). Replace worn and damaged parts.

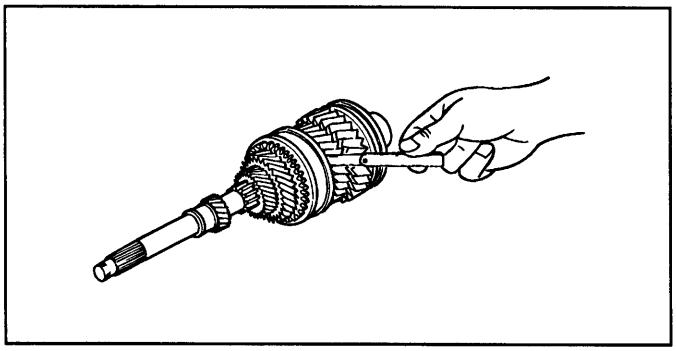

EMHA018C

DISASSEMBLY EMJA0270

1. Remove the 5th clutch hub assembly, 5th synchronizer ring, and 5th gear using the SST.
2. Remove 3rd/4th clutch hub assembly, 3rd synchronizer ring, and 3rd gear using the SST.

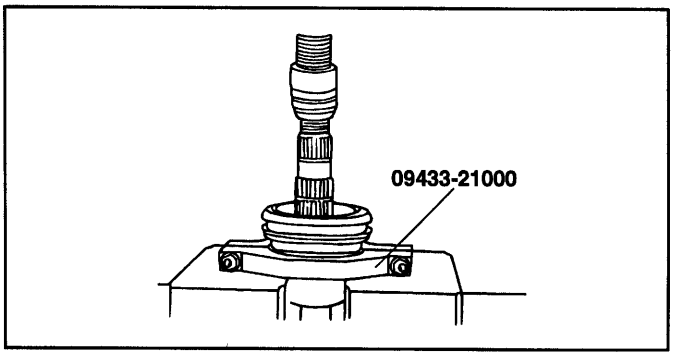

EMHA018A

REASSEMBLY EMJA0280

1. Install a new bearing using the SST.

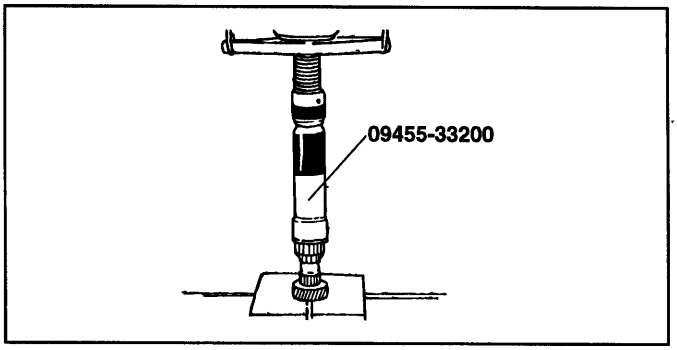

EMHA019A

2. Install the 5th synchronizer ring, 5th gear, and a new bearing using the SST.

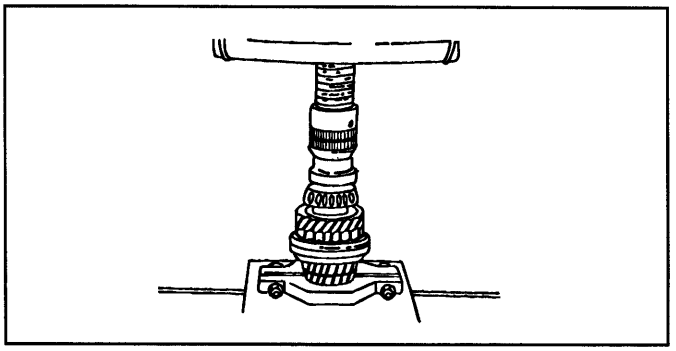

EMHA019B

OUTPUT SHAFT

COMPONENTS EMJA0290

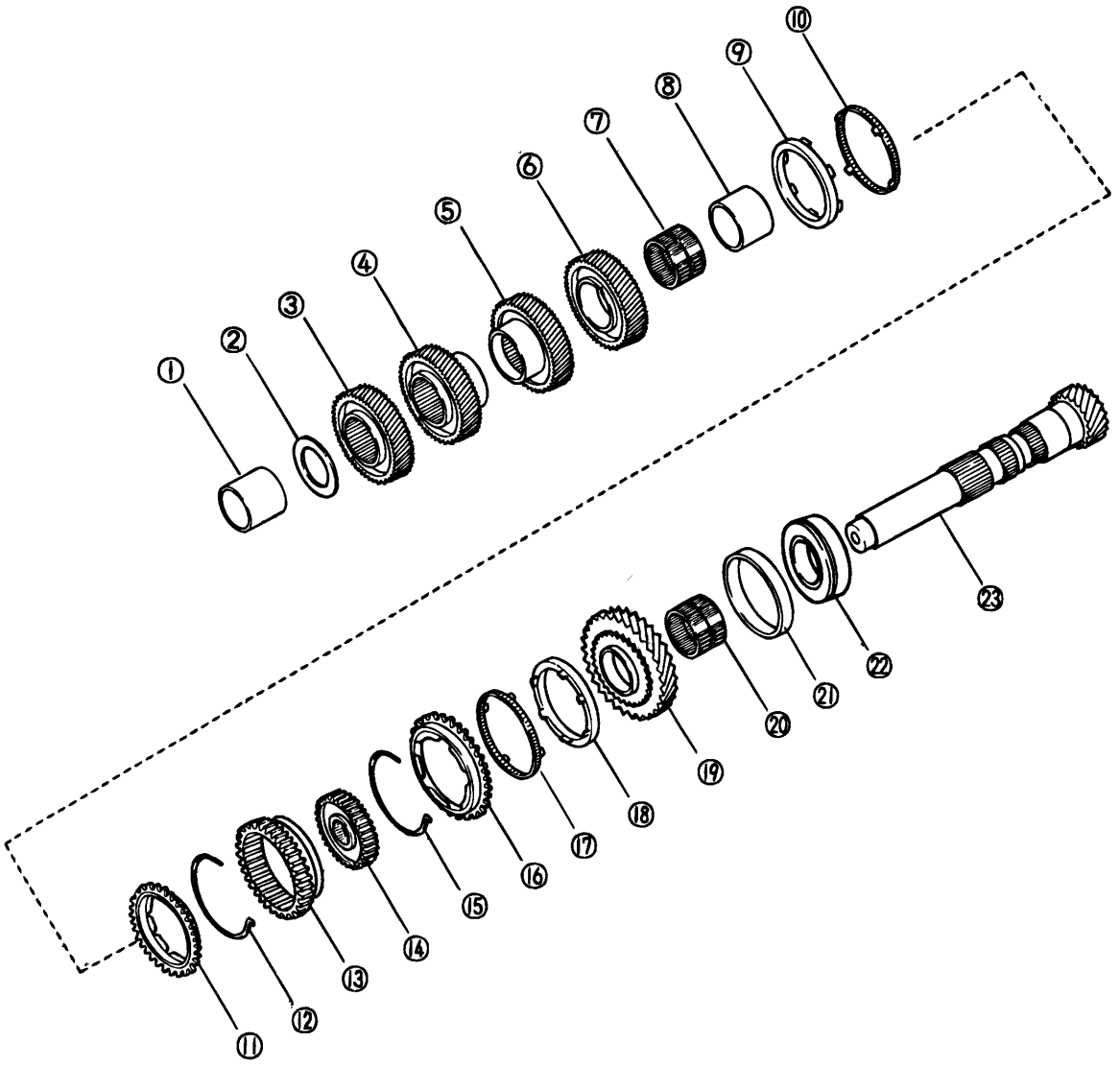

1. Spacer
2. Retainer ring
3. 5th gear
4. 4th gear
5. 3rd gear
6. 2nd gear
7. Needle bearing
8. Sleeve
9. Synchronizer inner ring
10. Double cone
11. Synchronizer ring
12. Synchronizer key spring
13. Reverse gear
14. Clutch hub sleeve
15. Synchronizer key spring
16. Synchronizer ring
17. Double cone
18. Synchronizer inner ring
19. 1st gear
20. Needle bearing
21. Cap bearing
22. Cone bearing
23. Output shaft

EMJA029A

INSPECTION EMJA0300

1. Measure the clearance between the output shaft and its bearing.
2. If the clearance exceeds the maximum, check the contact surface of the output shaft 1st gear, bearing of shaft, and 1st/2nd clutch hub assembly. Replace worn and damaged parts.

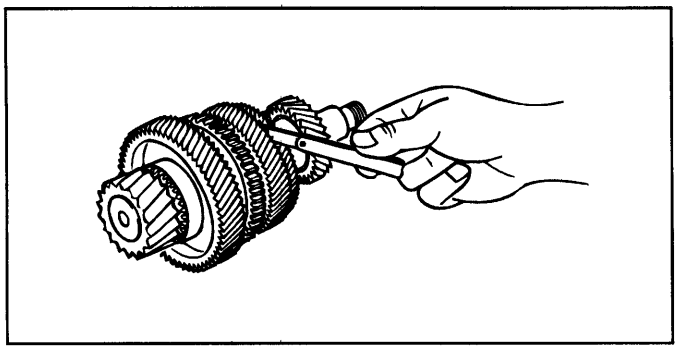

EMHA021A

3. Measure the clearance between 2nd gear and 3rd gear.
4. If the clearance exceeds the maximum, check the contact surfaces of 2nd gear, 3rd gear, and the 1st/2nd clutch hub assembly. Replace worn and damaged parts.

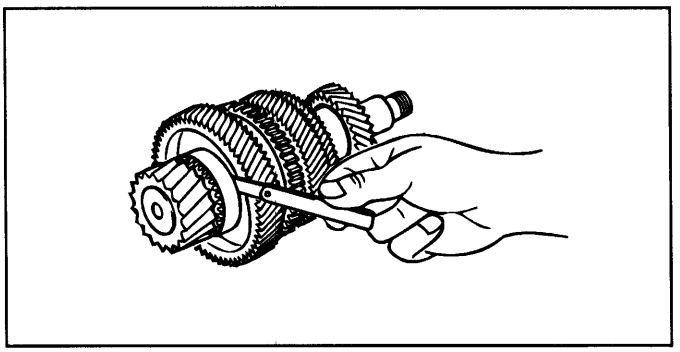

EMHA021B

DISASSEMBLY EMJA0310

1. Remove the bearing and 5th gear using the SST.

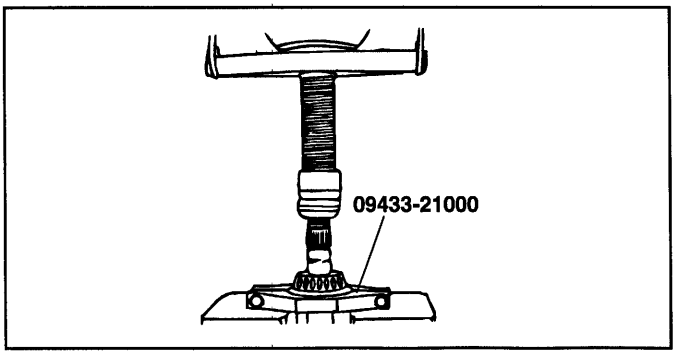

EMHA022A

2. Remove the 1st/2nd clutch hub assembly, 1st synchronizer ring, and 1st gear, using a press.

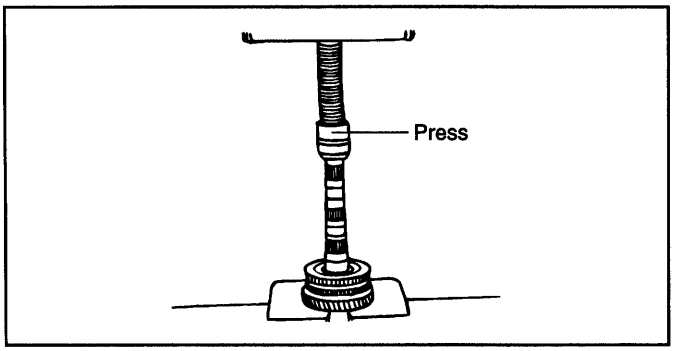

EMJA031A

REASSEMBLY EMJA0320

1. Assemble the 1st gear, 1st synchronizer ring, and 1st/2nd clutch hub assembly, as shown in the figure.
2. Align the synchronizer ring grooves and synchronizer keys.

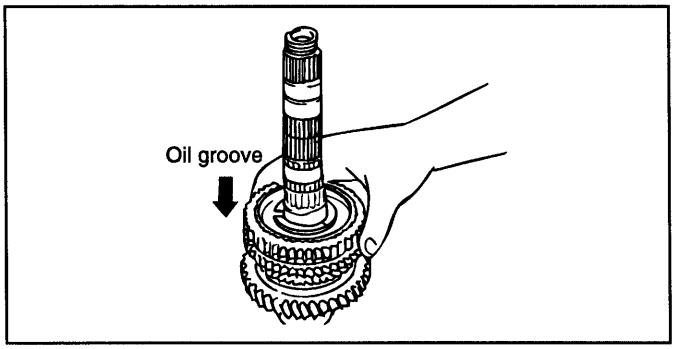

EMJA032A

3. Press on the 1st/2nd clutch hub assembly.

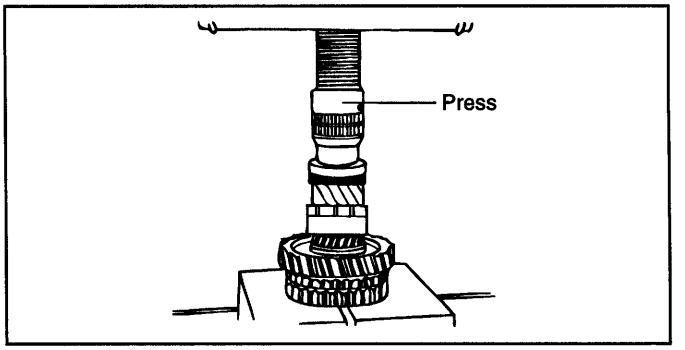

EMJA032B

4. Measure the clearance between 1st gear and the differential drive gear.

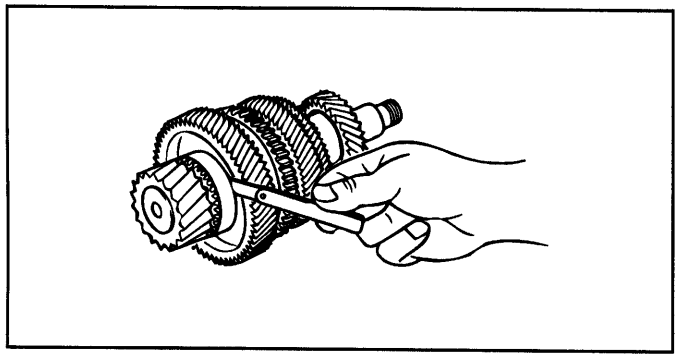

EMHA022E

5. Measure the clearance between 2nd gear and 3rd gear.

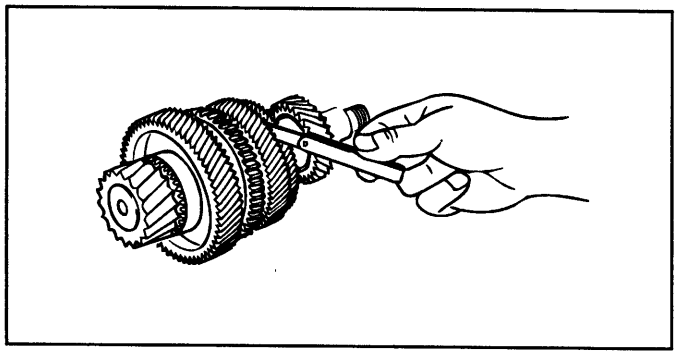

EMHA022F

MANUAL TRANSAXLE SHIFT CONTROL

COMPONENTS EMJA0110

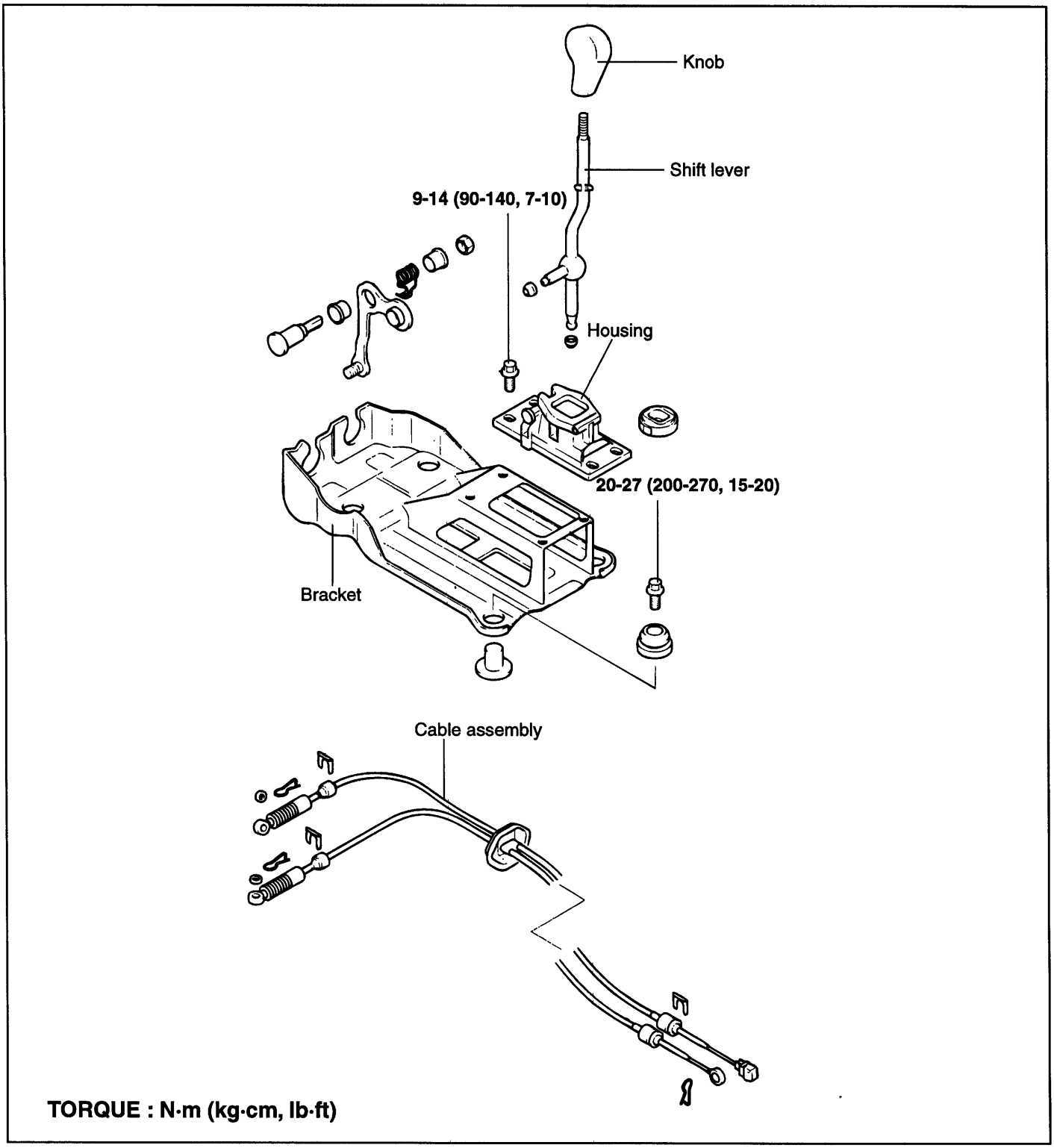

EMJA011A

REMOVAL EMA90120

1. Remove the console assembly.
2. Remove the cotter pins and clips (shift lever side).
3. Remove the shift lever assembly.
4. Remove the retainer and bolts.
5. Remove the cotter pins and clips (Transaxle side).
6. Remove the shift cable and select cable.

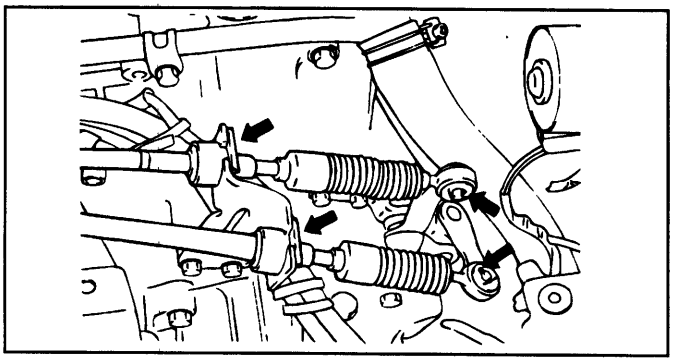

EMA9012E

INSPECTION EMA90130

1. Check the select cable for proper operation and for damage.
2. Check the shift cable for proper operation and for damage.
3. Check the boot for damage.
4. Check each bushing for wear, abrasion, sticking, restricted movement or damage.
5. Check for a weak or damaged return spring.

REASSEMBLY EMA90140

1. Install the shift lever assembly.
2. Install the shift lever and select cable.

SHIFT LEVER

COMPONENTS EMJA0150

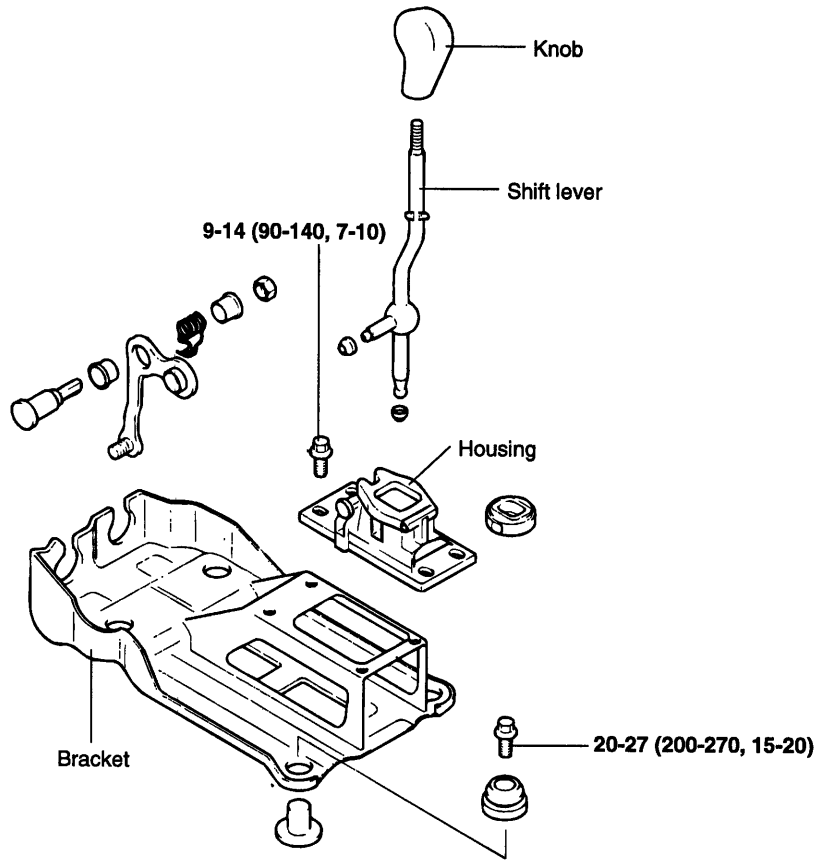

TORQUE : N·m (kg·cm, lb·ft)

EMJA015A

INSPECTION EMA90160

1. Inspect the bushing for wear or damage.
2. Inspect the return spring for damage or deterioration.

REASSEMBLY EMA90170

1. Apply multi-purpose grease to the sliding parts of the bushings.
2. Reassembly is reverse of disassembly.

TRANSFER CASE ASSEMBLY

PEPLACEMENT OF TRANSFER CASE OIL EKJA0440

SYSTEM DESCRIPTION

1. The transfer case is a full-time four-wheel drive system developed for stable driving in the worst conditions. It improves not only driving safety on a normal road but also the performance of the vehicle in a slippery road by distributing the power to both, front and rear wheels.

2. A driver may not control front or rear wheel drive directly like a four-wheel drive vehicle.

3. When the front or rear wheels slip, the viscous generates the effect of differential limitation made by viscosity torque of silicon oil inside the viscous coupling, caused by relative revolution difference among interior plates.

4. This system secures optimum drive performance and vehicle safety according to a road by transmitting viscous torque to the side there is a little slippage between front wheels and rear wheels.

5. Rear wheel power set by the above system is transmitted to the rear wheel through the hypoid gear.

TRANSFER CASE OIL INSPECTION

Check the gear oil level by removing the filler plug. If the oil is contaminated, it is necessary to replace it with new oil.

1. With the vehicle parked on a level surface, remove the oil filler plug.

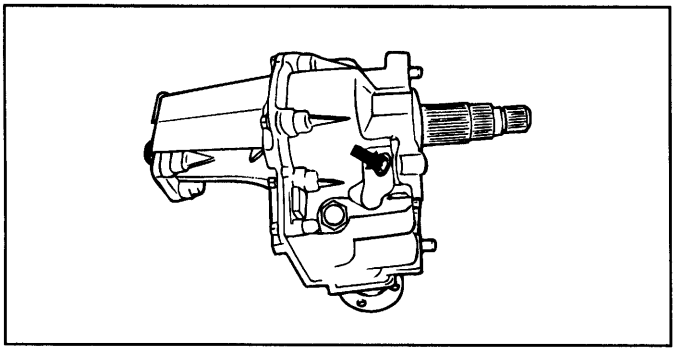

EFJA001A

2. Inspect the oil level.

PEPLACEMENT OF TRANSFER CASE OIL

USE SHELL SPIRAX AX (SAE 80W/90, API GL-5)

1. With the vehicle parked on a levell surface, remove the drain plug and drain the transfer case oil.

2. Install the drain plug.

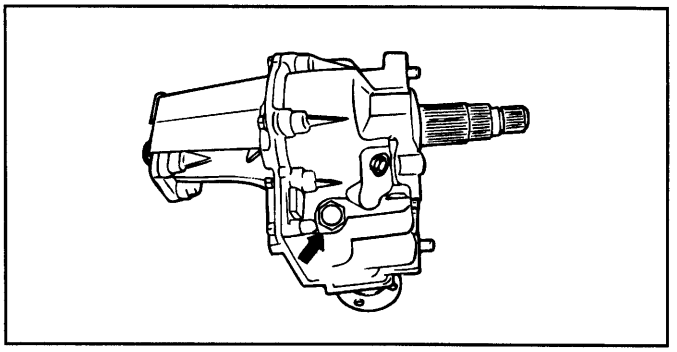

EKJA044A

3. Remove the oil filler plug.

4. Add the specified amount and type of oil into the oil filler hole

5. Install the oil filler plug.

TRANSFER CASE

SECTION VIEW EKJA0420

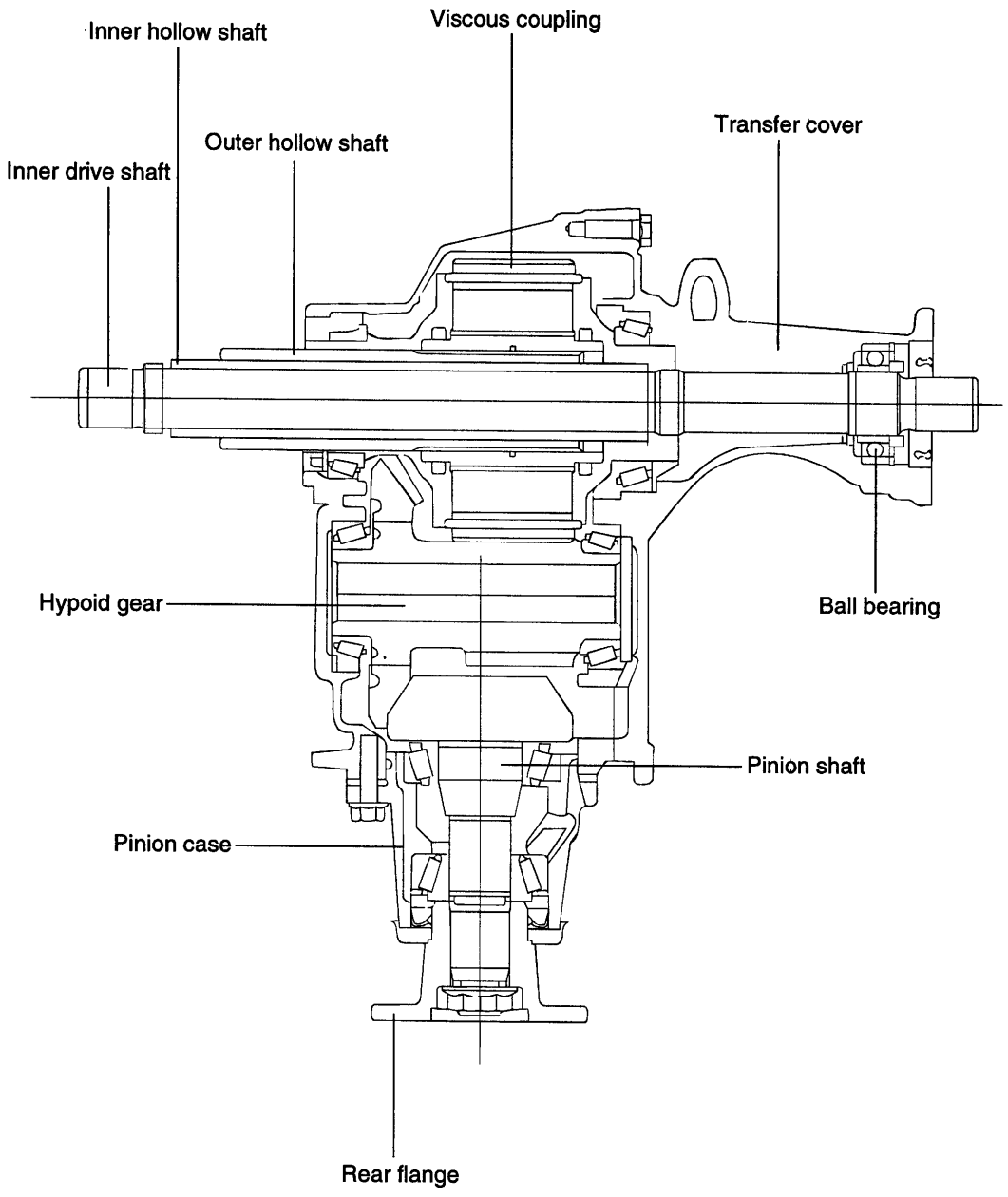

EKJA042A

OUTSIDE VIEW EKJA0430

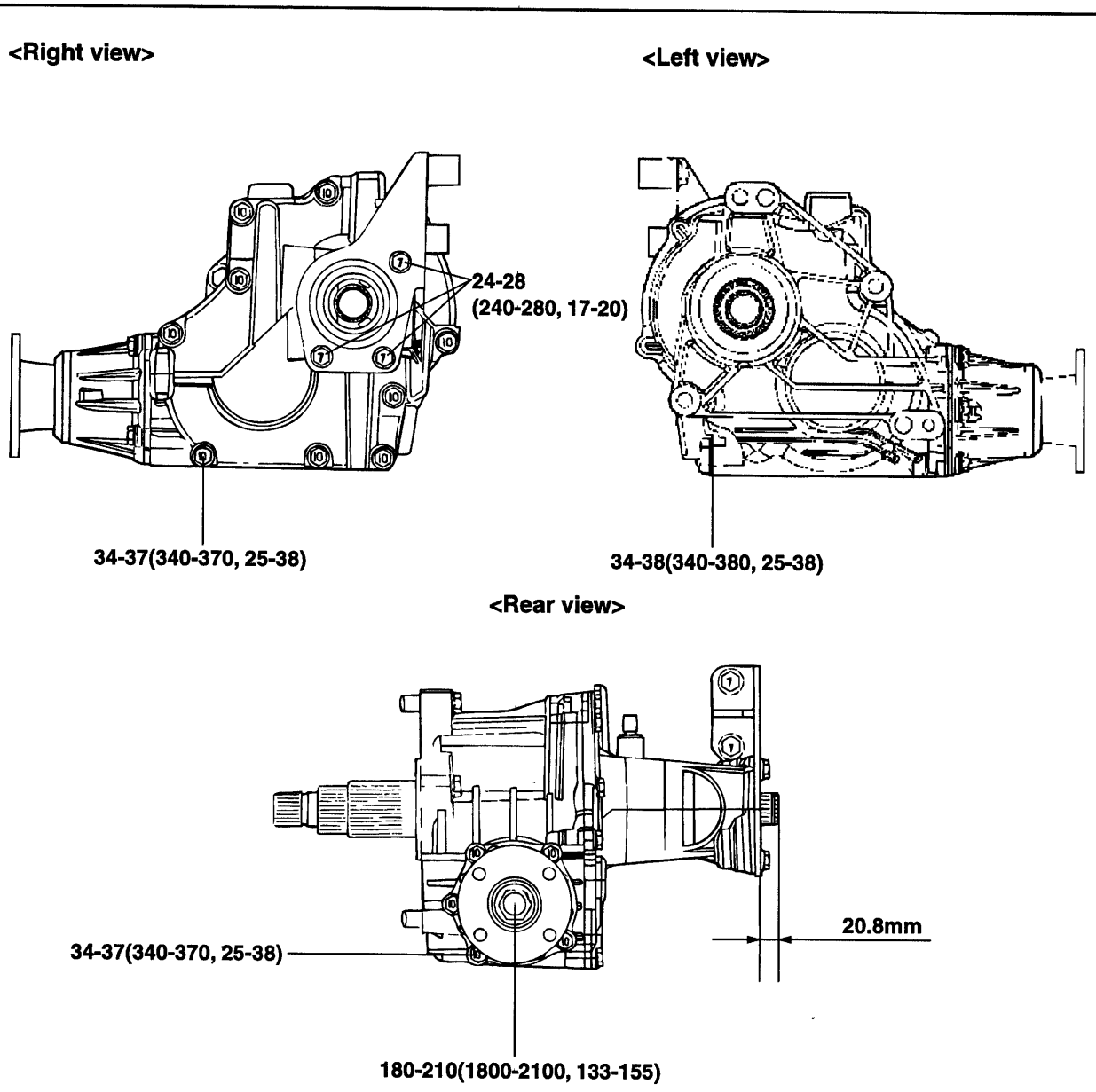

TORQUE : N·m (kg·cm, lb·ft)

EKJA043A

TRANSFER CASE EKJA0450

COMPONENTS

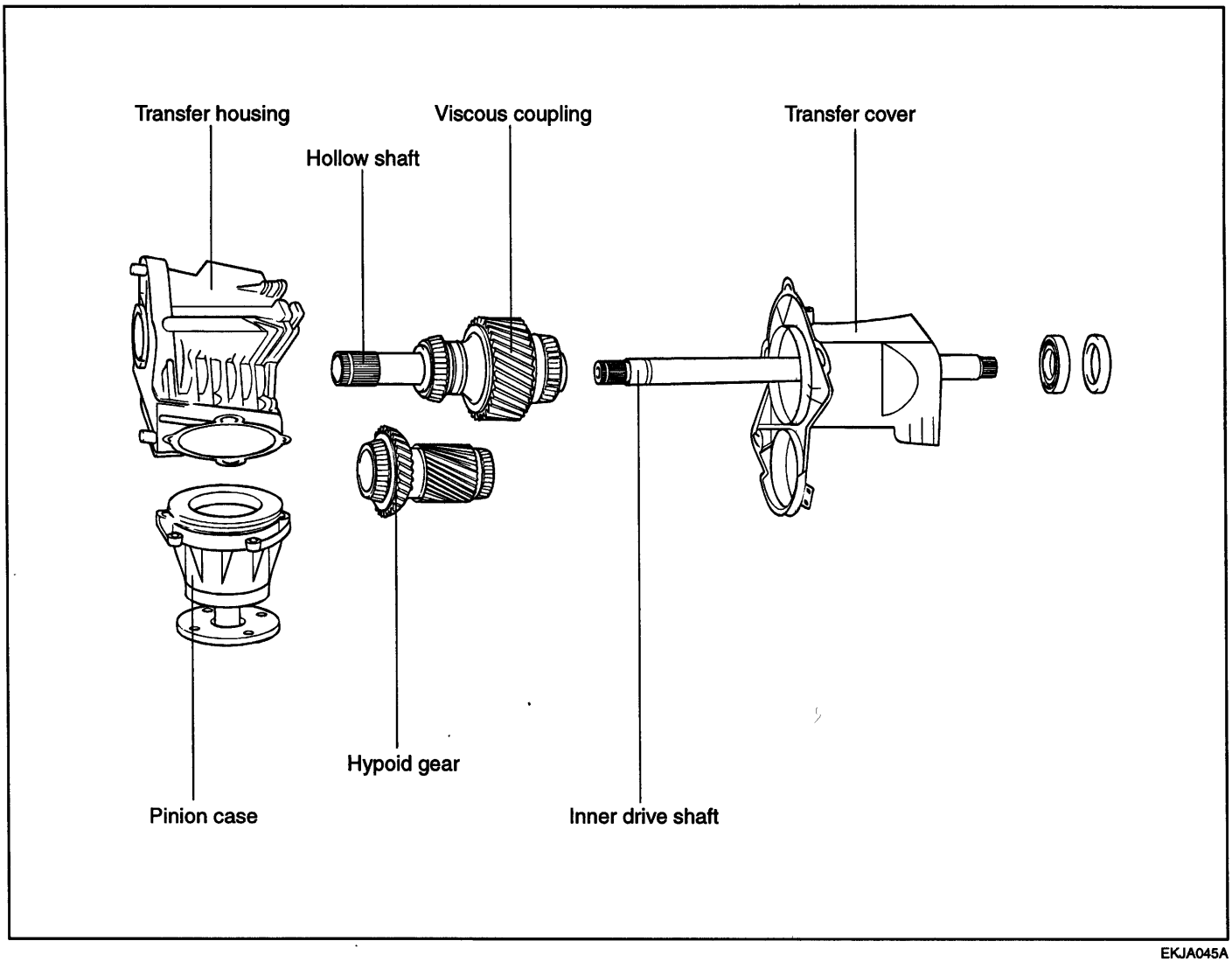

EKJA045A

REMOVAL EKJA0460

1. Attach the, engine support fixture (09200-38001) to the engine (if necessary).
2. Remove the transfer case and the sub-frame mounting bracket.
3. Raise the vehicle and remove the tires.
4. Remove the front muffler.
5. Drain the transfer case oil.

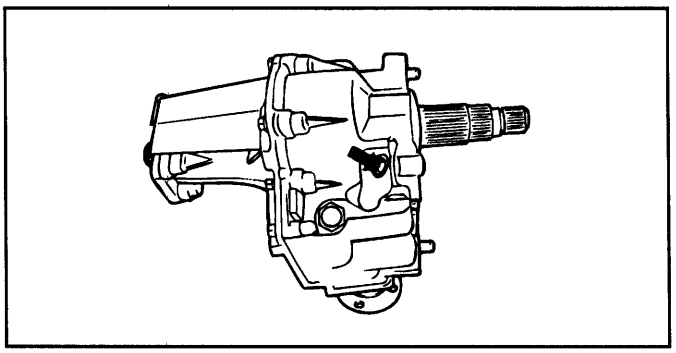

EFJA001A

6. Remove the engine lower cover and side cover.
7. Remove the brake calipers, the shock-absorbers and the drive shaft.
8. Remove the alternator, exhaust manifold and the rear propeller shaft.

9. Remove the steering tube attached to the sub-frame.
10. Remove the bolts of the sub-frame and the sub-frame assembly.
11. Support the transfer case with a jack.
12. Remove the transfer case mounting bolts.
13. Remove the transfer case assembly.

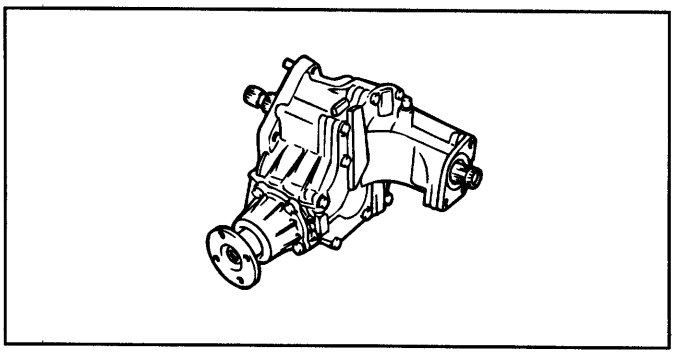

EFJA001B

TRANSFER CASE EKJA0470

COMPONENTS

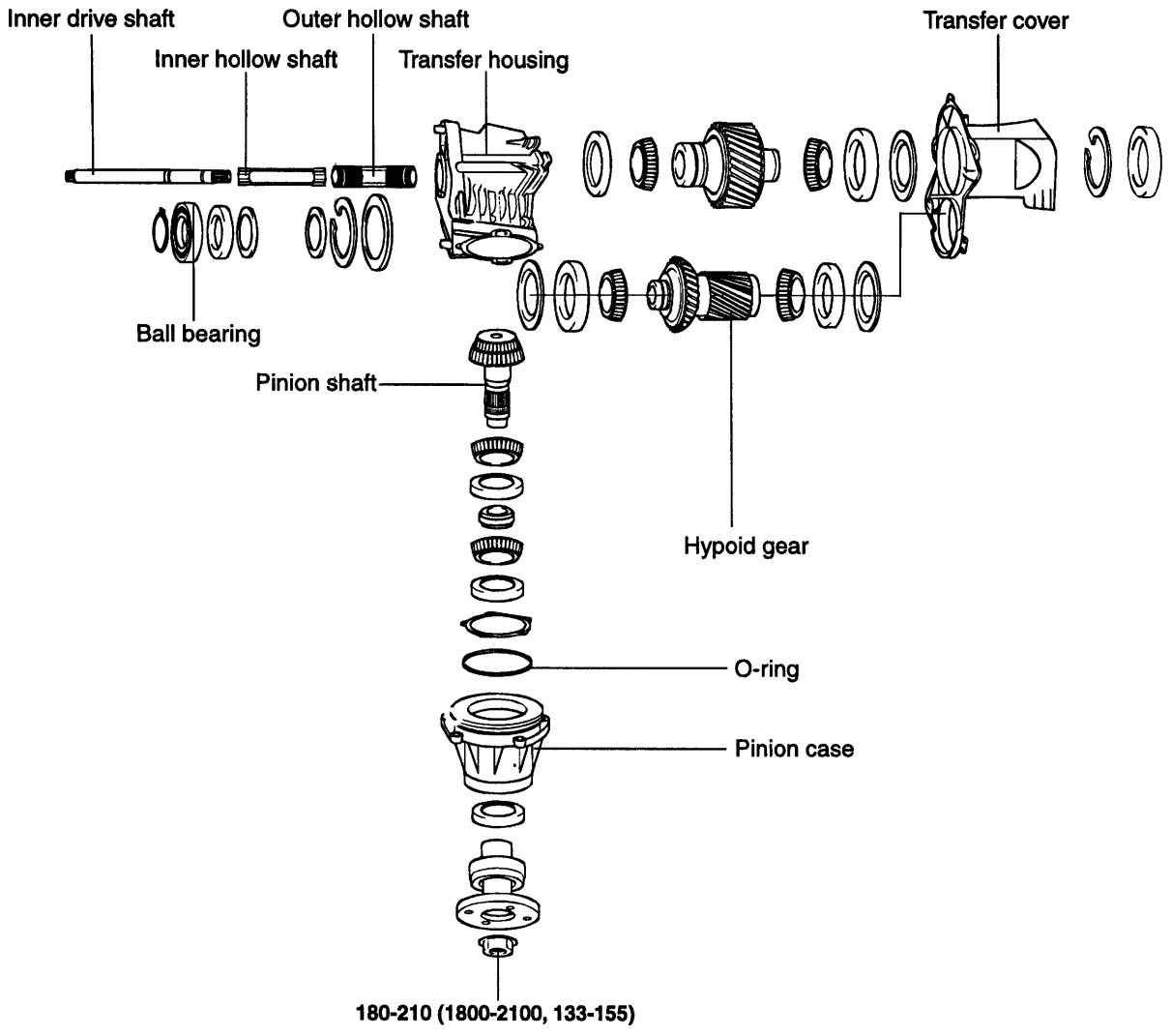

TORQUE : N·m (kg·cm, lb·ft)

EKJA047A

VISCOUS COUPLING

VISCOUS COUPLING EKJA0480

COMPONENTS

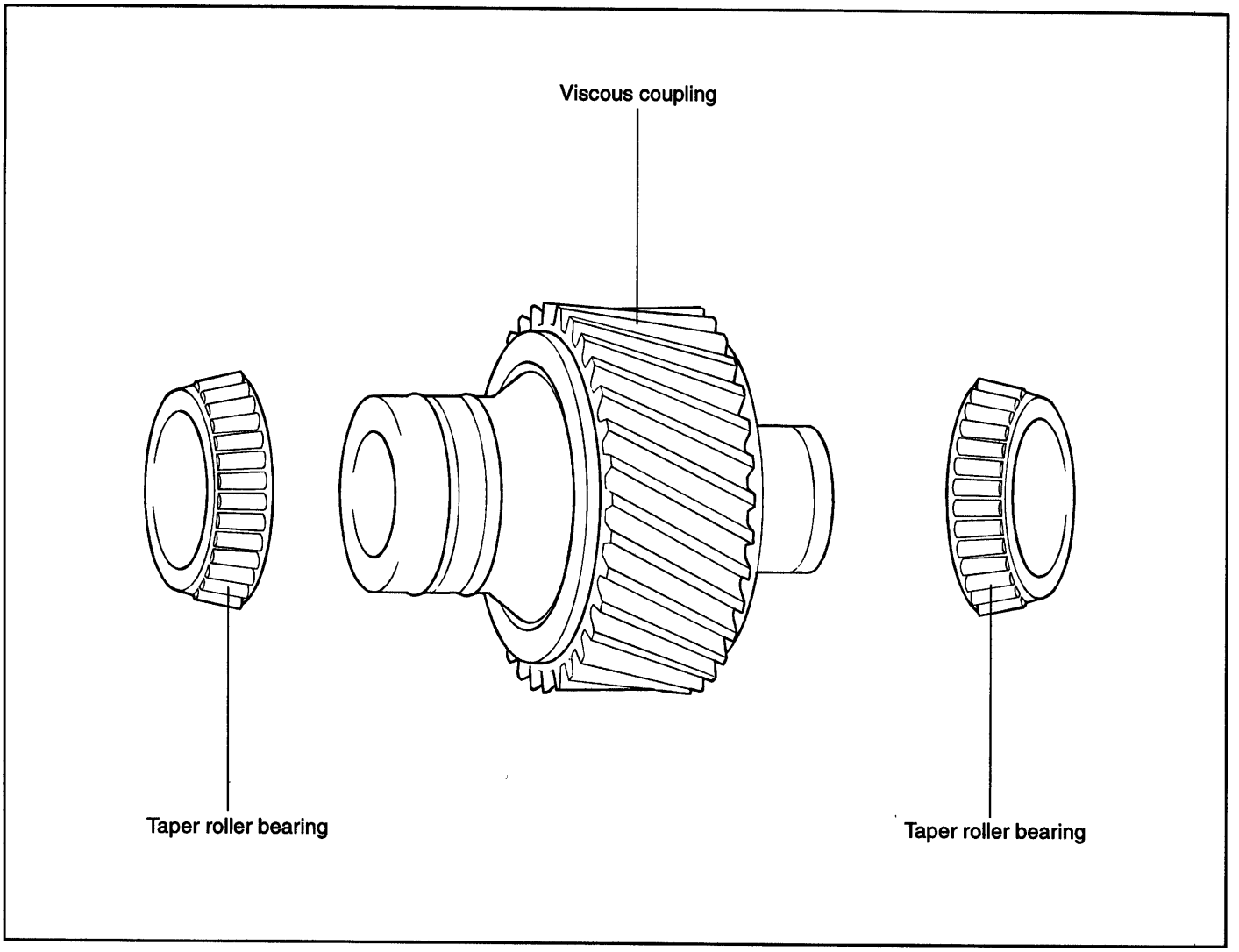

EKJA048A

NOTE

The viscous coupling is not serviceable

REASSEMBLY EKJA0490

1. Reassemble the taper roller bearing using special Tool.

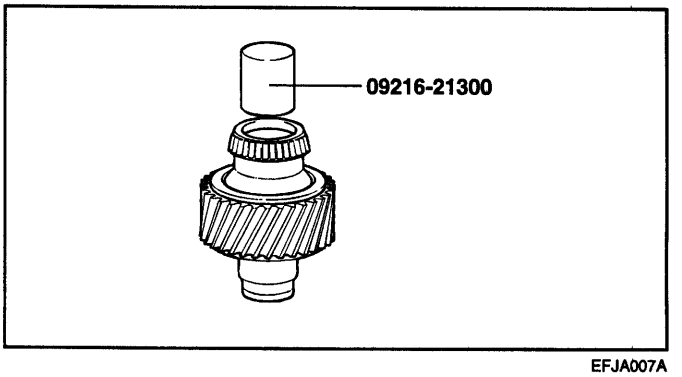

EFJA007A

2. Reassemble the taper roller bearing (larger size) in opposite side using special Tool.

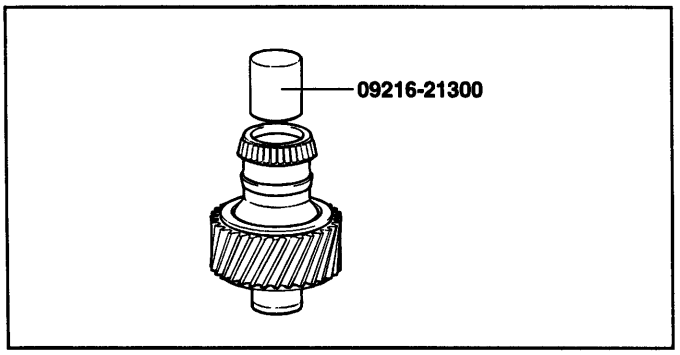

EFJA008A

HYPOID GEAR EKJA0500

COMPONENTS

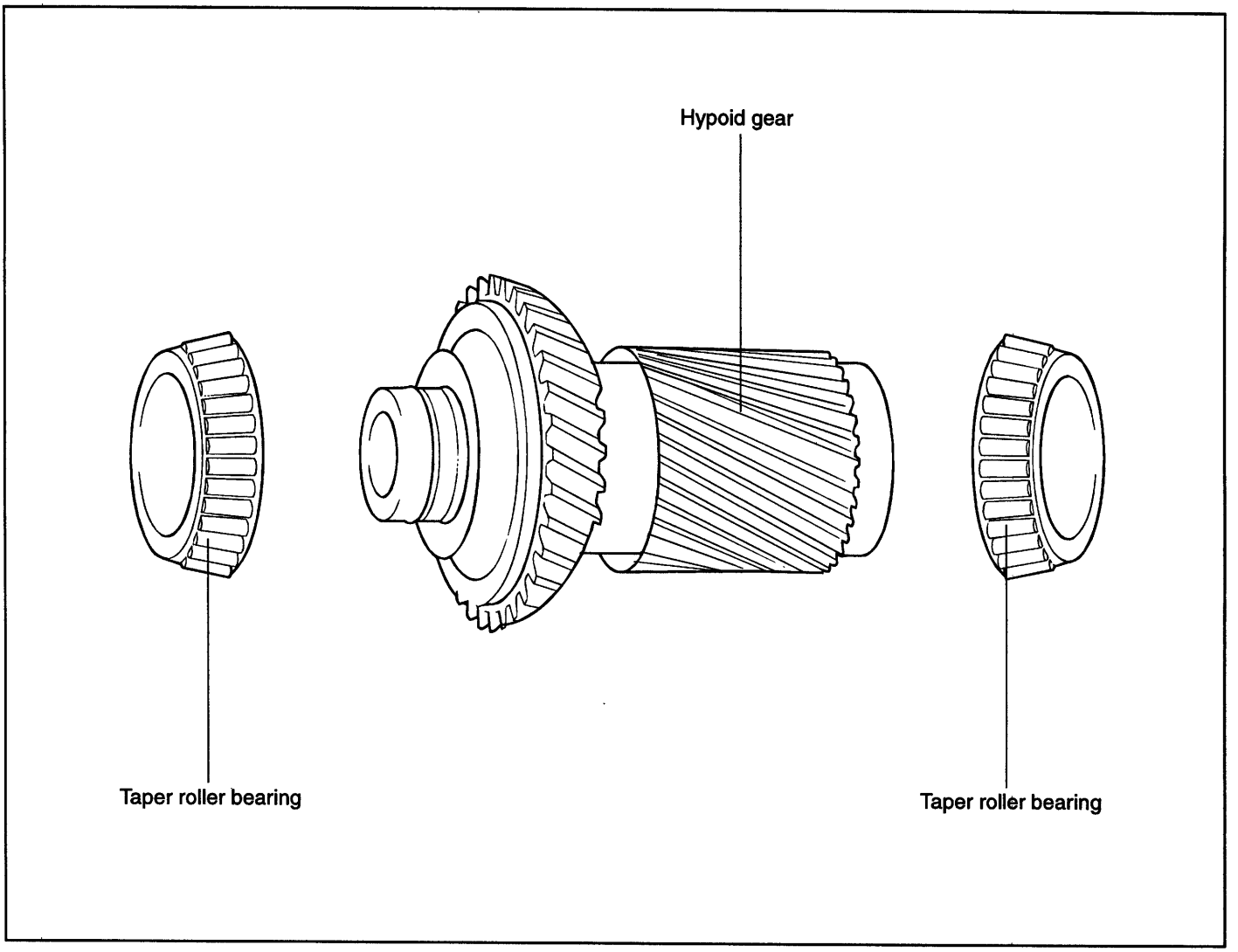

EKJA050A

HYPOID GEAR

REASSEMBLY EKJA0510

1. Reassemble two (front & rear side) taper roller bearings using the special tool.

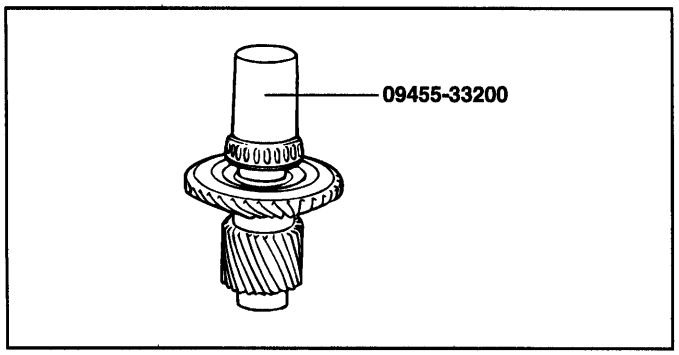

EFJA010A

PINION SHAFT AND CASE

PINION SHAFT AND CASE EKJA0520

COMPONENTS

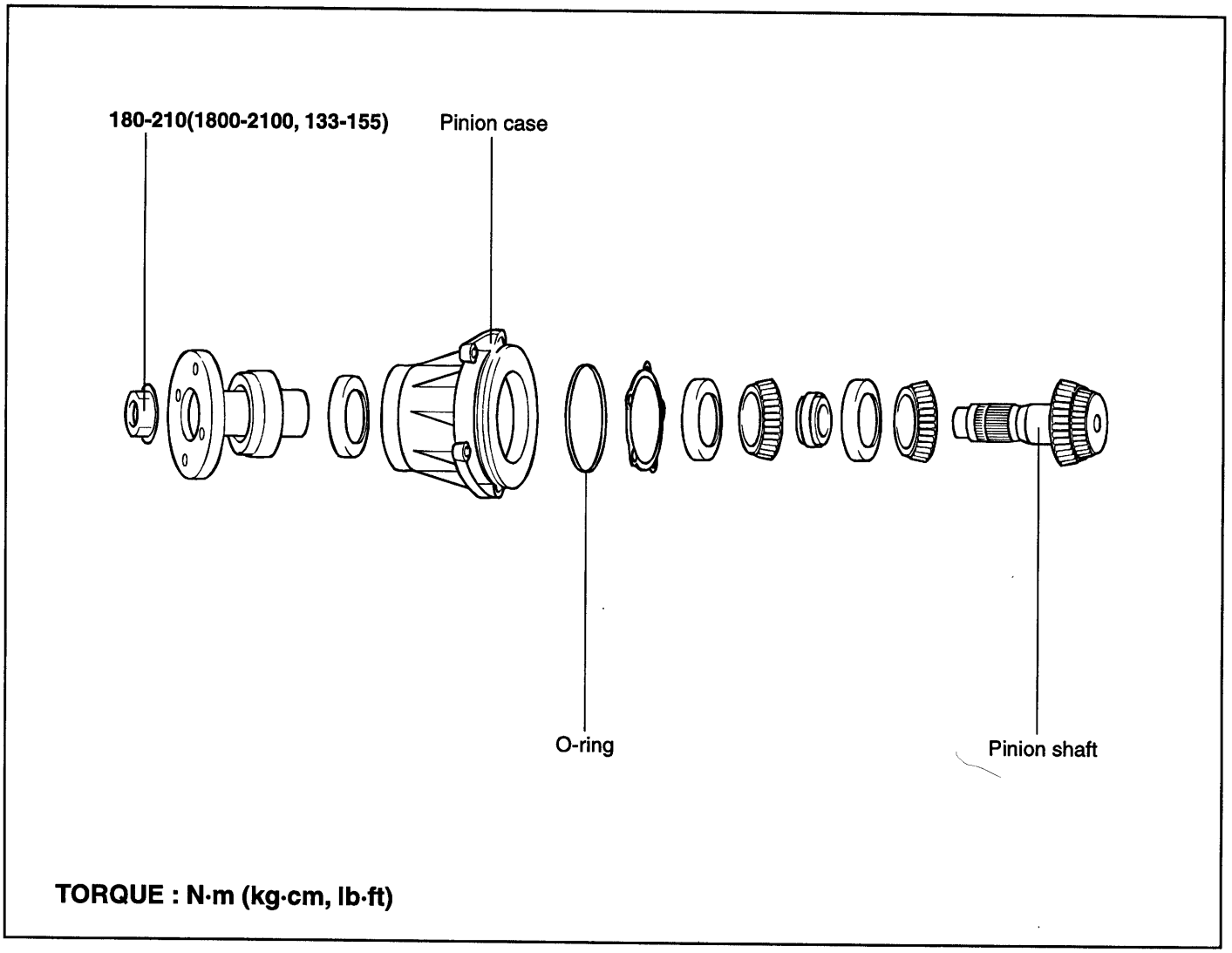

EKJA052A

REASSEMBLY EKJA0530

1. Reassemble the oil seal on the pinion case using special Tool.

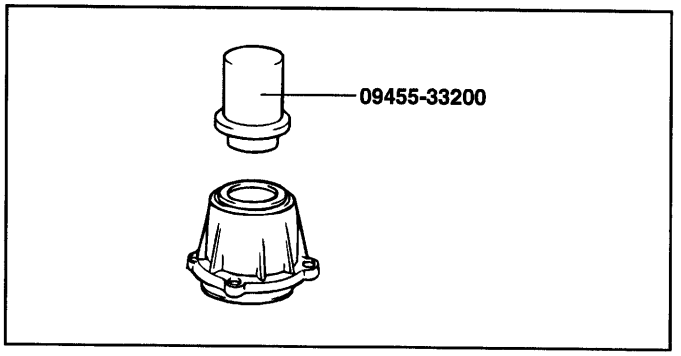

EFJA012A

TRANSFER HOUSING AND COVER

TRANSFER HOUSING AND COVER EKJA0540

COMPONENTS

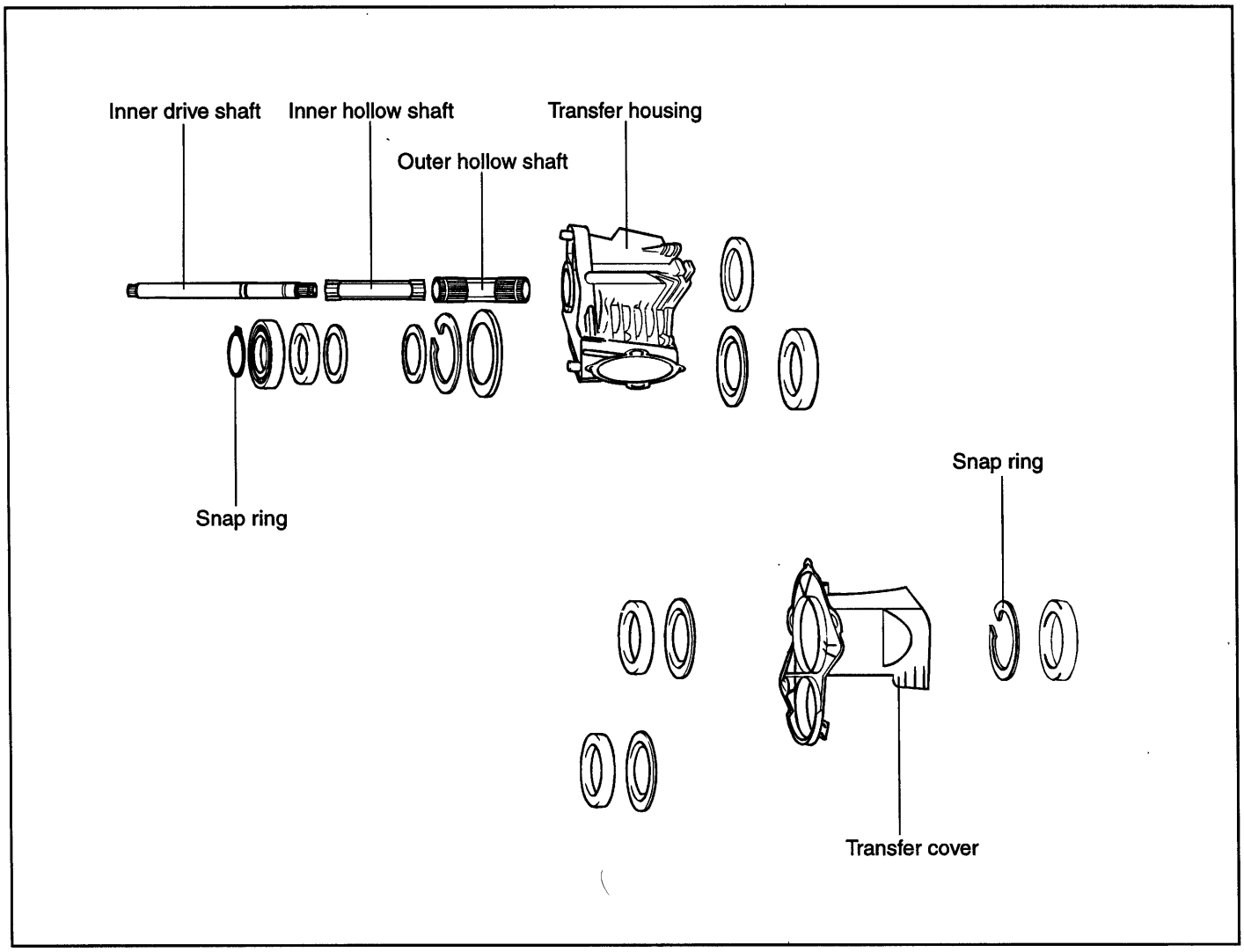

EKJA054A

REASSEMBLY EKJA0550

1. Reassemble the oil seal on the transfer housing using the special tool.

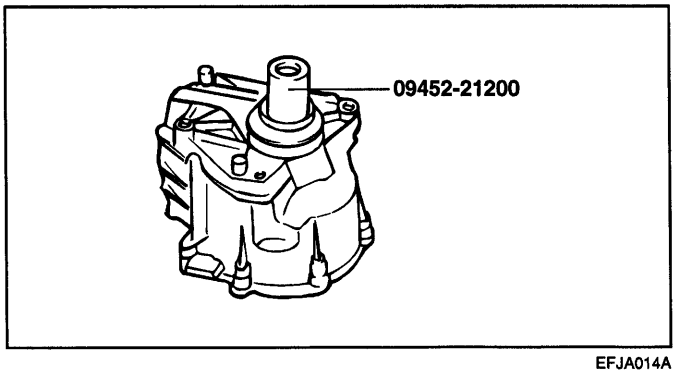

EFJA014A

REMOVAL OF INNER DRIVE SHAFT

1. Remove the oil seal.

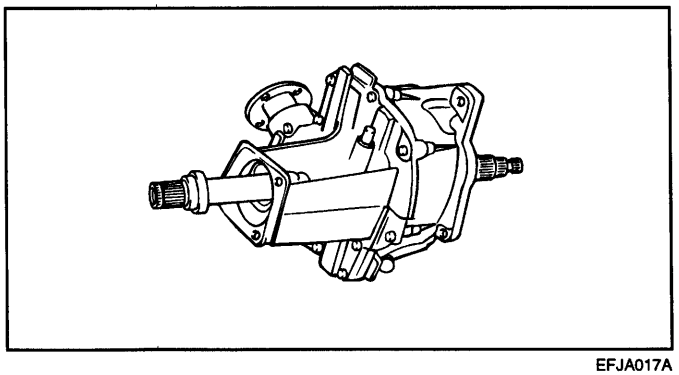

EFJA017A

2. Remove the snap ring.

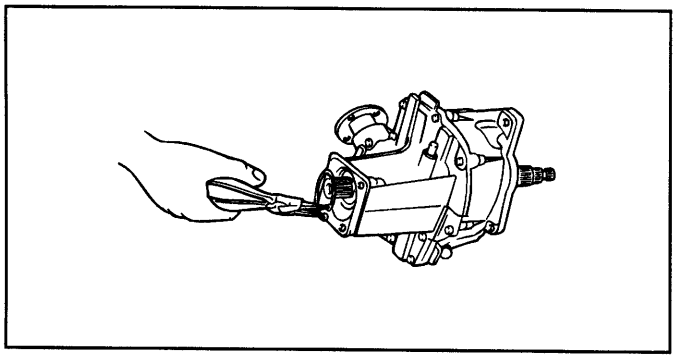

EFJA018A

3. Remove the inner drive shaft.

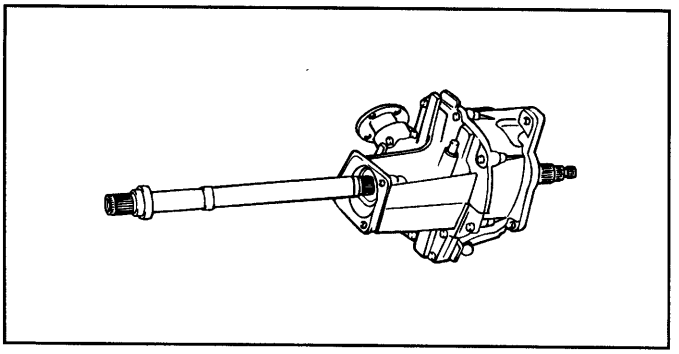

EFJA020A

REMOVAL OF INNER DRIVE SHAFT BEARING.

1. Remove the inner drive shaft bearing using the special tool.

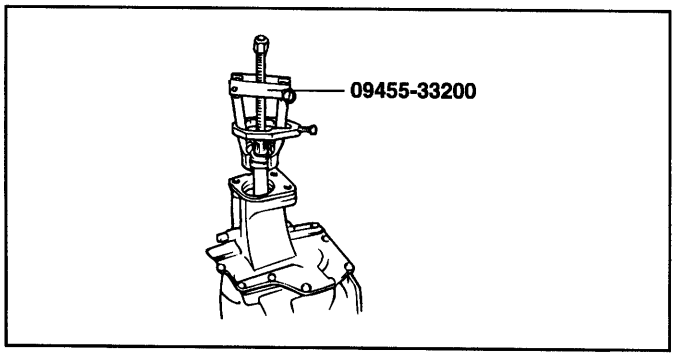

EFJA020B

REASSEMBLY OF BEARING AND SNAP RING

1. Reassemble the snap ring on the inner drive shaft.

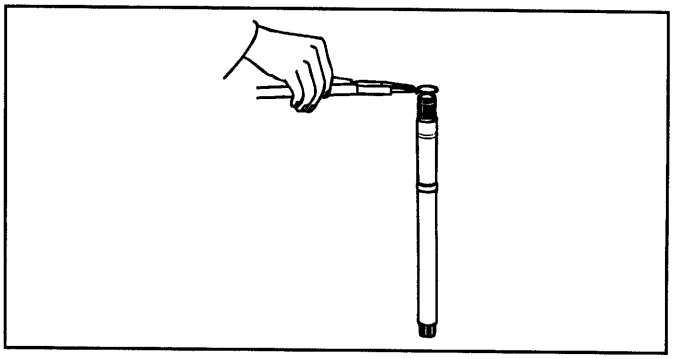

EFJA021A

2. Reassemble the ball bearing and the hoop ring.

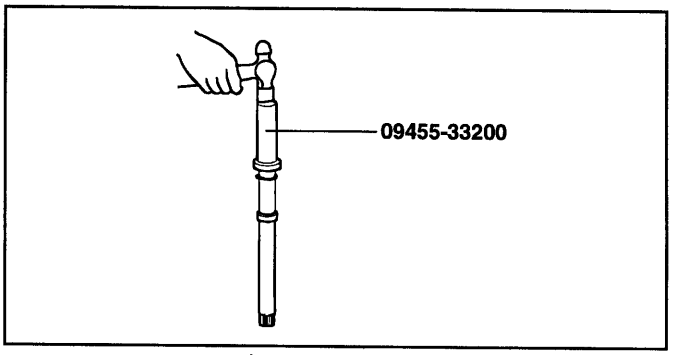

EFJA022A

REASSEMBLY OF HOLLOW SSHAFT

1. Apply grease to the spline surface.

GREASE : KLUBER MICROLUBE GNY202equivalent

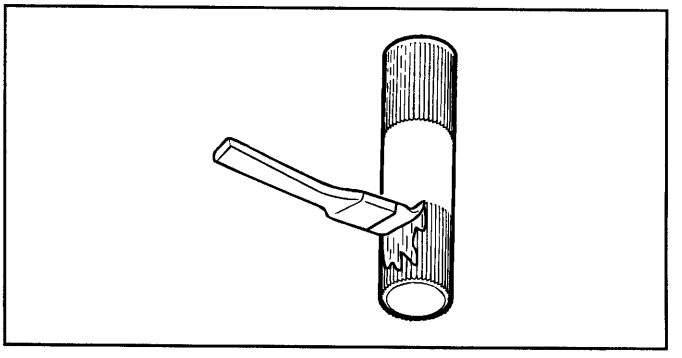

EFJA023A

2. Reassemble the outer hollow shaft.

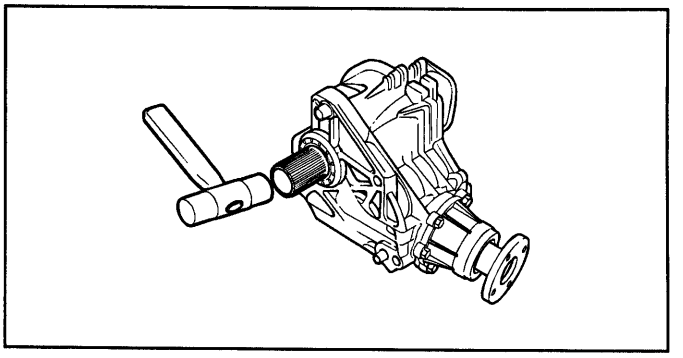

EFJA025A

3. Reassemble the inner hellow shaft.

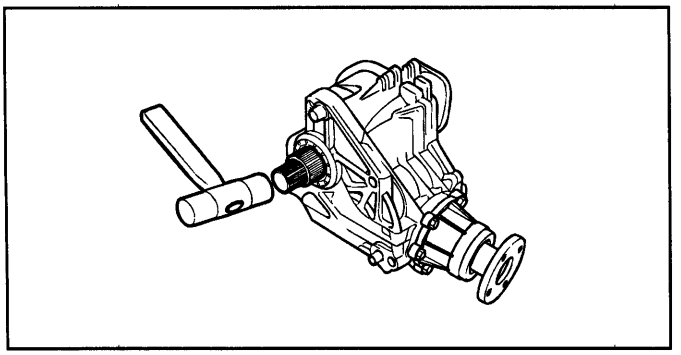

EFJA027A

Driveshaft and Axle

GENERAL ..... DS -2

PROPELLER SHAFT ASSEMBLY ..... DS -10

DRIVESHAFT ..... DS -20

FRONT AXLE ..... DS -29

REAR AXLE ..... DS -33

REAR DRIVESHAFT ASSEMBLY ..... DS -38

DIFFERENTIAL CARRIER ASSEMBLY ..... DS -43

GENERAL

SPECIFICATIONS EIJB0015

PROPELLER SHAFT

ITEMS	SPECIFICATION
Length x O.D mm(in)	2022 x 76.2 (79.6 x 3)
Front mm(in)	967 x 76.2 (38 x 3)
Rear mm(in)	1055 x 76.2 (41.5 x 3)
Clearance between snap ring and groove	
Wall of yoke	0.02 ~ 0.06 mm (0.0008 ~ 0.0024 in)
Runout	0.5 mm (0.020 in) or less

NOTE) Propeller shaft length indicates the length between the center point of each joint.

DRIVESHAFT

Joint type		2.0L (M/T)	2.4L (M/T)	2.7L(A/T)	Rear (2.4L, 2.7L))
Outer		B.J.	B.J.	B.J.	B.J.
Inner		T.J.	T.J.	D.O.J.	D.O.J.
Maximum permissible joint angle	Outer	45.3°	46.5°	46°	46°
	Inner	23°	23°	22°	22°

B.J. : Birfield joint D.O.J. : Double offset joint T.J. : Tripod joint

Limit		
Hub end play	mm (in)	0.008 (0.0003) or less
Wheel bearing torque	Nm (kg·cm, lb·in)	1.88 (18.8, 1.4)

DIFFERENTIAL

Reduction gear type		Hypoid gear (7.0 in)
Reduction gear ratio		3.800
Final drive gear backlash	mm (in)	0.08 ~ 0.13 (0.003 ~ 0.005)
Differential gear backlash	mm (in)	0 ~ 0.076 (0 ~ 0.003)

EIJB00AA

TORQUE SPECIFICATIONS

EIJB0020

Items	Nm	Kg•cm	lb•ft
Propeller shaft			
Yoke flange mounting nut	50–60	500–600	37–44
Center bearing mounting nut	40–50	400–500	29–37
Center bearing to flange mounting	40–50	400–500	29–37
Self locking nut	100–120	1000–1200	73–88
D.O.J. mounting nut	30–40	300–400	22–29
Pinion mounting nut	230–250	2300–2500	168–183
Driveshaft nut	200–260	2000–2600	146–190
Brake caliper to knuckle	65–75	650–750	48–55
Front lower arm ball joint self locking nut	100–120	1000–1200	73–88
Wheel nut	90–110	900–1100	66–83
Knuckle to front strut assemble	100–120	1000–1200	73–88
Stabilizer bar link mounting nut	40–50	400–500	61–37
Tie rod end to knuckle mounting nut	24–34	240–340	18–25
Front axle dust cover mounting	7–11	70–110	5–8
Rear wheel bearing flange nut	200–260	2000–2600	146–253
Rear brake caliper mounting bolt	50–60	500–600	37–44
Trailing arm to rear spindle mounting bolt	80–90	800–900	58–66
Differential mounting rear bracket	80–100	800–1000	58–73
Differential carrier mounting bracket	70–80	700–800	51–58
Differential pinion nut	190–250	1900–2500	139–183

CAUTION

Replace the self-locking nuts with new ones after removal.

LUBRICATIONS

EIJB0035

ITEMS	SPECIFIED LUBRICANTS	QUANTITY
Universal joint	ALVANIA EP #2	Reguired
D.O.J. assembly	REAMAX FS NO.1	95±5 gr.
Center bearing	ALVANIA EP #2	Rreguired
T.J.-B.J. Type driveshaft		
2.0L M/T		
B.J. boot grease	CENTOPLEX 278M/136K	110±6 gr. (joint : 55±3 gr. boot : 55±3 gr.
T.J. boot grease	KLK TJ 41–182	120±6 gr. (joint : 75±3 gr. boot : 45±3 gr.
2.4L M/T		
B.J. boot grease	CENTOPLEX 278M/136K	115±6 gr. (joint : 60±3 gr. boot : 55±3 gr.
T.J. boot grease	KLK TJ 41–182	145±6 gr. (joint : 100±3 gr. boot : 45±3 gr.
D.O.J.-B.J. Type driveshaft (2.7 A/T)		
B.J. boot grease	CENTOPLEX 278M/136K	135±6 gr. (joint : 70±3 gr. boot : 65±3 gr.
D.O.J. boot grease	AMBLYGON TA 10/2A	105±6 gr. (joint : 65±3 gr. boot : 40±3 gr.
D.O.J.-B.J. Type driveshaft (Rear driveshaft)		
B.J. boot grease	CENTOPLEX 278M/136K	115±6 gr. (joint : 60±3 gr. boot : 55±3 gr.
D.O.J. boot grease	AMBLYGON TA 10/2A	100±6 gr. (joint : 60±3 gr. boot : 40±3 gr.
Differential carrier	Hipoid gear oil (API GL-5, SEA 80W/90, SHELL SPIRAX AX Equivalent)	1.1 L

SEALANTS AND ADHESIVES

EIJB0040

Items	Specified sealants and adhesives
Threaded holes of the drive gear	LOCTITE #262 or equivalent
Differential cover installation surface (to gear carrier)	THREEBOND #1215 or equivalent

SPECIAL TOOL

EIJB0050

Tool (Number and Name)	Illustration	Use
09493–43000 Universal joint remover and installer	 D9343000	Removal and installation of the journal bearing (Use with 09432–43100)
09493–43100 Universal joint remover adapter	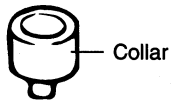 D9343100	Removal and installation of the journal bearing (Use with 09452–43000)
09455–21000 Bearing and gear puller	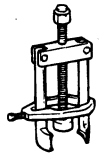 D5521000	• Removal of the center bearing • Removal of the wheel bearing inner race (Use with 09545–34100)
09216–21100 Mount bushing remover installer	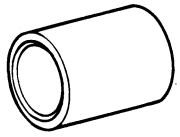 D1621100	Removal of the rear hub tone wheel (Use with 09457–34000)
09216–22100 Mount bushing remover and installer	 B1622100	• Removal of the front wheel bearing outer race (Use with 09532–32000) • Installation of the rear hub tone wheel
09457–34000 Removing plate	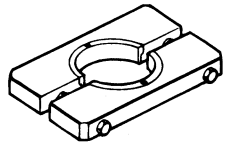 D5734000	Removal of the rear hub tone wheel (Use with 09216–21100)

Tool (Number and Name)	Illustration	Use
09457–21000 Oil seal installer	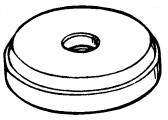 E1721000	Installation of the differential drive pinion oil seal (Use with 09500–21000)
09451–21500 Front hub remover and installer	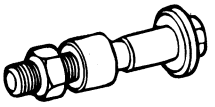 HFR49-3	Removal and installation of the front hub (Use with 09517–29000 and 09517–3A000)
09517–29000 Knuckle arm bridge	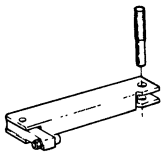 E1729000	Removal and installation of the front hub (Use with 09517–3A000 and 09517–21500)
09527–4A000 Removing plate	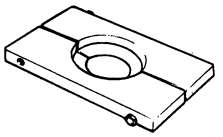 E274A000	Removal of the differential drive pinion rear bearing
09517–3A000 Knuckle arm bridge adapter	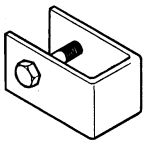 E173A000	Removal of the front hub (Use with 09517–21500 and 09517–29000)
09517–43001 Bearing puller	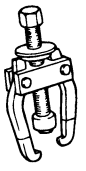 D9-8	• Removal of the rear hub bearing • Removal of the differential side bearing
09532–11600 Preload socket	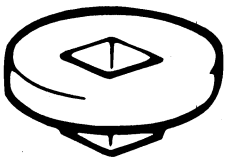 HFR49-10	Measurement of the front wheel bearing starting torque (Use with torque wrench)

Tool (Number and Name)	Illustration	Use
09532–32000 Bearing installer	 E3232000	• Removal of the front wheel bearing outer race (Use with 09216–22100) • Installation of the differential drive pinion front bearing outer race (Use with 09500–21000)
09545–34100 Lower arm bushing remover and installer	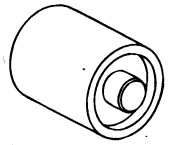 E4534100	Removal of the hub
09568–34000 Ball joint puller	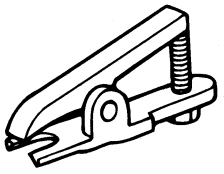 HFR49-1	Disconnection of the tie rod
09545–26000 Lower arm bushing remover installer	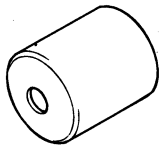 E4526000	Installation of the hub
09532–32100B Oil seal installer	 E3231200	Installation of the drive pinion rear bearing outer race (Use with 09500–11000)
09517–43401 Working base	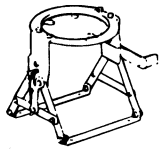 E1743401	Support for the differential carrier
09517–21700 End yoke holder	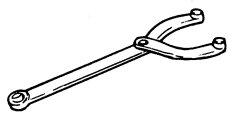 E1721700	Removal of the differential self locking nut

Tool (Number and Name)	Illustration	Use
09500–26000 Pinion height gauge tube	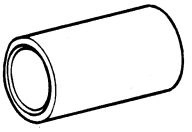 E004A100	Measurement of the drive pinion height
09500–43131 Pinion height gauge	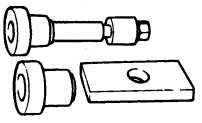 E0043131	

TROUBLESHOOTING

EIJB0060

Trouble Symptom	Probable cause	Remedy
Noise at start	Worn journal bearing or center bearing	Replace
	Worn sleeve yoke spline or center yoke spline	Replace
	Loose propeller shaft installation	Retighten
Noise and vibration at high speed	Unbalanced propeller shaft	Replace
	Improper snap ring selection	Adjust the clearance
	Worn journal bearing center bearing	Replace
Vehicle pulls to one side	Scoring of drive shaft ball joint	Replace
	Wear, rattle or scoring of wheel bearing	Replace
	Defective front suspension and steering	Adjust or replace
Vibration	Wear, damage or bending of drive shaft	Replace
	Drive shaft rattle and hub serration	Replace
	Wear, rattle or scractching of wheel bearing	Replace
Shimmy	Defective wheel balance	Adjust or replace
	Bent wheel	Replace
	Defective front suspension and steering	Adjust or replace
Excessive noise	Wear, damage or bending of drive shaft	Replace
	Rattle of drive shaft and worn hub splines	Replace
	Rattle of drive shaft and worn side gear splines	Replace
	Wear, rattle or scoring of wheel bearing	Replace
	Loose hub nut	Adjust or replace
	Defective front suspension and steering	Adjust or replace
Bent cage	Cage damage due to improper handling or tool usage	Replace bearing
Galling	Metal tears on roller end due to overheating, lubricant problem or overloading	Replace bearing Check seals, check for proper lubrication
Cracked inner race	Race cracked due to improper fit, cocking or poor bearing seats	Replace bearing
Etching	Bearing surfaces appear gray or grayish black in color with related etching away of material, usually at roller spacing	Replace bearing Check seals, check for proper lubrication
Brinelling	Surface indentations on the race surface caused by rollers either overloading or vibrating while the bearing is not rotating	Replace bearing
Heat discoloration	Heat discoloration is dark blue resulting from over-load or no lubricant (Yellow or brown color is normal)	Replace bearing Check seals and other parts
Fatigue spalling	Flaking of surface metal resulting from fatigue	Replace bearing Clean all related parts

PROPELLER SHAFT ASSEMBLY

PROPELLER SHAFT

COMPONENTS EIJB0070

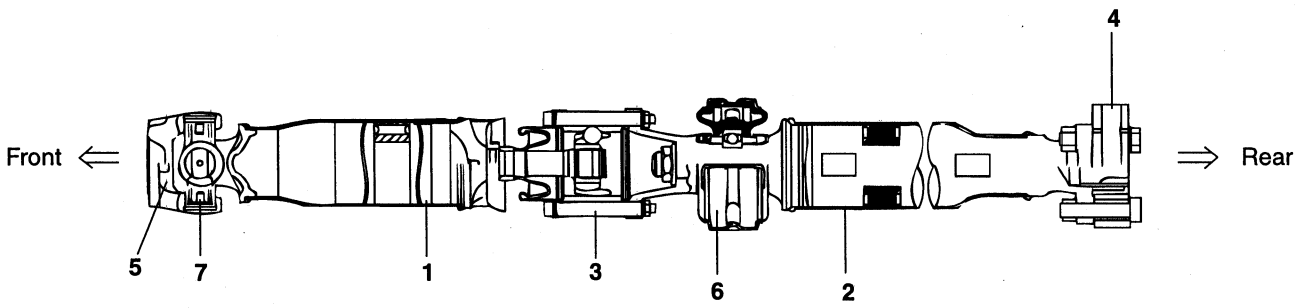

1. Front propeller shaft
2. Rear propeller shaft
3. D.O.J. assembly
4. Rubber coupling
5. Flange yoke
6. Center bearing assembly
7. Universal joint assembly

Removal steps

1. Front propeller shaft assembly
2. Rear propeller shaft assembly
3. Center bearing bracket

AIJA3100

REMOVAL EIJB0080

1. After making a matchmark on the companion flange and flange yoke, and another matchmark on the differential companion flange and rubber coupling, remove the propeller shaft.

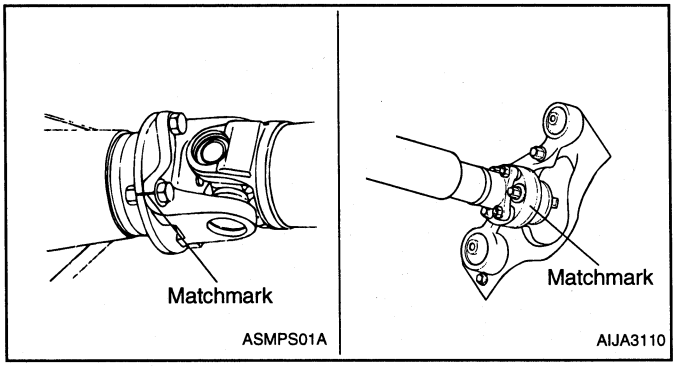

ASMPS300

NOTE

When removing the propeller shaft, be careful not to damage the boot. Insert a piece of cloth into the boot to prevent it from being damaged.

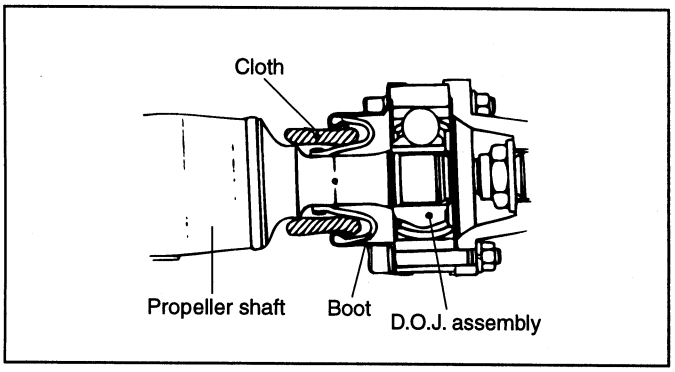

A7PS0280

INSPECTION EIJB0090

1. Check the propeller shaft yokes for wear, damage or cracks.
2. Check the propeller shaft for bends, twisting or damage.
3. Check the universal joints for smooth operation in all directions.

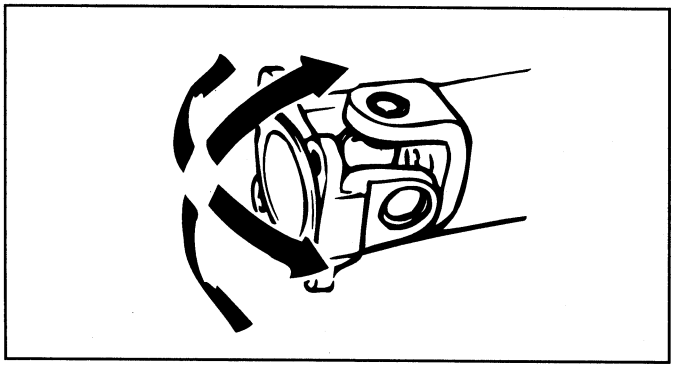

AU49-05B

4. Check the center bearing for smooth movement.
5. Check the center bearing mounting rubber for damage or deterioration.
6. Check the rubber coupling for damage or deterioration.
7. Measure the propeller shaft runout with a dial indicator.

Limit : 0.5 mm (0.02 in.)

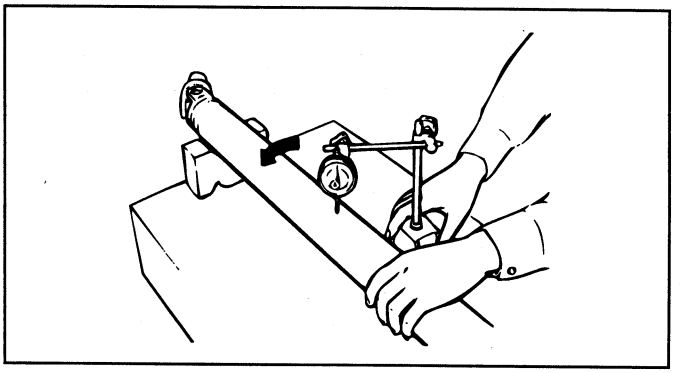

AU49-05D

INSTALLATION EIJB0100

1. Apply the grease to the rubber coupling centering device.

Recommended grease : ALVANIA EP #2 (8–10 gr.)

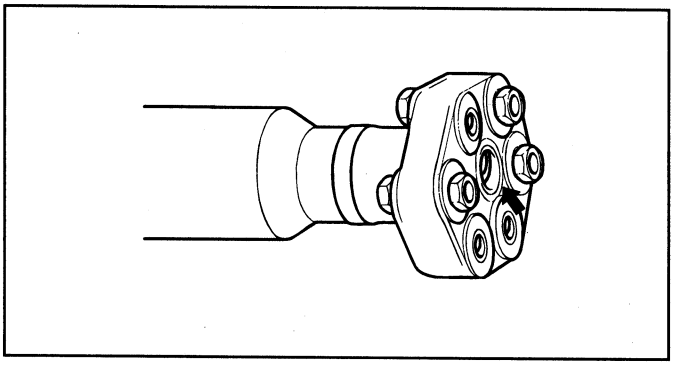

EIJA3120

2. Insert the rubber coupling centering device to the differential drive pinion slightly.

NOTE

Align the propeller shaft for reassembly. Support the center bearing assembly.

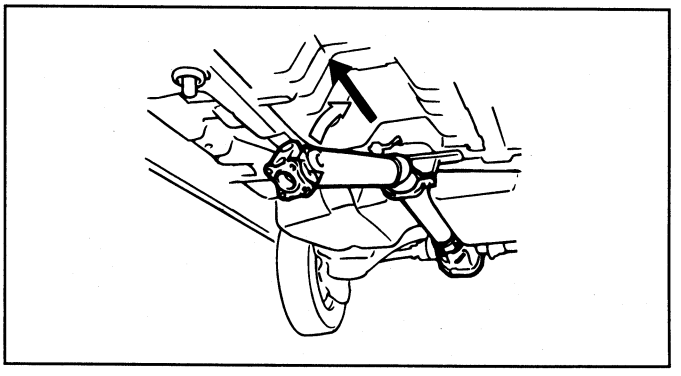

EIJA3130

3. Temporarily install the center bearing mounting bracket.

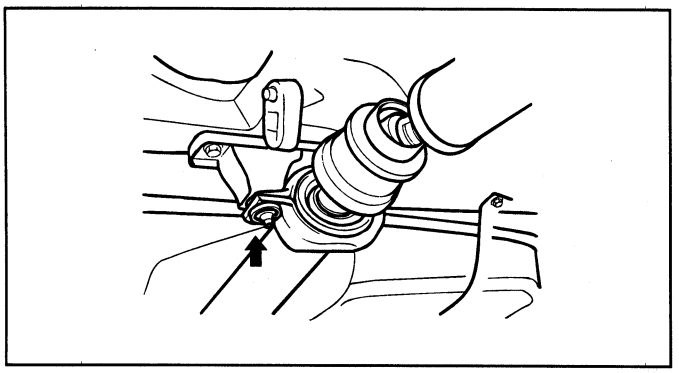

EIJA3140

NOTE

- **Install the center bearing mounting bracket so the mark "R" faces toward the vehicle's rear.**
- **Install the flange so that it faces upward as shown in the illustration.**

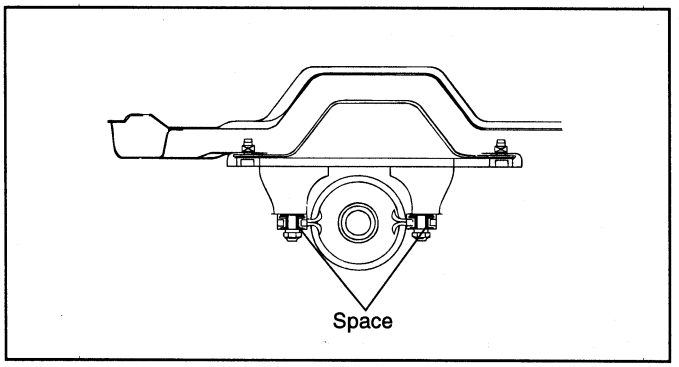

AIJA3150

4. Align the matchmarks on the companion flange and flange yoke and the differential companion flange and rubber coupling. Install the propeller shaft.

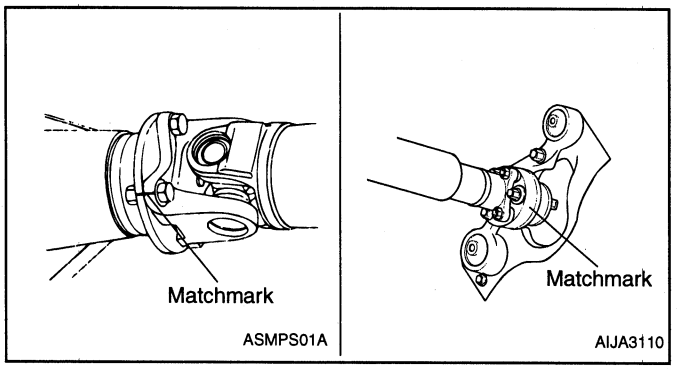

ASMPS01A AIJA3110

ASMPS300

NOTE

Specified torque :

- **Transfer flange to flange yoke : 50-60 Nm (500-600kgf•cm, 37-44lb•ft)**
- **Differential companion flange to rubber coupling : 100-120 Nm (1000-1200kgf•cm, 73-88lb•ft)**

5. Tighten the center bearing mounting bracket to the specified torque.

Specified torque :
40-50 Nm (400-500 kgf•cm, 29-37 lb•ft)

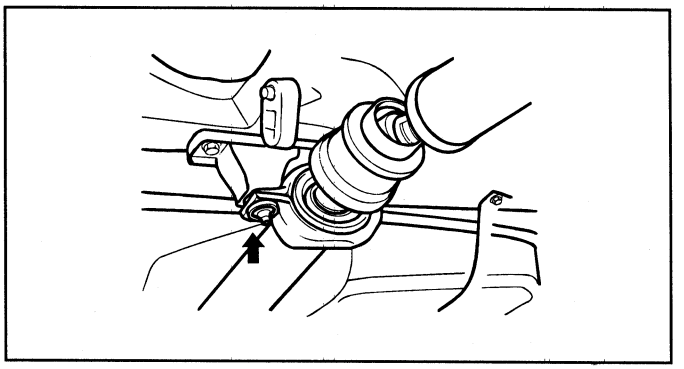

EIJA3140

DISASSEMBLY EIJB0110

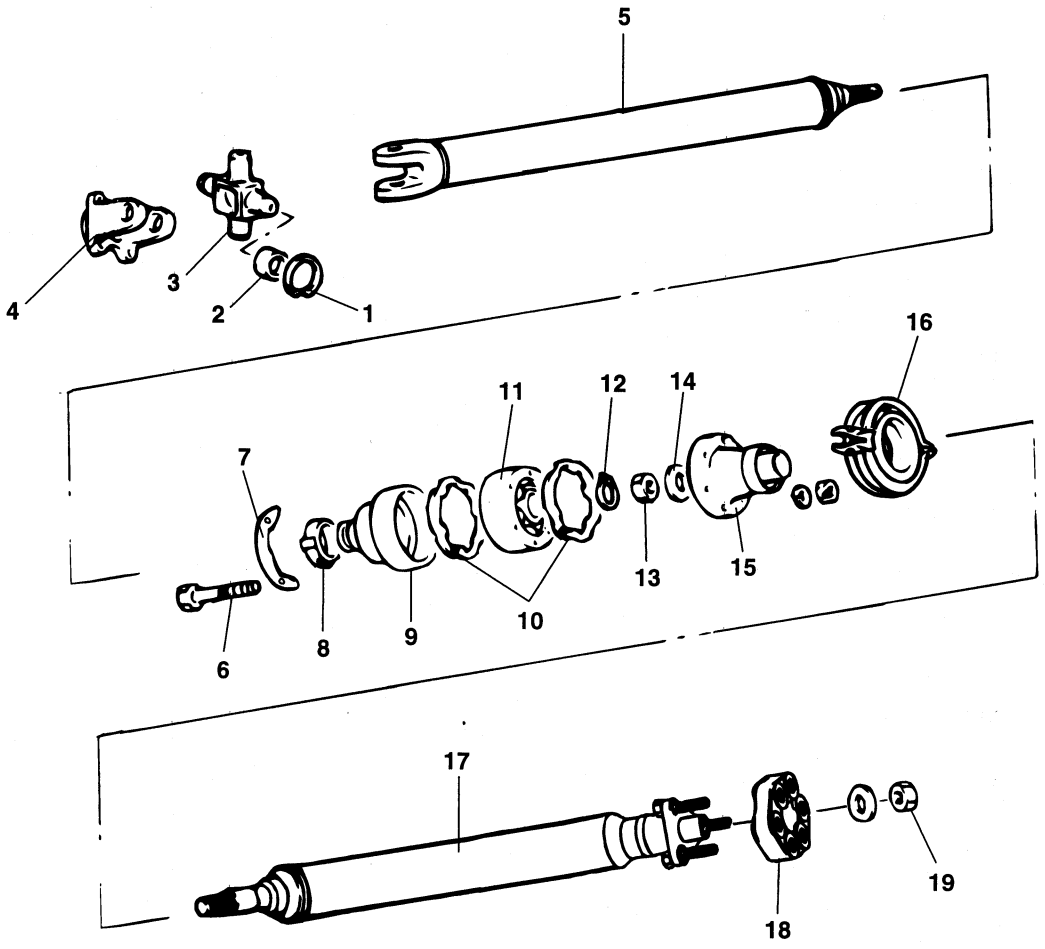

1. Snap ring
2. Journal bearing
3. Journal
4. Flange yoke
5. Front propeller shaft
6. Bolt
7. Washer
8. Boot band
9. D.O.J. boot
10. Rubber packing
11. D.O.J. joint assembly
12. Snap ring
13. Nut
14. Washer
15. Companion flange
16. Center bearing assembly
17. Rear shaft assembly
18. Rubber coupling
19. Bolt

AIJA3160

1. **REMOVAL OF SNAP RINGS**

   a. Make matchmarks on the yoke and universal joint that are to be disassembled.
   b. Remove the snap ring from the yoke with a snap ring pliers.

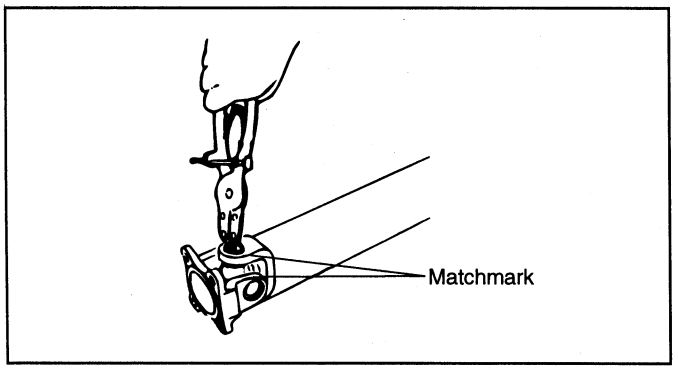

A7PS0320

2. **REMOVAL OF JOURNAL BEARINGS**

   Remove the journal bearings from the yoke with a special tool.

CAUTION

Do not tap the journal bearings to remove them, because this will cause inbalance of the propeller shaft.

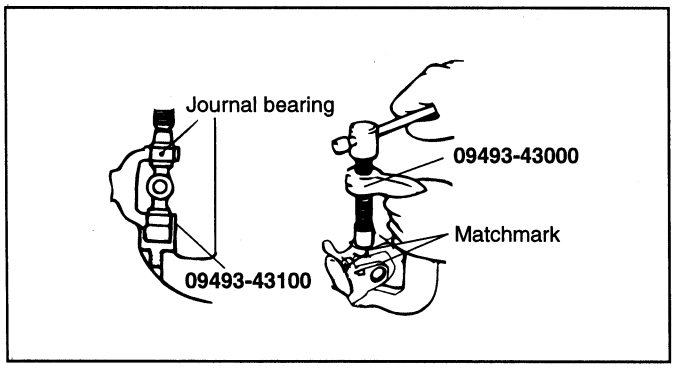

TU49-06C

3. **REMOVAL OF D.O.J. ASSEMBLY INSTALLATION BOLTS**

   a. Place matchmarks on the companion flange and D.O.J. assembly.
   b. Remove the D.O.J. installation bolts and separate the D.O.J. assembly from the companion flange.

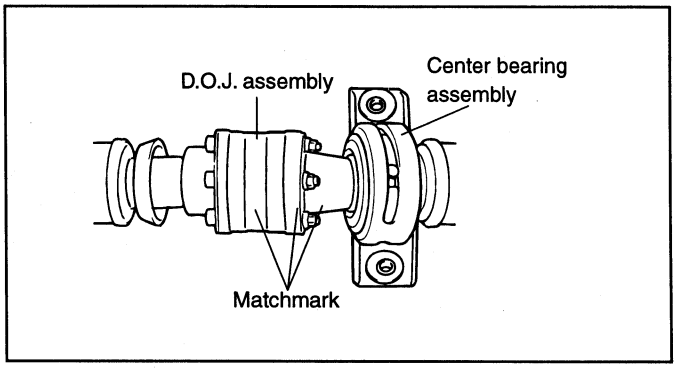

AIJA3170

4. **REMOVAL OF SELF-LOCKING NUT/COMPANION FLANGE**

   a. Place matchmarks on the companion flange and the rear propeller shaft.
   b. Remove the companion flange from the rear propeller shaft.

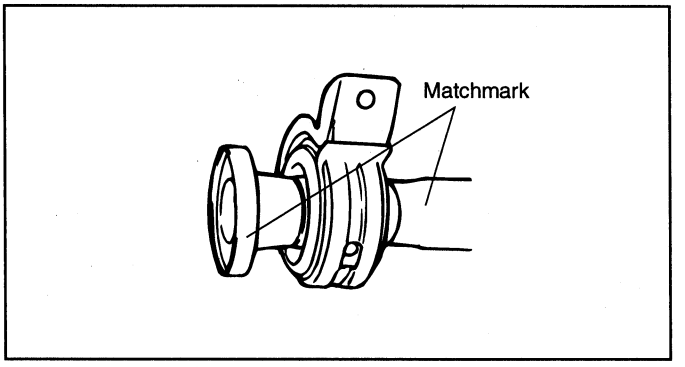

AIJA3180

5. **REMOVAL OF CENTER BEARING ASSEMBLY**

   a. Remove the center bearing bracket.
   b. Pull out the center bearing with a puller.

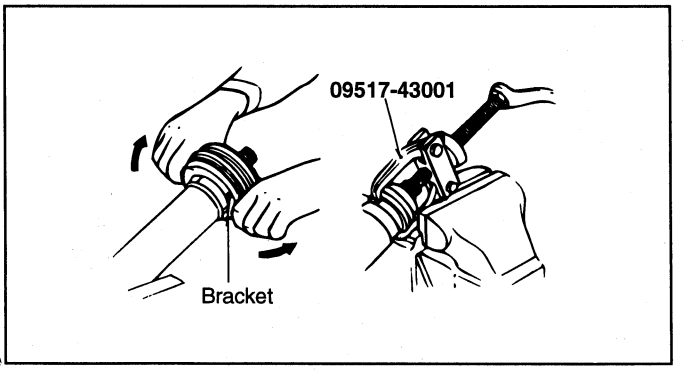

AIJA3190

6. **REMOVAL OF D.O.J. ASSEMBLY**

a. Remove the D.O.J. boot from the D.O.J. assembly

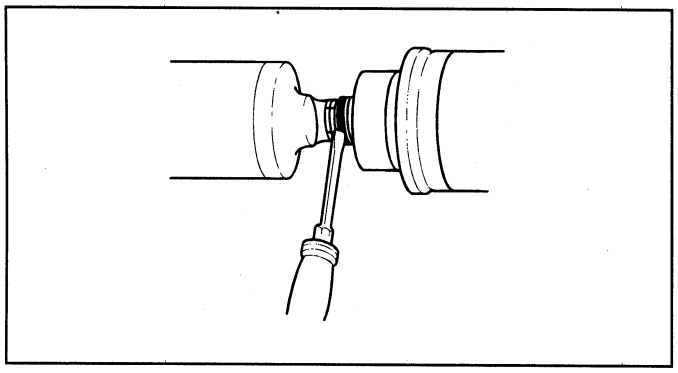

EIJA3115

b. Put matchmarks on the mating parts with a scriber.

NOTE

Note the positions of balls so that they can be reinstalled in their original positions.

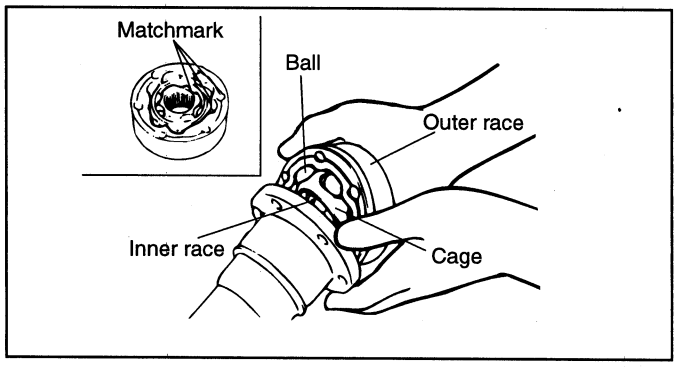

AIJA3210

c. Remove the D.O.J. assembly from the front propeller shaft with a commercially available puller.

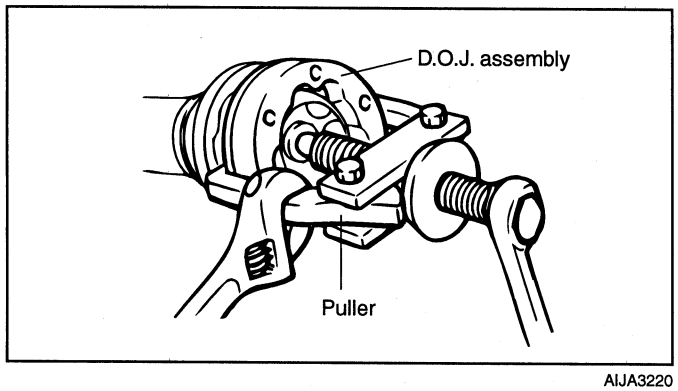

AIJA3220

7. **REMOVAL OF D.O.J. BOOT**

When reusing the D.O.J. boot, apply adhesive tape to the splined section of the propeller shaft before removing.

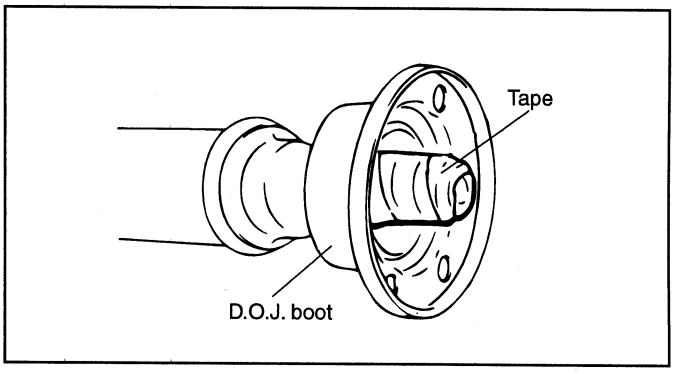

AIJA3230

INSPECTION EIJB0120

1. Check the propeller shaft splines for wear or damage.
2. Check the ball grooves in the inner and outer races for uneven wear, damage or rust.
3. Check the ball surfaces for rust, wear or damage.
4. Check the cage for rust or damage.

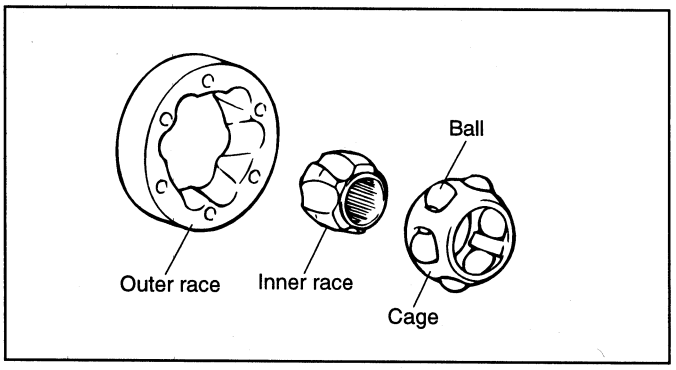

AIJA3240

REASSEMBLY EIJB0130

1. INSTALLATION OF D.O.J. BOOT

Wrap the splined end of the propeller shaft with adhesive tape.

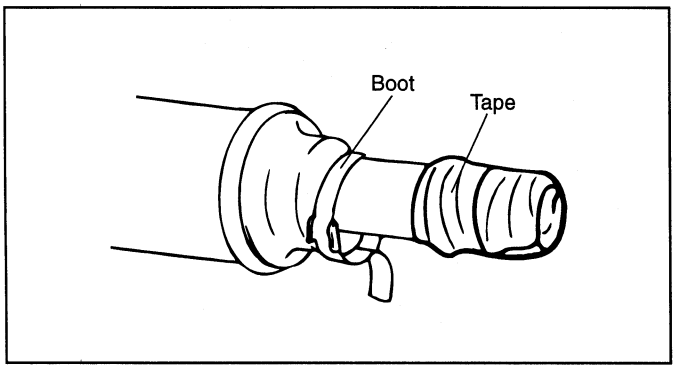

AIJA3250

2. INSTALLATION OF D.O.J. ASSEMBLY

a. Apply a thin coat of the specified grease to the ball grooves of the inner and outer races.

Specified grease : REAMAX FS NO.1

b. Put the cage on the inner race with the matchmarks aligned and install two balls, one in a groove and the other in the groove opposite to that groove. Both balls should be placed in the grooves where they were before disassembly.

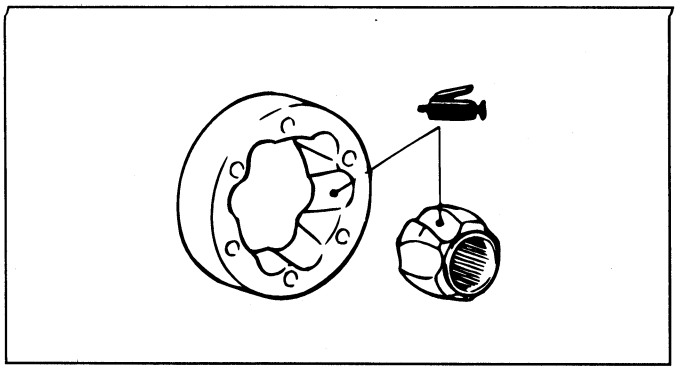

EIJA3260

c. Assemble the inner race and cage in the outer race with their mating marks aligned.
d. Install the remaining balls in their original positions.
e. Check that the outer and inner race rotate smoothly.

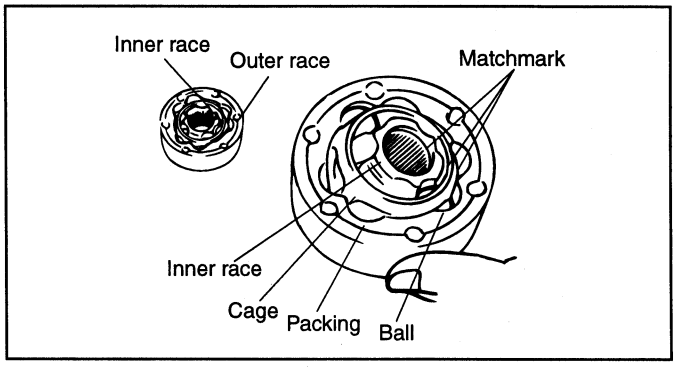

AIJA3270

f. Apply the specified grease to the D.O.J. assembly.

Specified grease : REAMAX FS NO.1 (95±5gr.)

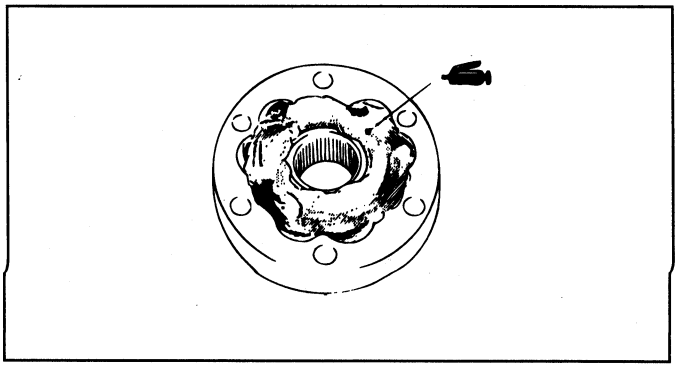

EIJA3280

g. Apply a small amount of specified adhesive in three places, equally divided, on the surface of the D.O.J. ball groove stepped section and then fit the rubber packing.

Specified adhesive : 3M ATD Part No.8121 or 3M ATD Part No.8155 or equivalent

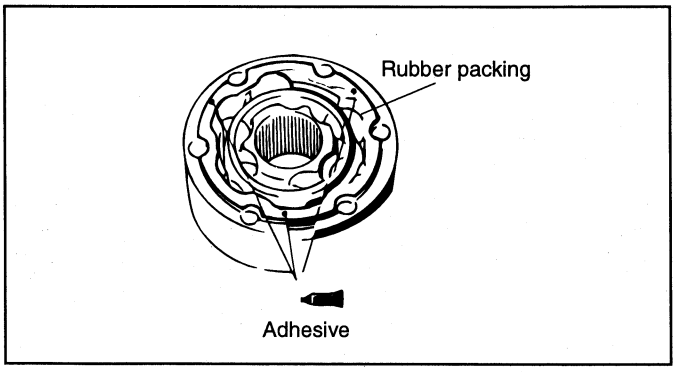

AIJA3290

h. Install the D.O.J. assembly on the propeller shaft while aligning the bolt holes, and hammer the joint assembly using a socket wrench or to install the inner race completely.

NOTE

Be sure that the grooves of the D.O.J. assembly face toward the D.O.J. boot.

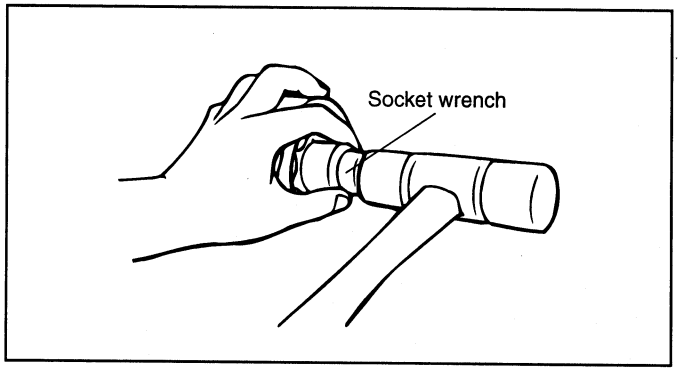

AIJA3300

i. Realign the bolt holes in the boot and D.O.J. assembly utilizing the mounting bolts, and fit the boot on the joint assembly.

j. Fit the rubber packing on the companion flange according to the same procedure as in step (g).

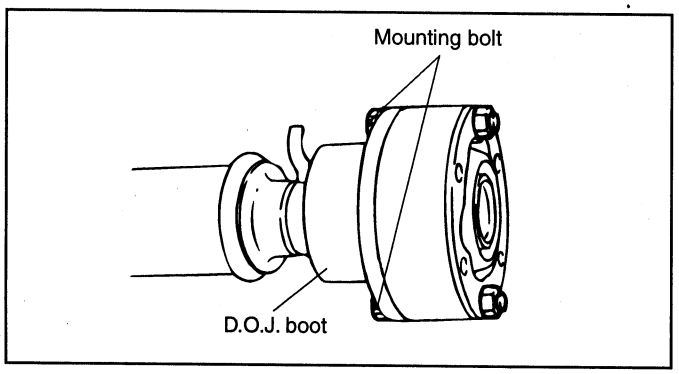

AIJA3310

3. **INSTALLATION OF BOOT BAND**

CAUTION

Position the boot band clip on the side opposite to the bosses which are provided in the boot for ventilation. Be sure to remove grease, if present, from around the bosses because the grease obstructs the ventilation.

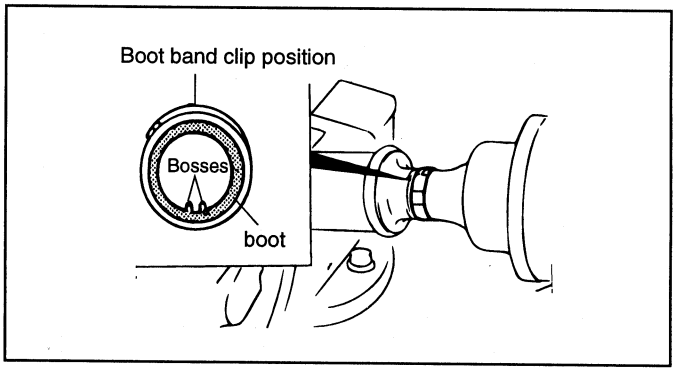

AIJA3320

4. **INSTALLATION OF CENTER BEARING ASSEMBLY / COMPANION FLANGE / SELF-LOCKING NUT**

a. Install the bearing and retainer to the groove of the center bearing bracket.

b. Install the dust seal of the center bearing assembly to the front propeller shaft so that it faces forward.

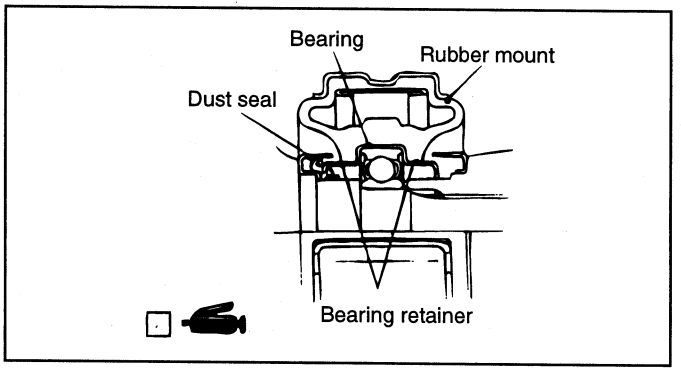

AIJA3330

c. Align the matchmarks on the companion flange and rear propeller shaft.

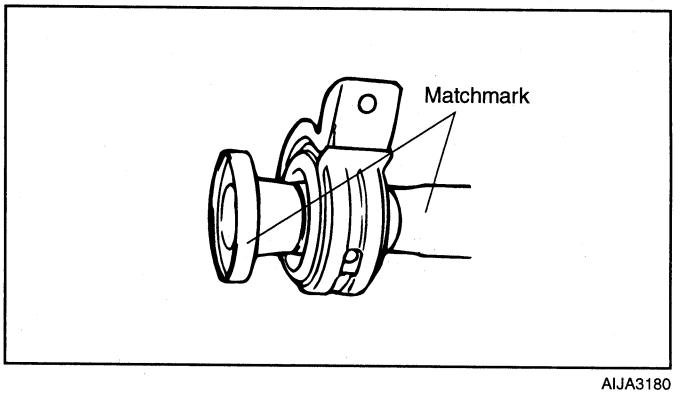

AIJA3180

d. Press-fit the center bearing assembly with the companion flange after tightening the self-locking nut.

5. **INSTALLATION OF D.O.J. ASSEMBLY INSTALLATION BOLTS**

a. Align the matchmarks on the companion flange and D.O.J. assembly.
b. Secure the companion flange and D.O.J. assembly by tightening installation bolts.
c. Check for grease leakage at the D.O.J. boot and companion flange.

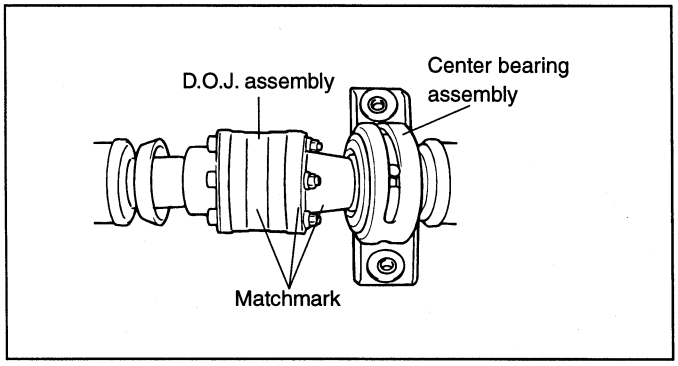

AIJA3170

6. **INSTALLATION OF CENTER BEARING ASSEMBLY**

a. Install the bearing and retainer to the rubber mount groove of the center bearing bracket.
b. Install the dust seal of the center bearing assembly so that it faces foward.

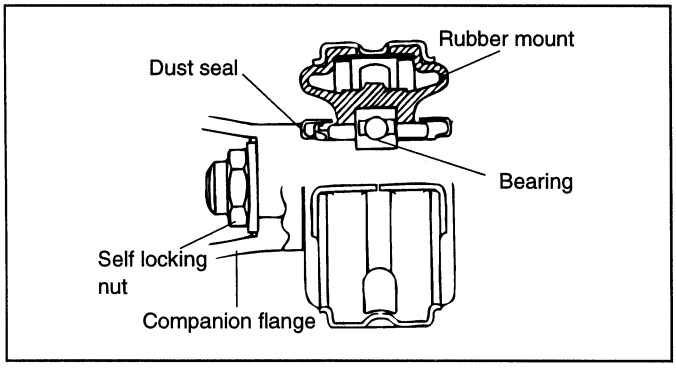

AIJA3340

7. **INSTALLATION OF JOURNAL AND JOURNAL BEARING**

a. Apply the specified grease to the following parts of the universal joint kit. :

- Shafts and grease sumps of the journal.
- Dust seal lips.
- Needle roller bearings.

Specified grease : ALVANIA EP GRADE NO.2

CAUTION

Use of excessive amounts of grease may result in difficulty in assembling the unit and incorrect selection of snap rings.

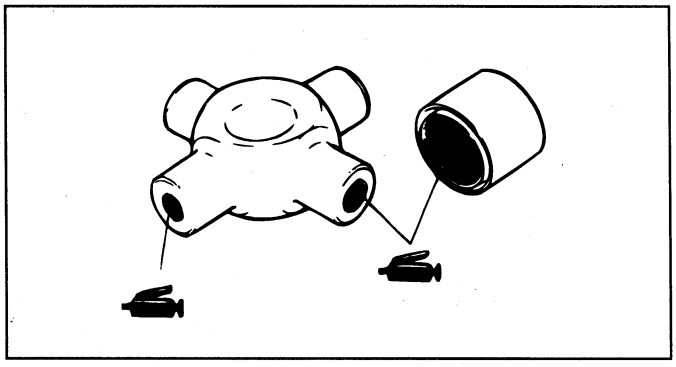

EIJA3350

b. Press-fit the journal bearings in the yoke according to the following procedures:

- Install the base to the special tool.
- Insert both bearings in the yoke. Hold and press-fit them using the special tool.

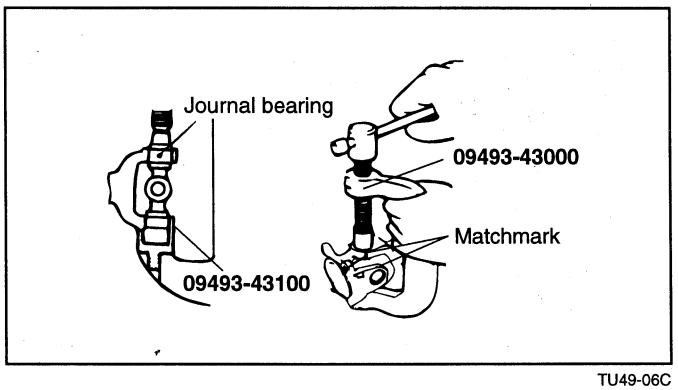

TU49-06C

8. INSTALLATION OF SNAP RINGS

a. Install snap rings of the same thickness onto both sides of each yoke.
b. Press the bearing and journal into one side using a brass bar.
c. Measure the clearance between the snap ring and the groove wall of the yoke with a feeler gauge. If the clearance exceeds the standard value, replace the snap rings.

Standard value : 0.02-0.06 mm

Snap ring thickness mm	Identification color
1.28	-
1.31	Yellow
1.34	Blue
1.37	Purple
1.40	Brown

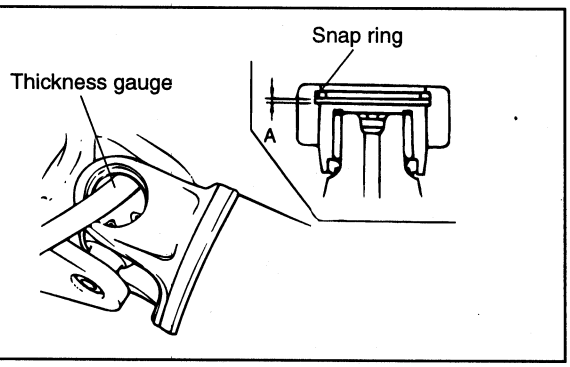

AIJA3360

DRIVESHAFT

FRONT DRIVESHAFT ASSEMBLY

COMPONENTS EIJB0140

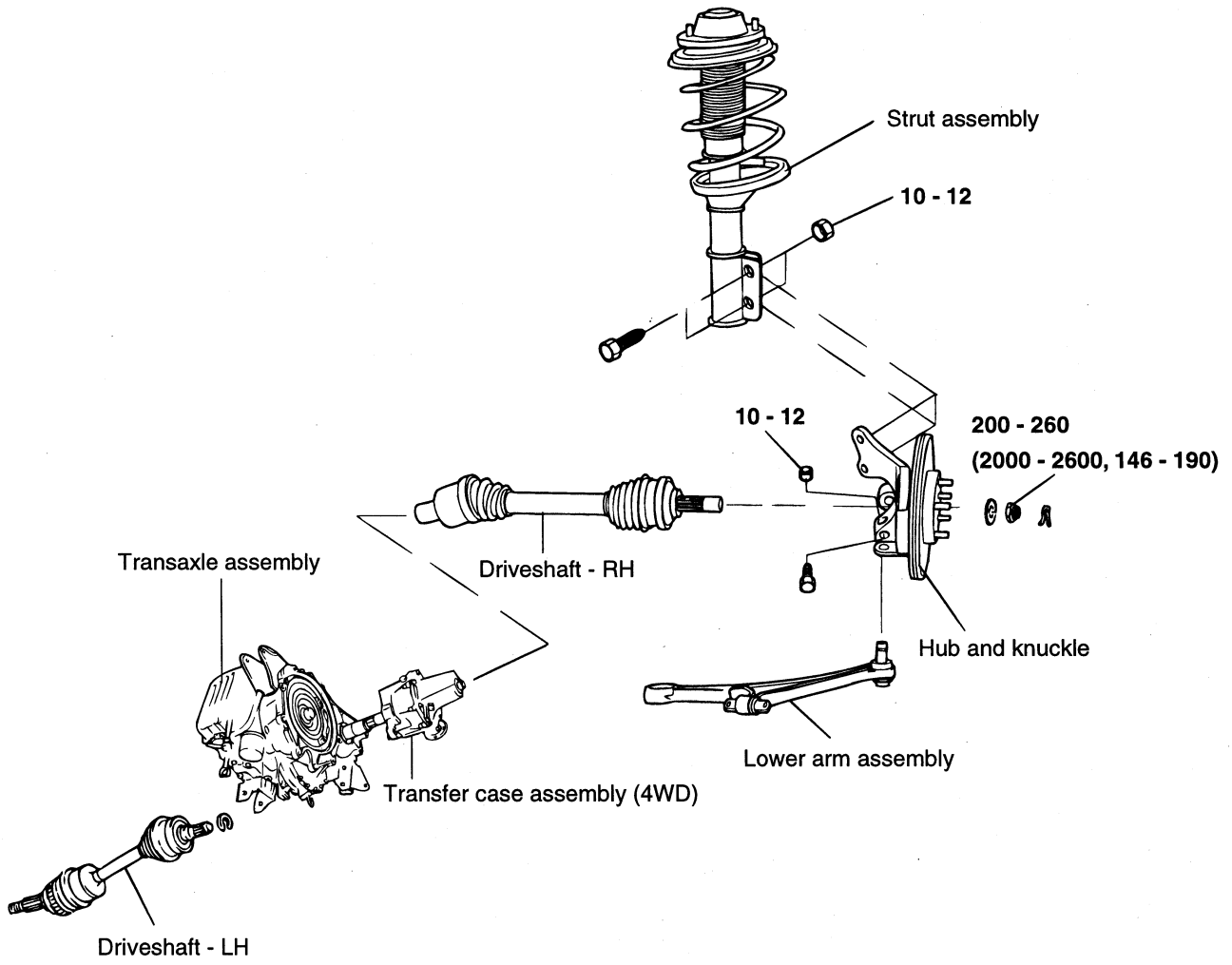

TORQUE : Nm (kg·cm, lb·ft)

AIJA001A

REMOVAL EIJB0150

1. Remove the aluminum wheel cover using a flat-blade screwdriver.
2. Raise the vehicle and remove the wheel.
3. Remove the split pin and driveshaft nut.

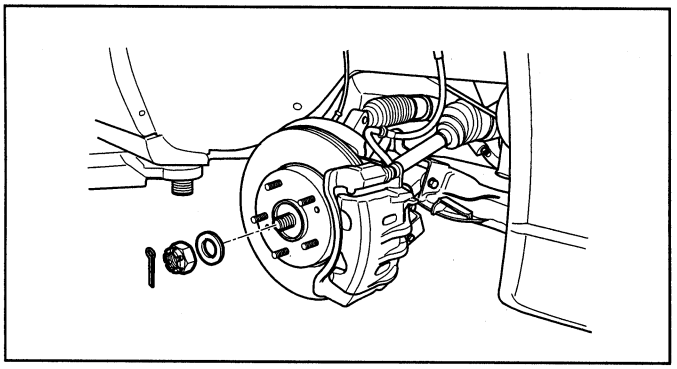

KGX7002A

4. Drain the transaxle oil.
5. Detach the wheel speed sensor cable from the bracket (for vehicles equipped with ABS).
6. Detach the brake hose cable from the bracket.

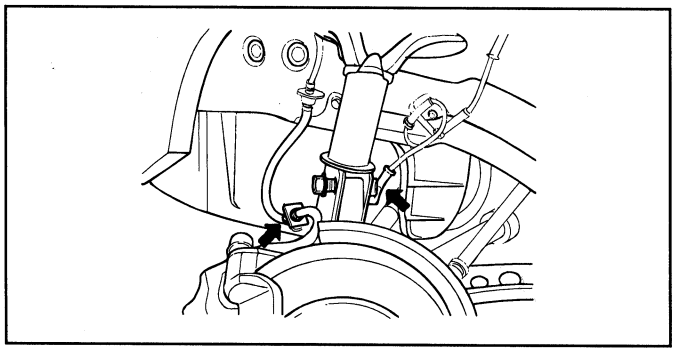

EIHA002A

7. Remove two flange bolts and detach the knuckle from the strut.

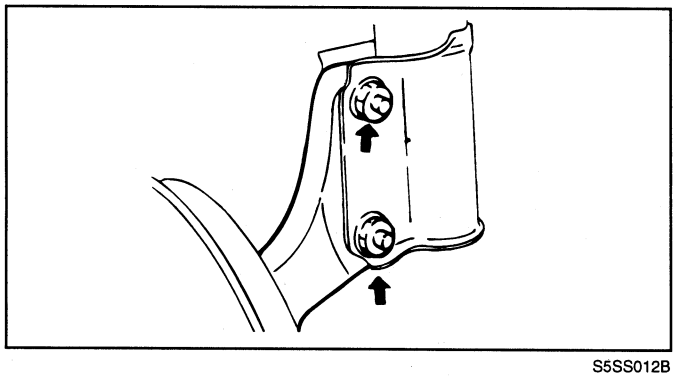

S5SS012B

8. Separate the driveshaft from the axle hub by tapping it lightly with a plastic hammer.

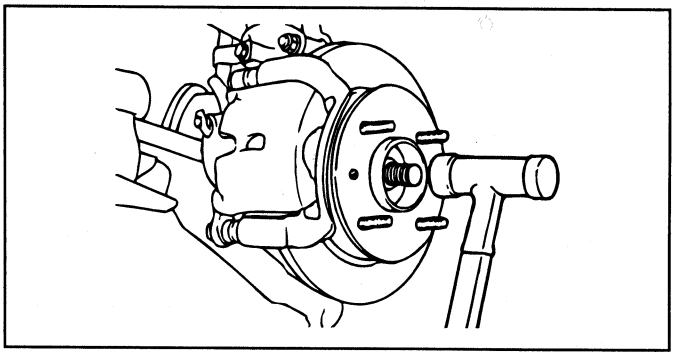

EIHA210B

9. Drive off the driveshaft from the transaxle or transfer inner shaft using a hammer and brass bar.

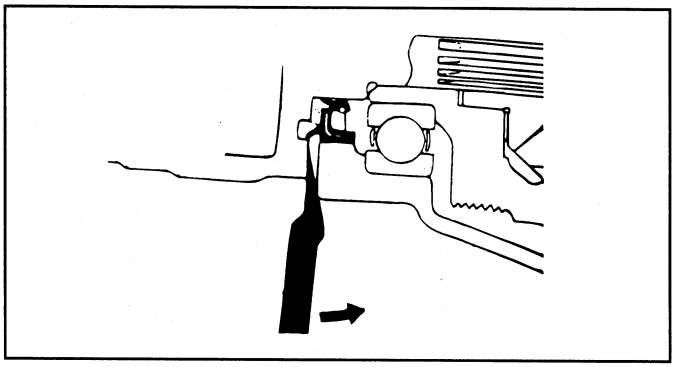

D9Y008-1

CAUTION

1. **Use a pry bar so you do not damage the joint.**
2. **If you pull the driveshaft by excessive force, components inside the joint kit can be displaced causing the boot to be torn and the bearing to be damaged.**
3. **Plug the transaxle case opening with an oil seal cap in order to avoid contamination.**
4. **Support the driveshaft properly.**
5. **Replace the retainer ring each time the drive-shaft is removed from the transaxle case.**
6. **While loosening the driveshaft nut, do not allow vehicle weight to be concentrated on the wheel bearing. If the vehicle moves, hold the wheel bearing using the special tool.**

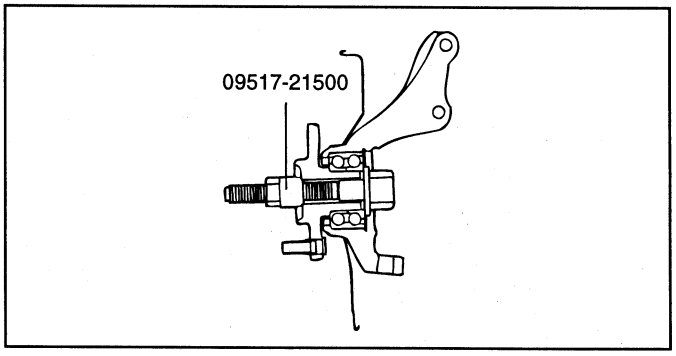

S5DS007F

INSPECTION EIHA2200

1. Check the driveshaft boots for damage and deterioration.
2. Check the splines for wear and damage.
3. Check the ball joints for wear and operating condition.
4. Check the dynamic damper for damage and deterioration

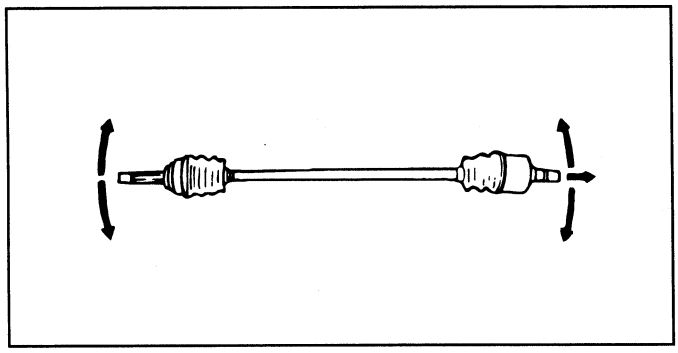

EIA9211A

INSTALLATION EIJB0170

1. Coat the driveshaft splines and sliding surface of the differential case with gear oil.
2. Before installing the driveshaft, set the gap in the circlip facing downward.
3. After installation, check that the driveshaft cannot be removed by hand.
4. Install the washer under the driveshaft nut with the convex side outward as shown in the illustration.

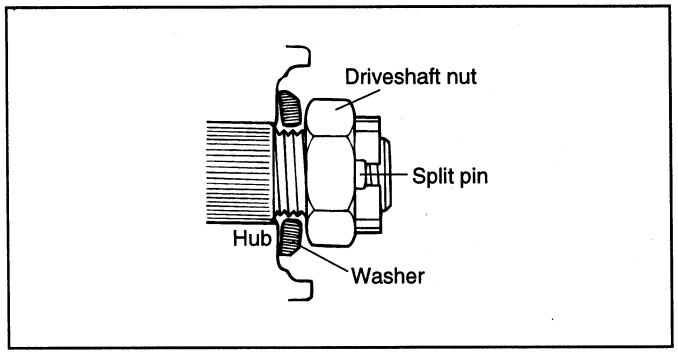

EIA9212A

FRONT DRIVESHAFT (DOJ-BJ TYPE)

COMPONENTS EIJB0220

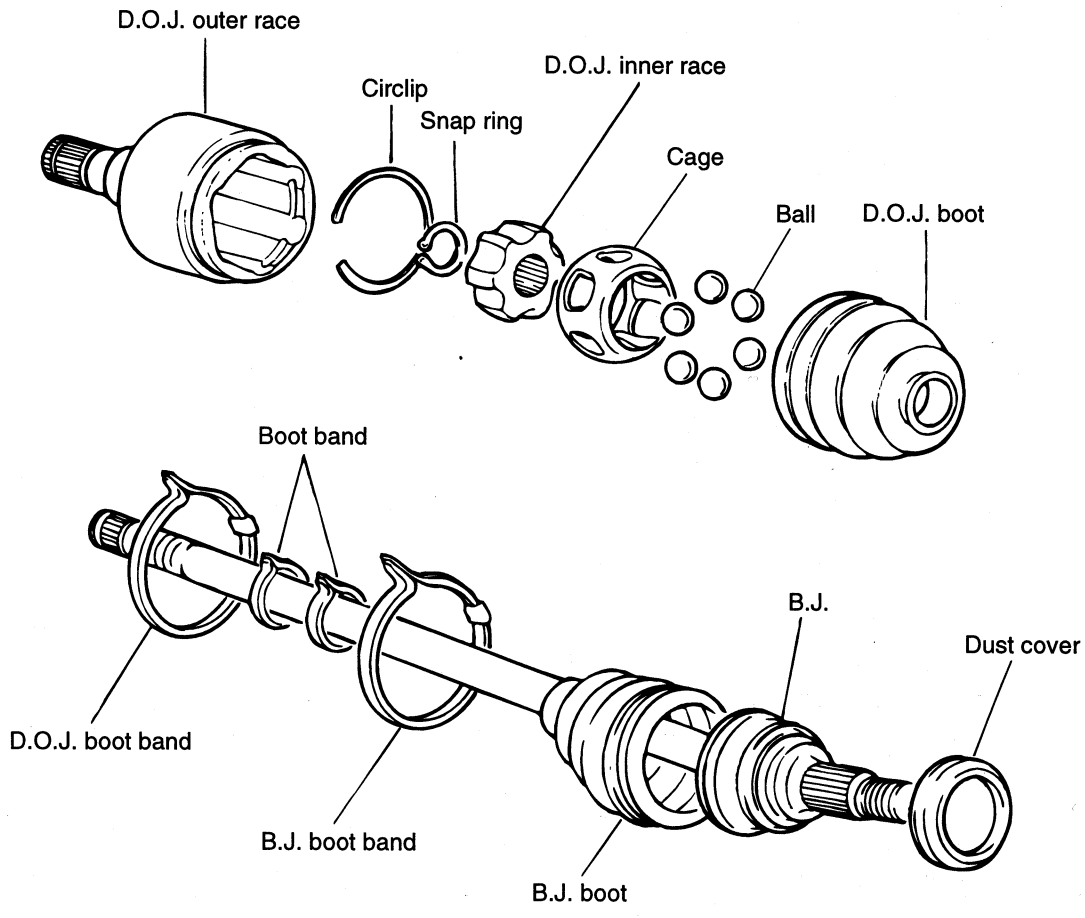

TORQUE : Nm (kg·cm, lb·ft)

AIJA003A

DISASSEMBLY EIJB0230

CAUTION

1. **Do not disassemble the B.J. assembly.**
2. **Special grease must be applied to the driveshaft joint.**
3. **The boot band should always be replaced with a new one.**

1. Remove the D.O.J. boot bands and pull the D.O.J. boot from the D.O.J. outer race.

CAUTION

Be careful not to damage the boot.

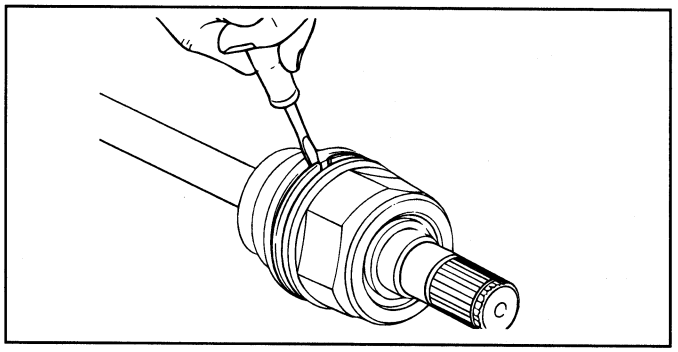

EIDA251A

2. Remove the circlip with a flat-blade screwdriver.

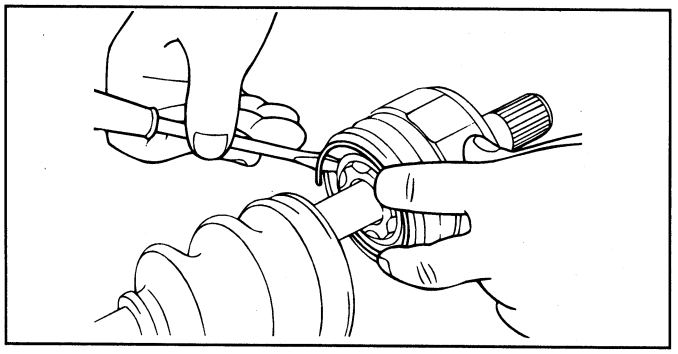

EIDA251B

3. Pull out the driveshaft from the D.O.J. outer race.

4. Remove the snap ring and take out the inner race, cage and balls as an assembly.

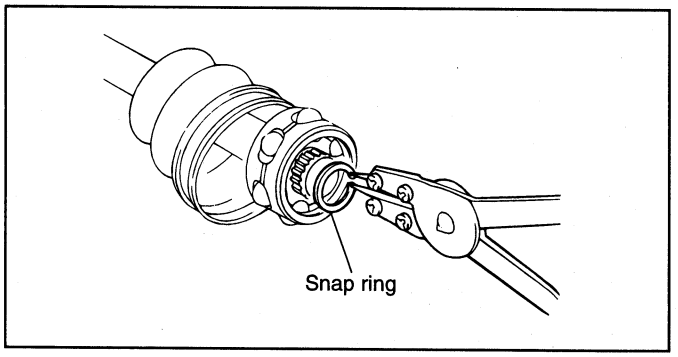

EIDA251C

5. Clean the inner race, cage and balls without disassembling.

6. Remove the B.J. boot bands and pull out the D.O.J. boot and B.J. boot.

CAUTION

If the boot is to be reused, wrap tape around the driveshaft splines to protect the boot.

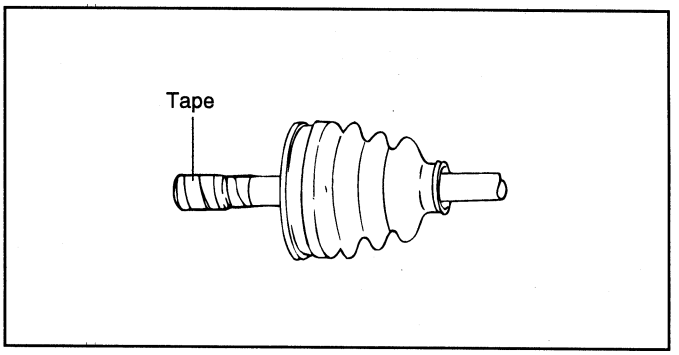

EIDA251D

INSPECTION EIJB0240

1. Check D.O.J. outer race, inner race, cage and balls for rust or damage.

2. Check the splines for wear.

3. Check that there is no water, foreign material, or rust in the B.J. boot.

CAUTION

When the B.J. assembly is to be reused, no do not routinely wipe out the grease. Check that there are foreign substances in the grease. If necessary, clean the B.J. assembly and replace the grease.

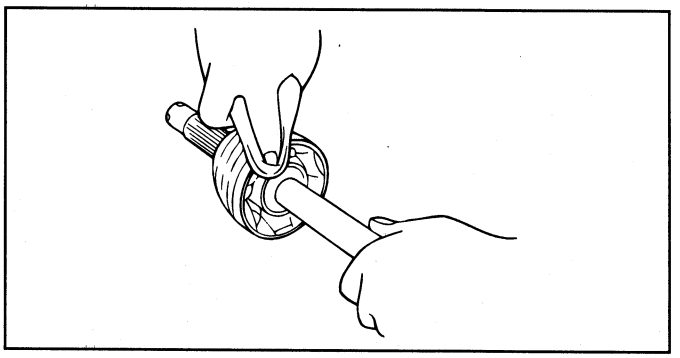

EIDA252A

REASSEMBLY EIJB0250

1. Wrap tape around the driveshaft splines to prevent damage to the boots.
2. Apply the specified grease to the driveshaft and install the boots.

Recommended lubricant :

B.J. Boot grease :
CENTOPLEX 278M/136K (MS511-50)
D.O.J. Boot grease :
AMBLYGON TA10/2A (MS511-50)

3. Apply the specified grease to the inner race and cage. Install the cage so that it is offset on the race as shown.

NOTE

Use the grease included in the repair kit.

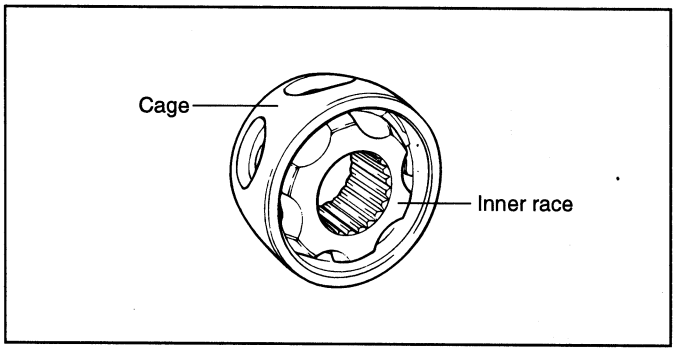

EIDA253B

4. Apply the specified grease to the cage and fit the balls into the cage.
5. Install the chamfered side of the cage as shown in the illustration, and then install the inner race onto the driveshaft. Install the snap ring.

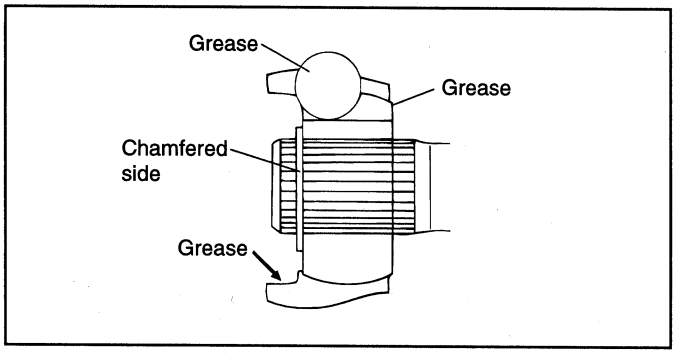

EIDA253C

6. Apply the specified grease to the B.J. outer race and install the outer race onto the driveshaft.

B.J. boot grease gr.

Total : 135±6 gr.

In the joint : 70±3 gr.

In the boot : 65±3 gr.

7. Apply the specified grease to the D.O.J. outer race and install the circlip.

D.O.J. boot grease gr.

Total : 105±6 gr.
In the joint : 65±3 gr.
In the boot : 40±3 gr.

8. Tighten the D.O.J. boot bands.
9. Add the specified grease to the B.J., using as much as was wiped away at inspection.
10. Install the boots.
11. Tighten the B.J. boot bands.
12. To control the volume of air in the D.O.J. boot, keep the specified distance between the boot bands when they are tightened.

Standard value (A)	mm (in.)
LH side	RH side
509.2±2 (20.05±0.08)	530±2 (20.87±0.08)

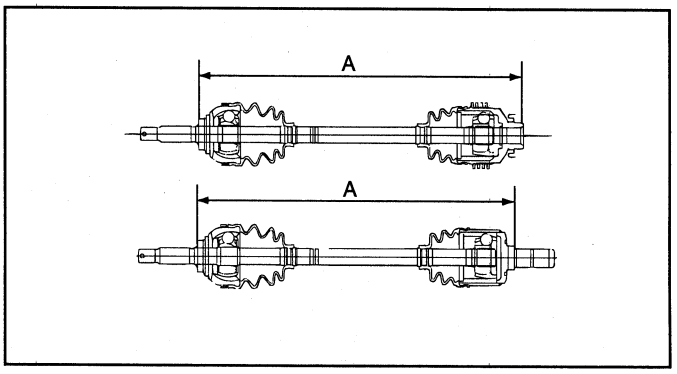

EIJA004A

FRONT DRIVESHAFT (T.J-BJ TYPE)

COMPONENTS EIJB0180

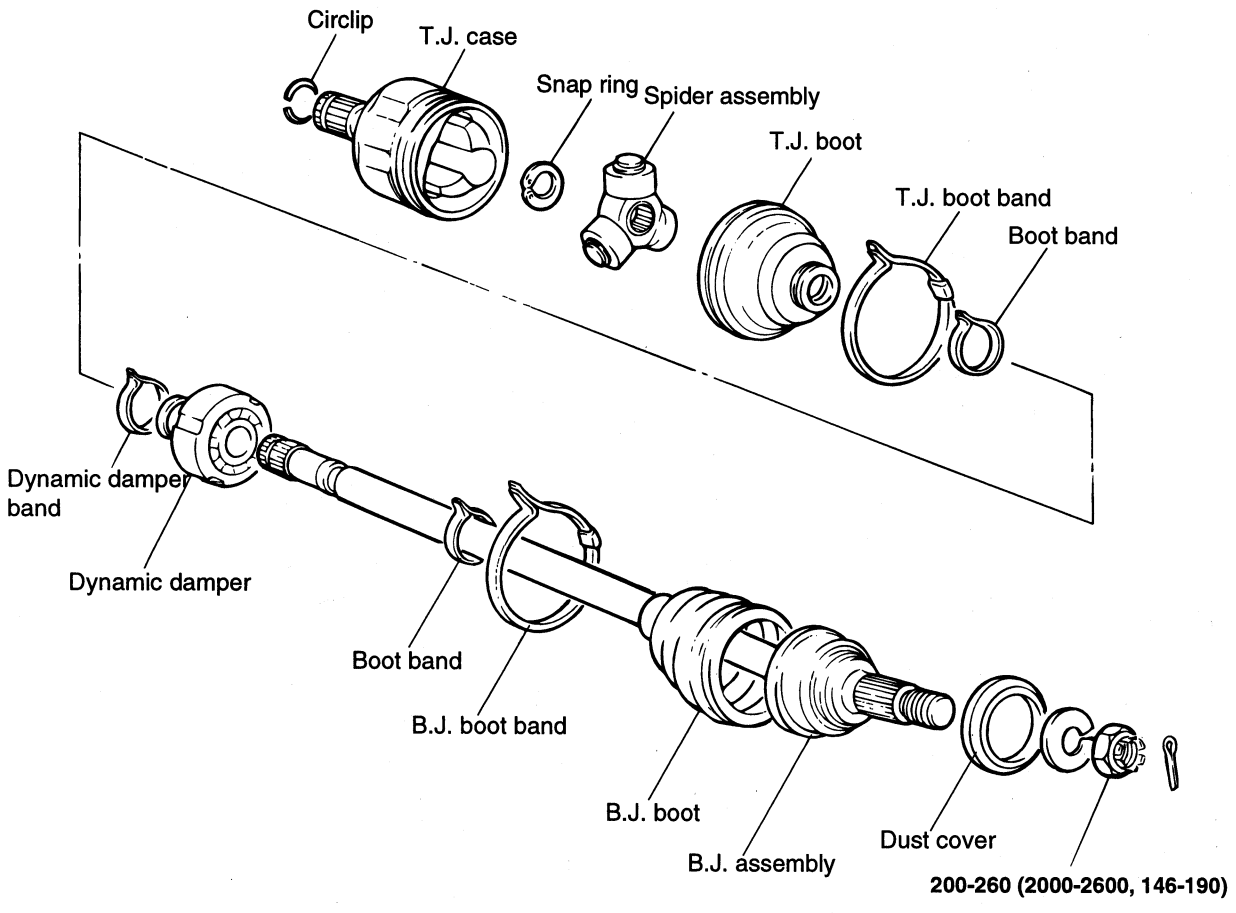

TORQUE : Nm (kg·cm, lb·ft)

AIDA300A

DISASSEMBLY EIJB0190

NOTE

1. **Do not disassemble the B.J. assembly.**
2. **Special grease is used on the driveshaft joint. Do not substitute with another type of grease.**
3. **The boot band should always be replaced with a new one.**

1. Remove the T.J. boot bands and pull the T.J. boot from the T.J. case.

NOTE

Be careful not to damage the boot.

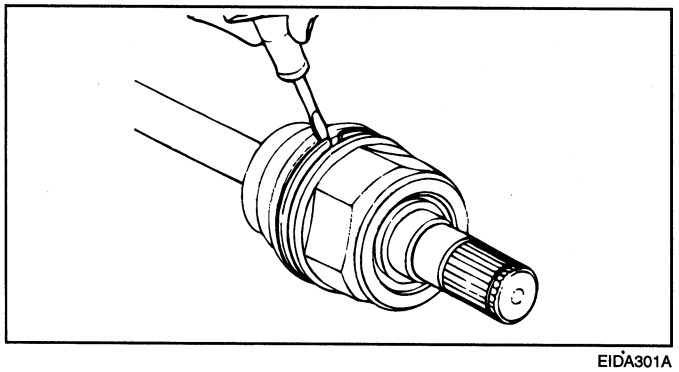

EIDA301A

2. Remove the snap ring and spider assembly from the driveshaft.

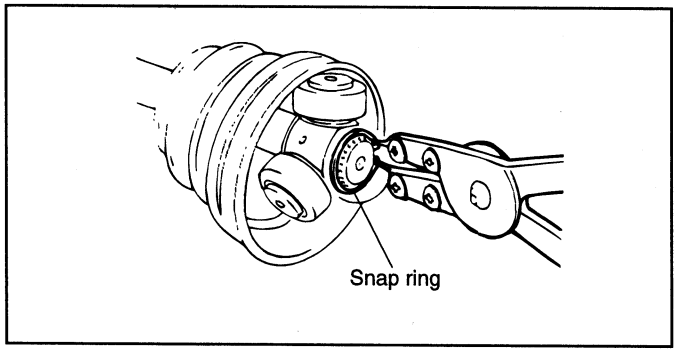

EIDA301B

3. Clean the spider assembly.

4. Remove the B.J. boot bands and pull out the T.J. boot and B.J. boot.

NOTE

If the boot is to be reused, wrap tape around the drive shaft splines to protect the boot.

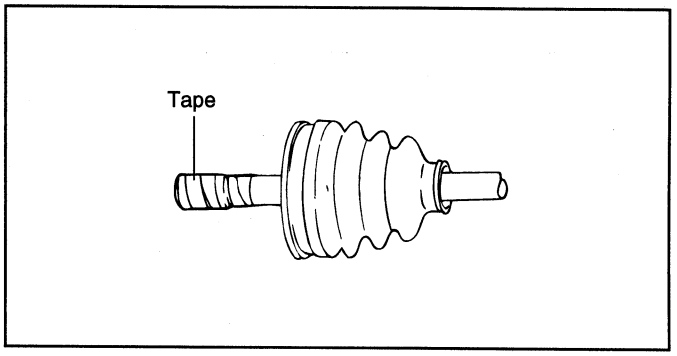

EIDA251D

INSPECTION EIDA3020

1. Check the driveshaft spline for wear or damage.

2. Check for entry of water and/or foreign material into the B.J.

3. Check the spider assembly for roller rotation, wear or corrosion.

4. Check the groove inside the T.J. case for wear or corrosion.

5. Check the dynamic damper for damage or cracking.

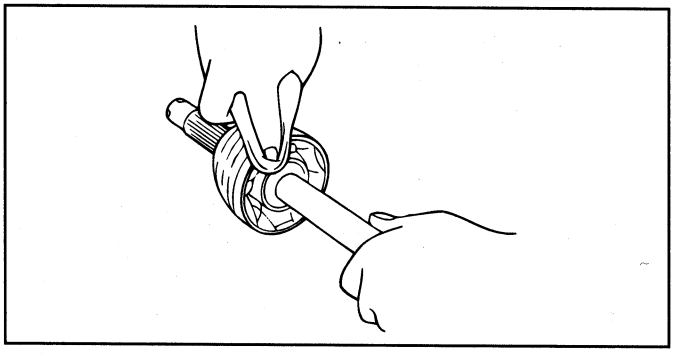

EIDA252A

REASSEMBLY EIJB0215

1. Wrap tape around the driveshaft splines (T.J. side) to prevent damage to the boots.

2. Apply the specified grease to the driveshaft and install the boots.

Recommended lubricant

B.J. Boot grease :
Centoplex 278M/136K (MS511-50)
T.J. Boot grease :
Oneluber MK (MS511-50)

3. To install the dynamic damper, keep the B.J. shaft in a straight line and secure the dynamic damper in the direction illustrated, and then install the small boot band.

Standard value (A) : 160mm (6.3 in.)

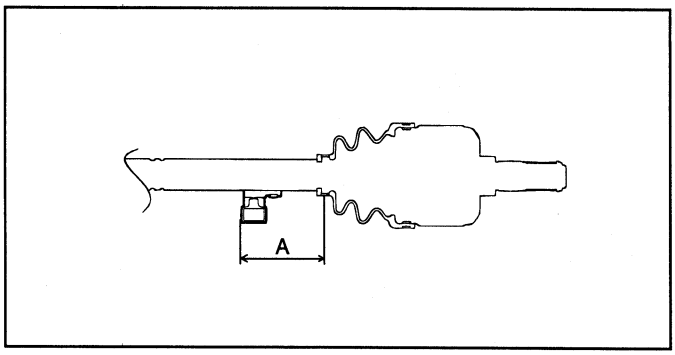

EIHA005A

4. Apply the specified grease into the T.J. boot and install the boot.

T.J. boot grease gr.		
Total	120±6gr. (2.0L M/T)	145±6gr. (2.4L M/T)
In the boot	75±3gr.	100±3gr.
In the joint	45±3gr.	45±3gr.

5. Tighten the T.J. boot bands.
6. Add the specified grease to the B.J. as much as was wiped out during inspection.
7. Install the boots.
8. Tighten the B.J. boot bands.
9. To control the air in the T.J. boot, maintain the specified distance between the boot bands when they are tightened.

STANDARD VALUE (A)

	2.0L M/T	2.4L M/T (2WD)	2.4L M/T (4WD)
LH	529.2±2 (20.83±0.08)	530±2 (20.9±0.08)	531±2 (20.91±0.08)
RH	818.2±2 (32.21±0.08)	820±2 (32.3±0.08)	533.7±2 (21.01±0.08)

* Unit : mm (in.)

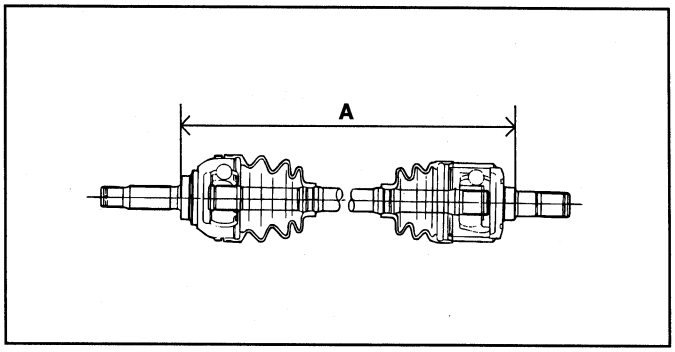

EIDA253D

FRONT AXLE

FRONT HUB/KNUCKLE

COMPONENTS EIJB0260

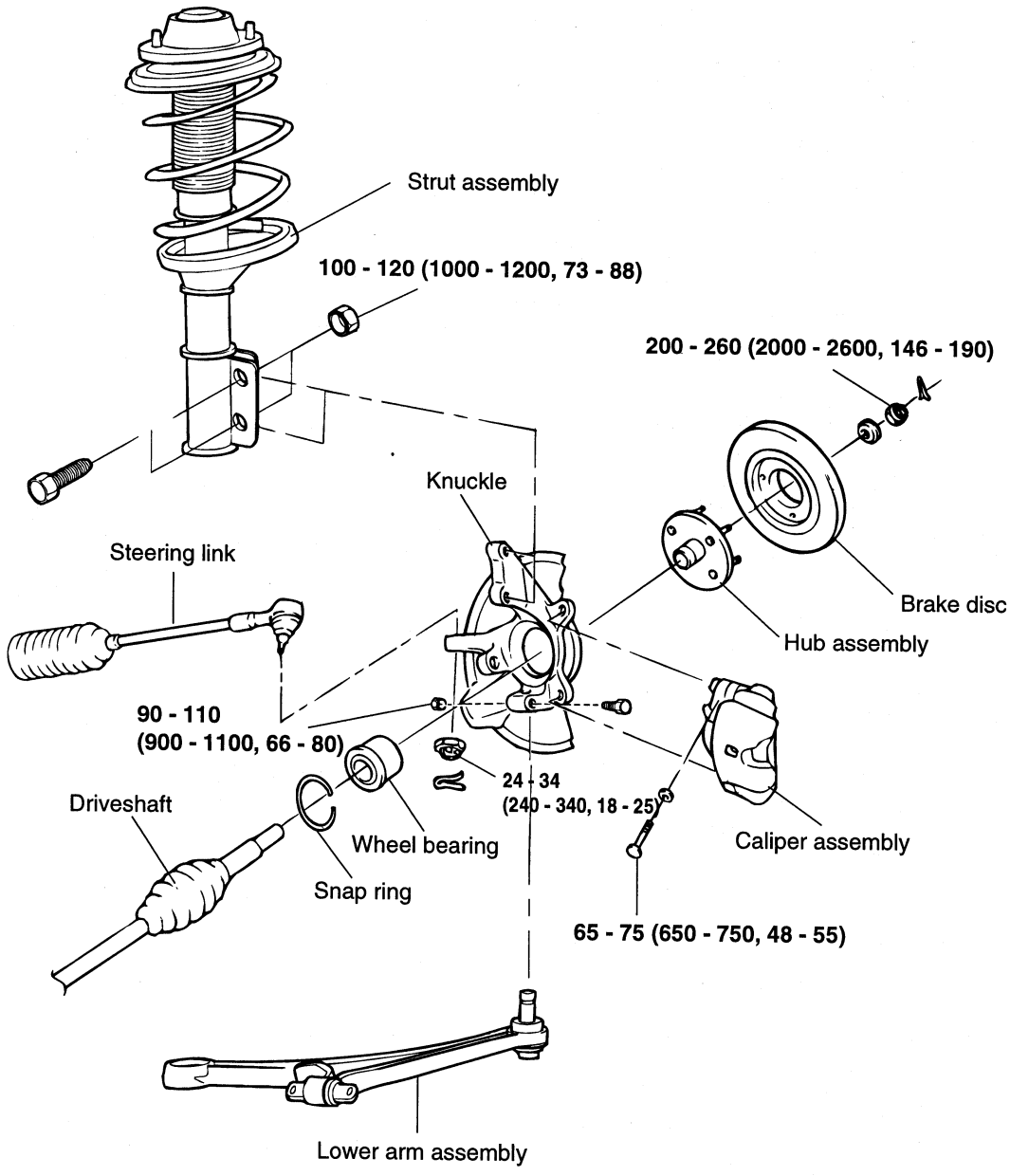

TORQUE : Nm (kg·cm, lb·ft)

AIJA012A

REMOVAL EIJB0270

1. Raise the vehicle and remove the front wheel.
2. Remove the wheel speed sensor from the knuckle.
3. Remove the brake caliper and suspend it with a wire.

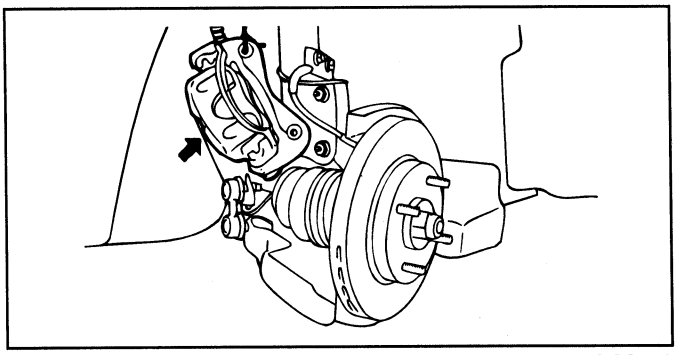

S5DS018A

4. Remove the split pin and driveshaft nut from the front hub.

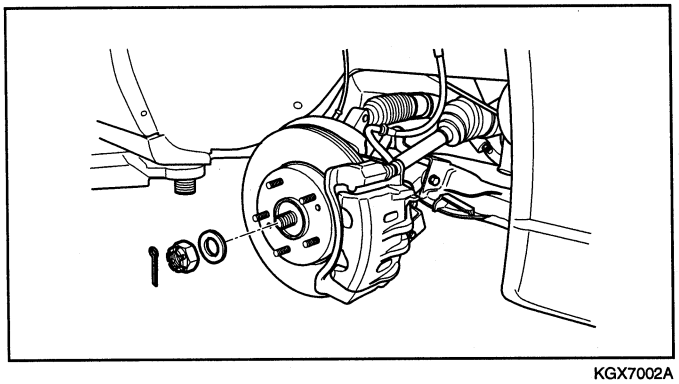

KGX7002A

5. Remove the strut and the two bolts mounting the knuckle.

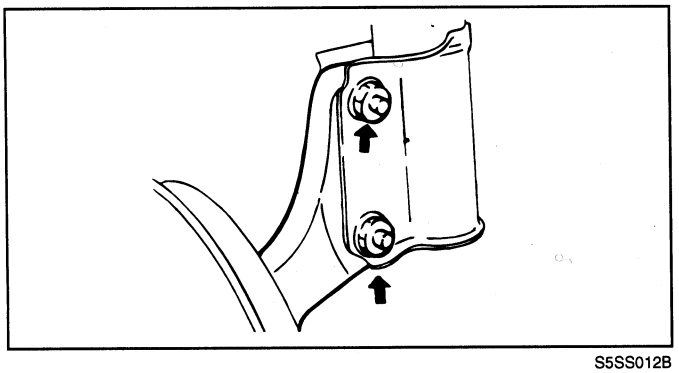

S5SS012B

6. Disconnect the tie rod end ball joint from the knuckle using the special tool.

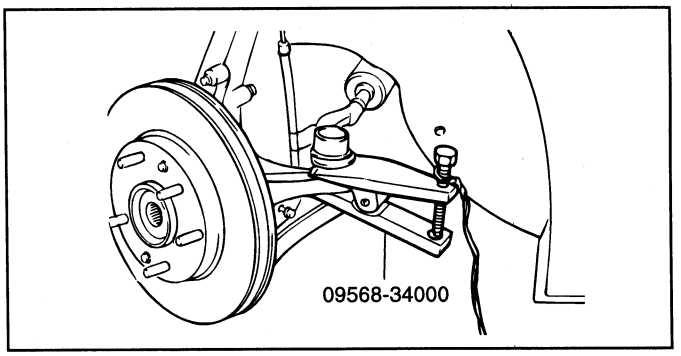

EIHA018A

7. Remove the lower arm ball joint mounting bolt.

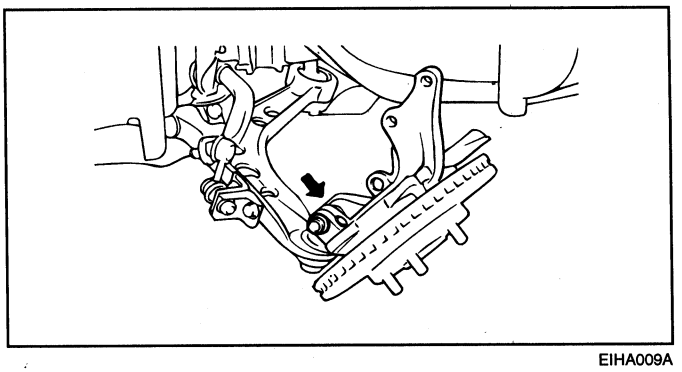

EIHA009A

8. Using a plastic hammer, drive out the axle hub from the driveshaft.

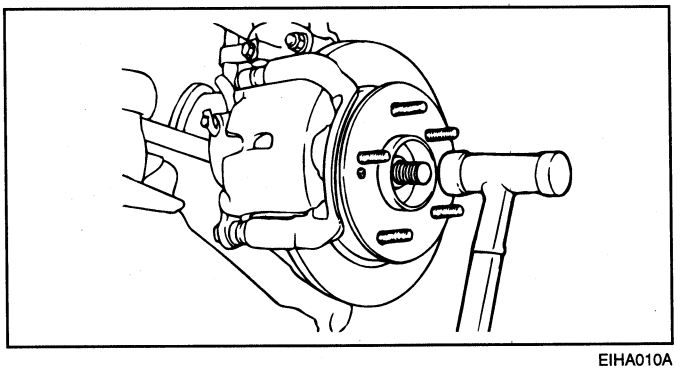

EIHA010A

9. Remove the front axle assembly.

DISASSEMBLY EIJB0280

1. Remove the brake disc from the hub.
2. Remove the snap ring.

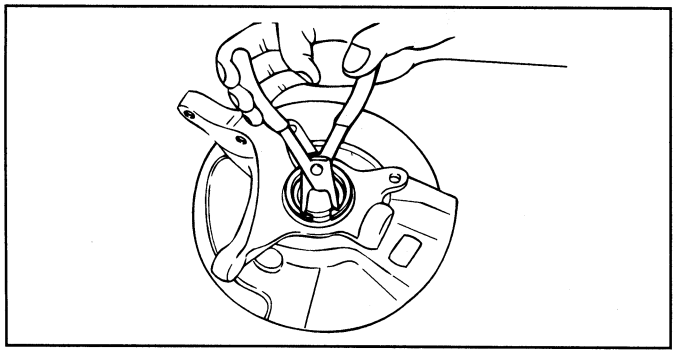

V5DS016A

3. Remove the hub from the knuckle using the special tool.
   - Install the special tool to the hub and knuckle.
   - Tighten the nut of the special tool to disconnect the hub from the knuckle.

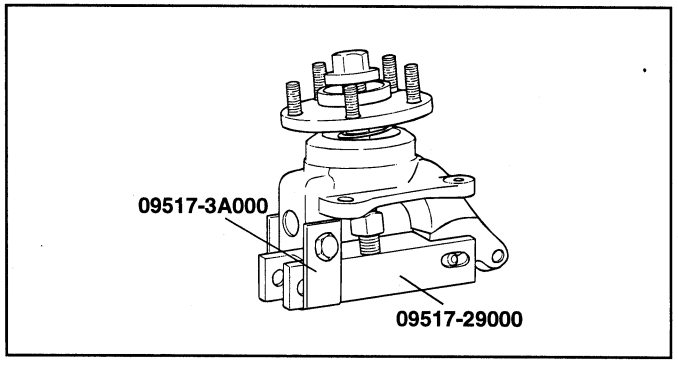

EIJA013C

4. Using the special tool, remove the wheel bearing inner race from the hub.

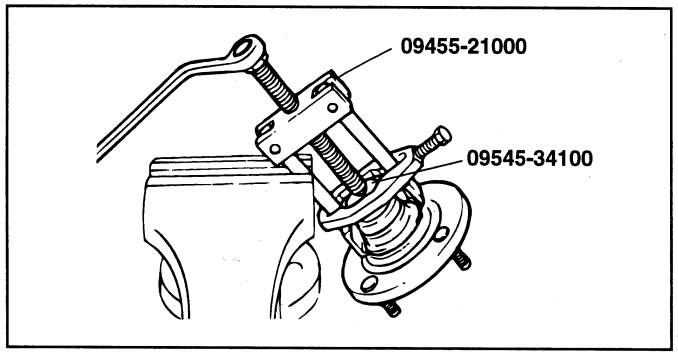

S5DS020C

5. Using the special tool, remove the wheel bearing outer race from the knuckle.

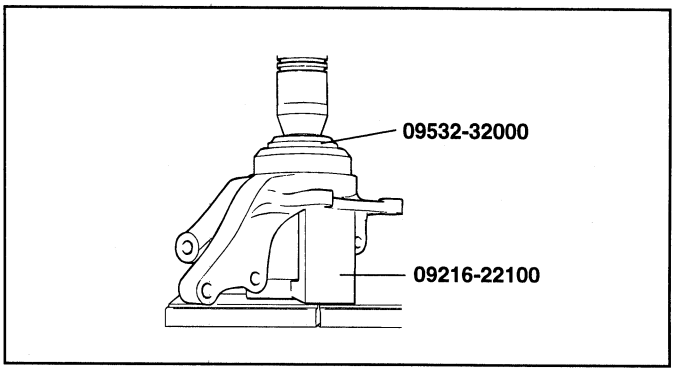

KSMDS17C

INSPECTION EIHA4120

1. Check the hub for cracks and check the splines for wear.
2. Check the hub bolts for cracks and damage.
3. Check the brake disc for scoring and damage.
4. Check the knuckle for cracks.
5. Check the bearings for defects.

REASSEMBLY EIJB0300

1. Apply a thin coat of multi-purpose grease to the surface of the knuckle and bearing.
2. Using the special tool, press the bearing onto the knuckle.

Press-in load [kg(f), (lb(f))] : 4500-5000 (9921-11023)

NOTE

- **Do not press against the outer race of the wheel bearing because that can cause damage to the bearing assembly.**
- **Always use a new bearing assembly.**

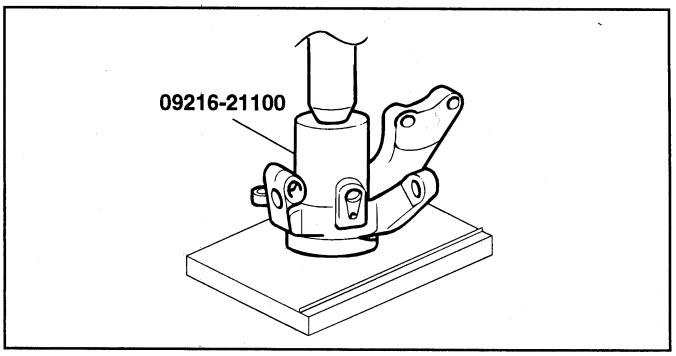

EIHA012A

3. Install the snap ring into the groove of the knuckle.
4. Install the backing plate to the knuckle.
5. Press the hub onto the knuckle using a special tool.

Press-in load [kg(f), (lb(f))] : 2000-2500(4409-5512)

NOTE

Do not press against the outer race of the wheel bearing because this can cause damage to the bearing assembly.

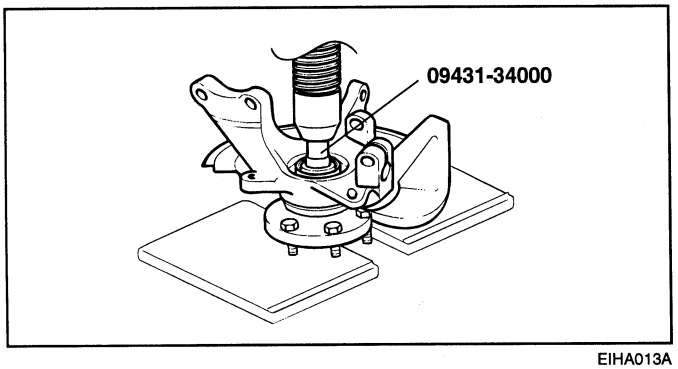

EIHA013A

6. Rotate the hub several times while seating the bearing.
7. Measure the wheel bearing starting torque.

Wheel bearing starting torque [Limit]:
1.88 Nm (18.8kg.cm, 16.64lb.in) or less

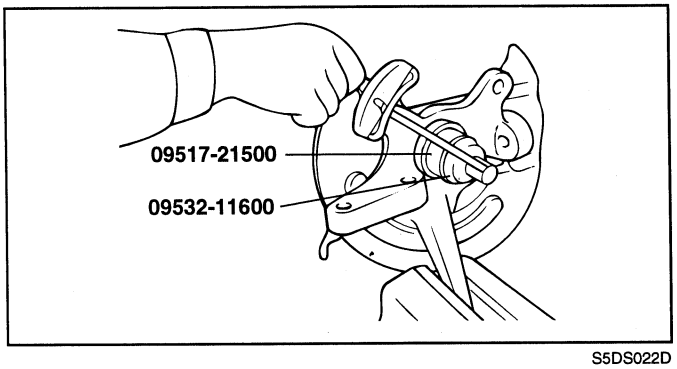

S5DS022D

8. Measure the end play of the hub by installing a dial gauge and verify that it is within specifications.

Hub end play : 0.008 mm (0.0003 in.) or less

9. Remove the dial gauge.
10. Install the disc to the hub.

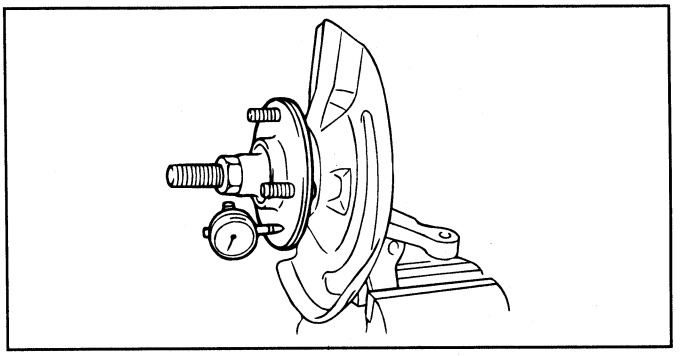

S5DS022E

REAR AXLE

REAR AXLE/HUB

COMPONENTS EIJB0310

<DRUM BRAKE>

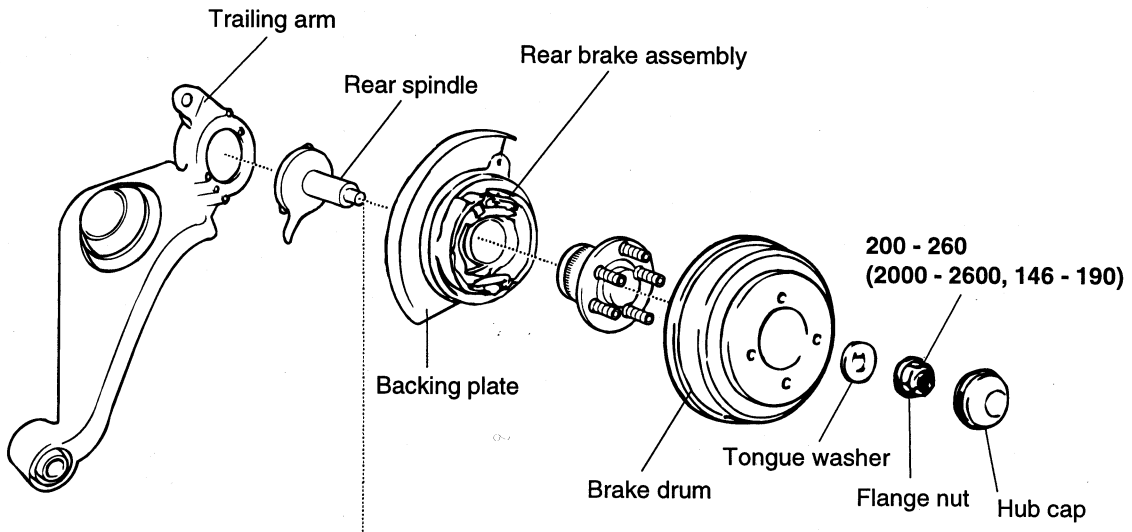

<DISC BRAKE>

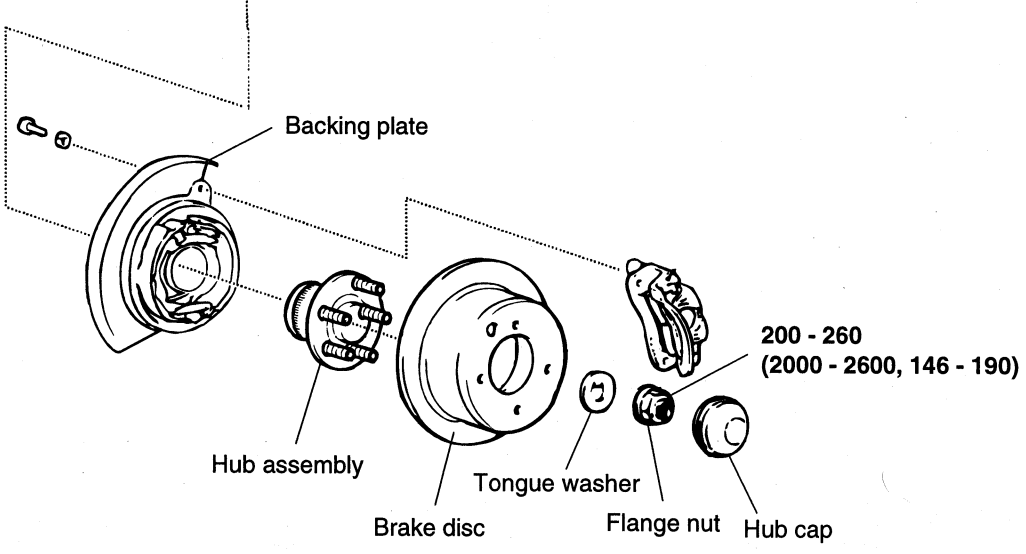

TORQUE : Nm (kg·cm, lb·ft)

AIJA014A

REMOVAL EIJB0320

1. Jack the vehicle up and remove the wheel.
2. After unstaking the flange nut, remove the nut and tongue washer.

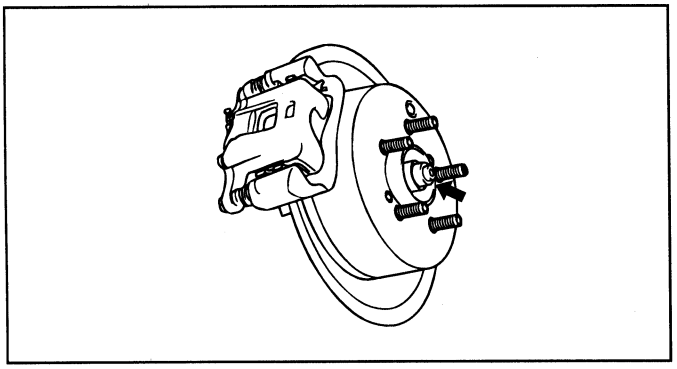

EIJA005A

3. Remove the drum.
4. Remove the brake line.
5. Remove the parking brake assembly.
6. Remove the parking brake cable.
7. Remove four bolts mounting the spindle to the trailing arm complete and disconnect the spindle, backing plate and rear hub assembly.

INSPECTION EIJB0330

1. Check the rear hub assembly for wear and damage.
2. Check the spindle for cracks and damage.
3. Check the backing plate for excessive transformation and damage.

MEASUREMENT OF THE END PLAY OF THE WHEEL BEARING

1. Install a dial gauge to the surface of the hub as shown in the illustration.

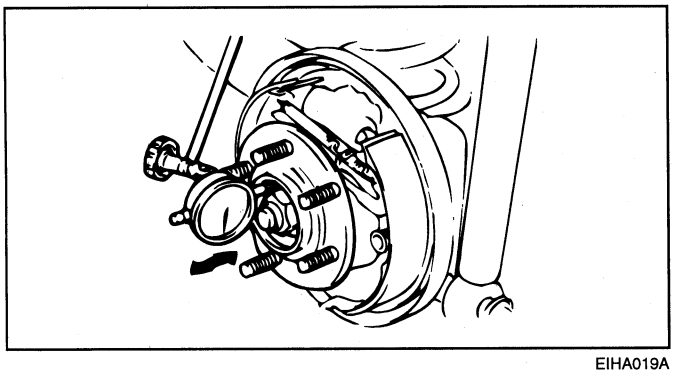

EIHA019A

2. Check the axial motion of the hub.

Limit value : 0.05mm or less

3. If the end play is over the limit, loosen the flange nut and tighten it again to the specified torque. Then measure it again.
4. If the end play is beyond the limit, replace the rear hub assembly.

MEASURING THE STARTING TORQUE OF THE HUB

1. Rotate the hub several times to seat the bearing.
2. After suspending the spring balance to the hub bolt, check the scale for spring balance, pulling it at a 90° angle.

Starting torque of rear hub rotation :

27N (6.1 lbs) or less

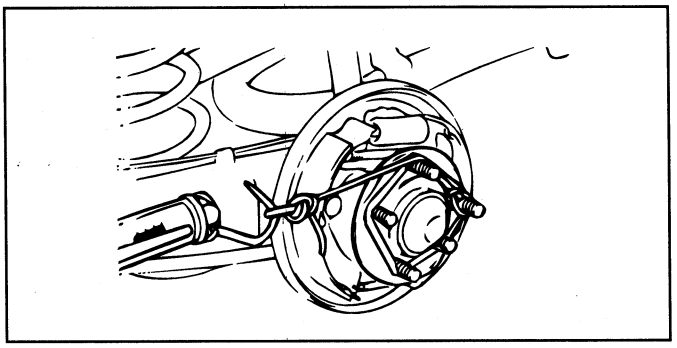

EIHA020A

3. If the starting torque is over the limit, loosen the flange nut and tighten it again to the specified torque. Then measure it again.
4. If the starting torque is beyond the limit, replace the rear hub assembly.

INSTALLATION EIJB0340

1. Installation is the reverse of removal.

NOTE

- **Don't re-use a hub assembly after it has been disassembled.**
- **After replacing the rear hub assembly, refill the brake fluid and bleed the brake line.**

REAR AXLE/HUB (4WD)

COMPONENTS EIJB0350

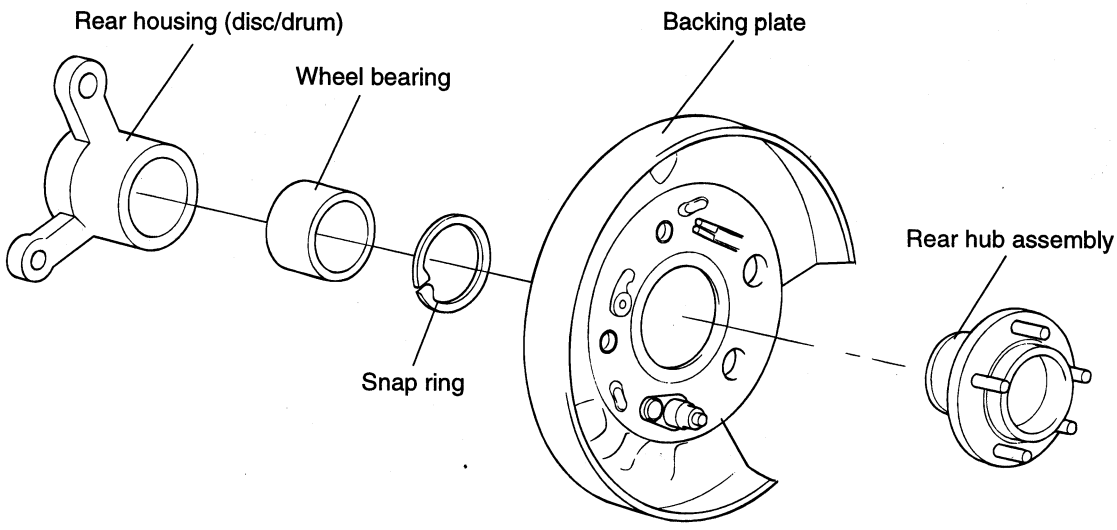

*** NOTE : This vehicle is full time 4WD**

AIJA014C

REMOVAL EIJB0360

1. Raise the vehicle and remove the wheel and tire.
2. Remove the split pin and flange nut.

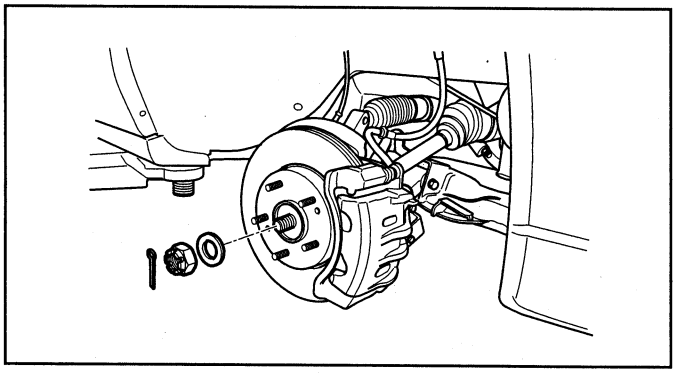

KGX7002A

3. Remove the brake disc.
4. Detach the wheel speed sensor (for a vehicle equipped with ABS)
5. Remove the parking brake assembly.
6. Remove four(4) the rear housing mounting nuts.

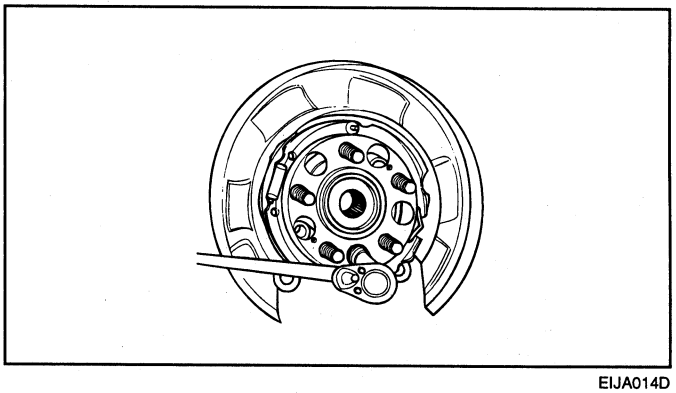

EIJA014D

7. Using the special tool, remove the rear hub assembly from the rear housing

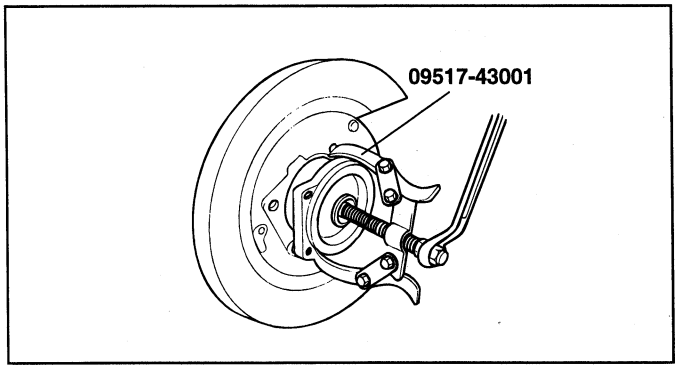

EIJA014E

8. Using snap ring pliers, remove the wheel bearing snap ring.

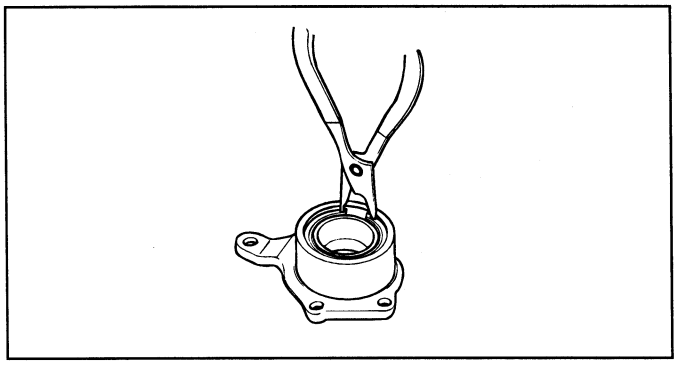

EIJA014G

9. Using the special tool, remove the wheel bearing inner race from the rear housing.

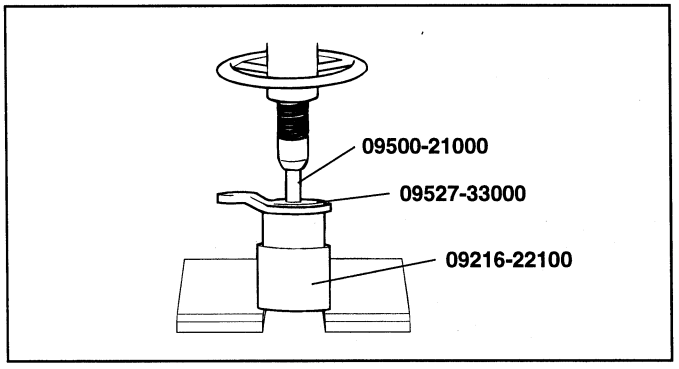

EIJA014F

INSPECTION EIJB0370

1. Check the hub for cracks and splines for wear.
2. Check the hub bolts for cracks and damage.
3. Check the brake disc for scoring and damage.
4. Check the rear housing for cracks.
5. Check the wheel bearing for defects.

MEASUREMENT OF THE END PLAY OF THE WHEEL BEARING

1. Install a dial gauge as shown in the illustration.
2. Check for axial motion (end play).

Limit value : 0.05mm or less

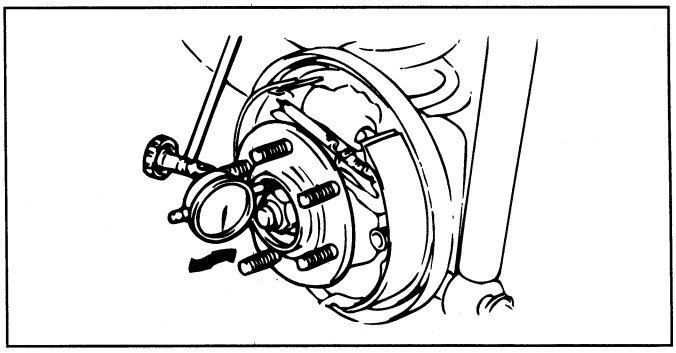

EIHA019A

3. If the end play is over the limit, loosen the flange nut and tighten it again to the specified torque. Then measure it again.
4. If the end play is beyond the limit, replace the rear hub assembly.

INSTALLATION EIJB0380

1. Apply a thin coat of multi-purpose grease to the contact surface of the rear housing and bearing.
2. Using the special tool (09216-22100, 09532-32000) press in the bearing to the spindle.

Press-in load [kg(f), lb(f)] : 4500-5000 (9921-11023)

NOTE

1. **Do not press the outer race of the bearing because that can cause damage to the bearing assembly.**
2. **When installing a bearing assembly, always use a new one.**

3. Install the snap ring.
4. After fitting the backing plate to the rear housing, press in the hub onto the rear housing using the special tool.

NOTE

- **Do not press the outer race of the wheel bearing because this can cause damage to the bearing assembly.**

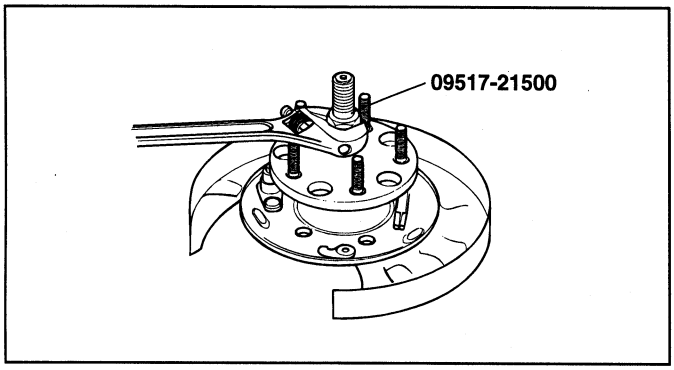

EIJA014H

5. Rotate the hub several times to seat the bearing.
6. Measure the wheel bearing starting torque.

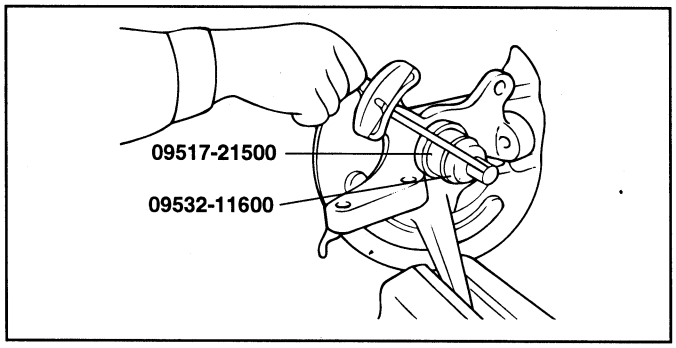

S5DS022D

7. Measure the end play of the hub by installing a dial gauge and check that it is within specifications.

Hub end play : 0.008 mm (0.0003 in.) or less

8. Remove the dial gauge and install the rear axle assembly to the trailing arm.

REAR DRIVESHAFT ASSEMBLY

REAR DRIVESHAFT (DOJ-BJ TYPE)

COMPONENTS EIJB0390

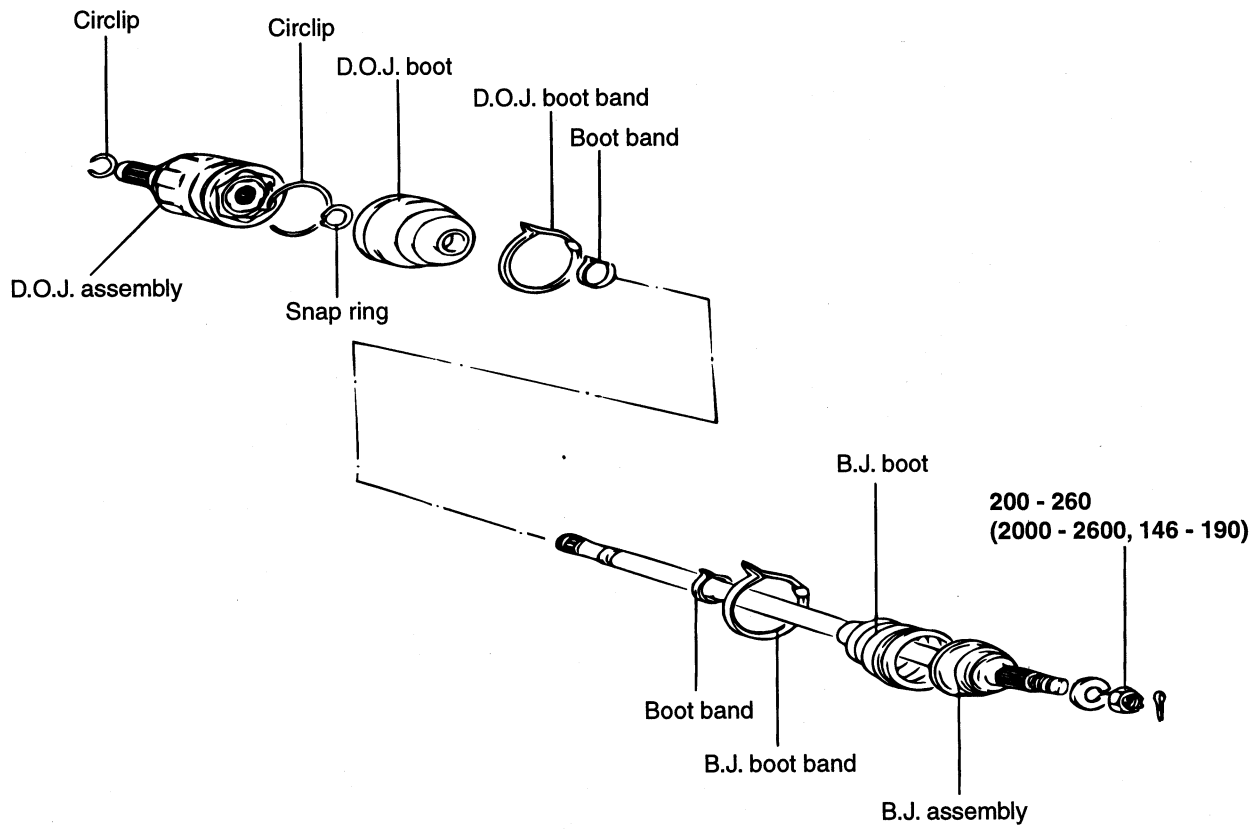

*** NOTE : This vehicle is full time 4WD**

TORQUE : Nm (kg·cm, lb·ft)

AIJA011A

REMOVAL EIJB0400

1. Remove the aluminum wheel cover using a flat-blade screwdriver.
2. Raise the vehicle and remove the wheel.
3. Remove the split pin from the rear hub and drive-shaft nut.

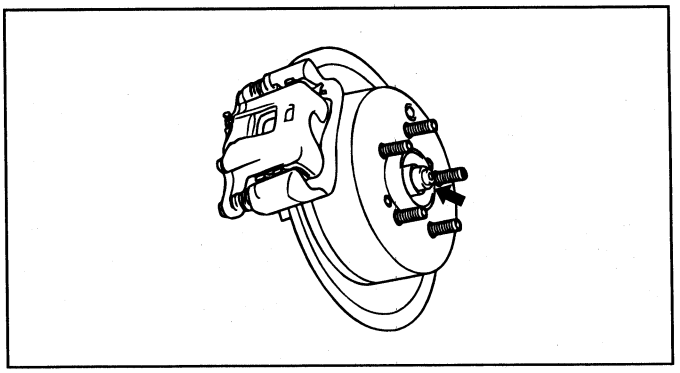

EIJA005A

4. Remove the spare tire and support the hanger of the main muffler to avoid interference with the differential carrier in removing the R.H. driveshaft.

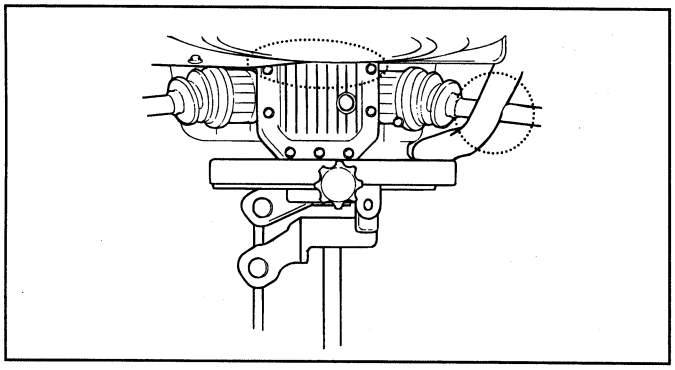

EIJA006A

5. After making matchmarks on the propeller rubber coupling and differential flange, remove the mounting bolts and nuts.

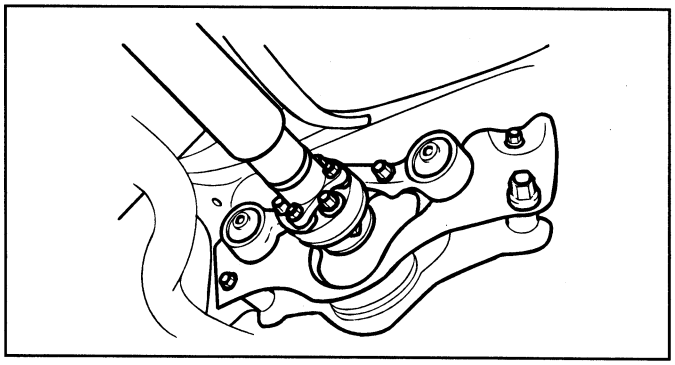

EIJA007A

6. Remove the differential mounting bolts and nuts while the differential carrier is supported by jack.

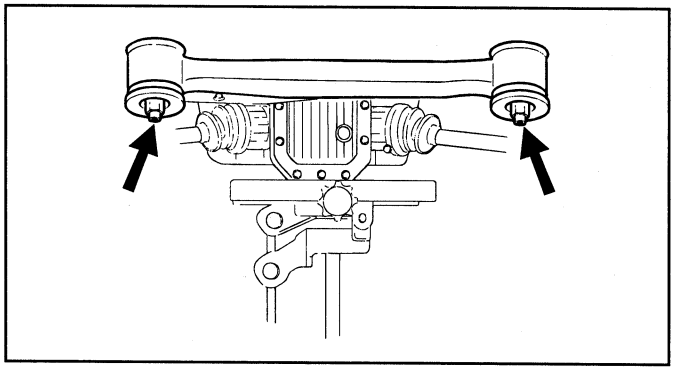

EIJA008A

7. Remove the driveshaft from the differential carrier by inserting a pry bar between the differential carrier and the driveshaft.

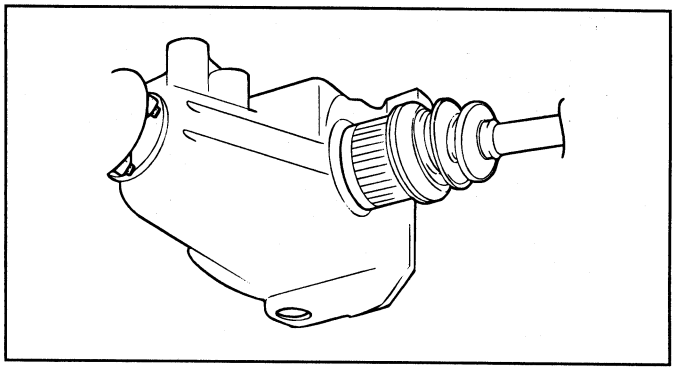

EIJA009A

8. After lowering the jack, move the differential carrier to the rear, and then remove it.

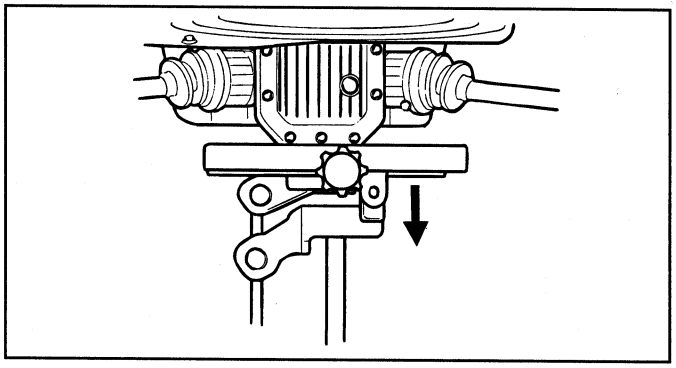

EIJA008C

9. Using a plastic hammer, disconnect the rear driveshaft from the rear axle hub.

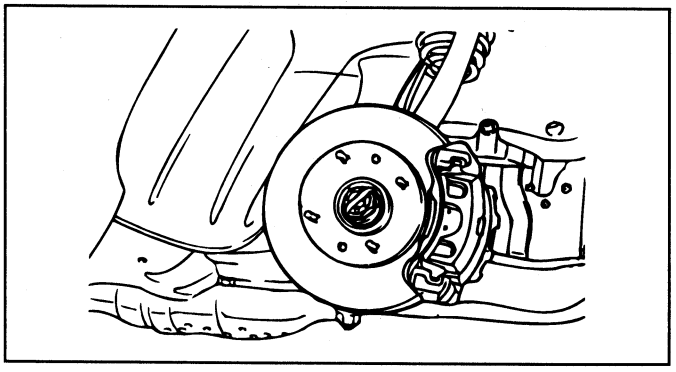

HEW49004

CAUTION

1. **Use a pry bar to avoid damage to the joint.**
2. **If you pull the driveshaft with excessive force, components inside the joint can be loosened and cause the boot to be torn or the bearing to be damaged.**
3. **Plug the transaxle case opening with an oil seal cap in order to avoid contamination.**
4. **Support the driveshaft properly.**
5. **While loosening the driveshaft nut, do not let the vehicle weight bear on the wheel bearing.**

INSPECTION EIJB0410

1. Check the driveshaft boots for damage and deterioration.
2. Check the splines for wear and damage.
3. Check the ball joints for wear and operating condition.

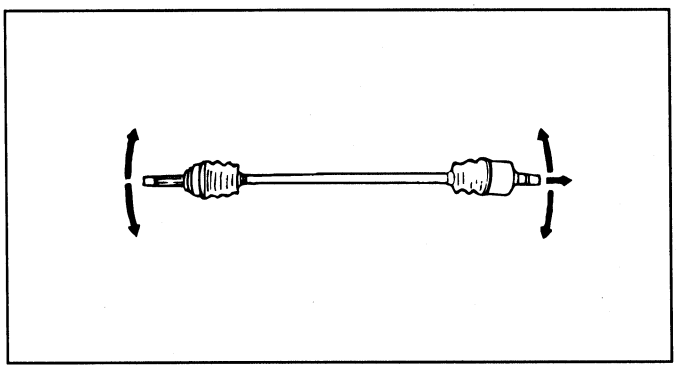

S5DS008A

INSTALLATION EIJB0420

1. Installation is the reverse of removal

NOTE

1. **Tighten the components below to the specified torque as follows.**

Items	Torque Nm (kg•cm, lb•ft)
Rear driveshaft nut	200-260 (2000-2600, 146-253)
Differential mounting rear bracket bolt	80-100 (800-1000, 58-73)
Rear differential mounting complete	70-80 (700-800, 51-58)

2. **Install the washer under the driveshaft nut with the convex side outward, as shown in the illustration, and tighten the nut.**

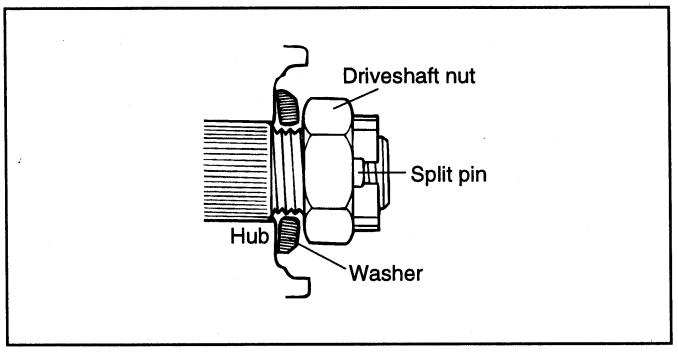

EIA9212A

3. **Check the quantity of oil in the differential carrier and fill if it is insufficient.**

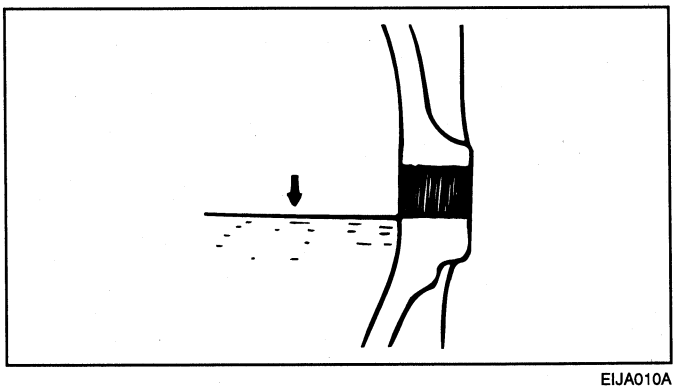

EIJA010A

DISASSEMBLY EIJB0430

CAUTION

1. **Do not disassemble the B.J. assembly.**
2. **Special grease must be applied to the driveshaft joint. Do not substitute with another type of grease.**
3. **The boot band should be replaced with a new one.**

1. Remove the D.O.J. boot bands and pull the D.O.J. boot from the D.O.J. outer race.

CAUTION

Be careful not to damage the boot.

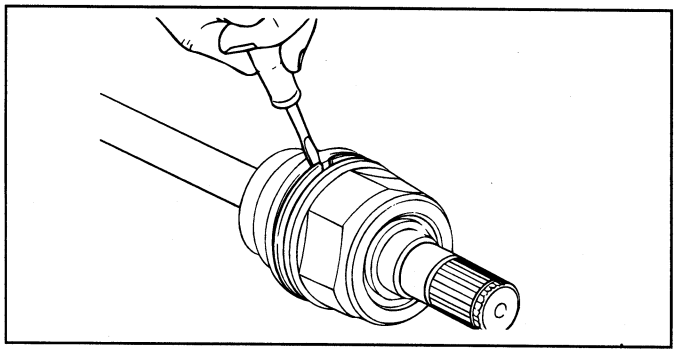

EIDA251A

2. Remove the circlip with a flat-blade screwdriver.

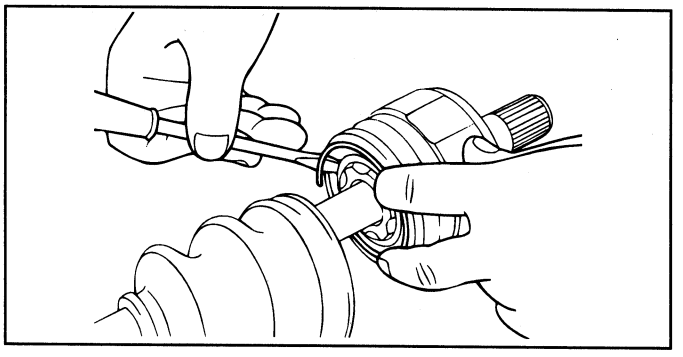

EIDA251B

3. Pull out the driveshaft from the D.O.J. outer race.

4. Remove the snap ring and take out the inner race, cage and balls as an assembly.

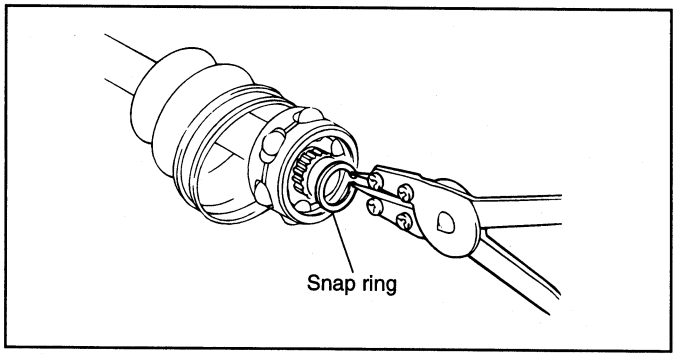

EIDA251C

5. Clean the inner race, cage and balls without disassembling.

6. Remove the B.J. boot bands and pull out the D.O.J. boot and B.J. boot.

CAUTION

If the boot is to be reused, wrap tape around the driveshaft splines to protect the boot.

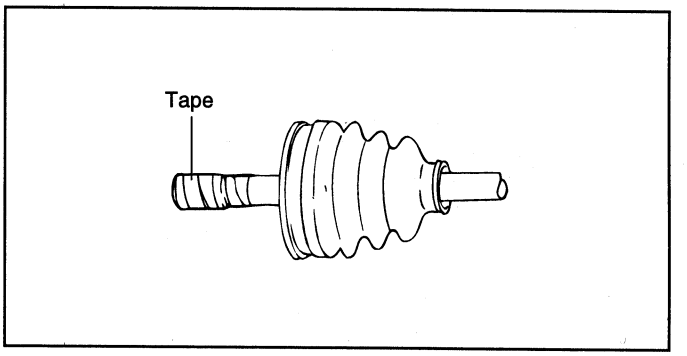

EIDA251D

INSPECTION EIJB0440

1. Check the D.O.J. outer race, inner race, cage and balls for rust or damage.

2. Check the splines for wear.

3. Check for water, foreign material, or rust in the B.J. boot.

CAUTION

When the B.J. assembly is to be reused, do not wipe out the grease. Check that there are no foreign substances in the grease. If necessary, clean the B.J. assembly and replace the grease.

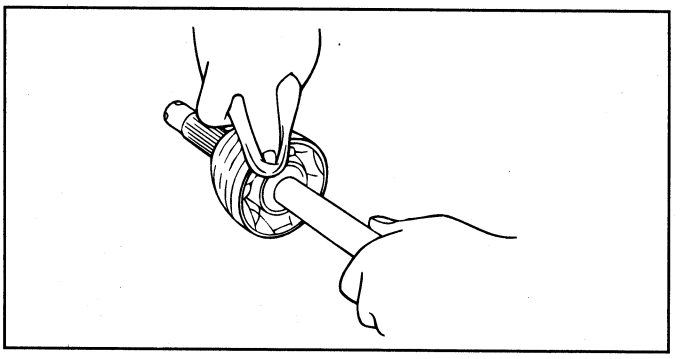

EIDA252A

REASSEMBLY EIJB0455

1. Wrap tape around the driveshaft splines (D.O.J. side) to prevent damage to the boots.
2. Apply the specified grease to the driveshaft and install the boots.

Recommended lubricant :

B.J. Boot grease : Centoplex 273/136K
D.O.J. Boot grease : Amblygon TA10/12A

3. Apply the specified grease to the inner race and cage. Install the cage so that it is offset on the race as shown in the illustration.

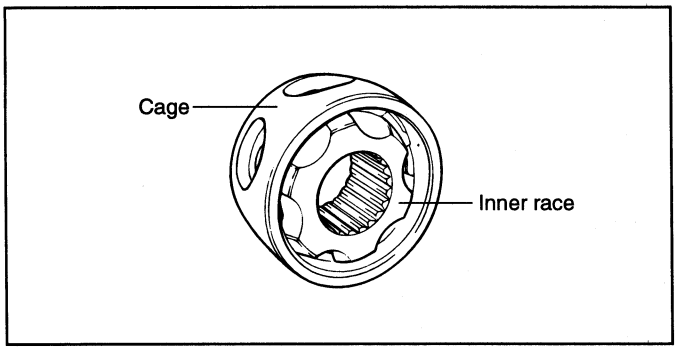

EIDA253B

NOTE

Use the grease included in the repair kit.

4. Apply the specified grease to the cage and fit the balls into the cage.
5. Install the chamfered side as shown in the illustration, and then install the inner race on the drive shaft. Install the snap ring.

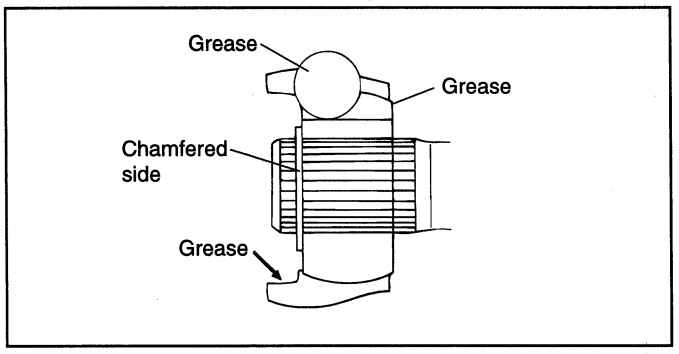

EIDA253C

6. Apply the specified grease to the B.J. outer race and install the outer race onto the driveshaft.

B.J. boot grease gr.

Total : 115±6 gr.

In the joint : 60±3 gr.

In the boot : 55±3 gr.

7. Apply the specified grease to the D.O.J. outer race and install the circlip.

D.O.J. boot grease gr.

Total : 100±6 gr.

In the joint : 60±3 gr.

In the boot : 40±3 gr.

8. Tighten the D.O.J. boot bands.
9. Add the specified grease to the B.J. as much as was wiped out at inspection.
10. Install the boots.
11. Tighten the B.J. boot bands.
12. To control the air in the D.O.J. boot, keep the specified distance between the boot bands when they are tightened.

Standard value (A)

2.4 M/T : 680.2 ± 2 mm (26.78 ± 0.08 in.)

2.7 A/T : 681.7 ± 2 mm (26.8 ± 0.08 in.)

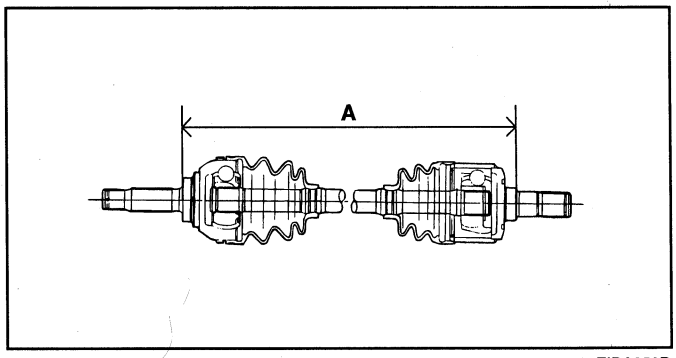

EIDA253D

DIFFERENTIAL CARRIER ASSEMBLY

DIFFERENTIAL CARRIER

COMPONENTS EIJB0460

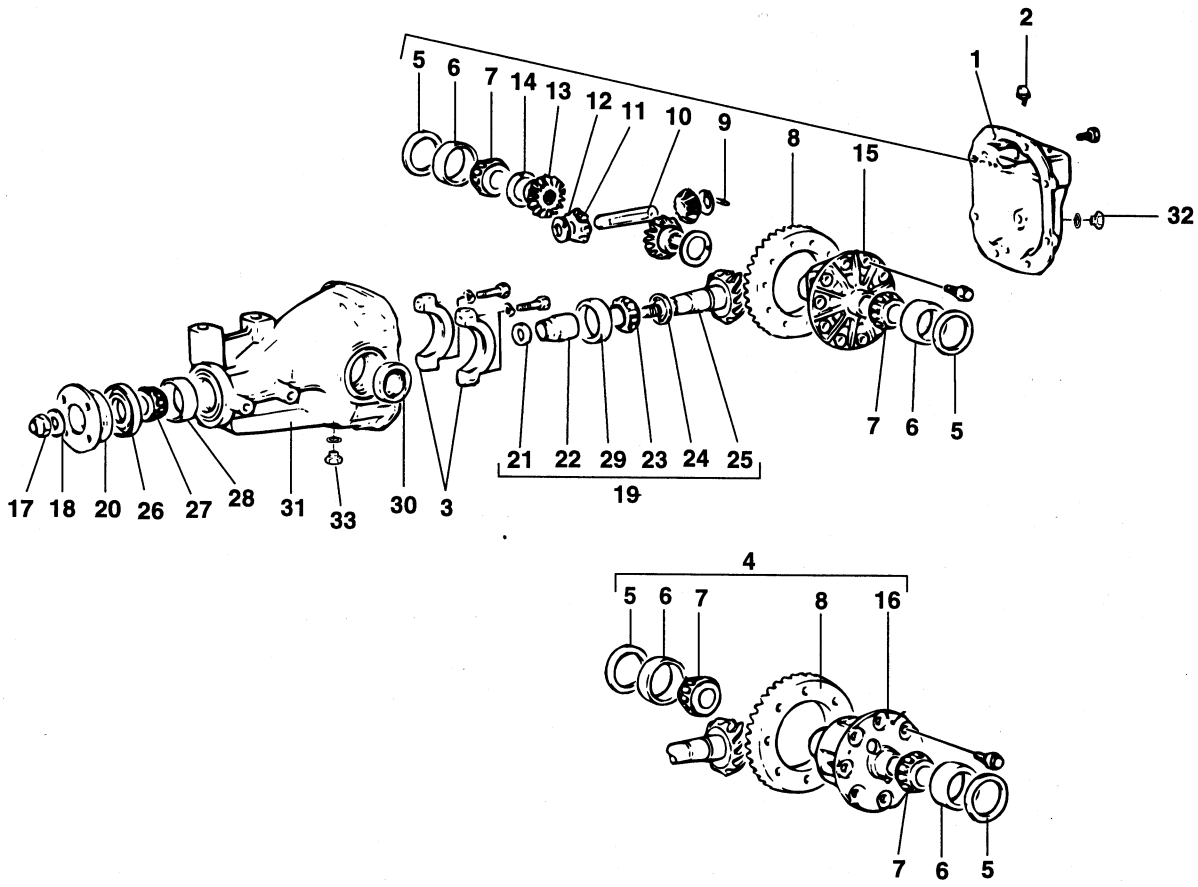

1. Differential cover
2. Vent plug
3. Bearing cap
4. Differential case assembly
5. Side bearing spacer
6. Side bearing outer race
7. Side bearing inner race
8. Drive gear
9. Lock pin <for conventional differential>
10. Pinion shaft
11. Pinion gear
12. Pinion washer
13. Side gear
14. Side gear spacer
15. Differential case
16. Limited slip differential case assembly
17. Self-locking nut
18. Washer
19. Drive pinion assembly
20. Companion flange
21. Drive pinion front shim (for preload adjustment)
22. Drive pinion spacer
23. Drive pinion rear bearing inner race
24. Drive pinion rear shim (for pinion height adjustment)
25. Drive pinion
26. Oil seal
27. Drive pinion front bearing inner race
28. Drive pinion front bearing outer race
29. Drive pinion rear bearing outer race
30. Oil seal
31. Gear carrier
32. Filler plug
33. Drain plug

INSPECTION BEFORE DISASSEMBLY EIJB0470

Hold the special tool in a vice, and mount the differential carrier on the special tool.

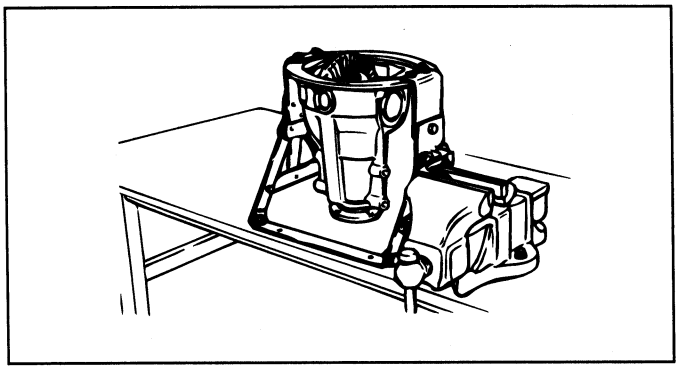

E7FS0600

FINAL DRIVE GEAR BACKLASH

1. Fix the drive gear so it cannot move and measure the final drive gear backlash with a dial indicator.

NOTE

Measure at four points or more on the circumference of the drive gear.

Standard value : 0.08-0.13 mm (0.003-0.005 in.)

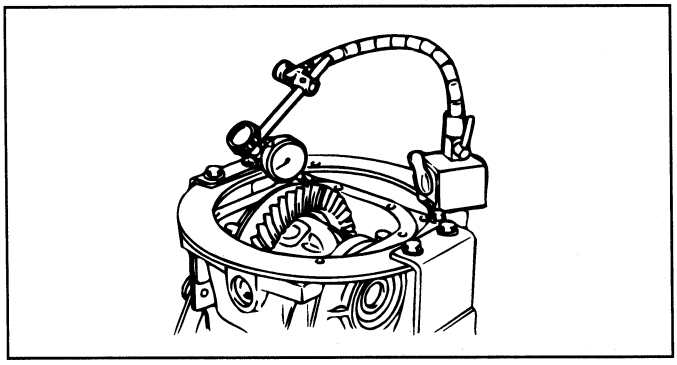

H7FA0690

2. If the backlash is beyond the standard value, adjust by using the side bearing spacer.

NOTE

After adjustment, inspect the contact of the final drive gear.

DRIVE GEAR RUNOUT

Check the back-face lash as follows:

1. Place a dial gauge on the back-face of the drive gear and measure the runout.

Limit : 0.05 mm (0.0020 in.)

2. If the runout is beyond the limit, check that there are no foreign substances between the drive gear and differential case and, that the bolts fixing the drive gear are not loose.

3. If nothing is wrong in check (2), adjust the drive gear depth and remeasure.

NOTE

If these adjustments are impossible, replace the case or install a new drive gear/drive pinion as a set.

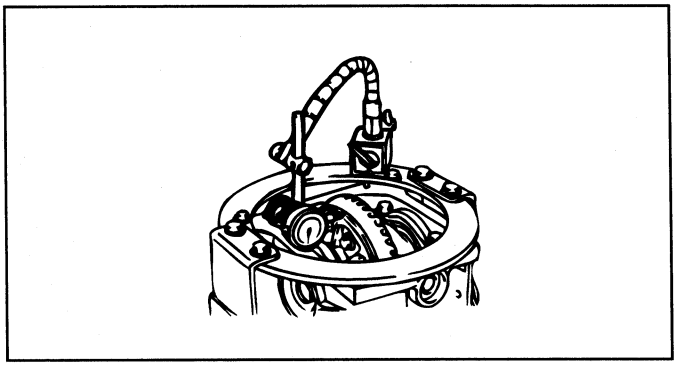

H7FA0700

DIFFERENTIAL GEAR BACKLASH

1. Fix the side gear with a wedge so it cannot move and measure the differential gear backlash with a dial indicator on the pinion gear.

NOTE

Take the measurements at two places (4 places for LSD) on the pinion gear.

Standard value : 0-0.076 mm (0-0.003 in.)
Limit : 0.2 mm (0.008 in.)

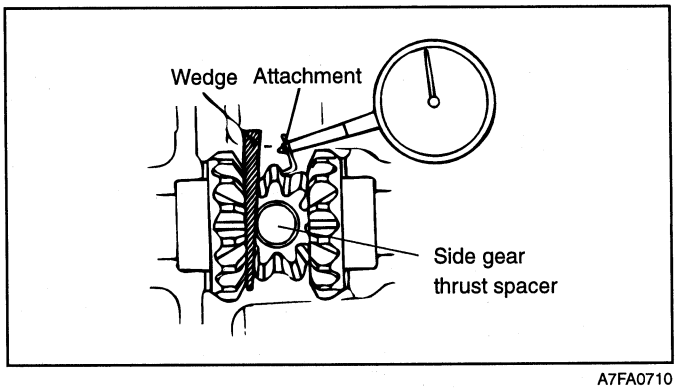

A7FA0710

2. If the backlash exceeds the limit, adjust using side bearing spacers.

NOTE

If adjustment is impossible, replace the side gear and pinion gears as a set.

FINAL DRIVE GEAR TOOTH CONTACT

Check the final drive gear tooth contact by following the steps below :

1. Apply a thin, uniform coat of machine blue to both surfaces of the drive gear teeth.

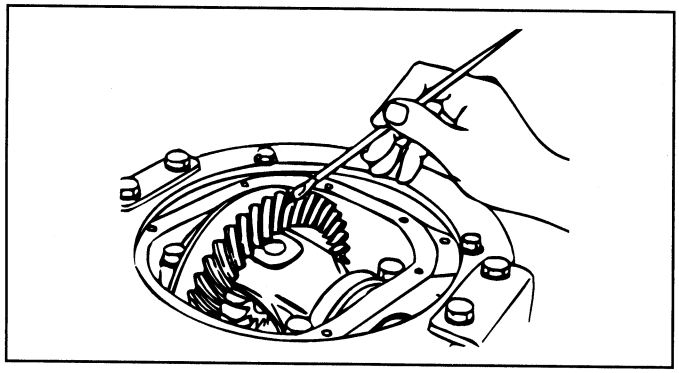

H7FA0720

2. Insert a brass rod between the differential carrier and the differential case, and then rotate the companion flange by hand (once in the normal direction, and then once in the reverse direction) while applying a load to the drive gear so that some torque (approximately 25-30 kg•cm) is applied to the drive pinion.

CAUTION

If the drive gear is rotated too much, the tooth contact pattern will become unclear and difficult to check.

3. Check the tooth contact pattern.

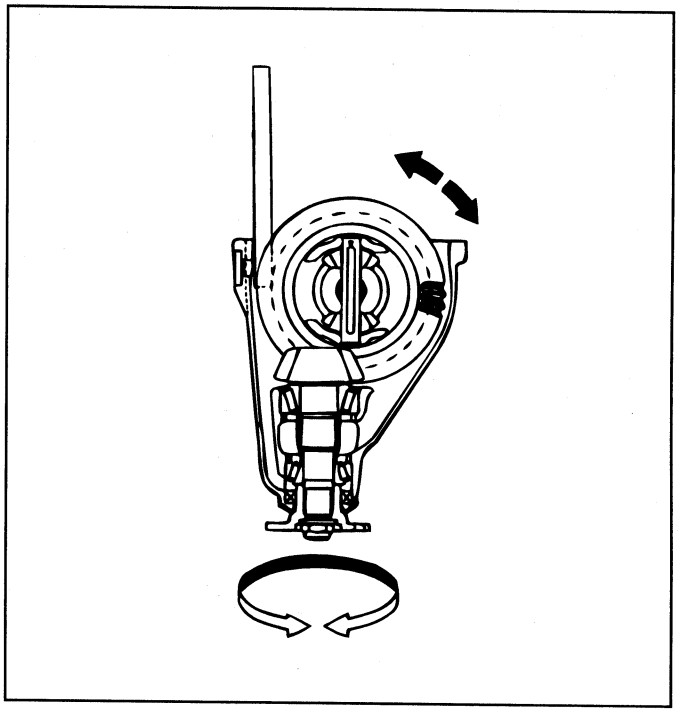

EIJA001B

Standard tooth contact pattern

1. Narrow tooth side
2. Drive-side tooth surface (the side receiving power during acceleration)
3. Wide tooth side
4. Coast-side tooth surface (the side receiving power during coast-down)

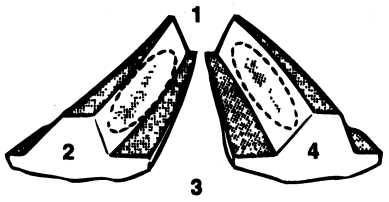

EIJA0011

Problem	Solution
Tooth contact pattern resulting from excessive pinion height 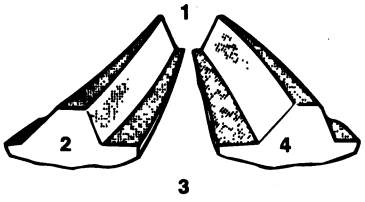 EIJA0012	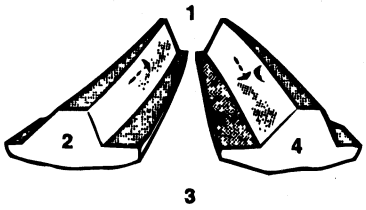 EIJA0013
The drive pinion is positioned too far from the center of the drive gear.	Increase the thickness of the pinion height adjusting shim, and position the drive pinion closer to the center of the drive gear. Also, for backlash adjustment, reposition the drive gear further from the drive pinion.
Tooth contact pattern resulting from insufficient pinion height 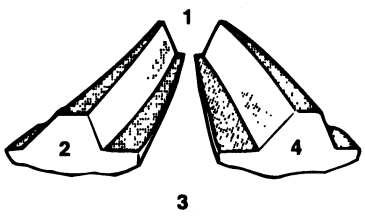 EIJA0014	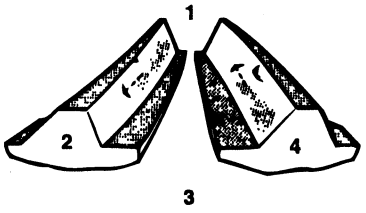 EIJA0015
The drive pinion is positioned too close to the center of the drive gear.	Decrease the thickness of the pinion height adjusting shim, and position the drive pinion further from the center of the drive gear. Also, for backlash adjustment, reposition the drive gear closer to the drive pinion.

NOTE

- **Tooth contact pattern is a method for judging the result of the adjustment of drive pinion height and final drive gear backlash. The adjustment of drive pinion height and final drive gear backlash should be repeated until the tooth contact patterns are similar to the standard tooth contact pattern.**
- **When you cannot obtain a correct pattern, the drive gear and drive pinion have exceeded their limits. Both gears should be replaced as a set.**

DISASSEMBLY (adule) EIJB0480

1. REMOVAL OF THE DIFFERENTIAL CASE ASSEMBLY

CAUTION

Remove the differential case assembly slowly and carefully. Be caurful so that the side bearing outer race is not dropped.

NOTE

Keep the right and left side bearings separate so that they are not mixed during reassembly.

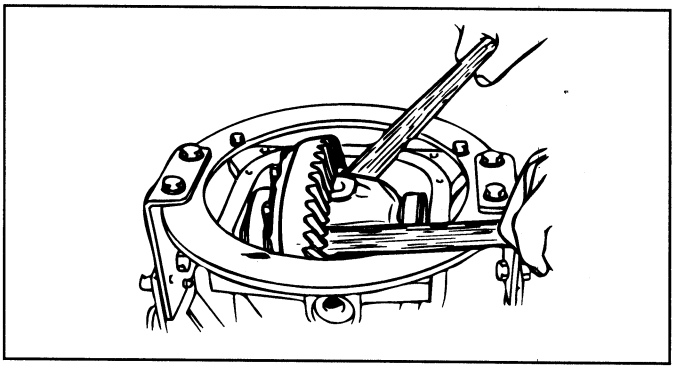

H7FA0740

2. REMOVAL OF THE SIDE BEARING INNER RACES

Fit the nut on top of the differential case, and then use the special tool to remove the side bearing inner race.

NOTE

Attach the prongs of the special tool to the inner race of the side bearing through the notched section in the differential case.

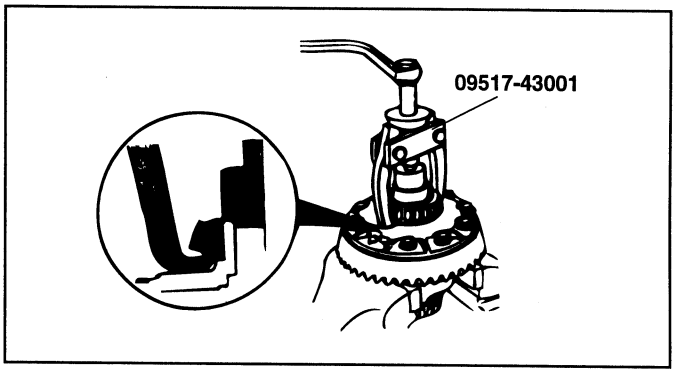

H7FA0750

3. REMOVAL OF DRIVE GEAR

a. Make the matchmarks to the differential case and the drive gear.
b. Loosen the drive gear attaching bolts in diagonal sequence to remove the drive gear.

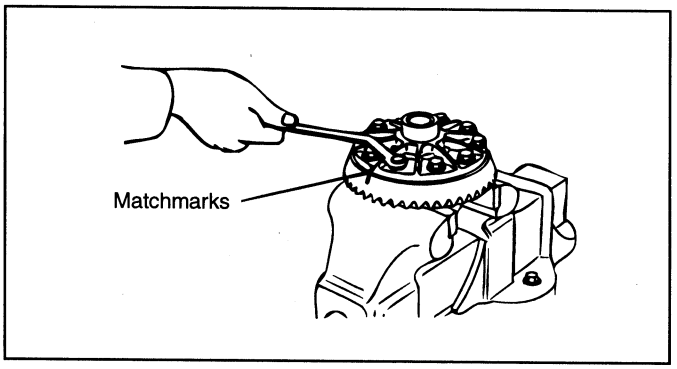

A7FA0760

4. REMOVAL OF LOCK PIN (FOR CONVENTIONAL DIFFERENTIAL)

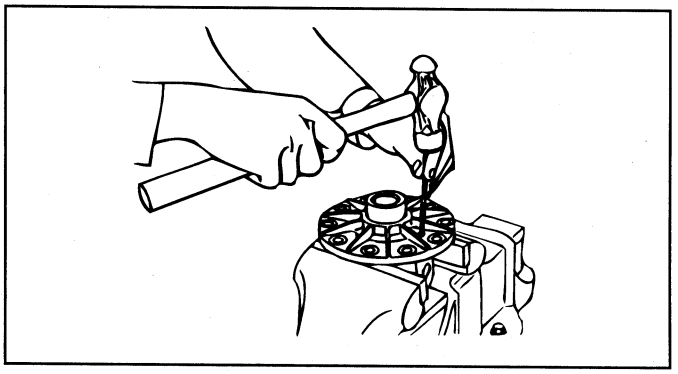

H7FA0770

5. **REMOVAL OF SELF-LOCKING NUT**

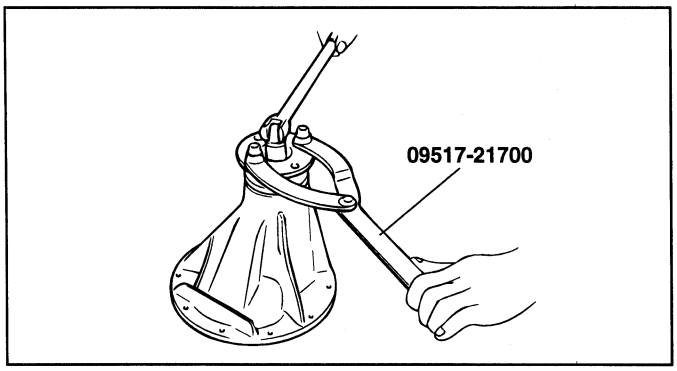

H7RA1100

6. **REMOVAL OF DRIVE PINION**

a. Make the matchmarks to the drive pinion and companion flange.

CAUTION

Matchmarks should not be made to the contact surfaces of the companion flange and the propeller shaft.

b. Drive out the drive pinion together with the drive pinion spacer and drive pinion front shims.

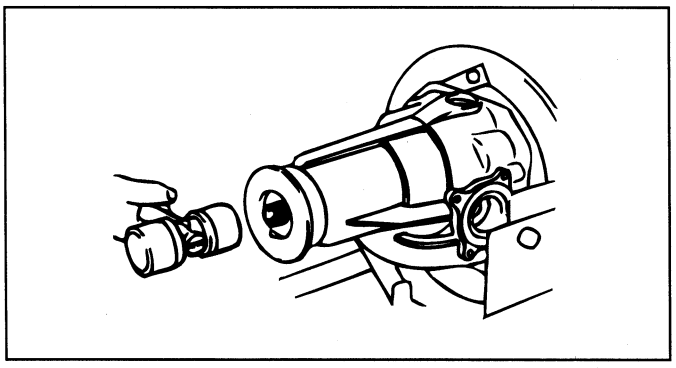

H7FA0790

7. **REMOVAL OF DRIVE PINION REAR BEARING INNER RACE**

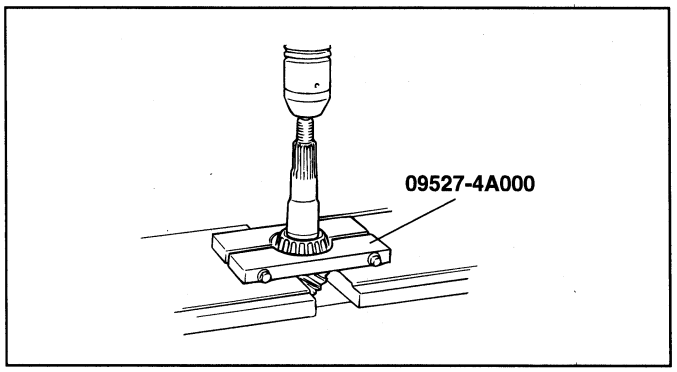

H7RA1090

8. **REMOVAL OF OIL SEAL / DRIVE PINION FRONT BEARING INNER RACE / DRIVE PINION FRONT BEARING OUTER RACE**

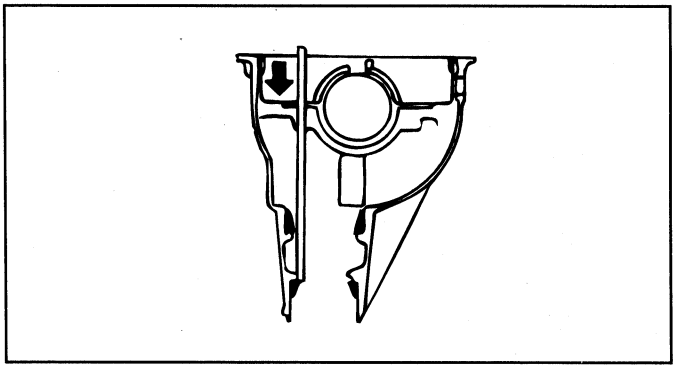

H7FA0810

9. **REMOVAL OF DRIVE PINION REAR BEARING OUTER RACE**

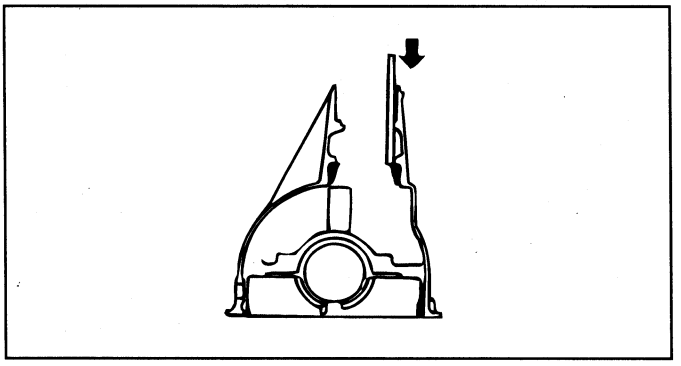

H7FA0820

INSPECTION EIJB0490

1. Check the companion flange for wear or damage.
2. Check the bearings for wear or discoloration.
3. Check the gear carrier for cracks.
4. Check the drive pinion and drive gear for wear or cracks.
5. Check the side gears, pinion gears and pinion shaft for wear or damage.
6. Check the side gear spline for wear or damage.

REASSEMBLY EIJB0500

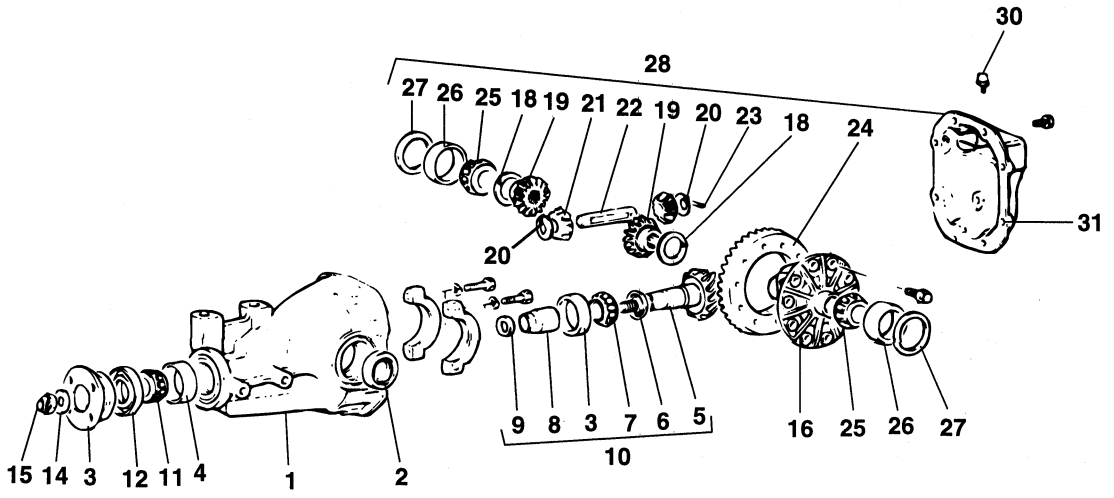

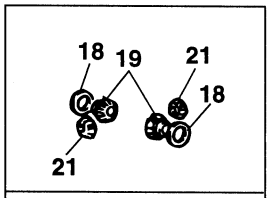

Differential gear set

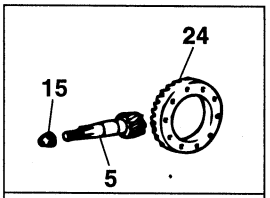

Final drive gear set

Limited slip differential

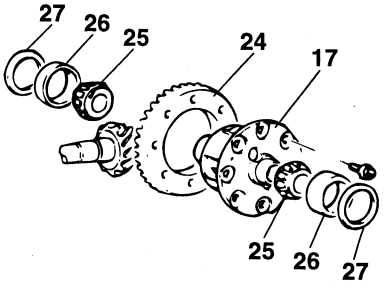

Reassembly steps

1. Gear carrier
2. Oil seal
3. Drive pinion rear bearing outer race
4. Drive pinion front bearing outer race (Adjustment of pinion height)
5. Drive pinion
6. Drive pinion rear shim (for pinion height adjustment)
7. Drive pinion rear bearing inner race
8. Drive pinion spacer (Adjustment of drive pinion preload)
9. Drive pinion front shim (for preload adjustment)
10. Drive pinion assembly
11. Drive pinion front bearing inner race
12. Oil seal
13. Companion flange
14. Washer
15. Self-locking nut
16. Differential case
17. Limited slip differential case assembly (Adjustment of differential gear backlash)
18. Side gear spacer
19. Side gear
20. Pinion washer
21. Pinion gear
22. Pinion shaft
23. Lock pin (for conventional differential)
24. Drive gear
25. Side bearing inner race
26. Side bearing outer race (Adjustment of final drive gear backlash)
27. Side bearing spacer
28. Differential case assembly
29. Bearing cap
30. Vent plug
31. Differential cover

AIJA003B

LUBRICATION AND ADHESIVE POINTS

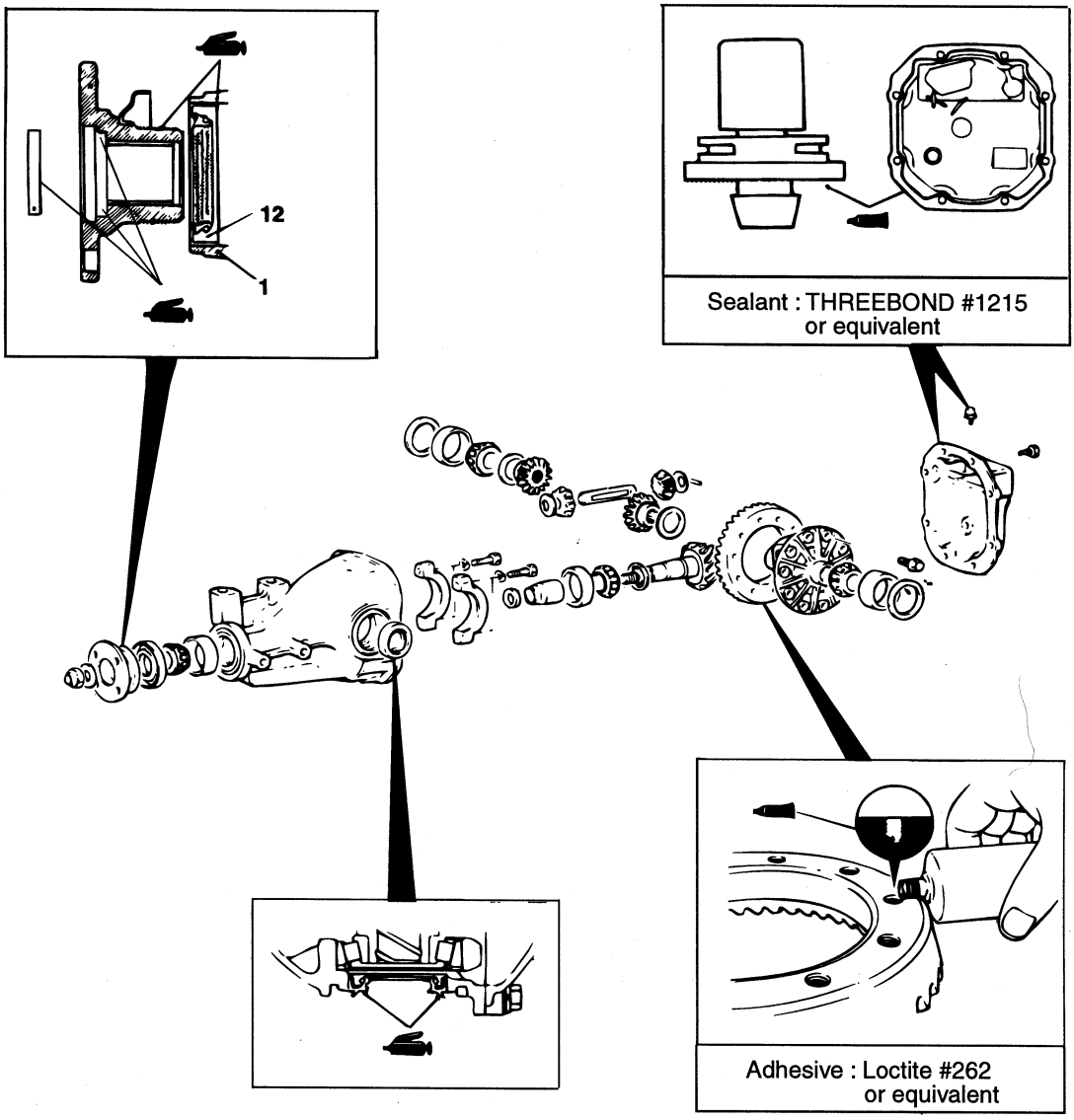

AIJA004B

SERVICE POINTS OF REASSEMBLY

1. PRESS-FITTING OF OIL SEAL

a. With the special tool, press fit the oil seal to the end of the gear carrier.
b. Apply multipurpose grease to the oil seal lip.

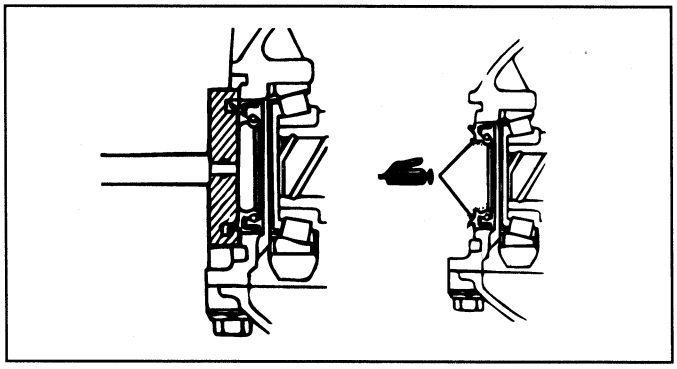

EIJA005B

c. Install the drive pinion rear bearing outer race and drive pinion front bearing outer race using the special tool.

CAUTION

Be careful not to press in the outer race when it is inclined.

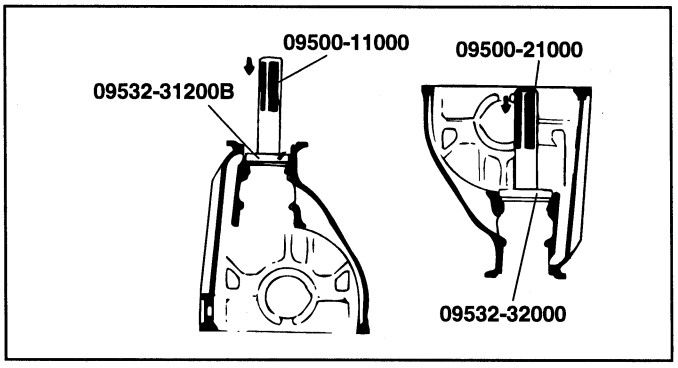

EIJA005C

ADJUSTMENT OF PINION HEIGHT

Adjust the drive pinion height according to the following procedures:

1. Install the drive pinion inner and outer bearing races to the special tool in sequence shown in the illustration.

NOTE

Apply a thin coat of the multipurpose grease on the mating face of the washer of the special tool.

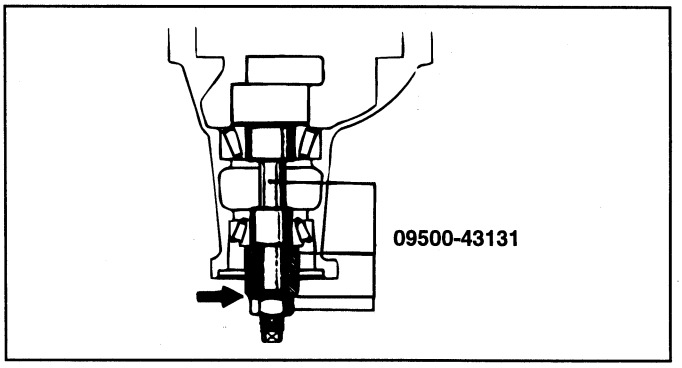

EIJA005D

2. Tighten the nut of the special tool slowly until the standard value of drive pinion turning torque is obtained.

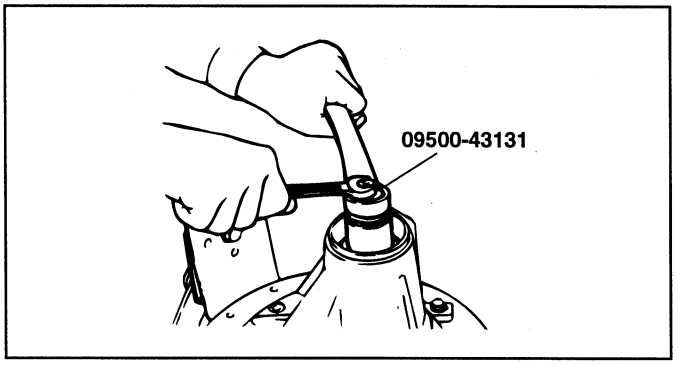

EIJA005E

3. Measure the drive pinion turning torque (without the oil seal) using the special tool.

STANDARD VALUE :

Bearing division	Bearing lubrication	Rotation torque Nm (kg•cm)
New	None (with anti-rust agent)	0.6-0.9 (6-9)
New or reused	Oil application	0.4-0.5 (4-5)

NOTE

- **Gradually tighten the nut of the special tool while checking the drive pinion turning torque.**
- **Because the special tool cannot be turned one rotation, turn it several times within the range that it can be turned. After obtaining smooth bearing operation, measure the rotation torque.**

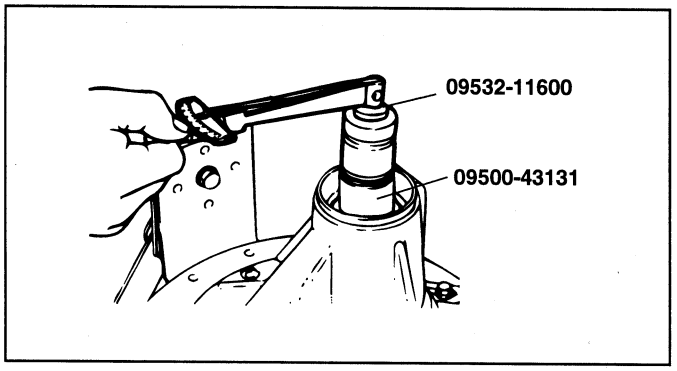

EIJA006C

4. Position the special tool in the side bearing seat of the gear carrier and select a drive pinion rear shim of a thickness which corresponds to the gap between the special tools.

NOTE

- **Clean the side bearing seat thoroughly. When positioning the special tool, confirm that the cut-out sections of the special tool touch the side bearing seat very closely.**
- **When selecting the drive pinion rear shims, use the fewest number of shims necessary.**

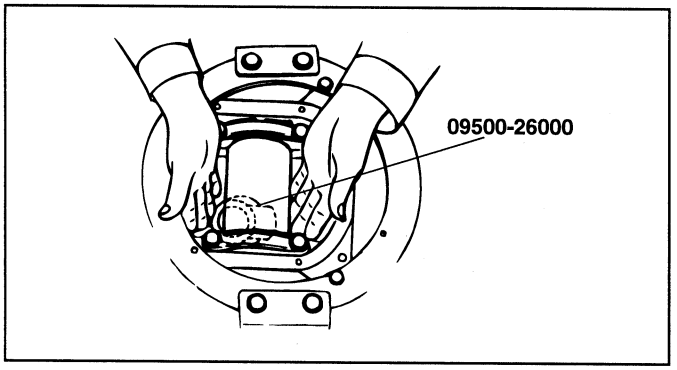

EIJA006B

5. Fit the selected drive pinion rear shim(s) to the drive pinion, and press-fit the drive pinion rear bearing inner race using the special tool.

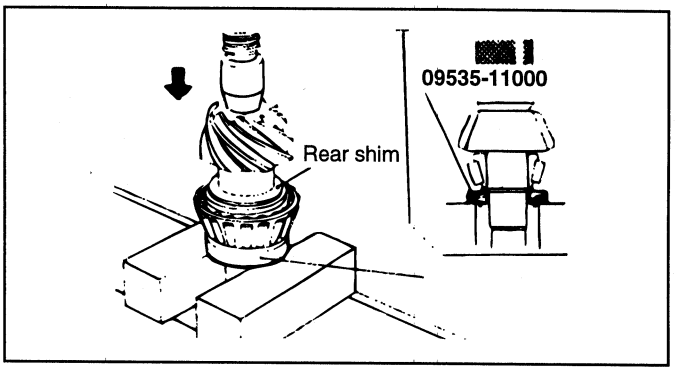

AIJA030A

ADJUSTMENT OF DRIVE PINION PRELOAD

Adjust the drive pinion turning torque according to the following procedures :

1. Fit the drive pinion front shim(s) between the drive pinion spacer and the drive pinion front bearing inner race.

2. Tighten the companion flange to the specified torque using the special tool.

NOTE

Do not install the oil seal.

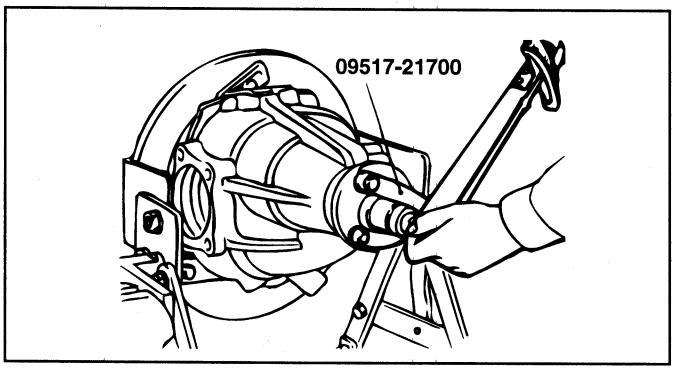

H7FA0930

3. Measure the drive pinion turning torque. (without the oil seal using the special tool)

STANDARD VALUE :

Bearing use	Bearing lubrication	Rotation torque Nm (kg•cm)
New	None (with anti-rust agent)	0.6-0.9 (6-9)
New or reused	Oil application	0.4-0.5 (4-5)

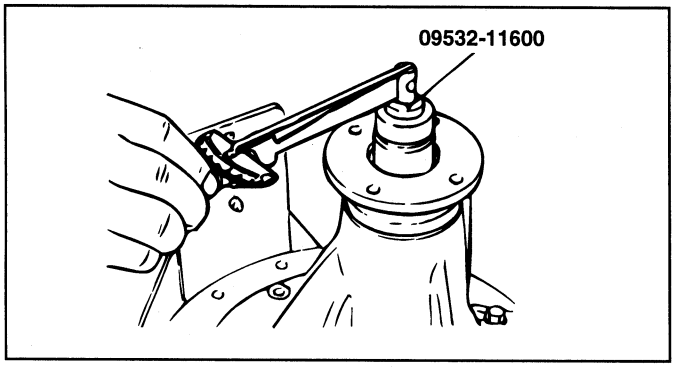

H7FA0940

4. If the drive pinion turning torque is not within the range of the standard value, adjust the turning torque by replacing the drive pinion front shim(s) or the drive pinion spacer.

NOTE

When selecting the drive pinion front shim pack use the minimum number of shims.

5. Remove the companion flange and drive pinion once again.

   Insert the oil seal into the gear carrier front lip using the special tool.

   Apply multipurpose grease to the oil seal lip.

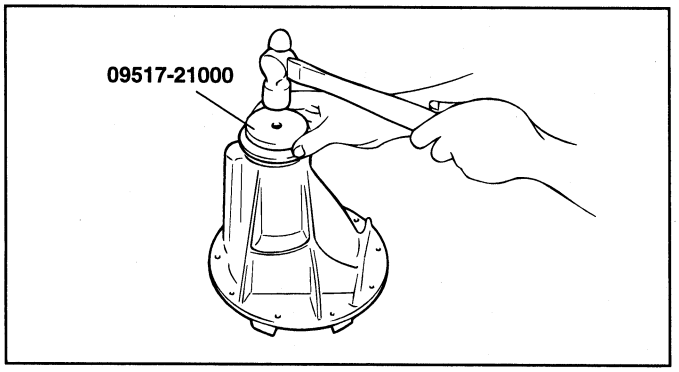

H7RA1080

6. Apply a thin coat of multipurpose grease to the contacting surface of the oil seal in the companion flange and contacting surface of the washer of the flange before installing the drive pinion assembly.

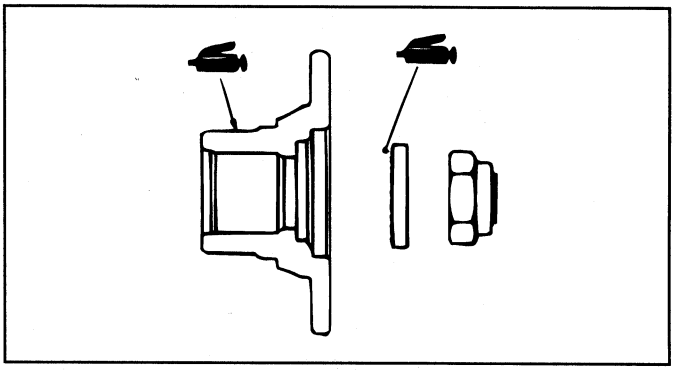

EIJA007B

7. Install the drive pinion assembly, shim packs and companion flange with matchmarks properly aligned, and tighten the companion flange self-locking nut to the specified torque by using the special tool.

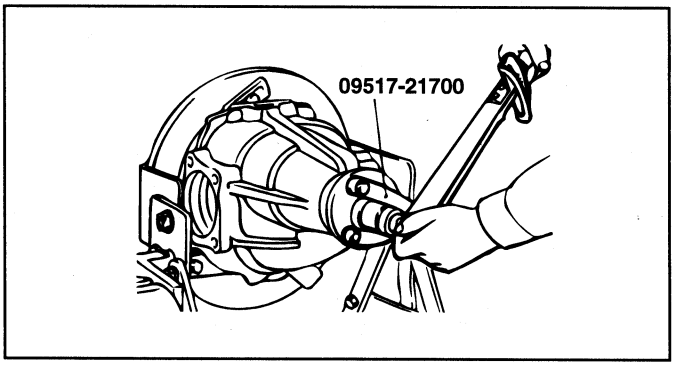

H7FA0970

8. Measure the drive pinion turning torque (with oil seal) by using the special tool to verify that the drive pinion turning torque is within the standard value.

STANDARD VALUE :

Bearing use	Bearing lubrication	Rotation torque Nm (kg•cm)
New	None (with anti-rust agent)	0.8-1.15 (8-11.5)
New or reused	Oil application	0.65-0.77 (6.5-7.5)

If it is beyond the standard value, verify the torque of the companion flange self-locking nut, or the fit of the oil seal.

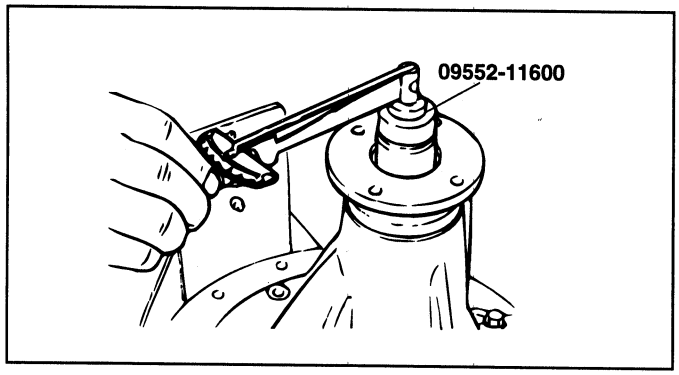

H7FA0980

ADJUSTMENT OF DIFFERENTIAL GEAR BACKLASH

Adjust the differential gear backlash according to the following procedures :

1. Assemble the side gears, side gear spacers, pinion gears, and pinion washers into the differential case.
2. Temporarily install the pinion shaft.

NOTE

Do not install the lock pin yet.

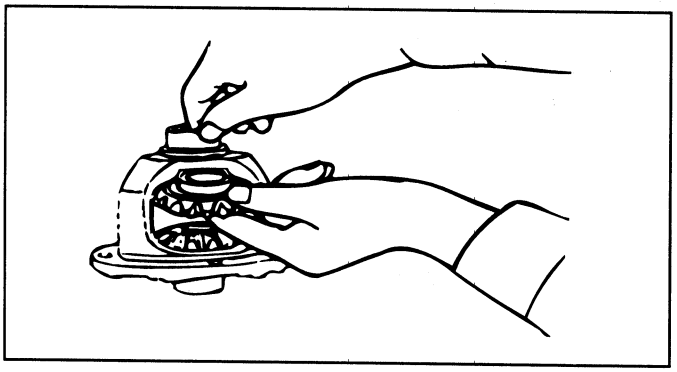

H7FA0990

3. Insert a wedge in the side gear and measure the differential gear backlash with a dial indicator on the pinion gear.

NOTE

Measure both pinion gears separately.

Standard value : 0-0.076 mm (0-0.0003 in.)
Limit : 0.2 mm (0.008 in.)

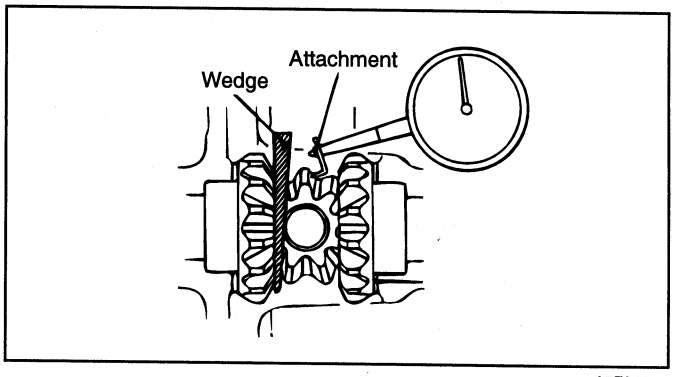

A7FA1000

4. If the differential gear backlash exceeds the limit, adjust the backlash by installing thicker side gear thrust spacers.
5. Measure the differential gear backlash once again, and confirm that it is within the limit.

NOTE

- **After adjustment, check that the backlash is within the limit and the differential gear rotates smoothly.**
- **When adjustment is impossible, replace the side gear and the pinion gear as a set.**

6. Installation of the lock pin

   a. Align the pinion shaft lock pin hole with the differential case lock pin hole, and drive in the lock pin.
   b. Fix the lock pin in place by staking two points around the lock pin hole with a punch.

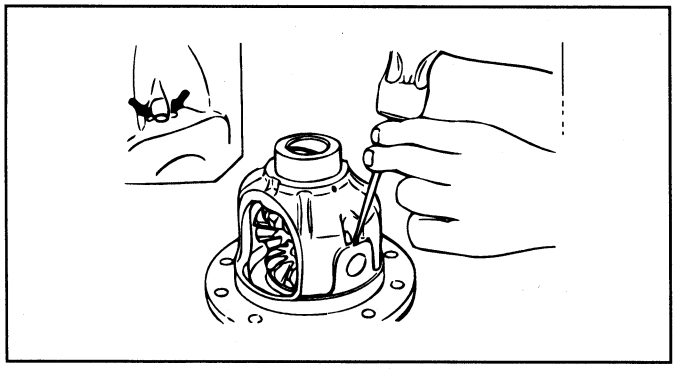

H7FA1010

7. Installation of the drive gear

   a. Clean the drive gear attaching bolts.
   b. Remove the adhesive on the threaded holes of the drive gear use a tap (M10 1.25), and then clean the threaded holes with compressed air.

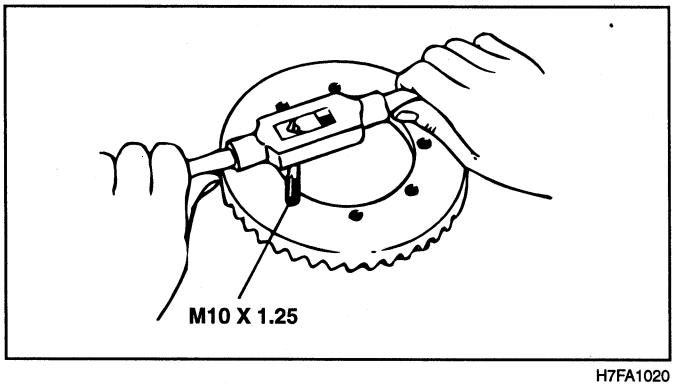

H7FA1020

   c. Apply the specified adhesive to the threaded holes of the drive gear.

Specified adhesive : LOCTITE #262 or equivalent

   d. Install the drive gear in the differential case with the matchmarks properly aligned. Tighten the bolts to the specified torque (800-900 kg•cm) in a diagonal sequence.

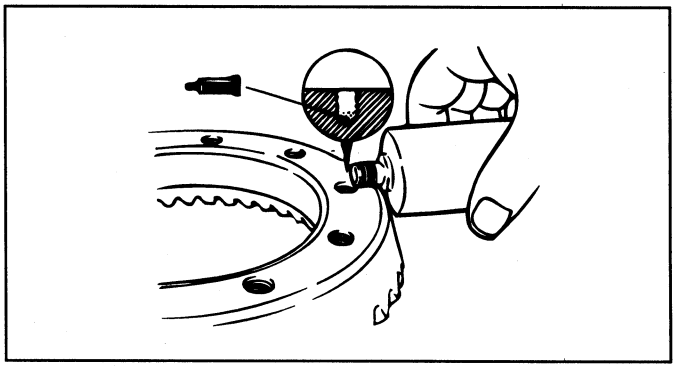

H7FA1030

8. Press the side bearing inner race

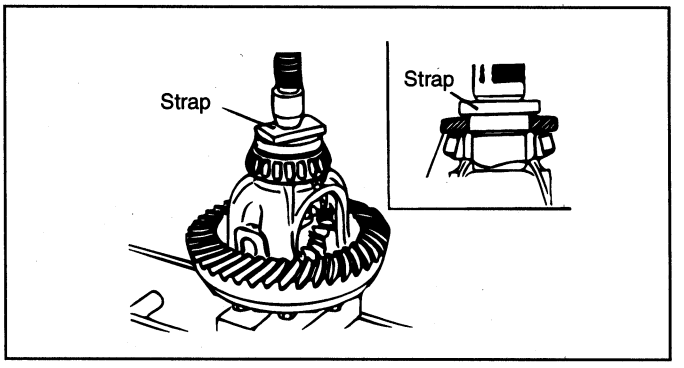

A7FA1040

ADJUSTMENT OF FINAL DRIVE GEAR BACKLASH

Adjust the final drive gear backlash according to the following procedures :

1. Install side bearing spacers which are thinner than those removed, to the side bearing outer races, and then mount the differential case assembly into the gear carrier.

NOTE

Select side bearing spacers with the same thickness for both the drive pinion side and the drive gear side.

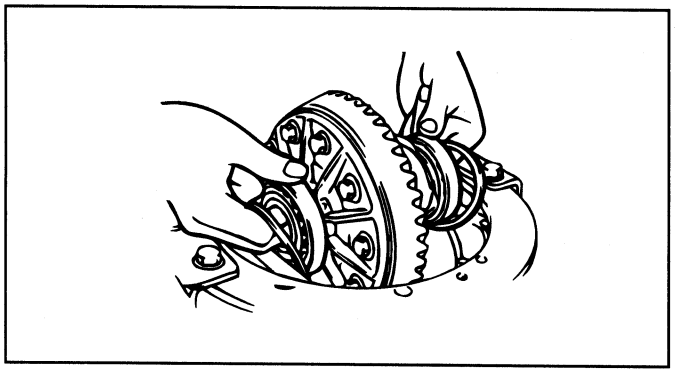

H7FA1050

2. Push the differential case to one side, and measure the clearance between the gear carrier and the side bearing with a feeler gauge.

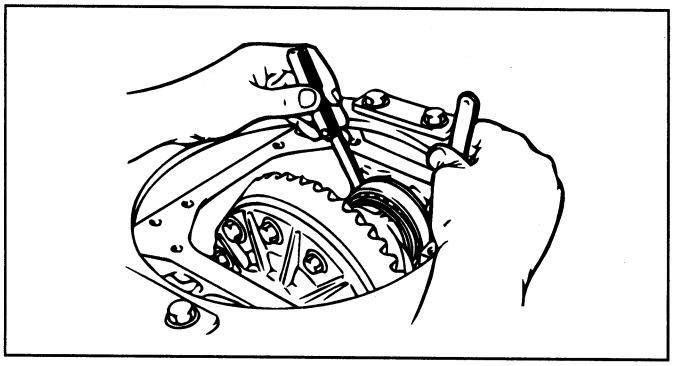

H7FA1060

3. Select two pairs of spacers which correspond to the value calculated according to the expression in the illustration. Install one pair each to the drive pinion side and the drive gear side.

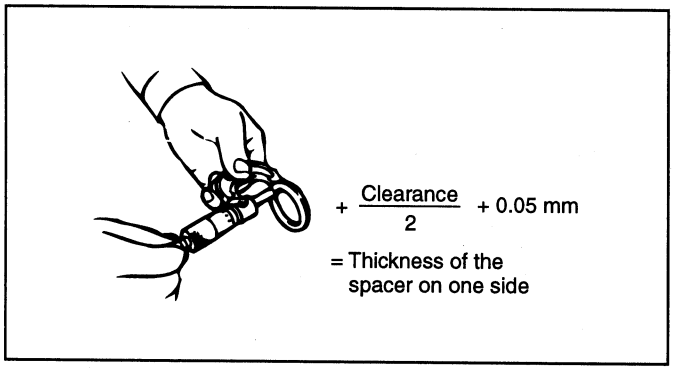

A7FA1070

4. Install the side bearing spacers and differential case assembly, as shown in the illustration, to the gear carrier.

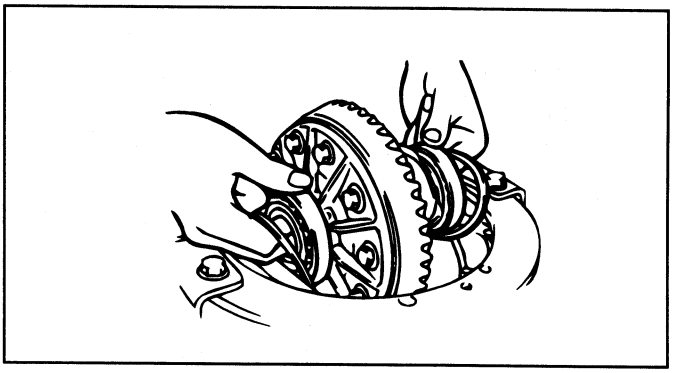

H7FA1080

5. Tap the side bearing spacers with a brass bar to fit them to the side bearing outer race.

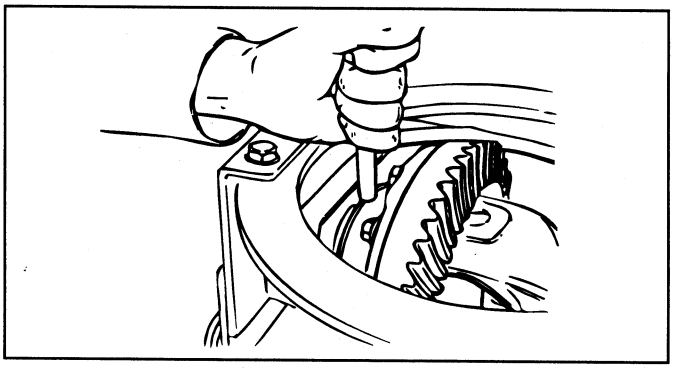

H7FA1090

6. Align the matchmarks on the gear carrier and the bearing cap and tighten the bearing cap.

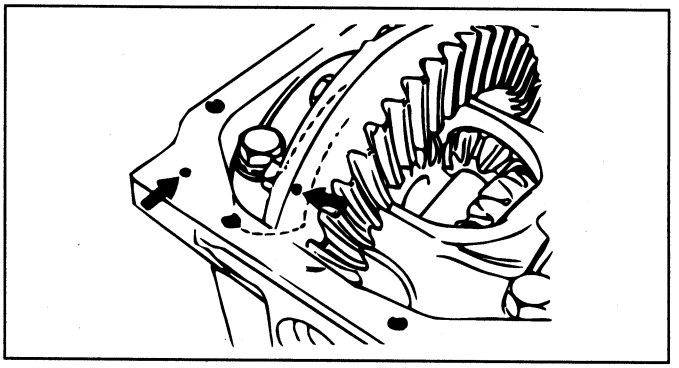

H7FA1100

7. With the drive pinion locked in place, measure the final drive gear backlash with a dial indicator on the drive gear.

NOTE

Measure at four points or more on the circumference of the drive gear.

Standard value : 0.08-0.13 mm (0.003-0.005 in.)

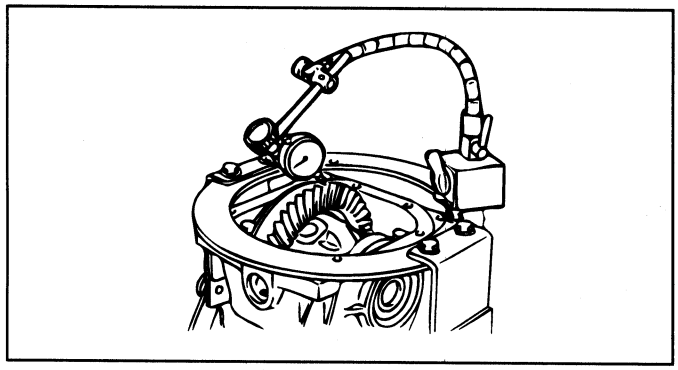

H7FA1110

8. Change the side bearing spacers as illustrated and then adjust the final drive gear backlash between the drive gear and the drive pinion.

NOTE

When increasing the number of side bearing spacers, use the same number for each and as few as possible.

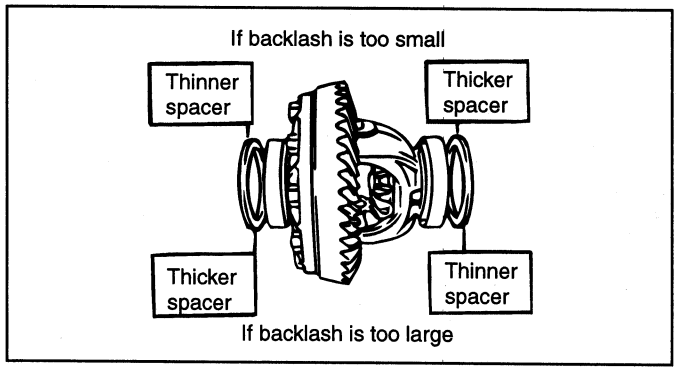

A7FA1120

9. Check the drive gear and drive pinion for tooth contact. If poor contact is evident, adjust again.

10. Measure the drive gear runout at the shoulder on the reverse side of the drive gear.

Limit : 0.05 mm (0.002 in.)

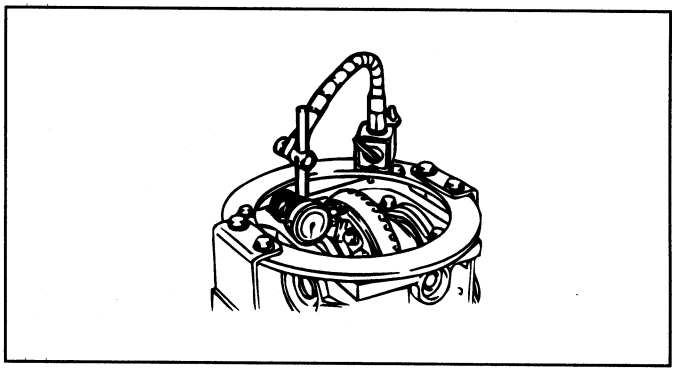

H7FA1130

11. If the drive gear runout exceeds the limit, reinstall by changing the position of the drive gear and differential case, and remeasure.

LIMITED SLIP DIFFERENTIAL (LSD)

COMPONENTS EIJB0510

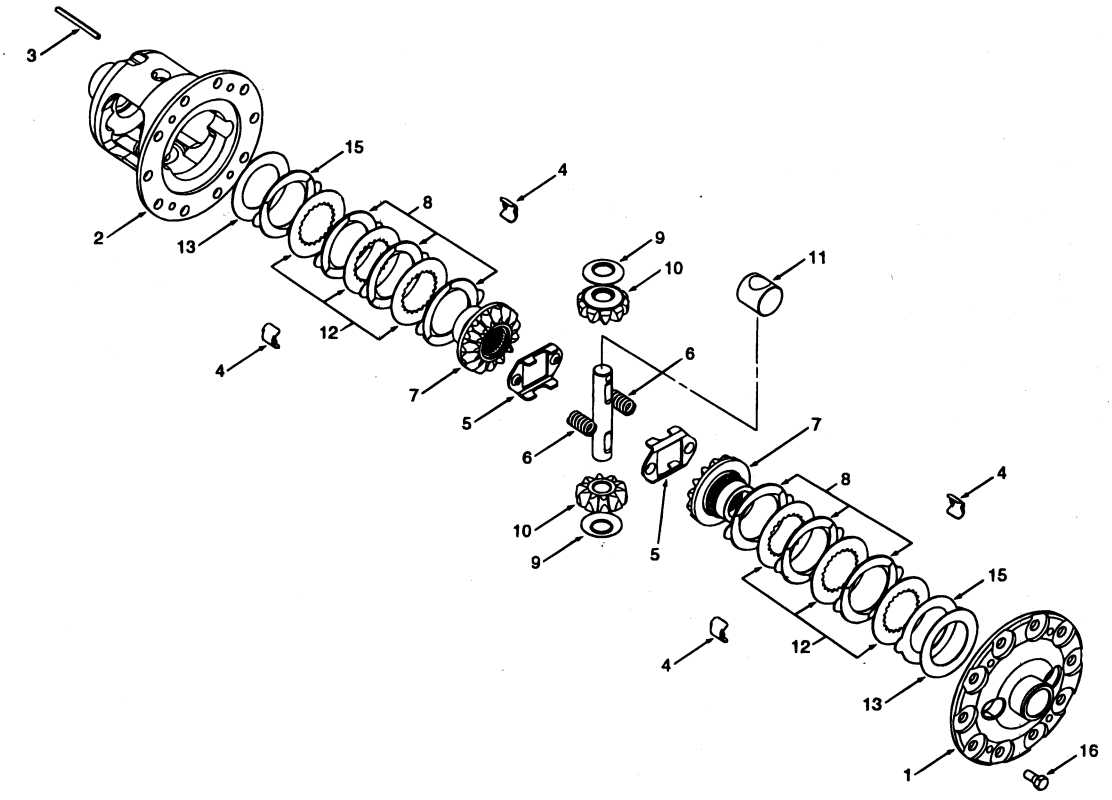

1. L.H.CASE
2. R.H.CASE
3. SPRING PIN
4. GUIDE - EAR
5. PLATE - PRELOAD
6. SPRING - PRELOAD
7. GEAR - SIDE
8. EARED DISC S/A (CARBON ON BOTH SIDES)
9. THRUST WASHER
10. PINION GEAR
11. CROSS SHAFT
12. DISC-SPLINED FRICTION
13. SHIM-SIDE GEAR
14. BLOCK - AXLE THRUST
15. EARED DISC S/A (CARBON ON ONE SIDE)
16. TORX SCREW - M6

AIJA0300

REMOVAL EIJB0520

1. Using the torx screw driver #T27, remove the 4 torx screws on the flange.

NOTE

- **Before removal, make matchmarks.**

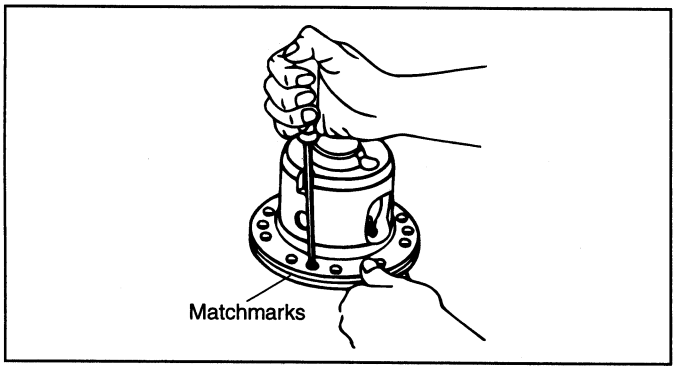

AIJA0301

- **If the case halves are not separated, tap the heads of the screws lightly with a punch and a hammer as shown in illustration.**

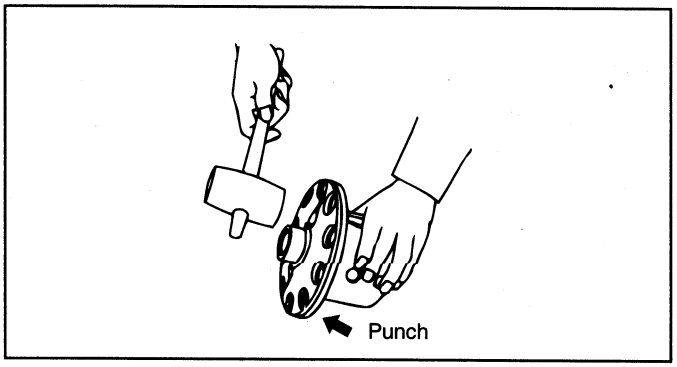

AIJA0302

2. Remove the screws, L.H. case, L.H. shim, L.H. gear sub-assembly (side gear, disc pack, and ear guides), preload plate and two preload springs from the R.H. case assembly.

NOTE

Keep these parts separate so that they can be reassembled in the same location as they were originally.

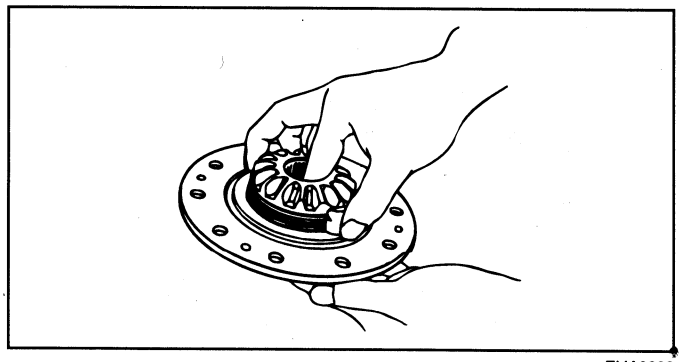

EIJA0303

3. Drive out the cross shaft lock pin using a 4 mm diameter rod and a hammer.

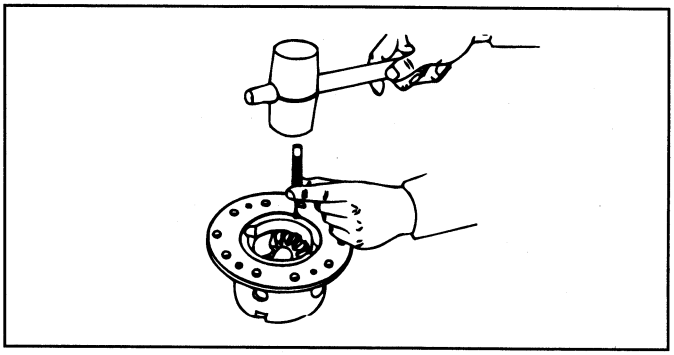

EIJA0304

4. Remove the cross shaft from the side gear.

NOTE

The cross shaft must be driven toward the side where the lock pin hole is located as shown in the illustration.

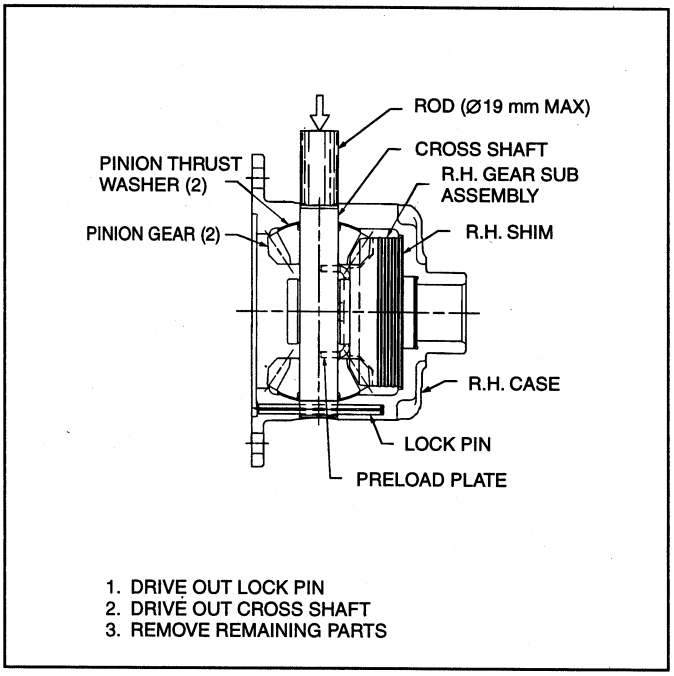

AIJA0305

5. Follow the same procedure for the opposite side case.

NOTE

Do not mix R.H. and L.H. parts.

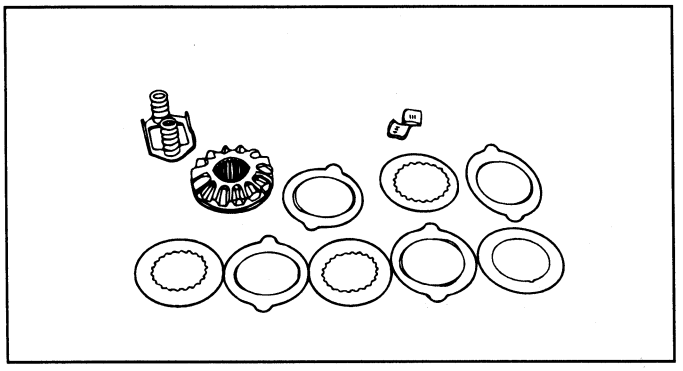

EIJA0306

INSPECTION EIJB0530

1. Check the side gears, pinions, pinion thrust washers, and cross shaft for wear or damage. If there is excessive wear, cracks, nicks, grooves or galling, replace the parts.

2. Inspect the carbon surfaces. After cleaning with a solvent, the carbon surface should appear a course weave fabric with flat spots on the peaks of the weave.

   If the surface is smooth, either from wear or from the weave filled with debris, replace the entire disc pack.

3. Measure the thickness of the carbon friction discs.

   If the measurements is beyond the limit value, replace the disc.

Clutch discs	Limit value
Double sided discs	2.06 mm
Single sided disc	1.65 mm

4. Inspect the splined friction discs. If they have grooves or are polished, replace the entire disc pack. Small scratches on them are ok.

SHIM SELECTION FOR CLUTCH DISC

1. Measurement for R.H. pocket

   Measure the R.H. pocket with the pinion shaft installed as shown in illustration.

2. Measurement for L.H. pocket

   Measure the L.H. pocket with the pinion shaft installed according to the following formula as shown in illustration.

   L.H. POCKET = A + B - C

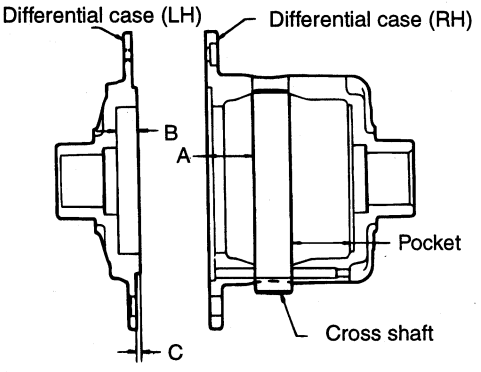

Measurement for the pocket (LH/RH)

AIJA0307

3. Measurement for the side gear sub height.

   As shown in illustration, install the clutch disc, side gear, preload spring and spring plate, and then adjust the clearance of the preload spring by applying the pressure at both sides till it is 32mm as shown in illustration. At this time, measure the height of side gear sub at RH, LH sides by measuring the length of "D"

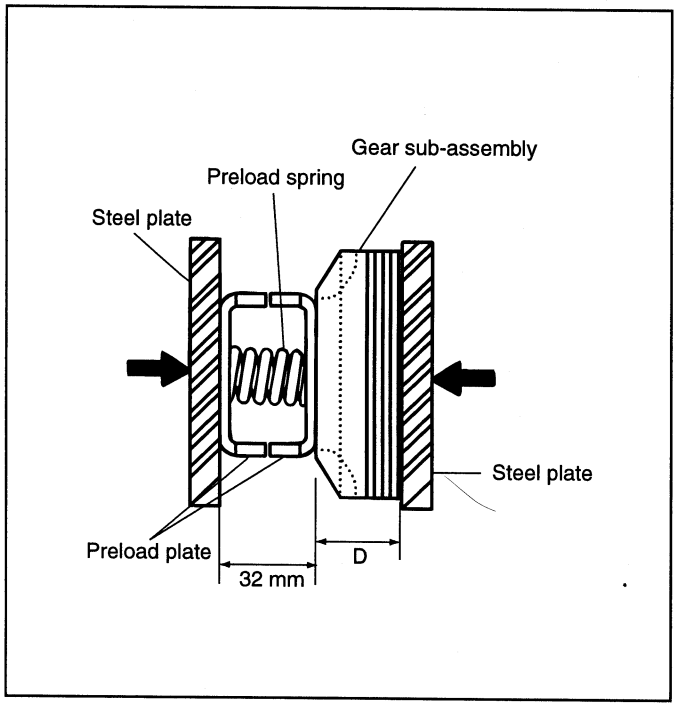

AIJA0308

4. Seclecting shims by the side gear sub height

   a. Used disc
      Shim thickness = RH(LH) pocket - RH(LH) side gear sub height - 6.45
   b. New disc
      Shim thickness = RH(LH) pocket - RH(LH) side gear sub height - 6.20

NOTE

- **Adjust the shim thickness within 0.08mm.**
- **When replacing one disc, replace all of the discs.**

5. The specifications of the clutch disc shim

Part No. (EATON CO)	Shim thickness
EDS98754 - 10	0.010′
EDS98754 - 15	0.015′
EDS98754 - 20	0.020′
EDS98754 - 30	0.025′
EDS98754 - 35	0.030′
EDS98754 - 40	0.035′
EDS98754 - 45	0.040′

REASSEMBLY EIJB0540

1. Install the clutch disc guide and clutch disc in order.

NOTE

Apply grease to the clutch disc guide and clutch disc before reassembly.

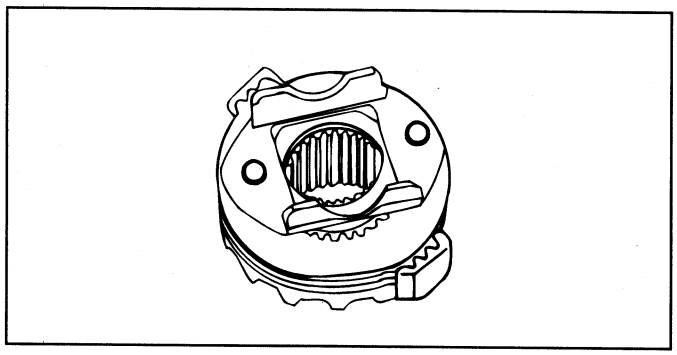

EIJA0309

2. Install the clutch preload plate and side gear.

3. After assembling the pinion shaft, pinion gear and washer, fix the pinion shaft lock pin with a hammer.

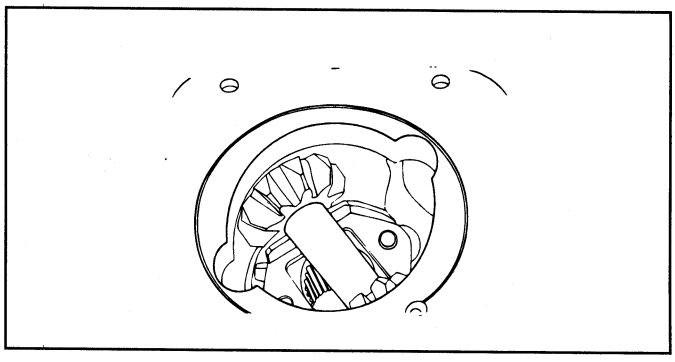

EIJA0310

4. Install the preload spring and spring plate in the opposite side .

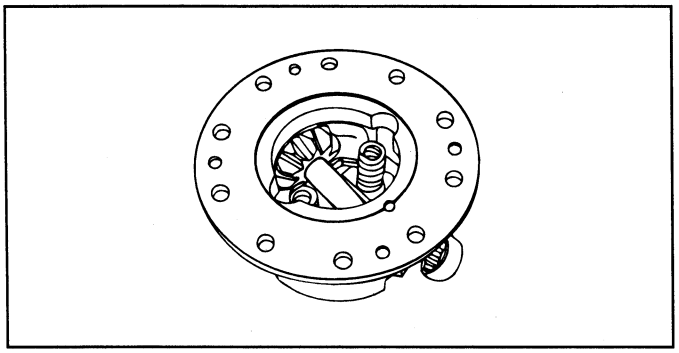

EIJA0311

5. After assembling the clutch disc and side gear in the opposite case, assemble the two cases.

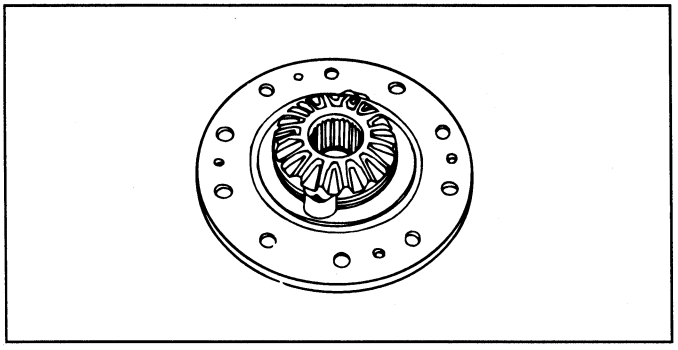

EIJA0312

6. Assemble the case by tightening the torx screws.

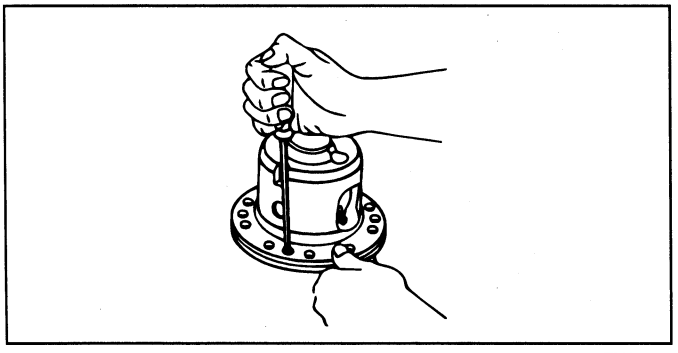

EIJA0301

Suspension System

GENERAL ..... SS -2

FRONT SUSPENSION SYSTEM ..... SS -8

REAR SUSPENSION SYSTEM ..... SS -16

TIRES/WHEELS ..... SS -21

GENERAL

SPECIFICATIONS EHJB0015

Front suspension system	MacPherson strut type

Coil spring free height and identification color

Model					Free height mm (in.)	I.D. color
SIRIUS	2.0	2WD	M/T		398.7	Green - Red
	2.4	2WD	M/T		↑	↑
			M/T	A/C + S/R +ABS	407.6	Green - Yellow
		4WD	M/T		↑	↑
DELTA	2.7	4WD	A/T		416.9	Green - White

- o M/T : With manual transaxle
- o A/T : With automatic transaxle
- o A/C : Air conditioner
- o S/R : Sun roof
- o ABS : Anti-lock brake system

Shock absorber				
Type		Gas pressurized type		
Stroke	mm (in.)	169 (6.65)		
Damping force at 0.3 m/s				
Expansion	N(kg)	820 ± 130 (82 ± 13)		
Compression	N(kg)	580 ± 110 (58 ± 11)		
Wheel and Tire				
Wheel type		Steel	Aluminum	
Wheel size		6J x 15	6.5J x 15	6.5J x 16
Tire size		215 / 70 R 15	215 / 70 R 15	225 / 70 R 16
Tire inflation pressure	kPa (psi)	206 (30)	206 (30)	206 (30)

EHJB001C

Rear suspension system	Double wishbone type

Coil spring free height and identification color

	2WD	4WD
Free height mm (in.)	299.9 (11.8)	304.7 (12)
Identification color	Red - Yellow	Red - White

Shock absorber		
Type	Gas pressurized type	
Stroke mm (in.)	219 (8.62)	
Damping force at 0.3 m/s		
Expension N (kg)	610 ± 100 (61 ± 10)	
Compression N (kg)	270 ± 60 (27 ± 6)	

EHJB001B

SERVICE STANDARD

EHJB0025

Standard value			
Toe-in	Front	0 ± 2 mm (0.008 in.) (Standard diameter of tire : ø702mm)	
	Rear	0 ± 2 mm (0.008 in.) (Standard diameter of tire : ø702mm)	
Camber	Front	0° ± 30′ (Max. difference between LH and RH : 0°30′)	
	Rear	0°30′ ± 30′ (Max. difference between LH and RH : 45′)	
Caster	Front	2°30′±30′ (Max. difference between LH and RH : 0°30′)	
King pin angle	Front	12.59°	
Wheel runout		[Steel wheel]	[Aluminum wheel]
Radial	mm (in.)	0.6 (0.024) : Average of LH & RH	0.3 (0.012)
Axial	mm (in.)	1.0 (0.039)	0.3 (0.012)

TIGHTENING TORQUE

EHJB0030

	Nm	Kg·cm	lb·ft
Wheel nut	90-110	900-1100	67-81
Lower arm ball joint self-locking nut	100-120	1000-1200	74-88
Lower arm bushing (A) to sub-frame mounting bolt	100-120	1000-1200	74-88
Lower arm bushing (G) to sub-frame mounting bolt	90-110	900-1100	66-81
Front strut lower mounting nut	100-120	1000-1200	74-88
Front strut upper mounting nut	40-50	400-500	30-37
Front strut self-locking nut	60-70	600-700	44-52
Stabilizer bar to front strut mounting nut	40-50	400-500	30-37
Sub-frame to body mounting bolt	160-200	1600-2000	118-148
Rear shock absorber complete upper mounting nut	20-30	200-300	15-22
Rear shock absorber complete lower mounting bolt	140-160	1400-1600	104-118
Rear suspension upper arm to crossmember mounting bolt	140-160	1400-1600	103-118
Rear suspension arm cam bolt	140-160	1400-1600	103-118
Crossmember to body mounting bolt	140-160	1400-1600	103-118
Brake tube flare nut	13-17	130-170	10-13
Tie rod end castle nut	24-34	240-340	18-25
Tie rod end lock nut	50-55	500-550	37-41

CAUTION

Replace the self-locking nuts with new ones after removal.

SPECIAL TOOLS

EHJB0040

Tool(Number and Name)	Illustration	Use
09216-21000 Mounting bushing remover and installer	 B1621000	Removal and installation of the front upper arm bushing and lower arm bushing (Use with 09551-31000)
09216-21300 Mounting bushing remover and installer	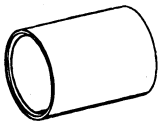 B1621300	Removal and installation of the trailing arm bushing (Use with 09552-38100)
09529-21000 Wheel alignment gauge attachment	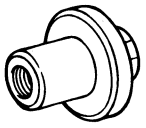 F2921000	Measurement of the wheel alignment
09532-11600 Preload socket	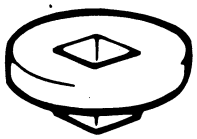 F3211600	Measurement of the stabilizer bar link ball joint preload (use with torque wrench)
09532-3A000 Preload socket	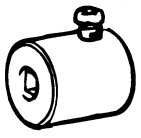 F323A000	Measurement of the front lower arm ball joint preload (use with torque wrench)
09545-28100 Lower arm bushing remover and installer	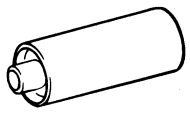 E4528100	Removal and installation of the rear upper arm bushing and lower arm bushing (Use with 09552-25000)

Tool(Number and Name)	Illustration	Use
09551-31000 Upper arm bushing remover and installer	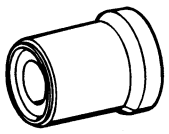 E5131000	Removal and installation of the front lower arm bushing (Use with 09216-21000)
09552-25000 Suspession bushing remover and installer	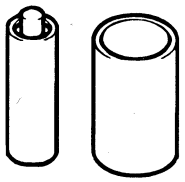 EHDA140H	Removal and installation of the rear upper arm bushing and lower arm bushing (Use with 09545-28100)
09552-38100 Trailing arm bushing remover and installer	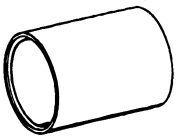 E5238100	Removal and installation of rear trailing arm bushing (Use with 09216-21300)
09546-26000 Strut spring compressor	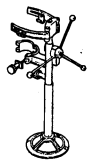 E4626000	Compression of the coil spring

TROUBLESHOOTING

EHHA1500

Trouble symptom	Probable cause	Remedy
Hard steering	Improper front wheel alignment	Correct
	Excessive turning resistance of lower arm ball joint	Replace
	Flat tire	Adjust
	No power assist	Repair or replace
Poor return of steering wheel to center	Improper front wheel alignment	Correct
Poor ride quality	Improper front wheel alignment	Correct
	Damaged shock absorber	Repair or replace
	Broken or worn stabilizer	Replace
	Broken or worn coil spring	Replace
	Worn lower arm bushing	Replace
	Improper tire inflation pressure	Correct

Trouble symptom	Probable cause	Remedy
Abnormal tire wear	Improper front wheel alignment	Correct
	Worn shock absorber	Replace
Wandering	Improper front wheel alignment	Correct
	Poor turning resistance of lower arm ball joint	Repair
	Loose or worn lower arm bushing	Replace
Vehicle pulls to one side	Improper front wheel alignment	Correct
	Excessive turning resistance of lower arm ball joint	Replace
	Broken or worn coil spring	Replace
	Bent lower arm	Replace
Steering wheel shimmy	Improper front wheel alignment	Correct
	Excessive turning resistance of lower arm ball joint	Replace
	Broken or worn stabilizer	Replace
	Worn lower arm bushing	Replace
	Worn of shock absorber	Replace
	Broken or worn coil spring	Replace
Bottoming	Broken or worn spring	Replace
	Malfunction of shock absorber	Replace
Abnormal sound	Loose parts	Retighten
	Damaged or worn wheel bearings	Replace
	Faulty shock absorber	Replace damaged parts
	Defective tire	Replace
Poor ride control	Excessive tire pressure	Adjust pressure
	Faulty shock absorber	Replace
	Loose wheel nuts	Tighten to specified torque
	Sagging or broken coil spring	Replace
Vehicle body tilts to one side	Defective tire	Replace
	Worn bushing	Replace
	Deformation of driveshaft and arm assembly	Replace
	Sagging or broken coil spring	Replace

WHEEL AND TYPE DIAGNOSIS				
CENTER OF TREAD WORN		BOTH SIDES OF TREAD WORN	CHUNKING OF TIRE	ONE SIDE OF TIRE WORN
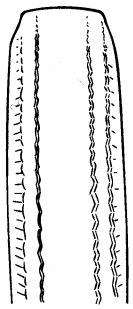 EHA9150A	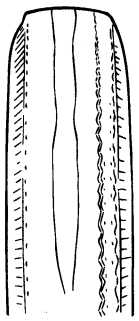 EHA9150B	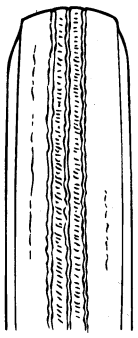 EHA9150C	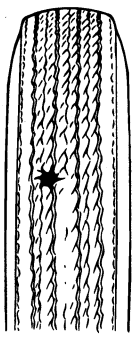 EHA9150D	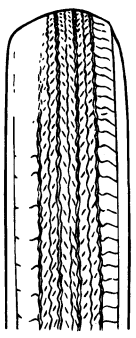 EHA9150E
*Over-Inflation	*Center-tread down to fabric due to excessive over-Inflation	*Under-Inflation *Bulge at the shoulder *Rapid wear	*When a patch of tread has loosened, it is torn off the tire by centrifugal force at high speed	*Incorrect camber angle *Improper camber and toe-in *High-speed turns
FLAT SPOT	FEATHERING	BAD PLUGGING	UNEVEN TIRE WEAR	TOTALLY UNSAFE TIRE
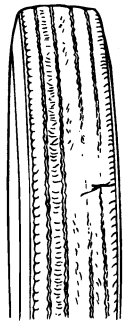 EHA9150F	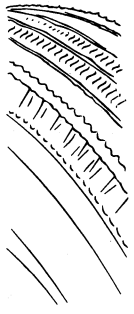 EHA9150G	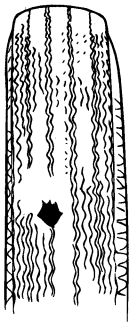 EHA9150H	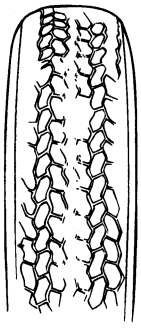 EHA9150I	 EHA9150J
*Caused by high-speed braking hard enough to lock up the wheel	*Excessive Toe-in or Toe-out	*Using more than one plug in a leak distorts the tread, resulting in carcass failure	*Bad wheel balance, fault in suspension, and steering gear or bearing	*Tread worn below the limit

FRONT SUSPENSION SYSTEM

STRUT ASSEMBLY

COMPONENTS EHJB0050

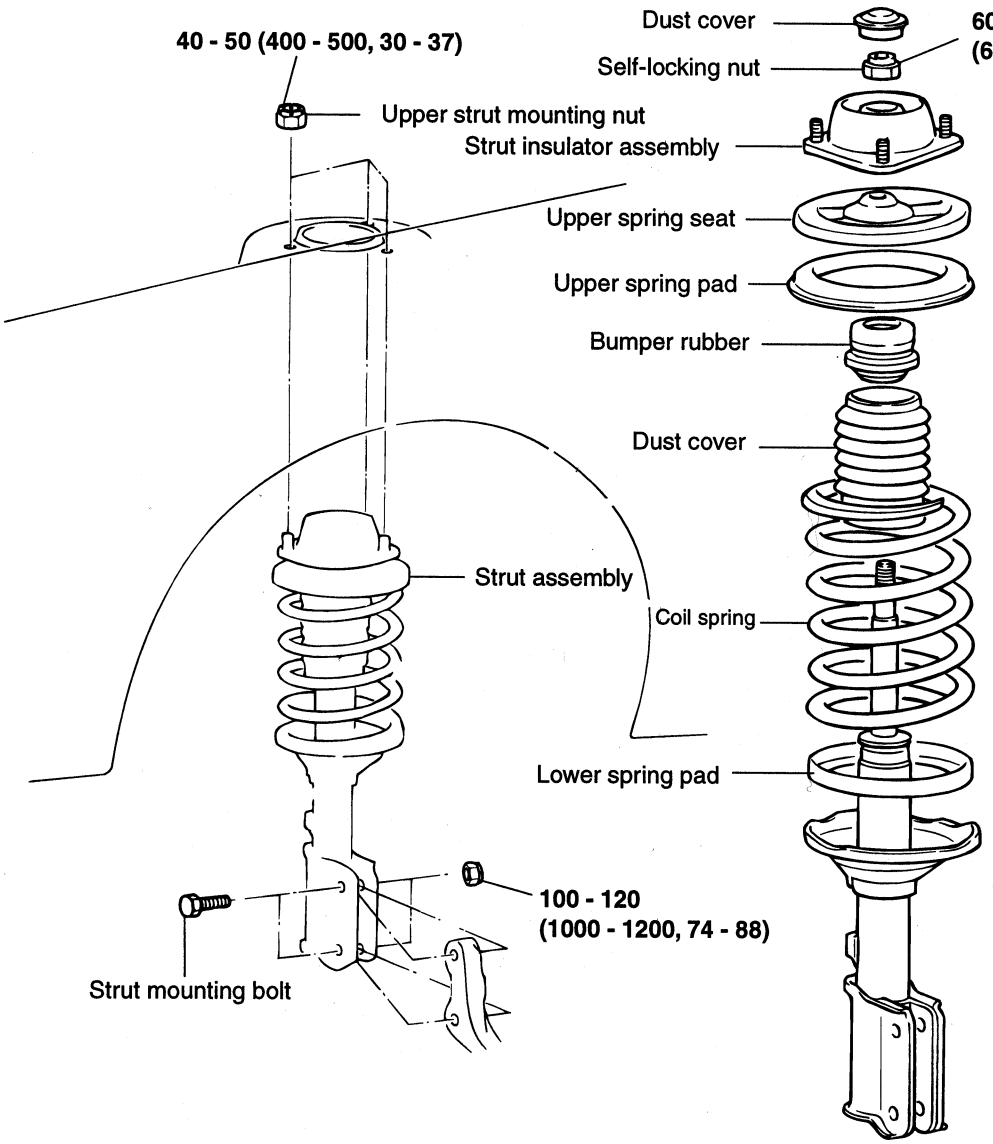

TORQUE : Nm (kg·cm, lb·ft)

REMOVAL EHJB0060

1. Remove the wheel and tire.
2. Detach the brake hose clip from the strut assembly mounting bracket.
3. Detach the wheel speed sensor harness from the front axle knuckle.

CAUTION

Be careful not to damage the wheel speed sensor.

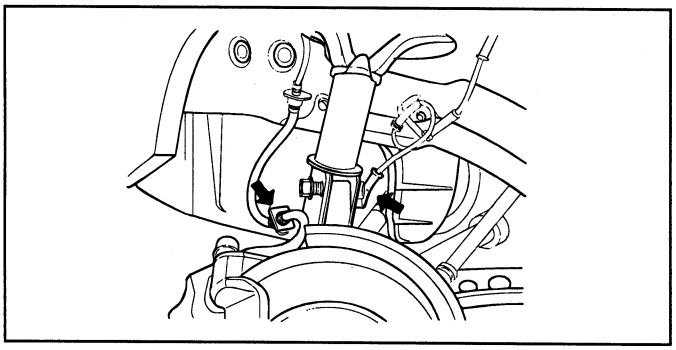

EHHA001A

4. Remove the stabilizer bar link.

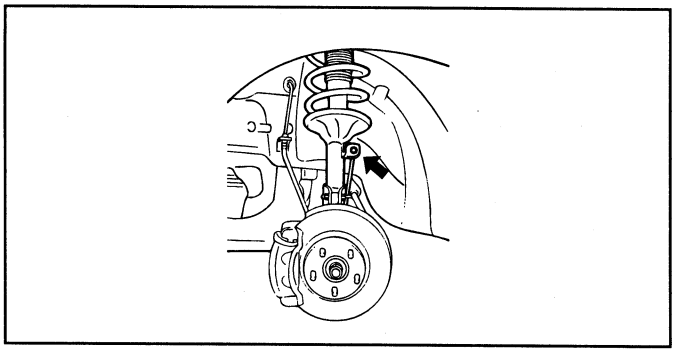

KSMS012A

5. Remove the knuckle from the strut assembly.

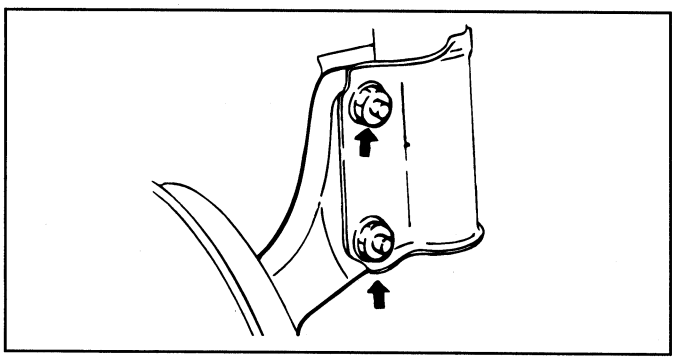

S5SS012B

6. Remove the 3 upper mounting nuts of the strut.

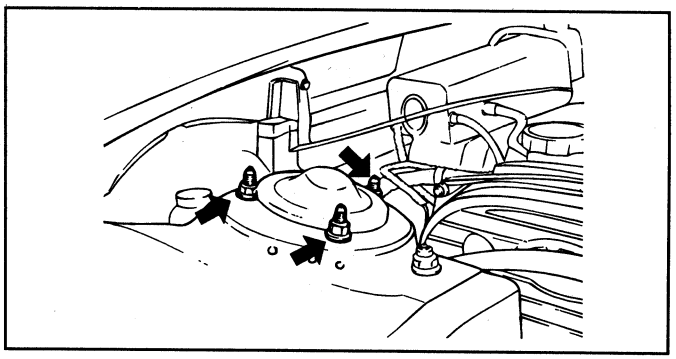

EHA9201D

7. Remove the strut assembly.

INSTALLATION EHHA2020

1. Installation is the reverse of removal.

DISASSEMBLY EHJB0070

1. Remove the dust cover with a flat-tip screw driver.

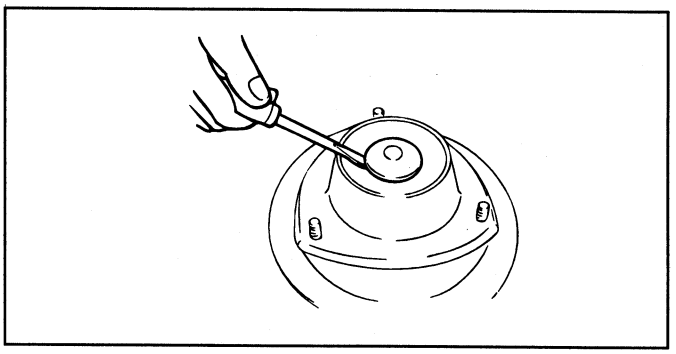

S5SS013A

2. Using the special tool, compress the coil spring until there is only a little tension on the strut.

NOTE

Do not use an impact gun.

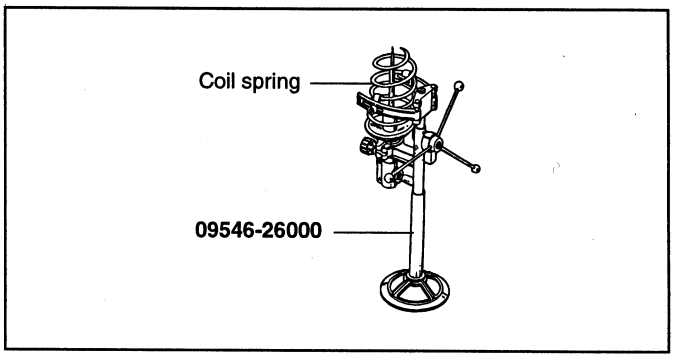

ASM040A

3. Remove the self-locking nut.

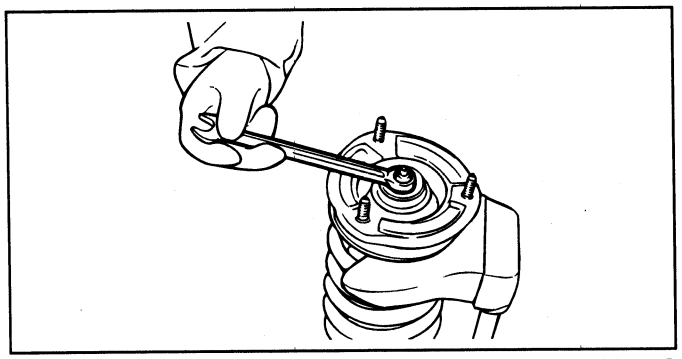

EHA9203B

4. Remove the washer, strut insulator assembly, upper spring seat, upper spring pad, bumper rubber, dust cover, coil spring and lower spring pad.

INSPECTION EHHA2040

1. Check the rubber components for wear or damage.
2. Check the spring for deformation or damage.
3. Hold the shock absorber and push. Then pull it up and down for more than three times. Check for strange noises and irregular elasticity.
4. Check the shock absorber for damage or leakage.

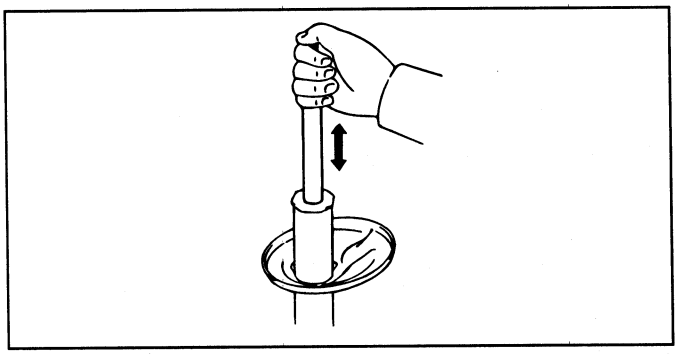

EHHA002A

DISPOSAL EHHA2050

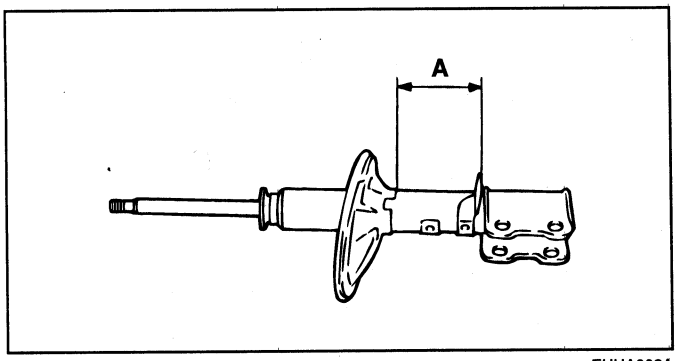

EHHA003A

1. Fully extend the shock absorber rod.
2. Drill a hole on the A section to remove gas from the cylinder.

CAUTION

The gas coming out is harmless, but be careful of chips that may fly when drilling.

REASSEMBLY EHJB0080

1. Using the spring compressor, compress the coil spring completely.

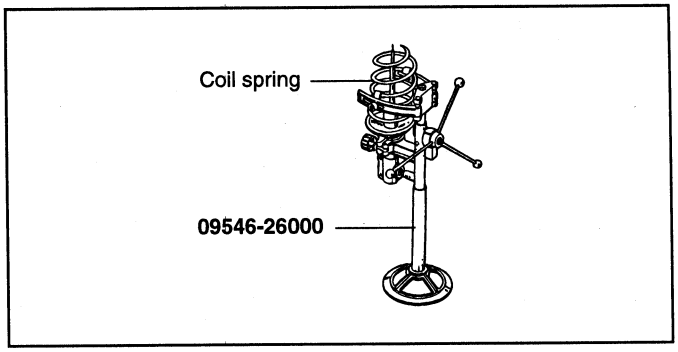

ASM040A

NOTE

- **Do not use an impact gun.**
- **Coil spring installation chart by load classification.**

LH spring		RH spring
Yellow	⟷	Yellow
White	⟷	White
Red	⟷	Red

EHJB008A

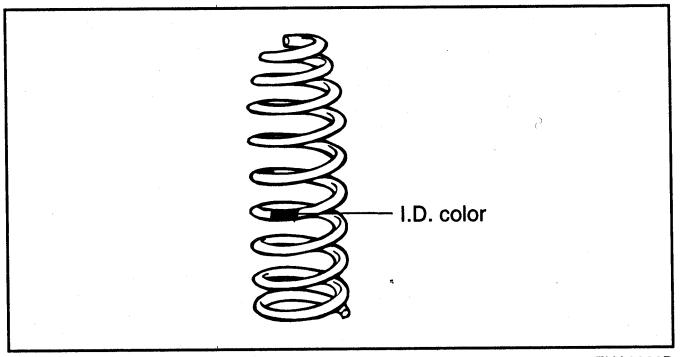

EHA9206B

2. Install the lower spring pad so that the protrusions fit in the holes of the spring lower seat.

NOTE

Position the upper and lower ends of the coil spring in the upper spring pad and lower spring seat groove.

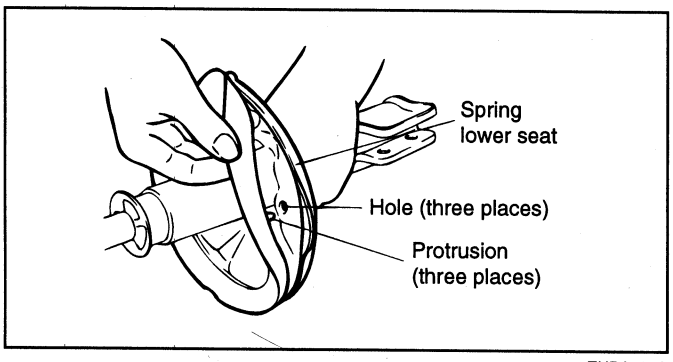

EHDA204A

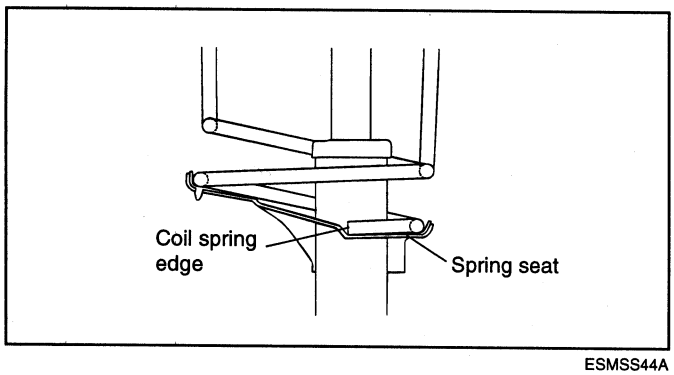

ESMSS44A

3. Install the upper spring seat on the piston rod.

NOTE

Align the D-shaped hole in the upper spring seat assembly with the protrusion on the piston rod.

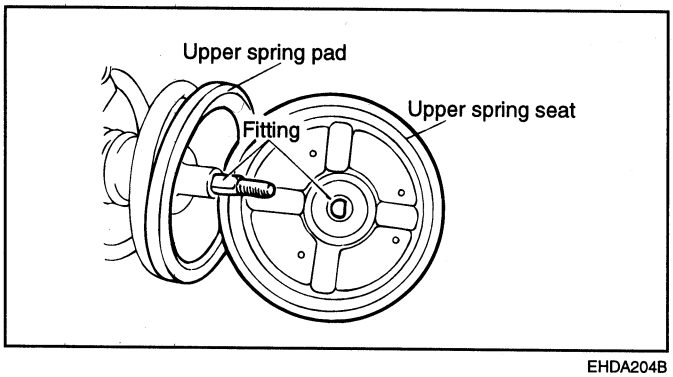

EHDA204B

4. Place the bracket so the holes on the upper spring seat align with those on the lower spring seat in a straight line.

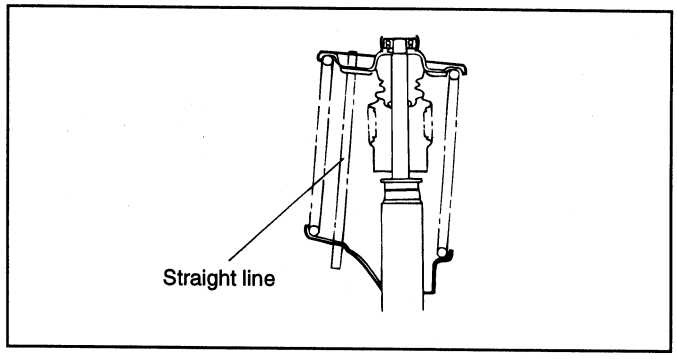

S5SS015E

5. Tighten the new self-locking nut temporarily.
6. Remove the special tool.
7. While holding the piston rod, tighten the new self-locking nut to the specified torque.

Tightening torque	Nm (kg·cm, lb·ft)
Piston rod to bracket nut	60-70 (600-700, 44-52)

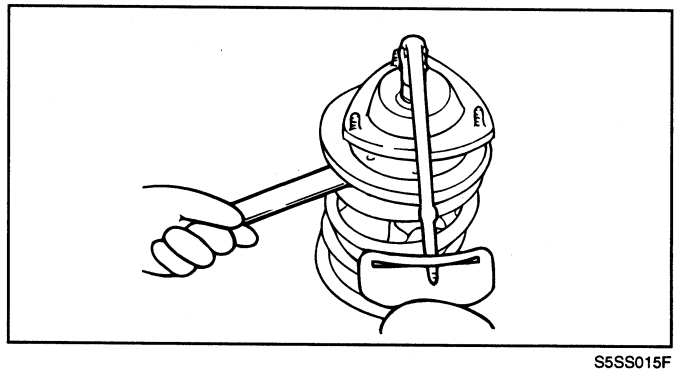

S5SS015F

CAUTION

Do not mar the piston rod with the tool.

LOWER ARM

COMPONENTS EHJB0090

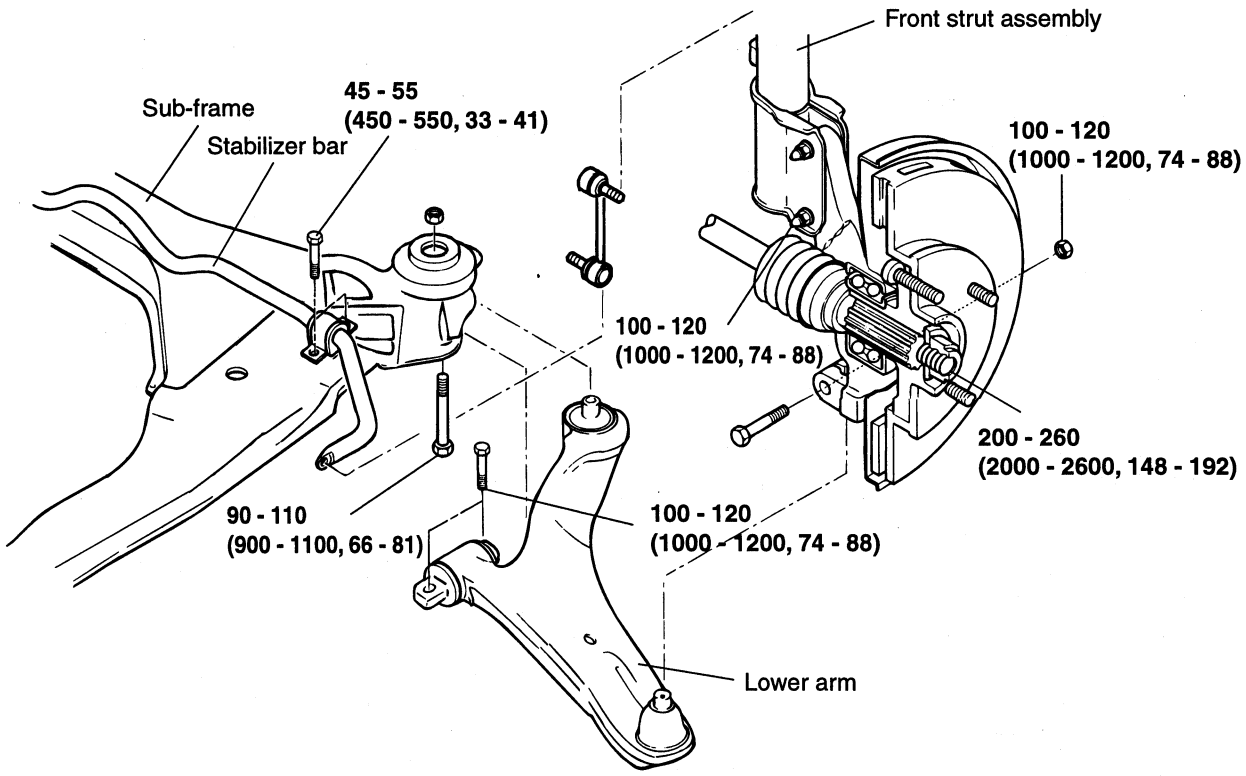

TORQUE : Nm (kg·cm, lb·ft)

ASMS002A

REMOVAL EHJB0100

1. Remove the wheel.
2. Loosen the bolt mounting the knuckle and the lower arm ball joint.
3. Remove the sub frame and 3 bolts mounting the lower arm.

INSTALLATION EHHA2520

1. Installation is the reverse of removal.

DISASSEMBLY EHJB0110

1. Using the special tool, remove the lower arm bushing.

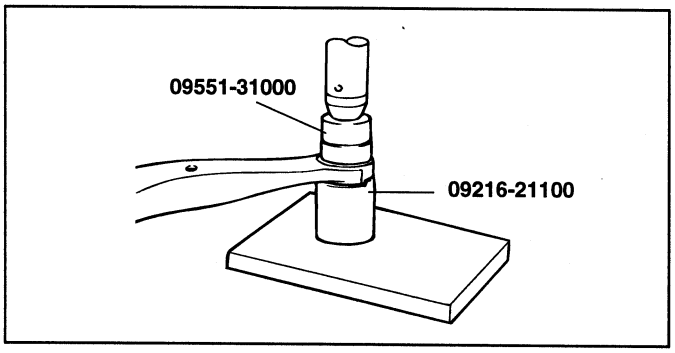

EHJB011A

2. Using a screwdriver, remove the dust cover from the lower arm ball joint.

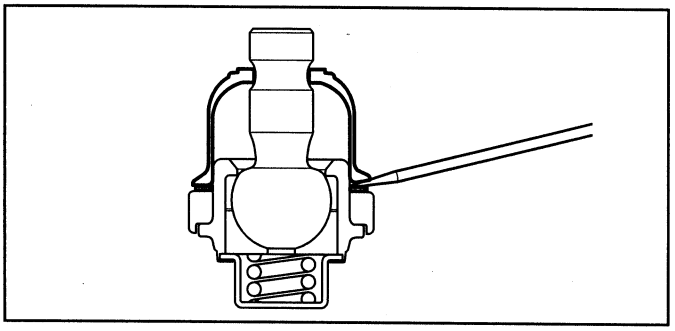

KGX6028A

3. Remove the snap ring.
4. Using a plastic hammer, remove the ball joint from the lower arm assembly.

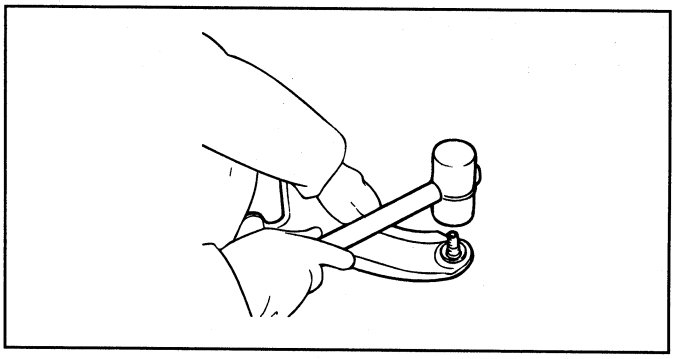

EHDA253A

INSPECTION EHJB0120

1. Check the bushing for wear and deterioration.
2. Check the lower arm for bends and other damage.
3. Check the ball joint dust cover for cracks. If there is a crack on the dust cover, replace the ball joint assembly.
4. Check the lower arm connecting bolt.
5. Shake the ball joint stud several times to test for looseness.
6. Check lower arm ball joint for rotating starting torque.

Standard value :
1.5 - 3.5 Nm [15 - 35kg·cm, 1.1 - 2.6 lb·ft]

NOTE

Measure at the range of 0.5-2rpm after vibrating 3° at room temperature after approx. 24 hours from assembly.

a. When the starting torque is above the standard value, replace the ball joint assembly.
b. When the starting torque is less than the standard value, the ball joint may be used again if there is no wear in the ball joint.

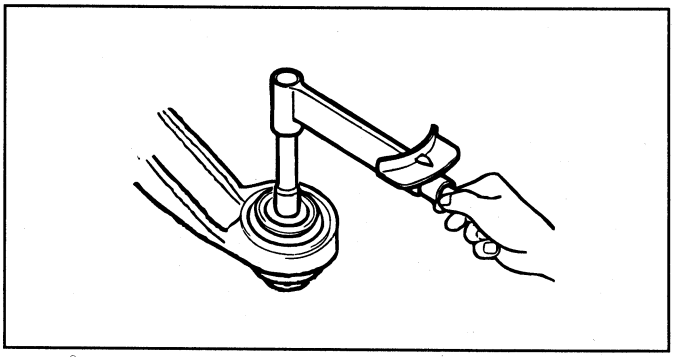

KSMS003A

7. Check the stabilizer bar link ball joint for rotation starting torque.

   - If there is a crack on the dust cover, replace the ball joint dust cover and apply grease.
   - Shake the stabilizer link ball joint several times to test for looseness.
   - Install the self locking nut on the ball joint and measure the ball joint turning starting torque.

Standard value :
0.7 - 2 Nm [7 - 20kg·cm, 0.52 - 1.5 lb·ft]

NOTE

- **After 24 hours of assembly rotate the ball joint stud to the left and right five times.**
- **After that, measure the turning torque around the range of 2 rpm at room temperature.**

   - When the starting torque is above the standard value, replace the stabilizer link.
   - Even if the rotation starting torque is less than the standard value, the ball joint may be used again if there is ball joint abnormal wear or excessive gap.

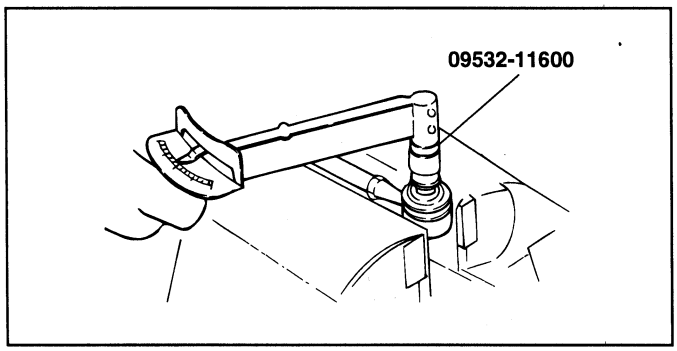

S5SS021A

REASSEMBLY EHJB0130

1. Using the special tool, press-fit the lower arm bushing.

NOTE

The standard pull-out force for the bushing : more than 50 N [500 kg(f), 1103 lb(f)].

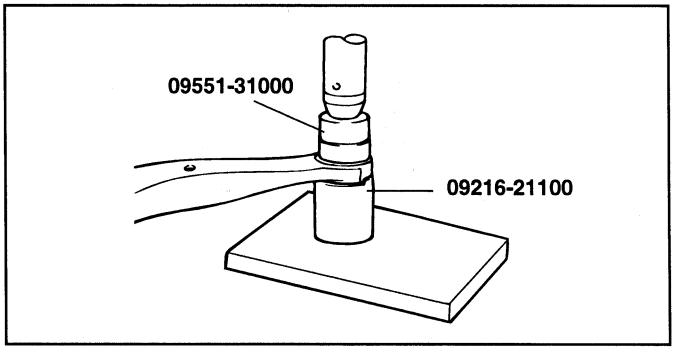

EHJB011A

2. Supporting the ball joint flange, press down the lower arm bushing until the flange touches the lower arm surface.

NOTE

Do not press the ball joint cap.

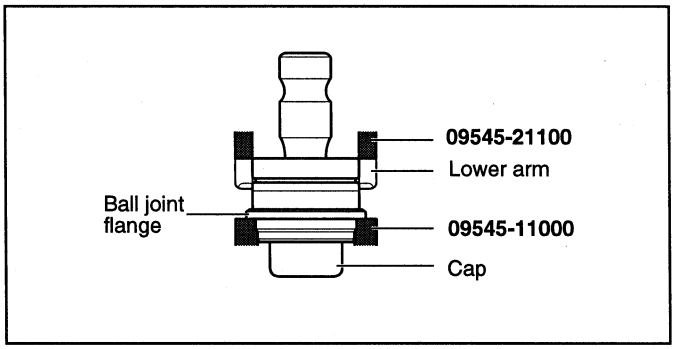

KGX6030A

3. Using a snap ring pliers, install the snap ring. Keep the amount of the snap ring expansion as small as possible.

4. Apply multi-purpose grease to the dust cover lip and inside the cover.

Grease : Sunlight MB-2 or equivalent

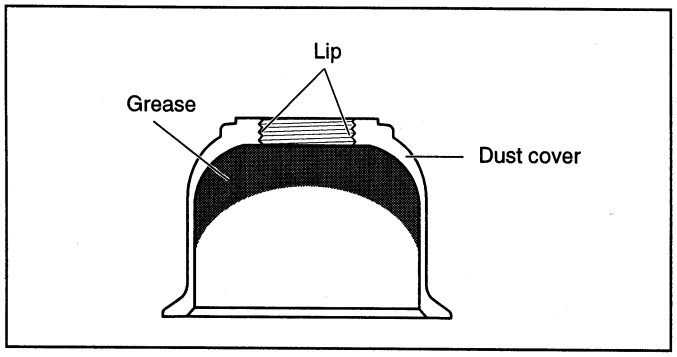

KGX6032A

5. Using the special tool, install the dust cover until it is completely seated on the snap ring.

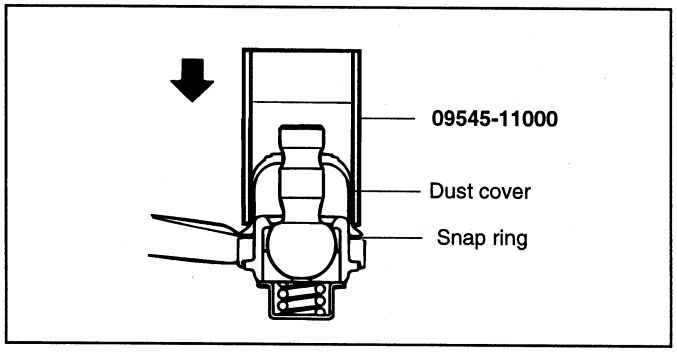

KGX6033A

REAR SUSPENSION SYSTEM

REAR SUSPENSION ARM

COMPONENTS EHJB0140

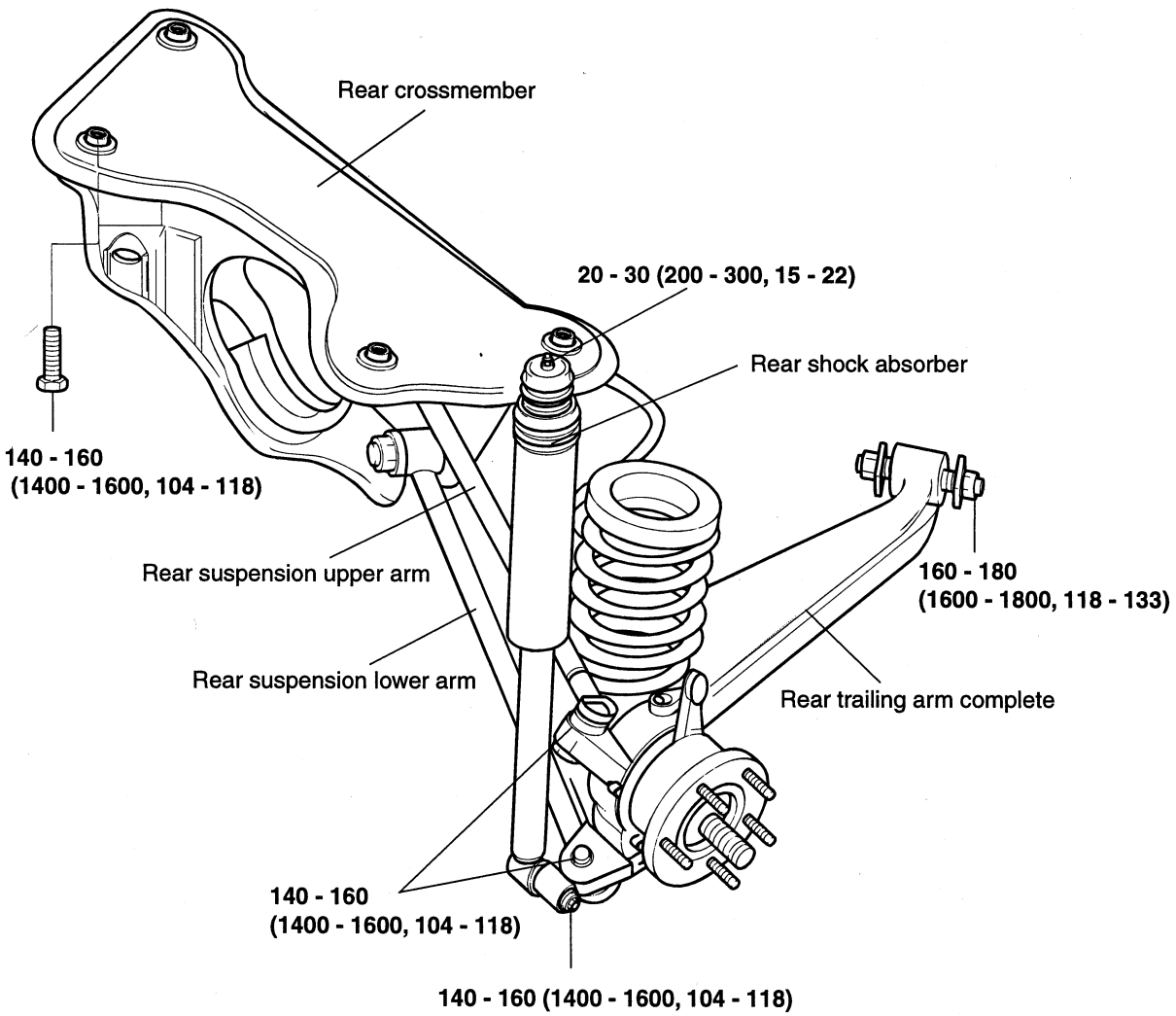

TORQUE : Nm (kg·cm, lb·ft)

REMOVAL EHJB0150

1. Remove the wheel and tire.
2. Remove the flange nut and the brake caliper assembly.
3. Detach the parking brake system.
4. Detach the wheel speed sensor and the parking brake cable.
5. Remove the rear shock absorber assembly.

NOTE

- **When the rear shock absorber is removed, remove the rear shock absorber mounting bolt. Support the trailing arm with a jack.**

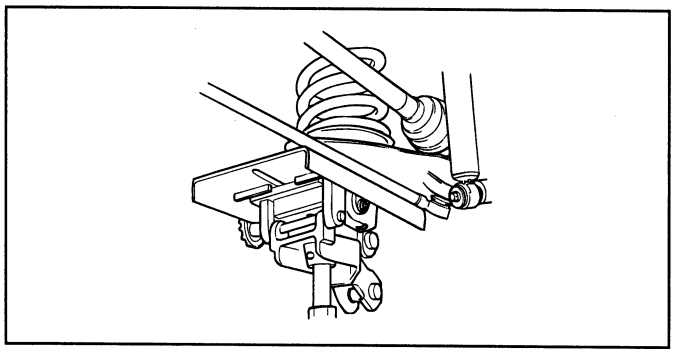

KSMS007C

- **If the rear shock absorber is removed, the rear coil spring is easy to remove.**

6. Remove the rear driveshaft from the rear axle assembly.
7. Using the special tool, remove the rear suspension upper and lower arm.

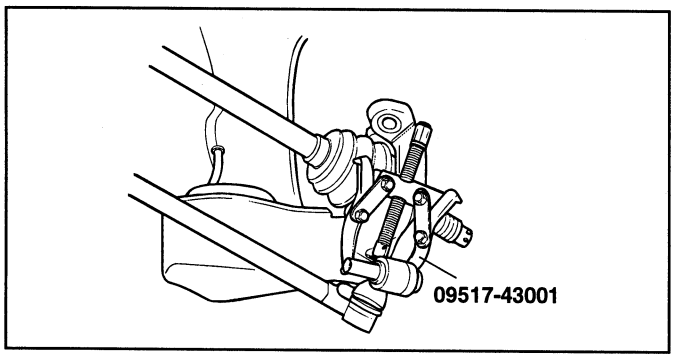

KSMS008C

NOTE

Make matchmarks on the crossmember and the cams.

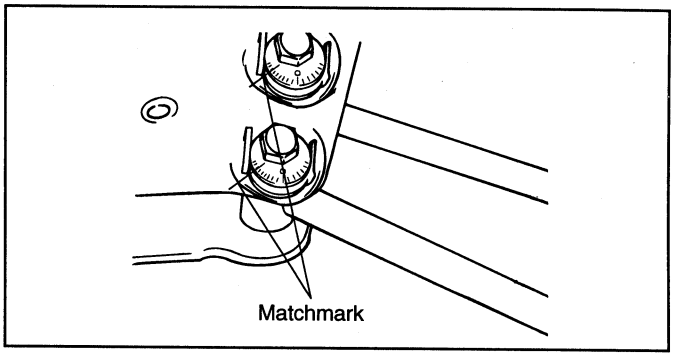

ASMS009A

8. Remove the trailing arm complete.
9. Remove the propeller shaft.

NOTE

Refer to the removal procedure of propeller shaft, page DS-9.

10. Loosen the muffler to ease access.

NOTE

When the crossmember is removed, you can prevent interference between the muffler and the crossmember page.

11. Remove the crossmember. Provide clearance between the fuel tank and differential carrier.

NOTE

First, remove the 2 differential and crossmember mounting bolts and then remove the 4 body and crossmember mounting bolts.

INSTALLATION EHJB0160

1. To install, reverse the removal procedure.
2. Align the upper and lower ends of the spring with the grooves of the spring seat and install.

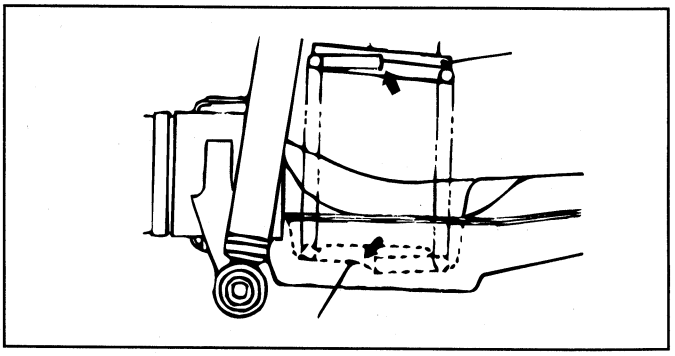

EHHA013A

3. After installing, replenish with brake fluid, and bleed the system.

4. Verify the wheel alignment.

INSPECTION EHJB0170

1. Check the bushing for wear and deterioration.

2. Check the rear suspension lower arm and upper arm for bending or breakage.

3. Check the ball joint dust cover for cracks.

4. Check all bolts.

5. Check the upper and lower arm ball joint for rotating torque.

   a. If there is a crack in the dust cover, replace the ball joint assembly.
   b. Shake the ball joint stud several times to check for looseness.
   c. Measure the ball joint rotating torque.

Standard value :

1-3.5 Nm, (10-35 kg·cm, 0.74-2.59 ft·lb)

NOTE

After the unit has been assembled for 24 hours, at room temperature, turn the ball joint 30° and then back and forth 3°. Then, measure the ball joint rotating torque.

   d. If the rotating torque is above the upper limit of the standard value, replace the ball joint assembly.
   e. If the rotating torque is below the lower limit of the standard value, the ball joint may be reused unless it has drag and excessive play.

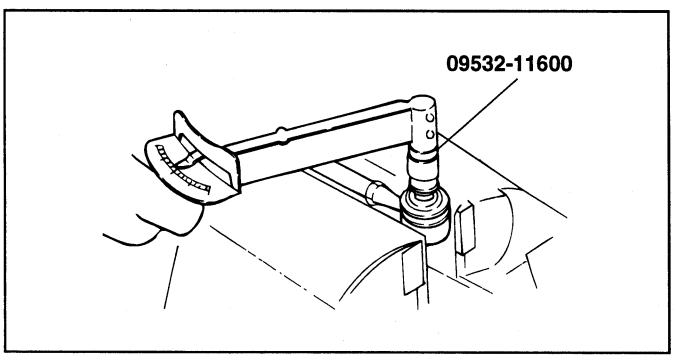

S5SS021A

UPPER ARM, LOWER ARM AND ASSIST LINK

REPLACEMENT OF TRAILING ARM COMPLETE BUSHING EHJB0180

1. Using the special tool, press-fit the trailing arm bushing.

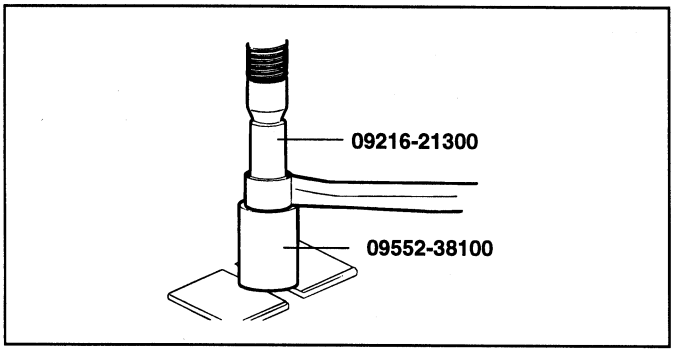

KSMS010A

NOTE

Position the groove in the trailing arm bushing so it is aligned as shown in illustration. Then, press- fit the bushing.

Deviation of rotational direction : ±3° or less

Pull-out force for the bushing :
150N [15000 kg(f), 22.5 lb(f)]

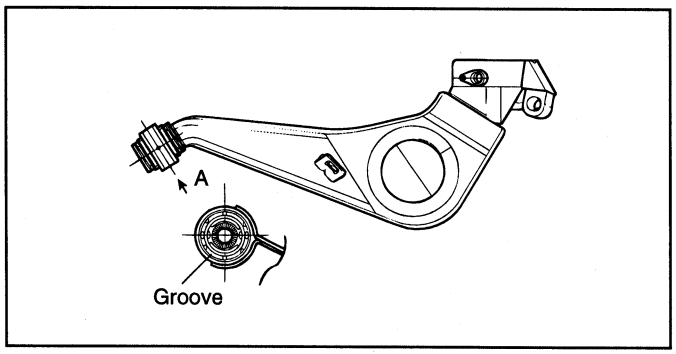

ASMS013A

TRAILING ARM

REPLACEMENT OF REAR SUSPENSION LOWER ARM BUSHING AND UPPER ARM BUSHING EHJB0190

1. Using the special tool, replace the rear suspension lower and upper arm bushing.

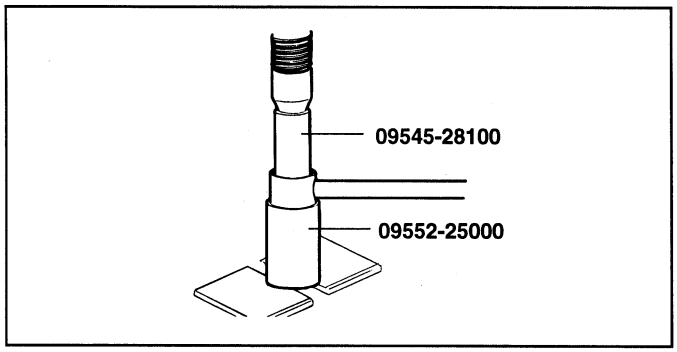

KSMS011A

NOTE

- **Install the bushings as shown in the illustration.**
- **Install the arm following the ID color shown in the chart.**

Part name	LH	RH
Lower arm Upper arm	Yellow	Blue

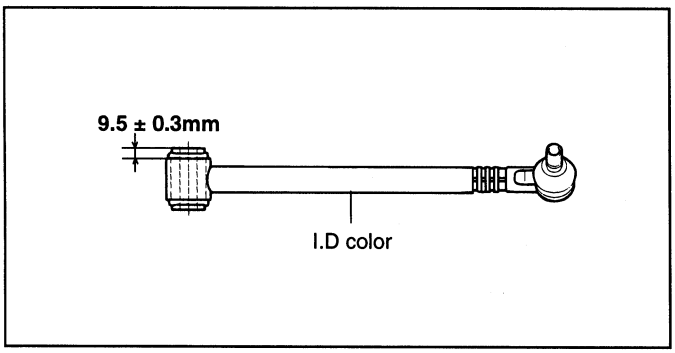

ASMS014A

TIRES/WHEELS

TIRE

FRONT WHEEL ALIGNMENT EHJB0200

When using a wheel alignment tester to inspect the front wheel alignment, always position the car on a level surface with the front wheels facing straight ahead. Prior to inspection, make sure that the front suspension and steering system are in normal operating conditione and that the wheels and tires face straight ahead, and the tires are inflated to specification.

TOE-IN

Toe-in (B-A or angle $\alpha+\beta$) is adjusted by turning the tie rod turnbuckles. Toe-in on the left front wheel can be reduced by turning the tie rod toward the rear of the car. Toe-in change is adjusted by turning the tie rod for the right and left wheels simultaneously at the same amount as follows:

Toe-in (B-A) mm (in.) [Standard value] :

0 ± 2 mm (0 ± 0.08 in.)

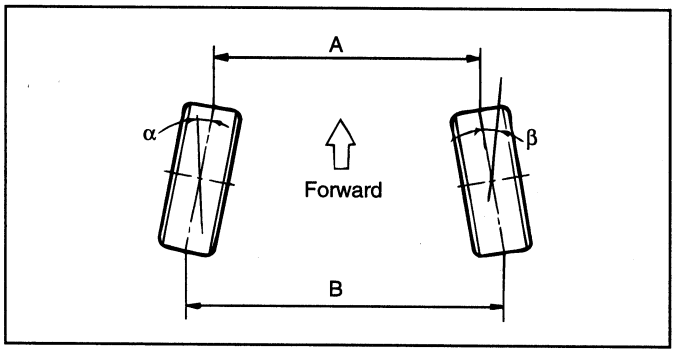

EHHA850A

ADJUSTMENT OF SIDE SLIP AND WHEEL STEERING ANGLE

1. Side slip is adjusted by rotating the tie rod within 0±3mm/m with the vehicle holding one person.
2. Steering angle is adjusted to the standard value by turning the right and left tie rods in opposite directions for the same amount.

Outer wheel steering angle : 32°73′±2

Inner wheel steering angle (difference between right and left should be within 2°) : 37°41′±2°

Inner wheel steering angle variation per tie rod revolution : 0.65°

NOTE

- **Remove the clip holding the bellows before rotating the tie rod.**
- **Check the bellows for twists after setting the steering angle, then reassemble it.**

Tie rod end lock nut tightening torque :
50-55 Nm [500-550kg·cm, 37-41 lb·ft]

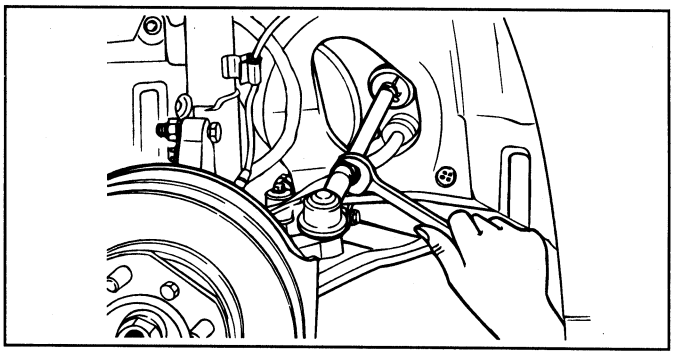

EHHA850B

CAMBER

The steering knuckle which is installed with the strut assembly is pre-set to the specified camber at the factory and cannot be adjusted.

Camber : 0°±30′

CASTER

Caster is pre-set at the factory and cannot be adjusted. If the caster is not within the standard value, replace the bent or damaged parts.

Caster : 2°30′±30′

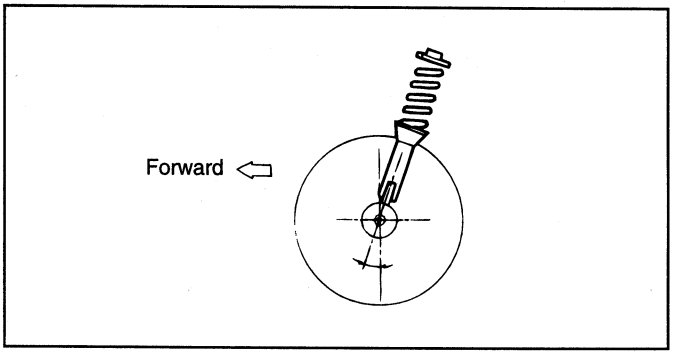

EHHA850C

NOTE

1. **The worn, loose or damaged parts of the front suspension assembly must be replaced prior to measuring front wheel alignment.**
2. **Measure wheel alignment by using the special tool (09529-21000).**
3. **Camber and caster are pre-set at the factory and cannot be adjusted.**
4. **If camber and caster are not within specifications, replace bent or damaged parts.**

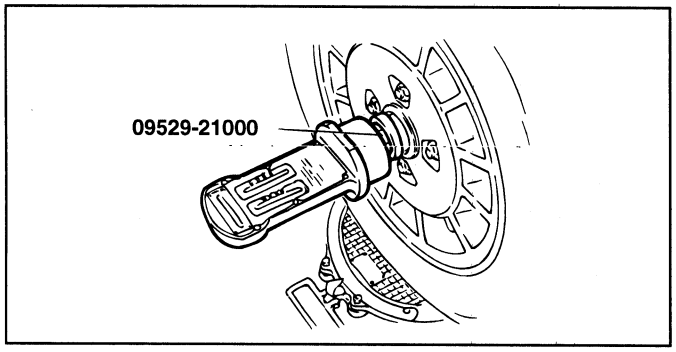

EHHA850D

REAR WHEEL ALIGNMENT

TOE-IN

Standard value : 0 ± 2 mm (0 ± 0.08 in.)

NOTE

1. **The rear suspension lower arm mounting cam bolt should be turned an equal amount on both sides during adjustment.**

Right wheel : Clockwise direction : toe-out

Left wheel : Clockwise direction : ton-in

2. **The cam bolt should be adjusted within a 90° range left and right from the center position.**

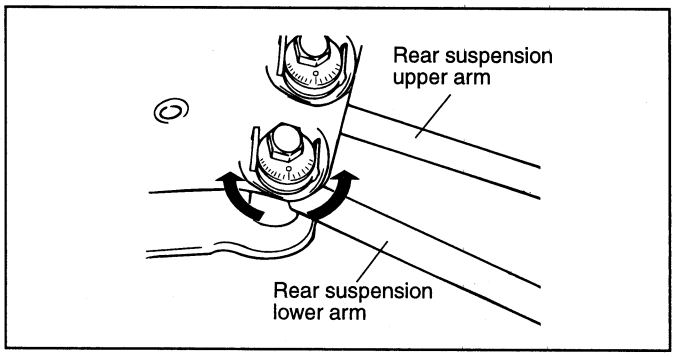

ASMSS19A

CAMBER

Standard value : 0°30′±30′

NOTE

1. **The rear suspension upper arm mounting cam bolt should be turned an equal amount on both sides during adjustment.**
2. **Install the left and right springs using the same ID color.**
3. **The cam bolt should be adjusted within a 90° range left and right from the center position.**

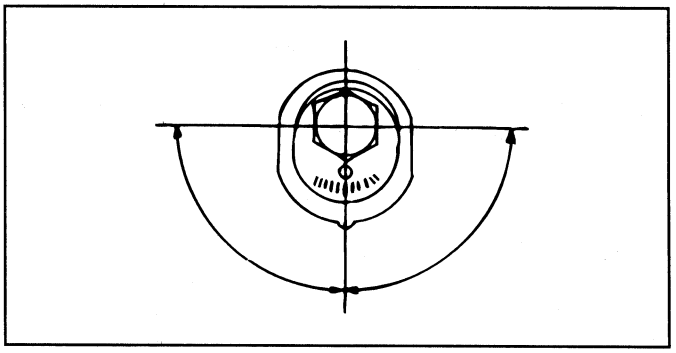

KSMSS20A

TIRE WEAR

1. Measure the tread depth of the tires.

Tread depth of tire [Limit] : 1.6 mm (0.06 in.)

2. If the remaining tread depth is less than the limit, replace the tire.

NOTE

When the tread depth of the tire is reduced to 1.6 mm (0.06 in.) or less, the wear indicators will appear.

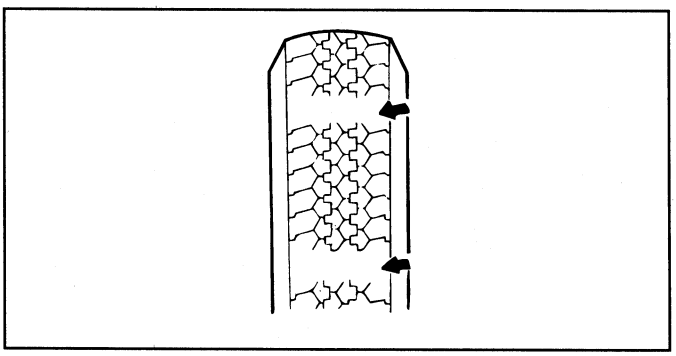

EHA9850E

WHEEL

WHEEL RUNOUT EHJB0215

1. Jack the vehicle up and support it with jack stands.
2. Measure wheel runout with a dial indicator as illustrated.
3. Replace the wheel if wheel runout exceeds the limit.

Wheel runout [Limit]

Steel wheel : Radial - 0.6mm (0.024 in)

Axial - 1.0mm (0.039 in)

Aluminum wheel : Radial - 0.3mm (0.012 in)

Axial - 0.3mm (0.012 in)

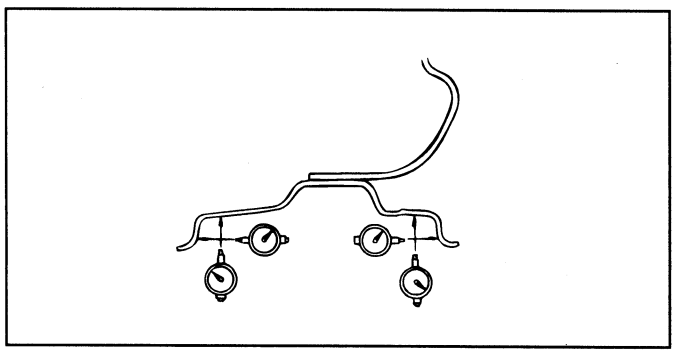

EHHA900A

TIGHTENING WHEEL NUT

1. Tightening torque

90-110 Nm [900-1100kg·cm, 66-81 lb·ft]

NOTE

When using an impact gun, be careful to use the correct tightening torque.

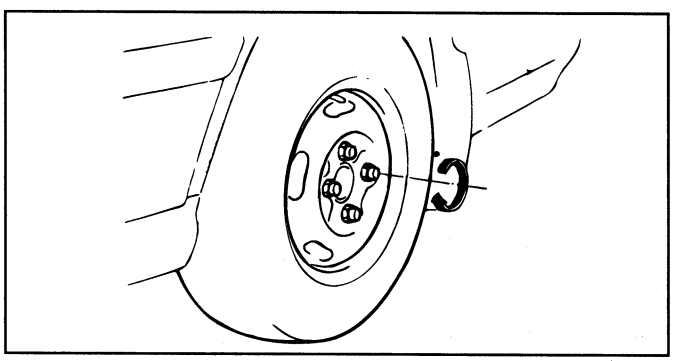

Y54-010A

2. Tighten all wheel nuts completely in the order illustrated.

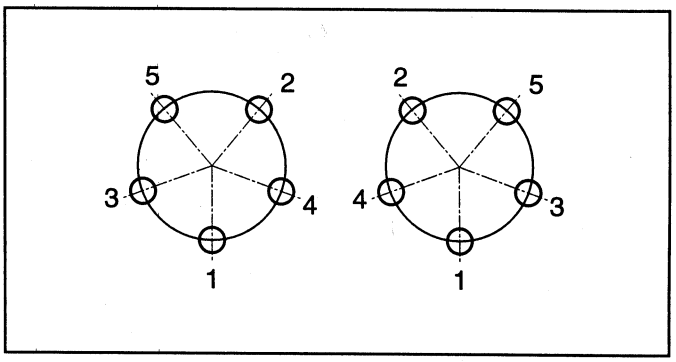

KFW6020A

Steering System

GENERAL ..... ST -2

MECHANICAL POWER STEERING SYSTEM ..... ST -9

GENERAL

EPJB0100

SPECIFICATIONS

Shaft and joint type	Collapsible, universal joint with tilt column
Steering gear type	Rack and pinion
Rack stroke	142 ± 5.5 mm
Power steering pump type	Vane type
Maximum steering angle (In a empty car)	Inner wheel : 35.1° ± 1°30′
	Outer wheel : 30.7°
Steering wheel turns	2.93 turns

SERVICE STANDARD

Steering wheel free play	0-30 mm	
Tie rod end ball joint starting torque	0.5-2.5 Nm	
Adjusting belt tension	Tension (kgf)	Belt deflection (mm)
New belt	75 ± 10	8.8 - 11.0
Used belt	50 ± 5	12.5 - 14.3
Checking tension	50 ± 10	11.7 - 15.3
Oil pump pressure (Max.)	78-83 kgf/cm^2	

TIGHTENING TORQUE

EPJB0200

Item	Nm	kg·cm	lb·ft
Steering column and shaft			
Airbag module mounting bolt	4-6	40-60	3.0-4.4
Steering column to column member mounting (upper)	13-18	130-180	9.6-13.3
Steering column to column member mounting (lower)	13-18	130-180	9.6-13.3
Steering wheel lock nut	35-45	350-450	25.8-33.2
Joint assembly	15-20	150-200	10.8-14.5
Steering gear box			
Pressure hose to gear box	12-18	120-180	8.9-13.3
Return tube to gear box	12-18	120-180	8.9-13.3
Tie rod rack	80-100	800-1000	59.0-73.8
Tie rod end lock nut	50-55	500-550	36.9-40.6
Yoke plug lock nut	50-70	500-700	36.9-51.6
Pinion and valve assembly self locking nut	50-70	500-700	36.9-51.6
End plug	50-70	500-700	36.9-51.6
Feed tubes	10-16	100-160	7.4-11.8
Tie rod end to knuckle	24-34	240-340	17.7-25.1
Crossmember mounting bracket	60-80	600-800	44.3-59.0
Crossmember and steering gear box	90-110	900-1100	66.4-81.1
Oil pump			
Pressure hose to oil pump	55-65	550-650	40.6-47.9
Oil pump mounting bolt	22-23(Long one)	220-230	16.2-24.3
	17-26(Short one)	170-260	12.5-19.2
Oil pump pressure switch	17-23	170-230	12.5-17.0
Oil pump bracket mounting bolt	39-60	390-600	28.8-44.3
Pump cover to pump body	33-43	330-430	24.3-31.7
Suction connector to oil pump body	13.6-18.4	136-184	10.0-13.6
Flow control valve connector to pump body	70-80	700-800	51.6-59.0
Steering hoses and oil reservoir			
Oil reservoir bracket mounting bolt	4-6	40-60	3.0-4.4
Cooler tube clamp mounting bolt	4-6	40-60	3.0-4.4
Tube clip and tube bracket	4-6	40-60	3.0-4.4
Pressure hose bracket mounting bolt	4-6	40-60	3.0-4.4
Clamp hose	4-6	40-60	3.0-4.4

LUBRICANTS

EPHA0150

Items	Specified lubricant	Quantity
Steering column bearing	Multipurpose grease SAE J310a, NLGI No.2	As required
Steering gear box rack, pinion gear part	Multipurpose grease SAE J310a, NLGI No.2	As required
Bellows	Silicone grease	As required
Oil pump	Power steering fluid (PSF-3)	As required
Power steering fluid	Power steering fluid (PSF-3)	1.0 lit (0.88 qts.)

SPECIAL TOOLS

EPHA0200

Tool (Number and Name)	Illustration	Use
09222-21100 Valve stem oil seal installer	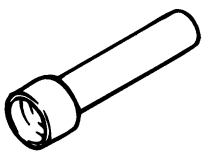 HCT56-01	Installation of the pinion gear bearing
09222-32100 Valve stem oil seal installer	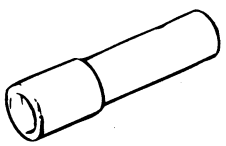 HCT56-02	Installation of the oil pump oil seal
09431 - 11000 Front oil seal installer	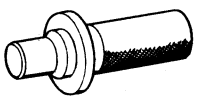 EPA9005C	Installation of the pinion gear oil seal
09432-21601 Bearing installer	 EPA9005D	Installation of the pinion gear bearing
09517-21400 Drift	 EPA9005E	1. Removal of the pinion gear bearing 2. Removal of the pinion bearing outer race

Tool (Number and Name)	Illustration	Use
09561-11001 Steering wheel puller	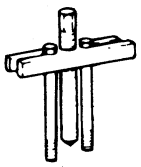 HCT56-07	Removal of the steering wheel
09565-11100 Preload socket	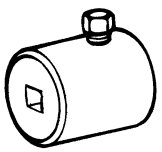 EPA9005G	Measurement of the main shaft preload
09565-21000 Pinion bearing remover and installer	 EPA9005H	Removal and installation of the pinion gear bearing
09565-31300 Yoke plug torque wrench socket	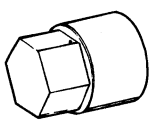 EPA9005I	Removal, installation and adjustment of the steering gear yoke plug
09568-31000 Tie rod end puller	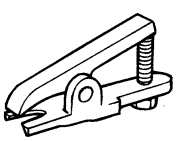 EPA9005J	Separation of the tie rod end ball joint
09572-21000 Oil pressure gauge	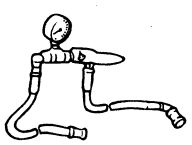 EPA9005K	Measurement of the oil pressure (use with 09572-33100, 09572-21200)

Tool (Number and Name)	Illustration	Use
09572-21200 Oil pressure gauge adapter	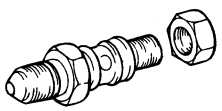 EPA9005L	Measurement of the oil pressure (use with 09572-21000, 09572-33100)
09572-33100 Oil pressure gauge adapter	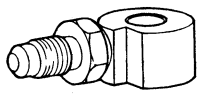 EPA9005M	Measurement of the oil pressure (use with 09572-21000, 09572-21200)

TROUBLESHOOTING

EPJB0500

Symptom	Probable cause	Remedy
Excessive play in steering wheel	Loose universal joint	Retighten
	Loose steering gear mounting bolts	Retighten
	Loose or worn tie rod end	Retighten or replace as necessary
Steering wheel operation is not smooth	V-belt slippage	Readjust
	Damaged V-belt	Replace
	Low fluid level	Replenish
	Air in the fluid	Bleed air
	Twisted or damaged hoses	Reposition or replace hoses
	Insufficient oil pump pressure	Repair or replace oil pump
	Sticky flow control valve	Replace
	Oil leakage in the oil pump	Replace the damaged parts
	Deteriorated or damaged gear box or valve body seals	Replace
Steering wheel does not return properly	Excessive turning resistance of tie-rod end ball joint	Replace
	Universal joint excessively tight	Adjust
	Inner tie rod and/or ball joint cannot turn smoothly	Replace
	Loose mounting of gear box to gear box mounting bracket	Retighten
	Worn steering shaft joint and/or body grommet	Correct or replace
	Distorted rack	Replace
	Damaged pinion bearing	Replace
	Twisted or damaged hoses	Reposition or replace
	Damaged oil pressure control valve	Replace
	Damaged oil pump input shaft bearing	Replace
Noise	**Hissing Noise in Steering Gear** There is some noise with all power steering systems. One of the most common is a hissing sound when the steering wheel is turned and the car is not moving. This noise will be most evident when turning the wheel while the brakes are being applied. There is no relationship between this noise and steering performance. Do not replace the valve unless the "hissing" noise becomes extreme. A replaced valve will also make a slight noise, and is not always a solution for the condition.	

Symptom	Probable cause	Remedy
Rattling or chucking noise in the rack and pinion	Interference with hoses from vehicle body	Reposition
	Loose gear box bracket	Retighten
	Loose tie rod end and/or ball joint	Retighten
	Worn tie rod and/or ball joint	Replace
Noise in the oil pump	Low fluid level	Replenish
	Air in the fluid	Bleed air
	Loose pump mounting bolts	Retighten

NOTE

A slight "grinding noise" may be heard immediately after the engine is started in extremely cold weather conditions (below-20°C). This is due to power steering fluid characteristics in extreme cold conditions and is not an indication of a malfunction.

MECHANICAL POWER STEERING SYSTEM

SERVICE ADJUSTMENT PROCEDURE EPJB0600

CHECKING STEERING WHEEL FREE PLAY

1. Start the engine with the steering wheel in the straight ahead position.
2. Measure the play while turning the steering wheel to the left and right.

Steering wheel free play [Standard value] : 30 mm (1.1 in.)

3. If the play exceeds the standard value, inspect the connection between the steering shaft and steering linkage.

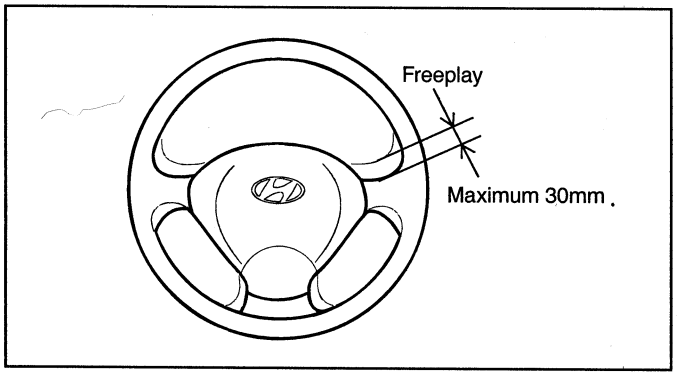

EPJA010A

CHECKING STEERING ANGLE

1. Place the front wheel on a turning radius gauge and measure the steering angle.

Wheel angle [Standard value]

Inside wheel : 35.1° ± 1°30′

Outside wheel : 30.7°

2. If the measured value is not within the standard value, adjust the toe and inspect again.

NOTE

1. **After adjusting the tie rod, assemble the bellows so they are not twisted.**
2. **The inner steering angle is changed 0.86° per each rotation of the tie rod.**

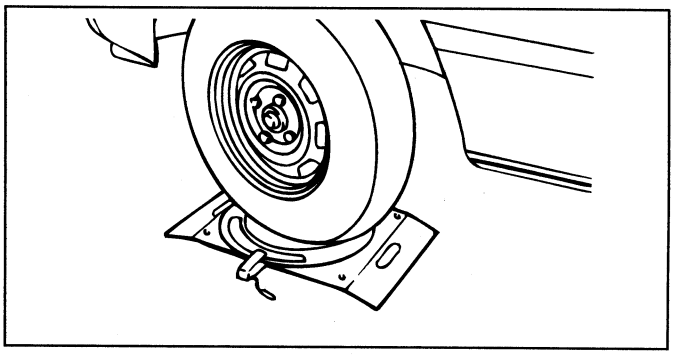

EPA9002A

CHECKING THE TIE ROD END BALL JOINT STARTING TORQUE EPJB0700

1. Disconnect the tie rod and knuckle with the special tool (09568-31000).

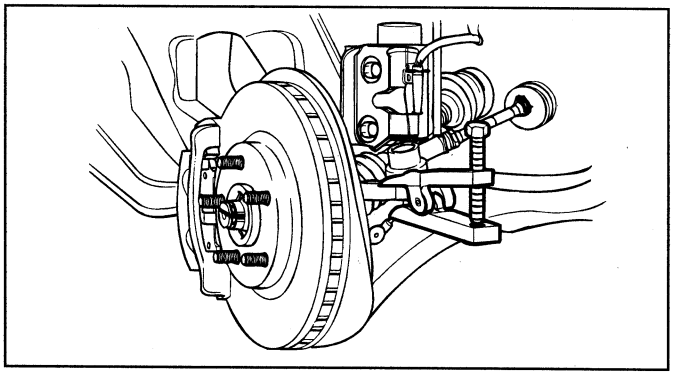

EPJA020J

2. Shake the ball stud several times to check for looseness.
3. Mount two jam nuts on the ball joint, and then measure the ball joint starting torque.

Standard value :

0.5-2.5 Nm (5-25 kg·cm, 0.36-1.78 lb·ft)

4. If the starting torque exceeds the upper limit of the standard value, replace the tie rod end.
5. Even if the starting torque is below the lower limit of the standard value, check the play of the ball joint and replace if necessary.

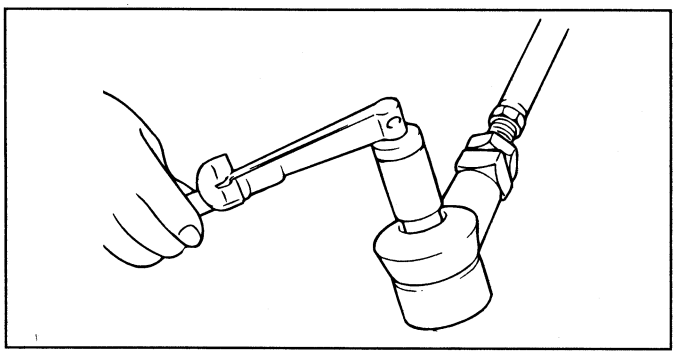

EPA9003A

CHECKING STEERING WHEEL RETURN EPJB0800

Check the steering wheel return and confirm the following points:

1. The force required to turn the steering wheel and then return should be the same for both moderate turns and sharp turns.
2. When the steering wheel is turned 90° and held for a couple of seconds while the vehicle is being driven under 23-30kph (12-19 mph), the steering wheel should return to within 20° from its central position when it is released.

NOTE

If the steering wheel is turned very quickly, steering may be momentarily difficult. This is not a malfunction because the oil pump output will be somewhat decreased.

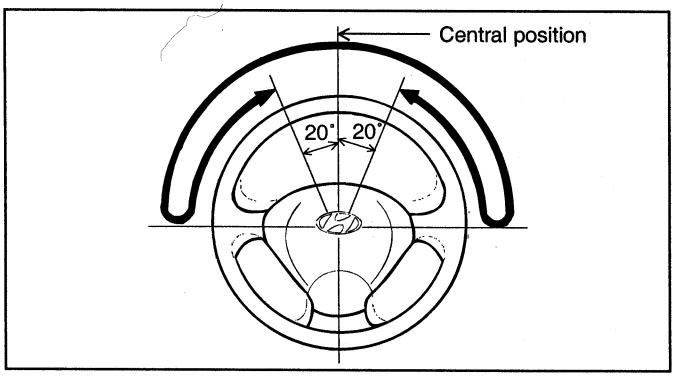

EPJB080A

CHECKING POWER STEERING FLUID LEVEL EPJB0900

1. Position the vehicle on a level surface.
2. Start the engine. With the vehicle kept stationary, turn the steering wheel several times continuously to raise the fluid temperature to 50-60°C (122-140°F).
3. With the engine at idle, turn the steering wheel fully clockwise and counter-clockwise several times.
4. Make sure that there is no foaming or cloudiness in the reservoir fluid.
5. Stop the engine and check for any difference in fluid level between a stationary and a running engine.

NOTE

1. **If the fluid level varies 5 mm (0.2 in.) or more, bleed the system again.**
2. **If the fluid level suddenly rises after stopping the engine, further bleeding is required.**
3. **Incomplete bleeding will produce a chattering sound in the pump and noise in the flow control valve, and lead to decreased durability of the pump.**

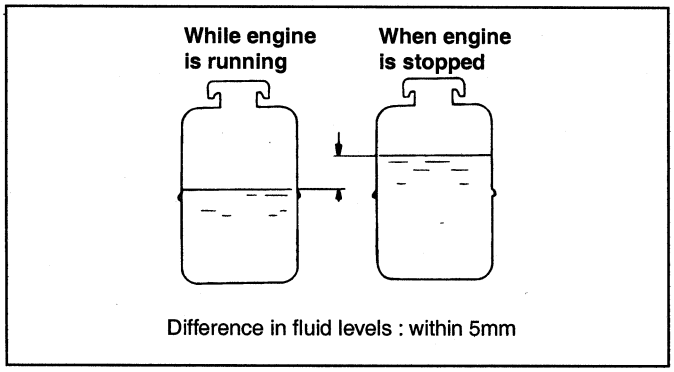

H7ST012A

REPLACING POWER STEERING FLUID EPJB1000

1. Jack up the front wheels and support them with jack stands.
2. Disconnect the return hose from the oil reservoir and plug the oil reservoir.
3. Connect a vinyl hose to the disconnected return hose, and drain the oil into a container.

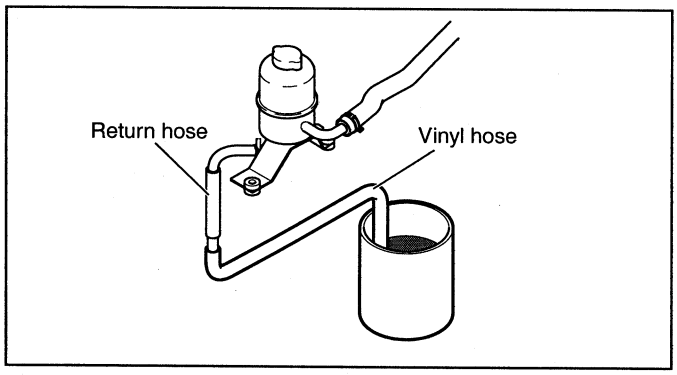

KGXC006A

4. Disconnect the high-tension cables and ignition coils.

   While operating the starter motor intermittently, turn the steering wheel to the limit of left and then to the limit of right several times to drain the fluid.

   After that, connect the high-tension cables and coils.
5. Connect the return hoses securely, and then fill the oil reservoir with the specified fluid.
6. Start the engine.

   Check for oil leakage.
7. Stop the engine.

Power steering fluid

Type : PSF-3

Total quantity : Approx. 1.0 liter (0.88 qts)

AIR BLEEDING EPJB1100

1. Fill the power steering fluid reservoir up to the "MAX"position with specified fluid.

NOTE

1. **When bleeding fluid, replenish the fluid so that the level never falls below the bottom of the filter.**
2. **If air bleeding is done while the vehicle is idling, the air will be broken up and absorbed into the fluid. Be sure to do the bleeding only while cranking.**

2. Jack up the front wheels.
3. Disconnect the ignition coil high tension cable, and then, while operating the starter motor intermittently (for 15 to 20 seconds), turn the steering wheel to the limit of left and then to the limit of right five or six times.
4. Connect the high tension cable, and then start the engine (idling).
5. Turn the steering wheel to the left and then to the right, until there are no air bubbles in the oil reservoir.

NOTE

Do not hold the steering wheel turned to either side for more than ten seconds.

6. Confirm that the fluid is not milky, and that the level is between "MAX"and "MIN" marks on the reservoir.
7. If the fluid level changes up and down considerably when the steering wheel is turned left and right or fluid overflows from the reservoir when the engine is stopped, air bleeding should be done again.

NOTE

1. **If the fluid level varies 5mm (0.2 in.) or more, bleed the system again.**

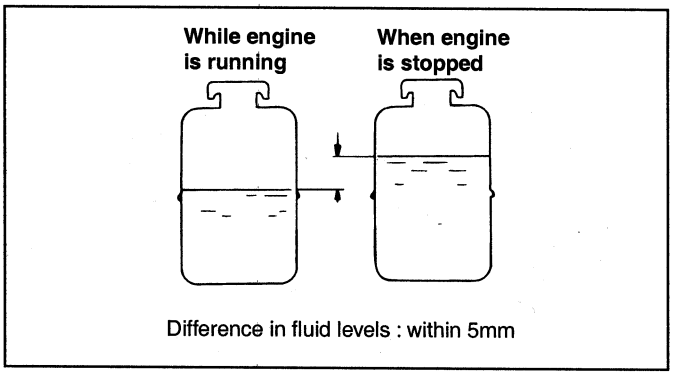

H7ST012A

2. **If the oil level changes up and down when the steering wheel is turned or the fluid overflows from the reservoir when the engine is stopped, further air bleeding is required. If the air isn't removed, it can cause cavitation in the pump, noise and may damage the pump.**

CHECKING POWER STEERING BELT TENSION EPJB1200

1. Press the V-belt, applying a pressure of 98 N (10 kg, 22 lb) at the specified point, and measure the deflection to confirm that it is within the standard value range.

V-belt deflection [Standard value]

Regular inspection : 11.7-15.3 mm (0.46-0.60 in.)

New belt : 8.8-11.0 mm (0.35-0.43 in.)

Used belt : 12.5-14.3mm (0.49-0.56 in.)

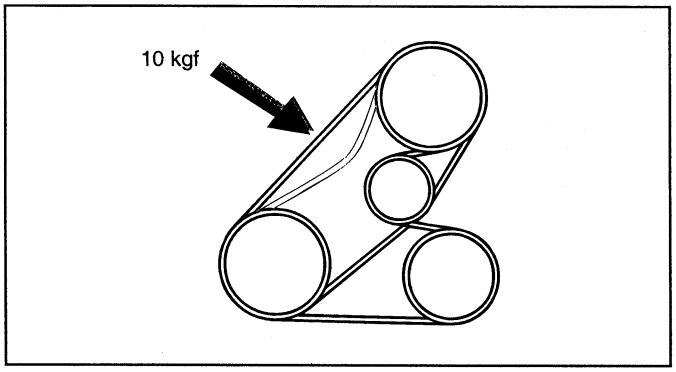

EPJA015A

2. Install the V-belt. Loosen the adjusting bolt and then adjust the tension of the V-belt.

   After that, tighten the hinge bolt and flange nut to the specified value.

NOTE

When adjusting tension of the V-belt, tighten the hinge bolt and flange nut temporarily so that the pulley does not lean to one side, then adjust the tension.

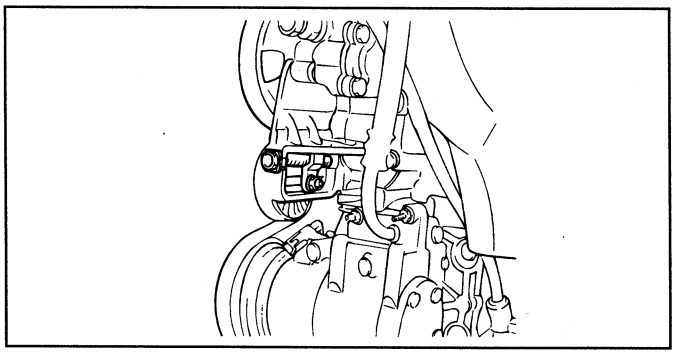

EPA9016D

OIL PUMP PRESSURE TEST EPJB1300

1. Disconnect the pressure hose from the pump, and then connect the special tool between the pump and the pressure hose as illustrated.

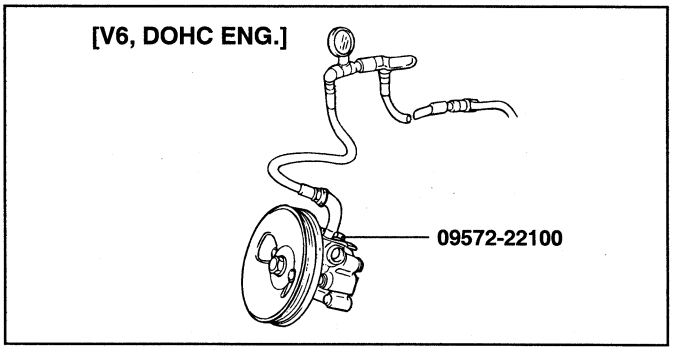

EPA9006A

2. Bleed the air. Start the engine and turn the steering wheel several times so that the fluid temperature rises to approximately 50~60°C (122~132°F) operating temperature.

3. Increase the engine speed to 1,000 rpm.

4. Close the shut-off valve of the special tool and measure the fluid pressure to confirm that it is within the standard value range.

Oil pump pressure [Standard value]

Relief pressure : 7.6~8.1 MPa (78~83 kg/cm, 1102~1175 psi)

CAUTION

Don't keep the shut-off valve on the pressure gauge closed for more than ten seconds.

5. Remove the special tool and then tighten the pressure hose to the specified torque.

Tightening torque : 55~69 Nm (550~690 kg.cm, 40.6~50.9 lb.ft)

6. Bleed the system.

STEERING COLUMN/SHAFT

COMPONENTS EPJB1400

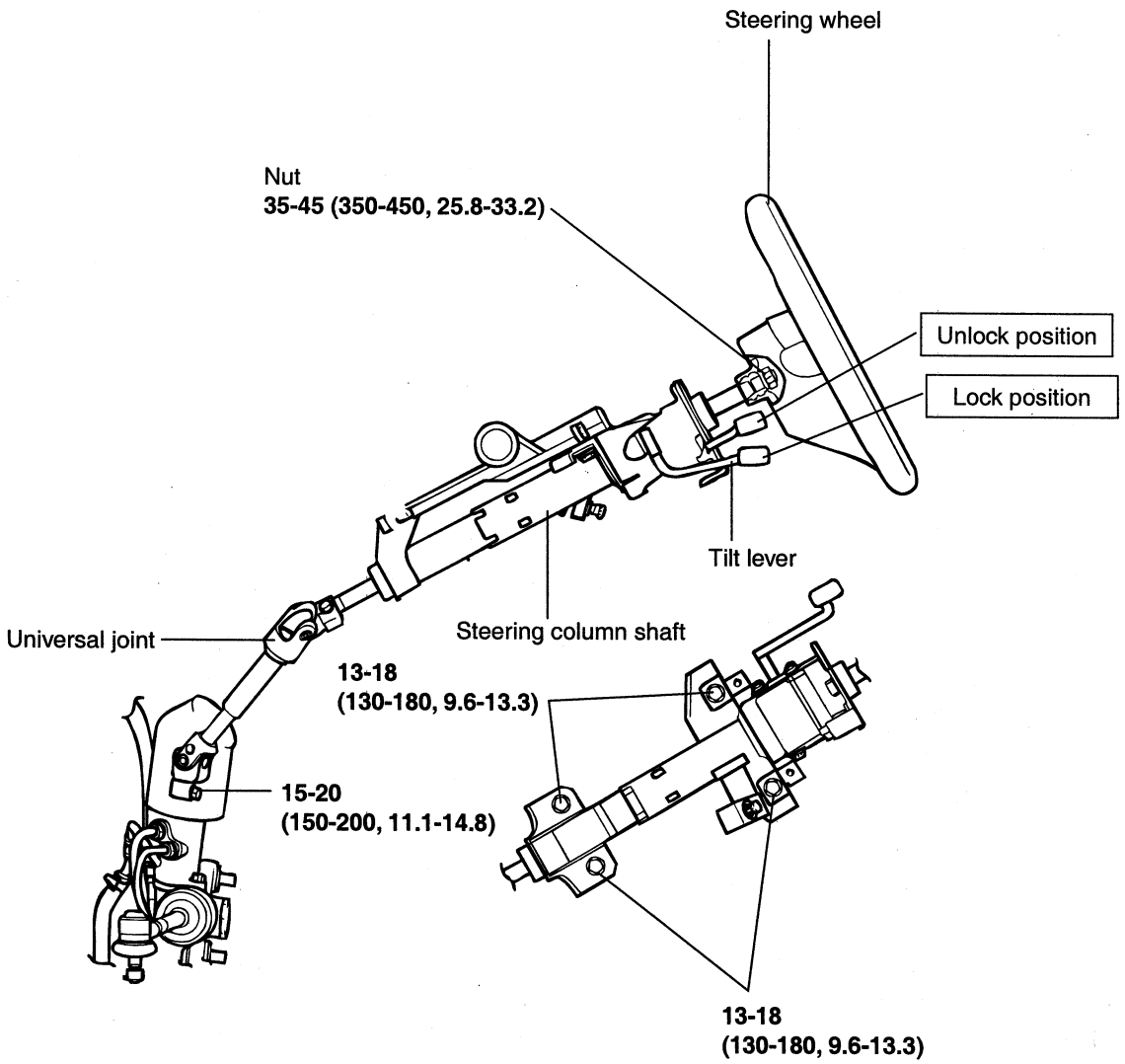

TORQUE : Nm (kg.cm, lb.ft)

EPJB140A

REMOVAL EPJB1500

1. Remove the cover on both sides under the steering wheel.
2. Remove two bolts by using a hexagonal wrench.

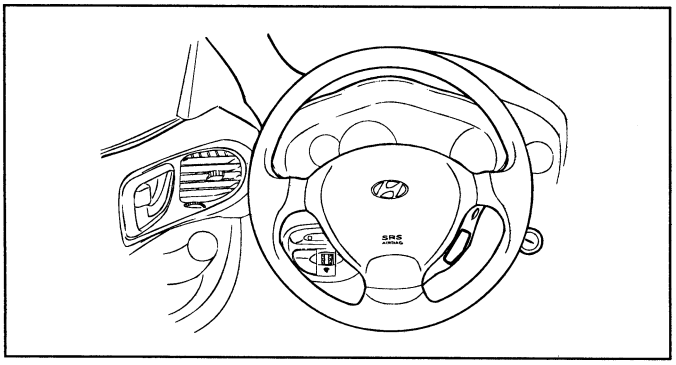

EPJA020K

3. Disconnect the DAB and horn connector, and remove the steering wheel lock nut.
4. Using the SST, remove the steering wheel.

CAUTION

Do not hammer on the steering wheel to remove it; doing so may damage the collapsible shaft.

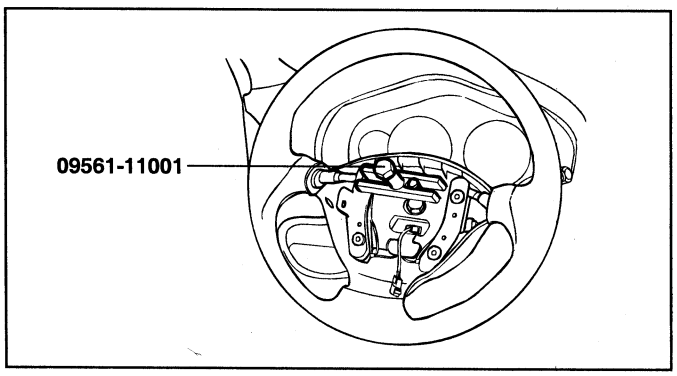

EPJA020B

5. Remove steering column lower shroud and upper shroud.

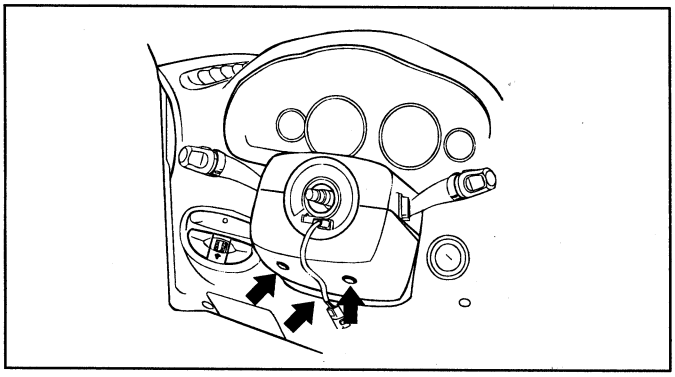

EPJA020C

6. Disconnect connectors and remove the multifunction switch.

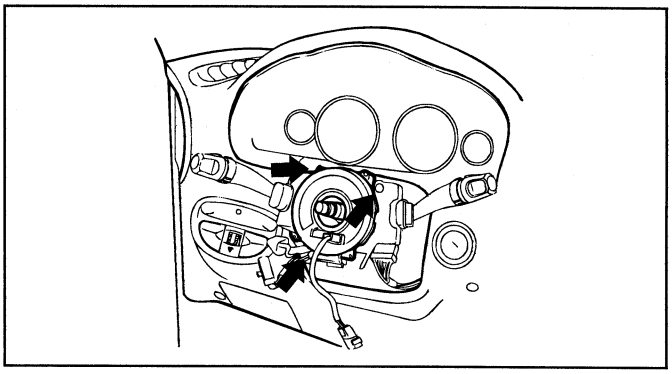

EPJB150A

7. Remove the switch on the left side of the lower crash pad.
8. Remove the lower cover.
9. After removing all connectors, remove the steering column shaft.

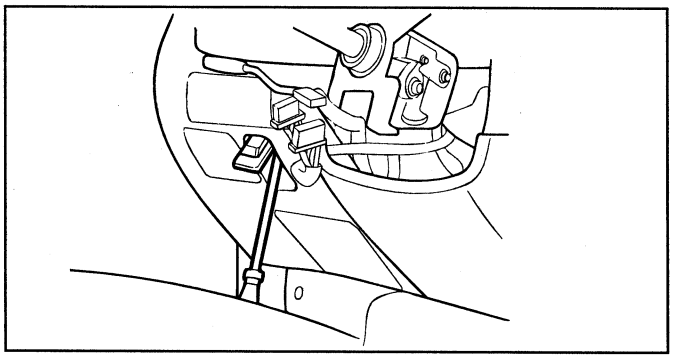

EPHA002C

10. Remove the bolt that couples the universal joint and the pinion. Pull out the universal joint from the gear box.

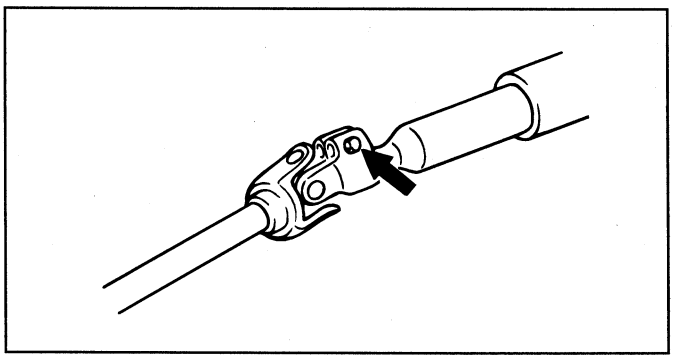

HEW56-10

11. Remove the bolts mounting the dust cover.

12. Remove 4 bolts mounting the steering column.

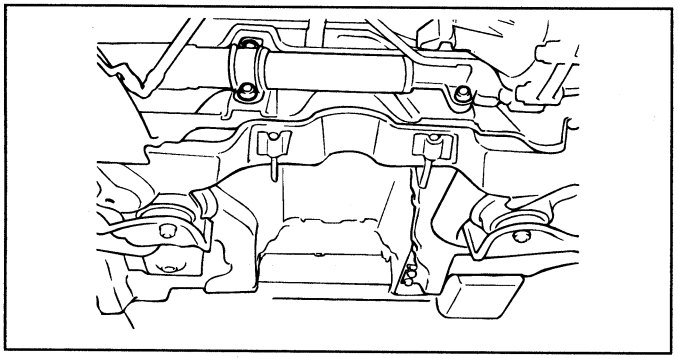

EPHA002D

13. Drain the power steering fluid and disconnect the return hose and pressure hose.

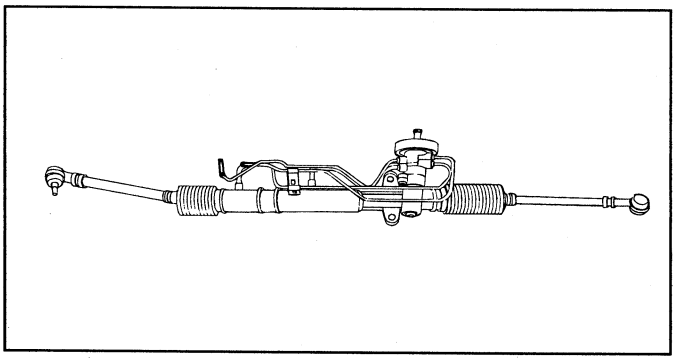

EPHA002F

14. Remove the steering column and shaft with the universal joint and dust cover.

INSPECTION EPHA0800

1. Check the steering shaft for damage or distortion.
2. Check the upper and lower bearing for wear or damage.
3. Check the joints for play, damage or rough movement.
4. Check the tilt bracket for cracks or damage.
5. Check the cover or boot for damage.
6. Check that the steering lock mechanism operates properly. If necessary, replace.

ASSEMBLY EPJB1700

1. Assembly is the reverse of disassembly.
2. When installing the steering lock, align the hook and shaft groove with the steering column.

INSTALLATION EPJB1800

1. Before installation, apply multipurpose grease to the groove inside the bearing and contracting surfaces of the boot and cover assembly.
2. Connect the steering lower shaft and joint assembly.

NOTE

When installing, mount the U-joint to the gear box first, then to the steering column shaft.

3. Install the dust cover to the column shaft assembly.
4. Install the steering column assembly to the column member assembly.
5. Install the multifunction switch and connect the connectors.
6. Install the lower cover and steering column upper and lower shroud.
7. Install the steering wheel.

NOTE

When installing, do not use a hammer because the collapsible column shaft could be damaged.

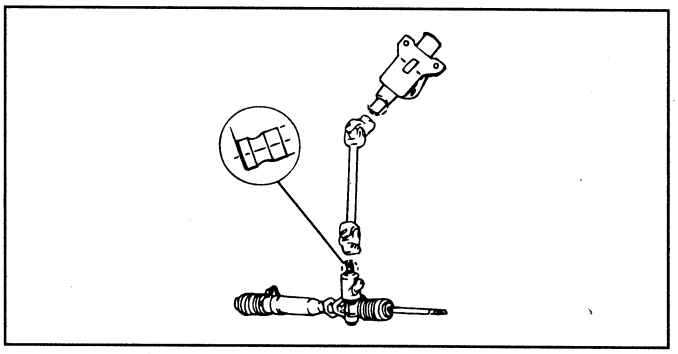

HCT56-39

POWER STEERING GEAR BOX

COMPONENTS EPJB1900

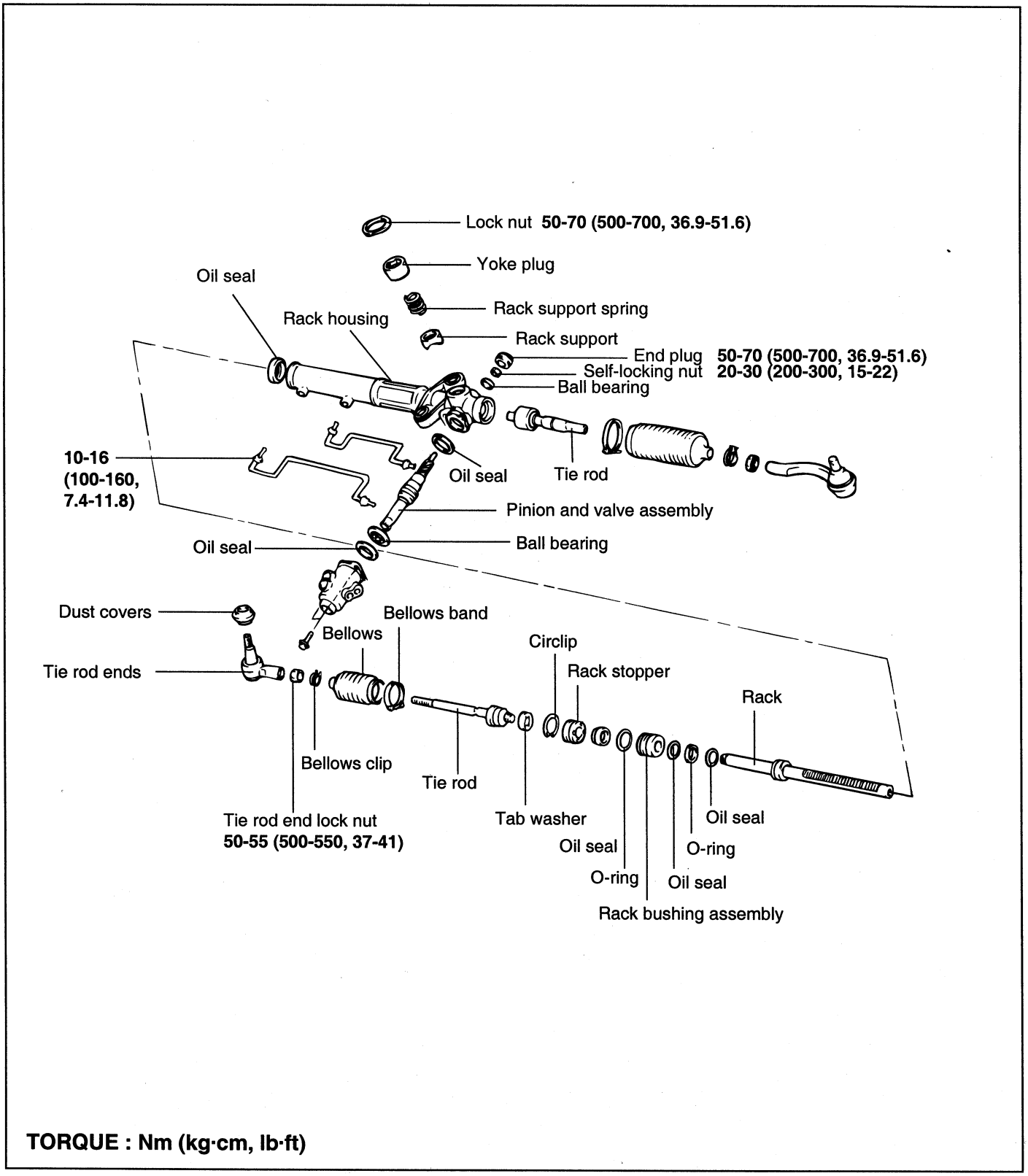

TORQUE : Nm (kg·cm, lb·ft)

EPJB190A

REMOVAL EPJB2000

1. Drain the power steering fluid.
2. Disconnect the pressure hose and return tube.
3. Remove the joint assembly connecting bolt.

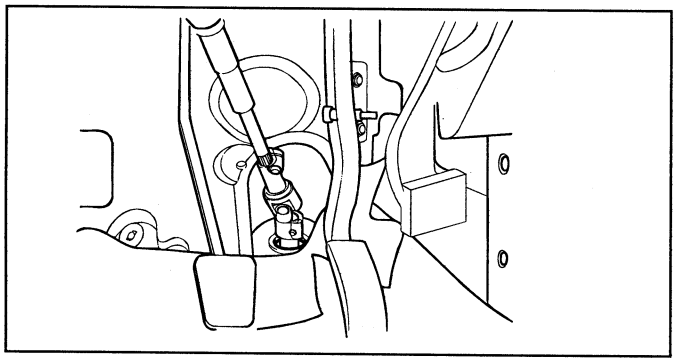

EPHA003A

4. Using the special tool (09568-31000), disconnect the tie rod end from the knuckle arm.

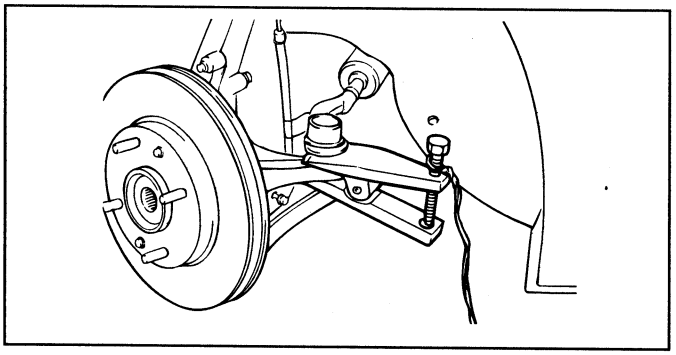

EPA9020F

5. Remove the feed tube.

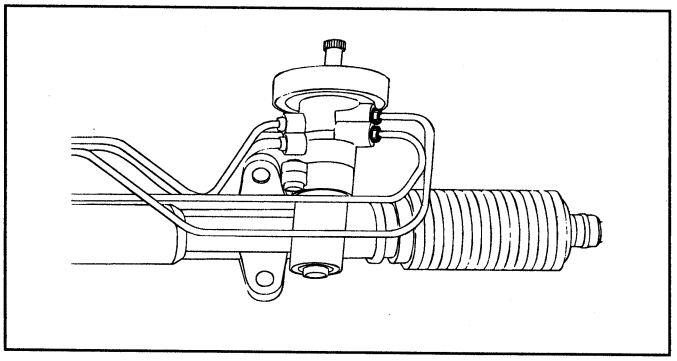

EPHA003B

6. Remove the steering gear box mounting bolts and remove the steering gear box assembly together with mounting rubber.

CAUTION

When removing the gear box, pull it out carefully and slowly to avoid damaging the boot.

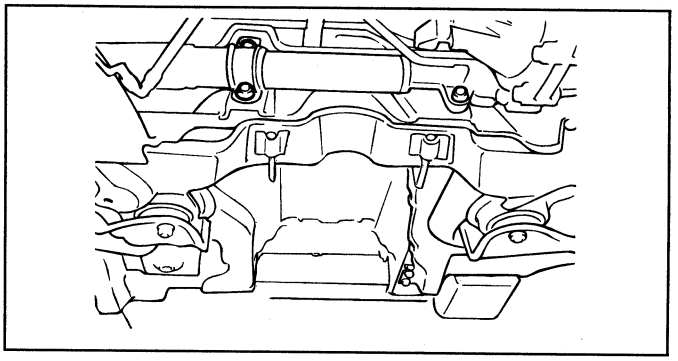

EPHA002D

DISASSEMBLY EPJB2100

1. Remove the tie rod end from the tie rod.

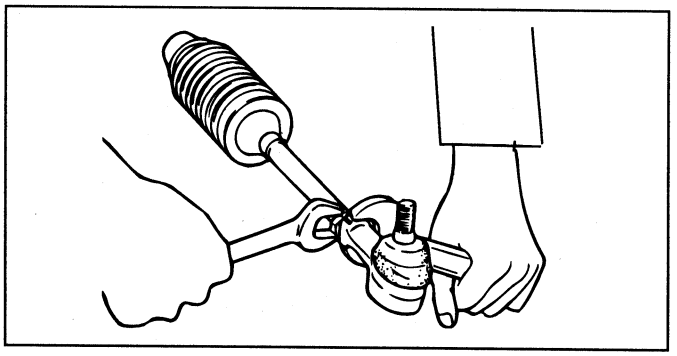

EPA9013F

2. Remove the dust cover from the ball joint.

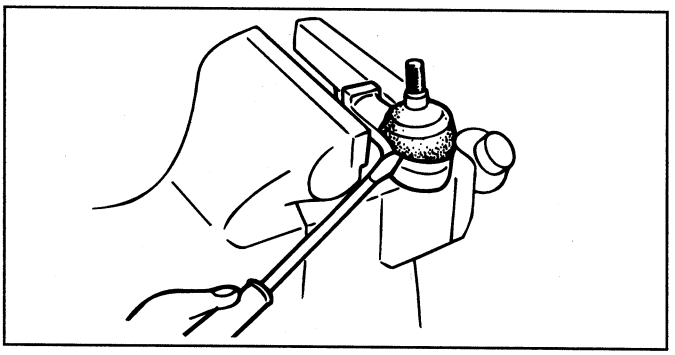

EPA9013G

3. Remove the bellows band.

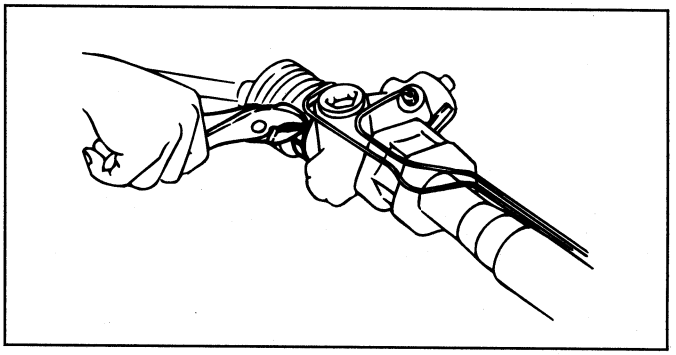

EPA9013H

4. Remove the bellows clip.

5. Pull the bellows out toward the tie rod.

NOTE

Check for rust on the rack when the bellows are replaced.

6. Remove the feed tube from the rack housing.

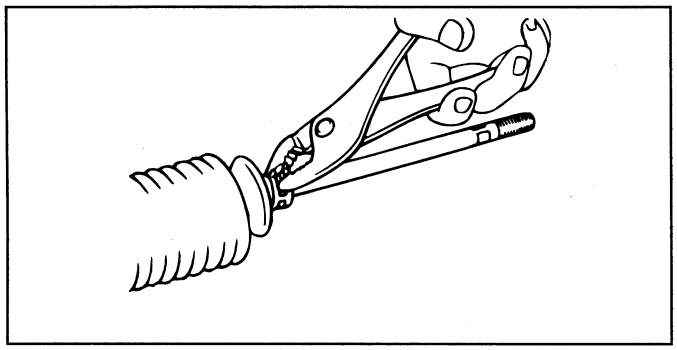

EPA9013I

7. While moving the rack slowly, drain the fluid from the rack housing.

8. Unstake the tab washer which fixes the tie rod and rack with a chisel.

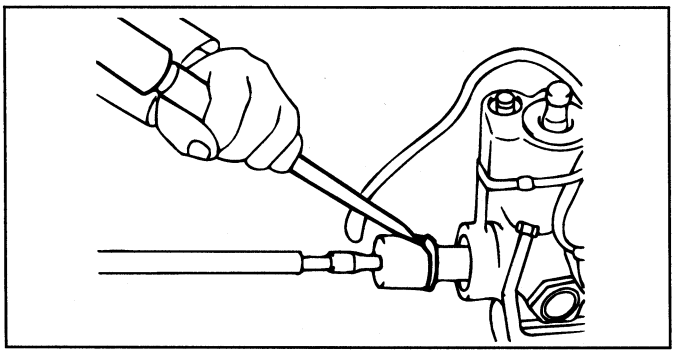

EPA9013J

9. Remove the tie rod from the rack.

CAUTION

Remove the tie rod from the rack, taking care not to twist the rack.

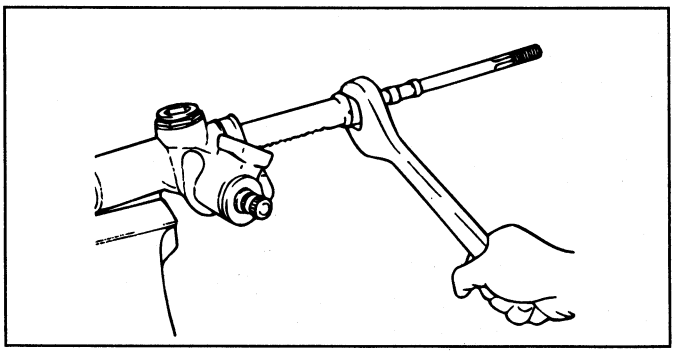

EPA9013K

10. Remove the yoke plug lock nut.

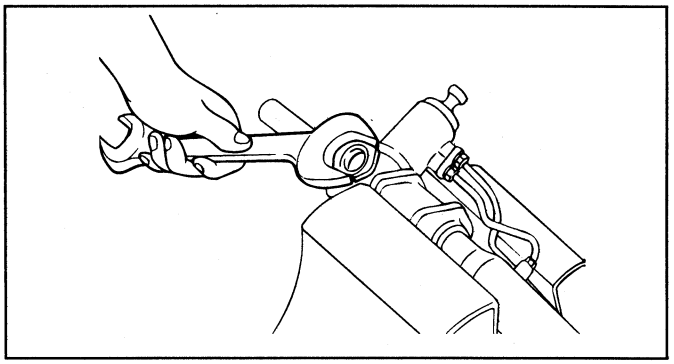

EPDA036H

11. Using the special tool (09565-31300), remove the yoke plug.

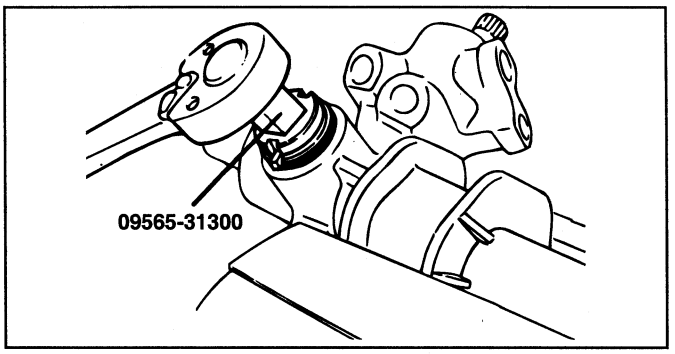

EPA9013M

12. Remove the rack support spring, yoke support and bushing from the gear box.

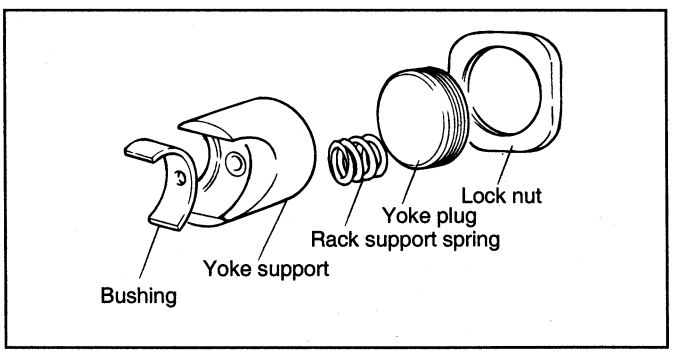

EPA9013N

13. Remove the end plug and self-locking nut.

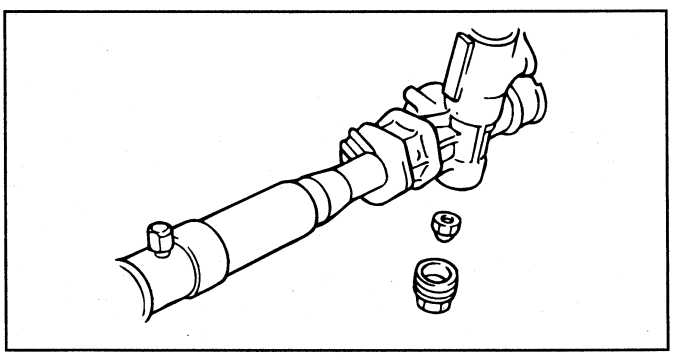

EPA9013O

14. Detach the dust seal.

15. Remove the snap ring with snap ring pliers.

16. Remove bolts mounting the valve assembly to the rack housing.

17. Remove the pinion and valve assembly together with the oil seal (upper) using a soft hammer.

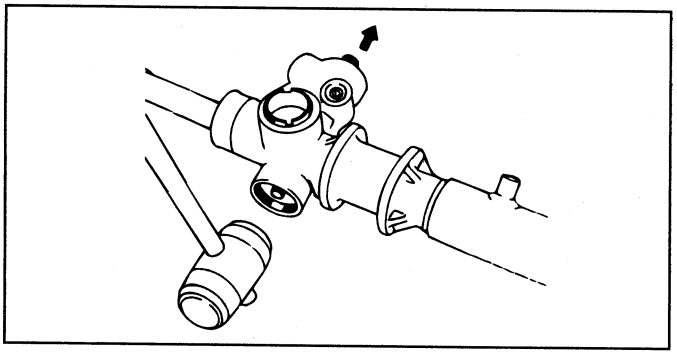

EPA9013P

18. Turn the rack stopper clockwise until the end of the circlip comes out of the slot in the gear housing.

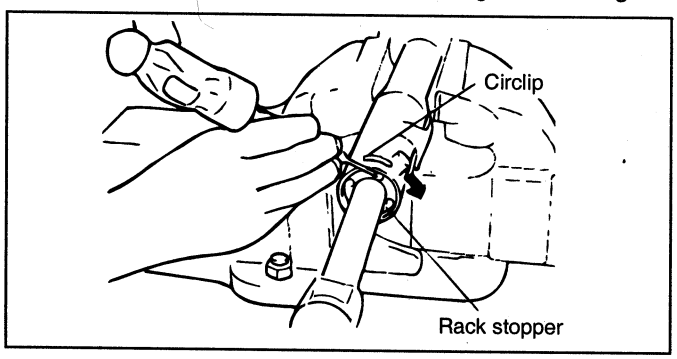

EPA9013Q

19. When the end of the circlip comes out from the notched hole of the housing rack cylinder, turn the rack stopper counter clockwise and remove the circlip.

CAUTION

Do not damage the rack when disassembling.

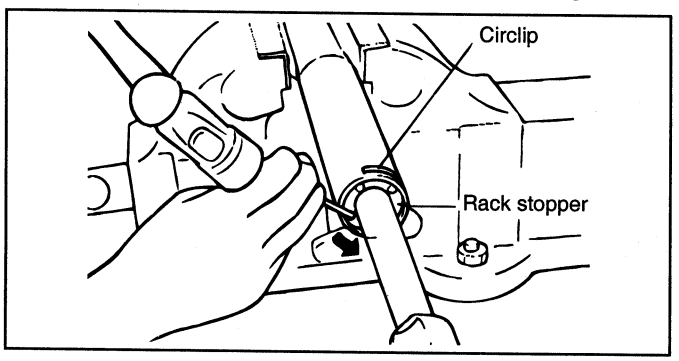

EPA9013R

20. Remove the rack stopper, rack bushing and rack from the rack housing by moving it toward the piston side.

CAUTION

When the rack has been removed, be sure to replace the housing side oil seal with a new one.

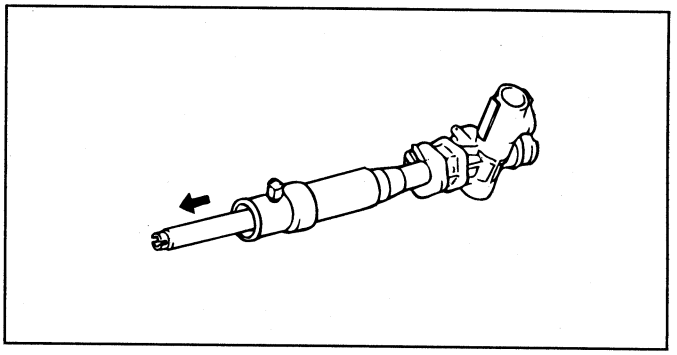

EPA9013S

21. Remove the O-ring from the rack bushing.

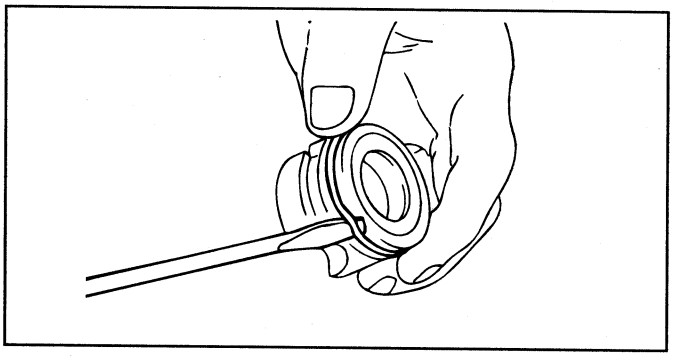

EPA9013T

22. Remove the oil seal from the rack bushing.

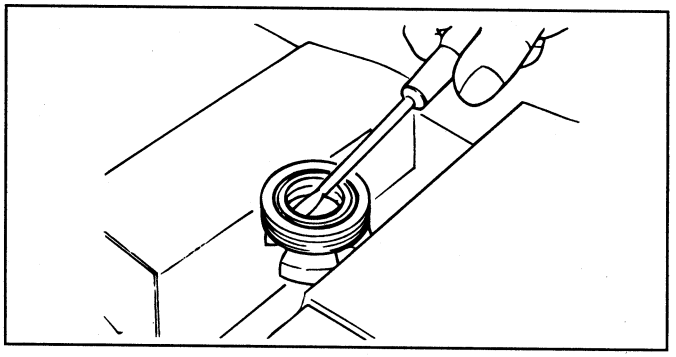

EPA9013U

INSPECTION EPJB2200

1. **Rack**

   1) Check for rack tooth face damage or wear

   2) Check for oil seal contact surface damage or wear

   3) Check for bending or twisting of rack

   4) Check for oil seal ring damage or wear

   5) Check for oil seal damage or wear

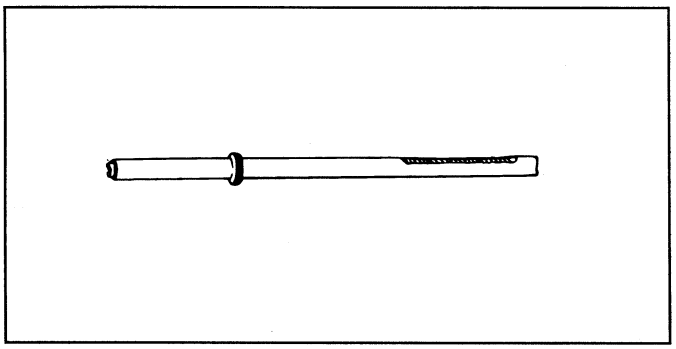

EPA9013Y

2. **Pinion valve**

   1) Check for pinion gear tooth face damage or wear

   2) Check for oil seal contact surface damage

   3) Check for seal ring damage or wear

   4) Check for oil seal damage or wear

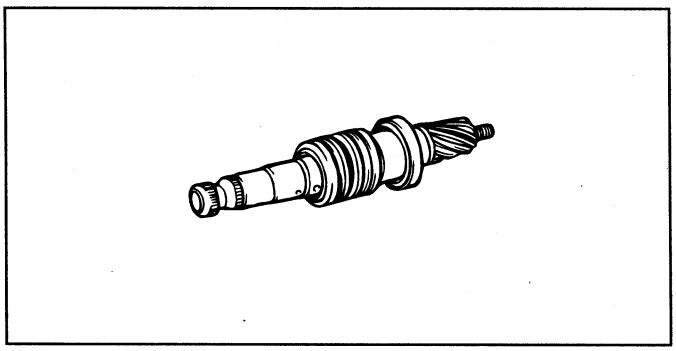

EPA9013Z

3. **Bearing**

   1) Check for seizure or abnormal noise during bearing rotation

   2) Check for excessive play

   3) Check for missing needle bearing rollers

4. **Others**

   1) Check for damage of the rack housing cylinder bore

   2) Check for boot damage, cracking or ageing

ASSEMBLY EPJB2300

1. Apply the specified fluid to the entire surface of the oil seal.

Recommended fluid :Power steering fluid (PSF-3)

2. Using the special tool (09431–11000), install the oil seal to the specified position in the rack housing.

CAUTION

1. **Note the direction of the oil seal.**
2. **Use a new oil seal.**

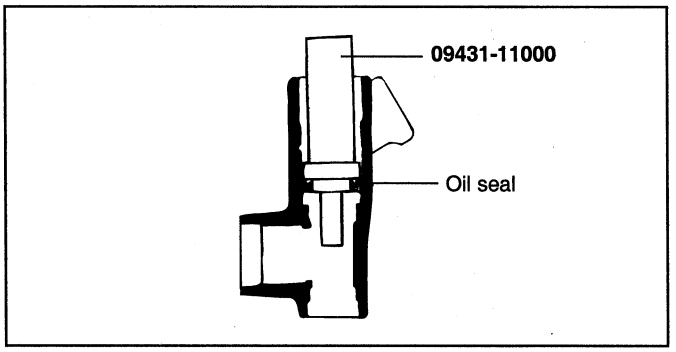

EPA9014C

3. Apply the specified fluid to the entire surface of the rack bushing oil seal.

Recommended fluid :Power steering fluid (PSF-3)

4. Install the oil seal in the rack bushing.

5. Apply the specified fluid to the entire surface of the O-ring and install the rack bushing using the special tool (09431-11000).

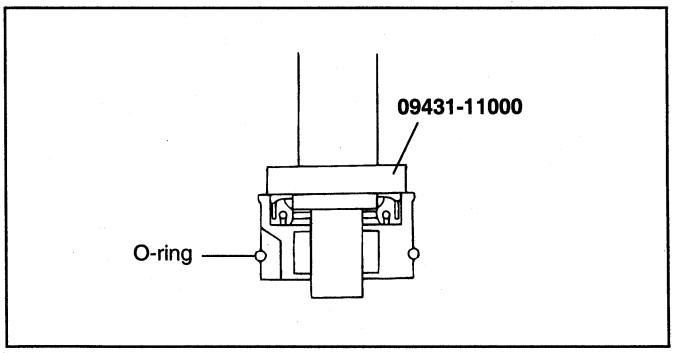

EPA9014D

6. Apply the specified grease to the rack teeth.

CAUTION

Do not plug the vent hole in the rack with grease.

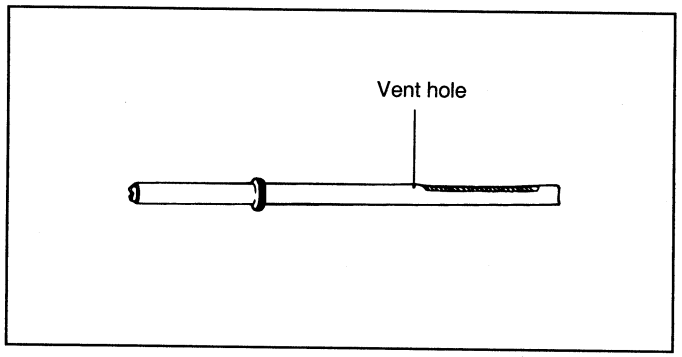

EPA9014E

7. Insert the rack into the rack housing. Install the rack bushing and rack stopper.

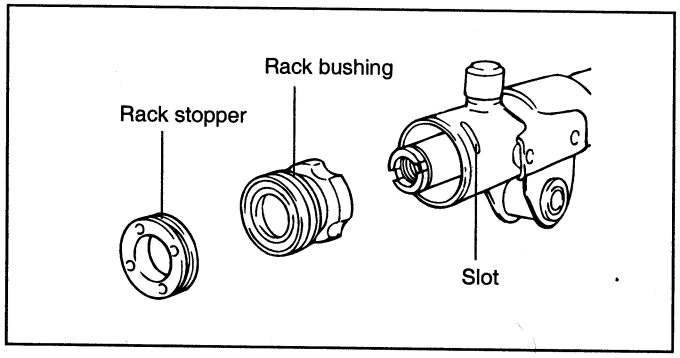

EPA9014F

8. Push the rack stopper until the circlip groove of the rack stopper is aligned with the notched hole of the rack housing and then install the circlip while turning the rack stopper.

CAUTION

The circlip end should not be visible through the notched hole of the rack housing.

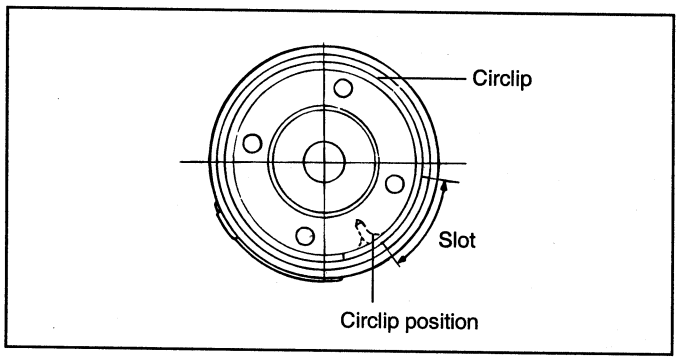

EPA9014G

9. Apply the specified fluid and grease to the pinion valve assembly and install the rack housing assembly.

Recommended fluid :

Power steering fluid (PSF-3)

Recommended grease :

Multipurpose grease SAE J310a, NLGI #2 EP

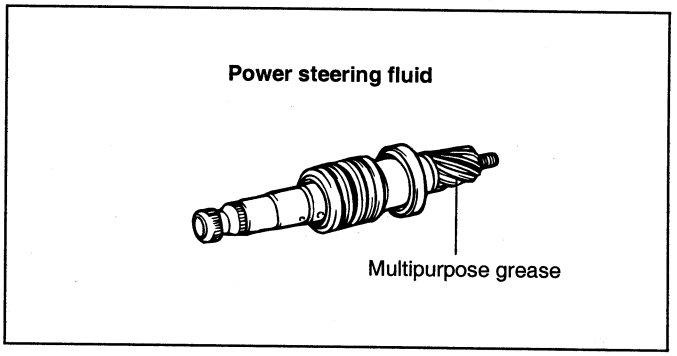

EPA9014H

10. Install the ball bearing using the special tool (09222-21100).

11. Install the pinion and valve assembly to the valve housing.

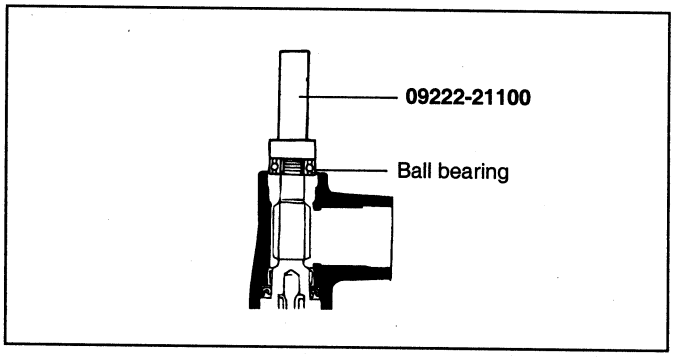

EPA9014I

12. Install the oil seal using the special tool (09432-21601).

13. Install the snap ring with snap ring pliers.

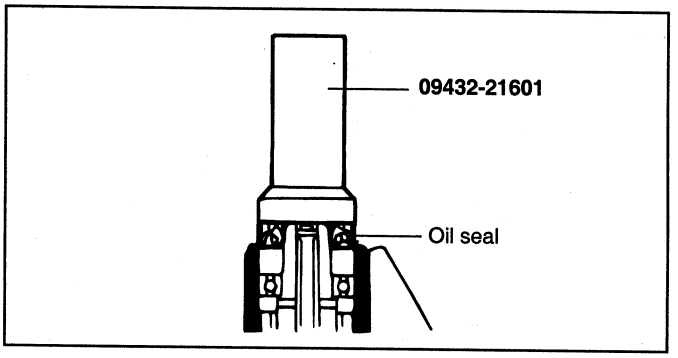

EPA9014J

14. With the pinion turned completely clockwise, tighten the self-locking nut.

CAUTION

Always replace the self-locking nut with a new one.

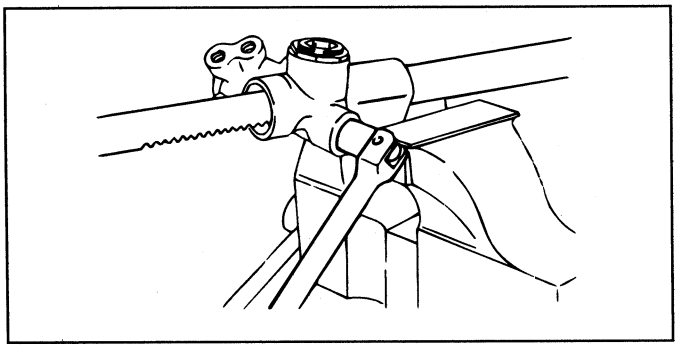

EPA9014K

15. Apply semi-drying sealant to the threaded section of the end plug and tighten to the specified torque.

Tightening torque :

End plug : 50-70 Nm

16. Stake the end plug at two points on its circumference with a punch.

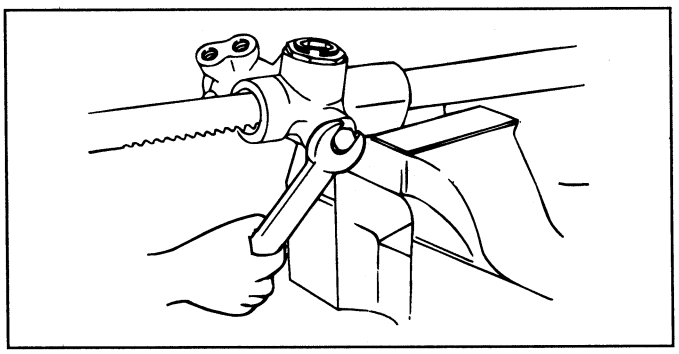

EPA9014L

17. Install the tab washer and then the tie rod and hammer the tab washer end at two points lightly to the tie rod.

CAUTION

1. **Align the tab washer pawls with the rack grooves.**
2. **Use a new tab washer.**

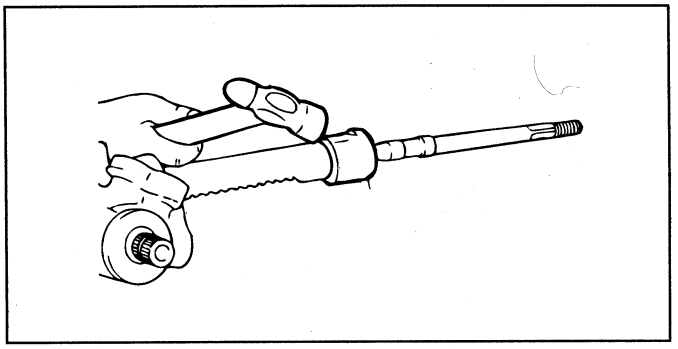

EPA9014M

18. Install the bushing, rack support yoke, rack support spring and yoke plug in the order shown. Apply semi-drying sealant to the threaded section of the yoke plug before installation.

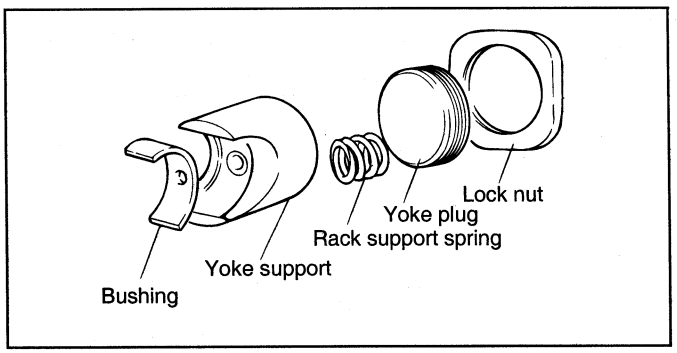

EPA9013N

19. With the rack placed at the center position, attach the yoke plug to the rack housing. Tighten the yoke plug within the range of 20-25 Nm (200-250 kg.cm, 14.5-18 lb.ft), using the special tool. Loosen the yoke plug for approximately 20° and tighten the locking nut to the standard value.

Tightening torque

Locking nut : 50-70 Nm (500-700 kg·cm, 36-51 lb·ft)

20. After adjusting, install the yoke plug with a lock nut.

NOTE

When it cannot be adjusted within the specified return angle, check the rack support plug components or replace.

21. Tighten the feed tube to the specified torque and install the mounting rubber with adhesive.

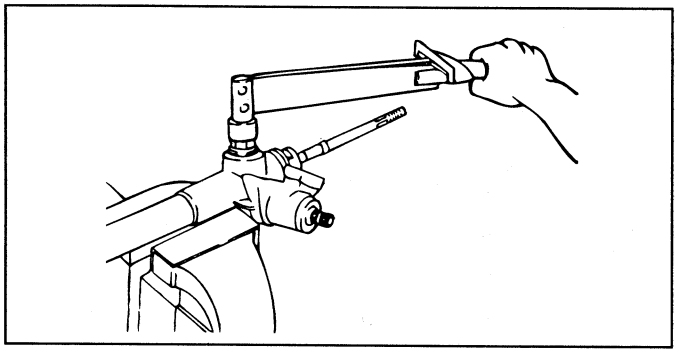

EPA9014O

22. Apply the specified grease to the bellows mounting position (fitting groove) of the tie rod.

Recommended grease

Multipurpose grease SAE J310a, NLGI #2 EP

23. Install the new attaching band to the bellows.

CAUTION

When the bellows are installed, a new band must be used.

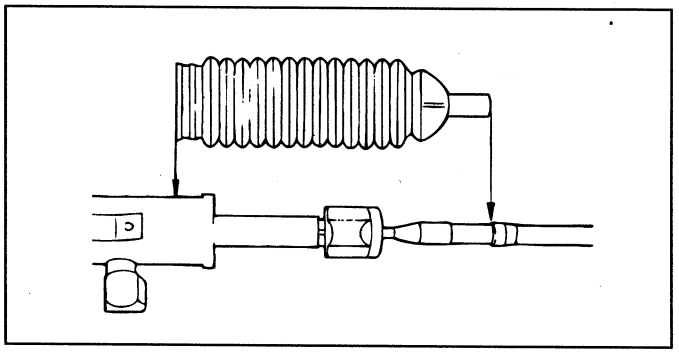

EPA9014P

24. Install the bellows in position, taking care not to twist it.

25. Fill the dust cover inner side and lip with the specified multipurpose grease, and place the dust cover in position with the clip ring attached in the groove of the tie rod end.

Recommended grease

Multipurpose grease SAE J310a, NLGI #2 EP

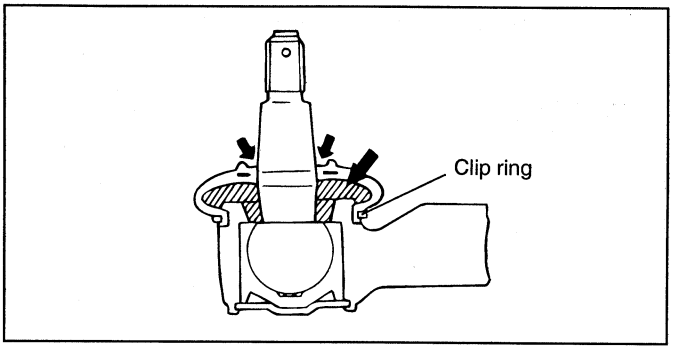

EPA9014Q

26. Install the tie rods so that the length of the left and right tie rods equals the standard value.

Tie rod free length [Standard value] :208.7 mm (8.2 in.)

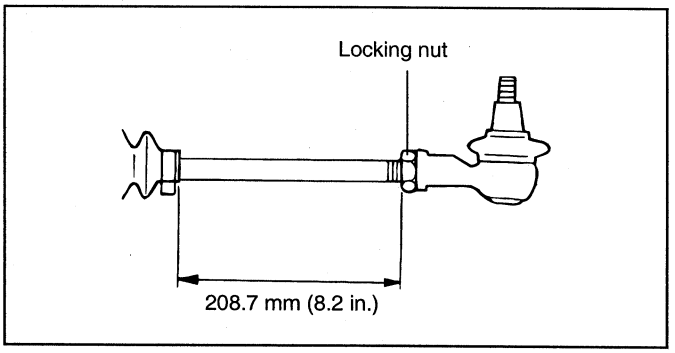

EPHA115A

27. Install the powersteering gear box assembly to the vehicle.

POWER STEERING OIL PUMP

COMPONENTS EPJB2400

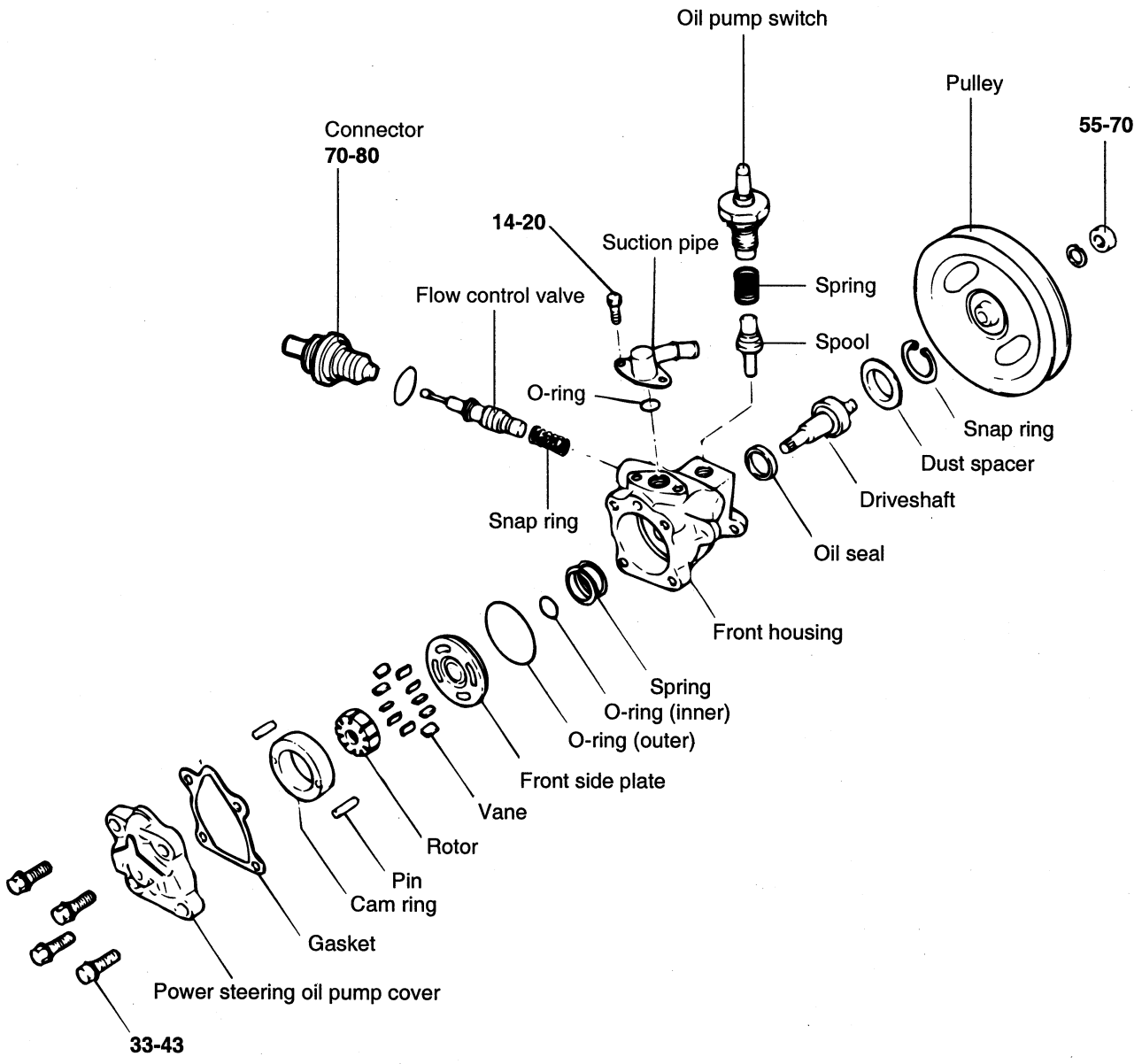

TORQUE : Nm (kg·cm, lb·ft)

EPJB240A

REMOVAL EPHA1250

1. Remove the pressure hose from the oil pump.
2. Disconnect the suction hose from the suction connector and drain the fluid into a container.

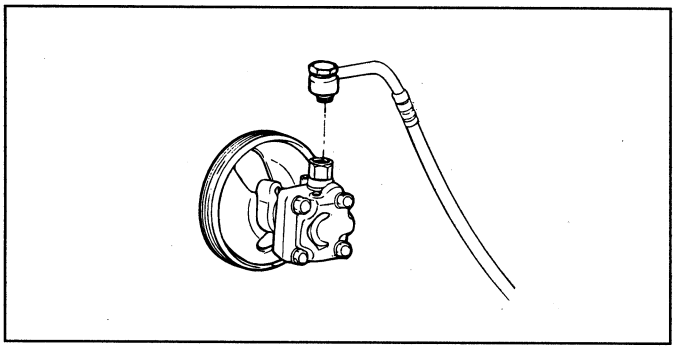

EPA9016A

3. To remove the drive belt, loosen the oil pump mounting bolt.
4. Remove the oil pump mounting bolts and disconnect the pressure switch connector.

DISASSEMBLY EPJB2600

1. Remove the suction pipe and the O-ring from the oil pump.

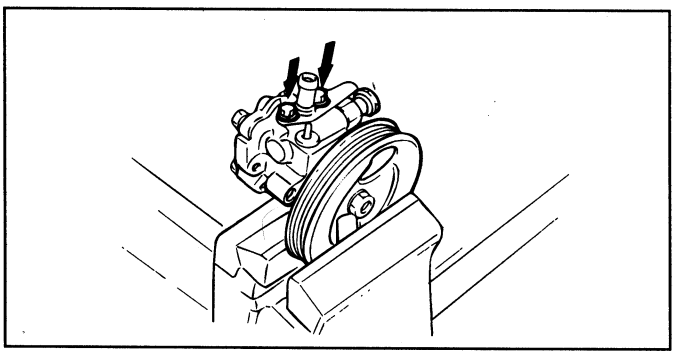

EPA9017A

2. Remove the rear cover with its gasket and pin.
3. Remove the cam ring.
4. Remove the rotor and vanes
5. Remove the front side plate.

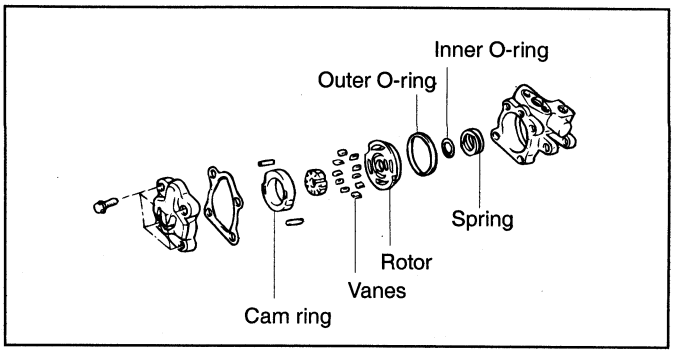

EPA9017B

6. Remove the inner and outer O-ring.
7. Remove the spring.

NOTE

When assembling, use a new gasket and O-ring.

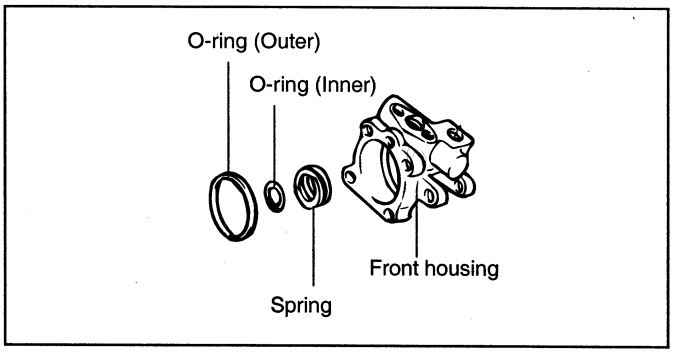

EPA9017C

8. Remove the pulley nut and the spring washer.
9. Pull off the pulley and the woodruff key.

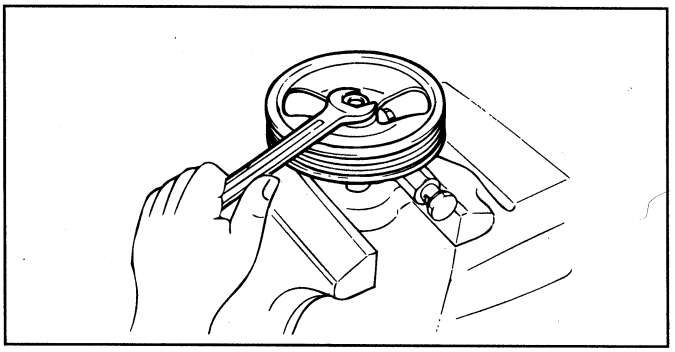

EPA9017D

10. Remove the snap ring using snap ring pliers.
11. Remove the drive shaft and bearing using a plastic hammer.

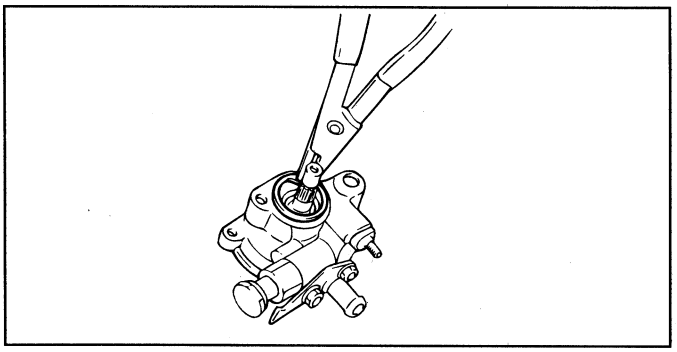

EPA9017E

12. Remove the oil seal from the oil pump body.

NOTE

When assembling, use a new oil seal.

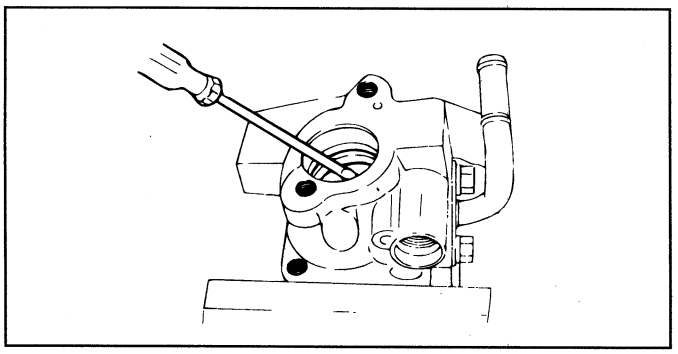

HCT56-94

13. Remove the guide bracket and nut.
14. Remove the connector from the oil pump body, and then remove the flow control valve and flow control spring.
15. Remove the O-ring from the connector.

CAUTION

Do not disassemble the flow control valve.

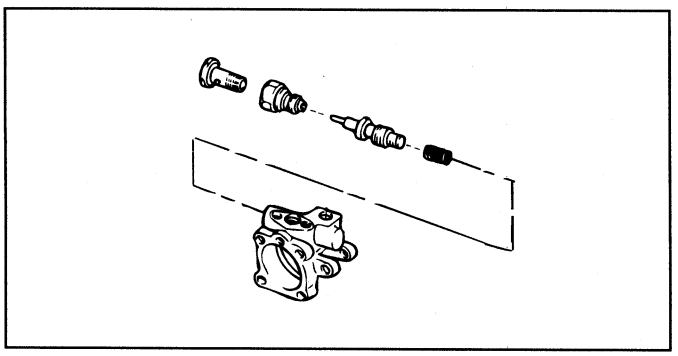

EPA9017G

16. Remove the oil pump switch.
17. Take the spring and the spool out.
18. Remove the O-ring from the oil pump switch.

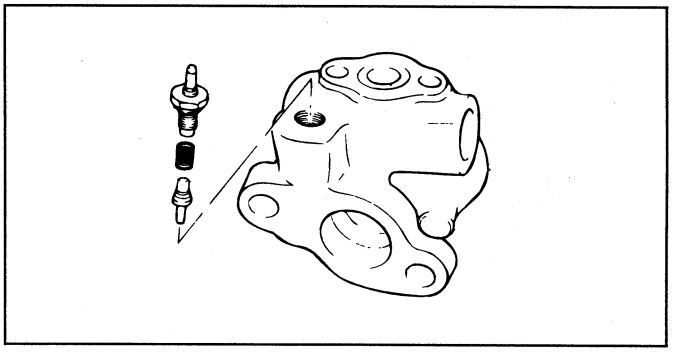

HCT56-96

INSPECTION EPJB2700

1. Clean all disassembled parts with a suitable cleaning solvent.
2. If any inside parts of the oil pump have been damaged, replace the pump as an assembly.
3. If the pulley is cracked or deformed, replace it.
4. If oil leaks around the drive shaft oil seal, replace the oil seal.
5. If the serrations of the pulley or drive shaft are deformed or worn out, replace them.

ASSEMBLY EPJB2800

1. Install the oil pump switch.
2. Install the flow control valve spring, valve and connector in the pump body.

NOTE

Apply a thin coat of power steering fluid to all parts including the oil seal and O-ring.

3. Install the guide bracket and nut.
4. Using the special tool (09222-32100), install the oil seal into the pump body.

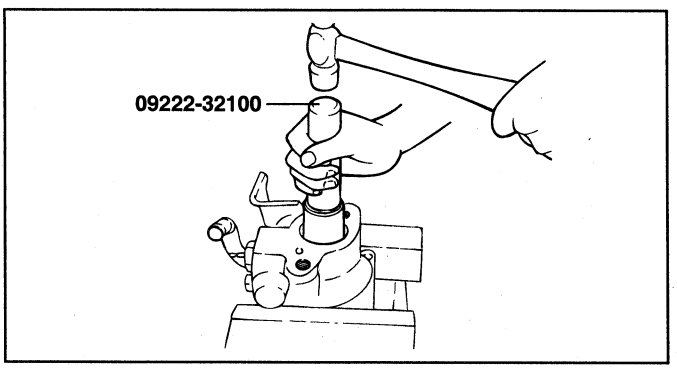

EPDA044A

5. Gently insert the shaft assembly and install the snap ring.

6. Install the pump pulley with the woodruff key in position.

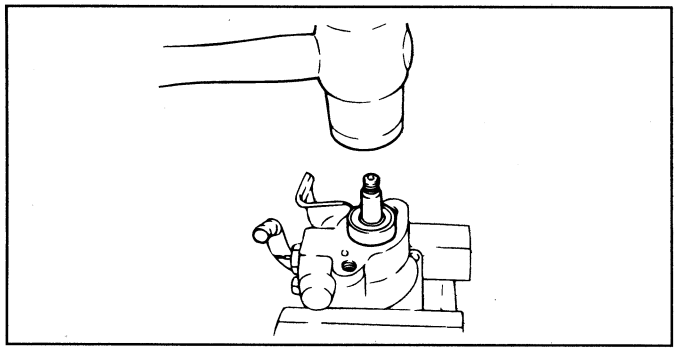

HCT56-98

7. Install the spring and the inner and outer O-rings.

8. Install the front side plate.

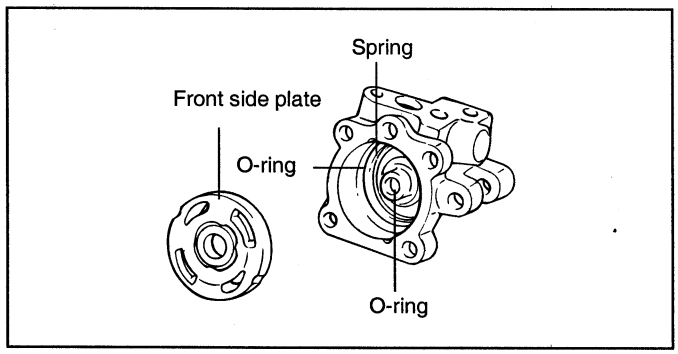

EPA9018C

9. Insert the pins into the pin grooves of the front housing, then install the cam ring, paying attention to its direction.

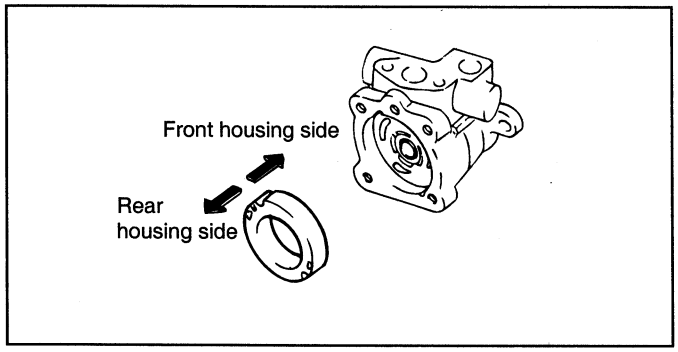

EPA9018D

10. Install the rotor with its punch-marked side facing towards the front side plate.

11. Install the vane plates with the round end facing outward.

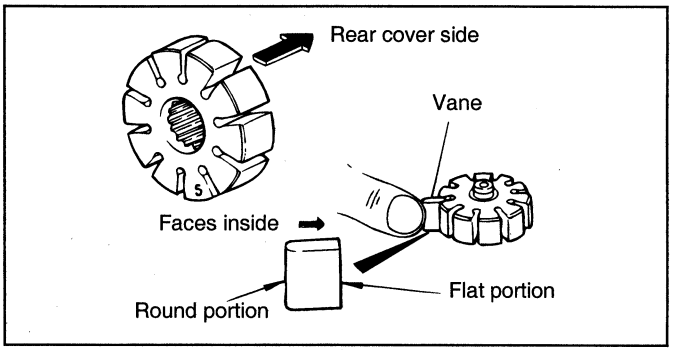

EPA9018E

12. Install the gasket and rear cover.

13. Tighten the suction connector.

INSTALLATION EPJB2900

1. Install the oil pump to the oil pump bracket.

2. Install the suction hose.

3. Install the ribbed V-belt and adjust its tension.

4. Connect the pressure hose to the oil pump, and the suction hose to the oil reservoir.

NOTE

Install the hoses so that they are not twisted and they do not come in contact with any other parts.

5. Replenish the reservoir.

Recommended fluid :

Power steering fluid (PSF-3)

6. Bleed the system.

7. Check the oil pump pressure.

8. Install parts by refering to the torque specification.

Restraints System

GENERAL ..... RT -2

SRSCM (SUPPLEMENTAL RESTRAINTS SYSTEM CONTROL MODULE) ..... RT -9

AIR BAG MODULE (DRIVER) AND CLOCK SPRING ..... RT -22

AIR BAG MODULE (PASSENGER) ..... RT -25

AIR BAG CONNECTORS ..... RT -30

AIR BAG SYSTEM (SRS) ..... RT -34

GENERAL

GENERAL ERJB0010

The supplement restraint system (SRS AIRBAG) is designed to supplement the seat belts to help reduce the risk or severity of injury to the driver and passenger by activating and deploying the driver, passenger and side airbag as well as the belt pretensioner in certain frontal or side collisions.

The SRS (Airbag) consists of : a driver airbag module located in the center of the steering wheel, which contains a folded cushion and an inflator unit ; a passenger airbag module located in the passenger side crash pad which contains a folded cushion together with an inflator unit ; side airbag modules located in the driver and passenger seat which contain folded cushions and inflator units; a control module (SRSCM) located on the floor under the heater core which monitors the system,; an accelerometer which senses the vehicle deceleration,; a spring interconnection (clock spring) located within the steering column; system wiring and wiring connectors; and a knee bolster located under the steering column. The impact sensing function of the SRSCM is carried out by the electronic accelerometer that continuously measures the vehicle's acceleration and delivers a corresponding signal through an amplifying and filtering circuit to the microprocessor. Deployment of the airbag is designed to occur in frontal or near-frontal side impacts of moderate to severe force.

Only authorized service personnel should do work on or around the SRS components. Those service personnel should read this manual carefully before doing any such work. Extreme care must be used when servicing the SRS to avoid injury to the service personnel (by inadvertent deployment of the airbag) or the driver (by render the SRS inoperative).

Failure to carry out service operations in the correct sequence could cause the airbag system to unexpectedly deploy during servicing, possibly leading to serious injury.

Further, if a mistake is made in servicing the airbag system, it is possible that the airbag may fail to operate when required.

Before performing servicing (including removal or installation of parts, inspection or replacement), be sure to read the following items carefully.

1. When troubleshooting the airbag system, always inspect the diagnostic codes before disconnecting the battery.

2. When the negative(-) terminal cable is disconnected from the battery, the clock and audio system's memory will be wiped out. So before starting work, make a record of the contents of the audio system's memory. When the work is finished, reset the audio system and adjust the clock.

3. Wait at least 30 seconds after the time the ignition switch is turned to the LOCK position and the negative (-) terminal cable is disconnected from the battery. The airbag system is equipped with a back-up power source to assure the deployment of airbags if the battery disconneted during an accident. The back-up power is available for approx. 150ms.

4. Symptoms of malfunction of the airbag system are difficult to detect, so the diagnostic codes become the most important source of information when troubleshooting.

5. Never use airbag parts from another vehicle. When replacing parts, replace them with new parts.

6. Never attempt to disassemble and repair the airbag modules (DAB, PAB, SAB, BPT), clock spring or wiring in order to reuse them.

7. If any component of the SRS has been dropped, or if there are cracks, dents or other defects in the case, bracket or connector, replace them with new ones.

8. After work on the airbag system is completed, perform the SRS SRI check. The airbag indicator lamp can be triggered by faults in other circuits in some cases. Therefore if the airbag indicator lamp goes on, be sure to erase the DTC codes using the Hi-Scan Pro just after repairing or replacing the troubled parts, including the fuse.

9. When welding the body, always disconnect the battery's negative (-) terminal.

CUSTOMER CAUTIONS ERJB0020

Failure to carry out service operations in the correct sequence could cause the airbag system to unexpectedly deploy during servicing, possibly leading to serious injury.

Further, if a mistake is made in servicing the airbag system, it is possible that the airbag may fail to operate when required.

Before performing servicing (including removal or installation of parts, inspection or replacement), be sure to read the following items carefully.

1. Be sure to proceed with airbag related service only after approx. 30 seconds or longer from the time the ignition switch is turned to the LOCK position and the negative (-) terminal cable is disconnected from the battery. The airbag system is equipped with a back-up power source to assure the deployment of airbags when the battery cable is disconneted during an accident. The back-up power is available for approx. 150ms.

2. When the negative(-) terminal cable is disconnected from the battery, the clock and audio system's memory will be wiped out. So before starting work, make a record of the contents of the audio system's memory. When the work is finished, reset the audio system and adjust the clock.

3. Symptoms of malfunction of the airbag system are difficult to detect, so the diagnostic codes become the most important source of information when troubleshooting.

4. When troubleshooting the airbag system, always inspect the diagnostic codes before disconnecting the battery.

5. Never use airbag parts from another vehicle. When replacing parts, replace them with new parts.

6. Never attempt to disassemble and repair the airbag modules (DAB, PAB, SAB, BPT), clock spring and wiring in order to reuse them.

7. If any component of SRS has been dropped, or if there are cracks, dents or other defects in the case, bracket or connector, replace them with new ones.

8. After work on the airbag system is completed, perform the SRS SRI check. The airbag indicator lamp can be triggered by faults in other circuit in some cases. Therefore if the airbag indicator lamp goes on, be sure to erase the DTC codes using Hi-scan just after repairing or replacing the troubled parts, including the fuse.

9. Especially when carring out body welding, never fail to disconnect the battery's negative (-) terminal.

SPECIAL SERVICE TOOL

ERJB0030

Tool (Number and name)	Illustration	Use
0957A-34100A Deployment tool	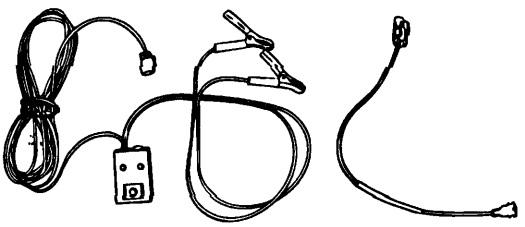 ERHA010A	Airbag deployment tool PAB, SAB : 0957A-38100 DAB, BPT : 0957A-38500
0957A-38000 Diagnosis checker	 ERHA010B	Wring harness checker for each module
0957A-38200 Dummy	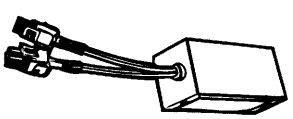 ERHA010C	Simulator to check the resistance of each wiring harness Dummy adapter PAB, SAB : 0957A-38300 DAB, BPT : 0957A-38400

* DAB : Driver Airbag

* PAB : Passenger Airbag

* SAB : Side Airbag

* BPT : Belt Pretensioner

WARNING/CAUTION LABELS ERJB0035

A number of caution labels relating to the SRS are found in the vehicle, as shown in the following illustration. Follow the label instructions when servicing the SRS.

If the labels are dirty or damaged, replace them with new ones.

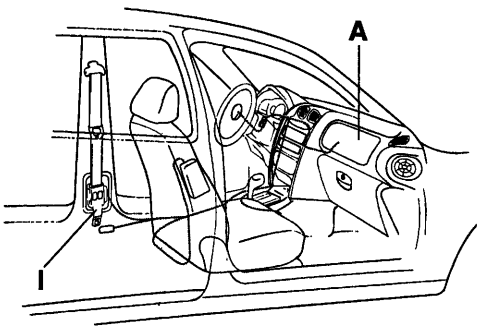

ERJA005A

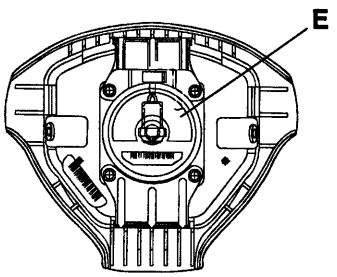

ERJA005B

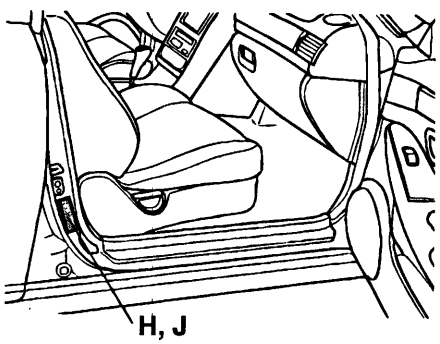

KFWF001A

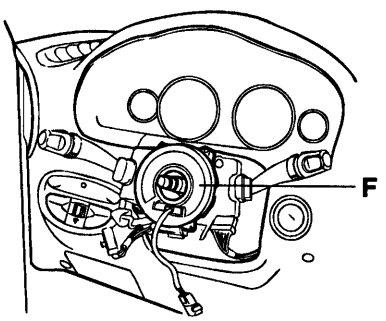

EPJA020D

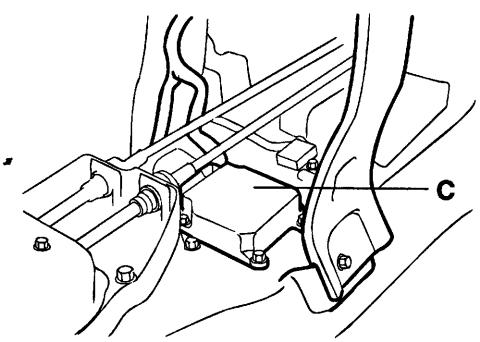

ERJA020M

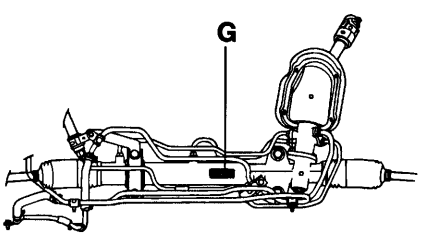

ERJA005F

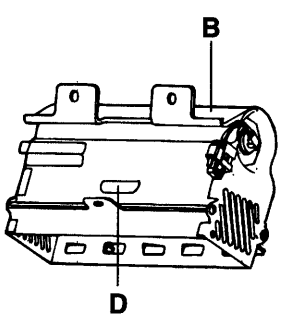

ERJA010A

ERJB0040

A. DAB + PAB
CAUTION
TO AVOID SERIOUS INJURY :

- For maximum safety protection in all types of crashes, you must always wear your safety belt.
- Do not install rearward-facing child seats in any front passenger seat position.
- Do not sit or lean unnecessarily close to the airbag.
- Do not place any objects over the airbag or between the airbag and yourself.
- See the owner's manual for further information and explanation.

B. SUPPLEMENTAL RESTRAINT SYSTEM (AIRBAG) INFORMATION

The airbag is a supplemental restraint system (SRS).You must always wear the seat belts. The airbag system condition is normal when "SRS" lamp in cluster flashes approximately 6 times after the ignition key is turned on and then goes off.
If any of the following conditions occur, the system must be serviced.

1. "SRS" lamp does not light up when key is turned on.
2. "SRS" lamp stays lit or flashes continuously.
3. The airbag has inflated.

The airbag system must be inspected by an authorized dealer ten years after vehicle manufacture date shown on certification label, located on left front door opening area.

WARNING

Failure to follow above instructions may result in injury to you or other occupants in the vehicle.

See the "SRS" section in Owner's Manual for more information about the airbag.

C. CAUTION : AIRBAG ESPS UNIT
Detach connector before unmounting. Assemble strictly according to manual instructions.

D. CAUTION : SUPPLEMENTAL RESTRAINT SYSTEM MODULE
To help avoid personal injury due to unwanted inflation, do not service or dispose of this unit without following instructions in the service manual.

E. WARNING :
Contents are poisonous and extremely flammable. Do not probe with electrical devices or otherwise tamper with item in any way. Servicing of this unit to be performed only by authorized personnel.

F. CAUTION : SRS clock spring
This is not a repairable part. Do not disassemble or tamper with. If defective, replace entire unit as per service manual instructions.
To re-center, rotate clockwise until tight. Then rotate in opposite direction approximately 3 turns and align →←
Failure to follow instructions may render SRS system inoperative possibly resulting in serious driver injury.

G. CAUTION : SRS Before removal of steering gearbox, read service manual, center the front wheels and remove the ignition key. Failure to do so may damage SRS clock spring and render SRS system inoperative, possibly resulting in serious driver injury.	**H. WARNING** This car is equipped with a side airbag for each front seat. • Do not use any accessory seat covers. • Use of other seat covers could reduce the effect of the system. • Do not install any accessories on the side or near the side airbag. • Do not use excessive force on the side of the seat. • For further information, see owner's manual.
I. ATTENTION Do not open, remove or put into another vehicles. Doing so carries a risk of malfunction and body injury.	**J. ATTENTION** **SRS VEHICLE** This car is equipped with a supplemental restraint system. To provide continued reliability, certain elements of the supplemental restraint system shall be serviced or replaced by authorized dealer ten years after vehicle manufacture date shown on certification label. For further information, see owner's manual. SIDE AIRBAG This car is equipped with a side airbag system. To provide continued reliability, certain elements of the side airbag system shall be serviced or replaced by authorized dealer ten years after vehicle manufacture date shown on certification label. For further information, see owner's manual.

ELECTRICAL SYSTEM ERJB0050

The SRS airbag system has sophisticated electrical and electronic components. Therefore the airbag operating components should be handled very carefully.

SRSCM (Supplement Restraint System Control Module)

SRSCM determines when to deploy the airbag module by sensing the frontal and side impact force through the built in sensor SRSCM.

1. DC/DC convertor : The DC/DC convertors of the power supply includes a step up and a step down converter, which provide the firing voltage for six firing circuits and the internal operating voltage. If the internal operating voltage falls below a defined threshold a reset is executed.

2. Arming sensor/safing sensor : The arming/safing sensor built in to the airbag firing circuit has the function of arming the airbag circuit under all required deployment conditions and maintaining the airbag firing circuits unarmed under normal driving conditions. The safing sensor is a dual-contact electromechanical switch which closes if it experiences a deceleration exceeding a specified threshold.

3. Back-up power : The SRSCM has emergency energy reserves to provide deployment energy for a short period when the vehicle voltage is low or if lost in a vehicle frontal crash.

4. Malfunction detection : The SRSCM continuously monitors the current SRS operation status while the ignition key is turned on and detects a malfunction of the system. The malfunction can be displayed in the form of diagnostic trouble code using Hi-scan.

5. MIL (Malfunction Indication Lamp) notification : If any fault is detected, the SRSCM sends a signal to the indicator lamp on the cluster to warn the vehicle's driver.

   The MIL indicator is the key to driver notification of SRS faults. Verify lamp and SRSCM operation by observing the flashinging 6 times when the ignition switch is first turned on.

6. Malfunction recording : Once a fault occurrs in the system SRSCM records the fault in the memory in the form of DTC and the DTC is erased by Hi-scan.

7. Data link connector : The SRSCM memory stored data are linked through this connector located at the underneath of driver side crash pad to an external output device such as Hi-scan.

8. After firing the airbags once, the SRSCM cannot be used again and must be replaced.

9. Crash output

   The crash output is used to control an external device which will unlock the doors in case of a crash event. The crash output is specified as follows : 0-200 μA in OFF mode and 200mA in ON mode. In case of an unlock command the switch is closed for 200 mS.

SRSCM (SUPPLEMENTAL RESTRAINTS SYSTEM CONTROL MODULE)

SRSCM (SRS CONTROL MODULE)

INFLATOR MODULE (DAB, PAB, SAB) ERJB0060

DAB (Driver airbag), PAB (Passenger airbag) module, DSAB (Driver side airbag), PSAB (Passenger side airbag) all consist of a inflator and cushion. The initiator (a gas generator igniting device) is port of the inflator. When the vehicle is in a frontal or side crash of sufficient force to close the sensor of the SRSCM, current flows through the deployment loop. This current ignites the material and inflates the airbag.

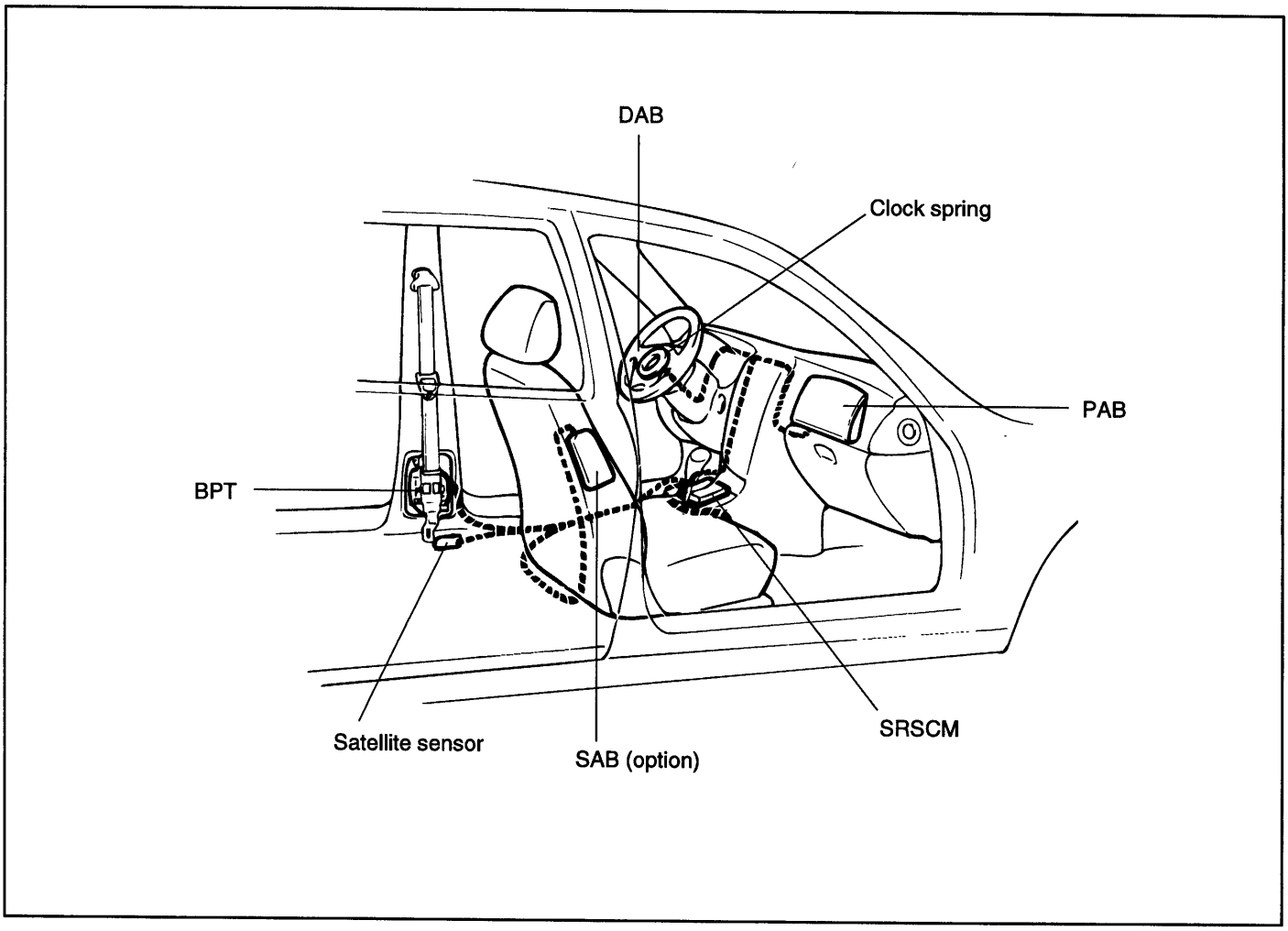

ERA9002A

1. When removing the airbag module or handling a new airbag module, it should be placed with the pad top surface facing up. In this case, the twin-lock type connector lock lever should be in the lock state and care should be taken to place it so the conector will not be damaged. Do not store a steering wheel pad on top of another one. (Storing the pad with its metallic surface up may lead to a serious accident if the airbag should inflate for any reason.)
2. Never measure the resistance of the airbag squib. (This may cause the airbag to deploy, which is very dangerous.)
3. Store the airbag module where the ambient temperature remains below 93°C (200°F), without high humidity and away from electrical noise.
4. During electric welding, disconnect the airbag under the steering column near the MULTI-FUNCTION SWITCH connector before starting work.

SRS HARNESS ERJB0070

The SRS harness is wrapped in yellow tube to identify it from other system harness. A shorting bar is included inside the wiring connectors of DAB, PAB, DSAB, PSAB and BPT inflator side. The shorting bar shorts the current flow when the connectors are disconnected. The circuits to the inflator module are shorted in this way to help prevent unwanted deployment of the airbag when serving the airbag module.

SRSCM INDEPENDENT LAMP ACTIVATION

The SRS malfunction indicator lamp (MIL) is located on the instrument cluster to provide information about SRS operating conditions.

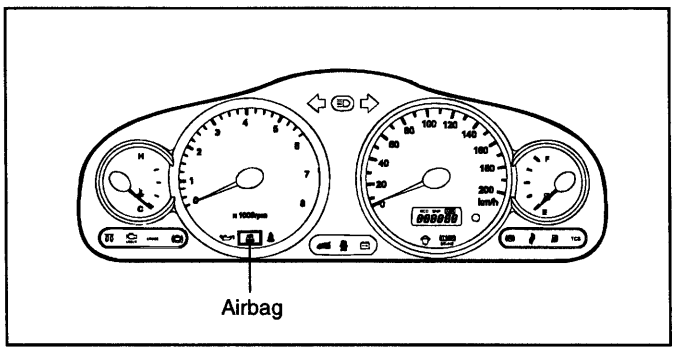

ERJB007A

There are certain fault conditions in which the SRSCM (SRS Control Module) cannot function and thus cannot control the operation of the lamp. In these cases, the lamp is directly activated by circuitry that operates independently of the SRSCM, as follows :

1. Loss of ignition voltage supply to the SRSCM : lamp turns on continuously.
2. Loss of internal operating voltage : lamp turns on continuously.
3. SRSCM not connected : lamp turns on through shorting bar in wiring harness connector.

MIL OPERATING METHOD ERJB0080

	Operating situation	Operating method
RUNNING	o Return to normal from temporary fault	ON → OFF
	o Total faults frequency ≥ 5 o Active fault	Turn it on continuously
STARTING	o Normal	Blink 6 times
	o Total faults frequency ≤ 4	On to off after 6 seconds
	o Total faults frequency ≥ 5 o Active fault	Turn it on continuously

ERJB008A

CLOCK SPRING ERJB0090

The clock spring (coil spring) consists of two current carrying coils. It is attached between the steering column and the steering wheel. It allows rotation of the steering wheel while maintaining continuous contact of the deployment loop through the inflator module.

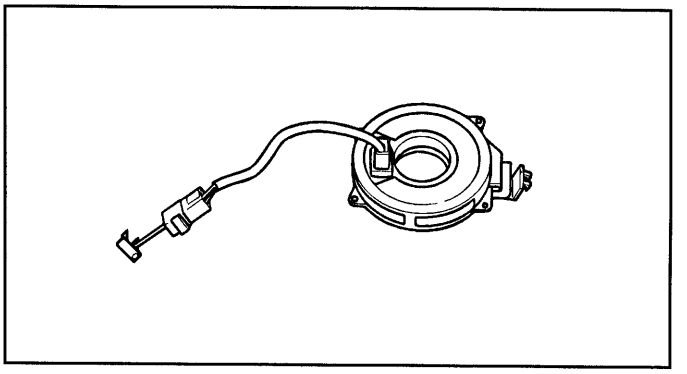

ERJA010E

The steering wheel must be fitted correctly to the steering column with the clock spring at the neutral position, otherwise cable disconnection and other troubles may result.

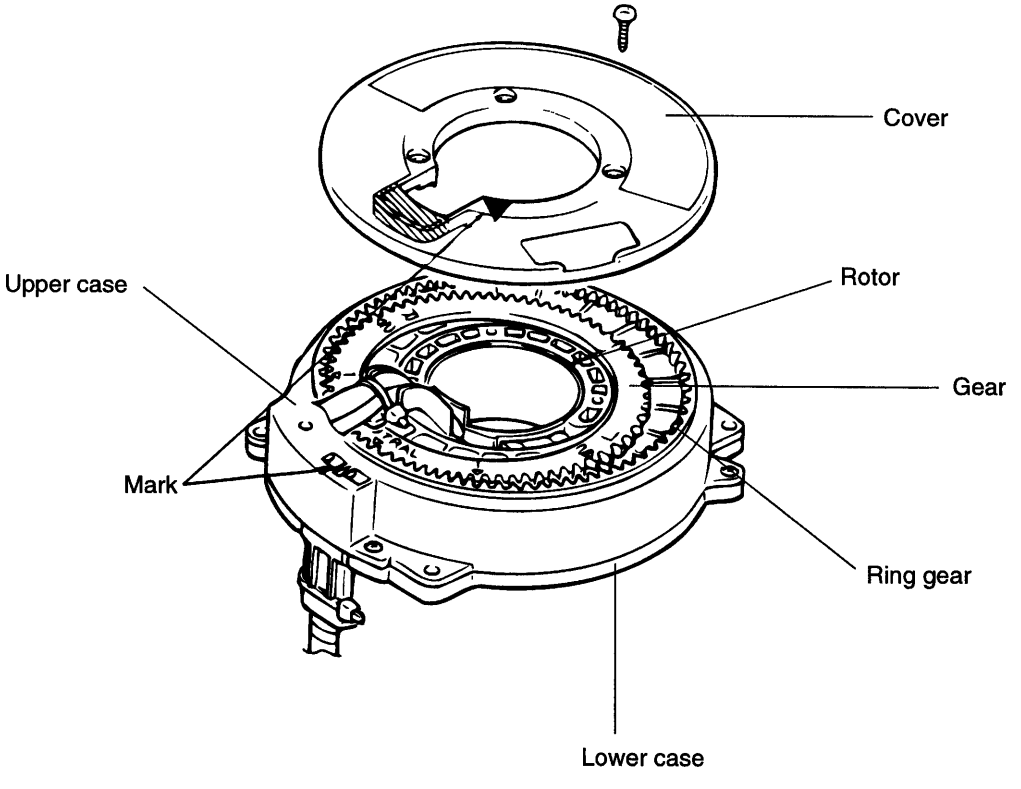

When the rotor is rotated clockwise

ERLB002C

SATELLITE SENSOR ERJB0110

The firing system for the side airbag consists of a SRSCM installed in the middle of the vehicle and two satellites - one on the left-hand side and one on the right. Only the SRSCM is capable of releasing the airbags or the seat-belt pretensioners systems in the vehicle. In the dialog between the SRSCM and the satellite, it is the SRSCM which makes the release decision.

The satellites act as intelligent acceleration sensors, and as such back up the central airbag controller. Both the satellites continuously report the current system status on the left and right-hand sides of the vehicle to the SRSCM.

The test results are reported to the SRSCM by means of periodic status signals.

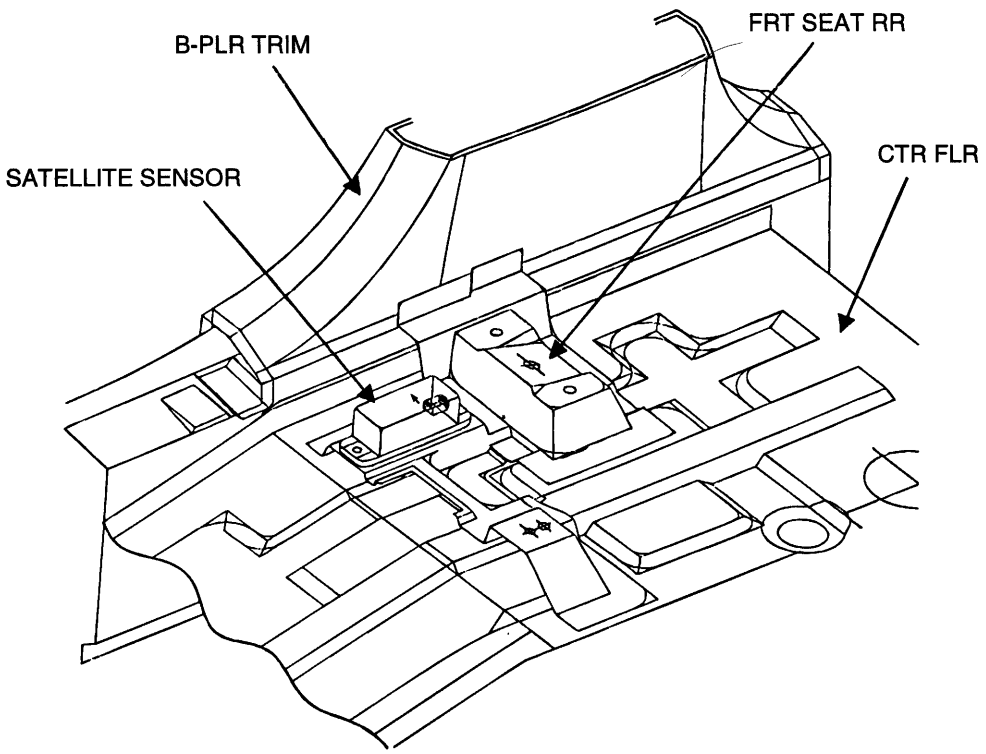

ERJB050A

NOTE

When the ignition is ON, never shock the area around of satellite sensor with a etc. Otherwise, the airbag system could unexpectedly deploy.

SYSTEM COMPONENT AND LAYOUT ERJB0120

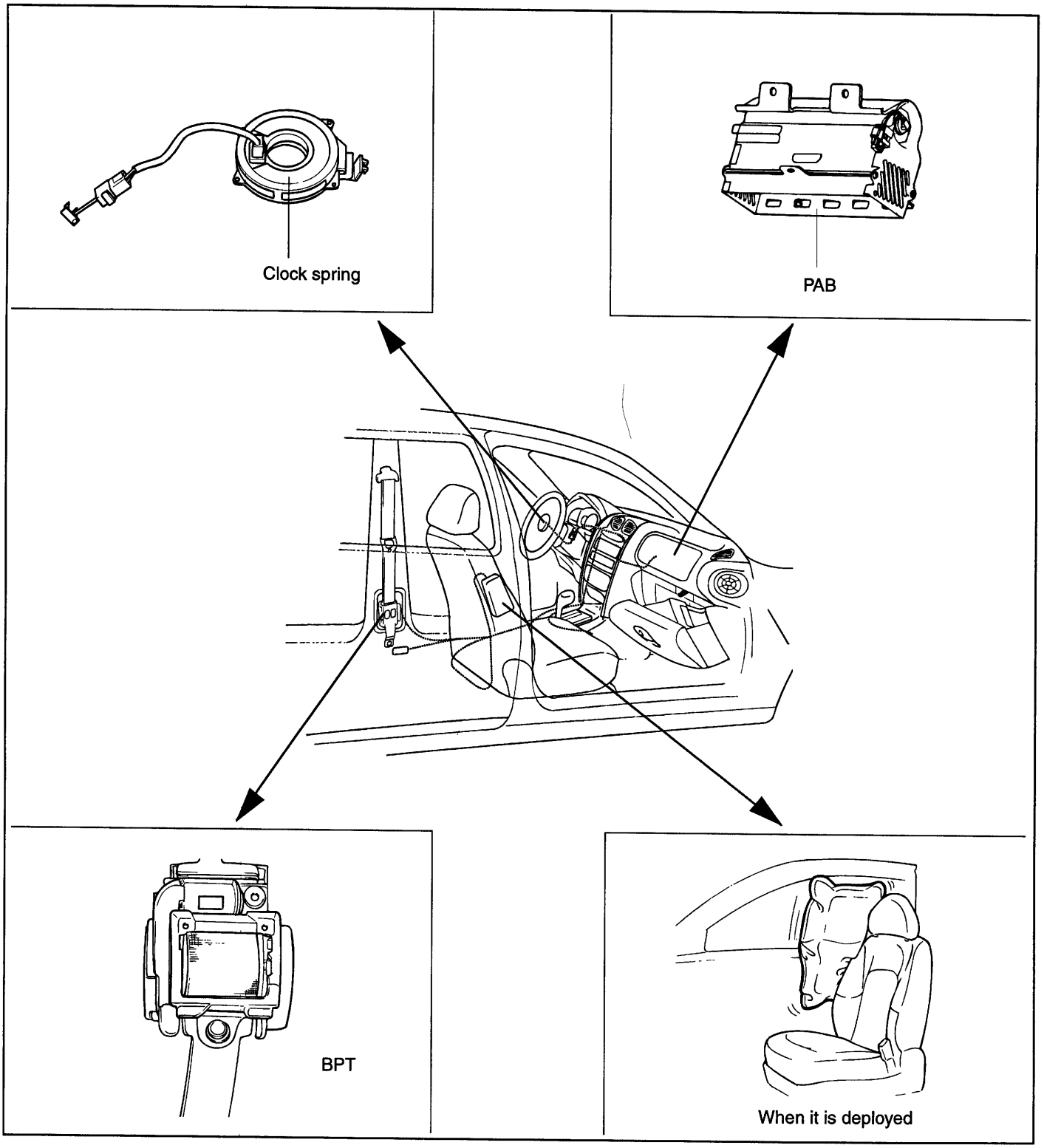

ERJB012A

SRSCM (SRS CONTROL MODULE) ERJB0130

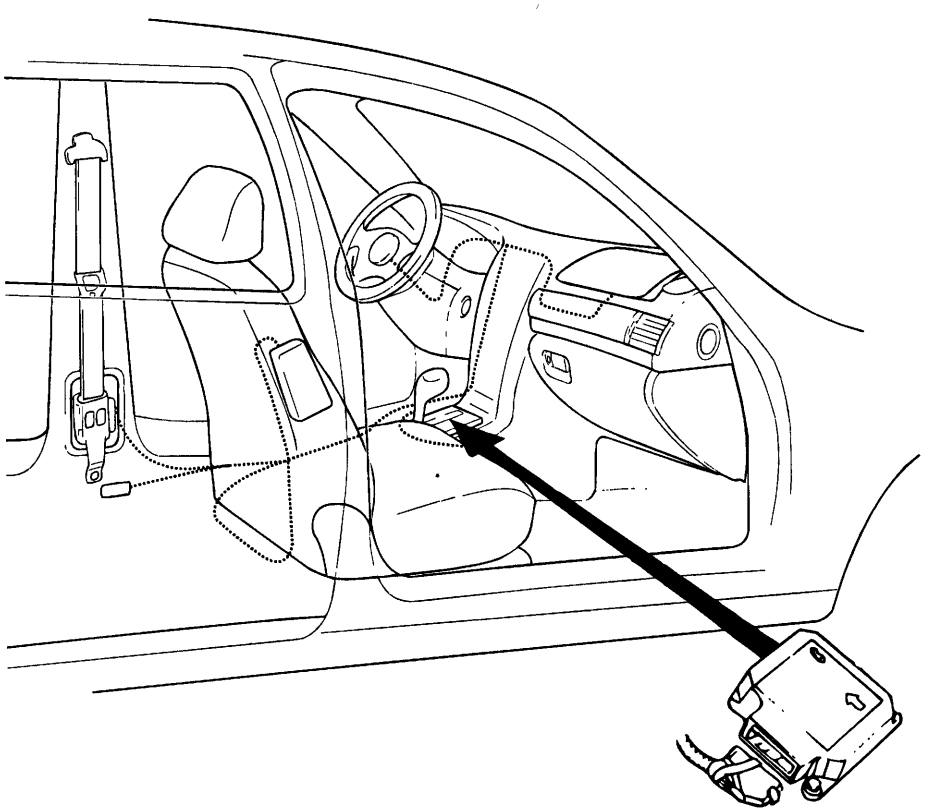

SRSCM

ERB9004A

AIRBAG SYSTEM (SRS) ERJB0140

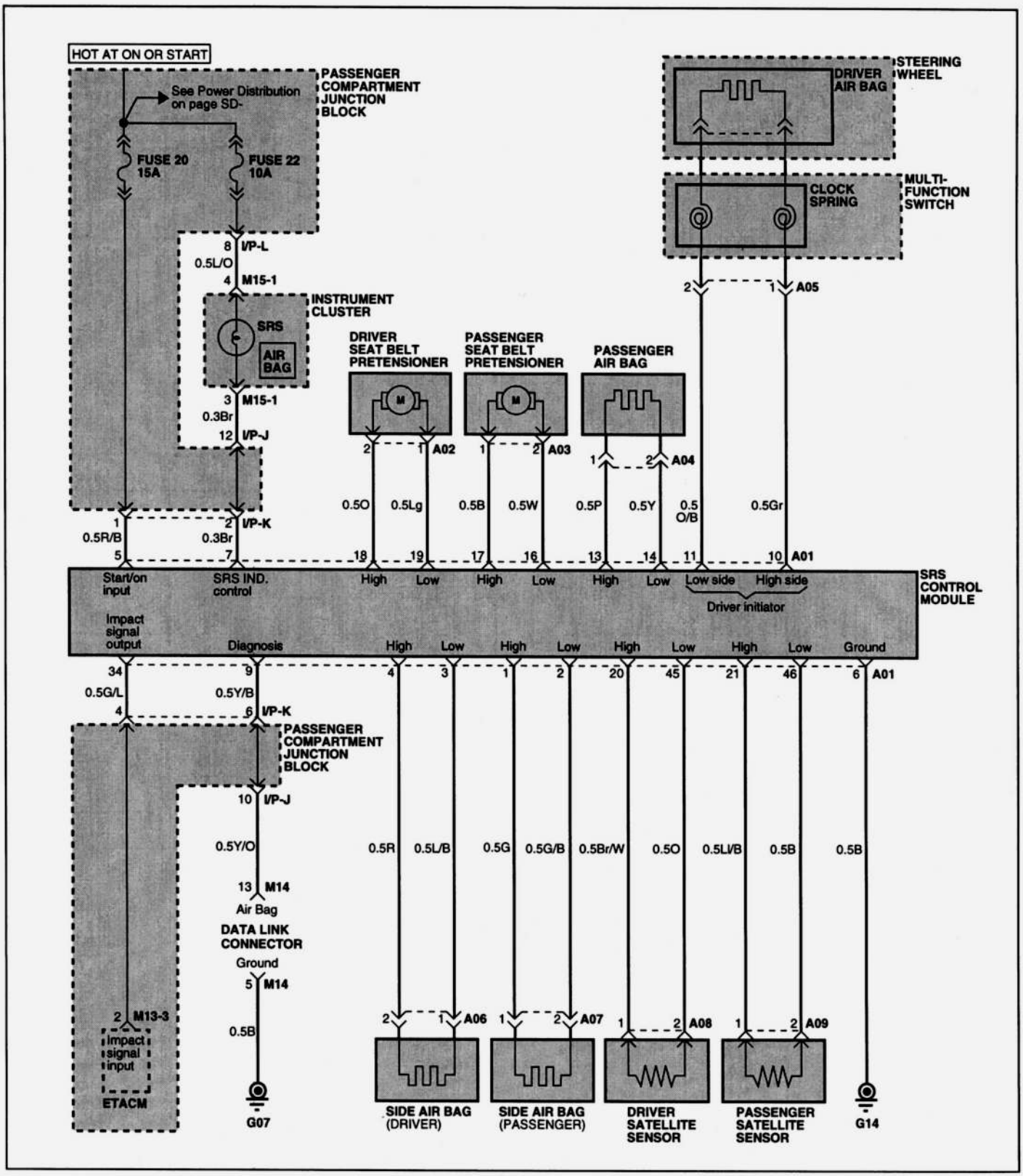

ERJB014A

SRSCM CONNECTOR (1) - (SRE-LC)

DAB+BPT ERJB0145

1	2	3	4	5	6	7	8	9	10	11	12	13	14	15	16	17	18	19	20	21	22	23	24	25
				●	●	●		●	●	●					●	●	●	●						

26	27	28	29	30	31	32	33	34	35	36	37	38	39	40	41	42	43	44	45	46	47	48	49	50
								●																

ERJB014B

PIN NO.	Function	Input/output
1	Not used	—
2	Not used	—
3	Not used	—
4	Not used	—
5	Battery supply	Input
6	GND	Input
7	Warning lamp	Output
8	Not used	—
9	K-Diagnostic line	Input/output
10	Driver airbag, High	Output
11	Driver airbag, Low	Output
12	Not used	—
13	Not used	—
14	Not used	—
15	Not used	-
16	Passenger belt pretensioner, Low	Output
17	Passenger belt pretensioner, High	Output
18	Driver belt pretensioner, High	Output
19	Driver belt pretensioner, Low	Output
20	Not used	-
21	Not used	-
22–25	Not used	-
26–29	Shorting bar	-
30	Not used	-
31–32	Shorting bar	-
33	Not used	-
34	Crash output	Output
35–36	Shorting bar	-
37	Not used	-

PIN NO.	Function	Input/output
38–39	Shorting bar	-
40	Not used	-
41–44	Shorting bar	-
45	Not used	-
46	Not used	-
47–50	Not used	-

SRSCM CONNECTOR (2) - (SRE-LC)

DAB+PAB+BPT ERJB0155

1	2	3	4	5	6	7	8	9	10	11	12	13	14	15	16	17	18	19	20	21	22	23	24	25
				●	●	●		●	●	●		●	●		●	●	●	●						

26	27	28	29	30	31	32	33	34	35	36	37	38	39	40	41	42	43	44	45	46	47	48	49	50
								●																

ERJB015A

PIN NO.	Function	Input/output
1	Not used	—
2	Not used	—
3	Not used	—
4	Not used	—
5	Battery supply	Input
6	GND	Input
7	Warning lamp	Output
8	Not used	—
9	K-Diagnostic line	Input/output
10	Driver airbag, High	Output
11	Driver airbag, Low	Output
12	Not used	—
13	Passenger airbag, High	Output
14	Passenger airbag, Low	Output
15	Not used	-
16	Passenger belt pretensioner, Low	Output
17	Passenger belt pretensioner, High	Output
18	Driver belt pretensioner, High	Output
19	Driver belt pretensioner, Low	Output
20	Not used	-
21	Not used	-
22–25	Not used	-
26–29	Shorting bar	-
30	Not used	-
31–32	Shorting bar	-
33	Not used	-
34	Crash output	Output
35–36	Shorting bar	-

PIN NO.	Function	Input/output
37	Not used	-
38–39	Shorting bar	-
40	Not used	-
41–44	Shorting bar	-
45	Not used	-
46	Not used	-
47–50	Not used	-

SRSCM CONNECTOR (3) - (SRE-HMC)

DAB+PAB+SAB+BPT ERJB0165

1	2	3	4	5	6	7	8	9	10	11	12	13	14	15	16	17	18	19	20	21	22	23	24	25
●	●	●	●	●	●	●		●	●	●		●	●		●	●	●	●	●	●				

26	27	28	29	30	31	32	33	34	35	36	37	38	39	40	41	42	43	44	45	46	47	48	49	50
								●											●	●				

ERJB016A

PIN NO.	Function	Input/output
1	Passenger side airbag, High	Output
2	Passenger side airbag, Low	Output
3	Driver side airbag, Low	Output
4	Driver side airbag, High	Output
5	Battery supply	Input
6	GND	Input
7	Warning lamp	Output
8	Not used	—
9	K-Diagnostic line	Input/output
10	Driver airbag, High	Output
11	Driver airbag, Low	Output
12	Not used	—
13	Passenger airbag, High	Output
14	Passenger airbag, Low	Output
15	Not used	-
16	Passenger belt pretensioner, Low	Output
17	Passenger belt pretensioner, High	Output
18	Driver belt pretensioner, High	Output
19	Driver belt pretensioner, Low	Output
20	Driver satellite sensor, High	Input/output
21	Passenger satellite sensor, High	Input/output
22–25	Not used	-
26–29	Shorting bar	-
30	Not used	-
31–32	Shorting bar	-
33	Not used	-
34	Crash output	Output
35–36	Shorting bar	-

PIN NO.	Function	Input/output
37	Not used	-
38–39	Shorting bar	-
40	Not used	-
41–44	Shorting bar	-
45	Driver satellite sensor, Low	Input/output
46	Passenger satellite sensor, Low	Input/output
47–50	Not used	-

AIR BAG MODULE (DRIVER) AND CLOCK SPRING

AIR BAG MODULE (DRIVER) AND CLOCK SPRING

COMPONENTS ERJB0200

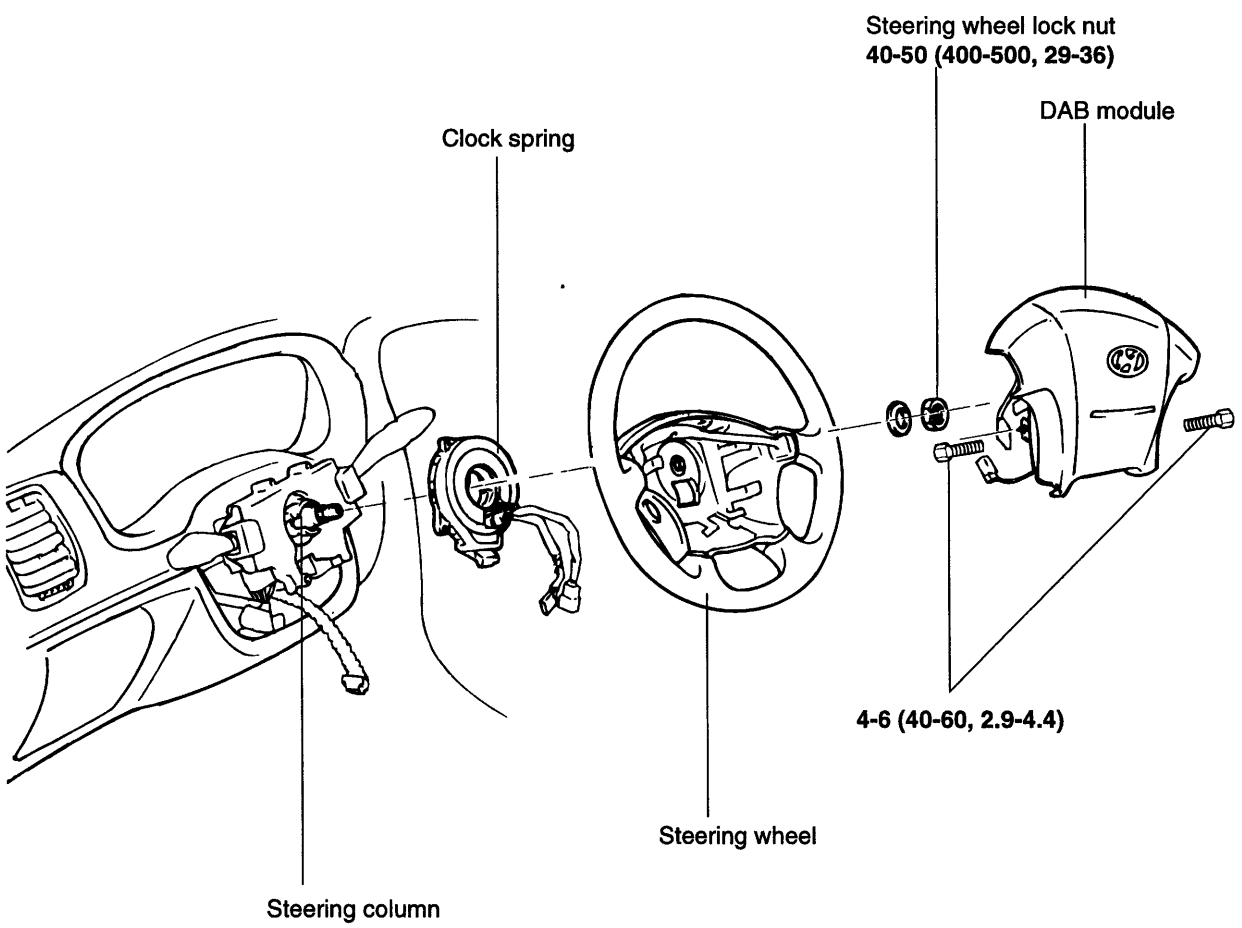

TORQUE : Nm (kg.cm, lb.ft)

ERJB020A

REMOVAL ERJB0210

1. Disconnect the negative battery cable and keep it secure from battery.

CAUTION

Wait at least 30 seconds after disconnecting the battery cable before doing any further work.

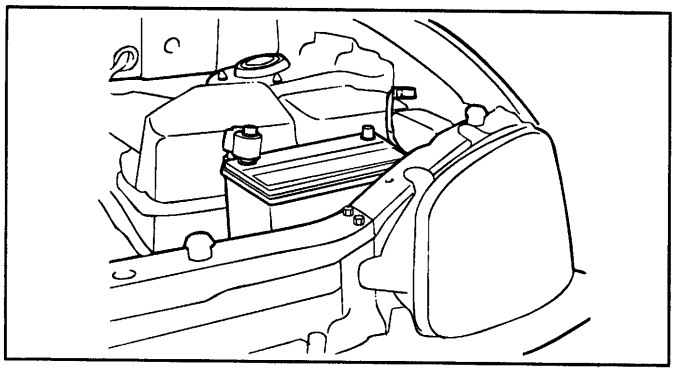

ERJA005C

2. Remove the side protecting cover of the steering wheel and airbag module mounting bolts using a hexagonal wrench.

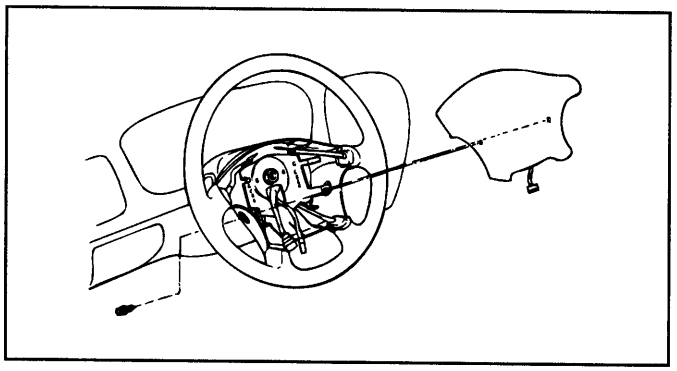

ERB9005A

3. When disconnecting the connector of the clock spring from the airbag module, pull the airbag's lock outward to spread it open.

CAUTION

When disconnecting the airbag module-clock spring connector, take care not to apply excessive force to it.

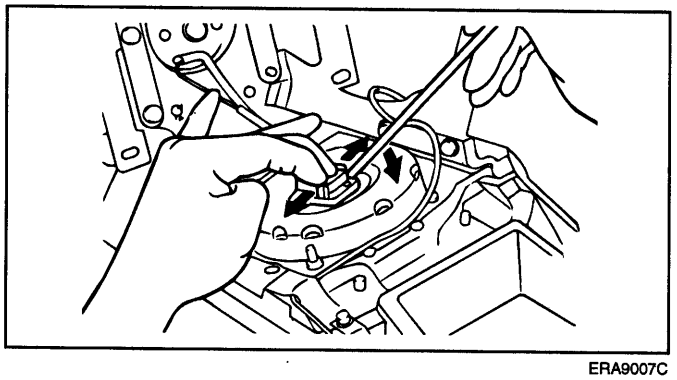

ERA9007C

4. Remove the airbag module.

CAUTION

The removed airbag module should be stored in a clean, dry place with the pad cover face up.

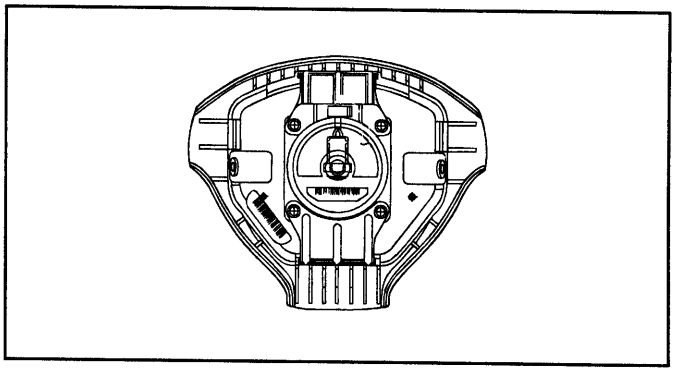

ERJB021A

5. Remove the steering wheel using SST (09561–11002).

CAUTION

Do not hammer on the steering wheel. Doing so may damage the collapsible column mechanism.

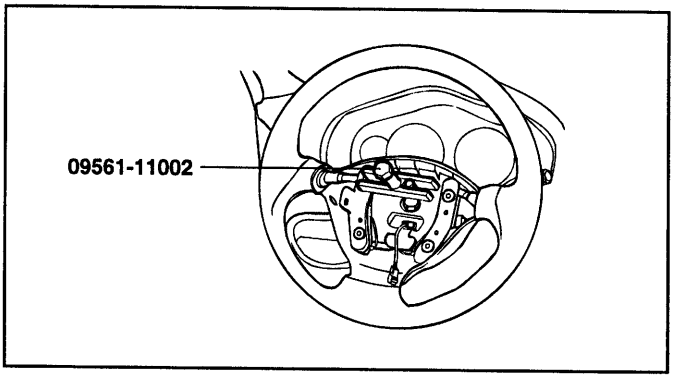

EPJA020B

INSPECTION ERJB0220

AIRBAG MODULE

If any damaged parts are found during the following inspection, replace the airbag module with a new one.

Dispose the old airbag following the proper procedure.

CAUTION

Never attempt to measure the circuit resistance of the airbag module (squib) even if you are using the specified tester. If the circuit resistance is measured with a tester, accidental airbag deployment could result in serious personal injury.

1. Check the pad cover for dents, cracks or deformities.
2. Check the airbag module for denting, cracking or deformation.
3. Check hooks and connectors for damage, terminals for deformities, and harness for binds.
4. Check the airbag inflator case for dents, cracks or deformities.

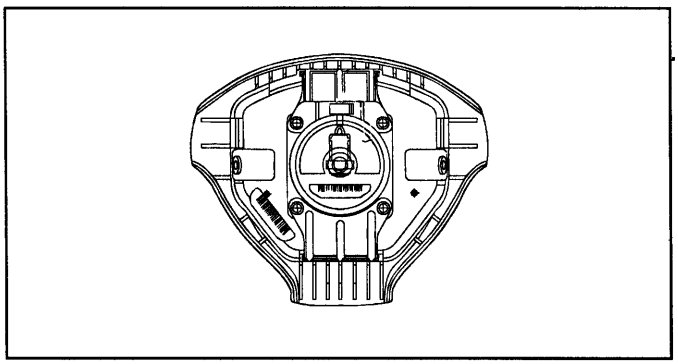

ERJB021A

5. Install the airbag module to the steering wheel to check its fit.

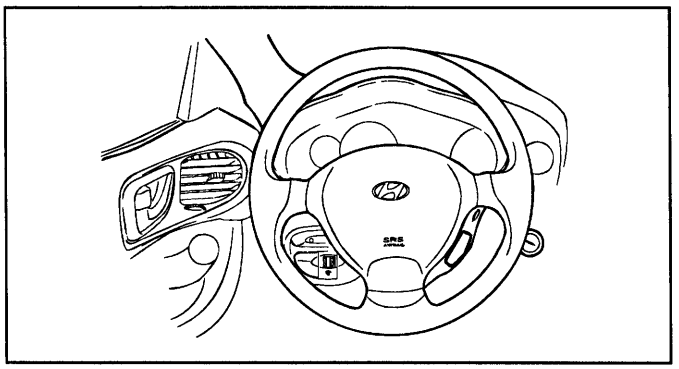

EPJA020K

CLOCK SPRING

1. If, as a result of the next check, even one abnormal point is discovered, replace the clock spring with a new one.
2. Check connectors and the protective tube for damage, and terminals for deformities.

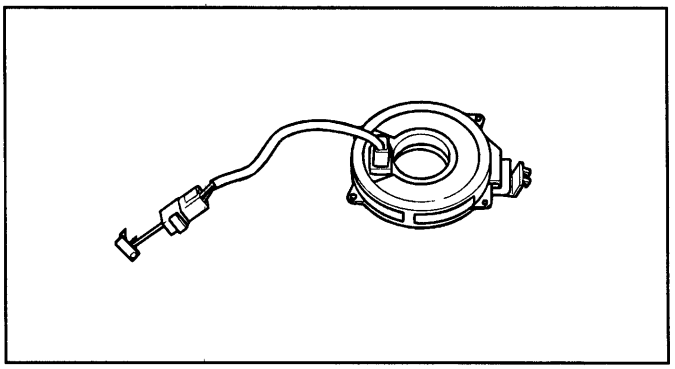

ERJA010E

AIR BAG MODULE (PASSENGER)

REMOVAL ERJB0250

NOTE

1. **Never attempt to disassemble or repair the airbag module.**
2. **Do not drop the airbag module or allow contact with water, grease or oil. Replace it if a dent, crack, deformation or rust is detected.**
3. **The airbag module should be stored on a flat surface and placed so that the pad surface is facing upward. Do not place anything on top of it.**
4. **Do not expose the airbag module to temperatures over 93°C (200°F)**
5. **An undeployed airbag module should only be disposed in accordance with the proper procedures.**
6. **Never attempt to measure the circuit resistance of the airbag module (squib) even if you are using the specified tester. If the circuit resistance is measured with a tester, accidental airbag deployment could result in serious personal injury.**
7. **Whenever the PAB is deployed it should be replaced with a new one, assembled with a new extension wire. The squib is melted when the PAB is deployed making the old extension wire useless.**

1. Disconnect the battery negative (-) terminal cable.

CAUTION

Wait at least 30 seconds.

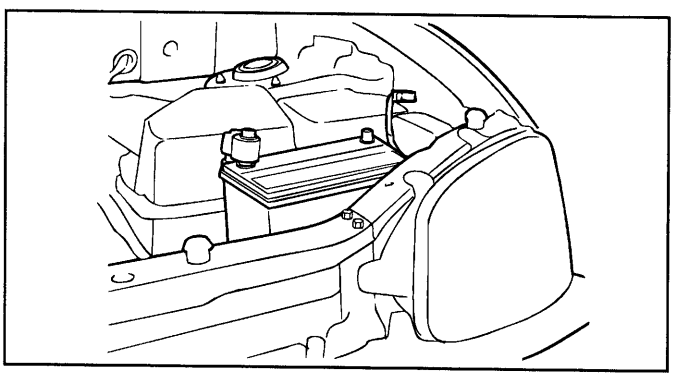

ERJA005C

2. Remove the glove box.
3. Disconnect the PAB module connector.
4. Remove the crash pad assembly and then undo the PAB module. (Refer to the BD section)

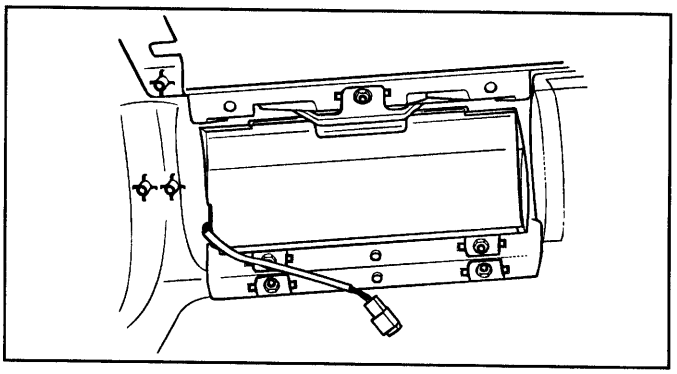

ERJA010G

5. The skin of passenger Airbag module is integrated with the crash pad. Replace the crash pad if PAB is deployed.

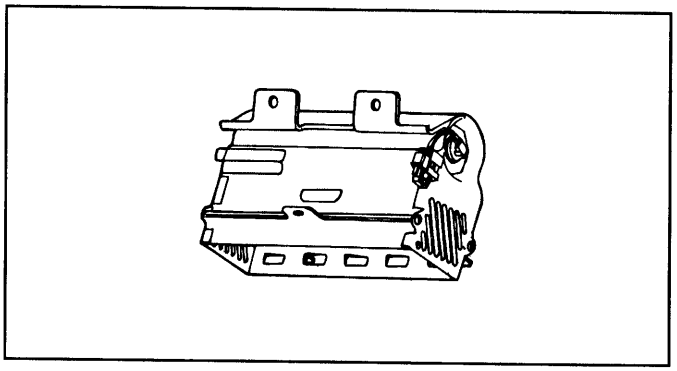

ERJB025A

REMOVAL ERJB0290

1. Disconnect the battery negative (-) terminal.

CAUTION

Wait at least 30 seconds.

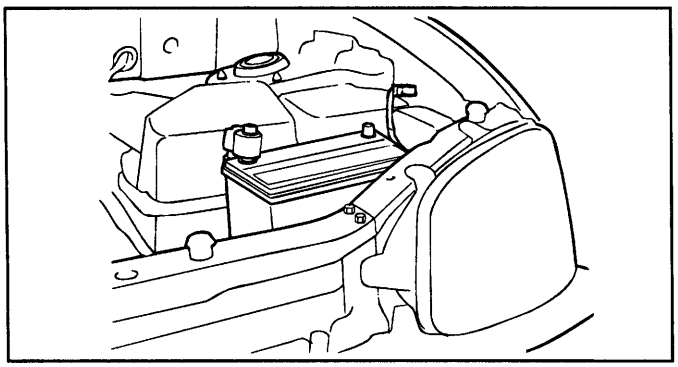

ERJA005C

2. Remove the door scuff trim.

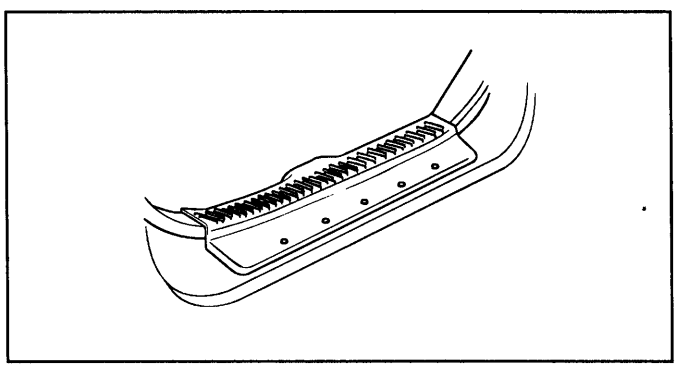

ERJA020C

3. Remove the center pillar lower trim after removing the seat belt lower anchor bolt.

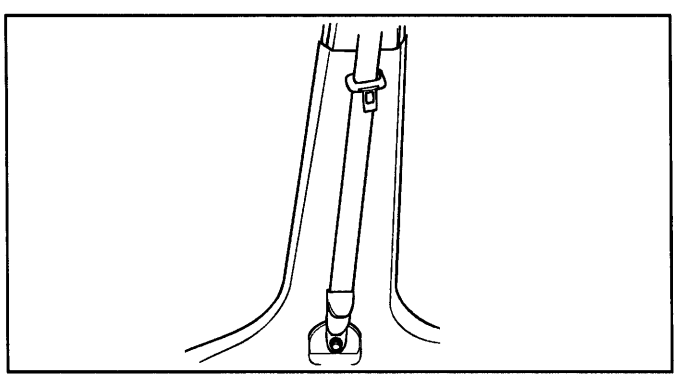

ERJA020D

4. Remove the upper anchor plate cover and upper anchor plate.

5. Remove the lower anchor plate and the front seat belt.

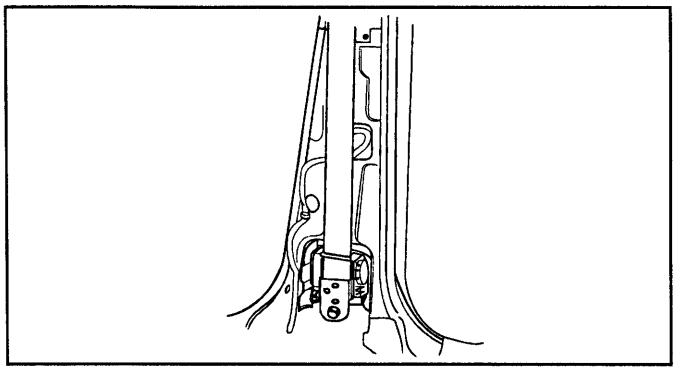

ERJA020E

CAUTION

1. **Never attempt to disassemble or repair the BPT.**
2. **Do not drop the BPT or allow contact with water, grease, oil.**
   Replace it if a dent, crack, deformation or rust is detected.
3. **Do not place anything on the BPT.**
4. **Do not expose the BPT to temperature over 93°C(200°F).**
5. **BPT functions one time only. Be sure to replace the BPT after it is deployed.**
6. **Be sure to wear gloves and safety goggles when handling the deployed BPT.**

AIR BAG MODULE (PASSENGER)

FUNCTION OF PRETENSIONER ERHA0900

When a vehicle crashes with a certain degree of impact from the front, the gas generator is ignited by the electrical firing signal from the SRSCM (Supplemental Restraint System Control Module).

Gas from the gas generator causes movement of the piston in the manifold case (cylinder), which operates the rack gear.

The rack gear rotates a piston gear and a pinion rotates the planet gears.

Finally the webbing is retracted by the rotation of the spool. Therefore the pretensioner seat belt helps to reduce the severity of injury to the front seat occupant by retracting the seat belt webbing to prevent the occupant from thrusting forward and hitting the steering wheel or instrument panel when the vehicle crashes.

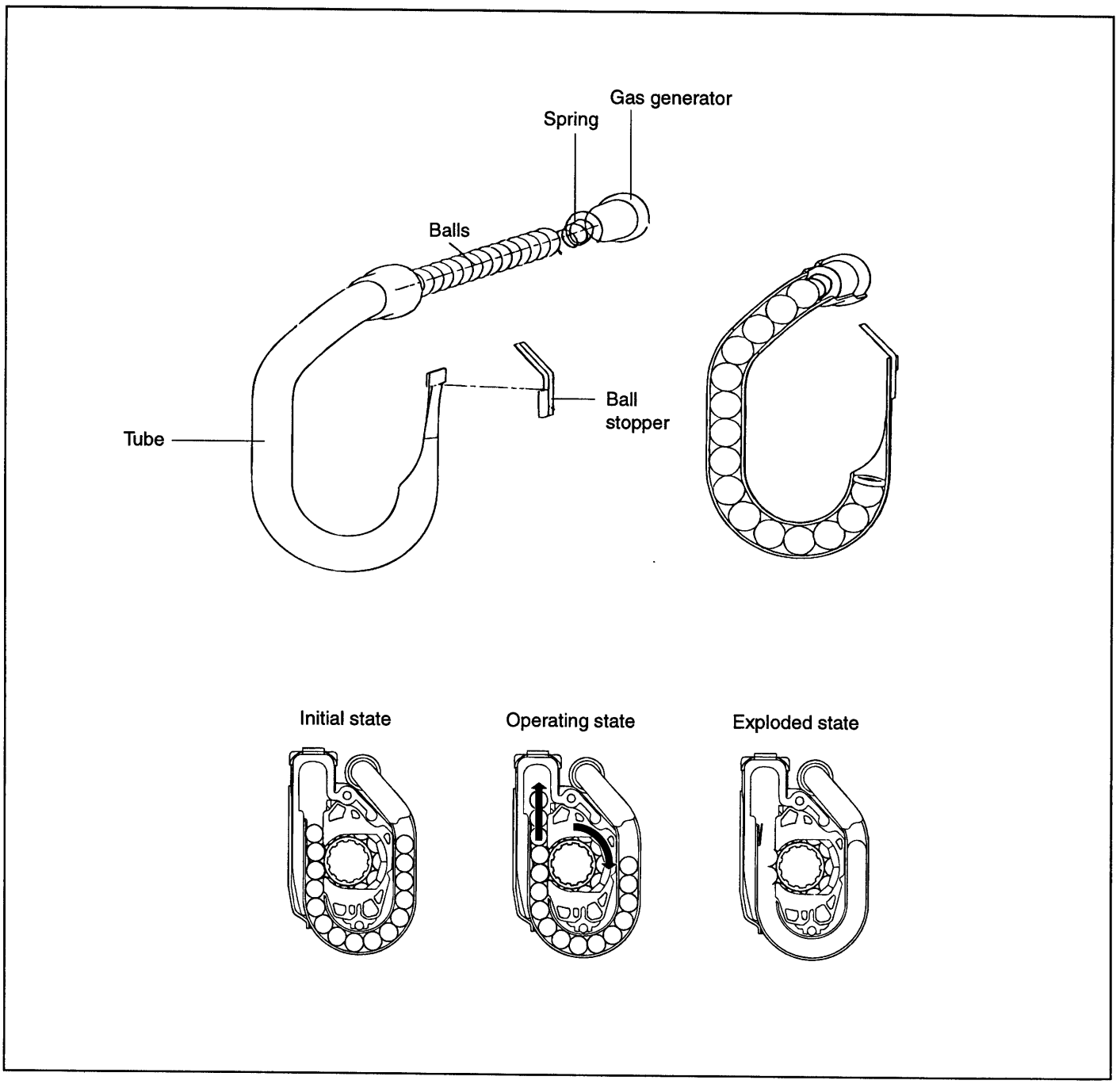

KFWE005A

LOAD LIMITER

The load limiter is designed to relieve the impact force to an occupant chest's of the seat belt webbing when the occupant is restrained by the seat belt during a crash. If the crash force reaches a certain value, the torsion bar in the pretensioned seat belt is deformed and this causes the webbing to relieve the impact force.

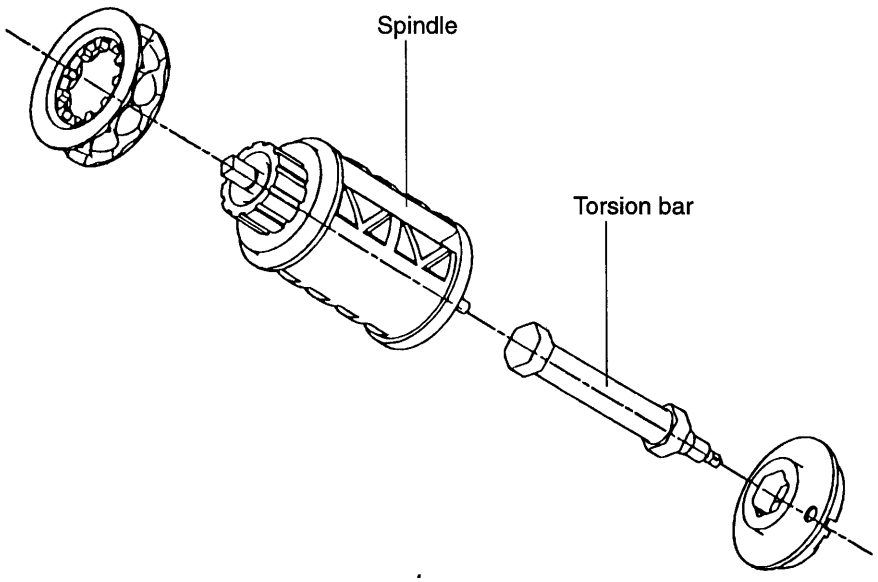

Load = 5.5 kN

Load < 5.5 kN

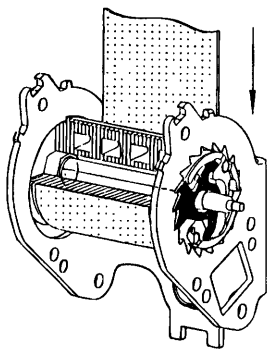

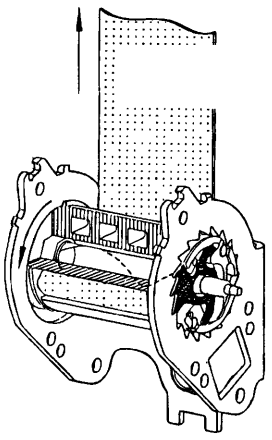

Webbing retracted

Torsion bar deformed

KFWE006A

PRETENSIONER SEAT BELT ERJB0260

COMPONENTS

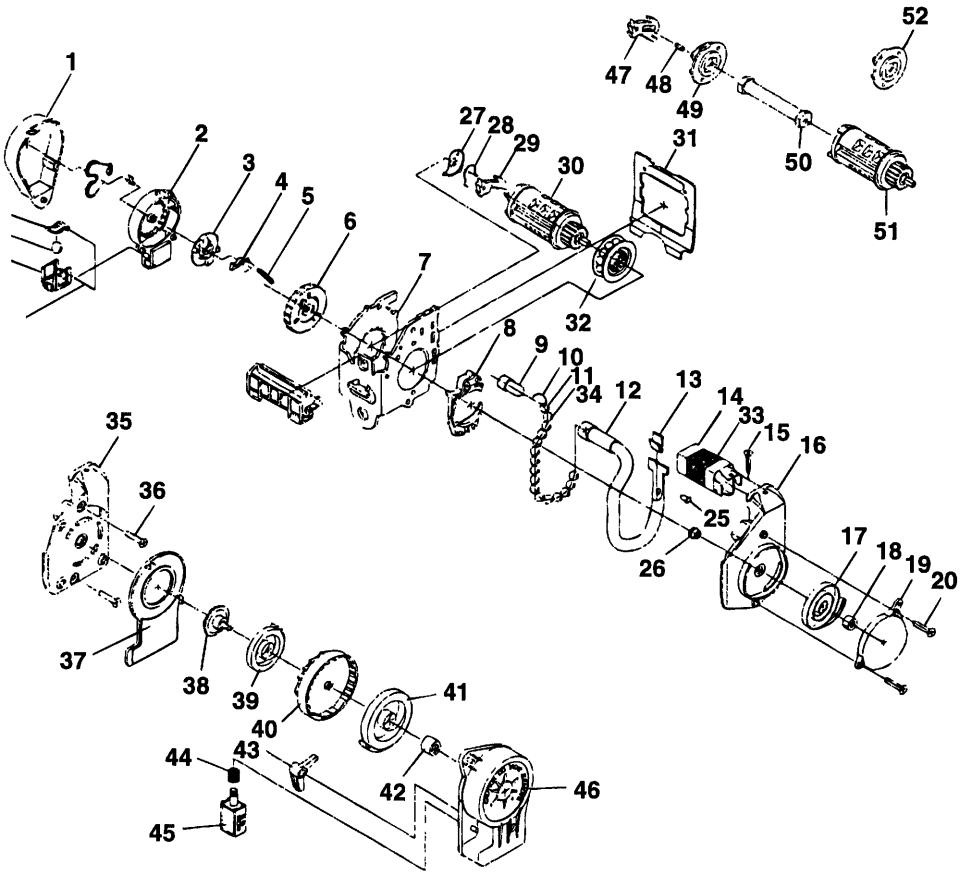

1. COVER-L/RH
2. BEARING PLATE-L/RH
3. INTERTIA MASS
4. WEB SENSOR PAWL
5. WEB SENSOR SPRING
6. STEERING DISC-L/RH
7. BASE L/RH
8. BALL L/RH
9. GAS GENERATOR
10. TUBE SPRING
11. PISTON
12. TUBE-L/RH
13. BALL STOPPING SPRING
14. BALL TRAP-L/RH
15. SCREW
16. TUBE COVER-L/RH
17. REWINDING SPRING
18. SPRING CORE-L/RH
19. SPRING COVER-L/RH
20. RIVET
27. RETAINING WASHER-L/RH
28. LOCK DISC SPRING
29. LOCKING ELEMENT-L/RH
30. SPINDLE-L/RH
31. DISTANCE SHEET
32. PINION GEAR
33. LABEL
34. BALL ALUMINUM
35. TUB COVER (T/R)-L/RH
36. RIVET (T/R)
37. RETAINER-L/RH
38. BUSH SHAFT
39. REDUCE SPRING
40. HOLDER-L/RH
41. NORMAL SPRING
42. STAY SHAFT
43. SOLENOID ASSY
44. RETURN SPRING
45. SOLENOID LEVER-L/RH
46. T/R COVER-L/RH
47. LOCK G ELEMENT (L/L)-L/RH
48. NECK
49. TREAD HEAD (W/STOP)-L/RH
50. TORSION BAR-5.5kN
51. SPINDLE (L/L)-L/RH
52. TREAD HEAD (W/OUT STOP)-L/RH

KFWE004A

AIR BAG CONNECTORS

AIR BAG CONNECTORS

DIAGNOSIS WITH SCAN TOOL ERJB0300

CHECK PROCEDURES

1. Connect the Hi-Scan Pro to the vehicle data link connector located underneath the dash panel.
2. Turn the ignition key to "ON" position and turn on the Hi-Scan Pro .
3. Check for diagnostic trouble codes.
4. If a fault code is found, then replace the appropriate component. Never attempt to repair the component.
5. If the Hi-Scan Pro finds that a component of the system is faulty, there is a possibility that the fault is not in the components but in the SRS wiring or connector.

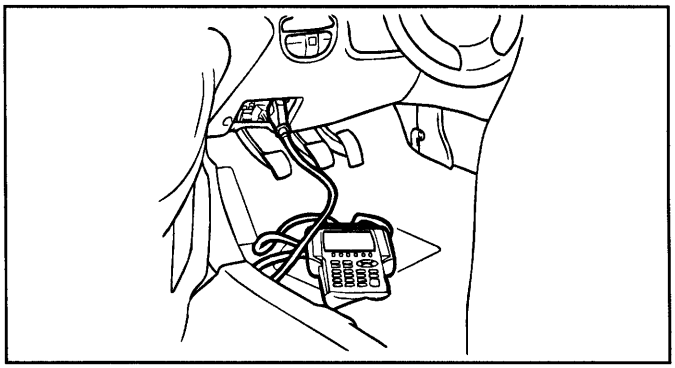

ERJA015C

DIAGNOSTIC TROUBLESHOOTING FLOW ERJB0310

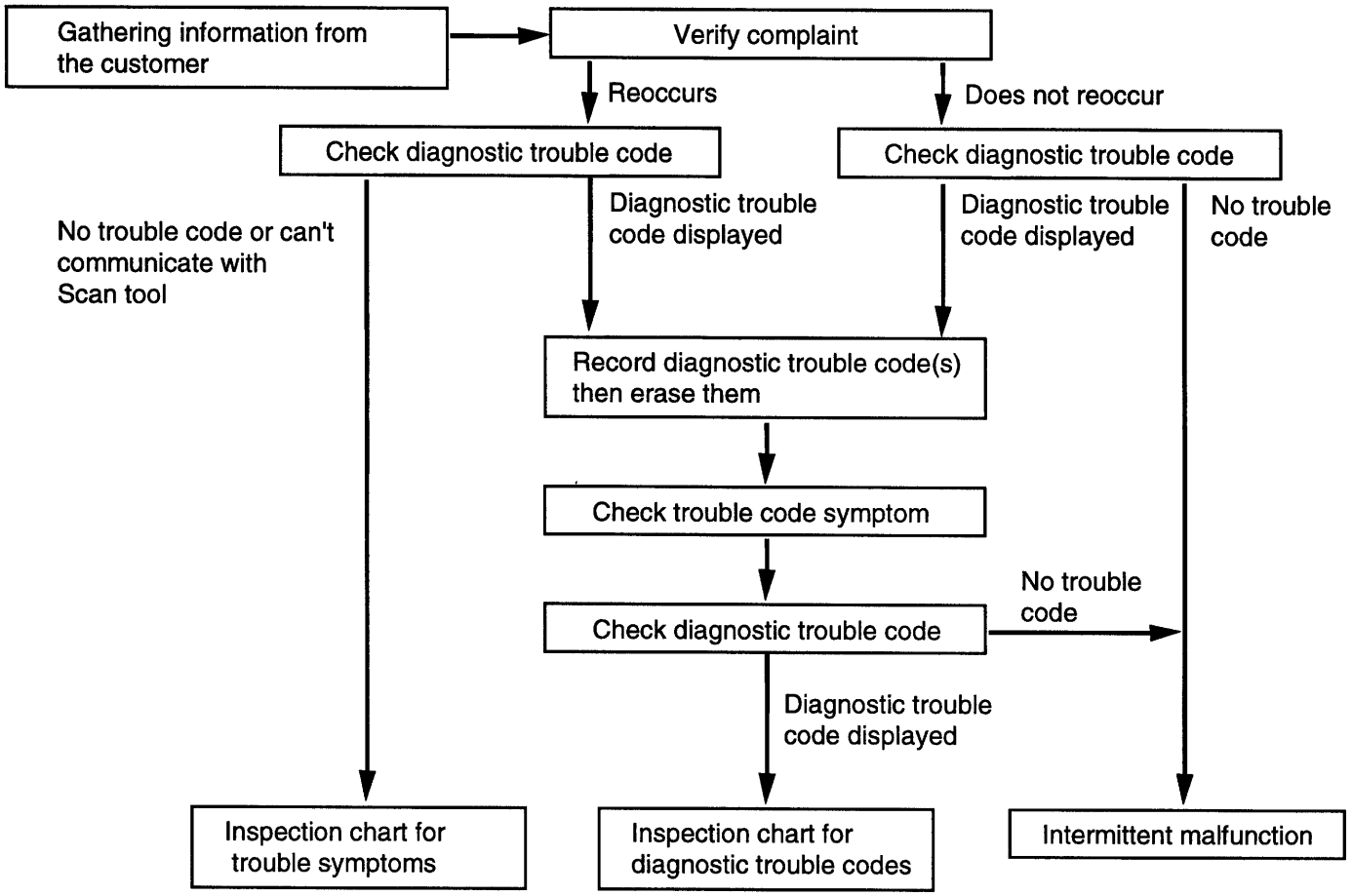

ERA9035A

SPECIFICAION (SRE-LC, SRE-HMC)

	DAB, PAB	SAB	BPT
Resistance	2 Ω ± 0.4 Ω	2 Ω ± 0.3 Ω	2.15 Ω ± 0.35 Ω
No-fire current	650 mA for 2 sec	0.4A for 10 sec	90 mA for 10 sec
All-fire current	1.75A for 2mS	1.2A for 3mS	1.0A for 2mS
Cyclic test current	50mA (100mA for 10 μS)		

AIRBAG SQUIB RESISTANCE LIMITS (SRE-LC, SRE-HMC)

DAB

$R \leq 1.06\Omega$	Resistance too low	Fault definitely detected
$1.0\Omega \leq R \leq 3.4\Omega$	Resistance whithin tolerance	Definitely no fault detected
$R \geq 6.7\Omega$	Resistance too high	Fault definitely detected
$1.06\Omega < R < 1.8\Omega$ $3.4\Omega < R < 6.7\Omega$	Tolerance band	Fault may or may not be detected

PAB, SAB, BPT

$R \leq 0.4\Omega$	Resistance too low	Fault definitely detected
$1.6\Omega \leq R \leq 2.8\Omega$	Resistance whithin tolerance	Definitely no fault detected
$R \geq 5.4\Omega$	Resistance too high	Fault definitely detected
$0.4\Omega < R < 1.6\Omega$ $2.8\Omega < R < 5.4\Omega$	Tolerance band	Fault may or may not be detected

BATTERY VOLTAGE SPECIFICATION

SRE - LC	SRE - HMC
$9V \leq V \leq 16V$	$10V \leq V \leq 16.5V$

INSPECTION CHART FOR DIAGNOSTIC TROUBLE CODE (SRE-LC) ERJB0315

OPTIONS : DAB + BPT

DTC No.	Fault description
B1111	Battery voltage too high
B1112	Battery voltage too low
B1346	Driver airbag (DAB), Resistance too high
B1347	Driver airbag (DAB), Resistance too low
B1348	Driver airbag (DAB), Short to ground
B1349	Driver airbag (DAB), Short to Battery
B1378	Driver seat belt pretensioner (DBPT), Resistance too high
B1379	Driver seat belt pretensioner (DBPT), Resistance too low
B1380	Driver seat belt pretensioner (DBPT), Short to ground
B1381	Driver seat belt pretensioner (DBPT), Short to Battery
B1620	Internal fault
B1650	Crash recorded (Replace SRE-LC)
B1661	ECU mismatching (Replace SRE-LC)
B2500	Warning lamp failure

NOTE

The DAB is located in the steering wheel.

AIR BAG SYSTEM (SRS)

INSPECTION CHART FOR DIAGNOSTIC TROUBLE CODE (SRE-LC) ERJB0320

OPTIONS : DAB + PAB + BPT

DTC No.	Fault description
B1111	Battery voltage too high
B1112	Battery voltage too low
B1346	Driver airbag (DAB), Resistance too high
B1347	Driver airbag (DAB), Resistance too low
B1348	Driver airbag (DAB), Short to ground
B1349	Driver airbag (DAB), Short to Battery
B1352	Passenger airbag (PAB), Resistance too high
B1353	Passenger airbag (PAB), Resistance too low
B1354	Passenger airbag (PAB), Short to ground
B1355	Passenger airbag(PAB), Short to Battery
B1361	Driver seat belt pretensioner (DBPT), Resistance too high
B1362	Driver seat belt pretensioner (DBPT), Resistance too low
B1363	Driver seat belt pretensioner (DBPT), Short to ground
B1364	Driver seat belt pretensioner (DBPT), Short to Battery
B1367	Passenger seat belt pretensioner (PBPT), Resistance too high
B1368	Passenger seat belt pretensioner (PBPT), Resistance too low
B1369	Passenger seat belt pretensioner (PBPT), Short to ground
B1370	Passenger seat belt pretensioner (PBPT), Short to Battery
B1620	Internal fault
B1650	Crash recorded (Replace SRE-LC)
B1661	ECU mismatching (Replace SRE-LC)
B2500	Warning lamp failure

NOTE

- **The DAB is located in the steering wheel.**
- **The PAB is located in the crash pad.**

INSPECTION CHART FOR DIAGNOSTIC TROUBLE CODE (SRE-HMC) ERJB0330

OPTIONS : DAB + PAB + SAB + BPT

DTC No.	Fault description
B1111	Battery voltage too high
B1112	Battery voltage too low
B1346	Driver airbag (DAB), Resistance too high
B1347	Driver airbag (DAB), Resistance too low
B1348	Driver airbag (DAB), Short to ground
B1349	Driver airbag (DAB), Short to Battery
B1352	Passenger airbag (PAB), Resistance too high
B1353	Passenger airbag(PAB), Resistance too low
B1354	Passenger airbag (PAB), Short to ground
B1355	Passenger airbag (PAB), Short to Battery
B1378	Driver side airbag (DSAB), Resistance to high
B1379	Driver side airbag (DSAB), Resistance to low
B1380	Drive side airbag (DSAB), Short to ground
B1381	Drive side airbag (DSAB), Short to Battery
B1382	Passenger side airbag (PSAB), Resistance too high
B1383	Passenger side airbag (PSAB), Resistance too low
B1384	Passenger side airbag (PSAB), Short to ground
B1385	Passenger side airbag (PSAB), Short to Battery
B1361	Drive seat belt pretensioner (DBPT), Resistance too high
B1362	Drive seat belt pretensioner (DBPT), Resistance too low
B1363	Drive seat belt pretensioner (DBPT), Short to ground
B1364	Driver seat belt pretensioner (DBPT), Short Battery
B1367	Passenger seat belt prestensioner (PBPT), Resistance too high
B1368	Passenger seat belt prestensioner (PBPT), Resistance too low
B1369	Passenger seat belt prestensioner (PBPT), Short to ground
B1370	Passenger seat belt prestensioner (PBPT), Short to Battery
B1401	Satellite left side short to ground
B1402	Satellite left side short to Battery
B1400	Satellite left side defect
B1404	Satellite right side short to ground
B1405	Satellite right side short to Battery
B1403	Satellite right side defect
B1408	Satellite left communication error

DTC No.	Fault description
B1409	Satellite right communication error
B1620	Internal fault
B1650	Crash recorded (Replace SRE-HMC)
B1651	Crash redcorded driver side airbag
B1652	Crash recorded passenger side airbag
B1661	ECU mismatchign (Replace SRE-HMC)
B2500	Warning lamp failure

NOTE

- **The DAB is located in the steering wheel.**
- **The PAB is located in the crash pad.**
- **The DSAB is located in the left side of driver's seat.**
- **The PSAB is located in the right side of passenger's seat.**

ERJB0400

CIRCUIT INSPECTION

DTC	B1111	Battery voltage too high
	B1112	Battery voltage too low

CIRCUIT DESCRIPTION

The SRS is equipped with a voltage-increase or decrease circuit (DC-DC converter) in the SRSCM in case the source voltage is abnormal. When the battery voltage is down or up the voltage increase or decrease circuit (DC-DC converter) functions to increase or decrease the voltage of the SRS to normal voltage. The diagnosis system malfunction display for this circuit is different to other circuits-when the SRS warning lamp remains lit up and the DTC is a B1111 or B1112, battery voltage too high or low is indicated. The B1111 or B1112 code is not stored and the voltage returns to normal, the SRS warning light automatically goes off.

INSPECTION PROCEDURE

1. Preparation

   1) Disconnect negative (-) terminal cable from the battery, and wait at least 30 seconds.

   2) Remove the DAB module.

   3) Disconnect the connectors of the PAB, left and right side airbag,belt pretensioner and satellite sensor.

   4) Disconnect the connector of the SRSCM.

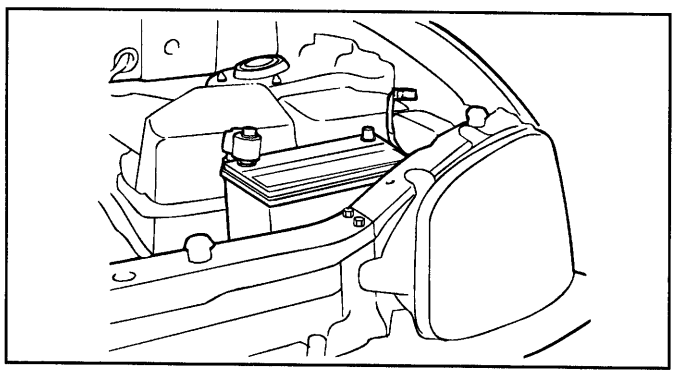

ERJA005C

CAUTION

Place the DAB with the front surface facing upward.

2. Check the source voltage.

   1) Connect the negative (-) terminal cable to the battery.

   2) Turn the ignition switch ON.

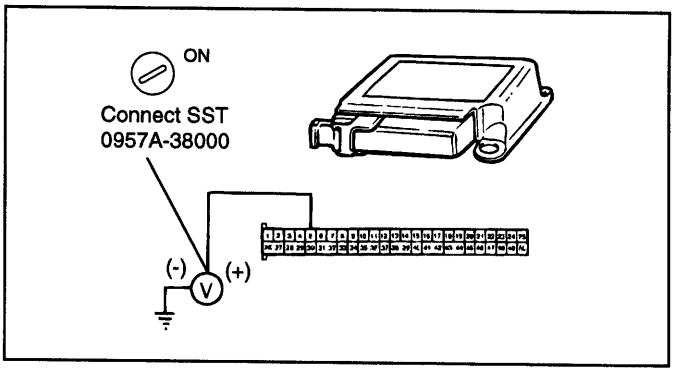

ERA9005A

[CHECK]

Measure the voltage between pin 5 of the SRS connector and body ground.

LIMIT

SRE-LC : 9~16V, SRE-HMC : 10~16.5V

NG → Check the harness between the battery and the SRSCM check the battery and charging system

OK ↓

ERJB040A

3. Does the SRS warning light turn off ?

[PREPARATION]

1) Turn the ignition switch to LOCK.
2) Connect the DAB module.
3) Connect the PAB connector, left and right side airbag, belt pretensioner and satellite connectors.
4) Connect the SRSCM connector.
5) Turn the ignition switch ON.

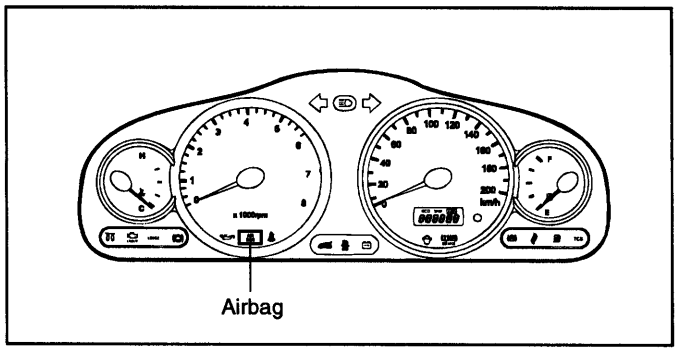

ERJB007A

[CHECK]

Check that the SRS warning light goes off.

NG ➔ Check for DTCs. If a DTC is output, perform troubleshooting for the DTC. If B1111 or B1112 is output, replace the SRSCM.

OK

From the results of the above inspection, the malfunctioning part can now be considered normal.

ERJB040B

ERJB0410

CIRCUIT INSPECTION

DTC	B1348	DAB short to ground
	B1354	PAB short to ground
	B1363	DBPT short to ground
	B1369	PBPT short to ground
	B1380	DSAB short to ground
	B1384	PASB short to ground
	B1401	Satellite sensor left side short to ground
	B1404	Satellite sensor right side short to ground

CIRCUIT DESCRIPTION

The squib circuit consists of the SRSCM, clock spring, DAB, PAB, SAB, BPT, and satellite sensors. It causes the SRS to deploy when the SRS deployment conditions are satisfied. The above DTCs are recorded when a short to ground is detected in a squib circuit.

DTC Detecting Condition	Trouble Area
• Short circuit in squib wire harness (to ground) • Squib malfunction • Clock spring malfunction • SRSCM malfunction	• DAB squib • PAB squib • DSAB squib • PSAB squib • BPT squib • Satellite sensor • Clock spring • SRSCM • Wire harness

WIRING DIAGRAM

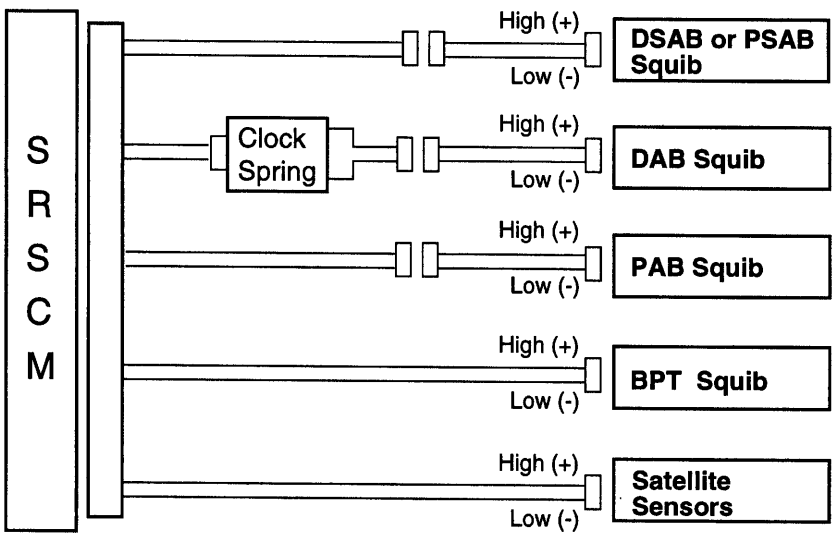

ERA9011A

INSPECTION PROCEDURE

1. Preparation (See step "1" on page RT-38).

2. Check DAB squib circuit.

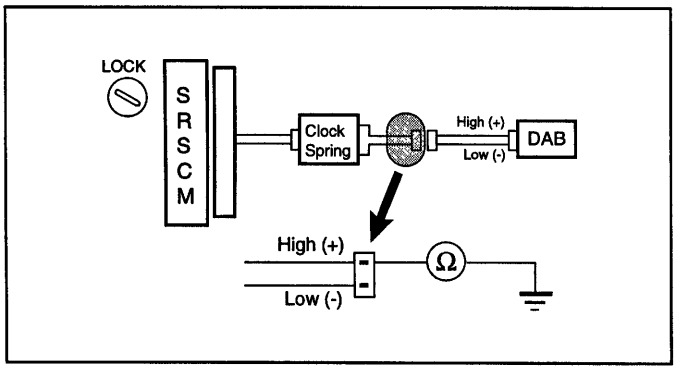

ERA9011B

[CHECK]

For the connector (on the clock spring side) between clock spring and DAB, measure the resistance between DAB high and body ground.

Resistance : ∞

NG ➔ Go to step "13"

OK
↓
Go to step "8"

ERJB041A

3. Check the PAB squib circuit.

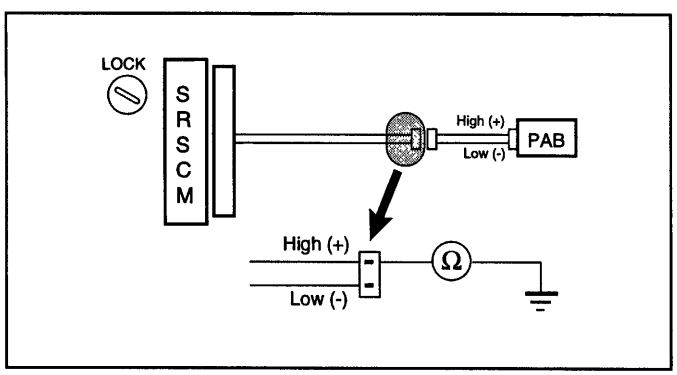

ERA9011C

[CHECK]

For the connector (on the SRSCM side) between SRSCM and PAB, measure the resistance between PAB high and body ground.

Resistance : ∞

NG ➔ Repair or replace harness or connector between the SRSCM and the PAB.

OK
↓
Go to step "9"

ERJB041B

4. Check PSAB and DSAB squib circuits.

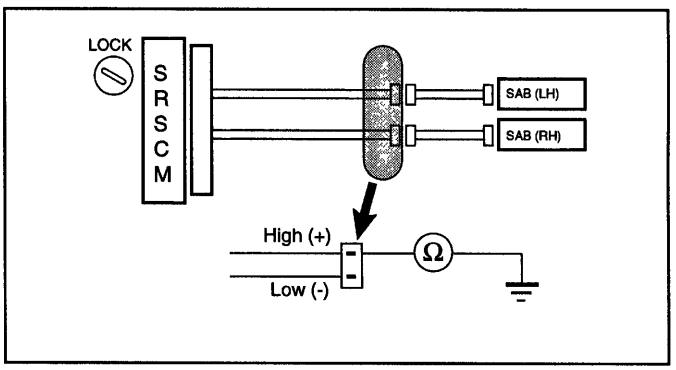

ERA9011D

[CHECK]

For the connector (on the SRSCM side) between SRSCM and the SABs, measure the resistance between the SABs high and body ground.

Resistance : ∞

NG ➔ Repair or replace the harness between the SRSCM and the SAB.

OK
↓
Go to step "10"

ERJB041C

5. Check the BPTs squib circuit.

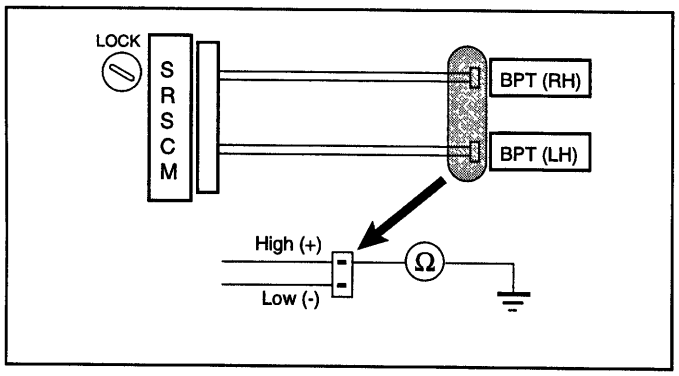

ERA9011E

[CHECK]

For the connector (on the SRSCM side) between the SRSCM and BPT, measure the resistance between the BPTs high and body ground.

Resistance : ∞

NG → Repair or replace the harness between the SRSCM and the BPTs.

OK ↓

Go to step "11"

ERJB041D

6. Check the Satellite sensor circuit.

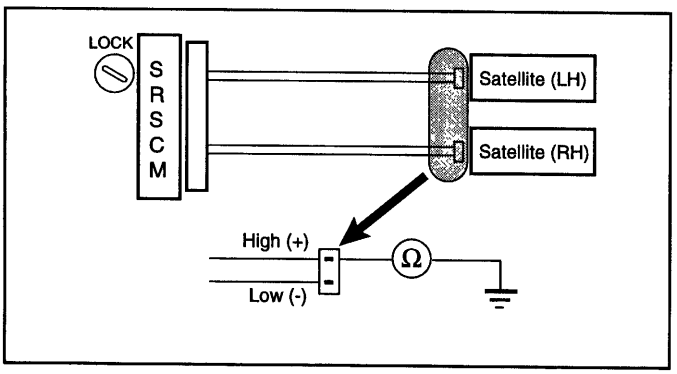

ERA9011F

[CHECK]

For the connector (on the SRSCM side) between the SRSCM and the Satellite sensor, measure the resistance between the Satellite high and body ground.

Resistance : ∞

NG → Repair or replace the harness between the SRSCM and the Satellite sensor.

OK ↓

Go to step "12"

ERJB041E

7. Check the SRSCM.

[PREPARATION]

1. Connect the connector to SRSCM.
2. Using a service wire, connect the DAB high and DAB low on the clock spring side of connector.
3. Using a service wire, connect the PAB high and low on SRSCM side of connector.
4. Connect the SABs and BPT using the same method.
5. Connect the negative (-) terminal cable to battery, and wait least 30 seconds.

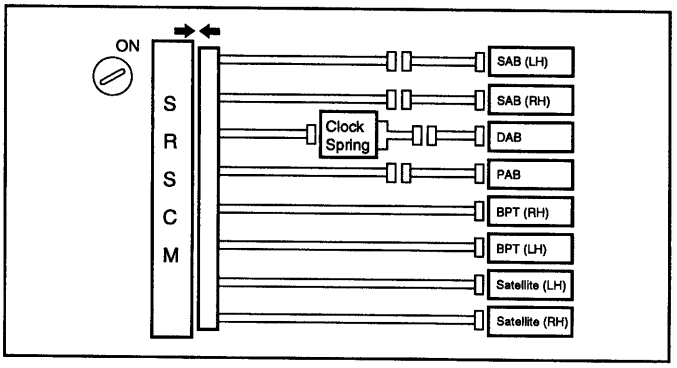

ERA9011G

[CHECK]

1. Turn ignition switch to ON, and wait for at least 30 seconds.
2. Clear any codes stored in the memory with the Hi-Scan Pro.
3. Turn the ignition switch to LOCK, and wait for 30 seconds.
4. Turn the ignition switch to ON, and wait for 30 seconds.
5. Using the Hi-Sacn Pro, check for DTCs.
   There is no DTC.

[HINT]

Codes other than these may be output at this time, but they are not relevant to this check.

NG → Replace the SRSCM.

OK

From the result of the above inspection, the malfunctioning part can now be considered normal.

ERJB041F

8. Check the DAB squib.

[PREPARATION]

1. Turn the ignition switch to LOCK.
2. Disconnect the negative (-) terminal cable from the battery, and wait for 30 seconds.
3. Connect the DAB connector.
4. Connect the negative (-) terminal cable to the battery, and wait for 30 seconds.

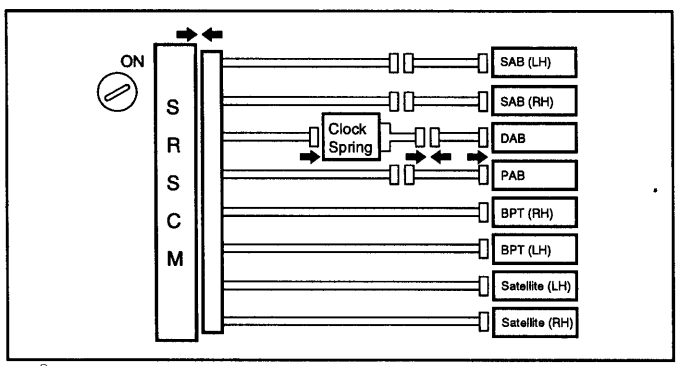

ERA9011I

[CHECK]

1. Turn the ignition switch to ON, and wait for at least 30 seconds.
2. Clear the malfunction code stored in the memory of the Hi-Scan Pro.
3. Turn the ignition switch to LOCK, and wait for 30 seconds.
4. Turn the ignition switch to ON, and wait for 30 seconds.
5. Using the Hi-Scan Pro, check for DTCs.
   There is no DTC.

[HINT]

Codes other than these may be output at this time, but they are not relevant to this procedure.

NG → Replace the DAB.

OK

From the result of the above inspection, the malfunctioning part can now be considered normal.

ERJB041G

9. Check the PAB squib.

[PREPARATION]

1. Turn the ignition switch to LOCK.
2. Disconnect the negative (-) terminal cable from the battery, and wait for 30 seconds.
3. Connect the PAB connector.
4. Connect the negative (-) terminal cable from the battery, and wait for 30 seconds.

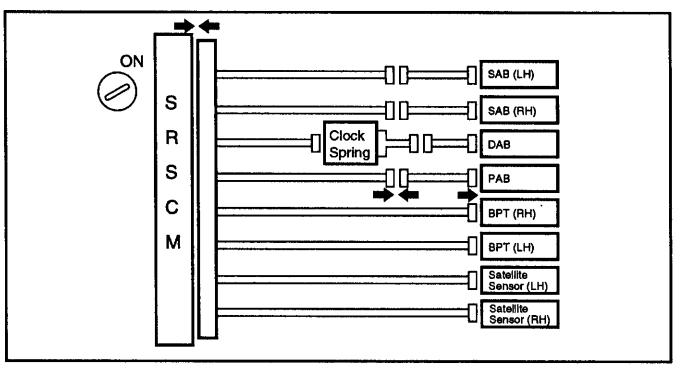

ERA9011J

[CHECK]

1. Turn the ignition switch to ON, and wait for at least 30 seconds.
2. Clear the malfunction code stored in the memory with the Hi-Scan Pro.
3. Turn the ignition switch to LOCK, and wait for 30 seconds.
4. Turn the ignition switch to ON, and wait for 30 seconds.
5. Using the Hi-Sacn Pro, check for DTCs.
   There is no DTC.

[HINT]

Codes other than these may be output at this time, but they are not relevant to this procedure.

NG → Replace the PAB.

OK

From the result of the above inspection, the malfunctioning part can now be considered normal.

ERJB041H

10. Check the SABs squib.

[PREPARATION]

1. Turn the ignition switch to LOCK.
2. Disconnect the negative (-) terminal cable from the battery, and wait for 30 seconds.
3. Connect the SAB connector.
4. Connect the negative (-) terminal cable from the battery, and wait for 30 seconds.

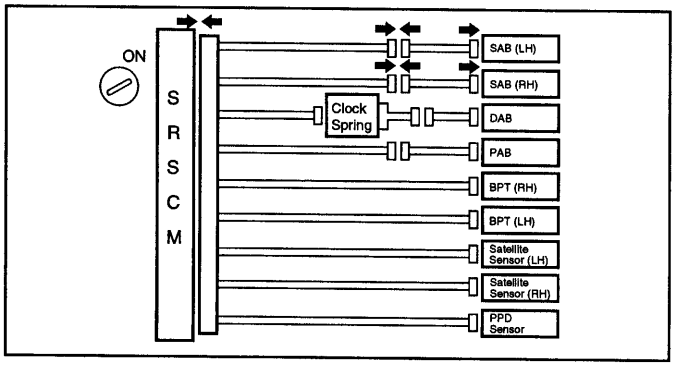

ERJB001A

[CHECK]

1. Turn the ignition switch to ON, and wait for at least 30 seconds.
2. Clear the malfunction code stored in the memory with the Hi-Scan Pro.
3. Turn the ignition switch to LOCK, and wait for 30 seconds.
4. Turn the ignition switch ON, and wait for 30 seconds.
5. Using the Hi-Sacn Pro, check for DTCs.
   There is no DTC.

[HINT]

Codes other than these ones may be output at this time, but they are not relevant to this checking procedure.

NOTE

Check the DSAB using the same procedure.

NG → Replace the SAB.

OK

From the result of the above inspection, the malfunctioning part can now be considered normal.

ERJB041I

11. Check BPT squib.

[PREPARATION]

1. Turn the ignition swich to LOCK.
2. Disconnect the negative (-) terminal cable from the battery, and wait for 30 seconds.
3. Connect the BPTs connector.
4. Connect the negative (-) terminal cable from the battery, and wait for 30 seconds.

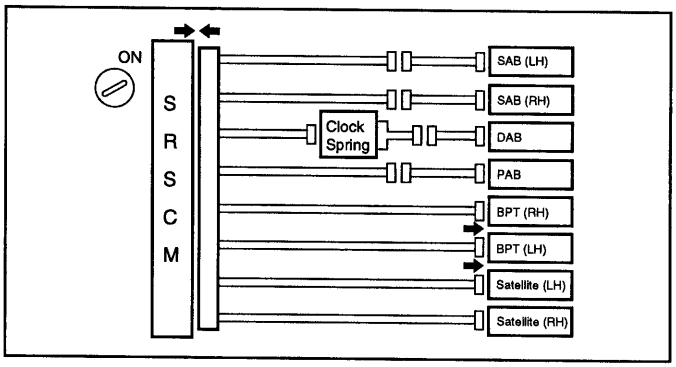

ERA9011K

[CHECK]

1. Turn the ignition switch to ON, and wait for 30 seconds.
2. Clear the malfunction code stored in the memory with the Hi-Scan Pro.
3. Turn the ignition switch to LOCK, and wait for 30 seconds.
4. Turn the ignition switch to ON, and wait for 30 seconds.
5. Using the Hi-Scan Pro, check for DTCs.
   There is no DTC.

[HINT]

Codes other than these may be output at this time, but they are not relevant to this procedure.

NG ➔ Replace the BPT.

OK
↓
From the results of the above inspection, the malfunctioning part can now be considered normal.

ERJB041J

12. Check the Satellite sensors.

[PREPARATION]

1. Turn ignition switch to LOCK.
2. Disconnect negative (-) terminal cable from the battery, and wait at least 30 seconds.
3. Connect the Satellite sensor connector.
4. Connect the negative (-) terminal cable from the battery, and wait at least 30 seconds.

[CHECK]

1. Turn the ignition switch to ON, and wait at least 30 seconds.
2. Clear the malfunction code stored in memory with the Hi-Scan Pro.
3. Turn the ignition switch to LOCK, and wait at least 30 seconds.
4. Turn the ignition switch to ON, and wait at least 30 seconds.
5. Using the Hi-Scan Pro, check for DTCs.
   There is no DTC.

[HINT]

Codes other than these may be output at this time, but they are not relevant to this procedure.

NG ➔ Replace the Satellite sensor.

OK
↓
From the result of the above inspection, the malfunctioning part can now be considered normal.

ERJB041K

13. Check clock spring circuit.

[PREPARAION]

Disconnect connector between SRSCM and clock spring.

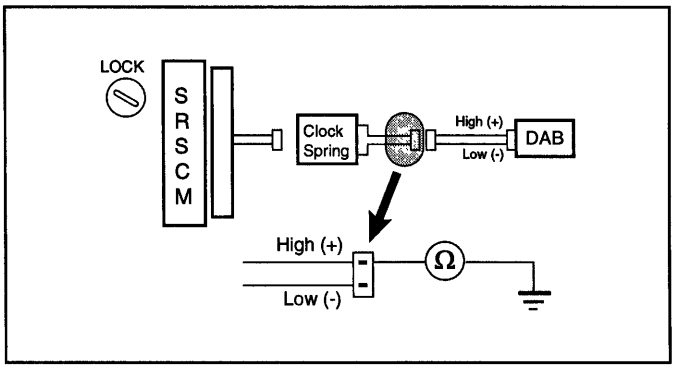

ERKB010B

[CHECK]

Measure resistance between the DAB high on the clock spring side of connector between clock spring and DAB and body ground.

Resistance : ∞

NG ➔ Replace the clock spring.

OK
↓
Repair or replace the harness or connector between the SRSCM and the clock spring.

ERDA027R

ERJB0420

CIRCUIT INSPECTION

DTC	B1349	DAB short to battery
	B1355	PAB short to battery
	B1364	DBPT short to battery
	B1370	DBPT short to battery
	B1381	DSAB short to battery
	B1385	PSAB short to battery
	B1402	Satellite left side short to battery
	B1405	Satellite right side short to battery

CIRCUIT DESCRIPTION

The squib circuit consists of the SRSCM, clock spring, DAB, PAB, DSAB, PSAB, BPT and satellite sensor. If it causes the SRS to deploy when the SRS deployment conditions are satisfied. The above DTCs are recorded when a B+ short is detected in the squib circuit.

DTC Detecting Condition	Trouble Area
• Short circuit in squib wire harness (to B+) • Squib malfunction • Clock spring cable malfunction • SRSCM malfunction	• DAB squib • PAB squib • DSAB or PSAB squib • BPT squib • Satellite sensor • Wire harness

WIRING DIAGRAM

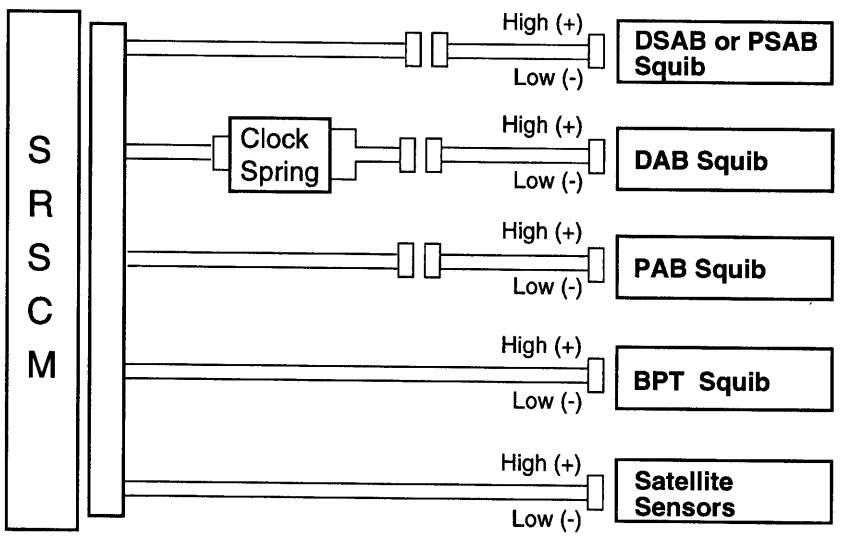

ERA9011A

INSPECTION PROCEDURE

1. Preparation (See step "1" on page RT-38).

2. Check the DAB squib circuit.

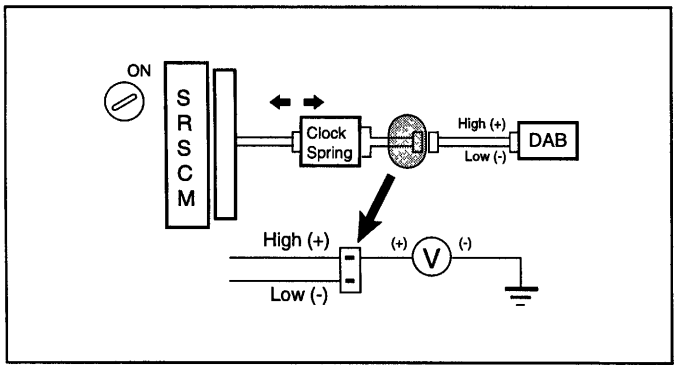

ERA9011O

[CHECK]

For the connector (on the clock spring side) between the clock spring and DAB, measure the voltage between the DAB high and body ground.

Voltage : 0 V

NG → Go to step "13"

OK
↓
Go to step "8"

ERJB041A

3. Check the PAB squib circuit.

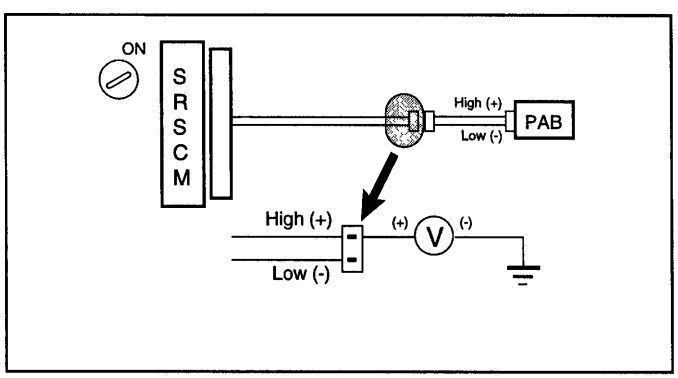

ERA9011P

[CHECK]

For the connector (on the SRSCM side) between the SRSCM and PAB, measure the voltage between the PAB high and body ground.

Voltage : 0 V

NG → Repair or replace the harness between the SRSCM and the PAB.

OK
↓
Go to step "9"

ERJB042A

4. Check the SAB squib circuit.

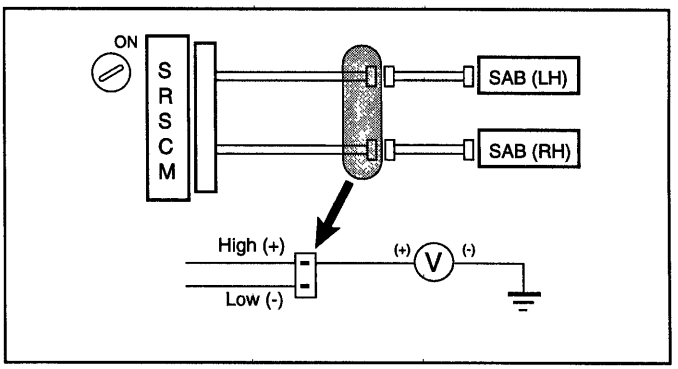

ERA9011Q

[CHECK]

For the connector (on the SRSCM side) between the SRSCM and SAB, measure the voltage between the SAB high and body ground.

Voltage : 0 V

NG → Repair or replace the harness between the SRSCM and the SAB.

OK
↓
Go to step "10"

ERJB041C

5. Check the BPTs squib circuits.

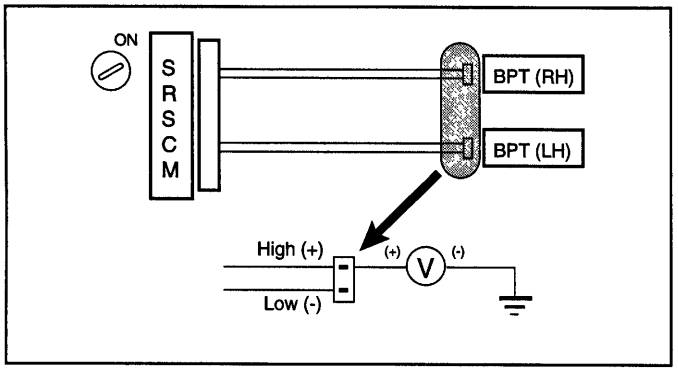

ERA9011R

[CHECK]

For the connector between SRSCM and the BPTs, measure the voltage between the BPTs high and body ground.

Voltage : 0 V

NG → Repair or replace the harness between the SRSCM and the BPTs.

OK ↓

Go to step "11"

ERJB041D

6. Check the Satellite sensor circuit.

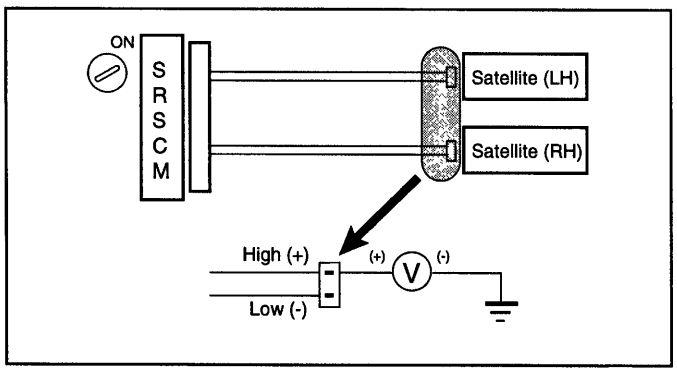

ERA9011S

[CHECK]

For the connector between the SRSCM and the Satellite sensor, measure the voltage between the Satellite sensor high and body ground.

Voltage : 0 V

NG → Repair or replace the harness between the SRSCM and the Satellite sensor.

OK ↓

Go to step "12"

ERJB041E

7. Check the SRSCM.

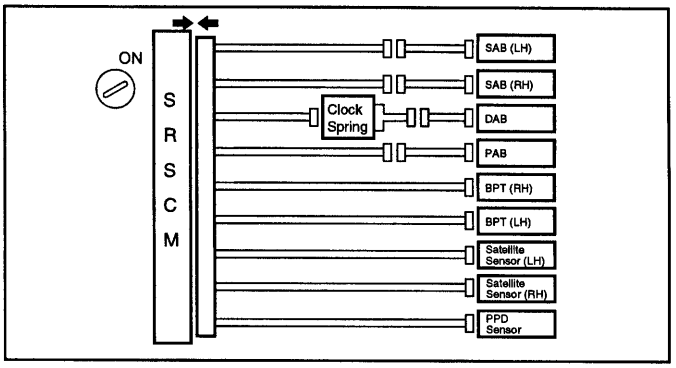

ERJB002B

[PREPARATION]

1. Connect the connector to the SRSCM.
2. Using a service wire, connect the DAB high and low on the clock spring side of connector between the clock spring and the DAB.
3. Using a service wire, connect the PAB high and low on the SRSCM side of the connector between the SRSCM and the PAB.
4. Using a service wire, connect the SAB high and low on the SRSCM side connector between the SRSCM and the SAB.
5. Using a service wire, connect the BPT high and low on the SRSCM side connector between the SRSCM and the BPT.
6. Using a service wire, connect the satellite high and low on the SRSCM side connector between the SRSCM and the satellite sensor.
7. Connect negative (-) terminal cable to battery, and wait at least 30 seconds.

[CHECK]

1. Turn the ignition switch to ON, and wait at least 30 seconds.
2. Clear the malfunction code stored in memory with the Hi-Scan Pro.
3. Turn the ignition switch to LOCK, and wait at least 30 seconds.
4. Turn the ignition switch to ON, and wait at least 30 seconds.
5. Using the Hi-Scan Pro, check for DTCs.
   There is no DTC.

[HINT]

Codes other than these may be output at this time, but they are not relevant to this check.

NG ➔ Replace the SRSCM.

OK ↓

From the result of the above inspection, the malfunctioning part can now be considered normal.

ERJB041F

8. Check the DAB squib.

[PREPARATION]

1. Turn the ignition switch to LOCK.
2. Disconnect the negative (-) terminal cable from the battery, and wait for 30 seconds.
3. Connect the DAB connector.
4. Connect the negative (-) terminal cable to the battery, and wait for 30 seconds.

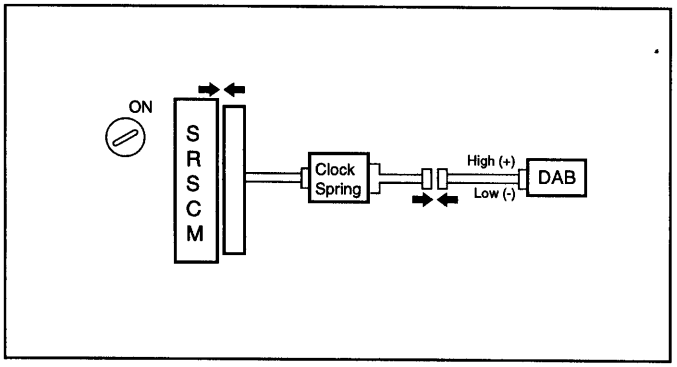

ERA9011U

[CHECK]

1. Turn the ignition switch ON, and wait for at least 30 seconds.
2. Clear the malfunction code stored in the memory of the Hi-Scan Pro.
3. Turn the ignition switch to LOCK, and wait for 30 seconds.
4. Turn the ignition switch to ON, and wait for 30 seconds.
5. Using the Hi-Scan Pro, check for DTCs.
   There is no DTC.

[HINT]

Codes other than these may be output at this time, but they are not relevant to this procedure.

NG ➔ Replace the DAB.

OK ↓

From the result of the above inspection, the malfunctioning part can now be considered normal.

ERJB041G

9. Check the PAB squib.

[PREPARATION]

1. Turn the ignition switch to LOCK.
2. Disconnect the negative (-) terminal cable from the battery, and wait for 30 seconds.
3. Connect the PAB connector.
4. Connect the negative (-) terminal cable from the battery, and wait for 30 seconds.

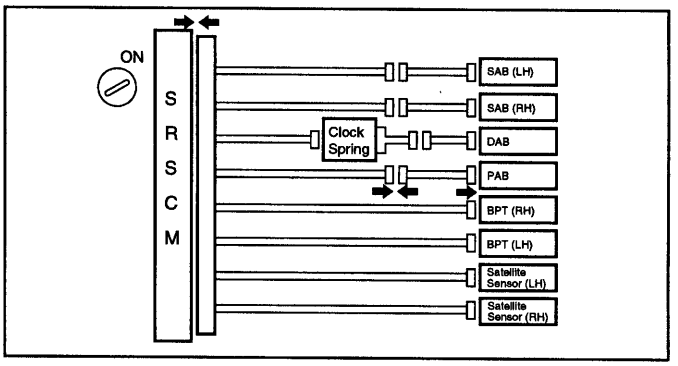

ERA9011J

[CHECK]

1. Turn the ignition switch to ON, and wait for at least 30 seconds.
2. Clear the malfunction code stored in the memory with the Hi-Scan Pro.
3. Turn the ignition switch to LOCK, and wait for 30 seconds.
4. Turn the ignition switch ON, and wait for 30 seconds.
5. Using the Hi-Sacn Pro, check for DTCs.
   There is no DTC.

[HINT]

Codes other than these may be output at this time, but they are not relevant to this procedure.

NG → Replace the PAB.

OK

From the result of the above inspection, the malfunctioning part can now be considered normal.

ERJB041H

10. Check the SAB squib.

[PREPARATION]

1. Turn the ignition switch to LOCK.
2. Disconnect the negative (-) terminal cable from the battery, and wait for 30 seconds.
3. Connect the SAB connector.
4. Connect the negative (-) terminal cable from the battery, and wait for 30 seconds.

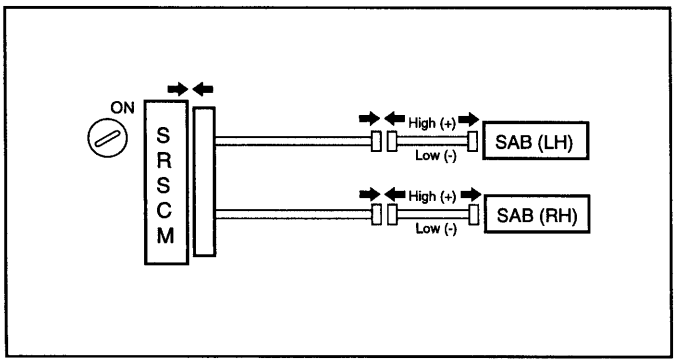

ERA9011W

[CHECK]

1. Turn the ignition switch to ON, and wait for at least 30 seconds.
2. Clear the malfunction code stored in the memory with the Hi-Scan Pro.
3. Turn the ignition switch to LOCK, and wait for 30 seconds.
4. Turn the ignition switch ON, and wait for 30 seconds.
5. Using the Hi-Sacn Pro, check for DTCs.
   There is no DTC.

[HINT]

Codes other than these may be output at this time, but they are not relevant to this procedure.

NG → Replace the SAB.

OK

From the result of the above inspection, the malfunctioning part can now be considered normal.

ERJB041I

11. Check the BPTs squib.

[PREPARATION]

1. Turn the ignition swich to LOCK.
2. Disconnect the negative (-) terminal cable from the battery, and wait for 30 seconds.
3. Connect the BPTs connector.
4. Connect the negative (-) terminal cable from the battery, and wait for 30 seconds.

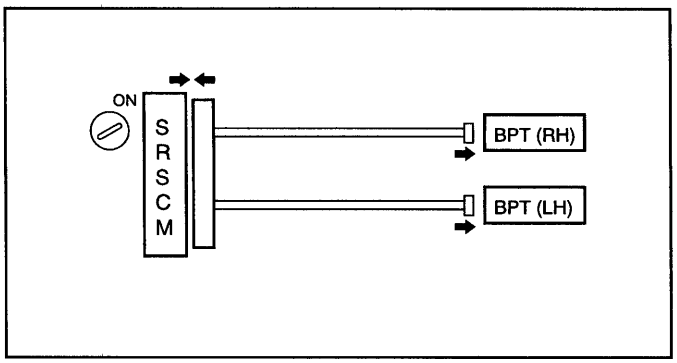

ERA9011X

[CHECK]

1. Turn the ignition switch to ON, and wait for 30 seconds.
2. Clear the malfunction code stored in the memory with the Hi-Scan Pro.
3. Turn the ignition switch to LOCK, and wait for 30 seconds.
4. Turn the ignition switch to ON, and wait for 30 seconds.
5. Using the Hi-Scan Pro, check for DTCs.
   There is no DTC.

[HINT]

Codes other than these may be output at this time, but they are not relevant to this procedure.

NG ➔ Replace the BPT.

OK
↓
From the results of the above inspection, the malfunctioning part can now be considered normal.

ERJB041J

12. Check the Satellite sensors.

[PREPARATION]

1. Turn ignition switch to LOCK.
2. Disconnect the negative (-) terminal cable from the battery, and wait at least 30 seconds.
3. Connect the Satellite sensor connector.
4. Connect the negative (-) terminal cable from the battery, and wait at least 30 seconds.

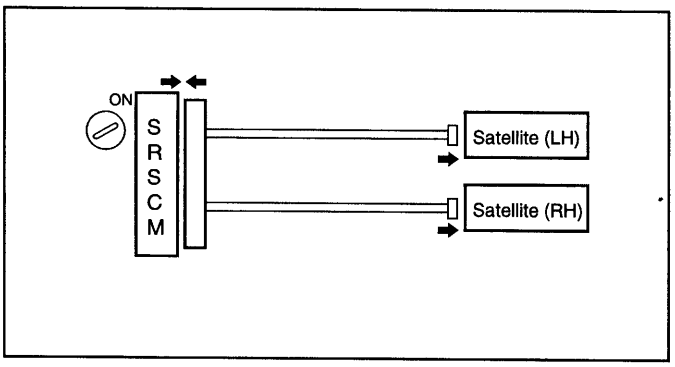

ERA9011Y

[CHECK]

1. Turn the ignition switch to ON, and wait at least 30 seconds.
2. Clear the malfunction code stored in memory with Hi-scan.
3. Turn the ignition switch to LOCK, and wait at least 30 seconds.
4. Turn the ignition switch to ON, and wait at least 30 seconds.
5. Using the Hi-Scan Pro, check for DTCs.
   There is no DTC.

[HINT]

Codes other than these may be output at this time, but they are not relevant to this procedure.

NG ➔ Replace the Satellite sensor.

OK
↓
From the result of the above inspection, the malfunctioning part can now be considered normal.

ERJB041K

13. Check the Clock spring.

[PREPARAION]

1. Turn the ignition switch to LOCK.
2. Disconnect the connector between the SRSCM and the clock spring.

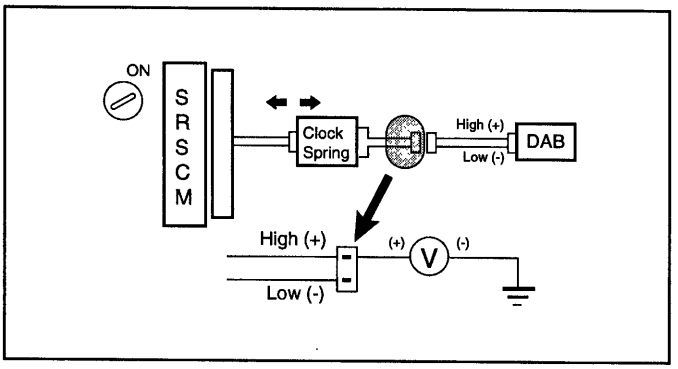

ERA9011O

[CHECK]

Turn the ignition switch ON, and measure the voltage between the DAB high side and the body ground.

Voltage : 0V

NG ➔ Replace the clock spring.

OK
↓
Repair or replace the harness or connector between the SRSCM and the clock spring.

ERDA027R

ERJB0430

CIRCUIT INSPECTION

DTC	B1346	DAB resistance too high (R ≥ 6.7 Ω)
	B1347	DAB resistance too low (R ≤ 1.06 Ω)

CIRCUIT DESCRIPTION

The DAB squib circuit consists of the SRSCM, clock spring and DAB. It causes the airbag to deploy when the airbag deployment conditions are satisfied. The above DTCs are recorded when the DAB resistance is too high or low in the DAB squib circuit.

DTC Detecting Condition	Trouble Area
• Too high or low resistane between DAB high (+) wiring harness and DAB low (-) wiring harness at the squib.	• DAB squib
• DAB malfunction • Clock spring malfunction • SRSCM malfunction	• Clock spring • SRSCM • Wire harness

WIRING DIAGRAM

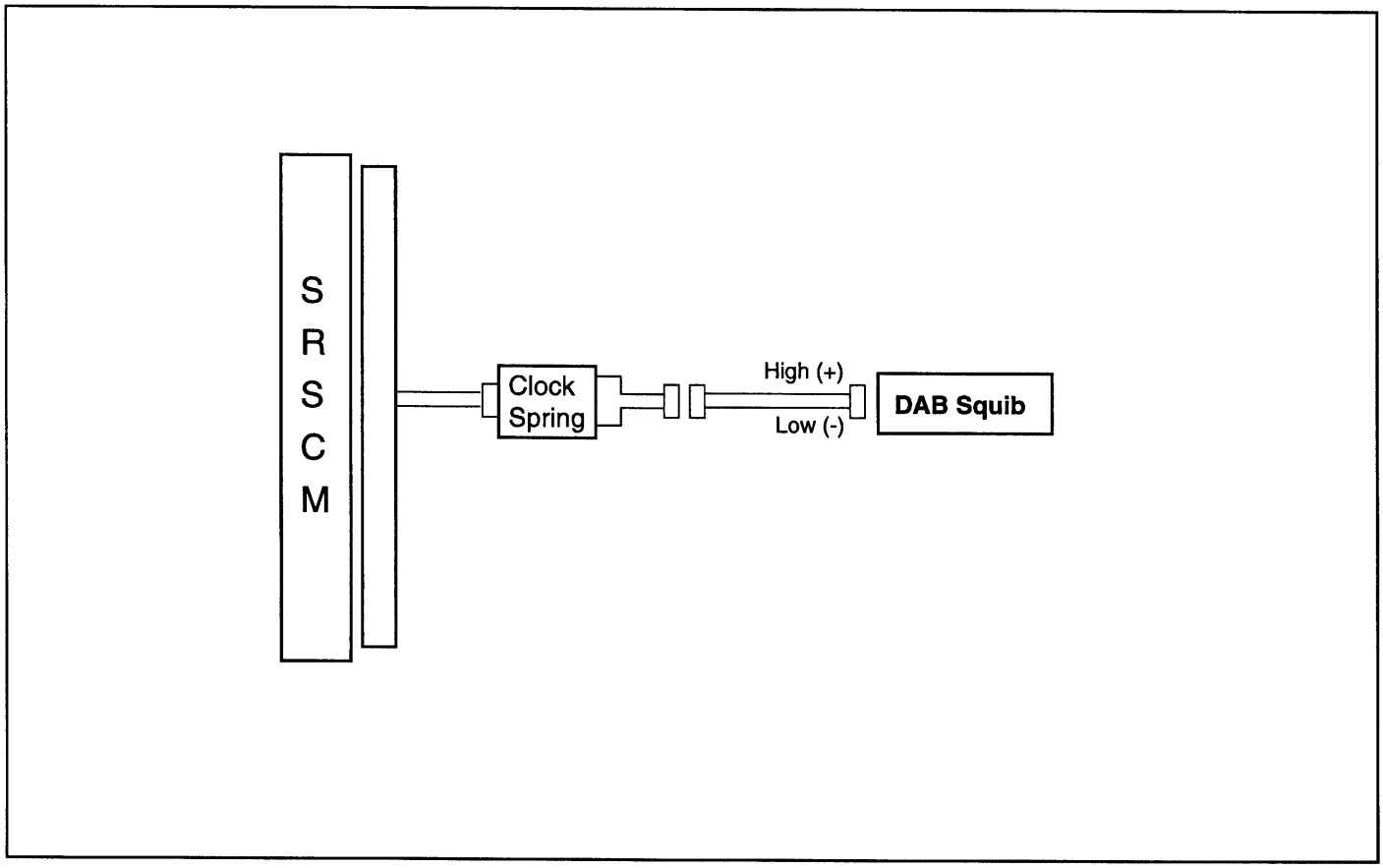

ERA9012A

INSPECTION PROCEDURE

1. Preparation (See step "1" on page RT-38).

2. Check the DAB resistance.

[PREPARATION]

Release the shorting bar on the SRSCM side of the airbag squib side. Connect the dummy (0957A-38200) and dummy adapter (0957A-38400) to the clock spring connector.

CAUTION

Never attempt to measure the circuit resistance of the airbag module(squib) even if you are using the specified tester.

NOTE

Before checking the resistance, you have to insert a shorting bar into the SRSCM connector.

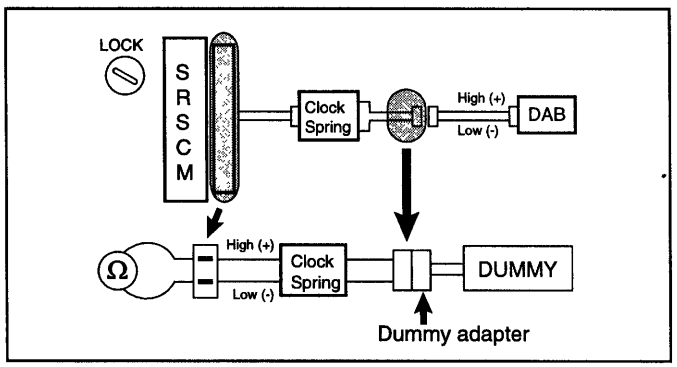

ERKB010C

[CHECK]

Measure the resistance between the DAB high (+) and low (-) terminals.

1.8 Ω ≤ R ≤ 3.4 Ω

NG ➔ Go to step "4"

OK ↓

ERJB043A

3. Check the DAB squib.

[PREPARATION]

1. Turn the ignition switch to LOCK.
2. Disconnect the negative (-) terminal cable from the battery, and wait for 30 seconds.
3. Connect the DAB connector.
4. Connect the negative (-) terminal cable to the battery, and wait for 30 seconds.

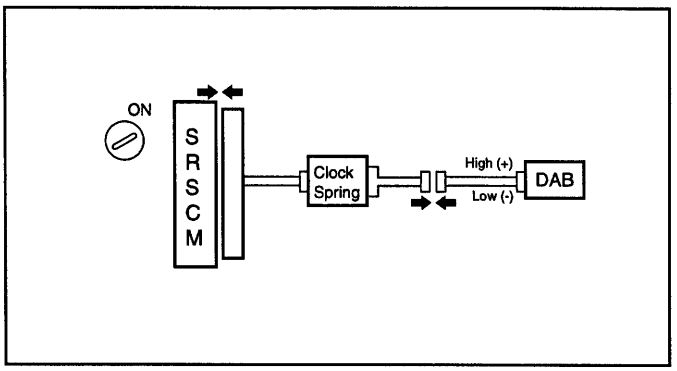

ERA9011U

[CHECK]

1. Turn the ignition switch to ON, and wait for at least 30 seconds.
2. Clear the malfunction code stored in the memory of the Hi-Scan Por.
3. Turn the ignition switch to LOCK, and wait for 30 seconds.
4. Turn the ignition switch to ON, and wait for 30 seconds.
5. Using Hi-Scan Pro, check for DTCs.
   There is no DTC.

[HINT]

Codes other than these may be output at this time, but they are not relevant to this procedure.

NG ➔ Replace the DAB.

OK ↓

From the result of the above inspection, the malfunctioning part can now be considered normal.

ERJB041G

4. Check the Clock spring.

[PREPARAION]

Disconnect the connector between the SRSCM clock spring, and connect the dummy connector (0957A-38200) to the clock spring connector.

NOTE

Before checking the resistance, you must insert the shorting bar into the SRSCM connector.

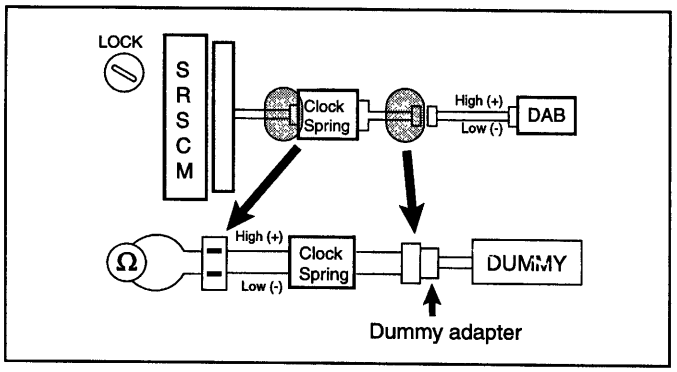

ERKB010D

[CHECK]

Measure the resistance between the DAB high (+) and low (-) circuits.

1.8 Ω ≤ R ≤ 3.4 Ω

NG ➔ Replace the clock spring.

OK

↓

Repair or replace the harness or connector between the SRSCM and the clock spring.

ERDA027R

ERJB0440

CIRCUIT INSPECTION

DTC	B1352	PAB resistance too high (R ≥ 5.4 Ω)
	B1353	PAB resistance too low (R ≤ 0.4 Ω)

CIRCUIT DESCRIPTION

The PAB squib circuit consists of the SRSCM and PAB. It causes the airbag to deploy when the airbag deployment conditions are satisfied. The above DTCs are recorded when the PAB resistance is too high or low.

DTC Detecting Condition	Trouble Area
• Too high or low resistane between PAB high (+) wiring harness and the PAB low (-) wiring harness of squib.	• PAB squib
• PAB malfunction • SRSCM malfunction	• SRSCM • Wire harness

WIRING DIAGRAM

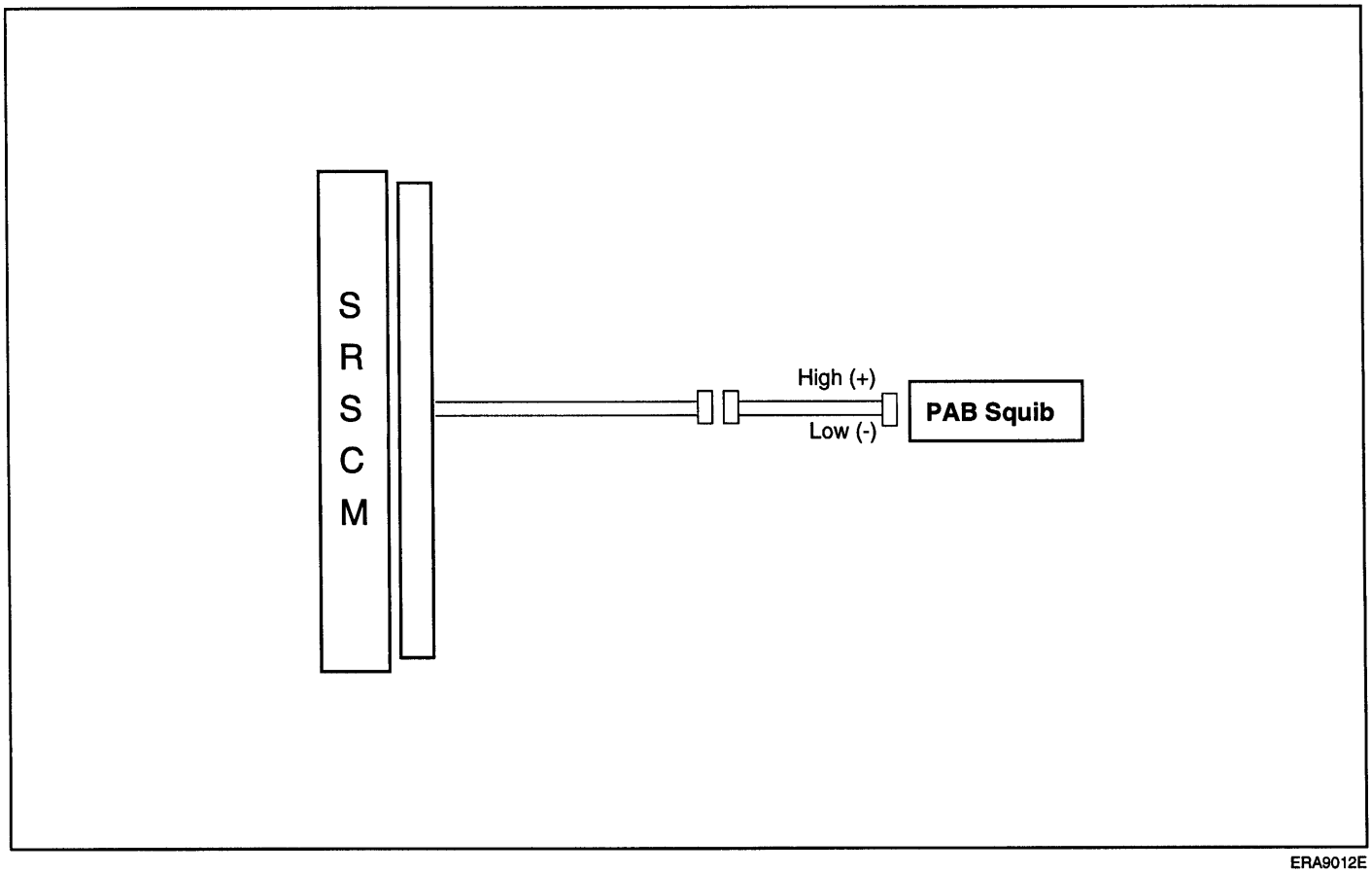

ERA9012E

INSPECTION PROCEDURE

1. Preparation (See step "1" on page RT-38).

2. Check the PAB resistance.

[PREPARATION]

Release the on the SRSCM side of the airbag squib side. Connect the dummy (0957A-38200) and dummy adapter (0957A-38300) to the PAB connector of the SRSCM connector side.

NOTE

Before checking the resistance, you must insert the shorting bar into the SRSCM connector.

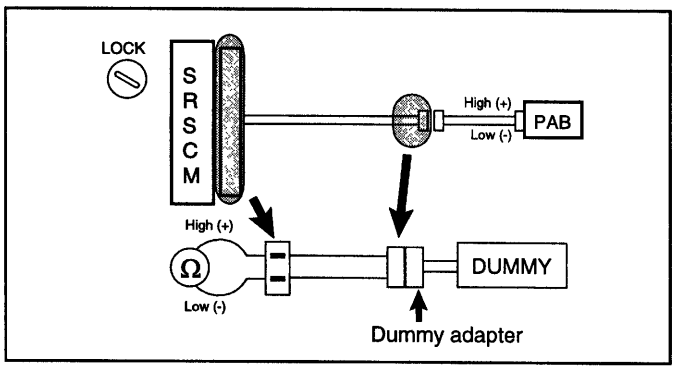

ERKB010E

[CHECK]

Measure the resistance between the PAB high (+) and PAB low (-) circuits.

1.6 Ω ≤ R ≤ 2.8 Ω

NG → Repair or replace the harness between the SRSCM and the PAB.

OK ↓

ERJB044A

3. Check the PAB squib.

[PREPARATION]

1. Turn the ignition switch to LOCK.
2. Disconnect the negative (-) terminal cable from the battery, and wait for 30 seconds.
3. Connect the PAB connector.
4. Connect the negative (-) terminal cable to the battery, and wait for 30 seconds.

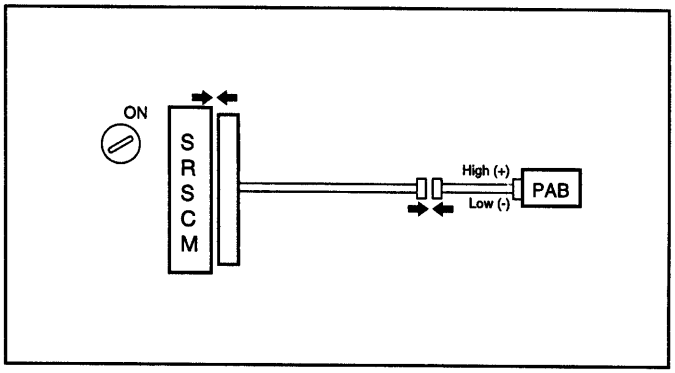

ERA9011V

[CHECK]

1. Turn the ignition switch to ON, and wait for at least 30 seconds.
2. Clear the malfunction code stored in the memory of the Hi-Scan Pro.
3. Turn the ignition switch to LOCK, and wait for 30 seconds.
4. Turn the ignition switch to ON, and wait for 30 seconds.
5. Using the Hi-Scan Pro, check for DTCs.
   There is no DTC.

[HINT]

Codes other than these may be output at this time, but they are not relevant to this procedure.

NG → Replace the PAB.

OK ↓

From the result of the above inspection, the malfunctioning part can now be considered normal.

ERJB041H

ERJB0450

CIRCUIT INSPECTION

DTC	B1378	DSAB Resistance too high (R ≥ 5.4 Ω)
	B1379	DSAB Resistance too low (R ≤ 0.4 Ω)
	B1382	PSAB Resistance too high (R ≥ 5.4 Ω)
	B1383	PSAB Resistance too low (R ≤ 0.4 Ω)

CIRCUIT DESCRIPTION

The SAB squib circuits consist of the SRSCM and the SAB. The SRSCM cause the airbags to deploy when the airbag deployment conditions are satisfied. The above DTCs are recorded when a SAB resistance is too high or low.

DTC Detecting Condition	Trouble Area
• Too high or low resistane between SAB high (+) wiring harness and SAB low (-) wiring harness at the squib.	• DSAB or PSAB squib
• SAB malfunction • SRSCM malfunction	• SRSCM • Wire harness

WIRING DIAGRAM

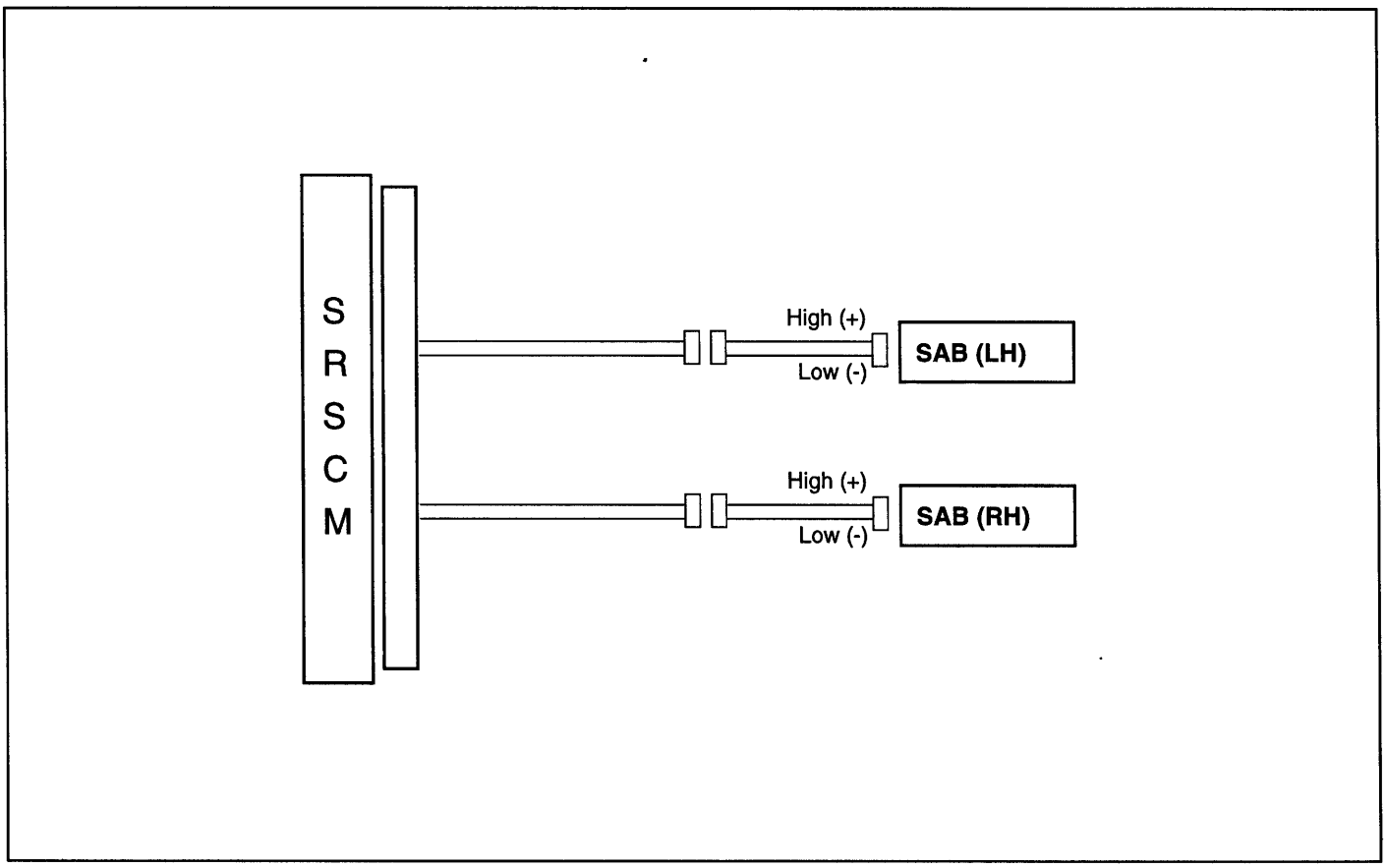

ERJB045B

INSPECTION PROCEDURE

1. Preparation (See step "1" on page RT-38).

2. Check the SABS resistance.

   [PREPARATION]

   Release the shorting bar on the SRSCM side of the airbag squib side. Connect the dummy (0957A-38200) and dummy adapter (0957A-38300) to the SAB connector of the SRSCM connector side.

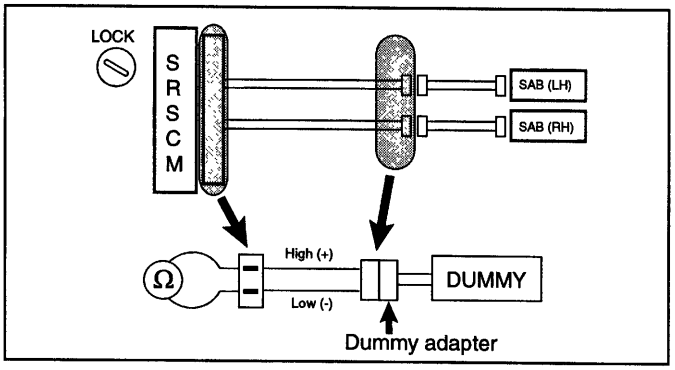

ERKB020A

NOTE

Before checking the resistance, you have to insert the shorting bar into the SRSCM connector.

[CHECK]

Measure the resistance between the SAB high (+) and SAB low (-).

1.6 Ω ≤ R ≤ 2.8 Ω

NG → Repair or replace the harness between the SRSCM and the SAB.

OK ↓

ERJB045A

3. Check the SAB squibs.

   [PREPARATION]

   1. Turn the ignition switch to LOCK.
   2. Disconnect the negative (-) terminal cable from the battery, and wait for 30 seconds.
   3. Connect the SAB connector.
   4. Connect the negative (-) terminal cable to the battery, and wait for 30 seconds.

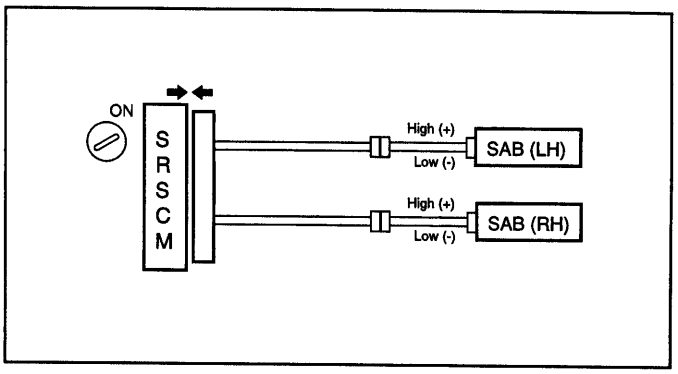

ERA9012K

[CHECK]

1. Turn the ignition switch to ON, and wait for at least 30 seconds.
2. Clear the malfunction code stored in the memory of the Hi-Scan Pro.
3. Turn the ignition switch to LOCK, and wait for 30 seconds.
4. Turn the ignition switch to ON, and wait for 30 seconds.
5. Using the Hi-Scan Pro, check for DTCs.
   There is no DTC.

[HINT]

Codes other than these ones may be output at this time, but they are not relevant to this checking procedure.

NG → Replace the SAB.

OK ↓

From the result of the above inspection, the malfunctioning part can now be considered normal.

ERJB041I

ERJB0460

CIRCUIT INSPECTION

DTC	B1361	DBPT Resistance too high (R ≥ 5.4 Ω)
	B1362	DBPT Resistance too low (R ≤ 0.4 Ω)
	B1367	PBPT Resistance too high (R ≥ 5.4 Ω)
	B1368	PBPT Resistance too low (R ≤ 0.4 Ω)

CIRCUIT DESCRIPTION

The BPTs squib circuits consist of the SRSCM and the BPTs. The SRSCM causes the airbag to deploy when the airbag deployment conditions are satisfied. The above DTCs are recorded when eighter BPT resistance is too high or low.

DTC Detecting Condition	Trouble Area
• Too high or low resistane between BPT high (+) wiring harness and the BPT low (-) wiring harness at the squib.	• BPT squib
• BPT malfunction • SRSCM malfunction	• SRSCM • Wire harness

WIRING DIAGRAM

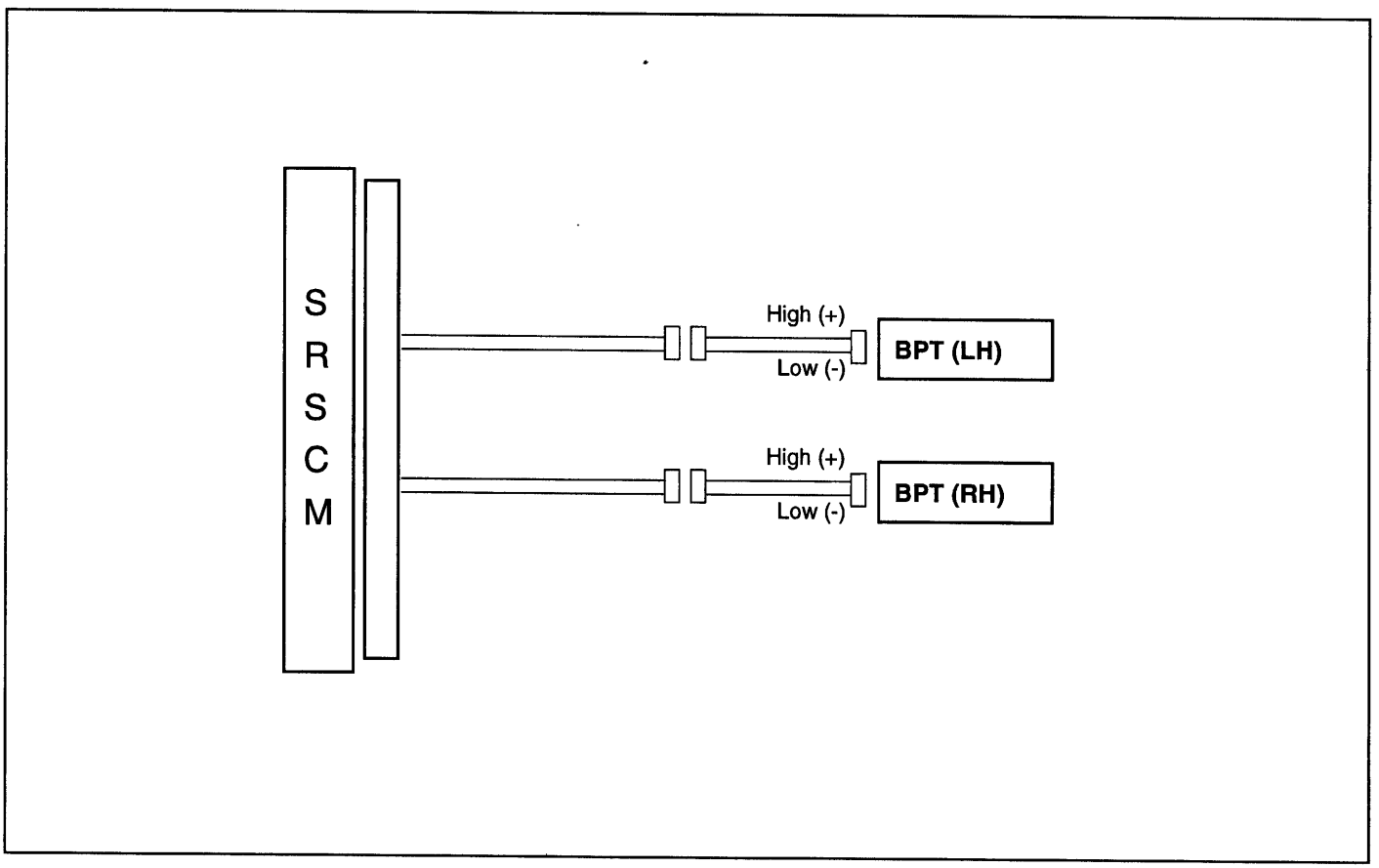

ERJB046A

INSPECTION PROCEDURE

1. Preparation (See step "1" on page RT-38).
2. Check the BPTs resistance.

[PREPARATION]

Release the shorting bar on the SRSCM side of the airbag squib side. Connect the dummy (0957A-38200) and dummy adapter (0957A-38300) to the BPT connector of the SRSCM connector side.

NOTE

Before checking the resistance, you have to insert the shorting bar into the SRSCM connector.

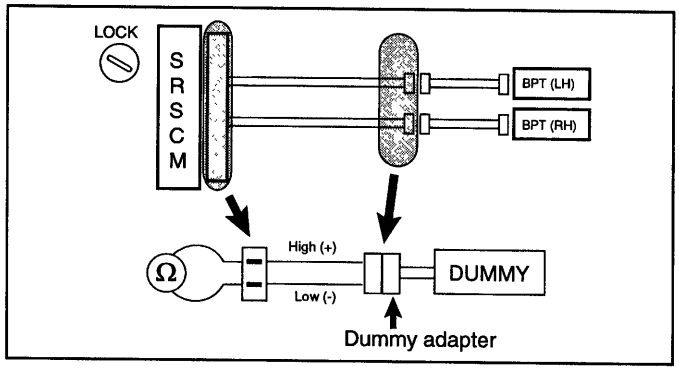

ERJB046D

[CHECK]

Measure the resistance between the BPT high (+) and BPT low (-) sides.

1.6 Ω ≤ R ≤ 2.8 Ω

NG → Repair or replace the harness between the SRSCM and the BPT.

OK ↓

ERJB046B

3. Check the BPT squib.

[PREPARATION]

1. Turn the ignition switch to LOCK.
2. Disconnect the negative (-) terminal cable from the battery, and wait for 30 seconds.
3. Connect the BPT connector.
4. Connect the negative (-) terminal cable to the battery, and wait for 30 seconds.

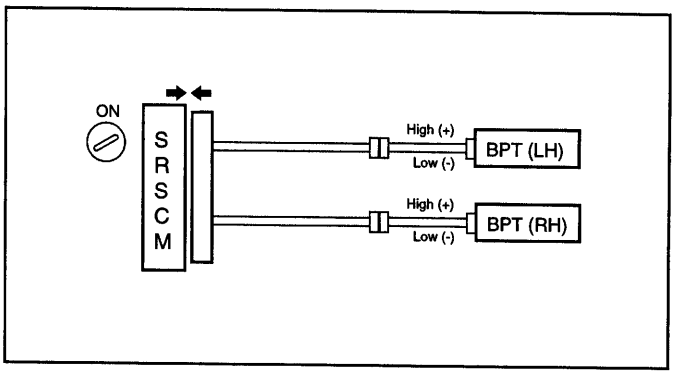

ERJB046C

[CHECK]

1. Turn the ignition switch to ON, and wait for at least 30 seconds.
2. Clear the malfunction code stored in the memory of the Hi-Scan Pro.
3. Turn the ignition switch to LOCK, and wait for 30 seconds.
4. Turn the ignition switch to ON, and wait for 30 seconds.
5. Using the Hi-Scan Pro, check for DTCs.
   There is no DTC.

[HINT]

Codes other than these may be output at this time, but they are not relevant to this procedure.

NG → Replace the BPT.

OK ↓

From the results of the above inspection, the malfunctioning part can now be considered normal.

ERJB041J

ERJB0470

CIRCUIT INSPECTION

DTC	B1400	Satellite sensor left side defect
	B1403	Satellite sensor right side defect
	B1408	Satellite sensor left communication error
	B1409	Satellite sensor right communication error

CIRCUIT DESCRIPTION

The release system for the airbag consists of the SRSCM and two satellite sensor - one on the left - hand side and one on the right. The above DTCs are recorded when the defect or communication error of a satellite sensor is detected in the satellite circuit.

WIRING DIAGRAM

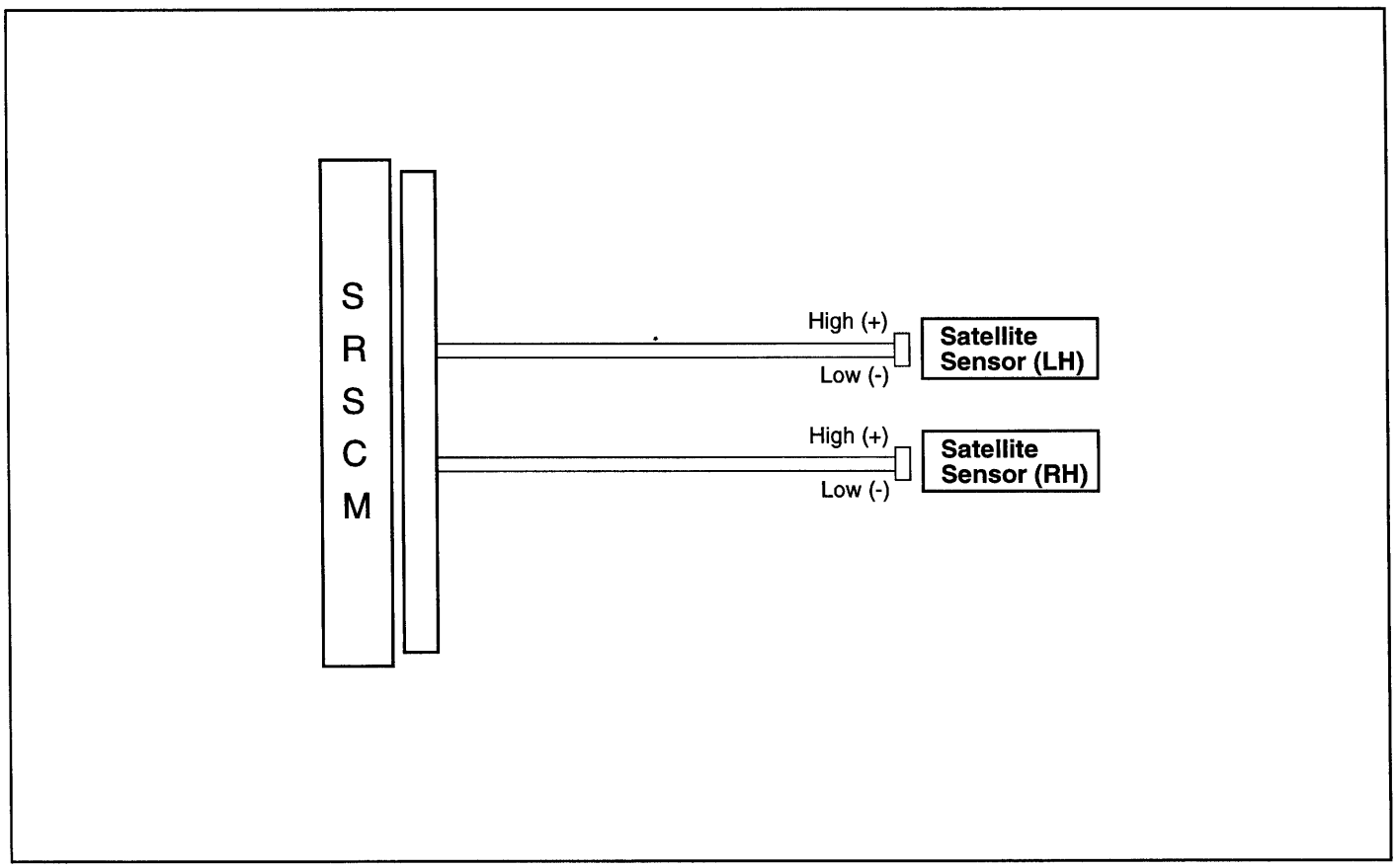

ERA9012L

INSPECTION PROCEDURE

1. Preparation (See step "1" on page RT-38).
2. Check sensor Satellite circuits (Communication error).

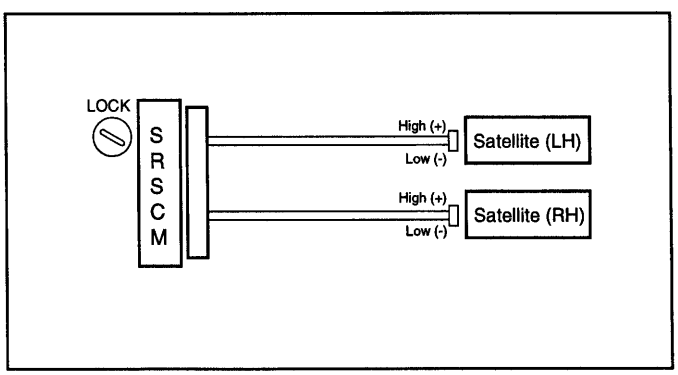

ERA9012M

[PREPARATION]

Check sensor continuity between sensor SRSCM connector and both satellite connector's high (+) and low (-) sides.

OK : Continuity

NG ➔ Repair or replace the harness between the SRSCM and the Satellite sensor.

OK

ERJB047A

3. Check the Satellite sensor (Defect).

[PREPARATION]

1. Turn the ignition switch to LOCK.
2. Disconnect the negative (-) terminal cable from the battery, and wait for 30 seconds.
3. Connect the satellite connector.
4. Connect the negative (-) terminal cable to the battery, and wait for 30 seconds.

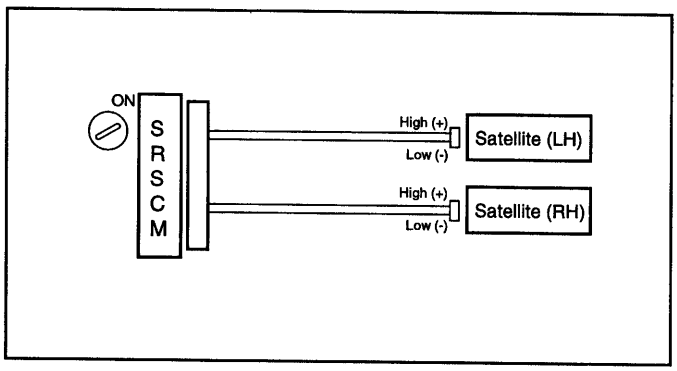

ERA9012N

[CHECK]

1. Turn the ignition switch to ON, and wait for at least 30 seconds.
2. Clear the malfunction code stored in the memory of the Hi-Scan Pro.
3. Turn the ignition switch to LOCK, and wait for 30 seconds.
4. Turn the ignition switch to ON, and wait for 30 seconds.
5. Using the Hi-Scan Pro, check for DTCs.
   There is no DTC.

[HINT]

Codes other than these may be output at this time, but they are not relevant to this check.

NG ➔ Replace the Satellite sensor.

OK

From the result of the above inspection, the malfunctioning part can now be considered normal.

ERJB041K

ERJB0490

CIRCUIT INSPECTION

DTC	B2500	Warning lamp failure

CIRCUIT DESCRIPTION

The SRS warning lamp is located on the instrument cluster. When the airbag system is normal, the SRI flashes for approx. imately 6 seconds after the ignition switch is turned ON, and then turns off automatically. If there is a malfunction in the airbag system, the SRI lights up to inform the driver of the abnormality. The SRSCM measures the voltage at the airbag SRI (Malfunction Indicator Lamp) output pin, both when the lamp is on and when the lamp is off, to detect whether the commanded state matches the actual state.

INSPECTION PROCEDURE

1. Check the fuse.

   [PREPARATION]

   1. Remove fuse No. 20 and 22 from the junction block.
   2. Inspect the fuses.
   3. Replace if necessary.

2. Check the SRS warning lamp circuit.

   [PREPARATION]

   1. Connect the negative (-) terminal cable to the battery.
   2. Turn the ignition switch ON.

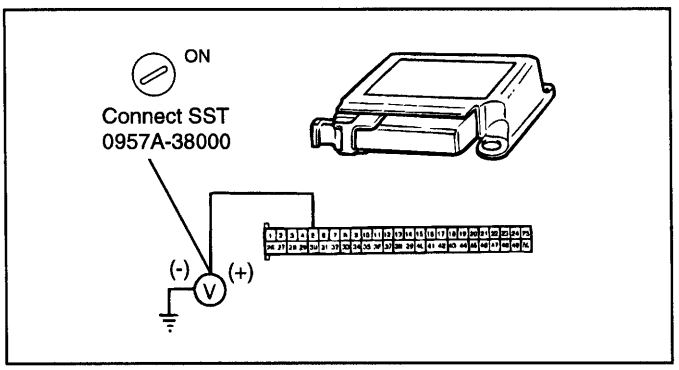

ERA9005A

[CHECK]

1. Measure voltage of pin 5 on the harness side connector of the SRSCM.
   Voltage
   SRE-LC : 9-16 V
   SRE-LC : 10-16.5 V

NG → Check the SRS warning light bulb/repair the SRS warning light circuit.

OK ↓

ERDA032A

2. Check the SRS SRI (Service Reminder Indicator).
   OK : SRS SRI ON

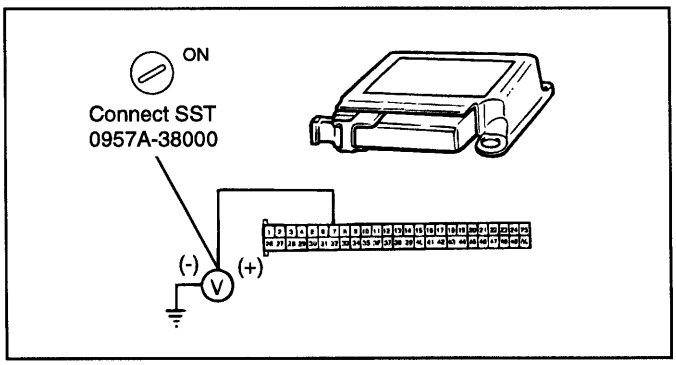

ERJB049A

NG → If no fault is found in wiring or connector, replace the SRSCM.

OK ↓

From the results of the above inspection, the part can now be considered to be normal.

ERDA032B

ERJB0500

CIRCUIT INSPECTION

DTC	B1620	Internal fault
	B1650	Crash recorded
	B1651	Crash recorded (driver side airbag)
	B1652	Crash recorded (passenger side airbag)
	B1661	ECU mismatching

CIRCUIT DESCRIPTION

SRSCM MALFUNCTION

The SRSCM monitors the following :

1. Condition of the firing circuit activation transistors.
2. Adequacy of deployment energy reserves.
3. Safing sensor integrity. (detection of faulty closure)
4. Plausibility of the accelerometer signal.
5. Operation of the SRSCM components.

The timely completion of all tests is monitored by a separate hardware watchdog. During normal operation, the watchdog is triggered periodically by the SRSCM. If the SRSCM fails to trigger the watchdog, the watchdog will reset the SRSCM and activate the SRI (Service Reminder Indicator). The SRSCM must be replaced once the above fault codes are confirmed.

FIELD DEPLOYMENT PROCEDURES ERJB0600

CAUTION

When handling the deployed airbag be careful that not the dust enters your eyes and always wear gloves to avoid direct contact with the dust.

AIRBAG MODULE DISPOSAL PROCEDURES

Before disposing of a vehicle equipped with an airbag, or prior to disposing of the airbag module, be sure to first follow the procedures described below to deploy the airbag.

AIRBAG REMOTE DEPLOYMENT DEVICES

Tool, Number, Name	Use
Deployment tool (0957A-34100A) SRS DEPLOYMENT ADAPTER HARNESS DAB, BPT : 0957A-38500 PAB, SAB : 0957A-38100 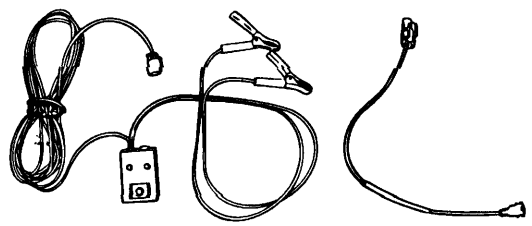 ERDA034A	Deployment inside the vehicle (if the vehicle will no longer be driven)

DISPOSAL PLAN

Take the following disposal steps.

CASE		DISPOSAL PLAN
Abnormal problems in airbag module		Deploy and discard
Car scrapping	DAB, PAB, BPT	Deploy the airbag module with the SST
Crash (Deployed)		Discard

UNDEPLOYED AIRBAG MODULE DISPOSAL ERJB0610

CAUTION

1. **If the vehicle is to be scrapped, junked, or otherwise disposed of, deploy the airbag inside the vehicle.**
2. **Since there is a loud noise when the airbag is deployed, avoid residential areas whenever possible. If anyone is nearby, give warning of the impending noise.**
3. **Since a large amount of smoke is produced when the airbag is deployed, select a well-ventilated site. Moreover, never attempt the test near a fire or smoke sensor.**

DEPLOYMENT INSIDE THE VEHICLE

When vehicle will no longer be driven :

1. Open all windows and doors of the vehicle. Move the vehicle to an isolated spot.
2. Disconnect the negative (-) and positive (+) battery cables from the battery terminals, and then remove the battery from the vehicle

CAUTION

Wait at least 30 seconds after disconnecting the battery cable before doing any further work.

3. Remove the center crash pad side cover.
4. Remove the Airbag SRSCM connector.
5. Connect the deployment tool to the connector of each module.

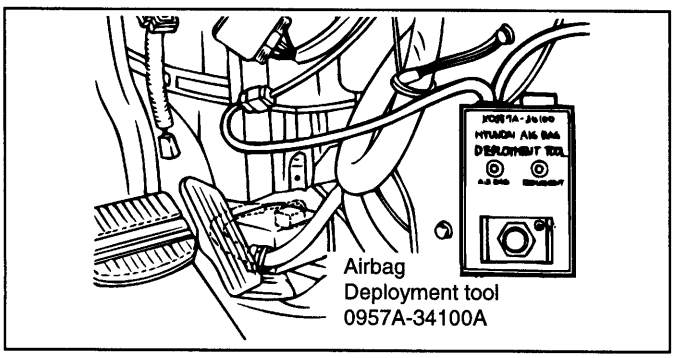

ERDA034B

6. As far away from the vehicle as possible, press the push button on the deployment tool to deploy the airbag.

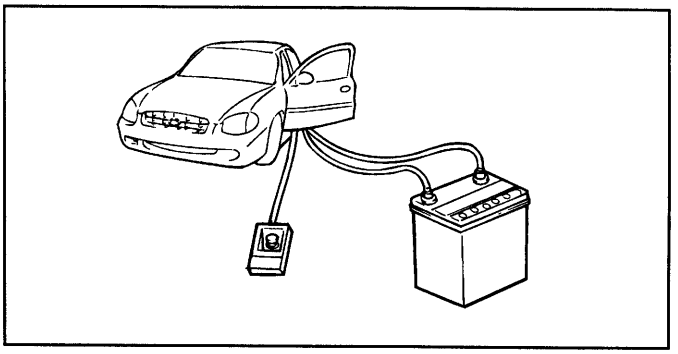

ERA9009B

CAUTION

1. **Before deploying the airbag in this manner, first check to be sure that there is no one in or near the vehicle. Wear safety glasses.**
2. **The inflator will be quite hot immediately following the deployment, so wait at least 30 minutes to allow it to cool before attempting to handle it. Although not poisonous, do not inhale gas from airbag deployment. See the Deployed Airbag Module Disposal Procedures for post-deployment handling instructions.**
3. **If the airbag fails to deploy when the procedures above are followed, do not go near the module. Contact your DPSM.**

DEPLOYED AIRBAG MODULE DISPOSAL PROCEDURES ERJB0620

After deployment, the airbag module should be disposed of in the same manner as any other scrap part, except that the following points should be carefully noted during disposal.

1. The inflator will be quite hot immediately following deployment, so wait at least 30 minutes to allow it to cool before attempting to handle it.
2. Do not put water or oil on the airbag after deployment.
3. There may be adhered to the deployed airbag module, material that could irritate the eyes and/or skin, so wear gloves and safety glasses when handling a deployed airbag module. If despite these precautions, the material does get into your eyes or on your skin, immediately rinse the affected area with a large amount of clean water. If any irritation develops, seek medical attention.
4. Tightly seal the airbag module in a strong vinyl bag for disposal.

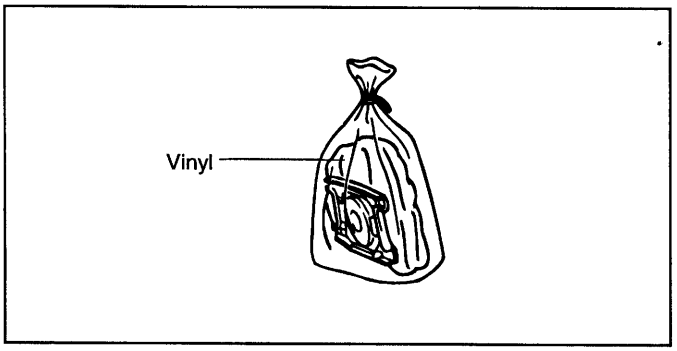

ERA9009C

5. Be sure to always wash your hands after completing this operation.

Brake System

GENERAL ..... BR -2

BRAKE SYSTEM ..... BR -9

PARKING BRAKE SYSTEM ..... BR -31

ABS (ANTI-LOCK BRAKE SYSTEM) ..... BR -33

GENERAL

EJJB0010

SPECIFICATIONS

Master cylinder	
Type	Tandem type
I.D.	23.8 mm (0.94 in.) : CBS (Conventional Brake System) 25.4 mm (1.0 in.) : ABS (Antilock Brake System)
Fluid level sensor	Provided
Brake booster	
Type	Vacuum type with tandem booster
Effective dia.	8 + 9 in.
Boosting ratio	7.0 : 1 (CBS), 7.5 : 1 (ABS)
Front brake	
Type	Floating type with ventilated disc
Disc O.D.	276 mm (10.87in.) : 2WD 294 mm (11.57in.) : 4WD
Disc thickness	26 mm (1.02 in.)
Pad thickness	10.5 mm (0.41 in.)
Cylinder I.D.	42,9 mm (1.689 in.) (X2)
Rear disk brake	
Type	Floating type with solid disc
Disc O.D.	284 mm (11.18 in.)
Disc thickness	10 mm (0.39 in.)
Pad thickness	10 mm (0.39 in.)
Cylinder I.D.	38.2 mm (1.50 in.)
Parking brake	
Actuation	Mechanical brake acting on rear wheels
Type	Lever
Rear drum brake	
Type	Dual mode drum
Drum I.D.	254 mm (10 in.)
Cylinder I.D.	20.64 mm (0.81 in.)
Clearance adjustment	Automatic
Lining thickness	4.5 mm (0.18 in.)

O.D. = Outer diameter

I.D. = Inner diameter

SERVICE STANDARD

EJJB0020

Standard value	
Brake pedal height	208 (+5, -0) mm, (8.22 (+2, -0) in.)
Clearance between stop lamp switch outer case and pedal stopper	0.5-1.0 mm (0.020-0.040 in.)
Brake pedal free play	3-8 mm (0.117-0.312 in.)
Clearance between booster push rod and master cylinder piston	0 (at 500 mmHg vacuum)
Clearance between brake pedal and floor board	44 mm (1.73 in.)
Parking brake lever stroke (when lever assembly is pulled with 196N (20kg, 44lb) force 7 clicks	44 mm (1.73 in.)
Service limit	
Front disc brake pad thickness	2.0 mm (0.079 in.)
Front disc thickness (minimum)	24.4 mm (0.96 in.)
Front disc runout	0.04 mm (0.0016 in.)
Front disc thickness variation	0.005 mm (0.0002 in.)
Rear disc brake pad thickness	2.0 mm (0.079 in.)
Rear disc thickness	8.4 mm (0.33 in.)
Rear drum I.D.	256 mm (10.08 in.)
Rear brake lining thickness	1.5 mm (0.059 in.)

TIGHTENING TORQUE

EJJB0030

	Nm	Kg·cm	lb·ft
Master cylinder to booster mounting	8-12	80-120	5.9-8.8
Brake booster mounting nut	13-16	130-160	9.4-11.6
Brake booster vacuum hose fitting to surge tank	15-18	150-180	11-13
Bleeder screw	7-9	70-90	5-6.6
Brake flare nut, brake hose	13-17	130-170	9-12
Proportioning valve mounting bolt	35-55	350-550	26-41
Caliper guide rod bolt	22-32	220-320	16-24
Caliper assembly to knuckle			
Front	80-100	800-1000	58-73
Rear	50-60	500-600	36-43
Brake hose to front caliper	25-30	250-300	18.5-22.2
Wheel cylinder mounting bolt	12-18	120-180	8.8-13
Parking brake mounting bolt	17-26	170-260	12-19

CAUTION

Replace the self-locking nuts with new ones after removal.

LUBRICANT

EJHA0150

	Recommended lubricant	Quantity
Brake fluid	DOT 3 or DOT 4	As required
Brake pedal bushing and brake pedal bolt	Chassis grease SAE J310, NLGI No.0	As required
Clevis pin	Wheel bearing grease SAE J310, NLGI No.2	As required
Parking brake shoe and backing plate contact surfaces	Bearing grease, NLGI No.0-1	As required

SPECIAL TOOLS

EJHA0200

Tool (Number and Name)	Illustration	Use
09581 - 11000 Piston expander	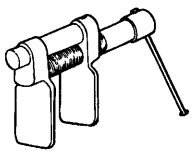 EJDA043A	Spreading the front and rear brake pistons

TROUBLESHOOTING

EJJB0040

Trouble symptom	Probable cause	Remedy
Noise or vibration when brakes are applied	Caliper improperly mounted	Correct
	Loose caliper mounting bolts	Retighten
	Unevenly worn or cracked brake drum or brake disc	Replace
	Foreign material in brake drum	Clean
	Seized pad or lining contact surface	Replace
	Excessive clearance between pad assembly and caliper	Correct
	Uneven pad contact	Correct
	Lack of lubrication in sliding parts	Lubricate
	Loose suspension parts	Retighten
	Excessive of disc runout	Replace disc
	Excessive variation of disc thickness	Replace disc
Vehicle pulls to one side when brakes are applied	Difference in left and right tire inflation pressure	Adjust
	Inadequate contact of pad or lining	Correct
	Grease or oil on pad or lining surface	Replace
	Drum warped or uneven wear	Replace
	Incorrect wheel cylinder installation	Correct
	Auto adjuster malfunction	Correct

Trouble symptom	Probable cause	Remedy
Insufficient braking power	Low or deteriorated brake fluid	Refill or change
	Air in the brake system	Bleed the system
	Brake booster malfunction	Correct
	Inadequate contact of pad or lining	Correct
	Grease or oil on pad or lining surface	Replace
	Auto adjuster malfunction	Correct
	Overheated brake rotor due to dragging of pad or lining	Correct
	Restricted brake line	Replace
	Proportioning valve malfunction	Replace
Increased pedal stroke required (Reduced clearance between pedal and floorboard)	Air in the system	Bleed the system
	Brake fluid leaks	Correct
	Excessive push rod to master cylinder clearance	Adjust
Brake drag	Incomplete release of parking brake	Adjust
	Incorrect parking brake adjustment	Adjust
	Worn brake pedal return spring	Replace
	Restricted master cylinder return port	Correct
	Broken rear drum brake shoe return spring	Replace
	Lack of lubrication in sliding parts	Lubricate
	Defective master cylinder check valve or piston return spring	Replace
Insufficient parking brake function	Worn brake lining or pad	Replace
	Grease or oil on lining or pad surface	Replace
	Parking brake cable sticking	Replace
	Auto adjuster malfunction	Correct
	Excessive parking brake lever stroke	Adjust the parking brake lever stroke or check the parking brake cable routing

SERVICE BRAKE PEDAL INSPECTION AND ADJUSTMENT EJJB0050

1. Turn the stop lamp switch until the clearance between the outer case of the stop lamp switch and pedal arm reaches the standard value, and then secure the stop lamp switch with the lock nut.

Clearance between pedal and stop lamp switch "A" :
0.5-1.0 mm (0.02-0.039 in.)

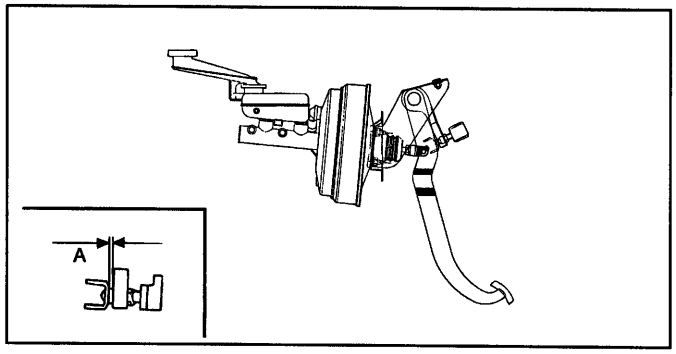

EJHA001A

2. Adjust the stop lamp switch until the free play of the brake pedal reaches the standard value.

Brake pedal free play "B" : 3-8 mm (0.12-0.32 in.)

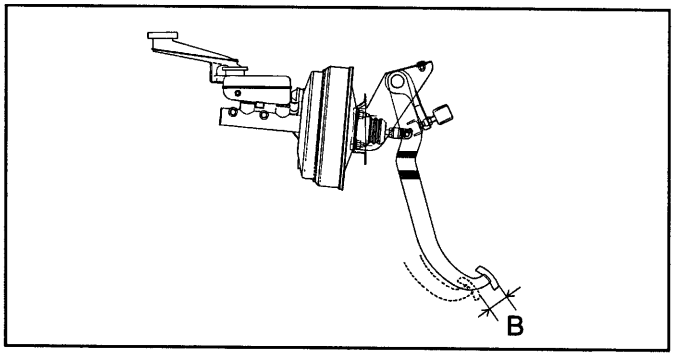

EJHA230A

BRAKE BOOSTER OPERATION TEST WITHOUT A TESTER

For a simple check of brake booster operation, perform the following tests.

1. Run the engine for one or two minutes, and then shut it off. Depress the brake pedal several times at normal foot pressure. If the pedal goes down completely the first time, but rises gradually, the brake booster is functioning properly. If the height of the pedal doesn't change, the booster may be damaged.

2. After checking that the height of the pedal changes when depressing the brake pedal several times with the engine stopped, start it keeping the brake pedal depressed. At this time, if it goes down slightly, the booster is good but if the height of it doesn't change, it is damaged.

3. With the engine running, depress the brake pedal and then stop the engine. Hold the pedal depressed for 30 seconds. If the pedal height does not change, the booster is in good condition. If the pedal rises up, it is damaged.

4. If one of the above three tests is not OK, check the vacuum hoses, the check valve and the brake booster. Make any necessary corrections. If all tests are OK, the unit is in good condition.

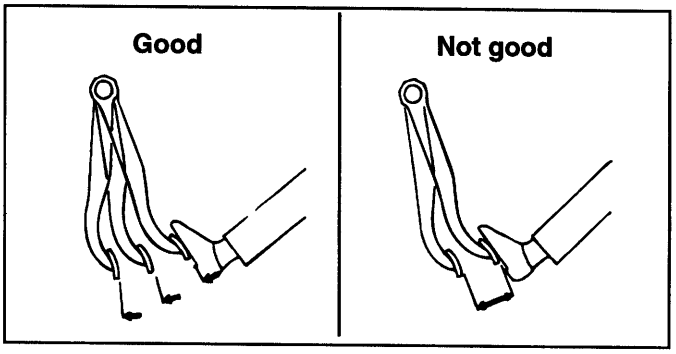

EJA9002A

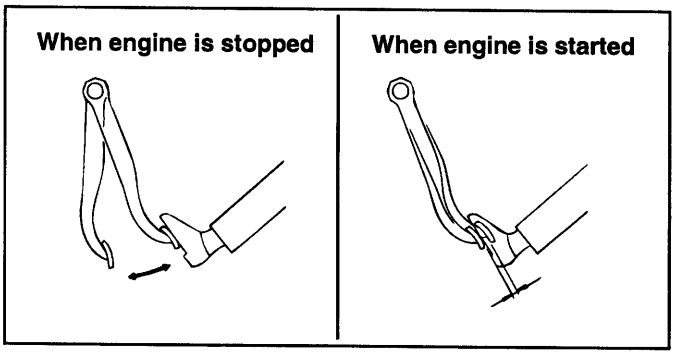

EJA9002B

BLEEDING THE BRAKE SYSTEM EJJB0070

1. Remove the reservoir cap and fill the brake reservoir with brake fluid.

CAUTION

Do not allow brake fluid to remain on a painted surface. Wash it off immediately.

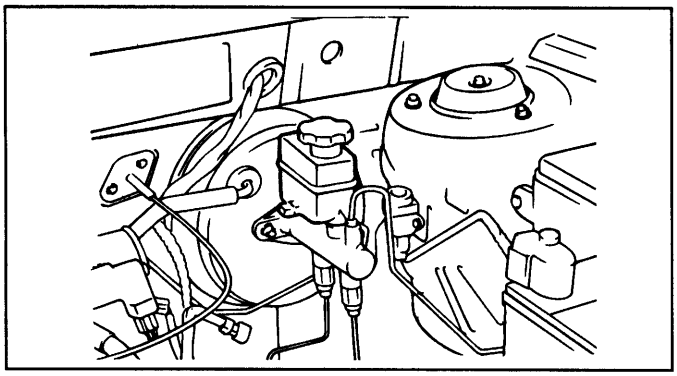

EJJA010G

2. Connect a vinyl tube to the wheel cylinder bleeder plug and insert the other end of the tube in a container of brake fluid which is half full.
3. Start the engine.
4. Slowly depress the brake pedal several times.
5. While depressing the brake pedal fully, loosen the bleeder plug until fluid runs out. Then close the bleeder screw and release the brake pedal.

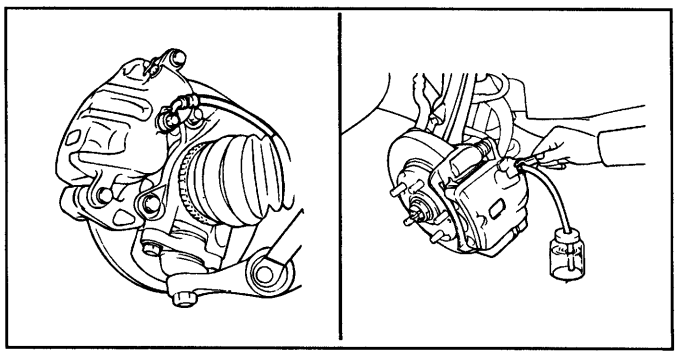

KFW8006A

6. Repeat steps 4 and 5 until there are no more bubbles in the fluid.
7. Tighten the bleeder plug screw.

Bleeder screw tightening torque :

7-9 Nm (70-90 kg·cm, 5-6.6 lb·ft)

8. Repeat the above procedure for each wheel in the sequence shown in the illustration.

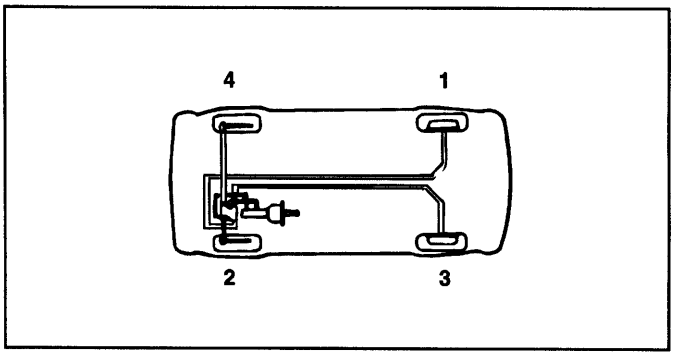

EJA9004A

BRAKE SYSTEM

BRAKE PEDAL

COMPONENT EJJB0080

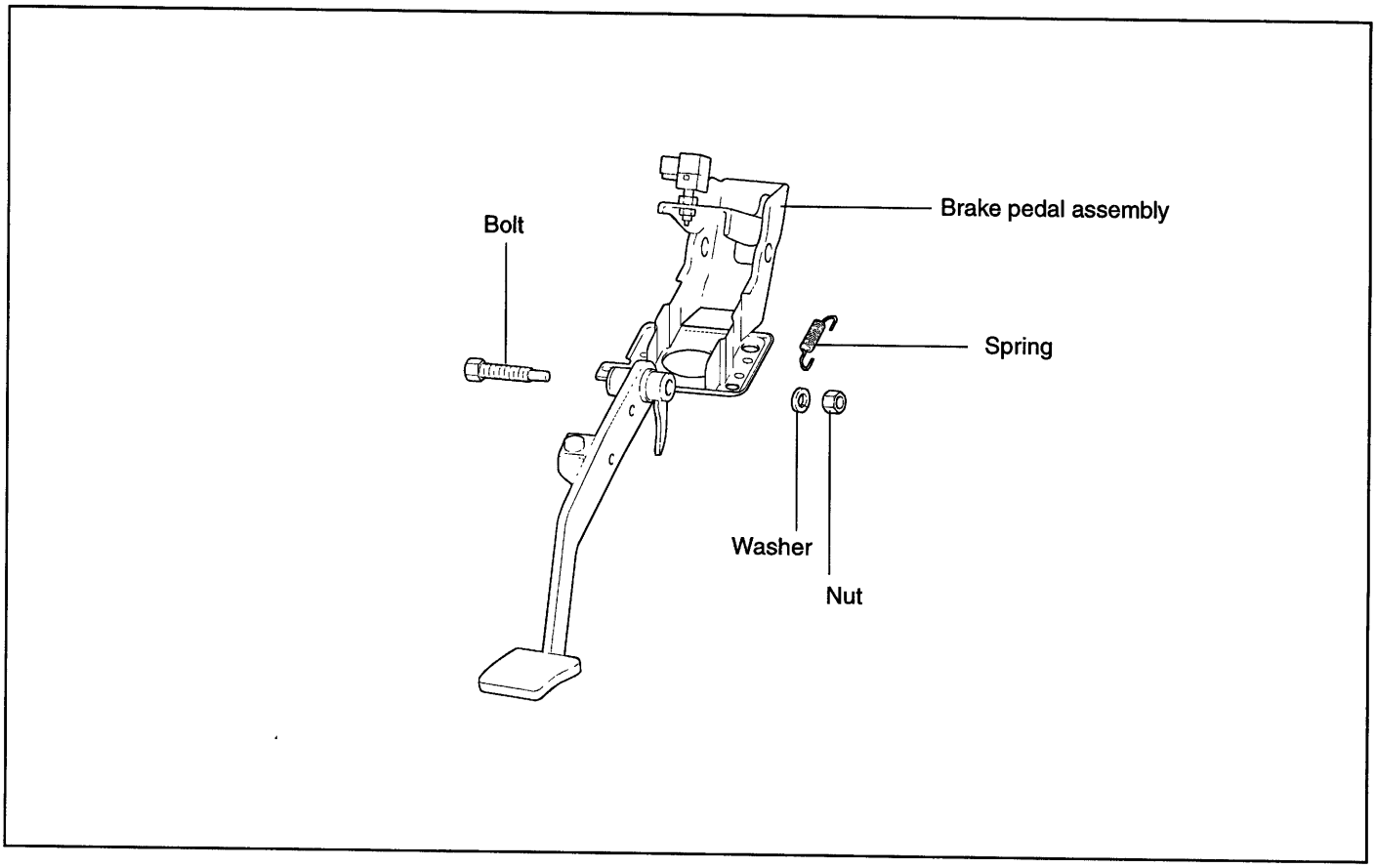

AJJA010C

REMOVAL EJJB0090

1. Remove the lower crash pad assembly.
2. Remove the stop lamp switch connector and disconnect the shift lock cable (Vehicle equipped with cruise control system only).
3. Remove the cotter pin and clevis pin.
4. Remove the brake pedal member assembly mounting nut.
5. Remove the brake pedal assembly.

INSPECTION EJJB0095

1. Check the bushing for wear.
2. Check the brake pedal for bending or twisting.
3. Check the brake pedal return spring for damage.
4. Check all parts for crack and wear.

INSTALLATION EJJB0100

Installation is the reverse of removal.

NOTE

1. **Coat the inner surface of the bushings with the specified grease.**

Specified grease :

Chassis grease SAE J310, NLGI No. 0

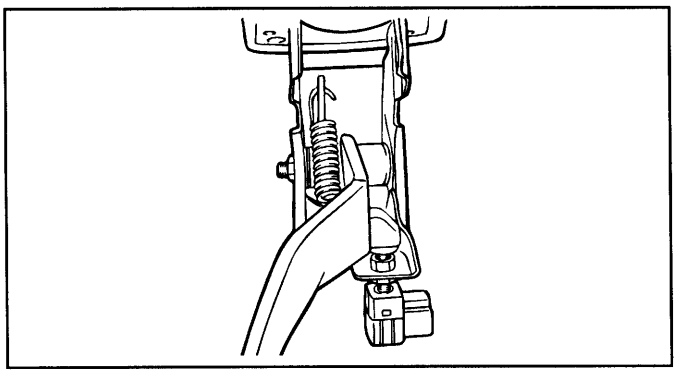

EJJA010D

2. **Before inserting the clevis pin, apply the specified grease to the clevis pin and washer.**

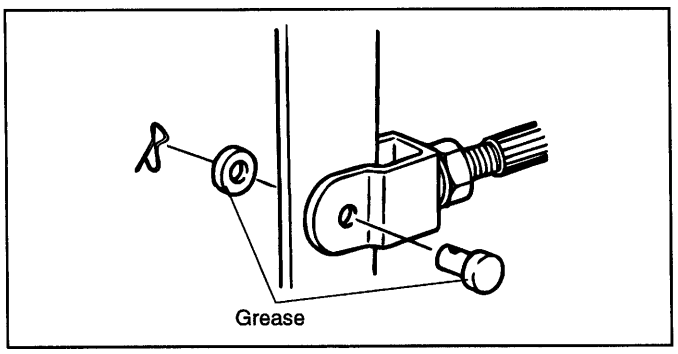

EJA9005B

MASTER CYLINDER

COMPONENTS EJJB0110

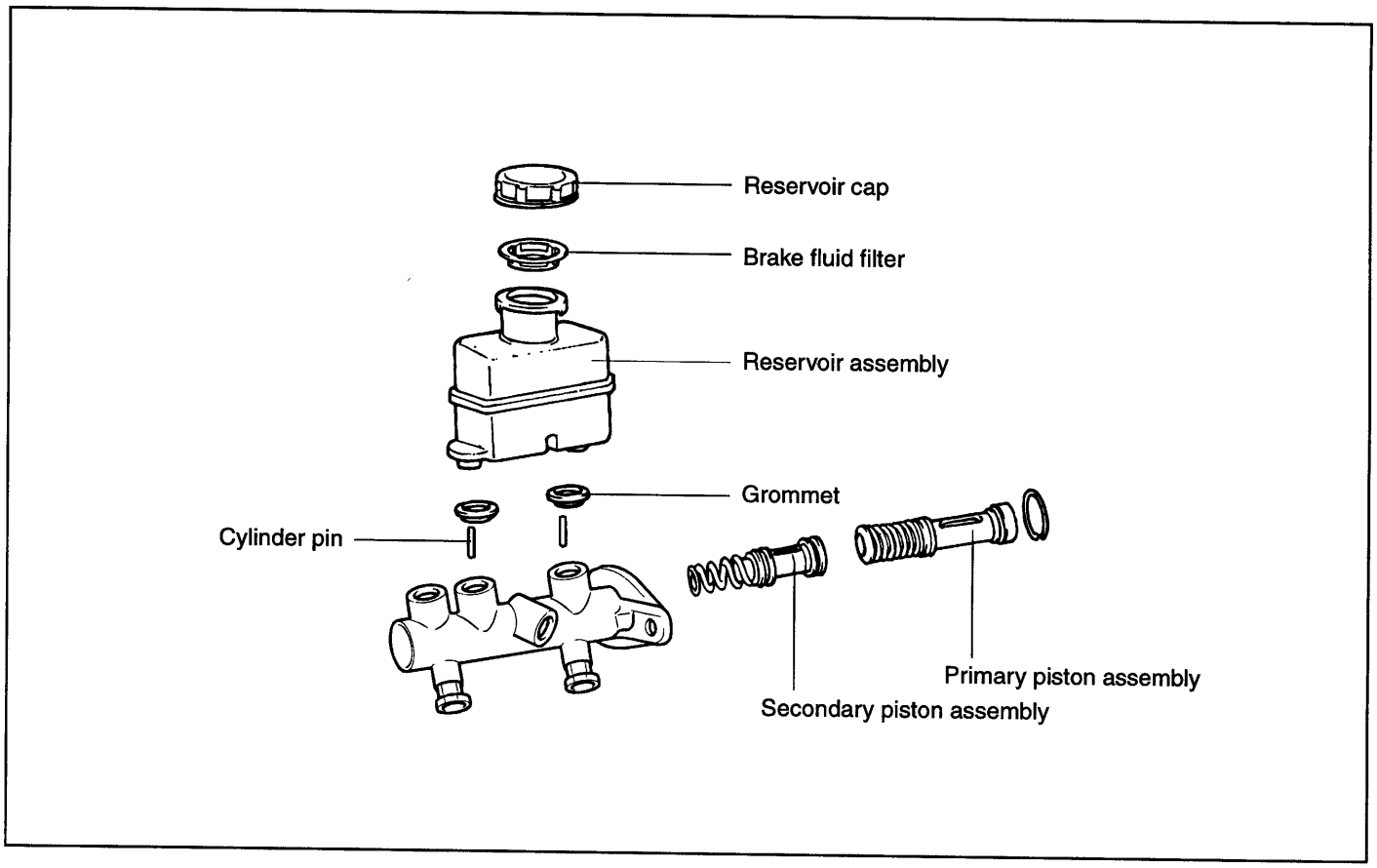

AJJA010E

REMOVAL EJJB0120

1. Detach the brake tubes from the master cylinder, and then install the plug.

CAUTION

Do not allow brake fluid to remain on a painted surface. Wash it off immediately.

2. Remove master cylinder mounting nuts and then lift out the master cylinder.

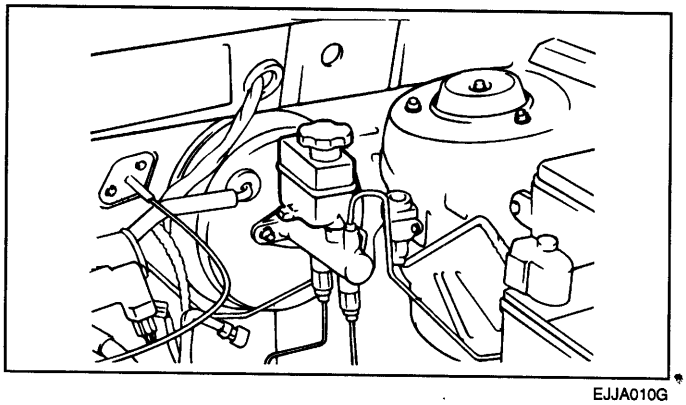

EJJA010G

DISASSEMBLY EJJB0130

1. Remove the reservoir cap and drain the brake fluid into a suitable container.

2. After disconnecting the mounting screws, pay the reservoir free from the master cylinder.

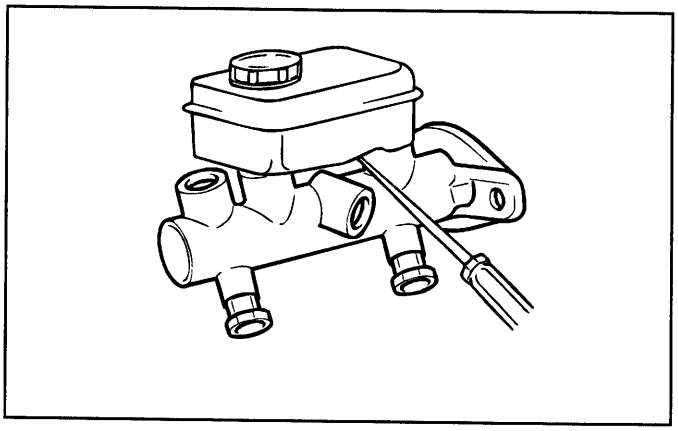

EJJA010F

3. Using a snap ring pliers, remove the retainer ring.

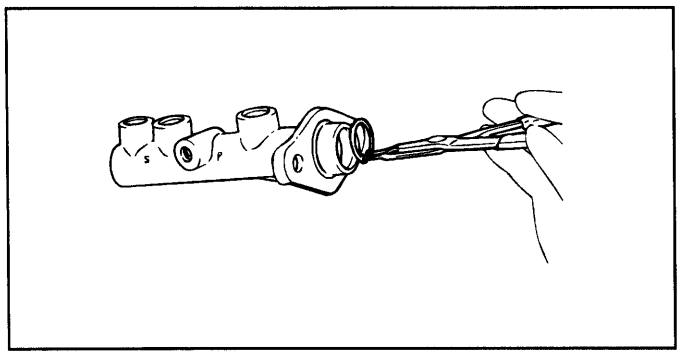

EJA9009C

4. Remove the primary cylinder pin. Push the primary piston with a screwdriver and remove the primary piston assembly.

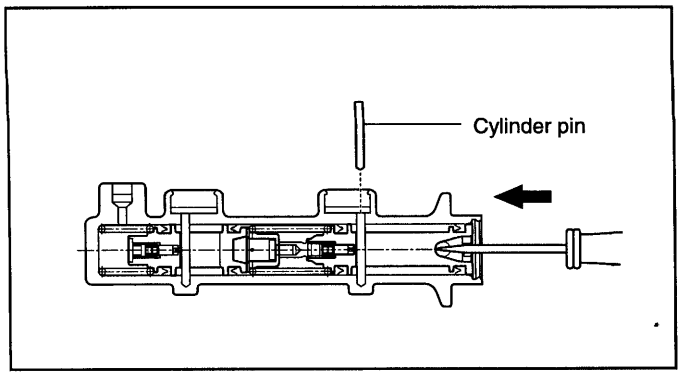

AFW8013A

5. Remove the secondary cylinder pin. Push the secondary piston with a screwdriver and remove the secondary piston assembly.

NOTE

Do not disassemble the primary and secondary piston assembly.

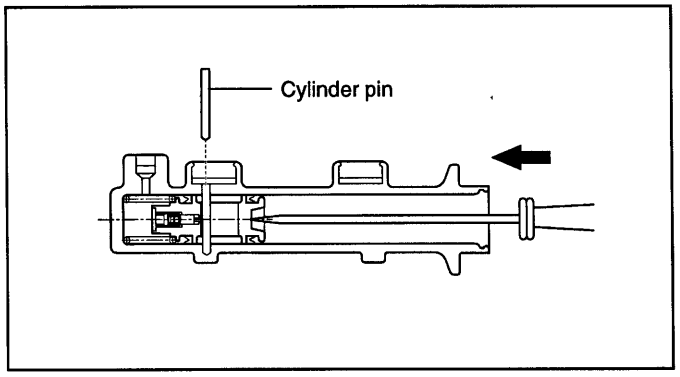

KFW8014A

INSPECTION EJJB0140

1. Check the master cylinder bore for rust or scoring.
2. Check the master cylinder for wear or damage. If necessary, clean or replace the cylinder.

NOTE

1. **If the cylinder bore is damaged, replace the master cylinder assembly.**
2. **Wash the parts in alchohol.**

ASSEMBLY EJJB0150

1. Apply genuine brake fluid to the rubber parts of the cylinder kit and grommets.

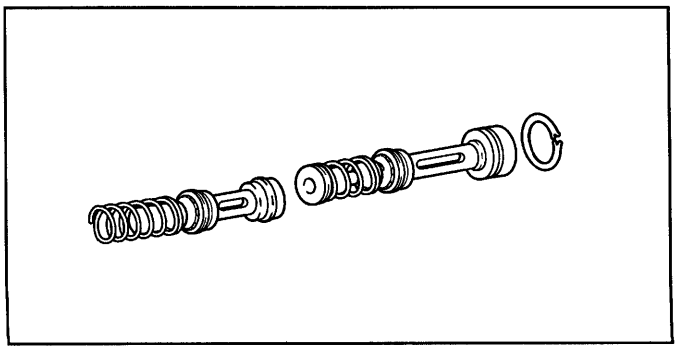

KFW8016A

2. Carefully insert the springs and pistons in the proper direction.
3. Press against the pistons with a screwdriver and install the retainer ring.

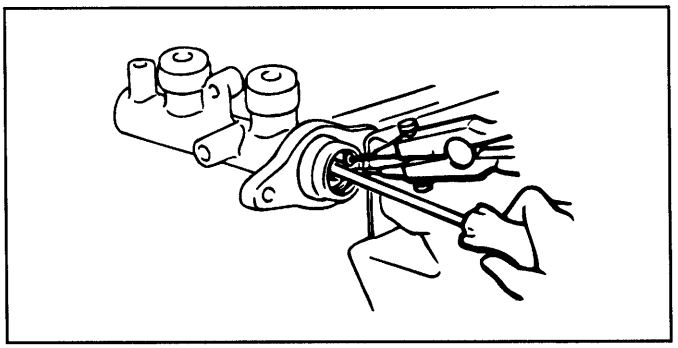

HE58-11

4. With the piston pushed completely home by a screwdriver, install the piston pin.
5. Mount two grommets.
6. Install the reservoir on the cylinder.

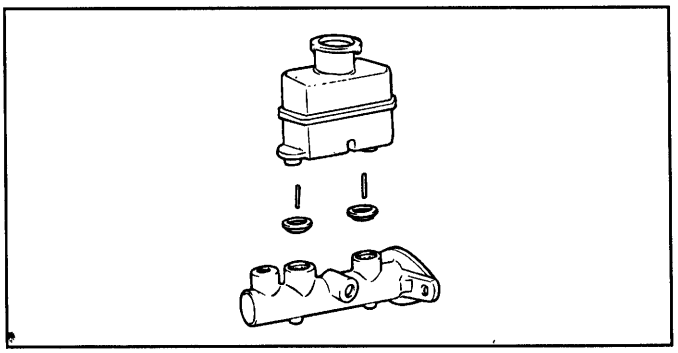

KFW8017A

INSTALLATION EJJB0160

1. Install the master cylinder to the brake booster.
2. Install the booster and master cylinder to the dash panel.
3. Connect the brake tubes to the master cylinder.
4. Install the vacuum hose tightly.
5. Connect the operating rod to the brake pedal.
6. After filling the brake reservoir with the brake fluid, bleed the system.

CAUTION

Don't disassemble the brake booster.

PROPORTIONING VALVE

PROPORTIONING VALVE EJJB0170

The proportioning valve distributes the proper fluid pressure to the front and rear wheel to obtain greater braking efficiency and prevents premature rear wheel lock-up and skid. You should not disassemble it because the performance of the valve is closely connected with the mounting tension of the spring.

PROPORTIONING VALVE FUNCTION TEST

1. Remove the proportioning valve from the master cylinder.
2. There are two pressure gauges. Connect one to the input side of the proportioning valve and the other to the output side of it.

NOTE

Be sure to bleed the system after connecting the pressure gauges.

3. With the brakes applied, measure the input pressure and the output pressure. If the measured pressures are within the specified range as illustrated, the proportioning valve is good.
4. Reconnect the brake lines in their original positions and bleed the system.

NOTE

This figure shows characteristics of the proportioning valve as the pressure incrases.

ITEMS	STANDARD VALUE
A (35)	A′ (35 ± 3)
B (80)	B′ (49.2 ± 3)

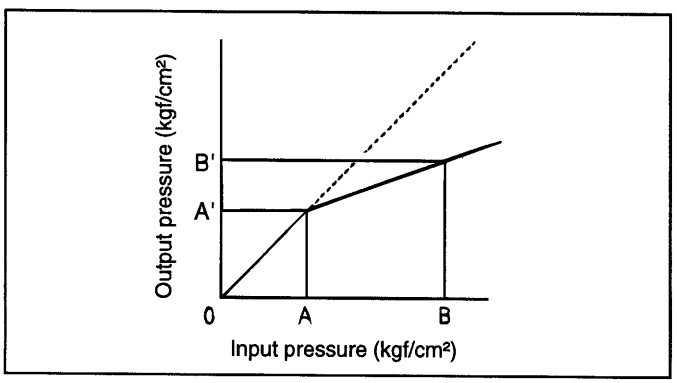

AJJA025A

INSTALLATION OF PROPORTIONING VALVE EJJB0180

1. Install the master cylinder according to the illustration.
2. Tighten the flare nuts and bleed the system.

Tightening torque

Brake tube flare nut :

13-17 Nm (130-170 kg.cm, 9-12 lb.ft)

Proportioning valve mounting nut :

35-55 Nm (350-550 kg.cm, 30-40 lb.ft)

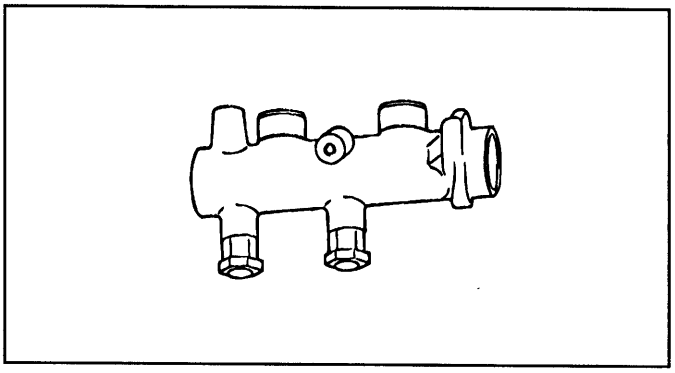

EJJA025B

FRONT DISC BRAKE

COMPONENTS EJJB0190

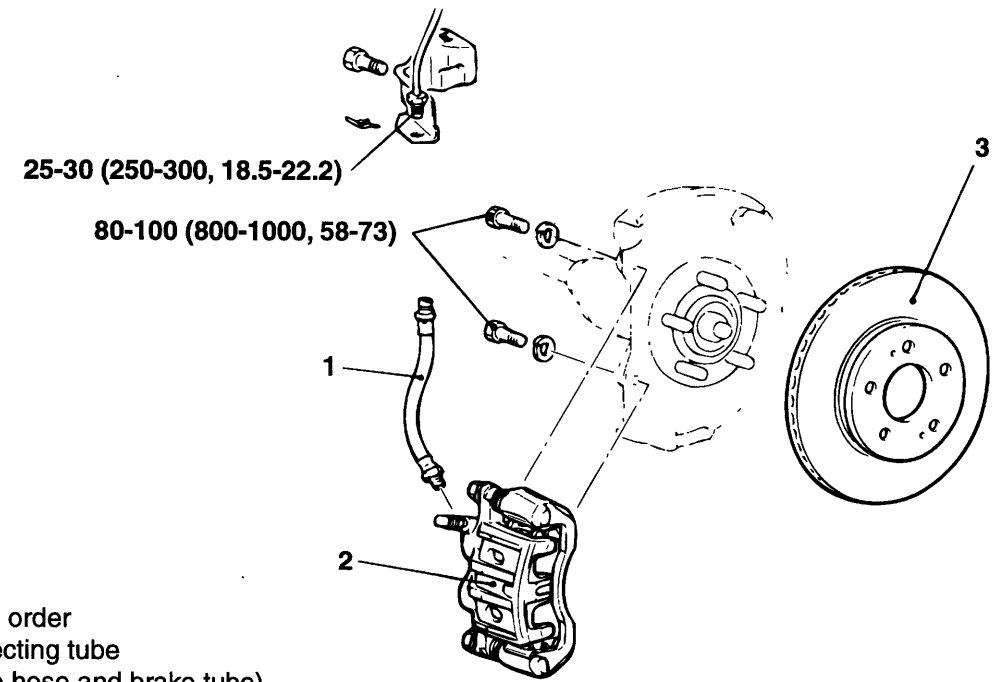

Removal order
1. Connecting tube
   (Brake hose and brake tube)
2. Front brake assembly
3. Brake disc

TORQUE : Nm (kg.cm, lb.ft)

AGX8022A

INSPECTION AND REPLACEMENT EJJB0200

INSPECTION AND REPLACEMENT OF FRONT DISC BRAKE PADS

1. Check the brake pad thickness through the caliper body inspection hole.

ITEM	Standard value	Service limit
Pad lining thickness mm (in.)	10.5 (0.413)	2.0 (0.079)

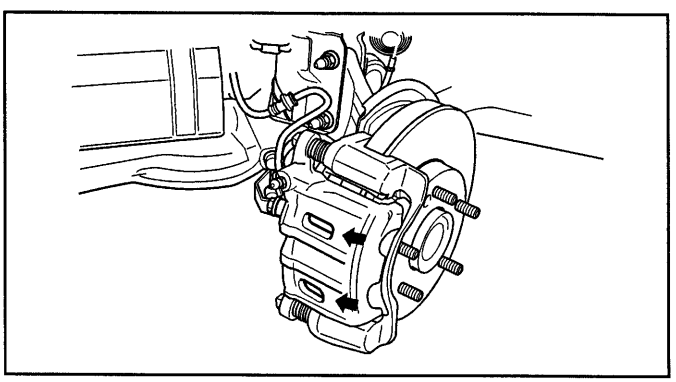

KGX8023A

CAUTION

1. **If the pad lining thickness is out of specification, left and right pads must be replaced as a complete set.**

2. **When the thickness difference between the left pad and the right pad is large, check the sliding condition of the piston, the lock pin and the guide pin.**

2. Remove the guide pin, lift the caliper assembly up and suspend it with a wire.

CAUTION

Be careful not to contaminate the lock pin and the guide pin with grease.

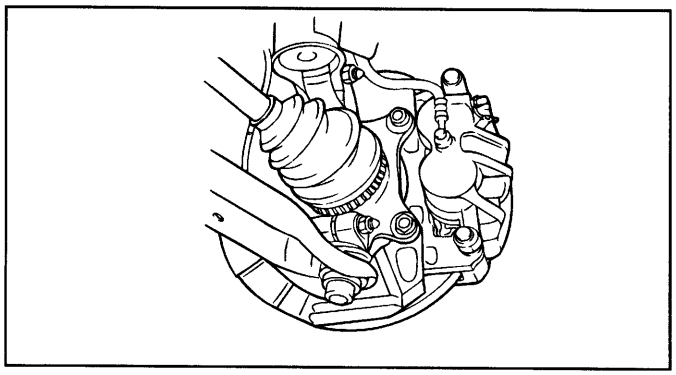

EJJA005B

3. Remove the following parts from the caliper support.

1. Pad and wear sensor assembly
2. Pad assembly
3. Clip
4. Outer shim

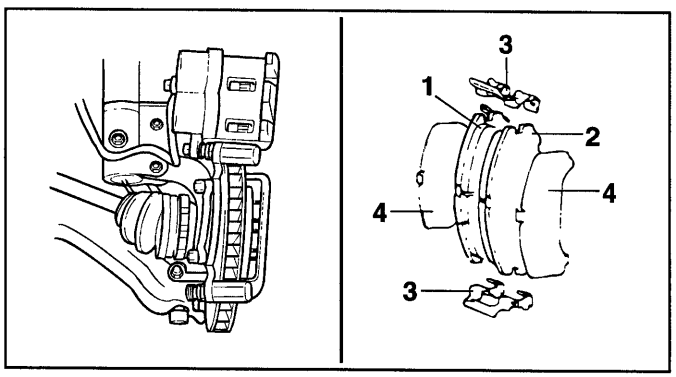

AJJA005C

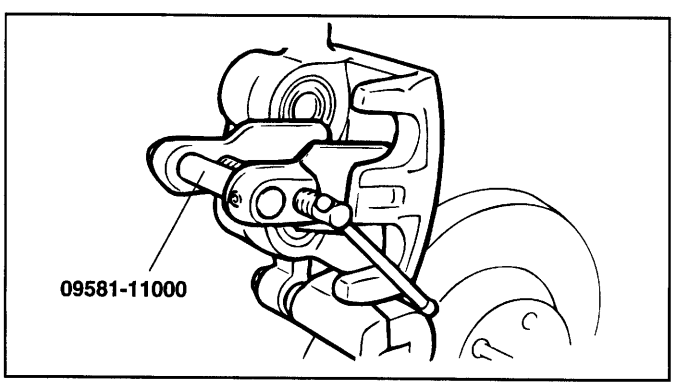

KGX8029A

FRONT BRAKE DISC THICKNESS CHECK EJJB0210

1. Using a caliper, measure nominal disc thickness at eight positions, approximately 45° apart and 10 mm (0.39 in.) from the outer edge of the disc.

Brake disc thickness

Standard value : 26 mm (1.02 in.)

Limit : 24.4 mm (0.96 in.)

Thickness variation (at least 8 positions)

2. Wherever you measure the thickness value use a micrometer. The pad must be less than 0.005mm in the direction of the circumference and less than 0.05mm in the direction of radius.

3. If the disc is beyond the limits for thickness or uneverness remove it and install a new one.

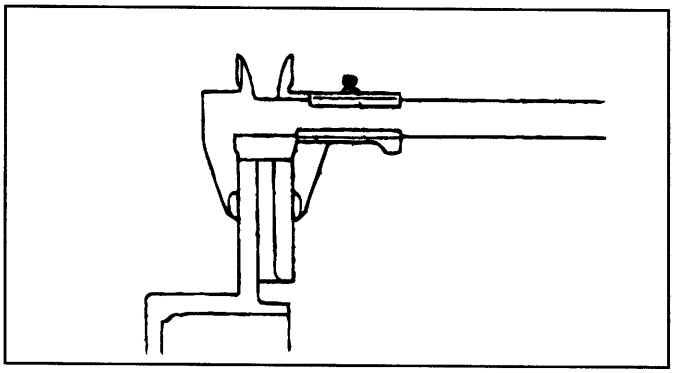

KGX8031A

FRONT BRAKE DISC RUN-OUT CHECK

1. Remove the caliper support, then raise the caliper assembly upward and suspend with wire.

NOTE

Tighten the nuts in order to mount the disc to the hub.

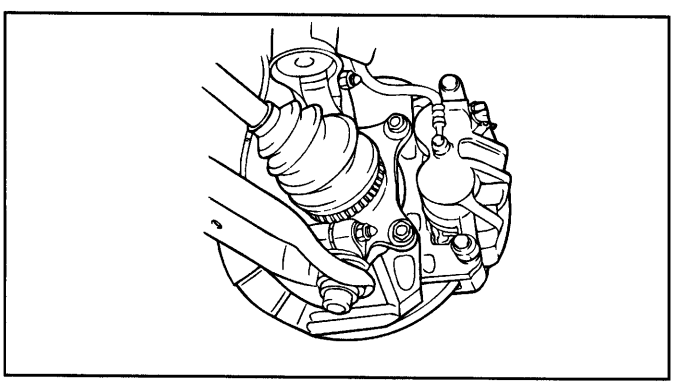

EJJA005B

2. Place a dial gauge about 5mm (0.2 in.) from the outer circumference of the brake disc, and measure the runout of the disc.

Limit : 0.04 mm (0.0016 in.)

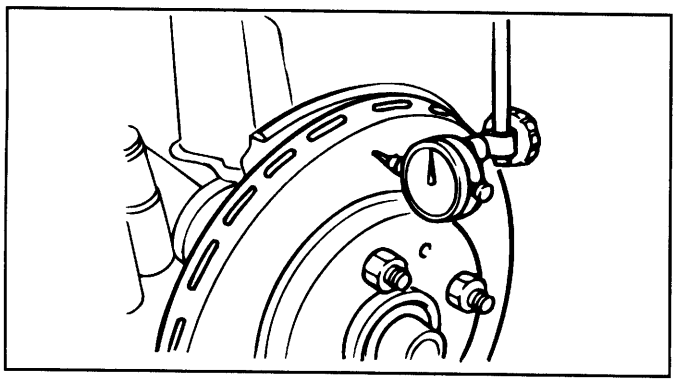

KGX8033A

FRONT BRAKE DISC RUN OUT CORRECTION

1. If the run out of the brake disc is equivalent to or exceeds the limit specification, replace the disc and hub, and then measure the run out again.

   1) Before removing the brake disc, chalk both sides of the wheel stud on the side at which the run out is greatest.

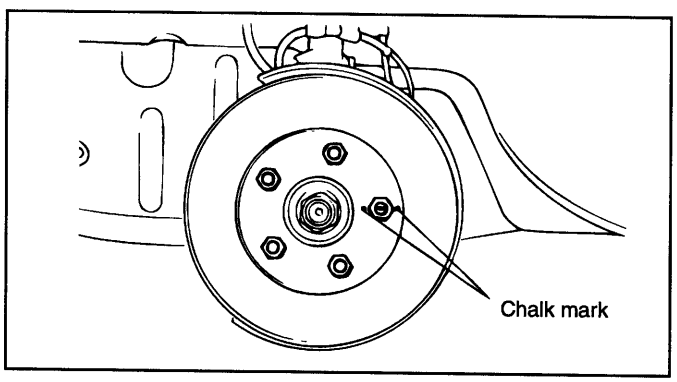

AGX8034A

   2) Remove the brake disc, and then place a dial gauge as shown in the illustration; then move the hub in the axial direction and measure the run out.

Limit : 0.05 mm (0.0020 in.)

If it is equivalent to or exceeds the limit, disassemble the hub knuckle and check each part.

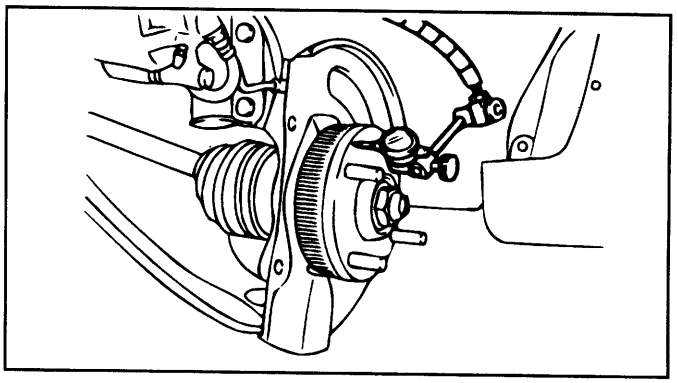

KGX8035A

   3) If the play does not exceed the limit specification, install the brake disc after turning it 180° from the chalk mark, and then check the run out of the brake disc again.

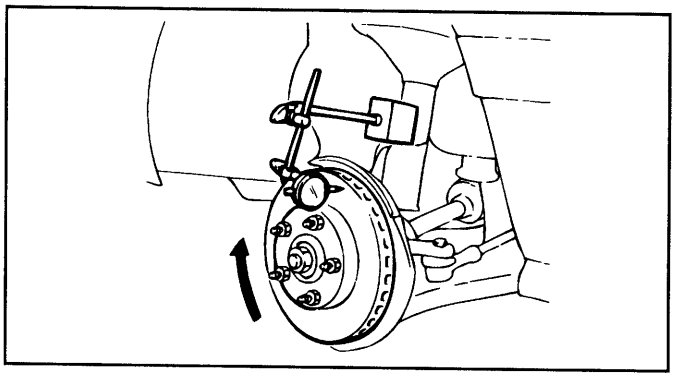

KGX8036A

2. If the run out cannot be corrected by changing the position of the brake disc, replace the brake disc.

INSTALLATION EJJB0220

1. Install the pad clips.
2. Install the pads on each pad clip.

NOTE

1. **All four pads must be replaced as a complete set.**
2. **When replacing the brake pads, check for deformation. When replacing the guide spring, use a new one or thoroughly clean the used one.**

3. Press in the piston with a hammer handle or the special tool.
4. Lower and insert the brake cylinder carefully so as not to damage the boot.
5. Tighten the two guide rod bolts to the specified torque.

Guide rod bolt :

22-32 Nm (220-320 kg·cm, 16-24 lb·ft)

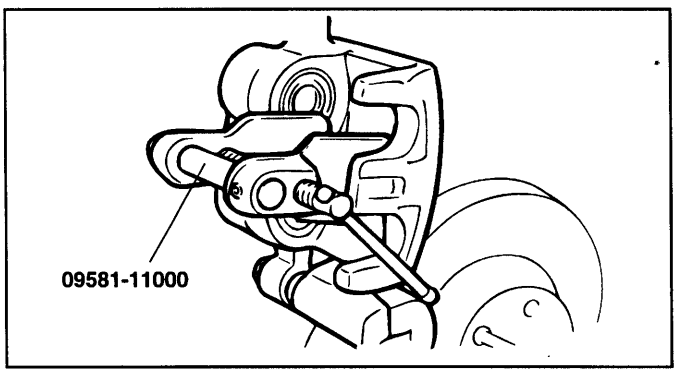

KGX8029A

DISASSEMBLY AND REASSEMBLY EJJB0230

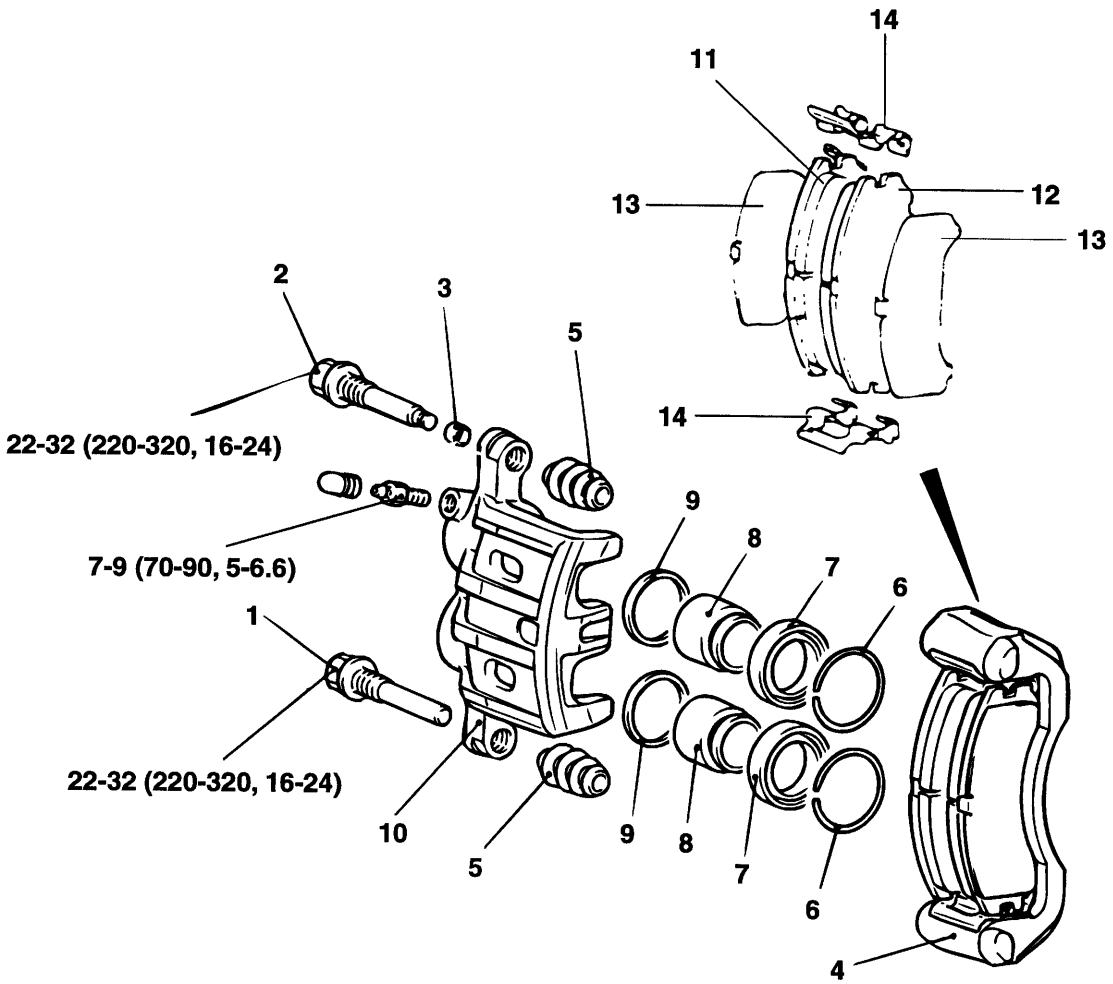

1. Guide bolt
2. Lock pin
3. Bushing
4. Caliper support
5. Boot
6. Boot ring
7. Piston boot
8. Piston
9. Piston seal
10. Caliper body
11. Pad and wear indicator assembly
12. Pad assembly
13. Outer shim
14. Clip

TORQUE : Nm (kg.cm, lb.ft)

AJJA050B

LUBRICATION POINTS EJJB0240

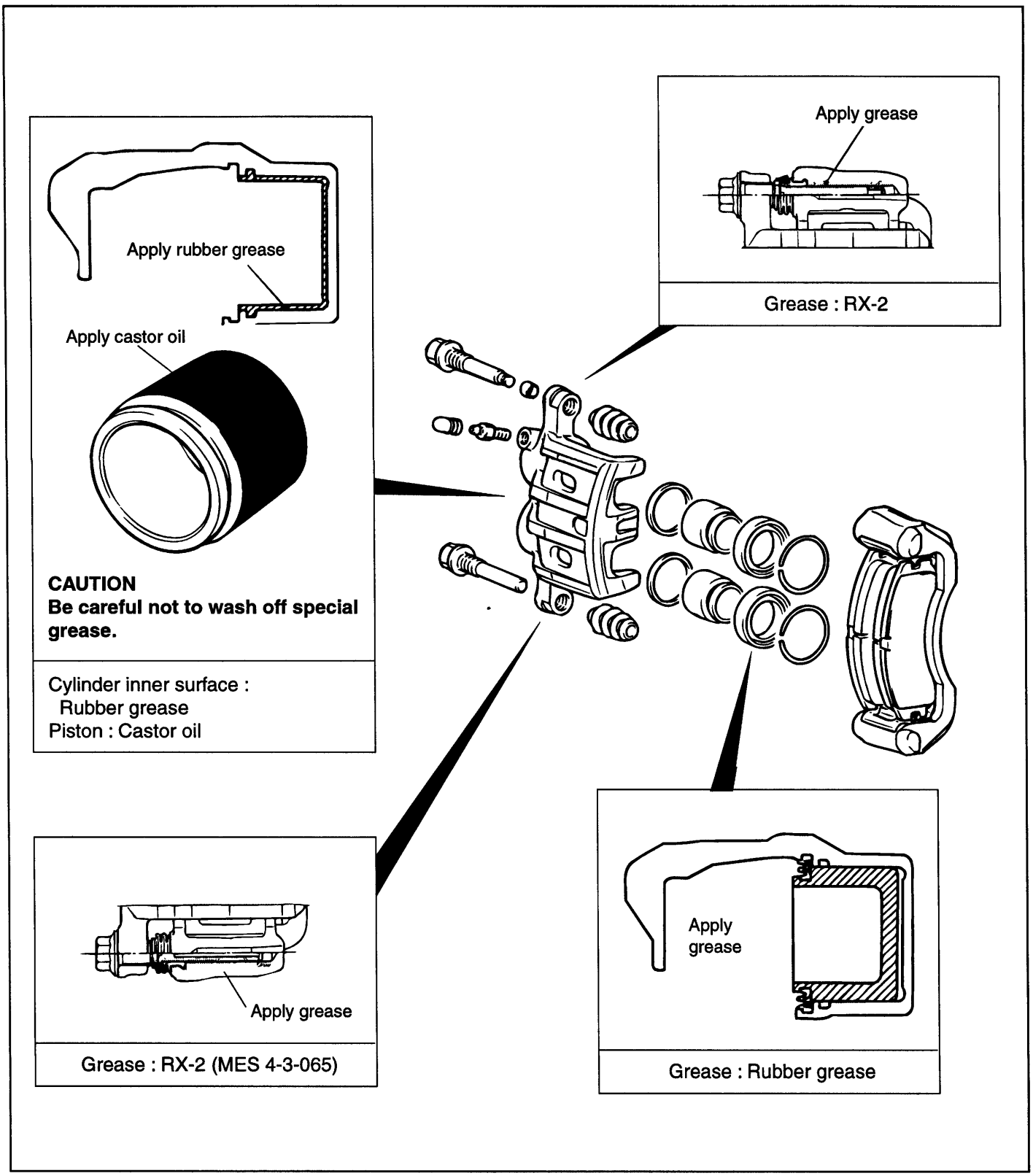

AGX8038A

DISASSEMBLY EJJB0250

Front disc brakes should be disassembled separately.

Do not mix right-hand and left-hand parts.

1. Remove the piston boot/piston.

   Blow compressed air into the brake hose seating hole. Remove the piston and the piston boot.

CAUTION

Remove the piston using a plastic hammer handle. Blow air slowly, adjusting the heights of the two pistons to push them out equally.

The secondary piston should not be removed before the primary piston is removed completely. Otherwise the secondary piston can't be removed.

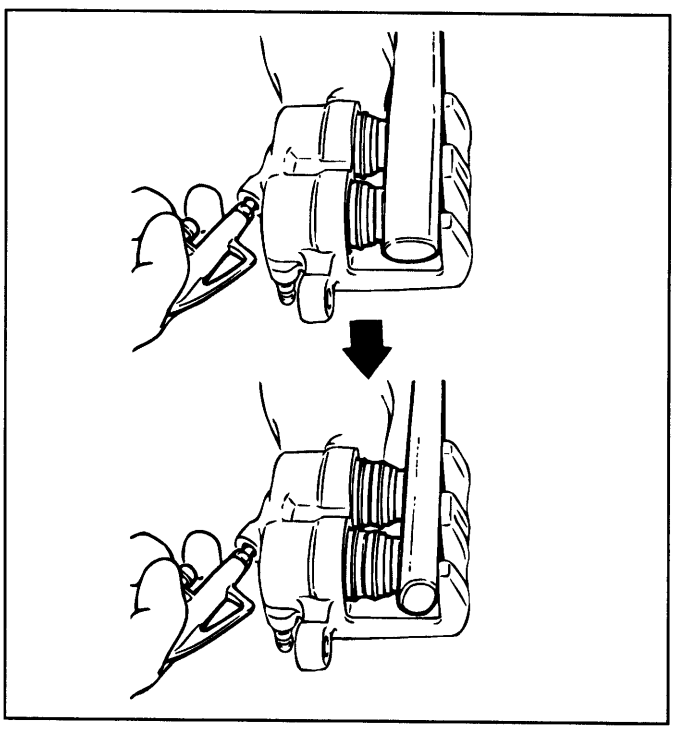

KGX8039A

2. Remove the piston seal.

   1) Remove the piston seal with your finger.

CAUTION

Do not use a screwdriver or another tool because it may damage the cylinder.

   2) Clean the piston surface and cylinder using the alcohol or the specified brake fluid.

Brake fluid : DOT 3 or DOT 4

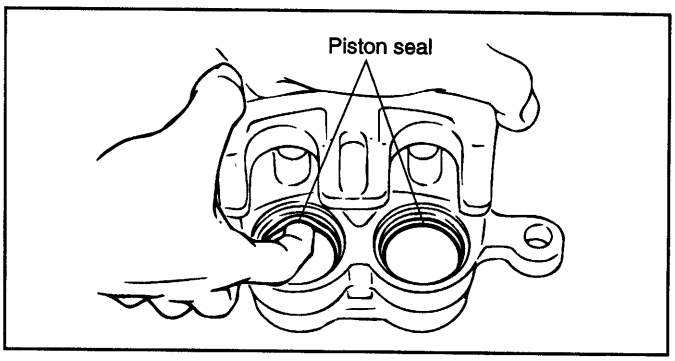

KGX8040A

INSPECTION EJJB0260

1. Check the cylinder for wear, damage and rust.
2. Check the piston surface for wear, damage and rust.
3. Check the caliper body and sleeve for wear.
4. Check that grease is applied, and the pad and backing metal are not damaged.
5. Check the pad wear. Check the pad thickness and replace it if it is less than the specified value.

Item	Specification	Service limit
Pad thickness	10.0 mm (0.39 in.)	2.0 mm (0.08 in.)

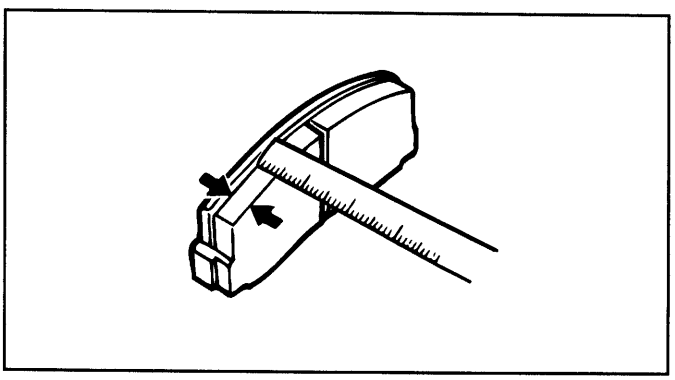

KGX8041A

REASSEMBLY EJJB0270

1. Clean all components with isopropyl alcohol except for the pad and shim.
2. Install the piston seal.
3. After applying the specified brake fluid to the piston outer surface, install the piston into the cylinder.
4. Install the piston boot and boot ring.

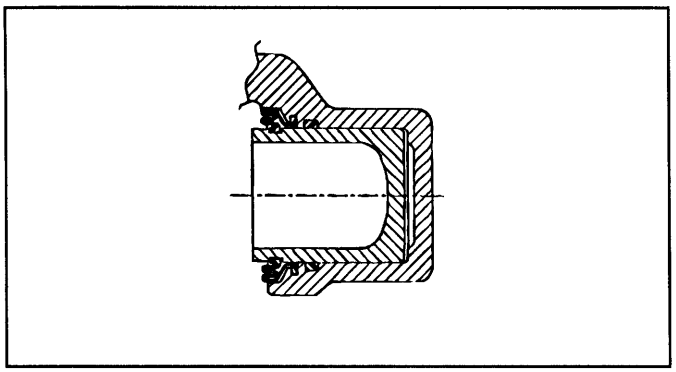

EJHA008A

5. Install the guide pin boots and guide pin.

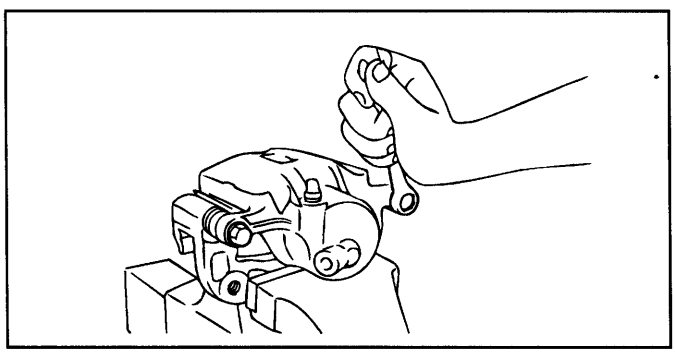

EJA9015J

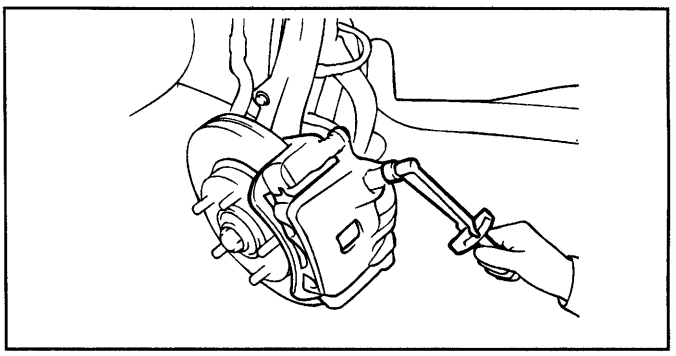

KFW8026A

INSTALLATION EJHA1500

1. Install the pads and brake cylinder.
2. Install the brake hose to the caliper.

Bleeder screw tightening torque :
7-9 Nm (70-90 kg·cm, 5-6.6 lb·ft)

3. Fill the brake reservoir with brake fluid.
4. Bleed the system.

REAR DISC BRAKE

COMPONENTS EJJB0290

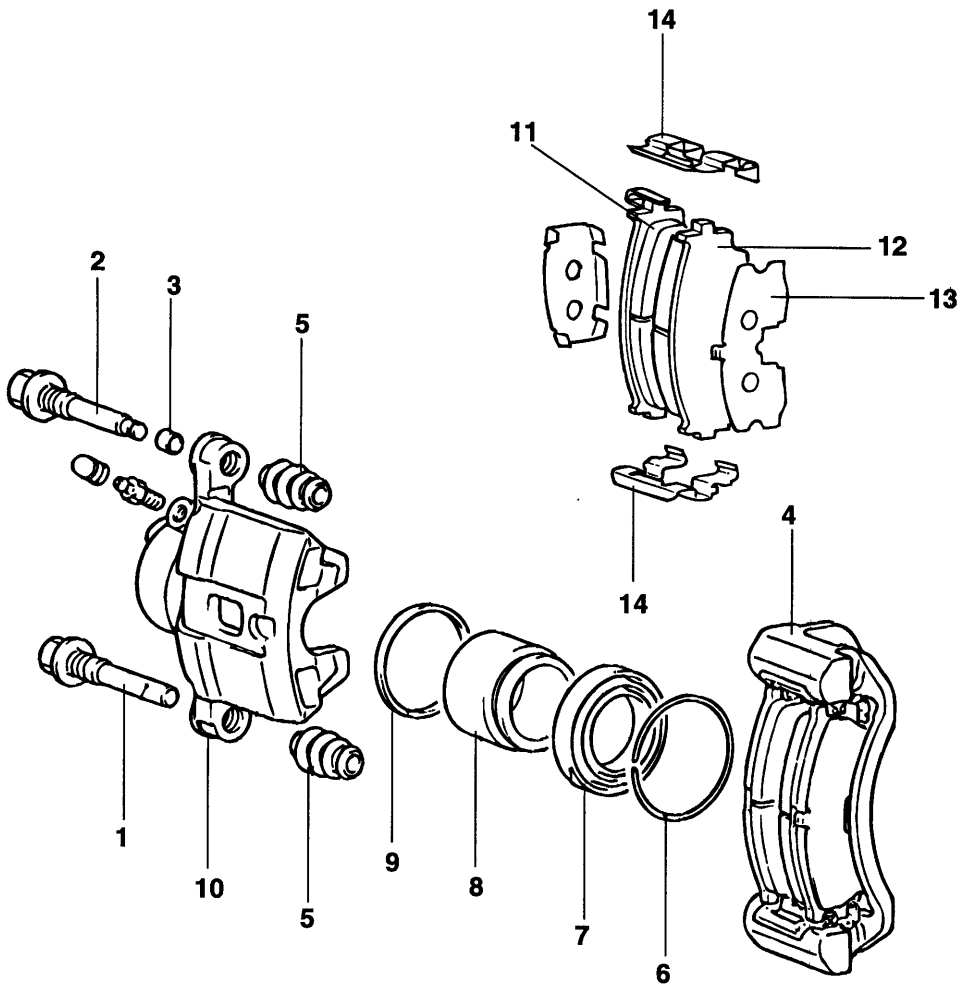

1. Guide bolt
2. Lock pin
3. Bushing
4. Carrier support
5. Boot
6. Boot ring
7. Piston boot
8. Piston
9. Piston seal
10. Caliper body
11. Pad
12. Pad
13. Shim
14. Clip

AJJA030A

LUBRICATION POINTS EJJB0300

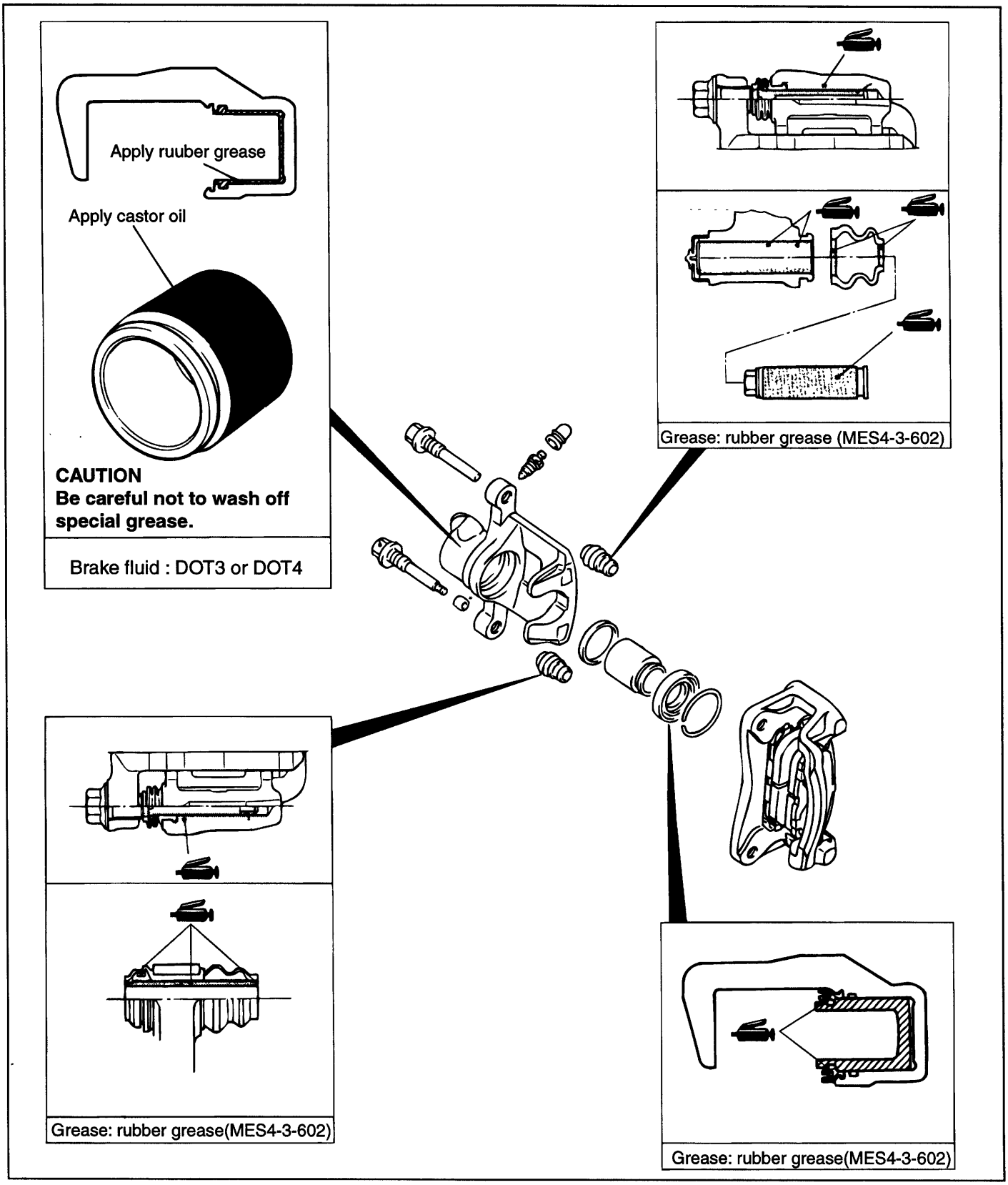

AGX8056A

REMOVAL EJJB0310

1. Remove the wheel.
2. Remove the guide bolt, lift up the caliper assembly, and remove the pad assembly.

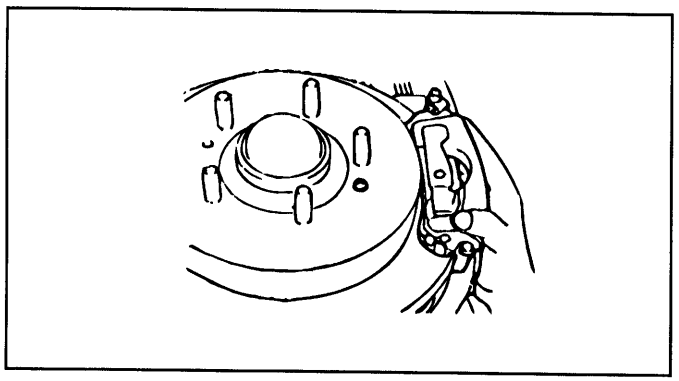

EJJA030B

DISASSEMBLY EJJB0320

Rear disc brakes should be disassembled seperately as a set of left and right.

1. Remove the piston boot/piston.

   Wrap the caliper body with a rag. Blow compressed air into the brake hose, opening and remove the piston and the piston boot.

CAUTION

Blow air slowly.

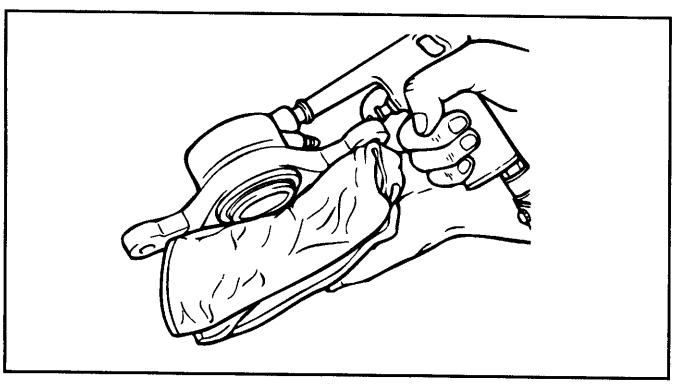

KGX8057A

2. Remove the piston seal.

   1) Remove the piston seal with your finger.

CAUTION

Do not use a screwdriver or another tool in order to avoid damage inside the cylinder.

   2) Clean the piston surface and the inside of the cylinder using alcohol or the specified brake fluid.

Brake fluid : DOT 3 or DOT 4

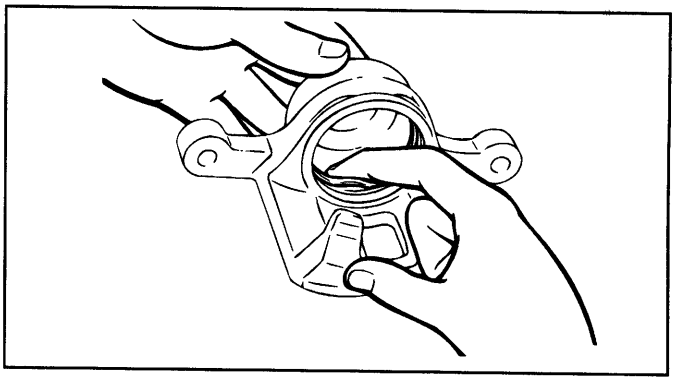

KGX8058A

CHECKING EJJB0330

1. Check the cylinder for wear, damage and rust.
2. Check the piston surface for wear, damage and rust.
3. Check the caliper body and sleeve for wear.
4. Check that grease is applied, and the pad and backing metal are damaged.

INSPECTION EJJB0340

1. Check the pads for wear or oil contamination and replace if necessary.

NOTE

The pads for the right and left wheels should be replaced at the same time.

Pad thickness wear limit : 2.0mm (0.08 in.)

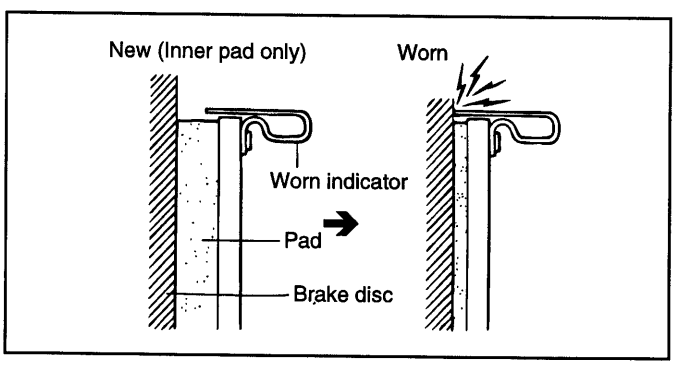

EJA9015E

2. Check for worn or damaged dust boots. If dust or mud had entered the caliper assembly through this seal, the caliper assembly must be replaced or rebuilt.

INSTALLATION EJJB0350

1. Before replacing the brake pads, drain brake fluid from the master cylinder reservoir until it is half full.
2. Install two caliper guide rods and tighten to the specified torque.

Specified torque :

22-32 Nm (220-320 kg.cm, 16.3-23.7 lb.ft)

3. After filling the master cylinder reservoir with the fluid, bleed the brake line.

Recommended brake fluid : DOT 3, DOT 4

REMOVAL EJJB0360

1. Remove the rear wheel.
2. Remove the caliper assembly.
3. Remove the brake hose from the caliper assembly.

DISASSEMBLY

1. Remove the pad.
2. Remove the piston boot from the housing, and remove the piston.

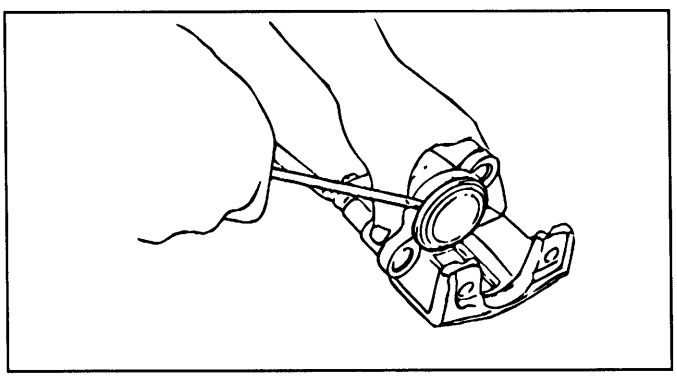

EJJA035D

3. Remove the piston by applying compressed air through the brake hose fitting.

CAUTION

Do not place your fingers in front of the piston when using compressed air.

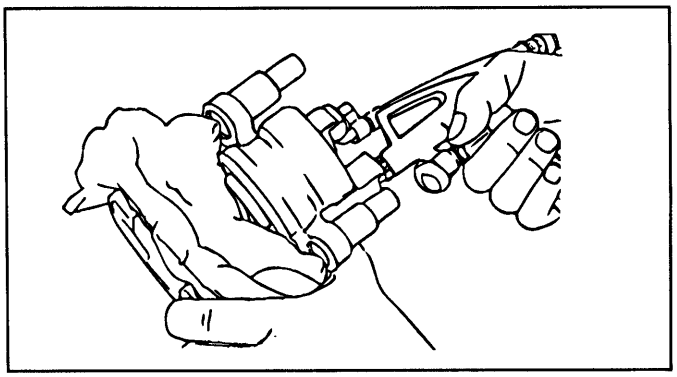

EJJA035E

4. Using a screwdriver, remove the piston seal carefully so as not to damage the cylinder wall.
5. Clean all removed parts with the specified fluid.

ITEM	SPECIFIED FLUID
Metal section	Alcohol or brake fluid
Piston seal	If the oil level is low, add fluid (about 70cc).
Piston boot and other rubber part	Alcohol

CAUTION

Rubber parts should be replaced with new ones but if you want to reuse them, don't put them in alcohol for more than thirty minutes.

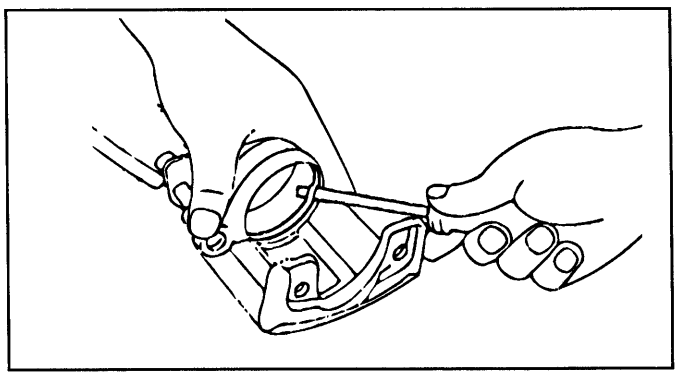

EJJA035F

INSPECTION EJJB0370

1. Check the piston and its inside for wear, damage and rust.

   Replace the damaged parts if necessary.

2. Check the piston seal, boot, and pin insulators for wear and damage.

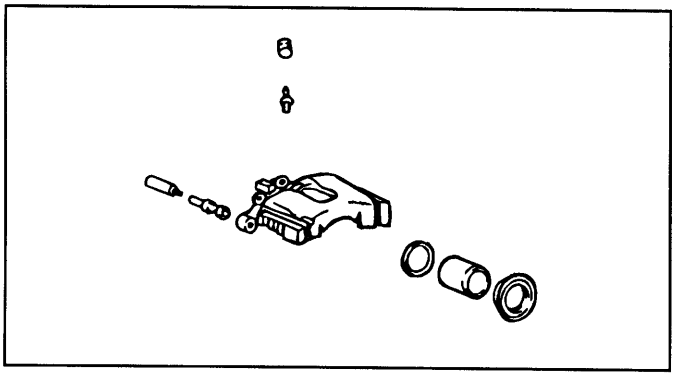

EJJA035G

REASSEMBLY EJJB0380

1. When disassembling the caliper assembly, use a new piston seal and boot.

2. Apply the recommended fluid to the bearing part of the piston seal and piston. Insert the piston seal into grooves inside the caliper, being careful not to twist the seal.

Description	Recommended fluid	Quantity
Piston seal	Brake fluid (DOT3, DOT4)	As required
Inside of piston cylinder	Brake fluid (DOT3, DOT4)	As required
Piston boot	Brake fluid (DOT3, DOT4)	As required
Locating pin insulator	White silicone grease	As required

3. Install the piston boot to the piston.

   Confirm that the concave part of the piston is situated outward and the boot fits in grooves of the piston well.

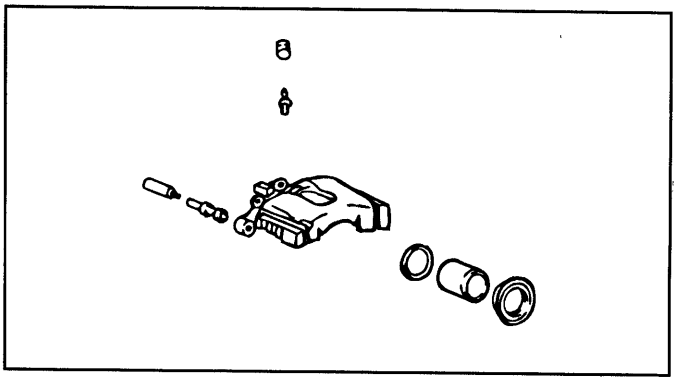

EJJA035G

4. Install the piston and boot in the caliper housing. Insert the boot flange in the caliper housing and check that the boot fits in grooves around the piston.

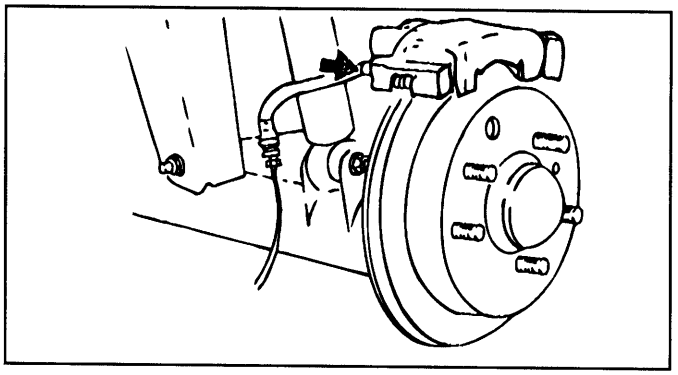

EJJA035H

5. Apply the recommended oil to the inside of the locating pin insulator.

INSTALLATION EJJB0390

1. Refer to "Installation"page BR-17.
2. Perform a road test.

NOTE

If there is a small quantity of air in the brake line, it can affect the brake pedal stroke so you must bleed the system carefully.

CAUTION

When replacing the piston seal, check the pedal stroke.

If the pedal stroke is too great, the piston may not retain the piston seal.

Adjust as follows :

1. **After removing the pad from the piston, push the piston into the cylinder 3-5mm. Put a lever or steel plate between the piston and disc, being careful not to damage the contact surface of the disc or the piston end.**
2. **Install the pad. Restore the brake pedal to the original position and step on it 2-3 times.**
3. **Repeat the above procedure more than 5 times and move the piston outward and inward to assure that the piston seal is properly installed.**
4. **Before driving a vehicle, step on the brake pedal and release it many times.**
5. **Perform the road test.**

BRAKE DISC EJJB0400

REMOVAL

1. Remove the wheel.
2. Remove the caliper assembly from the anchor plate and suspend it with a wire.
3. After loosening the 2 screws on the disc, remove the disc.

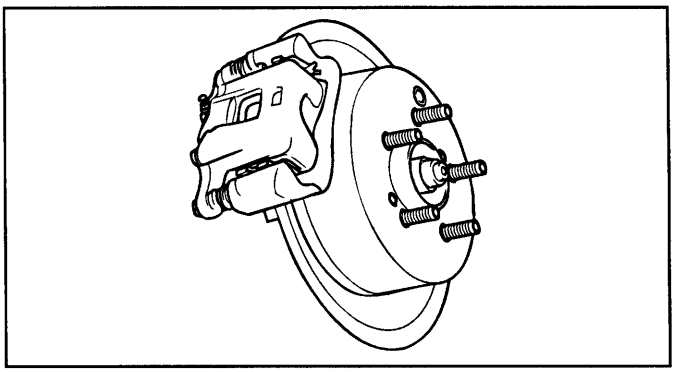

EJJA030E

INSPECTION EJJB0410

Check the disc for wear or damage and replace if necessary.

ITEMS	Standard value	Service limit
Thickness of disc	10mm (0.39 in.)	8.4mm (0.33 in.)
Runout	-	0.04mm (0.0016 in.)

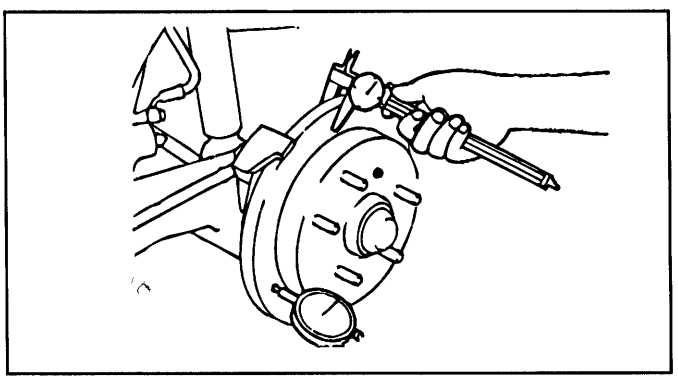

EJJA035J

REAR DRUM BRAKE

COMPONENTS EJJB0440

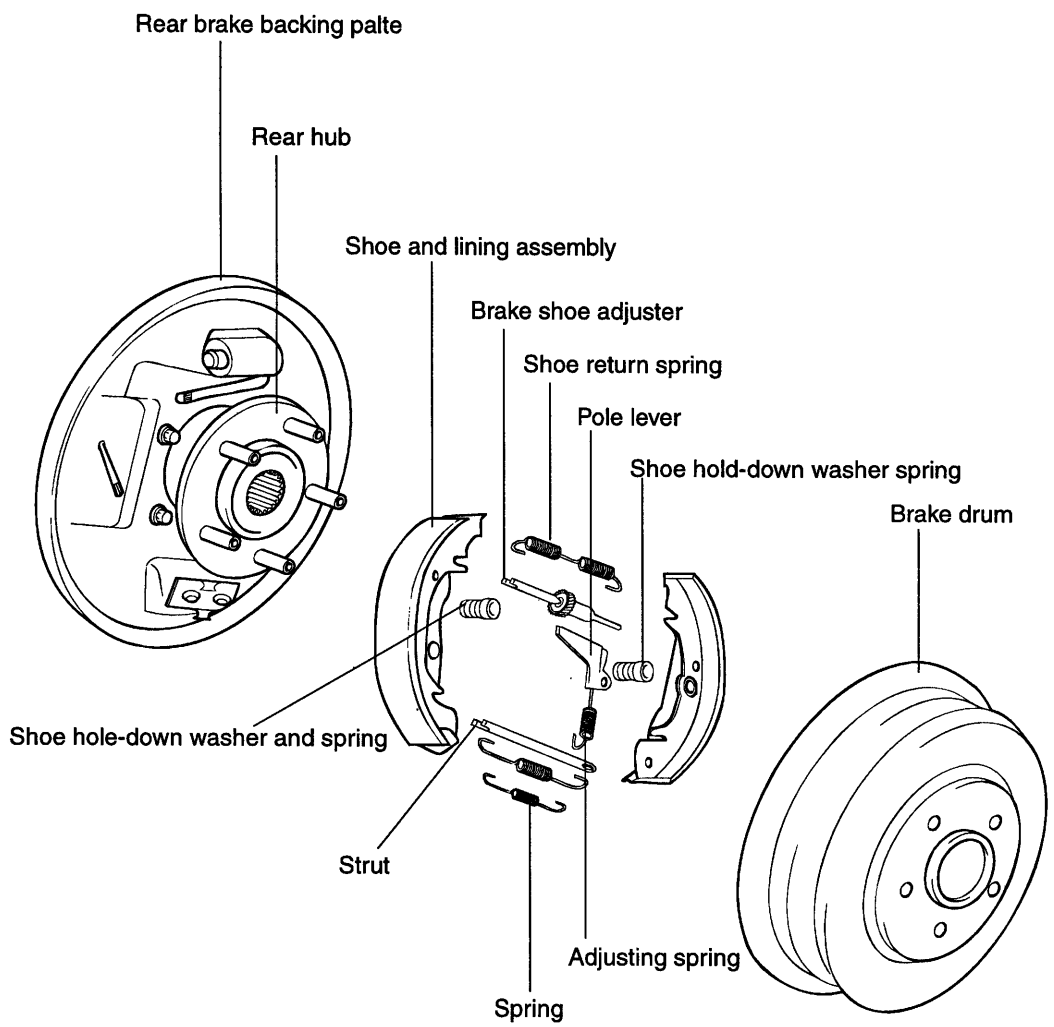

Removal steps
1. Wheel and tire
2. Brake drum
3. Shoe hold-down spring
4. Strut
5. Shoe return spring
6. Shoe and lining assembly

AJJA005A

INSPECTION EJJB0450

1. Measure the brake drum inside diameter. Check the runout of the brake drum using a dial indicator.

ITEM	Standard value	Service limit
Inside diameter mm (in.)	254 (100)	256 (10.08)

CAUTION

If the brake drum inside diameter is greater than the service limit, replace the brake drum.

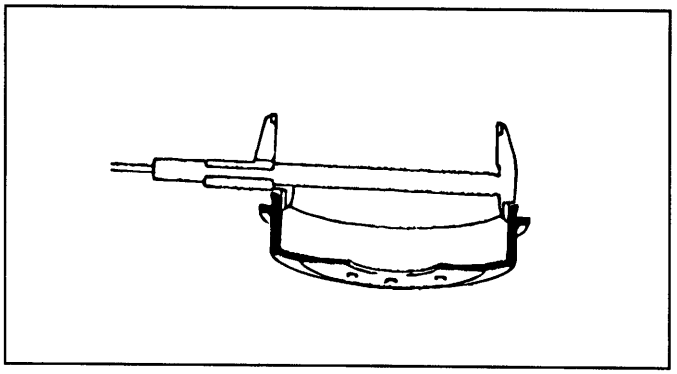

EJA9018C

2. Measure the brake shoe lining thickness.

	Standard value	Service limit
Lining thickness mm (in.)	4.5 (0.18)	1.5 (0.059)

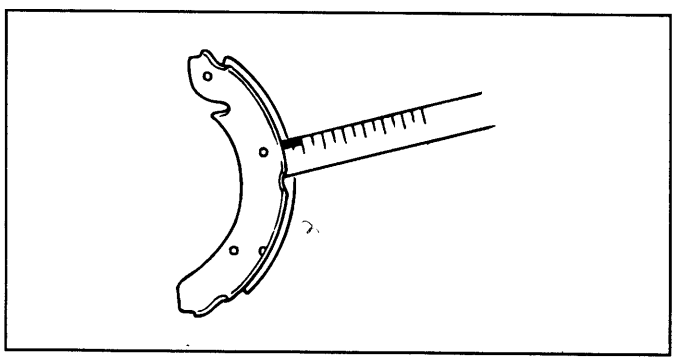

EJA9018D

CAUTION

If the brake lining thickness is less than the service limit, replace the brake shoe.

3. Inspect the brake lining and drum for proper contact.

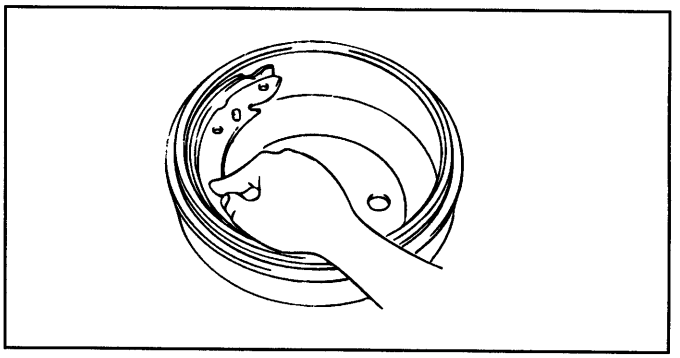

EJA9018E

4. Inspect the outside of the wheel cylinder for excessive corrosion and damage.

PARKING BRAKE SYSTEM

PARKING BRAKE

ADJUSTMENT PROCEDURE EJJB0420

PARKING BRAKE STROKE ADJUSTMENT

1. Pull the brake lever with force of 200N (20kg, 44lbs) and count the number of notches.

NOTE

Pull the brake lever with the force of 20kg.

ITEM	Spec.
Parking brake stroke	7 clicks

2. If the parking brake stroke is out of the standard value, adjust it as follows :
   1) Remove the console.
   2) Loosen the adjusting nut on the end of the cable rod.

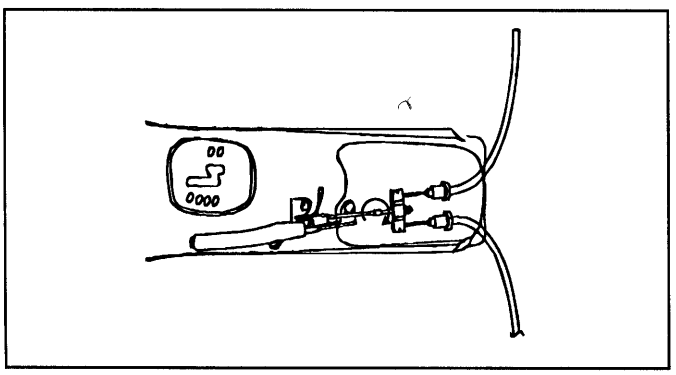

EJJA040A

   3) Remove the adjusting hole plug, and then turn the adjuster the direction of the arrow. To prevent the disc from rotating, use a screwdriver.
   4) Turn the adjuster 5 notches in the opposite direction of arrow.

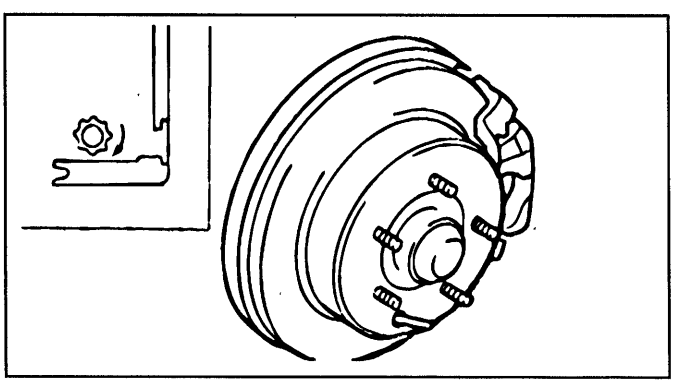

EJJA040B

   5) Turn the adjuster nut to adjust the parking brake stroke to the specification.

NOTE

If the number of parking brake notches is less than the specification, loosen the readjuster nut and readjust.

   6) After adjusting, check that there is no gap between the adjusting nut and pin and that the adjusting nut is fixed in the nut holder precisely.
   7) After adjusting the parking brake stroke, raise the rear of vehicle.
   8) Check that the rear brakes do not drag by turning the rear wheel when the parking brake lever is released.

INSPECTION OF PARKING BRAKE SWITCH

1. Disconnect the parking brake switch connector, and then connect the tester to the parking brake switch and the bolt fixing the switch.
2. If there is continuity when the parking brake lever is pulled and there is non-continuity when it is released, the parking brake switch is good.

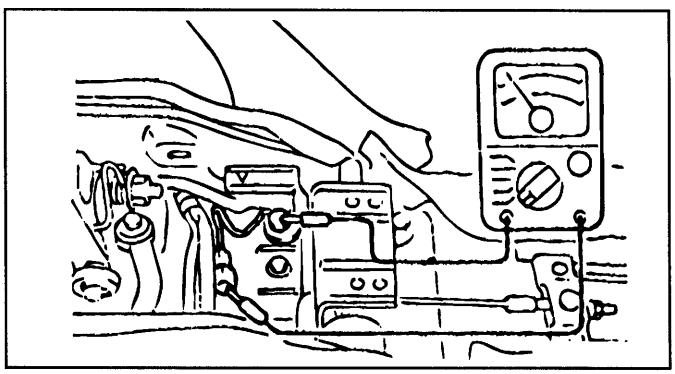

EJJA040C

PARKING BRAKE LEVER AND PARKING BRAKE CABLE EJJB0430

COMPONENTS

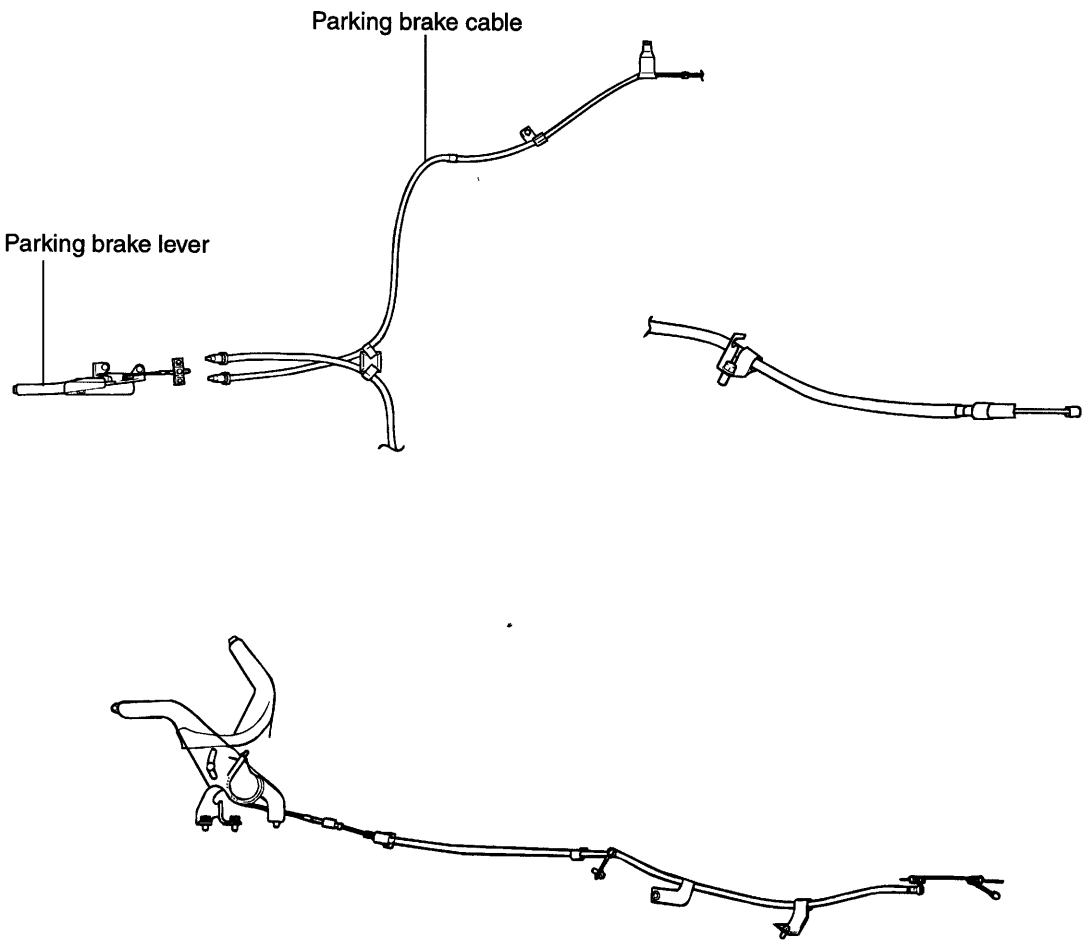

Removal steps for the of lever
1. Remove the console
2. Loosen the lever adjusting nut
3. Detach the cable from the lever
4. Removal the lever mounting bolts
5. Disconnect the parking brake switch connector

Removal steps for the calbe
1. Remove the console
2. Loosen the lever adjusting nut
3. Detach the cable from lever
4. Remove the muffler protector
5. Remove the bolts mounting the cable (on the body)
6. Remove the cable clip from the rear drum
7. Remove the parking cable from the rear drum

AJJA045A

ABS (ANTI-LOCK BRAKE SYSTEM) EJJB2000

SPECIFICATION (ABS)

Part	Standard value	Remark
System		
Type	Solenoid/Solenoid	
Mode	ABS + EBD + BTCS	
ECU		
Operating voltage	10V - 16V	
Operating temperature	-40°C - 110°C	
Warning lamp		
ABS		
Operating current	12V	
EBD		
Consumption current	80mA	
Wheel speed sensor		Min. pin-to-pin voltage 130mV
Internal resistance		
Front	1100Ω ± 50Ω	
Rear	1100Ω ± 50Ω	
Insulation resistance	Min. 1000kΩ	
Air gap		
Front	0.3-0.9 mm	
Rear	0.2-0.7 mm	
Tone wheel	47 teeth	
HECU (Hydraulic and Electronic Control Unit)		o LPA : Low Pressure, Accumulator o HPA : High Pressure, Accumulator o NO : Normal Open o NC : Normal Close
Pump capacity	2.45 cc/sec	
Accumulator amount		
LPA	3.0cc	
HPA	6.0cc	
NO solenoid vlave		
Front	Ø0.70mm	
Rear	Ø0.40mm	
NC solenoid valve		
Front	Ø0.56mm	
Rear	Ø0.40mm	
Pump orifice	Ø0.5mm	

TIGHTENING TORQUE (ABS)

EJHA2050

	Nm	kg.cm	lb.ft
Sensor mounting bolt on the brake plate			
Front	0.4-0.6	4-6	0.29-0.43
Rear	0.4-0.6	4-6	0.29-0.43
Hydraulic & electronic control unit mounting bolt	0.8-1.0	8-10	0.58-0.72
Hydraulic & electronic control unit mounting bracket bolt	1.7-2.6	17-26	1.23-1.88

SYSTEM COMPONENT EJHA2100

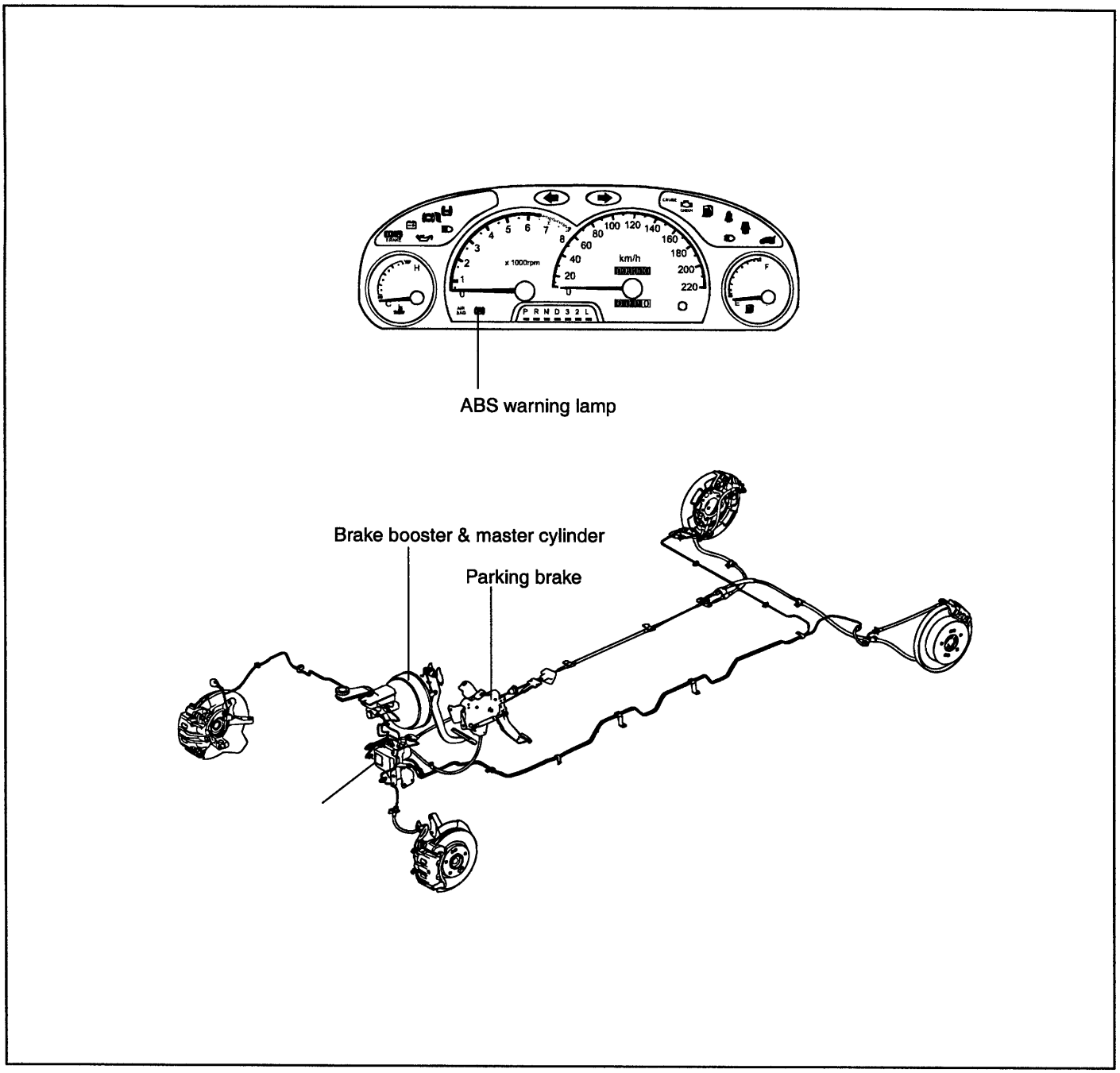

EJHA020B

The Anti-Lock Brake System (ABS) controls the hydraulic brake pressure of all four wheels during braking on hazardous road surfaces, preventing the wheels from locking up. ABS provides the following benefits :

1. Enables steering around obstacles with a greater degree of certainty, even during emergency braking.
2. Enables stopping during emergency braking while keeping stability and steerability even on curves.

If a malfunction occurs, a diagnosis function and fail-safe system are included for serviceability.

The hydraulic electronic control unit (HECU) recieves signals about the vehicle's speed, direction and road conditions from sensors at the wheels.

Based on these signals, the control unit will determine the optimum amount of wheel spin.

EBD (ELECTRONIC BRAKE-FORCE DISTRIBUTION) EJHA2150

EBD, instead of the proportioning valve, delivers ideal distribution of hydraulic pressure to the front and rear brakes. This prevents rear wheel lock up and provides higher brake efficiency within the range of brake application.

ADVANTAGES

- Functional improvement of the basic-brake system
- Compensation for different friction coefficients
- Elimination of the proportioning valve
- Failure notification by warning lamp

COMPARISON BETWEEN PROPORTIONING VALVE AND EBD

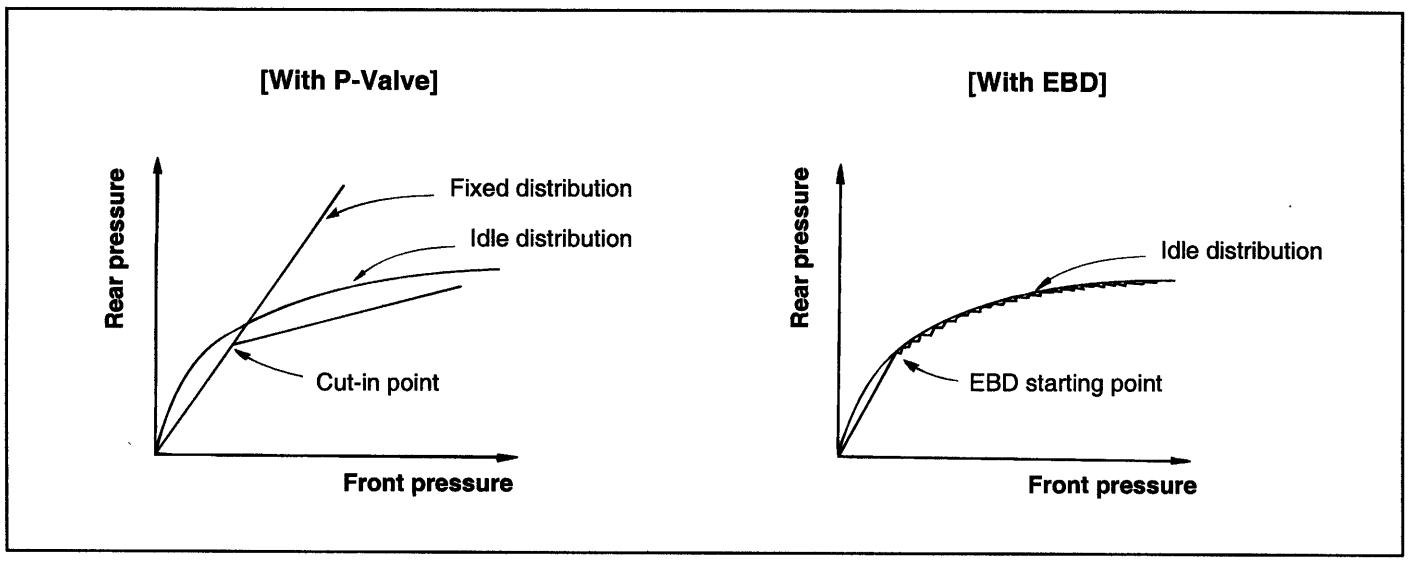

EJA0032A

INSPECTION AT HECU TERMINALS EJJB2200

TERMINAL VOLTAGE CHART

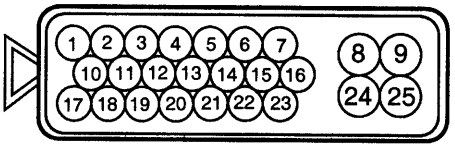

EJHA025A

Terminal No.	Description	Condition	Output
9	• Battery power source 1 • Solenoid valve power source	Always	System voltage
8	Ground	Always - In ABS control	
7	Diagnosis interface terminal (K-Line)	Data to the Hi-Scan	
5 1 19 23	Wheel speed sensor (Left rear) Wheel speed sensor (Left front) Wheel speed sensor (Right front) Wheel speed sensor (Right rear)		Resistance R=1.1kΩ ± 50% Min. detectable voltage 130mV peak to peak voltage at 50Hz
6 2 20 22	Wheel speed sensor (Left rear) Wheel speed sensor (Left front) Wheel speed sensor (Right front) Wheel speed sensor (Right rear)		
4	Power input via ignition 2 switch	Ignition 2 condition	Over voltage detection : between 16.5V ± 0.5V and 20V Suspend voltage detection : between 7.0V ± 0.5 and 9.5V ± 0.5 System off : below 5.5V ± 0.5
25	• Battery power source 2 • Motor power source	Always	• System voltage • Max. current : below 100A (before 100msec.) • Rated current : below 30A (after 100msec.)
24	Ground	G05	
16	ABS & EBD warning lamp	Energized ABS relay	Max. current : below 200mA Max. voltage 40V
18	Brake lamp switch input terminal		Input voltage threshold 1.00V - 2.75V 5.00V - 16.00V
17	TCS warning lamp		Max. current : below 200mA

Terminal No.	Description	Condition	Output
13	TCS switch		Input voltage -1.0V - 16.0V
10	Wheel speed sensor output (Left front)		Max current : below 10mA External resistance : 10kΩ or more
3	Wheel speed sensor output (Right front)		
12	Wheel speed sensor output (Left rear)		
14	Wheel speed sensor output (Right front)		

DIAGRAM OF INPUT/OUTPUT FOR HECU EJHA2250

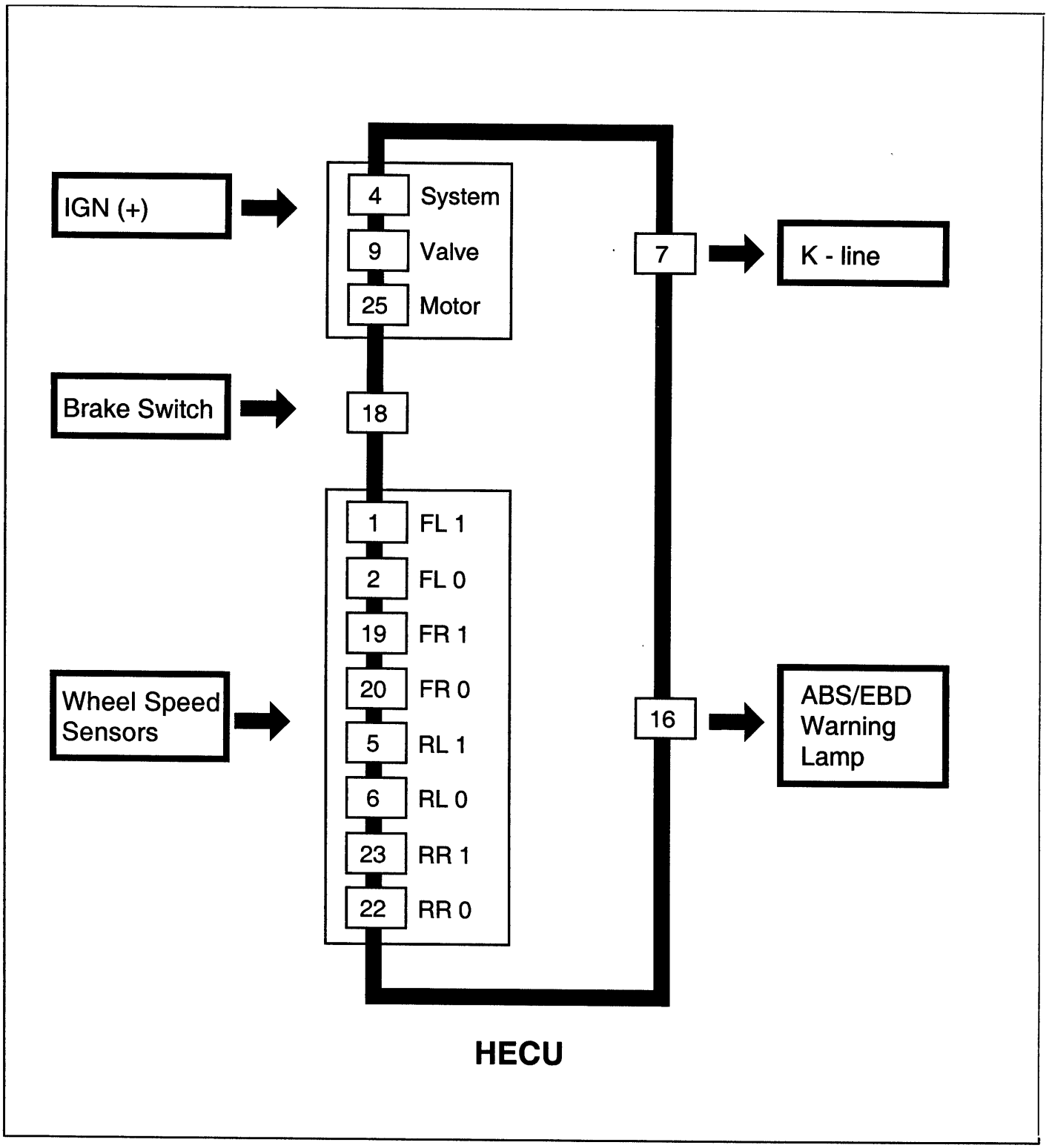

EJHA030B

SYSTEM DIAGRAM EJHA2300

[ABS]

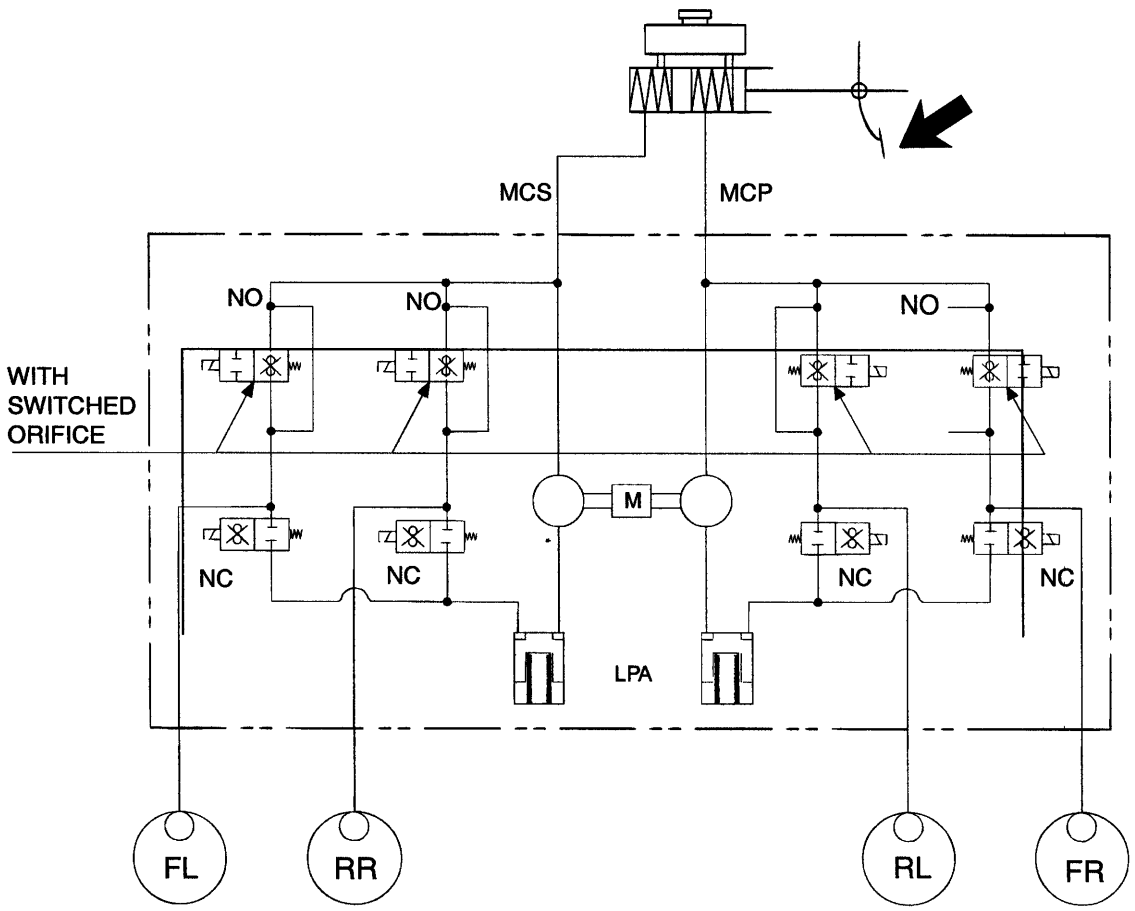

MCS : Master Cylinder Secondary
MCP : Master Cylinder Primary
NO : Normal Open
NC : Normal Close
M : Motor & Pump
LPA : Low Pressure Accumulator

EJHA015A

STANDARD FLOW OF DIAGNOSTIC TROUBLESHOOTING EJHA2400

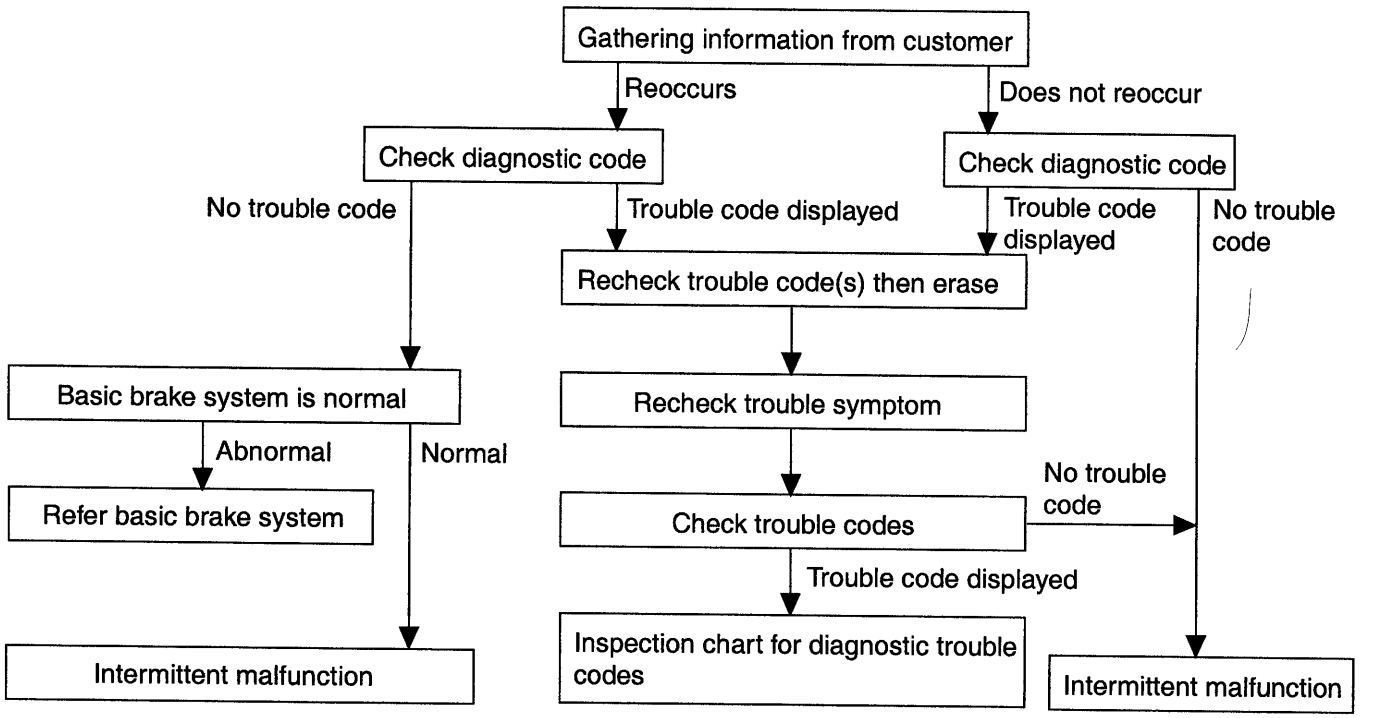

EJDA015A

*** Using the customer problem analysis check sheet for reference, ask the customer as much detail as possible about the problem.**

NOTES WITH REGARD TO DIAGNOSIS EJHA2450

The phenomena listed in the following table are not abnormal.

Phenomenon	Explanation
System check sound	When starting the engine, a thudding sound can sometimes be heard coming from inside the engine compartment. This is because the system operation check is being performed.
ABS operation sound	1. Sound of the motor inside the ABS hydraulic unit operation (whine). 2. Sound is generated along with vibration of the brake pedal (scraping). 3. When ABS operates, sound is generated from the vehicle chassis due to repeated brake application and release. (Thump : suspension; squeak: tires)
ABS operation (Long braking distance)	For road surfaces such as snow-covered and gravel roads, the braking distance for vehicles with ABS can sometimes be longer than that for other vehicles. Accordingly, advise the customer to drive safely on such roads by lowering the vehicle speed.
Pedal kickback	It's normal operation.
Diagnosis detection conditions can vary depending on the diagnosis code. When checking the trouble symptom after the diagnosis code has been erased, ensure that the requirements listed in "Comment" are met.	

ABS CHECK SHEET EJHA2500

ABS Check Sheet	Inspector's Name _____

Customer's Name	_____	**Registration No.**	
		Registration Year	/ /
		VIN.	
Date Vehicle Brought In	/ /	**Odometer**	Km Miles

Date the Problem First Occurred	/ /
Frequency of Occurence of Problem	☐ Continuous ☐ Intermittent (times a day)

Symptoms	☐ ABS does not operate.		
	☐ ABS does not operate efficiently.	☐ Intermittent (	times a day)
	ABS Warning Light Abnormal	☐ Remains ON	☐ Does not light up

Diagnostic Trouble Code Check	**1st Time**	☐ Normal Code	☐ Malfunction Code (Code)
	2nd Time	☐ Normal Code	☐ Malfunction Code (Code)

EJDA017A

HI-SCAN CHECK EJHA2550

1. Turn the ignition "OFF".
2. Connect the Hi-Scan or Hi-Scan Pro to the data link connector located underneath low crash pad panel.
3. Turn the ignition "ON".
4. Use the Hi-scan to check for diagnostic trouble codes.
5. After completion of the repair or correction of the problem, turn the ignition switch; then erase the stored faults codes using the clear key on the Hi-Scan.
6. Disconnect the Hi-Scan.

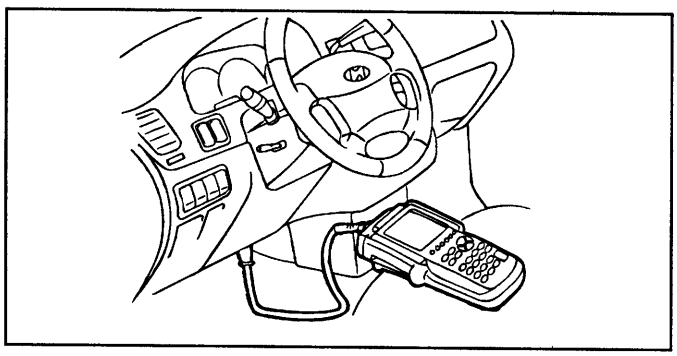

ERHA006A

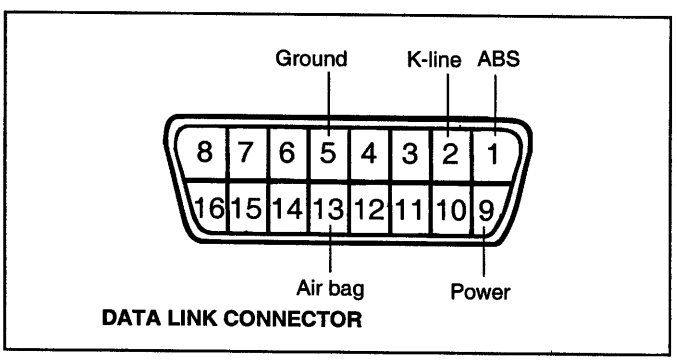

DATA LINK CONNECTOR

EJHA100A

INSPECTION CHART FOR DIAGNOSTIC TROUBLE CODES EJJB2600

Inspect according to the inspection chart that is appropriate for the malfunction code.

DTC on Hi-Scan	Description
C1101	Too high battery voltage (over 18V)
C1102	Too low battery voltage (below 9V)
C1200	FL wheel sensor : open or short to GND
C1201	-Range / Performance : exciter or speed jump error
C1202	- No signal : air-gap error
C1203	FR wheel sensor : open or short to GND
C1204	- Range / Performace : exciter or speed jump error
C1205	- No signal : air-gap error
C1206	RL wheel sensor : open or short to GND
C1207	- Range / Performanace : exciter or speed jump error
C1208	Battery voltage over volt (over 18V)
C1209	RR whel sensor : open or short to GND
C1210	- Range / Performance : exciter or speed jump error
C1211	Battery voltage over volt (over 18V)
C1604	Harware (including valve failures)
C2112	Valve relay (including fuse failure)
C2402	Electrical (Pump-Motor)

ACTUATOR DRIVING

No.	Description	Condition	Recognition	Time
01	Motor	KEY ON ENG. OFF	Motor pump relay operation (Click sounds)	2 seconds
02	Front left valve (In)		Front left solenoid valve operation (Click sounds)	
03	Front right valve (In)		Front right solenoid valve operation (Click sounds)	
04	Rear left valve (In)		Rear left solenoid valve operation (Click sounds)	
05	Rear right valve (In)		Rear right solenoid valve operation (Click sounds)	
06	Front left valve (Out)		Front left solenoid valve operation (Click sounds)	
07	Front right valve (Out)		Front right solenoid valve operation (Click sounds)	
08	Rear left valve (Out)		Rear left solenoid valve operation (Click sounds)	
09	Rear right valve (Out)		Rear right solenoid valve operation (Click sounds)	

CURRENT DATA

No.	Description	Recognition	Unit
1	Battery	Battery	Voltage
2	FL wheel speed SNSR	Front left wheel speed sensor	km/h
3	FR wheel speed SNSR	Front right wheel speed sensor	
4	RL wheel speed SNSR	Rear left wheel speed sensor	
5	RR wheel speed SNSR	Rear right wheel speed sensor	
6	ABS SRI status	Warning lamp	ON/OFF
7	Brake SW	Brake switch	
8	Motor pump relay	Motor relay	
9	Valve relay	Valve relay	
10	Motor pump status	Motor	
11	FL valve (In)	Front left valve (In)	
12	FR valve (In)	Front right valve (In)	
13	RL valve (In)	Rear left valve (In)	
14	RR valve (In)	Rear right valve (In)	
15	FL valve (Out)	Front left valve (Out)	
16	FR valve (Out)	Front right valve (Out)	
17	RL valve (Out)	Rear left valve (Out)	
18	RR valve (Out)	Rear right valve (Out)	

FAILSAFE SPECIFICATION

Detect timing A : Initial check mode B : Out of control C : ABS control mode D : EBD control mode E : Diagnostic mode

No.	DTC	Failure Locations	Detect mode	Condition for Detection	Management			Conditions for Restoration	ABS W/L	EBD W/L	Detect timing				
					Out of control	EBD control mode	ABS control mode				A	B	C	D	E
1	C1101	Power supply	Over voltage of VIGN	When VIGN>18V continue 224ms, ECU detects the failure.	All wheel inhibit	All wheel inhibit	All wheel inhibit	VIGN < 17V	O	O	O	O	O	O	
	C1102		Voltage drop of VIGN	When VIGN<9V or VREF<9V continues 224ms, ECU detects the failure.	ABS inhibit (permit EBD control)	Continue EBD control	ABS inhibit	VIGN>10V and VREF>10V continue 224ms. But in case of ABS control mode, all wheels inhibit until end of ABS control.	O	-	O	O	O	O	
			Voltage drop of VIGN (EBD inhibit)	When VIGN<7.5V or VREF<7.5V continues 70ms, ECU detects the failure.	All wheel inhibit	All wheel inhibit	All wheel inhibit	VIGN>9V and VREF>9V continue 70ms	O	O					
2	C1604	Actuator	Interruption or short circuit of actuator	Master CPU always sends a test pulse (about 200s) to valves, and feedback signal returns into master and slave CPU. When feedback signal is not equal to test signal, CPU recognizes the actuator failure. Monitoring time is 56ms. If the CPU detects a voltage drop or overvoltage, failure of the actuator is not detected.	System down	System down	System down	Restart	O	O	O *1	O	O	O	
	C2112 VREF< 6V	Main relay	Interruption or short circuit of main relay								O *1	O	O	O	

No.	DTC	Failure Locations	Detect mode	Condition for Detection	Management			Conditions for Restoration	ABS W/L	EBD W/L	Detect timing				
					Out of control	EBD control mode	ABS control mode				A	B	C	D	E
3	C1604	Main relay	Interruption or short circuit of inhibit signal	With the initial check, the main CPU checks the functions of sub CPU inhibit signal and custom IC inhibit circuit.	System down	-	-	Restart	O	O	O				
			Interruption or short circuit of main relay	1) IG-SW ECU checks VREF just after IGN-SW ON, and detects the failure. OFF: voltage is below 2.5V, voltage is over 4.2V (short or leak) — 105ms ON: voltage is velow 6V (open) — 105ms — If the ECU detects un-usual VIGN, failure isn't detected	System down	-	-	Restart	O	O	O				
	C112			When voltage is below for 224ms, ECU detects the failure. But if the ECU detects a voltage drop or overvoltage, the failure is not detected.	System down	System down	System down	Restart	O	O	O *1	O	O	O	
4	FL : C1200 FR : C1203 RL : C1206 RR : C1209	Wheel speed sensor	Interruption or short circuit of wheel speed sensor	The CPU detects the failure by checking voltage of the wheel speed sensor with a velocity of 0km/h. Sensor voltage is below 0.4V or over 2.7V Monitoring time=196ms	Manage-ment A	Manage-ment B	Manage-ment C	Restart	O	O *a	O	O	O	O	

No.	DTC	Failure Locations	Detect mode	Condition for Detection	Management			Conditions for Restoration	ABS W/L	EBD W/L	Detect timing				
					Out of control	EBD control mode	ABS control mode				A	B	C	D	E
4	FL : C1201 FR : C1204 RL : C1207 RR : C1210	Wheel speed sensor	Intermittent interruptions or short circuit of sensor. Defect of air gap, or sensor wheels, or clearance of bearing	After wheel velocity changes over 30km/h per 7ms (over 120G), if there is the difference between calibrated wheel velocity and monitoring velocity continuously beyond the constant, ECU detects the failure.	Management B	Management B	Management C	To meet EC regulations, all wheel sensing inhibits and ABS warning lamp turns on until vehicle velocity > 20km/h after restart.	O	O *a		O	O	O	O
	FL : C1202 FR : C1205 RL : C1208 RR : C1211		Missing sensor signal Too large air gap Sensor wheel is not installed	When starting the vehicle, ECU detects the following conditions. 1. $V_{MAX} \geq$ 40km/h and $V_{ref} \leq 0.6 \times V_{MAX}$ Monitoring time 120s.	Management B	Management B	Management C	To meet EC regulations, all wheel sensing inhibits and ABS warning lamp turns on until vehicle velocity > 20km/h after restart.	O	O *a		O	O	O	
				2. Within the range of 7 to 20km/h, if the wheel speed sensor reports 6 km/h continuously, the ECU will report a failure for that wheel.	Management B	-	-					O			
				3. If the vehicle speed is over 20km/h for 120 seconds but the wheel speed sensor reports 6km/h continuously for 120 seconds, the ECU will report failure for that wheel.	Management B	-	-					O			
			Too large air gap Long term EMI	In ABS control, if the pressure decrease mode and hold mode continue, for 14sec., ECU detects the failure.	-	-	Management C	To meet EC regulations, all wheel sensing inhibits and ABS warning lamp turns on until vehicle velocity > 20km/h after restart.	O	O *a			O		
	C1604		Defect of clearance of bearing EMI/IGN noise	When there are over 32 pulses from the wheel sensor within 7ms, ECU detects the failure.	System down	System down	System down	Restart	O	O	O	O	O	O	

No.	DTC	Failure Locations	Detect mode	Condition for Detection	Management			Conditions for Restoration	ABS W/L	EBD W/L	Detect timing				
					Out of control	EBD control mode	ABS control mode				A	B	C	D	E
5	C2402	Motor Motor relay	Interruption or short circuit of motor/motor relay	Monitoring VMS, ECU detects the failure. over 6.5V: 1785ms below 6.5V: 196ms When VIGN is unusual, ECU does not detect the failure.	ABS inhibit (permit EBD control	Continue EBD control	ABS inhibit	If ECU detects the failure of motor relay output ON or motor lock(see 7-(2)), after checking main relay failure at initial check, ECU unconditionally checks motor and motor relay with motor ON for 560ms. If ECU detects motor lock, ECU repeats the same check. After that, in case of an unusual condition, ECU recognizes the failure. This step meets the EC regulation.	O	-	O *2	O *2	O	O	
			Interruption of motor Motor lock	1. Monitoring decrease of VMS, ECU detects the failure. Monitoring VMS every 7ms after the, motor relay output changes from ON to OFF. It is recognized as normal condition in case that ECU detects VMS>5V over 6 times. If it is abnormal, ECU does the same check again with motor ON for 560ms. If it is abnormal again, ECU repeats the same process with motor ON for 553ms. After that, if the state is abnormal again, ECU recognizes the failure. After initial check, in case that more than predetermined acceleration continues for a fixed period, ECU checks in the same way as the above, with motor ON for 560ms. If that is abnormal, motor ON for 553ms and ECU repeats the same process. After that, in case of abnormal condition, ECU recognizes the failure. If VIGN is abnormal, ECU does not detect the failure.							O *3	O *3	O	O *3	
			Failure of motor relay circuit / motor relay over current	By comparing the voltage of the motor relay monitor and DIAG signal output from the custom IC, ECU detects the failure. But ECU does not check the failure for 1000ms from the time the motor is turned off.				Restart			O	O	O	O	

No.	DTC	Failure Locations	Detect mode	Condition for Detection	Management			Conditions for Restoration	ABS W/L	EBD W/L	Detect timing				
					Out of control	EBD control mode	ABS control mode				A	B	C	D	E
6	C1604	ECU	CPU failure	1.When ECU starts, main and sub CPU execute the following checks : a) ECU checks the value of the result of fixed multiplications, whether it becomes the value decided in advance or not. b) ECU executes read/write for RAM. c) ECU executes sum check of ROM.	System down	System down	System down	Restart	O	O	O				O
				2. IGN After IGN ON, main and sub CPU communicate each other for synchronization. When one or the other CPU can't synchronize within 1sec., the main CPU shuts system down and sub CPU stops running.	System down	System down	System down	Restart	O	O	O				O
				3.Main and sub CPU always execute the following checks. ECU checks whether the program is finished or not	System down	System down	System down	Restart	O	O	O	O	O	O	O

No.	DTC	Failure Locations	Detect mode	Condition for Detection	Management			Conditions for Restoration	ABS W/L	EBD W/L	Detect timing				
					Out of control	EBD control mode	ABS control mode				A	B	C	D	E
6	C1604	ECU	CPU failure	4. In every program cycle, the main CPU and sub CPU communicate with each other for synchronization. When one or the other can't synchronize within 300μ sec, main CPU shuts the system down and sub CPU stops running.	System down	System down	System down	Restart	O	O	O	O	O	O	O
				5. Sub CPU checks the following : a) Sub CPU always compares the result of analog sent by main CPU with the result of data calculated by sub CPU, in case that there is a difference above 7 bits for 112ms, ECU recognizes the failure. b) In case that wheel velocity of FL calculated by main CPU is different from that calculated by sub CPU above 10km/h for 504ms, ECU recognizes the failure. c) Sub CPU calculates the slip from Vref calculated by main CPU and wheel velocity of FL calculated by sub CPU. ECU recognizes a failure when the main CPU judges ABS phase as pressure decrease phase for 1sec. with no slip calculated by sub CPU break. d)When the main CPU does not judge ABS phase as pressure decrease phase, in that case the main CPU sets the valves as pressure decrease state for 1 sec., ECU recognizes the failure. e)When main CPU judges ABS phase as out of ABS control, in which case the valve driven information from main CPU is in a pressure hold state for 1 sec., ECU recognizes the failure.	System down	System down	System down	Restart	O	O	O	O	O	O	

*1 In case of main relay ON only
*2 In case of motor initial check only, ECU detects the failure of motor relay output ON.
*3 In case of motor initial check only
*4 In case of over two wheels failure

Management A

Conditions	Management
Vmax > 5km/h	Management B
Vmax < 5km/h	One front wheel failure detected causes ABS inhibit
	One rear wheel or more than two wheels failure causes all wheels to inhibit ABS

Management B

Conditions	Management
Failure of one wheel	ABS inhibit (permit EBD control)
Failure of over two wheels	System down

Management C

Conditions Management	Management
Failure of one front wheel	ECU discontinues ABS control of defective wheel and continues ABS control of normal wheels. ABS inhibit after end of ABS control.
Failure of two front wheels	ECU discontinues ABS control of defective wheel and continues ABS control of normal wheels. System down after end of ABS control.
Failure of one rear wheel	ECU continues ABS control of rear wheels using information of normal rear wheel and front wheels. System down after end of ABS control.
Failure of two rear wheels	System down
Failure of one front wheel and one rear wheel	ECU discontinues ABS control of defective front wheel, and continues rear wheels using information of normal rear wheel. System down after end of ABS control.
Failure of over three wheels	System down

ADDITIONAL EXPLANATION OF FAILSAFE

1. Warning lamp initial lighting time
   1) Immediately after IG-SW ON, warning lamp is lit for 3 sec. This term is called ' warning lamp initial lighting time'.
   2) Within this term, in case that the ECM detects the failure, warning lamp is lighted continuously.

NOTE

1. System down
   The system changes to normal braking with warning lamp ON after detecting the failure by its software.
   ECM restart is caused by IG-SW OFF → ON once.
   After the failure is corrected, the ECM returns a to normal mode with warning lamp OFF.
2. All wheel inhibit
   ECM discontinues ABS control of all wheels. (Equivalent to normal brake)
   When the failure is corrected, it returns to normal mode with warning lamp OFF.
   (But during ABS control, it does not return to a normal mode.)

TERM COMMENTARY

VIGN : Terminal voltage of IGN, VREF : Terminal voltage of REF
VMAX : Maximum wheel velocity, Vref : estimated vehicle velocity

EJHA105G

SCHEMATIC DIAGRAM EJJB2650

ABS CIRCUIT (1)

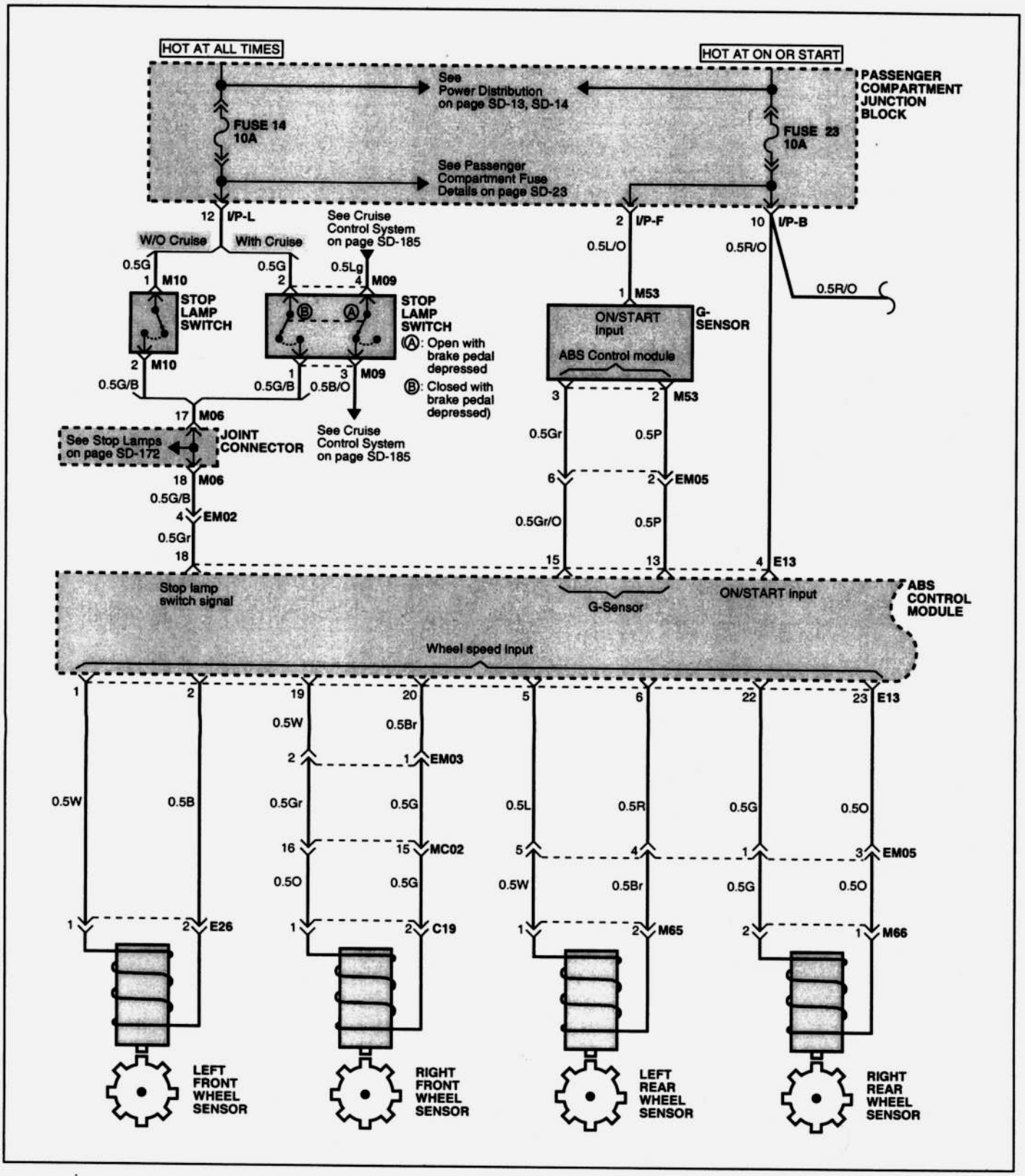

EJJB265A

ABS CIRCUIT (2)

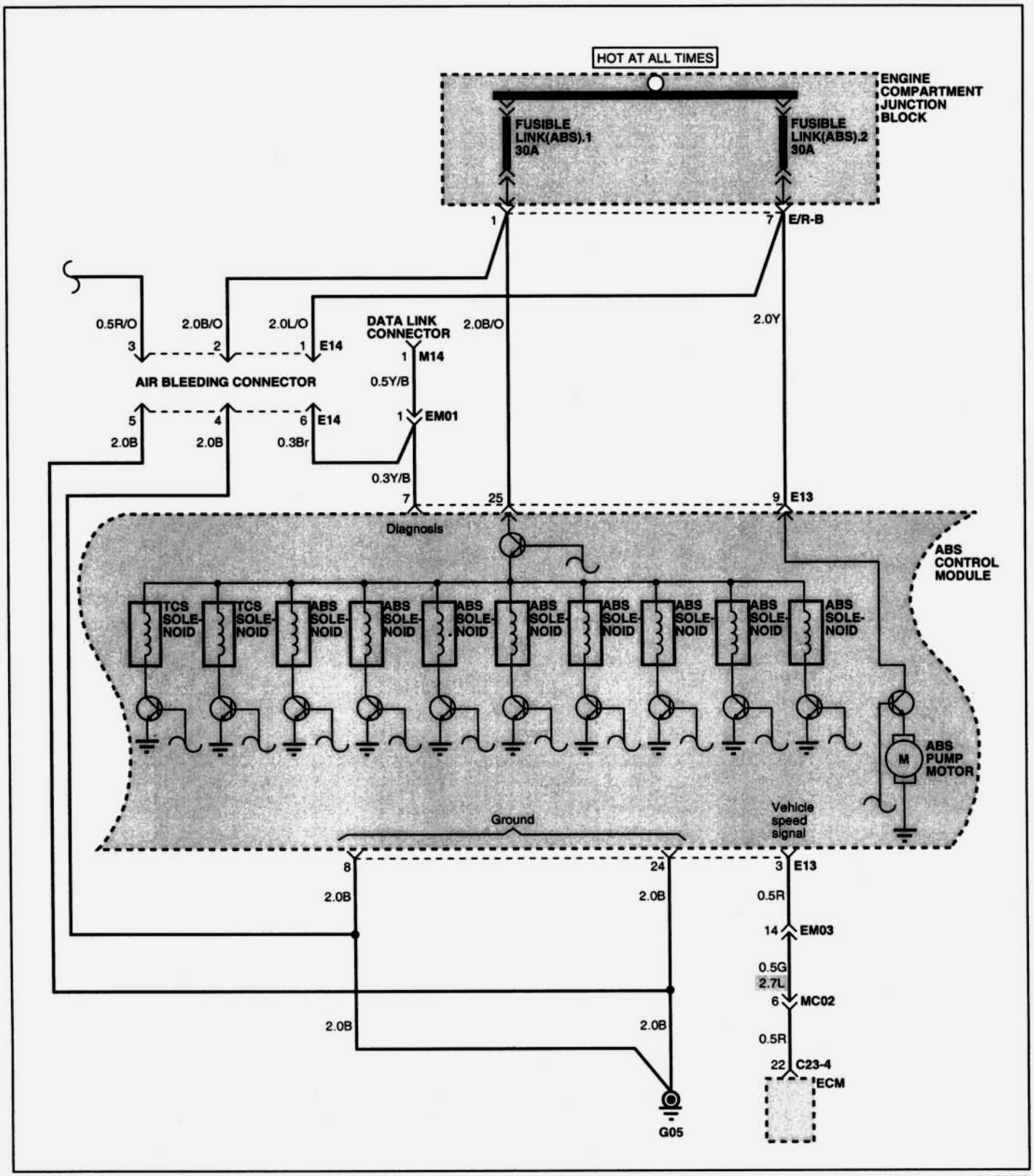

EJJB265B

ABS CIRCUIT (3)

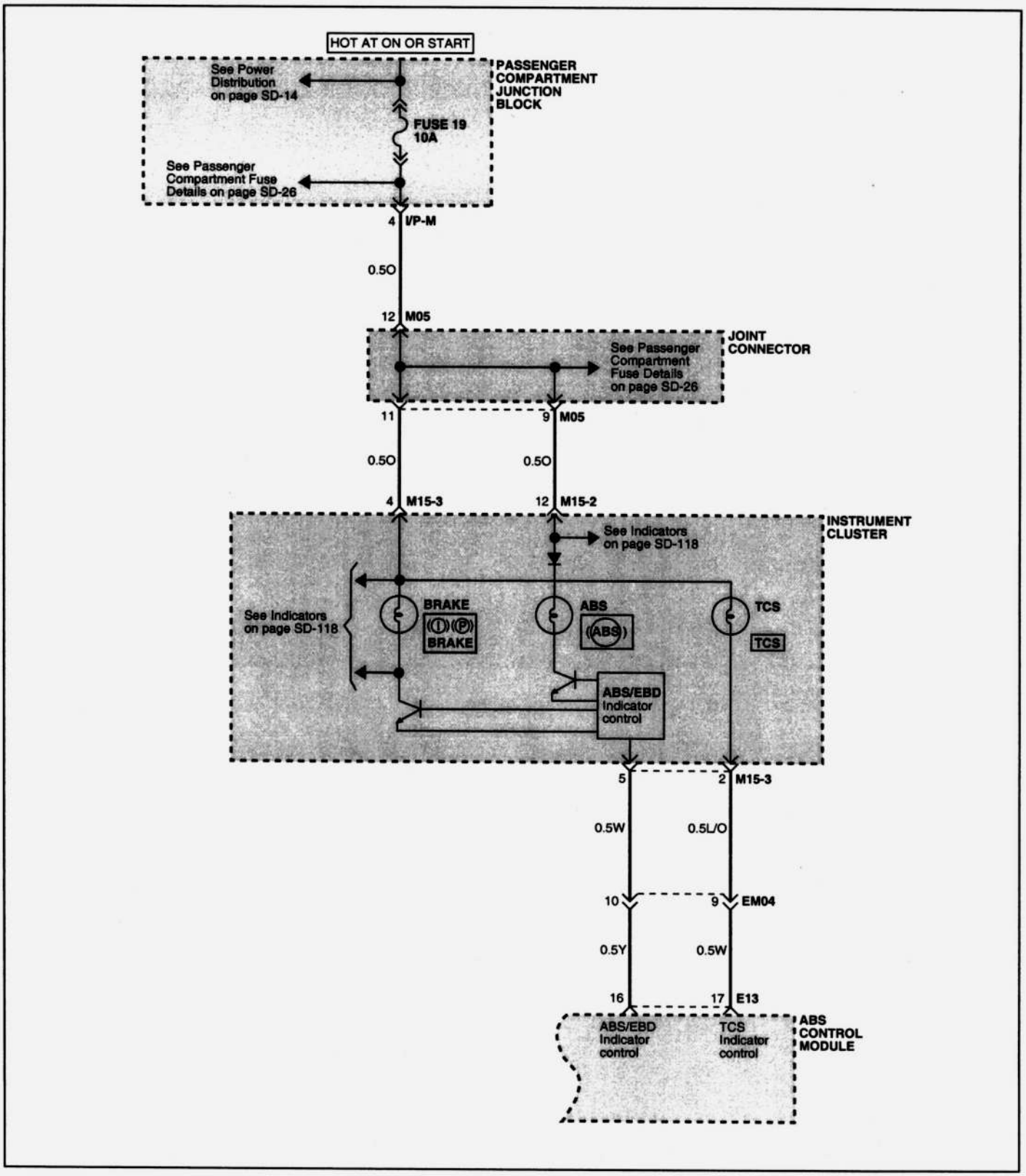

EJJB265C

INSPECTION PROCEDURE FOR DIAGNOSTIC TROUBLE CODES

EJJB2700

DTC No. C1200, C1203, C1206, C1209 Wheel speed sensor open or short to GND circuit	Probable cause
The HECU determines that an open or short circuit has occured in more than one wire of the wheel speed sensors	• Malfunction of wheel speed sensor • Malfunction of wiring harness or connector • Malfunction of HECU

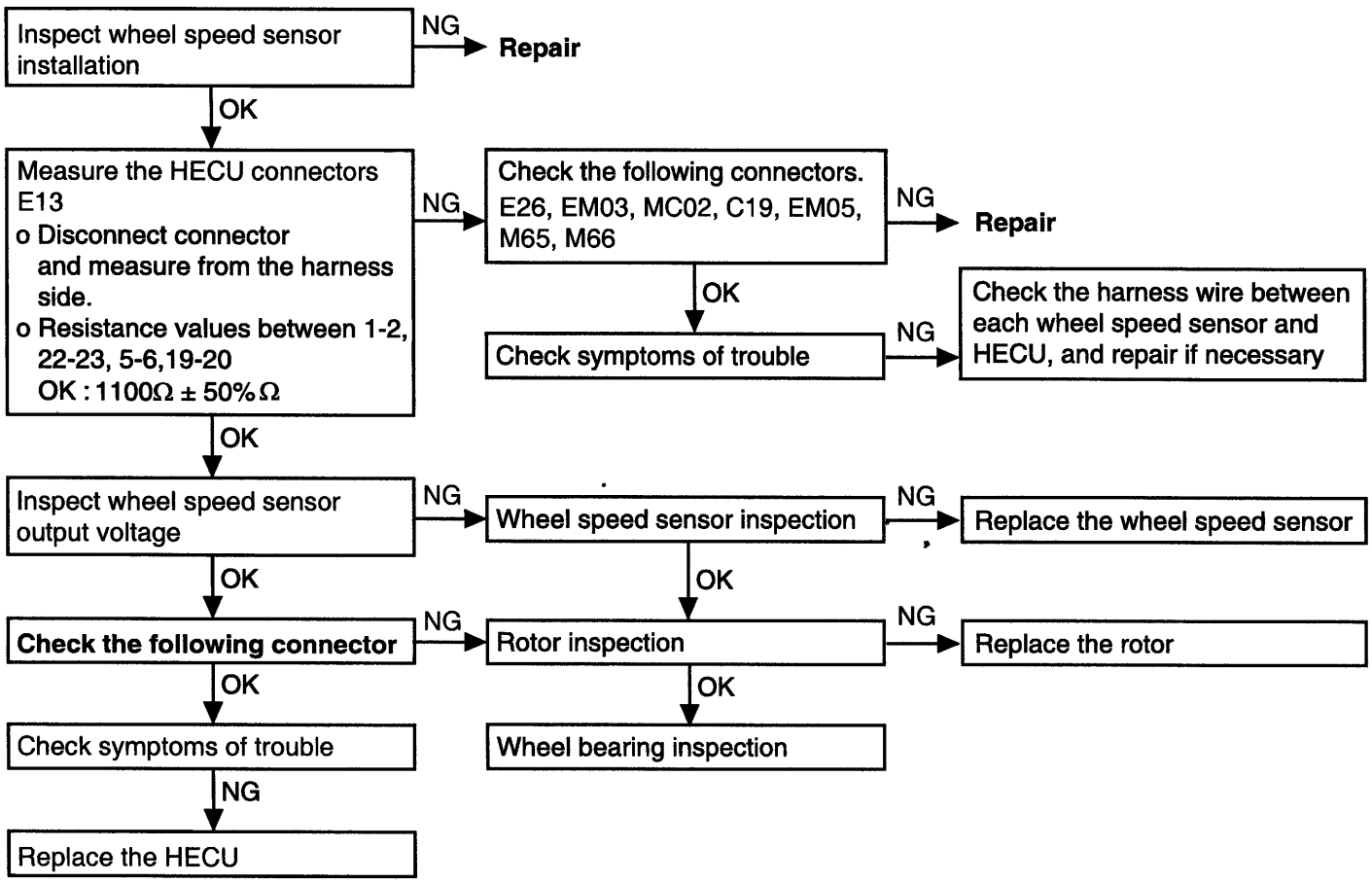

EJJB270A

EJHA2750

DTC No. C1201, C1204, C1207, C1210 (Speed jump or wrong exciter)	Probable cause
A wheel speed sensor outputs an abnormal signal (other than an open short-circuit).	• Improper installation of wheel speed sensor • Malfunction of wheel speed sensor • Malfunction of rotor • Malfunction of wheel bearing • Malfunction of wiring harness or connector • Malfunction of HECU

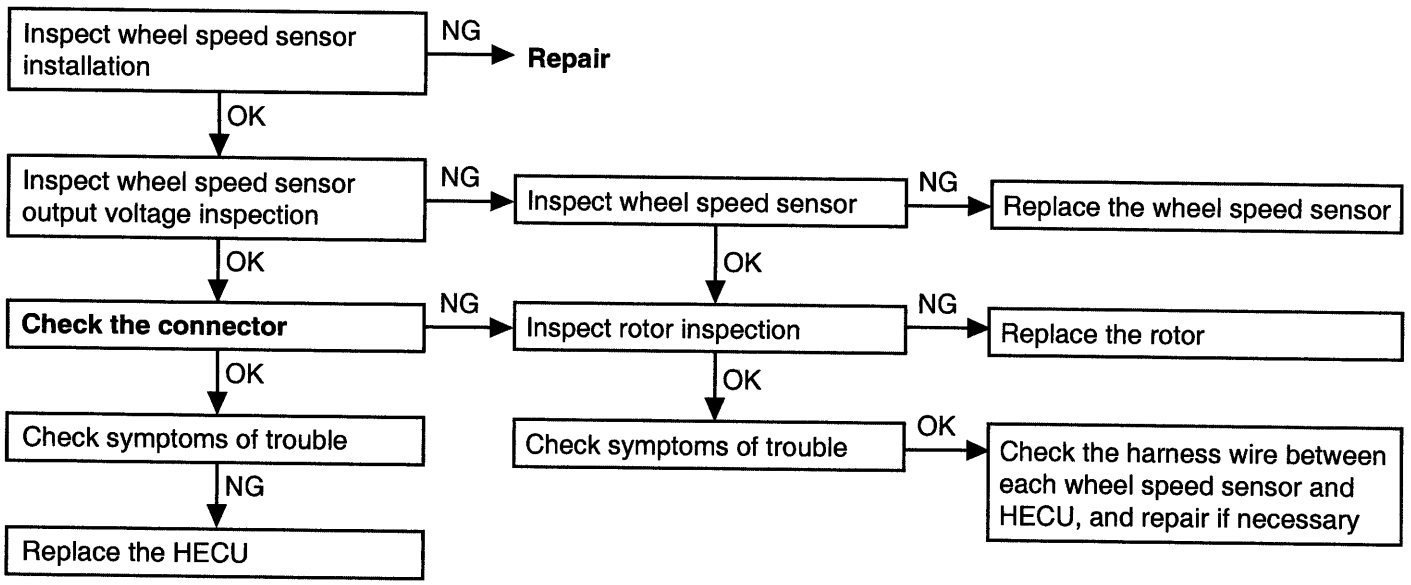

EJHA115A

EHJA2800

DTC No. C1202, C1205, C1208, C1211 (Large air gap)	Probable cause
A wheel speed sensor outputs no signal	• Malfunction of wheel speed sensor • Improper installation of wheel speed sensor • Malfunction of rotor (excitor) • Malfunction of wiring harness or connector • Malfunction of HECU

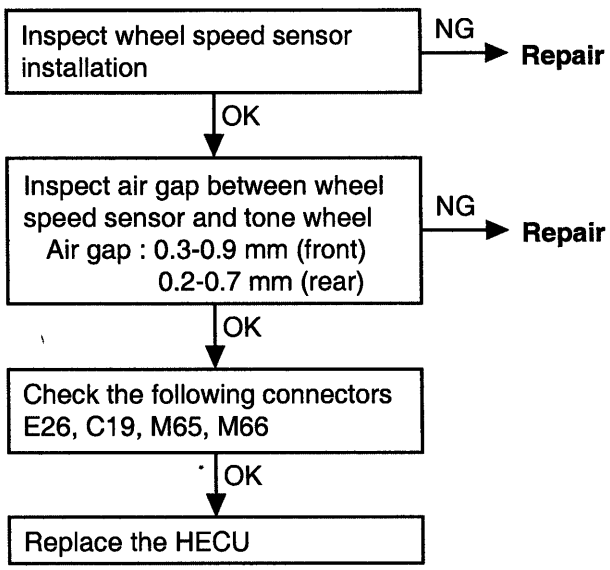

EJJB280A

EJJB2850

DTC No. C1101, C1102 Voltage out of range (Low and over voltage)	Probable cause
The voltage of the HECU power supply drops lower than or rises higher than the specified value. If the voltage returns to the specified value, this code is no longer output.	• Malfunction of wiring harness or connector • Malfunction of HECU.

CAUTION

If battery voltage drops or rises during inspection, this code will be output as well. If the voltage returns to the standard value, the code is no longer output. Before carrying out the following inspection, check the battery level and refill if necessary.

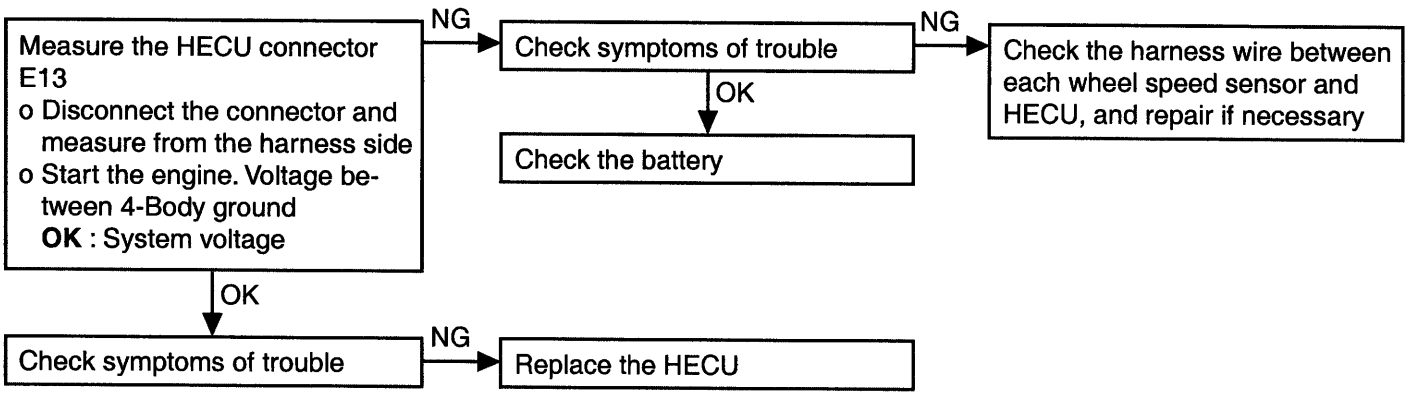

EJJB285A

EJHA2900

DTC No. C1604 ECU Hardware (EEPROM and ECU failure)	Probable cause
The HECU always monitors the solenoid valve drive circuit. It determines that there is an open or short-circuit in the solenoid coil or in a harness even if no current flows in the solenoid or through the HECU.	• Malfunction of wiring harness • Malfunction of hydraulic unit • Malfunction of HECU

EJHA2950

DTC No. C2112 Valve relay (Including fuse failure)	Probable cause
When the ignition switch is turned ON, the HECU switches the valve relay off and on during the initial check. In that way, the HECU compares the signals sent to the valve relay with the voltage in the valve power monitor line. That is how to check if the valve relay is operating normally. The HECU always checks if current flows in the valve power monitor line. It determines that there is an open circuit when no current flows. If no current flows in the valve power monitor line, this diagnosis code is output.	• Malfunction of wiring harness or connector • Malfunction of HECU

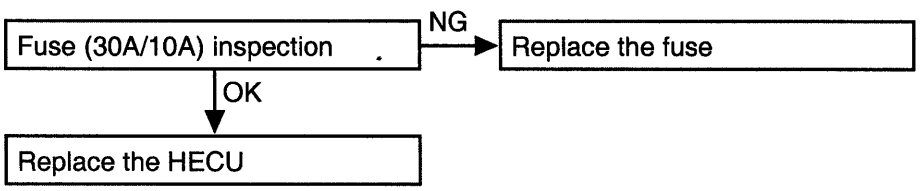

EJFA029B

EJJB3000

DTC No. C2402 Electrical (Motor relay, motor)	Probable cause
When the motor power line is normal but no signal is input to the motor monitor line, it is abnormal.	• Malfunction of hydraulic unit • Malfunction of HECU

CAUTION

Because powering of the motor with the Hi-Scan or Hi-Scan Pro will discharge the battery, the engine should be run for a while after testing is completed.

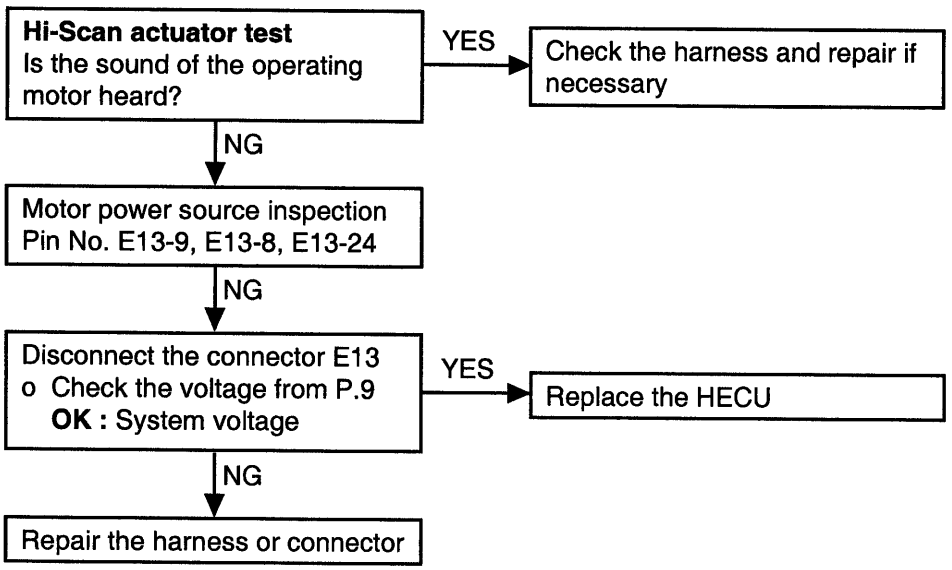

EJJB300A

ABS WARNING LAMP INSPECTION EJHA3050

Check that the ABS warning lamp illuminates as follows.

When the ignition key is turned "ON", the ABS warning lamp comes on for approximately 2 seconds and then goes out.

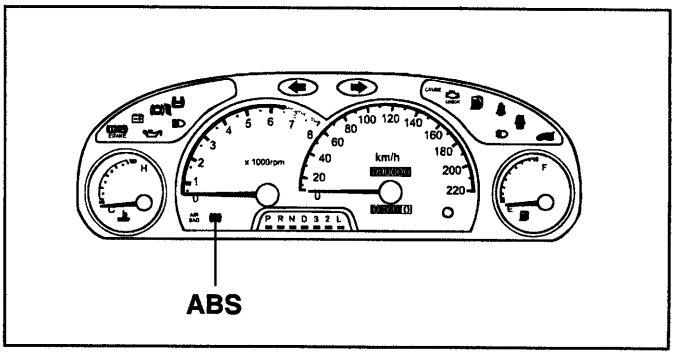

ERHA003A

INSPECTION CHART FOR TROUBLE SYMPTOMS EJHA3100

Find out the symptoms and check according to the inspection procedure chart.

Trouble system		Inspection procedure No.
Communication with Hi-Scan is not possible	Communication with any system is not possible.	1
	Communication with ABS only is not possible.	2
When the ignition key is turned "ON" (engine stopped), the ABS warning lamp does not illuminate.		3
After the engine starts, the lamp remains illuminated.		4
Faulty ABS operation	Unequal braking power on both sides	5
	Insufficient braking power	
	ABS operates under normal braking conditions	
	ABS operates before vehicle stops under normal braking conditions	
	Large brake pedal vibration (Caution 2.)	-

CAUTION

During ABS operation, the brake pedal may vibrate or may not be able to be depressed. Such phenomena are due to intermittent changes in hydraulic pressure inside the brake line to prevent the wheels from locking and is not an abnormality.

INSPECTION PROCEDURE FOR TROUBLE SYMPTOMS EJJB3150

INSPECTION PROCEDURE 1

Communication with Hi-Scan is not possible. (Communication with all systems is not possible.)	Probable cause
The reason is probably a defect in the power supply system (including ground) for the diagnosis line.	• Malfunction of connector • Malfunction of wiring harness

INSPECTION PROCEDURE 2

Communication with Hi-Scan is not possible. (Communication with ABS only is not possible.)	Probable cause
When communication with Hi-Scan is not possible, the cause is probably an open circuit in the HECU power circuit or an open circuit in the diagnosis output circuit.	• Blown fuse • Malfunction of wiring harness or connector • Malfunction of HECU

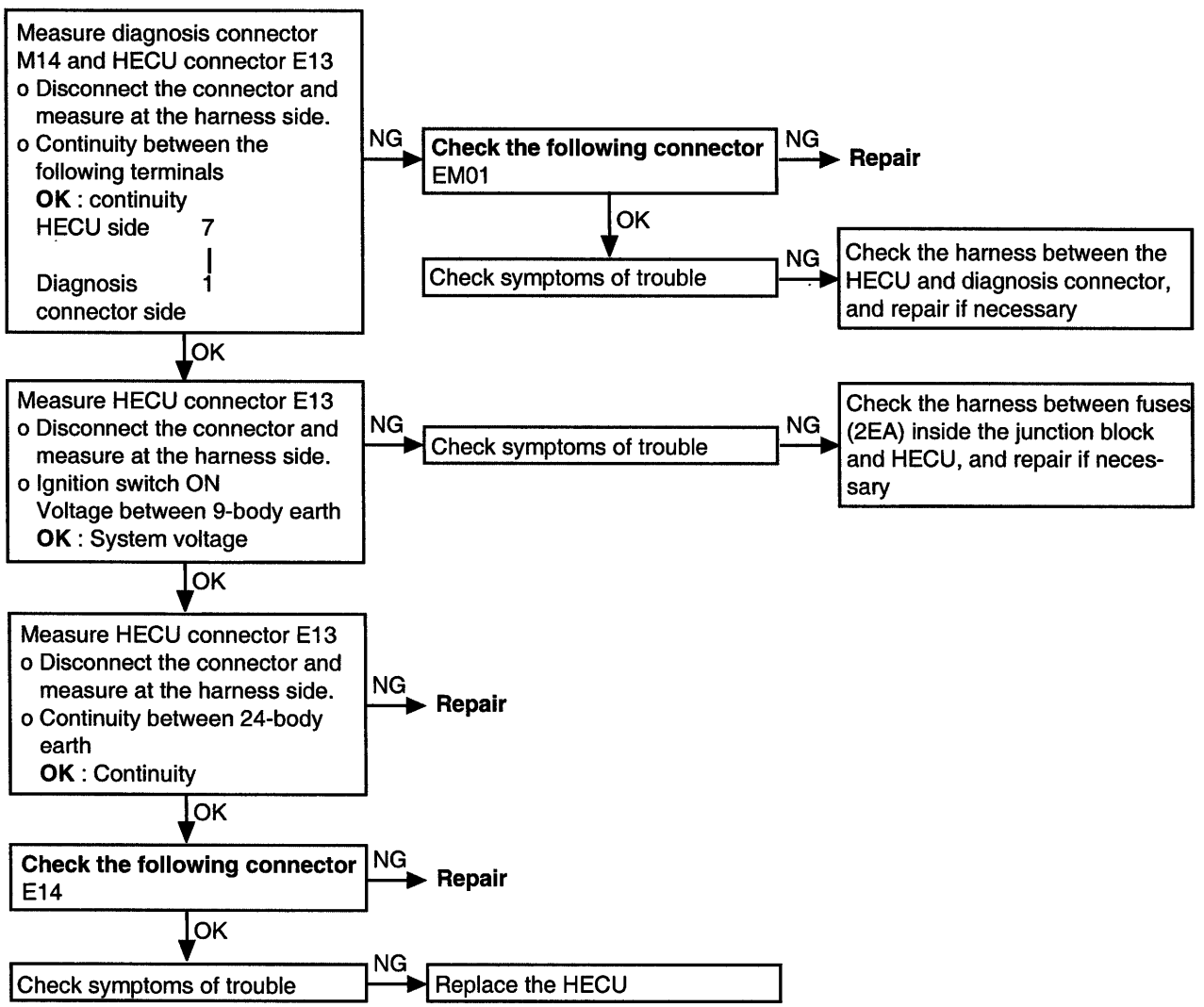

EJJB315A

INSPECTION PROCEDURE 3

When the ignition key is turned "ON" (engine stopped), ABS warning lamp does not illuminate	Probable cause
When current flows through the HECU, the ABS relay turns from on to off as the initial check. The ABS warning lamp will illuminate when the ABS relay is "Off" even if there is a problem with the circuit between the ABS warning lamp and the HECU. Therefore, if the lamp does not illuminate, the cause may be an open circuit in the lamp power supply circuit, a blown bulb, or an open circuit in both the circuits between the ABS warning lamp and the HECU and in the circuit between the ABS warning lamp and the ABS relay.	• Blown fuse • Burnt out ABS warning lamp bulb • Malfunction of wiring harness or connector

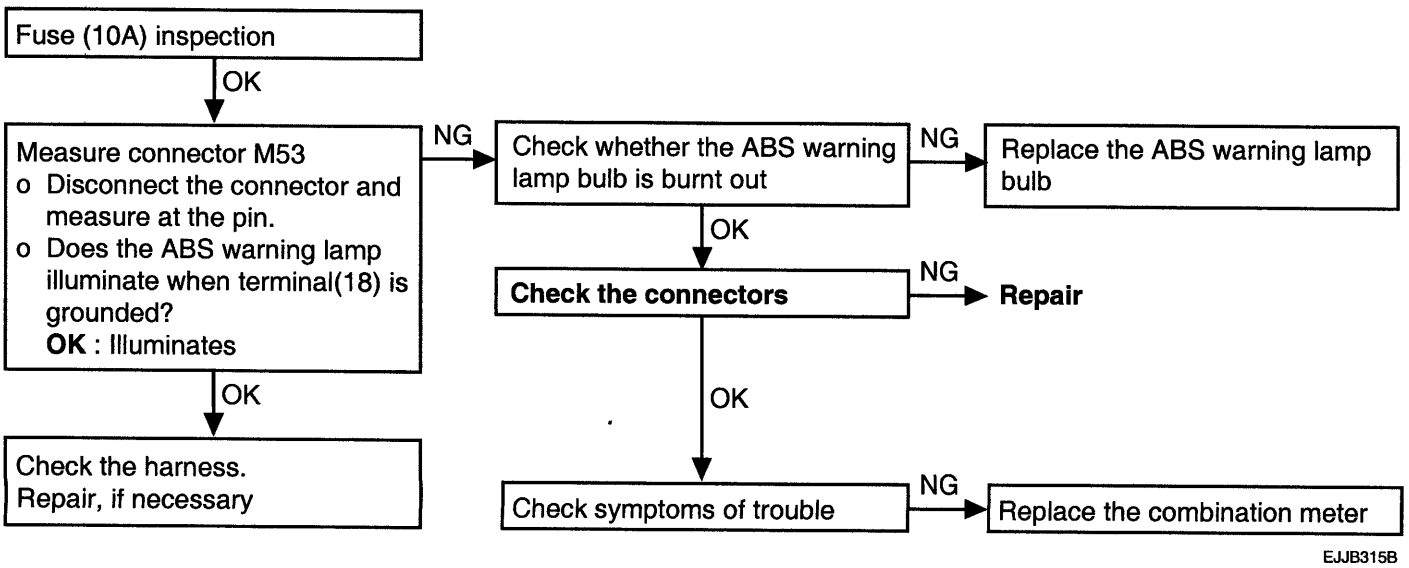

EJJB315B

INSPECTION PROCEDURE 4

Even after the engine is started, the ABS warning lamp remains illuminated	Probable cause
The cause is probably a short-circuit in the ABS warning lamp illumination circuit	• Malfunction of combination meter • Malfunction of HECU • Malfunction of wiring harness

This trouble symptom is limited to cases where communication with the Hi-Scan is possible (HECU power supply is normal) and the diagnosis code is normal.

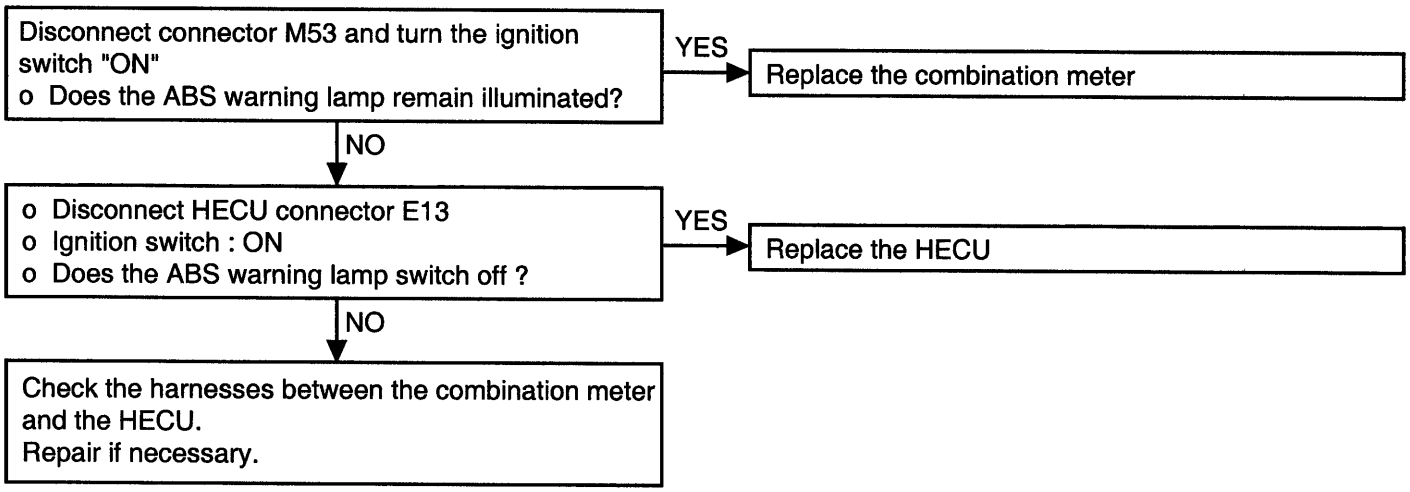

EJJB315C

INSPECTION PROCEDURE 5

Brake operation is abnormal	Probable cause
This varies depending on driving conditions and road surface conditions, so problem diagnosis is difficult. However, if a normal diagnosis code is displayed, carry out the following inspection.	• Improper installation of wheel speed sensor • Incorrect sensor harness contact • Foreign material adhering to wheel speed sensor • Malfunction of wheel speed sensor • Malfunction of rotor • Malfunction of wheel bearing • Malfunction of hydraulic unit • Malfunction of HECU

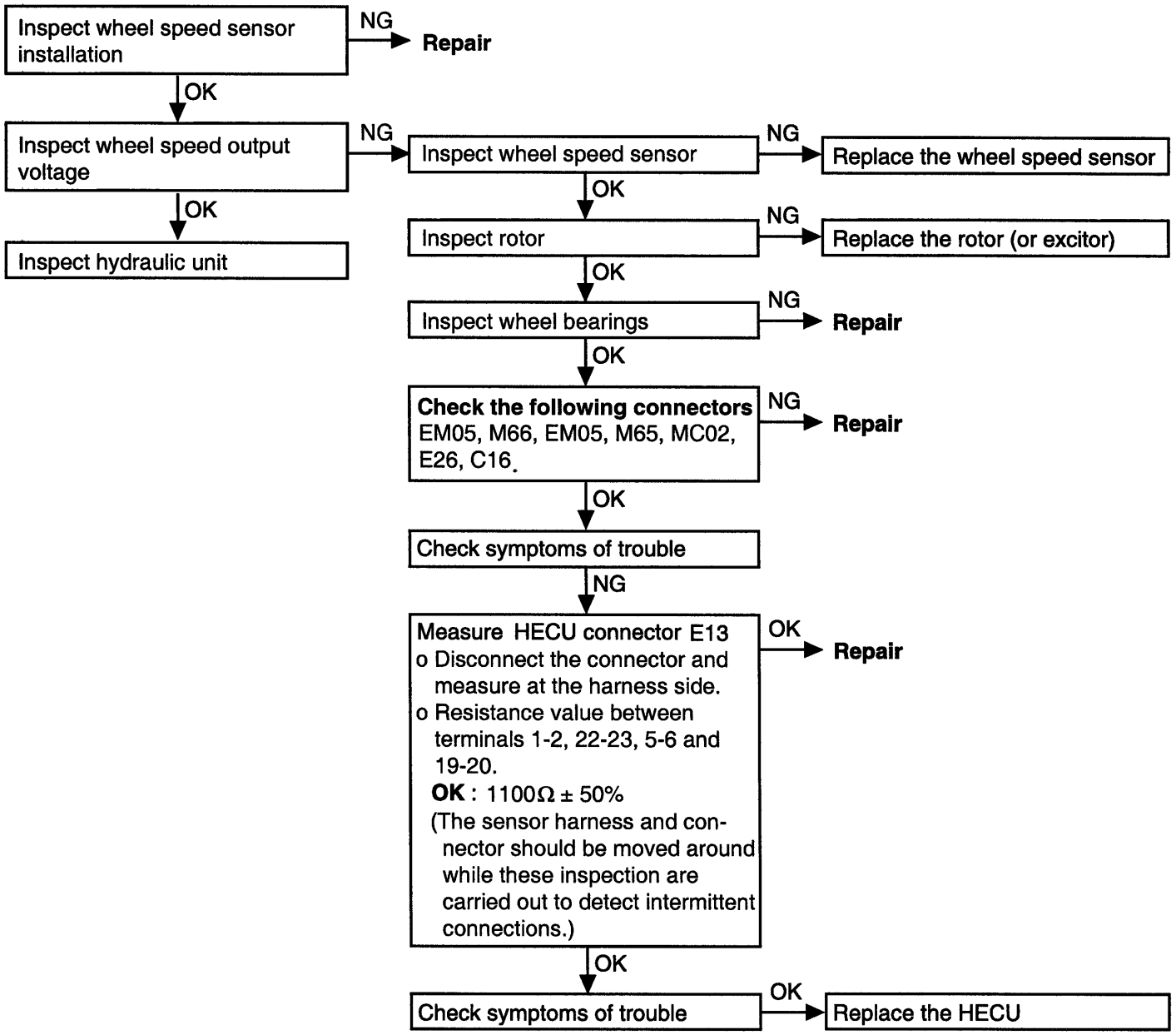

EJJB315D

ANTI-LOCK BRAKING SYSTEM CONTROL MODULE

COMPONENTS EJHA3200

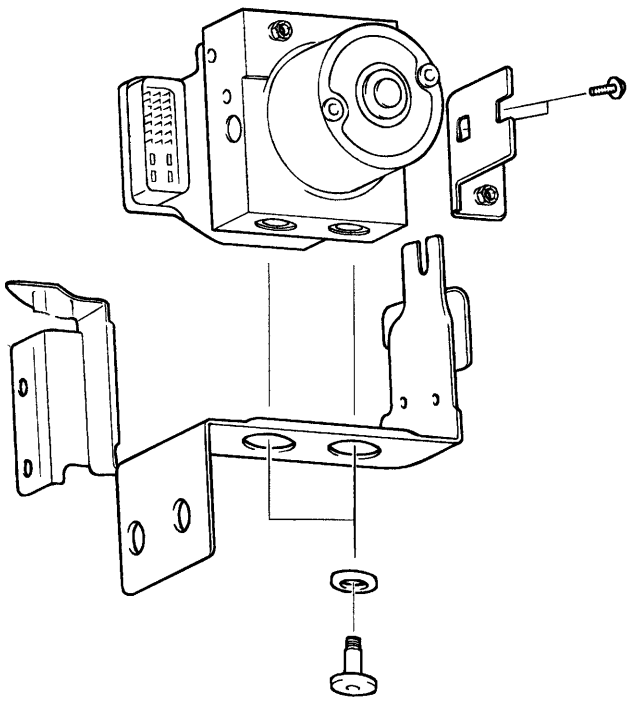

TORQUE : Nm (kg·cm, lb·ft)

EJHA040A

REMOVAL EJHA3250

1. Disconnect the HECU (Hydraulic and electronic Control Unit) and motor connector.

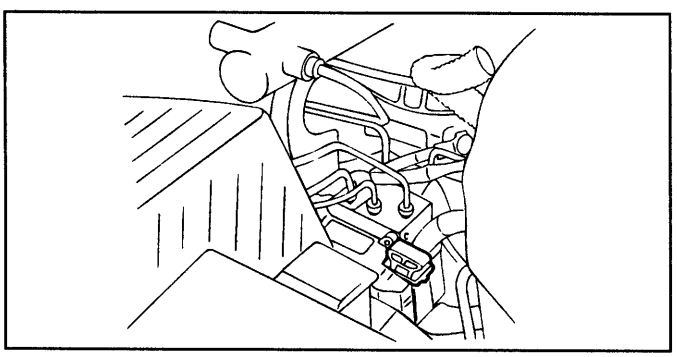

EJHA022A

2. Disconnect the brake lines from the HECU.

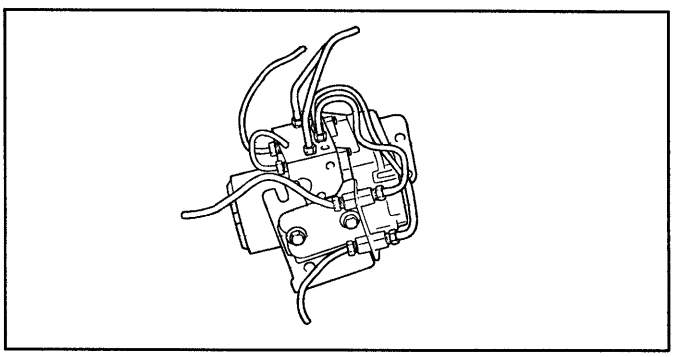

EJHA045A

3. Remove the HECU bracket mounting bolt and the HECU.

CAUTION

1. **Never attempt to disassemble the HECU.**
2. **The HECU must be transported and stored in the upright position and with sealed ports. The HECU must not be drained.**

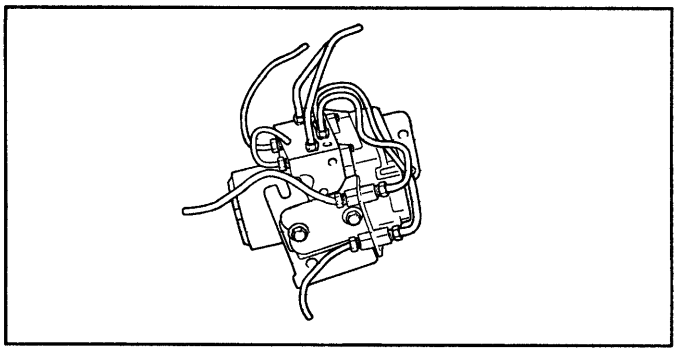

EJHA045A

INSTALLATION EJHA3300

1. Follow the reverse order for removal.
2. Tighten the modulator mounting bolts and brake tube nuts to the specified torque.

Tightening toque

HECU mounting bolt :

8-10 Nm (80-100 kg·cm, 5.6-6.9 lb·ft)

Brake tube nut :

13-17 Nm (130-170 kg·cm, 9-12 lb·ft)

ANTI-LOCK BRAKING SYSTEM MODULATOR

HYDRAULIC MODULE INSPECTION EJHA3600

CAUTION

Turn the ignition switch off before connecting or disconnecting the Hi-Scan.

1. Jack the vehicle up and support the vehicle with rigid racks at the specified jack-up points or replace the wheels which are checked on the rollers of the braking force tester.

CAUTION

1. **The roller of the braking force tester and the tire should be dry during testing.**
2. **When testing the front brakes, apply the parking brake, and when testing the rear brakes, stop the front wheels by chocking them.**

2. Release the parking brake and feel the drag force (drag torque) on each road wheel.

   When using the braking force tester, take a reading of the brake drag force.

3. Turn the ignition key "OFF" and set the Hi-Scan or Hi-Scan Pro as shown in the diagram.

4. After checking that the shift lever <M/T> or the selector lever <A/T> is in neutral, start the engine.

NOTE

If the ABS is in fail-safe mode, the Hi-Scan actuator test cannot be used.

5. Use the Hi-Scan to force-drive the ABS actuator.

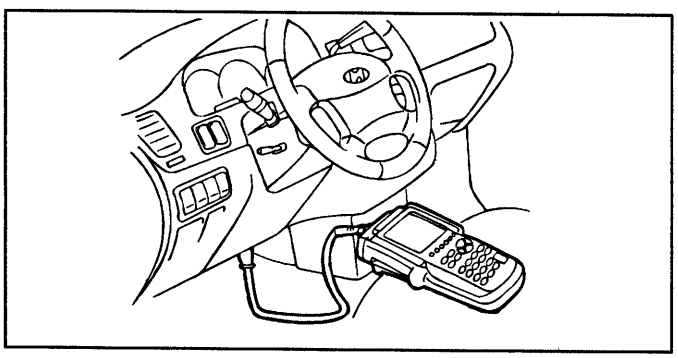

ERHA006A

ANTI-LOCK BRAKING SYSTEM WHEEL SPEED SENSOR

COMPONENTS EJHA3350

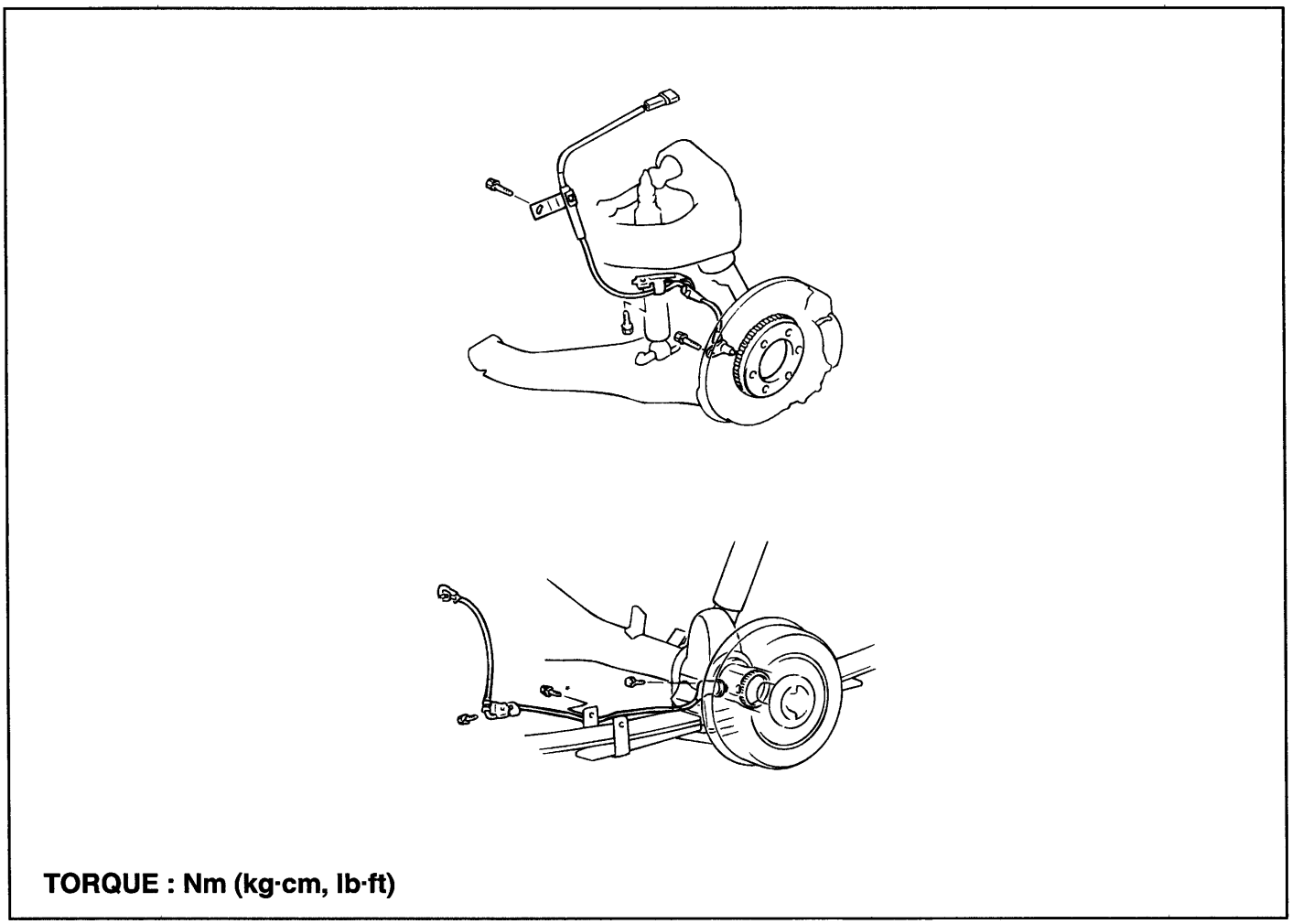

TORQUE : Nm (kg·cm, lb·ft)

EJHA055A

REMOVAL EJHA3400

FRONT WHEEL SPEED SENSOR

1. Remove the front wheel speed sensor mounting bolt.

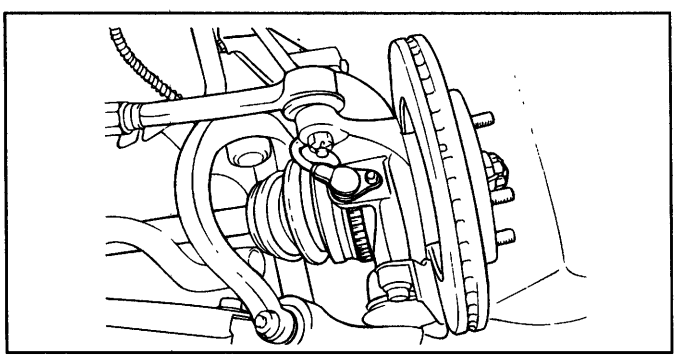

KFW8059A

2. Remove the front wheel speed sensor after disconnecting the wheel speed sensor connector.

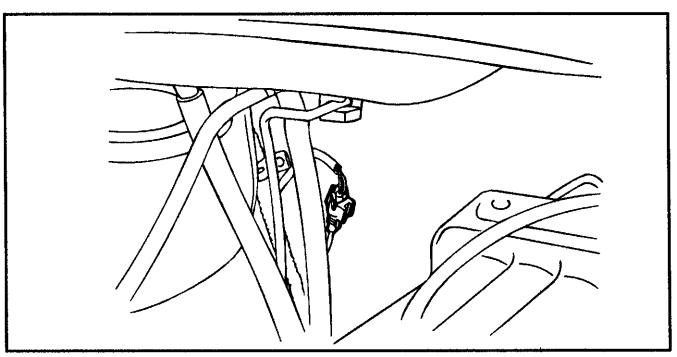

EJHA023B

REAR WHEEL SPEED SENSOR

Remove the rear wheel speed sensor after disconnecting the wheel speed sensor connector.

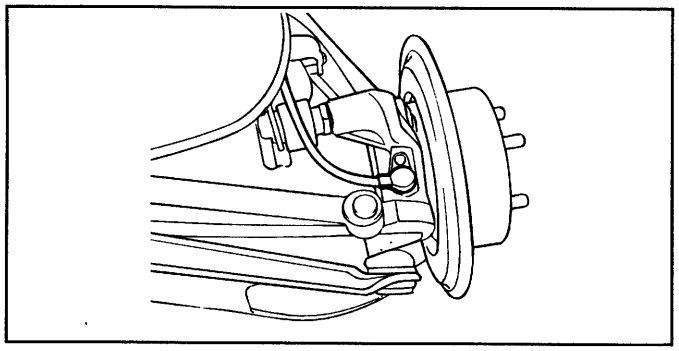

KFW8060A

INSPECTION EJHA3450

1. Connect an ohmmeter between the wheel speed sensor terminals and measure the resistance.

Service standard

Front : 1100Ω ± 50%

Rear : 1100Ω ± 50%

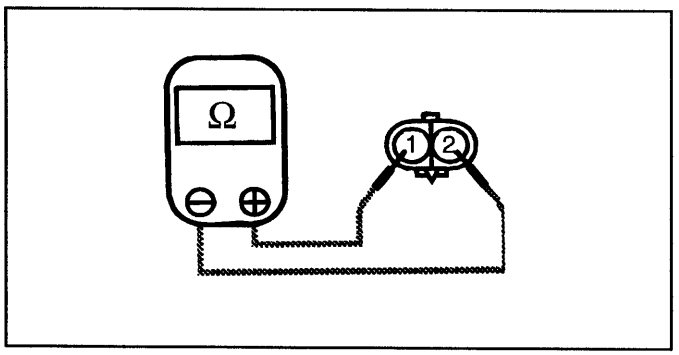

EJA9031E

2. Connect a voltmeter between the wheel speed sensor terminals and measure the voltage by turning the wheel.

NOTE

Set the voltmeter to measure AC voltage.

Service standard : AC voltage detected.

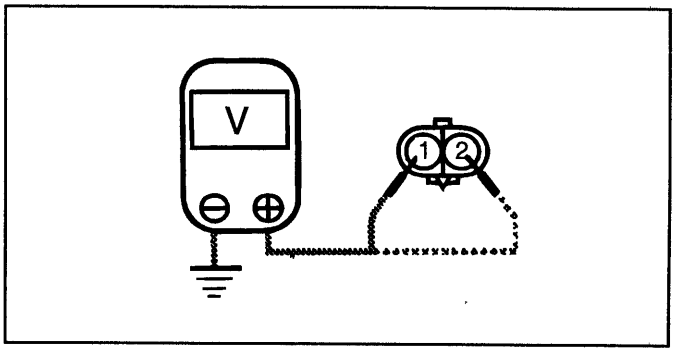

EJA9031F

ABS OPERATION CHECK EJHA3550

WHEEL SPEED SENSOR OUTPUT VOLTAGE CHECK

1. Lift the vehicle up and release the parking brake.
2. Disconnect the HECU harness connector and measure from the harness side connector.

CAUTION

Be sure to remove the connector double lock and insert the probe into the harness side. Inserting it into the terminal side will result in a bad connection.

3. Rotate the wheel to be measured at approximately 1/2–1 rotation per second, and check the output voltage using a circuit tester or an oscilloscope.

Wheel speed sensor	Front left	Front right	Rear left	Rear right
Terminal No.	1	19	5	22
	2	20	6	23

Output voltage

When measuring with an oscilloscope : 130 mV peak-to-peak or more

Body (Interior & Exterior)

GENERAL ..... BD -2

EXTERIOR ..... BD -7

INTERIOR ..... BD -24

BUMPER ..... BD -40

SEAT ..... BD -44

GENERAL

ESJA0010

SPECIFICATIONS

Hood	
Type	Rear hinged, front opening type
Front door	
Construction	Front hinged, full door construction
Regulator system	X-arm type
Locking system	Pin-fork system
Rear door	
Construction	Front hinged, full door construction
Regulator system	X-arm type
Locking system	Pin-fork system
Tailgate	
Type	Inner hinged, gas strut type
Glass thickness mm (in)	
Windshield glass	5 (0.20)
Front door glass	3.2 (0.13)
Rear door glass	3.2 (0.13)
Quarter fixed glass	3.2 (0.13)
Tailgate glass	3.5 (0.14)
Seat belts	Emergency Locking Retractor

TIGHTENING TORQUE

ESJA0050

	Nm	kg.cm.	lb.ft.
Front and rear doors			
Door hinge to body	34-42	340-420	24.6-30.4
Door hinge to door	22-27	220-270	16-19.6
Tailgate			
Tailgate hinge to body	7-9	70-90	5.1-6.5
Tailgate hinge to tailgate	7-9	70-90	5.1-6.5
Gas strut to body	7-9	70-90	5.1-6.5
Gas strut to tailgate	7-9	70-90	5.1-6.5
Hood			
Hood hinge to body	22-27	220-270	16-19.5
Hood hinge to hood	22-27	220-270	16-19.5
Hood latch to body	7-11	70-110	5.1-8.0
Seat belt			
Front seat belt upper anchor	40-55	400-550	28.9-39.8
Front seat belt lower anchor	40-55	400-550	28.9-39.8
Front seat belt retractor	40-55	400-550	28.9-39.8
Height adjuster	40-55	400-550	28.9-39.8
Rear seat belt upper anchor	40-55	400-550	28.9-39.8
Rear seat belt lower anchor	40-55	400-550	28.9-39.8
Rear seat belt retractor	40-55	400-550	28.9-39.8
Seat			
Front seat mounting bolts and nuts	35-55	350-550	25.4-40
Rear seat mounting bolts and nuts	35-55	350-550	25.4-40

SPECIAL TOOLS

ESHA0100

Tool (Number and name)	Illustration	Use
09793-21000 Door hinge adjusting wrench	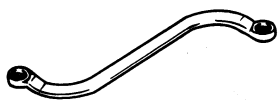 ESA9010F	Adjustment, removal, and installation of the door hinge
09800-21000 Ornament remover	 ESA9010G	Trim removal
09853-31000 Headliner clip remover	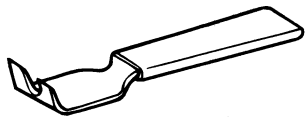 ESA9010H	Removal of the headliner clip
09861-31100 Sealant cut-out tool	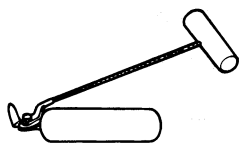 ESA9010I	Cutting the sealant of the windshield (use with 09861-31200)
09861-31200 Sealant cutting blade	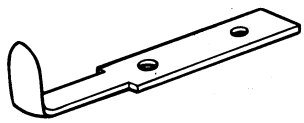 ESA9010J	Cutting the sealant of the windshield (use with 09861-31100)
09861-31300 Sealant gun	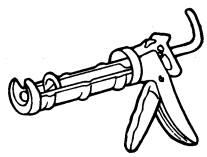 ESA9010K	Application of the sealant to the windshield
09681-31400 Glass holder	 ESA9010L	Removal and installation of the windshield
09681-31000 Windshield moulding remover	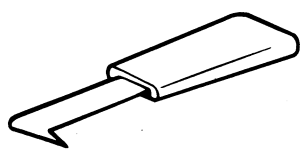 ESA9010M	Removal of the windshield moulding

TROUBLESHOOTING

ESHA0150

Trouble symptom	Probable cause	Remedy
Water leaks from sunroof	Dirt accumulated in drain tube	Clear dirt inside of drain
	Clogged drain tube	Blow air into drain to remove dirt
	Broken or dislocated drain tube, defective or cracked clip	Check tube installation and flange contact
	Deteriorated roof lid weatherstrip	Replace
	Excessive roof lid-to-body clearance and improperly fitted weatherstrip	Adjust
Wind noise around sunroof	Loose or deformed deflector, gaps in body work	Retighten adjust or replace
Sunroof makes a noise when moved	Foreign particles lodged in guide rail	Check drive cable and guide rails for foreign particles
	Loose guide rails and lid	Retighten
Motor runs but sunroof does not move or moves only halfway	Foreign particles lodged in guide rail	Check drive cable and guide rails for foreign particles
	Incorrect engagement of motor pinion with drive cable	Check for loose motor installation and damaged pinion
	Decrease in motor's clutch slipping force	Adjust
	Increased sunroof sliding resistance or interference of sunroof with drive cables, weatherstrip, etc. due to maladjustment of sunroof	Adjust or replace
Noise in motor (clutch slipping noise from motor when sunroof is fully opened or closed is not an unusual noise.)	Incorrect engagement of motor pinion with drive cable	Check pinion installation and retighten motor
	Worn out or damaged motor pinion bearing	Replace motor assembly
	Worn out or deformed drive cable	Replace
Door glass fails to operate up and down	Incorrect window glass installation	Adjust position
	Damaged or faulty regulator arm or regulator	Correct or replace
Door does not open or close completely	Incorrect door installation	Adjust position
	Defective door check assembly	Correct or replace
	Door hinge requires grease	Apply grease
Hood does not open or close completely	Striker and latch not properly aligned	Adjust
	Incorrectly installed hood	Adjust
	Incorrect hood bumper height	Adjust
Water leak through windshield and rear window	Defective seal	Fill with sealant
	Defective flange	Correct

Trouble symptom	Probable cause	Remedy
Wind noise around door	Weatherstrip not holding firmly	Adjust fit of door
	Improperly installed weatherstrip	Repair or replace
	Improperly closed door	Adjust
	Improperly fit door	Adjust
	Improper clearance between door glass and division channel	Adjust
	Deformed door	Repair or replace

EXTERIOR

FENDER

REMOVAL AND INSTALLATION ESJA0200

1. Remove the screws holding the inner fender protector and then remove the protector.

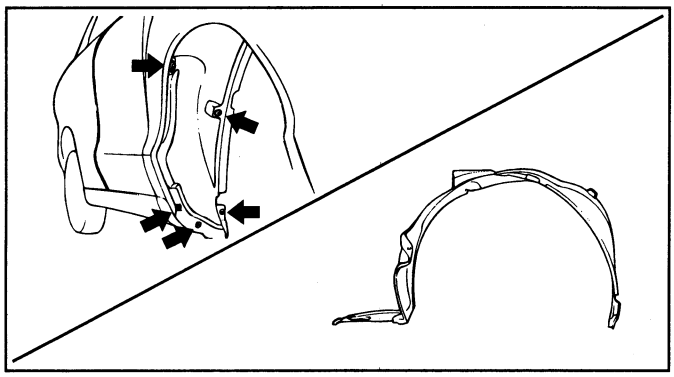

ESJA100A

2. Disconnect the wires to the head lamps and the turn signal lamps and then remove the head lamps

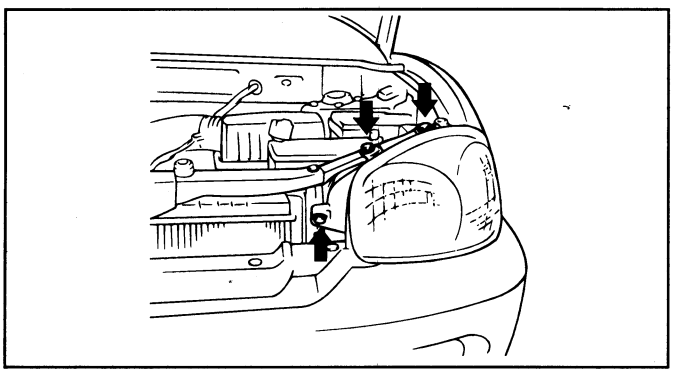

ESJA005B

3. Remove the front bumper. (Refer to the front bumper, page BD-41)

4. Remove the bolts holding the fender and then remove the fender.

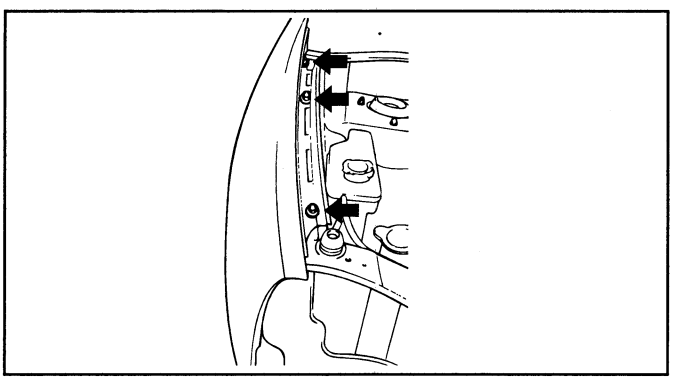

ESJA025D

HOOD

COMPONENTS ESJA0250

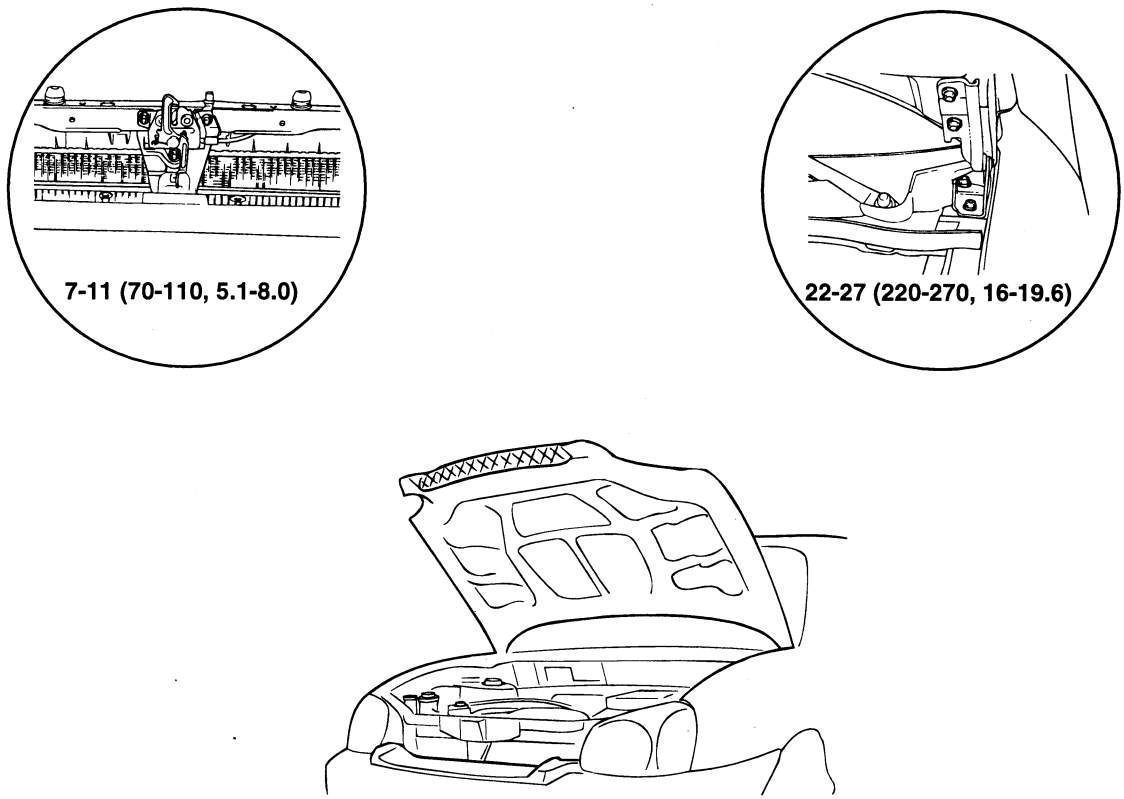

TORQUE : N·m (kg·cm, lb·ft)

ESJA100B

HOOD ALIGNMENT ADJUSTMENT ESJA0300

1. Adjust the longitudinal and lateral positions of the hood by utilizing the elongated holes in the hinge.
2. Turn the hood bumpers either clockwise or counter-clockwise to adjust the height of the hood.

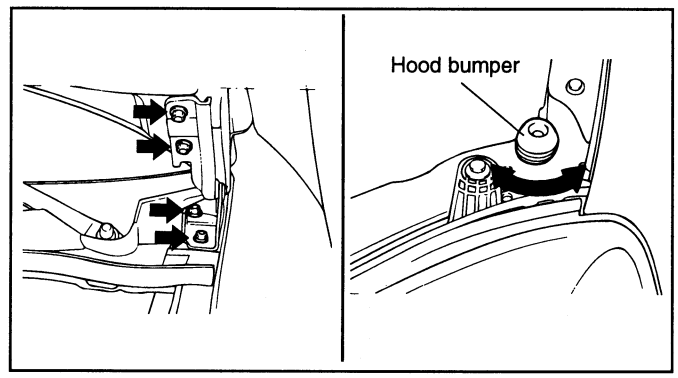

ESJA100C

3. Loosen the bolts holding the hood latch.

4. Adjust the hood latch so it holds the hood properly, then tighten its mounting bolts. If a proper latch cannot be obtained, readjust the hood longitudinally and laterally.

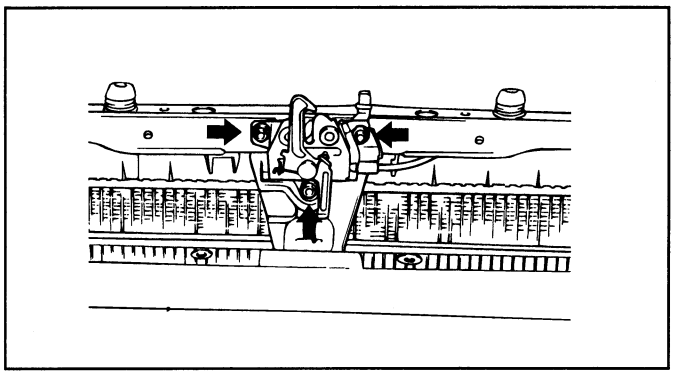

ESJA001D

TAILGATE

REMOVAL AND INSTALLATION ESJA0350

1. Remove the center high mounted stop lamp.

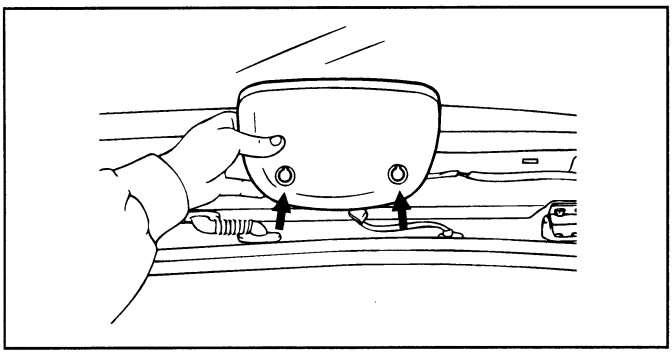

ESJA040N

2. Remove the upper trim from the tailgate frame.

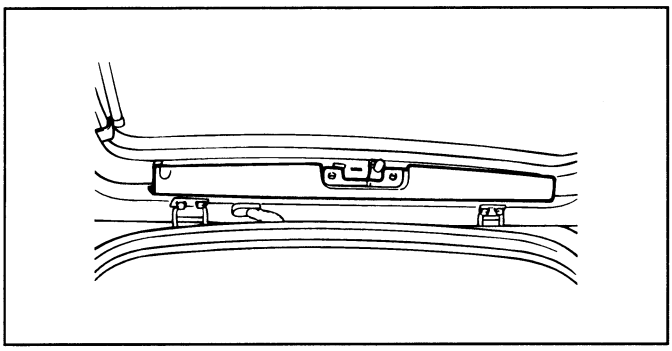

ESJA040A

3. Remove the side trim from the tailgate frame.

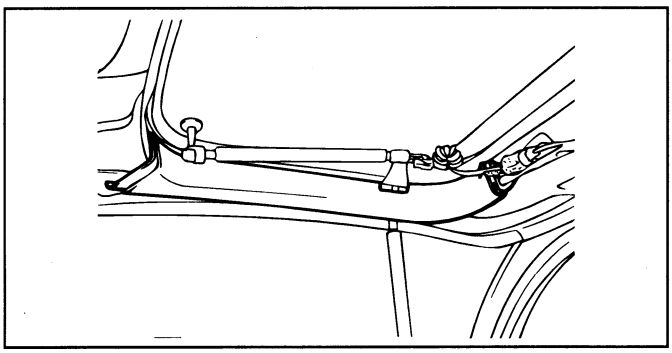

ESJA040B

4. Remove the tapping screw and the trim grip and then remove the tailgate trim panel.

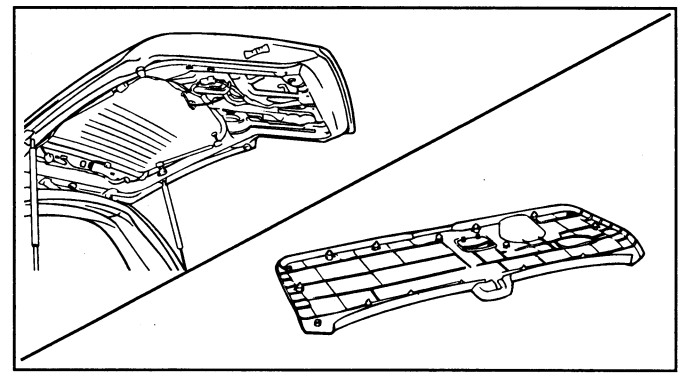

ESJA100D

5. Remove the tailgate glass flip-up switch and the tailgate outside handle.

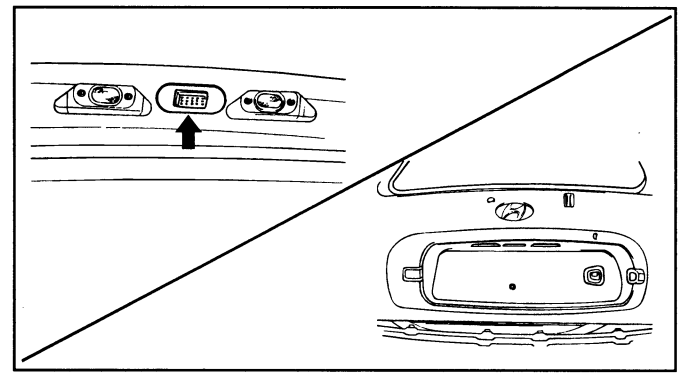

ESJA100E

6. Remove the back panel molding.

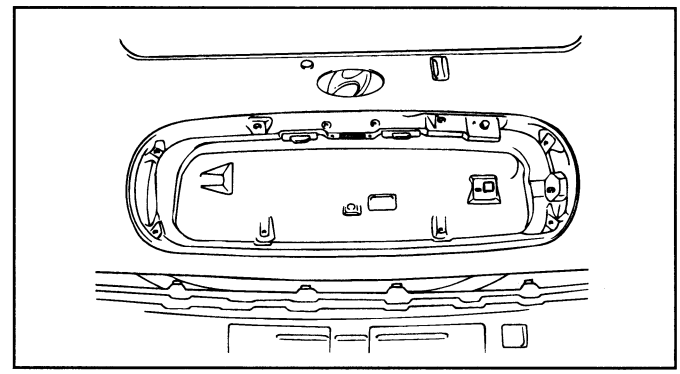

ESJA040G

7. Remove the rear wiper arm.

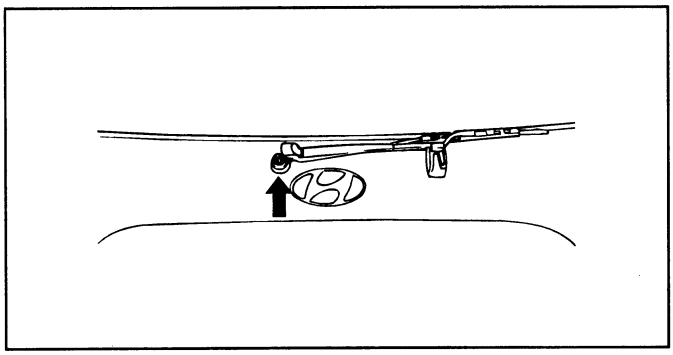

ESJA040H

8. From the interior, remove the rear wiper control unit and the rear wiper motor.

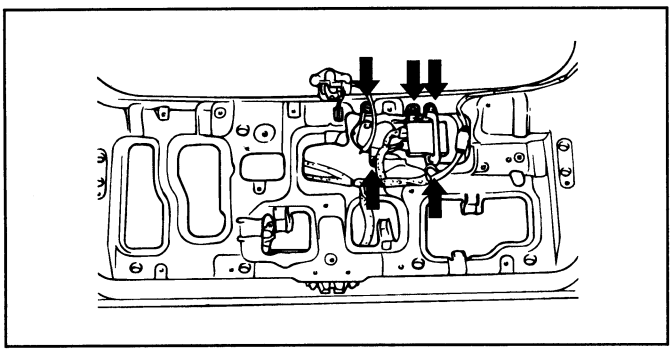

ESJA040K

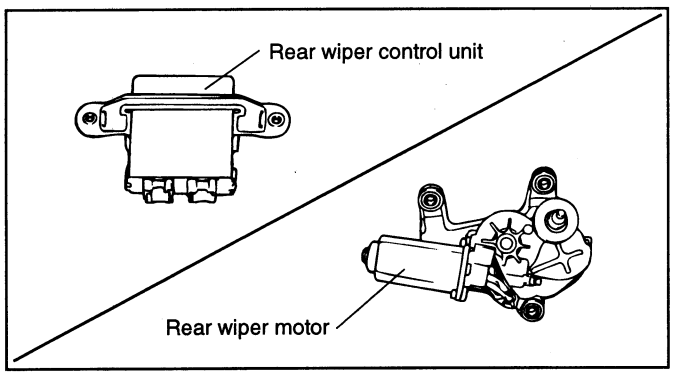

ESJA100F

9. Remove the tailgate actuator, the tailgate latch, the tailgate glass latch and the key cylinder.

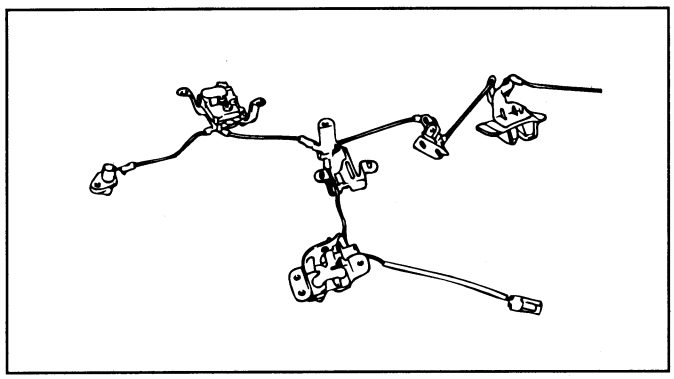

ESJA040L

10. Remove the tailgate struts and then loosen the bolts holding the tailgate hinge.

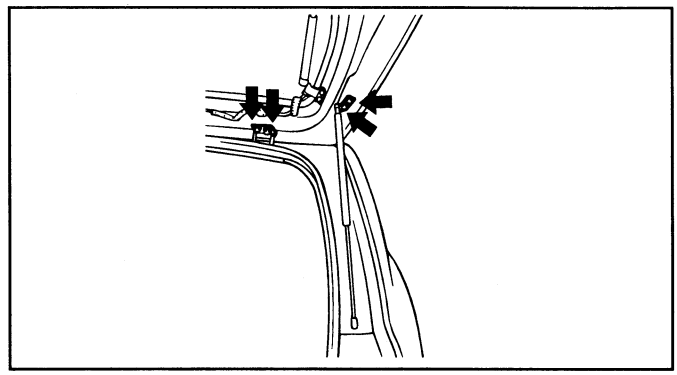

ESJA040M

11. Remove the tailgate.

12. Installation is the reverse of removal.

FRONT DOOR

REMOVAL AND INSTALLATION ESJA0400

1. Remove the screw holding the inside door handle trim.

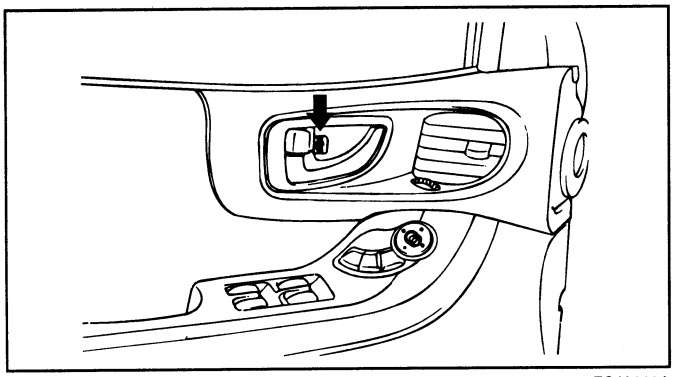

ESJA060A

2. Remove the screws holding the door trim panel.

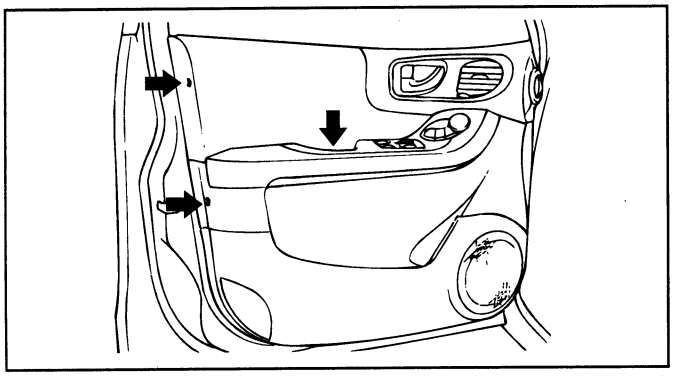

ESJA060B

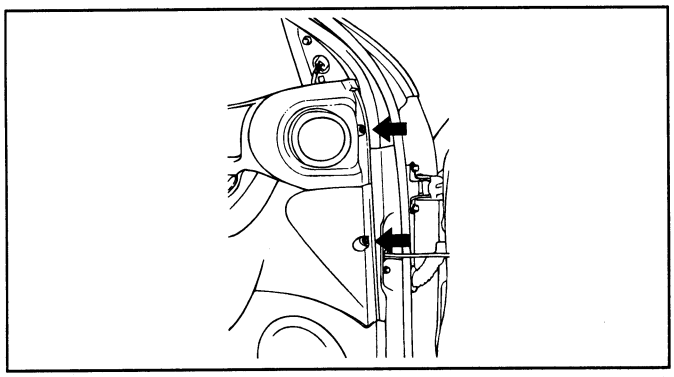

ESJA060C

3. Insert a trim panel remover between the trim fasteners and the door trim panel to pry off.

   Disconnect the wire connectors from the front door.

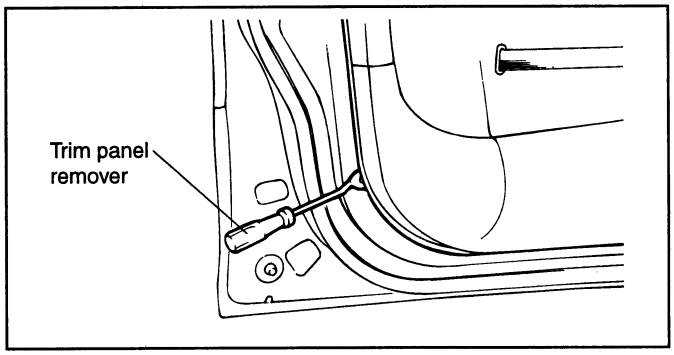

ESHA015D

4. Remove the front speaker and the door vapor barrier.

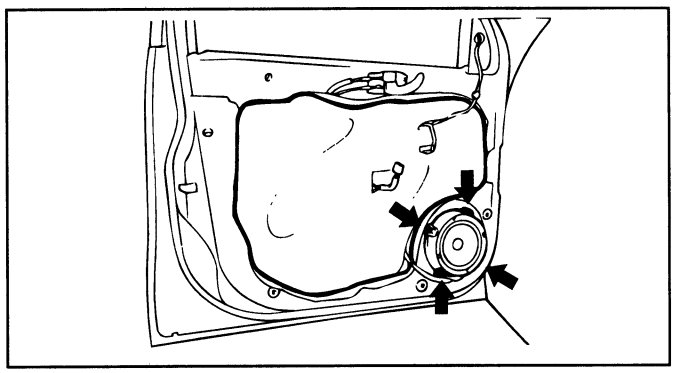

ESJA060D

5. Roll the door glass down and then remove the bolts holding the front door glass.

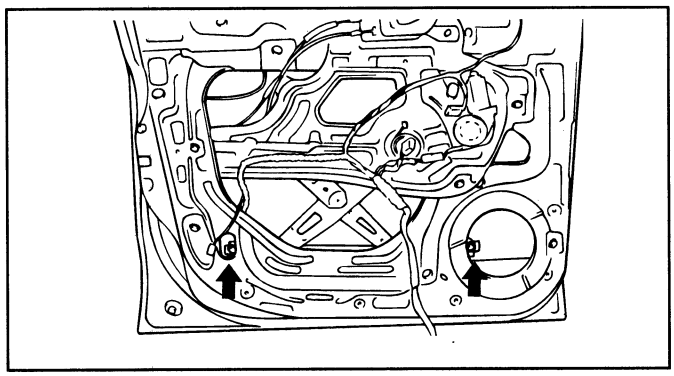

ESJA060E

6. Remove the front door glass from the front door module.

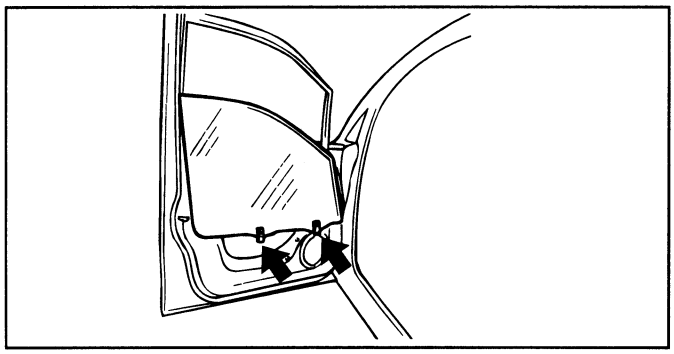

ESHA015F

7. Remove the front door window glass run.

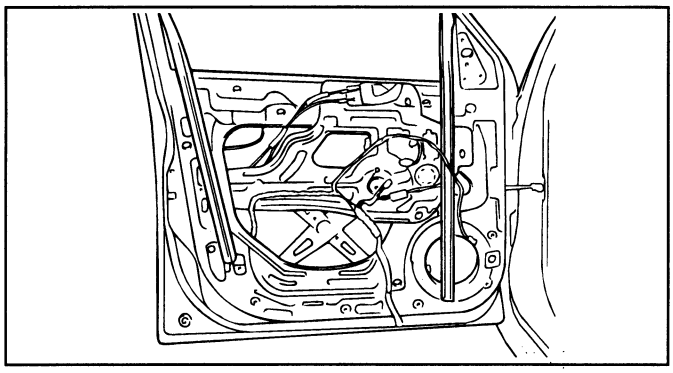

ESJA060F

8. Remove the front and rear channels from the front door.

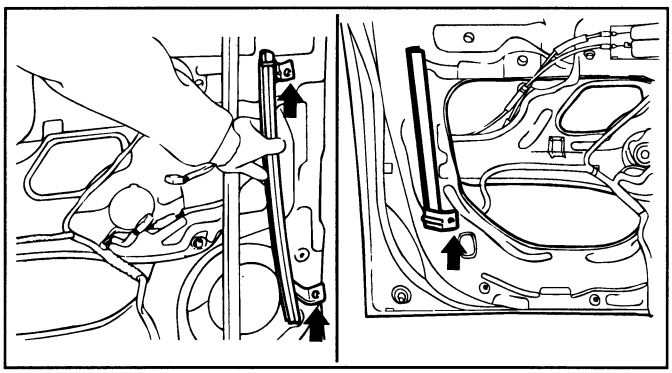

ESJA100G

9. Disconnect the rod from the exterior handle.

   Remove the bolts holding the latch and the door lock actuator.

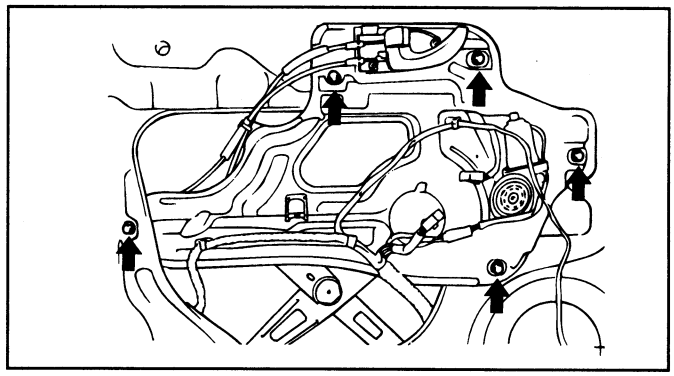

ESJA060I

10. Remove the wire harness and the front door module.

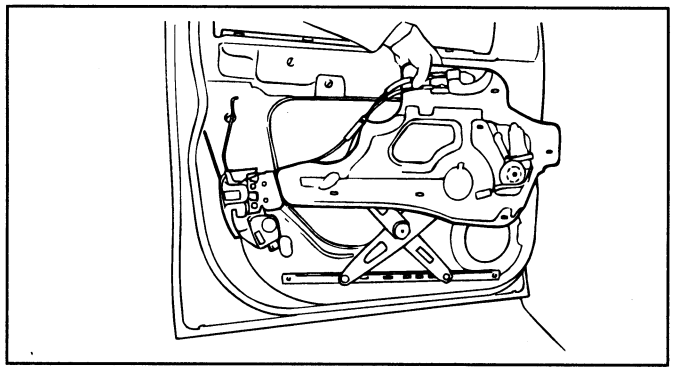

ESJA060K

11. Remove the outside rear view mirror.

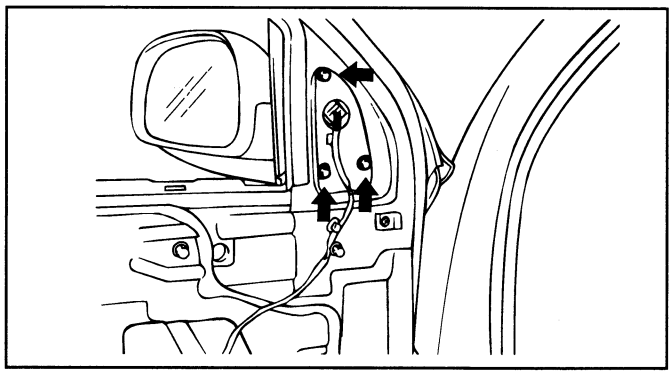

ESJA060L

12. Installation is the reverse of removal.

    When installing the door vapor barrier, butyl tape should not be placed so it blocks the door trim fastener holes.

ADJUSTMENT ESHA0400

DOOR POSITION

Check for a flush fit with the body, then check for an equal gap between the front and rear, top and bottom door edges and the body. The door and body edges should also be parallel.

CAUTION

Attach protective tape to the fender edges where the hinge is installed.

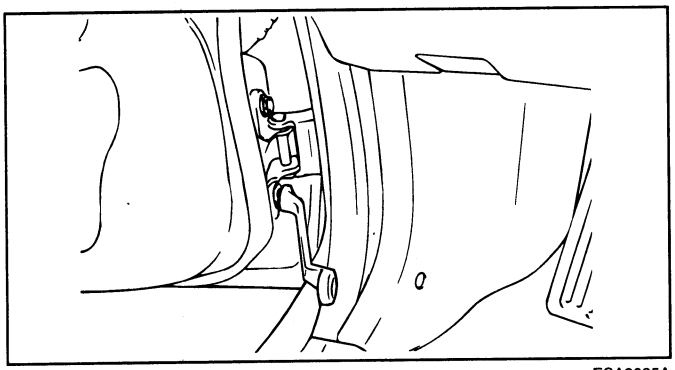

ESA9095A

DOOR STRIKER

Make sure the door is not loose, and that it latches securely without slamming. If necessary, adjust the door as follows :

1. Draw a line around the striker plate for reference.
2. Loosen the striker screws, and move the striker IN and OUT to make the latch fit tighter or looser. Move the striker UP and DOWN to align it with the latch opening. Then lightly tighten the screws and recheck.

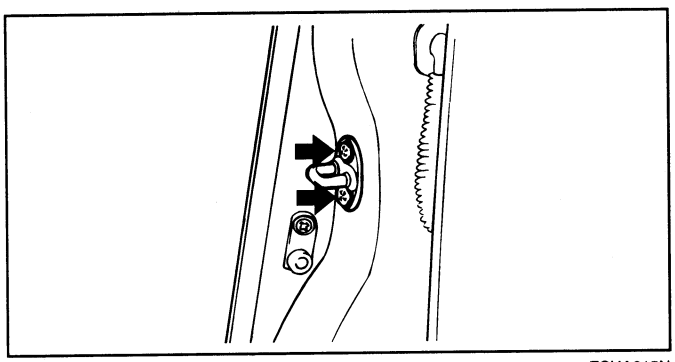

ESHA015N

NOTE

Hold the outside handle outward and push the door against the body to verify the striker provides a tight fit.

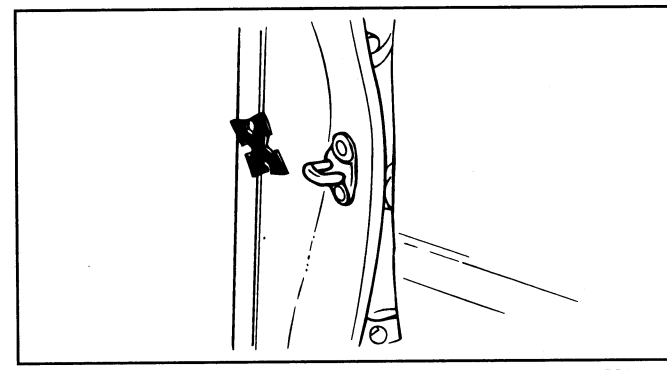

ESA9095B

REAR DOOR

REMOVAL AND INSTALLATION ESJA0500

1. Remove the screw holding the inside door handle trim.

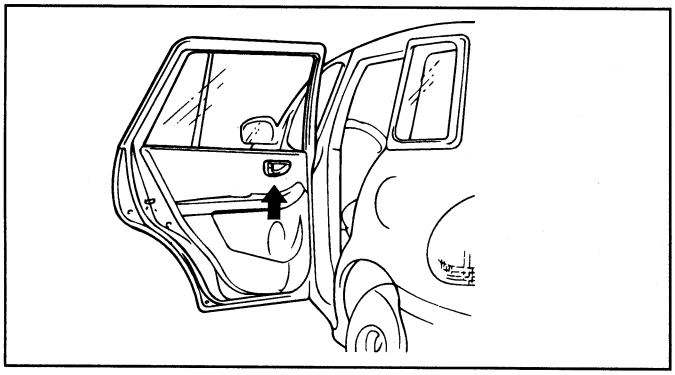

ESJA045A

2. Remove the screws holding the door trim panel.

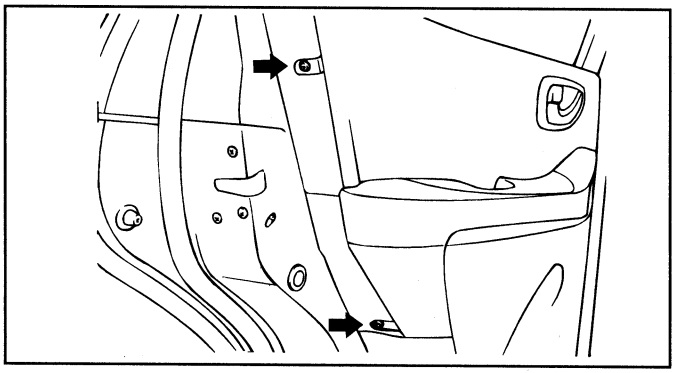

ESJA045B

3. Insert a trim panel remover between the trim fasteners and the door trim panel to pry off.

   Disconnect the wire connectors from the rear door.

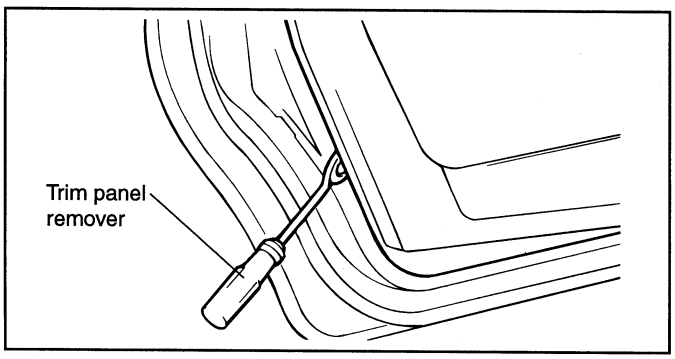

ESHA020D

4. Remove the door vapor barrier.

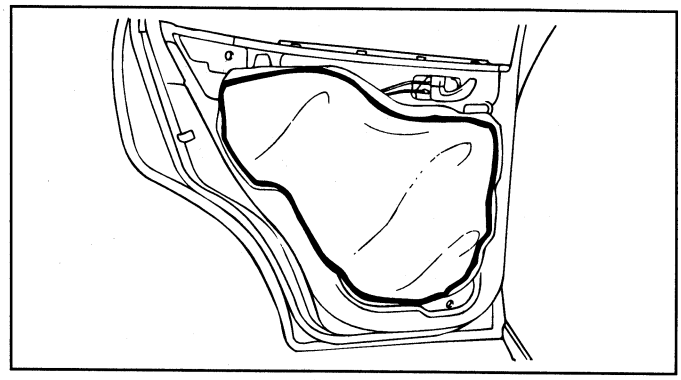

ESJA045C

5. Roll the rear door glass down and then remove the bolts holding the rear door glass.

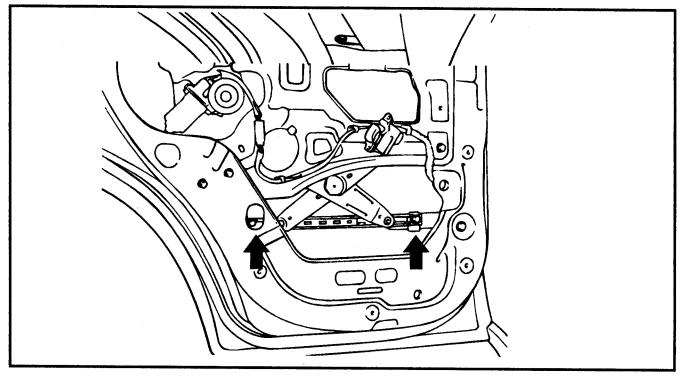

ESJA045D

6. Remove the front channel from the rear door.

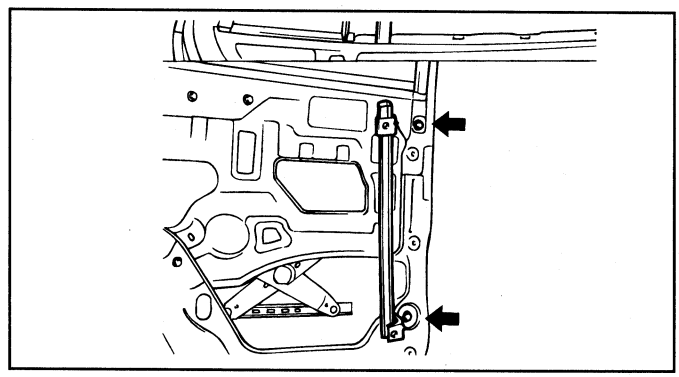

ESJA045E

7. Remove the rear door glass from the rear door module.

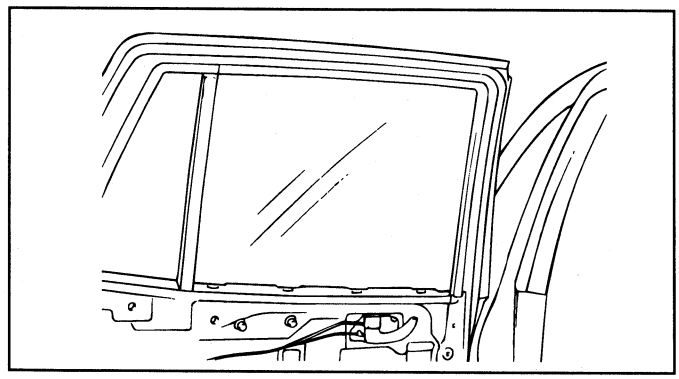

ESJA045F

8. Remove the rear door glass run and loosen the bolts holding the rear channel to the rear door.

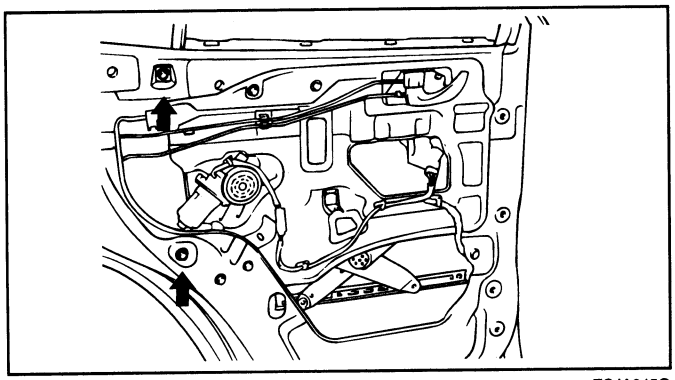

ESJA045G

9. Remove the rear channel from the rear door.

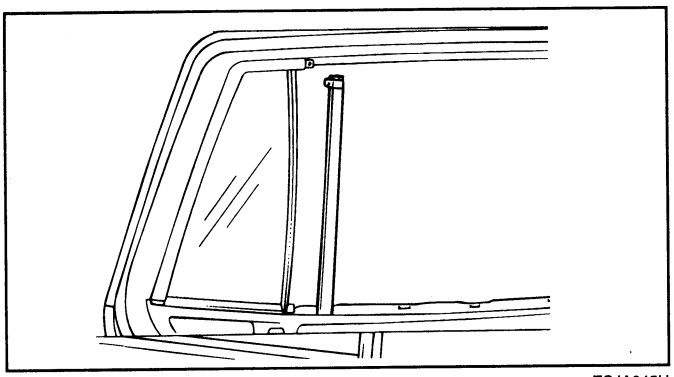

ESJA045H

10. Remove the rear fixed glass.

11. Disconnect the rod from the exterior handle.

    Remove the latch, the wire harness, and the rear door module.

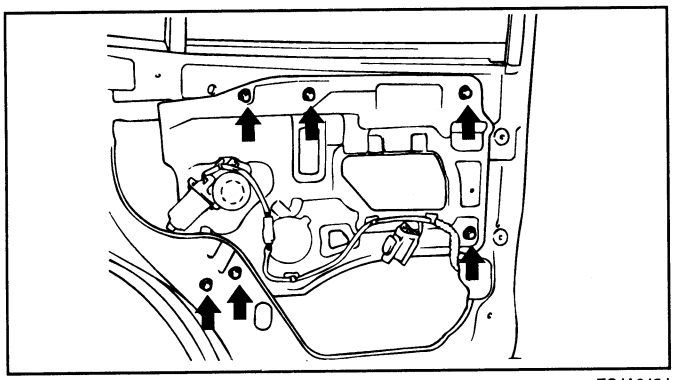

ESJA045J

12. Installation is the reverse of removal.

    When installing the door vapor barrier, butyl tape should not be placed so it blocks the door trim fastener holes.

ADJUSTMENT ESHA0500

DOOR POSITION

Check for a tight fit with the body, then check for an equal gap between the front and rear, top and bottom door edges and the body. The door and body edges should also be parallel.

DOOR STRIKER

Make sure the door is not loose, and that it latches securely without slamming. If necessary, adjust the door as follows :

1. Draw a line around the striker plate for reference.

2. Loosen the striker screws, and move the striker IN and OUT to make the latch fit tighter or looser. Move the striker UP and DOWN to align it with the latch opening. Then lightly tighten the screws and recheck.

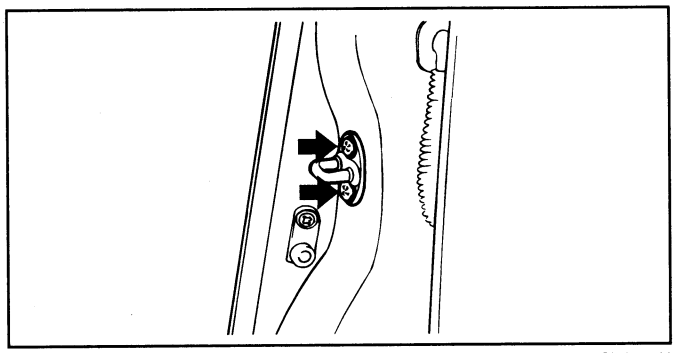

ESHA015N

NOTE

Hold the outside handle outward and push the door against the body to verify that the striker provides a tight fit.

BODY SIDE MOLDINGS

REMOVAL AND INSTALLATION ESJA0600

ROOF SIDE GARNISH

1. Remove the roof side garnish using a flat bladed screwdriver.

CAUTION

When prying with a flat bladed screwdriver, wrap it with protective tape to prevent damage.

In order not to scratch the body and roof side garnish, use protective tape on the body.

2. Pull the roof side garnish up, then remove it.

3. Installation is the reverse of the removal process.

NOTE

If necessary, replace any damaged clips.

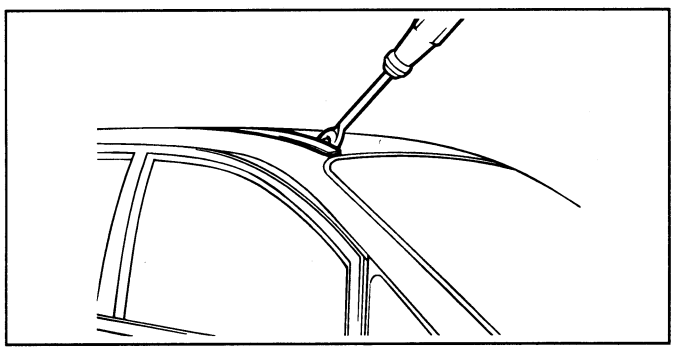

ESHA025B

SUN ROOF

COMPONENTS ESJA0650

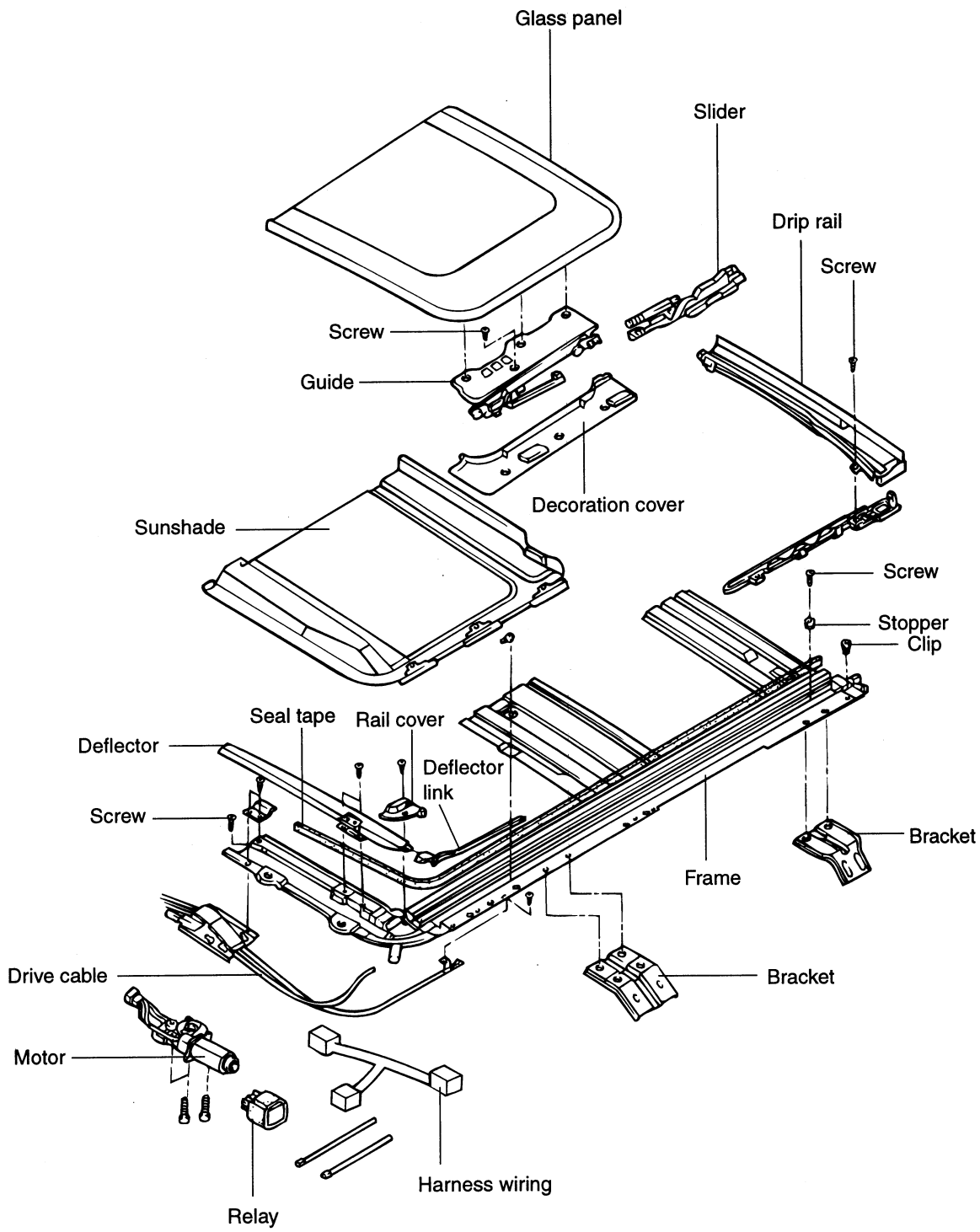

ESJA030A

REMOVAL ESHA0700

1. To remove the sunroof, first remove the following parts :
   1) Overhead console lamp.
   2) Sun visor and grip handle.
   3) Pillar trims.
2. Remove the decoration cover and the glass panel.

Tightening torque

Glass panel mounting nuts :

4-6 Nm (40-60 kg·cm, 2.9-4.4 lb·ft)

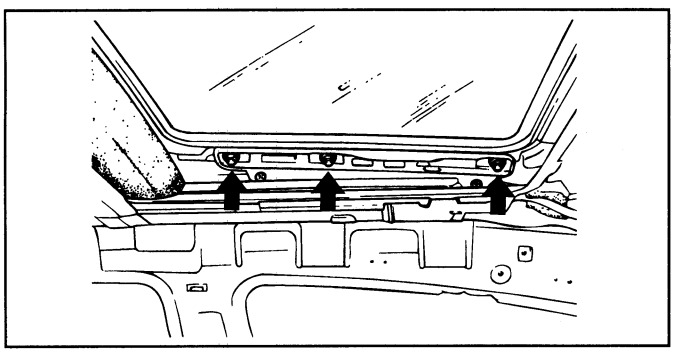

ESA9011K

3. Disconnect the drain hose.

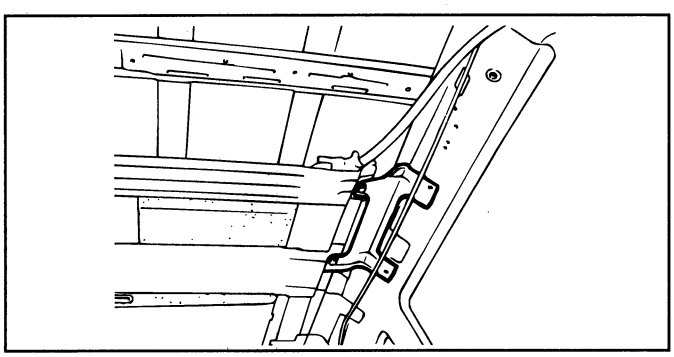

ESHA027A

4. Loosen the bolts and nuts holding the sunroof and then remove the sunroof assembly.

Tightening torque

Sunroof mounting bolts:

7-11 Nm (70-110 kg·cm, 5.1-8.0 lb·ft)

Sunroof mounting nuts:

4-6 Nm (40-60 kg·cm, 2.9-4.4 lb·ft)

NOTE

When removing the sunroof assembly, carefully pull out the assembly to avoid damaging other parts.

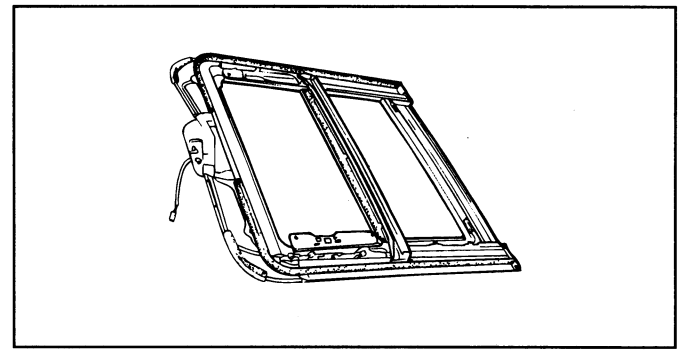

ESA9011B

DISASSEMBLY ESHA0750

1. Remove the drip rail.

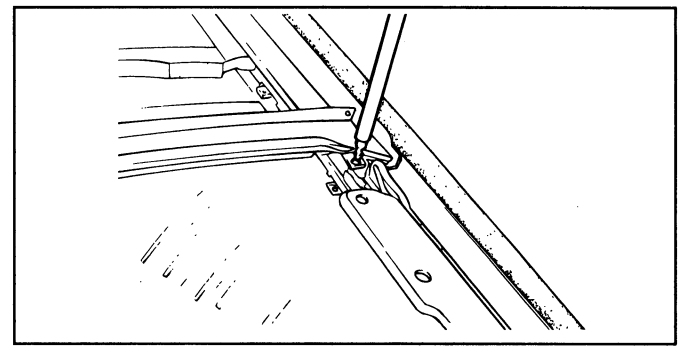

ESA9011C

2. Remove the stopper.

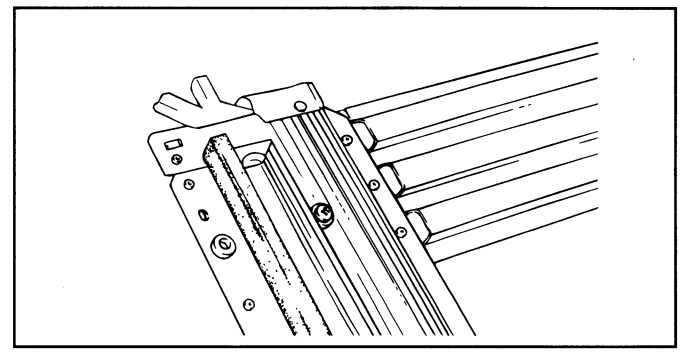

ESA9011D

3. Remove the sun shade.

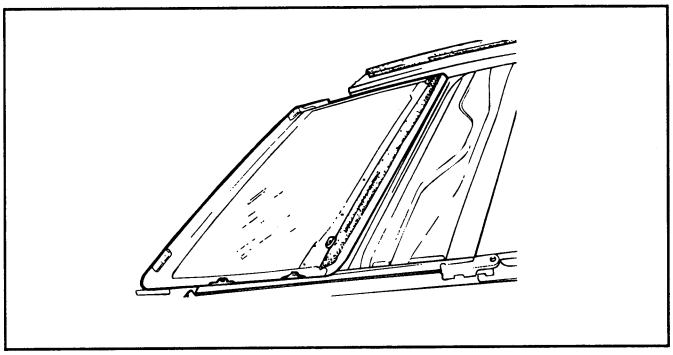

ESA9011E

4. Remove the guide assembly.

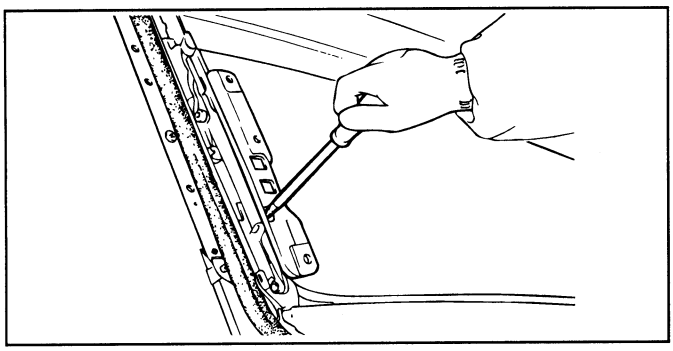

ESA9011F

5. Remove the deflector.

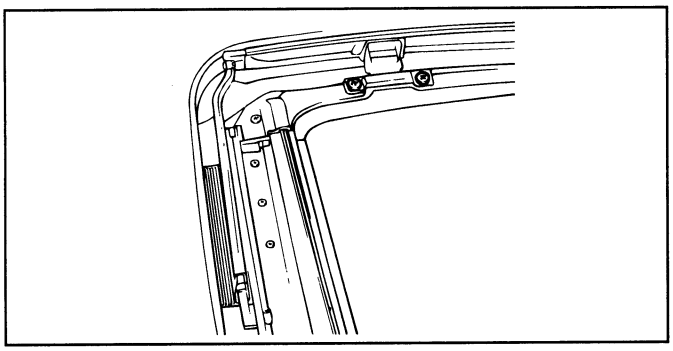

ESA9011G

6. Remove the motor assembly.

CAUTION

When removing the motor, the slider assembly should always be in a fully closed position. If there is discrepancy between the glass position and the motor pulley in a fully closed position, the sunroof will not operate correctly.

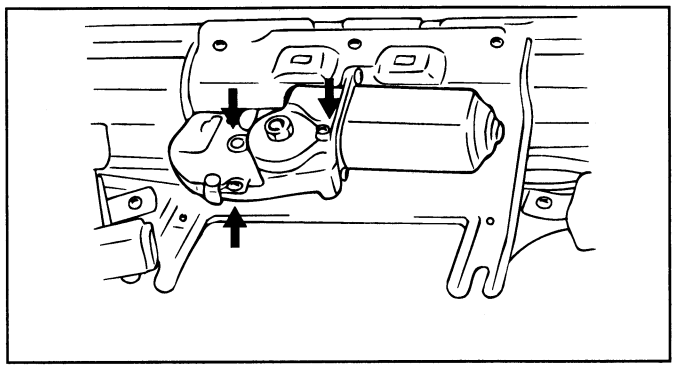

ESA9060N

INSTALLATION ESHA0850

Installation is the reverse of removal.

NOTE

Check that the limit switches (LS1 and LS2) of the motor are fully closed. Align the guide roller center and slider mating marks in the fully closed position.

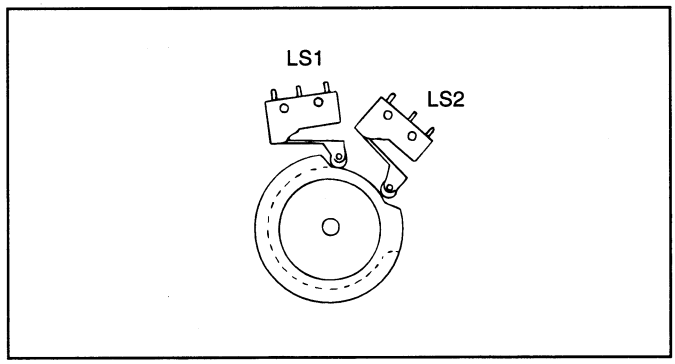

ESA9070D

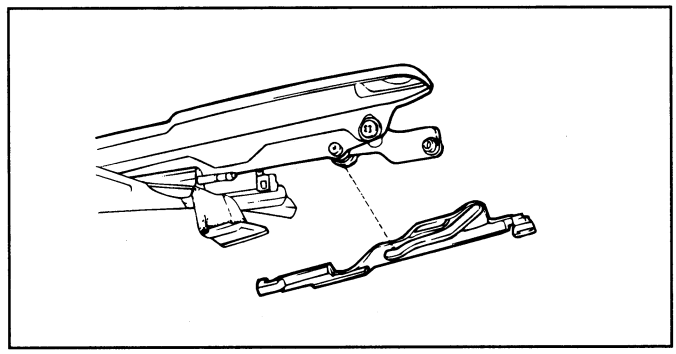

ESA9011H

VERIFY OPERATING CONDITION AFTER INSTALLATION ESHA0900

If the glass panel moves slowly, check and adjust.

1. Make sure the battery is fully charged.
2. Make sure that the sunroof sliding unit is free of abrasive materials.
3. Make sure that, when the glass panel opens, the rear of the panel does not jam against the roof panel. If there is interference, fully open the glass panel and move the stopper forward.

NOTE

If the stopper is moved forward too far, it may cause malfunction or leaks. Make sure the gap between the glass panel and roof panel is not more than 0.3 mm (0.012 in.).

4. Measure the driving force of the motor, and adjust it to 15-25 kg (33.1-55.7 lb) with the torque adjustment nut on the motor.

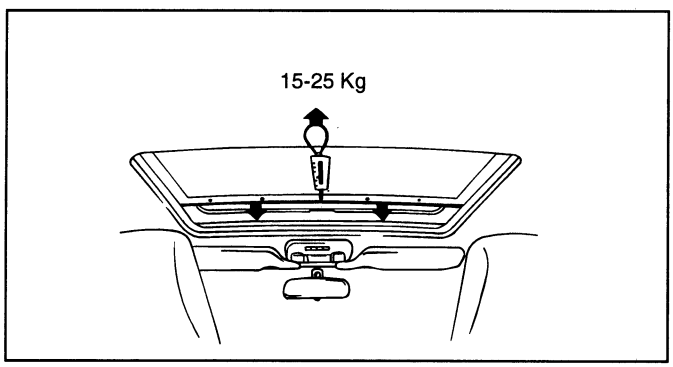

ESA9075D

5. After adjustment, be sure to lock the nut with the pawl washer.

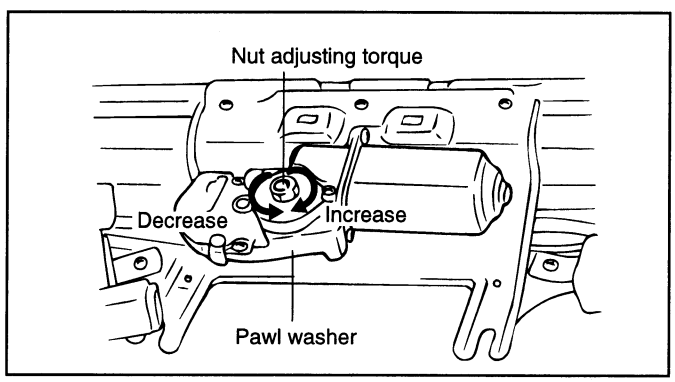

ESA9075E

ADJUSTMENT ESHA0950

Adjust the difference between the height of the glass panel and the roof panel.

Front side : 0 (+0, –1.0) mm

Rear side : 0 (+1, +0) mm

If the difference is not as specified, adjust the following procedure.

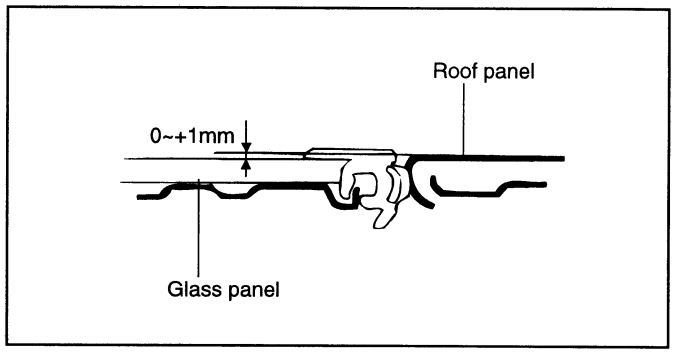

ESA9011J

1. Loosen the front screw and rear screw. Adjust the height between the glass panel and roof panel.

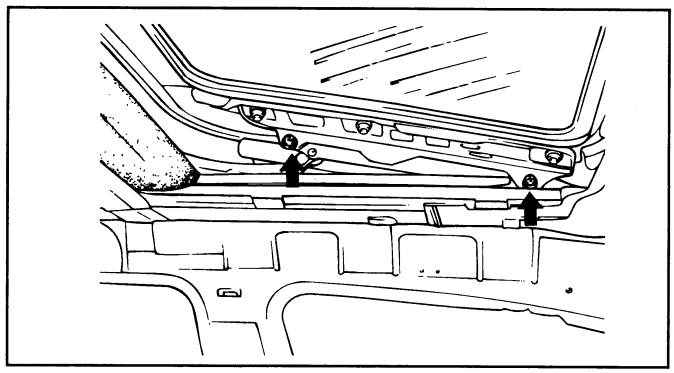

ESA9011I

2. Loosen the nuts holding the glass panel and adjust the gap between the glass panel and roof panel.

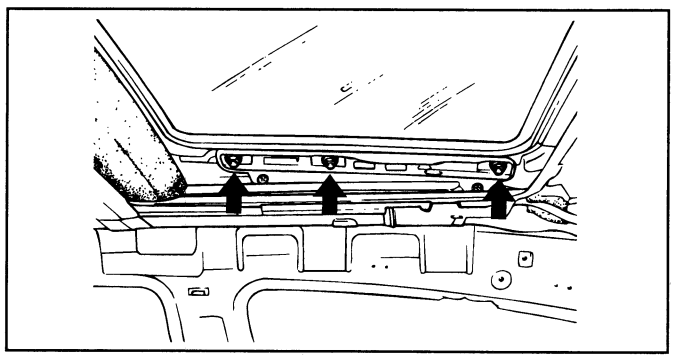

ESA9011K

OUTSIDE REAR VIEW MIRROR

COMPONENTS ESJA0950

[ELECTRIC REMOTE CONTROL TYPE]

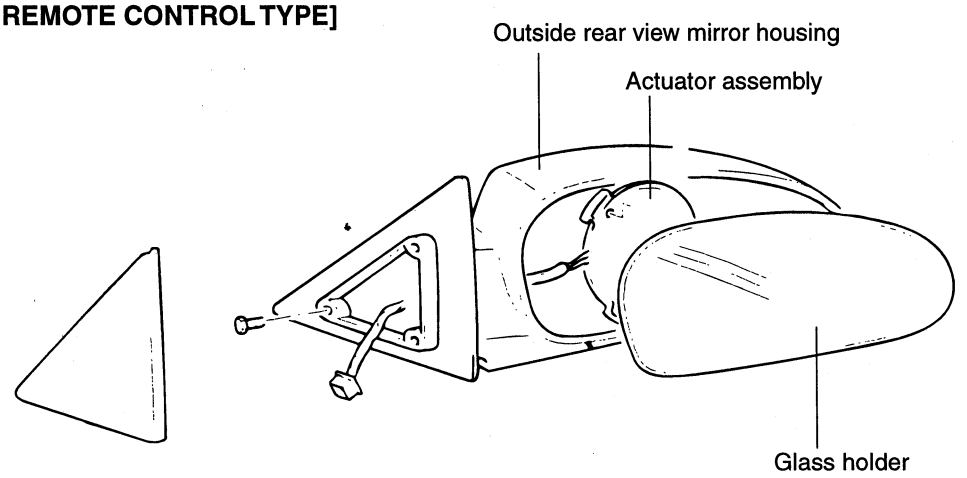

[MANUAL REMOTE CONTROL TYPE]

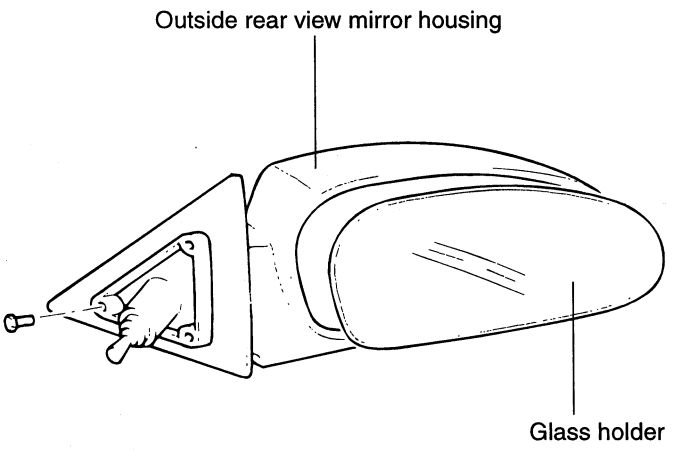

ESA9030A

REMOVAL AND INSTALLATION ESJA1000

CAUTION

Wear gloves to remove and install the mirror holder.

1. Insert flat bladed screwdriver between the outside rear view mirror holder and the mirror assembly.

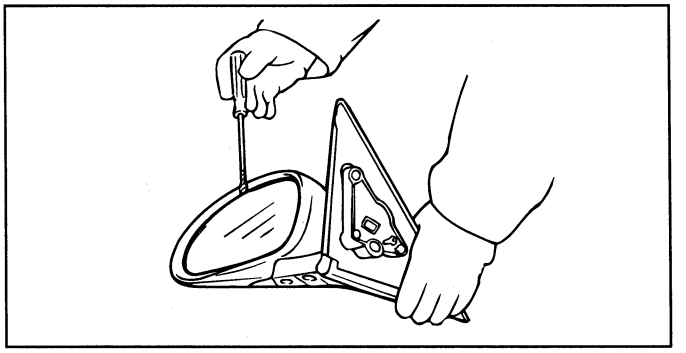

ESA9030B

CAUTION

When prying with a flat bladed screwdriver, wrap it with a shop towel to prevent damage.

2. Remove the outside rear view mirror actuator from the outside rear view mirror housing.

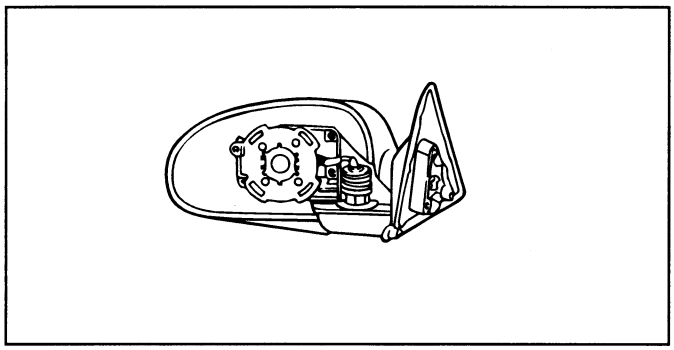

ESA9030C

3. Installation is the reverse of removal.

INTERIOR

CONSOLE

COMPONENTS ESJA1050

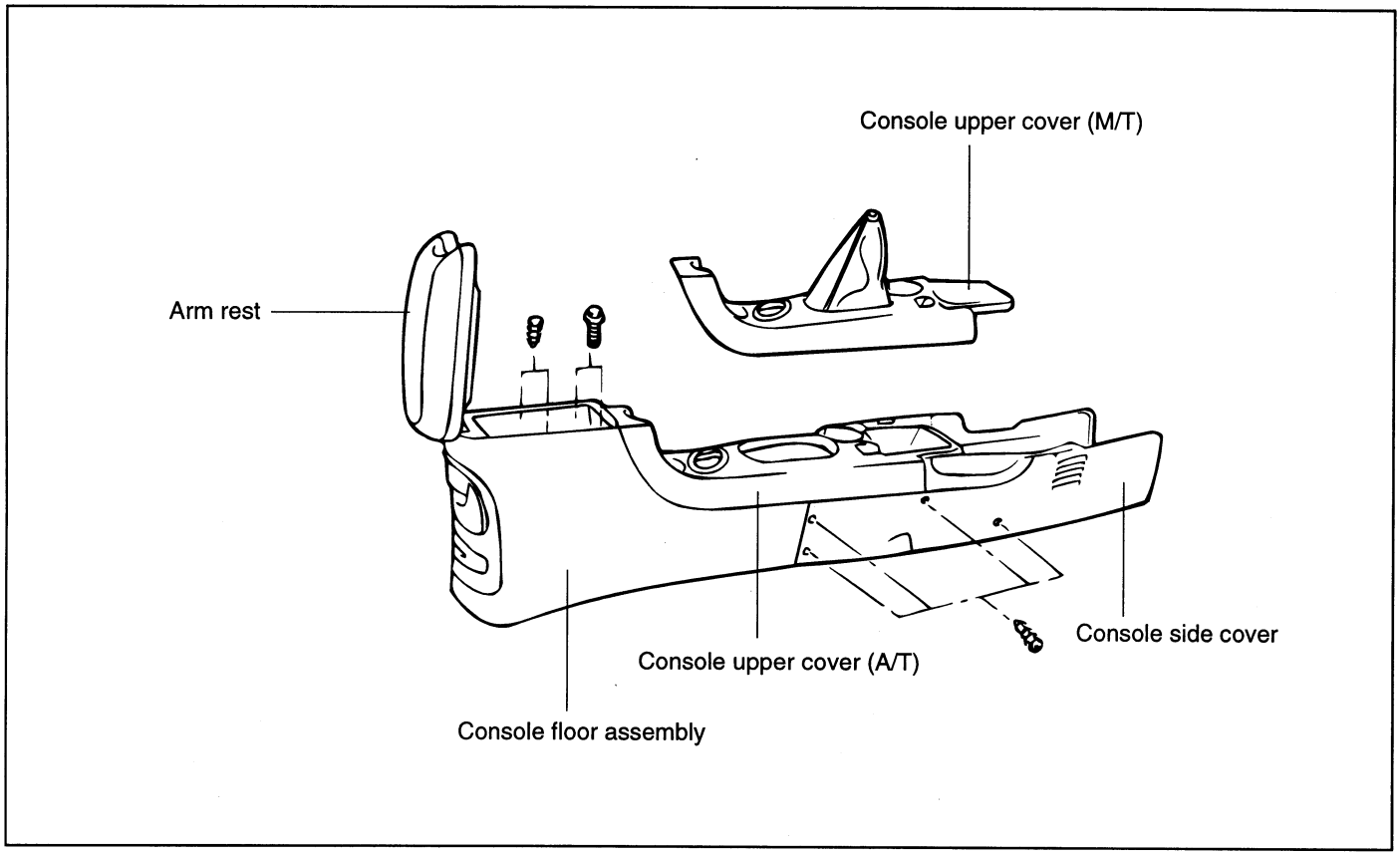

ESJA065A

REMOVAL AND INSTALLATION ESJA1100

1. Remove the screws holding the console side cover and remove the console side cover.

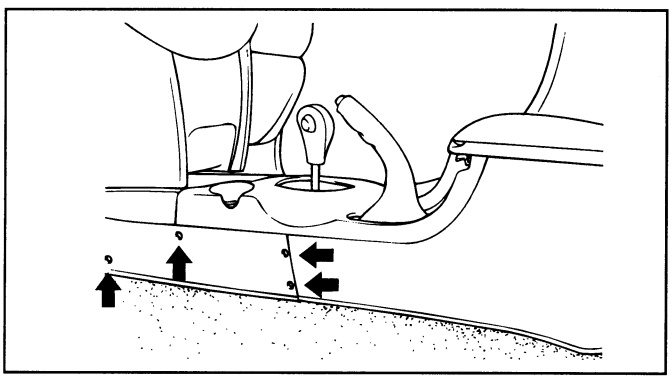

ESJA065B

2. Remove the screws holding the floor console assembly and then pull out the floor console.

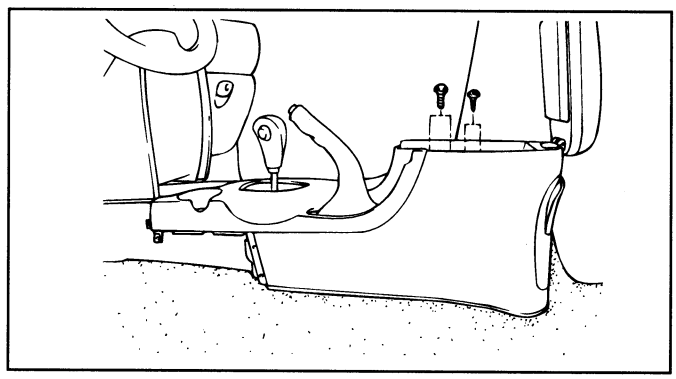

ESJA065C

3. Installation is the reverse of removal.

CRASH PAD

REMOVAL AND INSTALLATION ESJA1150

1. Disconnect the negative (-) battery terminal.
2. Disconnect the wire connectors from the front seats and then remove the front seats. (Refer to page BD-44)

CAUTION

Take care not to scratch the trim when removing the front seats.

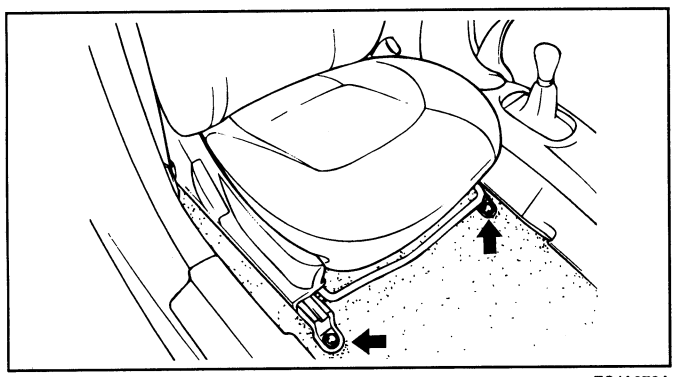

ESJA070A

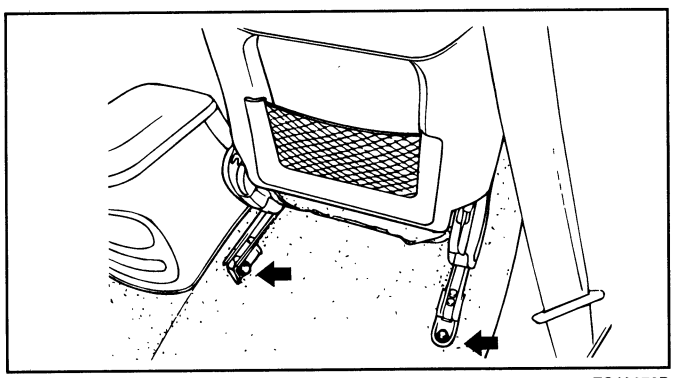

ESJA070B

3. Remove the 4 screws holding the floor console side cover.

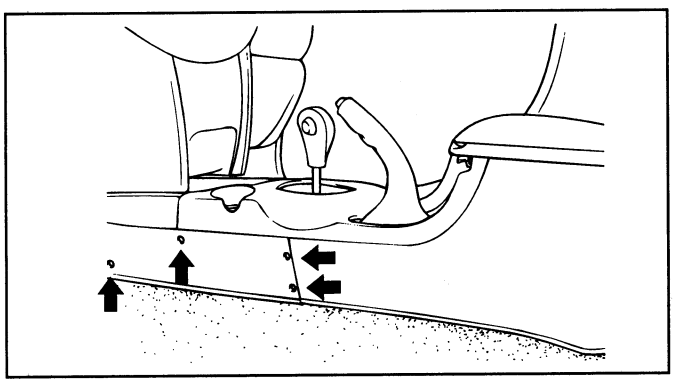

ESJA065B

4. Remove the 2 screws holding the floor console assembly and then pull out the floor console.

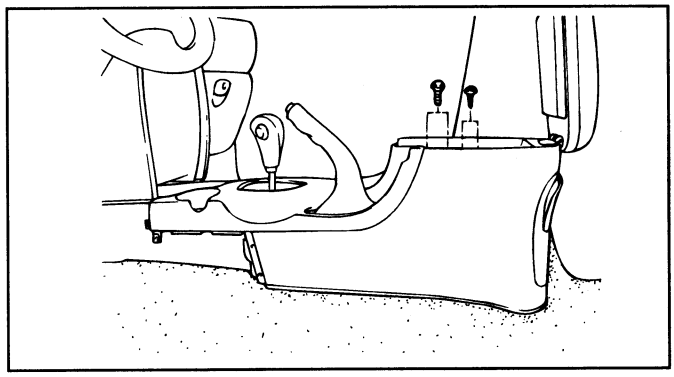

ESJA065C

5. Remove the air bag module.

CAUTION

For instructions on the removal of the air bag module and clock spring, refer to page RT-20.

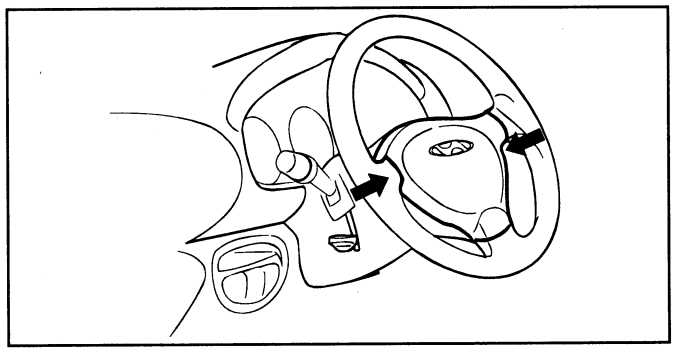

ESJA035P

6. Remove the steering wheel.

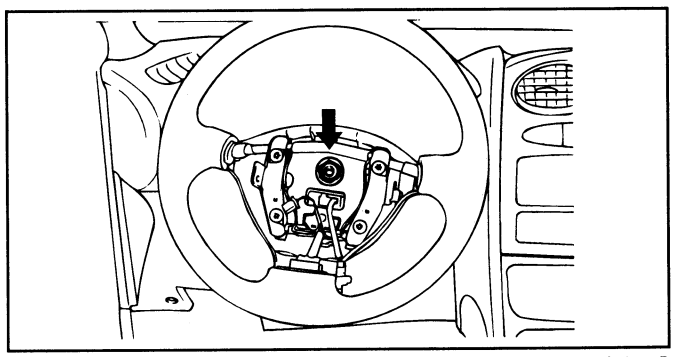

ESJA035B

7. Remove the 3 screws holding the steering column lower shroud and then remove the steering column lower and upper shroud.

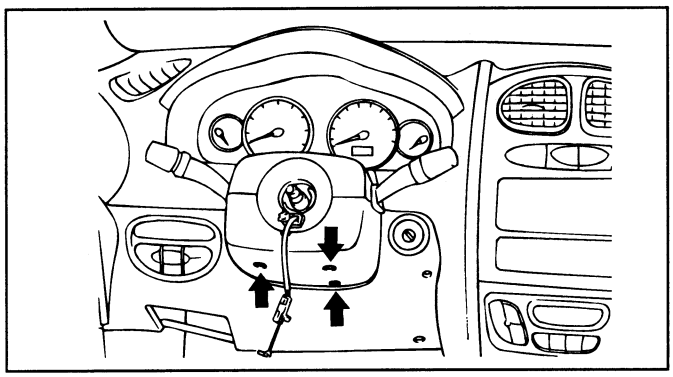

ESJA035C

8. Disconnect and remove the multifunction switch(3 screws).

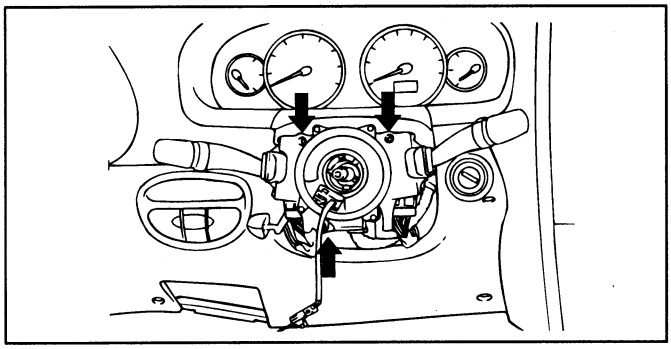

ESJA035D

9. Remove the driver side lower crash pad panel (3 screws) and hood release cable.

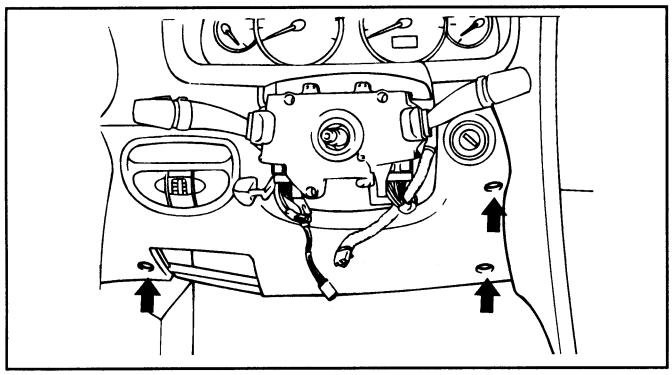

ESJA035E

10. Remove the instrument cluster facia panel (2 screws).

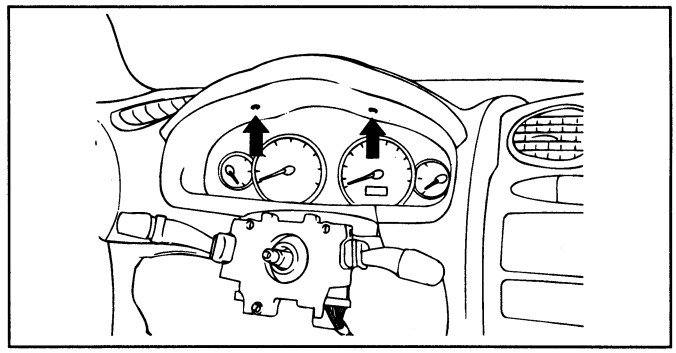

ESJA035F

11. Remove the instrument cluster (4 screws).

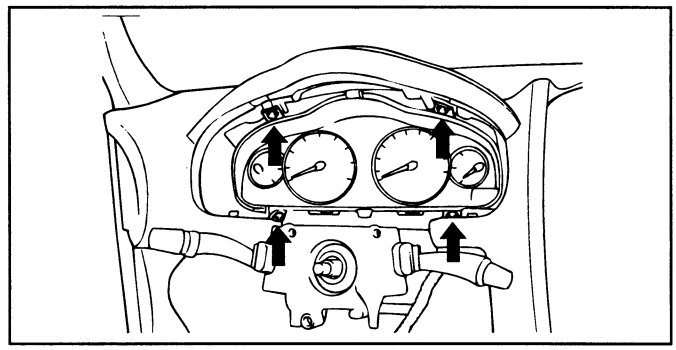

ESJA035G

12. Remove the ash tray and then remove the 4 screws holding the center facia panel.

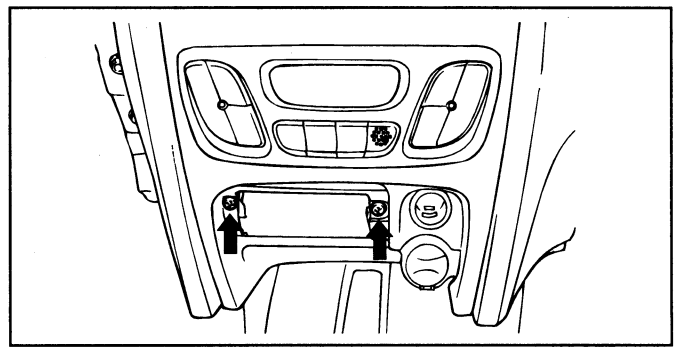

ESJA035H

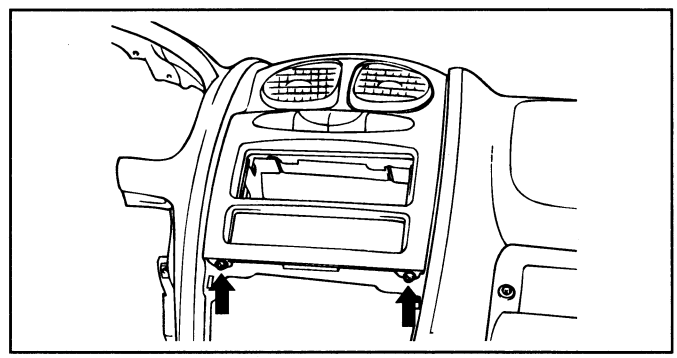

ESJA035J

13. Remove the center facia panel and disconnect the connectors.

14. Remove the audio unit.

15. Remove the glove box and the side cover (7 screws).

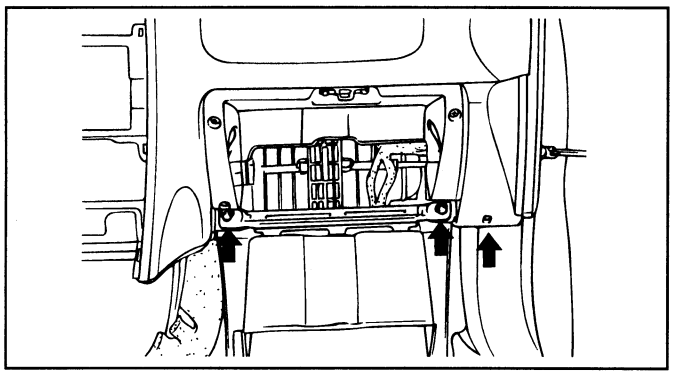

ESJA035K

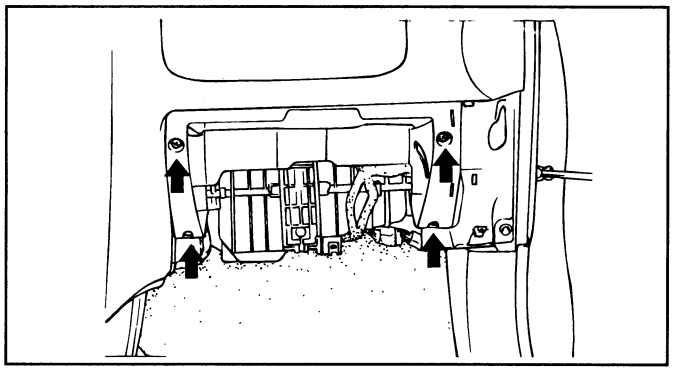

ESJA035L

16. Pry loose the front pillar trim and remove the bolts holding the crash pad.

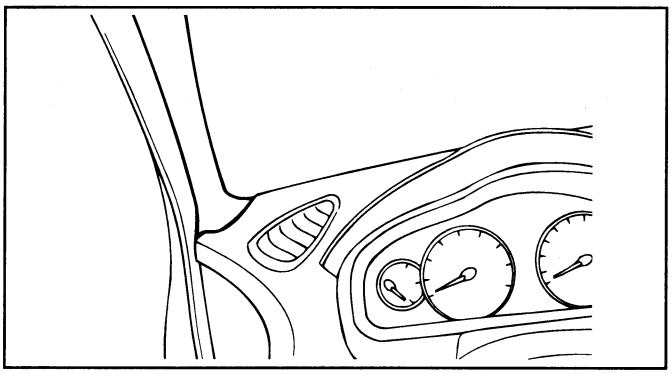

ESJA035O

17. Remove the 8 bolts holding the main crash pad.

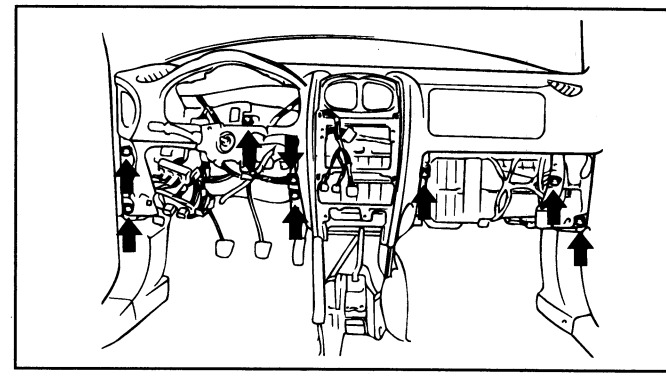

ESJA035M

18. Disconnect the connectors and then remove the main crash pad.

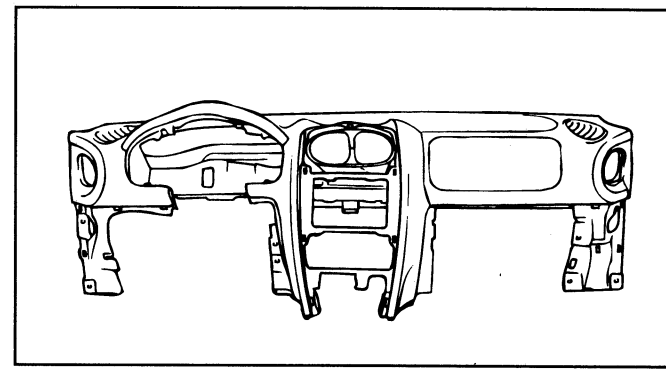

ESJA035N

19. Installation is the reverse of removal. Connect all connectors securely.

INTERIOR TRIM

REMOVAL ESJA1200

FRONT PILLAR TRIM

Pry loose the front pillar trim with a screwdriver.

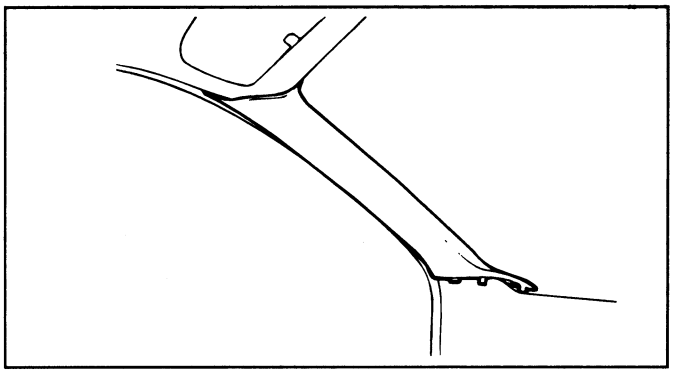

ESJA050A

COWL SIDE TRIM

Remove the screws holding the cowl side trim and remove it.

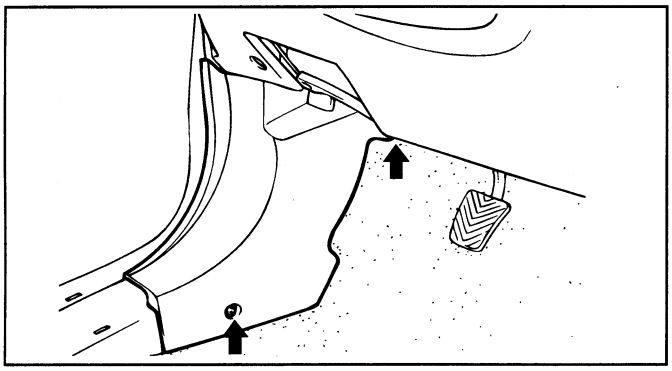

ESJA050N

FRONT DOOR SCUFF TRIM

1. Remove the screws holding the front door scuff trim.
2. Remove the front door scuff trim.

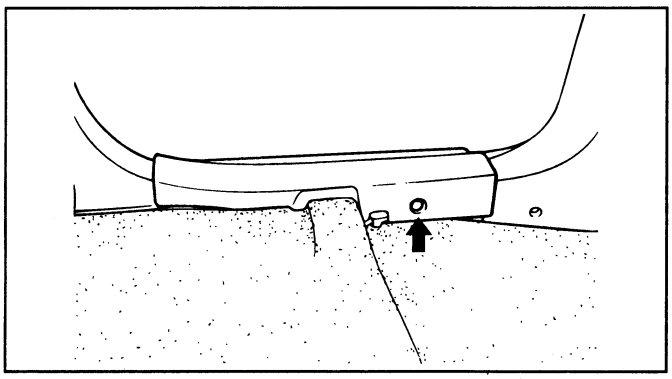

ESJA050B

REAR DOOR SCUFF TRIM

1. Remove the screws holding the rear door scuff trim.
2. Remove the rear door scuff trim.

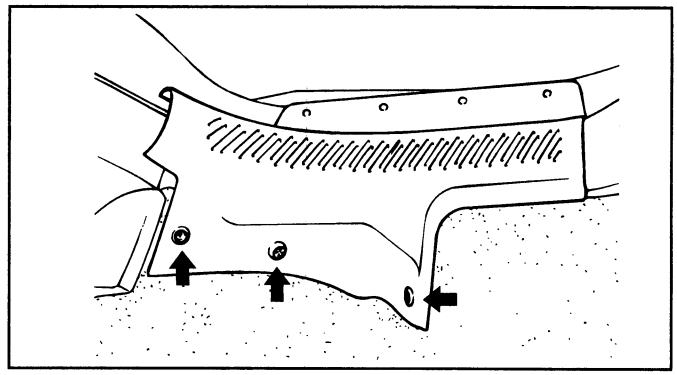

ESJA050C

CENTER PILLAR TRIM

1. Remove the bolt holding the seat belt lower anchor and pry loose the center pillar lower trim.

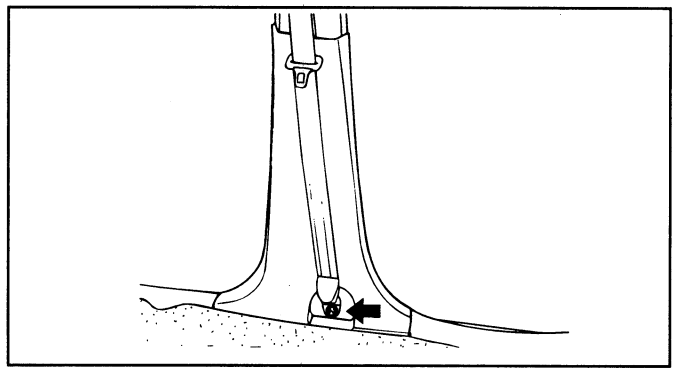

ESJA050D

2. Remove the bolt holding the seat belt upper anchor and 2 screws holding the center pillar upper trim.

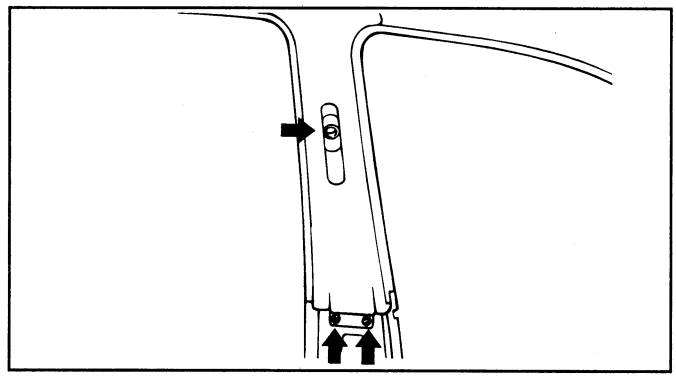

ESJA051E

REAR TRANSVERSE TRIM

1. Remove the screws holding the rear transverse trim and remove the trim.

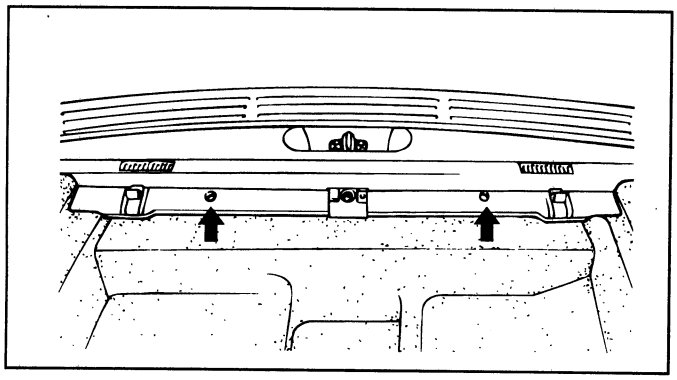

ESJA050F

2. Remove the bolts holding the luggage floor under tray assembly.

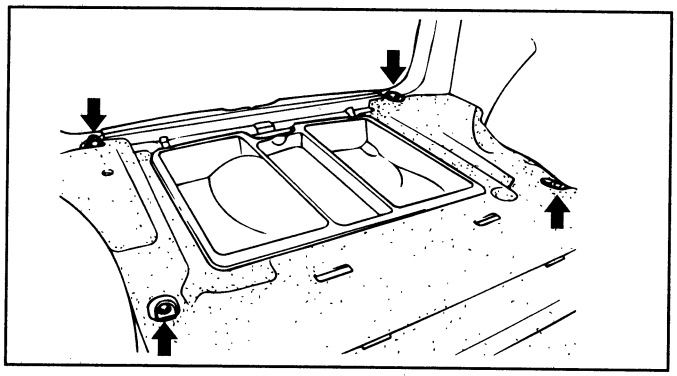

ESJA050G

QUARTER TRIM

Remove the bolt holding the rear seat belt lower anchor and pry loose the quarter trim.

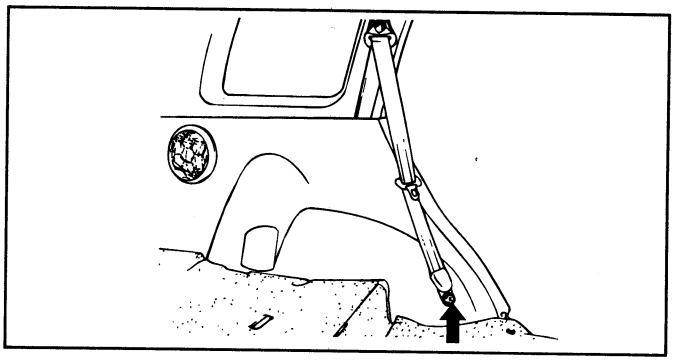

ESJA050H

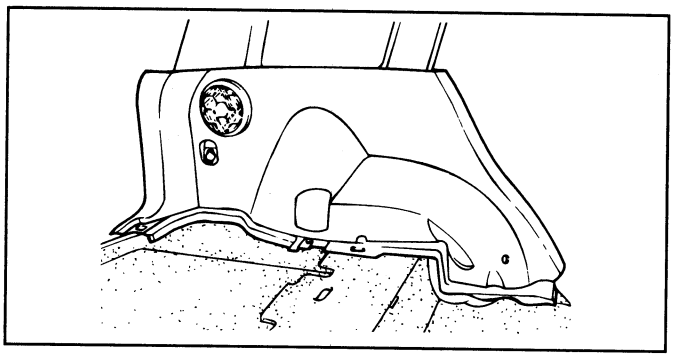

ESJA050I

HEADLINING REAR COVER

Pry loose the headlining rear cover with a screwdriver.

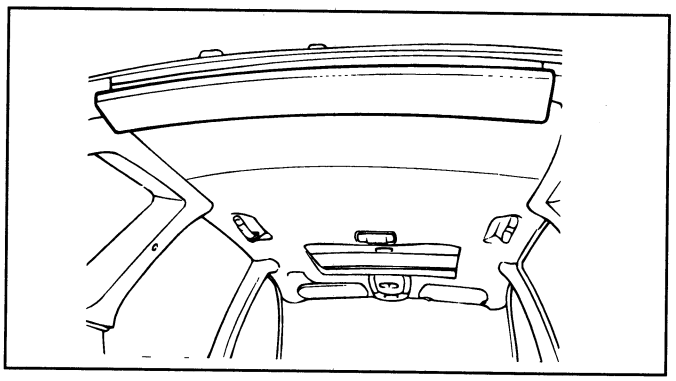

ESJA050J

REAR PILLAR TRIM

1. Remove the bolt holding the rear seat belt upper anchor.

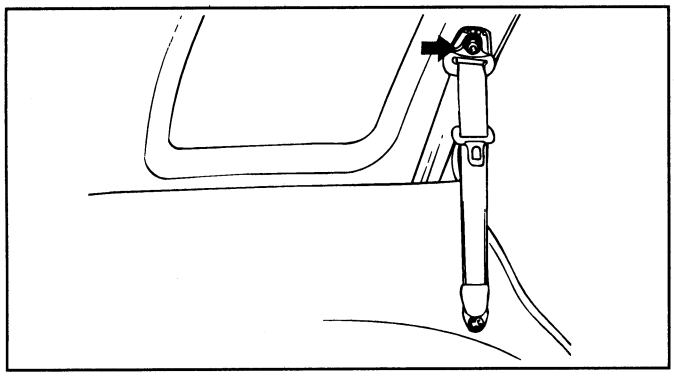

ESJA050K

2. Remove the 3 screws holding the rear pillar trim and pry loose the trim.

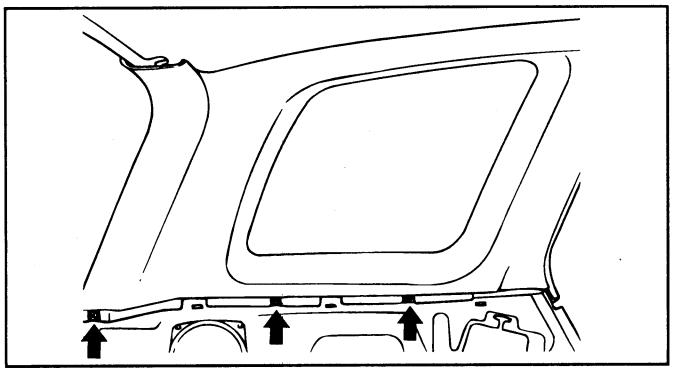

ESJA050L

HEADLINING

1. To remove the headlining, first remove the following parts :

   - Overhead console and sunvisor.

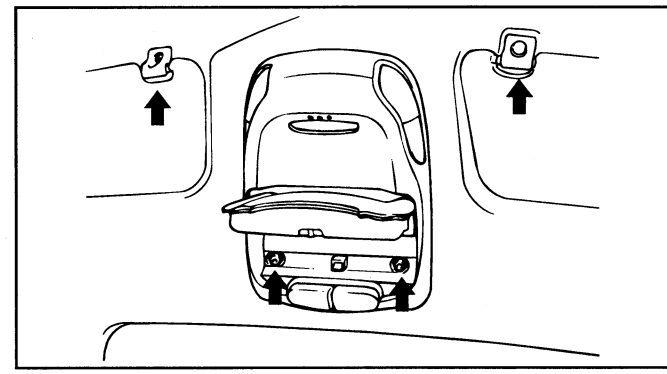

ESJA050M

   - Room lamp, luggage lamp and assist grip.

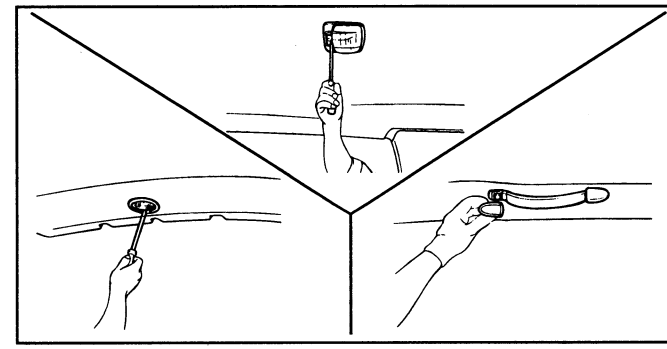

ESHA045H

2. Pry the headliner loose and carefully remove it.
3. Installation is the reverse of removal.

WINDSHIELD GLASS

COMPONENTS ESJA1250

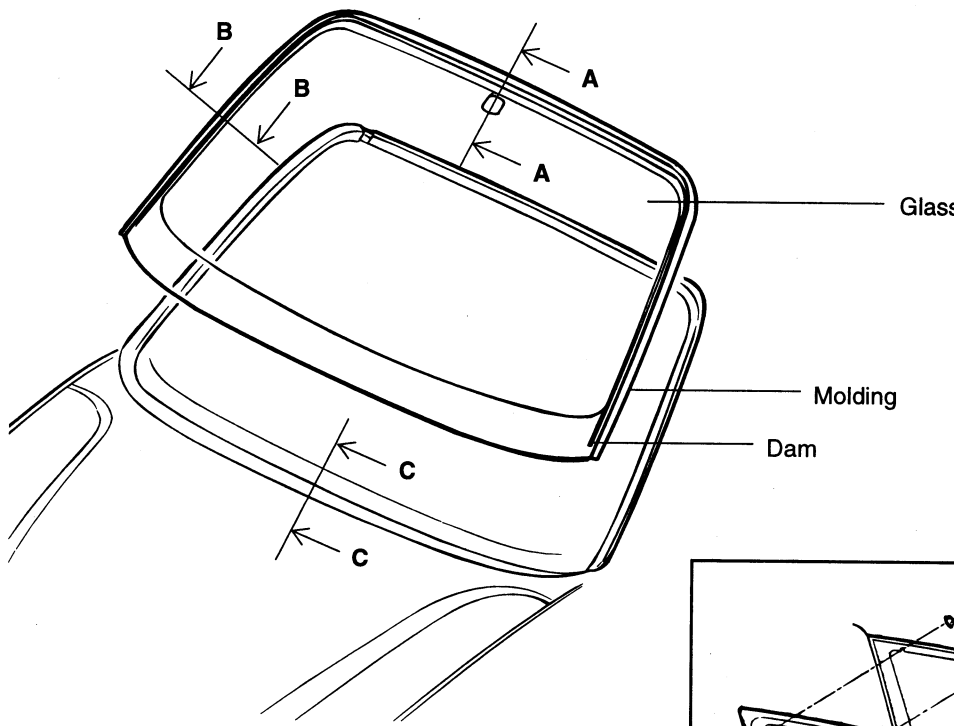

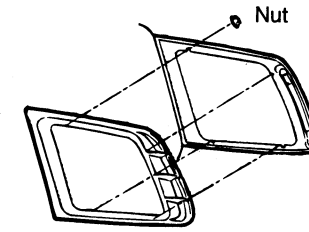

QUARTER FIXED GLASS

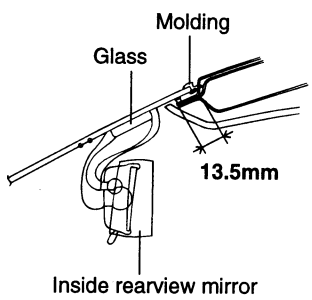

SECTION A-A

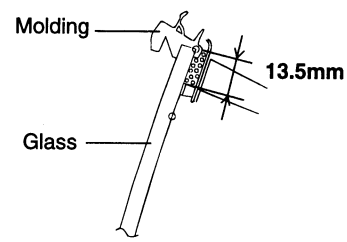

SECTION B-B

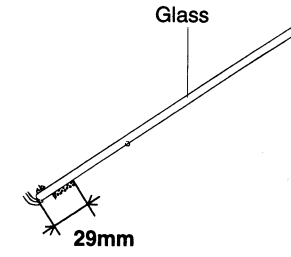

SECTION C-C

REMOVAL ESJA1300

1. To remove the windshield, first remove the following parts :
   1) Front pillar trim
   2) Inside rear view mirror
   3) Wiper arms
   4) Cowl top cover
   5) Windshield glass molding

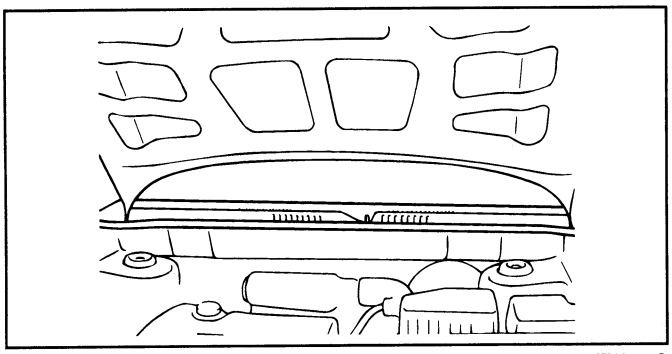

ETJA060G

2. Use the special tool (09861–31100) to cut through the sealant.

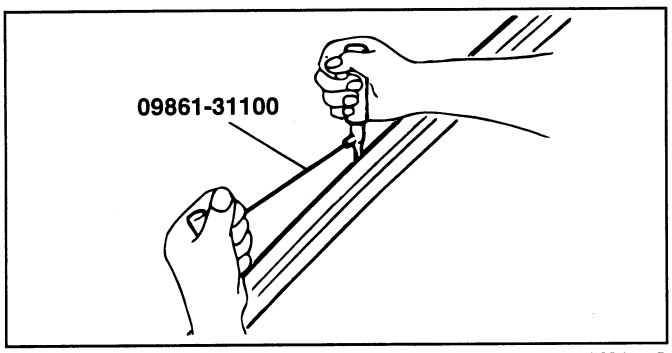

ESDA230B

3. Make mating marks on the glass and body if the glass is to be reinstalled.

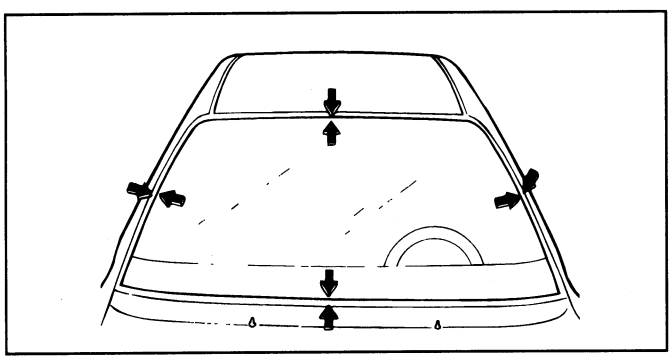

X60-026A

4. Take out the windshield glass with the special tool(09861–31400).

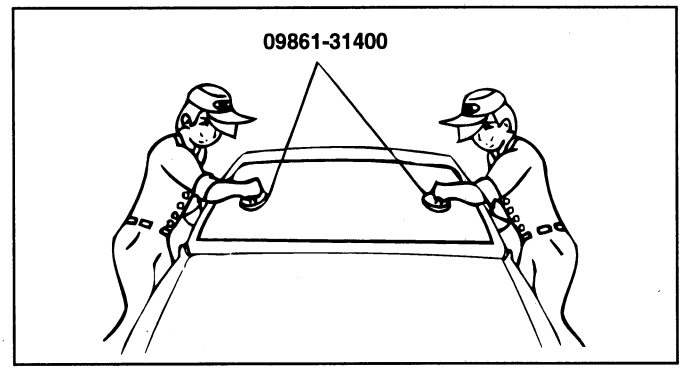

ESDA230D

INSTALLATION ESJA1350

1. Using a knife or the special tool(09861–31200), cut the old sealant smoothly to a thickness of about 2 mm (0.08 in.) on the bonding surface around the entire windshield flange.

CAUTION

Be careful not to remove more adhesive than necessary, and also not to damage the paintwork on the body surface with the knife. If the paintwork is damaged, repair the damaged area with touch-up paint.

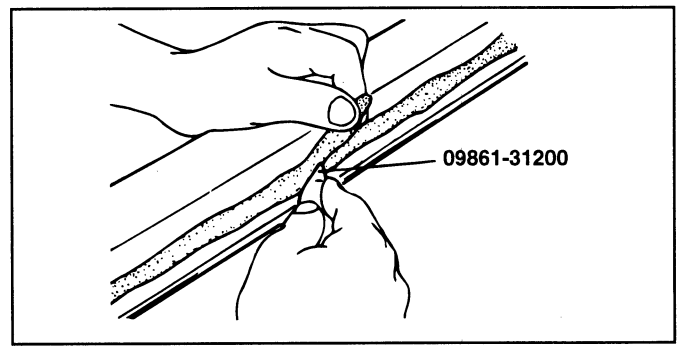

ESDA235B

2. Clean the body bonding surface with a sponge dampened in alcohol, or wax and grease remover.

3. Center the new windshield glass in the opening. Mark the location by marking lines across the glass and body with a grease pencil at the four points as shown.

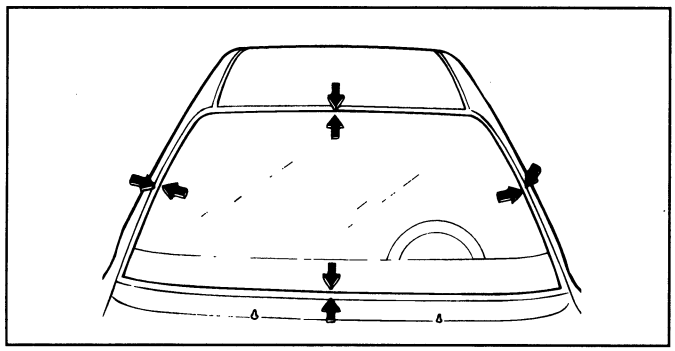

X60-026A

4. Glue the rubber dam to the inside surface of the windshield glass around the entire edge as shown, to contain the sealant during installation.

Part	"A"	Remarks
Upper	13.5mm constant	Glass molding sub
Side		

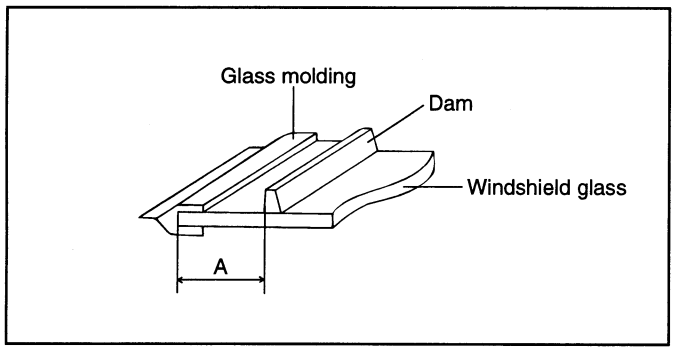

ESHA050E

5. Install the windshield glass molding. Do not allow any gaps.

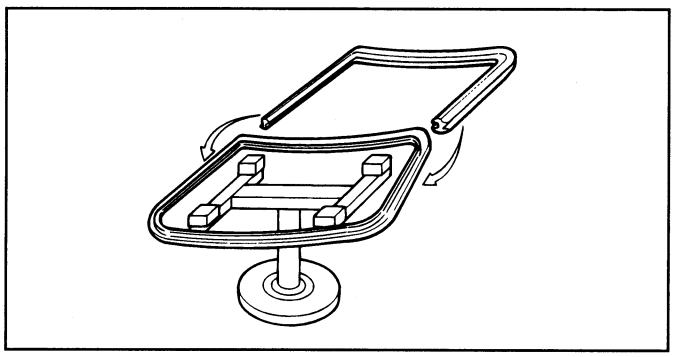

X60-027A

6. Clean the surface applying primer with alcohol.

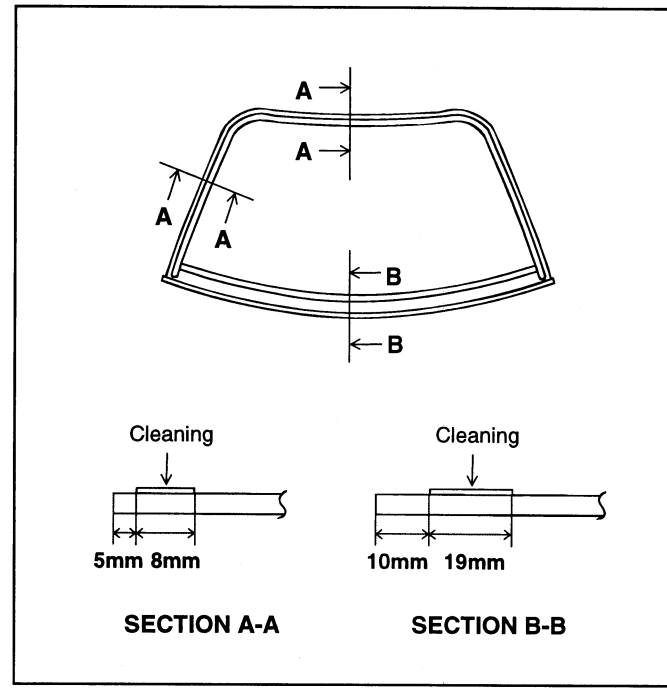

ESJA015I

7. Apply a light coat of glass primer to the outside of the dam.

NOTE

1. **Never touch the surface with your hand after you have applied primer.**
   If you do, the adhesive may not bond to the glass properly, causing a leak after the windshield glass is installed.
2. **Do not apply body primer to the glass.**
3. **Keep water, dust, and abrasive materials away from the primer.**

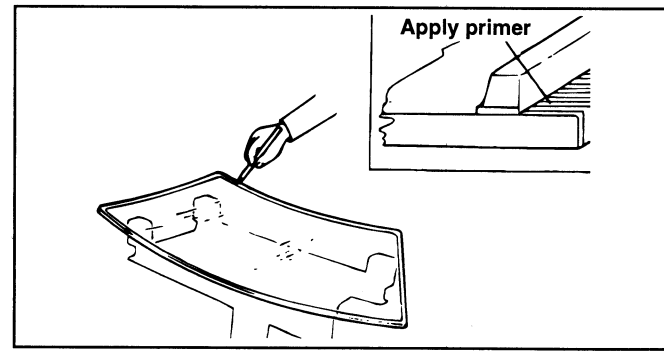

ESDA235E

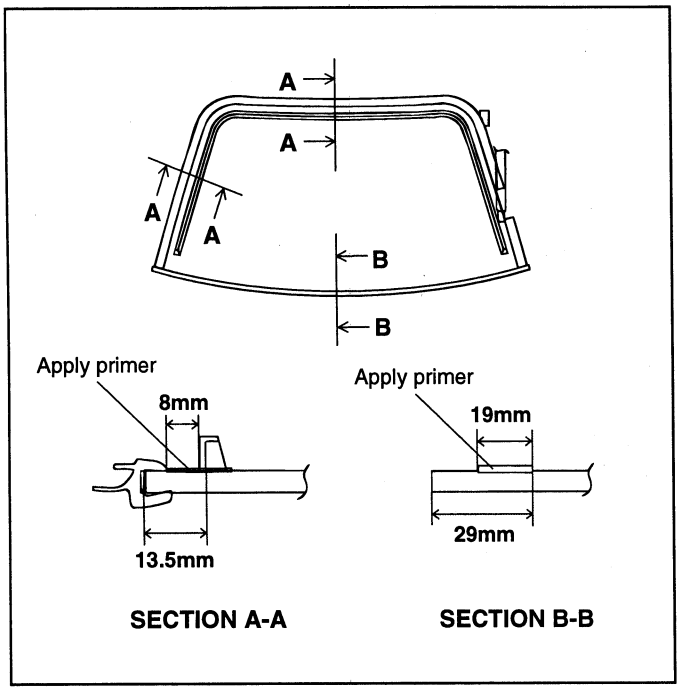

ESJA015J

8. Apply sealant around the edge of the glass.

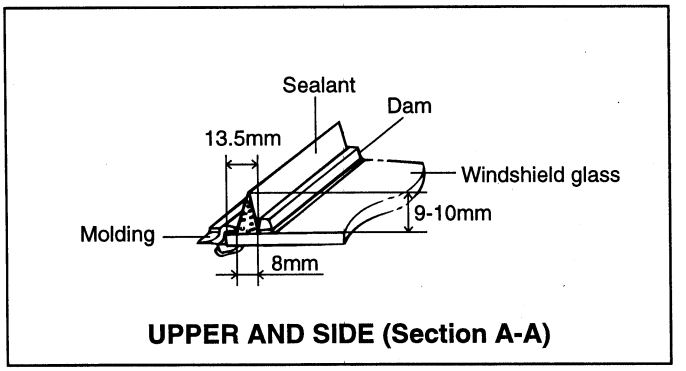

ESJA110N

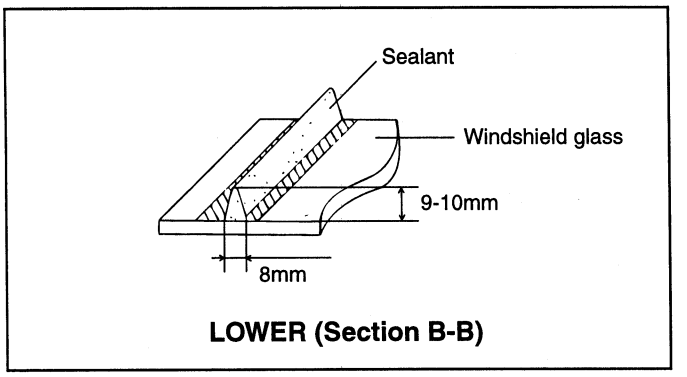

ESJA110P

NOTE

Apply the adhesive within 5 minutes after applying the primer.

9. Apply a light coat of body primer to the original sealant remaining around the window opening flange. The glass should be installed within 10 minutes after you apply the primer.

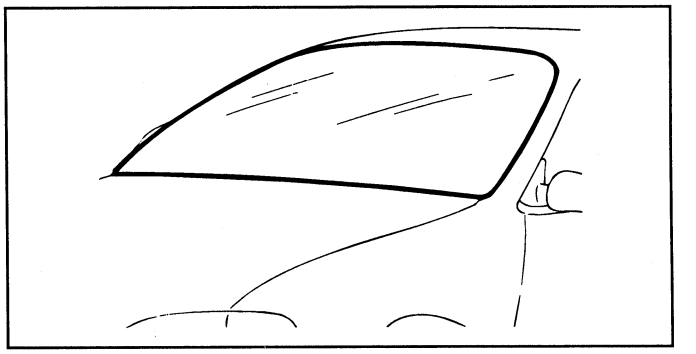

ESDA235F

10. Using suction cups or the special tool (09861–31400), lower the glass over the opening, align it with the marks made in step 3 and set it down on the sealant.

11. Remove excess adhesive with a putty knife or gauze. Fill any cavities around the windshield glass.

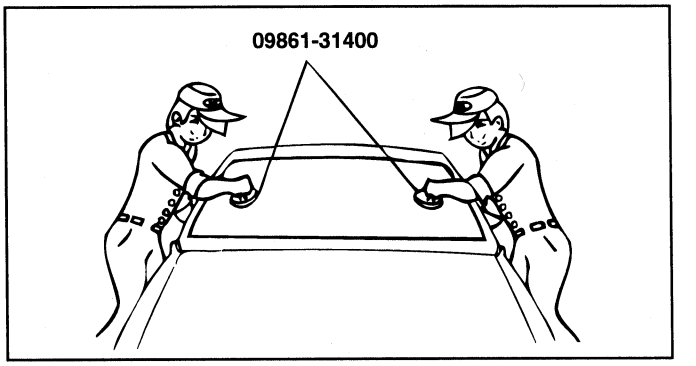

ESDA230D

12. After one hour, perform a water-leak test for the windshield. Use a cold water spray, being careful not to direct a powerful stream of water on the new adhesive material. Allow water to spill over the edges of the glass.

13. If there are leaks, dry the affected area, then apply sealant.

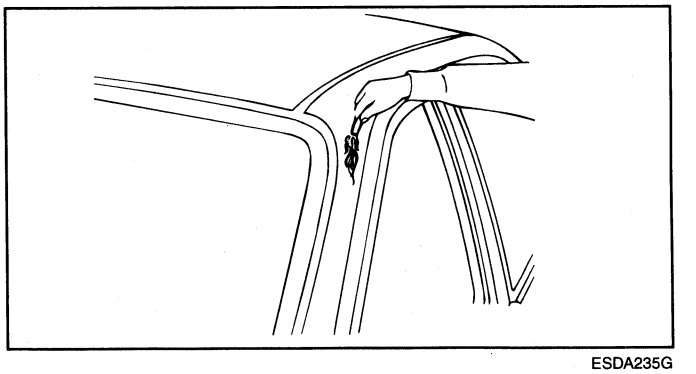

ESDA235G

14. Install the removed parts.

CAUTION

1. **Keep the windshield dry for the first hour after installation.**
2. **Let the car stand for at least four hours after windshield installation. If the car has to be used winthin the first 8 hours, it must be driven slowly.**
3. **Take care not to slam the doors with all the windows rolled up.**
4. **Take care not to stress the body (such as when going in and out of driveways at an angle or driving over rough, uneven roads).**

TAILGATE GLASS

COMPONENTS ESJA1500

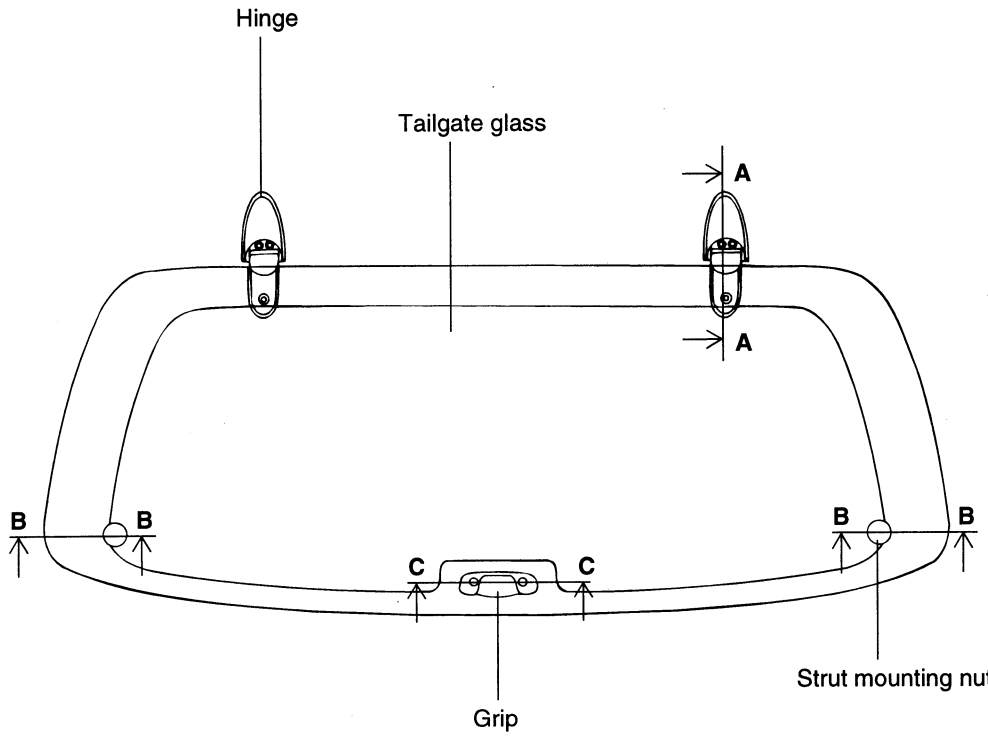

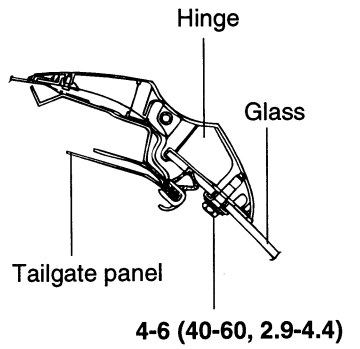

SECTION A-A

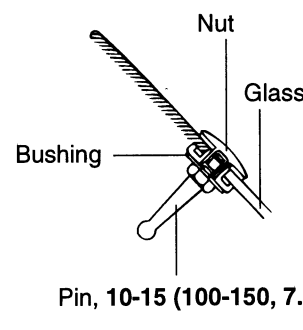

SECTION B-B

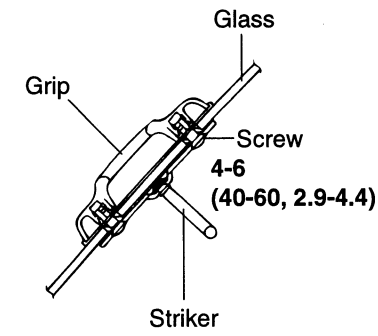

SECTION C-C

TORQUE : Nm (kg.cm, lb.ft)

ESJA100I

REMOVAL ESJA1550

1. Remove the heater connector from the tailgate glass.

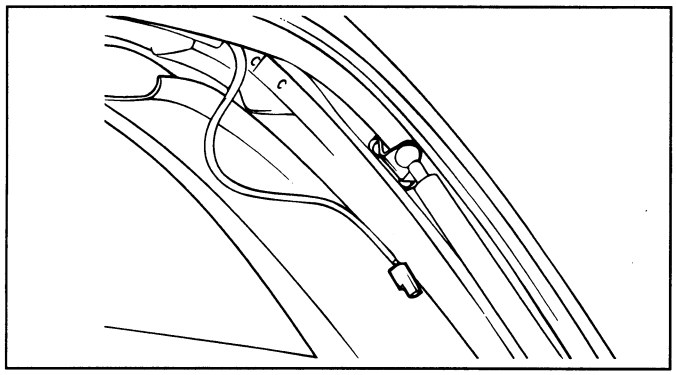

ESJA020E

2. Loosen the nuts holding the tailgate glass strut.

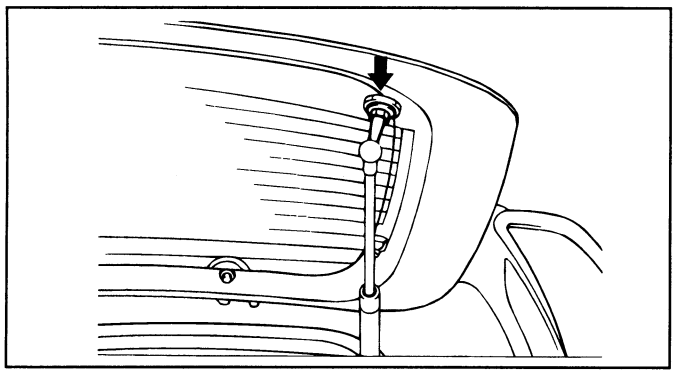

ESJA020F

3. Loosen the bolts holding the tailgate glass hinge.

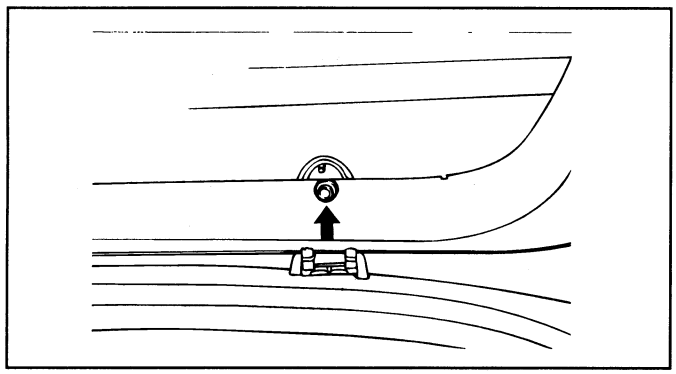

ESJA020G

4. Remove the tailgate glass.

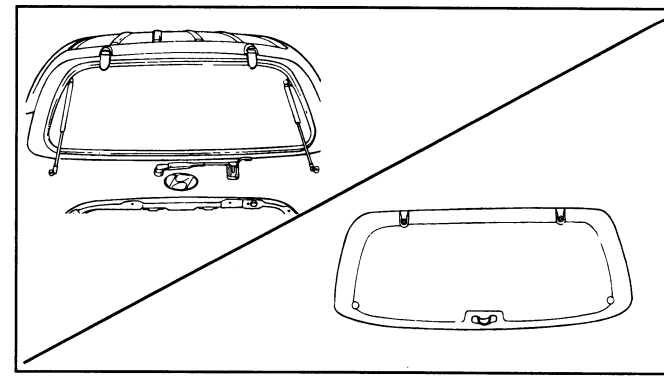

ESJA100J

QUARTER GLASS

REMOVAL ESJA1400

1. Remove the quarter trim and the rear pillar trim.

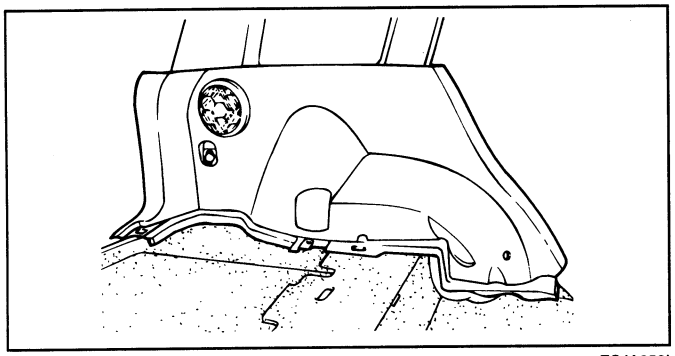

ESJA050I

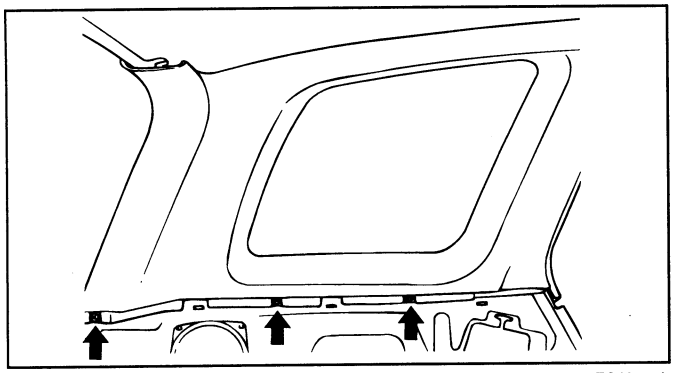

ESJA050L

2. Remove the nuts holding the quarter fixed glass.

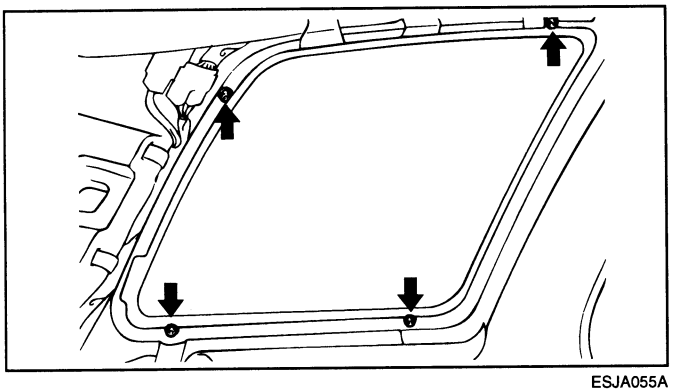

ESJA055A

3. Remove the quarter fixed glass.

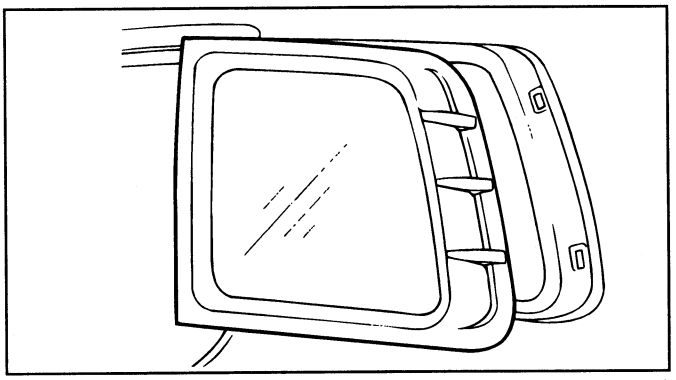

ESJA055B

INSTALLATION ESJA1450

1. Using a knife or the special tool (09861–31200), scrape the old sealant smoothly to a thickness of about 2mm (0.08in.)
2. Clean the body bonding surface with a sponge dampened in alcohol or grease remover.
3. Apply primer to the body bonding surface.

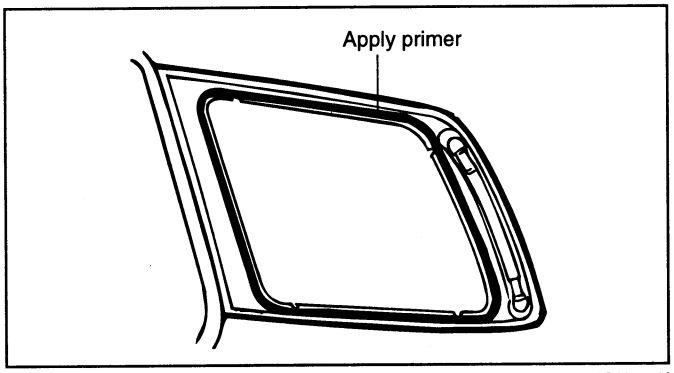

ESJA015K

4. Clean the surface of quarter fixed glass and then apply primer.
5. Apply sealant to the quarter fixed glass.

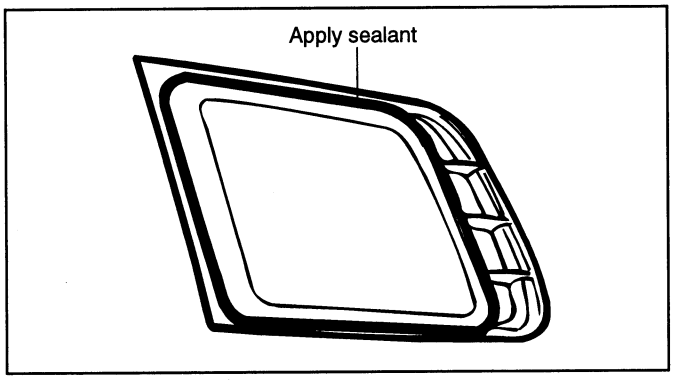

ESJA015L

6. Fasten a dual lock fastener to the quarter panel.

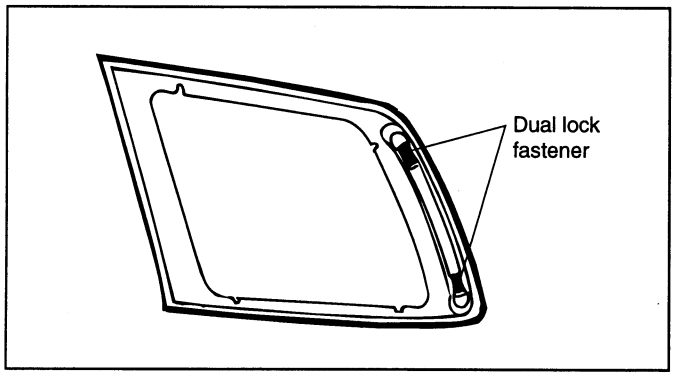

ESJA015M

7. Install the quarter fixed glass.

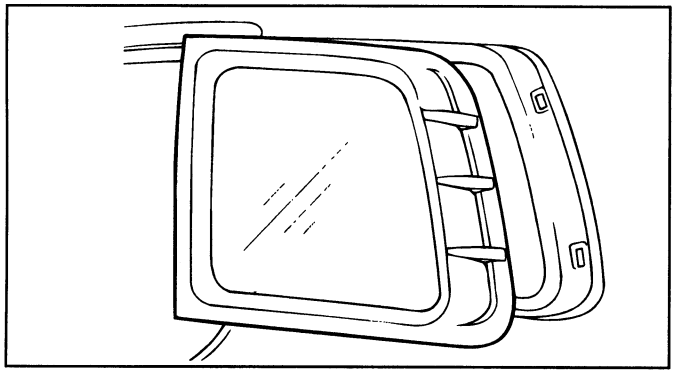

ESJA055B

BUMPER

FRONT BUMPER

COMPONENTS ESJA1600

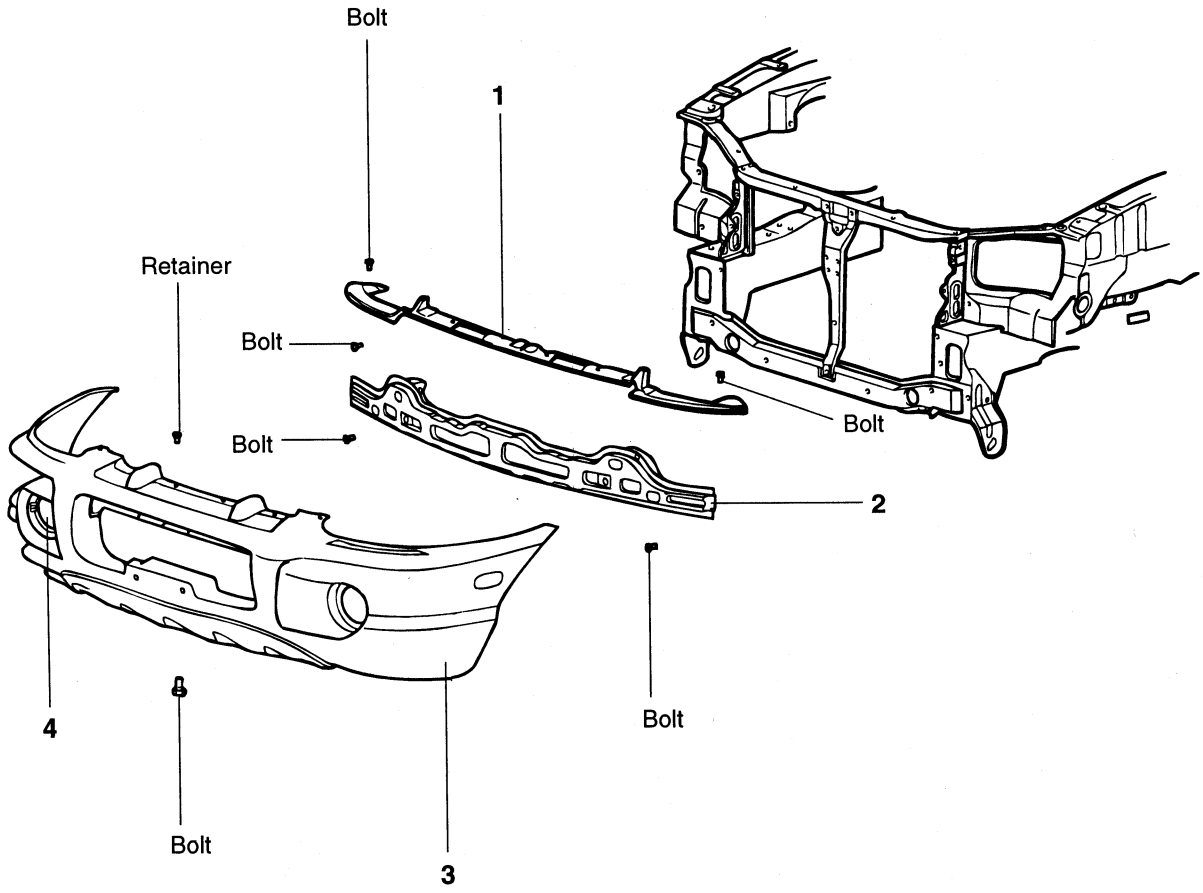

1. Front bumper support
2. Front bumper rail
3. Front bumper cover
4. Fog lamp

ESJA005A

REMOVAL AND INSTALLATION ESJA1650

1. Disconnect the leads to the turn signals and headlamps.
2. Remove the turn signal lamps and head lamps.

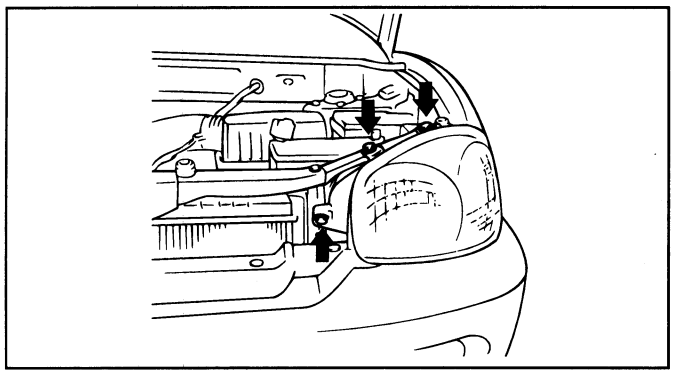

ESJA005B

3. Remove the screws holding the front bumper cover.

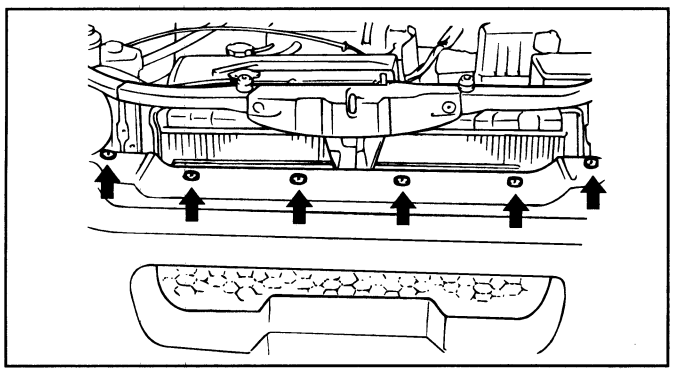

ESJA005C

4. Raising the vehicle, remove the bolts holding the front bumper cover and the front wheel guard.

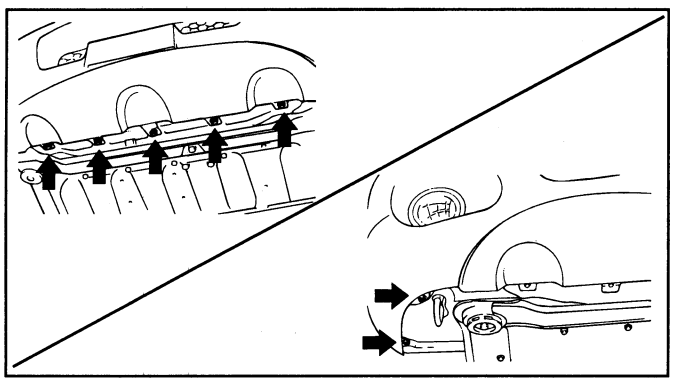

ESJA100K

5. Remove the front bumper cover and the bumper energy absorber.

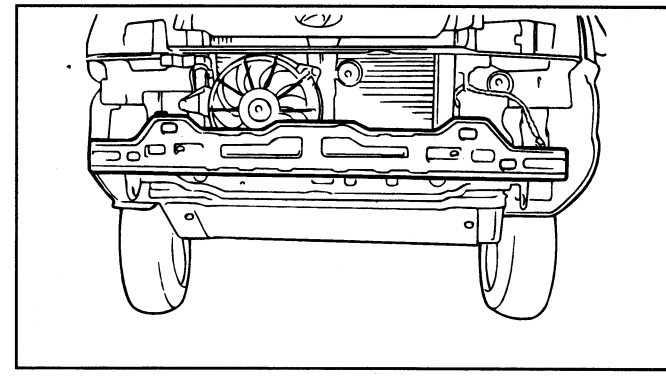

ESJA005F

6. Remove the front bumper rail.

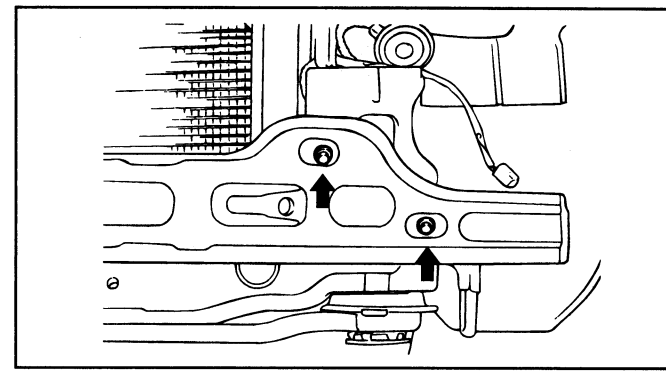

ESJA005G

7. Installation is the reverse of removal.

REAR BUMPER

COMPONENTS ESJA1710

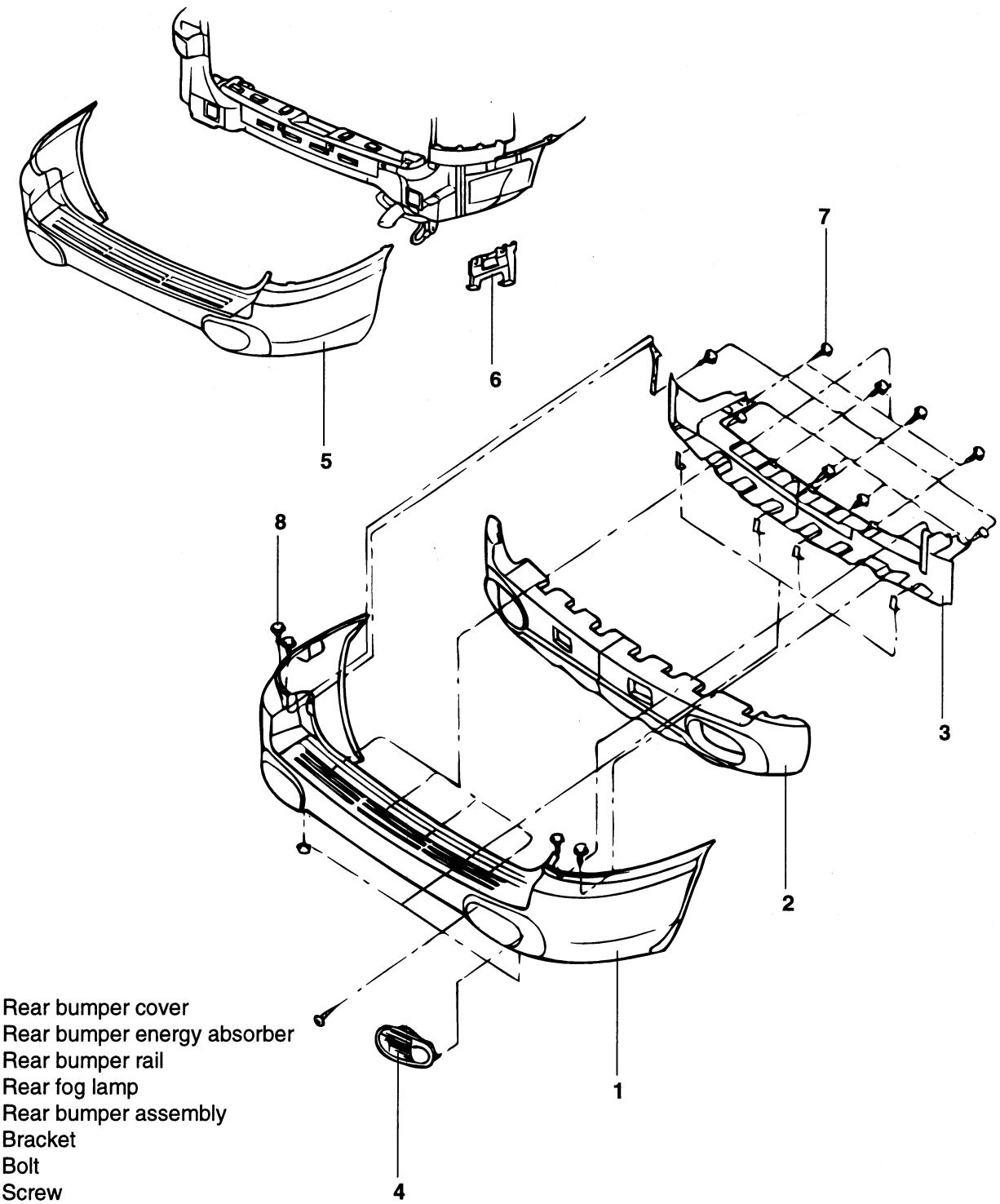

1. Rear bumper cover
2. Rear bumper energy absorber
3. Rear bumper rail
4. Rear fog lamp
5. Rear bumper assembly
6. Bracket
7. Bolt
8. Screw

ESJA171A

REMOVAL AND INSTALLATION ESJA1750

1. Remove the screws holding the rear bumper cover.

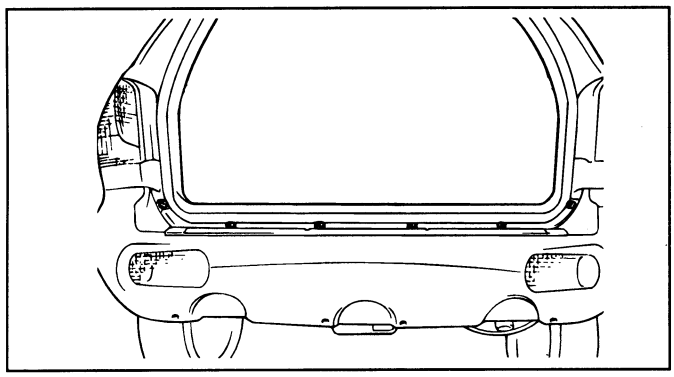

ESJA010C

2. Raising the vehicle, remove the screws holding the rear bumper cover and the rear wheel guard.

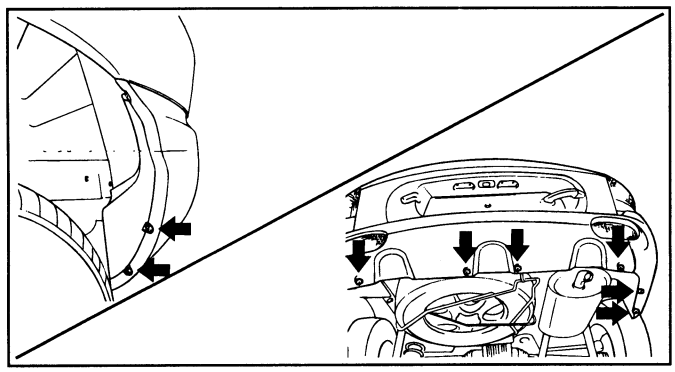

ESJA100M

3. Remove the energy absorber.

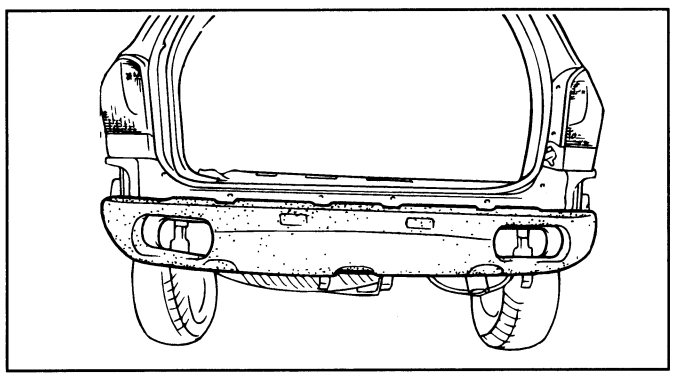

ESJA010F

4. Remove the rear bumper rail.

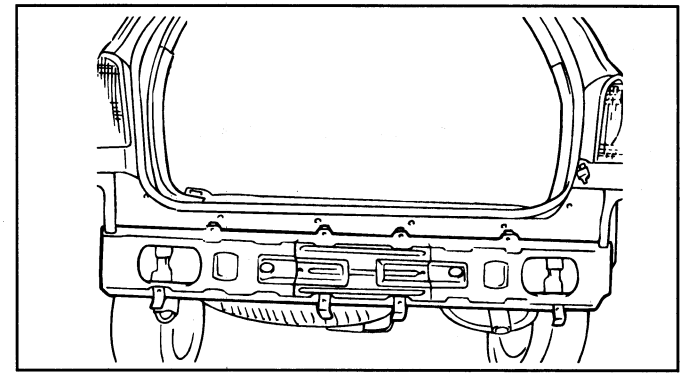

ESJA010G

5. Installation is the reverse of removal.

SEAT

FRONT SEAT

REMOVAL AND INSTALLATION ESJA1800

1. Remove the bolts holding the front seat and then remove the front seat assembly.

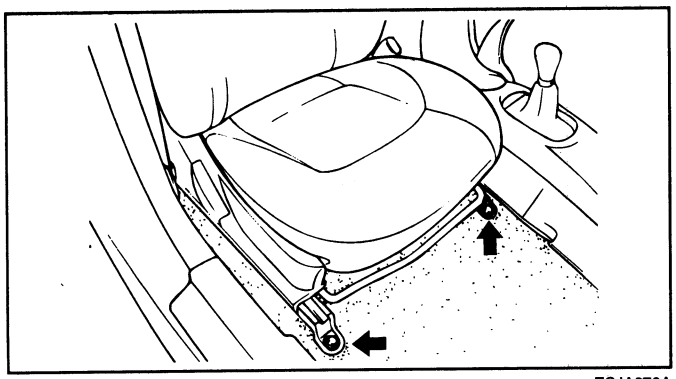

ESJA070A

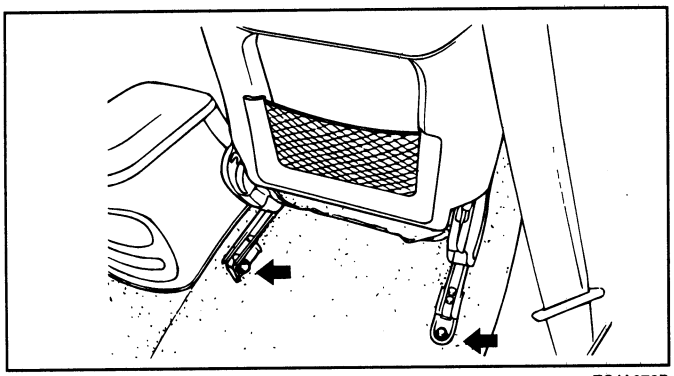

ESJA070B

Tightening torque

Front seat mounting bolts :

35-55 Nm (350-550 kg·cm, 25.4-40 lb·ft)

2. Installation is the reverse of removal.

REAR SEAT

REMOVAL AND INSTALLATION ESJA1850

1. Remove the bolts holding the rear seat.

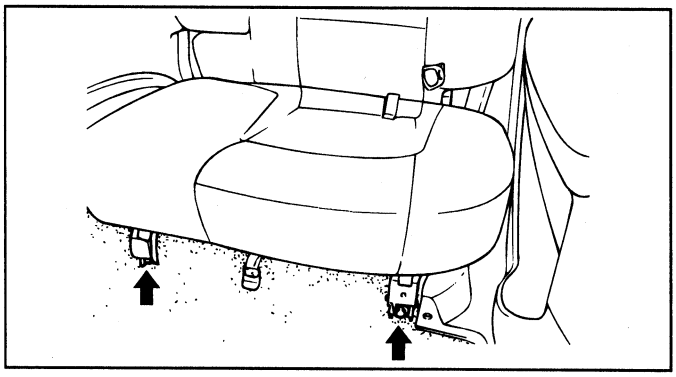

ESJA070C

2. After pulling up the rear seat cushion, remove the screws holding the cushion cover and remove it.

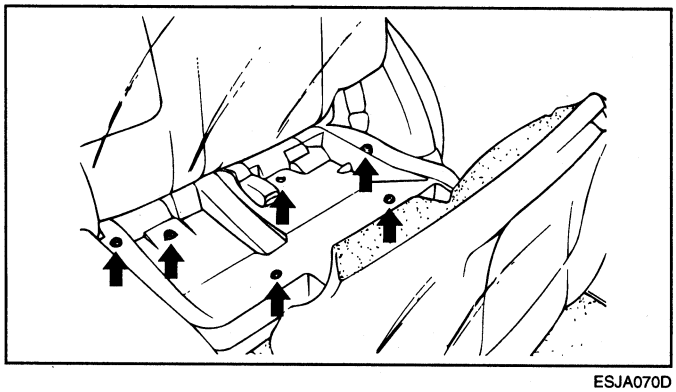

ESJA070D

3. Remove the bolts holding the rear seat and then remove the rear seat assembly.

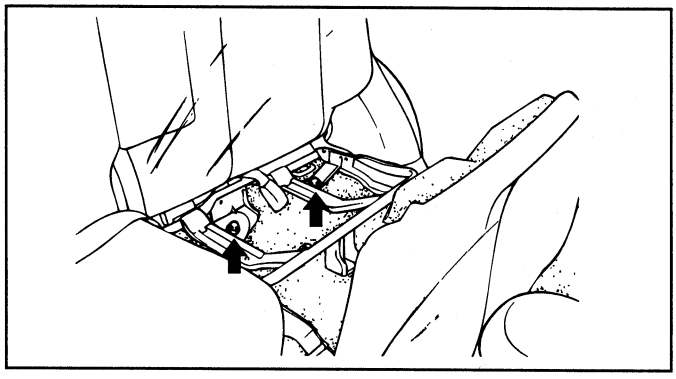

ESJA070E

Tightening torque

Rear seat mounting bolts :

35-55 Nm (350-550 kg·cm, 25.4-40 lb·ft)

4. Installation is the reverse of removal.

FRONT SEAT BELT

REMOVAL AND INSTALLATION ESJA1900

1. Remove the seat belt lower anchor bolt and pry loose the center pillar lower trim.

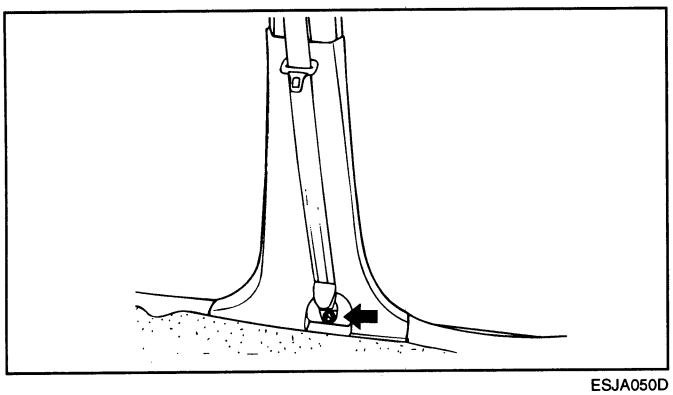

ESJA050D

2. Remove the seat belt upper anchor bolt.

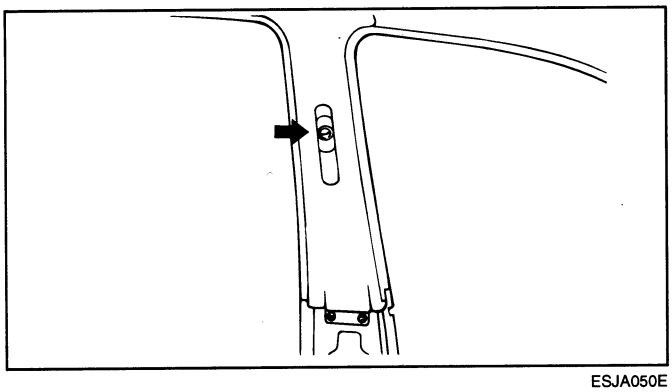

ESJA050E

3. In case of vehicles equipped with pretensioner seat belt, disconnect the negative (-) battery terminal and disconnect the connector from the gas generator and then remove the retractor.

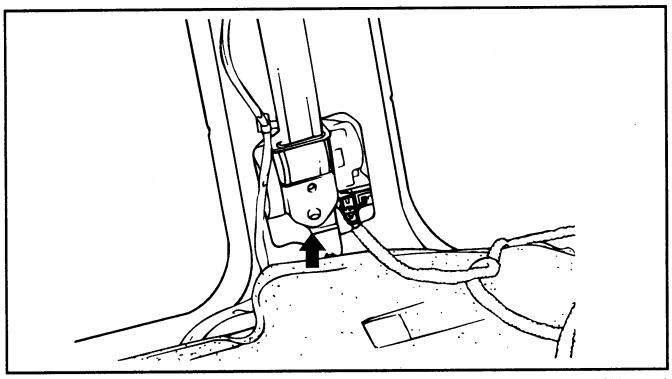

ESHA040J

Tightening torque

Front seat belt lower and upper anchor bolts :

40-55 Nm (400-550 kg·cm, 28.9-39.8 lb·ft)

Front seat belt retractor :

40-55 Nm (400-550 kg·cm, 28.9-39.8 lb·ft)

4. Installation is the reverse of removal.

CAUTION

1. **A pretensioner functions one time only. Be sure to replace the pretensioner seat belt after it is deployed.**
2. **Do not attempt to disassemble or repair the seat belt pretensioner. If it malfunctions, replace it with a new pretensioner seat belt.**
3. **Be cautious in handling a pretensioner seat belt, and do not expose it to water or oil. If crushed, damaged, or deformed, replace it with a new one.**
4. **Connect the battery only after the installation of the pretensioner seat belt has been correctly completed.**
5. **Removal of the pretensioner seat belt :**
   - **Make sure that the ignition is "Off".**
   - **Disconnect the negative (-) battery terminal and make sure it does not come into contact with the body.**
   - **Wait for about 1 minute.**
   - **Pull the plug from the connector at the gas generator.**
   - **Loosen the bolt and remove the belt from the vehicle body.**

REAR SEAT BELT

REMOVAL AND INSTALLATION ESJA1950

1. Remove the rear seat belt lower anchor bolt and remove the quarter trim.

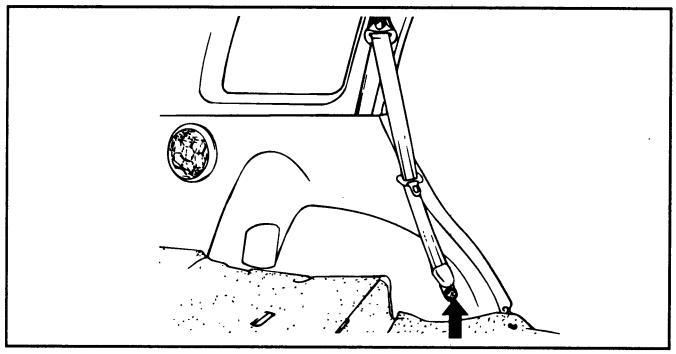

ESJA050H

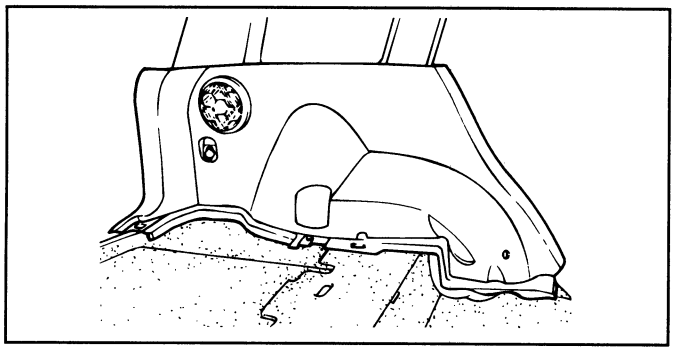

ESJA050I

2. Remove the rear seat belt retractor.

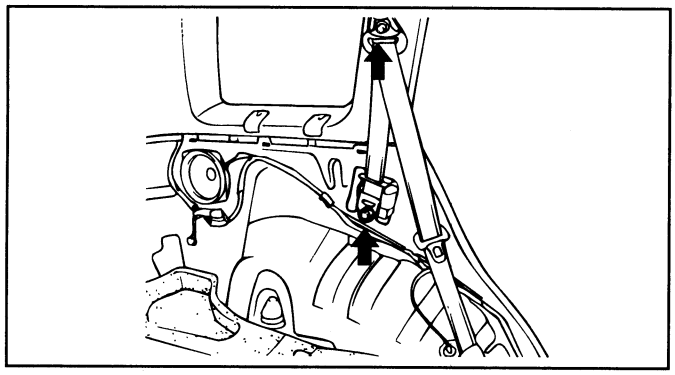

ESJA050O

Tightening torque

Rear seat belt lower and upper anchor bolts :

40-55 Nm (400-550 kg·cm, 28.9-39.8 lb·ft)

Rear seat belt retractor :

40-55 Nm (400-550 kg·cm, 28.9-39.8 lb·ft)

3. Installation is the reverse of removal.

Body Electrical System

GENERAL ..... BE -2

AUDIO SYSTEM ..... BE -21

MULTI FUNCTION SWITCH ..... BE -26

HORNS ..... BE -30

ETACS (ELECTRONIC TIME AND ALARM CONTROL SYSTEM) ... BE -31

FUSES AND RELAYS ..... BE -39

INDICATORS AND GAUGES ..... BE -41

POWER DOOR LOCKS ..... BE -49

POWER DOOR MIRRORS ..... BE -50

POWER WINDOWS ..... BE -52

REAR WINDOW DEFOGGER ..... BE -55

WINDSHIELD WIPER/WASHER ..... BE -58

REAR WIPER/WASHER ..... BE -61

SEAT WARMER ..... BE -64

SUN ROOF ..... BE -65

LIGHTING SYSTEM ..... BE -68

HEAD LAMP LEVELLING DEVICE ..... BE -79

IMMOBILIZER CONTROL SYSTEM ..... BE -80

GENERAL

SPECIFICATIONS ETJA7010

MULTIFUNCTION SWITCH

Items	Specifications
Rated Voltage	DC 12 V
Operating temperature range	-30°C~ +80°C (-22~+176°F)
Rated load	
Dimmer & passing switch	High : 15 A (Lamp load) Low : 10 A (Lamp load) Passing : 15 A (Lamp load)
Lighting switch	Lighting : 1A (Relay load)
Turn signal switch & lane change	6.6 ± 0.5A (Lamp load)
Wiper & mist switch	Low, High : 4 A (Motor load) Int. : 0.22 ± 0.05 A (Relay load) Lock : Max. 23 A (Motor load) Mist : 4A (Motor load)
Washer switch	4 A (Motor load)
Variable intermittent wiper volume switch	Max. 25 mA
Rear wiper&washer switch	Rear wiper : 0.2A (Relay load) Rear washer : 4A(Motor load)
Horn switch	0.2A (Relay load)

INSTRUMENTS AND WARNING SYSTEM

Warning lamps	Bulb wattage (W)	Color
Illumination	3.4	Beige
High beam	1.4	Blue
Low fuel	1.4	Amber
Turn signal (LH, RH)	1.4	Green
Battery (charge)	1.4	Red
Oil pressure	1.4	Red
Air bag	1.4	Red
Parking brake	1.4	Red
Seat belt	1.4	Red
Check engine	1.4	Amber

Warning lamps		Bulb wattage (W)	Color
ABS		1.4	Amber
Door ajar		1.4	Red
Tailgate open		1.4	Amber
Cruise		1.4	Green
TCS		1.4	Amber
Water separator (for DSL)		1.4	Red
Vacuum brake (for DSL)		1.4	Red
Glow (for DSL)		1.4	Amber
A/T	**P**	1.4	Green
	R	1.4	Amber
	N	1.4	Green
	D	1.4	Green
	4	1.4	Green
	3	1.4	Green
	2	1.4	Green
	1	1.4	Green

SERVICE SPECIFICATIONS ETJA7050

INDICATORS AND GAUGES

Speedometer

Type

o Cross - coil type.

Input spec.

o Hall IC type : 4 pulses/rev.

Indication

o Km/h : 637 rpm x 4 pulses/rev. indicates 60 Km/h

o MPH : 1026 rpm x 4 pulses/rev. indicates 60 MPH

Standard values

Velocity (Km/ h)	20	40	60	80	100	120
Tolerance (Km/ h)	20-24.1	40-43	60-64.1	80-85.2	100-105.2	120.5-126.3
Tolerance (Km/ h)	20.8-25.4	40-44	60.8-65.4	81.4-86.8	102.6-108.2	123.5-129.6

Velocity (Km/ h)	140	160	180	200	Remarks
Tolerance (Km/ h)	140.5-146.7	160.5-167.5	181-188.4	201-209.1	EXCEPT EEC & GENERAL
Tolerance (Km/ h)	144.4-151	165.4-172.4	186.3-193.8	207.2-215.2	EEC, GENERAL

Velocity (MPH)	10	20	40	60	80	100
Tolerance (MPH)	10-12.5	20-22	40-42.6	60-63.4	80.3-84.1	100.3-104.7
Tolerance (MPH)	8.5-11.5	18.5-21.5	38.5-41.5	58.3-61.7	78-82	97.7-102.3

Velocity (MPH)	120	Remarks
Tolerance (MPH)	120.3-125.3	EXCEPT USA
Tolerance (MPH)	117.5-122.5	USA

o Tap the speedometer to prevent hysterisis effects during inspection.

Tachometer

Type

o Cross - coil type. (4 cyl: 2pulses/ rev, 4 cyl: 4pulses/ rev, 6 cyl: 3pulses/ rev)

Standard values

Revolution(RPM)	1000	2,000	3,000	4,000	5,000	6,000	7,000
Tolerance(RPM)	±100	±125	±150	±150	±150	±180	±210

o Tap the speedometer to prevent hysterisis effects during inspection.

Fuel gauge

Type

o Cross - coil type (Fixed point type : Pointer should not fall into the "E" point but indicate remaining fuel level when the ignition is off.)

Standard values

Level	Gauge Resistance (Ω)	Tolerance assembled with fuel sender (°)
E (Empty)	100	-40 ± 2.5
1/2	55	0 ± 5.0
F (Full)	10	40 ± 2.5

o Inspection order : E → F → E

The level must be reached within 7 minutes after the resistance is set for Full or Empty.

o Point stabilty tolerance : Within 7°

Apply the power for 10 minutes. Then turn off the power for 30 minutes and read the position of the pointer.

<table>
<tr><th>Items</th><th>Specifications</th></tr>
<tr><td>Temperature gauge
Type
Indication standard</td><td>o Cross - coil type (Intermedia stability type).
<table>
<tr><th>Temperature</th><th>Angle (°)</th><th>Assembled tolerance (°)</th></tr>
<tr><td>60°C</td><td>-40</td><td>-</td></tr>
<tr><td>85°C~110°C</td><td>-7^{+2}_{-3}</td><td>$^{+3}_{-2}$</td></tr>
<tr><td>Red zone (over 127.4°C)</td><td>over 35±5</td><td>$^{+7}_{-4}$</td></tr>
</table>
o Inspection order : OFF→C→H</td></tr>
<tr><td>Resistance of temperature sender (NTC)</td><td>
<table>
<tr><td>Temperature (°C)</td><td>60</td><td>85</td><td>110</td><td>127.4</td></tr>
<tr><td>Resistance (Ω)</td><td>118</td><td>49</td><td>25</td><td>14.6</td></tr>
</table>
</td></tr>
</table>

ETJA310B

LIGHTING SYSTEM

Items		Bulb wattage(W)
Head lamp		60W / 55W (High / Low)
Front turn signal lamp		21W
Front position lamp		5W
Front fog lamp		55W
Rear combination lamps	Tail/stop lamp	5W / 21W
	Back up lamp	21W
	Turn signal lamp	21W
Rear fog lamp		21W
Side repeater lamp		5W
License plate lamp		5W
Luggage lamp		10W
Room lamp		10W
Map lamp		10W
High mounted stop lamp		17W/16W (only EC)
Door courtesy lamp		5W

AUDIO

Items	H240	H260	H290
Rated output	Max. 20W x 4	Max. 25W x 4	Max. 35W x 4
Speaker impedance	4ΩX4	4ΩX4	2ΩX4
Band	AM/FM, LW/MW/FM	AM/FM, LW/MW/FM	AM/FM, LW/MW/FM
Tuning type	PLL Synthesized type	PLL Synthesized type	PLL Synthesized type
Dark current	Max. 2mA	Max. 3.8mA	Max. 2mA

Items	H240	H260	H290
Frequency range / Channel	AM : 531~1602KHZ/ 9KHZ	AM : 531~1602KHZ/ 9KHZ	AM : 531~1602KHZ/ 9KHZ
	FM : 87.5~108MHZ/ 100KHZ	FM : 87.5~108MHZ/ 100KHZ	FM : 87.5~108MHZ/ 100KHZ
	LW : 153~279KHZ/1KHZ	LW : 153~279KHZ/1KHZ	LW : 153~279KHZ/1KHZ
	MW : 531~1602KHZ/ 9KHZ	MW : 531~1602KHZ/ 9KHZ	MW : 531~1602KHZ/ 9KHZ
	FM : 87.5~108MHZ/ 50KHZ	FM : 87.5~108MHZ/ 50KHZ	FM : 87.5~108MHZ/ 50KHZ

WINDSHIELD WIPER AND WASHER

Items	Specifications
Wiper motor	
Speed/current at 20kg.cm load test (2.0 Nm, 0.7 lb·ft)	Low : 39-47 rpm/4.0A or less High : 60-74 rpm/6.0A or less
Speed/current at 70kg.cm load test (7.0 Nm, 2.9 lb·ft)	Low : 34-42 rpm/7.0A or less High : 46-58 rpm/9.0A or less
Current when parking	Low : 28A or less High : 30A or less
Windshield washer	
Motor type	DC ferrite magnet
Pump type	Centrifugal
Current	5.0A or less
Discharge pressure	1.8 kg/cm^2 or more
Flow rate	1,500 cc/min. or more
Overload capacity (Continuous operation)	
With water	60 sec. or less
Without water	20 sec. or less

TROUBLESHOOTING ETJA0150

INSTRUMENTS AND WARNING SYSTEM

Symptom	Possible cause	Remedy
Tachometer does not operate	No.11 fuse (10A) blown	Check for short and replace fuse
	Tachometer faulty	Check tachometer
	Wiring faulty	Repair if necessary
Fuel gauge does not operate	No.11 fuse (10A) blown	Check for short and replace fuse
	Fuel gauge faulty	Check gauge
	Fuel sender faulty	Check fuel sender
	Wiring faulty	Repair if necessary

Symptom	Possible cause	Remedy
Low fuel warning lamp does not light	No.11 fuse (10A) blown	Check for short and replace fuse
	Bulb burned out	Replace bulb
	Fuel level sensor faulty	Check sensor
	Wiring or ground faulty	Repair if necessary
Water temperature gauge does not operate	No.11 fuse (10A) blown	Check for short and replace fuse
	Water temperature gauge faulty	Check gauge
	Water temperature sender faulty	Check sender
	Wiring or ground faulty	Repair if necessary
Oil pressure warning lamp does not light	No.11 fuse (10A) blown	Check for short and replace fuse
	Bulb burned out	Replace bulb
	Oil pressure sender faulty	Check sender
	Wiring or ground faulty	Repair if necessary
Low brake fluid warning lamp does not light	No.11 fuse (10A) blown	Check for short and replace fuse
	Bulb burned out	Replace bulb
	Brake fluid level warning switch faulty	Check switch
	Parking brake switch faulty	Check switch
	Wiring or ground faulty	Repair if necessary
Open door warning lamp does not light	No.11 fuse (10A) blown	Check for short and replace fuse
	Bulb burned out	Replace bulb
	Door switch faulty	Check switch
	Wiring or ground faulty	Repair if necessary
Seat belt warning lamp does not light	No.11 fuse (10A) blown	Check for short and replace fuse
	Bulb burned out	Replace bulb
	Buckle switch faulty	Check switch
	Wiring or gound faulty	Repair if necessary

LIGHTING SYSTEM

Symptom	Possible cause	Remedy
One lamp does not light (all exterior)	Bulb burned out	Replace bulb
	Socket, wiring or ground faulty	Repair if necessary
Head lamps do not light	Bulb burned out	Replace bulb
	No.5 fuse (10A) blown	Replace fuse and check for short
	Head lamp relay faulty	Check relay
	Lighting switch faulty	Check switch
	Wiring or ground faulty	Repair if necessary

Symptom	Possible cause	Remedy
Tail lamps do not light	Tail lamp fuse blown (10A)	Replace fuse and check for short
	Fusible link blown	Replace fusible link
	Tail lamp relay faulty	Check relay
	Lighting switch faulty	Check switch
	Wiring or ground faulty	Repair if necessary
Stop lamps do not light	No.14 fuse (10A) blown	Replace fuse and check for short
	Stop lamp switch faulty	Adjust or replace switch
	Wiring or ground faulty	Repair if necessary
	Stop lamp relay faulty	Replace relay
Stop lamps stay on	Stop lamp switch faulty	Adjust or replace switch
	Stop lamp relay faulty	Replace relay
Instrument lamps do not light (Tail lamps light)	Rheostat faulty	Check rheostat
	Wiring or ground faulty	Repair if necessary
Turn signal lamp does not flash on one side	Bulb burned out	Replace bulb
	Turn signal switch faulty	Check switch
	Wiring or ground faulty	Repair if necessary
Turn signal lamps do not operate	No.27 fuse (10A) blown	Replace fuse and check for short
	Flasher faulty	Check flasher
	Turn signal switch faulty	Check switch
	Wiring or ground faulty	Repair if necessary
Hazard warning lamps do not operate	No.15 fuse (10A) blown	Replace fuse and check for short
	Flasher faulty	Check flasher
	Hazard switch faulty	Check switch
	Wiring or ground faulty	Repair if necessary
Flasher rate too slow or too fast	Lamps' wattages are smaller or larger than specified	Replace lamps
	Defective flasher	Replace flasher
Back up lamps do not light up	No.25 fuse (10A) blown	Replace fuse and check for short
	Back up lamp switch faulty	Check switch
	Wiring or ground faulty	Repair if necessary
Overhead console lamp does not light up	No.9 fuse (10A) blown	Replace fuse and check for short
	Wiring or ground faulty	Repair if necessary

AUDIO

There are six areas where a problem can occur: wiring harness, the radio, the cassette tape deck, the CD player, the speaker, and antenna. Troubleshooting enables you to confine the problem to a particular area.

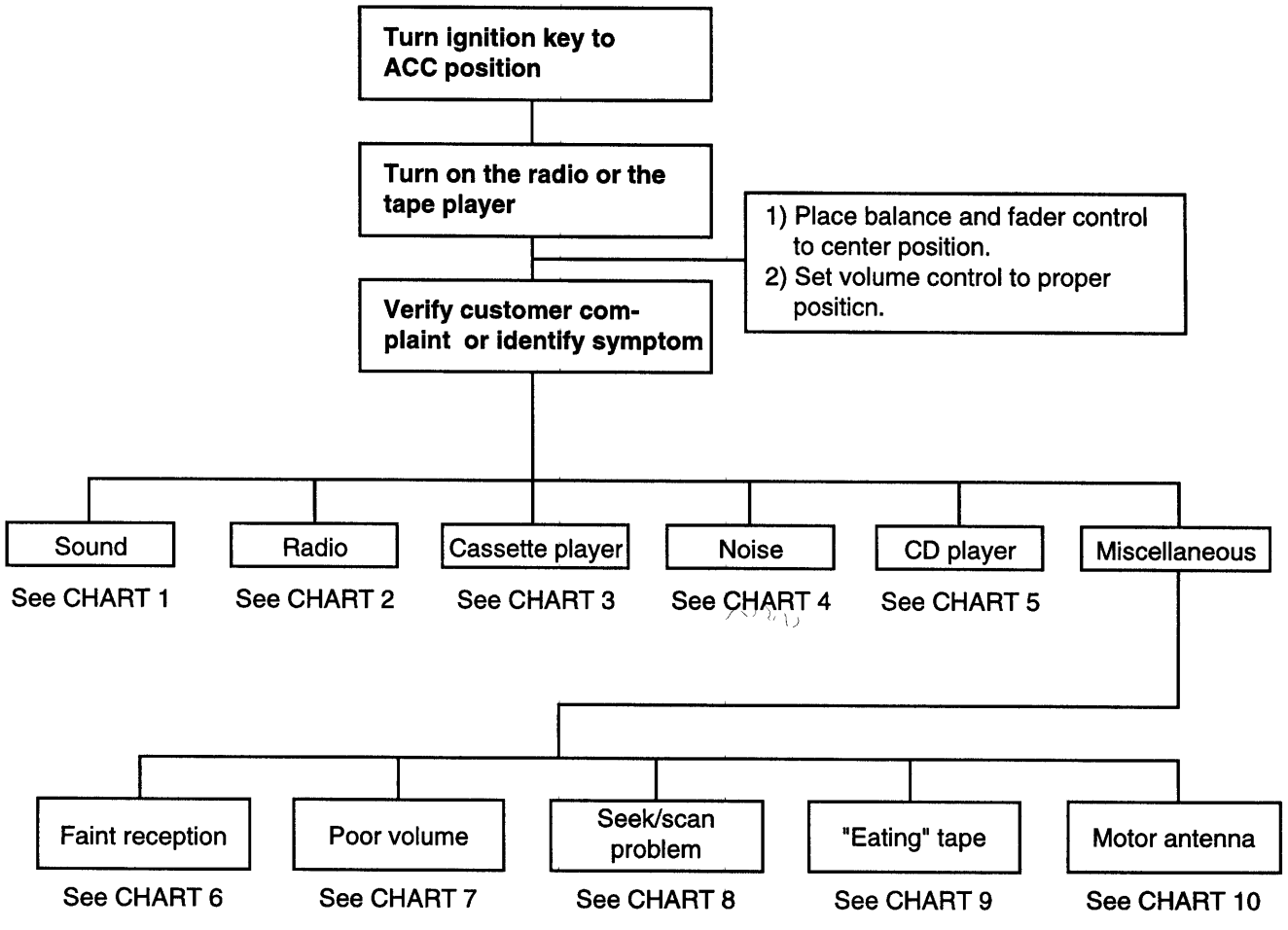

ETJA315A

CHART 1

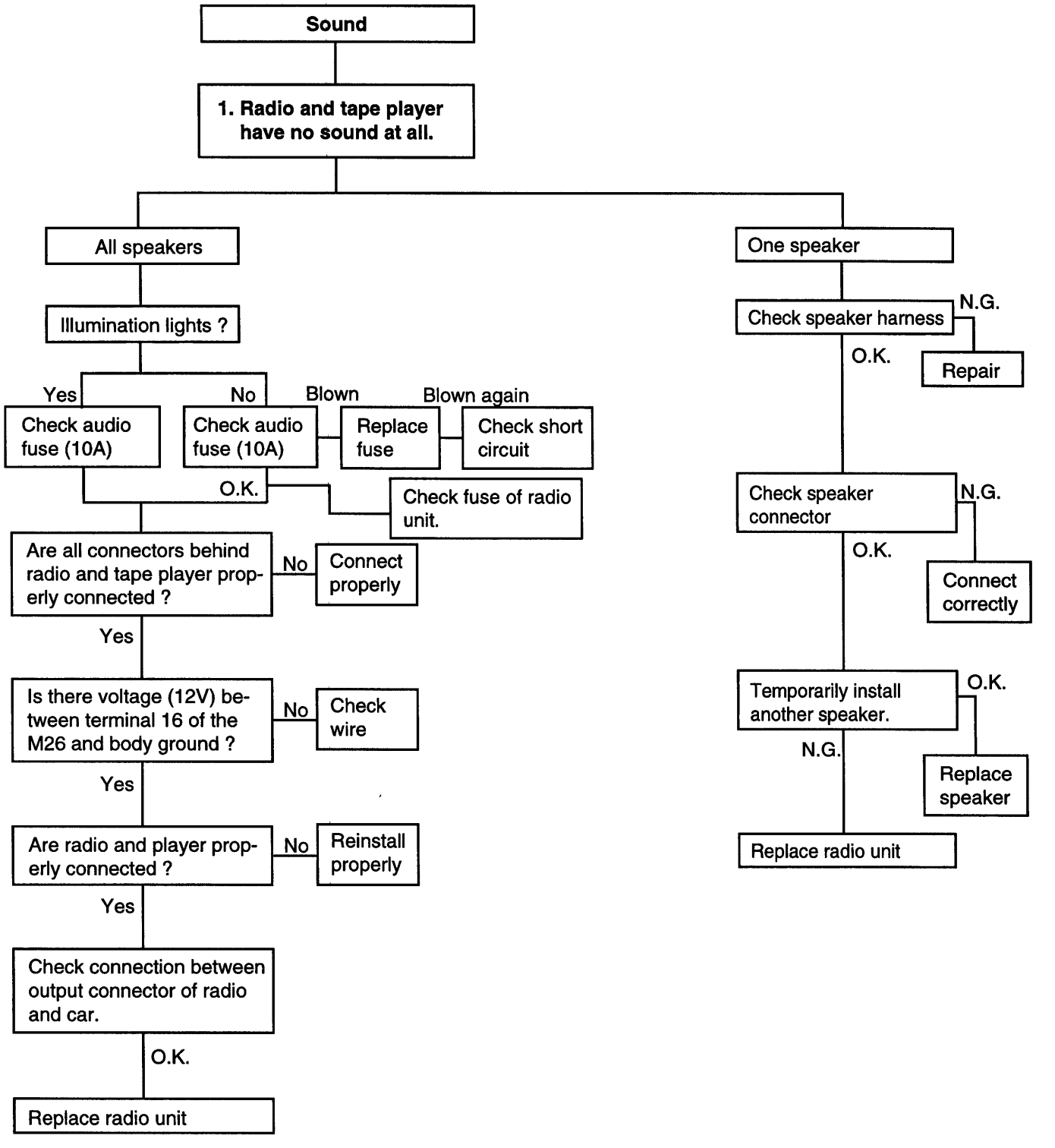

ETJA315B

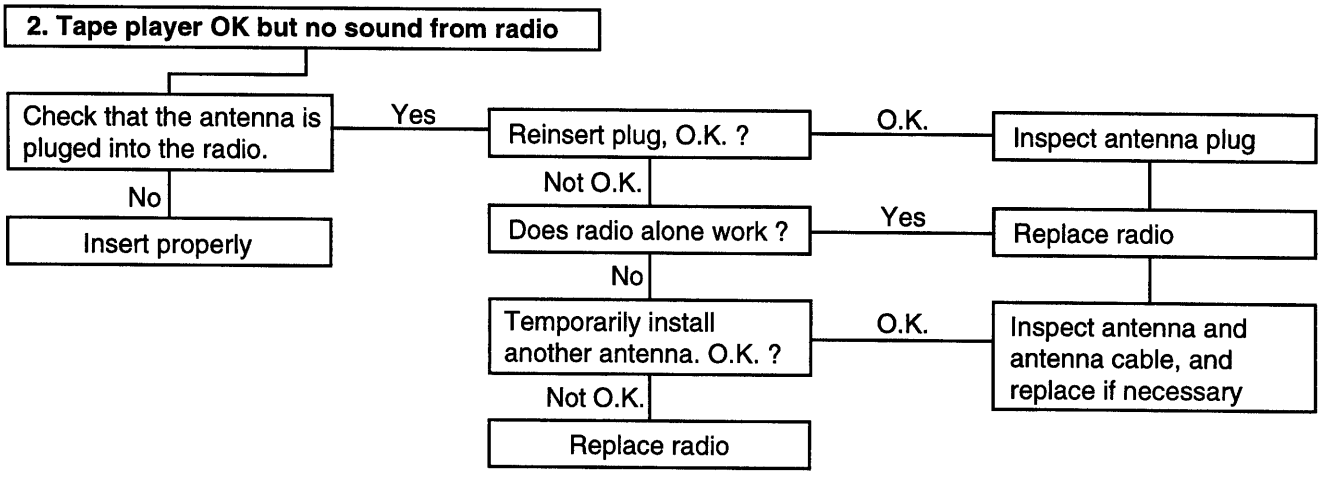

ETA9010C

CHART 2

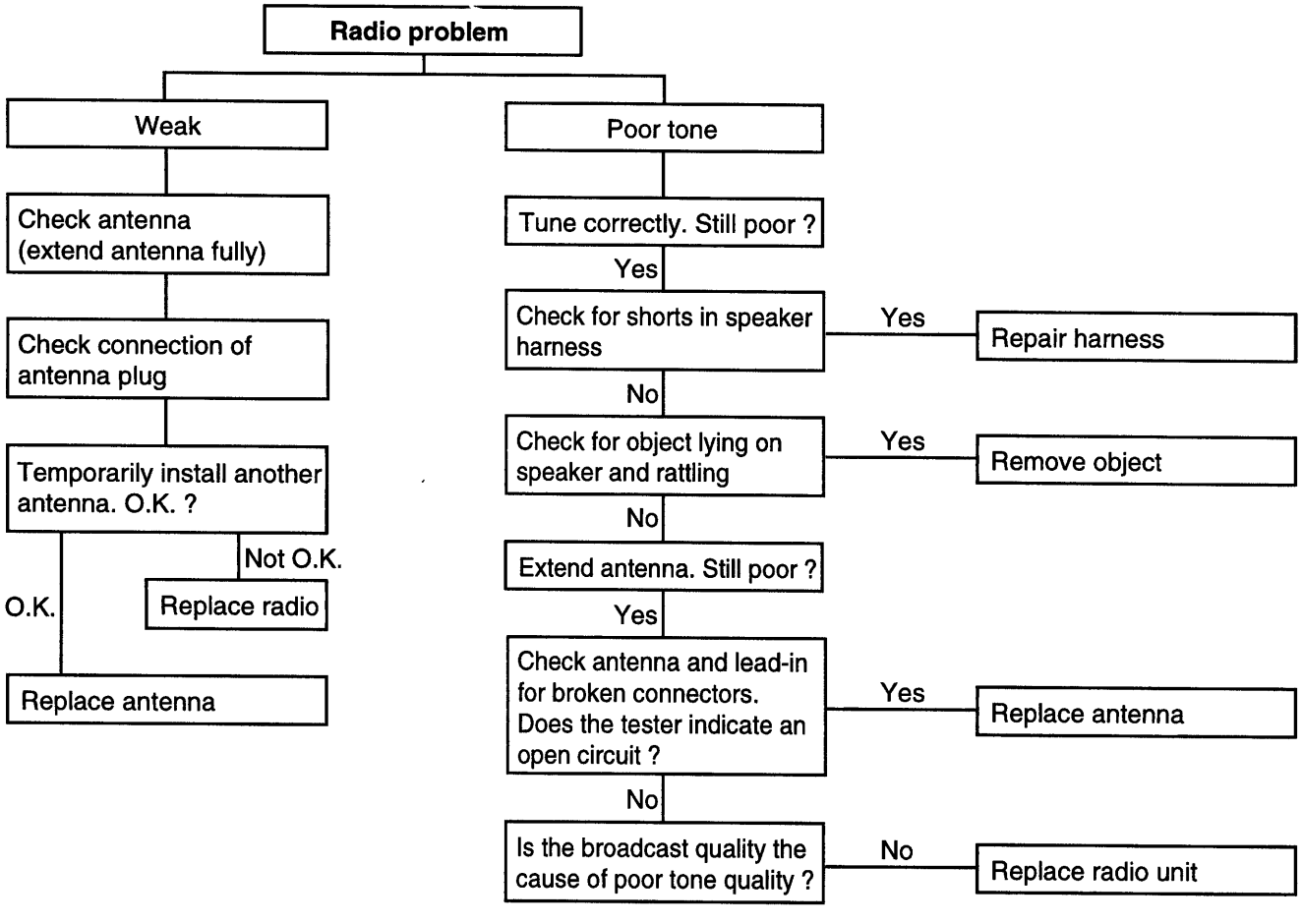

ETA9010D

CHART 3

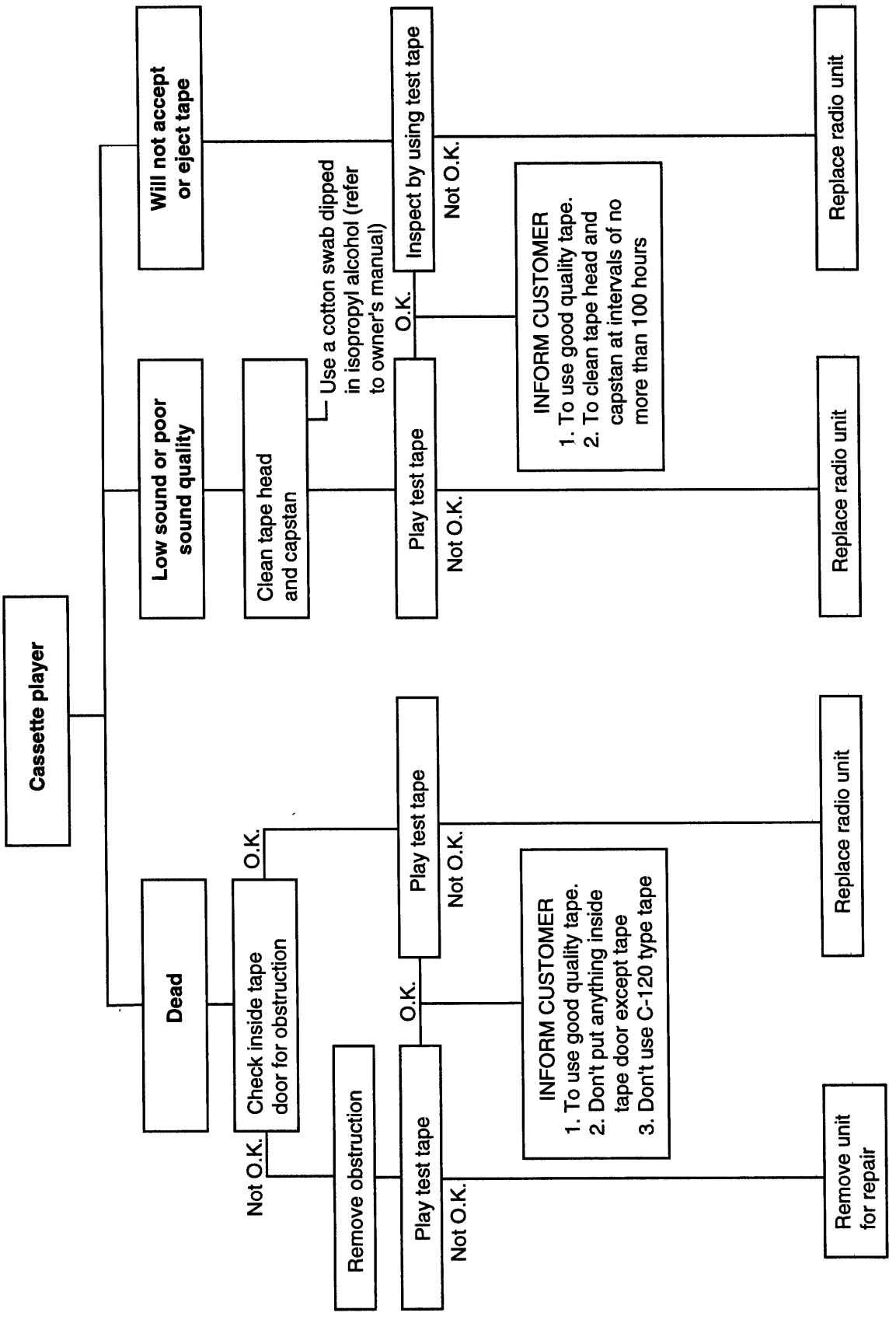

ETA9010E

CHART 4

1. RADIO

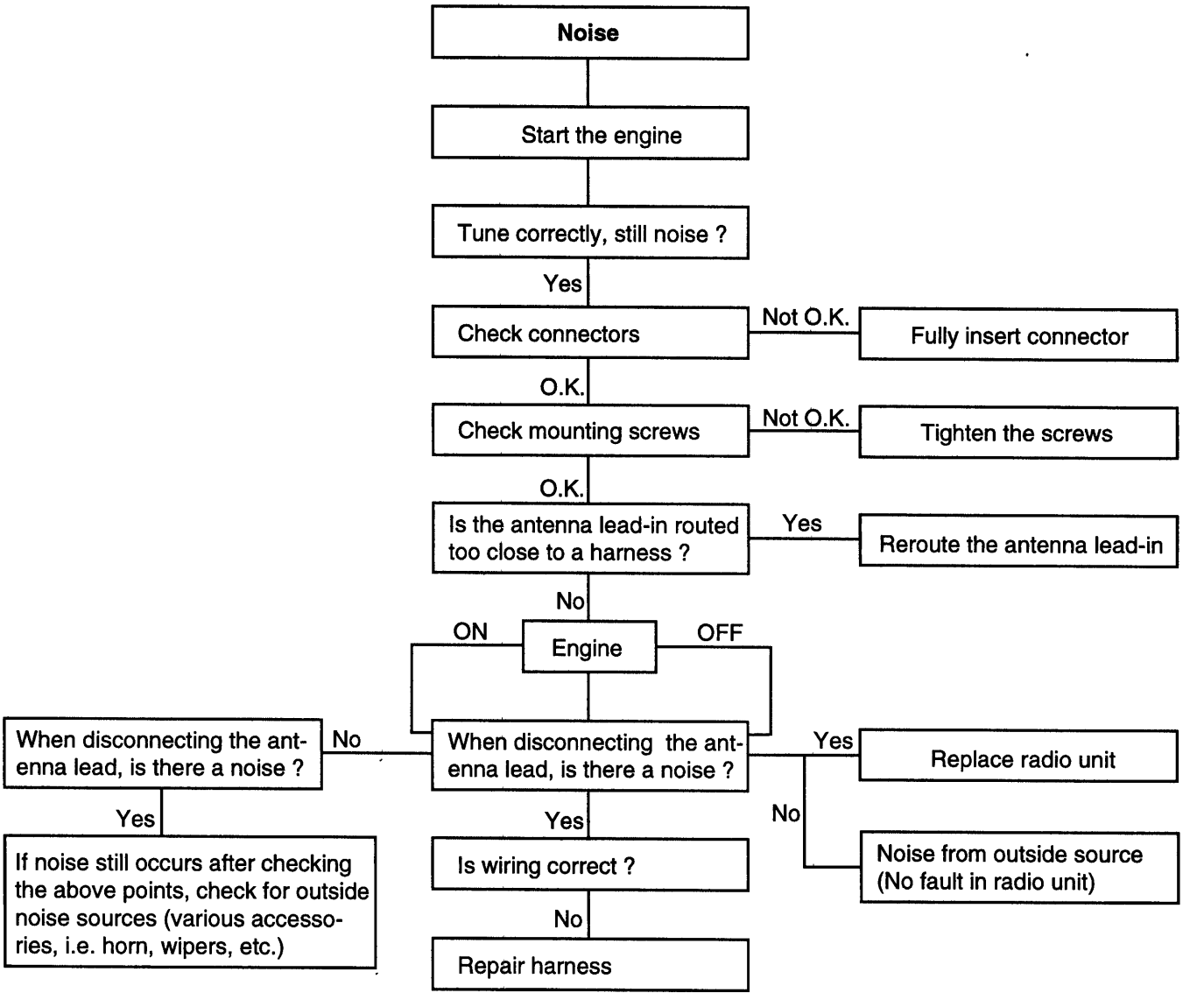

ETA9010F

2. TAPE

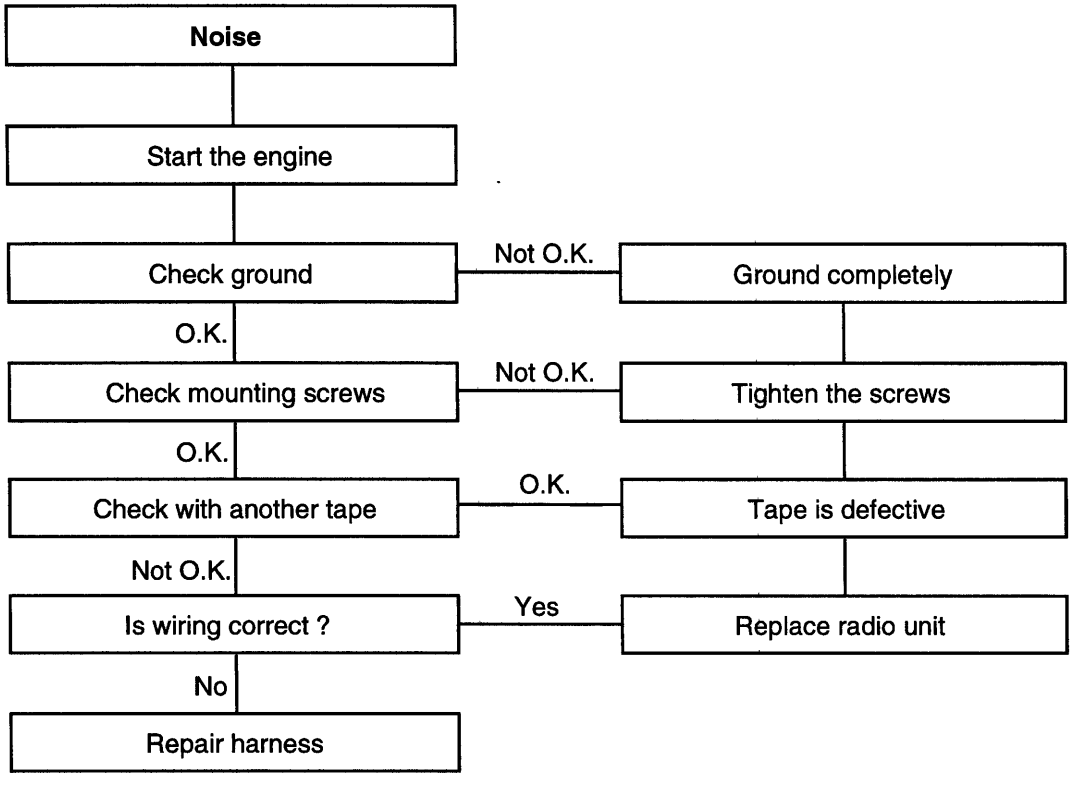

ETA9010G

CHART 5

1. CD WILL NOT BE ACCEPTED

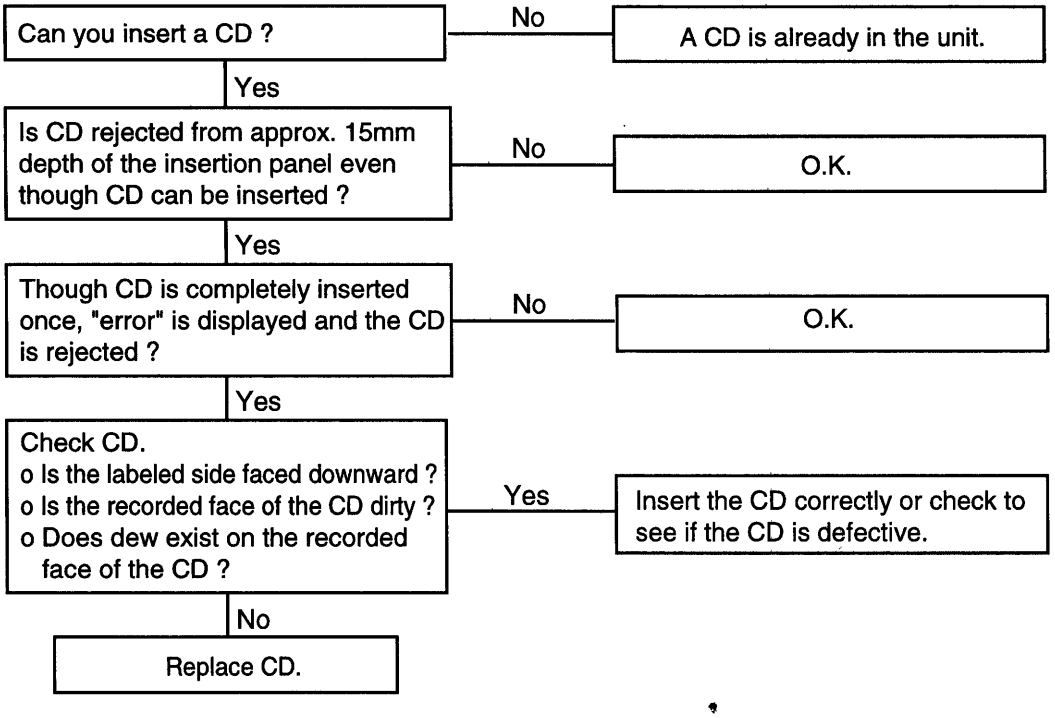

ETA9010H

2. NO SOUND

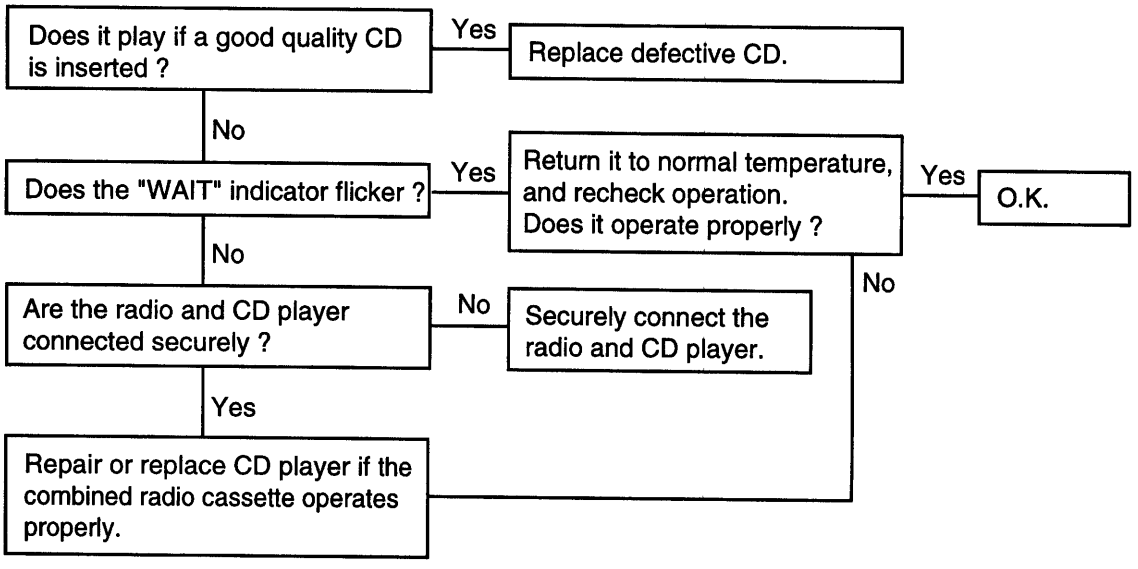

ETA9010O

3. CD SOUND SKIPS

1. Sound sometimes skips when parking.

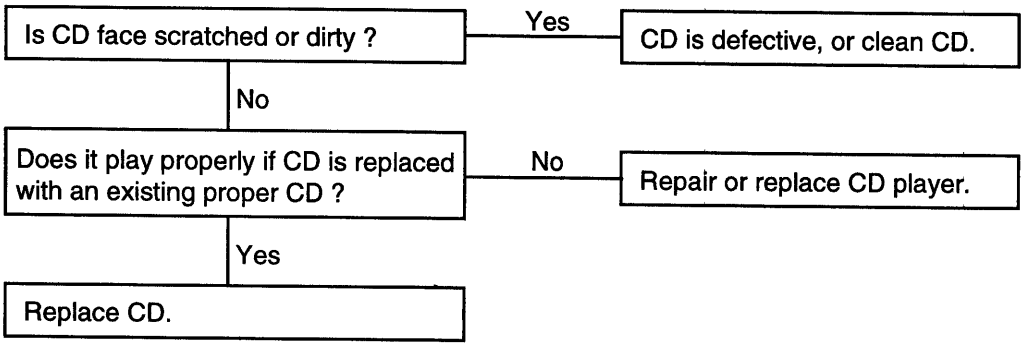

2. Sound sometimes skip when driving.
(Stop vehicle, and check it.)
(Check by using a CD which is free of scratches, dirt or other damage.)

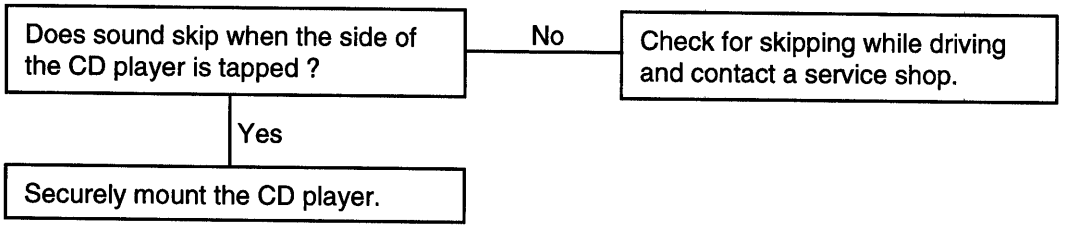

ETA9010I

4. SOUND QUALITY IS POOR

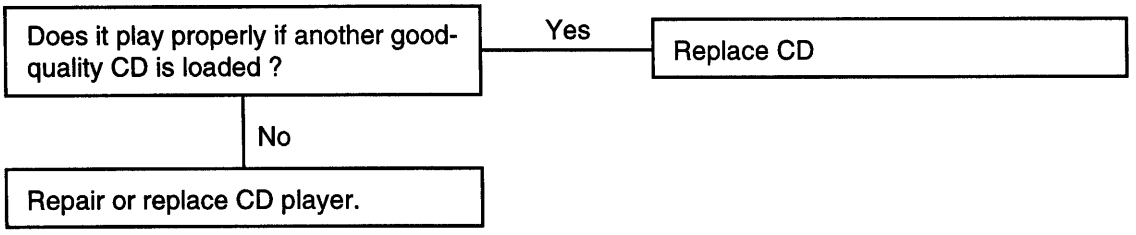

5. CD WILL NOT EJECT

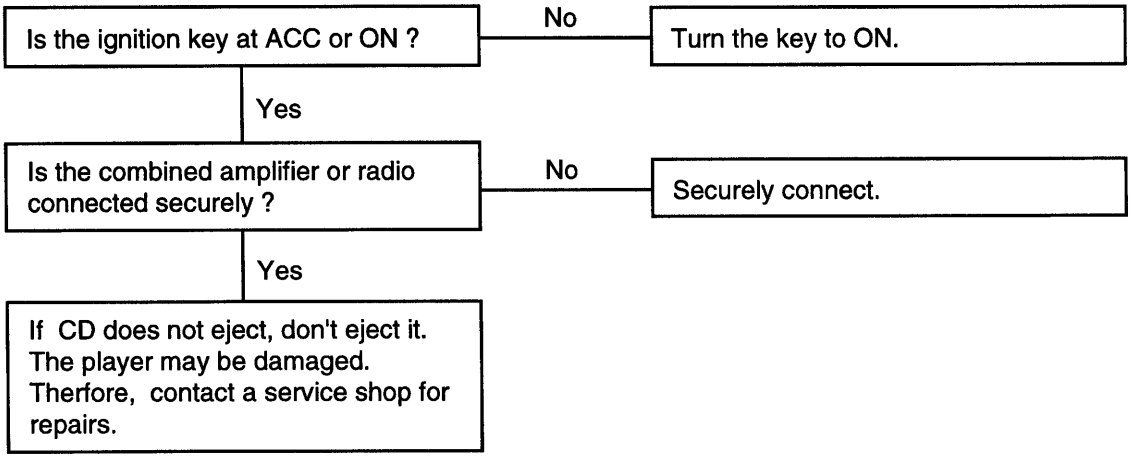

6. NO SOUND FROM ONE SPEAKER

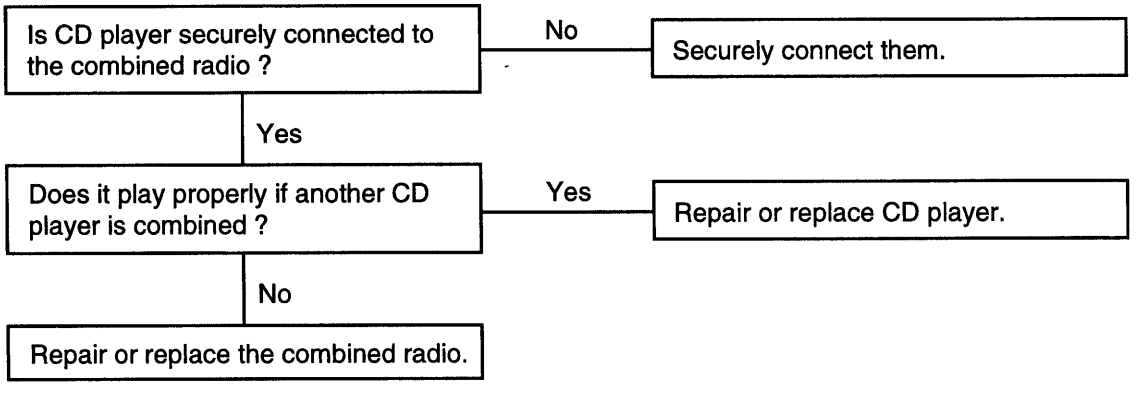

ETA9010J

CHART 6

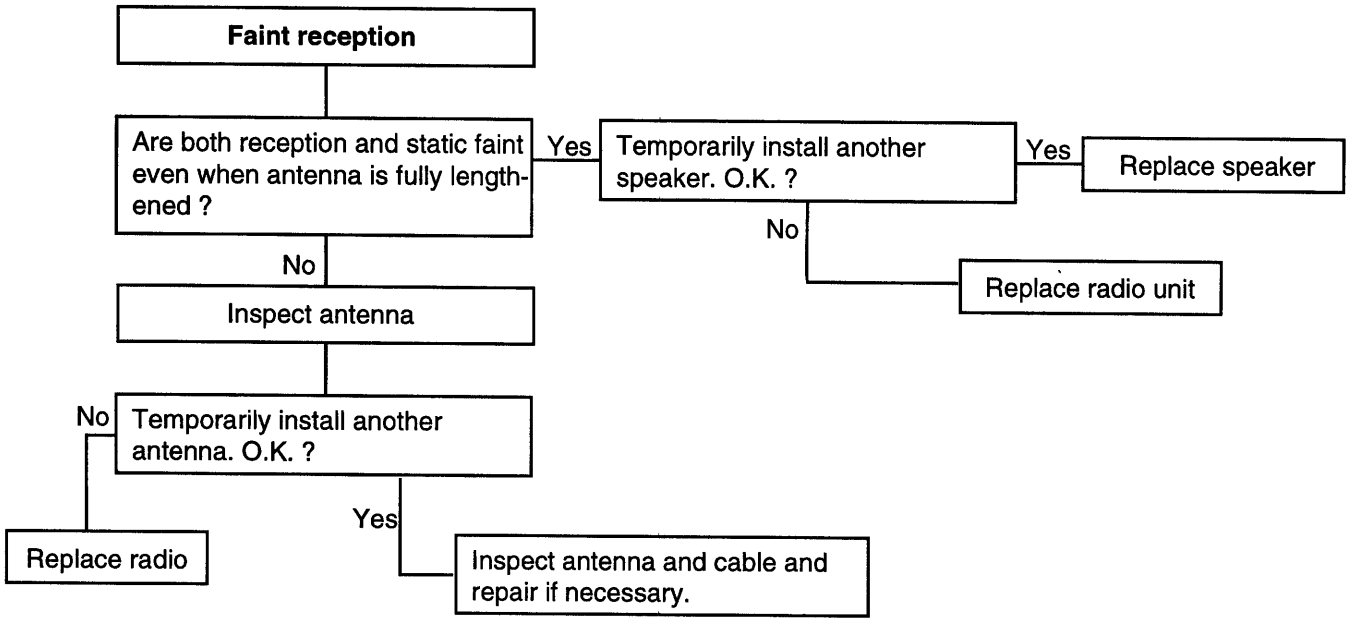

ETA9010K

CHART 7

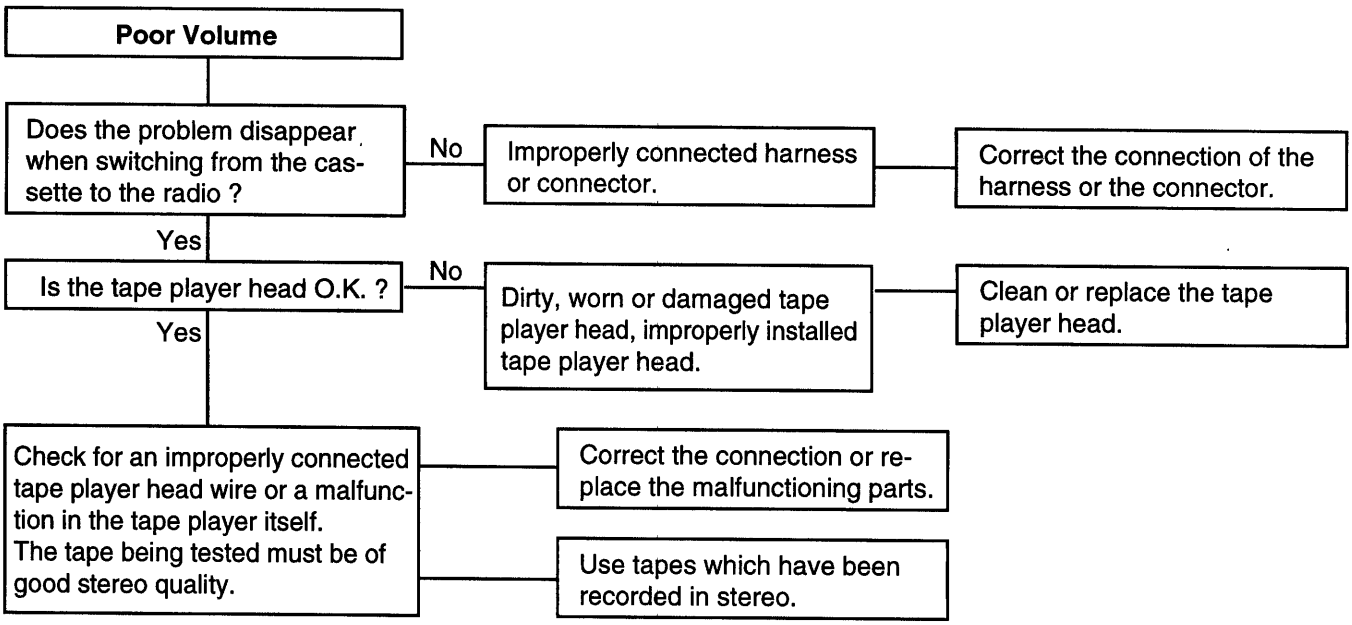

ETA9010L

CHART 8

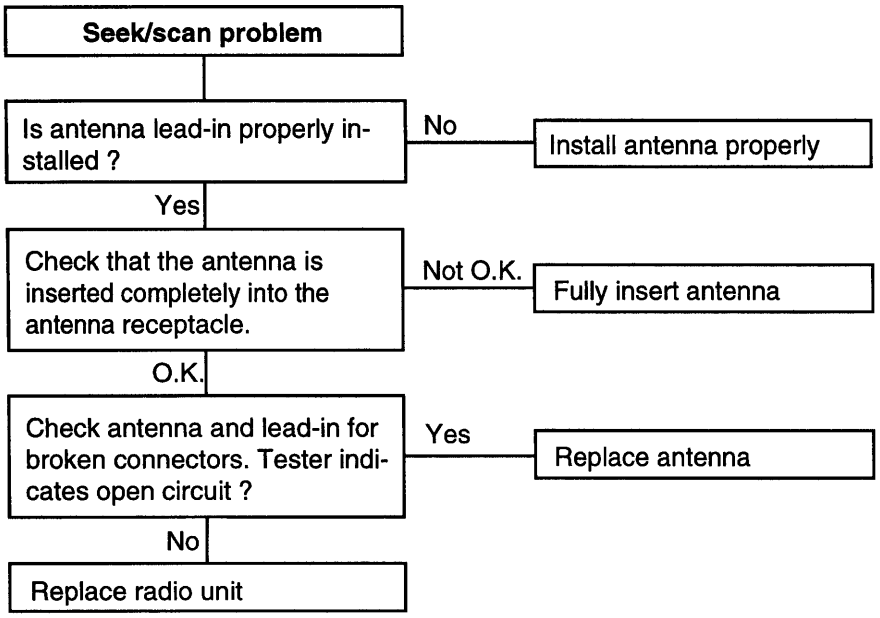

ETA9010M

CHART 9

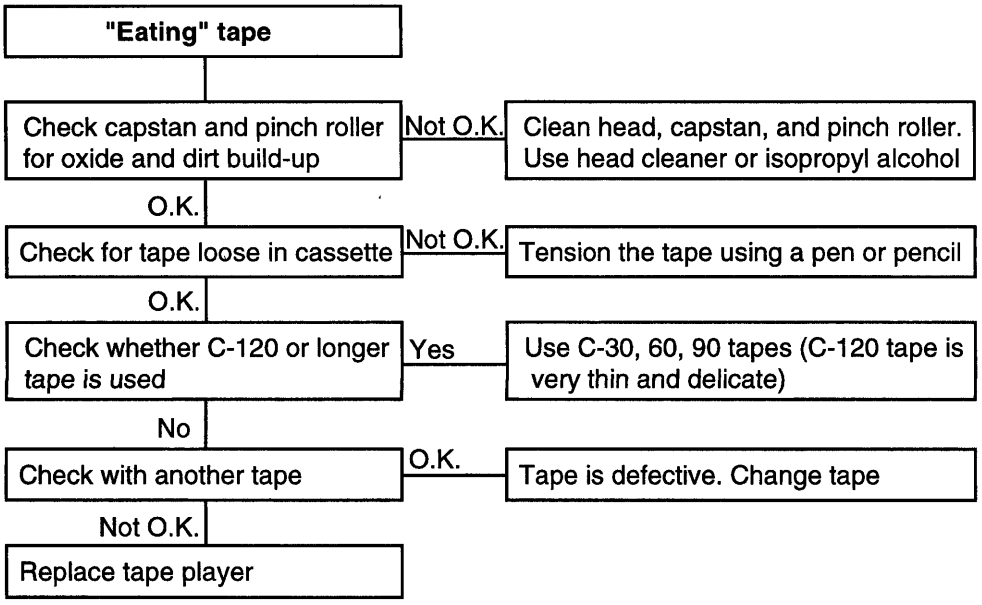

ETA9010N

CHART 10

1. MOTOR ANTENNA WON'T EXTEND OR RETRACT

Clean and polish the surface of the antenna rod.

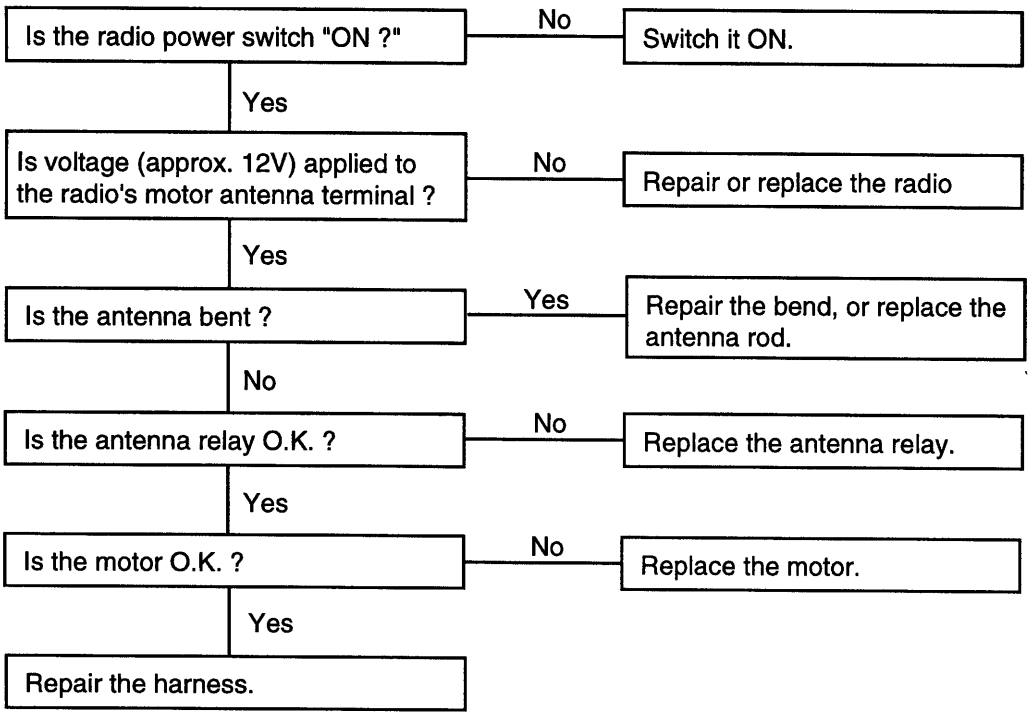

2. MOTOR ANTENNA EXTENDS AND RETRACTS BUT DOES NOT RECEIVE

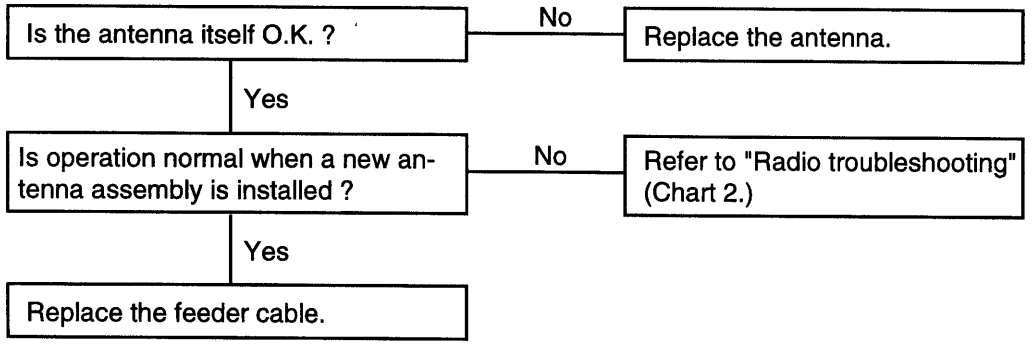

ETAA010P

WINDSHILD WIPER

Symptom	Possible cause	Remedy
Wipers do not operate or return to off position.	Wiper fuse (No.31; 20A) blown	Check for short and replace fuse
	Wiper motor faulty	Check motor
	Wiper switch faulty	Check switch
	Wiring or ground faulty	Repair if necessary

Symptom	Possible cause	Remedy
Wipers do not operate in INT position	ETACS CM faulty	Check ETACS CM
	Wiper switch faulty	Check switch
	Wiper motor faulty	Check motor
	Wiring or ground fautly	Repair if necessary

POWER WINDOW

Symptom	Possible cause	Remedy
No windows operate from the main switch on the driver's door	Fusible link (30A for P/Window) blown	Replace the fusible link
	Poor ground	Clean and retighten the ground terminal mounting bolt
	Defective power window main switch	Check the switch Replace if necessary
	Open circuit in wires or loose or disconnected connector	Repair or replace
Driver's side window does not operate	Defective power window main switch	Check for driver's window switch
	Defective motor or circuit breaker	Replace the motor
	Open circuit in wires or loose or disconnected connector	Check the harness and the connector
Passenger's side window does operate	Defective power window subswitch	Replace the switch
	Defective motor or circuit breaker	Replace the motor
	Wiring faulty or disconnected connector	Repair if necessary

POWER DOOR MIRROR

Symptom	Possible cause	Remedy
No mirrors operate	No.8 fuse (10A) blown	Check the circuit and replace fuse
	Poor ground	Clean and retighten the gound terminal mounting bolt
	Defective mirror switch	Check the switch Replace if necessary
	Open circuit in wires or loose or disconnected connector	Repair or replace
One mirror does not operate	Defective mirror switch	Check the switch Replace if necessary
	Defective mirror actuator	Replace the actuator
	Open circuit wires or loose or disconnected connector	Repair or replace

AUDIO SYSTEM

AUDIO UNIT

COMPONENTS ETJA7100

<H240>

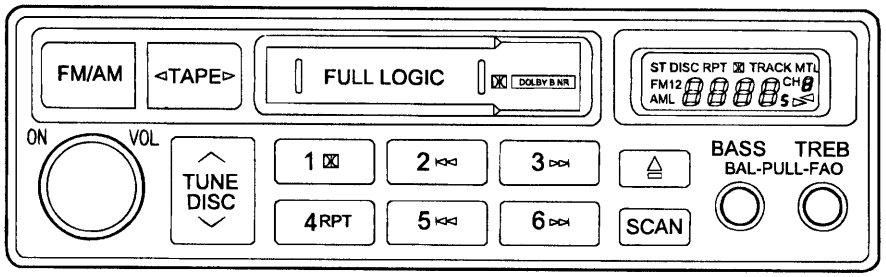

ETJA001B

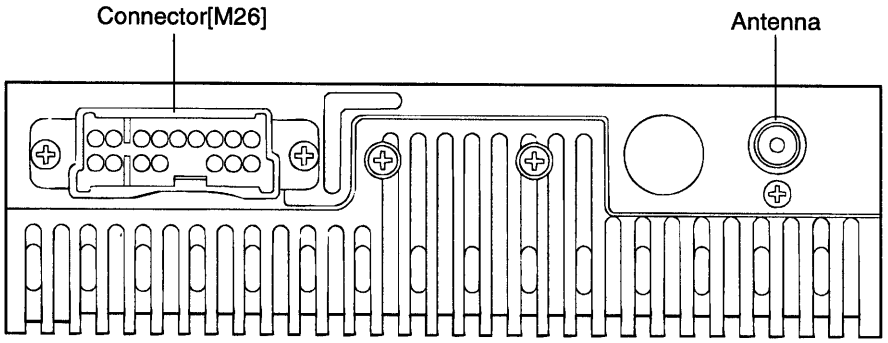

ETJA001A

Connector[M26]	Terminal	Description
[M26] ①②③ ④⑤ ⑥⑦ ⑧⑨⑩⑪⑫⑬⑭ ⑮⑯ ETJA001C	1	Antenna
	2	Rear left speaker(-)
	3	Front left speaker(-)
	4	Front right speaker(-)
	5	Rear right speaker(-)
	6	Illumination(-)
	7	ACC(+)
	8	Ground
	9	Rear left speaker(+)
	10	Front left speaker(+)
	11	N.C.
	12	N.C.
	13	Front right speaker(+)
	14	Rear right speaker(+)
	15	Illumination(+)
	16	Battery(+)

<H260>

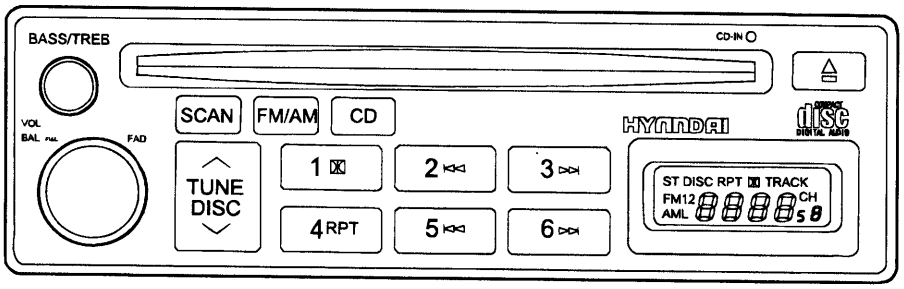

ETJA001E

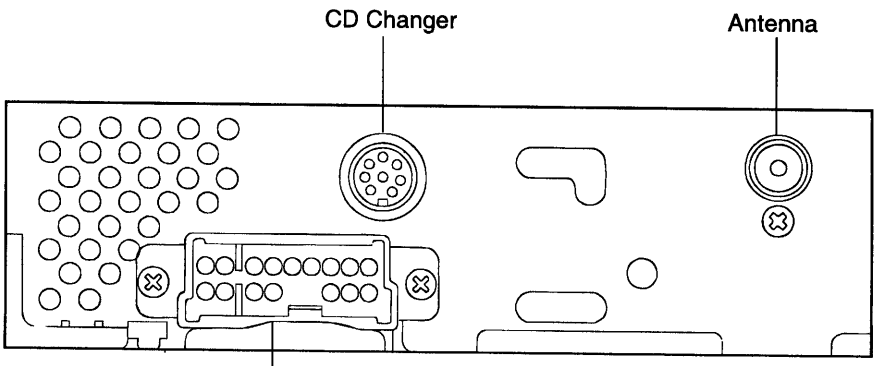

ETJA001D

Connector[M26]	Terminal	Description
[M26] 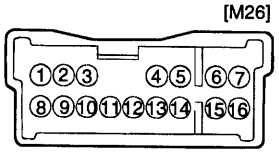 ETJA001C	1	N.C.
	2	Rear left speaker(-)
	3	Front left speaker(-)
	4	Front right speaker(-)
	5	Rear right speaker(-)
	6	Illumination(-)
	7	ACC(+)
	8	Ground
	9	Rear left speaker(+)
	10	Front left speaker(+)
	11	N.C.
	12	N.C.
	13	Front right speaker(+)
	14	Rear right speaker(+)
	15	Illumination(+)
	16	Battery(+)

Connector	Terminal	Description
(CD Changer) 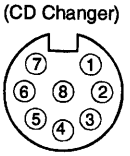 ETJA001G	1	R
	2	CD ON
	3	BUS
	4	B+
	5	M. Ground
	6	N.C.
	7	L
	8	A.Ground

<H290>

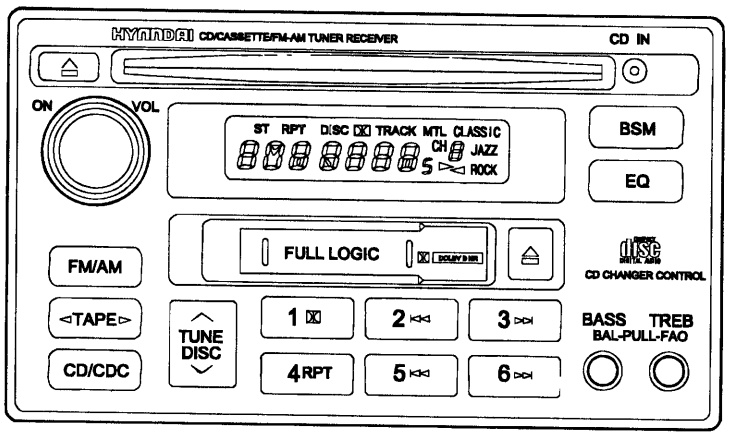

ETJA001I

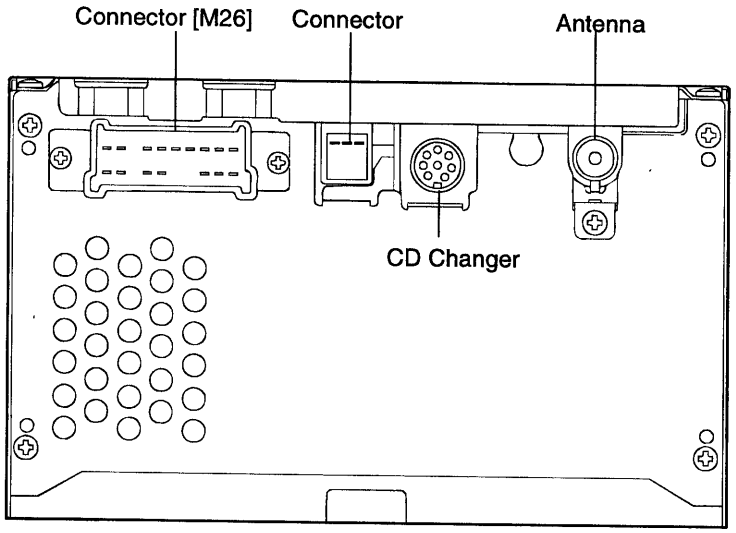

ETJA001H

Connector[M26]	Terminal	Description
[M26] 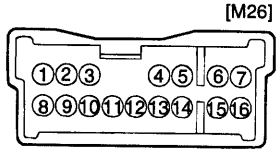 ETJA001C	1	Antenna
	2	Rear left amp(-)
	3	Front left amp(-)
	4	Front right amp(-)
	5	Rear right amp(-)
	6	Illumination(-)
	7	ACC(+)
	8	Ground
	9	Rear left amp(+)
	10	Front left amp(+)
	11	N.C.
	12	Amp remote
	13	Front right amp(+)
	14	Rear right amp(+)
	15	Illumination(+)
	16	Battery(+)

Connector	Terminal	Description
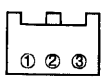 ETJA001K	1	Ground
	2	Signal
	3	Ground

Connector	Terminal	Description
(CD Changer) 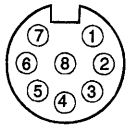 ETJA001G	1	R
	2	CD ON
	3	BUS
	4	B+
	5	M. Ground
	6	N.C.
	7	L
	8	A.Ground

REMOVAL AND INSTALLATION ETJA0250

1. Disconnect the negative (-) battery terminal.
2. Remove the ash tray and then remove the screws holding the center facia panel.

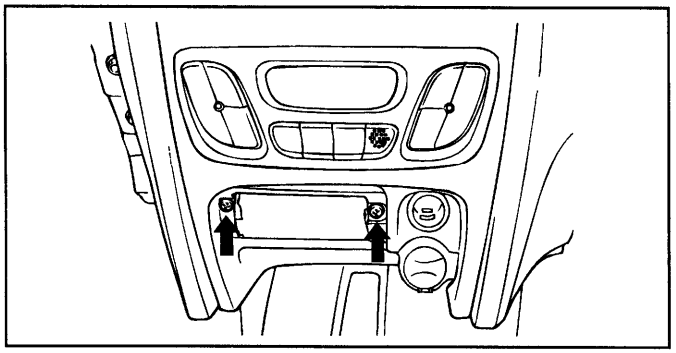

ESJA035H

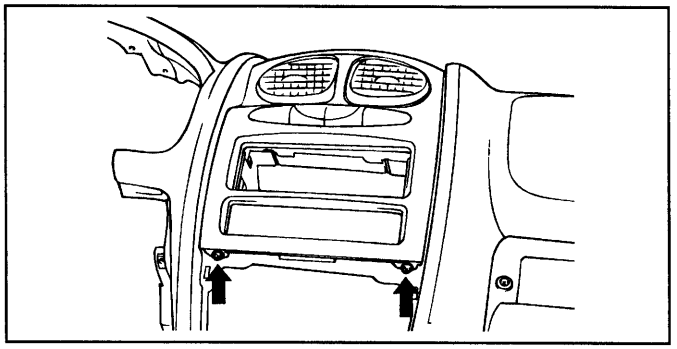

ESJA035J

3. Remove the center facia panel and disconnect the connectors.
4. Remove the screws holding the audio and remove the audio assembly from the mounting bracket.

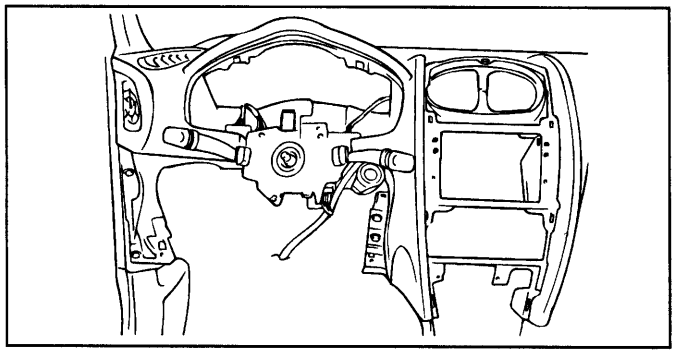

ESJA035I

5. Installation is the reverse of removal.

SERVICE INSTRUCTIONS ETHA0750

TAPE HEAD AND CAPSTAN CLEANING

1. To obtain optimum performance, clean the head, and capstan as often as necessary, depending on frequency of use and tape cleanness.
2. To clean the tape head and capstan, use a cotton swab dipped in ordinary rubbing alcohol. Wipe the head and capstan.

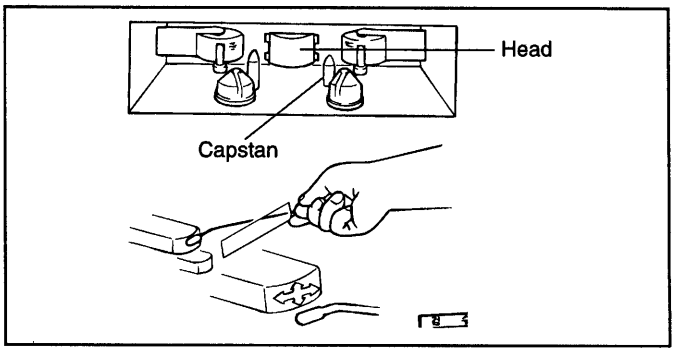

ETA9035A

SPEAKERS

REMOVAL AND INSTALLATION ETJA0300

FRONT SPEAKER

1. Remove the front door trim panel and remove the front speaker (Refer to page BD-12.)

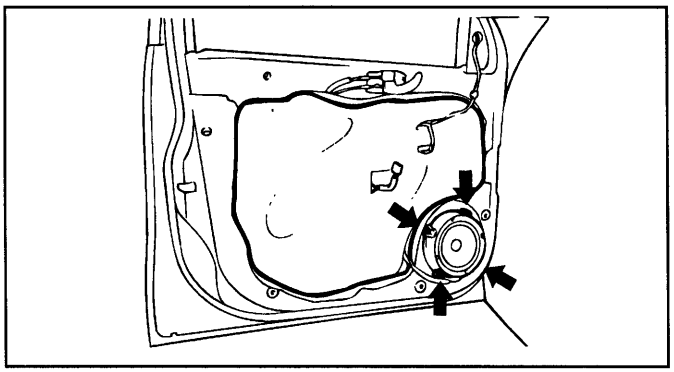

ESJA060D

2. Installation is the reverse of removal.

REAR SPEAKER

1. Remove the bolt holding the rear seat belt lower anchor and remove the quarter trim.

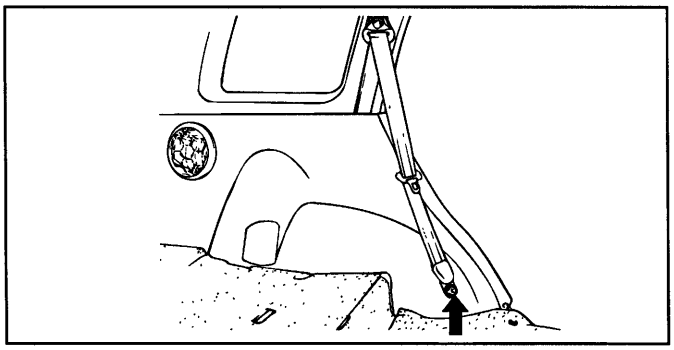

ESJA050H

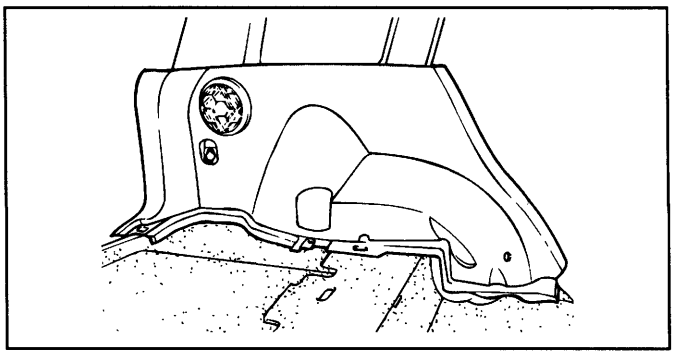

ESJA050I

2. Remove the rear speaker.

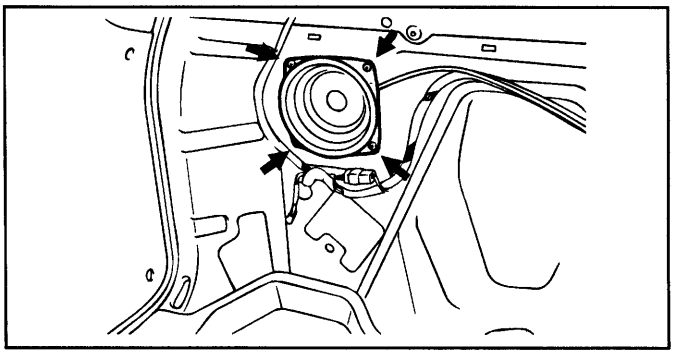

ETJA090A

SPEAKER CHECKING ETA90400

1. Check the speaker with an ohmmeter. If an ohmmeter indicates the correct impedance of the speaker when checking between the speaker (+) and speaker (-) of the same channel, the speaker is ok.

2. If a clicking sound is emitted from the speaker when the ohmmeter is connected to the speaker terminals, the speaker is ok.

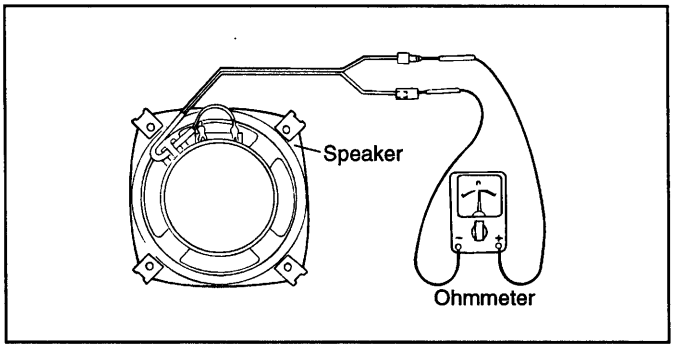

ETA9040A

MULTI FUNCTION SWITCH

COMPONENTS ETJA7150

[WITHOUT AIR BAG]

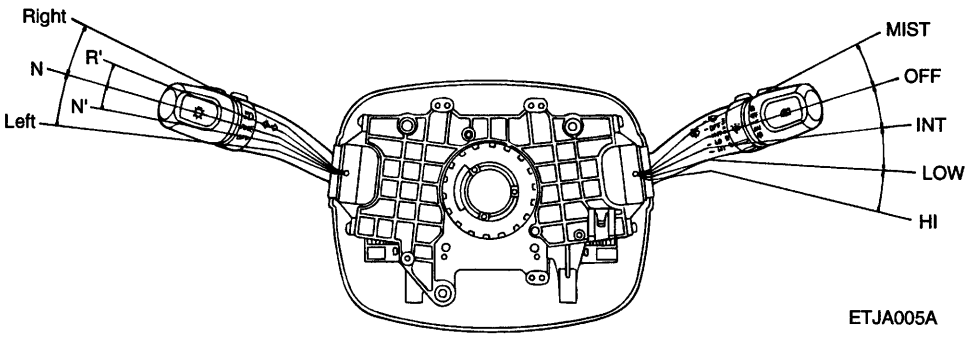

ETJA005A

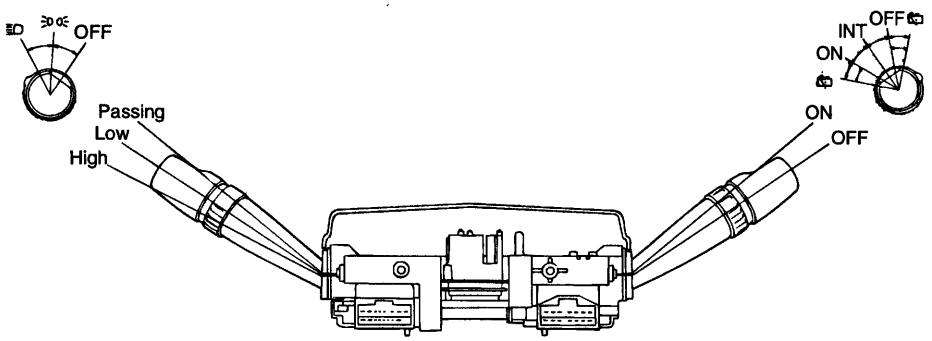

ETJA005B

[M20-1]

1	2	3	4	5	6	7
8	9	10	11	12	13	14

ETJA005G

[M20-2]

1	2	3	4	5	6	7	8	9
10	11	12	13	14	15	16	17	18

ETJA005H

Circuit connection

Connector No.	Terminal No.	Description
M20-2	1	Head lamp passing switch
	2	Head lamp high beam power
	3	-
	4	-
	5	-
	6	-
	7	Turn signal RH lamp switch
	8	Flasher unit power
	9	Turn signal LH lamp switch
	10	Head lamp low beam power
	11	Dimmer & passing ground
	12	-
	13	-
	14	Tail lamp switch
	15	Head lamp switch
	16	Rear fog lamp switch
	17	Lighting switch ground
	18	-

Connector No.	Terminal No.	Description
M20-1	1	Wiper high speed
	2	Wiper low speed
	3	Wiper parking
	4	Mist switch
	5	Wiper & washer ground
	6	Intermittent wiper
	7	Front washer switch
	8	Horn
	9	Rear wiper & washer ground
	10	Rear wiper (INT)
	11	Rear wiper
	12	Rear washer
	13	Intermittent wiper
	14	Intermittent wiper ground

[WITH AIR BAG]

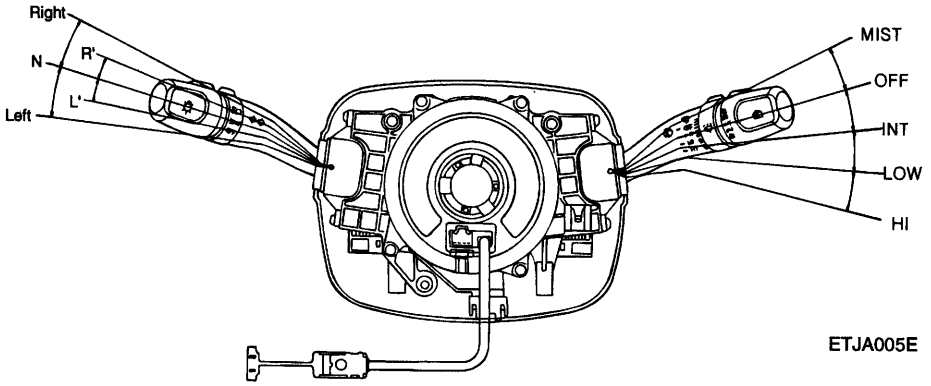

ETJA005E

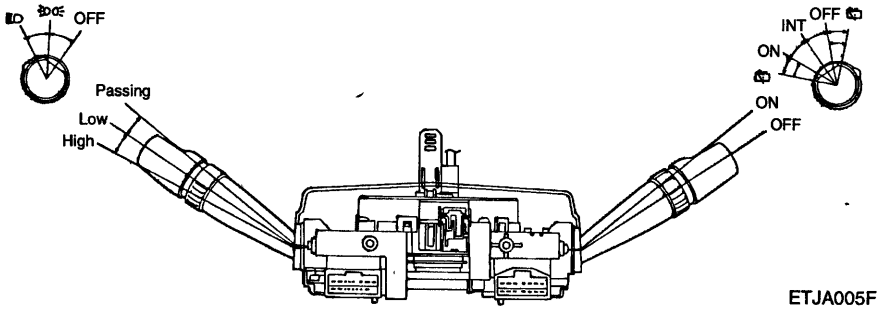

ETJA005F

[M20-2] [M20-1]

[M20-1]

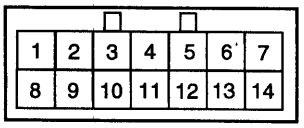

ETJA005G

[M20-2]

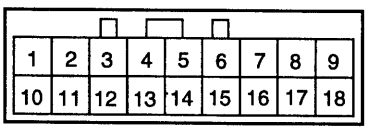

ETJA005H

[M20-3]

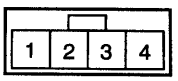

ETJA005I

Circuit connection

Connector No.	Terminal No.	Description	Connector No.	Terminal No.	Description
M20-2	1	Head lamp passing switch	M20-1	1	Wiper high speed
	2	Head lamp high beam power		2	Wiper low speed
	3	-		3	Wiper parking
	4	-		4	Mist switch
	5	-		5	Wiper & washer ground
	6	-		6	Intermittent wiper
	7	Turn signal RH lamp switch		7	Front washer switch
	8	Flasher unit power		8	-
	9	Turn signal LH lamp switch		9	Rear wiper & washer ground
	10	Head lamp low beam power		10	Rear wiper (INT)
	11	Dimmer & passing ground		11	Rear wiper
	12	-		12	Rear washer
	13	-		13	Intermittent wiper
	14	Tail lamp switch		14	Intermittent wiper ground
	15	Head lamp switch	M20-3	1	Remote control ground
	16	-		2	Remote control signal
	17	Lighting switch ground		3	Remote control power
	18	-		4	Horn

ETJA035A

REMOVAL AND INSTALLATION ETJA0400

Prior to removing of the multi function switch assembly in vehicles equipped with air bags, be careful to follow the following:

CAUTION

- **Never attempt to disassemble or repair the air bag module or clock spring. If faulty, replace it.**
- **Do not drop the air bag module or clock spring or allow contact with water, grease or oil. Replace if a dent, crack, deformation or rust is detected.**
- **The air bag module should be stored on a flat surface and placed so that the pad surface is facing upward. Do not place anything on top of it.**
- **Do not expose the air bag module to temperatures over 93°C(200°F).**
- **After deployment of an air bag, replace the clock spring with a new one.**
- **Wear gloves and safety glasses when handing an air bag that has been deployed.**
- **An undeployed air bag module should only be disposed of in accordance with the procedures mentioned in the restraints section.**
- **When you disconnect the air bag module-clock spring connector, take care not to apply excesive force.**
- **The removed air bag module should be stored in a clean, dry place.**
- **Prior to installing the clock spring, align the mating mark and "NEUTRAL" position indicator of the clock spring, and after turning the front wheels to the straight-ahead position, install the clock spring to the column switch. If the mating mark of the clock spring is not properly aligned, the steering wheel may not completely rotate during a turn, or the flat cable within the clock spring may be broken obstructing normal operation of the SRS and possibly leading to serious injury to the vehicle's driver. To inspect the clock spring, refer to the restraints section.**

1. Remove the air bag module.

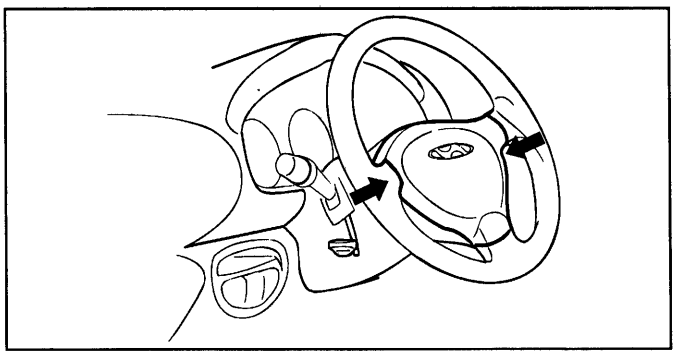

ESJA035P

Tightening torque

Air bag module mounting bolts :

4-6 Nm (40-60 kg·cm, 2.9-4.4 lb·ft)

2. Remove the steering wheel.

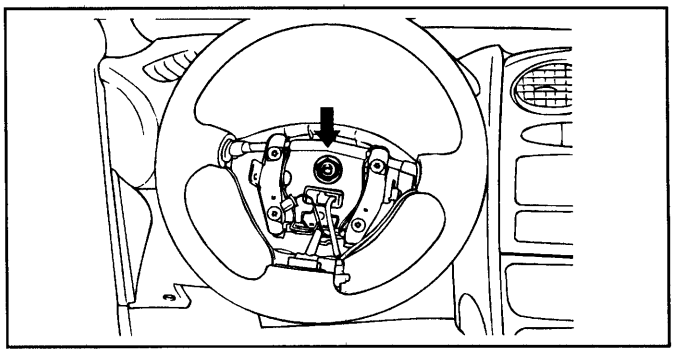

ESJA035B

3. Remove the steering column upper shroud and steering column lower shroud.

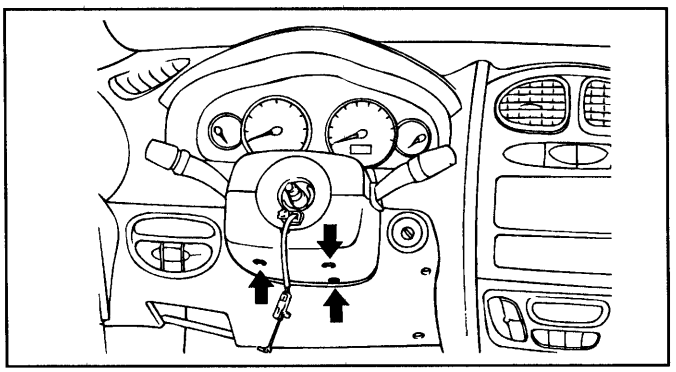

ESJA035C

4. Remove the screws holding the multi function switch and disconnect the connectors. Remove the multi function switch assembly.

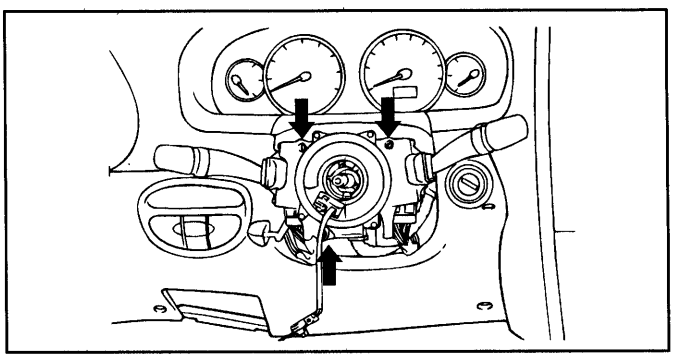

ESJA035D

5. Installation is the reverse of removal.

INSPECTION ETJA0450

Check the continuity between the terminals while operating the switch.

LIGHTING SWITCH [M20-2]

Position \ Terminal	14	15	17
OFF			
I	○	—	○
II	○	○	○

KTJA040A

DIMMER AND PASSING SWITCH [M20-2]

Position \ Terminal	1	2	10	11
HU		○	—	○
HL			○	○
P	○	○	—	○

HU : Head lamp high beam
HL : Head lamp low beam
P : Head lamp passing switch

KTDA040B

TURN SIGNAL AND LANE CHANGE SWITCH [M20-2]

Hazard switch \ Turn signal switch \ Terminal	7	8	9
OFF — L		○	○
OFF — N			
OFF — R	○	○	

KTDA040C

WIPER AND INTERMITTENT VOLUME SWITCH [M20-1]

Position \ Terminal	1	2	3	4	5	6	13	14
MIST				○	○			
OFF		○	○					
INT		○	○		○	○	○	○
LOW		○			○			
HI	○				○			

KTDA040D

WASHER SWITCH [M20-1]

Position \ Terminal	5	7
OFF		
ON	○	○

KTJA040B

REAR WIPER AND WASHER SWITCH [M20-1]

Position \ Terminal	9	10	11	12
WASHER	○			○
OFF				
INT	○	○		
LOW	○		○	
WASHER	○			○

KTJA040C

HORNS

REMOVAL AND INSTALLATION ETJA0500

1. Remove the bolts holding the horn and remove the horn assembly.

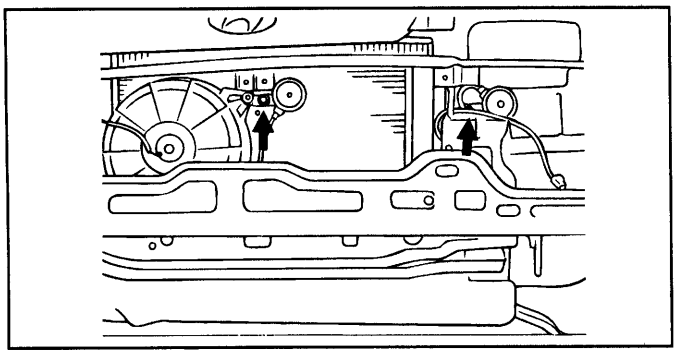

ETJA085A

2. Installation is the reverse of removal.

INSPECTION ETHA1200

1. Test the horn by connecting battery voltage to the 1 terminal and ground the 2 terminal.
2. The horn should make a sound. If the horn fails to make a sound, replace it.

ADJUSTMENT

Operate the horn, and adjust the tone to a suitable level by turning the adjusting screw.

NOTE

After adjustment, apply a small amount of paint around the screw head to keep it from loosening.

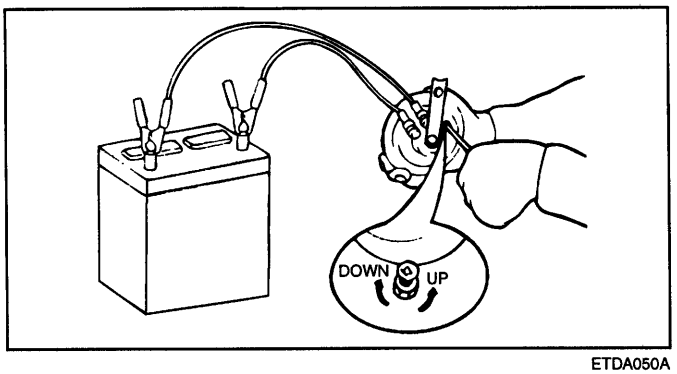

ETDA050A

ETACS (ELECTRONIC TIME AND ALARM CONTROL SYSTEM)

ETACS CM PIN CONNECTION ETJA7200

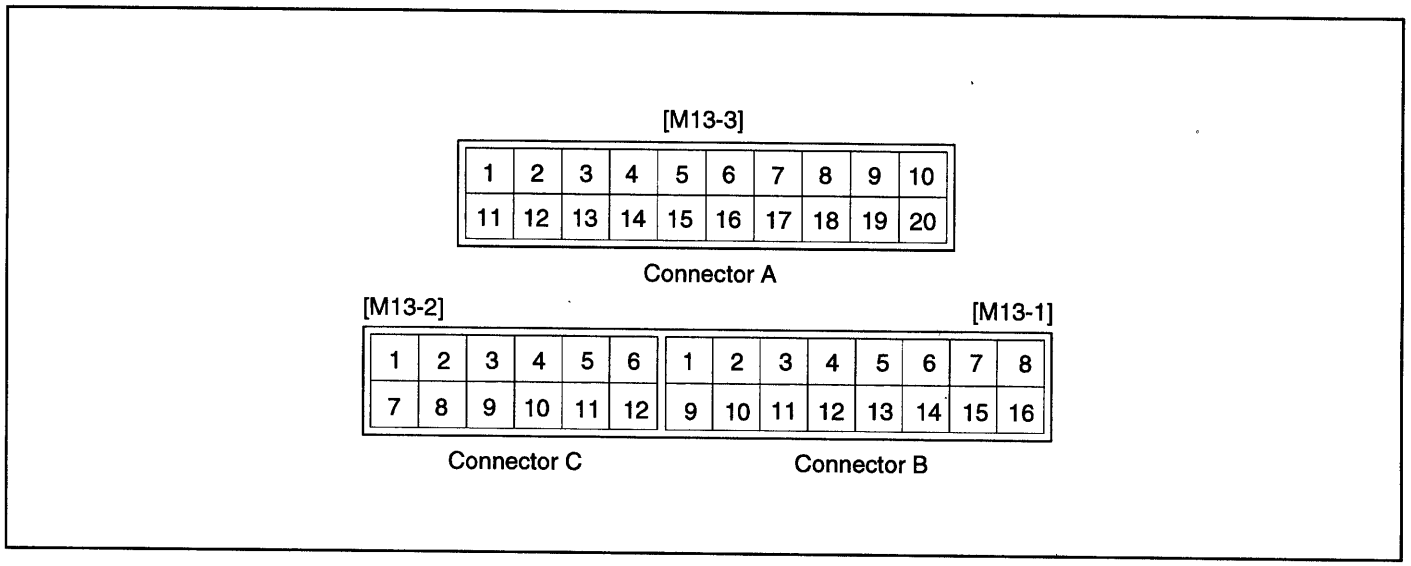

ETJA055A

Terminal No.	Connector A	Connector B	Connector C
1	Battery(+)	Ignition key illumination	-
2	Crash door unlock	Door warning switch	-
3	Rear door lock switch	Chime bell	-
4	Power window relay	Seat belt switch	Code saving
5	IGN1	Driver door lock switch	-
6	IGN2	Assist door lock switch	-
7	Speed sensor	Washer switch	Hood switch
8	Driver door switch	INT switch	Hazard relay
9	Assist door switch	INT(T) volume	Siren
10	Tailgate switch	Wiper relay	-
11	Room lamp	Head lamp switch	-
12	Rear defogger relay	Rear fog lamp switch (only EC area) Parking brake switch (except EC area)	Burglar alarm relay
13	Seat belt indicator	Rear fog lamp relay	
14	Door lock relay	Tail lamp switch	
15	Tail lamp relay	Front fog lamp switch	
16	Ground	DRL	
17	Rear defogger switch		
18	Door switch		
19	Alternator(L)		
20	Door unlock relay		

CIRCUIT DIAGRAM ETJA7250

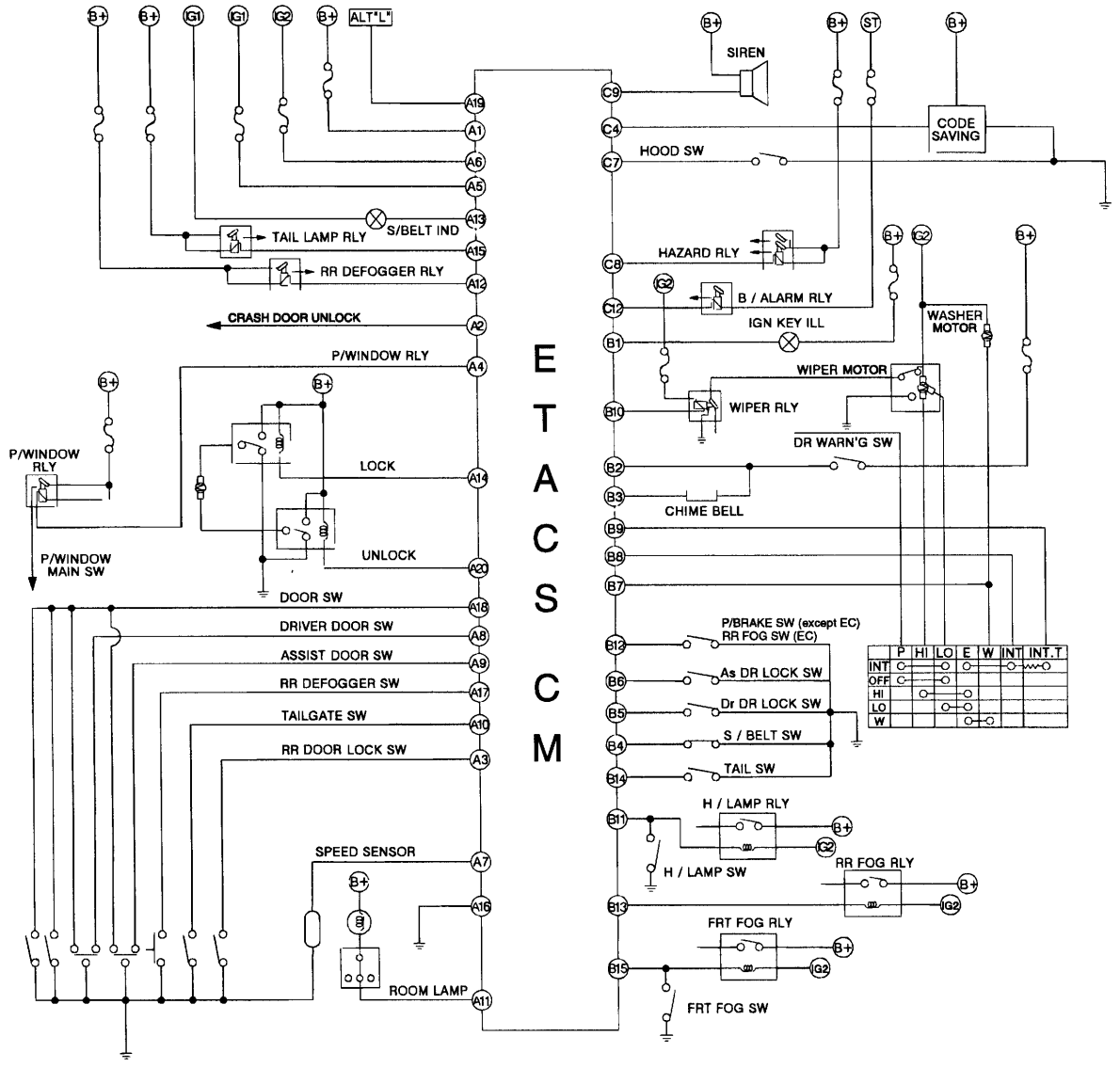

REMOVAL AND INSTALLATION ETJA0650

1. Disconnect the negative (-) battery terminal
2. Remove the lower crash panel.
3. Remove the ETACS CM from the junction block and disconnect the connectors.

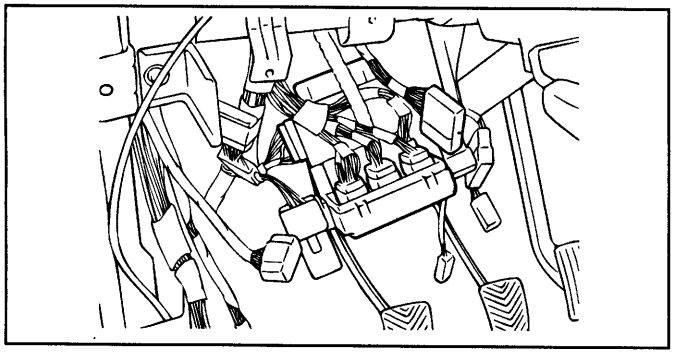

ETJA020H

4. Installation is the reverse of removal.

INSPECTION ETJA7300

While operating the components, check whether the operations are normal with timing chart.

ETACS FUNCTION

1. Vehicle speed sensing intermittent wiper

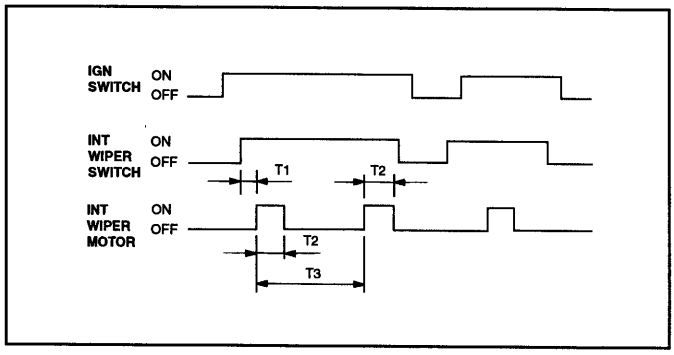

ETHA115C

Time specification

T1 : Max. 0.5 sec.

T2 : 0.6~0.7 sec. (Time of wiper motor 1 rotation)

T3 : At vehicle speed = 0km/h.

2.6±0.7 sec. (VR=0kΩ)~18.0±1sec (VR=50KΩ)

At vehicle speed = 100km/h or more.

1.0±0.2sec (VR=0kΩ)~10.0±1sec (VR=50KΩ)

2. Washer

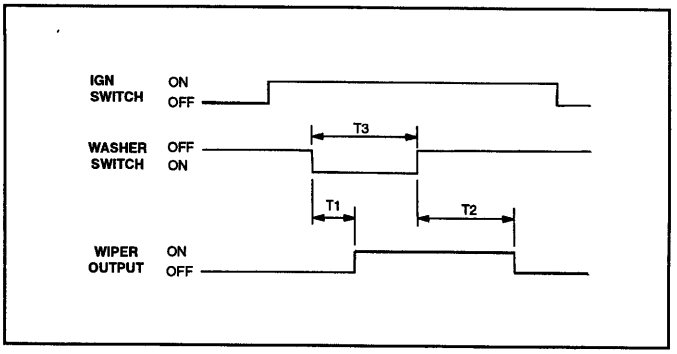

ETHA115D

a. Time specification
   T1 : 0.3 sec.
   T2 : 2.5 - 3.8 sec.
   T3 : 0.2 - 0.6 sec.
b. This function should be operated preferentially even though the variable intermittent wiper is operating.

3. Rear window defogger

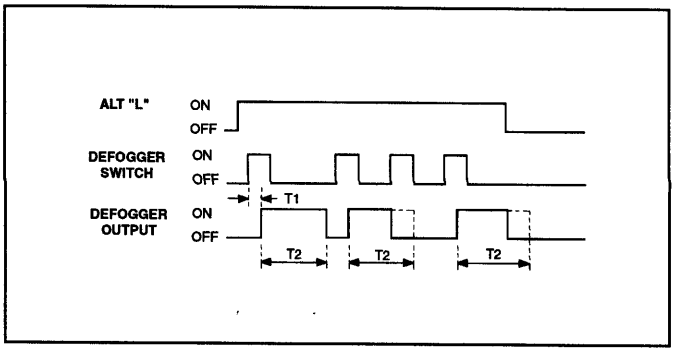

ETJA020B

Time specification

T1 : 60 msec

T2 : 20±1min.

4. Seat belt warning

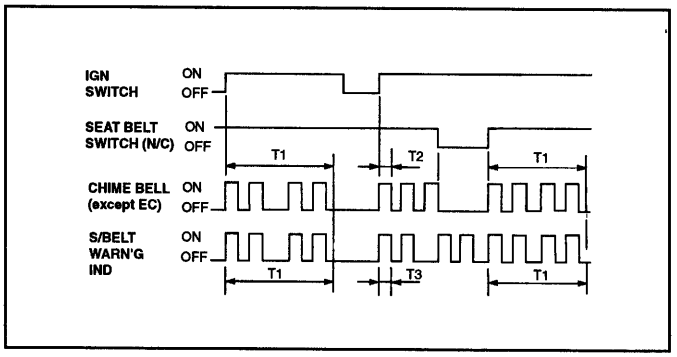

ETHA115F

Time specification

T1 : 6±1 sec.

T2 : 0.45±0.1 sec.

T3 : 0.3±0.1 sec.

5. Ignition key hole illumination

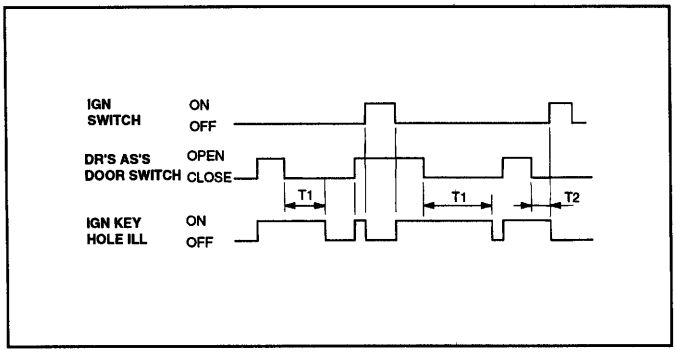

ETJA070A

Time specification

T1 : 10±1 sec.

T2 : 0-10 sec.

6. Delayed out room lamp&keyless unlock timer

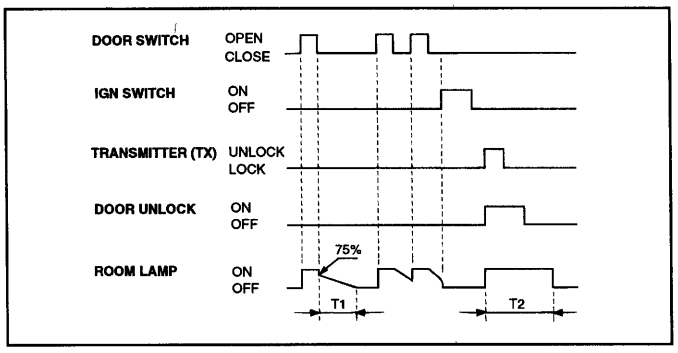

ETJA020C

Time specification

T1 : 5.5±0.5 sec.

T2 : 30±3 sec.

7. Key operated warning (except EC area)

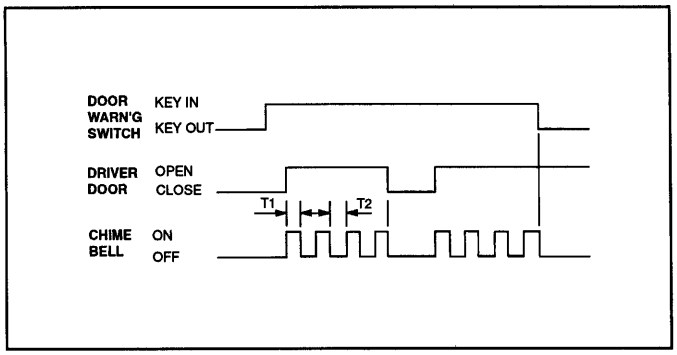

ETHA115L

Time specification

T1, T2 : 0.45±0.1 sec.

8. Ignition key reminder

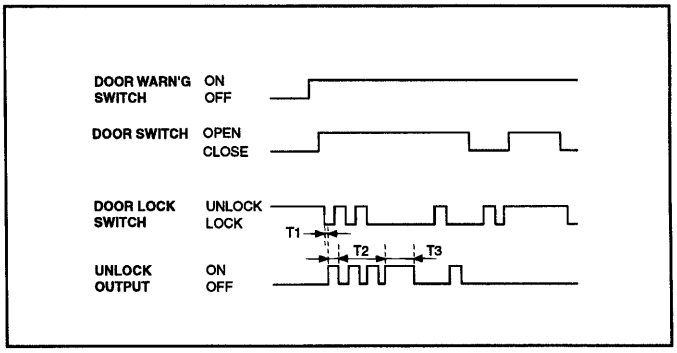

ETJA020D

Time specification

T1 : 0.5 sec.

T2 : 1 sec.

T3 : 0.5 sec., 3 times

9. Tail lamp auto cut

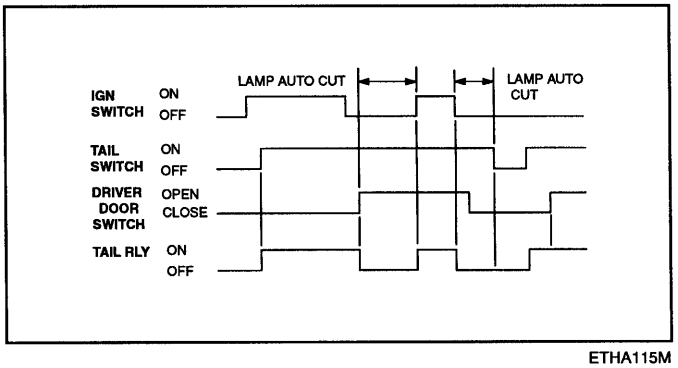

ETHA115M

10. Power window timer

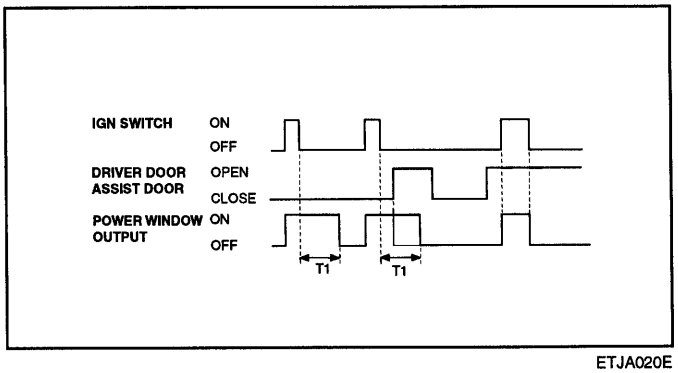

ETJA020E

Time specification

T1 : 30±3 sec.

11. Auto door lock(except EC area)

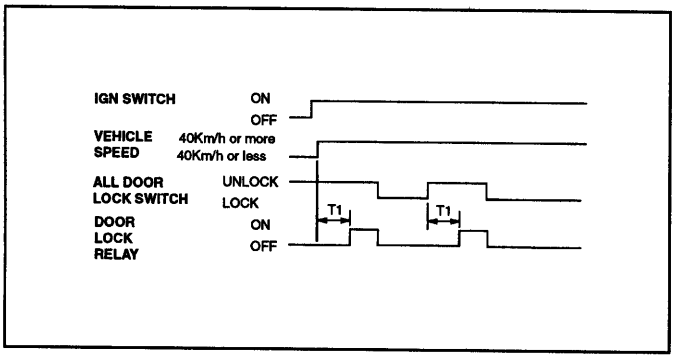

ETHA115N

Time specification

T1 : 2.5±0.5 sec.

12. Central door lock/unlock

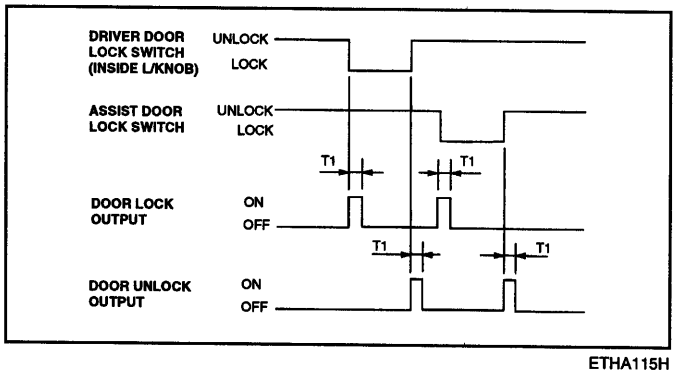

ETHA115H

Time specification

T1 : 0.5±0.1 sec.

13. Crash door unlock

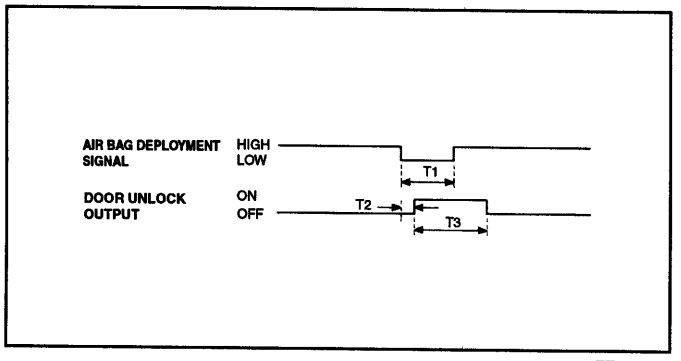

ETJA020F

Time specification

T1 : 200ms

T2 : 40ms

T3 : 5±0.5 sec.

14. Ignition key off unlock(except EC area)

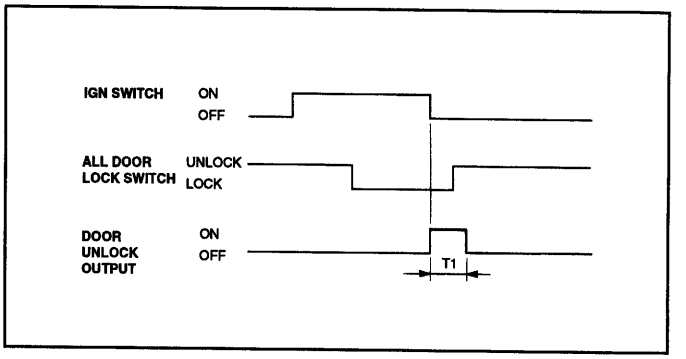

ETHA115P

Time specification

T1 : 0.5±0.1 sec.

15. Parking start warning(except EC area)

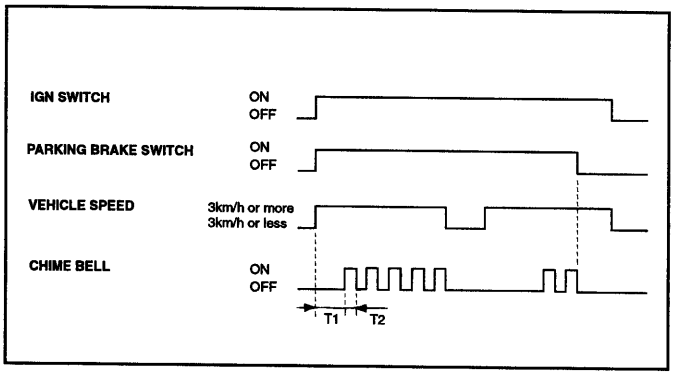

ETJA020G

Time specification

T1 : 2.5±0.5 sec

T2 : 0.3±0.1 sec

16. Rear fog lamp control(only EC area)

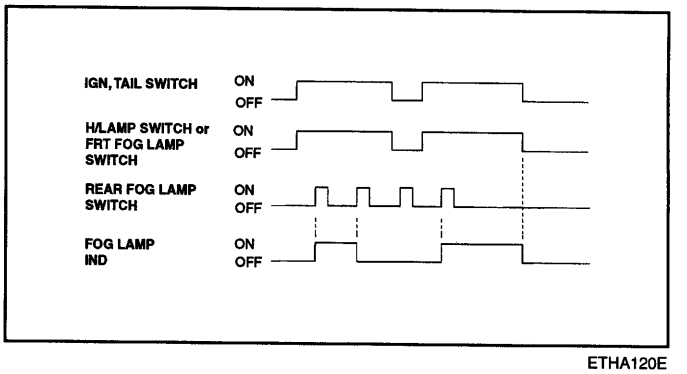

ETHA120E

ANTI-THEFT FUNCTION

1. Arm function

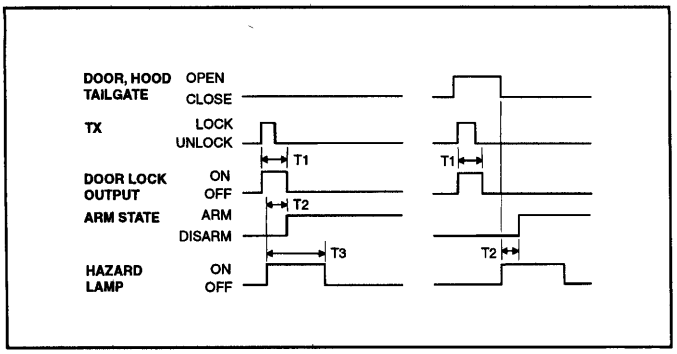

ETHA115Q

Time specification

T1 : 0.5sec.

T2 : Max 2sec.

T3 : 1.0±0.2sec.

2. Disarm function

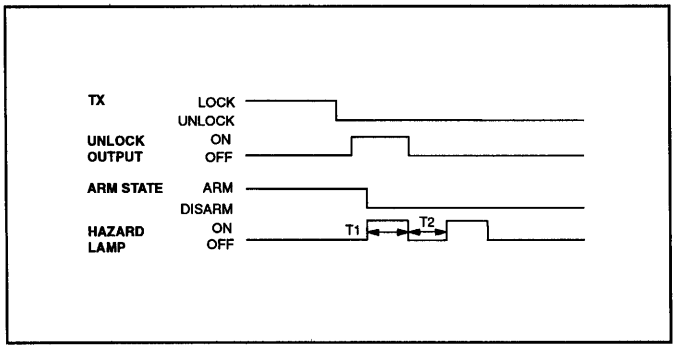

ETHA115R

Time specification

T1, T2 : 0.5±0.1sec.

3. Alarm function

a. Only EC area

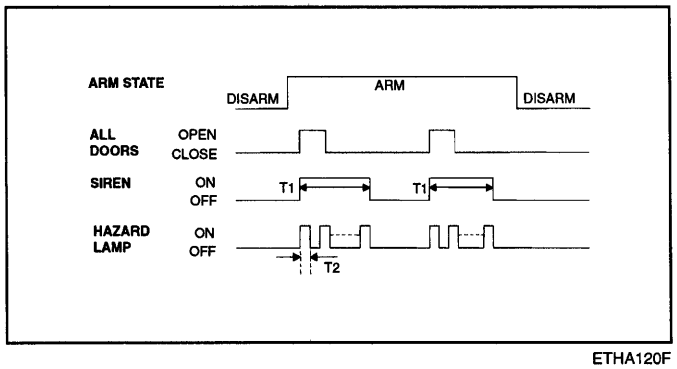

ETHA120F

Time specification
T1 : 27±2sec.
T2 : 0.5±0.1sec.

b. Except EC area

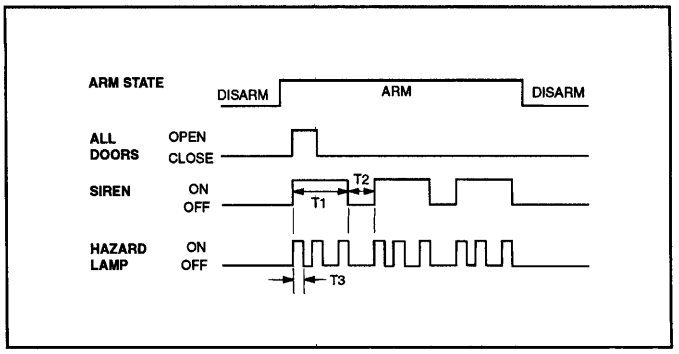

ETHA115S

Time specification
T1 : 27±2sec.
T2 : 10±1sec.
T3 : 0.5±0.1sec.

c. New alarm occurs while the alarm is sounding.

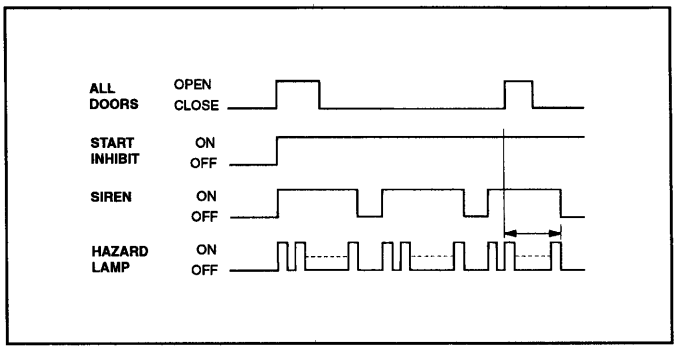

ETHA115T

d. Disarmed with TX (Transmitter) while the alarm is sounding.

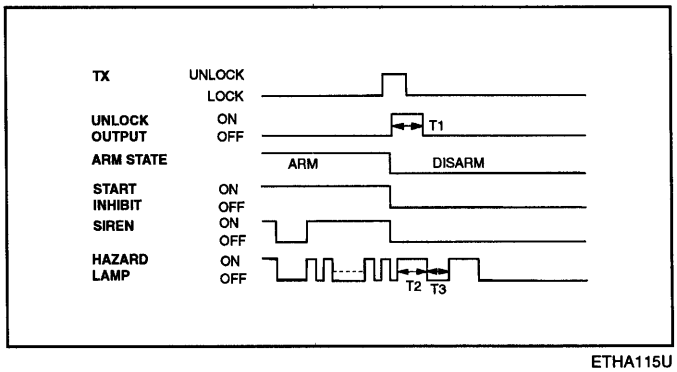

ETHA115U

Time specification
T1, T2, T3 : 0.5±0.1sec.

e. TX (Transmitter) lock button pressed when the door closed while the alarm is sounding.

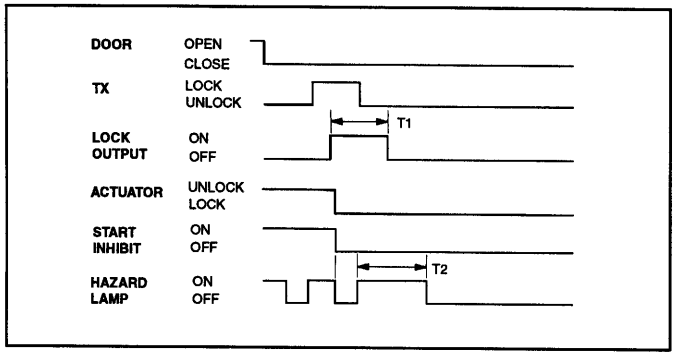

ETHA115V

Time specification
T1 : 0.5sec.
T2 : 1.0±0.2sec.

f. TX (Transmitter) lock button pressed when the door opened while the alarm is sounding.

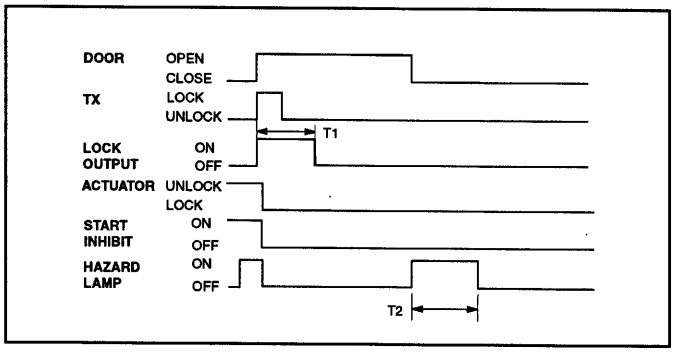

ETHA115W

Time specification
T1 : 0.5sec.
T2 : 1.0±0.2sec.

g. Disarmed after 30 sec when the ignition switch is turned on while the alarm is sounding.

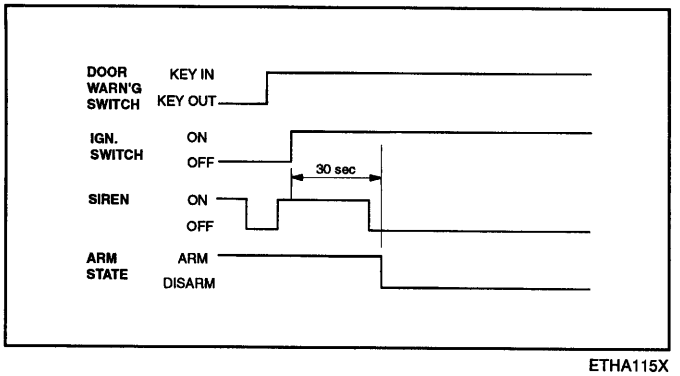

ETHA115X

h. Start inhibit is "ON" regardless of door latch lock state.

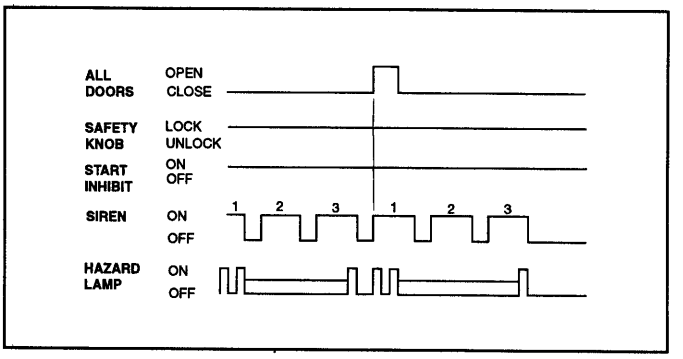

ETHA115Y

i. Battery is disconnected during the alarm state.

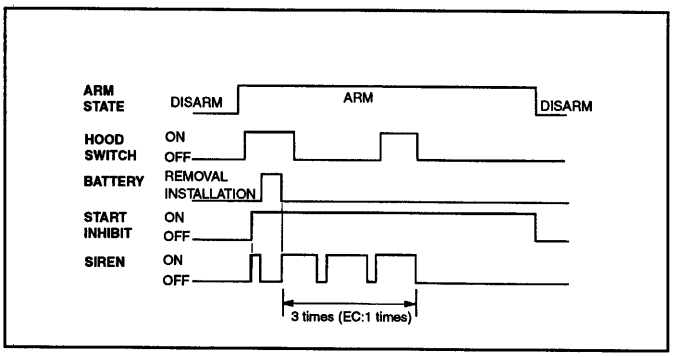

ETHA115Z

4. **Code saving method.**

   a. Remove the lower dash panel.

NOTE

Don't disconnect the negative (-) battery terminal.

   b. To store new codes :

   - Activate the keyless entry/receiver unit and change code saving switch of the receiver unit from "OFF" to "SET".
   - The secret codes from the transmitter will be stored into the receiver unit when the door lock button or unlock button is pressed on the transmitter.

   - Save the 2nd transmitter codes in the same manner.

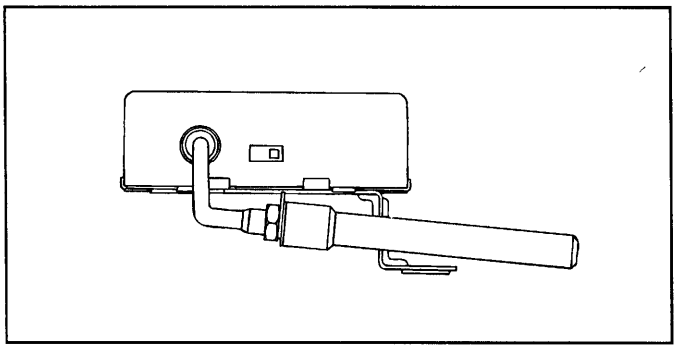

ETDA085R

   c. Return the code saving switch of the receiver unit from "SET" to "OFF".

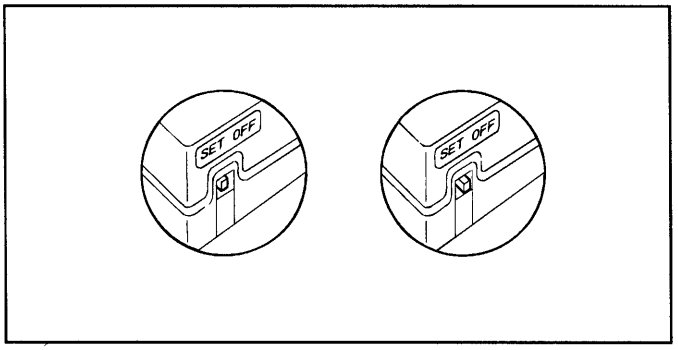

ETHA120D

   d. Install the lower dash panel.

FUSES AND RELAYS

RELAY BOX (ENGINE COMPARTMENT)

FUSIBLE LINK ETJA0750

SPECIFICATIONS

Circuit	Rated Capacity	Circuit	Rated Capacity
Battery	50A	ABS 1	30A
Generator	120A	ABS 2	30A
Power window	30A	Radiator	30A
Condenser	20A	ECM	40A
Ignition	40A	Blower	40A

INSPECTION

1. Check for a burnt fusible link with an ohmmeter.
2. If a fusible link burns out, there is a short or some other problem in the circuit. Carefully determine the cause and correct it before replacing the fusible link.

CAUTION

The fusible link will burn out within 15 seconds if a higher than specified current flows through the circuit.

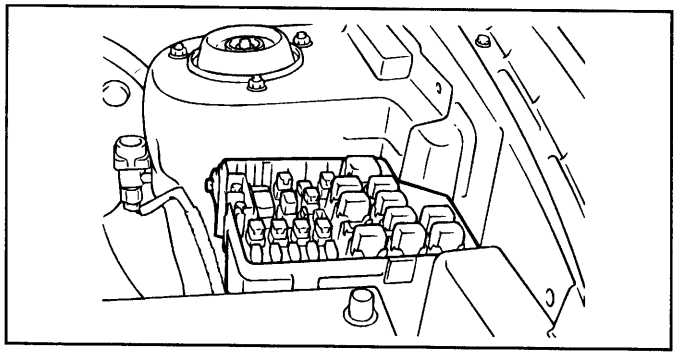

ETJA075D

FUSE BOX ETJA0800

INSPECTION

1. Be sure there is no play in the fuse holders, and that the fuses are held securely.
2. Are the fuse capacities for each circuit correct?
3. Are there any blown fuses?

   If a fuse is to be replaced, be sure to use a new fuse of the same capacity. Always determine why the fuse blew first and completely eliminate the problem before installing a new fuse.

CAUTION

Never use a fuse of higher capacity than specified.

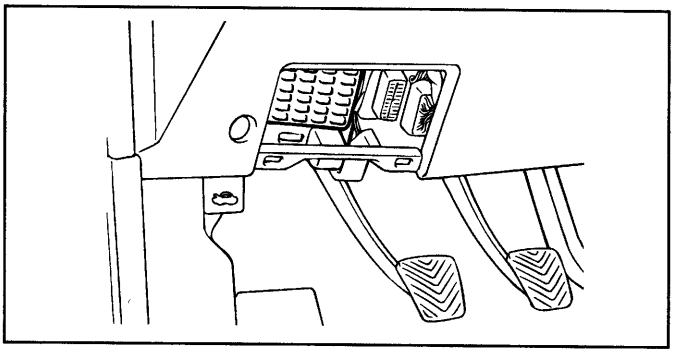

ETJA075E

FUSES

INSPECTION ETDA0860

When a fuse is blown, there are two probable causes. The two causes can easily be determined by a visual check after removing the fuses.

1. **Fuse blown due to over-current.**

   Prior to replacing the fuse with a new one, check the circuit for a short and the related parts for abnormal conditions. Only after the correction of a short or replacement of abnormal parts, should a fuse with the same ampere rating be installed.

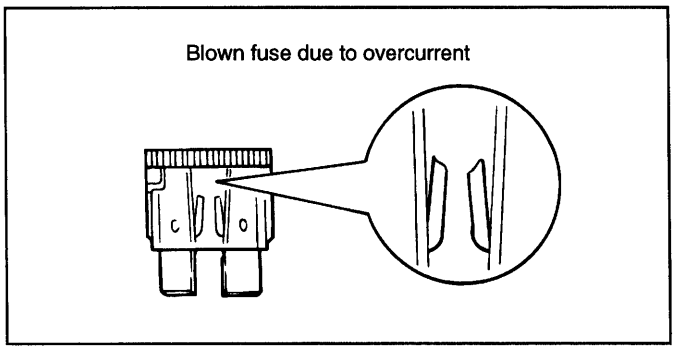

ETDA086A

2. **Fuse blown due to repeated on-off current.**

   Normally, this type of problem occurs after a fairly long period of use, and is less frequent than #1 above. In this case, you may simply replace with a new fuse of the same capacity.

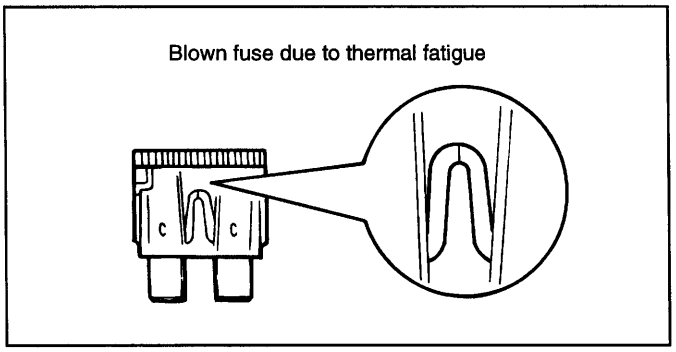

ETDA086B

CAUTION

A blade type fuse is identified by the numbered value in amperes. If the fuse is blown, be sure to replace a fuse with the same ampere rating. If a fuse of higher capacity than specified is used, parts may be damaged and a danger of fire exists. To remove or insert a fuse, use the fuse puller in the fuse box.

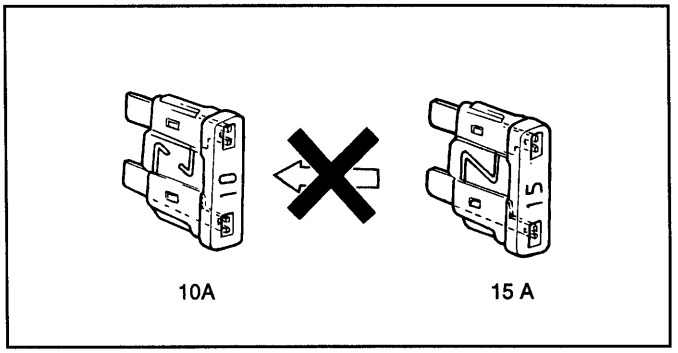

ETDA086C

INDICATORS AND GAUGES

INSTRUMENT CLUSTER

COMPONENTS ETJA7350

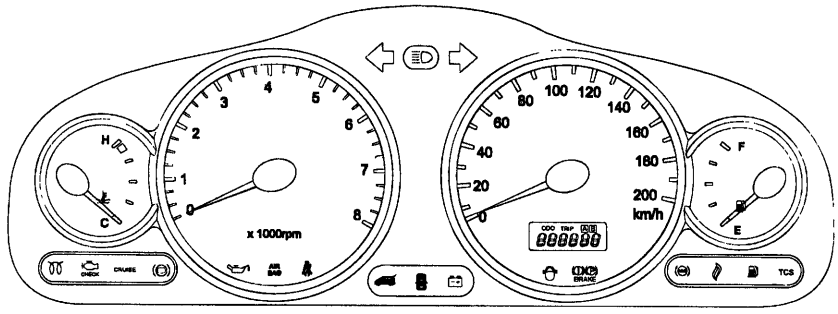

ETJA015C

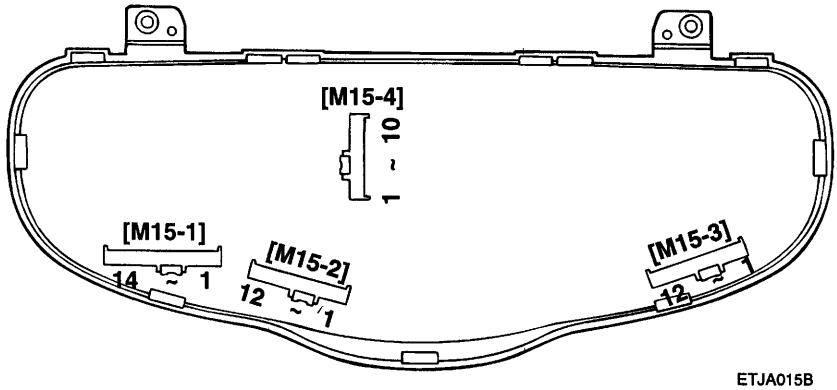

ETJA015B

[M15-1]

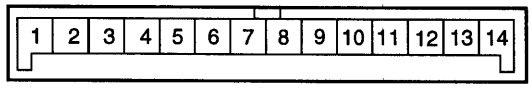

ETJA015E

[M15-2]

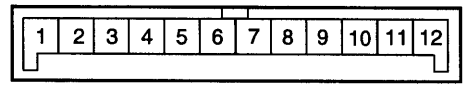

ETJA015F

[M15-3]

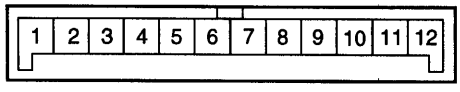

ETJA015F

[M15-4]

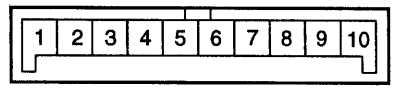

ETJA015G

ETJA735A

CIRCUIT DIAGRAM ETJA7400

M15-1	M15-2	M15-3	M15-4
	8		
	10		
	9		
	3		
	2		
3			
4			
		3	
13			
5			
	11		
6			
		2	
14			
		9	
		10	
		8	
		4	
11			
	12		
12			
		6	
8			
2			
		11	
		12	
9			
		7	
	5		
	1		
	4		
	7		
			10
			9
			8
			7
			5
			4
			3
			2
			1
	6		
10			
		5	

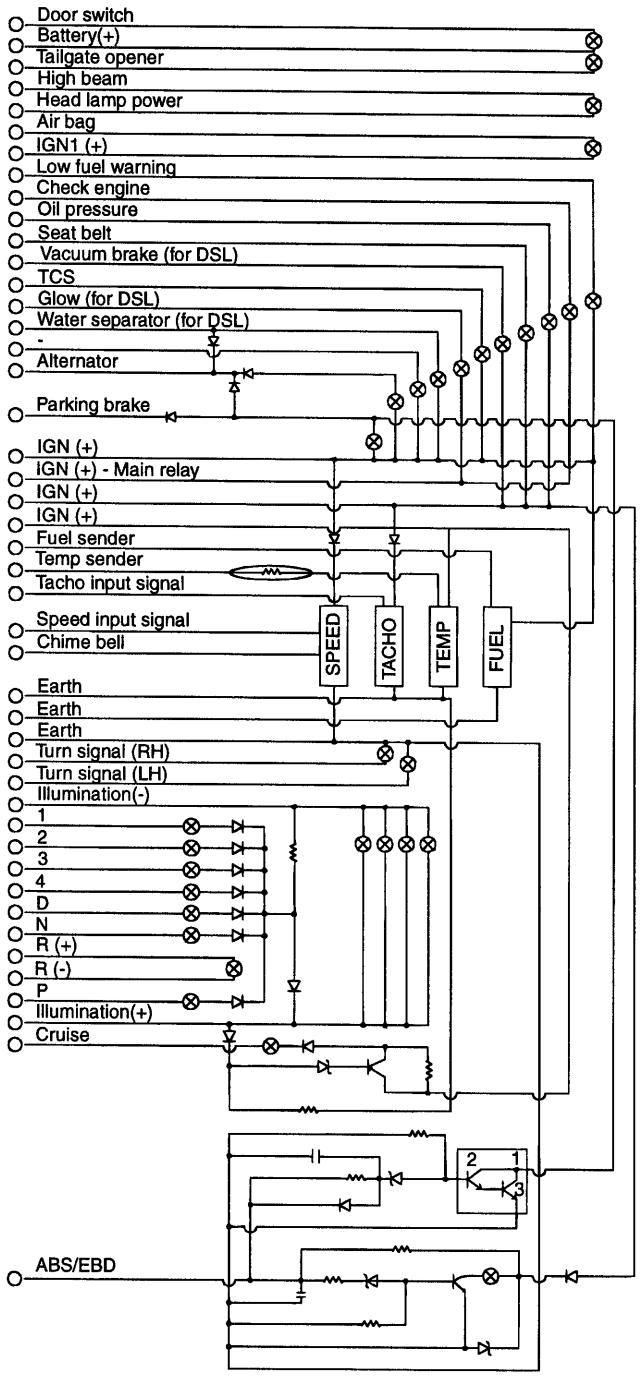

ETJA740A

REMOVAL AND INSTALLATION ETJA0950

1. Disconnect the negative (-) battery terminal.
2. Remove the cluster facia panel.

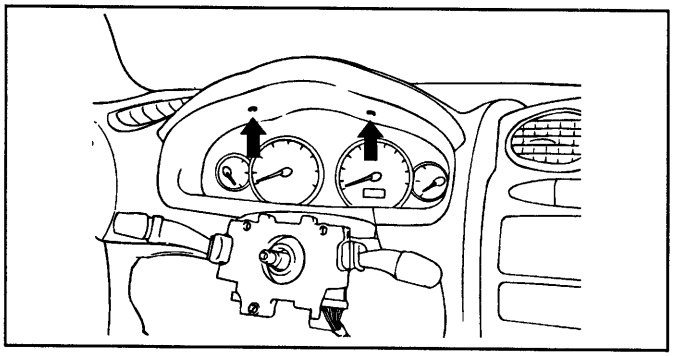

ESJA035F

3. Remove the screws holding the cluster and remove the instrument cluster.

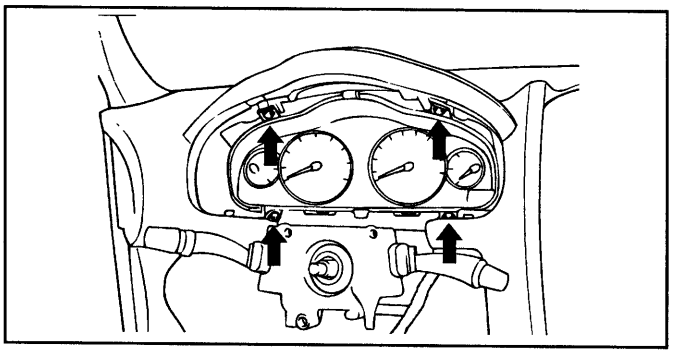

ESJA035G

4. Installation is the reverse of removal.

INSPECTION OF COMPONENTS ETJA7900

SPEEDOMETER

1. Adjust the pressure of the tires to the specified level.
2. Drive the vehicle onto a speedometer tester. Use wheel chocks as appropriate.
3. Check if the speedometer indicator range is within the standard values.

CAUTION

Do not operate the clutch suddenly or increase/ decrease speed rapidly while testing.

NOTE

Tire wear and tire over or under inflation will increase the indication error.

Velocity (Km/ h)	20	40	60	80	100	120	140	160	180	200	Remark
Tolerance (Km/ h)	20-24.1	40-43	60-64.1	80-85.2	100-105.2	120.5-126.3	140.5-146.7	160.5-167.5	181-188.4	201-209.1	Except EEC& GENERAL
	20.8-25.4	40-44	60.8-65.4	81.4-86.8	102.6-108.2	123.5-129.6	144.4-151	165.4-172.4	186.3-193.8	207.2-215.2	EEC, GENERAL

Velocity (MPH)	10	20	40	60	80	100	120	Remark
Tolerance (MPH)	10-12.5	20-22	40-42.6	60-63.4	80.3-84.1	100.3-104.7	120.3-125.3	Except U.S.A
	8.5-11.5	18.5-21.5	38.5-41.5	58.3-61.7	78-82	97.7-102.3	117.5-122.5	U.S.A

TACHOMETER

1. Connect the scan tool to the diagnostic link connector or install a tachometer.
2. With the engine started, compare the readings of the tester with that of the tachometer. Replace the tachometer if the tolerance is exceeded.

CAUTION

1. **Reversing the connections of the tachometer will damage the transistor and diodes inside.**
2. **When removing or installing the tachometer, be careful not to drop it or subject it to severe shock.**

Revolution (rpm)	1,000	2,000	3,000	4,000	5,000	6,000	7,000	Remark
Tolerance (rpm)	±100	±125	±150	±150	±150	±180	±210	

FUEL GAUGE

OPERATION CHECK

1. Disconnect the fuel sender connector from the fuel sender.
2. Connect a 3.4 watt, 12V test bulb to terminals 2 and 5 on the wire harness side connector.
3. Turn the ignition switch to the ON, and then check that the bulb lights up and the fuel gauge needle moves to full.

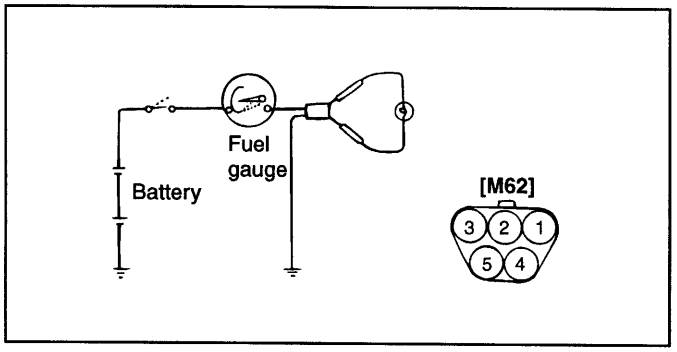

ETJA070F

RESISTANCE CHECK

1. Remove the instrument cluster (Refer to page BD-26).
2. Measure the resistance between terminal 6(M15-3) and terminal 7(M15-3).

Resistance (Ω)	Gauge level
100	E(Empty)
55	1/2
10	F(Full)

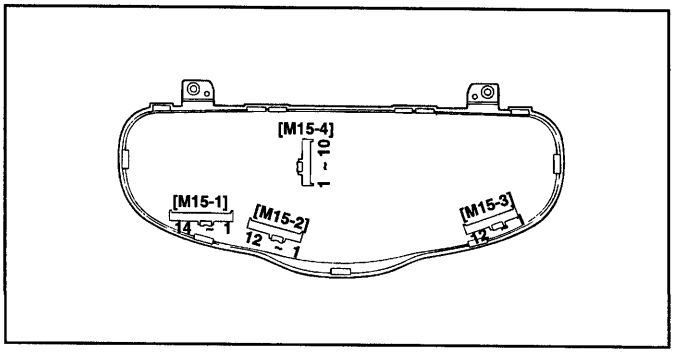

ETJA015B

FUEL SENDER

1. Using an ohmmeter, measure the resistance between terminals 2 and 5 at each float level.

Float position	F	1/2	E
Resistance (Ω)	4	55	105

2. Also check that the resistance changes smoothly when the float is moved from "E" to "F".

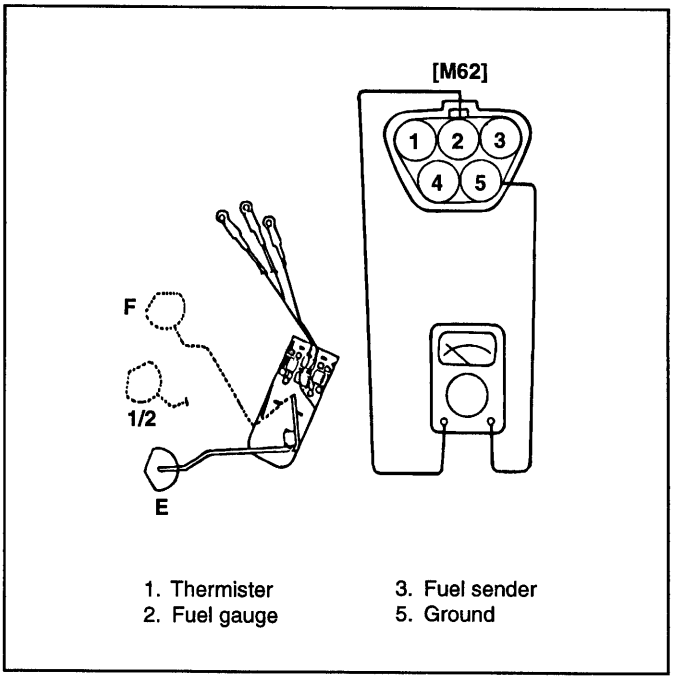

1. Thermister
2. Fuel gauge
3. Fuel sender
5. Ground

ETJA070G

LOW FUEL LEVEL SENSOR

1. Connect a test lamp (12V, 3.4W) and the battery to the sender. Immerse the sender in water.
2. The lamp should be off while the thermister is submerged in the water, and should illuminate when the sender is taken out of the water.

NOTE

If there is a malfunction, replace the fuel sender as an assembly.

CAUTION

After completing this test, wipe the sender dry and reinstall it in the fuel tank.

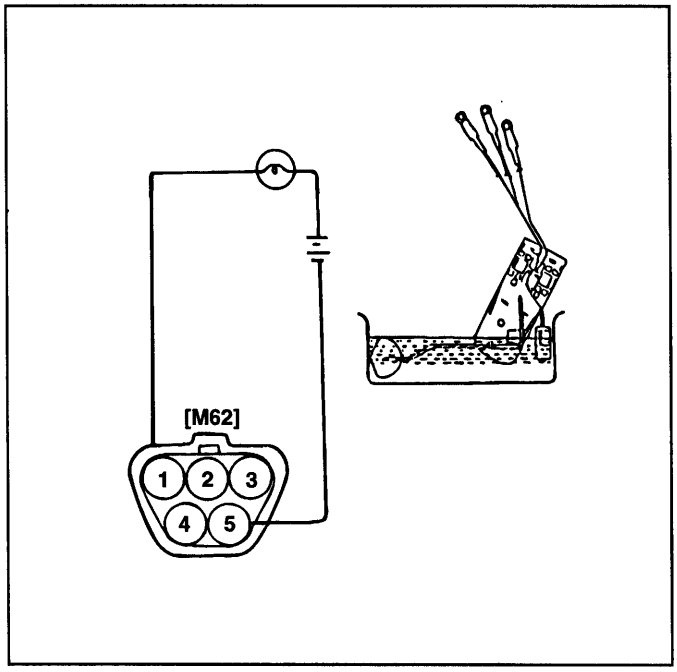

ETJA070H

ENGINE COOLANT TEMPERATURE GAUGE

1. Disconnect the wiring connector from the engine coolant temperature sender in the engine compartment.
2. Turn the ignition switch ON. Check that the gauge needle indicates cool. Turn the ignition switch OFF.
3. Connect a 12V, 3.4 watt test bulb between the harness side connector and ground.

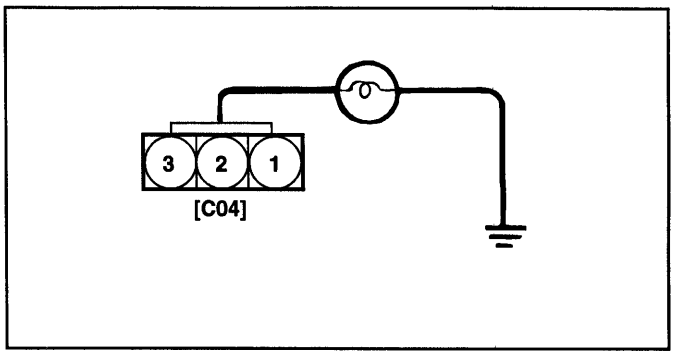

ETJA700A

4. Turn the ignition switch ON.
5. Verify that the test bulb flashes and that the indicator moves to HOT.

If operation is not as specified, replace the sender. Then recheck the system.

ENGINE COOLANT TEMPERATURE SENDER

1. Using an ohmmeter, measure the resistance between the terminal 2 and ground.

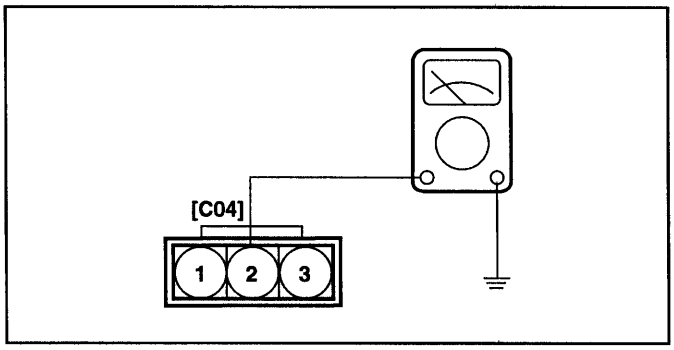

ETJA700B

2. If the resistance value is not as shown in the table, replace the temperature sender.

Temperature (°C)	60	85	110	127.4
Resistance (Ω)	118	49	25	14.6

OIL PRESSURE SWITCH

1. Check that there is continuity between the switch's terminal and ground with the engine stopped.
2. Check that there is no continuity between the terminal and ground with the engine running.
3. If operation is not as specified, replace the switch.

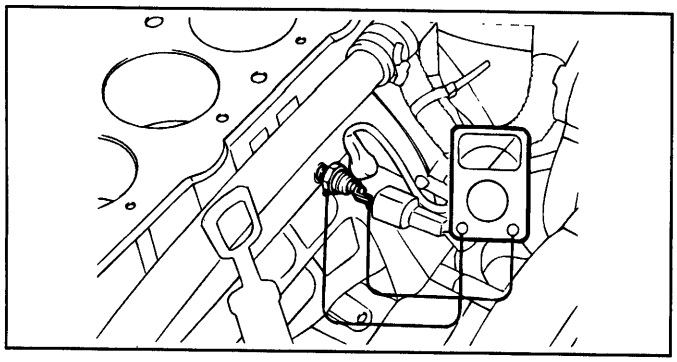

V5BE060K

OIL PRESSURE WARNING LAMP

1. Disconnect the connector from the warning switch and ground the terminal on the wire harness side connector.
2. Turn the ignition switch ON. Check that the warning lamp lights up. If the warning lamp doesn't light, test the bulb or inspect wire harness.

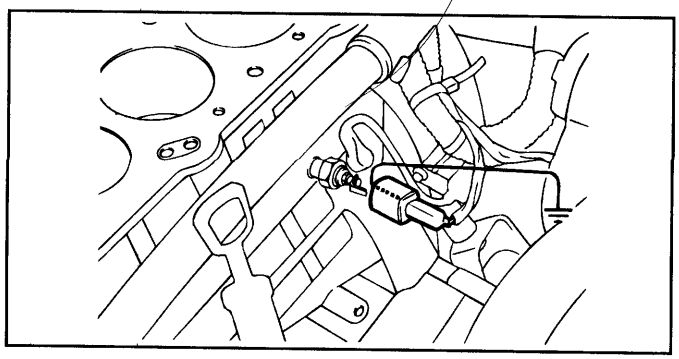

V5BE060L

BRAKE FLUID LEVEL WARNING SWITCH

1. Remove the connector from the switch located at the brake fluid reservoir.
2. Verify that continuity exists between switch terminals 1 and 2 while pressing down the switch (float) with a rod.

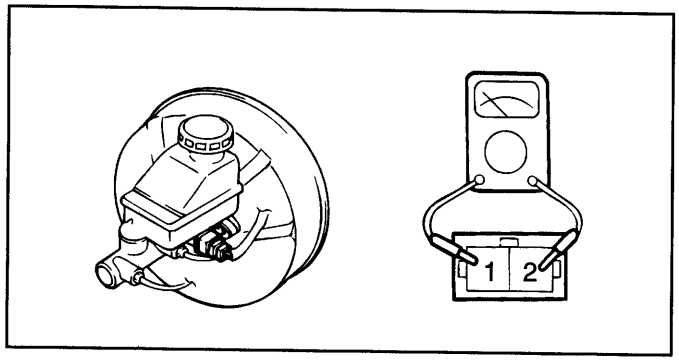

V5BE060M

BRAKE FLUID LEVEL WARNING LAMP

1. Start the engine.
2. Release the parking brake.
3. Remove the connector from the brake fluid level warning switch.
4. Ground the connector at the harness side.
5. Verify that the warning lamp lights.

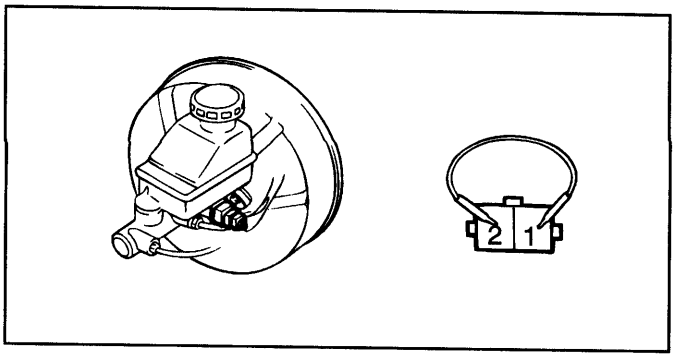

V5BE060N

PARKING BRAKE SWITCH

The parking brake switch is a push type located under the parking brake lever. To adjust, move the switch mount up and down with the parking brake lever released all the way.

1. Check that there is continuity between the terminal and switch body with the switch ON (Lever is pulled).
2. Check that there is no continuity between the terminal and switch body with the switch OFF (Lever is released).

If continuity is not as specified, replace the switch or inspect its ground connection.

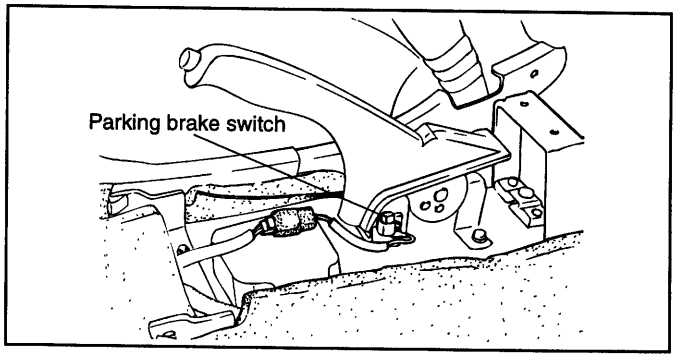

V5BE060O

DOOR SWITCH

Remove the door switch and check for continuity between the terminals.

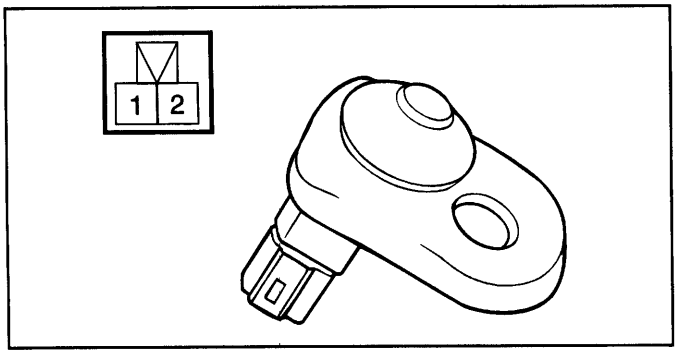

V5BE060P

FRONT DOOR SWITCH

Position \ Lead wire	1	2
Free	○	○
Push		

ETJA740B

REAR DOOR SWITCH

Position \ Lead wire	Ground (Body)	1
Free	○	○
Push		

ETJA740C

SEAT BELT SWITCH

1. Remove the connector from the switch.
2. Check for continuity between terminals.

Seat belt condition	Continuity
Fastened	Non-conductive (∞Ω)
Not fastened	Conductive(0Ω)

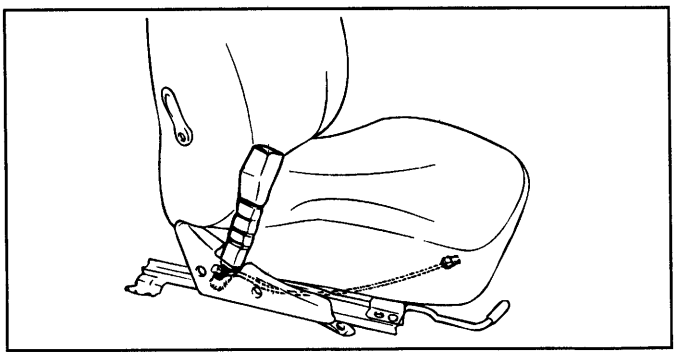

V5BE060Q

SEAT BELT WARNING LAMP

With the ignition switch turned ON, verify that the lamp glows.

Seat belt condition	Warning lamp
Fastened	OFF
Not fastened	ON

POWER DOOR LOCKS

POWER DOOR LOCK ACTUATORS

INSPECTION ETJA1050

1. Disconnect the actuator connector from the wiring harness.
2. Apply battery voltage (12V) to each terminal as shown in the table and verify that the actuator operates correctly.

[D06]

Position \ Terminal	4	6
Unlock	⊕	⊖
Lock	⊖	⊕

ETJA105A

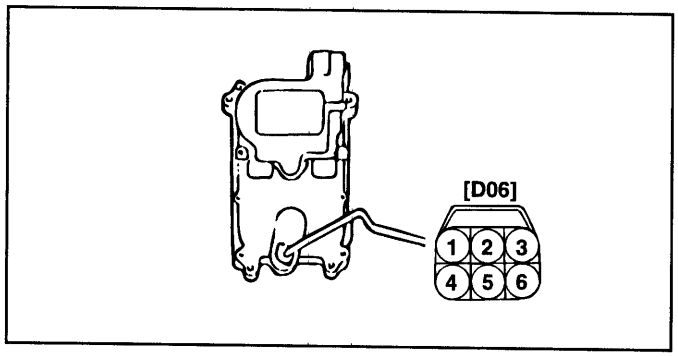

ETJA055R

POWER DOOR MIRRORS

POWER DOOR MIRROR SWITCH

INSPECTION ETJA1100

1. Remove the power door mirror switch from the door trim panel.
2. Check for continuity between the terminals in each switch position according to the table.

   If continuity is not as specified, replace the power door mirror switch.

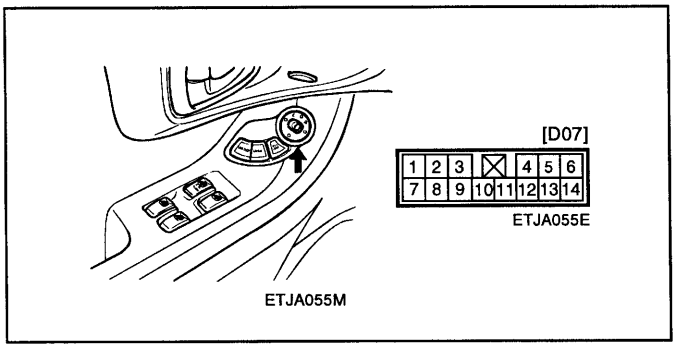

ETJA110A

MIRROR SWITCH

[D07]

Class	Terminal / Direction	2	5	9	10	11	12	13
LEFT HAND	UP	○	○	○	○	○		
	DOWN	○		○	○			
	OFF		○	○	○	○		
	LEFT	○	○			○		
	RIGHT	○		○	○	○		
RIGHT HAND	UP	○	○			○	○	○
	DOWN	○	○			○	○	○
	OFF		○			○	○	○
	LEFT	○	○			○	○	
	RIGHT	○	○			○	○	○

ETJA110B

DOOR LOCK SWITCH

[D07]

Position / Terminal	2	3	4
LOCK	○		○
OFF			
UNLOCK	○	○	

ETJA110C

WINDOW LOCK SWITCH

[D07]

Position / Terminal	6	14
UNLOCK	○	○
LOCK		

ETJA110D

POWER DOOR MIRROR ACTUATOR

INSPECTION ETJA1150

1. Disconnect the power door mirror connector from the harness.
2. Apply battery voltage to each terminal as shown in the table and verify that the mirror operates properly.

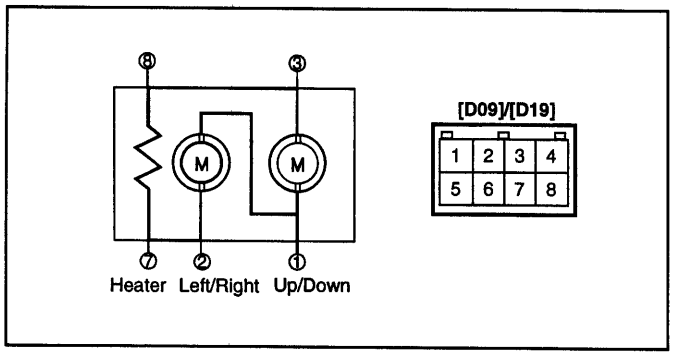

ETJA115A

[D09(LH), D19(RH)]

Terminal / Position	1	2	3
UP	⊕	M	⊖
DOWN	⊖	M	⊕
LEFT		⊕	M ⊖
RIGHT		⊖	M ⊕

ETJA115B

POWER WINDOWS

POWER WINDOW MOTOR

INSPECTION ETJA1200

Connect the motor terminals directly to battery voltage (12V) and check that the motor operates smoothly. Next, reverse the polarity and check that the motor operates smoothly in the reverse direction. If the operation is abnormal, replace the motor.

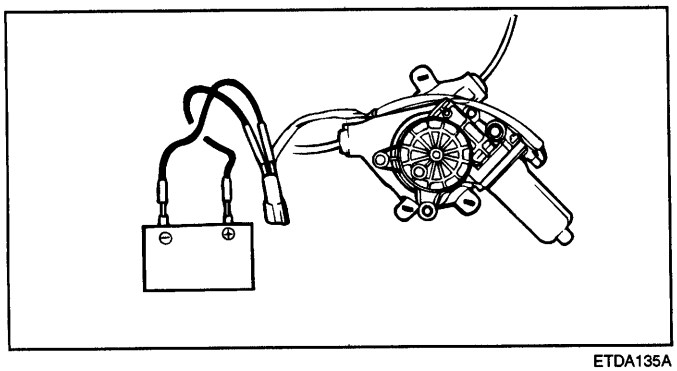

ETDA135A

POWER WINDOW SWITCH

INSPECTION ETJA1250

1. Remove the switch from the door trim panel.
2. Check for continuity between the terminals. If continuity is not as specified in the table, replace the power window switch.

POWER WINDOW MAIN SWITCH

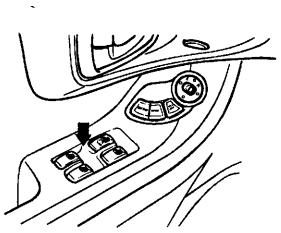

ETJA055M

[D04]

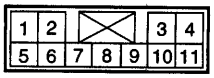

ETJA055D

ETJA125C

[D04]

Terminal / Position	FRONT LEFT				FRONT RIGHT				REAR LEFT				REAR RIGHT			
	3	4	9	10	1	8	9	10	7	9	10	11	5	6	9	10
UP	○	○	○	○	○		○	○	○	○		○	○		○	○
OFF	○	○	○		○	○	○		○	○		○	○	○	○	
DOWN	○	○	○	○	○	○		○	○		○	○	○		○	○

ETJA125A

POWER WINDOW SUB SWITCH

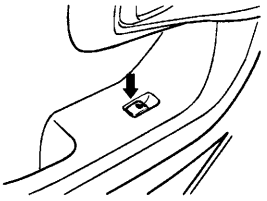

ETJA055P

[D14]

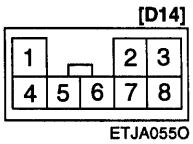

ETJA055O

ETJA125D

[D14]

Terminal / Position	1	3	4	6	8
UP	○—○		○		○
OFF	○—○		○—○		
DOWN	○				○
			○—○		

ETJA125B

REAR WINDOW DEFOGGER

REAR WINDOW DEFOGGER PRINTED HEATER

INSPECTION ETA91650

CAUTION

Wrap tin foil around the end of the voltmeter test lead to prevent damaging the heater line. Apply finger pressure on the tin foil, moving the tin foil along the grid line to check for open circuits.

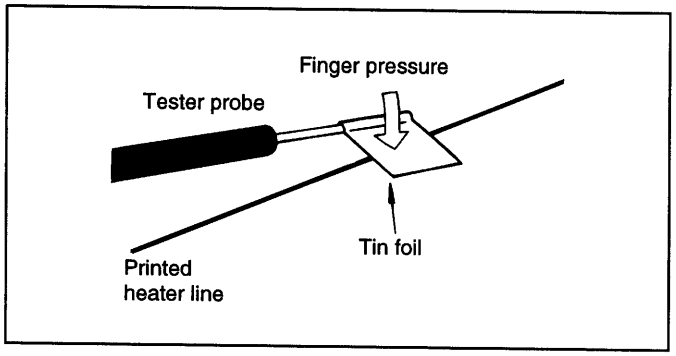

ETA9165A

1. Turn on the defogger switch and use a voltmeter to measure the voltage of each heater line at the glass center point. If a voltage of approximately 6V is indicated by the voltmeter, the heater line of the rear window is considered satisfactory.

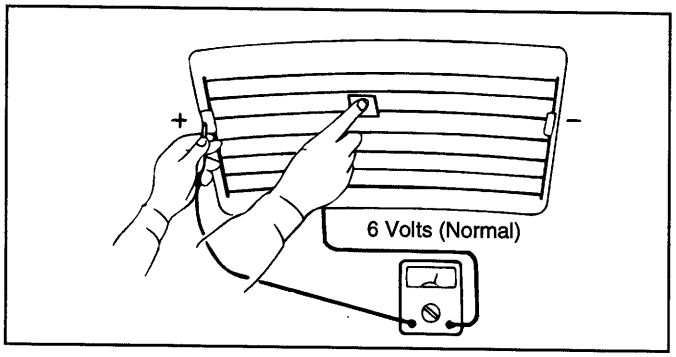

ETA9165B

2. If a heater line is burned out between the center point and (+) terminal, the voltmeter will indicate 12V.

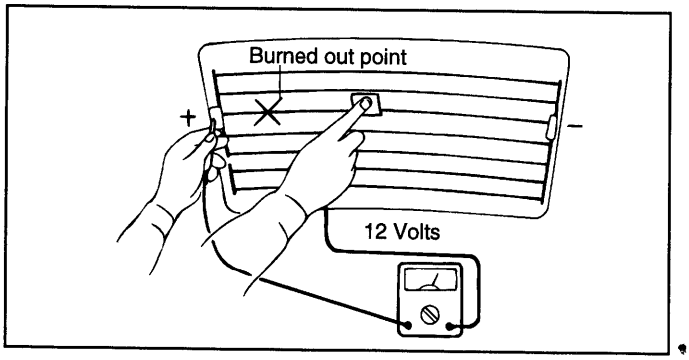

ETA9165C

3. If a heater line is burned out between the center point and (-) terminal, the voltmeter will indicate 0V.

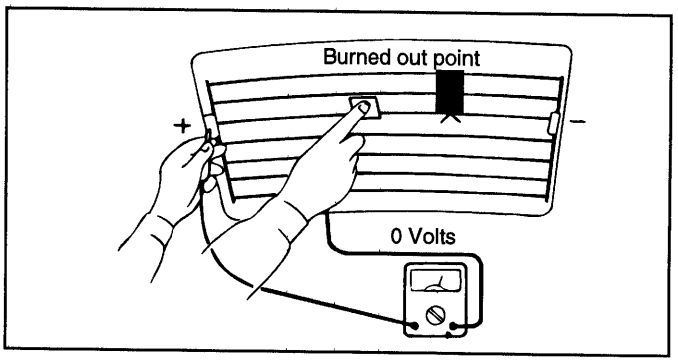

ETA9165D

4. To check for open circuits, slowly move the test lead in the direction that the open circuit seems to exist. Try to find a point where a voltage is generated or changes to 0V. The point where the voltage has changed is the open-circuit point.

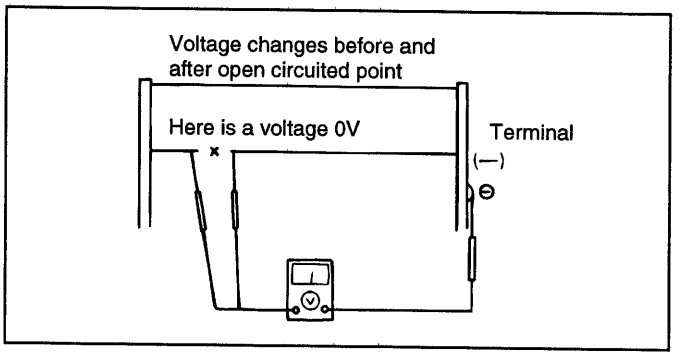

ETA9165E

5. Use an ohmmeter to measure the resistance of each heater line between a terminal and the center of a grid line, and between the same terminal and the center of one adjacent heater line. The section with a broken heater line will have a resistance twice as that in other sections. In the affected section, move the test lead to a position where the resistance sharply changes.

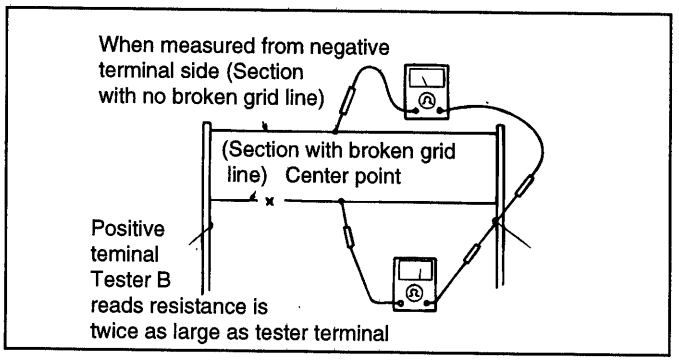

ETA9165F

REPAIR OF BROKEN HEATER LINE

Prepare the following items:

1. Conductive paint.
2. Paint thinner.
3. Masking tape.
4. Silicone remover.
5. Thin brush.

Wipe the glass adjacent to the broken heater line, clean with silicone remover and attach the masking tape as shown. Shake the conductive paint container well, and apply three coats with a brush at intervals of about 15 minutes apart. Remove the tape and allow sufficient time for drying before applying power. For a better finish, scrape away excess deposits with a knife after the paint has completely dried. (allow 24 hours).

CAUTION

After repairing, clean the glass with a soft dry cloth or wipe along the grid line with a slightly moistened cloth.

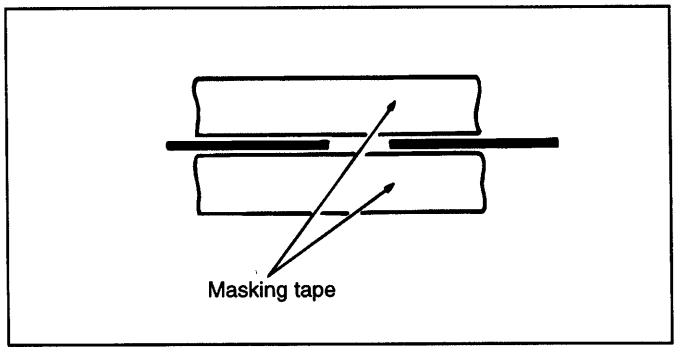

ETA9165G

REAR WINDOW DEFOGGER SWITCH

INSPECTION ETJA1300

1. Disconnect the negative(-) battery terminal.
2. Remove the center facia panel(Refer to page BD-26).
3. Disconnect the connector from the rear window defogger switch.

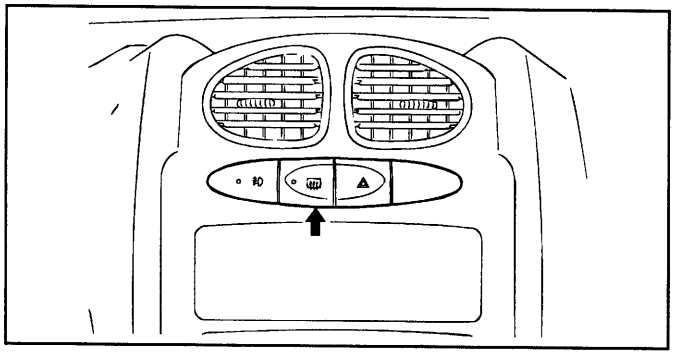

ETJA050C

4. Operate the switch and check for continuity between the terminals using an ohmmeter.

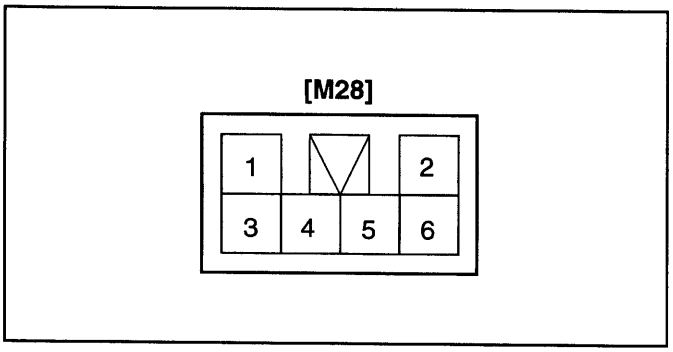

ETJA050B

[D28]

Terminal / Position	1	2	3	4	5
ON	○		○	○	
OFF	○			○	○

ETJA130A

WINDSHIELD WIPER/WASHER

COMPONENTS ETJA1350

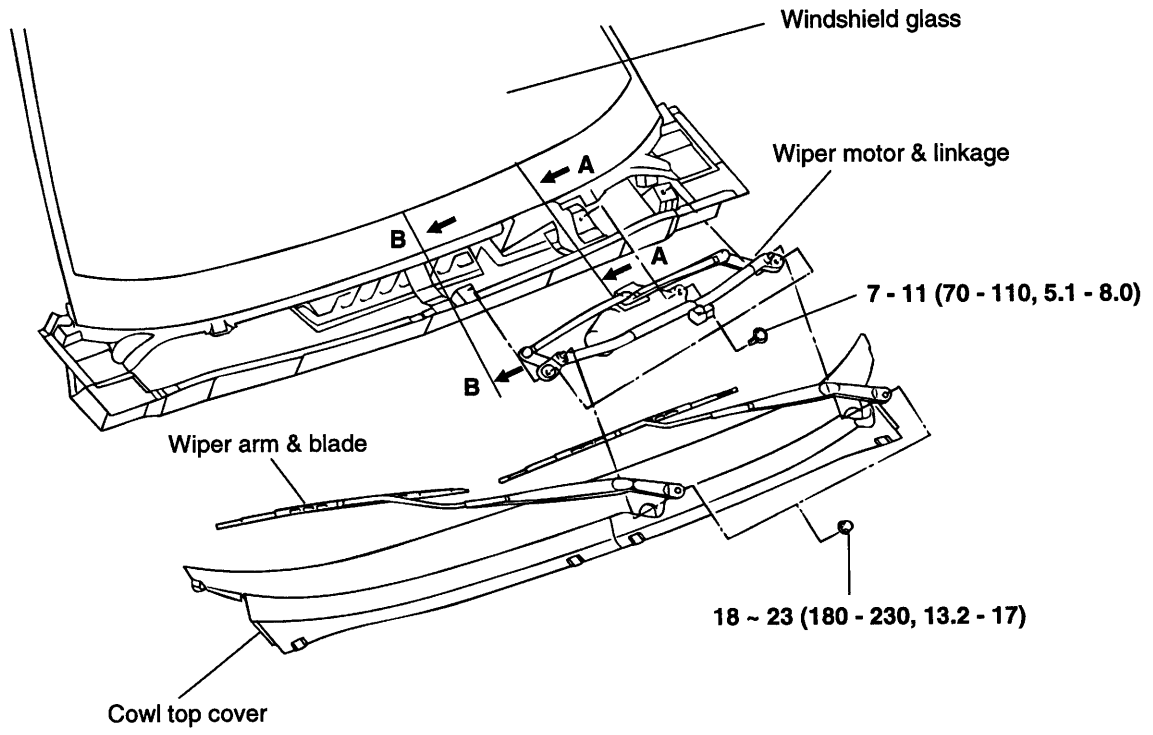

ETJA060A

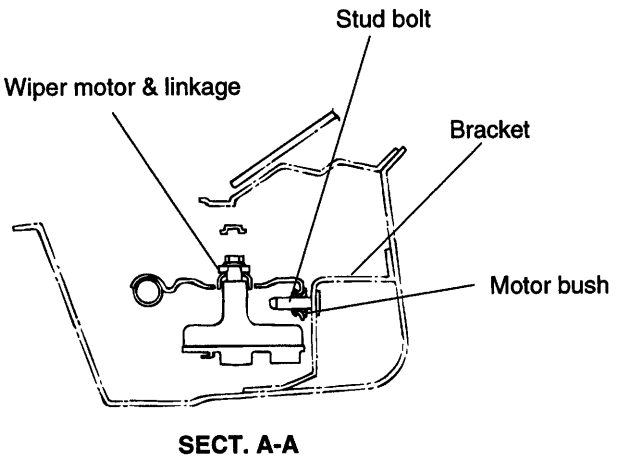

SECT. A-A

ETJA060B

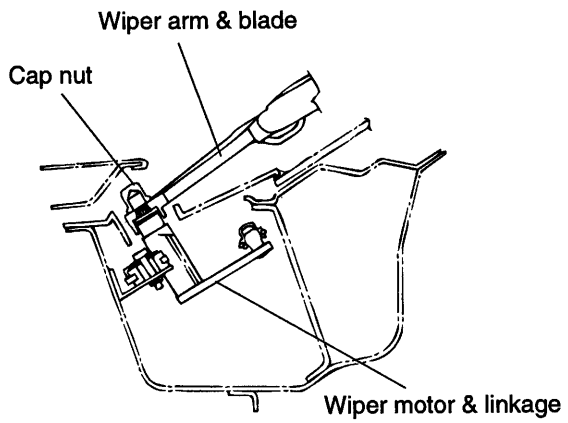

SECT. B-B

ETJA060C

TORQUE : N·m (kg·cm, lb·ft)

ETJA135A

REMOVAL ETJA1400

1. Remove the windshield wiper arm and blade.

NOTE

Care must be taken not to scratch the engine hood.

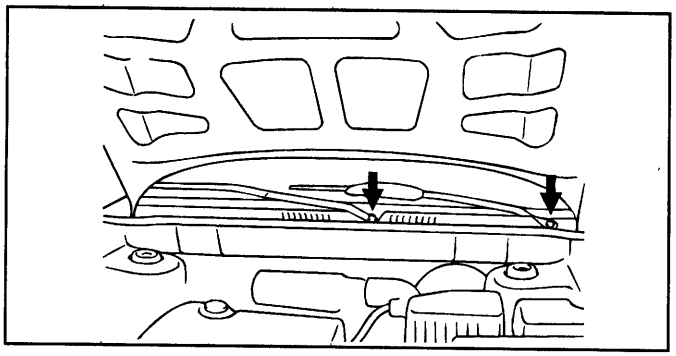

ETJA060F

2. Remove the weather strip and the cowl top cover.

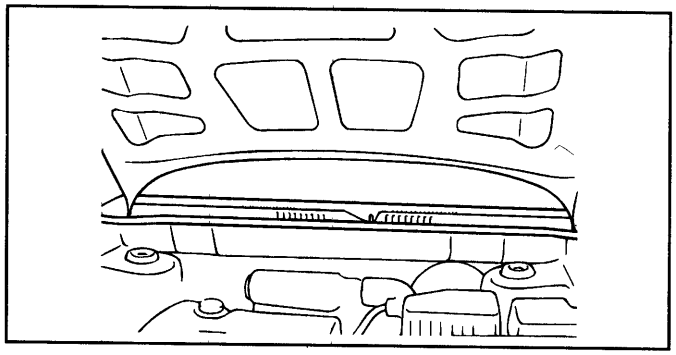

ETJA060G

3. Disconnect the windshield wiper motor connector and remove the windshield wiper motor and the link.

Tightening torque :

7-11Nm (70-110kg.cm, 5.1-8.0lb.ft)

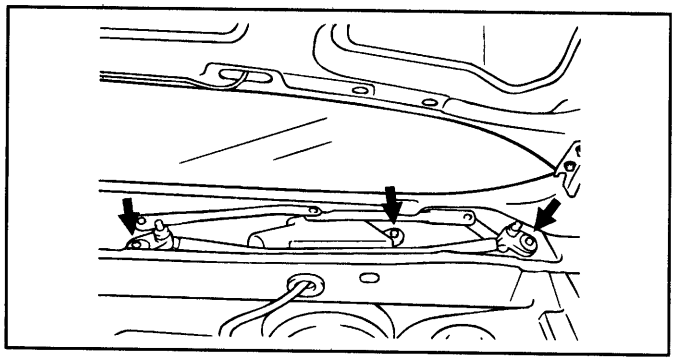

ETJA060H

INSTALLATION ETJA1450

1. Install the wiper arm to the specified position.

Specified position	A	B
Distance (mm)	40	30

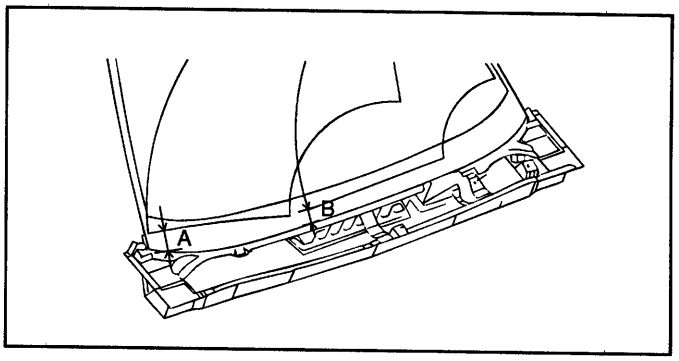

ETJA060I

2. Set the washer nozzle on the specified spray position.

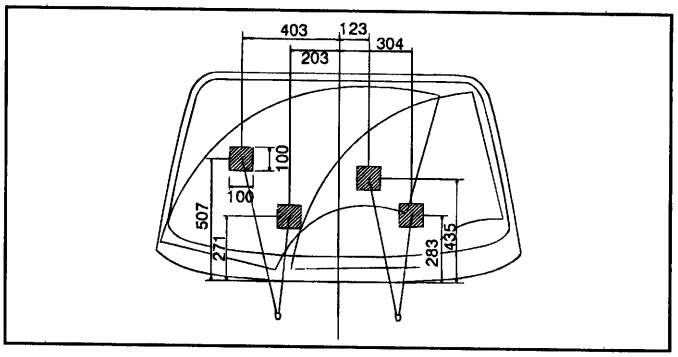

ETJA060E

INSPECTION ETJA1500

WINDSHIELD WIPER/WASHER SWITCH

Check the switch for continuity between the terminals.

If continuity is not as specified, replace the wiper and washer switch.

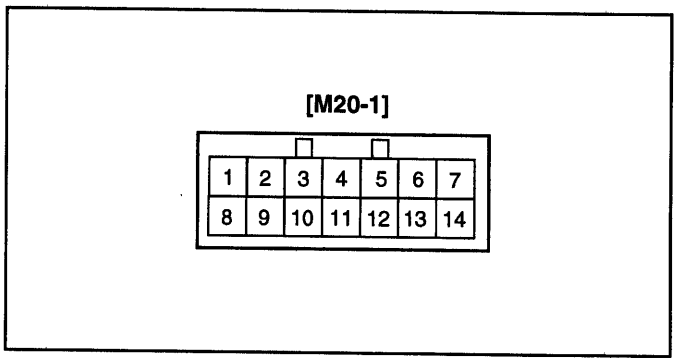

ETJA005G

WIPER AND INTERMITTENT VOLUME SWITCH [M20-1]

Position \ Terminal	1	2	3	4	5	6	13	14
MIST				○—○				
OFF		○—○						
INT		○—○			○—○		○∿○	
LOW		○—	—	—	—○			
HI	○—	—	—	—	—○			

KTDA040D

WASHER SWITCH [M20-1]

Position \ Terminal	5	7
OFF		
ON	○—	—○

ETJA150A

FRONT WIPER MOTOR ETJA1550

SPEED OPERATION CHECK

1. Remove the connector from the wiper motor.
2. Attach the positive (+) lead from the battery to terminal 5 and the negative (-) lead to terminal 2.
3. Check that the motor operates at low speed.
4. Connect the positive (+) lead from the battery to terminal 5 and the negative (-) lead to terminal 3.
5. Check that the motor operates at high speed.

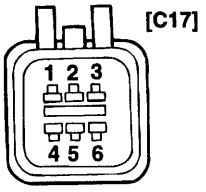

1. Parking
2. Low
3. High
4. Blank
5. Ignition "ON"
6. Ground

ETJA155A

AUTOMATIC STOP OPERATION CHECK

1. Operate the motor at low speed using the stalk control.
2. Stop the motor operation anywhere except at the off position by disconnecting terminal 1.
3. Connect terminals 1 and 2.
4. Connect the positive (+) lead from the battery to terminal 5 and the negative (-) lead to terminal 6.
5. Check that the motor stops running at the off position.

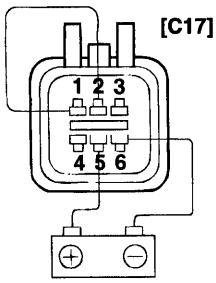

ETJA060D

WASHER MOTOR ETJA1600

1. With the washer motor connected to the reservoir tank, fill the reservoir tank with water.
2. Connect positive (+) and negative (-) battery cables to terminals 2 and 3 respectively to see that the washer motor runs and water sprays from the front nozzles.
3. Connect battery positive (+) and negative (-) cables to terminals 2 and 1 respectively to see that the washer motor runs and water sprays from the rear nozzles.

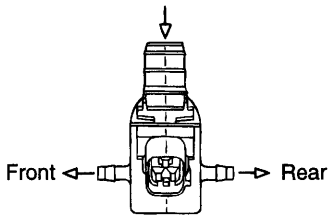

ETJA065E

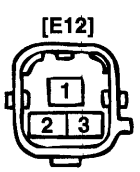

ETJA065F

1. Rear washer (-)
2. Battery (+)
3. Front washer (-)

ETJA160A

REAR WIPER/WASHER

COMPONENTS ETJA1650

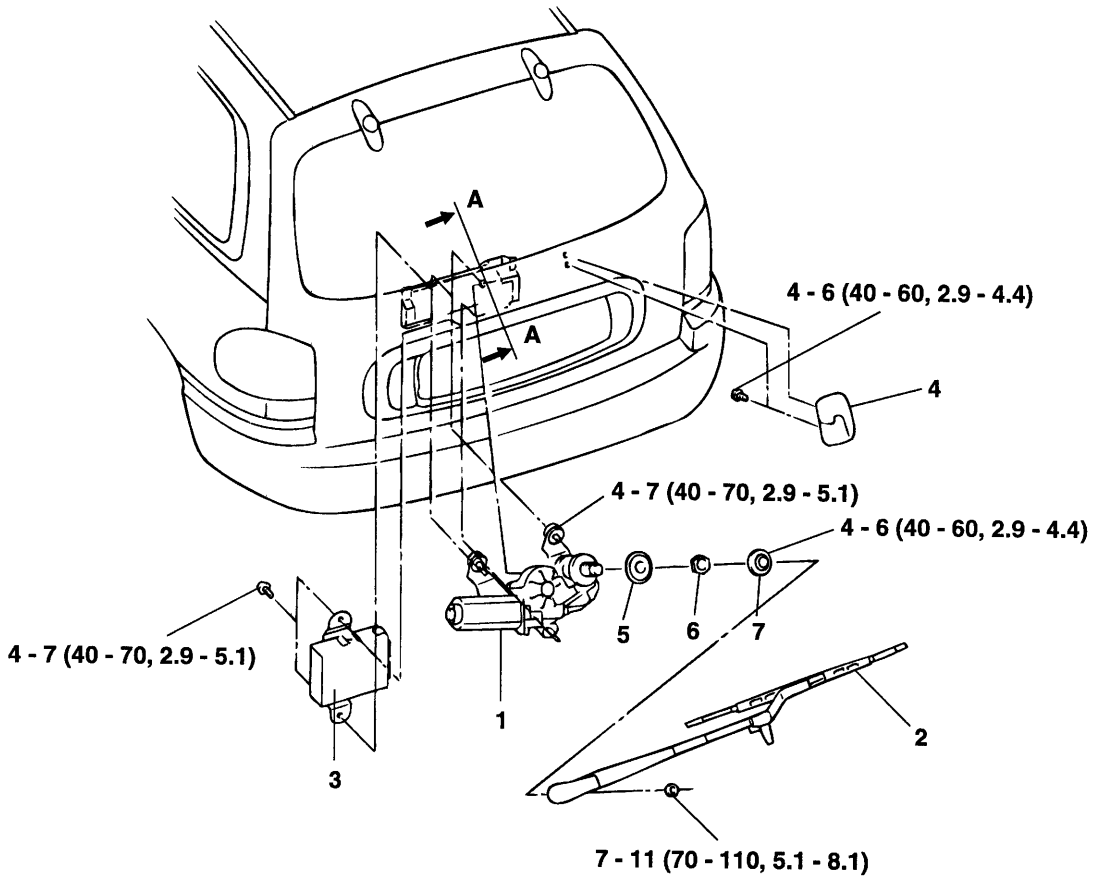

ETJA065A

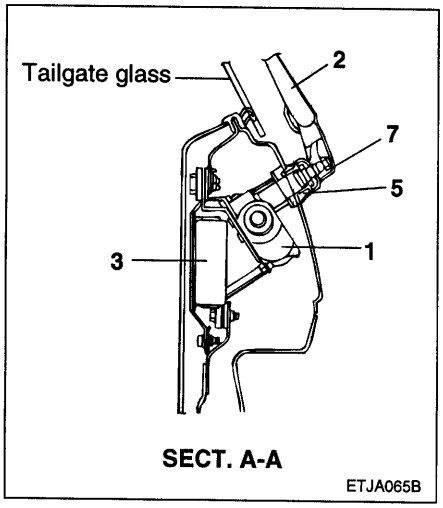

SECT. A-A

ETJA065B

1. Rear wiper motor
2. Rear wiper arm&blade
3. Rear wiper control unit
4. Holder
5. Cap and pad
6. Nut
7. Cover

TORQUE : N·m (kg·cm, lb·ft)

ETJA165A

REMOVAL ETJA1700

1. Remove the center high mounted stop lamp.

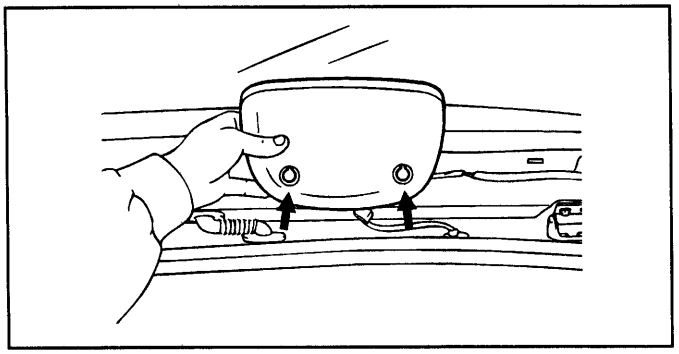

ESJA040N

2. Pry the upper trim from the tailgate frame.

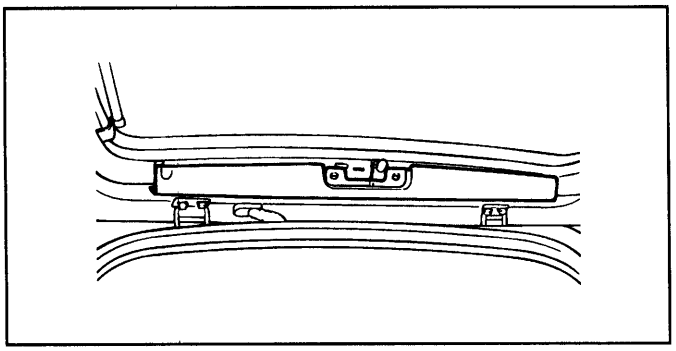

ESJA040A

3. Pry the side trim from the tailgate frame.

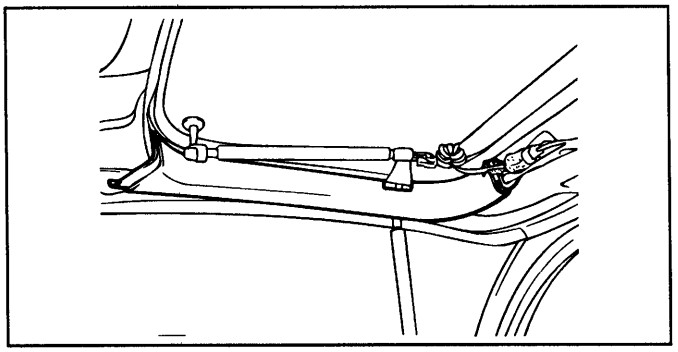

ESJA040B

4. Remove the self-tapping screws and the trim grip and then remove the tailgate trim panel.

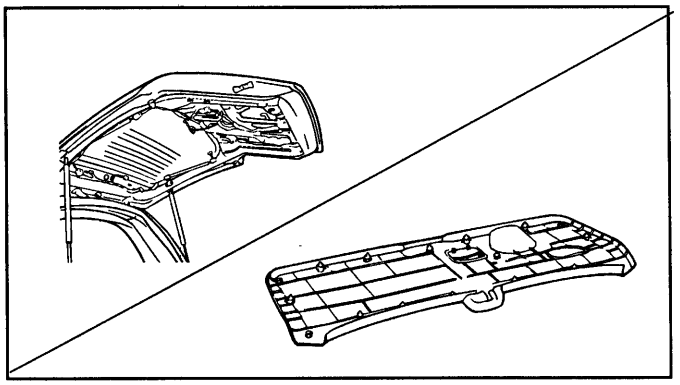

ETJA170A

5. Remove the rear wiper.

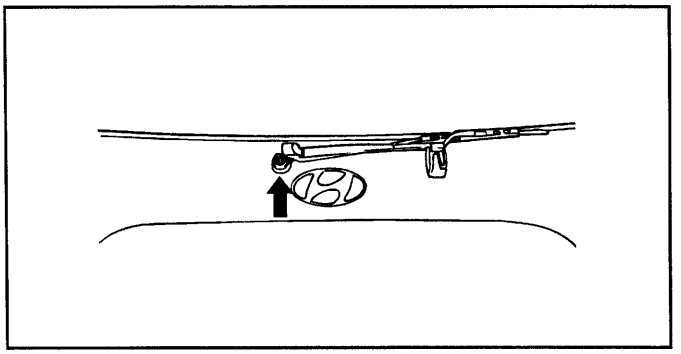

ESJA040H

6. Remove the rear wiper control unit and the rear wiper motor.

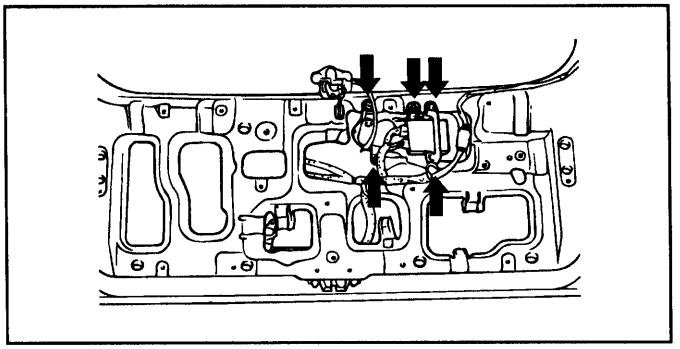

ESJA040K

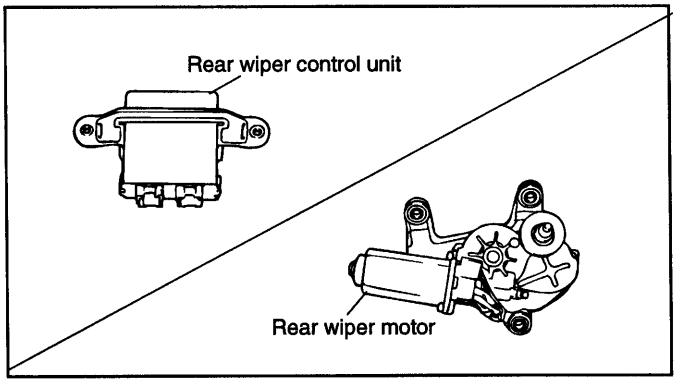

ETJA170B

INSTALLATION ETJA1750

1. After replacing all the removed components, install the rear wiper arm to the specified stop position.

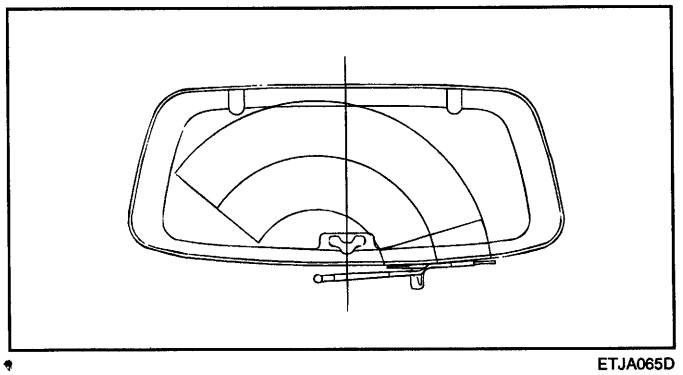

ETJA065D

2. Set the washer nozzle on the specified spray position.

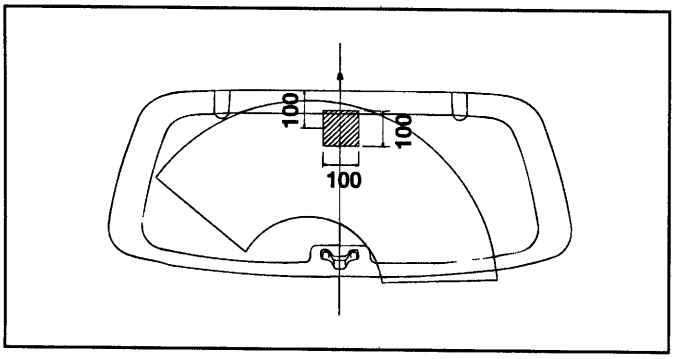

ETJA065C

INSPECTION ETJA1800

REAR WIPER/WASHER SWITCH

1. Disconnect the connector from the multifunction switch.
2. Check for continuity between the terminals.

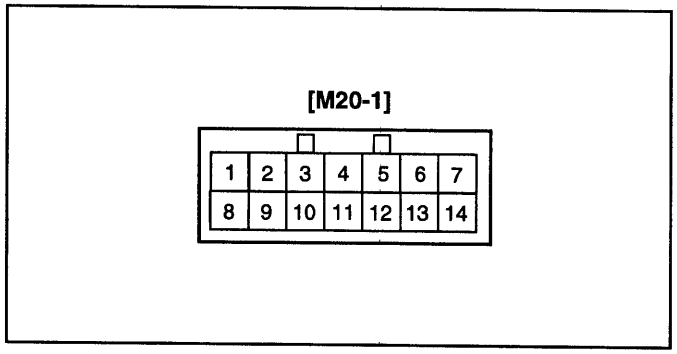

ETJA005G

[M20-1]

Terminal / Position	9	10	11	12
WASHER	○			○
OFF				
INT	○	○		
LOW	○		○	
WASHER	○			○

ETJA180A

REAR WIPER MOTOR ETJA1850

1. Remove the connector from the rear wiper motor.
2. Connect battery positive (+) and negative (-) cables to terminals 2 and 1 respectively.
3. Check that the motor operates normally. Replace the motor if it operates abnormally.

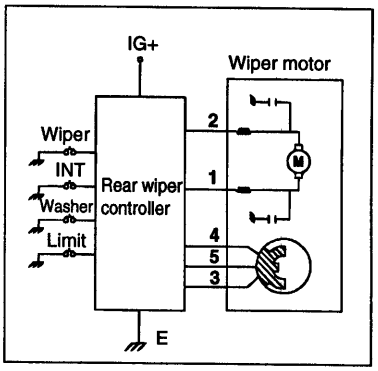

ETJA065H

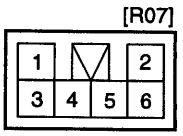

1. Motor (-)
2. Motor (+)
3. Common
4. Parking
5. Winding position
6. Blank

ETJA185A

SEAT WARMER

SEAT WARMER SYSTEM ETA92050

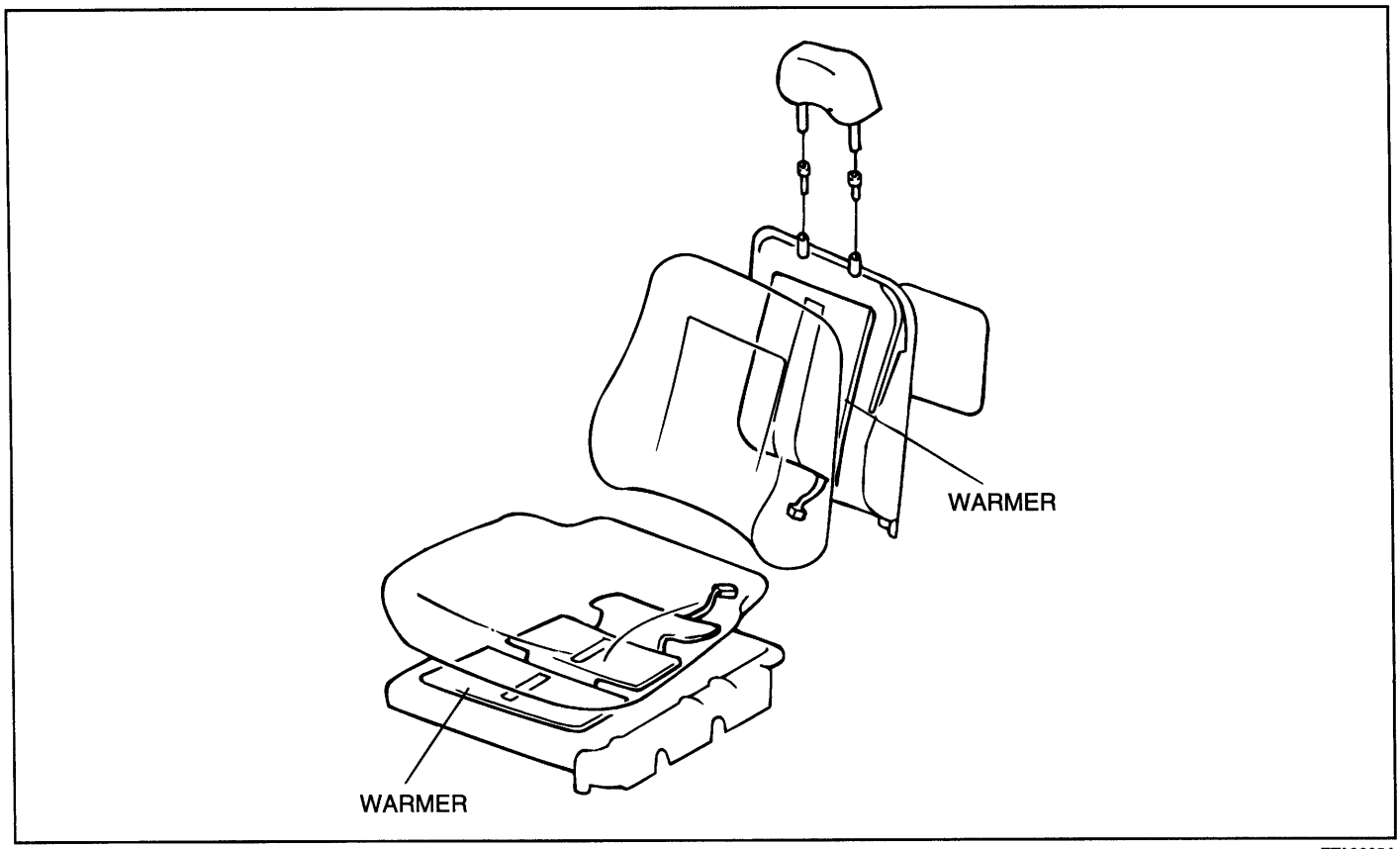

ETA9205A

SEAT WARMER SWITCH

INSPECTION ETJA7500

Inspect the switch continuity between terminals as below.

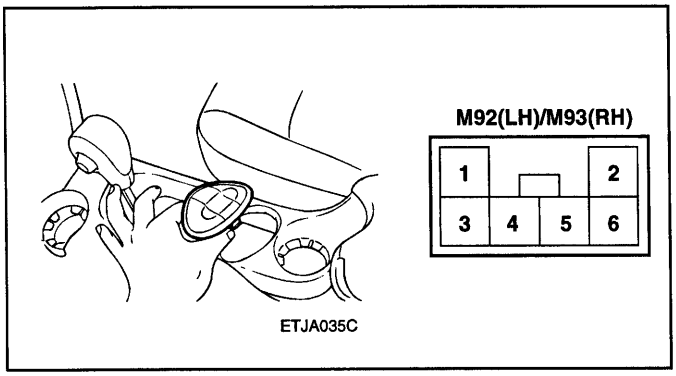

ETJA750A

M92(LH)/M93(RH)

Position \ Terminal	1	2	3	4	5
ON (PUSH)	●		●	●	
OFF (FREE)	●		●	●	

ETJA750B

If the continuity is not as specified, replace the switch.

SUN ROOF

SUN ROOF SWITCH

INSPECTION ETJA7550

1. Using an ohmmeter, check for continuity between the terminals.
2. If the continuity is not as specified, replace the switch.

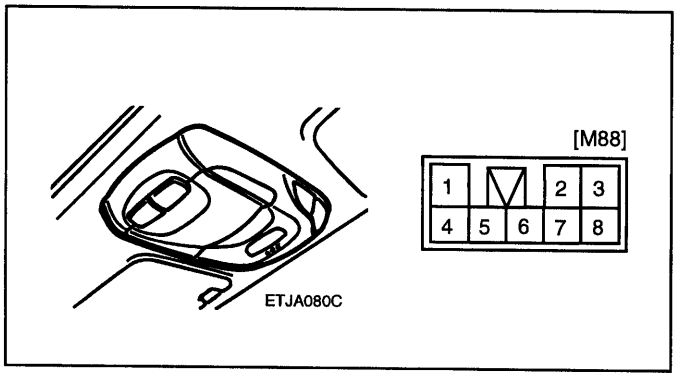

ETJA755A

[M88]

Position	Terminal	1	2	3	4	5	6	7	8
Slide switch	Open		○	○				○	
	Off			○				○	
	Close	○	○	○				○	
Tilt switch	Up		○			○			
	Off								
	Down		○				○		

ETJA755B

SUN ROOF RELAY

INSPECTION ETJA7600

Check for continuity between the terminals.

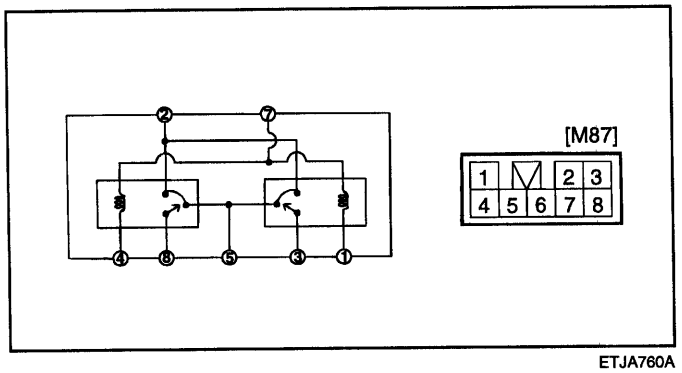

ETJA760A

[M87]

Terminal / Position	1	2	3	4	5	6	7	8
Battery voltage not supplied (coils not energized)	○		○	○	○		○	○
Battery voltage supplied (coils energized)	⊖	○	○	⊖			⊕	○

⊕- - -⊖ **Indicates battery connection**

ETJA760B

SUN ROOF MOTOR

INSPECTION ETJA7650

1. Remove the overhead console.
2. Disconnect the motor connector from sun roof harness.
3. After applying DC 12V to the terminal 5, apply the terminal 4 to the ground.
4. Check that the motor turns in the direction of the sunroof when tilted down and is open.
5. Reverse the connections and check that the motor turns in the direction when the sunroof is closed and tilted up.

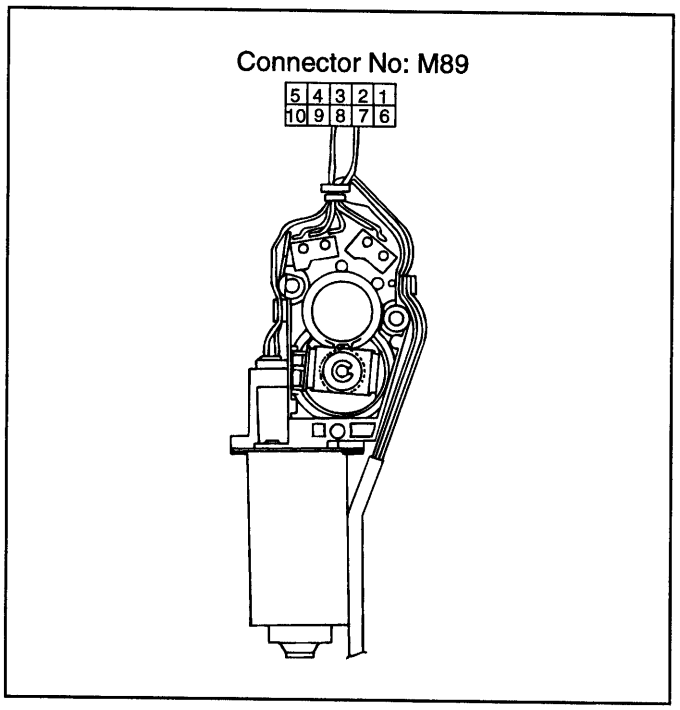

ETAA215B

LIGHTING SYSTEM

REPLACEMENT OF LAMPS ETJA1900

HEAD LAMP/TURN SIGNAL LAMP

1. Disconnect the negative battery terminal.
2. Remove the head lamp mounting bolts and remove the head lamp assembly.

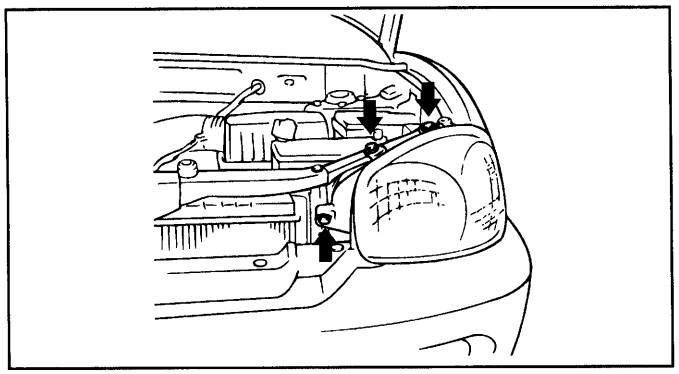

ESJA005B

3. Installation is the reverse of removal.

FRONT FOG LAMP

1. Disconnect the negative battery terminal.
2. Remove the head lamp mounting bolts and remove the head lamp assembly.

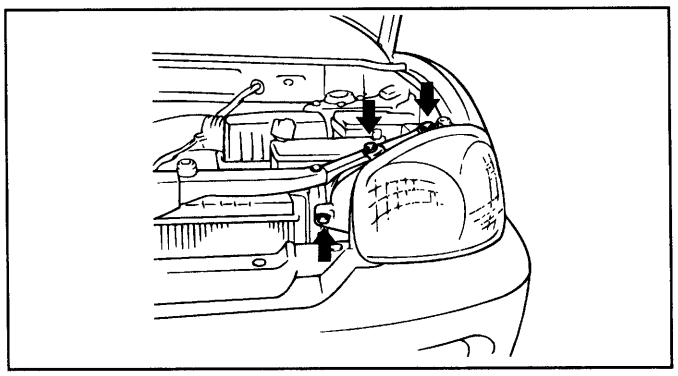

ESJA005B

3. Remove the screws in the front bumper cover.

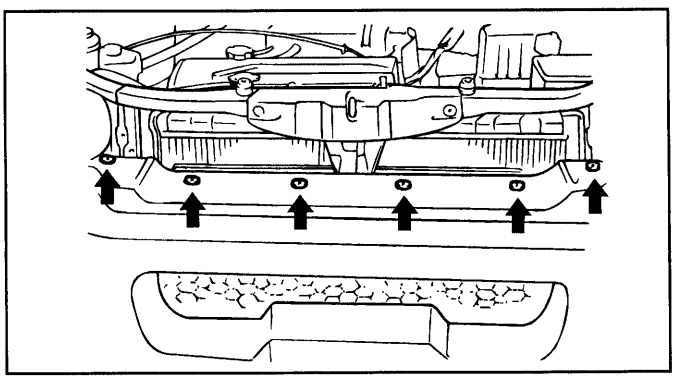

ESJA005C

4. Raise the vehicle then remove the screws holding the front bumper and the front wheel guard.

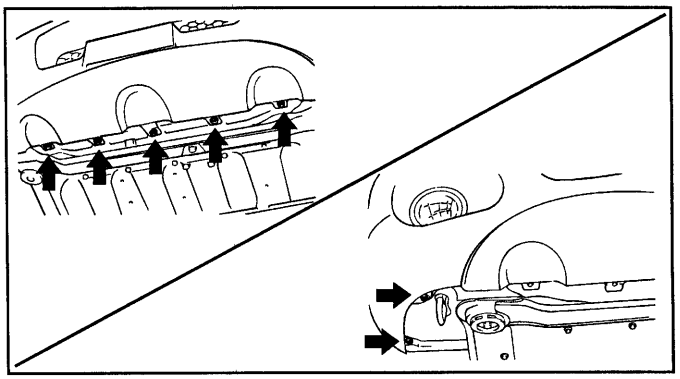

ETJA190A

5. Remove the front fog lamp from the bumper cover.

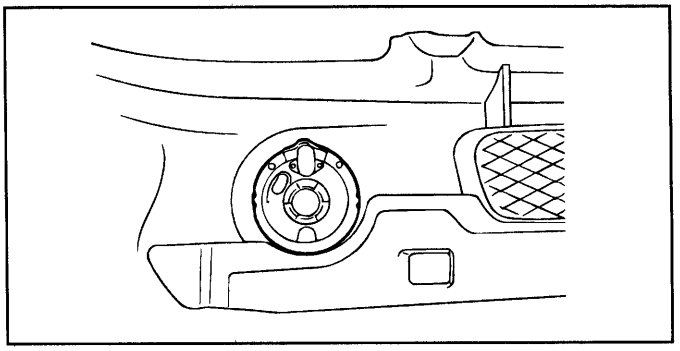

ETJA010H

6. Installation is the reverse of removal.

REAR COMBINATION LAMP

1. Disconnect the negative battery terminal.
2. Open the tailgate and loosen the screws holding the rear combination lamp.
3. Disconnect the connector and remove the lamp assembly.
4. Installation is the reverse of removal.

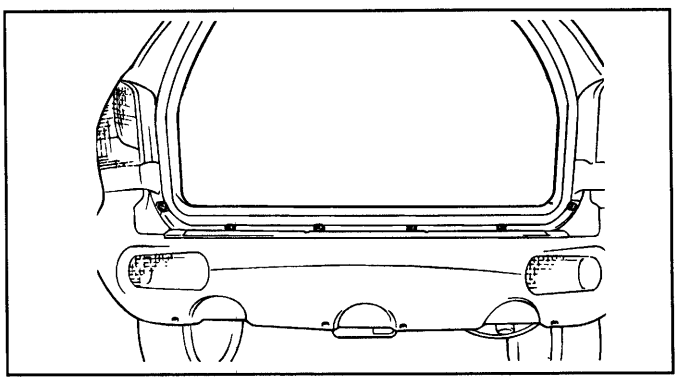

ESJA010C

CENTER HIGH MOUNTED STOP LAMP

1. Disconnect the battery negative terminal.
2. Using a flat-bladed screwdriver detach 2 blanking covers on both sides of the lamp.
3. Remove the two mounting screws.

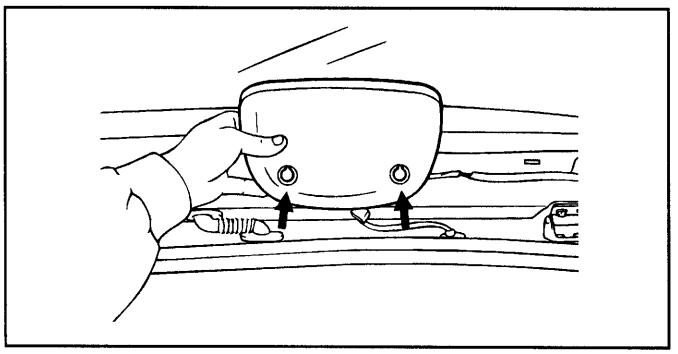

ESJA040N

4. Disconnect the connector and then remove the lamp assembly.

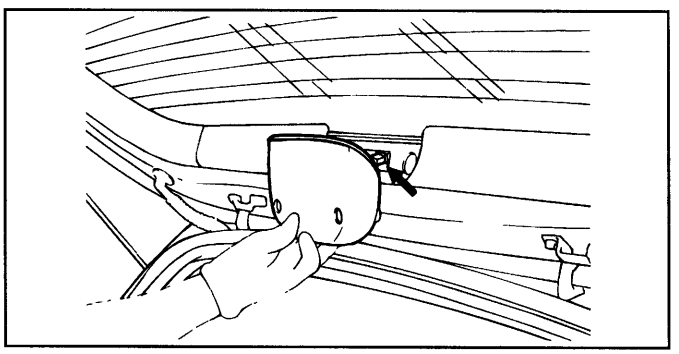

V5BE075I

5. Installation is the reverse of removal.

LICENSE PLATE LAMP

1. Disconnect the battery negative terminal.
2. Remove the mounting bolt, and disconnect the lamp connector.
3. Installation is the reverse of removal.

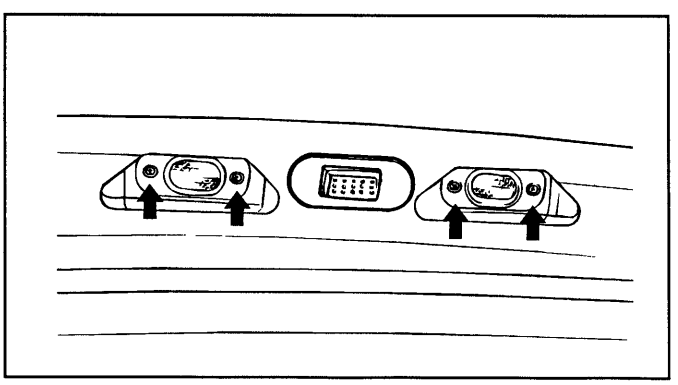

ESJA040E

MAP LAMP

1. Disconnect the battery negative terminal.
2. Using a flat-bladed screwdriver detach the map lamp lens.

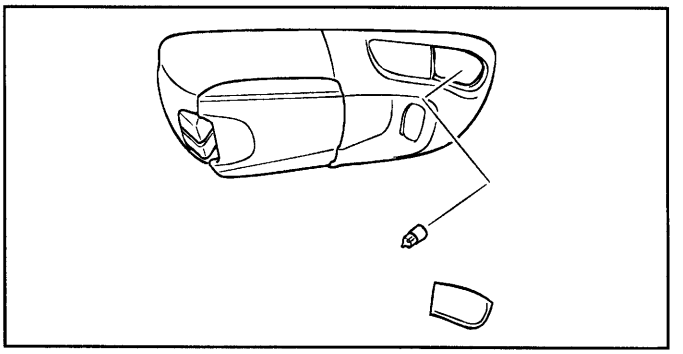

ETJA010L

3. Detach the lamp assembly from the headlining after removing the screws.

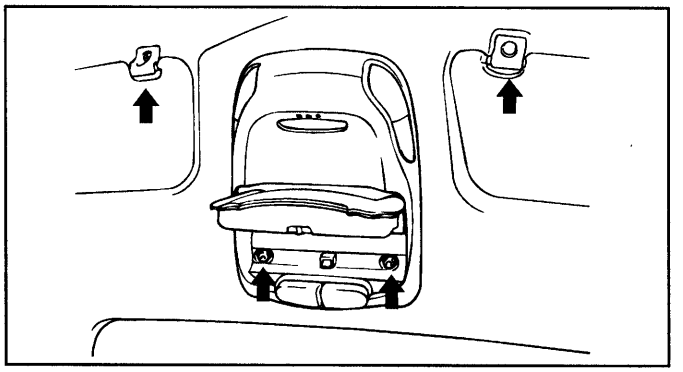

ESJA050M

4. Disconnect the connector from the roof harness.
5. Installation is the reverse of removal.

ROOM LAMP

1. Disconnect the battery negative terminal.
2. Using a flat-bladed screwdriver detach the room lamp lens.

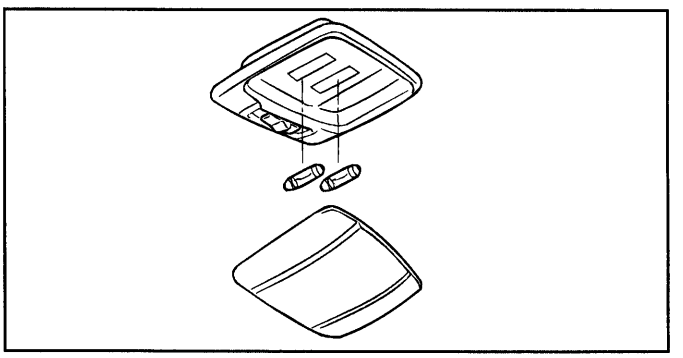

ETJA010K

3. Detach the lamp assembly from the headlining after removing the screws.

4. Disconnect the connector from the roof harness.
5. Installation is the reverse of removal.

LUGGAGE LAMP

1. Using a flat-bladed screwdriver detach the luggage lamp lens.
2. Detach the lamp assembly from the headlining after removing the screws.

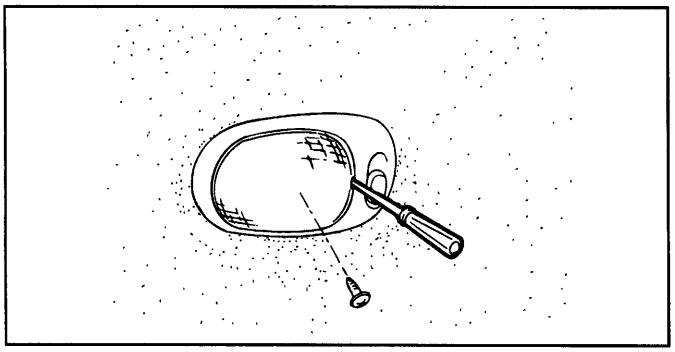

V5BE075P

INSPECTION OF COMPONENTS ETJA1950

HEAD LAMP RELAY

1. Remove the headlamp relay from the relay box in the engine compartment.
2. Check for continuity between terminals on the relay.

Terminal / Position	1	2	3	5
When de-energized			○—○	
When energized	○—○		⊕—⊖	

NOTE:
1. ○—○: Indicates that there is continuity between the terminals.
2. ⊖—⊕: Indicates that power is supplied.

ETHA305A

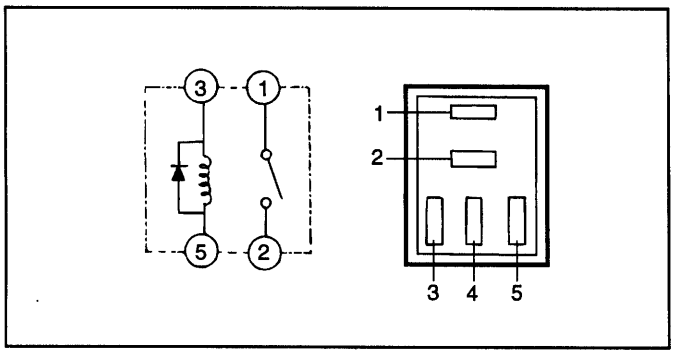

ETDA211B

FLASHER UNIT

1. Remove the flasher unit from the relay box.
2. Connect the positive (+) lead from the battery to terminal 2 and the negative (-) lead to terminal 3.

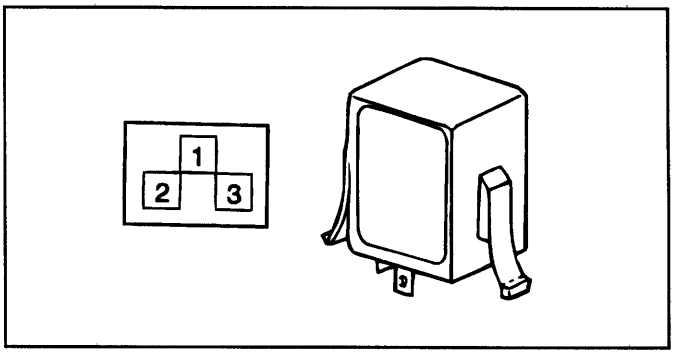

KTDA212A

3. Connect the two turn signal lamps in parallel to terminals 2 and 3. Check that the bulbs turn on and off.

NOTE

The turn signal lamps should flash 60 to 120 times per minute. If one of the front or rear turn signal lamps has an open circuit, the number of flashes will be more than 120 per minute. If operation is not as specified, replace the flasher unit.

HAZARD SWITCH ETJA2050

1. Disconnect the negative (-) battery terminal.
2. Remove the center facia panel(Refer to page BD-26).
3. Disconnect the connector from the hazard lamp switch.

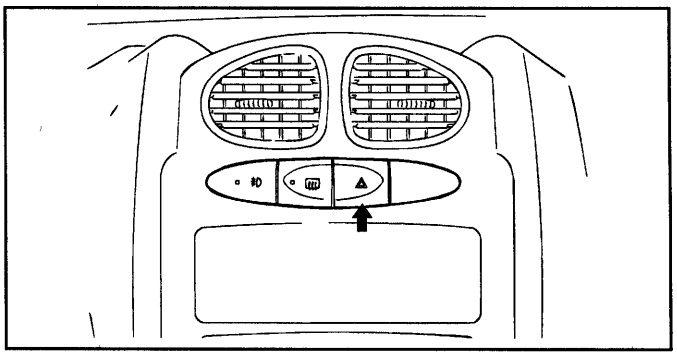

ETJA051C

4. Operate the switch and check for continuity between terminals with an ohmmeter.

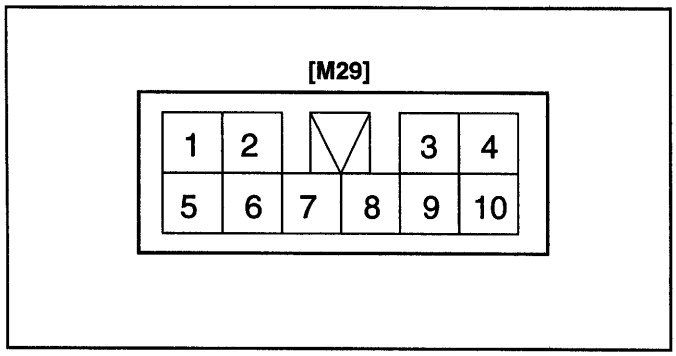

ETJA205B

[M29]

Terminal / Position	1	2	3	5	6	7	8	9	10
OFF									
ON									

ETJA205A

RHEOSTAT ETJA2100

1. Disconnect the negative (-) battery terminal.
2. Remove the crash pad lower panel.
3. Disconnect the connector from the rheostat.

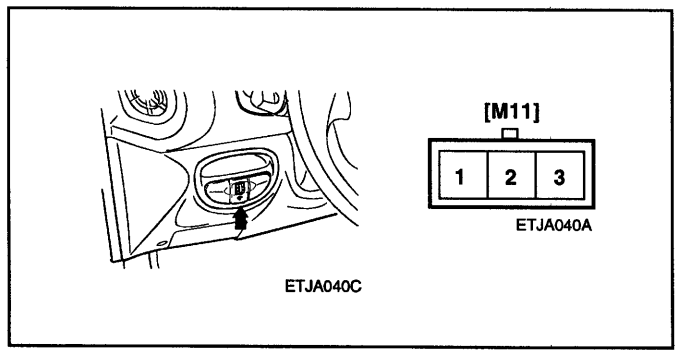

ETJA040C

ETJA040A

ETJA210A

4. Check for intensity. If the light intensity of the lamps changes smoothly without any flickering when the rheostat is turned, it can be assumed that the rheostat is normal.

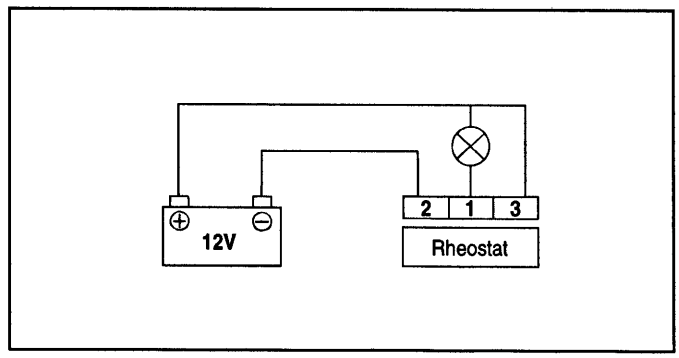

ETJA040B

DAYTIME RUNNING LIGHT (DRL) ETJA7660

OPERATION CHECK

Check that the lights operate according to the following timing chart.

TIMING CHART

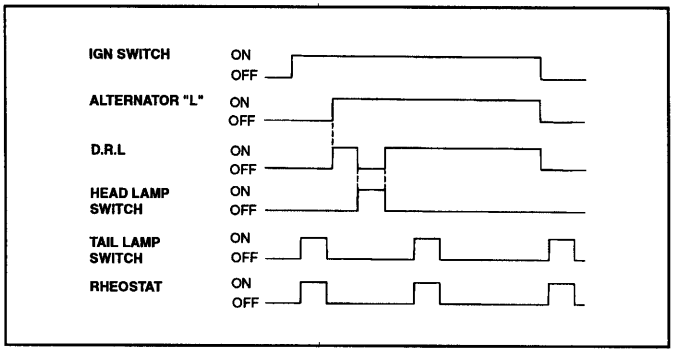

ETKA241A

INSPECT CIRCUITS FOR DAYTIME RUNNING LIGHT SYSTEM

Disconnect the connector from DRL module and inspect the connector on wire harness side as shown.

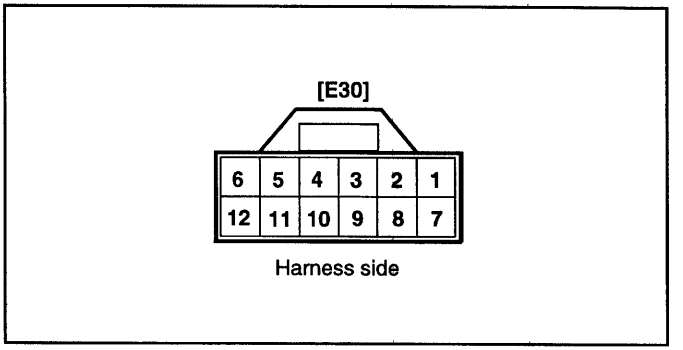

ETJA766A

Check For	Test Connection	Condition		Test Specification
Continuity	9–Ground	Tail lamp switch	OFF	No continuity
			ON	Continuity
	5–Ground	Head lamp switch	OFF	No continuity
			ON	Continuity
	6–Ground	Constant		Continuity
	7–Ground	Dimmer&passing switch	Head light ON	Continuity
			Head light OFF	No continuity
Voltage	7–Ground	Constant		Battery voltage
	5–Ground	Ignition switch	ON	Battery voltage
			ACC or LOCK	No voltage
	11–Ground	Constant		Battery voltage
	3–Ground	Engine	Stop	No voltage
			Running	Battery voltage

If circuit is not as specified, refer to schematic diagram and inspect short or circuits.

FRONT FOG LAMP SWITCH ETJA2200

1. Disconnect the negative (-) battery terminal.
2. Remove the center facia panel(Refer to page BD-26).
3. Disconnect the connector from the front fog lamp switch.

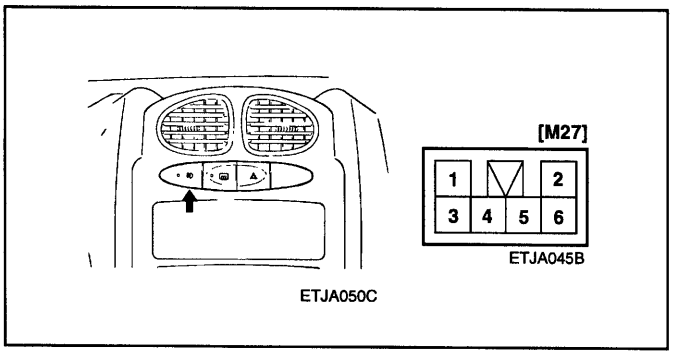

ETJA220A

4. Operate the switch and check for continuity between the terminals with an ohmmeter.

[M27]

Position \ Terminal	1	2	3	4	5
ON	●		●	●	
OFF	●	●		●	●

ETJA220B

REAR FOG LAMP SWITCH ETJA7700

1. Disconnect the negative (-) battery terminal.
2. Remove the center facia panel (Refer to page BD-26).
3. Disconnect the connector from the rear fog lamp switch.

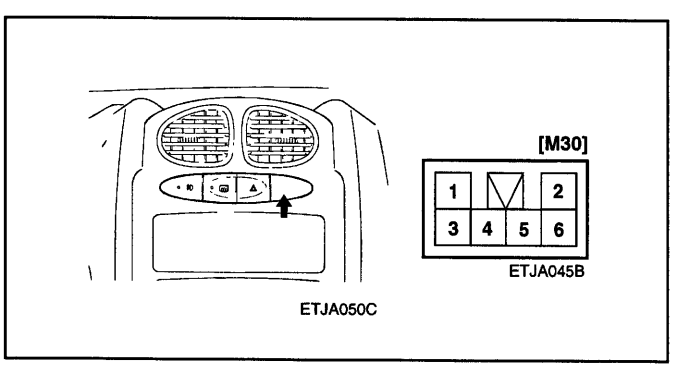

ETJA770A

4. Operate the switch and check for continuity between the terminals with an ohmmeter.

[M30]

Position \ Terminal	1	2	3	4	5
ON	●		●	●	
OFF	●	●		●	●

ETJA770B

MAP LAMP SWITCH ETJA7750

1. Disconnect the negative (-) battery terminal.
2. Remove the overhead console.
3. Disconnect the connector from the map lamp switch and then check for continuity between the terminals.

[VEHICLES WITHOUT SUN ROOF]

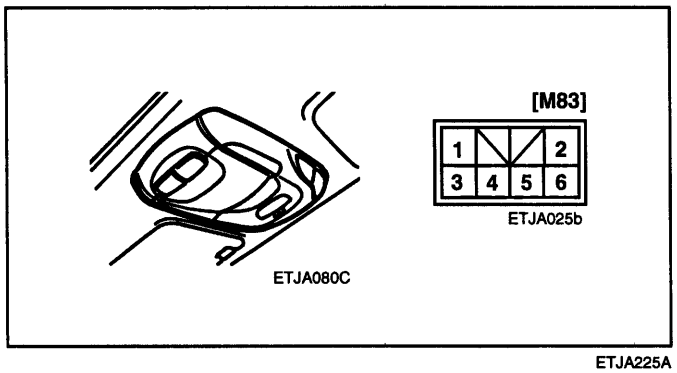

ETJA225A

[M83]

Sort / Position / Terminal	MAP LAMP SWITCH			
	LH		RH	
	ON	OFF	ON	OFF
1	○		○	
2	○		○	

ETJA225B

DIGITAL CLOCK

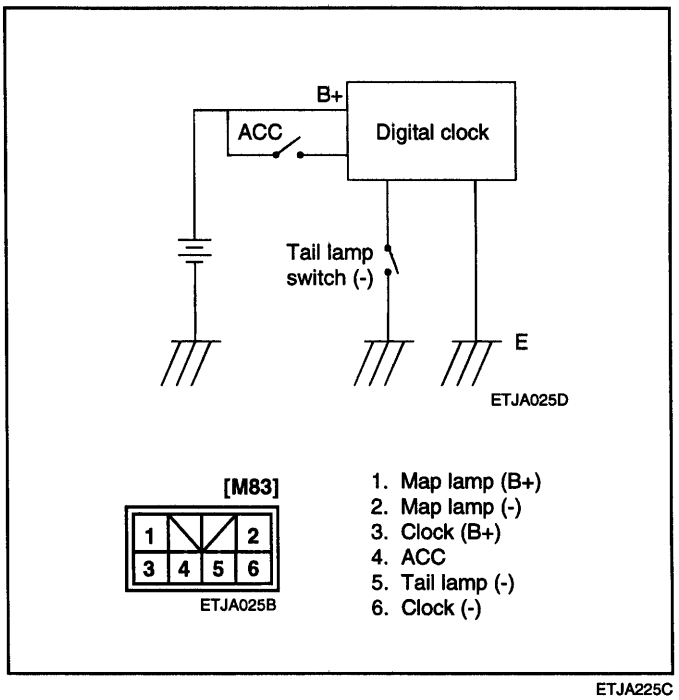

ETJA225C

[VEHICLES WITH SUN ROOF]

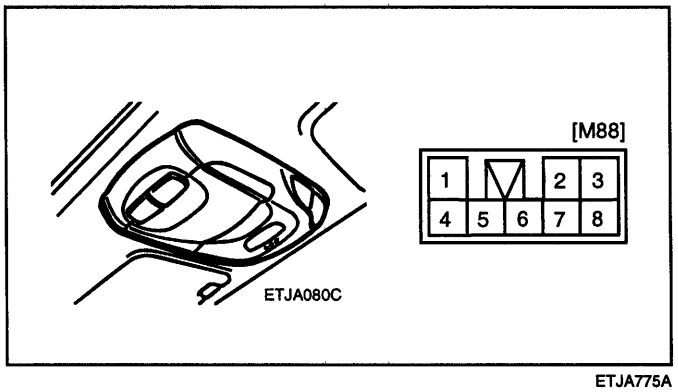

ETJA775A

[M88]

Sort / Position / Terminal	MAP LAMP SWITCH			
	LH		RH	
	ON	OFF	ON	OFF
2	○		○	
4	○		○	

ETJA775B

DIGITAL CLOCK

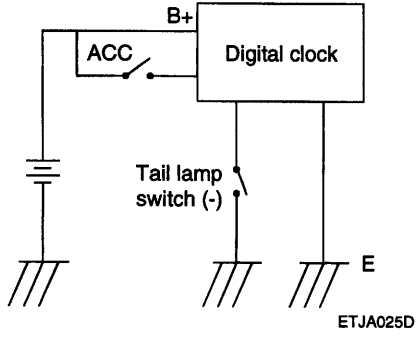

ETJA025D

[M83]

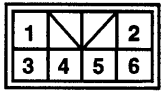

ETJA025B

1. Blank
2. Blank
3. Clock (B+)
4. ACC
5. Tail lamp (-)
6. Clock (-)

ETJA775C

HEAD LAMP ETJA7950

HEAD LAMP AIMING INSTRUCTIONS

The headlamps should be aimed with the proper beam-setting equipment, and in accordance with the equipment manufacturer's instructions.

NOTE

If there are any regulations pertinent to the aiming of headlamps in the area where the vehicle is to be used, adjust so as to meet those requirements.

Alternately turn the adjusting gear to adjust the headlamp aiming. If beam-setting equipment is not available, proceed as follows:

1. Inflate the tires to the specified pressure and remove any loads from the vehicle except the driver, spare tire, and tools.
2. The vehicle should be placed on a flat floor.
3. Draw vertical lines (Vertical lines passing through respective headlamp centers) and a horizontal line (Horizontal line passing through center of headlamps) on the screen.
4. With the headlamp and battery in normal condition, aim the headlamps so the brightest portion falls on the horizontal and vertical lines.

   Make vertical and horizontal adjustments to the lower beam using the adjusting wheel.

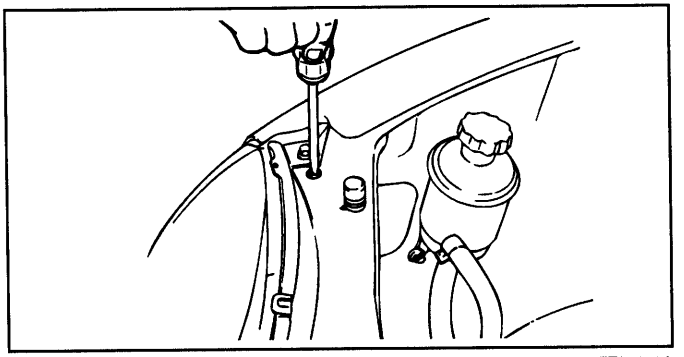

ETA9230A

FRONT FOG LAMP

The front fog lamps should be aimed as the same manner of the head lamps aiming.

With the front fog lamps and battery normal condition, aim the front fog lamps by turning the adjusting gear.

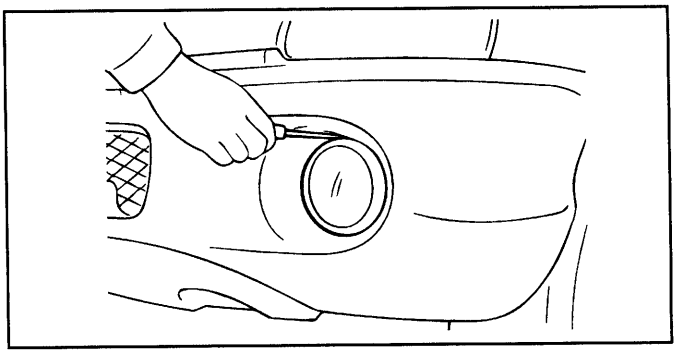

ETJA010I

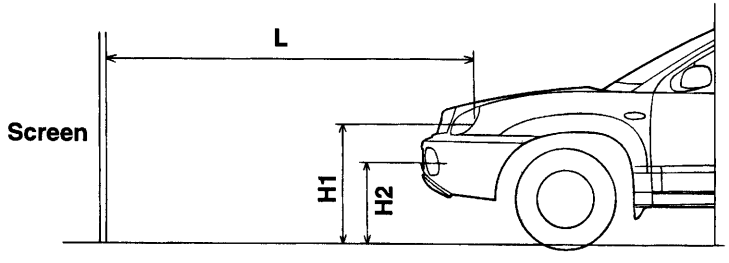

ETJA010A

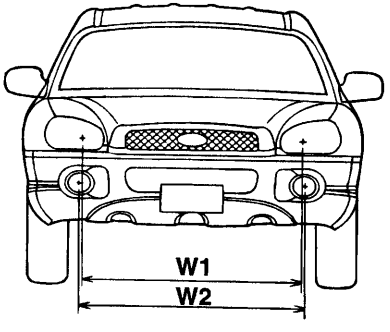

ETJA010B

H1 : Height between the head lamp bulb center and ground (low beam)
H2 : Height between the fog lamp bulb center and ground

W1 : Distance between the head lamp bulb center (low beam)
W2 : Distance between the fog lamp bulb center

L : Distance between the head lamp bulb center and screen.

ETJA230A

HEAD LAMP AND FOG LAMP AIMING POINT

Unit : mm

Vehicle condition	H1		W1	H2		W2	L
	2WD	4WD	2WD/4WD	2WD	4WD	2WD/4WD	
Without driver	830	850	1,178	558	578	1,201	3,000
With driver	822	843	1,178	551	571	1,201	

ETJA230B

- Turn the low beam on without the driver aboard. The cut-off line should be projected in the allowable range (shaded region).

Unit : mm

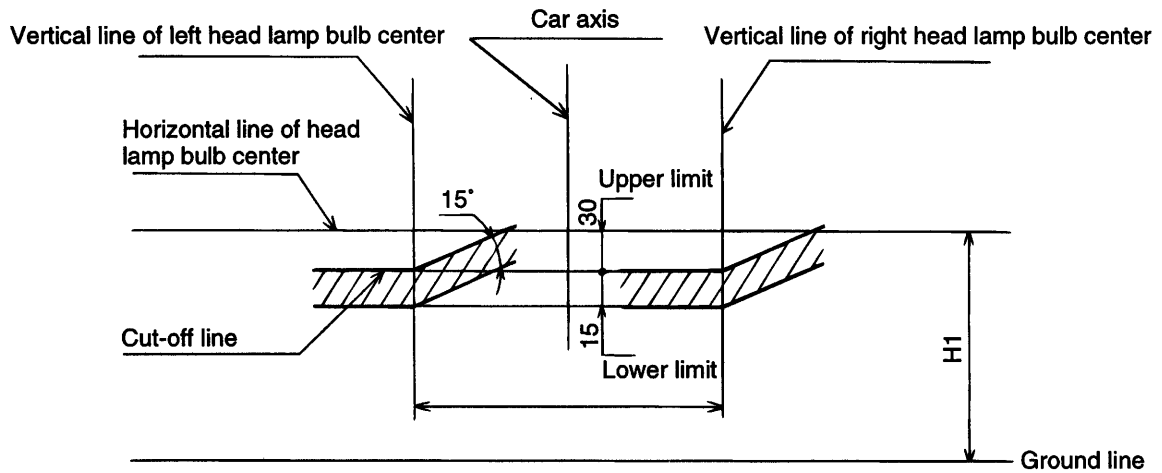

ETJA010E

- Turn the front fog lamp on without the driver aboard. The cut-off line should be projected in the allowable range. (shaded region)

Unit : mm

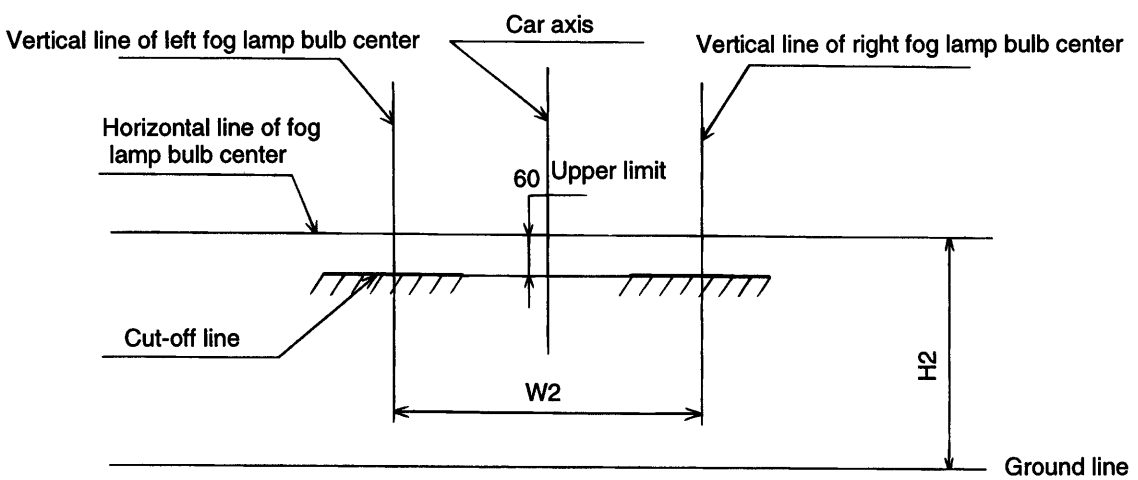

ETJA010D

HEAD LAMP LEVELLING DEVICE

HEAD LAMP LEVELLING SWITCH

INSPECTION ETJA7960

1. Remove the head lamp levelling device switch from the floor console.

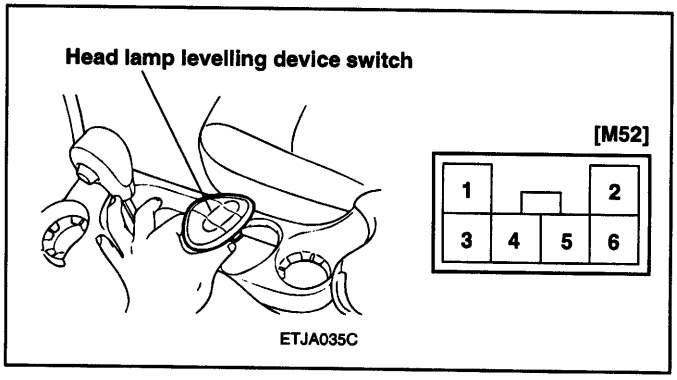

ETJA796A

2. Connect the battery voltage between terminals 3 and 4.

3. Measure the voltage between terminals 4 and 5. If the voltage is not as specified, replace the head lamp levelling switch.

Position No.	Voltage (V)
0	1.80
1	3.61
2	5.65
3	6.23

IMMOBILIZER CONTROL SYSTEM

IMMOBILIZER SYSTEM ETJA7970

DESCRIPTION

The immobilizer system is an anti-theft device which enables starting to be possible only when the mechanical and wireless secret codes are aligned simultaneously.

The transponder built in the ignition key signals its unique frequency code and at this time the ICM compares it with the memorized code.

When the codes are aligned, the ICM sends signals to the ECM so that starting is possible.

ICM : Immobilizer Control Module
ECM : Engine Control Module

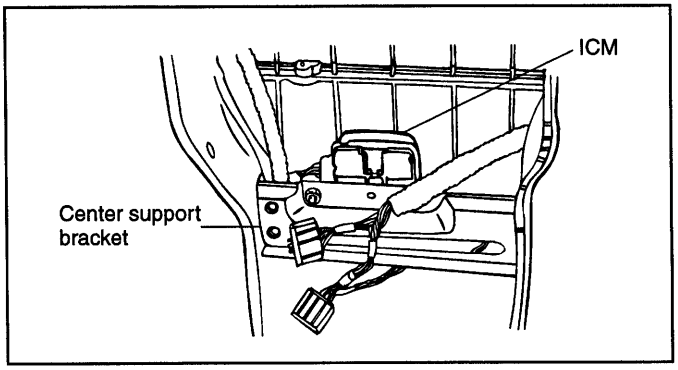

ETJA797A

SYSTEM BLOCK DIAGRAM

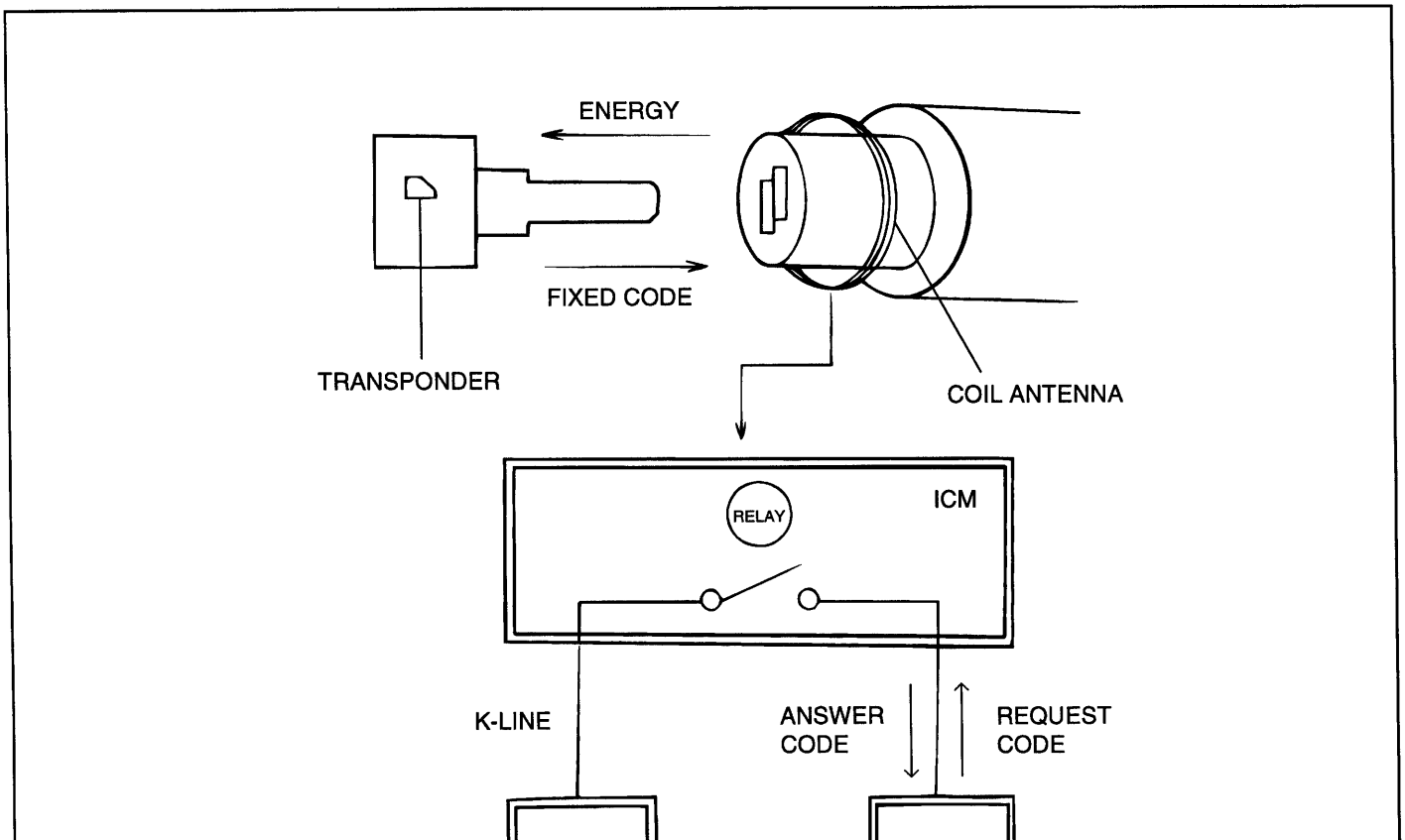

COMPONENT

A. TRANSPONDER KEY	B. COIL ANTENNA
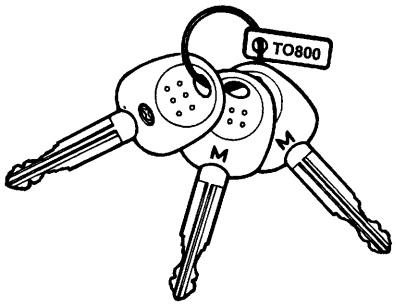 B880B01A	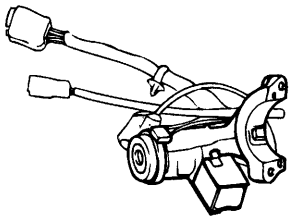 B6BE225C
C. IMMOBILIZER CONTROL MODULE	**D. ENGINE CONTROL MODUEL**
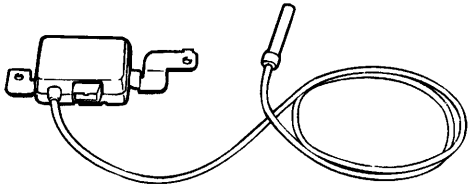 B6BE710D	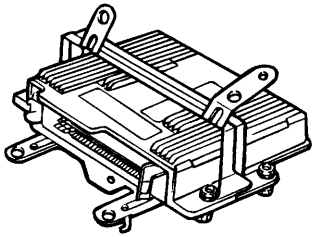 B6BE710E

DESCRIPTION

COMPONENT	DESCRIPTION
TRANSPONDER (built-in keys)	When ignition is "ON", the coil supplies energy to the transponder, which in turn accumulates energy in the condenser. Once the energy supply from the coil has stopped, using the stored energy in the condenser, the transponder transmits the ID CODE.
COIL ANTENNA	Supplies energy to the transponder. Receives signal from the transponder. Sends transponder signal to the ICM.
IMMOBILIZER CONTROL MODULE	Supplies power to the coil antenna. Receives and analyzes signal from the coil antenna.

KEY REGISTRATION

1. ID Code registration sequence

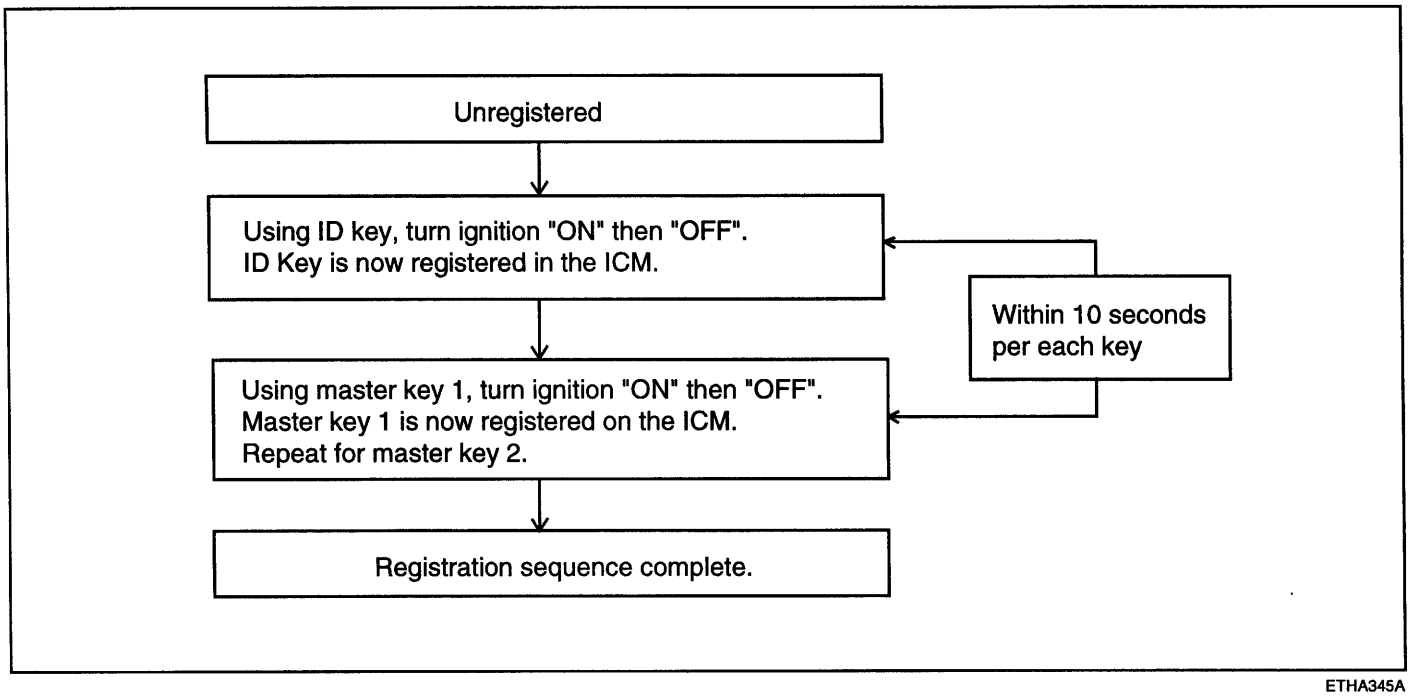

ETHA345A

2. Master key correction

If a new set of master keys needs to be produced, it can be done by two methods:

a. Using ID key

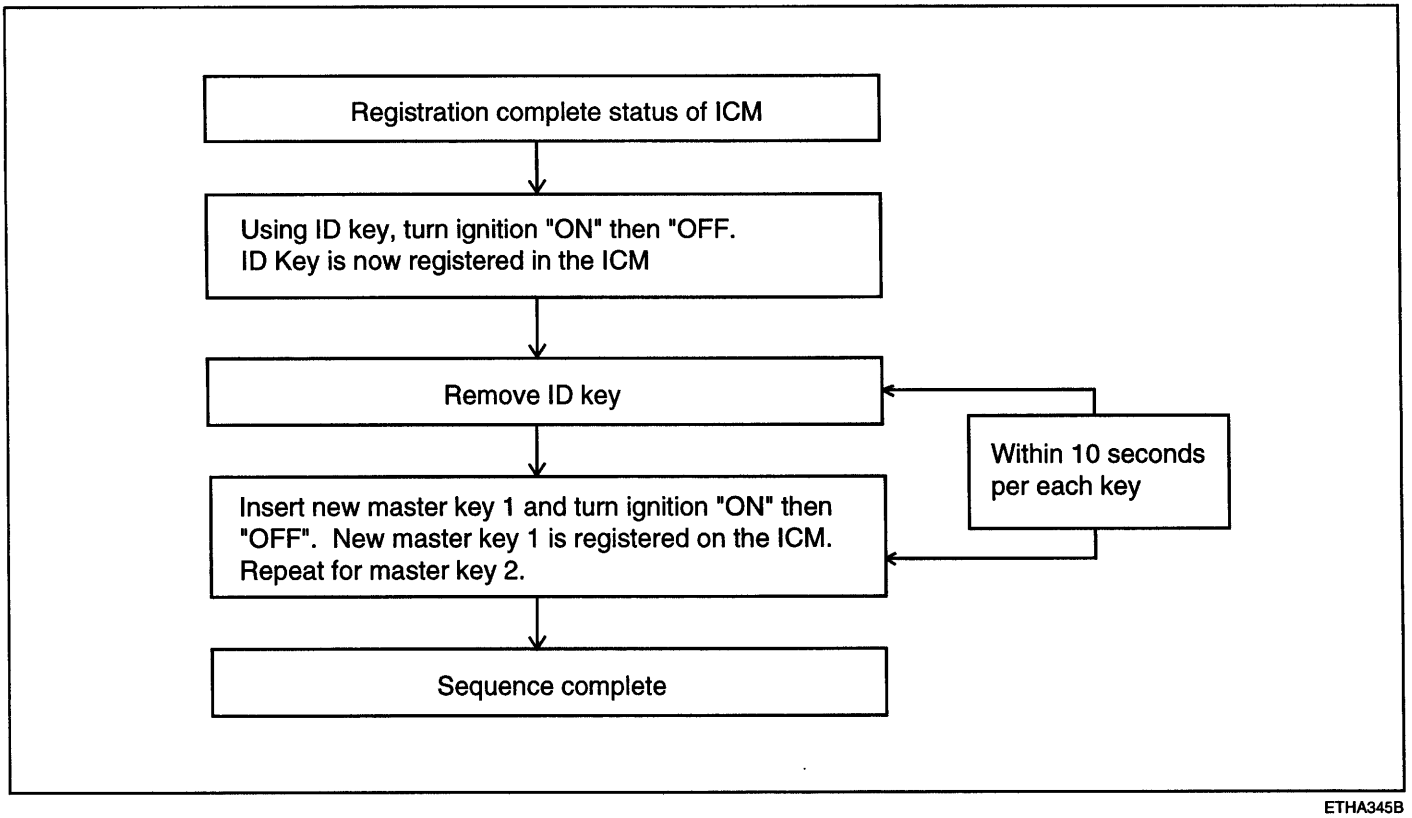

ETHA345B

b. Using password

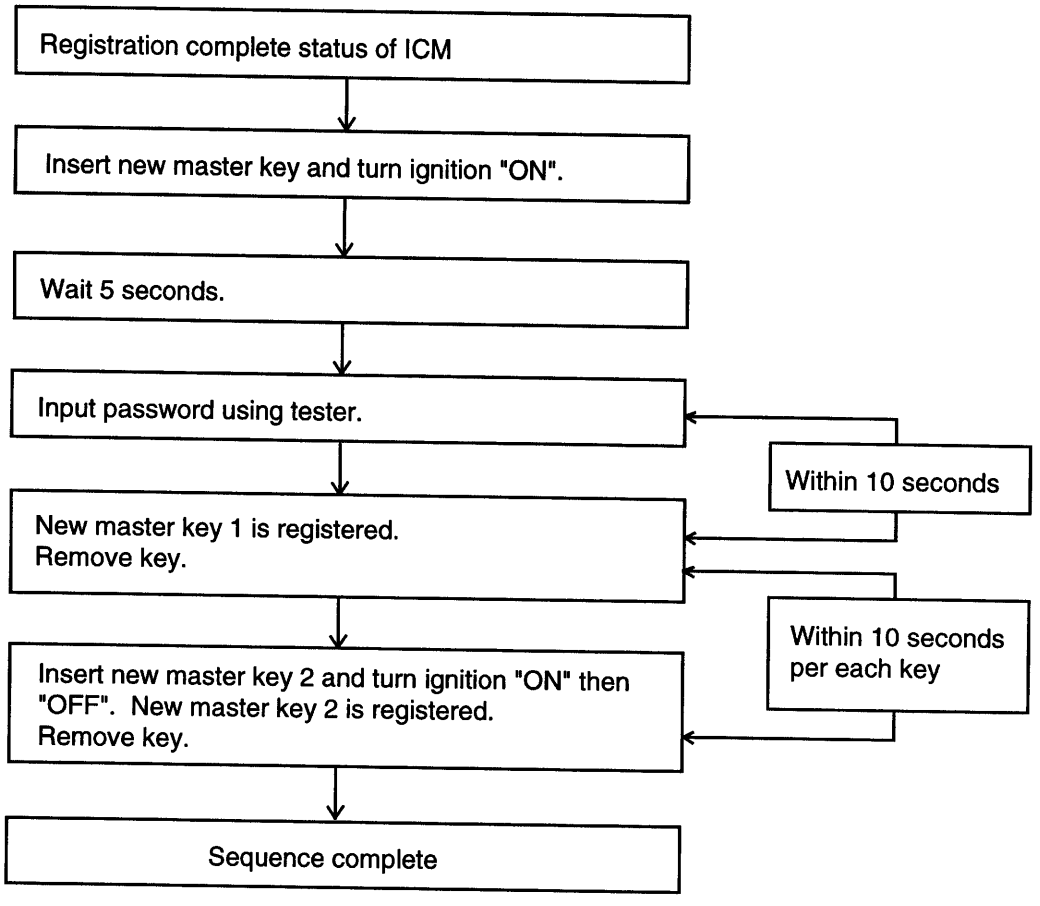

NOTE

- **Once the password is mis-registered, it is impossible to register new password during 10 seconds regardless of ignition ON/OFF.**
- **When the master 3 keys have been registered, the codes for existing master keys are all cleared.**
- **The password should consist of 4 numbers among ten (0~9) numbers.**

ETHA345C

Heating, Ventilation & Air Conditioning

GENERAL ..... HA -2

AIR CONDITIONING SYSTEM ..... HA -6

MANUAL A/C COMPRESSOR CONTROLS ..... HA -18

FULL AUTO A/C COMPRESSOR ..... HA -36

VACUUM SYSTEM ..... HA -54

HEATER ..... HA -55

BLOWER CONTROLS ..... HA -59

GENERAL

EQJA0010

SPECIFICATIONS

Item		Specification
Compressor	Type	HS-18 (SWASH TYPE)
	OIL (FD46 x G)	150g
	Capacity	170 cc
	Thermal fuse	184°C OFF
Refrigerant and quantity		600 ± 25g (R134a)
Evaporator	Thermistor temp.	0.5 ± 0.5°C (OFF)
		2.5 ± 0.5°C (ON)
Triple Switch (Kgf/cm^2)	High Pressure	32.0 ± 2.0
	Medium Pressure	15.5 ± 0.8
	Low Pressure	2.3 ± 0.25

TIGHTENING TORQUE

EQJA0020

Item	Nm	kg·cm	lb·ft
Compressor mounting bolt	20 - 30	200 - 300	14 - 22
Expansion valve mounting bolt	8 - 12	80 - 120	5 - 8
Expansion valve mounting nut	10 - 15	100 - 150	7 - 11
Compressor to refrigerant hose	5 - 7	50 - 70	3 - 5
Suction hose to liquid tube	5 - 7	50 - 70	3 - 5

SPECIAL TOOLS

EQHA0050

Tool (Number and name)	Illustration	Use
09977-29000 Pressure plate bolt remover	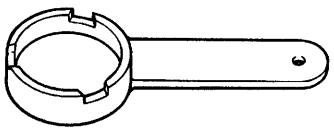 EQA9002A	Removal and installation of pressure plate
09455-34000 Bearing and gear puller	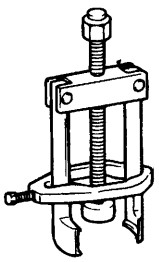 EQA9002B	Removal of field coil

TROUBLESHOOTING EQHA0100

Before replacing or repairing air conditioning components, first determine if the malfunction is due to the refrigerant charge, air flow or compressor. The following diagnostic charts have been developed as a quick reference for determining the cause of the malfunction. If these charts do not satisfactorily describe the problem, refer to the appropriate section for a more detailed explanation. After correcting the malfunction, check the complete system to ensure that performance is satisfactory.

MALFUNCTION CAUSES AND REMEDIES (NUMBERS INDICATE CHECKING/INSPECTION ORDER.)

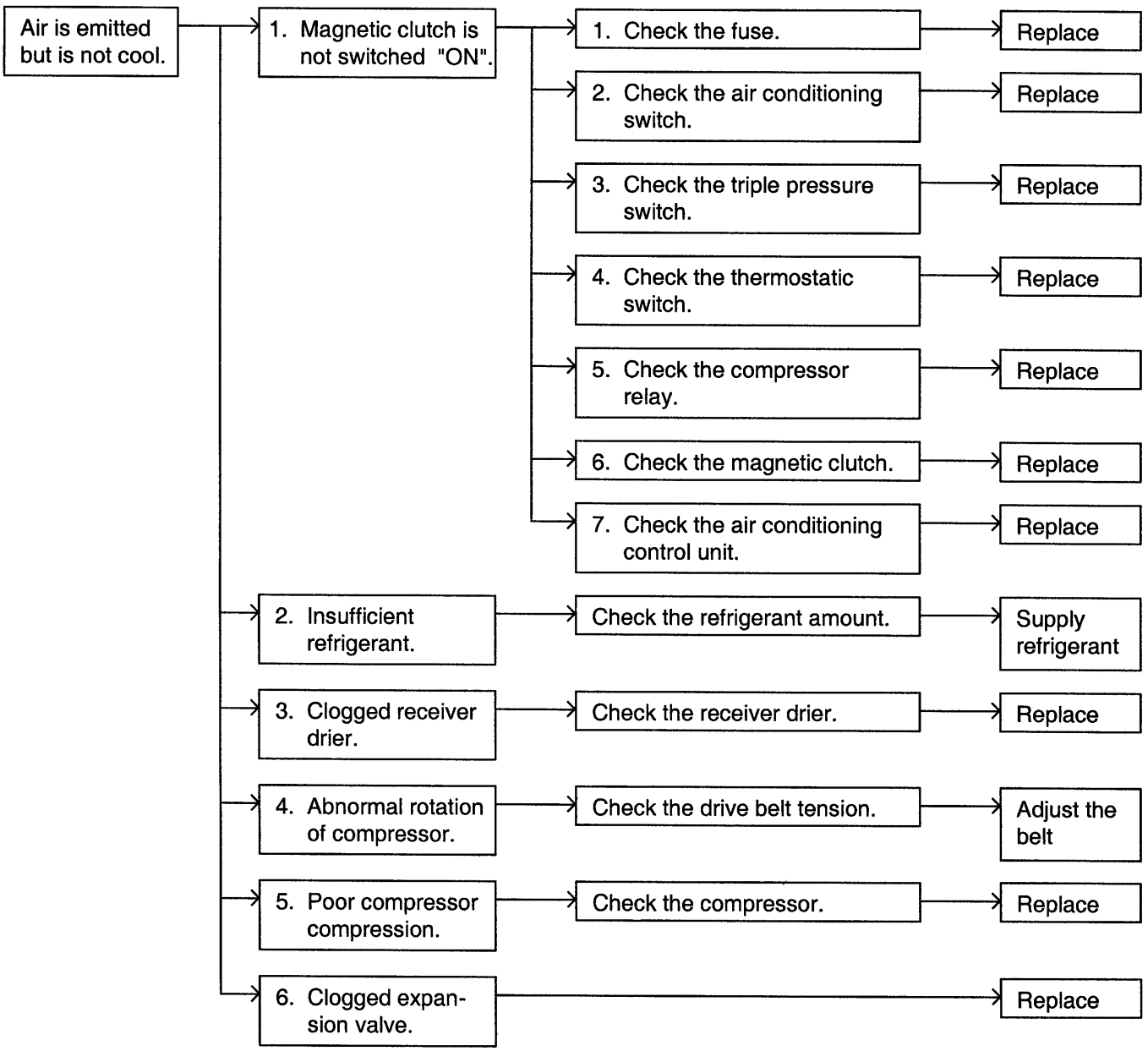

EQHA010A

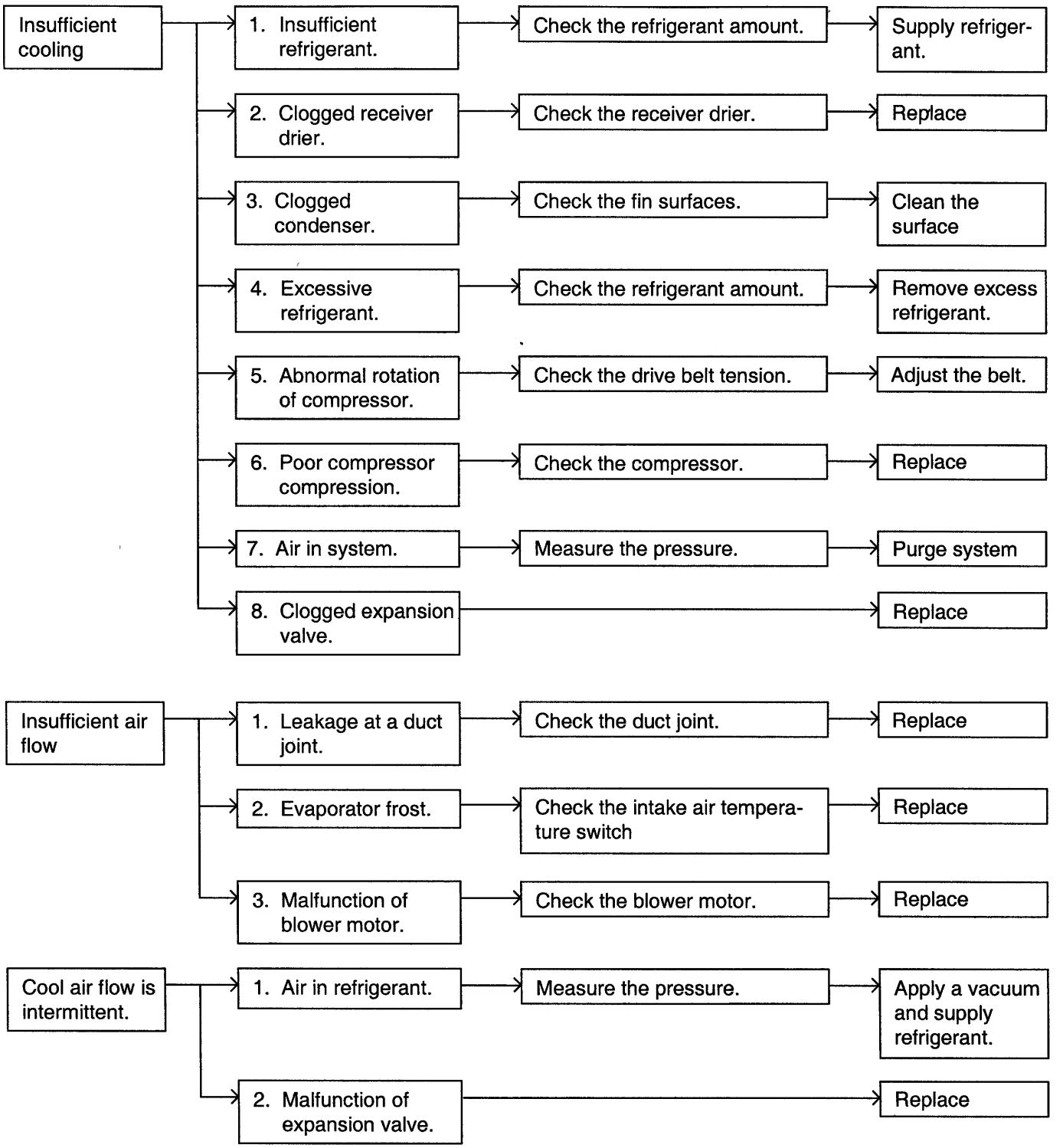
Insufficient cooling
1. Insufficient refrigerant.
Check the refrigerant amount.
Supply refrigerant.
2. Clogged receiver drier.
Check the receiver drier.
Replace
3. Clogged condenser.
Check the fin surfaces.
Clean the surface
4. Excessive refrigerant.
Check the refrigerant amount.
Remove excess refrigerant.
5. Abnormal rotation of compressor.
Check the drive belt tension.
Adjust the belt.
6. Poor compressor compression.
Check the compressor.
Replace
7. Air in system.
Measure the pressure.
Purge system
8. Clogged expansion valve.
Replace
Insufficient air flow
1. Leakage at a duct joint.
Check the duct joint.
Replace
2. Evaporator frost.
Check the intake air temperature switch
Replace
3. Malfunction of blower motor.
Check the blower motor.
Replace
Cool air flow is intermittent.
1. Air in refrigerant.
Measure the pressure.
Apply a vacuum and supply refrigerant.
2. Malfunction of expansion valve.
Replace

EQHA010B

AIR CONDITIONING SYSTEM

INSTRUCTIONS EQDA0100

WHEN HANDLING REFRIGERANT

1. R-134a liquid refrigerant is highly volatile. A drop on the skin of your hand could result in localized frostbite. When handling the refrigerant, be sure to wear gloves.
2. It is standard practice to wear goggles or glasses to protect your eyes, and gloves to protect your hands. If the refrigerant splashes into your eyes, wash them with clean water immediately.
3. The R-134a container is highly pressurized. Never leave it in a hot place, and check that the storage temperature is below 52°C (126°F).
4. A electronic leak detector should be used to check the system for refrigerant leakage. Bear in mind that the R-134a, upon coming into contact with flame, produces phosgene, a highly toxic gas.
5. Use only recommended the lubricant for R-134a systems. If lubricants other than the recommended one used, system failure may occur.
6. PAG lubricant absorbs moisture from the atmosphere at a rapid rate, therefore the following precautions must be observed:
   - When removing refrigerant components from a vehicle, cap immediately the components to prevent from the entry of moisture.
   - When installing refrigerant components to a vehicle, do not remove the cap until just before connecting the components.
   - Complete the connection of all refrigerant tubes and hoses without delay to prevent the A/C system from taking on moisture.
   - Use the recommended lubricant from a sealed container only.
7. If an accidental discharge in the system occurs, ventilate the work area before resuming service.

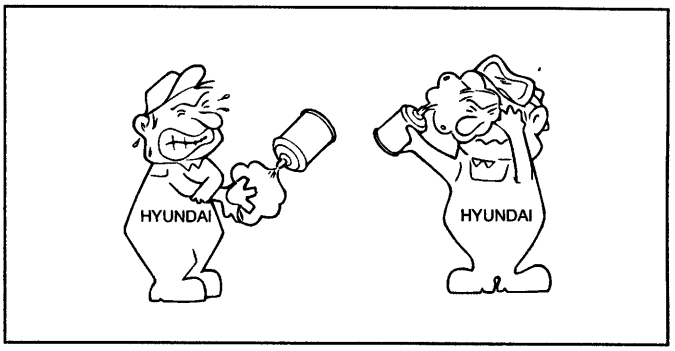

EQDA010A

WHEN REPLACING PARTS ON A/C SYSTEM

1. Never open or loosen a connection before discharging the system.
2. Seal the open fittings of components with a cap or plug immediately to prevent intrusion of moisture or dust.
3. Do not remove the sealing caps from a replacement component until it is ready to be installed.
4. Before connecting an open fitting, always install a new sealing ring. Coat the fitting and seal with refrigerant oil before making the connection.

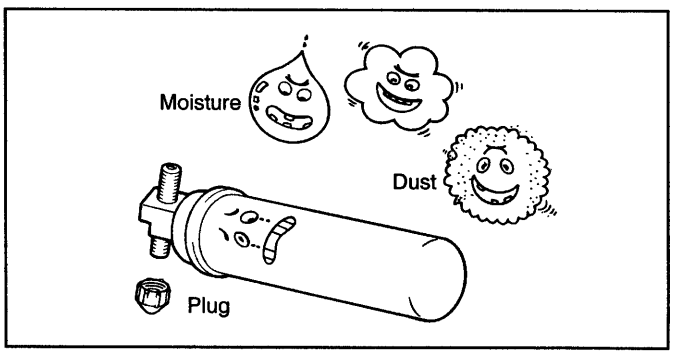

EQDA010B

WHEN INSTALLING CONNECTING PARTS

FLANGE WITH GUIDE PIN

Check the new O-ring for damage (use only the specified) and lubricate it using compressor oil. Tighten the nut to specified torque.

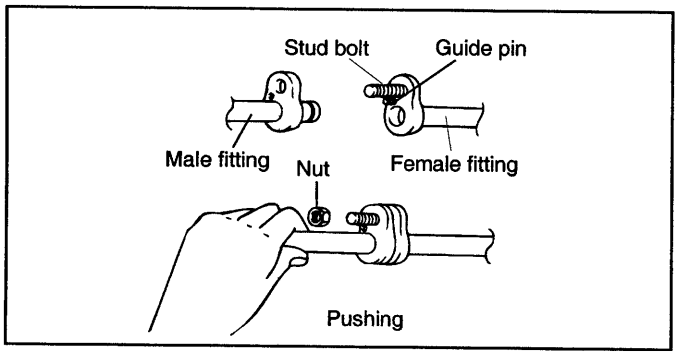

EQDA010C

HANDLING TUBING AND FITTINGS

The internal parts of the refrigeration system will remain in a state of chemical stability as long as pure moisture-free refrigerant and refrigerant oil are used. Abnormal amounts of dirt, moisture or air can upset the chemical stability and cause problems or serious damage.

THE FOLLOWING PRECAUTIONS MUST BE OBSERVED

1. When it is necessary to open the refrigeration system, have everything you will need to service the system ready so the system will not be left open any longer than necessary.
2. Cap or plug all lines and fittings as soon as they are opened to prevent the entrance of dirt and moisture.
3. All lines and components in parts stock should be capped or sealed until they are ready to be used.
4. Never attempt to rebend formed lines to fit. Use the correct line for the installation you are servicing.
5. All tools, including the refrigerant dispensing manifold, the gauge set manifold and test hoses, should be kept clean and dry.

REFRIGERATION CYCLE EQHA0200

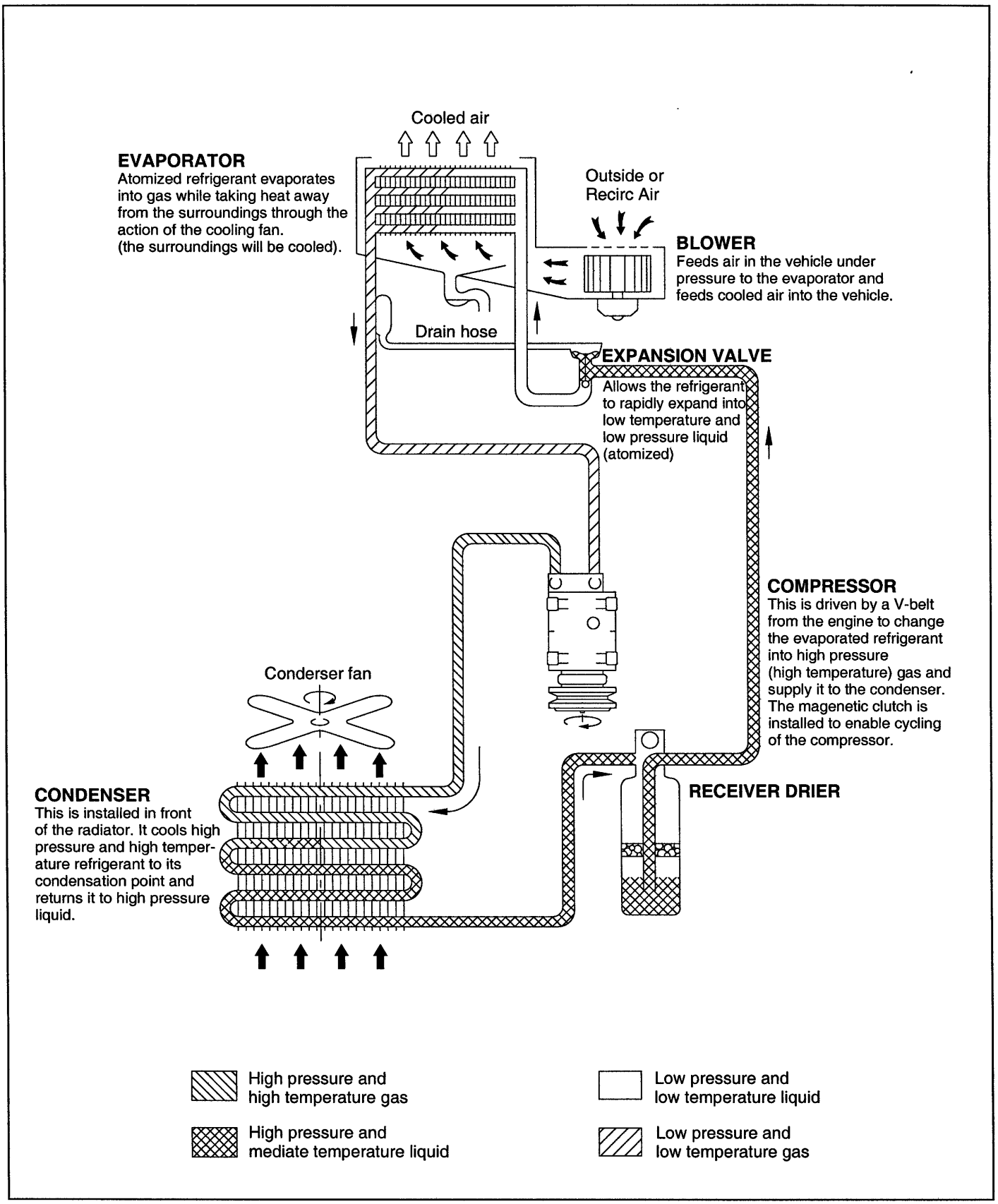

JCW97002

COMPONENTS EQJA0250

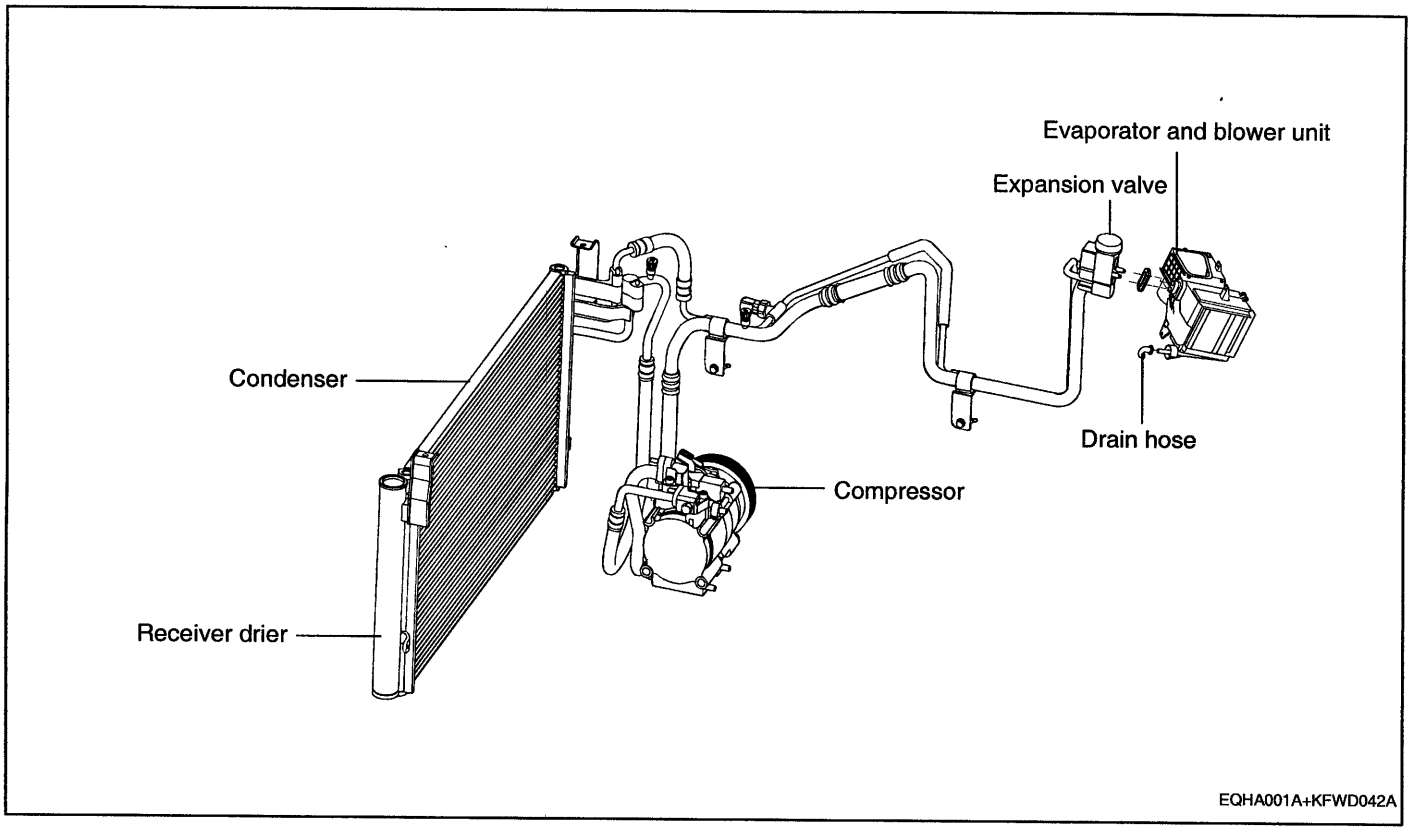

EQHA001A+KFWD042A

EQHA001C

INSTALLATION OF MANIFOLD GAUGE SET EQHA0300

CAUTION

When connecting the manifold gauge set test hoses, be sure to observe all safety precautions.

1. Close both valves of the manifold gauge set.
2. Install the charging hoses of the gauge set to the fittings. Connect the low-pressure hose to the low-pressure service port, and the high-pressure hose to the high-pressure service port. Tighten the hose nuts by hand.

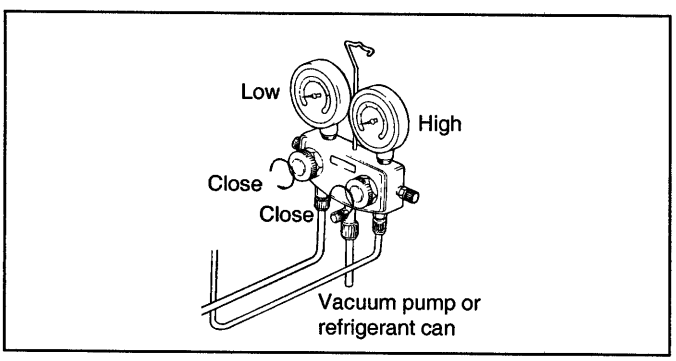

EQHA030A

REFRIGERANT DISCHARGING PROCEDURE EQHA0350

1. Connect the manifold gauge set to the system.
2. Put a towel under the open end of the center hose.
3. Open the high pressure valve slowly to discharge the refrigerant.

CAUTION

If discharging the refrigerant too fast, compressor oil may drain from the system.

4. Check if the towel is stained with oil. If so, gently close the valve.
5. If the manifold gauge reading drops below 3.5kg/cm^2, open the low pressure valve slowly.
6. Open the high and low pressure valves slowly in order to drop the system pressure until the gauge indicates 0kg/cm^2.

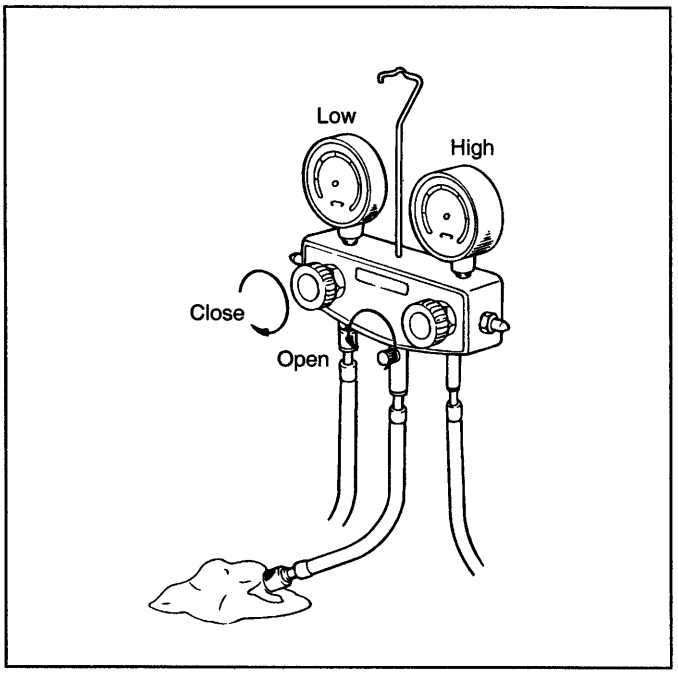

EQHA035A

EVACUATING REFRIGERANT SYSTEM EQHA0400

NOTE

It is necessary to evacuate the air conditioning system any time the system has been opened. Evacuation is necessary to rid the system of all air and moisture that may have been allowed to enter the unit. After installation of a component, the system should be evacuated for approximately 15 minutes. A component in service that has been opened for repair should be evacuated for 30 minutes.

1. Engine should be off.
2. Connect a manifold gauge set to the compressor gauge fittings. Close both high and low pressure valves.
3. Make sure the refrigerant has been discharged from the system.
4. Connect the center hose of the gauge set to the vacuum pump inlet.
5. Start the vacuum pump and then open the high and low manifold pressure valves.
6. After about ten minutes, check that the low pressure gauge reads more than -94,39 kPa (-0.96 kg/cm^2, -13.7 psi) vacuum. If negative pressure can not be obtained, there is a leak in the system. In this case, repair the leak as following:
   a. Close both the manifold valves and stop the vacuum pump.
   b. Charge system with a can or refrigerant [about 0.4 kg (0.9 lb)]. Refer to Charging Refrigerant.
   c. Check for refrigerant leakage with a leak detector. Repair any leakage found. Refer to Checking Refrigerant Leak page HA-14.
   d. Discharge refrigerant again, and then evacuate the system. If no leaks are found, continue evacuating the system.
7. Start the vacuum pump.

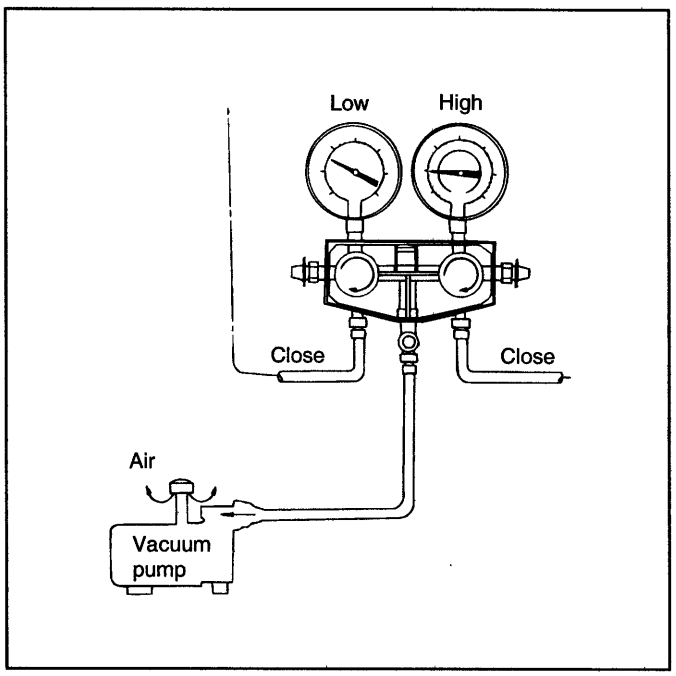

EQA9007A

8. Open both manifold valves to obtain -94.39 kPa (-0.96 kg/cm^2, -13.7 psi) of vacuum.
9. After the low pressure manifold gauge indicates close to -94.39 kPa (-0.96 kg/cm^2, -13.7 psi), continue evacuating for 15 minutes.

10. After evacuating for 15 minutes, close both manifold valves and stop the vacuum pump. Disconnect the hose from the vacuum pump. The system is now ready for charging.

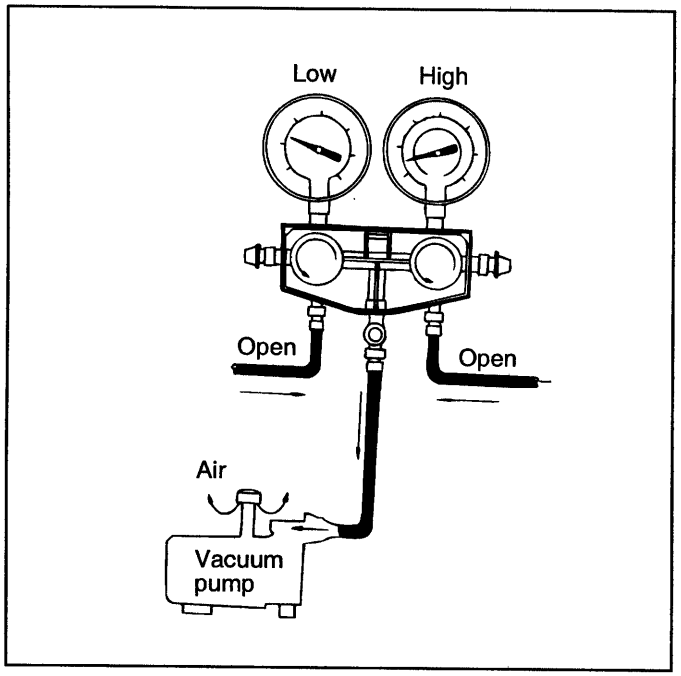

EQA9007B

HANDLING REFRIGERANT SERVICE TAP VALVE EQHA0450

1. Before connecting the valve to the refrigerant container, turn the handle fully counterclockwise.
2. Turn the disc counterclockwise until it reaches its highest position.
3. Connect the center hose to the valve fitting. Turn the disc fully clockwise by hand.
4. Turn the handle clockwise to make a hole in the sealed top.
5. Turn the handle fully counterclockwise to fill the center hose with air. Do not open the high and low-pressure hand valves.
6. Loosen the center hose nut connected to the center fitting of the manifold gauge.
7. Allow air to escape for a few seconds, and then tighten the nut.

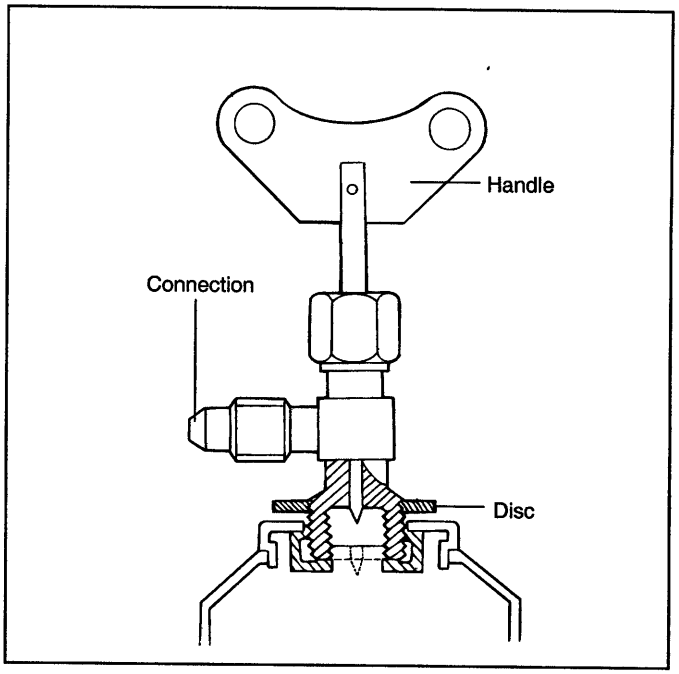

EQA9008A

CHARGING REFRIGERANT SYSTEM (VAPOR) EQJA0500

NOTE

This step is to charge the system through the low pressure side with refrigerant in a vapor state. When the refrigerant container is placed right side up, refrigerant will enter the system as a vapor.

1. Open the low pressure valve. Adjust the valve so that the low pressure gauge does not read over 412 kPa (4.2 kg/cm^2, 60 psi).

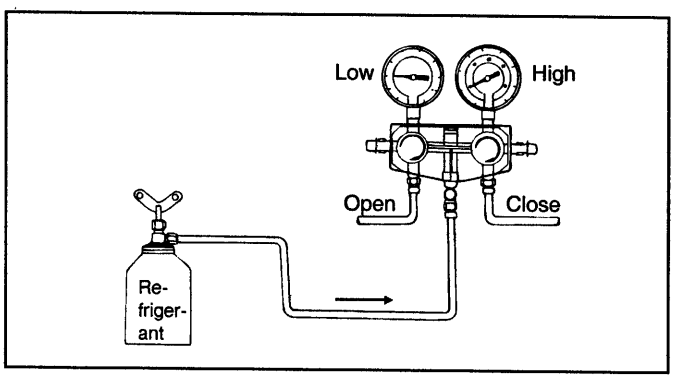

EQA9009A

2. Put the refrigerant in a pan of warm water (maximum temperature 40°C or 104°F) to keep vapor pressure in the container slightly higher than vapor pressure in the system.

3. Run the engine at fast idle and operate the air conditioning.

NOTE

Be sure to keep the container upright to prevent liquid refrigerant from being charged into the system through the suction side, resulting in possible damage to the compressor.

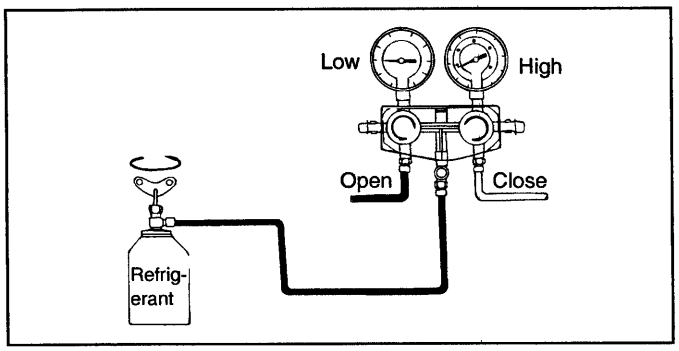

EQA9009B

4. Charge the system to the specified amount. Then close the low pressure valve.

Specified amount : 600 ± 25g

When refrigerant charging speed is slow, immerse refrigerant can in water, heated to a temperature of about 40°C (104°F).

WARNING

- **Under any circumstances the refrigerant must not be warmed in water heated to a temperature of over 52°C (126°F).**
- **A blow torch or stove must never be used to warm up the can.**

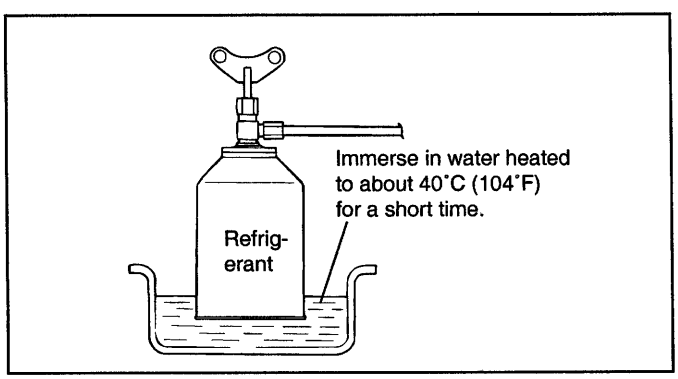

EQA9009C

CHARGING REFRIGERANT SYSTEM (LIQUID)

NOTE

This step is to charge an empty system through the high pressure side with refrigerant in a liquid state. When the refrigerant container is held upside down, refrigerant will enter the system as a liquid.

CAUTION

Never run the engine when charging the system through the high pressure side. Do not open the low pressure valve when the system is being charged with liquid refrigerant.

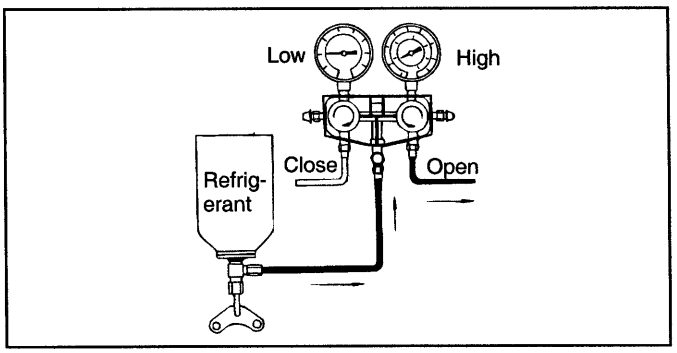

EQA9010A

1. Close both high and low pressure valves completely after the system is evacuated.

2. Install the refrigerant can tap valve as described in "Handling Refrigerant Service Tap Valve" section.

3. Open the high pressure valve fully and keep the container upside down.

4. Charge the system to the specified amount by weighing the refrigerant with a scale. Overcharging will cause the discharge pressure (high side) to rise. Then, close the high pressure valve.

Specified amount : 600 ± 25g

NOTE

If the low pressure gauge does not show a reading, the system is restricted and must be repaired.

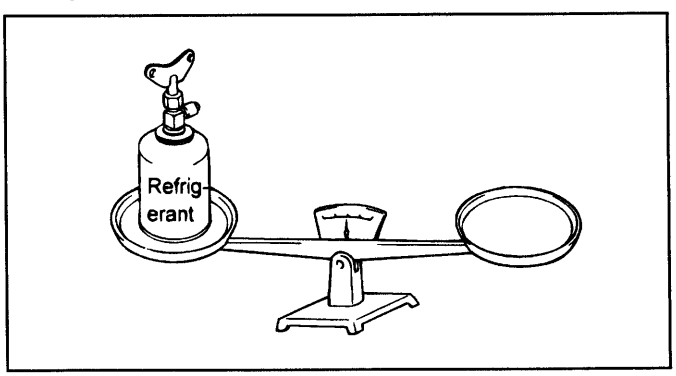

EQA9010B

5. After the specified amount of refrigerant has been charged into system, close the manifold valve.

6. Confirm that there are no leaks in the system by checking with a leak detector. Refer to Checking Refrigerant Leak.

NOTE

Conducting a performance test prior to removing the manifold gauge is good service operation.

PERFORMANCE TEST EQHA0550

1. Install the manifold gauge set.

2. Run the engine at 2,000 rpm and set the controls for maximum cooling and high blower speed.

3. Keep all windows and doors open.

4. Place a dry-bulb thermometer in the cool air outlet.

5. Place a wet—dry thermometer close to the inlet of the cooling unit.

6. Check that the reading on the high pressure gauge is 1,373-1,575 kPa (14-16 kg/cm^2, 199-228 psi). If the reading is too high, pour water on the condenser. If the reading to too low, cover the front of the condenser.

7. Check that the reading on the dry-bulb thermometer at the air inlet at 25-35°C (77-95°F).

8. Calculate the relative humidity from the psychrometric graph by comparing the wet-and dry-bulb reading at the air inlet.

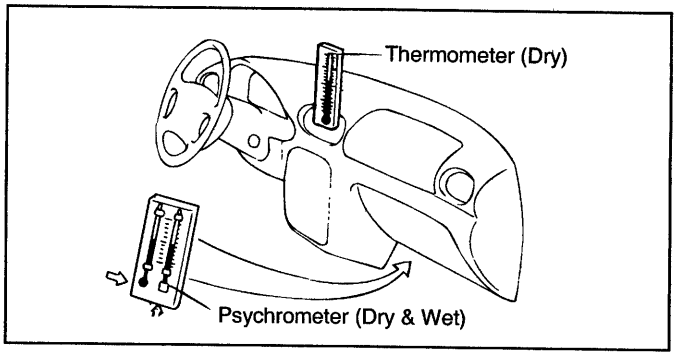

EQA9019A

HOW TO READ THE GRAPH :
After measuring the temperatures of the wet and dry-bulb thermometers at the evaporator air inlet, relative humidity (%) can be obtained.
Example : Dry-and wet-bulb temperature at the evaporator air inlet are 25°C (77°F) and 19.5°C (67°F) respectively, the point of intersection of the dotted lines in the graph indicates 60%.

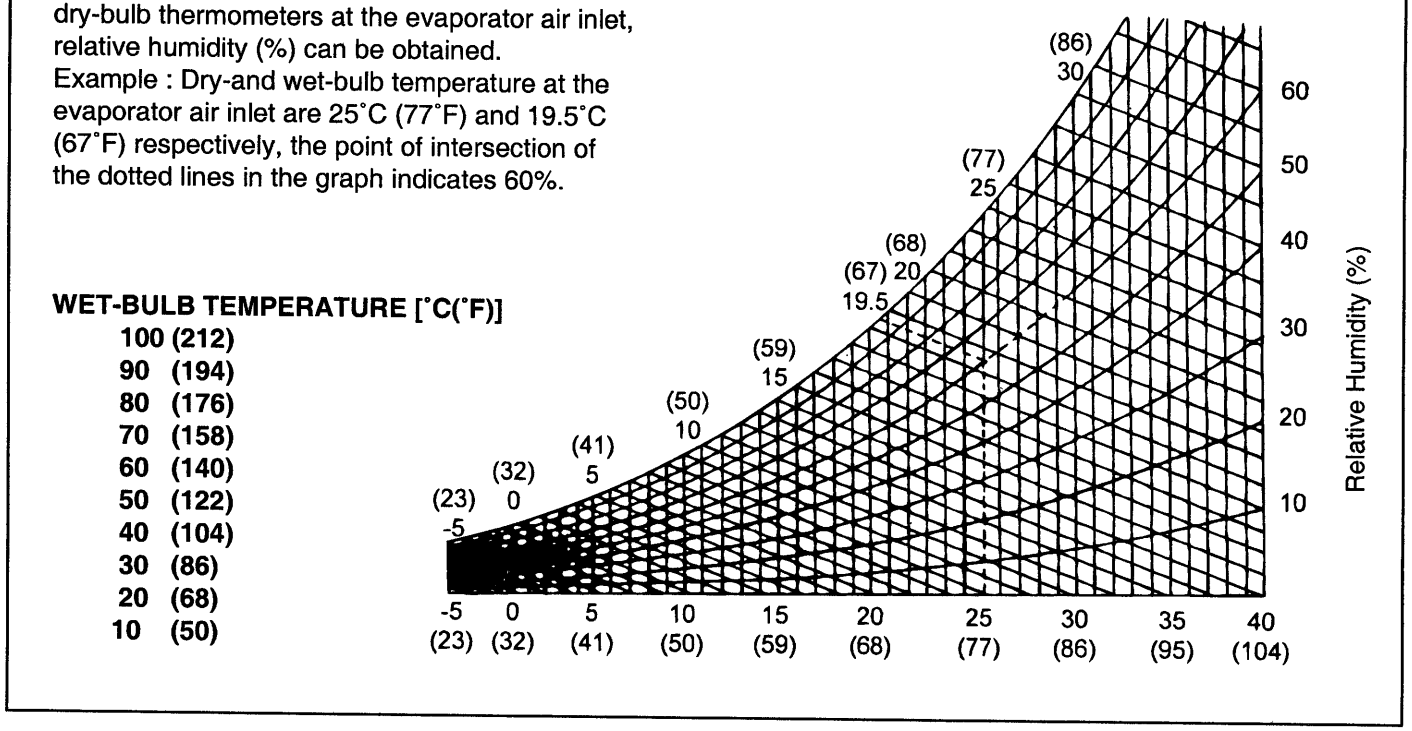

EQA9019B

9. Measure the dry-bulb temperature at the cool air outlet, and calculate the difference between the inlet dry-bulb and outlet dry-bulb temperatures.

10. Check that the intersection of the relative humidity and temperature difference falls within the block below. If the intersection is within the block, cooling performance is satisfactory.

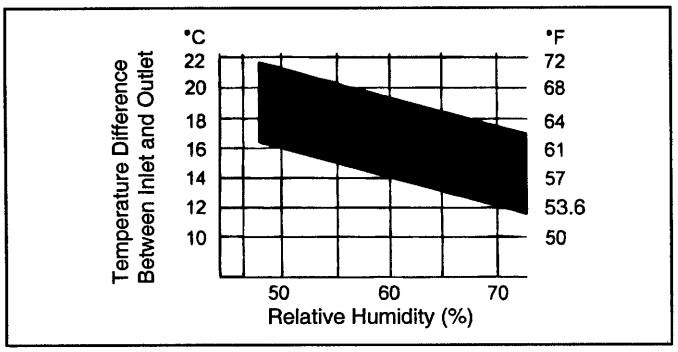

EQA9019C

COMPRESSOR OIL EQJA0600

Oil lubricates the compressor and circulates in the system while the compressor is operating. Whenever replacing any component of the system, or when a large amount of gas leakage occurs, add oil to maintain the original total amount of oil.

HANDLING OF OIL

1. The oil should be free from moisture, dust, metal filings, etc.
2. Do not mix oils.
3. The moisture content in the oil increases when exposed to the air for prolonged periods. After use, seal the container immediately.

OIL RETURN OPERATION

To check the oil level or add the oil, idle the engine for 20–30 minutes with the controls set to maximum cooling and blower level, to return the lubricant to compressor.

CHECKING AND ADDING OF COMPRESSOR OIL LEVEL

In order to add oil to an operating compressor, check the compressor oil using the following procedure:

1. Stop the engine, discharge the refrigerant, and dismantle the compressor from the vehicle.

2. Pour oil from the system line outlet.

NOTE

If the compressor is cold, sometimes it can be hard to drain the oil. Warm the compressor (approx. 40–50°C) to drain the oil.

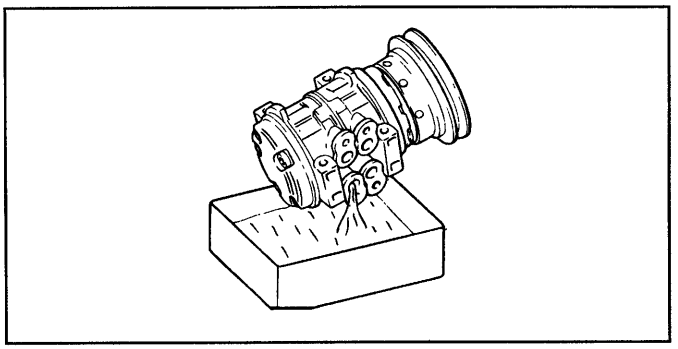

EQHA060A

3. Check the volume of the discharged oil. If it is less than 70cc, it means there is little leak. Perform the leakage test on each system connection, and repair or replace faulty parts if necessary.

4. Check the oil for contamination and replenish the oil level in the following procedure:

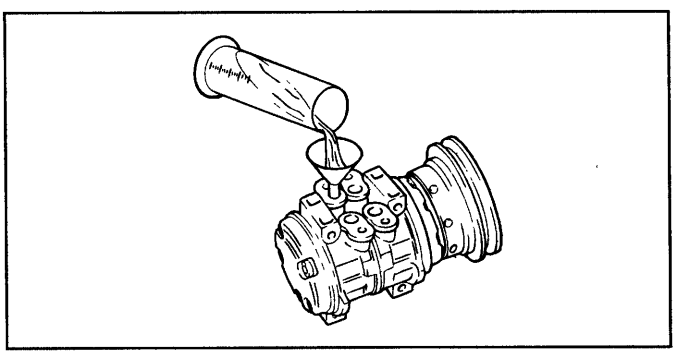

EQHA060B

a. When oil is clean

Discharge	Setting
Above 70cc	Oil level is normal. Add an equal amount of discharged oil.
Below 70cc	Oil level is low. Add 70cc of oil.

b. If the oil is contaminated with metal fragments or other material, clean the receiver drier after charging the refrigerant.

CHECKING FOR REFRIGERANT LEAKS EQHA0650

Always conduct a leak test with an electronic leak detector whenever leakage or refrigerant is suspected and when conducting service operations which are accompanied by disassembly or loosening or connection fittings.

NOTE

In order to use the leak detector properly, read the manual supplied by the manufacturer.

If a gas leak is detected, proceed as follows:

1. Check the torque on the connection fittings and, if too loose, tighten to the proper torque. Check for gas leakage with a leak detector.
2. If leakage continues even after the fitting has been tightened, discharge the refrigerant from the system, disconnect the fittings, and check their seating faces for damage. Always replace, even if the damage is slight.
3. Check the compressor oil and add oil if required.
4. Charge the system and recheck for gas leaks. If no leaks are found, evacuate and charge the system again.

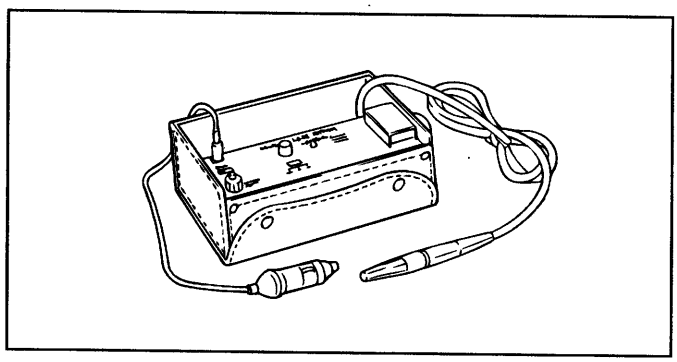

EQHA065A

BLOWER UNIT AIR FILTER EQJA0750

The combination filter eliminates foreign materials and odor. The combination filter includes an odor filter as well as conventional dust filter to ensure comfortable interior environment. Vehicles equipped with rear air conditioning have an air filter in the rear air conditioning unit.

REMOVAL AND INSTALLATION

1. Remove the glove box housing.

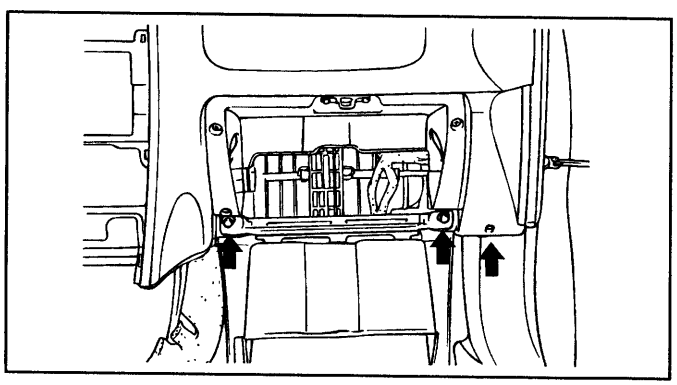

ESJA035K

2. Remove the lower side cover of the crash pad.

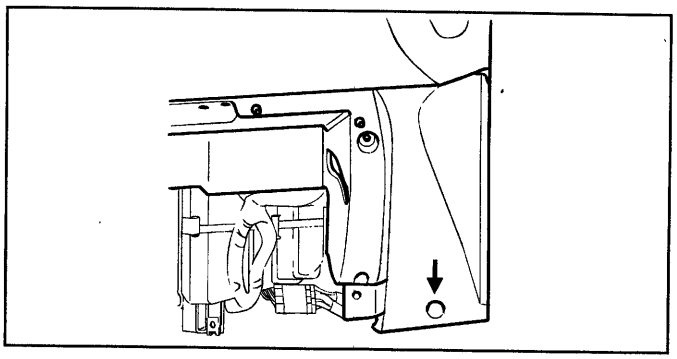

EQJA005B

3. Remove the upper cover of the glove box.

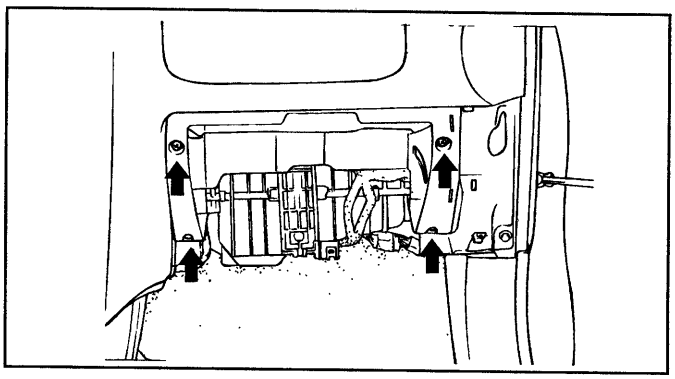

ESJA035L

4. Remove the air filter cover and the air filter.

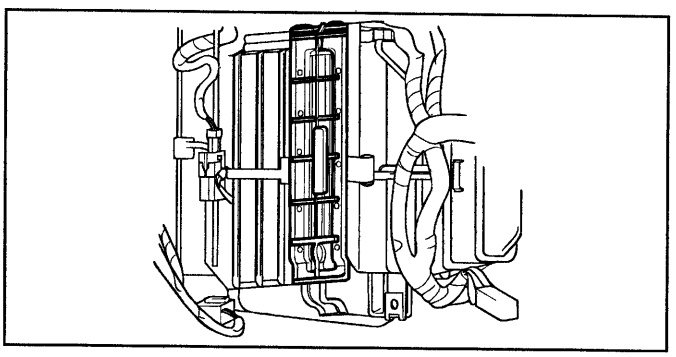

EQJA005A

CAUTION

When driving in an air-polluted area or rugged terrain, check and replace the air filter as frequently as possible.

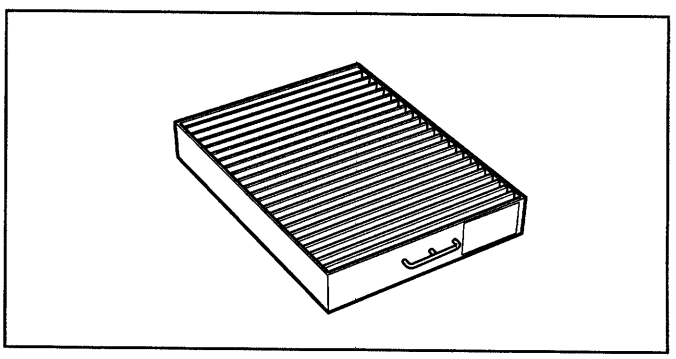

KFWD051A

PERFORMANCE TEST DIAGNOSIS USING MANIFOLD GAUGE EQHA0800

STANDARD VALUE

If cooling cycle is operating normally, the manifold gauge reading will be approx. 1.5–2.0kg/cm^2 for the low pressure side and approx. 14.5–15kg/cm^2 for the high pressure side. Inlet temperature should be 30–35°C, with the engine at 2,000 rpm, maximum cooling selected, and the blower on highest level.

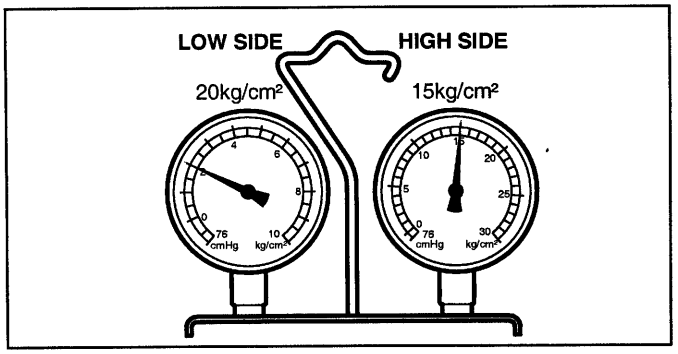

KFWD001A

DIAGNOSIS

SYMPTOMS	PROBABLE CAUSES	REMEDY	MANIFOLD GAUGE READINGS
1. Low pressure and high pressure are low. 2. Cooler outlet air is a little cooler.	• Gas leak.	• Check and repair. • Add refrigerant.	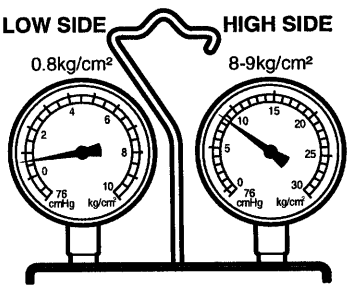 KFWD002A
1. Low pressure and high pressure are high.	• Faulty cooling or condenser freezing. • Belt slip.	• Maintain the proper level of refrigerant. Clean the condenser. • Adjust the belt.	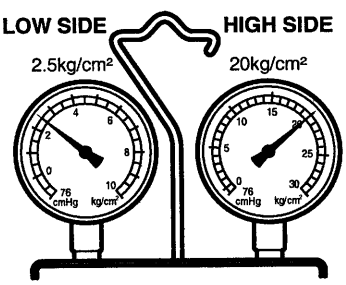 KFWD003A
1. Low pressure and high pressure are high. 2. Low pressure pipe is not cold.	• Air in the system.	• Clean or repair the receiver drier. • Check for oil contamination.	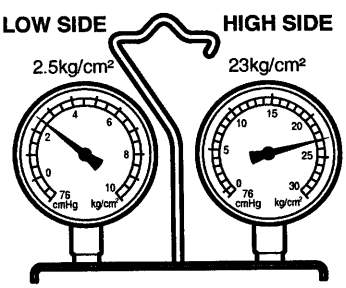 KFWD004A

SYMPTOMS	PROBABLE CAUSES	REMEDY	MANIFOLD GAUGE READINGS
1. Low pressure side indicates negative pressure and high pressure side indicates low pressure. 2. Front or dew on pipes connected with receiver or expansion valve.	• Dust or moisture frozen at expansion valve. • Gas leak.	• Repair the receiver drier and replace the expansion valve. • Replace the expansion valve if the receiver-drier is faulty.	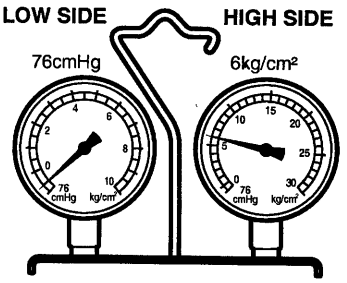 KFWD005A
1. Low pressure side pressure sometimes goes to negative pressure or normal.	• Intaken moisture is frozen at expansion valve hole.	• Repair and bleed receiver drier	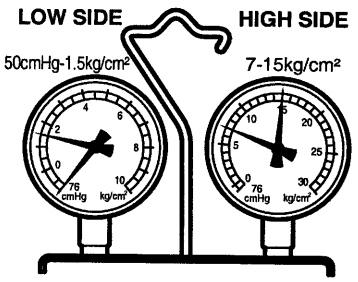 KFWD006A
1. Low pressure and high pressure are high. 2. Much frost or dew on the low pressure side piping.	• Expansion valve failure. Receiver-drier faulty. • Flow control faulty.	• Repair receiver drier. • Check oil contamination.	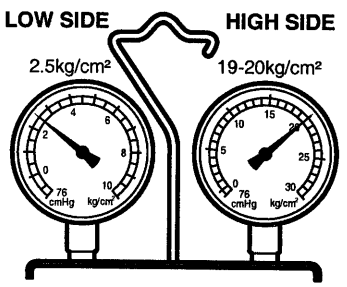 KFWD007A
1. Low pressure side pressure is high and pressure side pressure is low.	• Leak inside compressor.	• Replace compressor.	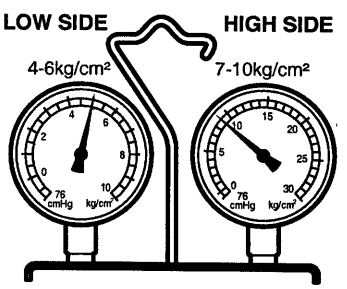 KFWD008A

MANUAL A/C COMPRESSOR CONTROLS

COMPRESSOR

COMPONENTS EQJA1150

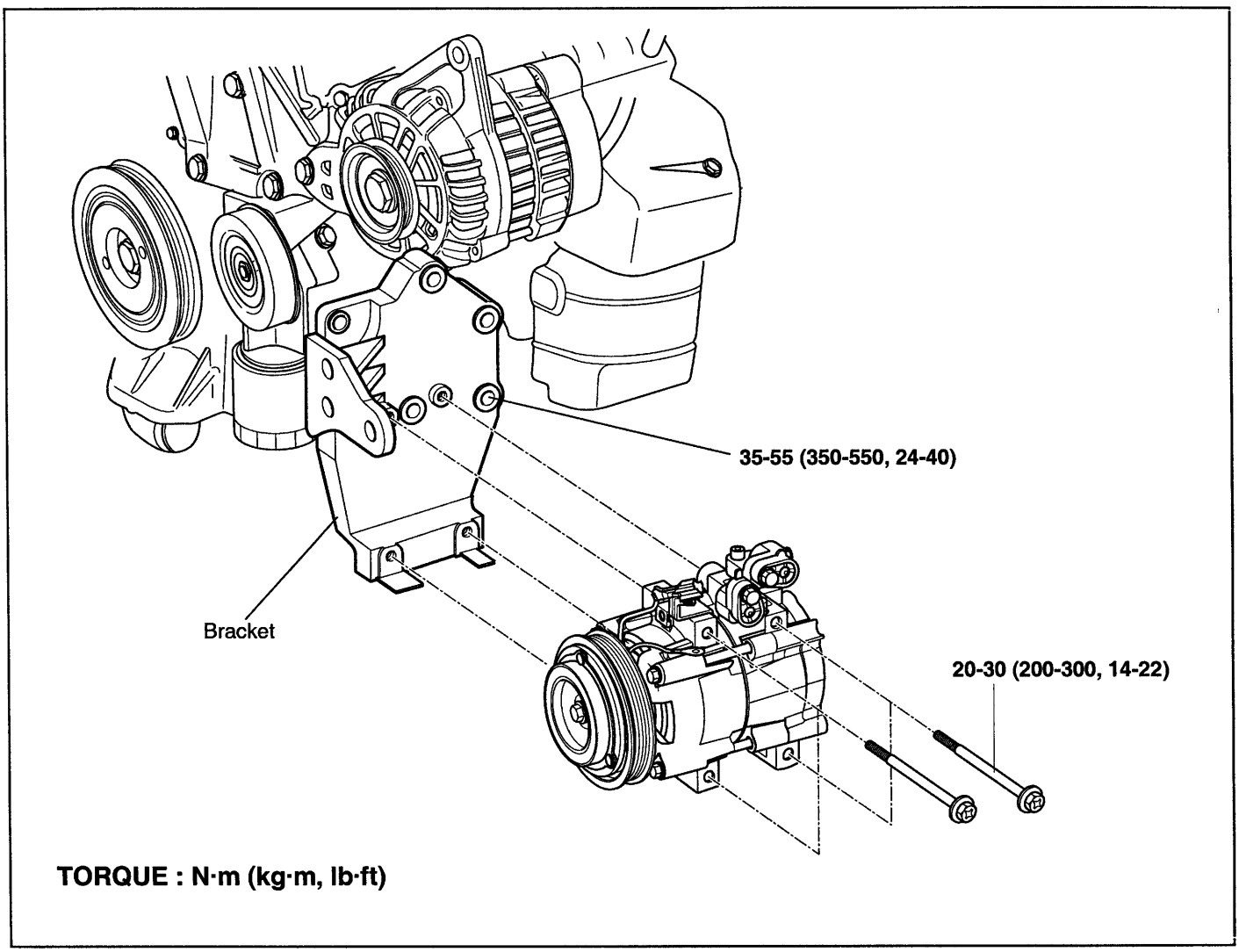

KFWD035A

REMOVAL AND INSTALLATION EQHA1200

1. Remove the drive belt after loosening the tension pulley.
2. Discharge the refrigerant.
3. Remove the discharge and suction hoses.
4. Remove the compressor.
5. Installation is the reverse of removal.

COMPONENTS EQJA1250

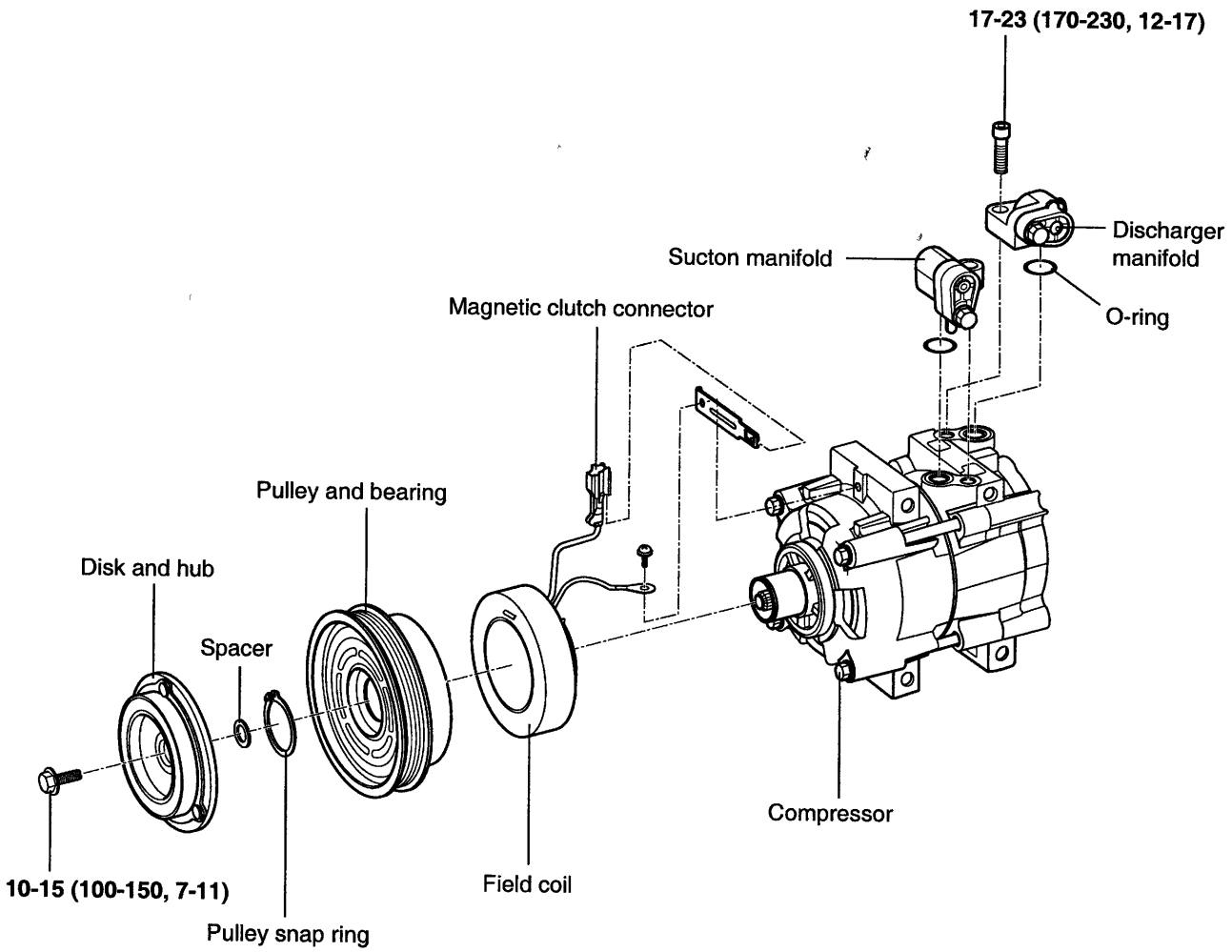

EQJA125A

CLUTCH HUB AND PULLEY EQHA1300

DISASSEMBLY

1. Remove the clutch hub supporting bolt using the Special Tool.

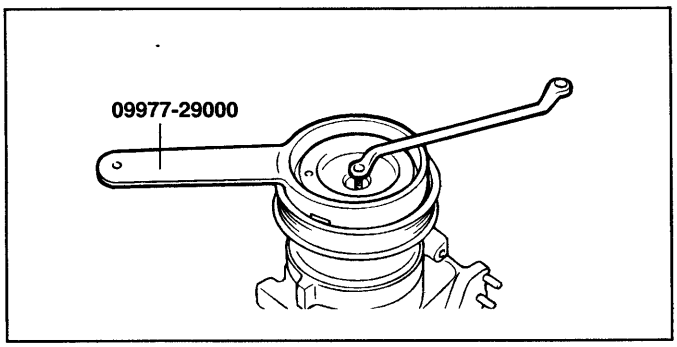

EQA9014A

2. Pull out the clutch hub and shim from the compressor shaft. If it is hard to pull out the hub from compressor, insert an 8mm bolt into the shaft hole to remove the hub from the shaft.
3. Remove the pulley supporting the snap ring.
4. Remove the pulley and bearing assembly from the compressor.

ASSEMBLY

1. Clean the pulley bearing surface of the compressor head and remove dirt and rust.
2. Install the pulley and bearing on the compressor.
3. Install the snap ring with its bevelled side facing out.
4. Place one space shim of specified size over the hub spline and slide the hub onto the compressor shaft end.

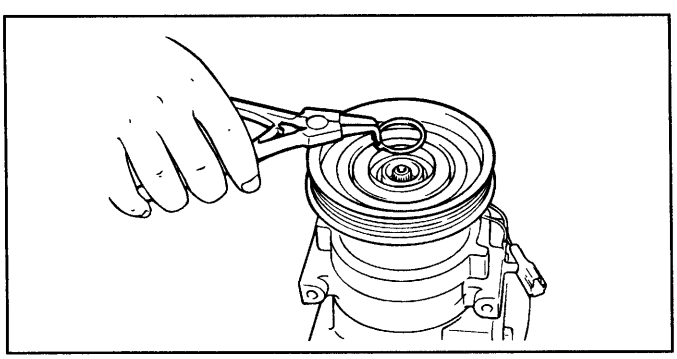

EQA9014B

5. Install a new hub supporting bolt at the compressor shaft end. Tighten the bolt with tightening torque.

Tightening torque : 102~153kg.cm

CAUTION

Do not use air tools.

CLUTCH FIELD COIL

DISASSEMBLY

1. Remove the clutch hub and pulley.

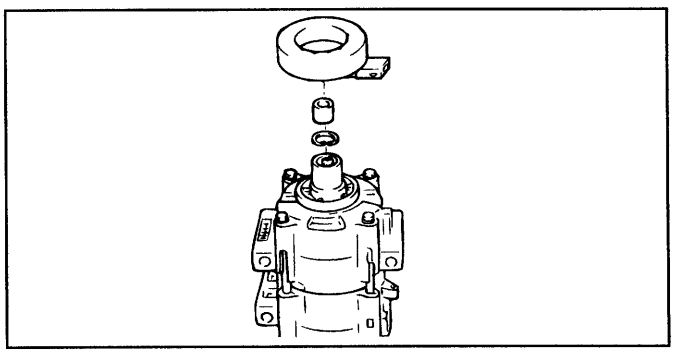

EQHA130A

2. Install a shaft protection tool at the compressor opening.
3. Install the pulley on the compressor.

   Place the puller screw end on the shaft arms center concave and the puller projection around the rear side of the field coil.

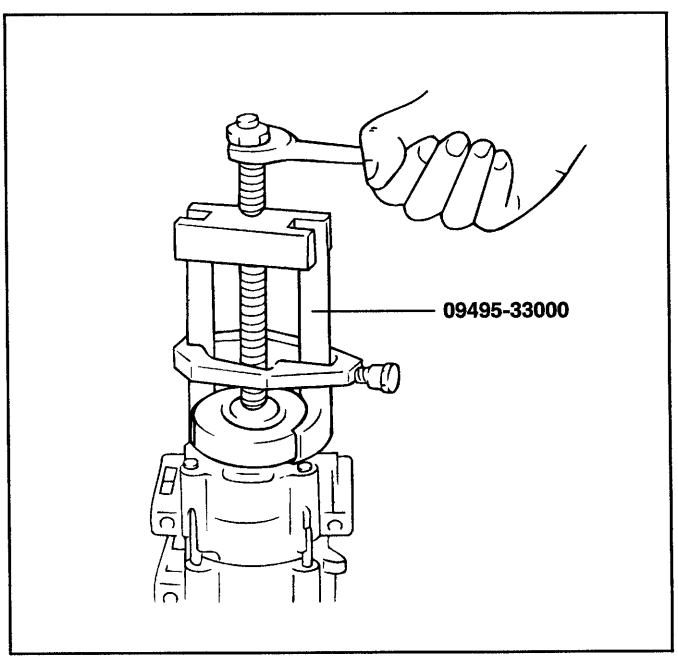

EQHA130B

4. Turn the puller screw using a wrench and remove the coil.

CAUTION

Do not use air tools.

THERMAL FUSE

1. A thermal fuse is located on the compressor clutch coil.

2. The thermal fuse will detect clutch slip heat (184°C off) generated by faulty compressor operation, then interrupt the coil's power supply. Therefore, the clutch bearing and the pulley bearing will not be damaged, also protecting the belt and engine. Once the thermal fuse blows the compressor will not operate. Check the clutch oil resistance (3.0–3.2Ω) to determine the thermal fuse condition, and replace the clutch coil if required.

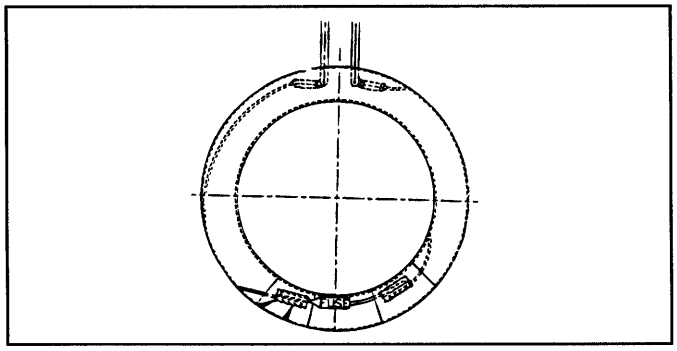

HEW97018

CHECKING THE CLUTCH AIR GAP

1. Check the air gap between the clutch hub and pulley contact surface using a feeler gauge.

Clutch air gap : 0.35~0.65mm

2. Check the gap around the pulley at 3 points.

3. If the clutch air gap is outside the normal range, correct it using a shim of proper size.

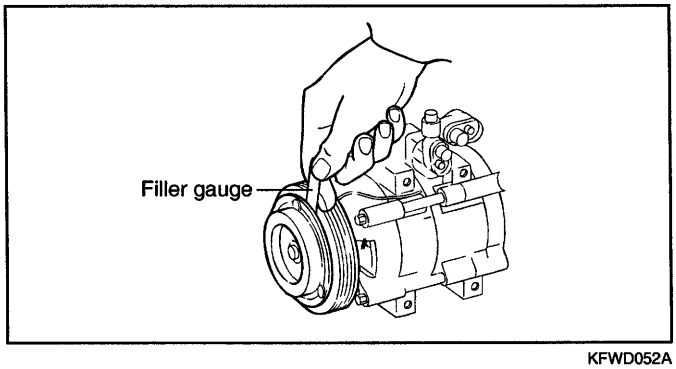

KFWD052A

MAGNETIC CLUTCH OPERATION

Connect the compressor terminal to battery(+) and the battery(-) terminal to the compressor body. Verify magnetic clutch operation by a clicking noise.

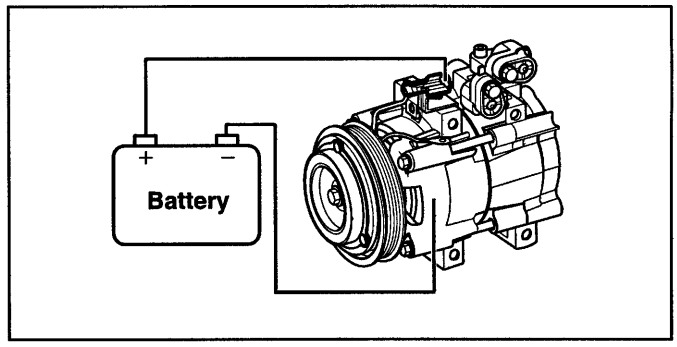

KFWD053A

CONDENSER FAN AND RELAY

CONDENSER FAN AND RELAY EQJA1350

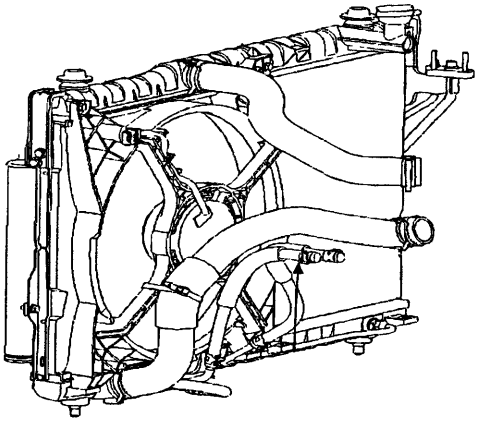

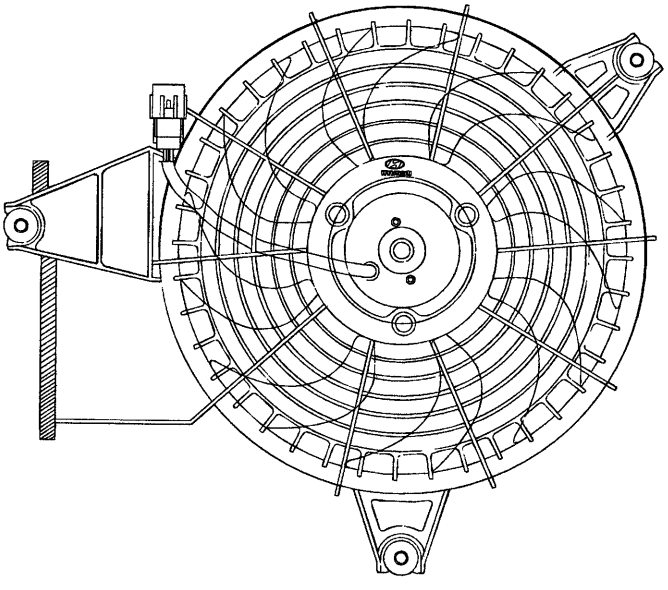

Condenser fan

EQJA013D/EQJA013B

EQJA135A

CHECKING EQJA1400

CONDENSER

1. Check the condenser fins for clogging and damage. If clogged, clean them with water, and blow them with compressed air. If bent, gently bend them using a screwdriver or a pliers.
2. Check the condenser connections for leakage, and repair or replace it, if required.

CONDENSER FAN

1. Check the condenser fan for proper operation.
2. Check the harness connector.
3. Check the condenser fan motor using battery voltage as shown below.

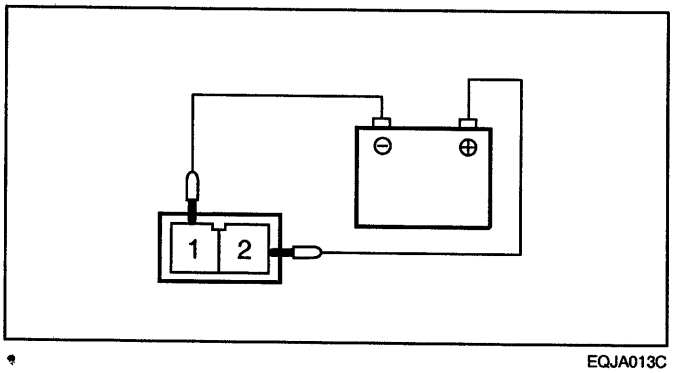

EQJA013C

RECEIVER/DRIER

RECEIVER/DRIER EQHA1450

1. Check the fusible plug and the fittings for leakage, using a leak detector.

2. Run the engine at fast idle with the air conditioning "ON", and check both the inlet and outlet temperatures. If the difference in temperatures between the inlet and outlet is large, replace the receiver-drier.

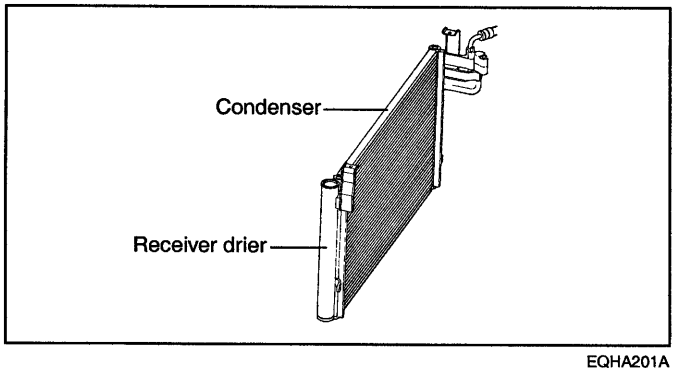

EQHA201A

NOTE

1. **Plug the all open fittings immediately to keep moisture out of the system.**
2. **Do not remove plugs until ready for connection.**
3. **If the receiver-drier is replaced with a new unit, add 40cc of compressor oil to the compressor.**
4. **Evacuate, charge and test the refrigeration system.**

TRIPLE PRESSURE SWITCH

TRIPLE SWITCH EQJA1500

The triple switch is a combination of a medium switch as well as conventional low pressure and high pressure switches. The low pressure switch will be turned off to stop compressor operation if refrigerant pressure is low. The high pressure switch will be turned off to stop compressor operation if refrigerant pressure is too high. The medium switch will be turned on at medium level pressure to cool the A/C system operating radiator fan and condenser fan at high speed.

OPERATING CHARACTERISTIC

kg·cm²

Pressure	ON	OFF
High	32.0 ± 2.0	26.0 ± 2.0
Low	2.3 ± 0.25	2.0 ± 0.2
Medium	15.5 ± 0.8	11.5 ± 1.2

EQJA150B

LOW & HIGH

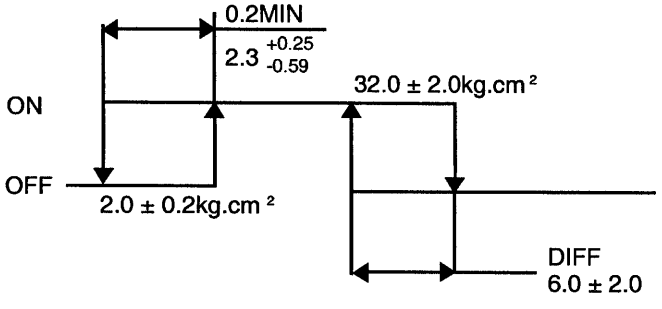

EQHA150A

MEDIUM

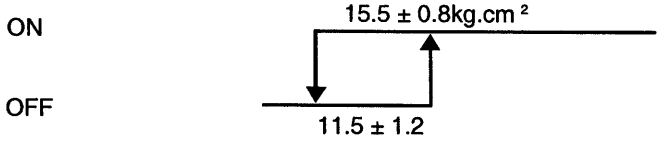

EQHA150C

CONTROL PANEL EQJA1000

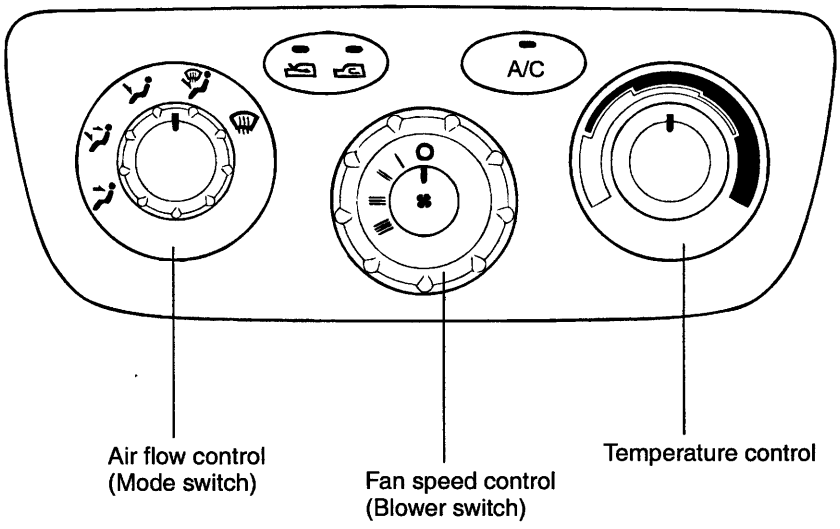

M35

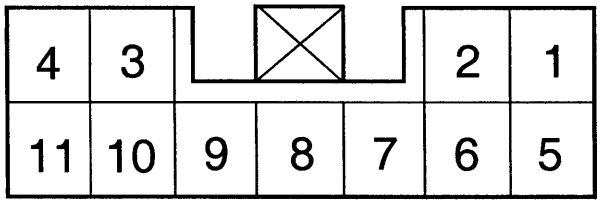

A/CON. switch

EQJA100A/CR11F003

EQJA100A

SCHEMATIC DIAGRAM EQJA1050

BLOWER AND A/C CONTROLS (MANUAL) (1)

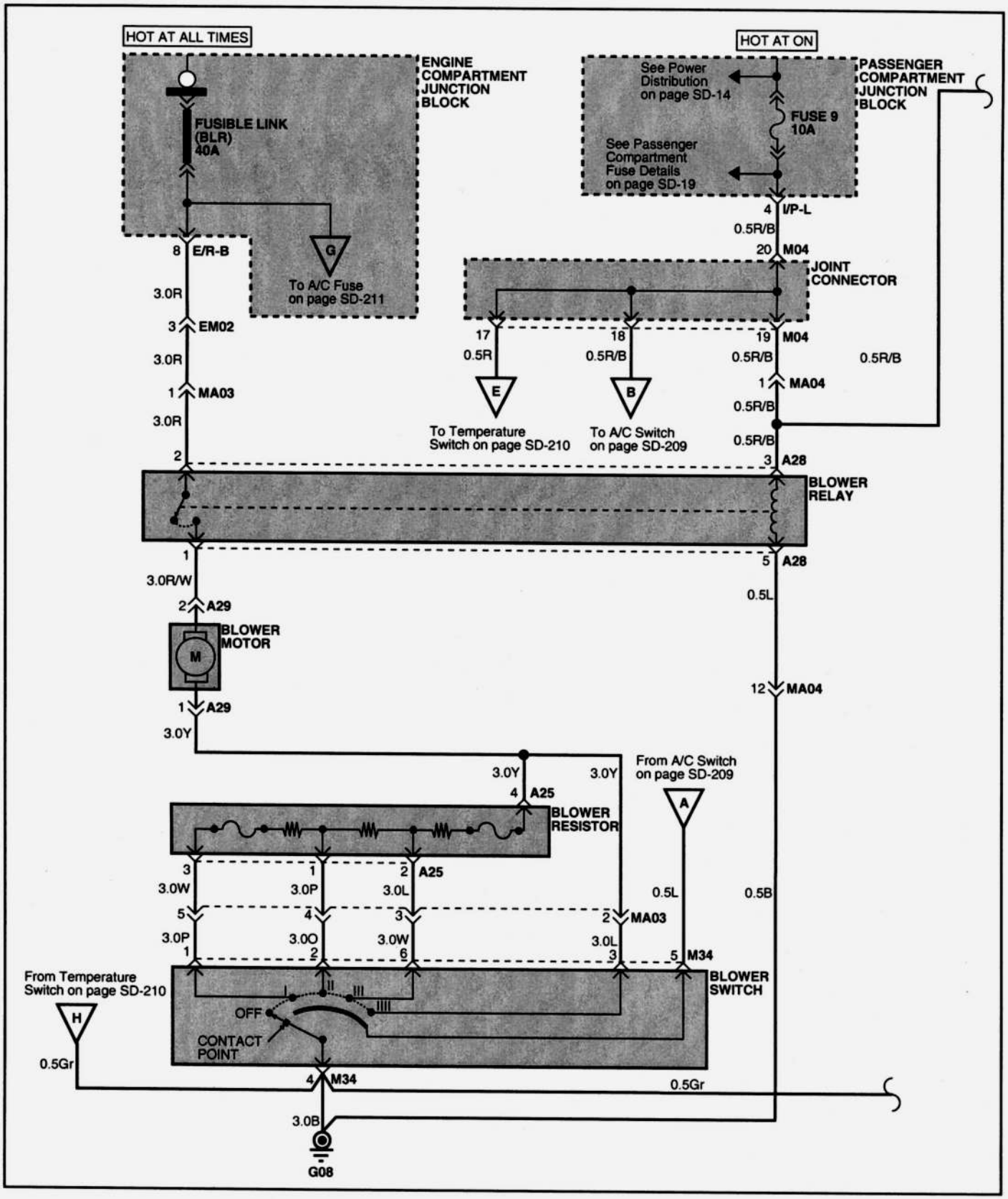

EQJA105A

BLOWER AND A/C CONTROLS (MANUAL) (2)

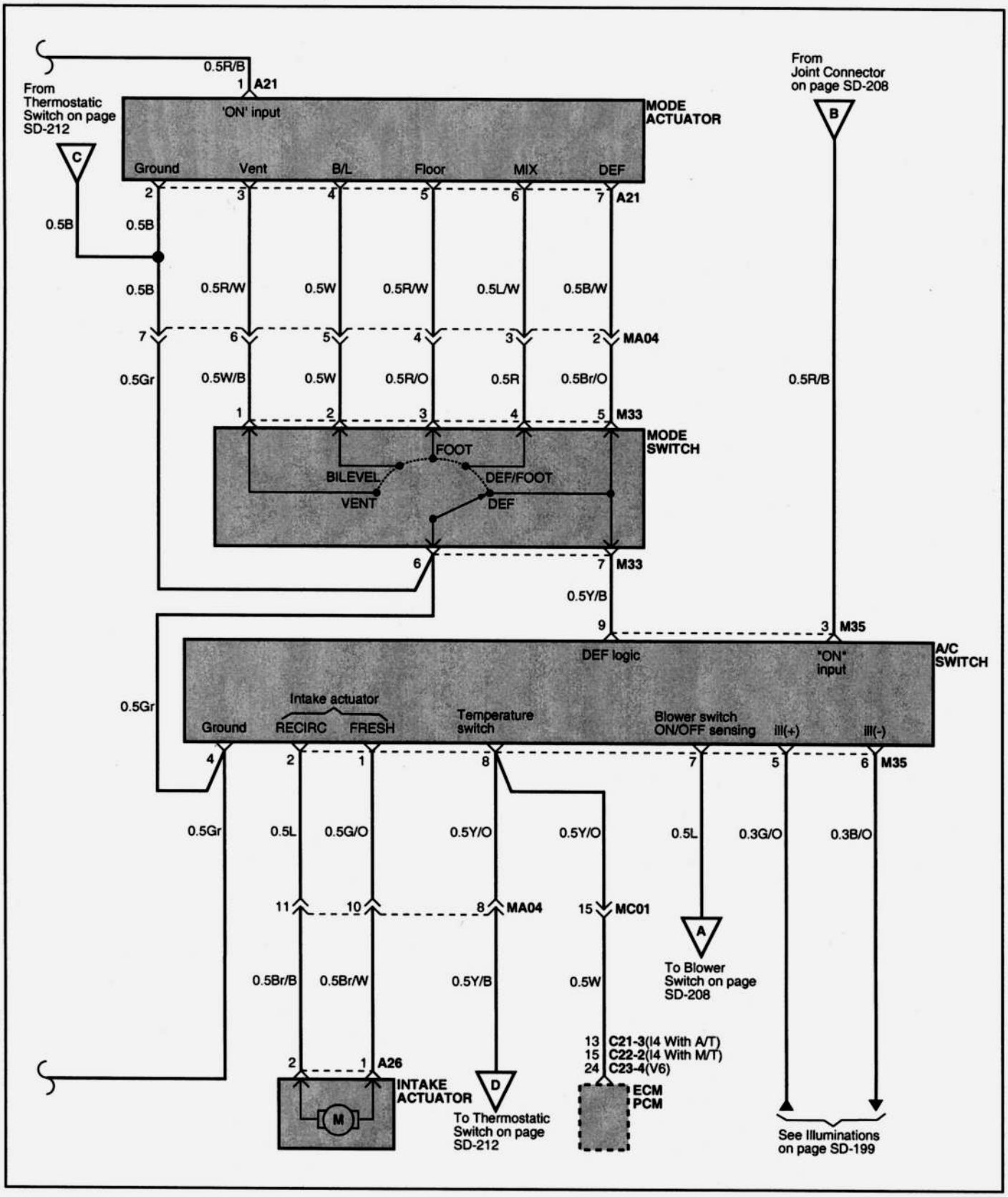

EQJA105B

BLOWER AND A/C CONTROLS (MANUAL) (3)

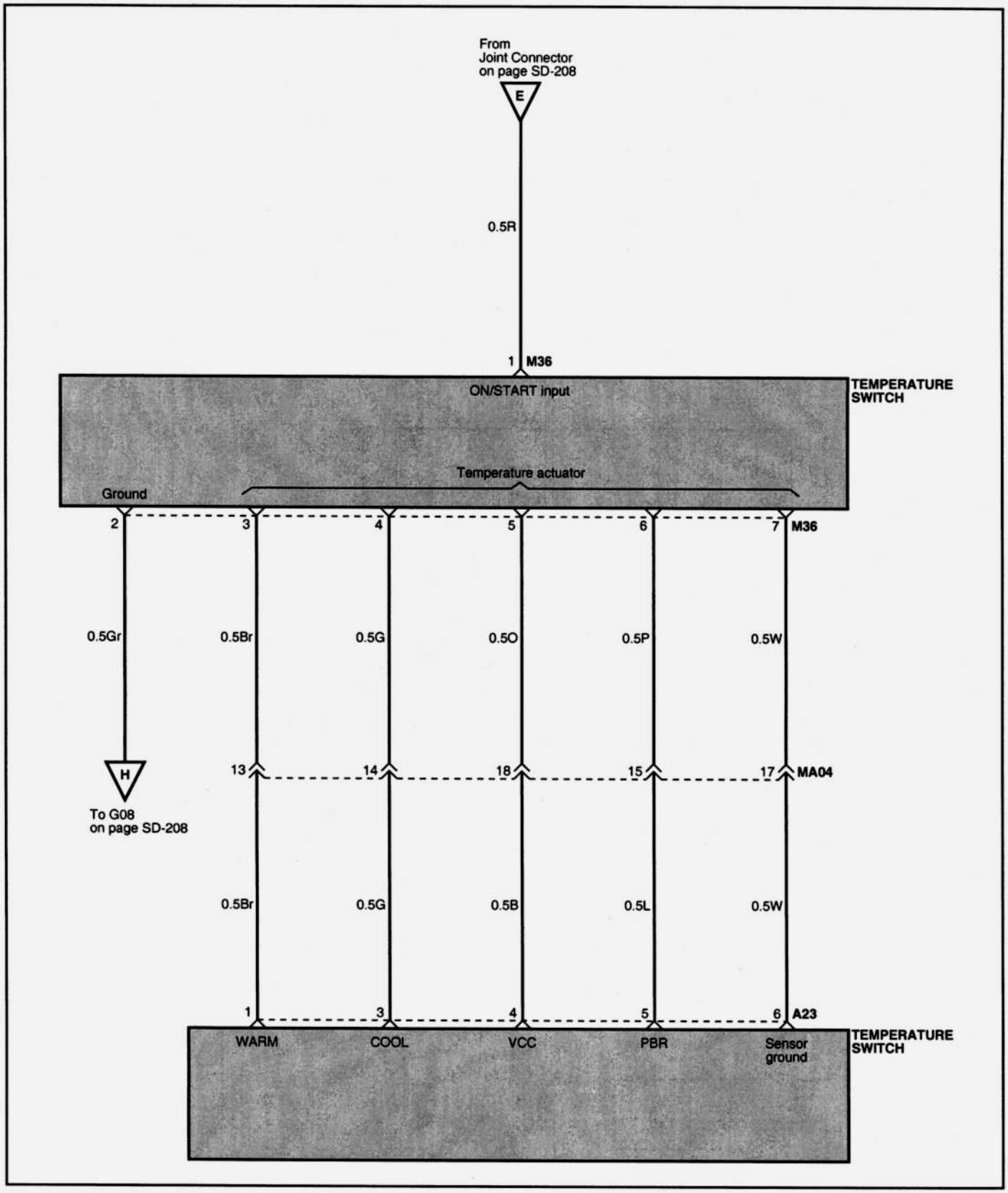

EQJA105C

BLOWER AND A/C CONTROLS (MANUAL) (4)

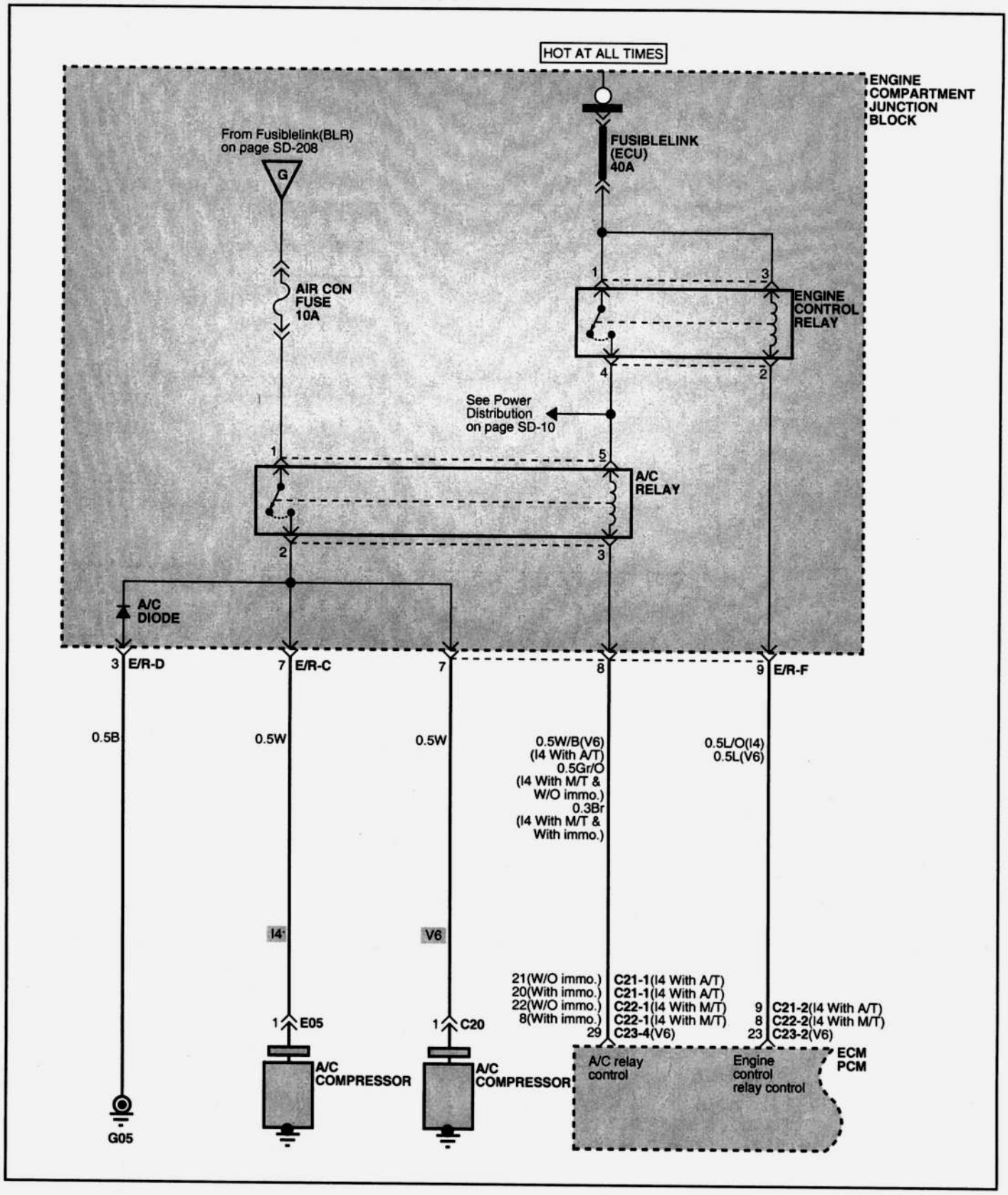

EQJA105D

BLOWER AND A/C CONTROLS (MANUAL) (5)

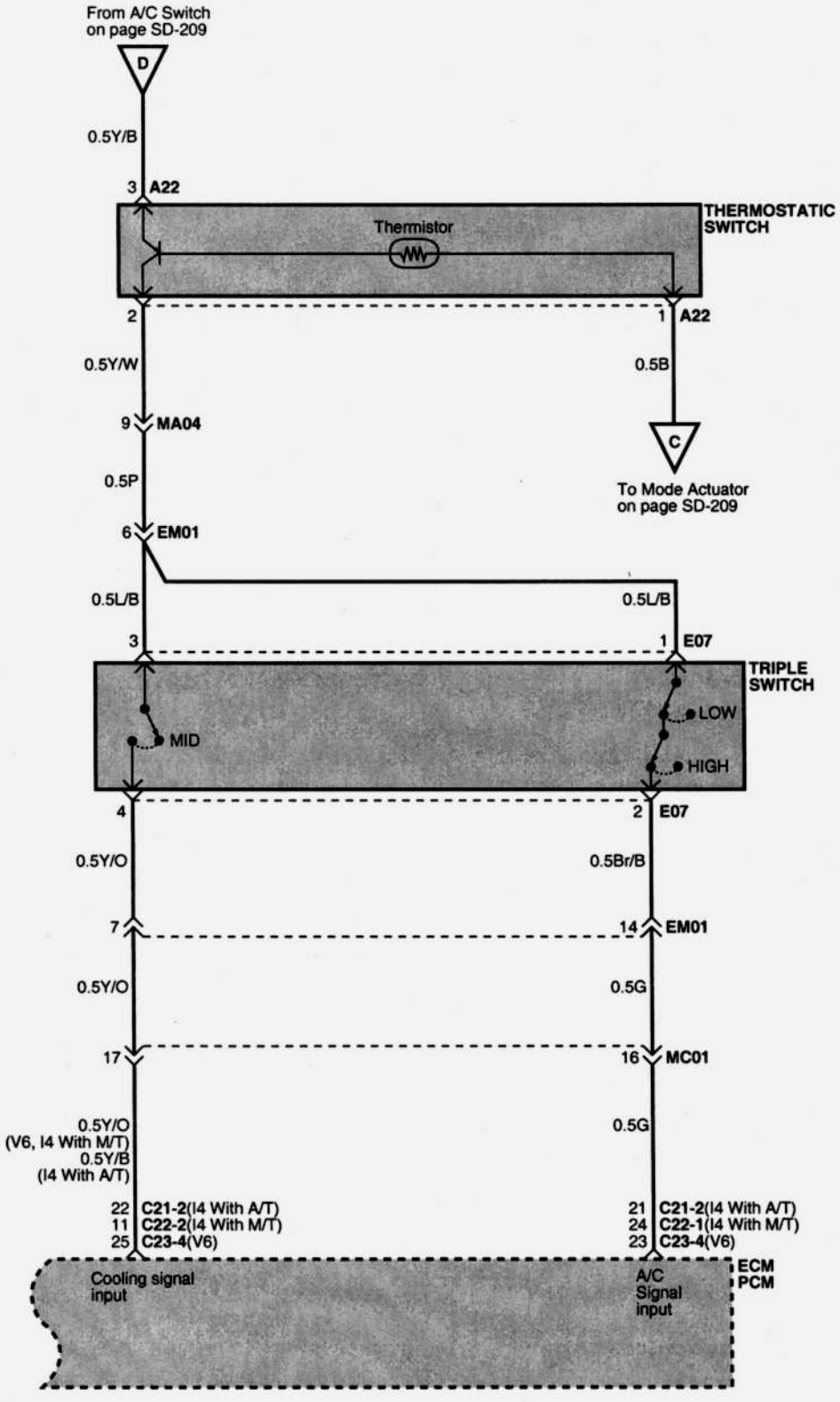

EQJA105E

SWITCH OPERATION AND FEATURES B670A01O

HEATING AND VENTILATION

There are four controls for the heating and cooling system. They are:

1. Air flow control.
   This is used to direct the flow of air. Air can be directed to the floor, dashboard outlets, or windshield. Five symbols are used to represent Face, Bi-Level, Floor, Floor-Defrost and Defrost air positions.
2. Air intake control.
   This allows you to select fresh outside air or recirculation inside air.
3. Fan speed control.
   This is used to turn the fan on and select the fan speed.
4. Temperature control.
   This is used to turn the heating system on and off and to select the degree of heating or cooling desired.

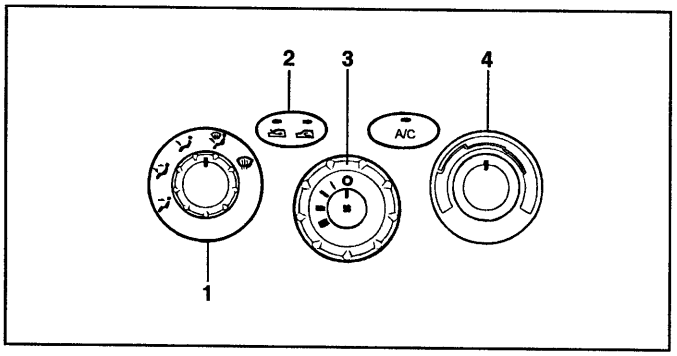

B670A01G

FAN SPEED CONTROL (BLOWER CONTROL) B670B01A

This is used to turn the blower fan on and off and to select the fan speed. The blower fan speed, and therefore the volume of air delivered from the system, may be controlled manually by setting the blower control between the "1" and "4" position.

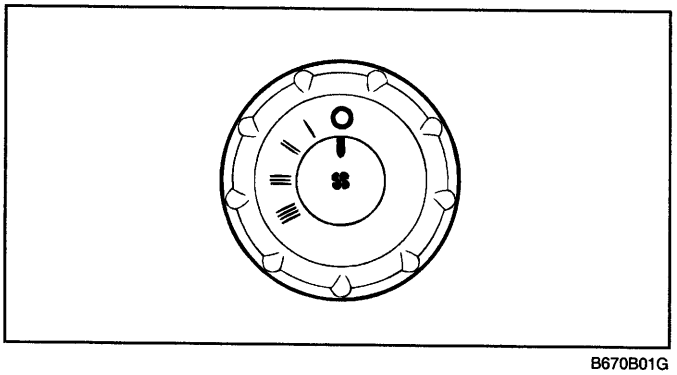

B670B01G

AIR INTAKE CONTROL B670C01A

This is used to select fresh outside air or recirculation inside air.

Fresh
Recirculation

FRES-REC

With the **"Fresh"** mode selected, air enters the vehicle from outside and is heated or cooled according to the other functions selected. With the **"Recirculation"** mode selected, air from within the passenger compartment is drawn through the heating system and heated or cooled according to the other functions selected.

NOTE

It should be noted that prolonged operation of the heating system in "Fresh" mode will give rise to fogging of the windshield and side windows and the air within the passenger compartment will become stale. In addition, prolonged use of the air conditioning with the "Recirculation" mode selected may result in the air within the passenger compartment becoming excessively dry.

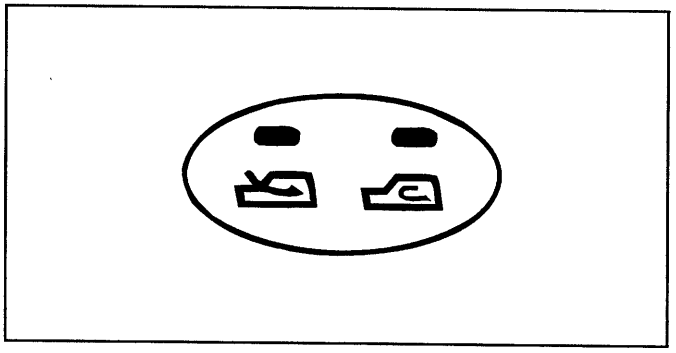

B670C01G

AIR FLOW CONTROL B670D01A

This is used to direct the flow of air. Air can be directed to the floor, dashboard outlets, or windshield. Five symbols are used to represent Face, Bi-Level, Floor, Floor-Defrost and Defrost air position.

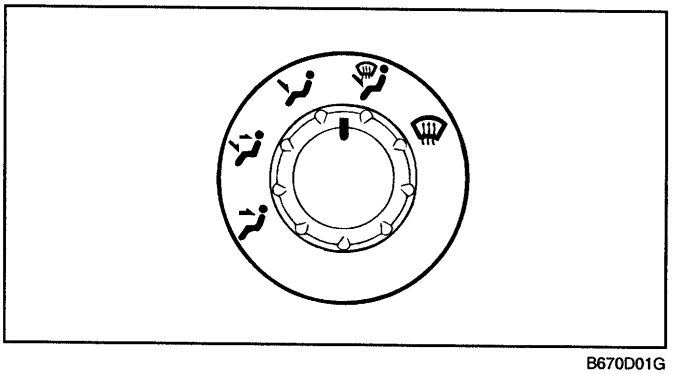

B670D01G

FACE-LEVEL

Selecting the "Face" mode will cause air to be discharged through the face-level vents.

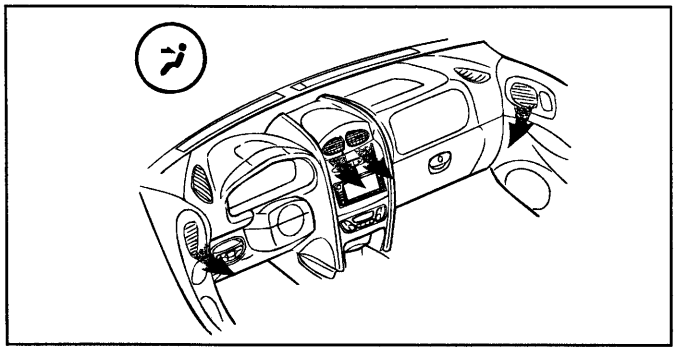

B670D02G

BI-LEVEL

Air is discharged through the face-level vents and the floor vents. This makes it possible to have cooler air from the dashboard vents and warmer air from the floor outlets at the same time.

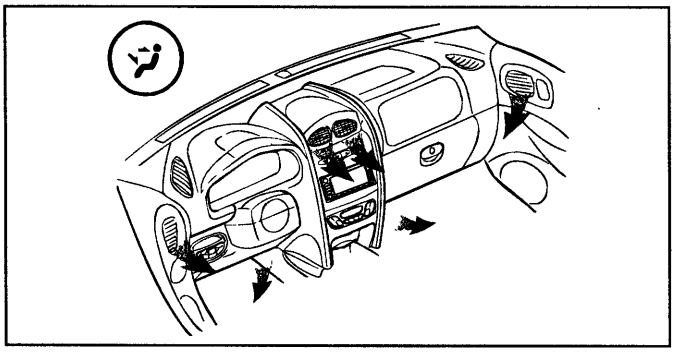

B670D03G

FLOOR-LEVEL

Air is discharged through the floor vents.

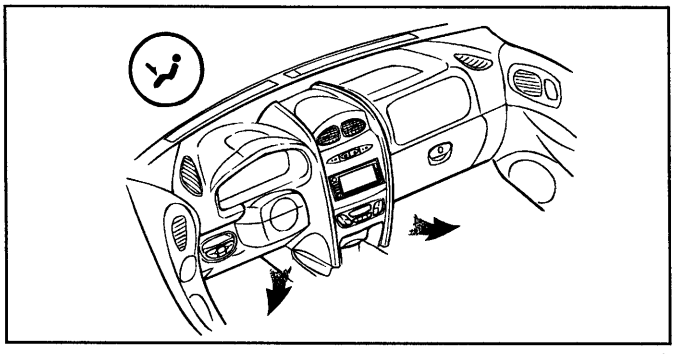

B670D04G

FLOOR-DEFROST LEVEL

Air is discharged through the windshield defrost vents and the floor vents.

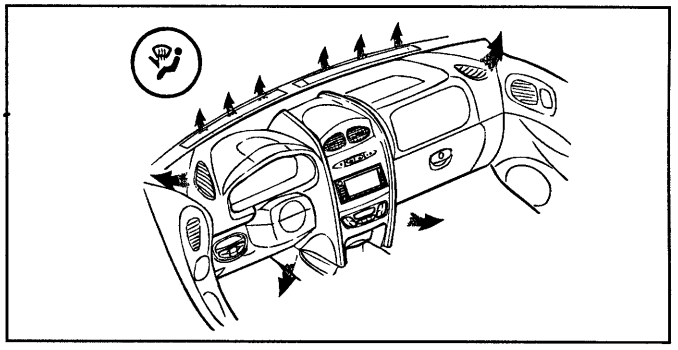

B670D05G

DEFROST-LEVEL

Air is discharged through the windshield defrost vents.

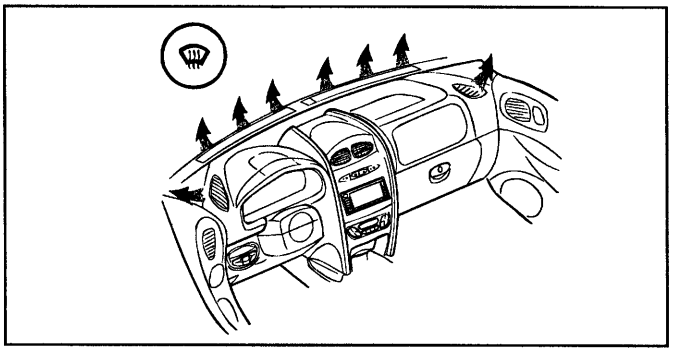

B670D06G

TEMPERATURE CONTROL B670E01A

This is used to turn the heating system on and off and to select the degree of heating or cooling desired.

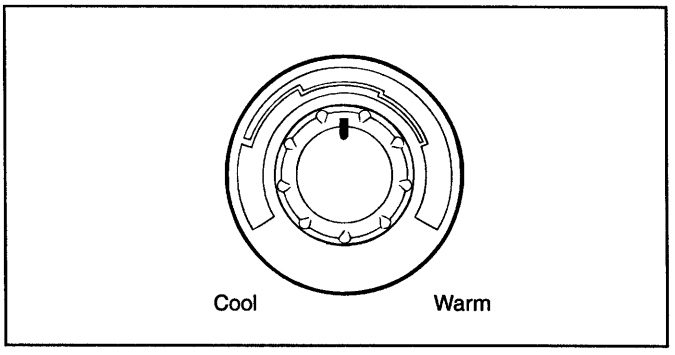

B670E01G

HEATING CONTROLS B690A01O

For normal heating operation, set the air intake control to the fresh air (**Fresh**) position and the air flow control to the floor (**Floor-Level**) position.

For faster heating, the air intake control should be set in the recirculate (**Recirculation**) position.

If the windows fog up, set the air flow control to the defrost (**Defrost-Level**) position and the air intake control to the fresh air (**Fresh**) position.

For maximum heat, move the temperature control to "Warm".

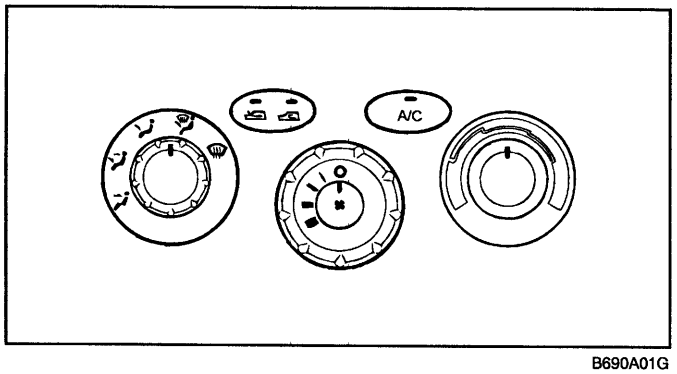

B690A01G

BI-LEVEL HEATING B700A01O

Your Hyundai is equipped with bi-level heating controls. This makes it possible to have cooler air from the dashboard vents and warmer air from the floor outlets at the same time. To use this feature:

- Set the air intake control to the fresh air (**Fresh**) position.
- Set the air flow control at the bi-level (**Bi-level**) position.
- Set the temperature control between "Cool" and "Warm".

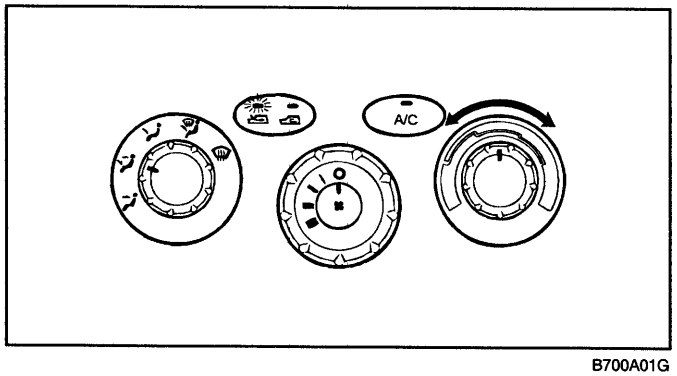

B700A01G

VENTILATION B710A01O

To operate the ventilation system:

- Set the air intake control at the fresh air (**Fresh**) position.
- To direct all intake air to the dashboard vents, set the airflow control to the face (**Face-Level**) position.
- Adjust the fan speed control to the desired speed.
- Set the temperature control between "Cool" and "Warm".

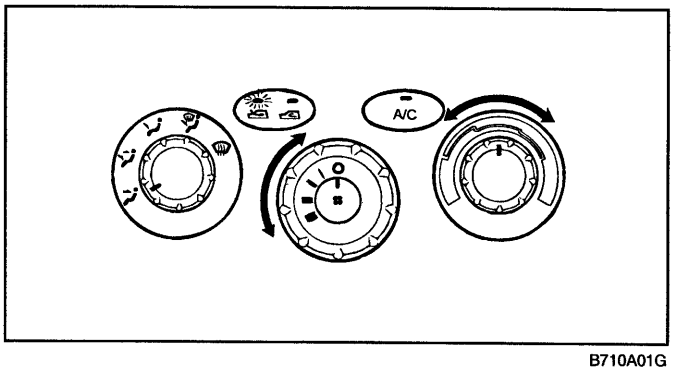

B710A01G

CENTER VENTILATOR B710B01A

The center ventilators are located in the middle of the dashboard. To change the direction of the airflow, move the control knob on the middle of the ventilator as desired.

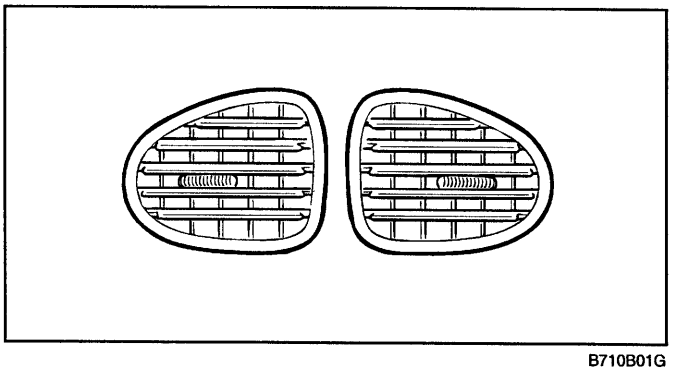

B710B01G

SIDE VENTILATOR B710C01O

The side ventilators are located on each side of the front door. The side vent knobs control the amount of outside air entering the vehicle through the side vents. These vents can also be closed, so no air enters through the side vents. To change the direction of the air flow, turn the control knobs as desired.

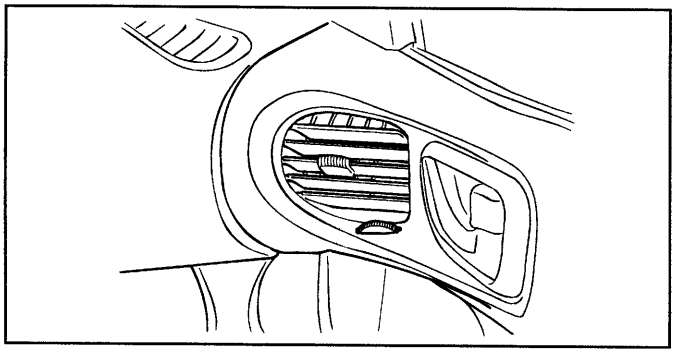

B710C01G

DEFROSTING/DEFOGGING B720A05Y

To remove the interior fog on the windshield;

- Set the air flow control to the defrost (**Defrost-Level**) position.
- Set the air intake control to the fresh air (**Fresh**) position.
- Set the temperature control at the desired position.
- Set the fan speed control between the 1 and 4 position.
- If vehicle is so equipped, push on the A/C for increased defogging action.

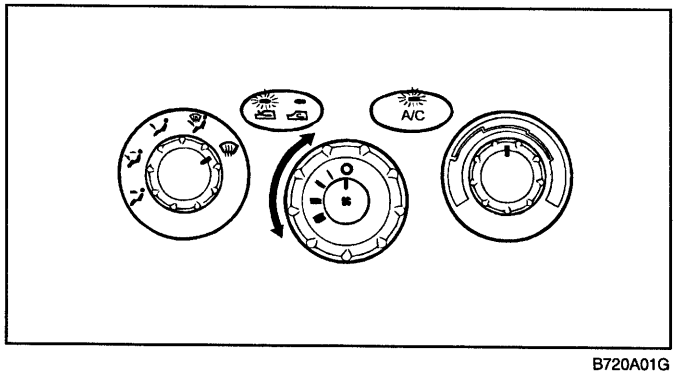

B720A01G

To remove the frost or exterior fog on the windshield;

- Set the air flow control to the defrost (**Defrost-Level**) position.
- Set the air intake control to the fresh (**Fresh**) position.
- Set the temperature control to the warm.
- Set the fan speed control to position 3 or 4.

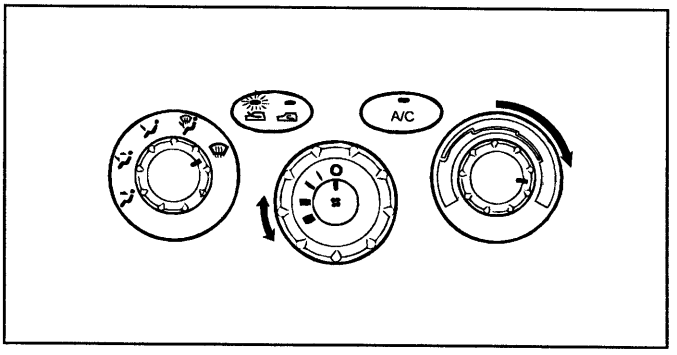

B720B01G

OPERATION TIPS B730A01O

- To keep dust or unpleasant fumes from entering the car through the ventilation system, temporarily set the air intake control at the **Recirculation** position. Be sure to return the control to the **Fresh** position when the irritation has passed to keep fresh air in the vehicle.
- Air for the heating/cooling system is drawn in through the grilles just ahead of the windshield. Care should be taken that these are not blocked by leaves, snow, ice or other obstructions.

AIR CONDITIONING SYSTEM B740A01S

AIR CONDITIONING SWITCH

The air conditioning is turned on or off by pushing the A/C button on the heating/air conditioning control panel.

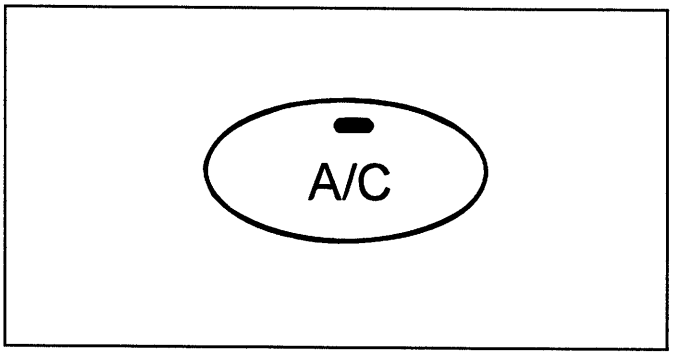

B740A01G

AIR CONDITIONING OPERATION (IF INSTALLED) B740B01O

COOLING

To use the air conditioning to cool the interior:

- Set the side vent control to shut off the outside air entry.
- Turn on the fan control switch.
- Turn on the air conditioning switch by pushing in on the switch. The air conditioning indicator light should come on at the same time.
- Set the air intake control to the fresh air (**Fresh**) position.
- Set the temperature control to "Cool". (Cool" provides maximum cooling. The temperature may be moderated by moving the control toward "Warm".)
- Adjust the fan control to the desired speed. For greater cooling, turn the fan control to one of the higher speeds or temporarily select the recirculate (**Recirculation**) position on the air intake control.

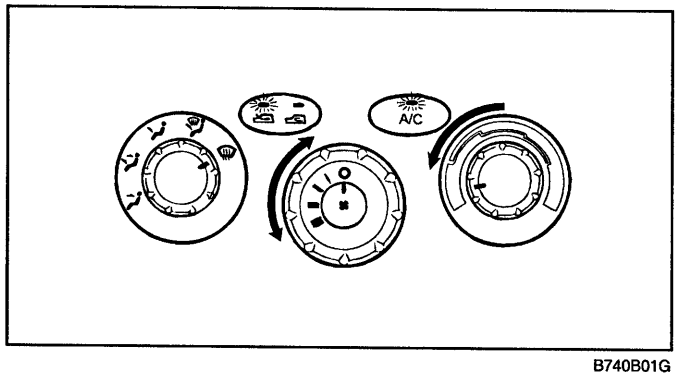

B740B01G

DE-HUMIDIFIED HEATING B740C01O

For dehumidified heating:

- Turn on the fan control switch.
- Turn on the air conditioning switch. The air conditioning indicator light should come on at the same time.
- Set the air intake control to the fresh air (**Fresh**) position.
- Set the air flow control to the face (**Face-Level**) position.
- Adjust the fan control to the desired speed.
- For more rapid action, set the fan at one of the higher speeds.
- Adjust the temperature control to provide the desired amount of warmth.

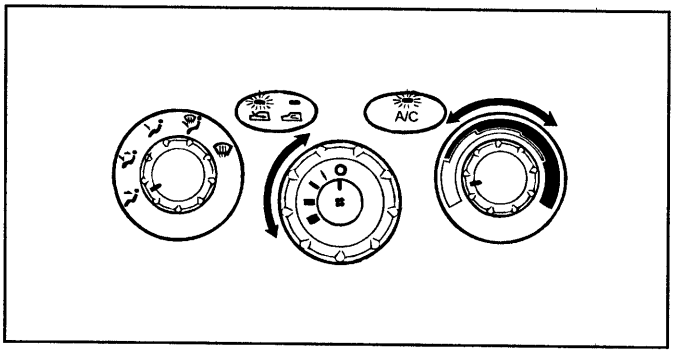

B740C01G

FULL AUTO A/C COMPRESSOR

FULL AUTOMATIC AIR CONDITIONER (FATC) EQJB1000

CONTROL PANEL

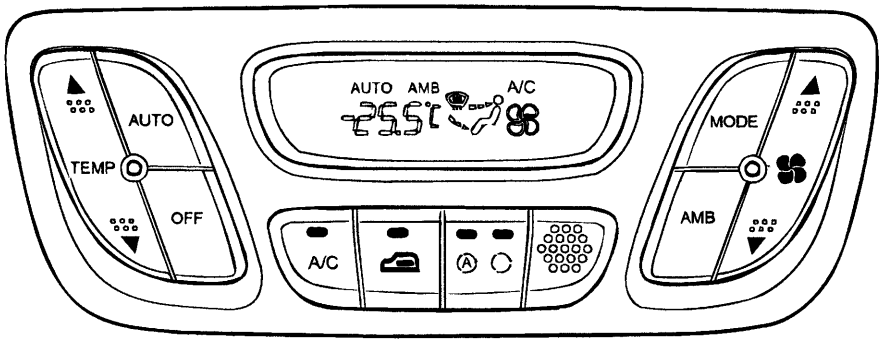

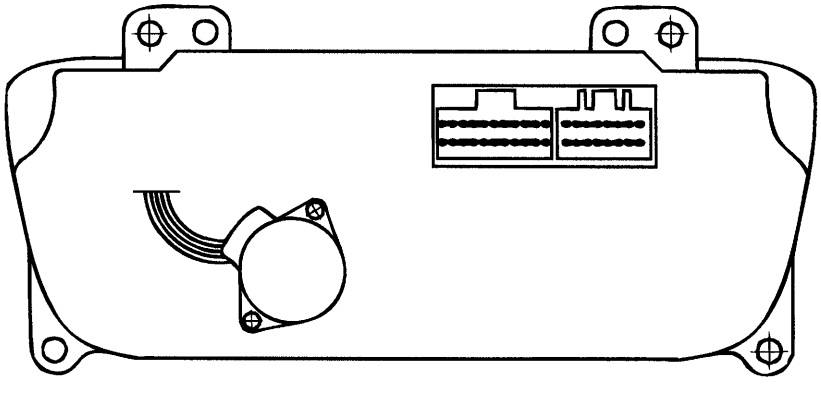

M32-1

1	2	3	4	5	6	7	8	9	10
11	12	13	14	15	16	17	18	19	20

M32-1

1	2	3	4	5	6	7	8
9	10	11	12	13	14	15	16

EQJA011A/EQJA011B

EQJB100A

SCHEMATIC DIAGRAM EQJB1050

BLOWER AND A/C CONTROLS (FULL AUTO) (1)

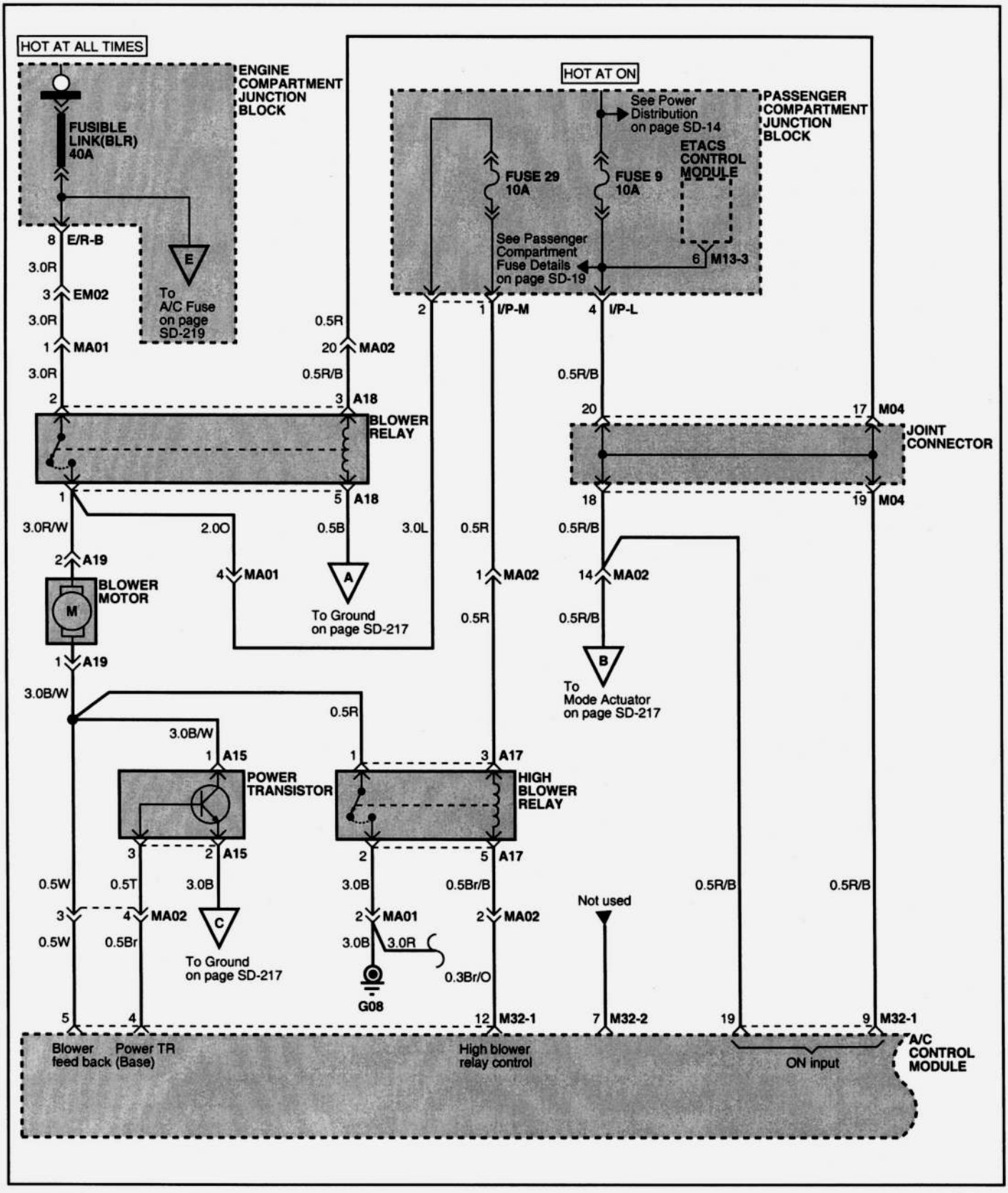

EQJB105A

BLOWER AND A/C CONTROLS (FULL AUTO) (2)

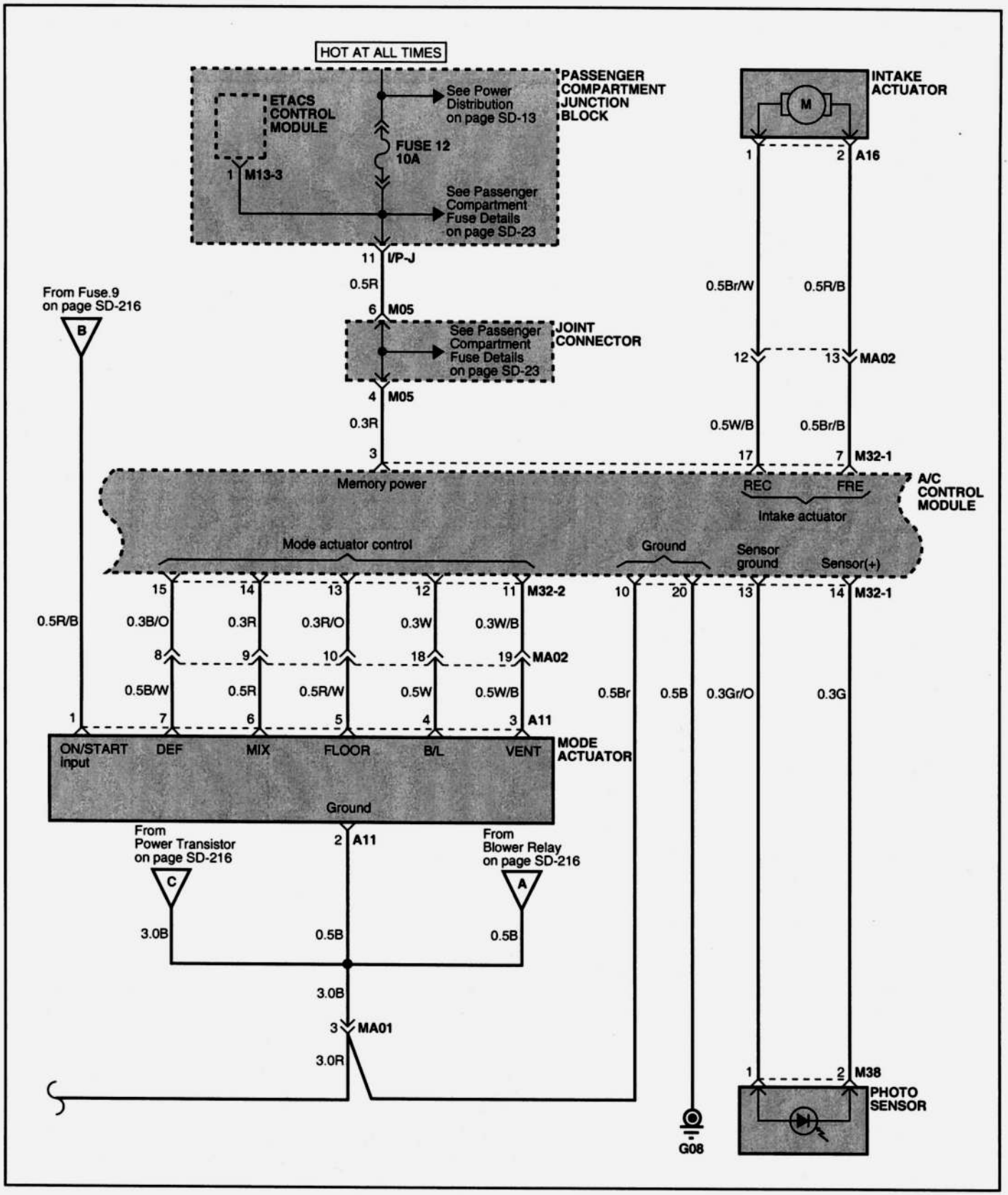

EQJB105B

BLOWER AND A/C CONTROLS (FULL AUTO) (3)

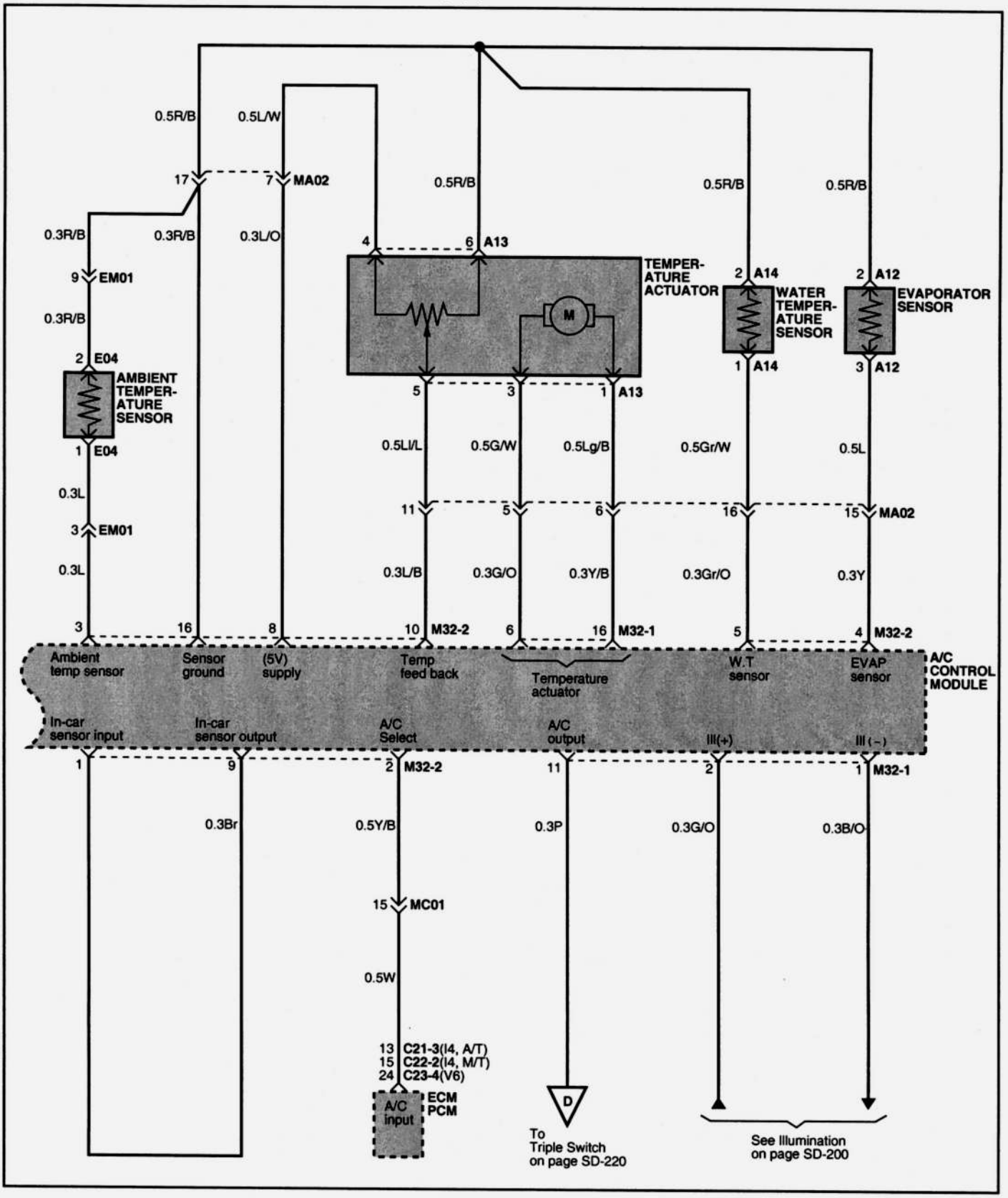

EQJB105C

BLOWER AND A/C CONTROLS (FULL AUTO) (4)

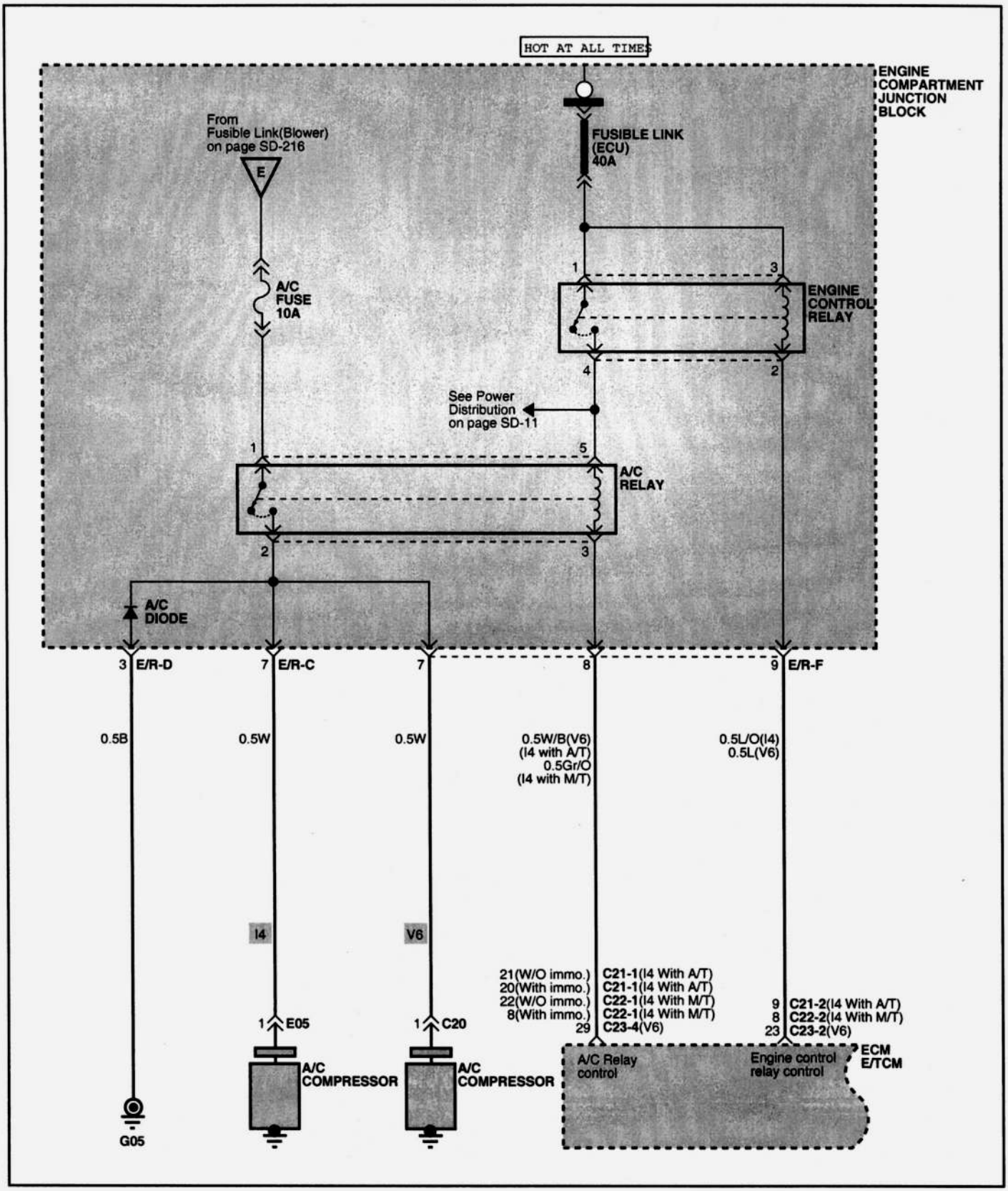

EQJB105D

BLOWER AND A/C CONTROLS (FULL AUTO) (5)

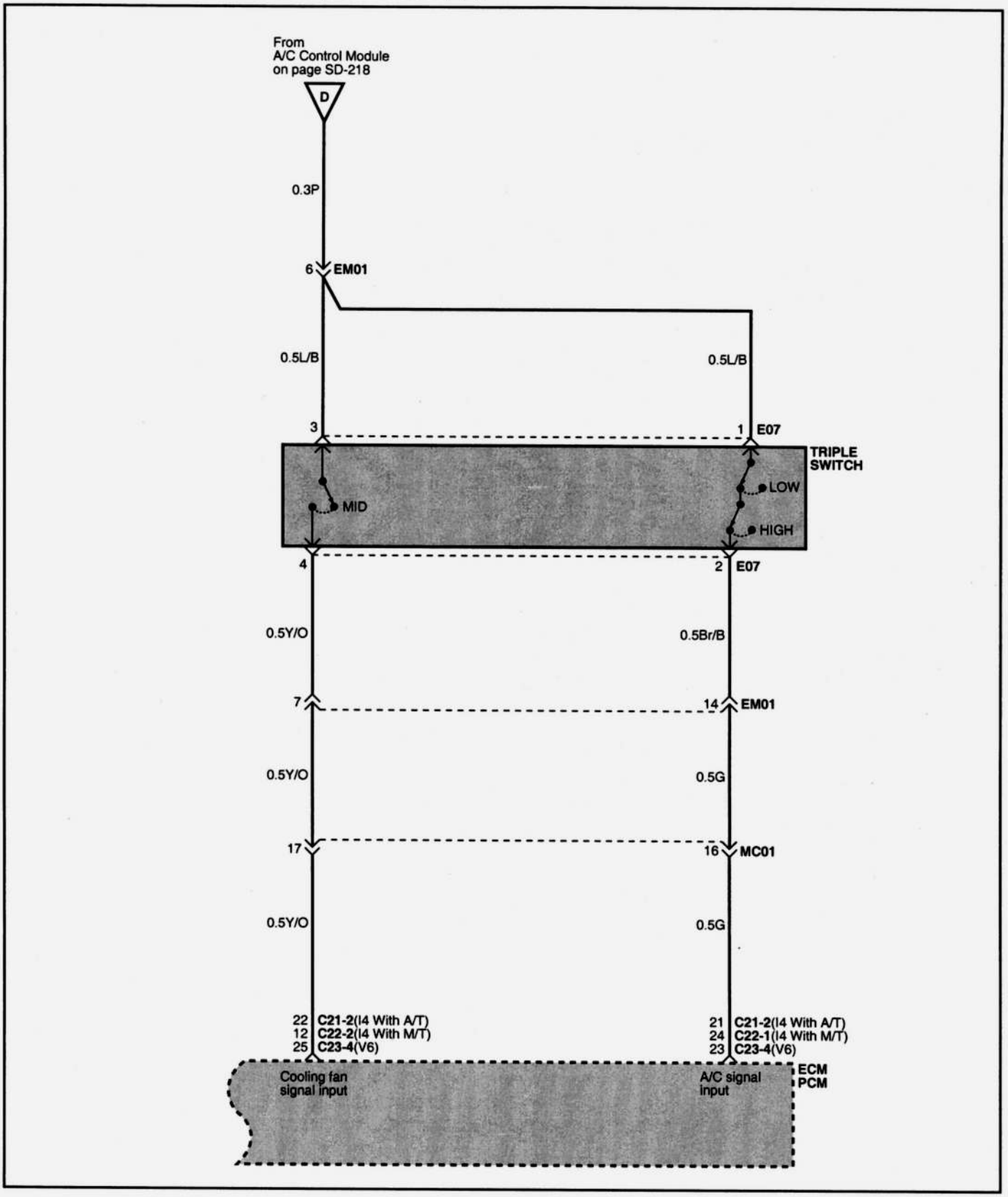

EQJB105E

SWITCH OPERATION AND FEATURES EQJA1010

1. Full auto air conditioning system: One-touch button type.
2. Manual air conditioning system: Combination of dial switch and one-touch button.

CONTROL PANEL SWITCHES WILL GENERATE BUZZER SOUND ON OPERATION

Button	Function	Display	System operation	Stop switch and system operation
Temperature switch (Temperature control) (Manual air-conditioning systems have dial type switches)	Temperature setting UP/ DOWN	Temperature setting indication Range: 17°C-32°C Scale: 0.5°C User may chose the temperature indication between °C/°F. 17°C=62°F 32°C=90°F 25°C=77°F	1. The switch will operate temperature door to regulate cool/ warm air ratio and resultingly control discharge air control. 2. The switch will raise up or lower down the temperature by unit of 0.5. 3. Setting at 17°C (62°F) will provide max. cooling, and setting at 32°C (90°F) will provide max. heating. 4. Switching off→on, it will display the temperature setting just before the previous switching-off. 5. In shifting 17.5°C→17°C or 31.5°C→32°C, raising temperature setting will generate buzzer sound 5 times at interval of 0.15 seconds. 6. Lowering temperature setting at 17°C or raising temperature setting at 32°C, it will generate buzzer sound 5 times at interval of 0.15 sec. 7. Pressing repeatly on: Shift one unit every 0.7 second. Holding down: First shift in 0.7 seconds and than shift every 0.3 seconds (buzzer sound for 0.1 second upon each shift)	Turning off the switch, the system will be off. Control temperature setting up/down.

Button	Function	Display	System operation	Stop switch and system operation
AUTO (Auto control)	Auto control of air conditioning system	"AUTO" will be displayed on control panel.	1. The system will provide auto control of the below features on the basis of temperature setting: • Temperature door • Mode door • Intake door(Shift between fresh air/recirculation) • Blower speed • Compressor. 2. "AUTO" will disappear upon releasing AUTO switch. 3. Features except manually selected switches will be controlled automatically upon releasing auto switch.	• Off→system off • Blower switch : Manually control blower • MODE : Manually control discharge mode • A/C : Manually control compressor on/off. • Fresh air : Manually control fresh air • Recirculation : Manually control recirculation • Defroster : Manually control defroster (when air conditioning system is on and recirculation selected)
AMB	Indicate ambient air temperature	'AMB' lamp will come on indicate ambient air temperature other lamps will go out.	1. Pressing AMB switch, any previous indication will go out and 'AMB' lamp and ambient air temperature will come on 5 seconds, and then it will return to the previous indication just before pressing AMB switch.	• AMB: Pressing the AMB switch when ambient air temperature is indicated, ambient air temperature indication will extinguish. • Other switches: Pressing another switch when the ambient air temperature is indicated, ambient air temperature indication will extinguish and selected switch control will be performed.

Button	Function	Display	System operation	Stop switch and system operation
INTAKE	Recirculation	Recirculation lamp will come on. "AUTO" lamp will go out.	Fix intake door at the circulation position.	Selecting fresh air at the current condition : Fresh air control off switch Fixing at the current condition (Fresh air selection is possible)- IND lamp will come in. AUTO-auto control (fresh air, recirculation).
	Fresh air	Fresh air lamp will come on. "AUTO" lamp will go out.	Fix intake door at the fresh air position.	Selecting fresh air at the current condition : Fresh air control off switch Fixing at the current condition (Fresh air selection is possible)- IND lamp will come in. AUTO-auto control (fresh air, recirculation).
Blower fan speed UP/ DOWN	Blower fan speed, UP/ DOWN control	Indicates fan operation on/off	1. Pressing fan UP/DOWN switches during auto control, the speed will shift up/down based on the current fan level. 2. Switching on a switch except fan switch at 'off' condition, the speed will rise steadily from LOW to the target speed. (Require 6 seconds from LOW to HI). 3. Shifting a step will take 0.7 seconds when pressing the switch once. Holding on the switch, a shift will occur every 0.3 seconds and buzzer sounds for 0.1 second. 4. Pressing UP switch at HI position or DOWN switch at LOW position, buzzer sound will occur 5 times at 0.15 second interval.	• AUTO: Auto control • OFF : System off • Fan speed control: Manually control blower fan speed.
	Output increment step by step			
	Fan speed levels and voltages - Auto cooling : No level(4.5V~B+) - Auto heating: No level(4.5V~B+) - Manual control: 7 levels (3.8V~B+)			
A/C Air conditioning switch	Compressor on/off control	• A/C lamp (on/off) • AUTO lamp off	Airconditioning on/off	A/C: A/C on/off, manual control. OFF: System off AUTO: Auto control. DEF: Defroster, manual control.
MODE (Discharge mode)	Mode door control VENT, FLOOR, B/L, MIX	MODE indication (on/off) AUTO lamp off	1. Fix mode door at B/L or MIX 2. Manual operating mode switch, the switch will shift in the order of VENT-B/L-FLOOR-MIX	MODE: Shift control in order of Vent-B/L-Floor-Mix-Vent. DEF: Defroster, manual control. AUTO: Auto control

Button	Function	Display	System operation	Stop switch and system operation
DEF (Defroster) • Remove moisture/ frost on windshield.	DEF control	• DEF IND on • DEF indication on • A/C lamp on • INTAKE IND off • AUTO lamp off	1. Mode door: Fixed at defroster. 2. Intake door: Fresh air control (Selecting recirculation is enabled). 3. A/C: on (Compressor will be controlled on/off based on detected temperature by fin sensor). 4. Prevails over max. cooling and max. heating. 5. Prevails over mix mode control	AUTO: System auto control. MODE: Discharge mode, manual control (release the defroster control). A/C: A/C on/off, manual control DEF: Return to the previous condition before selecting DEF switch.

<table>
<tr><th>Button</th><th>Function</th><th>Display</th><th>System operation</th><th>Stop switch and system operation</th></tr>
<tr><td rowspan="4">OFF</td><td rowspan="4">System off</td><td rowspan="2">Control panel LCD off
Indicator lamps on</td><td rowspan="2">1. Blower fan speed off.
2. Airconditioning off.
3. Intake door: Fixed at the location prior to system off.
4. Temperature door: Auto control.
5. Mode door: Fixed at the condition prior to system off.
6. AMB
Pressing AMB switch after system off, 'AMB' lamp/ambient air temperature will come on for 5 seconds and then go out.</td><td>AUTO: Auto control.
Blower speed: Return to MANUAL LOW.
Others: Return to the previous condition before system off</td></tr>
<tr><td>A/C: Airconditioning on.
Others: Return to the previous condition before system off (Blower speed: Return to MANUAL LOW)</td></tr>
<tr><td colspan="2">• INTAKE(recirc/fresh air) control at the system off condition
1) Selecting the fresh air switch at the recirculation position after system off: It will shift to the fresh air position and extinguish the recirculation indicator lamp. The LCD will be held off.
2) Selecting the recirculation switch at the fresh air position after system off: It will shift to the recirculation position and extinguish the recirculation indicator lamp. The LCD will be held off.
3) Other switches will be held off at the above condition.</td><td>MODE: Held at the previous condition before system off. (Auto control is released).
Others: Return to the previous condition before system off (Blower speed: Return to MANUAL LOW)</td></tr>
<tr><td colspan="2"></td><td>DEF: Shift to defroster mode
Air conditioning on/Intake(fresh air)
Others: Return to the previous condition before system off</td></tr>
<tr><td colspan="2"></td><td>TEMP: Held at the previous condition before system off.
Others: Return to the previous condition before system off.</td></tr>
<tr><td>DEFOG</td><td>Rear glass defogger on</td><td>Defogger switch indicator on/off</td><td>1. Pressing DEFOG switch, the switch signal will be sent to ETACS.
2. Pressing the switch again, defogging will stop and the indicator will go out.
3. Released by ETACS after 15 minutes of control.</td><td>Pressing DEFOG switch again, it will be released.</td></tr>
</table>

DIAGNOSIS SYSTEM EQJA2750

OPERATION METHOD (SELF-DIAGNOSIS)

The F.A.T.C. module self test feature will detect electrical malfunction and provide error codes for system components with suspected failures.

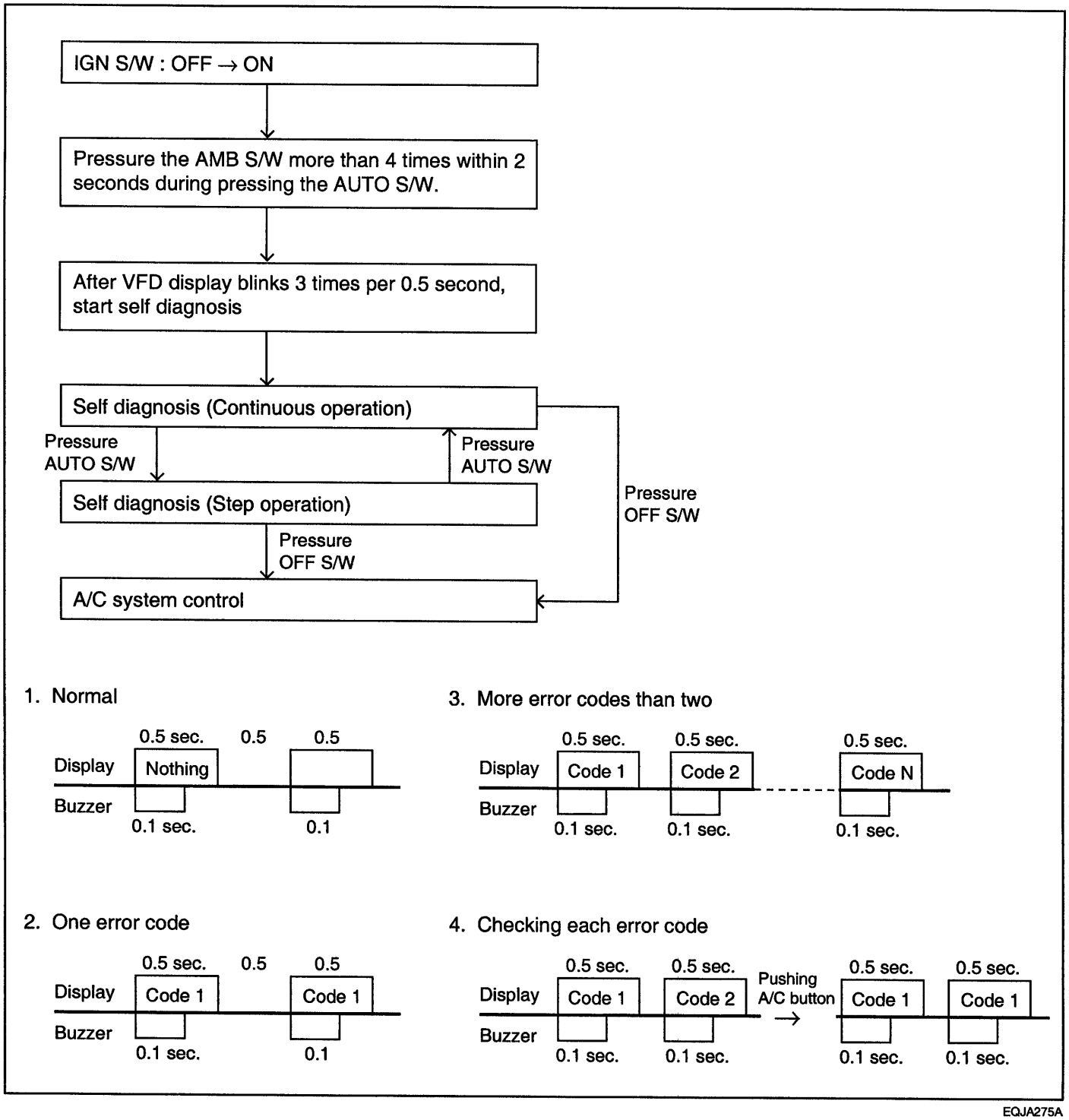

EQJA275A

FAIL SAFE FUNCTION

EQJA1020

No.	Item	Failure	FAIL SAFE Function
1	In-car temperature sensor	Open/Short	25°C alternate value control
2	Ambient temperature sensor	Open/Short	20°C alternate value control
3	Pin thermo sensor	Open/Short	-2°C alternate value control
4	Water temperature sensor	Open/Short	-20°C alternate value control
5	Temperature door potentiometer	Open/Short setup temperature	For 17°C to 24.5°C, Set to maximum cooling position. For 25°C to 32°C, Set to maximum heating position.

HOW TO READ SELF-DIAGNOSTIC CODE

1. After the display panel flickers three times every 0.5 second, the corresponding error code flickers on the setup temperature display panel every 0.5 second and will show two figures.
2. If error code is more than two, each code flickers 2 times in sequence.

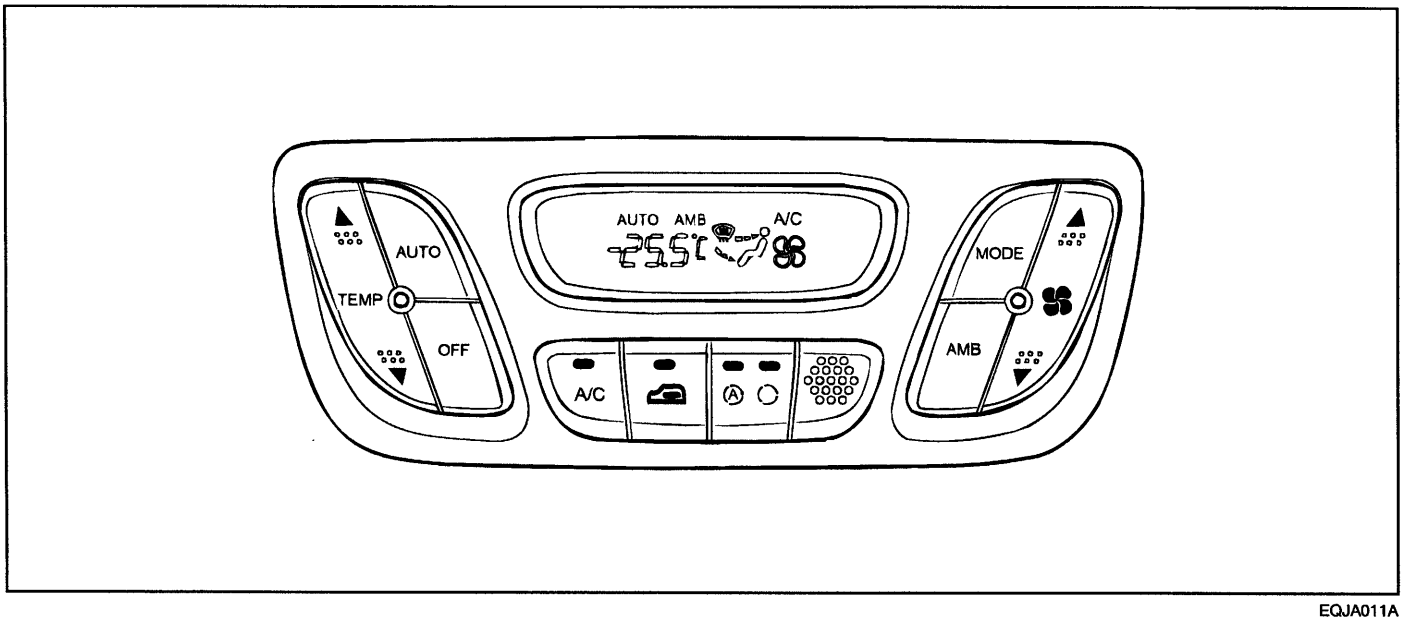

EQJA011A

FAULT CODE DISPLAY

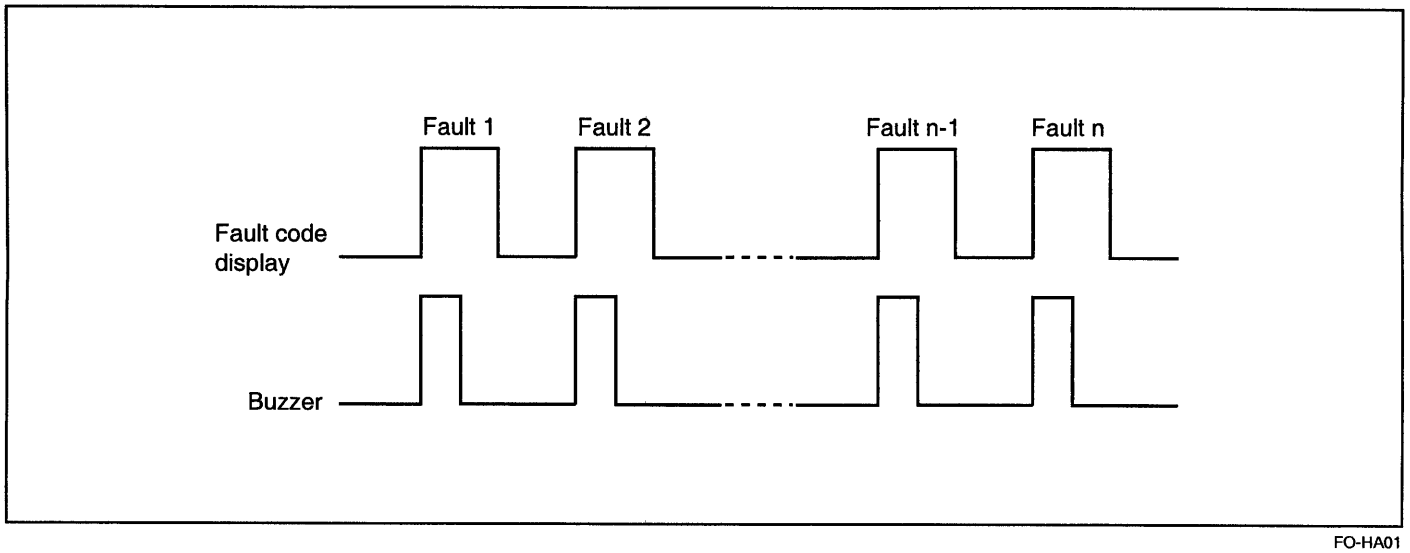

FO-HA01

DTC CHART

If a malfunction code is displayed during the DTC check, check the circuit listed for that code in the table below.

DTC code	Detection item	Trouble area
00	Normal	-
11	Open INCAR Sensor circuit	• Incar sensor • Harness or connector between incar sensor and A/C control assembly • A/C control assembly
12	Shorted INCAR Sensor circuit	
13	Open Ambient sensor circuit	• Ambient sensor • Harness or connector between ambient sensor and A/C control assembly. • A/C control assembly.
14	Shorted Ambient sensor circuit	
15	Open water temp. sensor	• Water temp. sensor • Harness or connector between water temp. sensor and A/C control assembly. • A/C control assembly
16	Shorted water temp. sensor	
17	Open pin thermo sensor	• Pin thermo sensor • Harness or connector between evap. sensor and A/C control assembly • A/C control assembly
18	Shorted pin thermo sensor	
19	Open or shorted temp. door potentiometer	• Harness or connector between temp. door potentiometer and A/C control assembly
20	Defective temp. door potentiometer	• Temp. door potentiometer

IN CAR SENSOR

IN-CAR AIR TEMPERATURE SENSOR EQHA2200

It will detect interior temperature, which will be used for discharge temperature control, sensor failsafe, temperature door control, blower motor level control, A/C auto control.

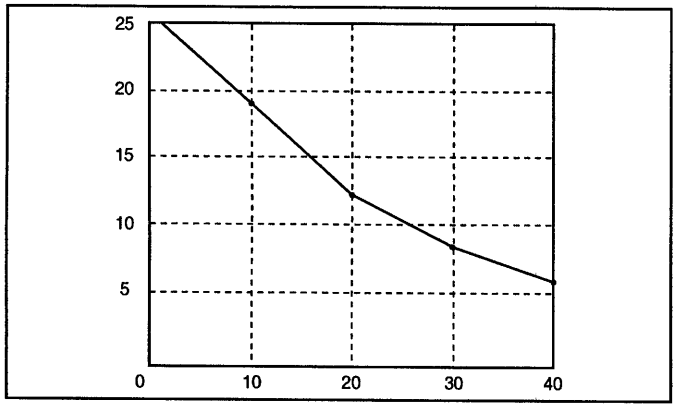

KFWD034A

PHOTO SENSOR

PHOTO SENSOR EQJA2050

The photo sensor is located by the driver side defrost nozzle. In response to photo intensity level in vehicle, the sensor will send signal to control module to control the blower level and discharge temperature.

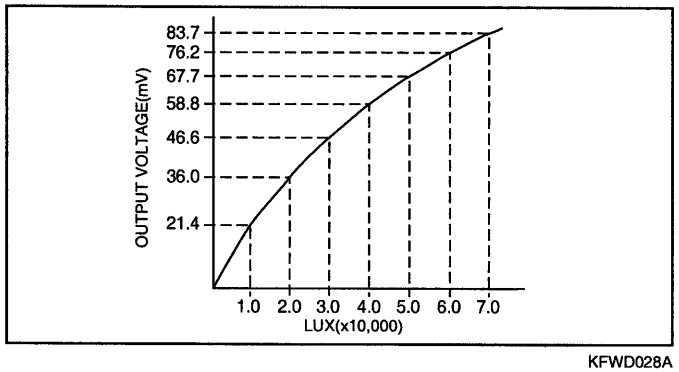

KFWD028A

NOTE

Emit intensive light toward driver side and passenger side using a lamp, and check the current change between terminals 1 & 2.

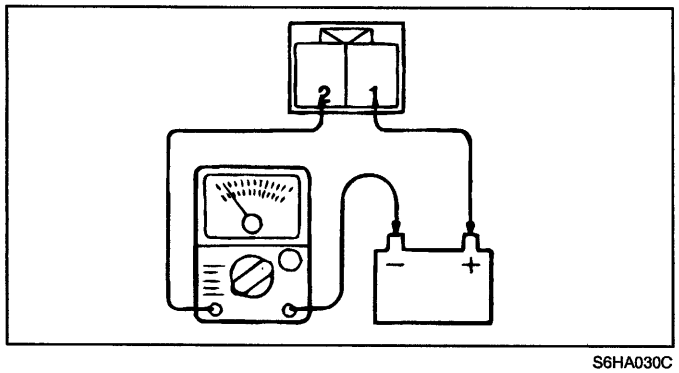

S6HA030C

AMBIENT TEMPERATURE SENSOR

AMBIENT AIR TEMPERATURE SENSOR EQJA2150

1. The air temperature sensor, located at the front of the engine radiator, and detect ambient air temperature. It is a negative type thermistor; resistance will increase with lower temperature, and decrease with higher temperatures.

2. The sensor output will be used for discharge temperature sensor, sensor fail-safe, temperature regulation door control, blower motor level control, mix mode control and in-car humidity control.

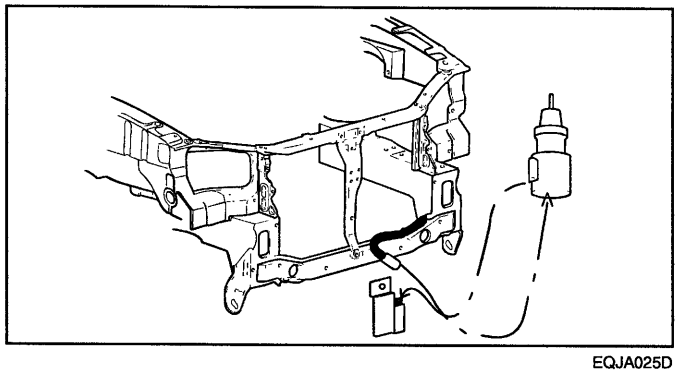

EQJA025D

CHECK

Temperature (°C)	Min. Resistance (Ω)	Max. Resistance (Ω)
-40	787.25	982.15
-20	254.8	287.5
0	89.2	109.6
20	35.0	39.5
40	15.1	17.1
60	7.1	8.0

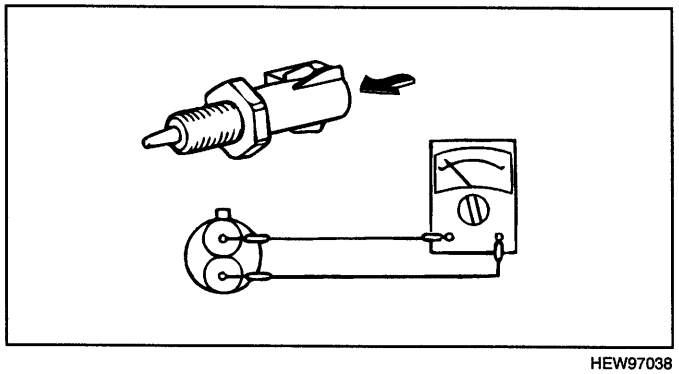

HEW97038

A.Q.S (AIR QUALITY SENSOR)

A.Q.S. SENSOR EQJA2100

1. The A.Q.S. sensor, located at the center support in front of the center member, detects hazardous elements in ambient air, and provides output signals to the control module.

2. It will detect sulfurous acid gas, carbon dioxide, carbon mondxide, hydrocarbon and allergen.

SENSOR OUTPUT

Condition	Resistance
Normal condition	5V
Hazardous gas detection	0V

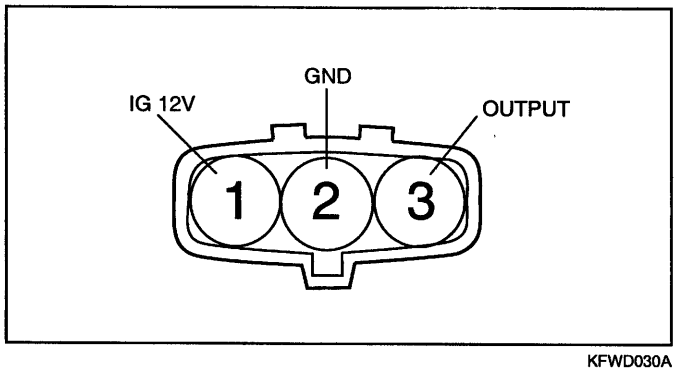

KFWD030A

VACUUM SYSTEM

VENTILATOR EQJA1550

COMPONENTS

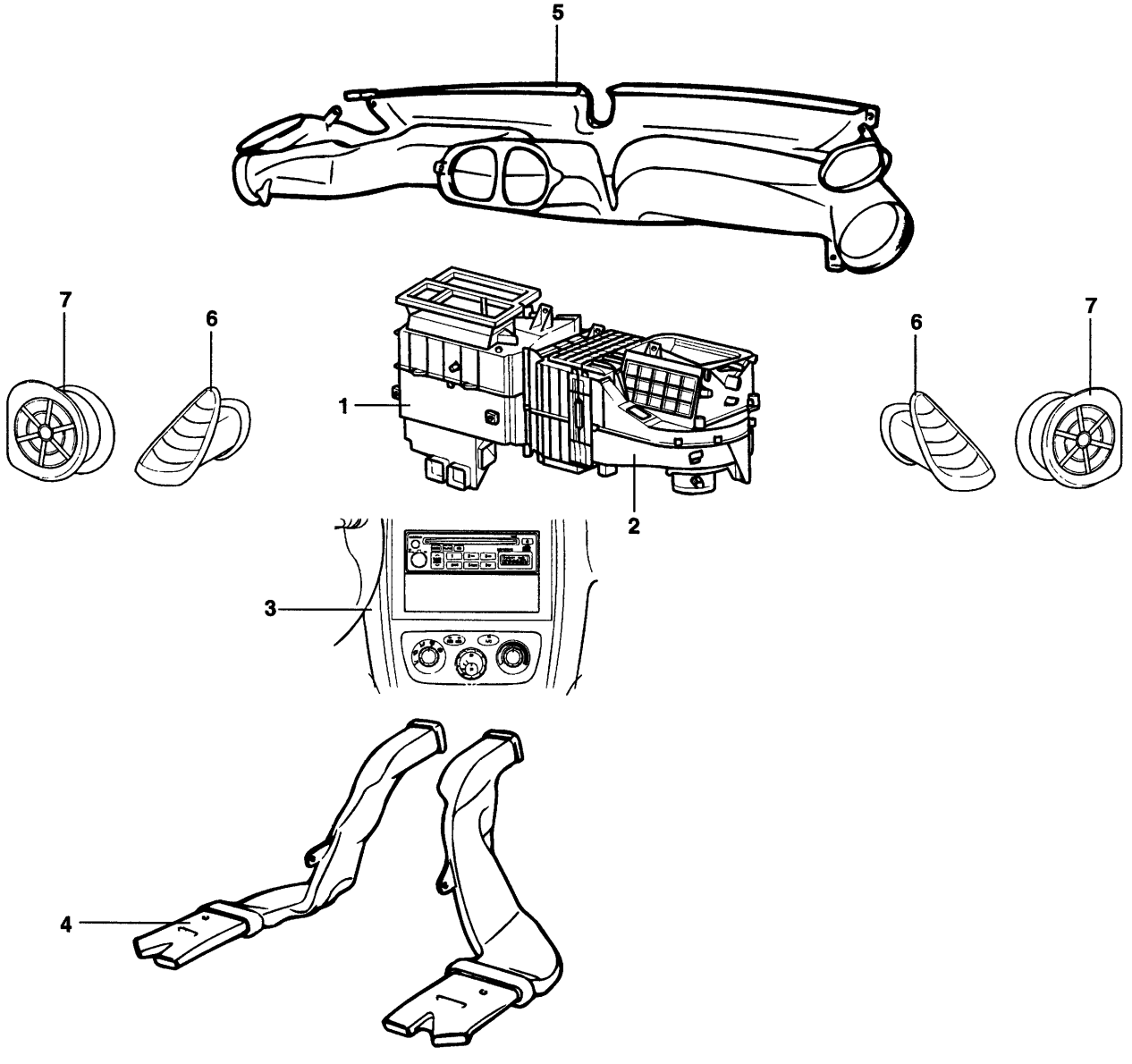

1. Heater unit
2. Eva and blower unit
3. Control switch
4. Floor duct
5. Defroster duct
6. Side nozzle
7. Side defrostor nozzle

EQJA155A / EQJA015A/B/C/D//F

EQJA155A

HEATER

HEATER UNIT EQJA1600

COMPONENTS (ROTARY+PUSH)

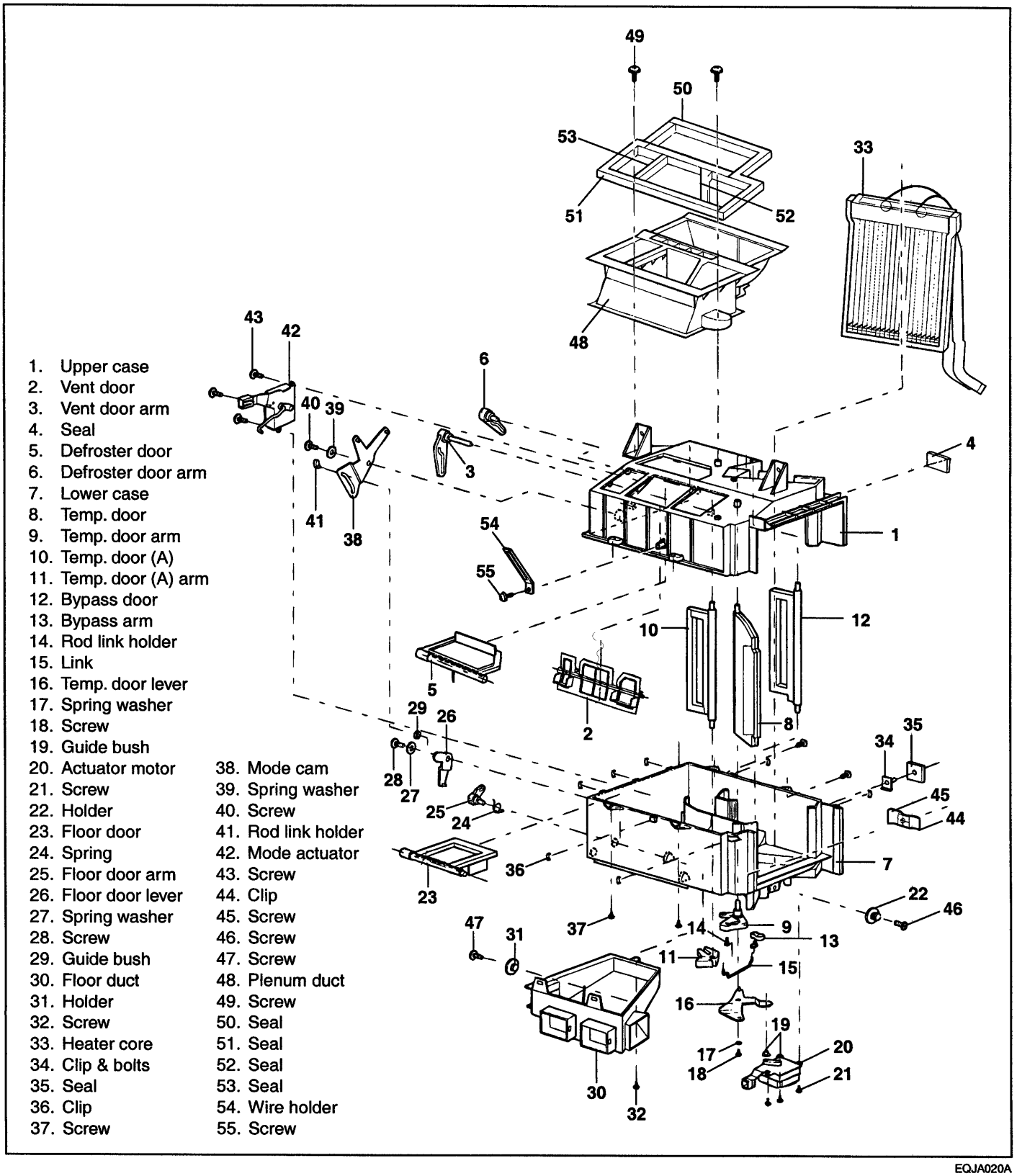

EQJA020A

COMPONENTS (FATC) EQJA1650

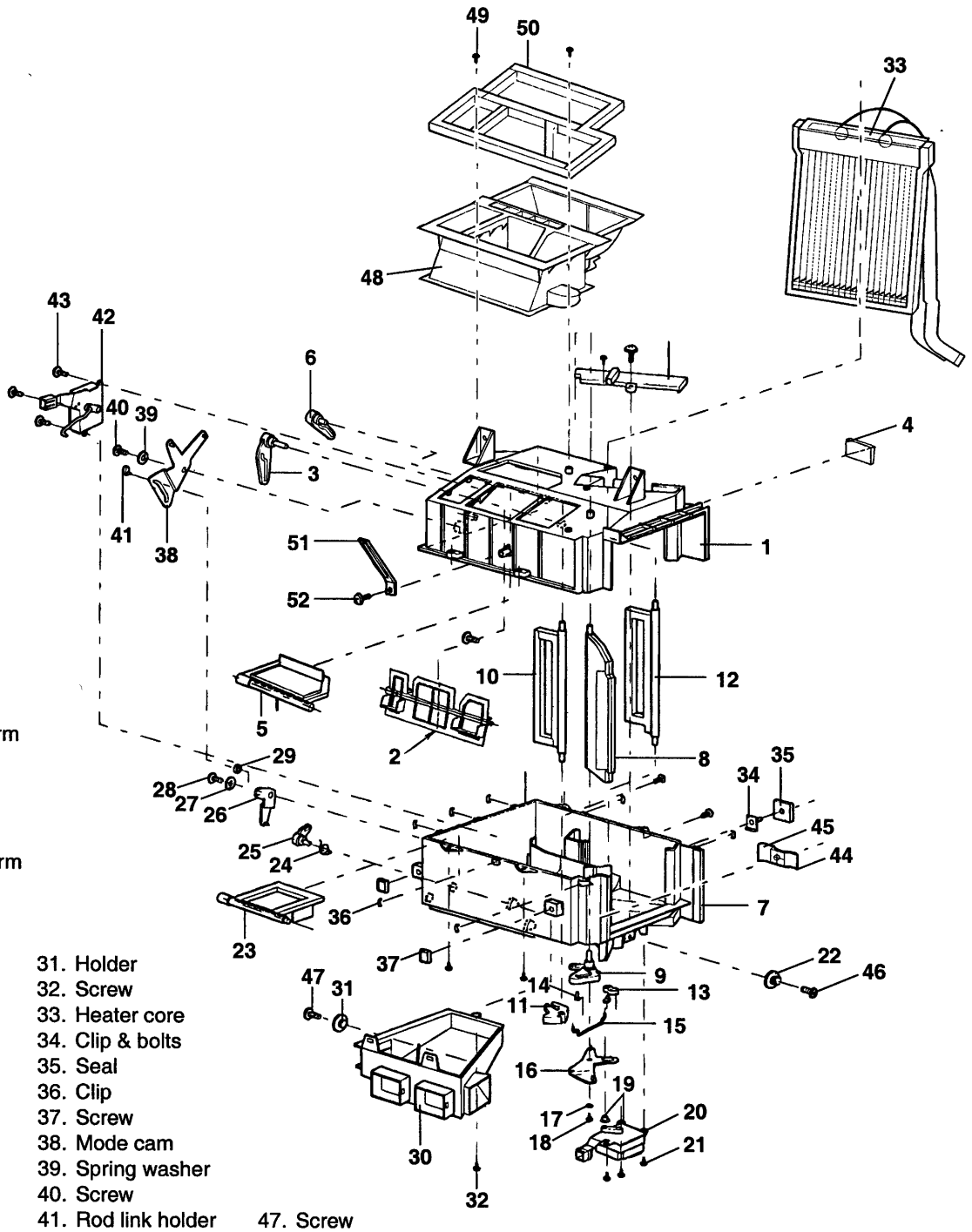

1. Upper case
2. Vent door
3. Vent door
4. Seal
5. Defroster door
6. Defroster door arm
7. Lower case
8. Temp. door
9. Temp. door arm
10. Temp. door (A)
11. Temp. door (A) arm
12. Bypass door
13. Bypass arm
14. Rod link holder
15. Link
16. Temp. door lever
17. Spring washer
18. Screw
19. Guide bush
20. Actuator motor
21. Screw
22. Holder
23. Floor door.
24. Spring
25. Floor door arm
26. Floor door lever
27. Spring washer
28. Screw
29. Guide bush
30. Floor duct
31. Holder
32. Screw
33. Heater core
34. Clip & bolts
35. Seal
36. Clip
37. Screw
38. Mode cam
39. Spring washer
40. Screw
41. Rod link holder
42. Mode actuator
43. Screw
44. Clip
45. Screw
46. Screw
47. Screw
48. Planium duct
49. Screw
50. Seal
51. Wire holder
52. Screw

EQJA020B

HEATER UNIT

TEMPERATURE CONTROL ACTUATOR EQJA1700

1. Temperature control actuators are installed in the heater unit case. The control switches and the vent ductswitch will operate actuators to regulate the temperature and discharge air.

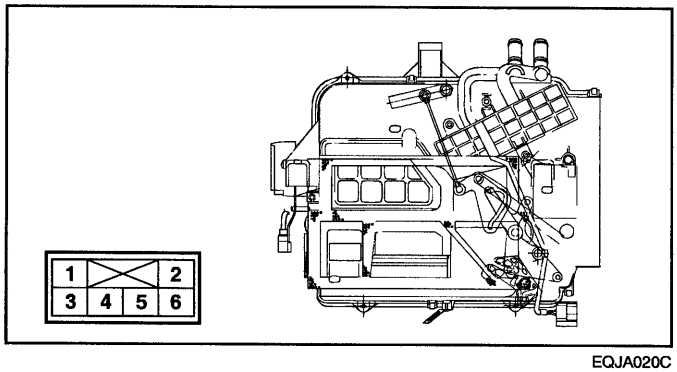

EQJA020C

2. Temp switch terminal voltage check.

Terminal	Voltage	Remark
1	12V (+,-)	Change Polarity
3	12V (+,-)	Change Polarity
4	5V	Sensor Voltage
5	Change with resistance	Variable Resistance
6	Ground	Ground

MODE CONTROL ACTUATOR EQJA1750

1. Pressing the mode select switch with the ignition on will shift the driver side and passenger side mode door actuators as follows :

   VENT ⇒ BI/LEVEL ⇒ FLOOR ⇒ MIX

2. Mode actuator circuit diagram and voltage

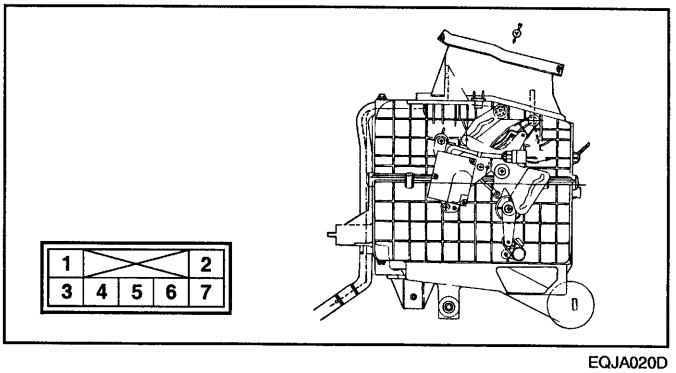

EQJA020D

Terminal	Description	Voltage
1	IG	12V
2	Ground	-
3	Vent	0V
4	Bi-level	12V
5	Floor	12V
6	Mix	12V
7	Defroster	12V

3. Heater

Mode / Position	Recirculation	Fresh			
	COOL	1/2 COOL	WARM		
	Vent	Bi level	Floor	Mix	Defroster
Vent	100	55±10	-	-	-
Floor	-	45±10	60 ± 7	52 ± 7	-
Defroster	-	-	20 ± 7	30 ± 7	75 ± 7
Side vent	-	-	20 ± 7	18 ± 7	25 ± 7

EQJA175A

BLOWER CONTROLS

BLOWER UNIT AND EVAPORATOR EQJA1800

COMPONENTS (ROTARY+PUSH)

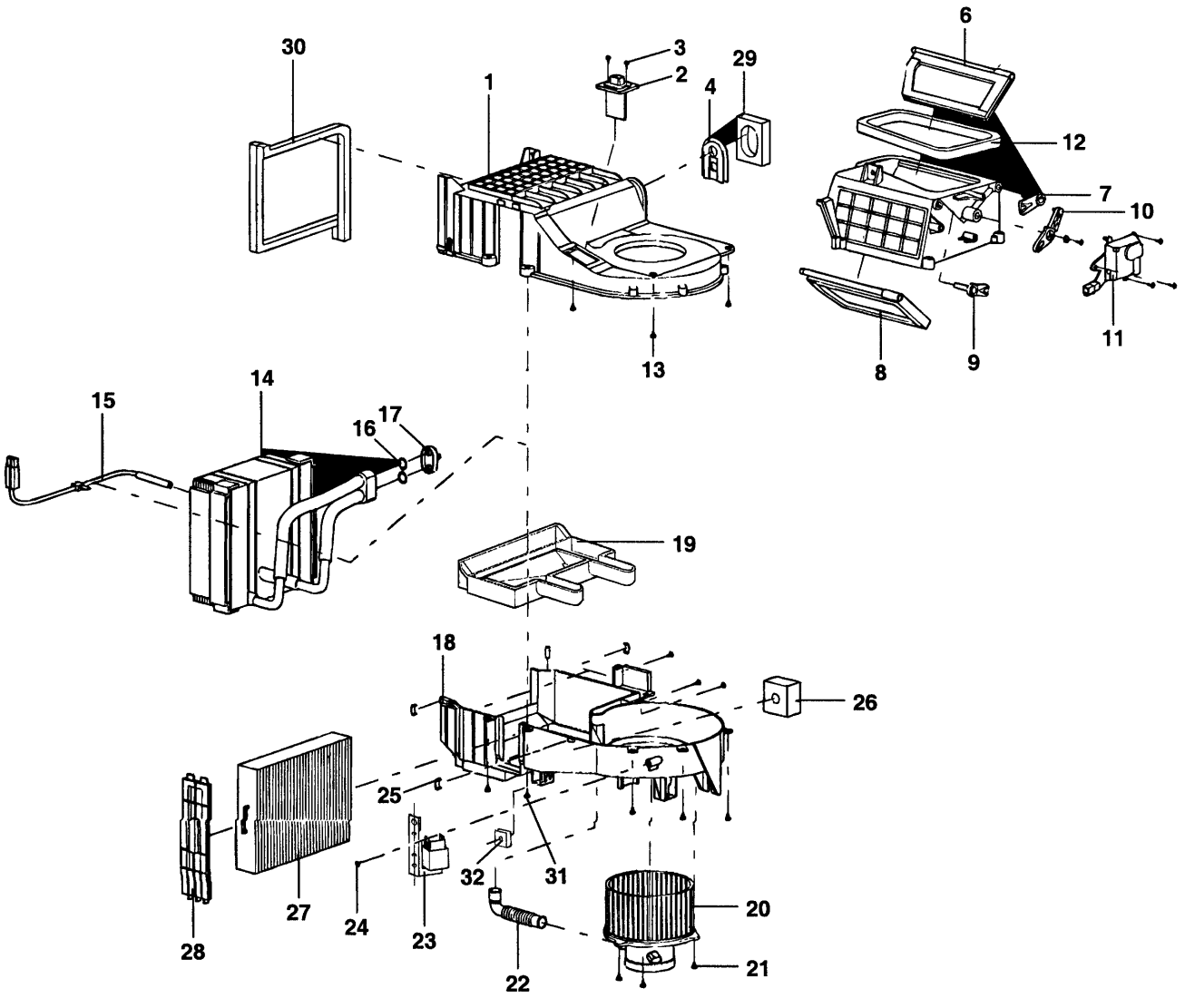

1. Evaporator upper case
2. Resistor
3. Screw
4. Bracket
5. Air inlet duct case
6. Inlet duct door
7. Inlet duct arm
8. Inlet duct door (A)
9. Inlet duct arm (A)
10. Inlet duct lever
11. Actuator (Outside/Recir)
12. Seal
13. Screw
14. Evaporator core
15. Resistor
16. O-ring
17. Evaporator tube cap
18. Lower case
19. Evaporator lower cover
20. Motor and wheel
21. Screw
22. Blower motor cooling tube
23. Power relay
24. Screw
25. Clip
26. Sill
27. Air filter
28. Air filter cover
29. Sill
30. Sill

EQJA025B

COMPONENTS (FATC) EQJA1850

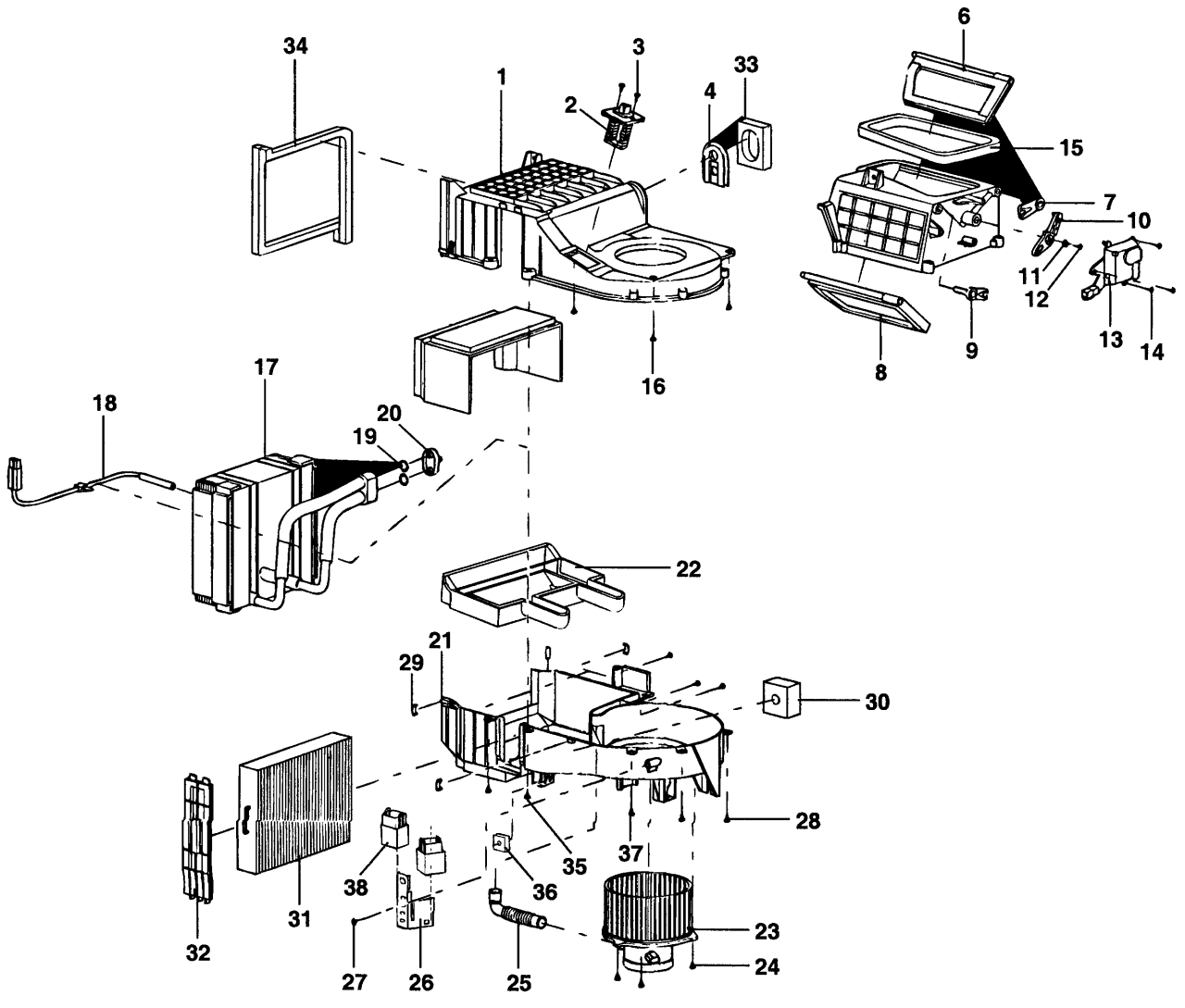

1. Evaporator upper cover
2. Power TR
3. Screw
4. Bracket
5. Air inlet duct case
6. Inlet duct door
7. Inlet duct arm
8. Inlet duct door (A)
9. Inlet duct arm (A)
10. Inlet duct lever
11. Spring washer
12. Screw
13. Actuator (Recir/Fresh)
14. Screw
15. Seal
16. Screw
17. Evaporator core
18. Pin sensor
19. O-ring
20. Evaporator tube cap
21. Lower case
22. Evaporator lower cover
23. Motor and wheel
24. Screw
25. Blower motor cooling tube
26. Bracket
27. Screw
28. Screw
29. Clip
30. Sill
31. Air filter
32. Air filter cover
33. Sill
34. Seal
35. Screw
36. Nut
37. Screw
38. Power relay

EQJA025C

SENSOR CHECKING EQJA1950

THERMISTOR

The thermistor will detect the core temperature and interrupt compressor relay power, in order to prevent evaporator freezing by excessive cooling.
The thermistor is an NTC device.

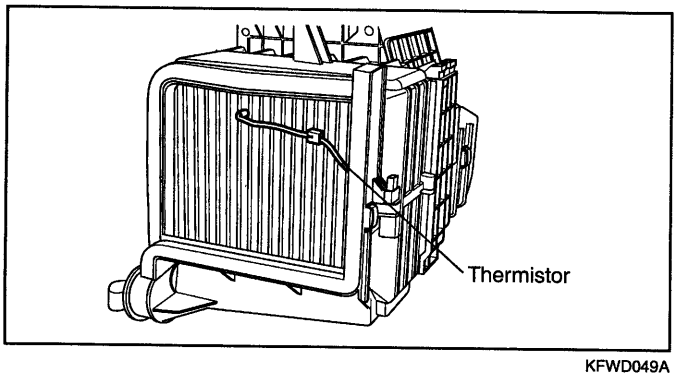

KFWD049A

1. Thermistor check

    1. Remove the glove box.
    2. Start the engine.
    3. Turn on the air conditioner.
    4. Using the multi-tester, check the output voltage between terminals 2 and 3 in the thermistor.

Thermistor	Operating temperature	Output voltage
ON	0.5 ± 0.5°C	12V
OFF	2.5 ± 0.5°C	0V

WATER TEMPERATURE SENSOR EQHA2000

1. The water temperature sensor is located at the heater core, and detects coolant temperature flowing through heater core. It is an NTC device: resistance will rise with lower temperature, and drop with higher temperature.

CHECK

Water temperature	Resistance
25°C	10KΩ
60°C	2.50KΩ

2. Electromotive heating control

    In AUTO mode, discharge mode to the FLOOR or Bi-LEVEL, if the coolant temperature is low, the sensor will the prevent cold air from being discharged toward passenger's legs.

    1. Operation control

        - Discharge mode FLOOR or Bi-LEVEL with AUTO setting
        - Coolant temperature is low

    2. System operation

        - Mode door : DEF⇒MIX⇒AUTO
        - Blower level : AUTO LO⇒AUTO HI
        - Intake door : Ambient air

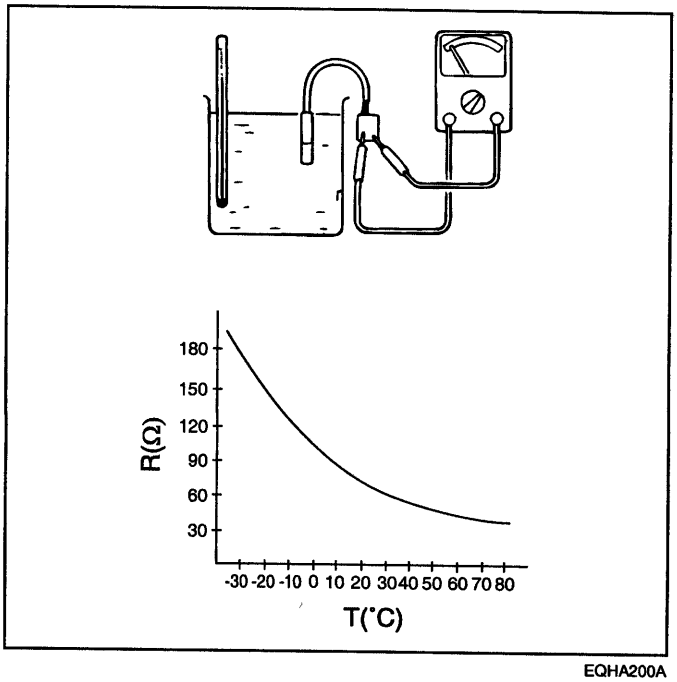

EQHA200A

BLOWER MOTOR

FRESH AIR RECIRCULATION SWITCHING ACTUATOR EQHA1900

The intake selection switch is located on the control panel. Pressing the switch will shift between recirculation and fresh air modes.

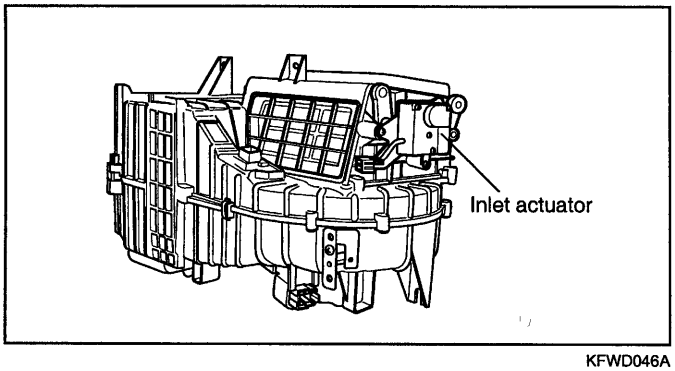

KFWD046A

CHECK

Input		Output
1	2	Fresh/recirculation shifting
-	+	Recirculation
+	-	Fresh

BLOWER MOTOR CHECKING (ROTARY+PUSH) EQHA2350

Apply the battery voltage as shown and check the blower motor rotation.

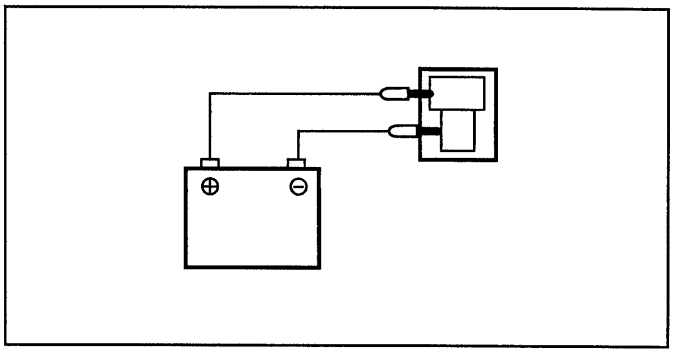

EQA9042A

REMOVAL EQJA3000

1. Remove the glove box housing.

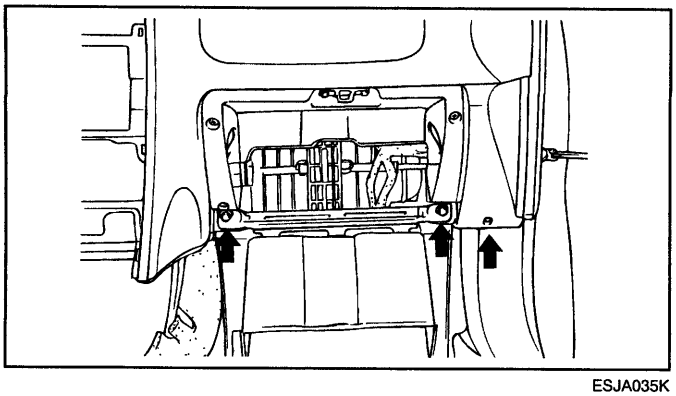

ESJA035K

2. Remove the lower side cover of the crash pad.

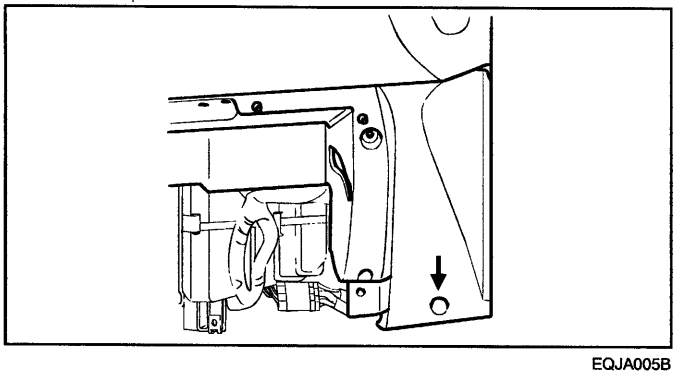

EQJA005B

3. Remove the upper cover of the glove box.

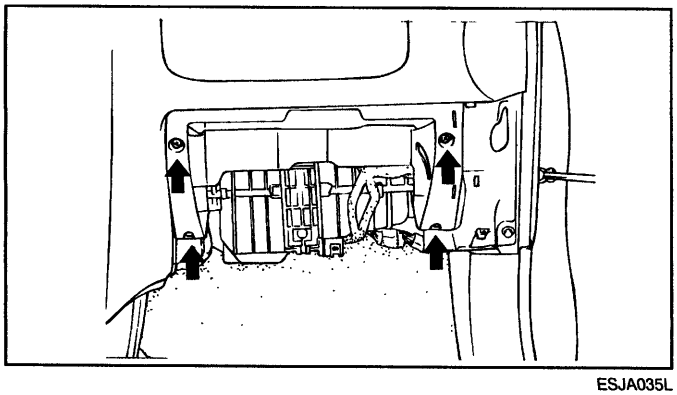

ESJA035L

4. Remove the evaporator and blower mounting bolts.

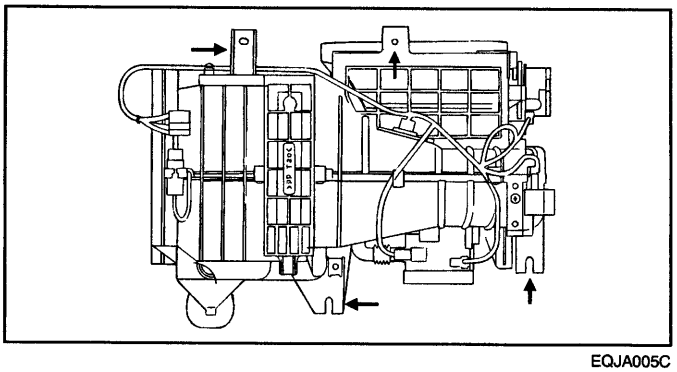

EQJA005C

5. Remove the blower motor.

INSTALLATION EQJA3100

Installation is the reverse of removal.