General Information

GENERAL

GENERAL

IDENTIFICATION NUMBER LOCATIONS EB9D3DCB

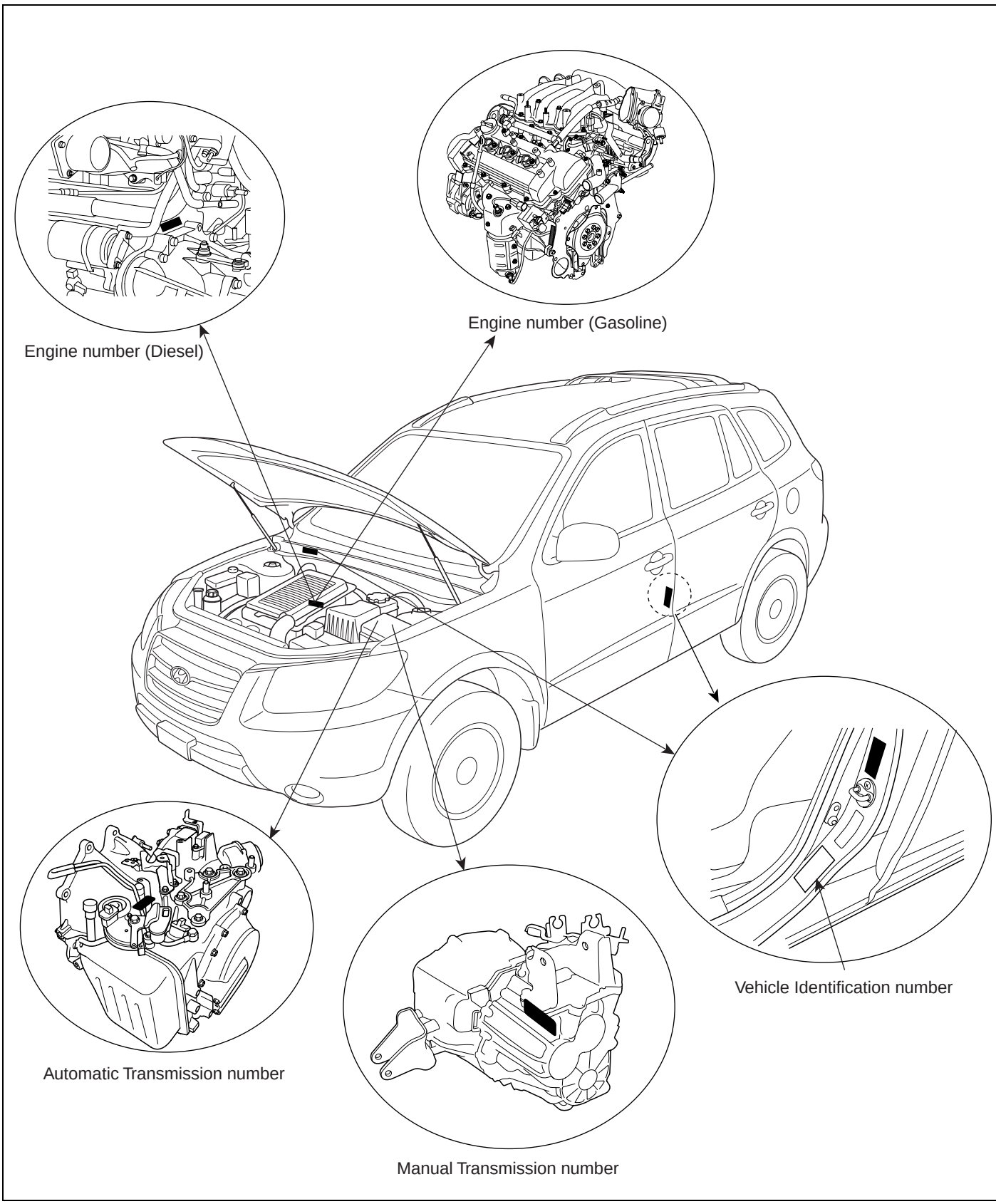

SCMGI6001L

IDENTIFICATION NUMBER DESCRIPTION

VEHICLE IDENTIFICATION NUMBER

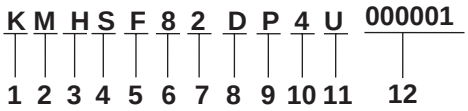

SCMGI6002L

1. Geographic zone
   - K : Korea
2. Manufacturer
   - M : Hyundai motor company
3. Vehicle type
   - H : Passenger
4. Vehicle line
   - S : SANTAFE
5. Model & Series
   - F : STANDAD (L)
   - G : DELUXE (GL)
   - H : SUPER DELUXE (GLS)
   - J : GRAND SALON (GDS)
   - K : SUPPER GRAND SALON (HGS)
6. Body type
   - 8 : WAGON
7. Restraint system
   - 0 : Both side - None
   - 1 : Both side - Active belt
   - 2 : Both side - Passive belt
8. Engine type
   - D : Gosoline 2.7 DOHC
   - W : Diesel 2.2 TCI
9. Check digit
   - Check digit : 0 ~ 9, x
   - P : Left hand driver
   - R : Right hand driver
10. Production year
    - 5 : 2005, 6 : 2006, 7 : 2007
11. Plant of production
    - U : Ulsan (korea)
12. Vehicle production sequence number
    - 000001 ~ 999999

PAINT CODE

CODE	COLOR
NW	Noble White
EB	Ebony Black
LS	Smart Silver
3M	Vanilla White
5Q	Blue Onyx
5J	Superior Red
6F	Blue Titanium
6M	Platinum Silver
2Z	Black Pearl
2J	Gunmental
5T	Satin Beige

ENGINE IDENTIFICATION NUMBER



KABF201A

1. Engine fuel
   - G : Gasoline
   - D : Diesel
2. Engine range
   - 4 : 4 cycle 4 cylinder
   - 6 : 4 cycle 6 cylinder

3~4 : Engine development order and capacity
- EB : D-engine TCI, 2188cc (Diesel)
- EA : μ -engine, 2656cc (Gasoline)

5. Production year
   - 5 : 2005, 6 : 2006, 7 : 2007
6. Engine production sequence number
   - 000001 ~ 999999

TRANSMISSION IDENTIFICATION NUMBER

MANUAL

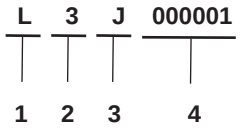

EAQF103A

1. Model
   - S : M5GF2
2. Production year
   - 5 : 2005, 6 : 2006, 7 : 2007
3. Gear ratio
   - D : 5.071 / 3.737
4. Transaxle production sequence number
   - 000001 ~ 999999

AUTOMATIC

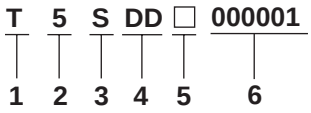

SCMGI6004L

1. Model
   - T : F4A51-3
2. Production year
   - 5 : 2005, 6 : 2006, 7 : 2007
3. Gear ratio
   - S : 4.520
4. Detailed chassification
   - DD : 4WD
   - CD : 2WD
   - ED : 2WD + LSD
5. Spare
6. Transaxle production sequence number
   - 000001 ~ 999999

AUTOMATIC

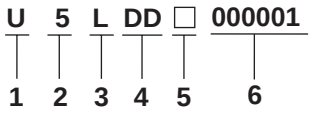

SCMGI6004D

1. Mode
   - U : A5HF1
2. Production year
   - 5 : 2005, 6 : 2006, 7 : 2007
3. Gear ratio
   - L : 3.684
4. Detailed chassification
   - DD : 4WD
   - CD : 2WD
   - ED : 2WD + LSD
5. Spare
6. Transaxle production sequence number
   - 000001 ~ 999999

WARNING / CAUTION LABEL LOCATIONS

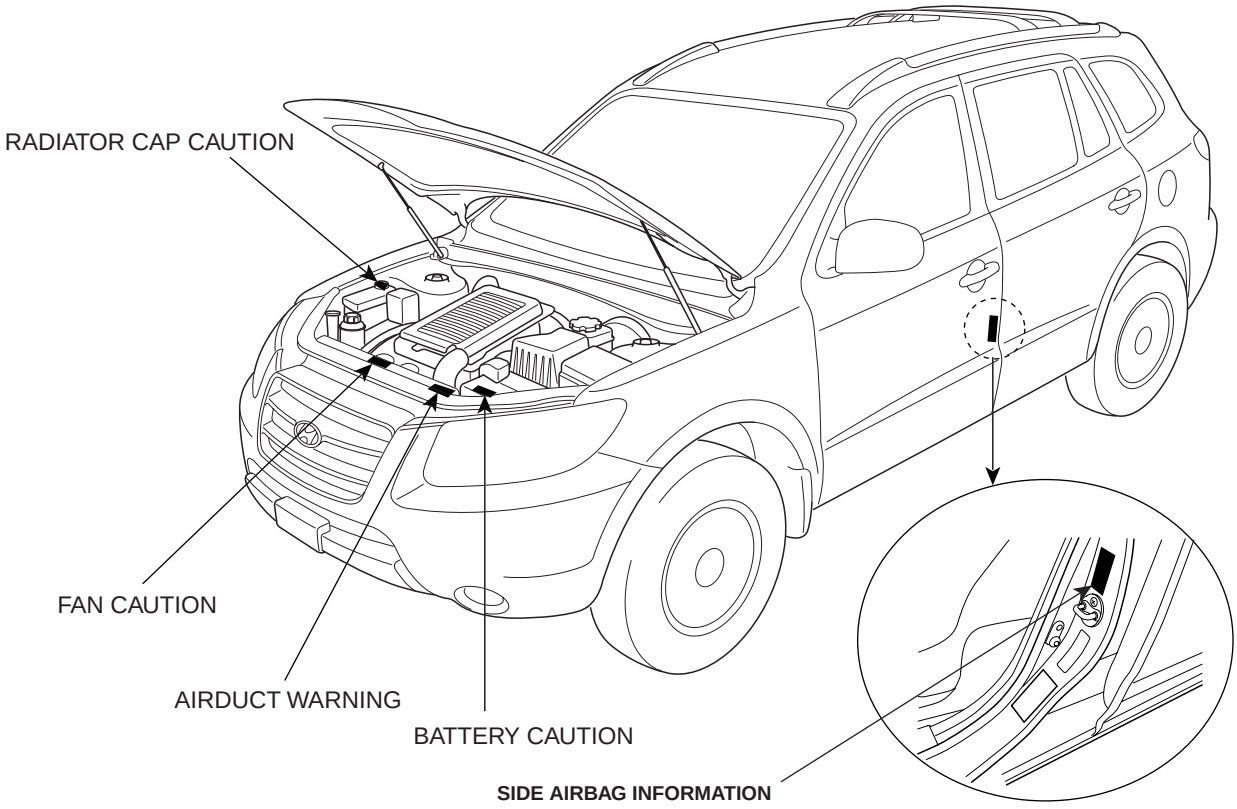

SIDE AIRBAG INFORMATION

ATTENTION

SRS VEHICLE
THIS CAR IS EQUIPPED WITH A SUPPLEMENTAL
RESTRAINT SYSTEM. TO PROVIDE CONTINED RELIABLITY,
CERTAIN ELEMENTS OF THE SUPPLEMENTAL RESTRAINT
SYSTEM SHALL BE SERVICED OR REPLACED BY AUTHORIZED
DEALER TEN YEARS AFTER VEHICLE LABEL. FOR FURTHER INFORMATION.
SEE OWNER'S MANUAL.

SIDE AIR BAG
THIS CAR IS EQUIPPED WITH A SIDE AIRBAG SYSTEM.
TO PROVIDE CONTINUED RELIABILITY, CERTAIN ELEMENTS
OF THE SIDE AIRBAG SYSTEM SHALL BE SERVICED OR
VEHICLE MANUFACTURE DATE SHOWN ON CERTIFICATION LABEL.
FOR FURTHER INFORMATION
SEE OWNER'S MANUAL.

SCMGI6005L

AIR BAG WARNING / CAUTION LABEL

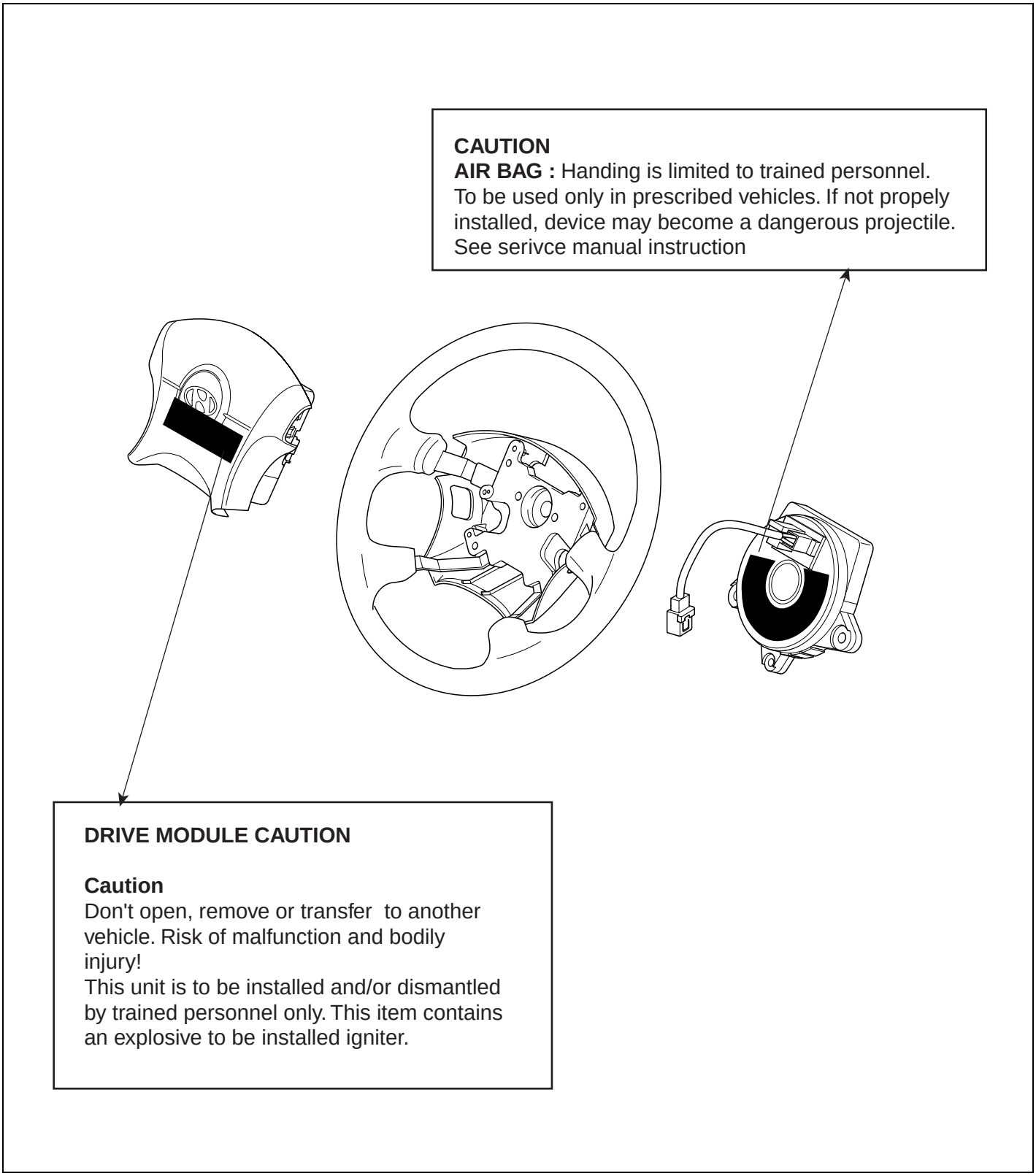

EAKE002A

AIR BAG WARING / CAUTION LABEL (CONT'D)

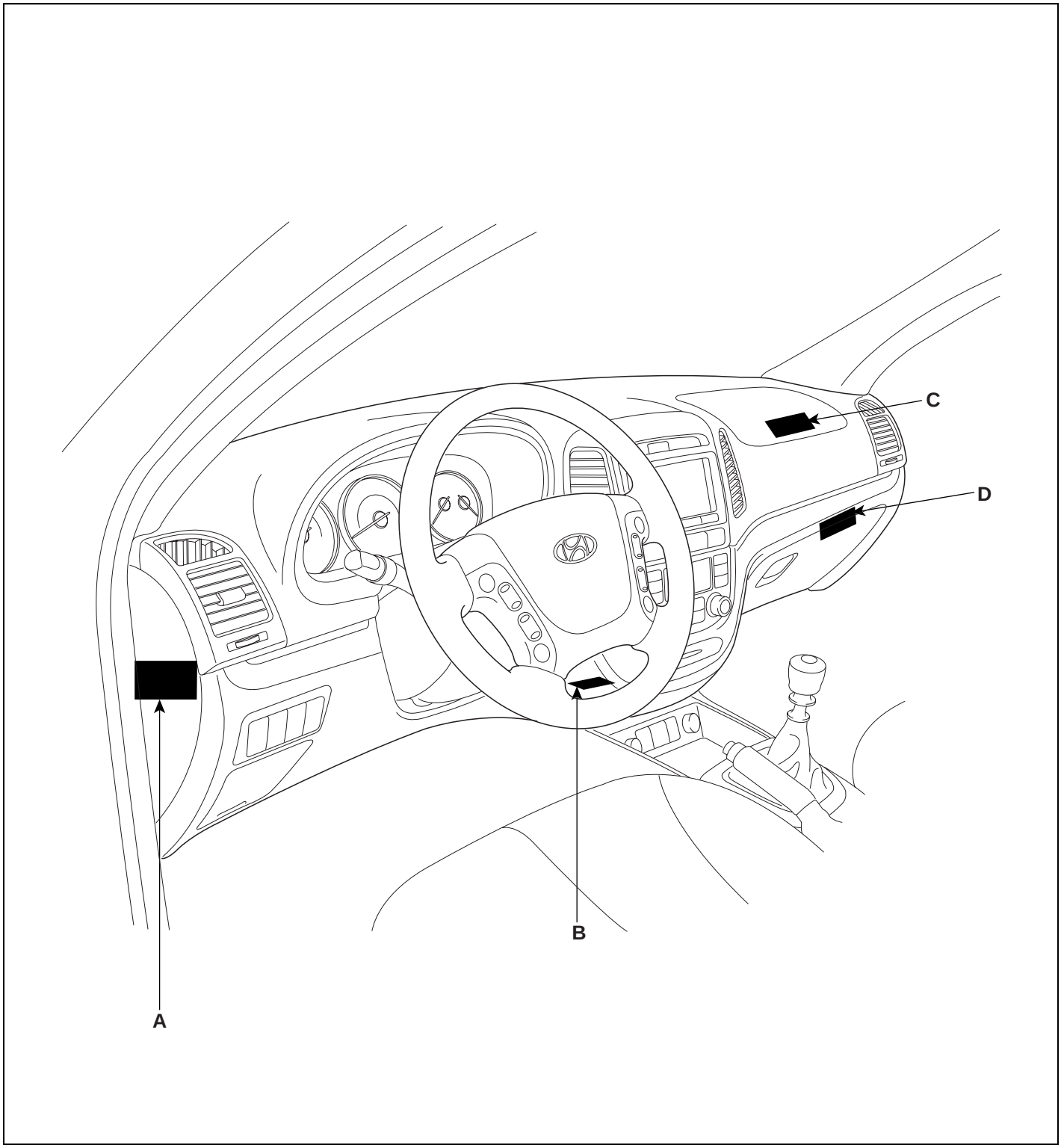

SCMGI6006D

WARNING / CAUTION LABEL (CONT'D)

A : WARNING
SEE OWNER'S MANUAL.
This car is equipped a side airbag for each front seat.
- Do not use any accessory seat covers.
- Use of other seat covers could reduce the effect of the system.
- Do not install any accessories on the side or near the side airbag.
- Do not use excessive force on the side of the seal.
- For further information, see the owner's manual.

B : CAUTION
AIRBAG ESPE UNIT

Detach connector before unmounting. Assemble strictly according to manual instructions.

C : PASSENGER MODULE CAUTION

CAUTION
Don't open, remove or transfer to another vehicle.
Risk of malfunction and bodily injury!
This unit is to be installed and/or dismantled by trained personnel only. This item contains an explosive to be installed igniter.

D : SUPPLEMENTAL RESTRAINT SYSTEM (AIRBAG) INFORMATION
- The airbag is a Supplement Restraint System (SRS).
  You must always wear the seat belts.
- The airbag system condition is normal when the "SRS" lamp in the cluster flashes approximately 6 times after the ignition key is turned on and then goes off.
- If any of the following condition occur, the system must be serviced.
  - "SRS" lamp does not light up when the key is turned on.
  - "SRS" lamp stays lit or flashes continuously.
  - The airbag has inflated.

- The airbag system must be inspected by an authorized dealer ten years after the vehicle manufacture date shown on the certification label, located on left front door opening area.

WARNING
Failure to the above instructions may result in injury to you or other occupants in the vehicle
- See the "SRS" section in Owner's Manual for more information about airbags.

BATTERY CAUTION LABEL DESCRIBTION

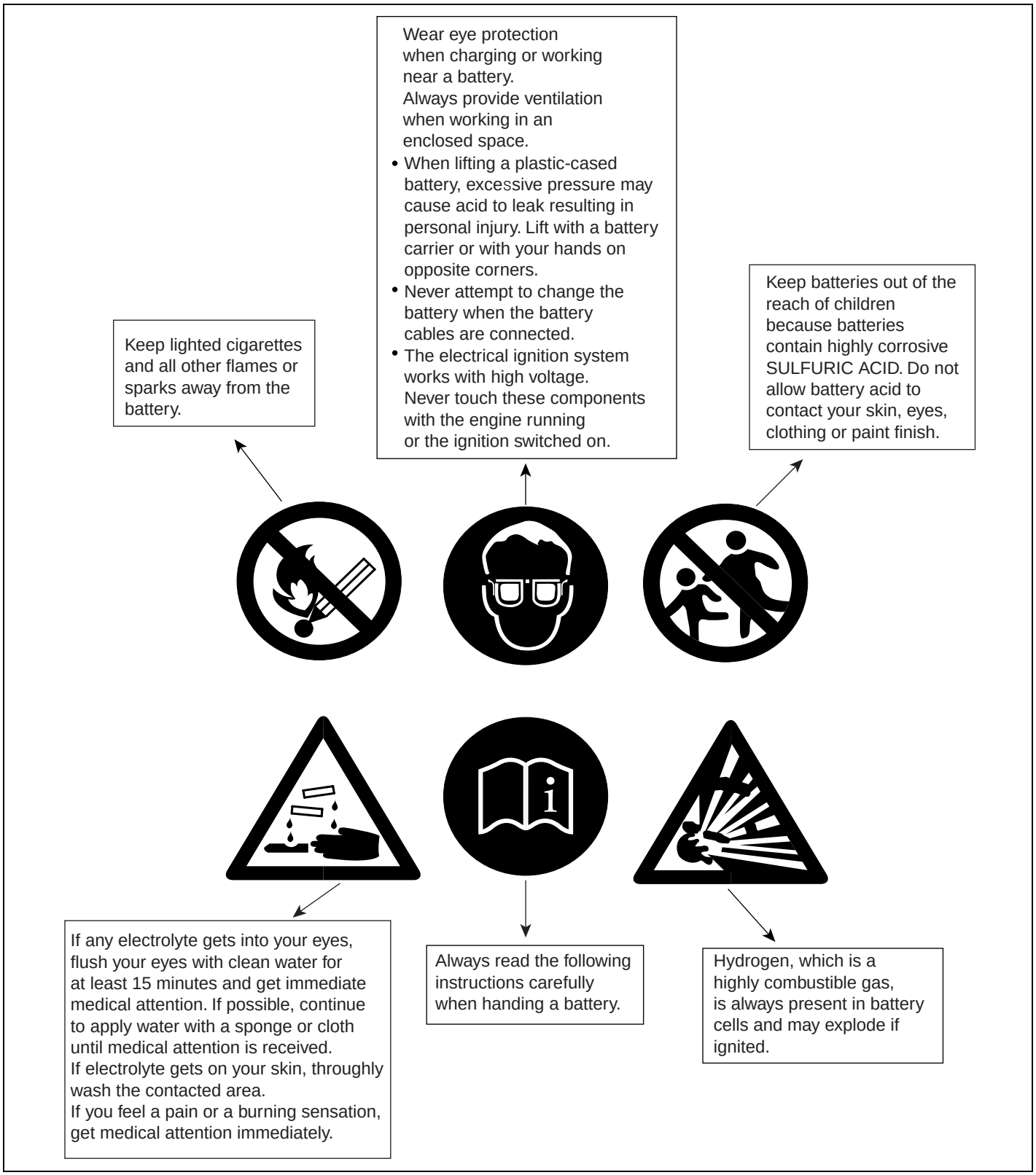

EAKE007E

HANDLING AND STORING THE BATTERY

Battery Itself	• Batteries should be stored in cool, dry (27 degrees Celsius) places and out of direct sunlight. • MF batteries are tightly sealed to prevent acid leakage. However, tilting the battery to an angle of 45 degrees can cause acid to leak through the vents on the sides. Therefore, batteries should always be stored in their upright positions. Prevent placing any aqueous or solid (i.e. conductors) bodies on top of the battery. • It is extremely dangerous to use tools, such as hammers, on the battery terminals when connecting cables to the mounted battery.
Battery on Vehicle	• When storing the vehicle for long periods of time, make sure to remove the memory fuse at junction box to prevent natural discharging. • Also, run the engine for battery charging within 1 month if the memory fuse wasn't removed from the start of vehicle storing. If the memory fuse was removed, run the engine for battery charging within 3 months from the start of vehicle storing.

LIFT AND SUPPORT POINTS

WARNING

When heavy rear components such as suspension, fuel tank, spare tire, tailgate and trunk lid are to be removed, place additional weight in the luggage area before hoisting. When substatial weight is removed from the rear of the vehicle, the center of gravity may change and cam cause the vehicle to tip forward on the hoist.

NOTE

- *Since each tire/wheel assembly weights approximately 30lbs (14kg), placing the front wheels in the luggage area can assist with the weight distribution.*
- *Use the same support points to support the vehicle on safety stands.*

1. Place the lift blocks under the support points as shown in the illustration.
2. Raise the hoist a few inches (centimeters) and rock the vehicle to be sure it is firmly supported.
3. Raise the hoist to full height to inspect the lift points for secure support.

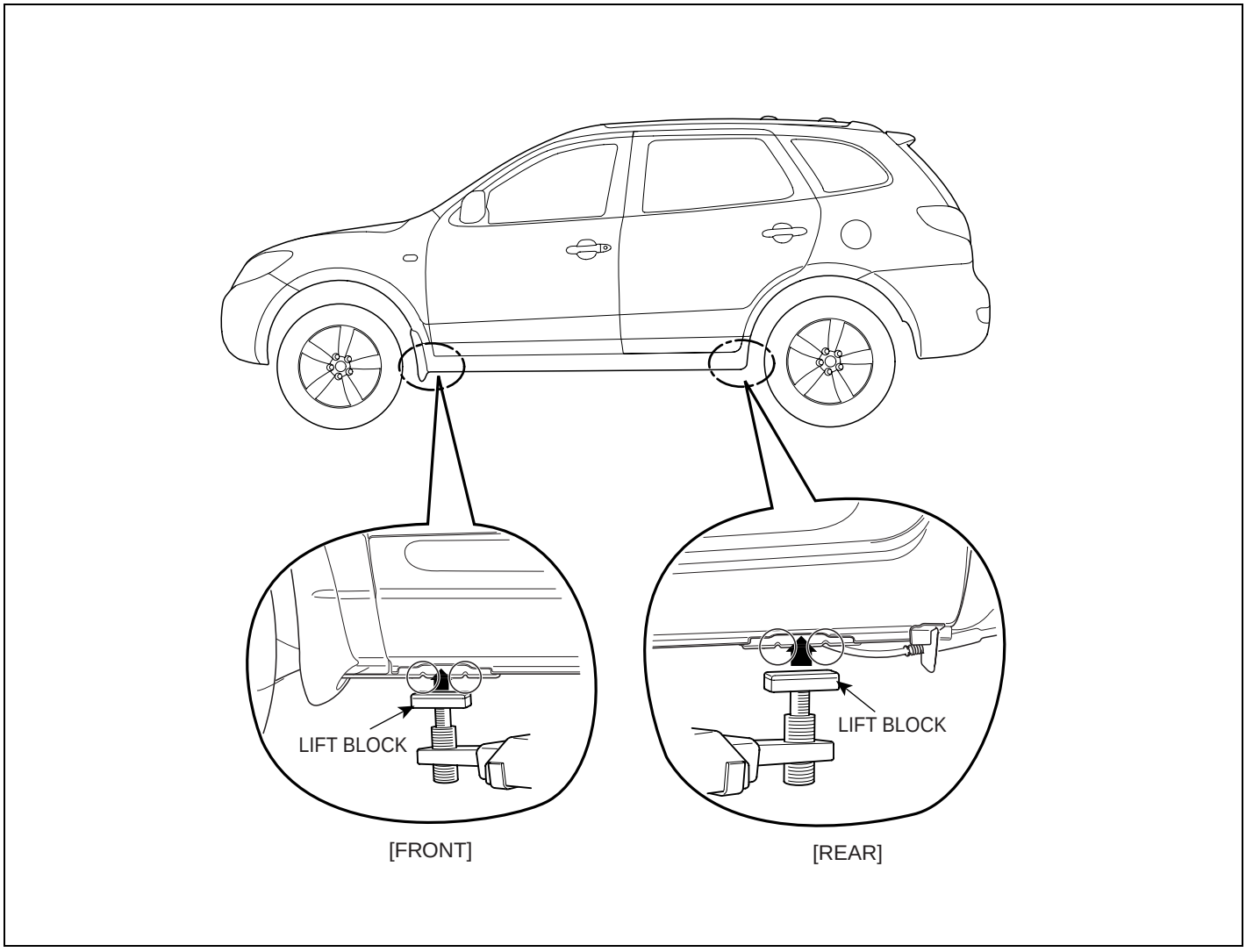

SCMGI6007L

TOWING

If the vehicle needs to be towed, call a professional towing service. Never tow vehicle with just a rope or chain. It is very dangerous.

EMERGENCY TOWING

There are three propular methods of towing a vehicle :

Flat - bed Equipment- The operator loads the vehicle on the back of truck. This is best way of transporting the vehicle.

Wheel Lift Equipment- The tow truck uses two pivoting arms that go under the tires (front or rear) and lift them off the ground. The other two wheels remain on the ground.

Sling type Equipment- The tow truck metal cables with hooks on the ends. These hooks go around parts of the frame or suspension, and the cables lift that end of the vehicle off the ground. The vehicle's suspension and body can be seriously damaged if this method of towing is attempted.

If the vehicle cannot be transported by flat-bed, if should be towed with the front wheels off the ground. If due to damage, the vehicle must be toward with the front wheels on the ground, do not following :
Manual Transmission
- Release the parking brake.
- Shift the transmission to neutral

Automatic Transmission
- Release the parking brake.
- Start the engine.
- Shift to [D] position, then [N] position.
- Turn off the engine.

CAUTION

- ***Improper towing preparation will damage the transmission. Follow the above procedure exactly. If you cannot shift the transmission or start the engine(automatic transmission), your vehicle must be transported on a flatbed.***
- ***It is the best to tow vehicle no farther than 19miles (30km), and keep the speed below 30mph (50km/h).***
- ***Trying to lift or tow your vehicle by the bumpers will cause serious damage. The bumpers are not designed to support the vehicle's weight.***

FRONT :

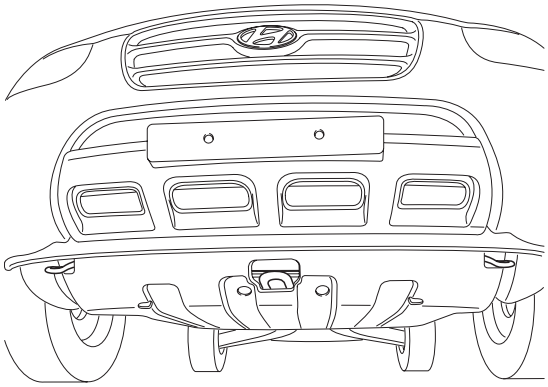

SCMGI6008D

REAR :

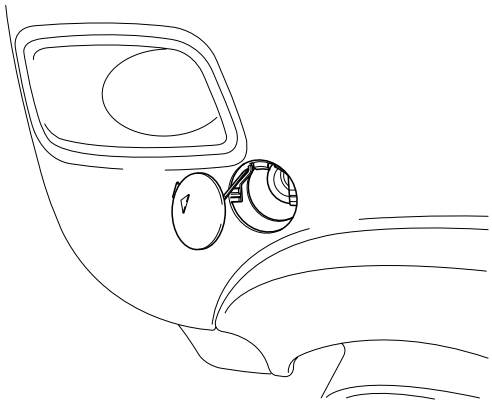

SCMGI6009D

TIGHTENING TORQUE TABLE OF STANDARD PARTS

Bolt niminal diameter (mm)	Pich (mm)	Torque Nm (kg.cm, lb.ft)	
		Head Mark 4	Head Mark 7
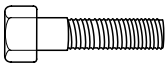 EAKE004E	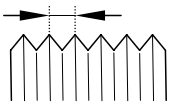 KASD100Y	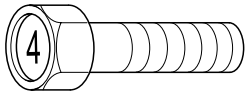 EAKE004F	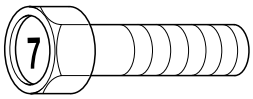 EAKE004G
M5	0.8	3 ~ 4 (30 ~ 40, 2.2 ~ 2.9)	5 ~ 6 (50 ~ 60, 3.6 ~ 4.3)
M6	1.0	5 ~ 6 (50 ~ 50, 3.6 ~ 4.3)	9 ~ 11 (90 ~ 110, 6.5 ~ 8.0)
M8	1.25	12 ~ 15 (120 ~ 150, 9 ~ 11)	20 ~ 25 (200 ~ 250, 14.5 ~ 18.0)
M10	1.25	25 ~ 30 (250 ~ 300, 18 ~ 22)	30 ~ 50 (300 ~ 500, 22 ~ 36)
M12	1.25	35 ~ 45 (350 ~ 450, 25 ~ 33)	60 ~ 80 (600 ~ 800, 43 ~ 58)
M14	1.5	75 ~ 85 (750 ~ 850, 54 ~ 61)	120 ~ 140 (1,200 ~ 1,400, 85 ~ 100)
M16	1.5	110 ~ 130 (1,100 ~ 1,300, 80 ~ 94)	180 ~ 210 (1,800 ~ 2,100, 130 ~ 150)
M18	1.5	160 ~ 180 (1,600 ~ 1,800, 116 ~ 130)	260 ~ 300 (2,600 ~ 3,000, 190 ~ 215)
M20	1.5	220 ~ 250 (2,200 ~ 2,500, 160 ~ 180)	360 ~ 420 (3,600 ~ 4,200, 260 ~ 300)
M22	1.5	290 ~ 330 (2,900 ~ 3,300, 210 ~ 240)	480 ~ 550 (4,800 ~ 5,500, 350 ~ 400)
M24	1.5	360 ~ 420 (3,600 ~ 4,200, 260 ~ 300)	610 ~ 700 (6,100 ~ 7,000, 440 ~ 505)

NOTE

1. *The torques shown in the table are standard values under the following conditions :*
   - *Nuts and bolts are made of galvanized steel bar.*
   - *Galvanized plain steel washers are inserted.*
   - *All nuts, bolts and plain washers are dry.*

2. *The torques shown in the table are not applicable :*
   - *When spring washers, toothed washers and the like are inserted.*
   - *If plastic parts are fastened.*
   - *If self-tapping screws or self-locking nuts are used.*
   - *If threads and surfaces are coated with oil.*

3. *If you reduce the torques in the table to the percentage indicated below, under the following conditions, if will be the standard value.*
   - *If spring washers are used : 85%*
   - *If threads and bearing sufaces are stained with oil : 85%*

LUBRICANTS

RECOMMENDED LUBRICANTS

Parts		OIL & GREASE STANDARD
Engine Oil	Diesel 2.2	API CF -4 or ABOVE, ACEA B4 or ABOVE
	Gasoline 2.7	API SJ or ABOVE
Transaxle	Manual	SAE 75W/85 (API GL - 4)
	Auto	DIAMOND ATF SP-III, SK ATF SP-III
Power Steering		PSF -3
Breake Steering		DOT 3 or equivalent
Coolant		Ethlyene glycol base for aluminium radiator
Transaxle linkage, parking breake cable mechanism, hood, door latch, seat adjuster, tailgate latch, door hinges, tailgate hinge		Multipurpose grease NIGL grade #2

WARNING

Always use Genuine Hyundai parts and recommended fluid.

Using any other type of parts and fluid can cause serious damaged if the vehicle.RECOMMENDED LUBRICANTS

LUBRICANTS CAPACITIES

Description		Gasoline(2.7)	Diesel(2.2)
Engine oil	Oil pan	4.2 (4.44, 3.70)	5.4 (5.70, 4.75)
	Oil filter	0.3 (0.32, 0.26)	0.5 (0.583, 0.44)
	Total	4.5 (4.75, 3.96)	5.9 (6.3, 5.2)
Cooling system		7.8 (8.2, 6.8)	7.9 (8.35, 6.95)
Manual transaxle		2.15 (2.3, 1.86)	2.15 (2.3, 1.86)
Automatic transaxle		7.8 (8.2, 6.8)	7.8 (8.2, 6.8)
Power steering		0.9 (0.95, 0.79)	0.9 (0.95, 0.79)

SELECTION OF ENGINE OIL

Recommended API classification : SJ OR SI ABOVE, CF - 2.7 (Gasoline)

RECOMMENDED SAE VISCOSITY GRADES :

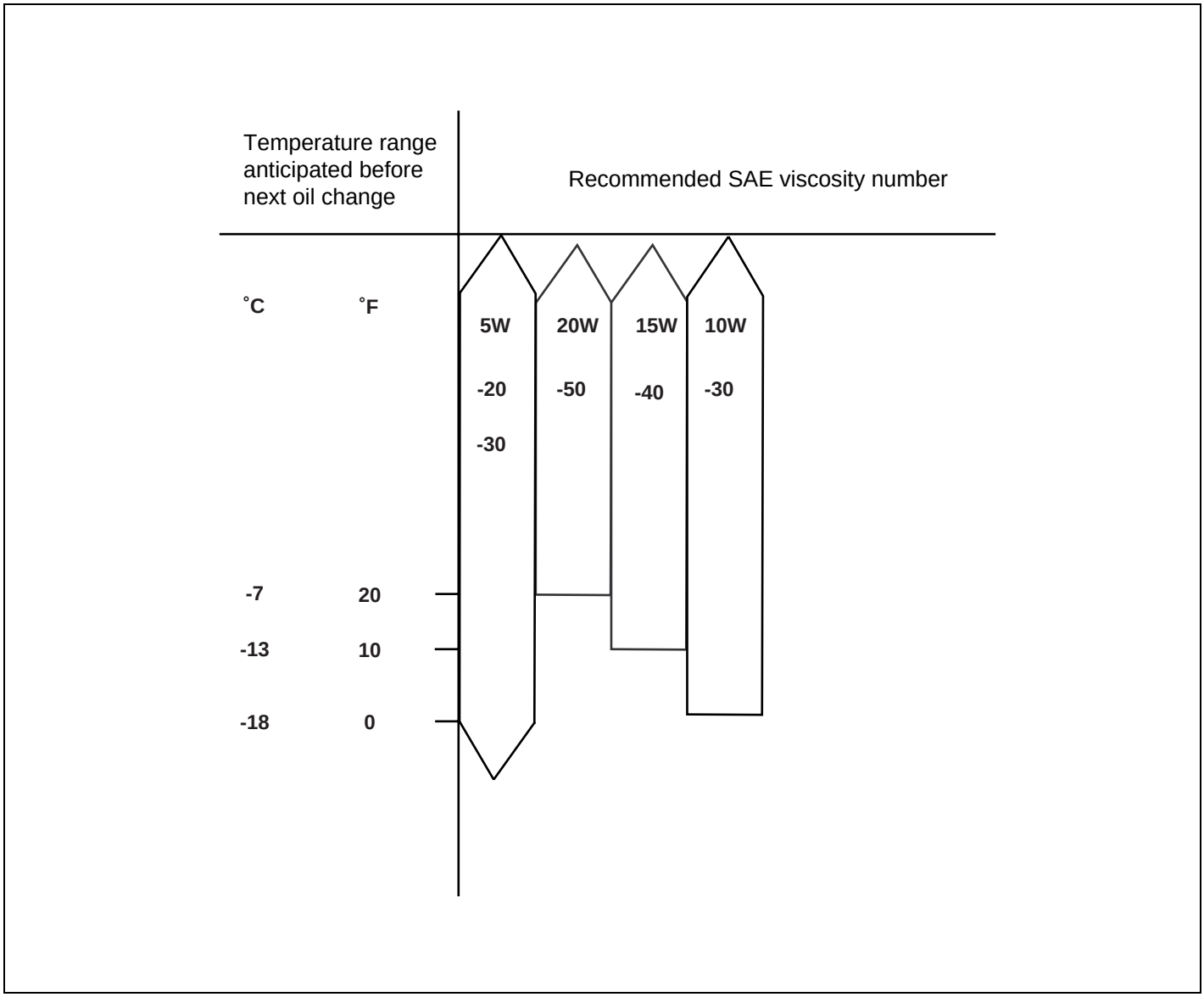

LALG009B

RECOMMENDED API CLASSIFICATION : CF-4 ABOVE - 2.2 (DIESEL)

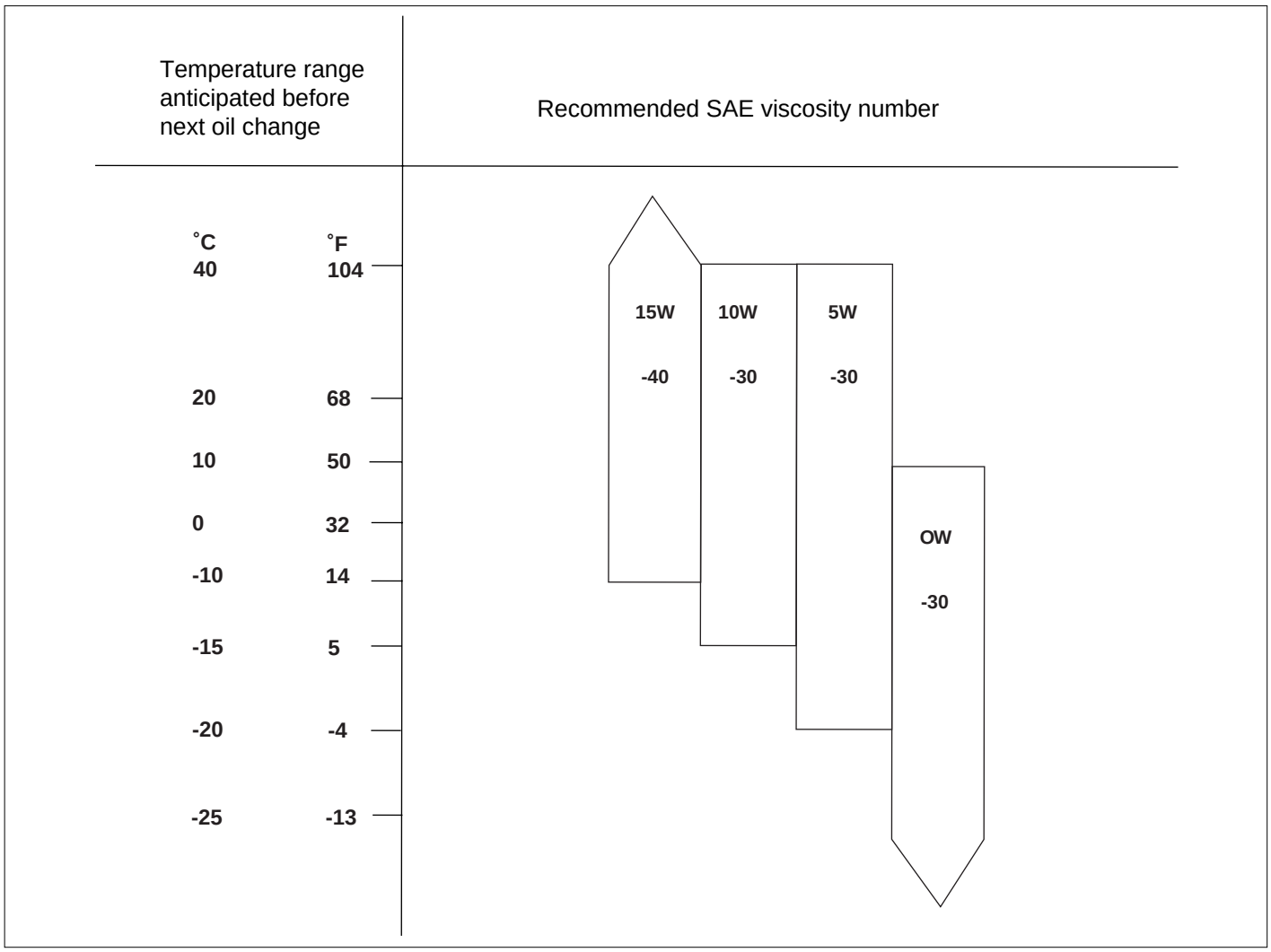

SCMGI6011L

NOTE

For best performance and maximum protection of all types of operation, select only those lubricants which :

1. *Satisfy the requirements of the API classification.*
2. *Have the proper SAE grade number for expected ambient temperature range.*

Lubricants which do not have both an SAE grade number and an API service classification on the container should not be used.

GENERAL SERVICE INFORMATION

PROTECTION OF THE VEHICLE

Always be sure to cover fenders, seats, and floor areas before starting work.

CAUTION

The support rod must be inserted into the hole near the edge of the hood whenever you inspect the engine compartment to prevent the hood from falling and causing possible injury.
Make sure that the support rod has been released prior to closing the hood. Always check to be sure the hood is firmly latched before driving the vehicle.

PREPARATION OF TOOLS AND MESURING EQUIPMENT

Be sure that all necessary tools and measuring equipment are available starting work.

SPECIAL TOOLS

Use special tools when they are required.

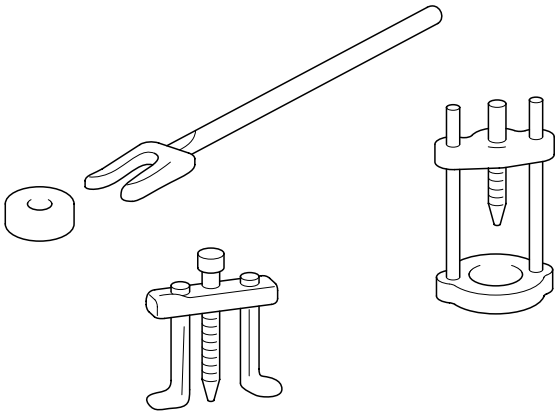

EAKE005A

REMOVAL OF PARTS

First find the cause of the problem and then determine whether removal or disassembly before starting the job.

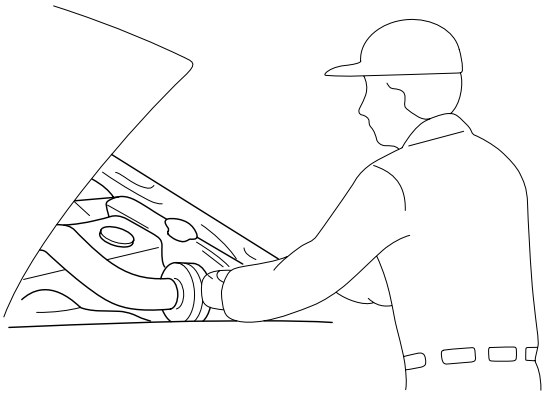

EAKE005B

DISASSEMBLY

If the disassembly procedure is complex, requiring many parts to be disassembled, all parts should be disassembled in a way that will not aggect their performance or external appearance.

1. **Inspection of parts**
   Each part, when removed, should be carefulley on spected for malfunction, deformation, damage, and other problems.

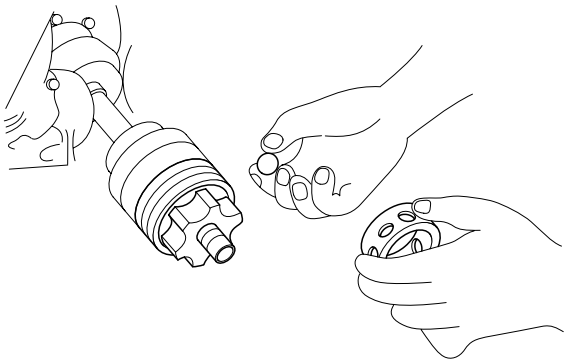

EAKE005C

2. **Arrangement of parts**
   All disassembled parts should be carefully arranged for effective reassembly.
   Be sure to separate and correctly identify the parts to be repllaced from those that will be used again.

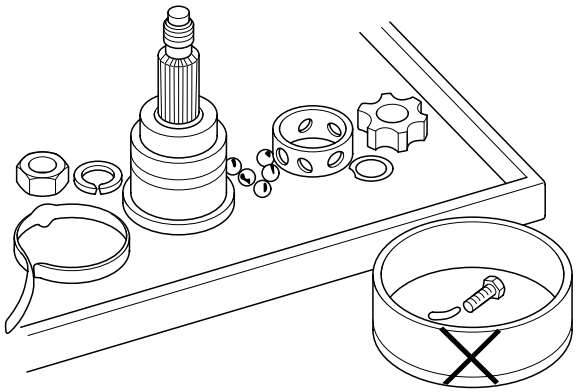

EAKE005D

3. **Cleaning parts for reuse**
   All parts to be used again should be carefully and thoroughly cleaned by an appropriate method.

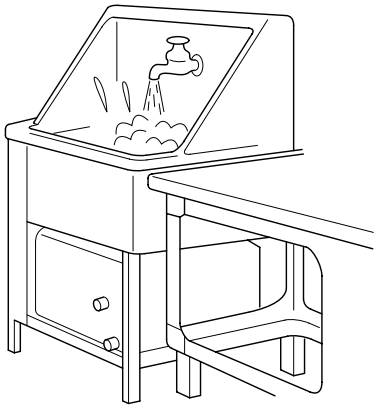

EAKE005E

PARTS

When replacing parts, use HYUNDAI genuine parts.



EAKE005F

REPLACEMENT

Standard values, such as torques and certain adjustments, must be strictly observed in the reassembly of all parts.
If removed, the following parts should always be replaced with new ones.

1. Oil seals
2. Gaskets
3. O-rings
4. Lock washers
5. Cotter pins (split pins)
6. Plastic nuts

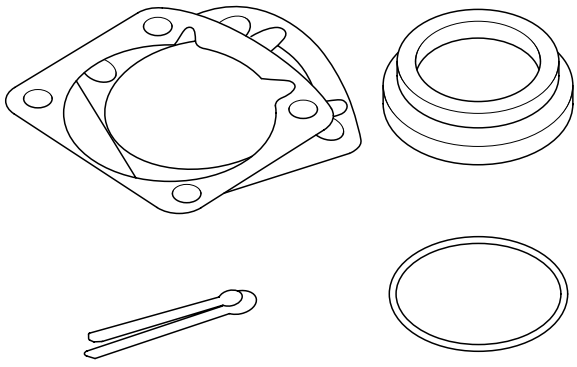

EAKE005G

Depending on their location.

7. Selalant should be applied to gaskets.
8. Oil should be applied to the moving components of parts.
9. Specified oil or grease should be applied to the prescribed locations (oil seals, etc) before assembly.

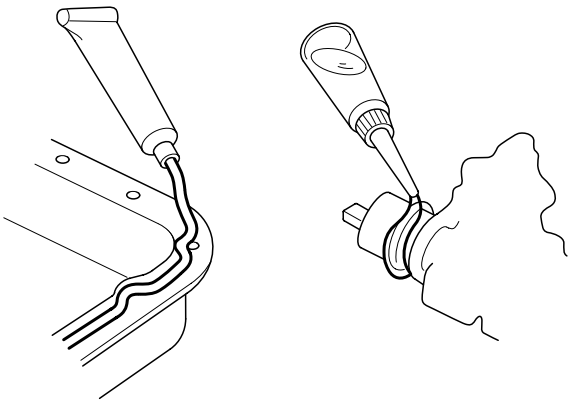

EAKE005H

ADJUSTMENT

Use gauges and testers to adjust correclty the parts to standard values correctly.

ELECTRICAL SYSTEM

1. Be sure to disconnect the battery cable from the negative (-) terminal of the battery.
2. Never pull on the wires when disconnecting connectors.
3. Locking connectors will click when the connector is secure.
4. Handle sensors and relays carefully. Be careful not to drop them against other parts.

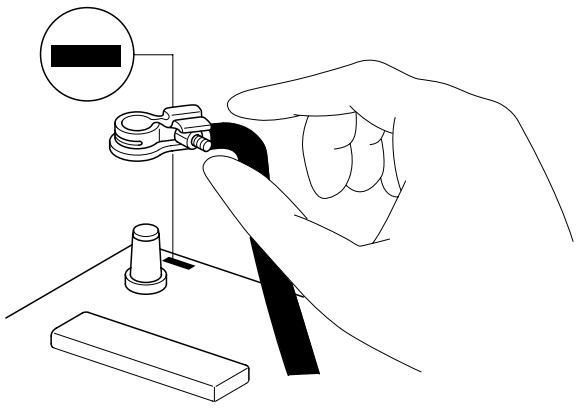

EAKE005I

RUBER PARTS AND TUBES

Always prevent gasoline or from touching rubber parts or tubing.

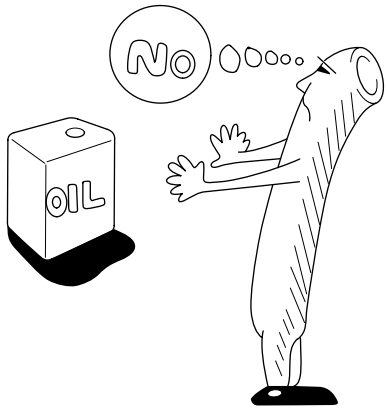

EAKE005J

MEASURING BODY DIMENSIONGS

1. Basically, all measurements in this manual are taken with a tracking gauge.
2. When a measuring tape is used, check to be sure there is no elongation, twisting or bending.
3. For measuring dimensions, both projected dimensioners and actual - measurement dimensions are used in this manual.

DIMENSIONS PROJECTED

1. These are the dimensions measured when the measurement points are projected from the vehicle's surface, and are the reference dimensions used for used for body alterations.
2. If the length of the tracking gauge probes is adjustable, measure it by lengthening one of two probes as long as the different value in height of the two surface.

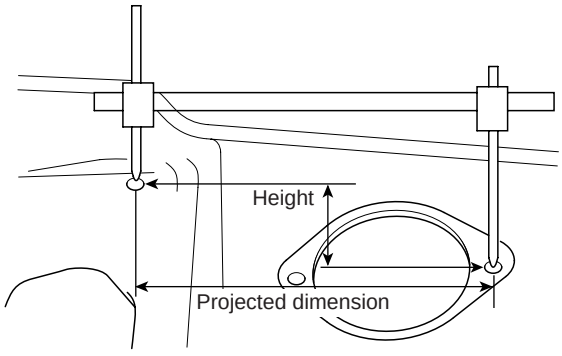

EAKE005K

MEASURING ACTUAL DIMENSIONS

1. These dimensions indicate the actual linear distance between mesaurement points, and are used as the reference dimensions when a tracking gauge is used for measurement.
2. First adjust both probes to the same length (A=A') before measurement.

NOTE

Check the probes and gauge itself to make sure there is no free play.

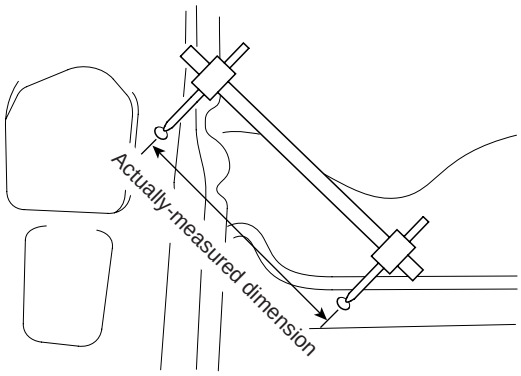

EAKE005L

MEASUREMENT POINT

Measurements should be taken at the center fo the hole.

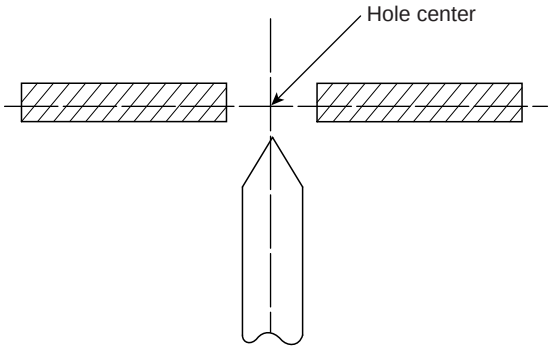

EAKE005M

CHECKING CABLES AND WIRES

1. Check the terminal for tightness.
2. Check terminals and wires for corrosion from battery electrolyte, etc.
3. Check terminals and wires for open corcuits.
4. Check wire insulation and coating for damage, cracks and degrading.
5. Check the conductive parts of terminals for contact with other metallic parts (vehicle body and other parts).
6. Check grounded parts to verify that there is complete continuity between thier attaching bolt(s) and the vehicle's body.
7. Check for incorrect wiring.
8. Check that the wiring is so clamped to the prevent contact with sharp corners of the vehicle body, etc. or hot parts (exhaust manifold, etc.)
9. Check that the wiring is clamped firmy to provide enough clearance from the fan pulley, fan belt and other rotating or moving parts.
10. Check that the wiring has a little space so that it can vibrate between fixed and moving parts such as the vehicle body and the engine.

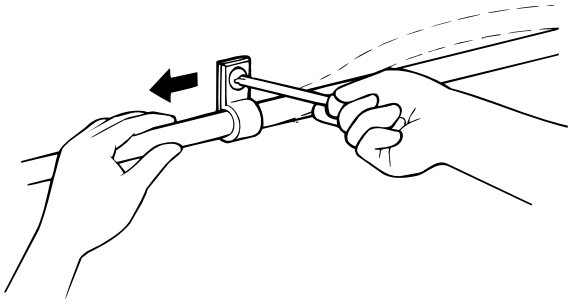

EAKE005N

CHECK FUSES

A blade type fuse test taps provided to allow checking the fuse itself without removing if from the fuse box. The fuse is good if the test lamp lights up when one lead is connected to the test taps (one at a time) and the other lead is grounded. (Turn the ignition switch so that the fuse circuit becomes operative)

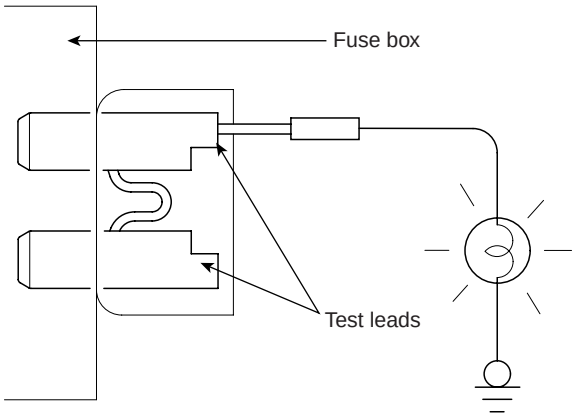

EAKE005O

SERIVICING THE ELECTRICAL SYSTEM

1. Prior to servicing the electrical system, be sure to turn off the ignition switch and disconnect the battery ground cable.

   NOTE

   In the course of MFI or ELC system diagnosis, when the battery cable is removed, any diagnostic trouble code retained by the computer will be cleared. There fore, if necessary, read the diagnostic before removing the battery cable.

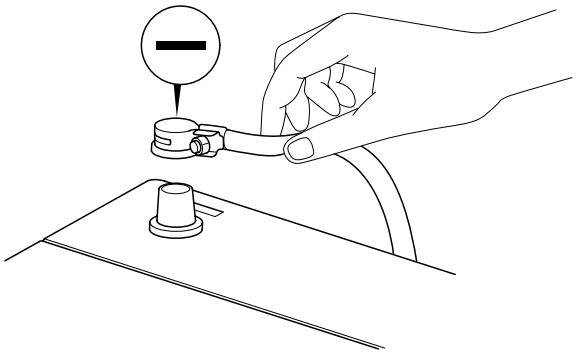

EAKE005P

2. Attach the wiring harnesses with clamps so that there is no slack. However, for any harness which passes the engine or other vibrating parts of the vehicle, allow some slack within a range that does not allow the engine vibrations to cause the harness to come into contact with any of the surronding parts and then secure the harness by using a clamp.

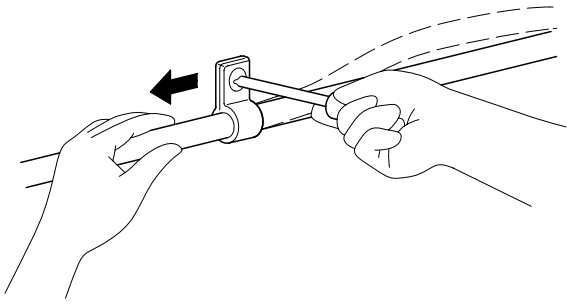

EAKE005R

3. If any section of a wiring harness interferes with the edge of a parts, or a corner, wrap the section of the harness with tape or something similar in order to protect if from damage.

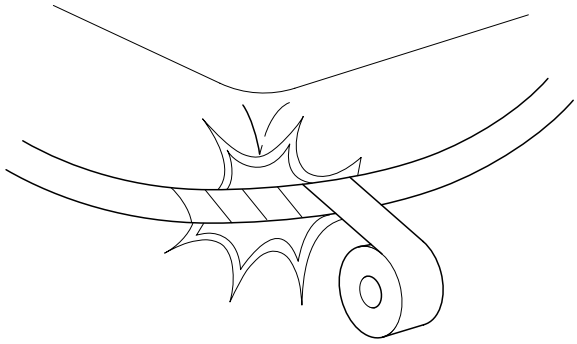

EAKE005S

4. When installing any parts, be careful not to pinch or damage any of the wiring harness.

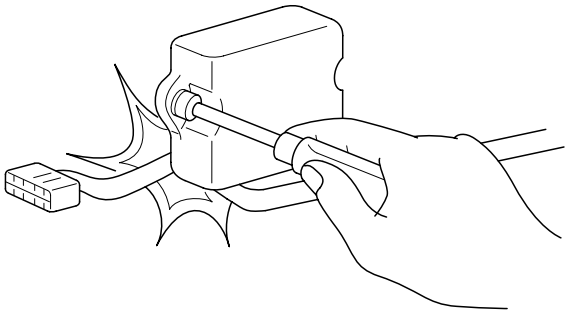

EAKE005T

5. Never throw relays, sensors or electrical parts, or expose them to strong shock.

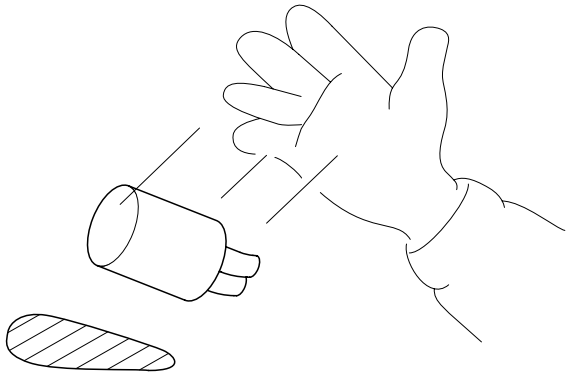

EAKE005U

6. The electronlic parts used in the computer, relays, etc. are readily damaged by heat. If there is a need for service operations that may cause the temperature to exceed 80°C (176°F), remove the electronic parts before hand.

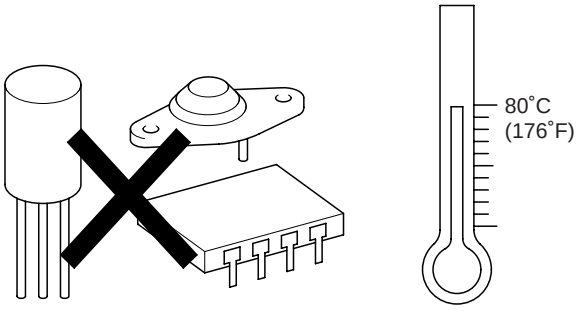

EAKE006A

7. Loose connectors cause problems. Make sure that the connectors are always securely fastened.

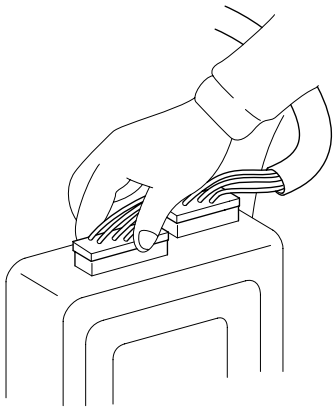

EAKE006B

8. When disconnecting a connector, be sure to grip only the connector, not the wires.

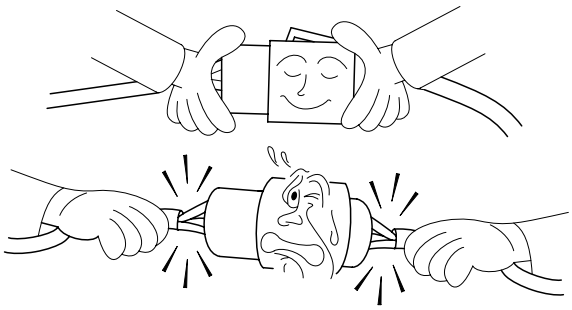

EAKE006C

9. Disconnect connector which have catches by pressing in the direction of the arrows shown the illustration.

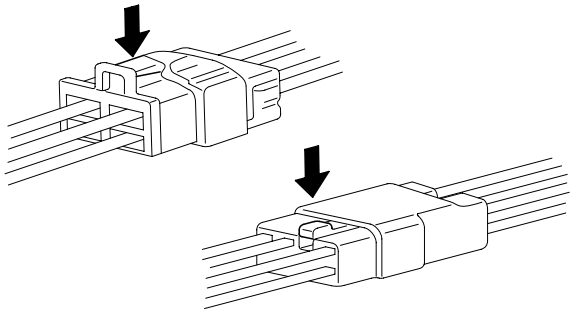

EAKE006D

10. Connect connectors which have catches by inserting the connectors until they make a clicking sound.

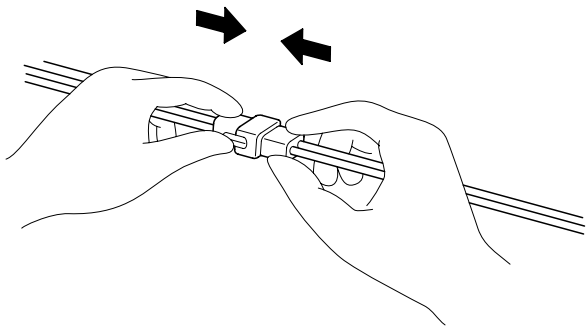

EAKE006E

11. When using a circuit tester to check continuity or voltage on connector terminals, insert the test probe into the harness side. If the connector is a sealed connector, insert the test probe through the hole in the rubber cap until contacts the terminal, being careful not to damage the insulation of the wires.

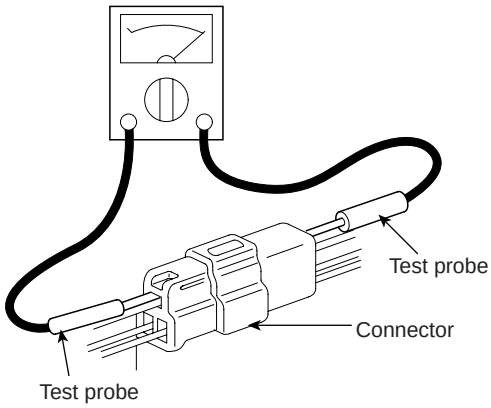

EAKE006G

12. To avoid overloading the wiring, take the electrical current load of the optional equipment into consideration, and determine the appropartate wire size.

Noeminal size	SAE gauge No.	Permissible current	
		In engine compartment	**Other areas**
0.3mm²	AWG 22	-	5A
0.5mm²	AWG 20	7A	13A
0.85mm²	AWG 18	9A	17A
1.25mm²	AWG 16	12A	22A
2.0mm²	AWG 14	16A	30A
3.0mm²	AWG 12	21A	40A
5.0mm²	AWG 10	31A	54A

PRECAUTIONS FOR CATALYTIC CONVERTER

CAUTION

If a large amount of unburned gasolined gasoline flow into the converter, it may overheat and create a fire hazard. To prevent this observe the following precations and explain them to your customer.

1. Use only unleaded gasoline.
2. Do not run the engine while the car is at rest for a long time. Avoid running the engine at fast idle for more than 10minutes and idle speed for more than 20 minutes.
3. Avoid start-jump tests. Do start-jumps only when absolutely necessary. Perform this test as rapidly as possible and, while testing, never race the engine.
4. Do not measure engine compression for and extended time. Engine compression tests must be made as rapidly as possible.
5. Avoid coasting with the ignition turned and during prolonged braking.
6. Do not dispose of used catalytic converter together with parts contaminated with gasoline or oil.

Engine (D4EB - Diesel 2.2)

GENERAL

ENGINE AND TRANSAXLE ASSEMBLY

TIMING SYSTEM

CYLINDER HEAD ASSEMBLY

ENGINE BLOCK

COOLING SYSTEM

LUBRICATION SYSTEM

INTAKE AND EXHAUST SYSTEM

GENERAL

SPECIFICATIONS E18A7ADE

Description		Specifications	Limit
General			
Type		1-type, SOHC	
Number of cylinder		4	
Bore		87mm(3.4252in.)	
Stroke		92mm(3.6220in.)	
Total displacement		2,188cc	
Compression ratio		17.3:1	
Firing order		1-3-4-2	
Valve timing			
Intake valve	Opens (BTDC)	7°	
	Closes (ABDC)	35°	
Exhaust valve	Opens (BBDC)	52°	
	Closes (ATDC)	6°	
Cylinder head			
Flatness of gasket surface		Less than 0.03mm (0.0012in) for width	
		Less than 0.09mm (0.0035in) for length	
		Less than 0.012mm (0.0005in) for 51 × 51 mm	
Camshaft			
Cam height	Intake	34.697mm (1.3660in)	
	Exhaust	34.571mm (1.3611in)	
Journal outer diameter		27.947 ~ 27.960mm(1.1003 ~ 1.1008in.)	
Bearing oil clearance		0.040 ~ 0.074mm (0.0016 ~ 0.0029in)	
End play		0.05 ~ 0.15mm (0.0020-0.0059in)	
Valve			
Valve length	Intake	95.5 ~ 95.9mm(3.7598 ~ 3.7756in.)	
	Exhaust	95.2 ~ 95.6mm(3.7480 ~ 3.7638in.)	
Stem outer diameter	Intake	5.933 ~ 5.953mm(0.2366 ~ 0.2344in.)	
	Exhaust	5.905 ~ 5.925mm(0.2325 ~ 0.2333in.)	
Face angle		45.5° ~ 46°	
Thickness of valve-head(margin)	Intake	1.5 ~ 1.7mm(0.0591 ~ 0.0669in.)	
	Exhaust	1.2 ~ 1.4mm(0.0472 ~ 0.0551in.)	
Valve stem to valve guide clearance	Intake	0.022 ~ 0.067mm(0.0009 ~ 0.0021in.)	
	Exhaust	0.050 ~ 0.095mm(0.0020 ~ 0.0037in.)	
Valve guide			

Description		Specifications	Limit
Length	Intake	36.25 ~ 36.75mm(1.4272 ~ 1.4468in.)	
	Exhaust	36.25 ~ 36.75mm(1.4272 ~ 1.4468in.)	
Valve spring			
Free length		38.8mm (1.5276in)	
Load		21.25±1.3kg/32.0mm(47.4±2.9 lb/1.2598in)	
Out of squareness		Less than 1.5°	
Valve seat			
Seat angle		44° ~ 46°	
Valve contacting width	Intake	0.95 ~ 1.25mm(0.0374 ~ 0.0492in.)	
	Exhaust	0.8825 ~ 1.0825mm(0.0347 ~ 0.0426in.)	
Piston			
Piston outer diameter		86.92 ~ 86.95mm (3.4220 ~ 3.4232in)	
Piston to cylinder clearance		0.07 ~ 0.09mm (0.0028 ~ 0.0035in)	
Ring groove width	No. 1 ring groove	2.415 ~ 2.445mm (0.0951 ~ 0.0963in.)	
	No. 2 ring groove	2.06 ~ 2.08mm (0.0811 ~ 0.0819in.)	
	Oil ring groove	3.02 ~ 3.04mm (0.1189 ~ 0.1197in.)	
Piston ring			
Side clearance	No. 1 ring	0.083 ~ 0.137mm (0.0033 ~ 0.0054in)	
	No. 2 ring	0.065 ~ 0.110mm (0.0026 ~ 0.0043in)	
	Oil ring	0.03 ~ 0.07mm (0.0012 ~ 0.0028in)	
End gap	No. 1 ring	0.25 ~ 0.40mm (0.0098 ~ 0.0157in)	
	No. 2 ring	0.40 ~ 0.60mm (0.0157 ~ 0.0236in)	
	Oil ring	0.20 ~ 0.40mm (0.0079 ~ 0.0157in)	
Piston pin			
Piston pin outer diameter		27.995 ~ 28.000mm (1.1022 ~ 1.1024in)	
Connecting rod			
Connecting rod bearing oil clearance		0.024 ~ 0.042mm(0.0009 ~ 0.0017in.)	
Crankshaft			
Main journal outer diameter		60.002 ~ 60.020mm (2.3623 ~ 2.3630in.)	
Pin journal outer diameter		50.008 ~ 50.026mm (1.9688 ~ 1.9695in.)	
Main bearing oil clearance		0.024 ~ 0.042mm(0.0009 ~ 0.0017in.)	0.1mm
End play		0.09 ~ 0.32mm (0.0035 ~ 0.126in)	
Cylinder block			
Cylinder bore		87mm(3.4252in.)	
Flywheel			
Runout		0.45mm(0.0177in.)	
Oil pump			

Description		Specifications	Limit
Side clearance	Tip clearance	0.12 ~ 0.20mm(0.0047 ~ 0.0079in.)	
	Radial clearance	0.13 ~ 0.23mm(0.0051 ~ 0.0091in.)	
Cooling system			
Cooling method		Forced circulation with electrical fan	
Coolant quantity		8.4L(8.88US qt, 7.39lmp qt)	
Thermostat	Type	Wax pellet type	
	Opening temperature	85±1.5°C (185±34.7°F)	
	Fully opened temperature	100°C (213°F)	
	Full lift	8mm (0.3150in.) or more	

TIGHTENING TORQUE

ITEM	N.m	kgf.m	lb.ft
Engine mounting bracket nuts/bolts(engine side)	63.7 ~ 83.4	6.5 ~ 8.5	47.0 ~ 61.5
Engine mounting bracket nuts(body side)	63.7 ~ 83.4	6.5 ~ 8.5	47.0 ~ 61.5
Engine mounting insulator bolt	78.5 ~ 98.1	8.0 ~ 10.0	57.9 ~ 72.3
Engine support bracket bolt	42.2 ~ 53.9	4.3 ~ 5.5	31.1 ~ 39.8
Front roll stopper bracket sub frame member bolt	49.0 ~ 63.7	5.0 ~ 6.5	36.2 ~ 47.0
Front roll stopper insulator bolt/nut	78.5 ~ 98.1	8.0 ~ 10.0	57.9 ~ 72.3
Rear roll stopper bracket sub frame member bolt	49.0 ~ 63.7	5.0 ~ 6.5	36.2 ~ 47.0
Rear roll stopper insulator bolt/nut	78.5 ~ 98.1	8.0 ~ 10.0	57.9 ~ 72.3
Transaxle mounting bracket bolt(transaxle side)	63.7 ~ 83.4	6.5 ~ 8.5	47.0 ~ 61.5
Transaxle mounting bracket bolt(body side)	63.7 ~ 83.4	6.5 ~ 8.5	47.0 ~ 61.5
Cylinder head cover bolt	7.8 ~ 9.8	0.8 ~ 1.0	5.8 ~ 7.2
Camshaft sprocket bolt	122.6 ~ 137.3	12.5 ~ 14.0	90.4 ~ 101.3
Camshaft bearing cap bolt	26.0 ~ 28.9	2.7 ~ 3.0	19.2 ~ 21.3
Air cleaner body mounting bolt	7.8 ~ 9.8	0.8 ~ 1.0	5.8 ~ 7.2
Crankshaft bolt	196.1 ~ 205.9	20.0 ~ 21.0	144.7 ~ 151.9
Damper pulley bolt	29.4 ~ 33.3	3.0 ~ 3.4	21.7 ~ 24.6
Cylinder head bolt(at cold)	63.7 + 120° + 120°	6.5 + 120° + 120°	47.0 + 120° + 120°
Timing belt auto tensioner bolt	49.0 ~ 53.9	5.0 ~ 5.5	36.2 ~ 39.8
Drive belt auto tensioner bolt	25.5 ~ 30.4	2.6 ~ 3.1	18.8 ~ 22.4
Timing belt auto tensioner adjusting bolt	9.8 ~ 11.8	1.0 ~ 1.2	7.2 ~ 8.7
Drive belt idler bolt	45.1 ~ 50.0	4.6 ~ 5.1	33.3 ~ 36.9
Oil pan bolt	9.8 ~ 11.8	1.0 ~ 1.2	7.2 ~ 8.7
Oil pan drain plug	34.3 ~ 44.1	3.5 ~ 4.5	25.3 ~ 32.5
Oil screen	9.8 ~ 11.8	1.0 ~ 1.2	7.2 ~ 8.7
Oil pressure switch	14.7 ~ 21.6	1.5 ~ 2.2	10.8 ~ 15.9
Oil filter fitting	47.1 ~ 51.0	4.8 ~ 5.2	34.7 ~ 37.6
Oil filter	22.6 ~ 24.5	2.3 ~ 2.5	16.6 ~ 18.1
Oil jet bolt	8.8 ~ 12.7	0.9 ~ 1.3	6.5 ~ 9.4
Oil pump cover bolt	7.8 ~ 9.8	0.8 ~ 1.0	5.8 ~ 7.2
Oil pump assembly	19.6 ~ 26.5	2.0 ~ 2.7	14.5 ~ 19.5
Oil lever gauge	9.8 ~ 11.8	1.0 ~ 1.2	7.2 ~ 8.7
Plug cap	7.8 ~ 9.8	0.8 ~ 1.0	5.8 ~ 7.2
Timing belt upper cover	7.8 ~ 11.8	0.8 ~ 1.2	5.8 ~ 8.7
Timing belt lower cover	7.8 ~ 11.8	0.8 ~ 1.2	5.8 ~ 8.7
Flywheel	68.6 ~ 78.5	7.0 ~ 8.0	50.6 ~ 57.9
Connecting rod cap bolt	24.5 + 90°	2.5 + 90°	18.1 + 90°
Water pump and cylinder block bolt	47.1 ~ 51.0	4.8 ~5.2	34.7 ~ 37.6

ITEM	N.m	kgf.m	lb.ft
Water inlet mounting bolt	9.8 ~ 11.8	1.0 ~ 1.2	7.2 ~ 8.7
Crankshaft bedplate bolt(15mm)-bearing cap bolt(M11 x 1.5P)	19.6 ~ 24.5	2.0 ~ 2.5	14.5 ~ 18.1
Crankshaft bedplate bolt(12mm)-bearing cap bolt(M8 x 1.25P)	29.4 ± 2.0 + 120°	3.0 ± 0.2 + 120°	21.7 ± 1.4 + 120°
Balance shaft assembly mounting bolt	33.0 ~ 37.0	3.4 ~ 3.8	24.4 ~ 27.3
Intake manifold and cylinder head mounting bolt/nut	52.0 ~ 55.9	5.3 ~ 5.7	38.3 ~ 41.2
Exhaust manifold and cylinder head mounting nut	14.7 ~ 21.6	1.5 ~ 2.2	10.8 ~ 15.9
Turbocharger supporting bolt	29.4 ~ 34.3	3.0 ~ 3.5	21.7 ~ 25.3
Turbocharger heat protector mounting bolt	34.3 ~ 44.1	3.5 ~ 4.5	25.3 ~ 32.5
Heater pipe protector mounting bolt	16.7 ~ 21.6	1.7 ~ 2.2	12.3 ~ 15.9
Exhaust manifold and front muffler mounting nut	7.8 ~ 9.8	0.8 ~ 1.0	5.8 ~ 7.2
Front muffler and catalytic convertor mounging nut	39.2 ~ 58.8	4.0 ~ 6.0	28.9 ~ 43.4
Catalytic covertor and center muffler mounting nut	39.2 ~ 58.8	4.0 ~ 6.0	28.9 ~ 43.4
Center muffler and main muffler mounting nut	39.2 ~ 58.8	4.0 ~ 6.0	28.9 ~ 43.4
Subframe mounting bolts/nuts	68.6 ~ 88.3	7.0 ~ 9.0	50.6 ~ 65.1
Subframe mounting bolts	137.3 ~ 156.9	14.0 ~ 16.0	101.3 ~ 115.7
Injector holder mounting bolts	39.2 ~ 53.9	4.0 ~ 5.5	28.9 ~ 39.8

TROUBLESHOOTING E72E93DD

Symptom	Suspect	Remedy
Engine misfire with abnormal internal lower engine noises.	Loose or improperly installed engine flywheel.	Repair or replace the flywheel as required.
	Worn piston rings (Oil consumption may or may not cause the engine to misfire.)	Inspect the cylinder for a loss of compression. Repair or replace as required.
	Worn crankshaft thrust bearings.	Replace the crankshaft and bearings as required.
Engine misfire with abnormal valve train noise.	Stuck valves (Carbon buildup on the valve stem can cause the valve not to close properly.)	Repair or replace as required
	Excessive worn or mis-aligned timing belt	Replace the timing belt and sprocket as required.
	Worn camshaft lobes.	Replace the camshaft and valve lifters.
Engine misfire with coolant consumption.	• Faulty cylinder head gasket and/or cranking or other damage to the cylinder head and engine block cooling system. • Coolant consumption may not cause the engine to overheat.	• Inspect the cylinder head and engine block for damage to the coolant passages and/or a faulty head gasket. • Repair or replace as required.
Engine misfire with excessive oil consumption.	Worn valves, valve guides and/or valve stem oil seals.	Repair or replace as required.
	Worn piston rings. (Oil consumption may or may not cause the engine to misfire)	• Inspect the cylinder for a loss of compression. • Repair or replace as required.
Engine noise on start-up, but only lasting a few seconds.	Incorrect oil viscosity.	• Drain the oil • Install the correct viscosity oil.
	Worn crankshaft thrust bearing.	• Inspect the thrust bearing and crankshaft. • Repair or replace as required.
Upper engine noise, regardless of engine speed.	Low oil pressure.	Repair or replace as required.
	Broken valve spring.	Replace the valve spring
	Worn or dirty valve lifters.	Replace the valve lifters.
	Stretched or broken timing belt and/or damaged sprocket teeth.	Replace the timing belt and sprockets.
	Worn timing chain tensioner, if applicable.	Replace the timing chain tensioner as required.
	Worn camshaft lobes.	• Inspect the camshaft lobes. • Replace the timing camshaft and valve lifters as required.
	Worn valve guides or valve stems.	Inspect the valves and valve guides, then repair as required.
	Stuck valves. (Carbon on the valve stem or valve seat may cause the valve to stay open.)	Inspect the vlaves and valve guides, then repair as required.

Symptom	Suspect	Remedy
Lower engine noise, regardless of engine speed.	Low oil pressure.	Repair or replace damaged components as required.
	Loose or damaged flywheel.	Repair or replace the flywheel.
	Damaged oil pan, contacting the oil pump screen.	• Inspect the oil pan. • Inspect the oil pump screen. • Repair or replace as required.
	Oil pump screen loose, damage or restired.	• Inspect the oil pump screen. • Repair or replace as required.
	Excessive piston-to-cylinder bore clearance.	• Inspect the piston and cylinder bore. • Repair as required.
	Excessive piston pin-to bore clearance.	• Inspect the piston, piston pin and the connecting rod. • Repair or replace as required.
	Excessive connecting rod bearing clearance	Inspect the following components and repair as required. • The connecting rod bearings. • The connecting rods. • The crankshaft. • The crankshaft journal.
	Excessive crankshaft bearing clearance	Inspect the following components and repair as required. • The crankshaft bearings. • The crankshaft journals.
	Incorrect piston, piston pin and connecting rod installation	• Verify the piston pins and connecting rods are installed correctly. • Repair as required.
Engine noise under load	Low oil pressure	Repair or replace as required.
	Excessive connecting rod bearing clearance	Inspect the following components and repair as required. • The connecting rod bearings. • The connecting rods. • The crankshaft
	Excessive crankshaft bearing clearnace	Inspect the following components, and repair as required. • The crankshaft bearings. • The crankshaft journals. • The cylinswe block crankshaft bearing bore.

Symptom	Suspect	Remedy
Engine will not crank-crakshaft will not rotate	Hydraulically cylinder • Coolant/antifreeze in cylinder. • Oil in cylinder. • Fuel in cylinder	1. Remove injectors and check for fluid. 2. Inspect for broken head gasket. 3. Inspect for cranked engine black or cylinder head. 4. Inspect for a sticking fuel injector and/or leaking fuel regulator.
	Broken timing chain and/or timing chain gears.	1. Inspect timing chain and gears. 2. Repair as required.
	Material cylinder • Broken valve • Piston material • Foreign meterial	1. Inspect cylinder for damaged components and/or foreign materials. 2. Repair or replace as required.
	Seized crankshaft or connecting rod bearings.	1. Inspect crankshaft and connecting rod bearing. 2. Repair as required.
	Bent or broken connecting rod.	1. Inspect connectong rods. 2. Repair as required.
	Broken crankshaft	1. Inspect crankshaft. 2. Repair as required.

SPEICAL SERVICE TOOLS E764F48B

Tool (Number and name)	Illustration	Use
Camshaft oil seal installer (09212-27100)	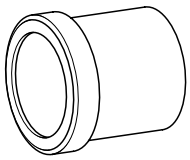 ACIE003A	Installation of the camshaft oil seal
Valve spring compressor (09222-27300)	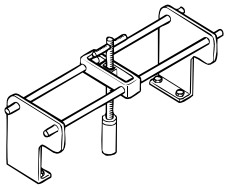 ACIE004A	Removal and installation of intake and exhaust valves
Valve stem oil seal installer (09222-27200)	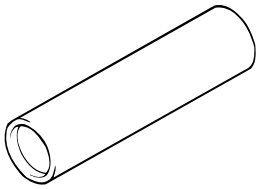 ACIE005A	Installation of valve stem oil seals
Crankshaft rear oil seal installer (09231-27000)	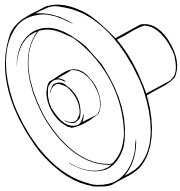 ACIE006A	Installation of the crankshaft real oil seal
Front case oil seal installer (09231-27100)	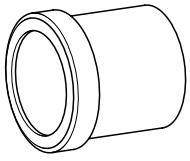 ACIE003A	Installation of the front case oil seal

Tool (Number and name)	Illustration	Use
Injector oil seal installer (09351-27401)	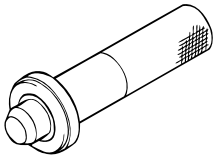 ACIE007A	Installation of the injector oil seal
Compression gauge & adapter (09351-27000) (09351-27100)	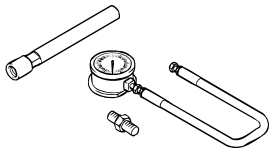 ACIE002A	Checking engine compression pressure
Oil filter wrench (09263-2E000)	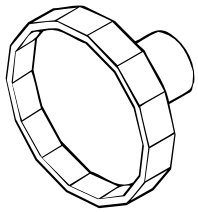 ACIE008A	Removal and installation of oil filter For the rest area except Europe LHD
Oil filter wrench (09263-27000)	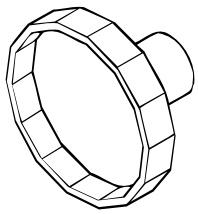 ACIE008A	Removal and installation of oil filter For Europe LHD

ENGINE AND TRANSAXLE ASSEMBLY

REMOVAL E1706BBE

CAUTION

- ***Make sure jacks and safety stands are placed properly.***
- ***Make sure the vehicle will not roll off stands and fall while you are working under it.***
- ***Use fender covers to avoid damaging painted surface.***
- ***Unplug the wiring connectors carefully while holding the connector portion to avoid damage.***
- ***Mark all wiring and hoses to avoid misconnection.***
  Also, be sure that they do not contact other wiring or hoses or interfere with other parts.

1. Remove the air duct(A).

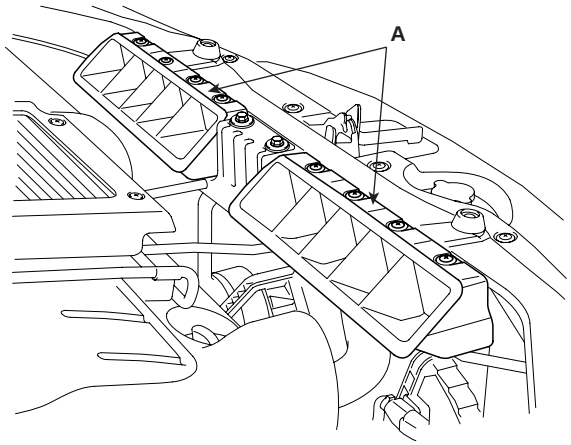

SCMEM6001D

2. Remove the battery terminals and the battery assembly(A).

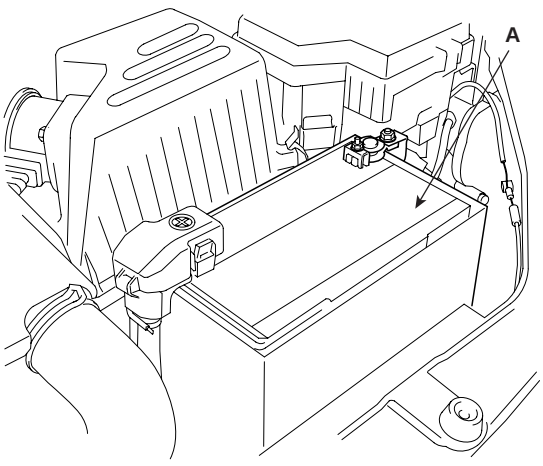

SCMEM6002D

3. Remove the intercooler system.

   1) Disconnect the connector(C) related to the BPS(Boost Pressure Sensor)(A) and the VGT(Variable Geometry Turbocharger) solenoid valve(B).

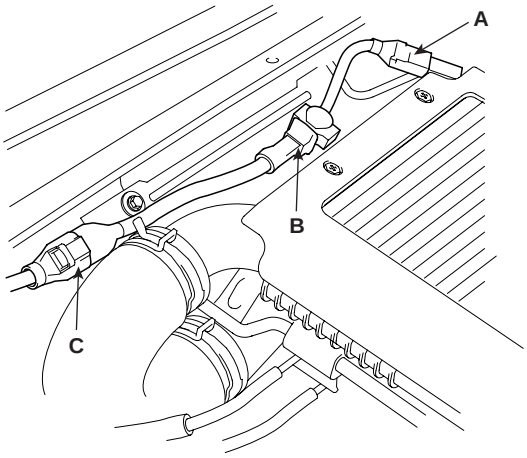

SCMEM6003D

   2) Disconnect the intercooler hoses(A).

   3) Disconnect the VGT(Variable Geometry Turbocharger) solenoid valve vaccum hoses(B).

   4) Remove the intercooler hose assembly(C).

Tightening torque :
7.8 ~ 11.8N.m(0.8~1.2kgf.m, 5.8 ~ 8.7lb-ft)

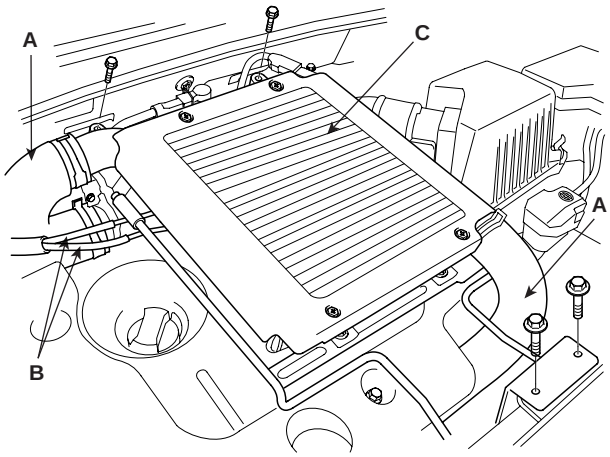

SCMEM6004D

4. Remove the under cover(A).

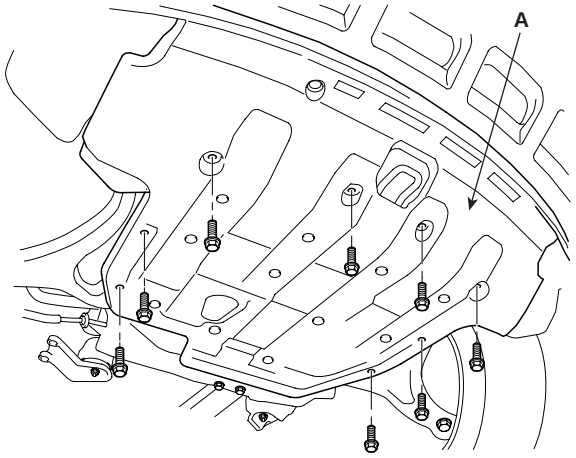

SCMEM6005D

5. Drain engine coolant and remove the radiator cap to speed draining.

6. Remove the drain plug(A) and the radiator lower hose(B).

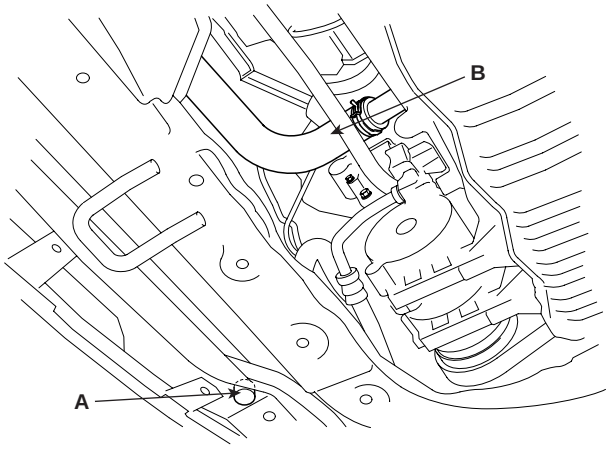

SCMEM6006D

7. Remove the air cleaner assembly.

   1) Disconnect the AFS(Air Flow Sensor) connector(A).

   2) After removing the air intake hose clamp, loosen the air cleaner assembly mounting bolts(2EA).

   3) Remove the air cleaner assembly(B).

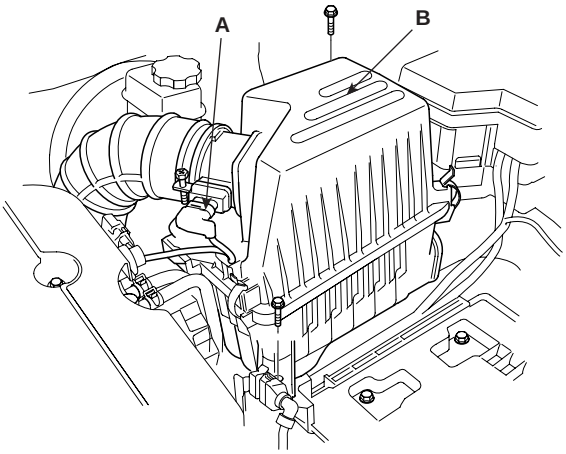

SCMEM6007D

8. Remove the battery tray(A), loosening the mounting bolts(4EA).

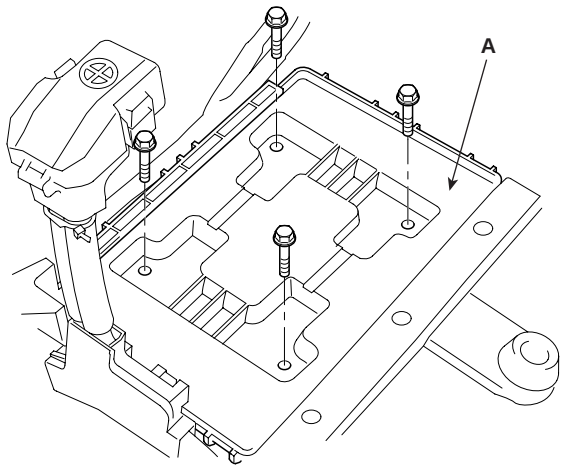

SCMEM6008D

9. Disconnect the ECU(Engine Control Unit) connectors(A) and remove its mounting bolts(B).

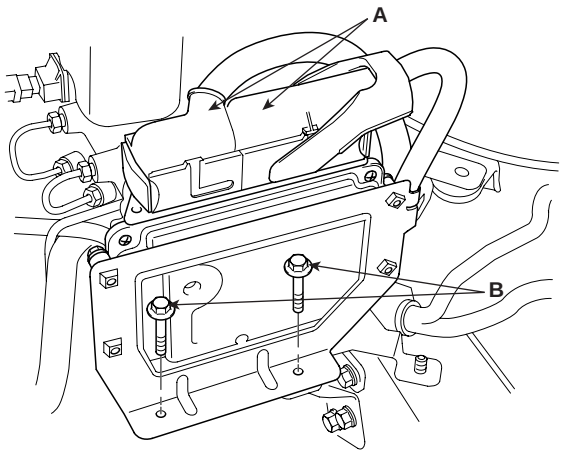

SCMEM6009D

10. Remove the engine cover(A).

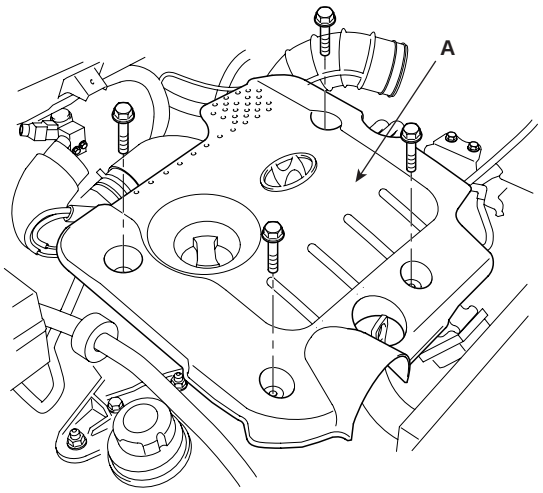

SCMEM6010D

11. Remove the hose between the intercooler and the intake system.

12. Remove the engine wirings.

1) Disconnect the rail pressure sensor connector(A) and the ECT(Engine Coolant Temperature) sensor connector(B).

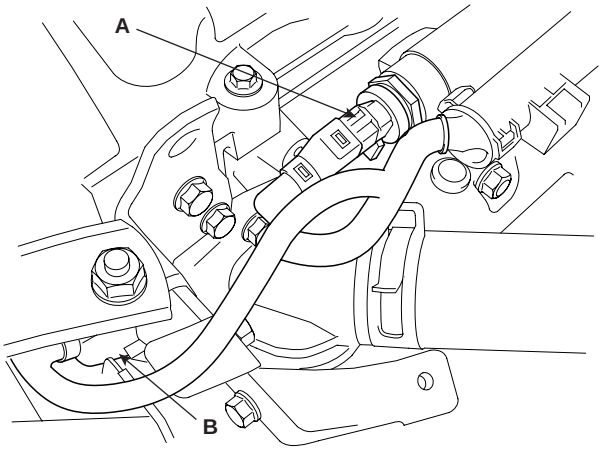

SCMEM6011D

2) Disconnect the camshaft position sensor connector(A), the rail pressure regulator connector(B), the swirl valve actuator connector(C), the electronic throttle body actuator connector(D), the oil pressure switch connector(E) and the crankshaft position sensor connector(F) and remove the connector/wire harness protector(G).

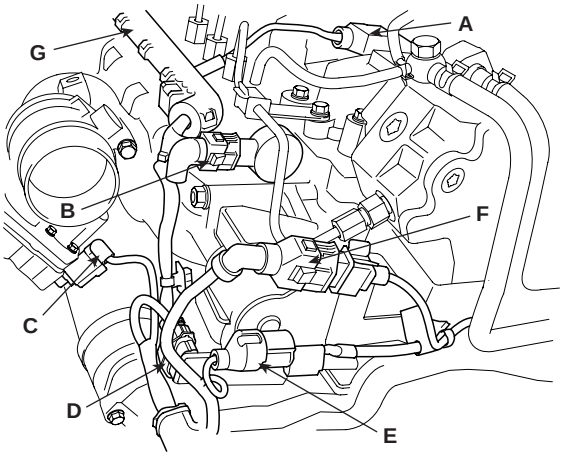

SCMEM6012D

3) Disconnect the EGR(Exhaust Gas Recirculation) solenoid valve connector(A), the glow plug(B), the fuel pressure regulator valve connector(C), the injector(D) and the connector/wire harness protector(E).

4) Disconnect the ground lines(F).

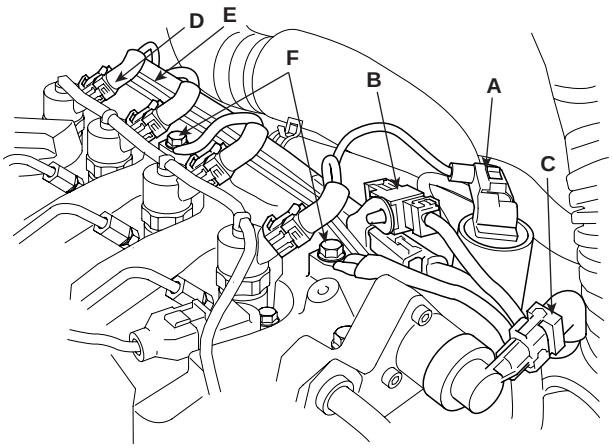

SCMEM6013D

13. Disconnect the ground line from the cylinder head(A).

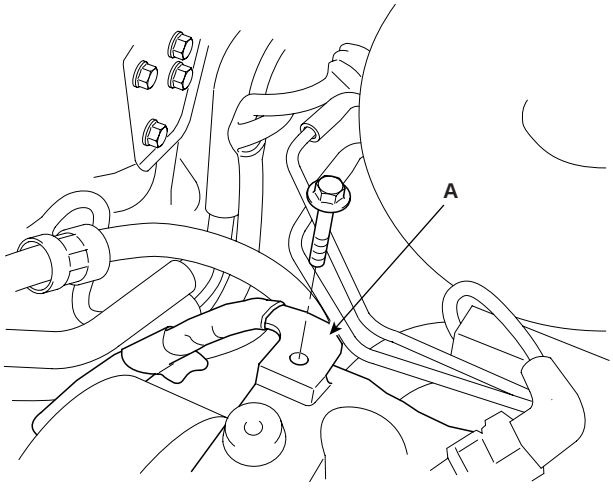

SCMEM6014D

14. Remove the fuel hose(A) and the fuel temperature sensor connector(B).

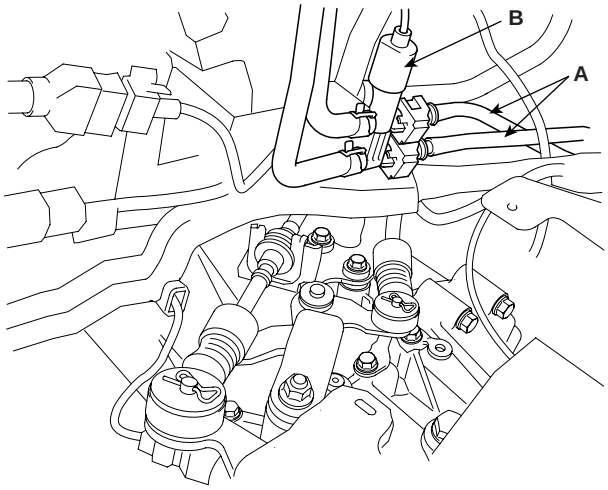

SCMEM6015D

15. Disconnect the brake booster vacuum hose(A) and the heater hoses(B).

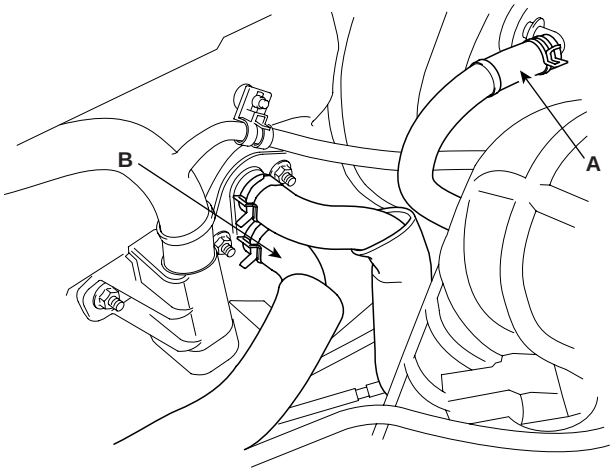

SCMEM6016D

16. Disconnect the upper radiator hose(A).

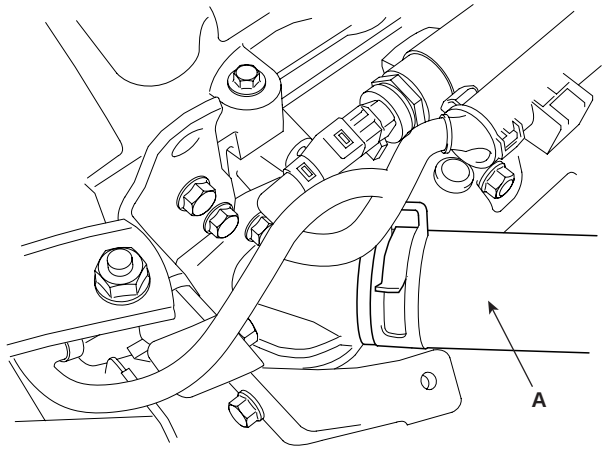

SCMEM6017D

17. Disconnect the battery cables to the fuse & relay box by removing the nuts.

18. Disconnect the front lamp connector(B).

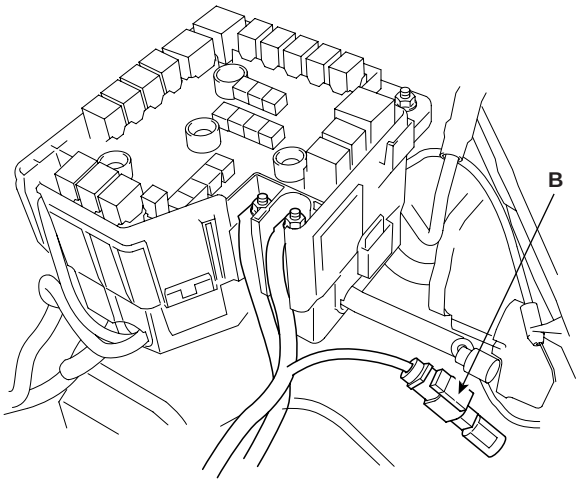

SCMM16004L

19. Remove the wirings related to the transaxle.

    1) Disconnect the back up lamp switch connector(A).

    2) Disconnect the neutral switch connector(B).

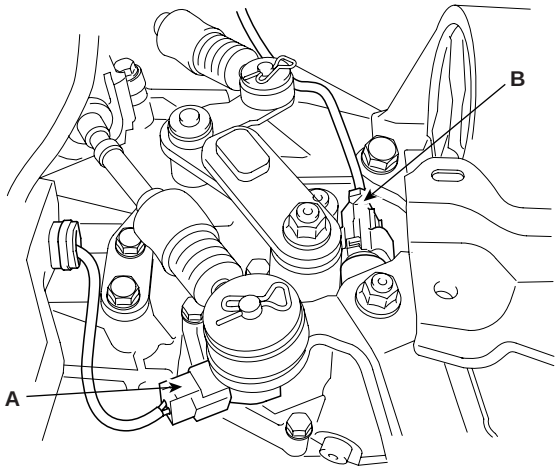

SCMEM6019D

    3) Disconnect the vehicle speed sensor.

20. Remove the shift cable assembly(A), the clip(B) and the pin(C).

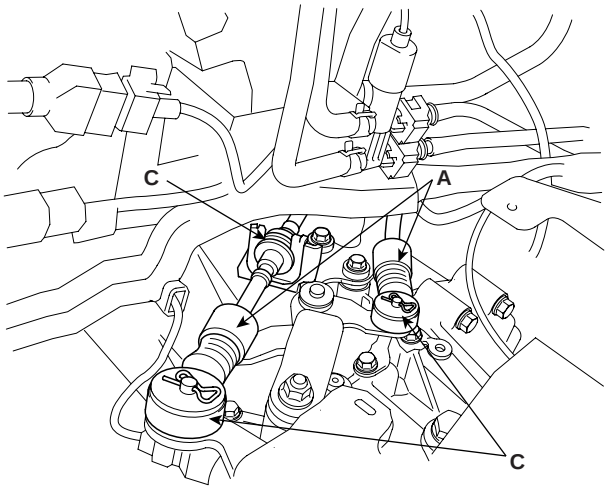

SCMM16005L

21. Remove the concentric slave cylinder with clamping the tube(A).

22. Remove the groung line mounting bolts(B) from the transaxle.

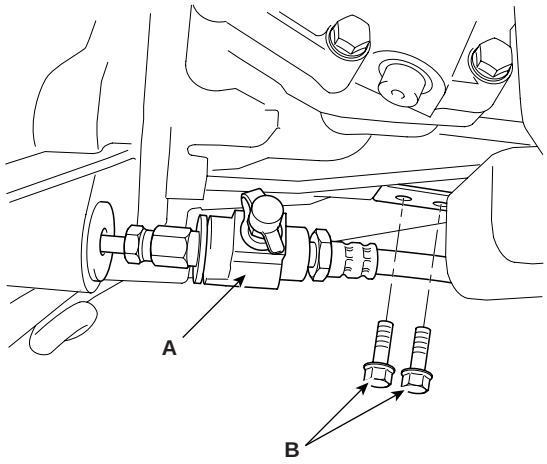

SCMEM6021D

23. Drain power steering oil.

24. Disconnect the power steering oil hose(A).

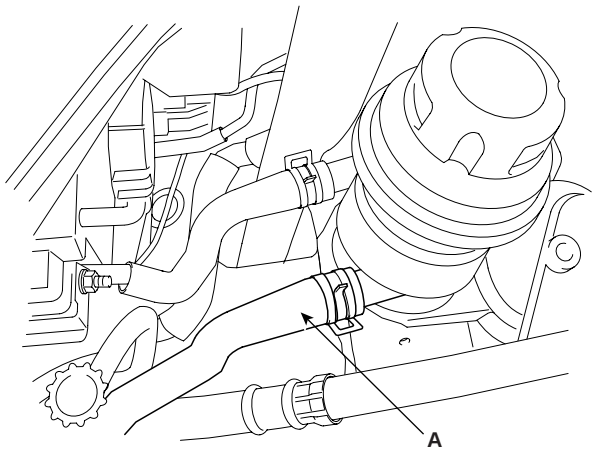

SCMEM6022D

25. Remove the clips(B) from the right side wheel guide(A).

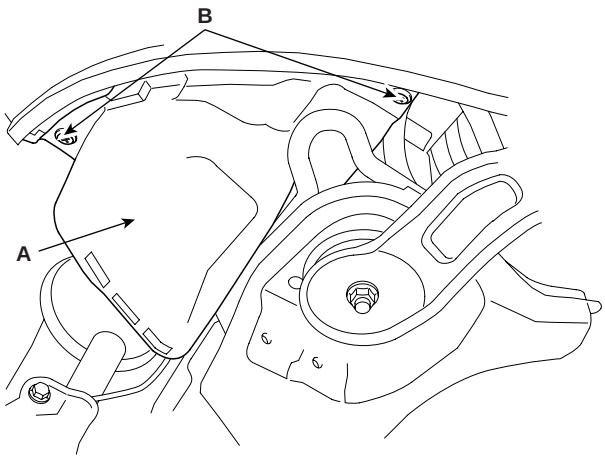

SCMEM6023D

26. Disconnect the power steering lower hose(A).

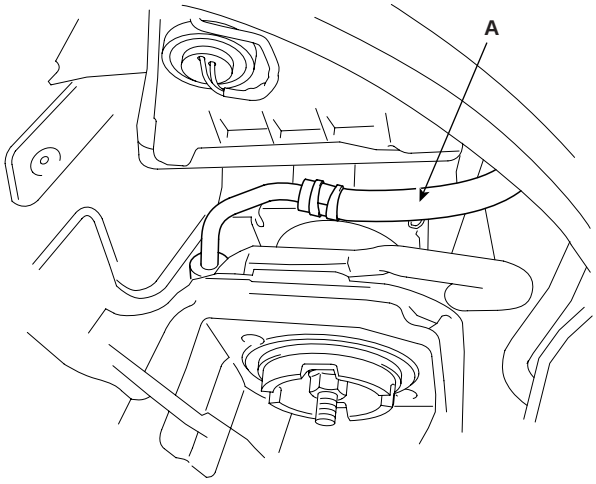

SCMEM6024D

27. Recover air-conditioning refrigerant and remove the high & low pressure hoses.(Refer to 'HA' group).

28. Remove the steering column universal joint mounting bolt(A).

29. Disconnect the EPS(Electronic Power Steering) sensor connector(B).

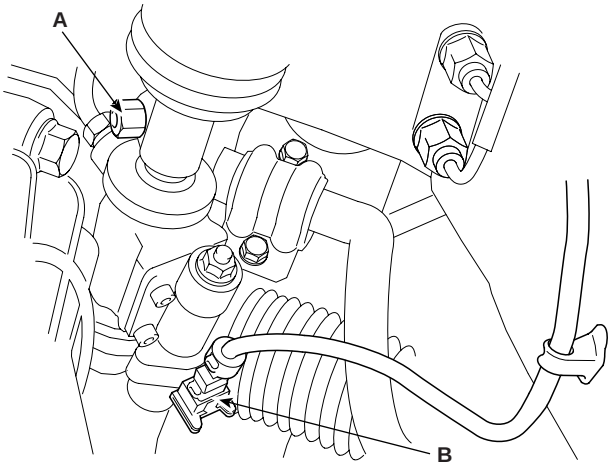

SCMEM6025D

30. Remove the front wheels and tires.

31. Remove the wheel speed sensor(A).(Refer to 'SS' group).

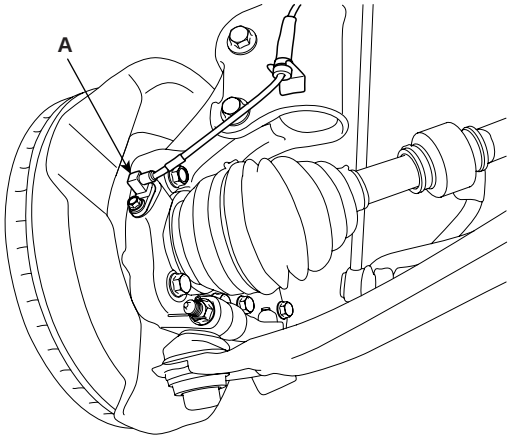

SCMEM6060D

32. After removing the mounting bolts(A) and the caliper(B), bind it up to the coil spring of the strut.

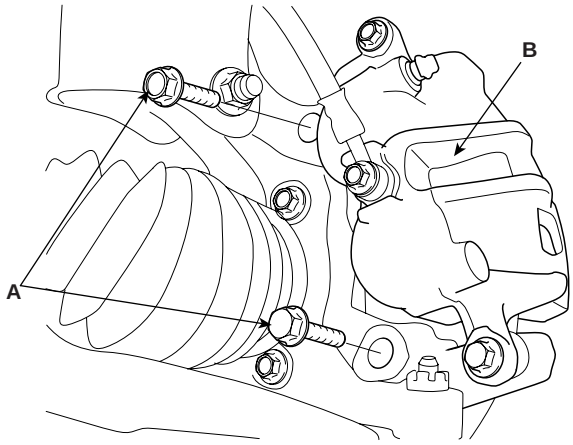

SCMDS6005D

33. Remove the strut assembly by removing the stabilizer bar(A) link nuts(B) and the strut lower mounting bolts(B).(Refer to 'SS' group).

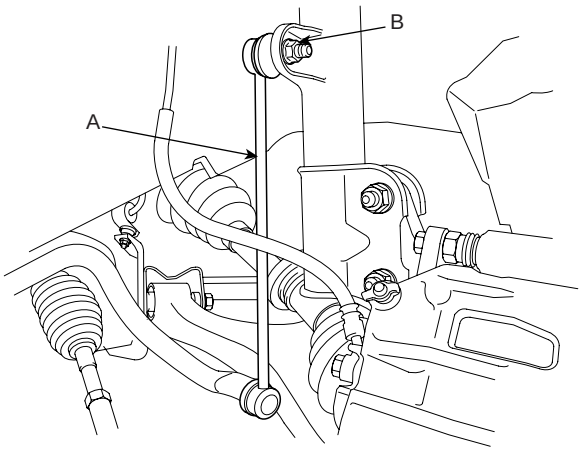

SCMSS6504D

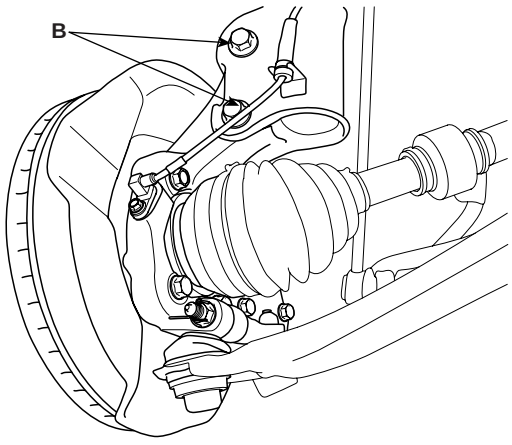

SCMEM6062D

34. Remove the front muffler(A).

Tightening torque :
39.2 ~ 58.8N.m(4.0 ~ 6.0kgf.m, 28.9 ~ 43.4lb-ft)

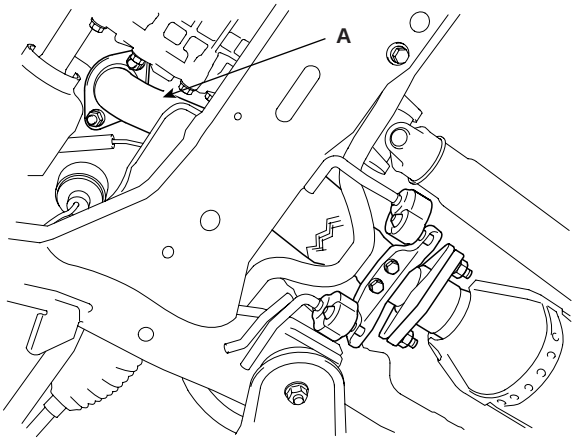

SCMEM6044D

35. Disconnect the propeller shaft(A).(Refer to 'DS' group).

Tightening torque :
49.0 ~ 68.6N.m(5.0 ~ 7.0kgf.m, 36.2 ~ 50.6lb-ft)

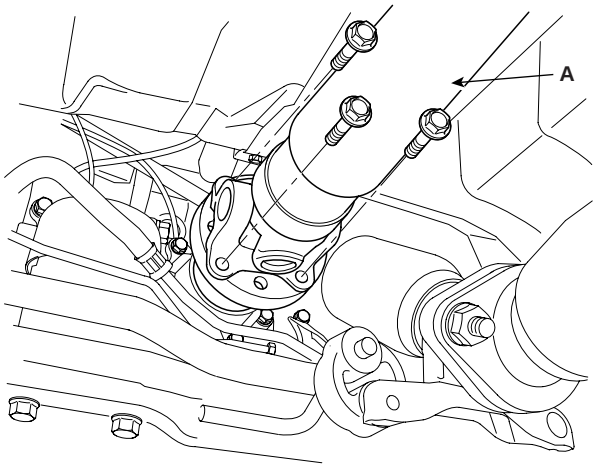

SCMEM6026D

NOTE

The propeller shaft is tightened by left-handed screw bolts.

36. Install a jack under the engine and transaxle assembly for supporting.

37. Remove the engine stay(A) and the engine mounting bracket(B).

Tightening torque :
Bolts, Nut(C): 39.2 ~ 53.9N.m(4.0 ~ 5.5kg.m, 28.9 ~ 39.8lb-ft)
Bolts, Nut(D): 63.7 ~ 83.4N.m(6.5 ~ 8.5kg.m, 47.0 ~ 61.5lb-ft)

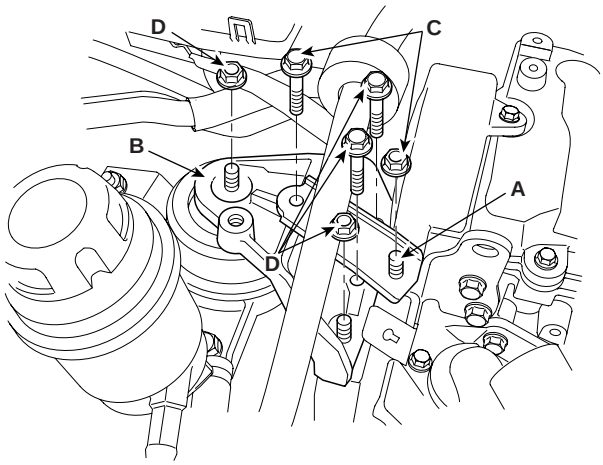

SCMEM6027D

38. Remove the transaxle mounting(A).(Refer to 'MT/AT' group).

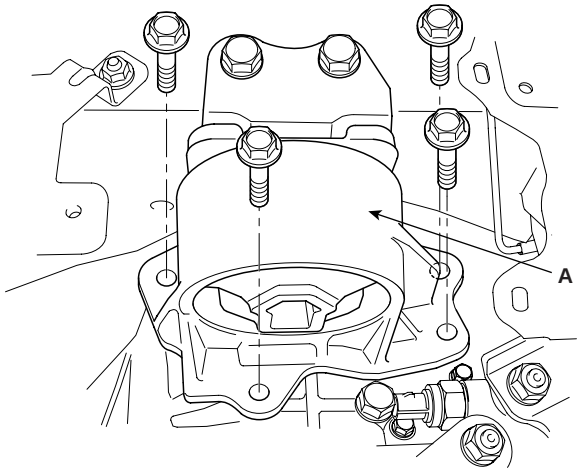

SCMEM6028D

39. Remove the subframe mounting bolts and nuts.

Tightening torque :
Bolts, Nuts: 68.6 ~ 88.3N.m(7.0 ~ 9.0kg.m, 50.6 ~ 65.1lb-ft)
Bolts: 137.3 ~ 156.9N.m(14.0 ~ 16.0kg.m, 101.3 ~ 115.7lb-ft)

40. Remove the engine and transaxle assembly by lifting the vehicle.

NOTE

When removing the engine and transaxle assembly, be careful not to damage any surrounding parts or body components.

INSTALLATION EE394374

Installation is in the reverse order of removal.
Perform the following :

- Adjust the shift cable.
- Adjust the throttle cable.
- Refill the engine with engine oil.
- Refill the transaxle with fluid.
- Refill the radiator and reservoir tank with engine coolant.
- Place the heater control knob on " HOT" position.
- Bleed air from the cooling system.
  - Start engine and let it run until it warms up. (until the radiator fan operates 3 or 4 times.)
  - Turn Off the engine. Check the level in the radiator, add coolant if needed. This will allow trapped air to be removed from the cooling system.
  - Put the radiator cap on tightly, then run the engine again and check for leaks.

- Clean the battery posts and cable terminals with sandpaper assemble them, then apply grease to prevent corrosion.
- Inspect for fuel leakage.
  - After assemble the fuel line, turn on the ignition switch (do not operate the starter) so that the fuel pump runs for approximately two seconds and fuel line pressurizes.
  - Repeat this operation two or three times, then check for fuel leakage at any point in the fuel line.

TIMING SYSTEM

COMPONENTS E32DA029

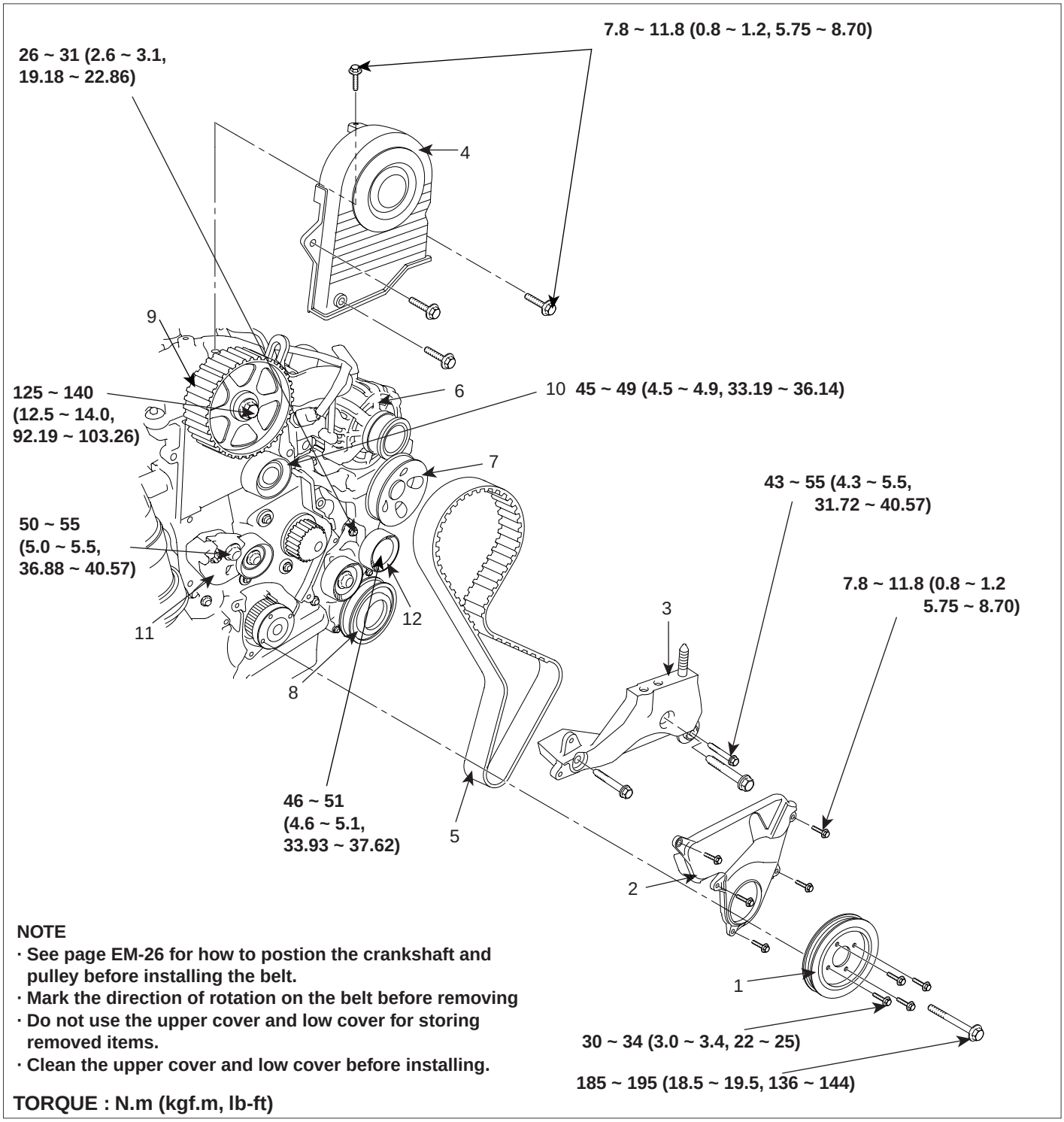

NOTE

- **See page EM-26 for how to postion the crankshaft and pulley before installing the belt.**
- **Mark the direction of rotation on the belt before removing**
- **Do not use the upper cover and low cover for storing removed items.**
- **Clean the upper cover and low cover before installing.**

TORQUE : N.m (kgf.m, lb-ft)

1. Damper pulley
2. Timing belt lower cover
3. Engine support bracket
4. Timing belt upper cover
5. Timing belt
6. Alternator and vacuum pump assembly
7. Power steering pump
8. Air conditioning compressor
9. Camshaft sprocket
10. Timing belt idler
11. Timing belt tensioner
12. Idler

SCMM16001L

REMOVAL E3E1740E

NOTE

- *Inspect the water pump before installing the timing belt.*

1. The tensioner should be lifted up to remove the drive belt(A).
2. Turn the crankshaft pulley to align the timing mark at TDC(Top Dead Center).

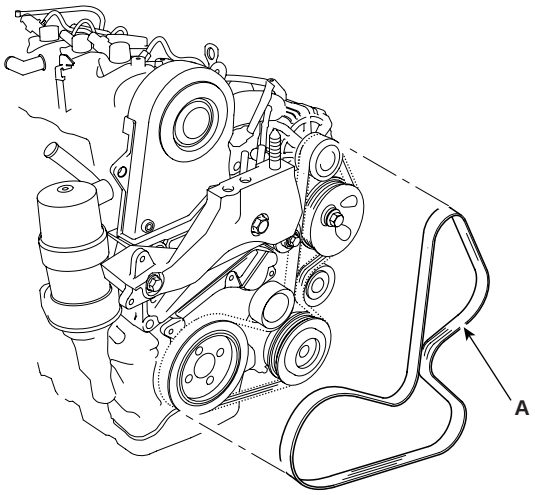

SCMEM6030D

3. Remove the crankshaft pulley(A) and the timing belt lower cover(B).

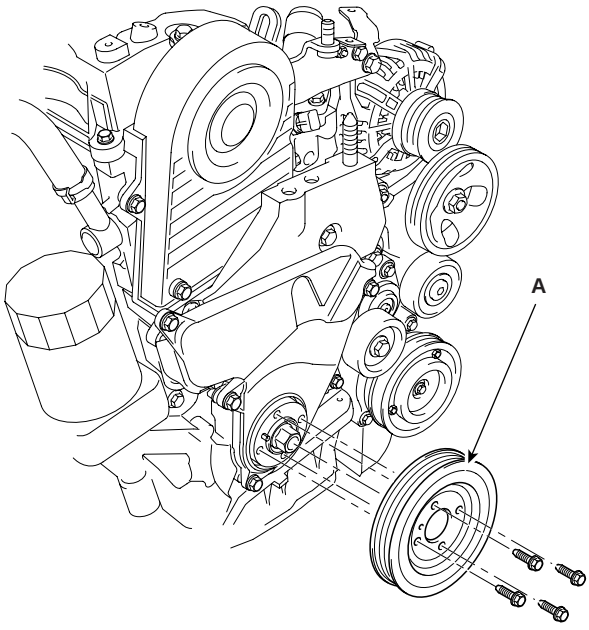

SCMEM6031D

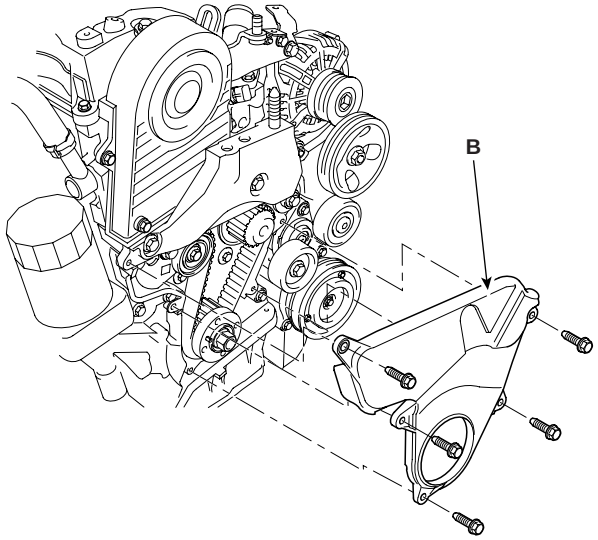

SCMM16006L

4. Remove the timing belt upper cover(A) and the engine support bracket(B).

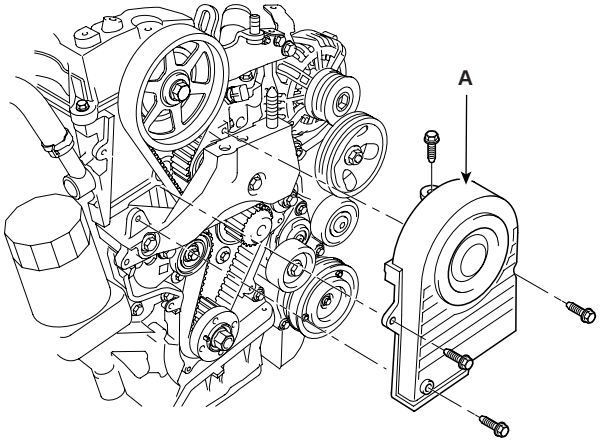

SCMEM6033D

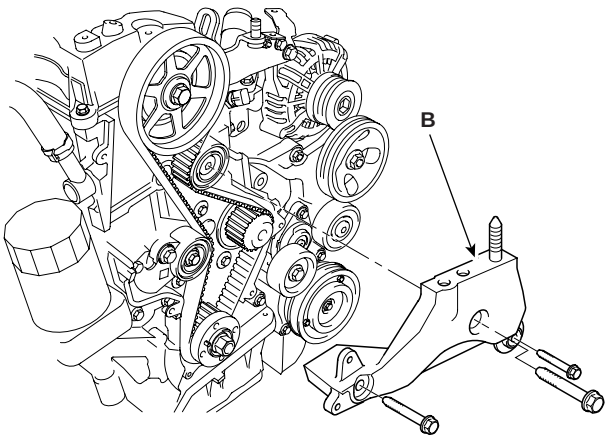

SCMM16007L

5. Insert a pin(A) into the aligned holes in the auto-tensioner(B).

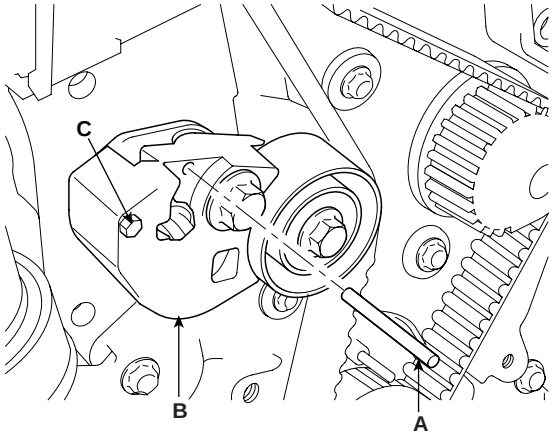

ACIE049A

6. Using a hexagonal wrench (5mm)(A), loosen the stop bolt(B). And then, turning the auto-tensioner(C) clockwise fully with the boss bolt(D) and 12mm spanner(E), retighten the stop bolt(B).

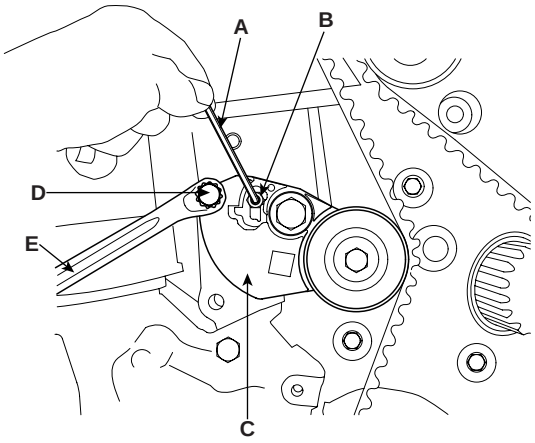

ACIE050A

7. Remove the timing belt.

NOTE

To be prepared in case the removed belt is used, mark an arrow on the timing belt in the direction of rotation before removing it.

INSPECTION EF5CAC28

1. Remove the upper cover.
2. Inspect the timing belt(A) for cracks and oil or coolant soaking.

NOTE

- *Replace the belt if oil or coolant soaked.*
- *Remove any oil or solvent that gets on the belt.*

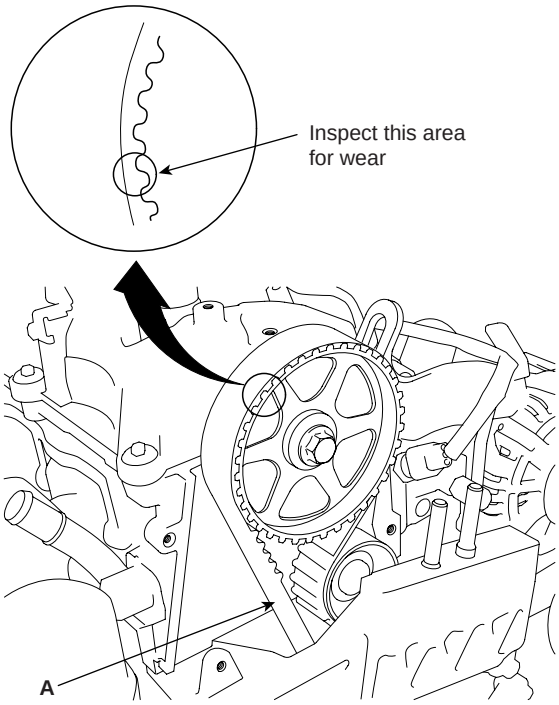

EDKD541A

SPROCKETS, TENSIONER, IDLER

1. Check the camshaft sprocket.
   Crankshaft sprocket, tensioner pulley and idler pulley for abnormal wear, cracks or damage. Replace as necessary.
2. Inspect the tensioner pulley and the idler pulley for easy and smooth rotation and check for play or noise. Replace as necessary.
3. Replace the pulley if there is a grease leak from its bearing.

INSTALLATION EC144B3B

1. Align the timing mark(A) on the camshaft sprocket(B) with the mark(C) on the cylinder head(D).

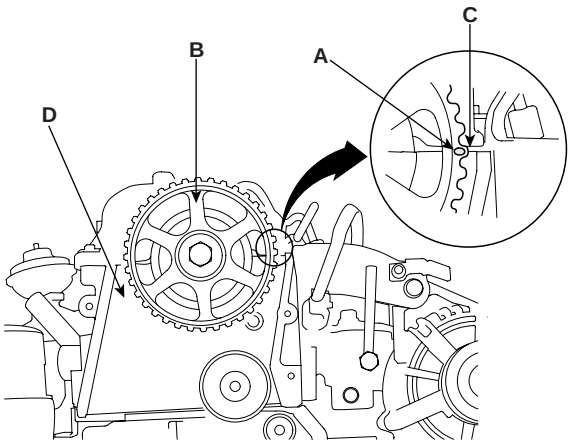

ACIE051A

2. Align the timing mark(A) on the crankshaft sprocket(B) with the pin(C) press fitted in the oil pump housing(D).

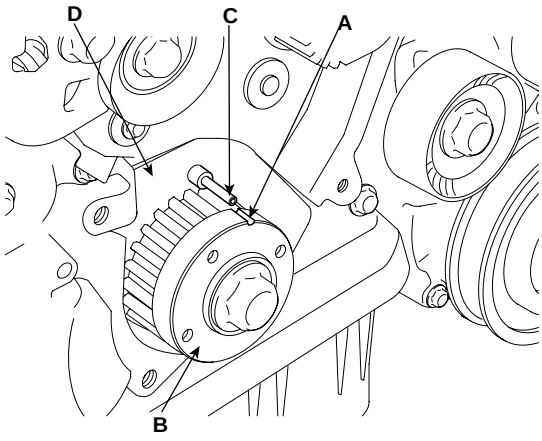

ACIE052A

3. Install the timing belt.
   a. Install the timing belt(A) tightly in the sequence shown.
      ① Timing belt drive pulley(B) (crakshaft) → ② Water pump pulley(C) ③ Timing belt idler(D) → ④ Camshaft sprocket(E) → ⑤ Timing belt tensioner(F).

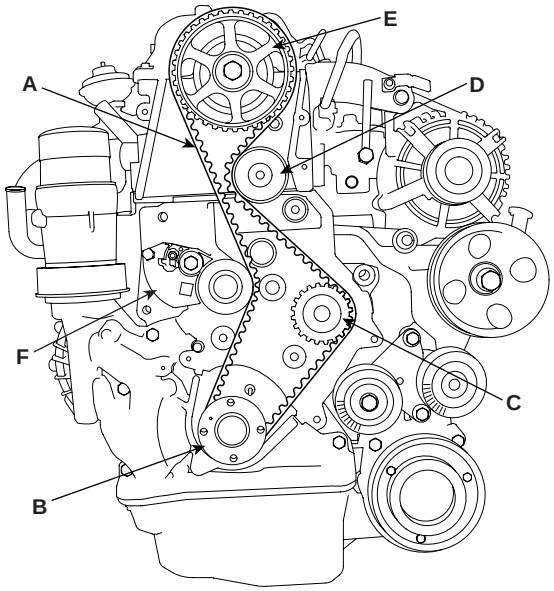

ACIE053A

   b. Insert a pin into the auto-tensioner.
   c. Using a hexagonal wrench (5mm)(A), loosen the auto-tensioner stop bolt(B).
   d. Turn the auto-tensioner(C) counterckockwise fulley to install the timing belt using the boss bolt(D) and 12mm spanner(E).

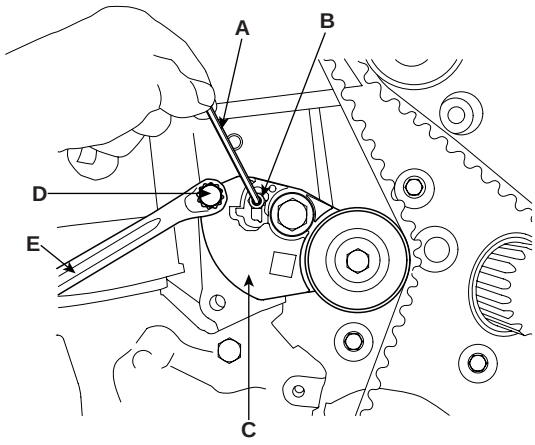

ACIE050A

   e. Rotate the crankshaft by hand 2 complate revolutions (clockwise) to take up any slack and set to TDC(Top Dead Center).

NOTE

Verify the timing marks are aligned again.

4. Tighten the stop bolt(B) and remove the fixing pin.

Tightening torque
Auto tensioner adjustable bolt
10 ~ 12N.m (1.0 ~ 1.2 kgf.m, 7 ~ 9lb-ft)

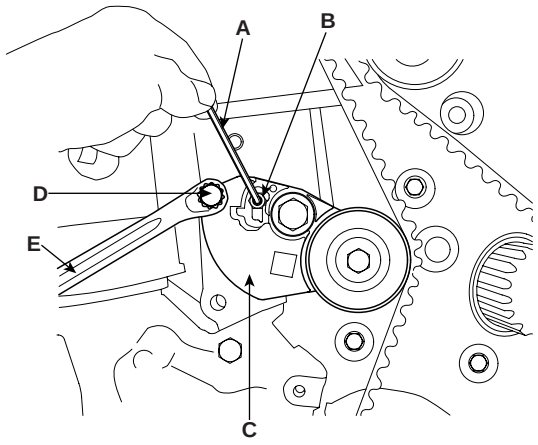

ACIE050A

5. Reinstall all removed components in the reverse order of removal.
   a. Install the engine bracket(A).

Tightening torque
43 ~ 55N.m (4.3 ~ 5.5kgf.m, 31.72 ~ 40.57lb-ft)

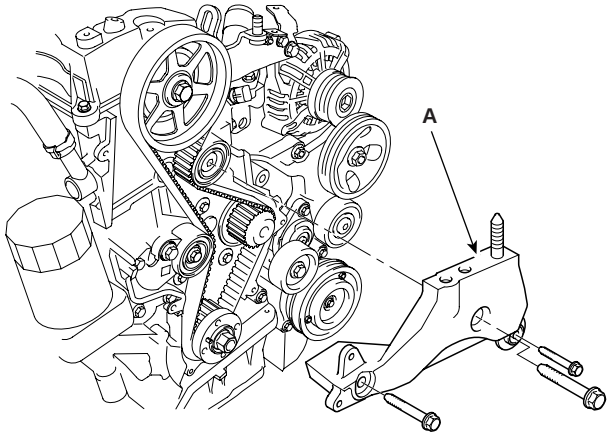

SCMEM6034D

   b. Install the timing belt upper cover(A) and lower cover(B).

Tightening torque
7.8 ~ 11.8N.m (0.8 ~ 1.2kgf.m, 5.75 ~ 8.70lb-ft)

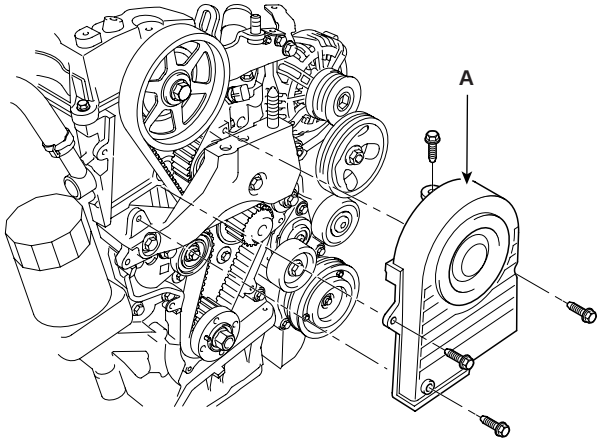

SCMEM6033D

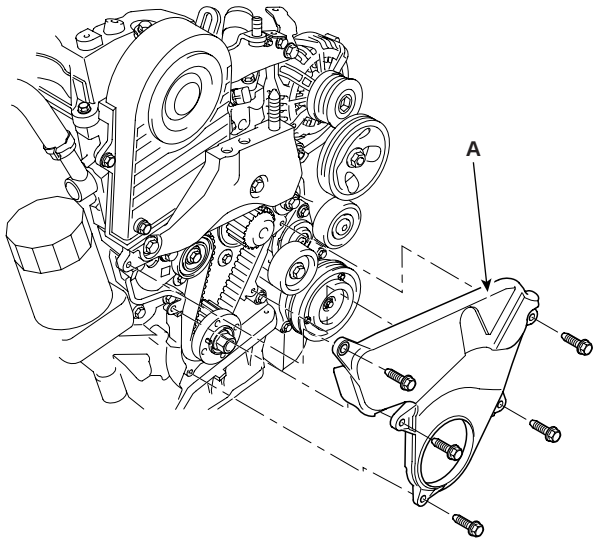

SCMEM6032D

c. Install the damper pulley(A).

Tightening torque
Damper pulley mounting bolt
30 ~ 34N.m (3.0 ~ 3.4kgf.m, 22 ~ 25lb-ft)

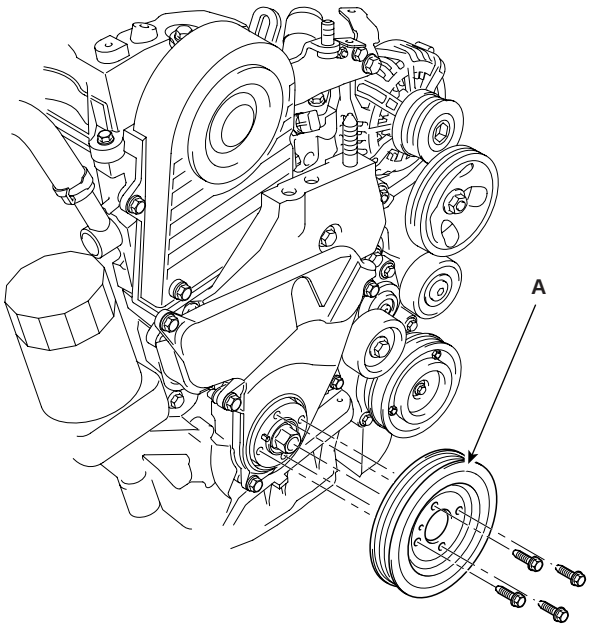

SCMEM6031D

d. Install the drive belt(A), following the sequence below.
1.Alternator → 2.Power steering → 3.Idler → 4.Air compressor → 5.Crankshaft pulley → 6.Tensioner.
The tensioner should be lifted up to install the drive belt(A).

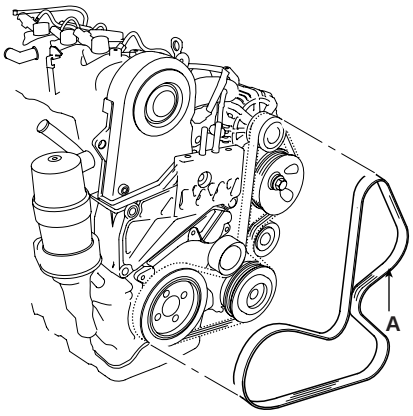

ACIE044A

NOTE

Clean the upper and lower covers before installation.

6. Install the side cover.
7. Install the front tires.(RH)
8. Install the engine mounting bracket.

CYLINDER HEAD ASSEMBLY

COMPONENTS ED362F83

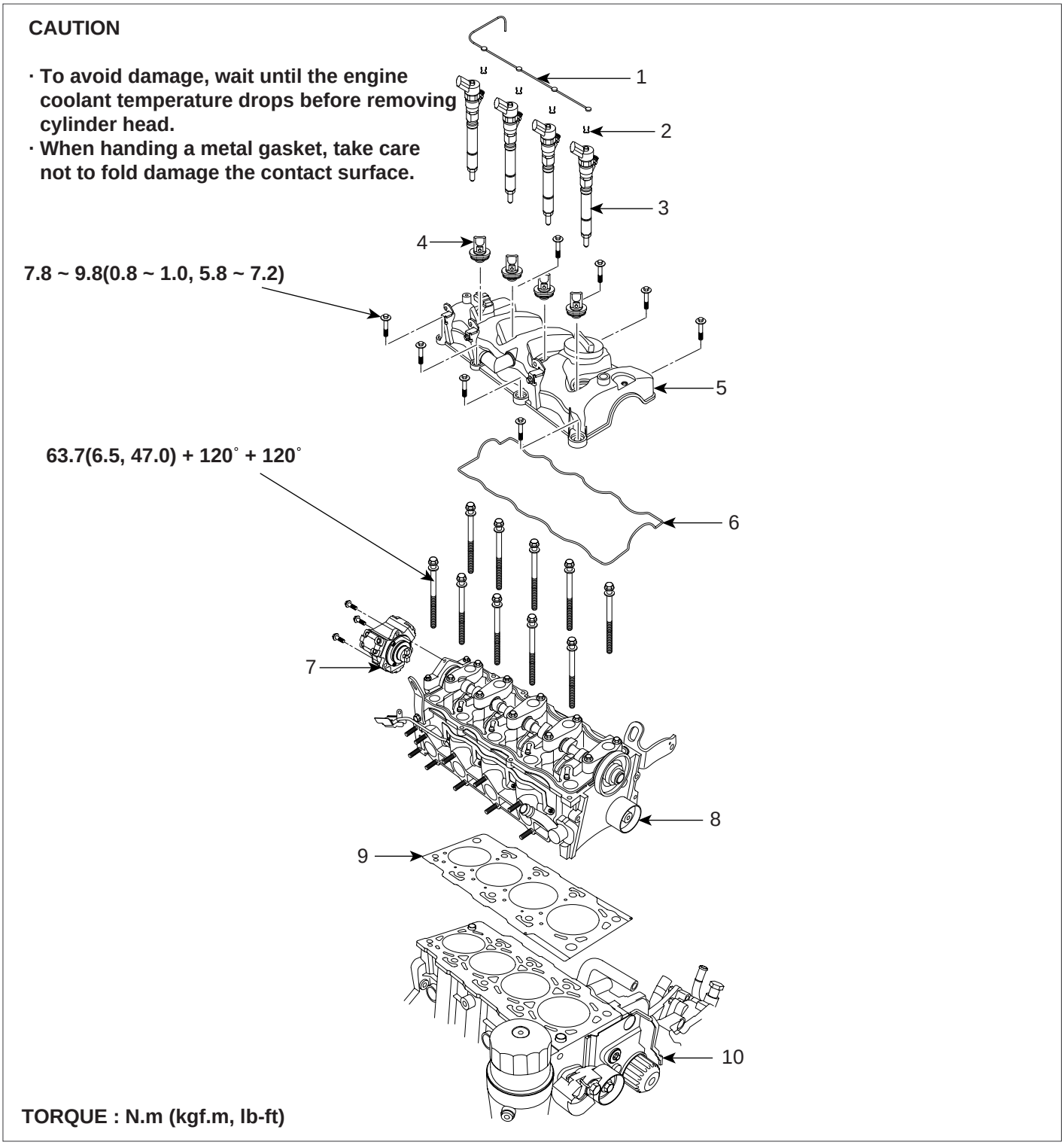

1. Fuel return hose
2. Cilp
3. Injector
4. Injector installation plug
5. Cylinder head cover
6. Cylinder head cover gasket
7. Fuel pump
8. Cylinder head
9. Cylinder head gasket
10. Cylinder block assembly

SCMM16002L

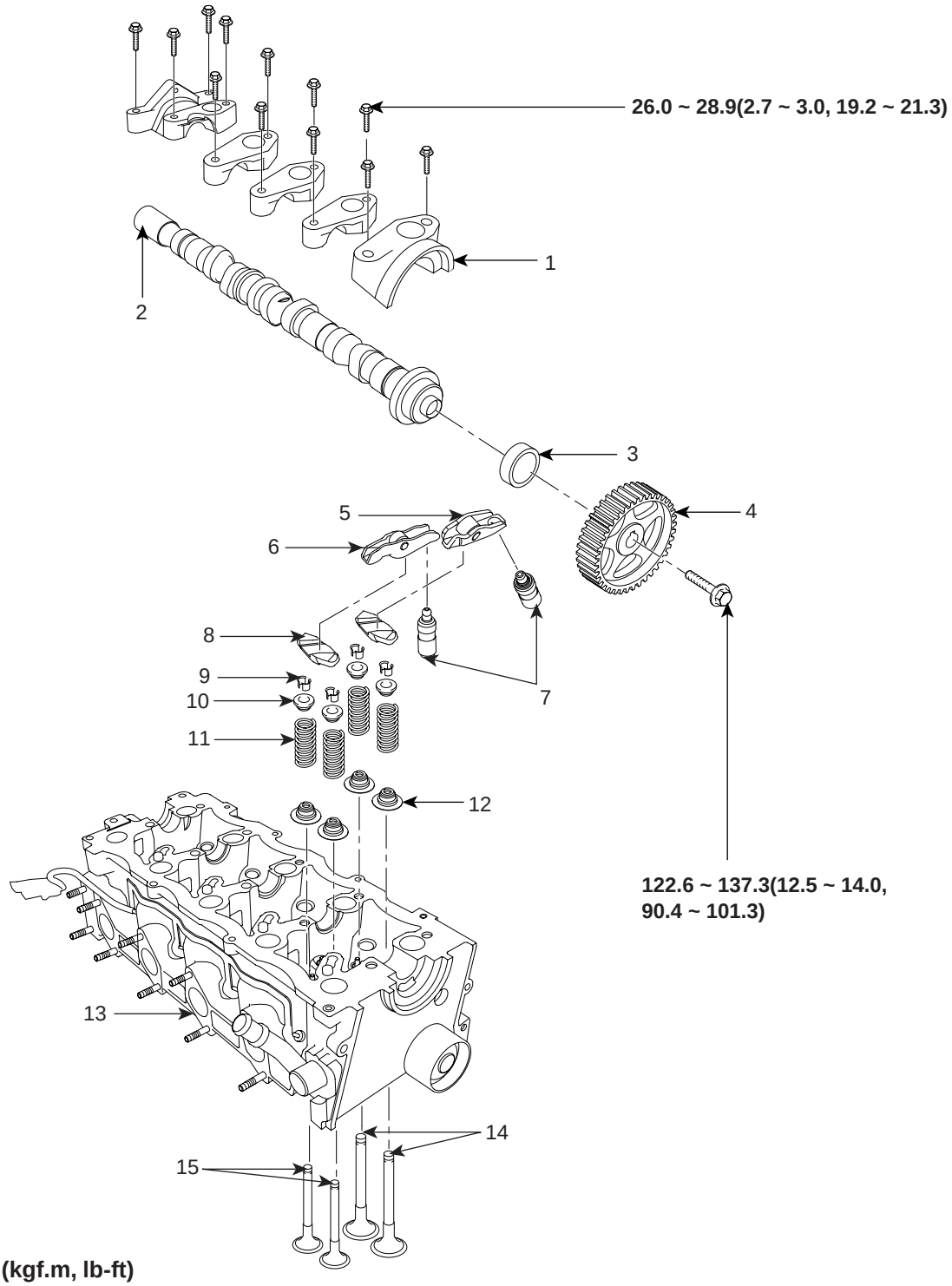

TORQUE : N.m (kgf.m, lb-ft)

1. Camshaft bearing cap
2. Camshaft
3. Oil seal
4. Camshaft sprocket
5. Intake cam follower
6. Exhaust cam follower
7. Lash adjuster
8. Valve cap
9. Valve spring retainer lock
10. Valve spring retainer
11. Valve spring
12. Valve stem seal
13. Cylinder head
14. Intake valves
15. Exhaust valves

SCMM16003L

REMOVAL ED877421

CAUTION

- ***Use fender covers to avoid damaging painted surfaces.***
- ***To avoid damage, unplug the wiring connectors carefully while holding the connector portion to avoid damage.***
- ***To avoid damaging the cylinder head, wait until the engine coolant temperature drops below normal temperature before loosening the retaining bolts.***

NOTE

Mark all wiring and hoses to avoid misconnection. Also, be sure that they do not contact other wiring or hoses, or interfer with other parts.

1. Before removing the cylinder head, the timing belt should be removed first. Refer to the timing belt 'removal' step.
2. Disconnect the fuel return hose after removing the clips(A).

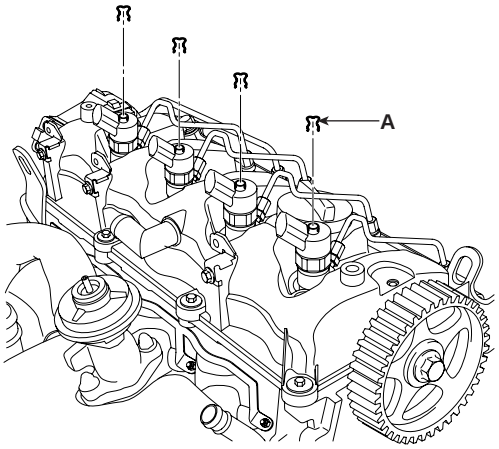

ACIE057A

3. Remove the plugs(A).
   a. Pull the plug up slightly. (more than 1mm)
   b. Rotate the plug 90° clockwise.
   c. Remove the plug with inserting a (-)driver between the plug assy(B) and the cylinder head cover(C).

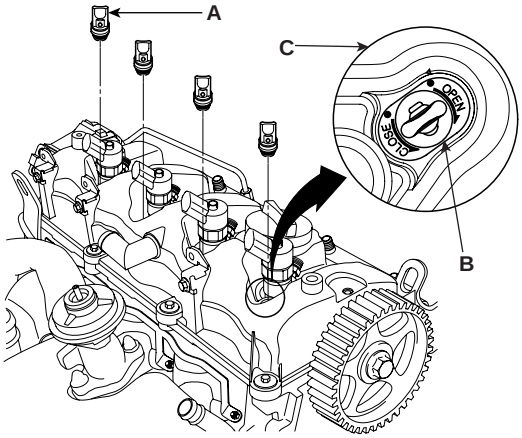

ACIE058A

4. Loosen the injector holder bolt(A) with 5mm hexagonal wrench(B).

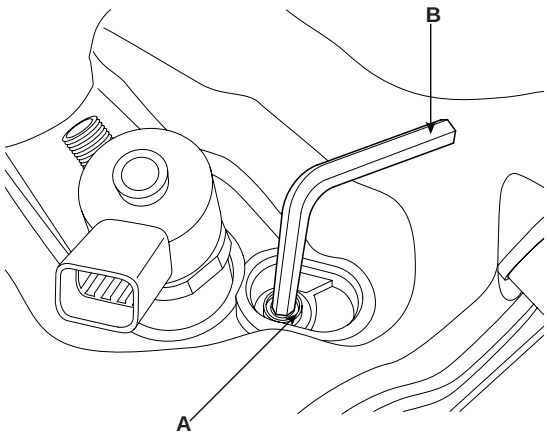

ACIE059A

5. Pull the injector holders(A) with the bolts(B).

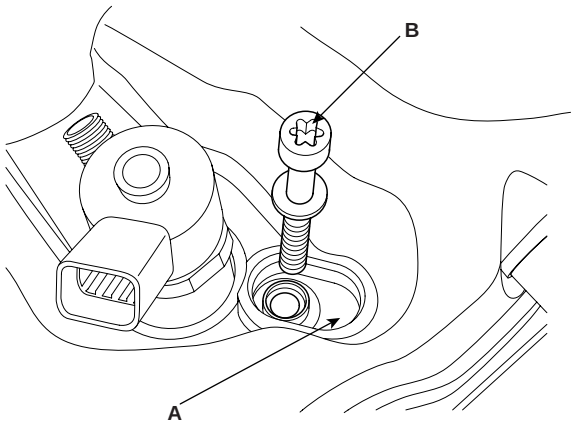

LCIF017A

6. Remove the injectors(A).

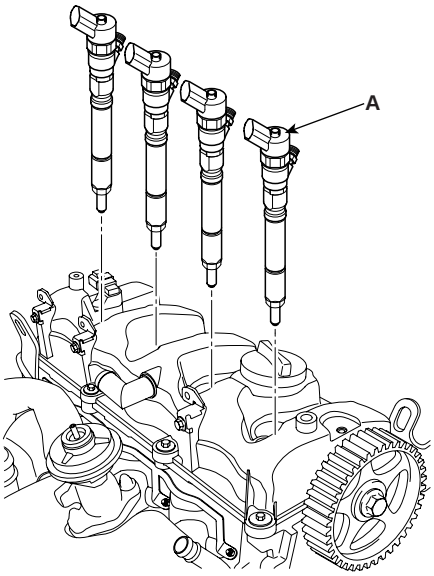

ACIE060A

7. Remove the cylinder head cover(B) mounting bolts(A).

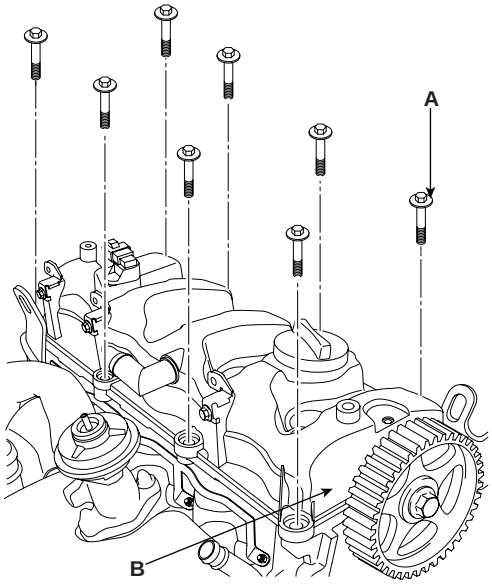

ACIE061A

8. Remove the cylinder head cover(A).

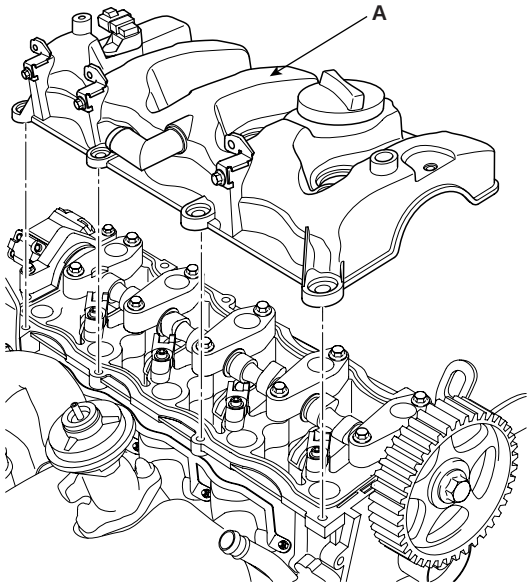

ACIE062A

9. Remove the injector holders(A) with the bolts(B) which was loosened in the step 5.

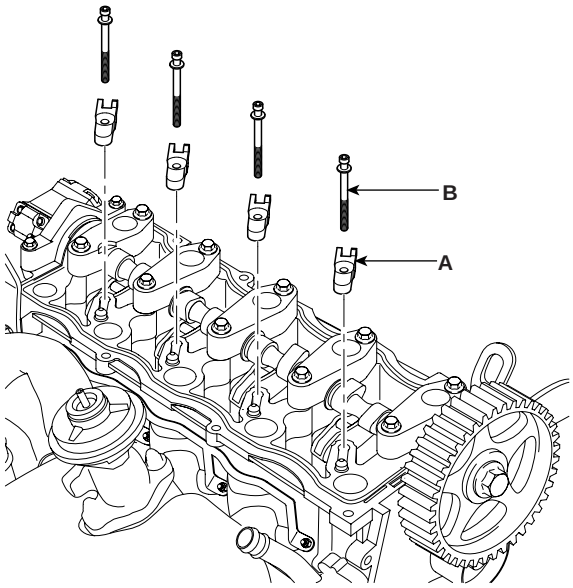

ACIE063A

10. Remove the cylinder head cover gasket(A).

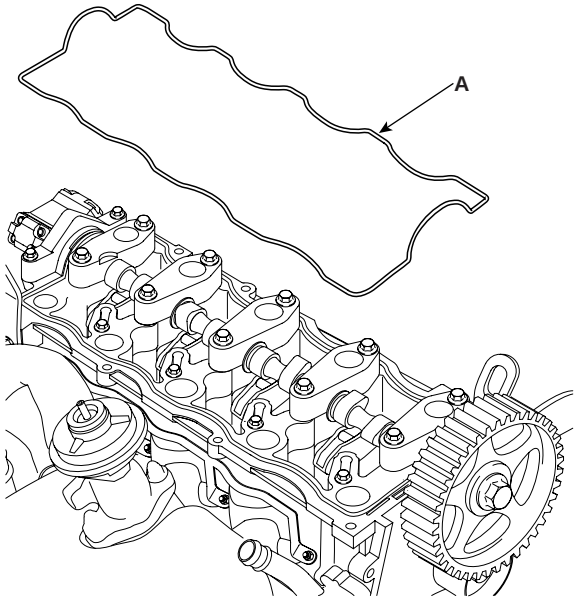

LCIF018A

11. Remove the metal tube(A) between the fuel pump(B) and the common rail(C).

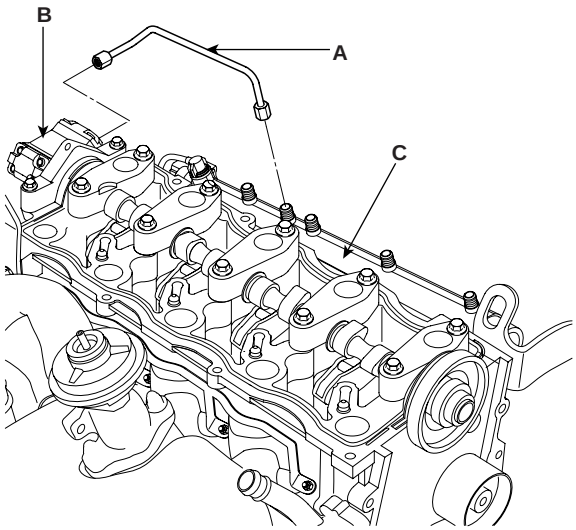

ACIE064A

12. Remove the fuel pump(A) after removing the three bolts(B).

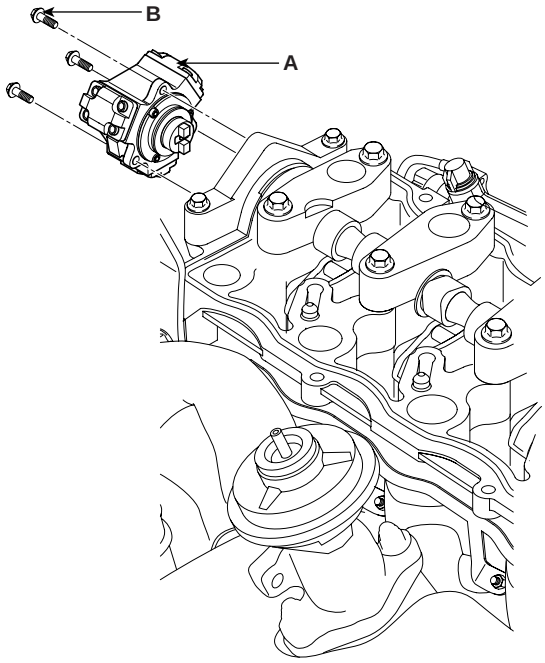

ACIE065A

13. Remove the exhaust manifold.

14. Remove the intake manifold.

15. Remove the cylinder head bolts(A), then remove the cylinder head(B).

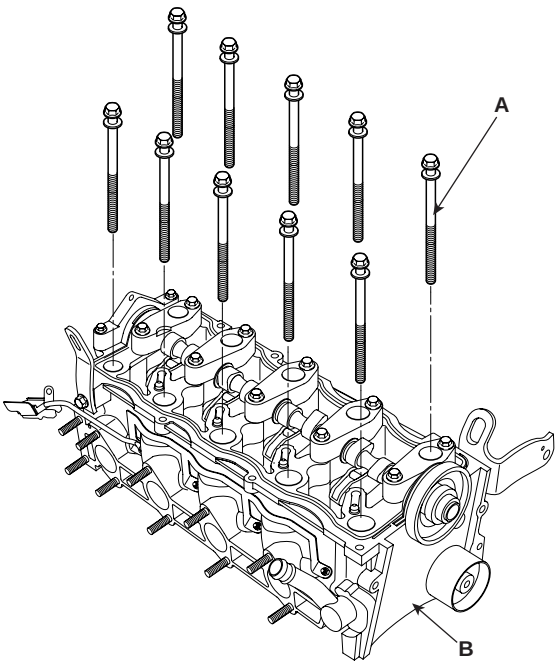

ACIE066A

CAUTION

To prevent warpage, unscrew the bolts in sqience 1/3 turn at a time: repeat the sequence until all bolts are loosened.

CYLINDER HEAD BOLTS LOOSENING SEQUENCE

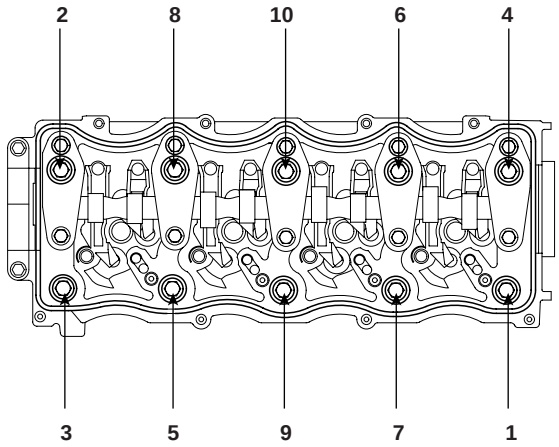

ACIE067A

DISASSEMBLY E9BF1486

NOTE

- *Identify parts as they are removed to ensure re-installation in original locations.*
- *Inspect camshafts.*

1. Remove the engine hangers, the knock bushes and the studs.

2. Remove the camshaft bearing caps(A).

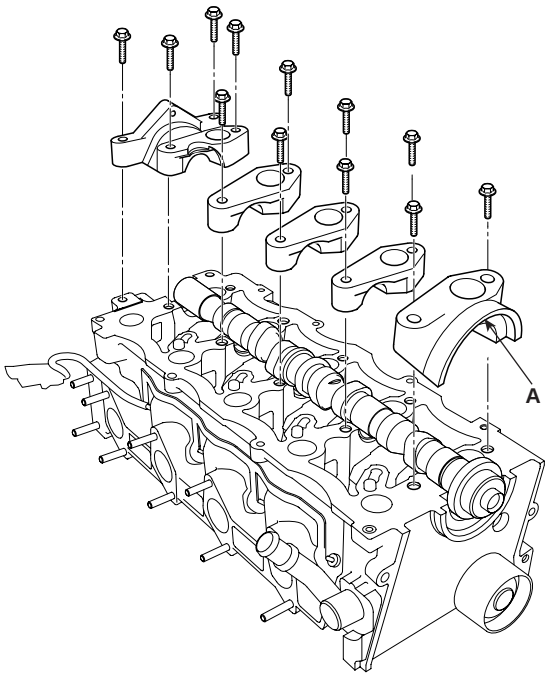

ACIE068A

3. Remove the camshaft(A) with the oil seal(B).

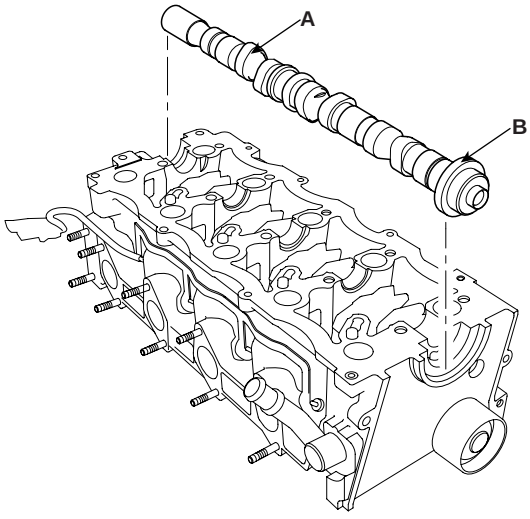

ACIE069A

4. Remove the In/Ex cam followers(A, B).

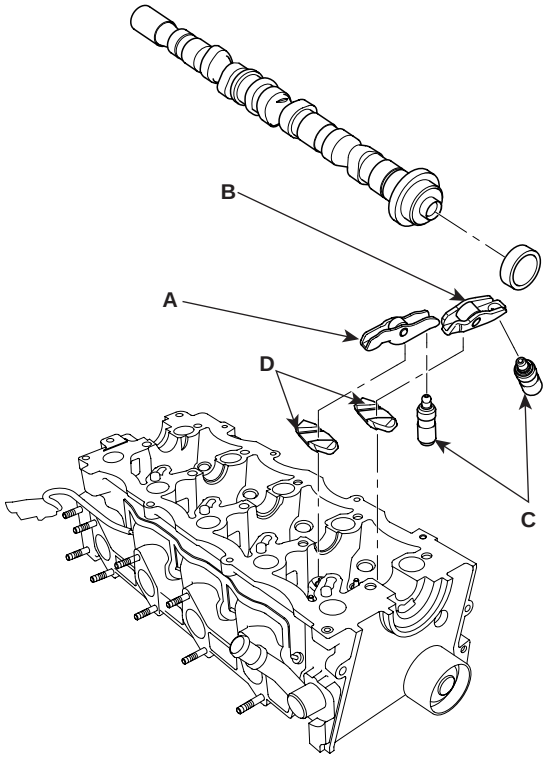

ACIE070A

5. Remove the lash adjusters(C).

6. Remove the valve caps(D).

7. Using an appropriate-sized socket and plastic mallet, lightly tap the valve retainer to loosen the valve retainer locks before installing the valve spring compressor.

NOTE

Identify valves and valve springs as they are removed so that each item can be reinstalled in its original position.

8. Using the SST(09222-27300), compress the valve spring(A) in order to remove the valve spring retainer locks(B).

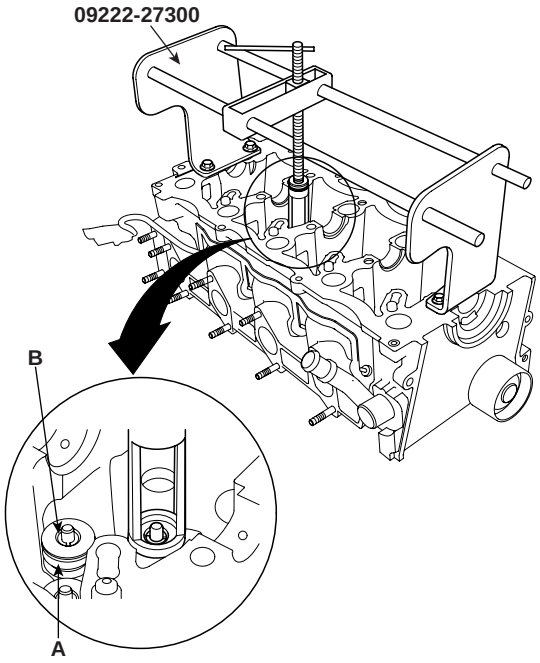

ACIE071A

9. Remove the valve stem seals(A).

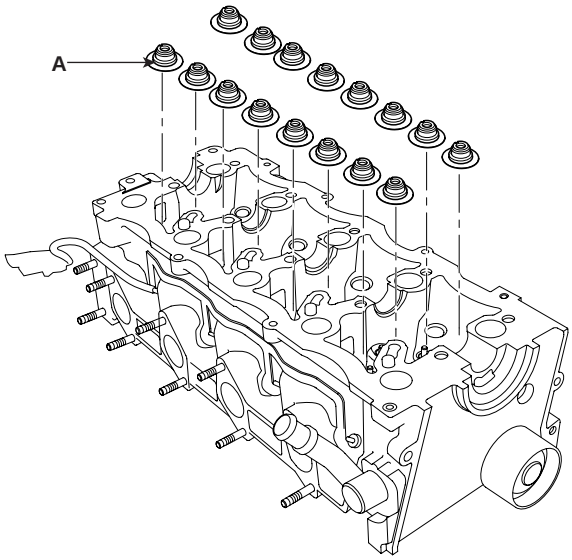

ACIE072A

INSPECTION E680F0AE

CAMSHAFT

NOTE

Do not rotate the camshaft during inspection.

1. Put the camshaft(A) and the camshaft bearing caps(B) on the cylinder head(C), then tighten the bolts to the specified torque with the following sequence below.

Specified torque
26.5 ~ 29.5N.m (2.65 ~ 2.95kgf.m, 20 ~ 22lb-ft)

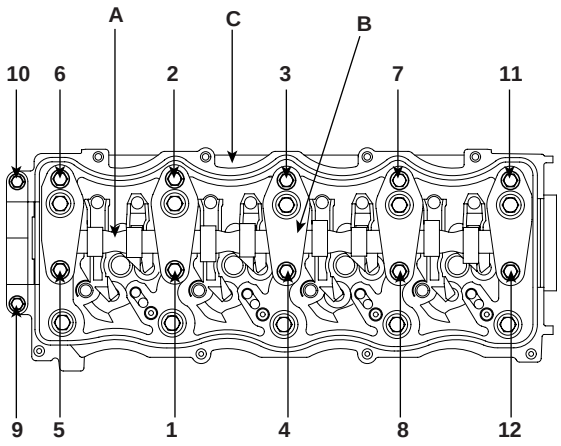

ACIE073A

2. Seat the camshaft by pushing it toward the rear of the cylinder head.

3. Zero the dial indicator(A) against the end of the camshaft(B).
   Push the camshaft(B) back and forth, and read the end play.

Camshaft End Play
Standard (New) : 0.05 ~ 0.15mm (0.002 ~ 0.006in.)

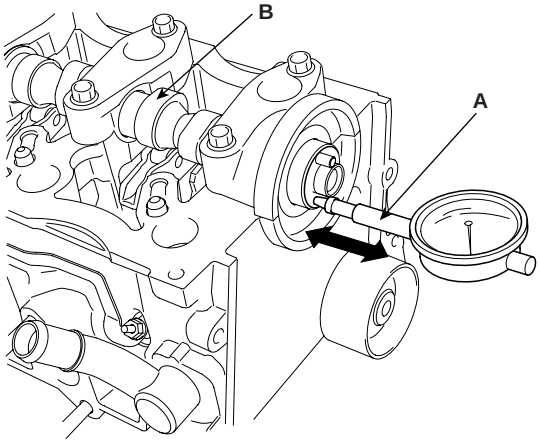

ACIE074A

4. Remove the bolts, then remove the camshaft bearing caps from the cylinder head(A).
   - Lift the camshaft(B) out of the cylinder head(A), wipe it clean. Replace the camshaft if any lobes are pitted, scored, or excessively worn.
   - Clean the camshaft bearing surfaces in the cylinder head, then set the camshaft back in place.
   - Place a plastigauge strip(C) across each journal.

5. Install the camshaft bearing caps and tighten the bolts to the specified torque.

6. Remove the camshaft bearing caps, then measure the widest portion of the plastigage(C) on each journal.

Camshaft-to-Camshaft bearing cap oil clearance
Standard (New)
0.040 ~ 0.074mm (0.0020 ~ 0.0029in.)

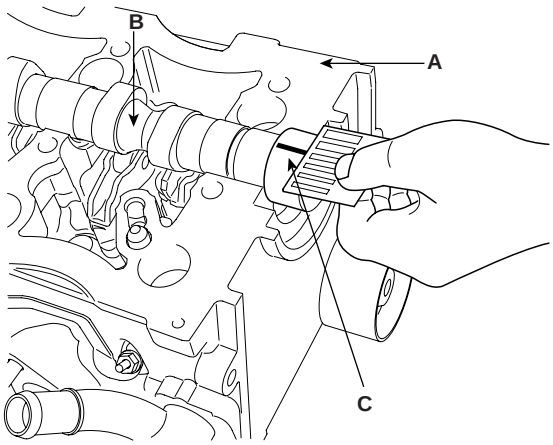

LCIF020A

7. Check the cam height wear.

[Standard]
Intake : 34.697mm (1.366in.)
Exhaust : 34.571mm (1.361in.)

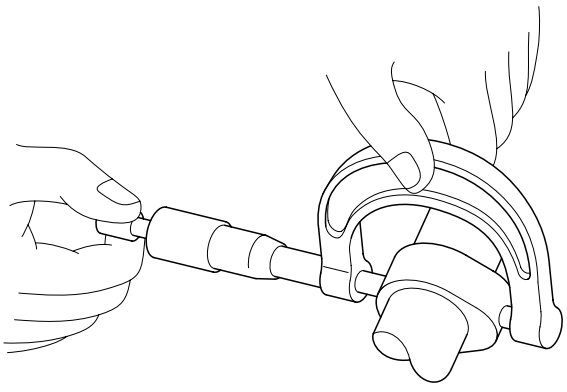

ACIE076A

WARPAGE

Check the cylinder head(A) for warpage.

- If warpage is less than 0.03mm (0.0012in.) for width, 0.09mm (0.0035in.) for length and 0.012mm (0.0035in) for 51mm ×51mm, cylinder head is in good condition.
- If warpage is over the standard value, replace the cylinder head.

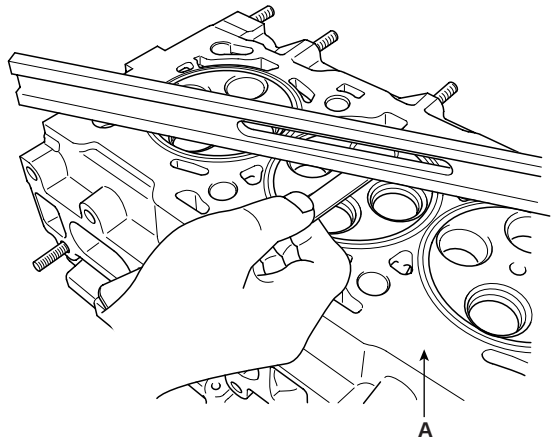

ACIE084A

Measure along edges, and three ways across center.

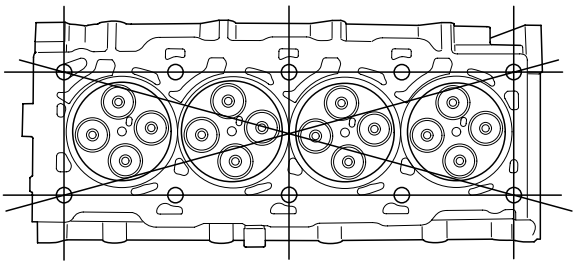

ACIE085A

REASSEMBLY E75104BF

NOTE

Prior to reassembling, cylinder head assembly shall be cleaned sufficiently to remove scrap and clust. (Clean holes with special care.)

1. Using the SST(09222-27200) insert the valve stem seals(A).

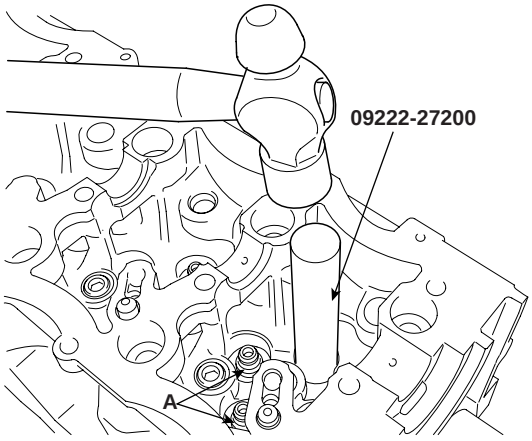

ACIE086A

2. Insert the valves through the valve stem seals.

NOTE

Make sure the valves move up and down smoothly.

3. Install the valve spring(A) and valve spring retainer(B), then install the SST (09222-27300, the valve spring compressor). Compress the spring(A) and install the valve spring retainer lock(c).

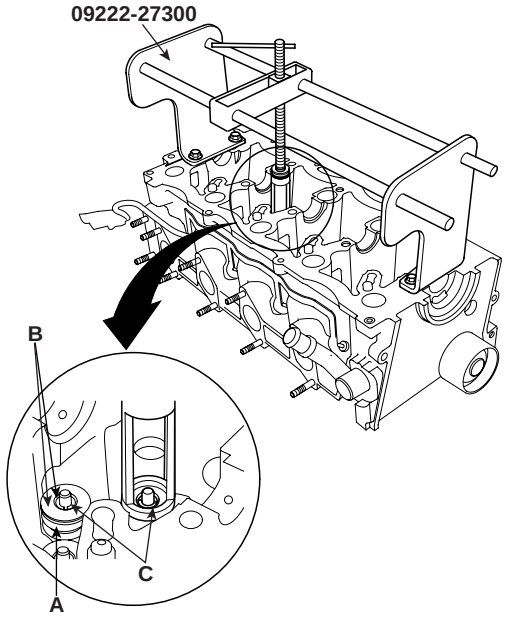

ACIE087A

4. Lightly tap the end of each valve stem two or three times with a plastic mallet to ensure proper seating of the valve and valve spring retainer locks.

NOTE

Tap the valve stem only along its axis so you do not bend the stem.

5. Assembly of lash adjuster.
   a. Until installing, lash adjuster shall be held upright so that gas oil in lash adjuster should not spill and assured that dust does not adhere to adjuster.
   b. Lash adjust shall be inserted tenderly to the cylinder head not to spill gas oil from lash adjuster. In case of spilling air bent shall be done in accordance with the air bent procedure below.

NOTE

Air bent procedure

1. In case of lash adjuster alone.
Stroke lash adjuster in gas oil 4~5 times by pushing its cap while pushing the ball down slightly by hard steel wire.
Take care not to severely push hard steel wire down since ball is several grams.

2. After installed on engine
Lash adjuster might give out unusual noise if air is mingled. Apply slow racing from idle to 3,000rpm (Approximately one minute per one racing) and the air shall be removed from adjuster.
Therefore noise can be extinguished.

6. Install the valve-caps.

7. Put the cam followers on the lash adjusters and valve caps.

8. After wiping down the camshaft and camshaft seal in the cylinder head, lubricate both surfaces and install the camshaft with engine oil.

9. Confirm that cam followers are located on lash adjusters and their rollers are in touch with camshaft.

10. In assembly camshaft bearing cap, to the cylinder head with the cylinder block, all pistons should be in the middle position between TDC(Top Dead Center) and BDC(Bottom ead Center) because valves come out of the bottom surface of the cylinder head.

11. Install the bolts loosely.

12. Tighten each bolt two turns at a time in the sequence shown below to ensure that the cam followers do not bind on the valves.

Tightening torque
26.5 ~ 29.5N.m (2.65 ~ 2.95kgf.m, 20 ~ 22lb-ft)

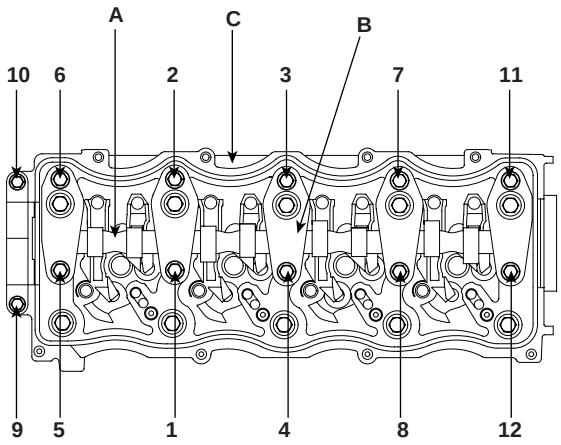

ACIE073A

INSTALLATION E4F40791

Install the cylinder head in the reverse order of removal :

NOTE

- *Always use a new head gasket.*
- *Cylinder head and cylinder block surface must be clean.*
- *Turn the crankshaft so the No.1 piston is at TDC(Top Dead Center).*

1. Cylinder head dowel pins must be aligned.

2. Select the cylinder head gasket.
   a. Measure the piston protrusion from the upper cylinder block face (I) on 8 places (A ~ H) at T.D.C. Measure on the crankshaft center line considering the piston migration.

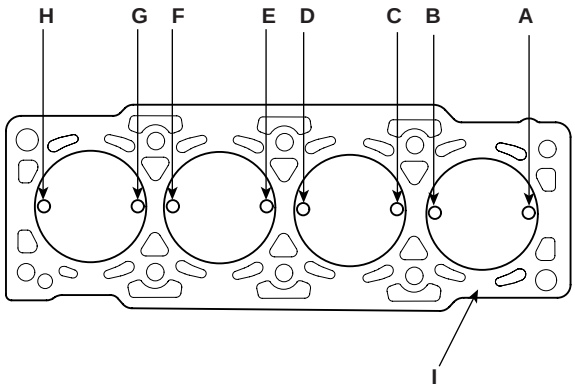

ACIE088A

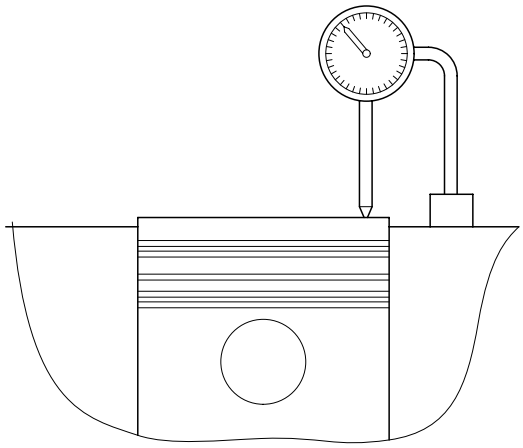

ACIE089A

   b. Select the gasket in the table below using the average value of piston protrusions.
   Although even the only 1 point is over than the each rank limit, use 1 rank upper gasket than specified in the table below.

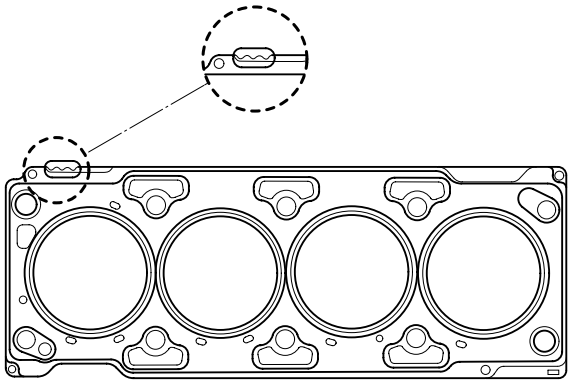

ACIE090A

Displacement	2.2 L		
Average of pisston protrusion	0.194 ~ 0.337mm (0.0079 ~ 0.013in.)	0.337 ~ 0.440mm (0.013 ~ 0.017in.)	0.440 ~ 0.542mm (0.017 ~ 0.021in.)
Gasket thickness	1.1 ± 0.05mm (0.0433 ± 0.0020in.)	1.2 ± 0.05mm (0.0472 ± 0.0020in.)	1.3 ± 0.05mm (0.0512 ± 0.0020in.)
Limit of each rank extant	0.43mm (0.0169in.)	0.53mm (0.0208in.)	-
Identification code	 SCMEM6102D	 SCMEM6103D	 SCMEM6104D

   c. Install the gasket so that the identification mark faces toward the flywheel side.

3. Position the cylinder head assembly over the gasket.

4. Tighten the cylinder head bolts slightly.

5. Install the camshaft sprocket, aligning the timing mark.

Tightening torque
122.6 ~ 137.3N.m (12.5 ~ 14.0kgf.m, 90.4 ~ 101.3lb-ft)

6. Tighten the bolts to the specified torque

Tightening torque
63.7N.m (6.5kgf.m, 47.0lb-ft) + 120° + 120°

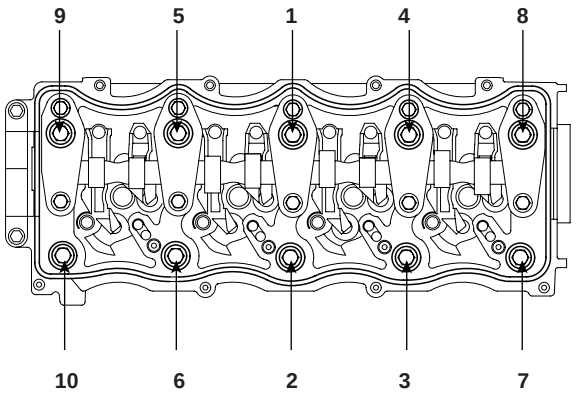

ACIE094A

NOTE

- *Tightening sequence of cylinder head bolt should be confirmed to the upper drawing.*
- *Cylinder head bolt must be replaced.*

7. Install the fuel pump assembly.

8. Install the intake/exhaust manifold assemblies.

9. Install the hose between the vacuum pump and the cylinder head.

10. If it is necessary to replace the oil seals on the cylinder head cover for injectors, use the SST(09351-27401).

11. Install the head cover gasket in the groove of the cylinder head cover.

NOTE

- *Cylinder head cover gasket must be replaced.*
- *Before installing the head cover gasket, throughly clean the seal and the groove.*
- *When installing, make sure the head cover gasket is seated securely in the corners of the recesses with no gap.*

12. Apply liquid gasket to the head cover gasket at the four corners of the recesses.

NOTE

- *Use liquid gasket LOCTITE 5699 or TH1212D.*
- *Check that the mating surface are clean and dry before applying liquid gasket.*
- *Do not install the parts if five minutes or more have elapsed since applying liquid gasket. Instead, reapply liquid gasket after removing old residue.*
- *After assembly, wait at least 30 minutes before filling the engine with oil.*

13. When installing the cylinder head cover, hold the head cover gasket in the groove by placing your fingers on the camshaft holder contacting surfaces (top of the semicircles).
Once the cylinder head cover is on the cylinder head, slide the cover slightly back and forth to seat the head cover gasket.

NOTE

- *Before installing the cylinder head cover, clean the cylinder head contacting surfaces with a shop towel.*
- *Do not touch the parts where liquid gasket was applied.*
- *Take care not to damage the oil seals when installing the cylinder head cover.*
- *Visually check the oil seals for damage.*
- *Replace any washer that is damaged or deteriorated.*

14. Tighten the nuts in two or three steps. In the final step, tighten all bolts, in sequence.

Tighten torque
8 ~ 10N.m (0.8 ~ 1.0kgf.m, 5.90 ~ 7.38lb-ft)

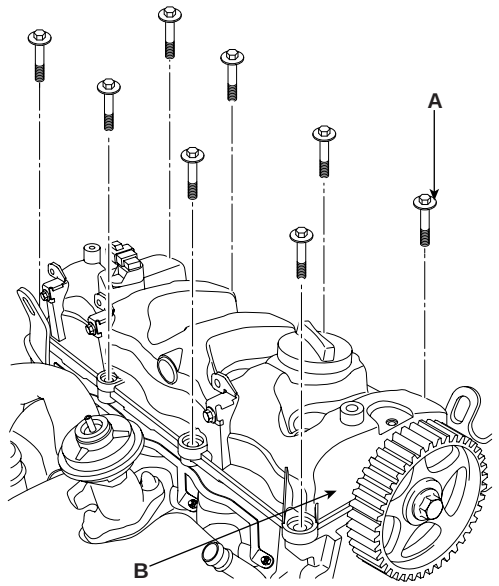

SCMEM6071D

NOTE

After assembly, wait at least 30 minutes before filling the engine with oil.

15. After installating, check that all tubes, hoses and connectors are installed correctly.

16. Insert the injectors(C), moving back the injector holders(A) with the bolts(B).

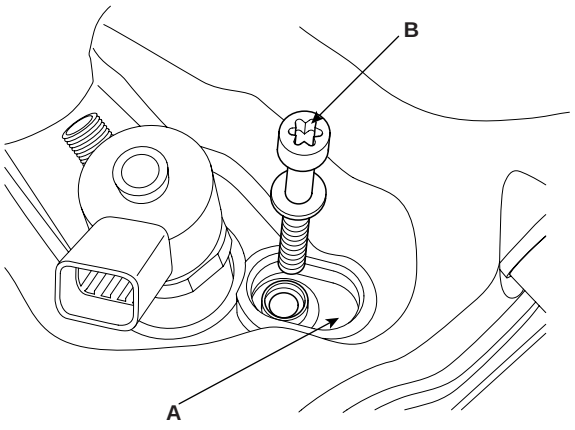

ACIE096A

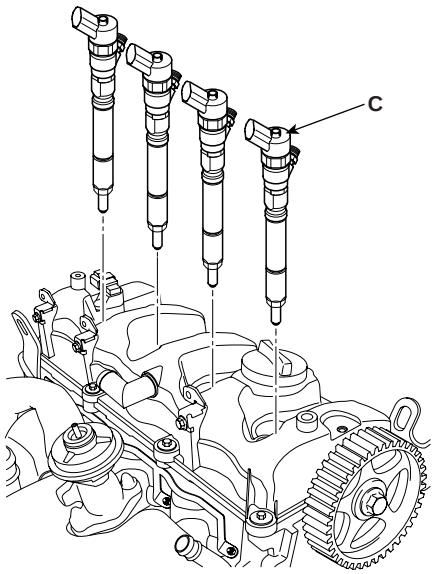

ACIE095A

17. Tighten the injector holder bolts(A) with 5mm hexagonal wrench(B).

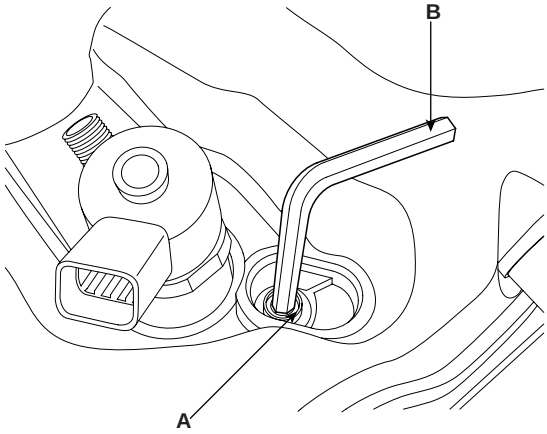

ACIE059A

18. Install the injector plug(A).

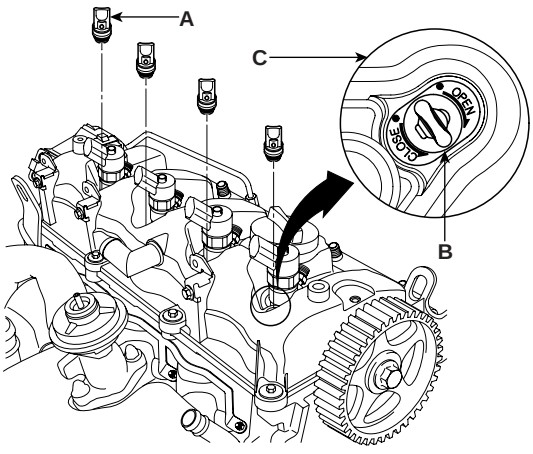

ACIE097A

a. Make sure that the stopper of the plug faces 'OPEN' side. Otherwise pull and rotate the plug clockwise so the stopper should face 'OPEN' side.
b. Apply the engine oil on the head cover mating surface or the gasket of the plug.
c. Insert the plugs in the head cover.
d. Rotate the plug inserted counterclockwise 90° .
e. After installation, rotate the plug clockwise. If it is rotated, repeat the step a ~ d.

NOTE

Plug gasket must be replaced.

ENGINE BLOCK

COMPONENTS E9326704

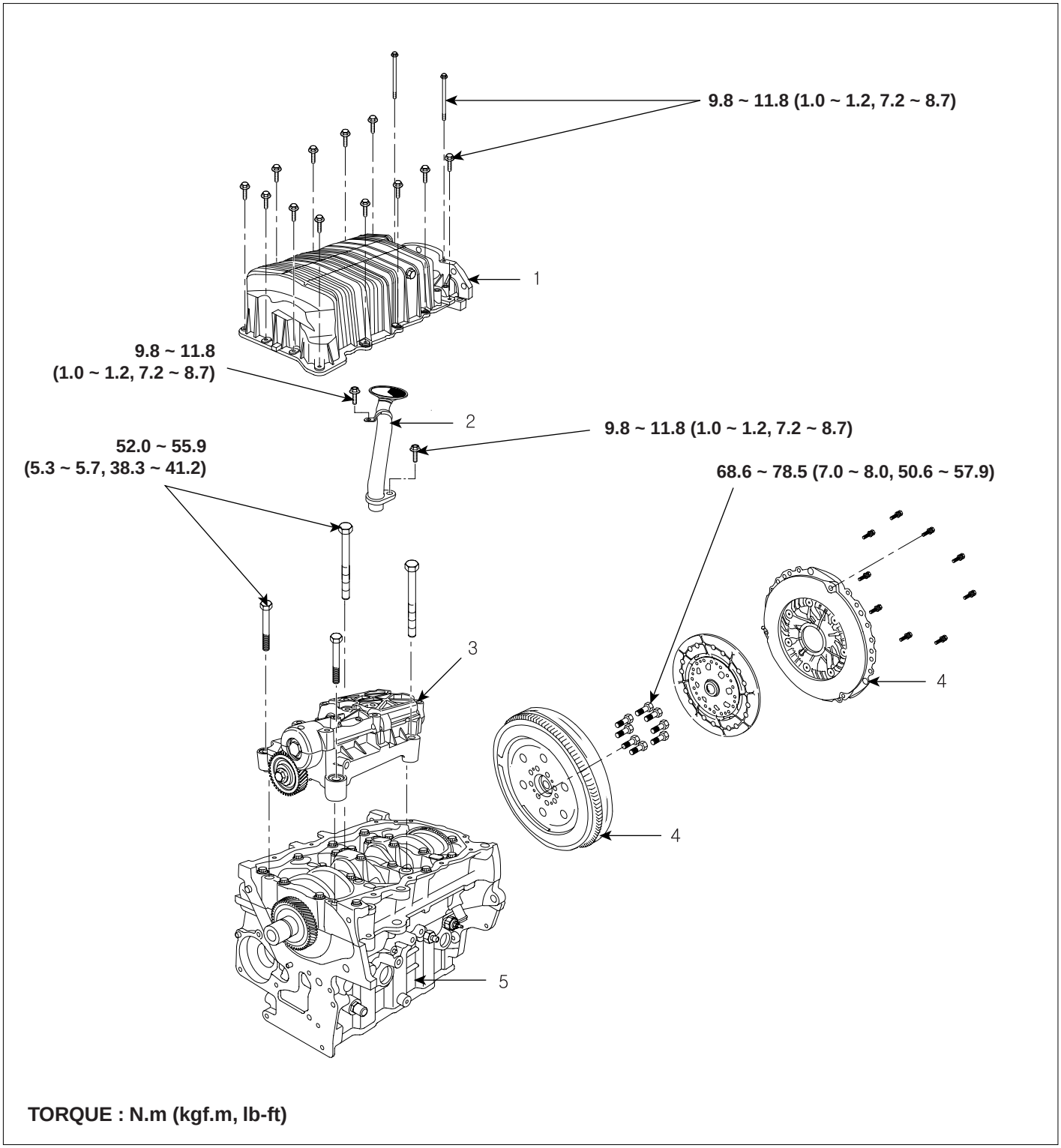

1. Oil pan
2. Oil screen
3. Balance shaft assembly
4. Duel mass flywheel
5. Clutch assembly

SCMM16008L

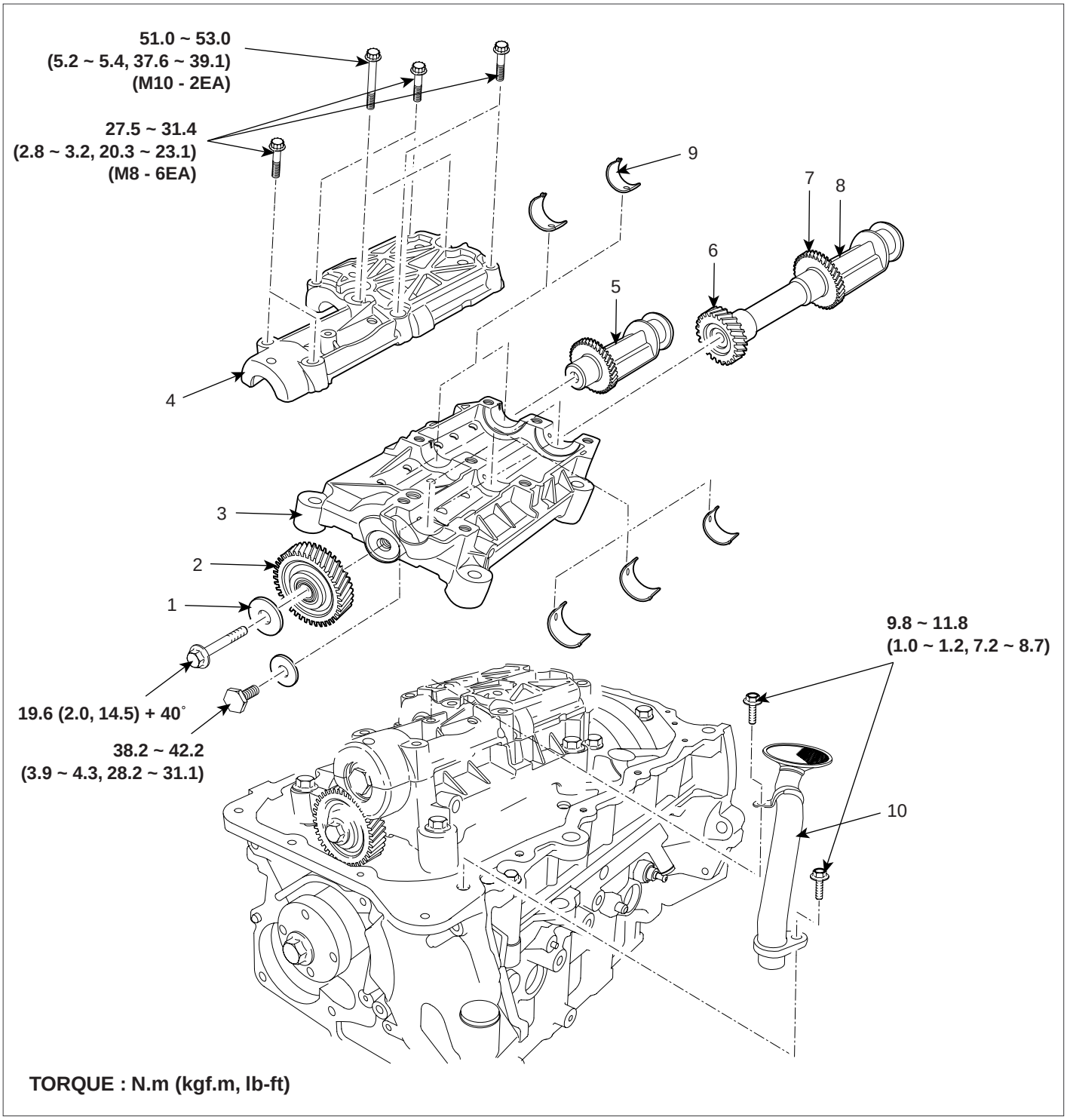

1. Washer
2. Balance shaft intermediate gear
3. Balance shaft upper carrier
4. Balance shaft lower carrier
5. Balance driven shaft
6. Balance shaft drive gear
7. Balance shaft driver gear
8. Balance driver shaft
9. Balance shaft bearing
10. Oil screen

SCMM16009L

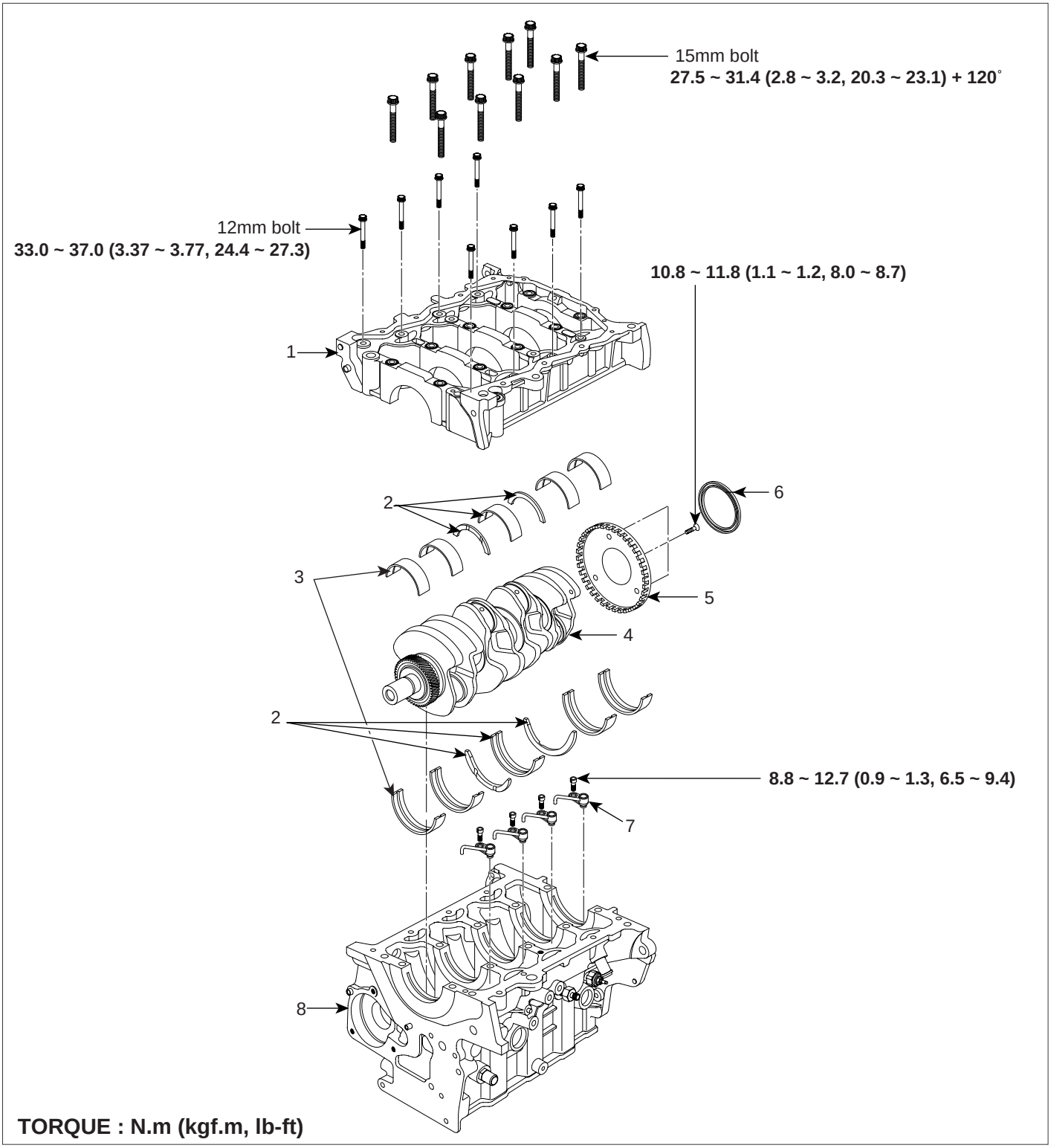

1. Bad plate
2. Center bearings
3. Main bearings
4. Crankshaft
5. Crankshaft position sensor wheel
6. Crankshaft rear oil seal
7. Piston cooling jet (Oil jet)
8. Engine block

SCMM16010L

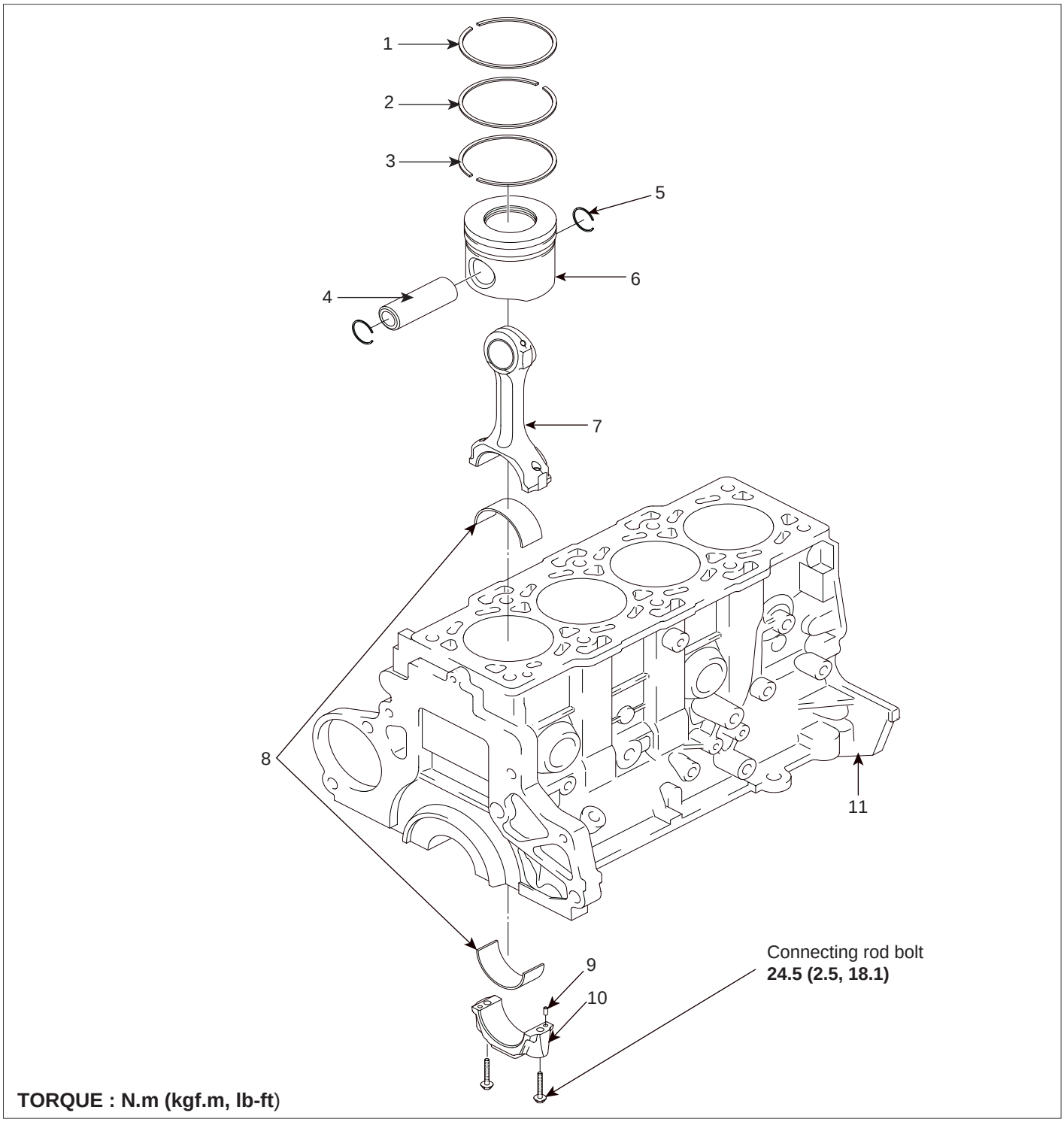

TORQUE : N.m (kgf.m, lb-ft)

1. Piston ring No. 1
2. Piston ring No. 2
3. Oil ring
4. Piston pin
5. Snap ring
6. Piston
7. Connecting rod
8. Connecting rod bearings
9. Dowel pin
10. Connecting rod bearing cap
11. Engine block

SCMM16011L

REMOVAL E55C8328

1. Remove the engine and transaxle assembly from the vehicle.
2. Remove the transmission from the engine and transaxle assembly by loosening bolts.
3. Remove the eight flywheel bolts, then separate the flywheel from the crankshaft flange.
4. Remove the timing belt assembly.
5. Remove the intake and the exhaust manifold.
6. Remove the cylinder head assembly.
7. Remove the alternator. (See EE group - alternator)
8. Remove the engine oil level gauge(A).

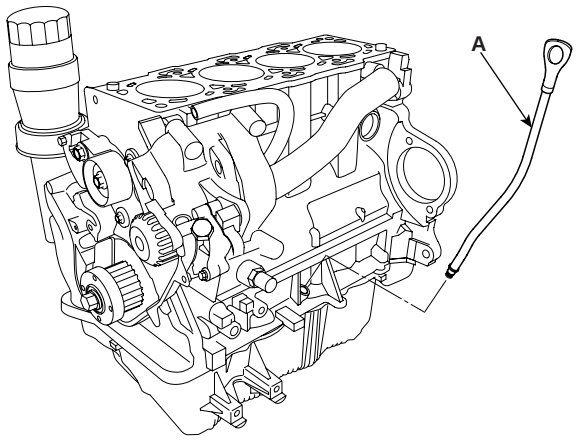

ACIE102A

9. Remove the CKP(Crankshaft Position Sensor)(A) and the oil pressure switch(B).

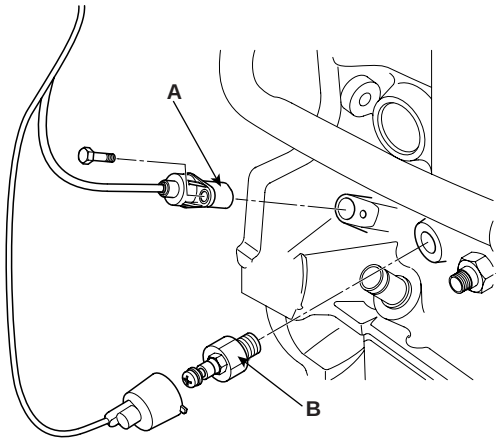

ACIE103A

10. Remove the heater and oil cooler return pipe assembly(A) after loosening the hose clamps(B) and the bolts(C, D, E).

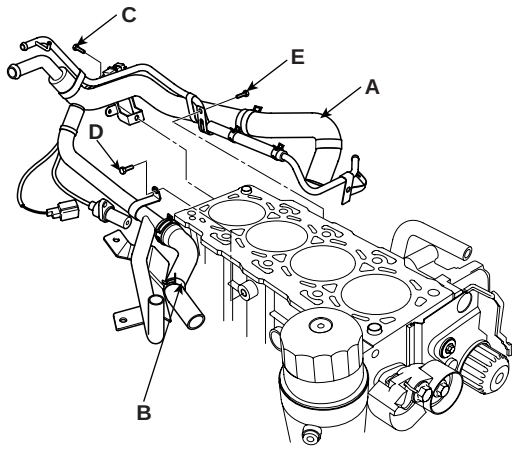

ACIE104A

11. Remove the tube(A) between the vacuum pump and the cylinder head.

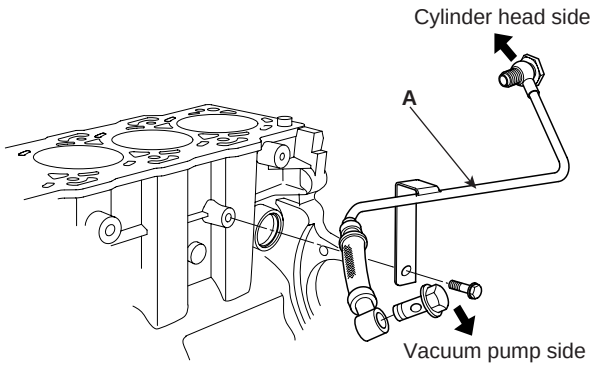

LCIF026A

12. Remove the power steering pump mounting bracket assembly(A).

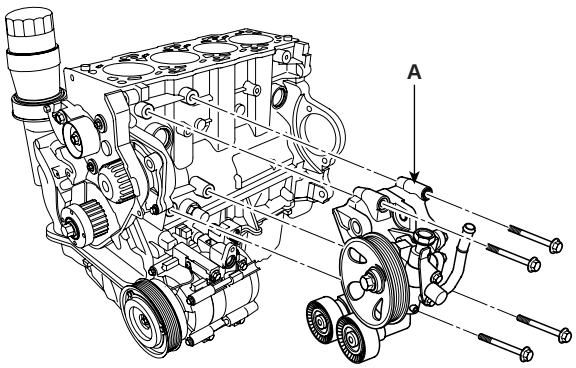

ACIE106A

13. Remove the water inlet pipe assembly(A) by loosening a bolt(B) and clamps.

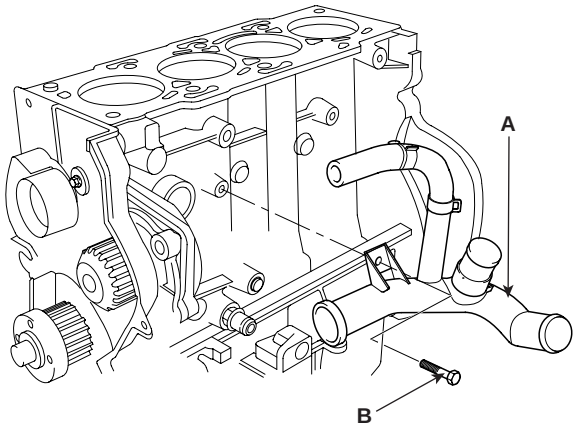

ACIE107A

14. Remove the air compressor(A). (See HA group - compressor)

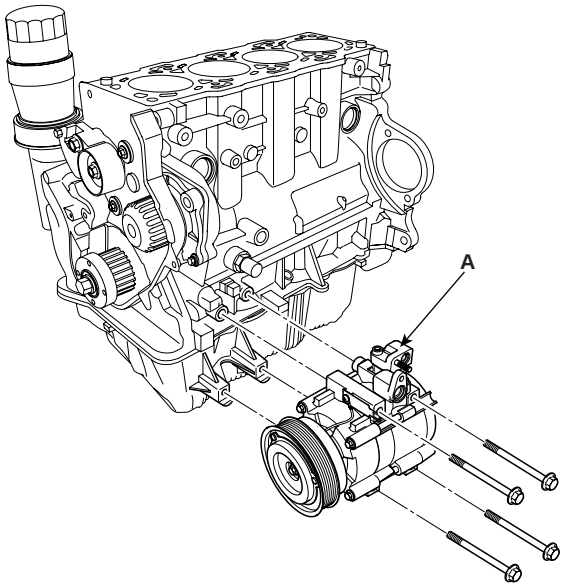

ACIE108A

15. Remove the auto-tensioner(A) by loosening the bolt(B).

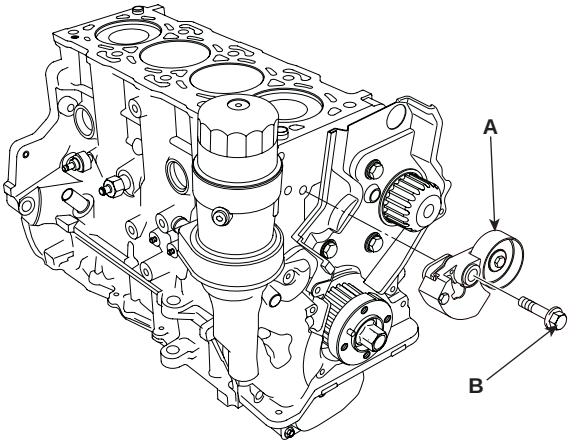

ACIE109A

16. Remove the timing belt rear cover(A).

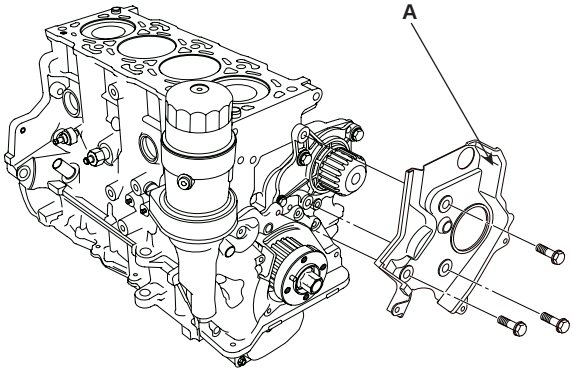

ACIE110A

17. Remove the water pump assembly(A) with the gasket(B).

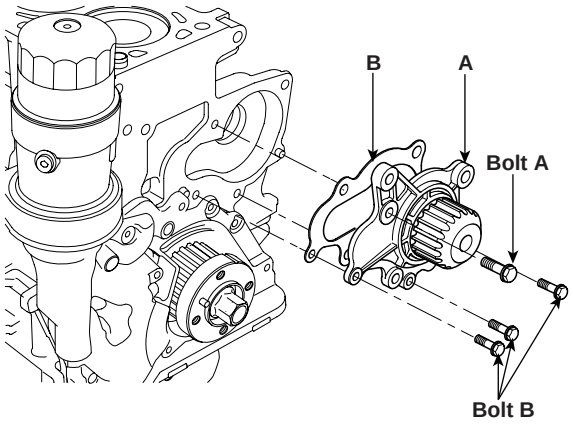

LCIF027A

18. Remove the oil pan(A) after removing the oil-pan acoustic shield.

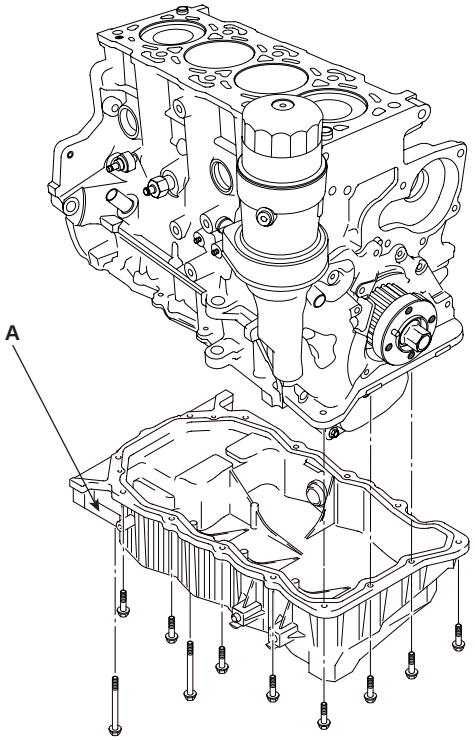

ACIE112A

NOTE

An oil-pan acoustic shield can be also removed when removing a transmission from an engine.

19. Remove the oil screen(A) for removal of the oil pump case.

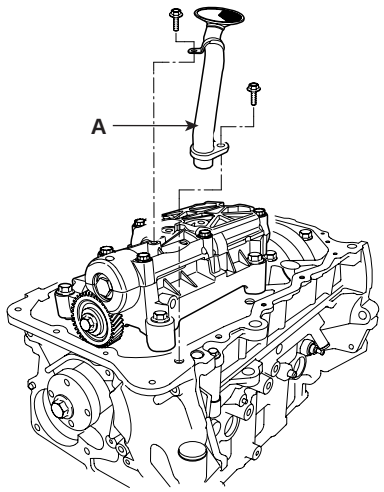

SCMM16012L

20. Remove the crankshaft bolt(A), then seperate the crankshaft sprocket(B).

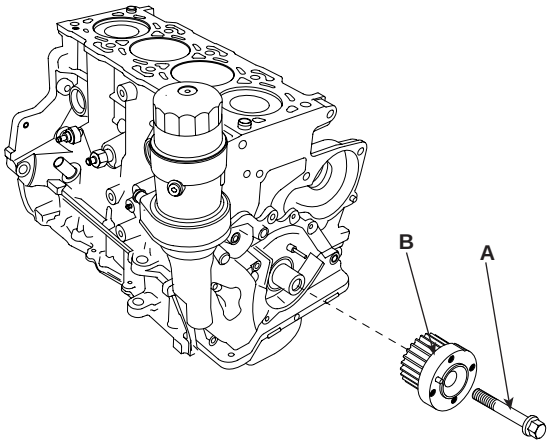

ACIE114A

21. Remove the oil-pump assembly(B) by loosening the bolts(A).

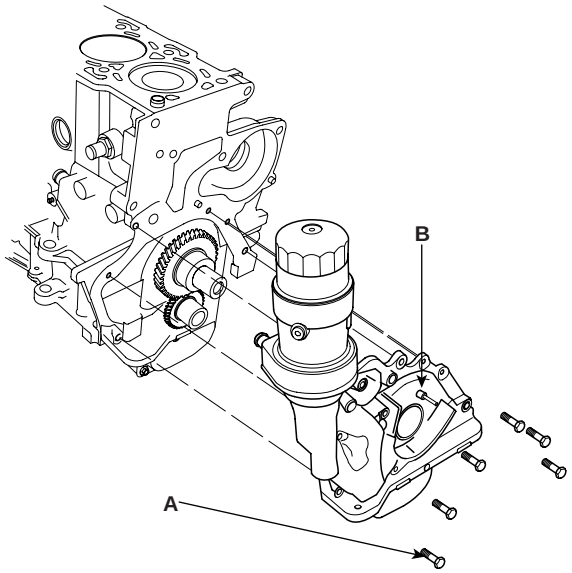

ACIE115A

DISASSEMBLY EA4886D5

1. Remove the balance shaft assembly(A).

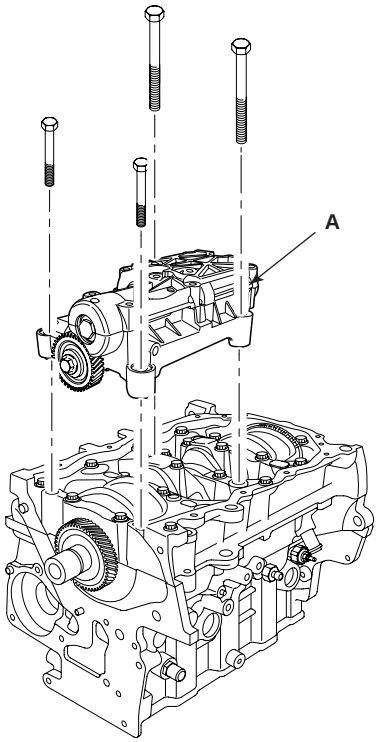

SCMEM6055D

2. Remove the bed plate assembly.
   - Remove the bolts(A).
     To prevent warpage, unscrew the bolts in sequence 1/3 turn at a time : repeat the sequence until all bolts are loosened.
   - Remove the bolts(B).

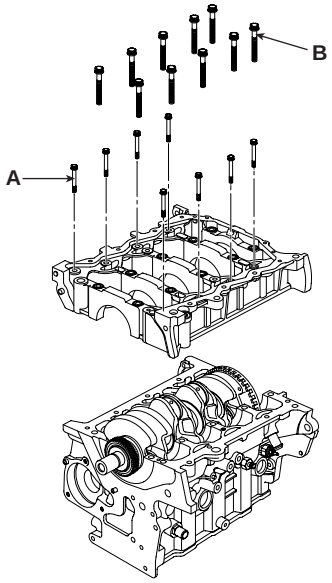

ACIE117A

3. Remove the connecting rod bearing caps(A) and bearings(B).
   - After removing No. 1 and 4 connecting rod bearing caps and turn the crankshaft No. 2 and 3 crankpins are at the top.
   - Remove the rest bearing caps and bearings.
   - Keep all caps/bearings in order.

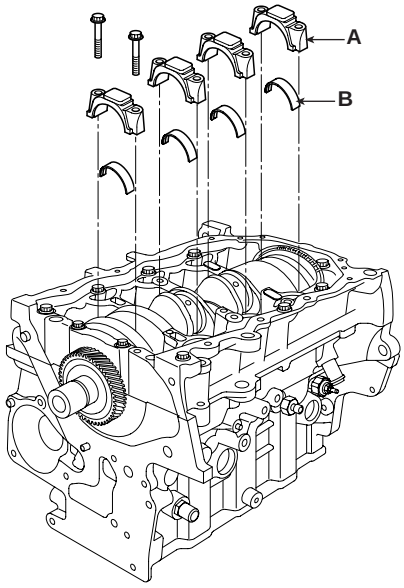

ACIE118A

4. If you can feel a ridge of metal or hard cabon around the top of each cylinder, remove it with a ridge reamer. Follow the reamer manufacturer's instructions. If the ridge is not removed, it may damage the pistons as they are pushed out.

5. Drive out the piston assembly from the engine block.
   a. Reinstall the connecting rod bearings and caps after removing each piston/connecting rod assembly.
   b. To avoid mixup on reassembly, mark each piston/connecting rod assembly with its cylinder number.

6. Lift the crankshaft(A) out of the engine block(B), being careful not to damage the journals.

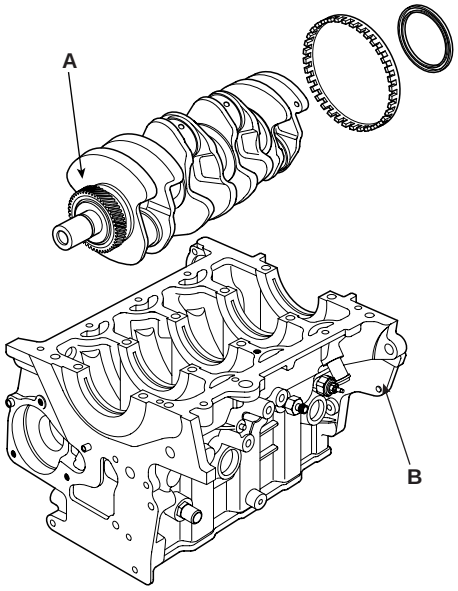

ACIE119A

7. Remove the piston oil jet(A) by loosening the hexagonal bolt(B) with a hexagonal wrench.

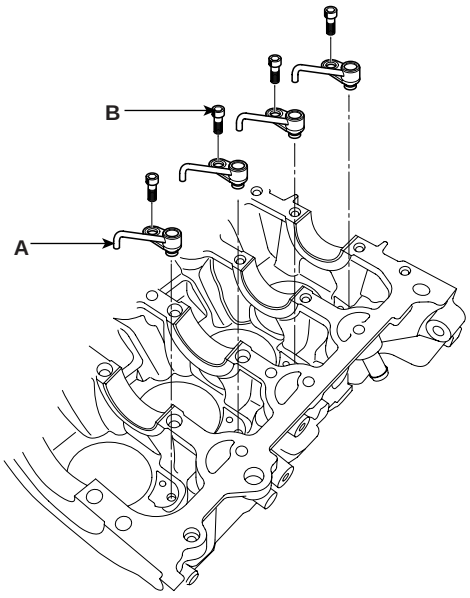

ACIE120A

BALANCER

1. Remove the balance shaft intermediate gear bolt(A) and dive gear bolt(B).

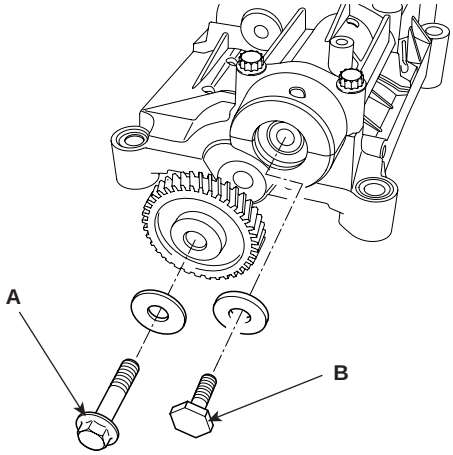

SCMEM6050D

2. Remove the balance shaft lower carrier.

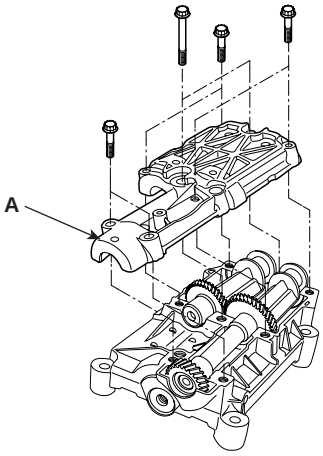

SCMEM6051D

3. Remove the balance driven shaft(A) and balance dive shaft(B).

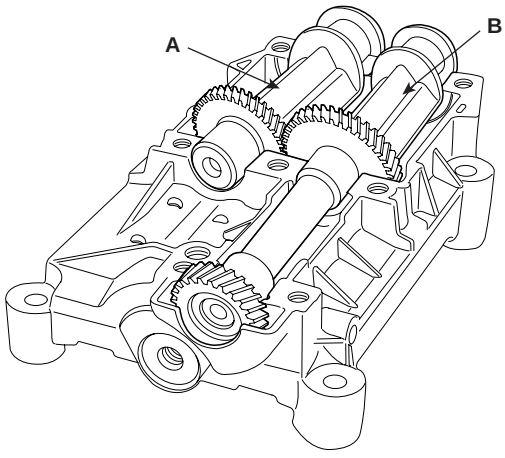

SCMEM6052D

4. Remove the balance shaft bearing(B) from balance shaft upper carrier(A).

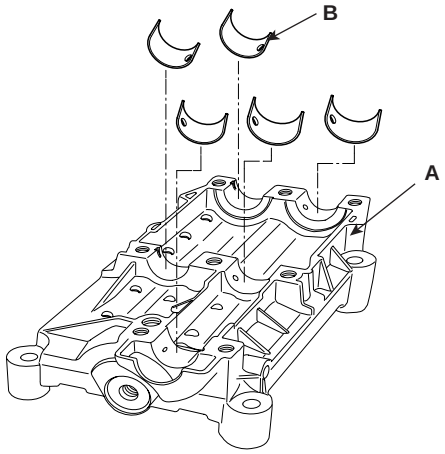

SCMEM6053D

REPLACEMENT E0EBB461

MAIN BEARING SELECTION

Crankshaft Bore Code Location

1. Letters have been stamped on the end of the block as a code for the size of each of the 5 main journal bores. Write down the crank bore codes.
   If you can't read the codes because of accumulated dirt and dust, do not scrub them with a wire brush or scraper. Clean them only with solvent or detergent.

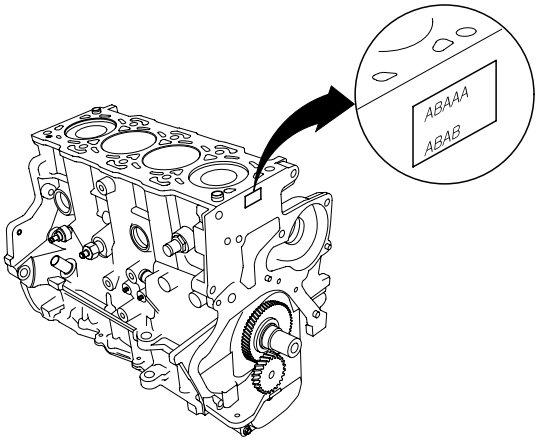

ACIE129A

Discrimination of cylinder block

Discrimination		SIZE (mm) (Inside diameter of crank bore)
Class	Mark	
A	A	Ø64 (0 ~ +0.006)
B	B	Ø64 (+0.006 ~ +0.012)
C	C	Ø64 (+0.012 ~ +0.018)

Main Journal Code Locations

2. The main Journal Codes are stamped on the No.1 web.

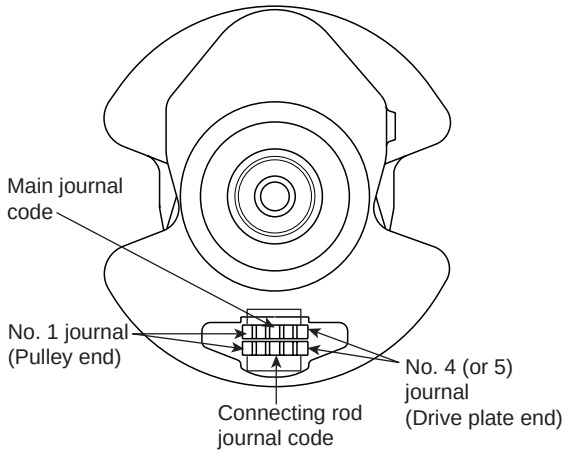

LCIF031A

Discrimination of crank shaft

Discrimination		SIZE (mm) (Outside diameter of main journal)
Class	Mark	
I	A	Ø60 (+0.014 ~ +0.020)
II	B	Ø60 (+0.008 ~ +0.014)
III	C	Ø60 (+0.002 ~ +0.008)

3. Use the crank bore codes and crank journal codes to select the appropriate replacement bearings from the following table.

NOTE

- *Color code is on the edge of the bearing. Refer to the table in the step 6 of the main bearing clearance inspection.*
- *When using bearing halves of different colors, it dose not matter which color is used in the top or bottom.*

Installing procedure of bearing

Shaft bore combination		Bearing mark	Oil clearance
Shaft mark	Bore mark		
I (A)	A (A)	A (BLUE)	0.024 ~ 0.042 mm
	B (B)	B (BLACK)	
	C (C)	C (-)	
II (B)	A (A)	B (BLACK)	
	B (B)	C (-)	
	C (C)	D (GREEN)	
III (C)	A (A)	C (-)	
	B (B)	D (GREEN)	
	C (C)	E (YELLOW)	

ROD BEARING SELECTION

1. Inspect each connecting rod for cracks and heat damage.

Connecting Rod Big End Bore Code Locations

2. Each rod has tolernance range from 0 to 0.018mm (0.0007in.), in 0.006mm (0.0002in.) increments, depending on the size of its big end bore. It's then stamped with a letter (A, B or C) indicating the range. You may find any combination of letters in any engine.

   If you can't read the code because of an accumulation of oil and varnish, do not scrub them with a wire brush or scraper. Clean them only with solvent or detergent.

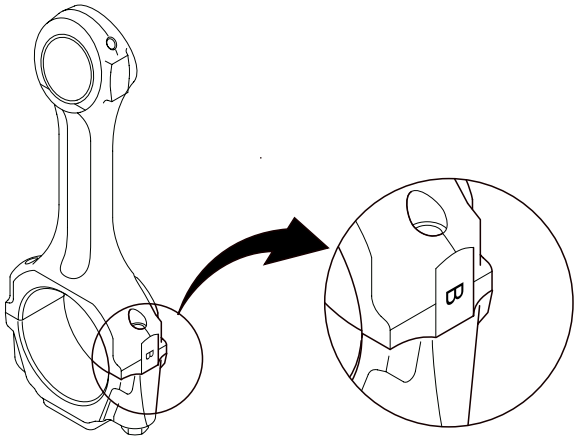

LCIF032A

NOTE

Discrimination connecting rod

Discrimination		SIZE (mm) (Inside diameter of connecting rod big end bore)
Class	Mark	
A	A	Ø 53 (0 ~ +0.006)
B	B	Ø 53 (+0.006 ~ +0.012)
C	C	Ø 53 (+0.012 ~ +0.018)

Connecting Rod Journal Code Locations

3. The connecting Rod Journal Codes are stamped on the No. 1 web.

Connecting rod journal code locations (letters)

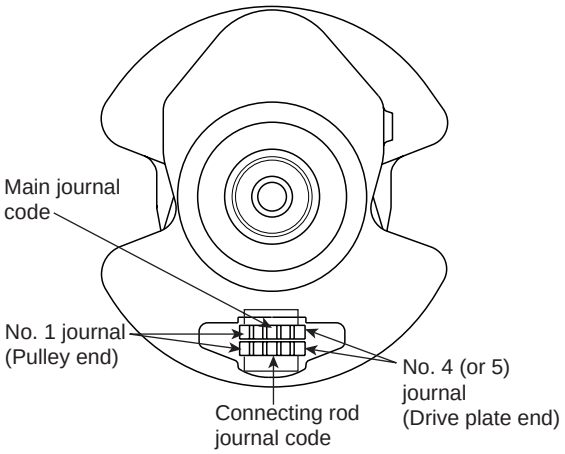

LCIF031A

NOTE

Discrimination of crank shaft pin

Discrimination		SIZE (mm) (Outside diameter of pin)
Class	Mark	
I	A	Ø50 (+0.020 ~ +0.026)
II	B	Ø50 (+0.014 ~ +0.020)
III	C	Ø50 (+0.008 ~ +0.014)

4. Use the big end bore codes and rod journal codes to select appropriate replacement bearings from the following table.

NOTE

Color code is on the edge of the bearing.
Refer to the table in the step 5 of rod bearing clearance inspection.

Shaft bore combination		Bearing mark	Oil clearance
Sahft mark	Bore mark		
I	A (A)	A (BLUE)	0.024 ~ 0.042 mm
	B (B)	B (BLACK)	
	C (C)	C (WHITE)	
II	A (A)	B (BLACK)	
	B (B)	C (WHITE)	
	C (C)	D (GREEN)	
III	A (A)	C (WHITE)	
	B (B)	D (GREEN)	
	C (C)	E (YELLOW)	

PISTON, PIN AND CONNECTING ROD

1. Apply engine oil to the piston pin snap rings and turn them in the ring grooves.

NOTE

Take care not to damage the ring grooves.

2. Remove both snap rings(A) carefully so they do not go flying or get lost. Wear eye protection.

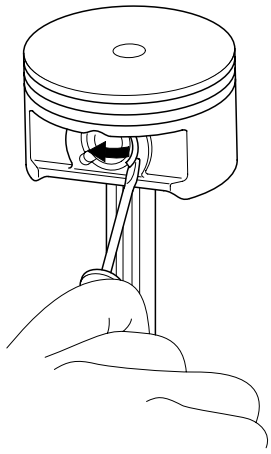

LCIF033A

3. Remove the piston pin and the conecting rod assembly.

4. Measure the diameter of the piston pin.

Piston Pin Diameter
Standard (New)
27.995 ~ 28.000mm (1.1022 ~ 1.1024in.)

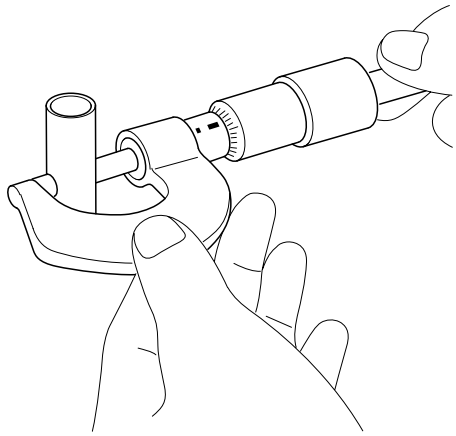

ACIE134A

NOTE

Inspect the piston, piston pin and connecting rod when they are at room temperature.

5. Set a snap ring in one side of piston pin hole.

6. Before inserting the piston pin, apply a sufficient amount of the lubricant oil to the outer surface of the piston, the inner surface of the piston pin hole and the small end bore of the connecting rod.

7. Insert the piston pin(A). Assembly the piston and connecting rod with the embossed front marks on the same side.

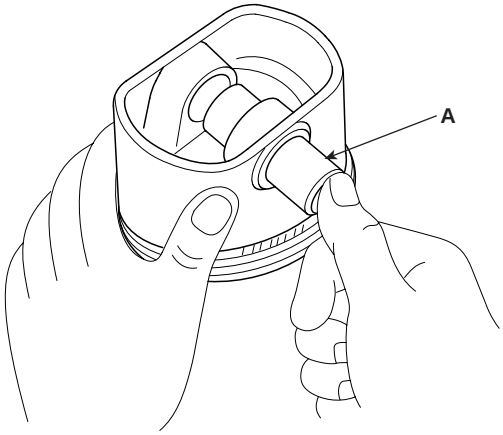

ACIE133A

NOTE

The front mark of the piston is embossed on the piston whereas some letters are located on a side surface of the connecting rod as the front mark.

CAUTION

- ***Be sure to keep the small end bore, piston pin hole and piston pin undamaged and unscratched when inserting the piston pin.***
- ***Set the snap rings to be sure for contacting with the groove of the piston pin hole.***

PISTON RING

1. Using a piston, push a new ring into the cylinder bore.

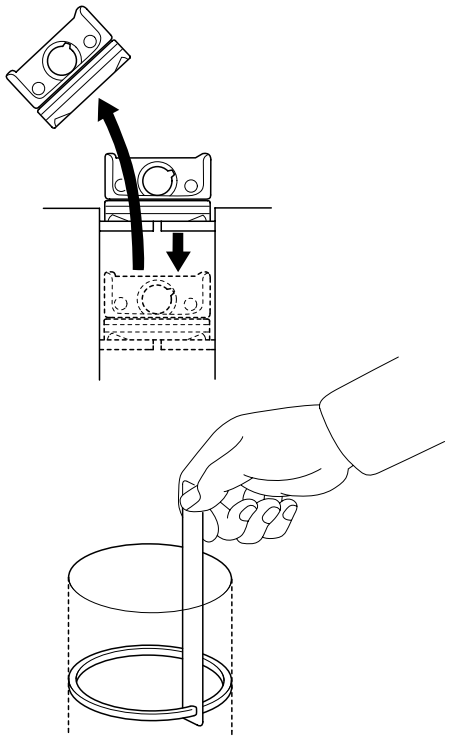

ACIE137A

2. Measure the piston ring end-gap(B) with a feeler gauge :
   - If the gap is too small, check to see if you have the proper rings for your engine.
   - If the gap is too large, recheck the cylinder bore diameter against the wear limits.
     If the bore is over the service limit, the cylinder block must be rebored.

Piston Ring End-Gap
Top ring
Standard (New) : 0.25 ~ 0.40mm (0.0098 ~ 0.0157in.)
Second Ring
Standard (New) : 0.40 ~ 0.60mm (0.0157 ~ 0.0236in.)
Oil Ring
Standard (New) : 0.20 ~ 0.40mm (0.008 ~ 0.016in.)

3. After installing a new set of rings, measure the ring-to-groove clearances :

Top Ring Clearance
Standard (New)
0.083 ~ 0.137mm (0.0033 ~ 0.0054in.)

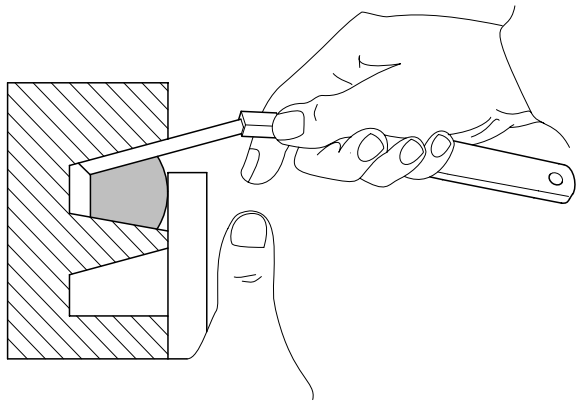

ACIE135A

Second Ring Clearance
Standard (New)
0.065 ~ 0.110mm (0.00256 ~ 0.00433in.)

Oil Ring Clearance
Standard (New)
0.03 ~ 0.07mm (0.00118 ~ 0.00275in.)

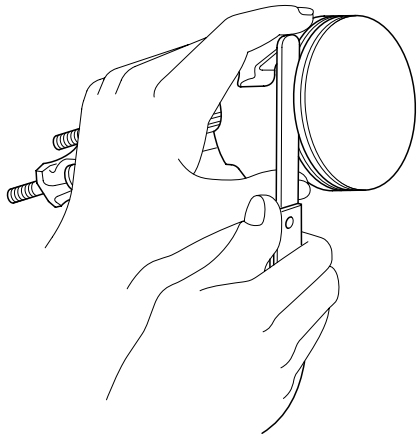

ACIE136A

INSPECTION E969687D

FLYWHEEL

1. Inspect ring gear teeth for wear or damage.
2. Flywheel bolts should be free from detrimental flaws.

CONNECTING ROD AND CRANKSHAFT END PLAY

1. Measure the connecting rod end play with a feeler gauge(A) between the connecting rod(B) and crankshaft(C).

Connecting Rod End play
Standard (New) : 0.10 ~ 0.35mm (0.004 ~ 0.014in.)

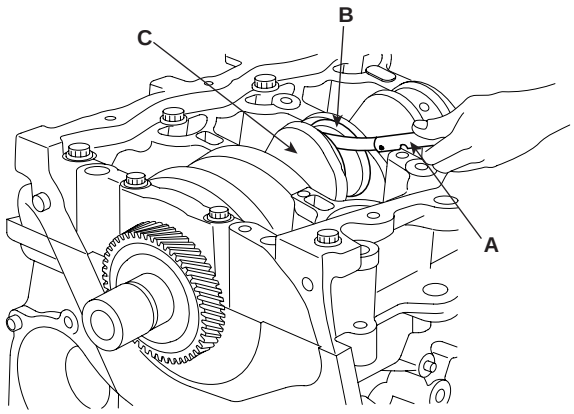

ACIE131A

2. If the connecting rod end play is out-of-tolerance, install a new connecting rod, and recheck. If it is still out-of-tolerance, replace the crankshaft.
3. If the end play is excessive. Replace parts as necessary.

MAIN BEARING CLEARANCE

1. To check main bearing-to-journal oil clearance, remove the bed plate, the crankshaft and the bearing halves.
2. Clean each main journal and bearing half with a clean shop towel.
3. Cut plastigauge to the same length as the width of the bearing.
4. Place one strip of plastigauge across each main journal on the cylinder block and the bed plate, avoiding the oil holes.
5. Reinstall the bearings, crankshaft and bed plate then torque the bolts to the specified valve.

NOTE

Do not rotate the crankshaft during inspection.

6. Remove the bed plate and bearings again and measure the widest part of the plastigauges with a calibrated scale on which an arrow of marks has beeen printed.

Main bearing-to-journal Oil Clearance
Standard (valve)
0.024 ~ 0.042mm (0.0009 ~ 0.0017in.)

NOTE

Discrimination of crankshaft main bearing

Discrimination		SIZE (mm) (Thickness of bearing)	Place of identification mark
Class	Mark		
E	YELLOW	1.987~1.990	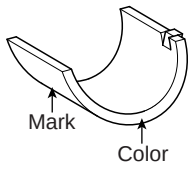
D	GREEN	1.984~1.987	
C	-	1.981~1.984	
B	BLACK	1.978~1.981	
A	BLUE	1.975~1.978	

LCIF047A

7. If the plastigauge mesaure too wide or too narrow, remove the crankshaft, and remove the upper half of the bearing. Install a new, complete bearing with the same color code(s), and recheck the clearance. Do not file, shim, or scrape the bearings to adjust clearance.
8. If the plastigauge shows the clearance is still incorrect, try the next larger or smaller bearing (the color listed above or below that one), and check again. If the proper clearance cannot be obtained by using the appropriate larger or smaller bearings, replace the crankshaft and start over.

ROD BEARING CLEARANCE

1. Remove the connecting rod cap and bearing half.
2. Clean the crankshaft rod journal bearing half with a clean shop towel.
3. Place pastigauge across the rod journal.
4. Reinstall the bearing half and cap, and torque the bolt.

NOTE

Do not rotate the crankshaft during inspecition.

5. Remove the rod cap and bearing half and measure the widest part of the plastigauge.

Connectinng Rod Bearing-to-Journal Oil
Clearance : 0.024 ~ 0.042mm (0.0009 ~ 0.0017in.)

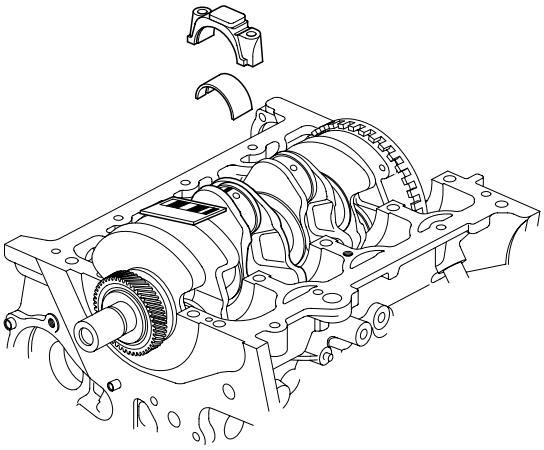

ACIE132A

6. If the plastigauge measure too wide or too narrow, remove the upper half of the bearing, install a new, complete bearing with the same color code(s), and recheck the clearance. Do not file, shim, or scrape the bearings or the caps to adjust clearance.

NOTE

Discrimination of connecting rod bearing

Discrimination		Size (Thick-ness of bearing)	Place of Identification
Class	Mark		
E	YELLOW	1.484 ~ 1.487	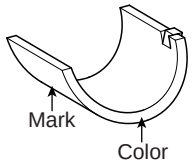 LCIF047A
D	GREEN	1.481 ~ 1.484	
C	WHITE	1.478 ~ 1.481	
B	BLACK	1.475 ~ 1.478	
A	BLUE	1.472 ~ 1.475	

7. If the plastigauge shows the clearance is still incorrect, try the next larger or smaller bearins (the color listed above or below that one), and check clearance again. If the proper clearance cannot be obtained by using the appropriate larger or smaller bearing, replace the crankshaft and start over.

BLOCK AND PISTON

1. Check the piston for distortion or cracks.

2. Measure the piston diameter at a point 10mm (0.4in) from the bottom of the skirt. There are three standard-size pistons (A. B and C). The letter is stamped on the top of the piston. Letters are also stamped on the block as cylinder bore sizes.

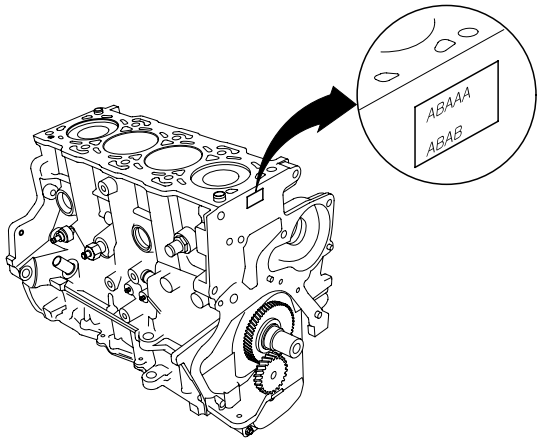

ACIE129A

Piston Diameter and Cylinder Bore
Standard value :

Grade	A	B	C
Piston Outer Diameter (mm)	86.92 ~ 86.93	86.93 ~ 86.94	86.94 ~ 86.95
Cylinder Bore (mm)	87.00 ~ 87.01	87.01 ~ 87.02	87.02 ~ 87.03
Clearance (mm)	0.070 ~ 0.090		

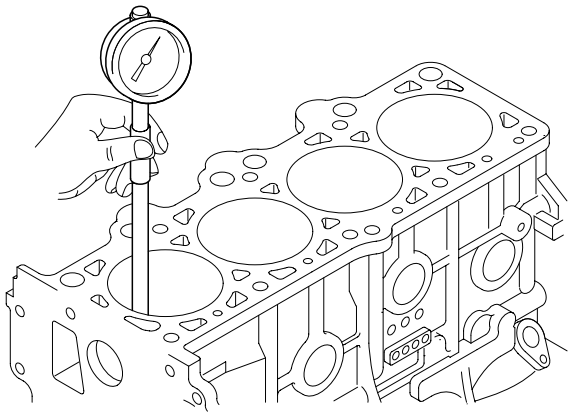

ACIE139A

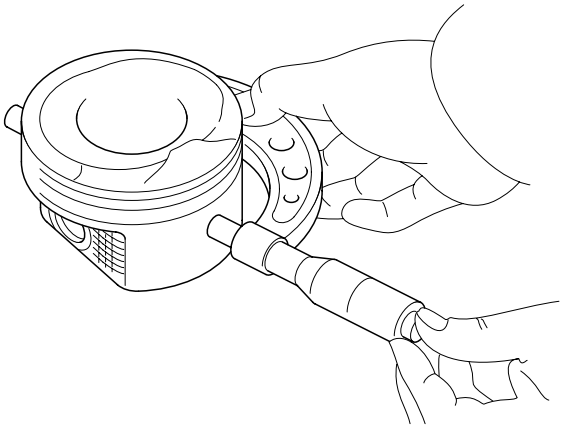

ACIE140A

3. Scored or scratched cylinder bores must be honed.

4. Check the top of the block for warpage. Measure along the edges and across the center.

Engine Block Warpage
Standard (New)
0.042mm (0.00165in.) for width
0.096mm (0.00378in.) for legth
0.012mm (0.00047in.)/50×50mm

CYLINDER HONING

Only a scored or scratched cylinder bore must be honed.

1. Measure the cylinder bores.
   If the block is to be reused, hone the cylinders and remeasure the bores.

2. Hone the cylinder bores with honing oil and a fine stone. Do not use stones that are worn or broken.

3. When honing is complate, thoroughly clean the engine block of all metal particles. Wash the cylinder bores with hot soapy water, then dry and oil them immediately to prevent rusting. Never use solvent, it will redistribute the grit on the cylinder walls.

4. If scoring or scratches are still present in the cylinder bores after honing to the service limit, rebore the cylinder block. Some light vertical scoring and scratching is acceptable if it is not deep enough to catch your fingernail and does not run the full length of the bore.

REASSEMBLY E7D325AA

BALANCE SHAFT

1. Install the balance shaft bearing(B) to the balance shaft upper carrier(A).

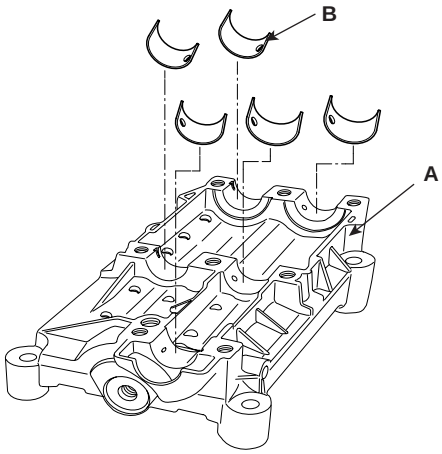

SCMEM6053D

2. Install the balance driven shaft(A) and the balance driver shaft(B).

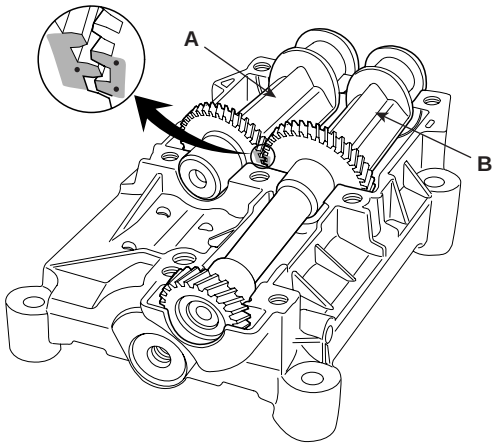

SCMEM6057D

CAUTION

Confirm the gear marks.

3. Install the balance shaft lower carrier(A) after installing the balance bearing to the lower carrier.

Tightening torque
Bolt(B) : 52 ~ 54N.m (5.2 ~ 5.4kgf.m, 37.6 ~ 39.1lb-ft)
Bolts(C) : 28 ~ 32N.m (2.8 ~ 3.2kgf.m, 20.3 ~ 23.1lb-ft)

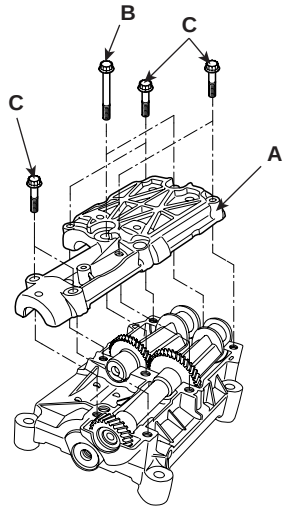

SCMEM6058D

4. Install the balance shaft drive gear bolt(B) and the intermediate gear bolt(A).

Tightening torque
Bolts(A) : 20N.m (2.0kgf.m, 14.5lb-ft, 14.5lb-ft)
± 104(°F)
Bolts(B) :39 ~ 43N.m (3.9 ~ 4.3kgf.m, 28.2 ~ 31.1lb-ft)

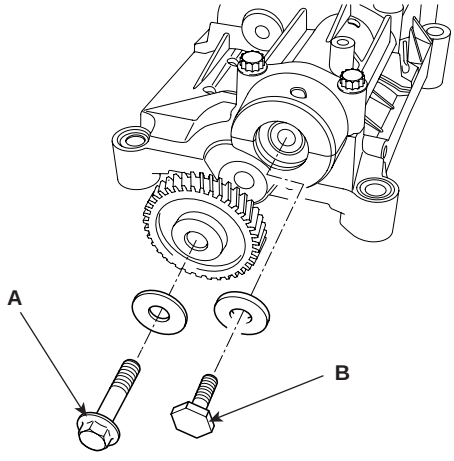

SCMEM6050D

CAUTION

Confirm the gear marks.

PISTON

1. Remove the connecting rod caps then install the ring compressor and check that the bearing is securely in place.

2. Position the marks facing the timing belt side of the engine.

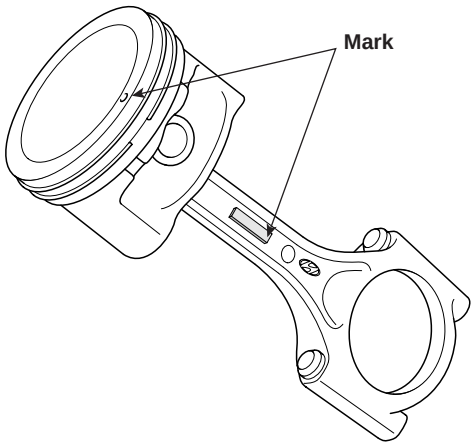

LCIF039A

3. Position the piston in the cylinder and tap it in using the wooden handle of hammer.
Maintain downward force on the ring compressor to prevent the rings from expanding before entering the cylinder bore.

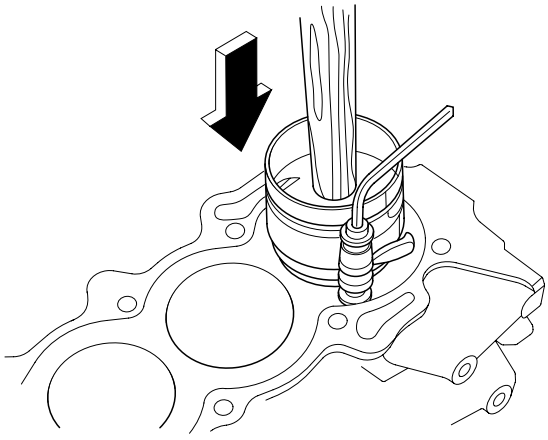

ACIE146A

4. Stop after the ring compressor pops free, and check the connecting rod-to-crank journal alignment before pushing the piston into place.

5. Check the connecting rod bearing clearance with plastigauge.

6. Apply engine oil to the bolt threads, then install the rod caps with bearings.

CRANKSHAFT AND BALANCER

1. Install the oil jets, tightening the hexagon socket head bolts with the torque 10 ~ 13Nm (0.1 ~ 1.3kgf.m, 7.2 ~ 9.4lb-ft)
2. Apply a coat of engine oil to the main bearings.
3. Install the bearing halves in the engine block.
4. Hold the crankshaft so rod journal No. 2 and rod journal No. 3 are straight up.
5. Lower the crankshaft into the block.
6. Install the bearing halves in the bed plate after applying a coat of engine oil.
7. Install the bed plate(C) to the engine block. After applying the sealant (LOCTITE 5205, DREIBOND 5105 or HYLOMAR 3000).

Tightening torque
15mm(B)
28 ~ 32N.m + (2.8 ~ 3.2kgf.m, 20.65 ~23.60lb-ft) + 120°
12mm(A)
33.7 ~ 37.7N.m (3.3 ~ 3.7kgf.m, 24.9 ~27.8lb-ft)

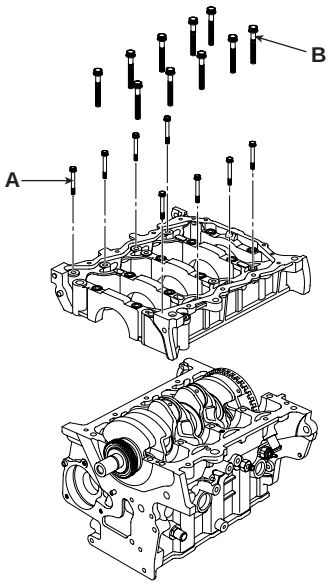

ACIE117A

8. Rotate the crankshaft clockwise to be seated properly.
9. Check the main bearing clearance with plastigauge.
10. Install the piston and connecting rod assemblies.
    a. Apply coat of engine oil to the connecting rod bearings.
    b. Install the bearing halves in the connecting rods.
    c. Insert the assemblies into the cylinder bores.
    d. Install the connecting rod caps and bolts finger tight
    e. Rotate the crankshaft clockwise, seat the journals into connecting rod No.2 and connecting rod No.3. Install the connecting rod caps and bolts finger tight. Install caps so the bearing recess is on the same side as the recess in the rod.
    f. Check the connecting rod bearing clearance with plastigage.
    g. Apply engine oil to the bolt threads, then install the rod caps within bearings and torque the bolts to 25N.m + 90° (250kgf.m + 90°, 18.44lb-ft + 90°).
11. Using the SST(09231-27000), install the crankshaft oil seal(A) squarely.

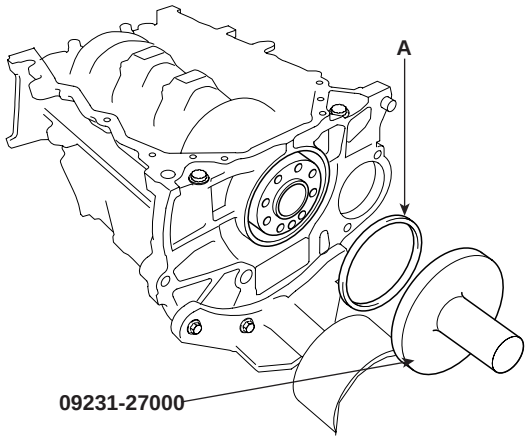

ACIE147A

12. Clean and dry the mating surfaces.
    Apply a light coat of oil to the crankshaft and to the lip of the seal.

13. Install the balance shaft assembly(A) onto the bed plate with the bolts (B,C).

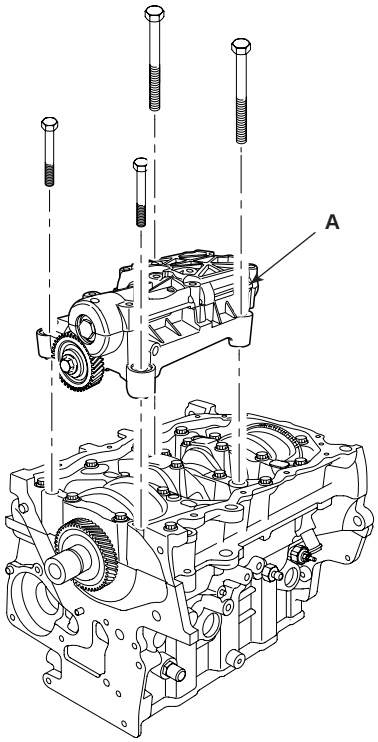

SCMEM6055D

Tightening torque
53 ~ 57N.m (5.3 ~ 5.7kgf.m, 39.09 ~ 42.04lb-ft)

NOTE

Pay attention to the timing marks on the driver gears of the balance shaft and the crankshaft.

INSTALLATION EB9422DC

1. Clean and dry the oil pump mating surface.

2. Install the oil pump
   a. Install a new crankshaft oil seal in the oil pump.
   b. Apply liquid gasket evenly to the block mating surface of the oil pump.

Standard liquid gaskets (or sealants)
LOCTITE5900 or equivalent

- Apply liquid gasket in a wide bead : 2.5 ± 0.5m
- Apply the liquid gasket without stoping.
- Assemble the oil pump within 5 minutes after applying.

   c. Grease the lips of the oil seals.
   d. Align the inner rotor with the crankshaft drive gear and install the oil pump(B).

Tightening torque(A)
20 ~ 27N.m (2.0 ~ 2.7kgf.m, 14.75 ~ 19.91lb-ft)

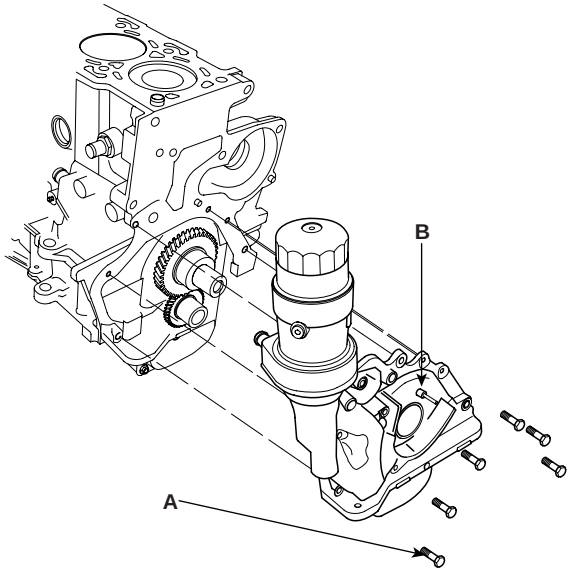

ACIE115A

   e. Clean the excess grease off the crankshaft and check the seals for distortion.

3. Install the crankshaft key(A) on the crankshaft assembly.

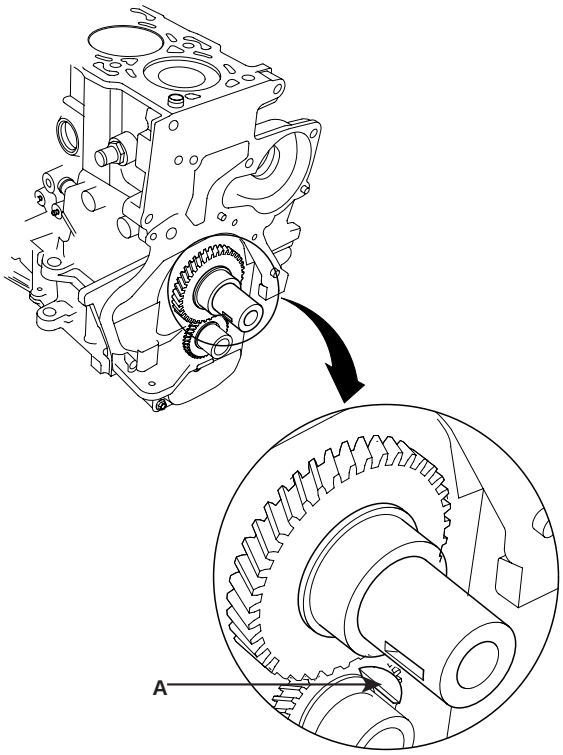

LCIF040A

4. Insert the crankshaft sprocket(B) then tighten the crankshaft bolt(A).

Tightening torque
196.1 ~ 205.9N.m (20.0 ~ 21.0kgf.m, 144.7 ~ 151.9lb-ft)

NOTE

Align the timing mark on the sproket.

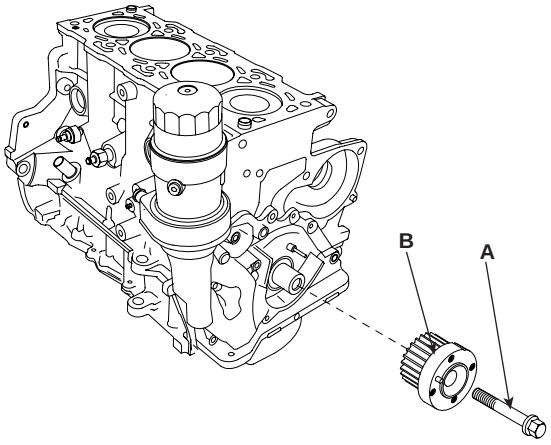

ACIE114A

5. Install the oil screen(A) on the oil pump case(B) and the engineblock.

Tightening torque
10 ~ 12N.m (1.0 ~ 1.2kgf.m, 7.37 ~ 8.85lb-ft)

NOTE

The bolt B should be tightened after the installation of the bolt A.

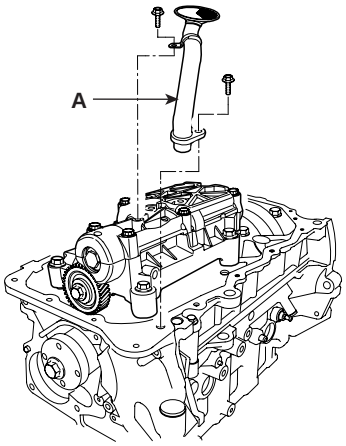

SCMEM6054D

6. Clean and dry the bed plate and the oil pan mating surfaces.

7. Apply liquid gasket evenly to the bed plate mating surface of the oil pan. Install the oil pan.

NOTE

- *Standard liquid gasket : LOCTITE 5900*
- *Assemble the oil pan in 5 mimutes after applying the liquid gasket.*
- *Apply liquid gasket in a 3mm wide bead without stopping.*
- *The clearance between the liquid gasket and the flange inner end should be 2 ~ 3mm.*

8. Tighten the bolt in two or three steps. In the final step, tighten all bolts.

Tightening torque
10 ~ 12N.m (1.0 ~ 1.2kgf.m, 7.38 ~ 8.851lb-ft)

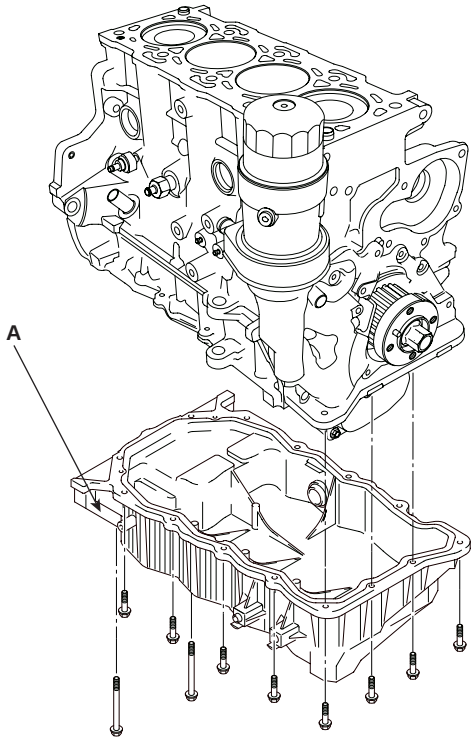

ACIE112A

NOTE

After installing the oil pump assembly and the oil pan, remove the oil cooler and fill the 50cc engine oil.

9. Install the water pump.

10. Install the auto-tensioner(A).

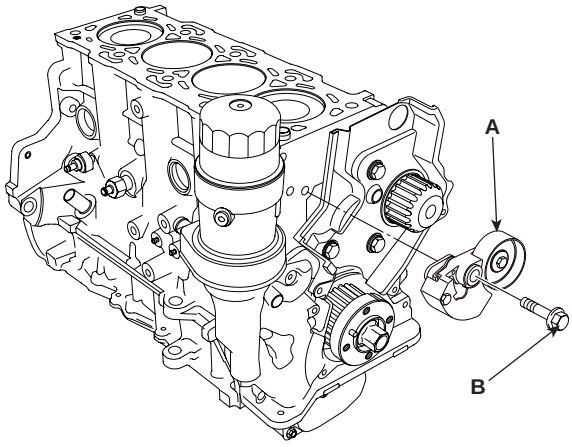

ACIE109A

11. Install the air compressor(A). (See HA group - compressor)

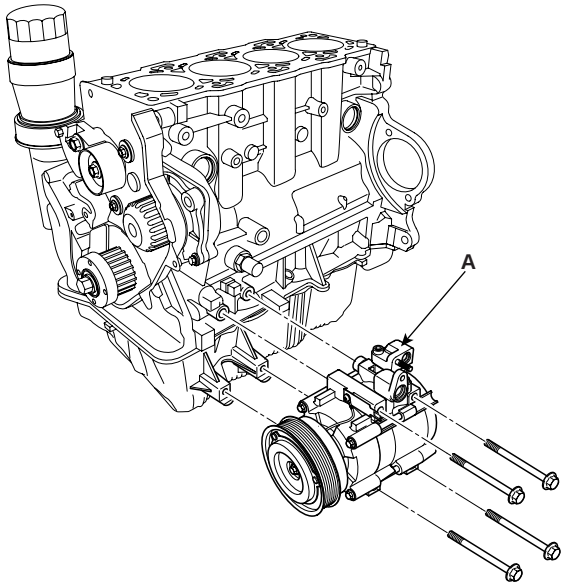

ACIE108A

12. Install the water inlet pipe assembly(A), tightening the bolt(B).

Tightening torque
20 ~ 25N.m (2.0 ~ 2.5kgf.m, 14.75 ~ 18.44lb-ft)

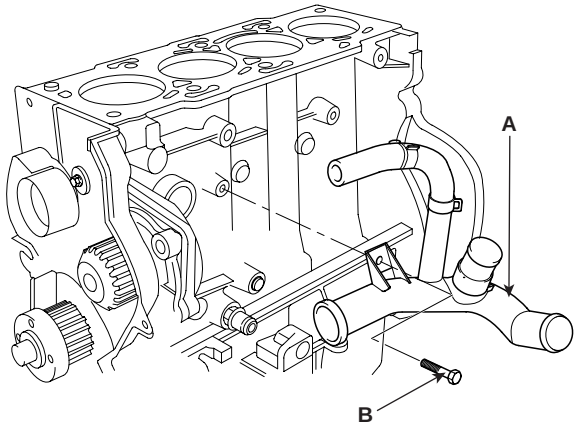

ACIE107A

13. Install the power steering pump mounting bracket assembly(A).

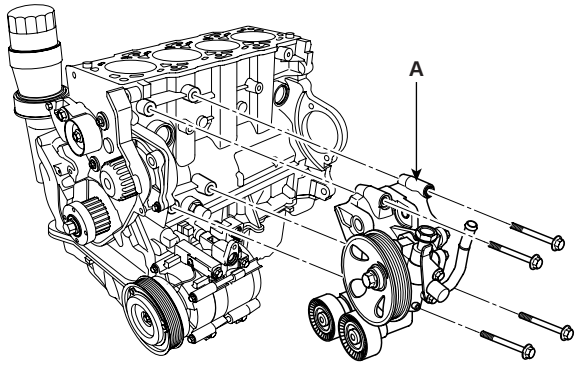

ACIE106A

14. Install the heater and oil cooler return pipe(A) assembly.

Tightening torque
Rear side bolt and left side bolt(C, D)
20 ~ 25N.m (2.0 ~ 2.5kgf.m, 14.75 ~ 18.44lb-ft)
Right side bolt(E)
8 ~ 10N.m (0.8 ~ 1.0kgf.m, 5.90 ~ 7.38lb-ft)

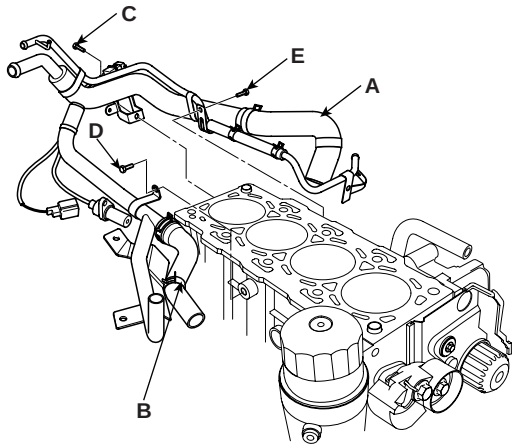

ACIE104A

15. Install the CKP(Crankshaft Position Sensor)(A) and the oil pressure switch(B).

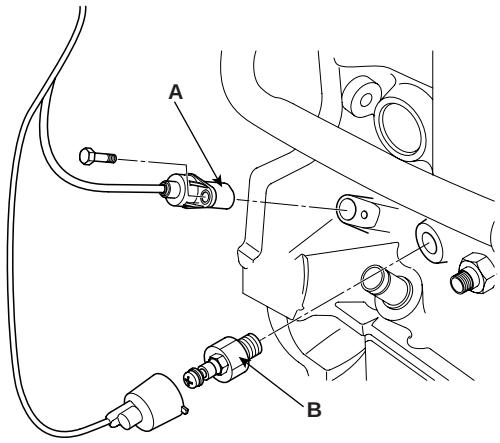

ACIE103A

16. Install the cylinder head assembly.

17. Install the intake/exhaust manifold assemblies.

18. Install the oil level gauge(A).

Tightening torque
10 ~ 12N.m (1.0 ~ 1.2kgf.m, 7.38 ~ 8.85lb-ft)

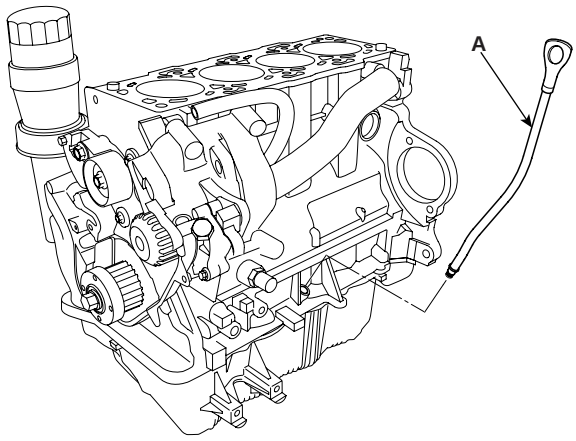

ACIE102A

19. Install the timing belt assembly.

COOLING SYSTEM

COMPONENTS E5E014EC

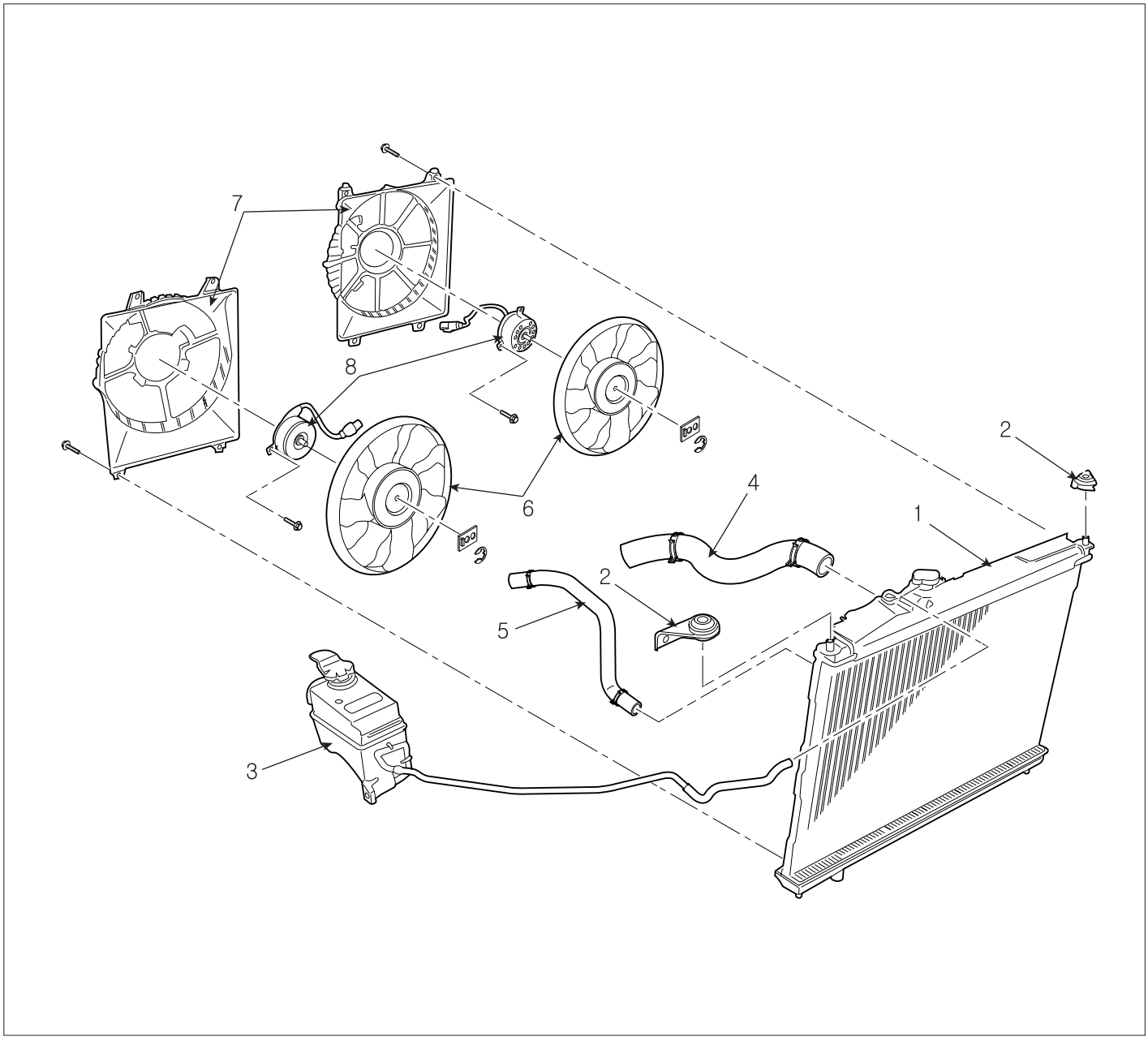

1. Radiator
2. Radiator bracket
3. Engine coolant reservoir tank
4. Radiator upper hose
5. Radiator lower hose
6. Radiator fan
7. Shroud
8. Fan motor

SCMM16015L

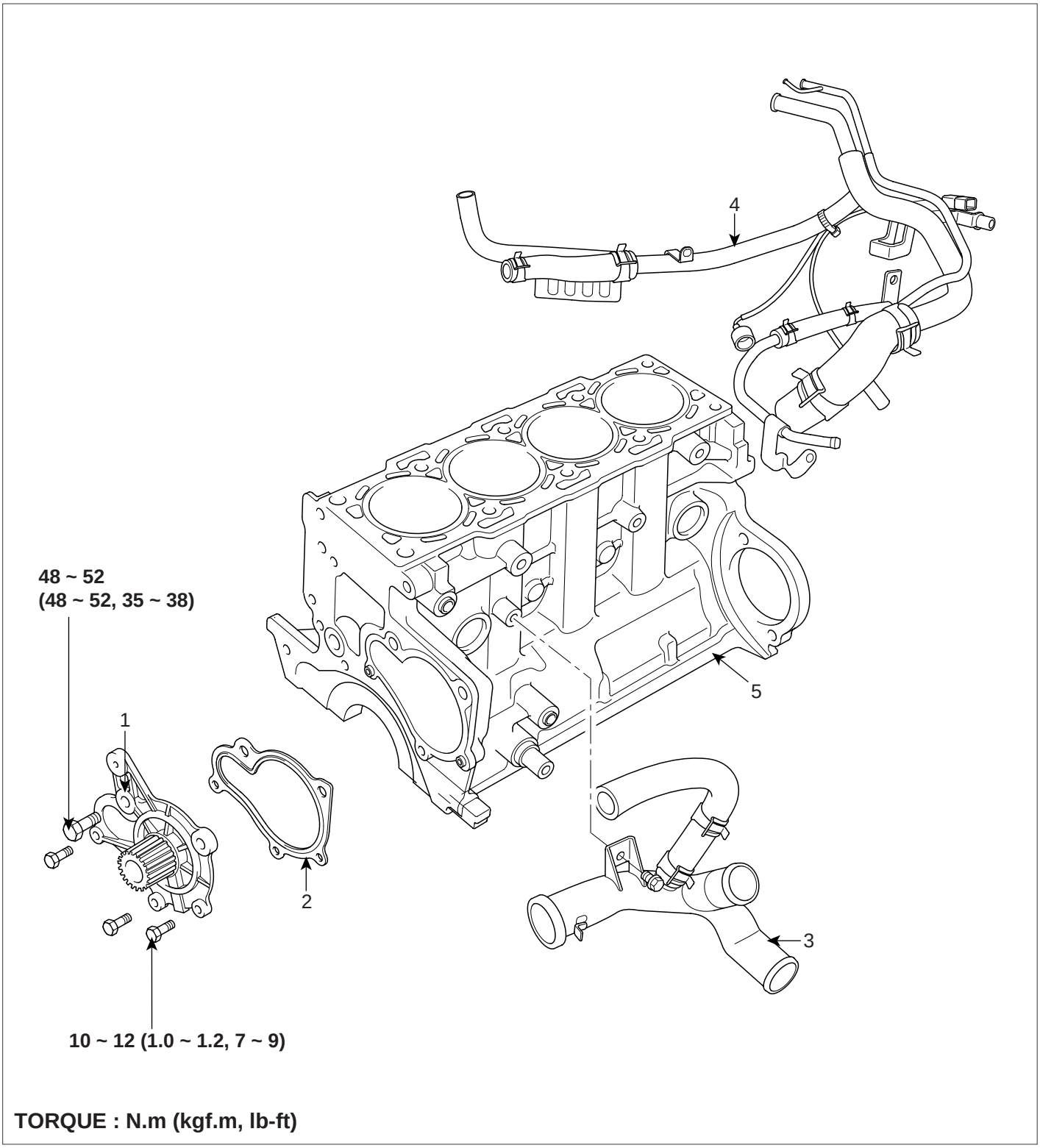

TORQUE : N.m (kgf.m, lb-ft)

1. Coolant pump
2. Gasket
3. Coolant inlet pipe
4. Coolant hose & pipe
5. Cylinder block

SCMM16014L

ENGINE COOLANT REFILLING AND BLEEDING E8429B6D

WARNING

Never remove the radiator cap when the engine is hot.
Serious scalding could be caused by hot fluid under high pressure escaping from the radiator.

CAUTION

When pouring engine coolant, be sure to shut the relay box lid and not to let coolant spill on the electrical parts of the paint. If any coolant spills, rinse it off immediately.

1. Slide the heater temperature control lever to maximum heat. Make sure the engine and radiator are cool to the touch.
2. Remove the radiator cap.
3. Loosen the drain plug(A), and drain the coolant.

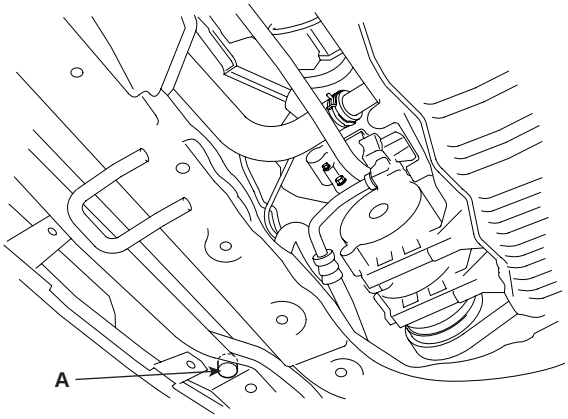

SCMM16013L

4. Tighten the radiator drain plug(A) securely.
5. Remove the coolant reservoir tank. Drain the coolant and reinstall the coolant reservoir tank. Fill the coolant reservoir tank to the MAX mark with the coolant.

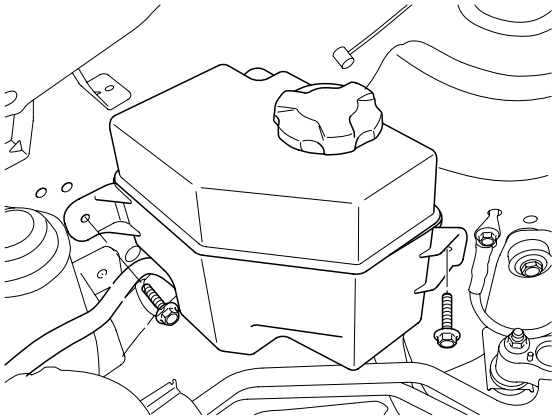

ACJF037A

6. Fill the coolant into the radiator to the base of filler neck. Gently squeeze the upper/lower hoses of radiator so as to bleed air easily.

NOTE

- *Use only genuine antifreeze/coolant.*
- *For best corrosion protection, the coolant concentration must be maintained year-round at 50% minimum. Coolant concentrations less than 50% may not provide sufficient protection against corrosion of freezing.*
- *Coolant concentrations greater then 60% will impair cooling efficiency and are not recommended.*

CAUTION

- ***Do not mix different brands of antifreeze/coolants.***
- ***Do not use additional rust inhibitors or antirust products; they may not be compatible with the coolant.***

7. Start the engine and allow coolant to circulates. When the cooling fan operates and coolant circulates, refill coolant through the radiator filler neck.
8. Repeat 7 until the cooling fan 3~5 times and bleed air sufficiently out of the cooling system.
9. Install the radiator cap and fill the reservoir tank to the "MAX" line with coolant.
10. Run the vehicle under idle until the cooling fan operates 2~3 times.
11. Stop the engine and allow coolant to cool.
12. Repeat steps 6 to 11 until the coolant level stays constant and all air is bleed out of the cooling system.

NOTE

Recheck the coolant level in the reservoir tank for 2~3 days after replacing coolant.

Coolant capacity :
8.4 liters(8.88 US qt, 7.39 lmp qt)

REPLACEMENT E24A9ED2

WATER PUMP

1. Drain the engine coolant after removing drain plug(A).

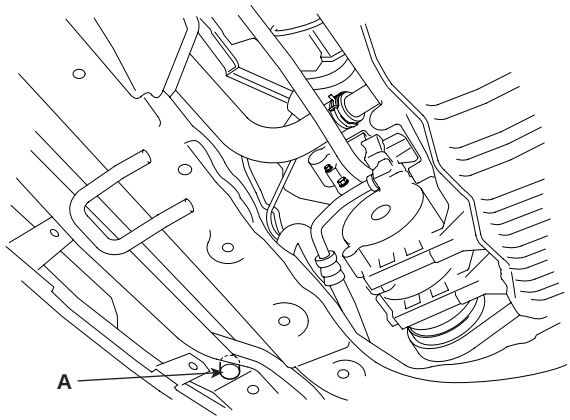

SCMM16013L

2. Remove the drive belt and the timing belt.
3. Remove the timing belt rear cover(A).

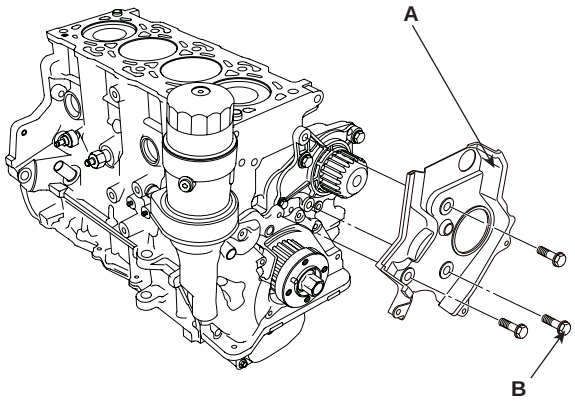

SCMEM6123D

CAUTION

Damage of the water pump or coolant-leakage can be occurred when the longer bolt than the specification(18mm) is used.

4. Remove the water pump(A) with the gasket(B) by removing four bolts. (One bolt A and three bolt B)

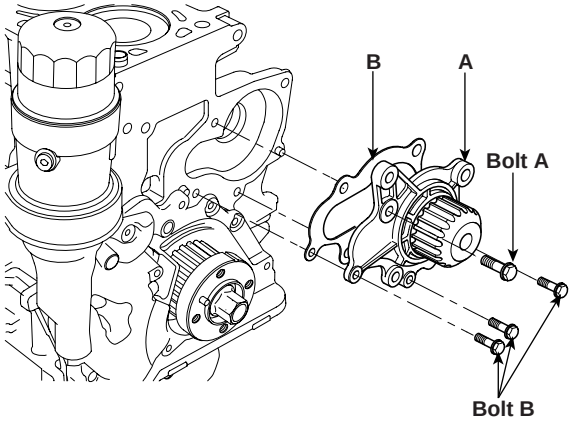

LCIF027A

5. Inspect, repair and clean the mating surface on the engine block.
6. Install the water pump, with a new gasket in the reverse order of removal.

Tightening torque
For timing belt rear cover
7.8 ~ 11.8N.m (0.8 ~ 1.2kgf.m, 5.8 ~ 8.7lb-ft)
For water pump
Bolt A :
47.1 ~ 51.0N.m (4.8 ~ 5.2kgf.m, 34.7 ~ 37.6lb-ft)
Bolt B :
9.8 ~ 11.8N.m (1.0 ~ 1.2kgf.m, 7.2 ~ 8.7lb-ft)

7. Clean the spilled engine coolant.

RADIATOR

1. Remove the under cover.
2. Drain the engine coolant after removing drain plug. Remove the radiator cap to speed draining.
3. Remove the radiator upper hose(A).

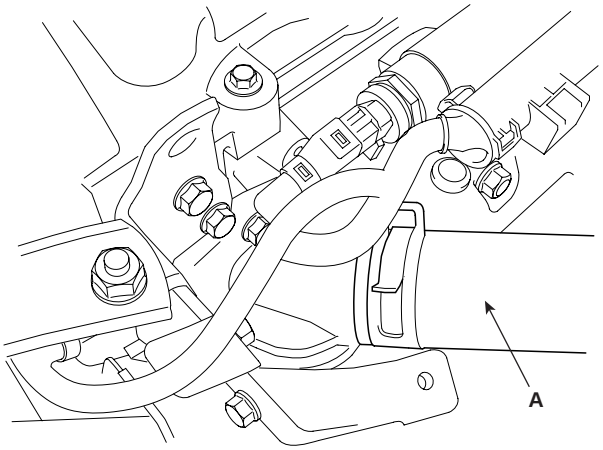

SCMEM6017D

4. Remove the cooling fan motor connector(A, B).

LEFT

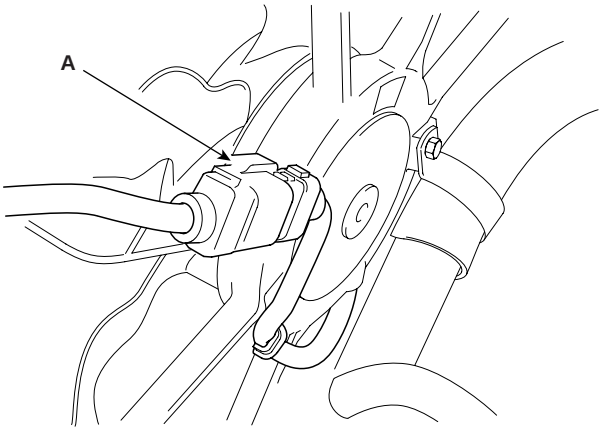

SCMEM6036D

RIGHT

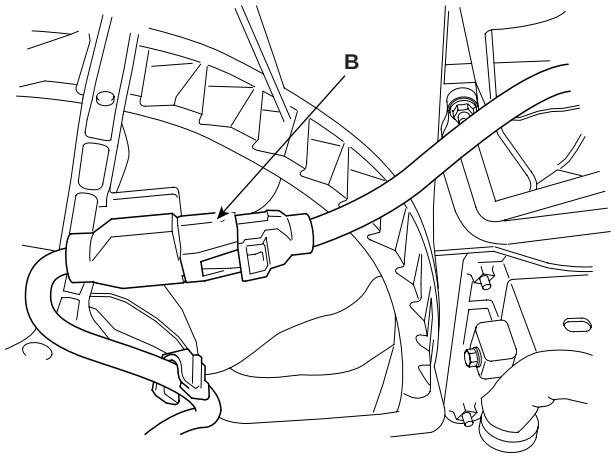

SCMEM6037D

5. Remove the radiator grill upper cover(A).

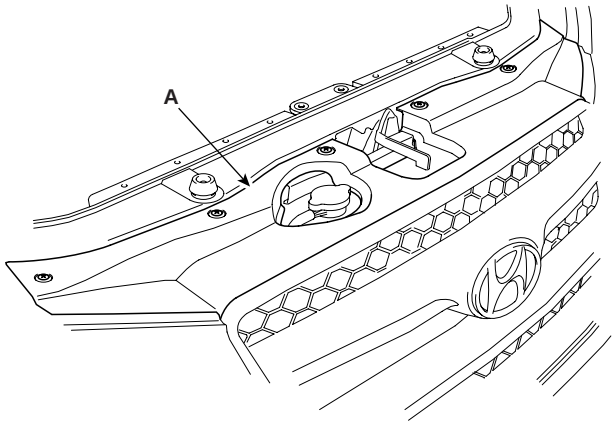

SCMEM6039D

6. Remove the front bumper after removing the front lamp cleaning nozzle cover.(Refer to 'BD' group)
7. Remove the radiator cap hose(A).

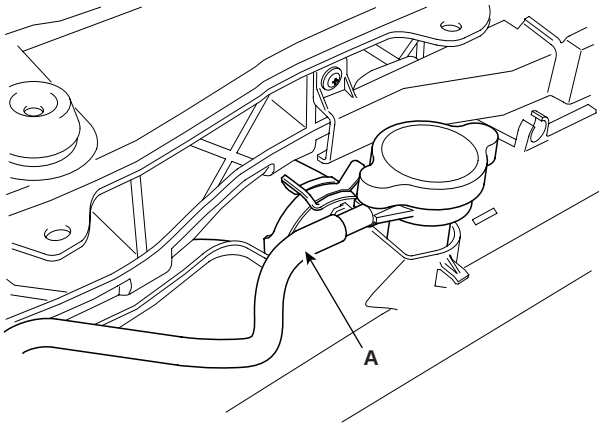

SCMEM6040D

8. Remove the left side cooling fan assembly first.

NOTE

Remove the radiator lower hose bracket mounting bolt.

9. Remove the radiator bracket bolts(A).

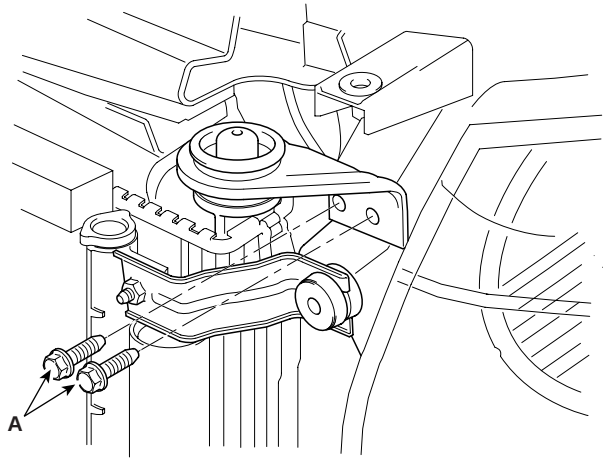

SCMEM6041D

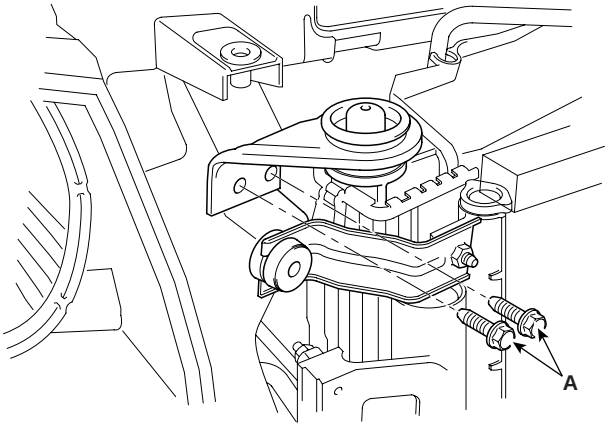

SCMEM6042D

10. Remove the radiator from engine room.

THERMOSTAT

1. Drain the engine coolant.
2. Remove the coolant inlet fitting.
3. Remove the thermostat(A).

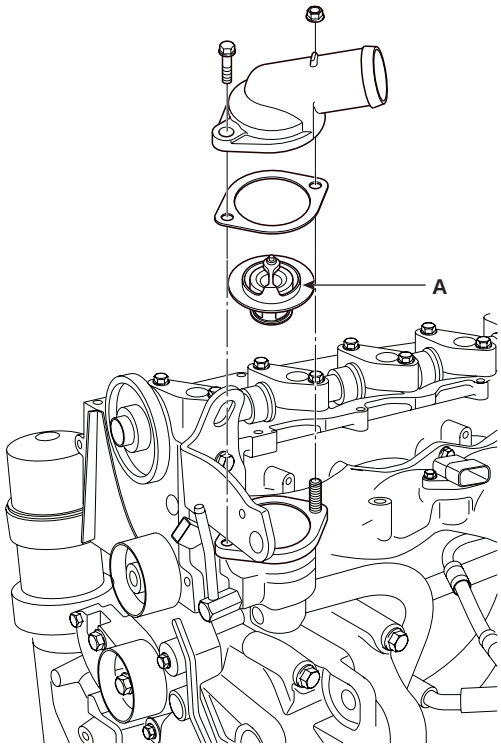

SCMM16020L

INSPECTION EBA8B55E

THERMOSTAT

Replace the thermostat if it is open at room temperature.

To test closed thermostat :

1. Suspend the thermostat in a container of water.
   Do not let the thermometer touch the bottom of the hot comtainer.

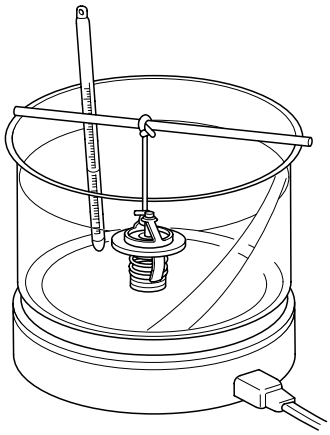

ACIE153A

2. Heat the water and check the temperature with the thermomster. Check the temperature at which the thermostat first opens, and at which it is fully open.

3. Measure the lift height of the thermostat when it is fully open.

STANDARD THERMOSTAT
Lift height : above 8.0mm (0.31in.)
Starts opening: 85 ± 1.5°C (185 ± 34.7°F)
Fully open : 100°C (212°F)

LUBRICATION SYSTEM

COMPONENTS EB5DDECB

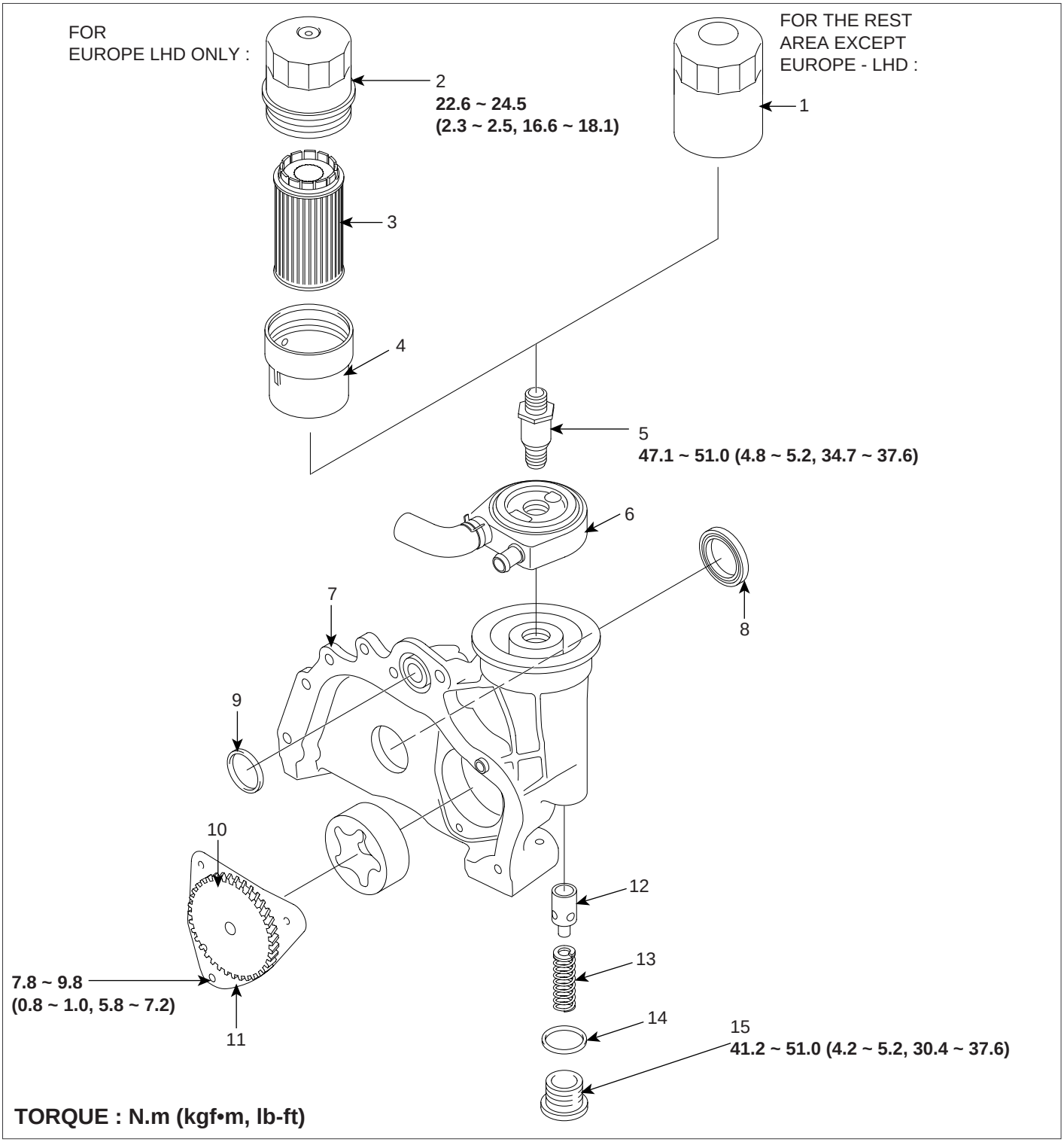

1. Oil filter assembly
2. Oil filter upper cap
3. Oil filter
4. Oil filter lower case
5. Oil filter fitting
6. Oil cooler
7. Oil pump housing
8. Oil seal
9. O-ring
10. Oil pump drive gear
11. Oil pump cover
12. Relief plunger
13. Relief spring
14. Relief cap washer
15. Relief cap

SCMM16016L

REPLACEMENT EB27D92C

ENGINE OIL FILTER

NOTE

There are two kinds of oil filters. One is for Eurpe LHD and the orther is for the rest area except Eurpe LHD (Left Hand Drive).

For Eurpe LHD :

1. Remove the oil filter upper cap from lower case with SST(09263-2E000 the oil filter wrench.).
2. Inspect the threads and rubber packing. Wipe off the seat on the oil pump assembly, then apply a light coat of oil to the oil pump assembly upper cap packing.
3. Install the new oil filter by hand to the upper cap.
4. After the rubber seal seats, tighten the oil filter clockwise with the special tool.

For the rest area except Eurpe LHD :

1. Remove the oil filter(A) with the SST(09263-27000, the oil filter wrench).

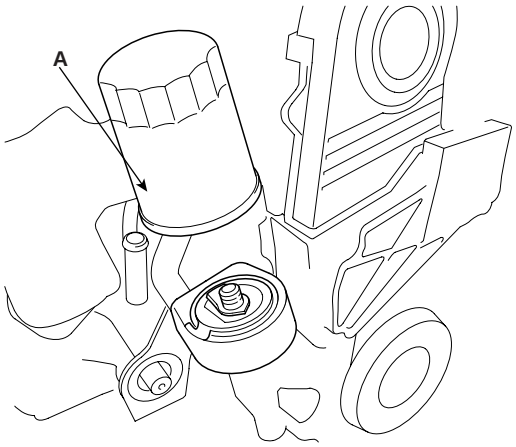

ACIE158A

2. Inspect the threads and the packing on the apply a light coat of oil new filter. Wipe off the seat.
3. Install the new oil filter by hand.
4. After the packing seats, tighten the oil filter clockwise with the SST(09263-27000).

ENGINE OIL

NOTE

Under normal conditions, the oil filter should be replaced at every other oil change. Use severe conditions, the oil filter should be replaced at each oil change.

1. Warm up the engine.
2. Remove the drain bolt, and drain the engine oil.
3. Reinstall the drain bolt with a new washer.

Tightening torque
35 ~ 45N.m (3.5 ~ 4.5kgf.m, 25.8 ~ 33.2lb-ft)

4. Refill with the recommended oil.

SELECTION OF ENGINE OIL

1. RECOMMENDED API classification : CH-4 OR ABOVE
   RECOMMENDED ACEA classification : B4 OR ABOVE
   RECOMMENDED SAE viscosity grades :

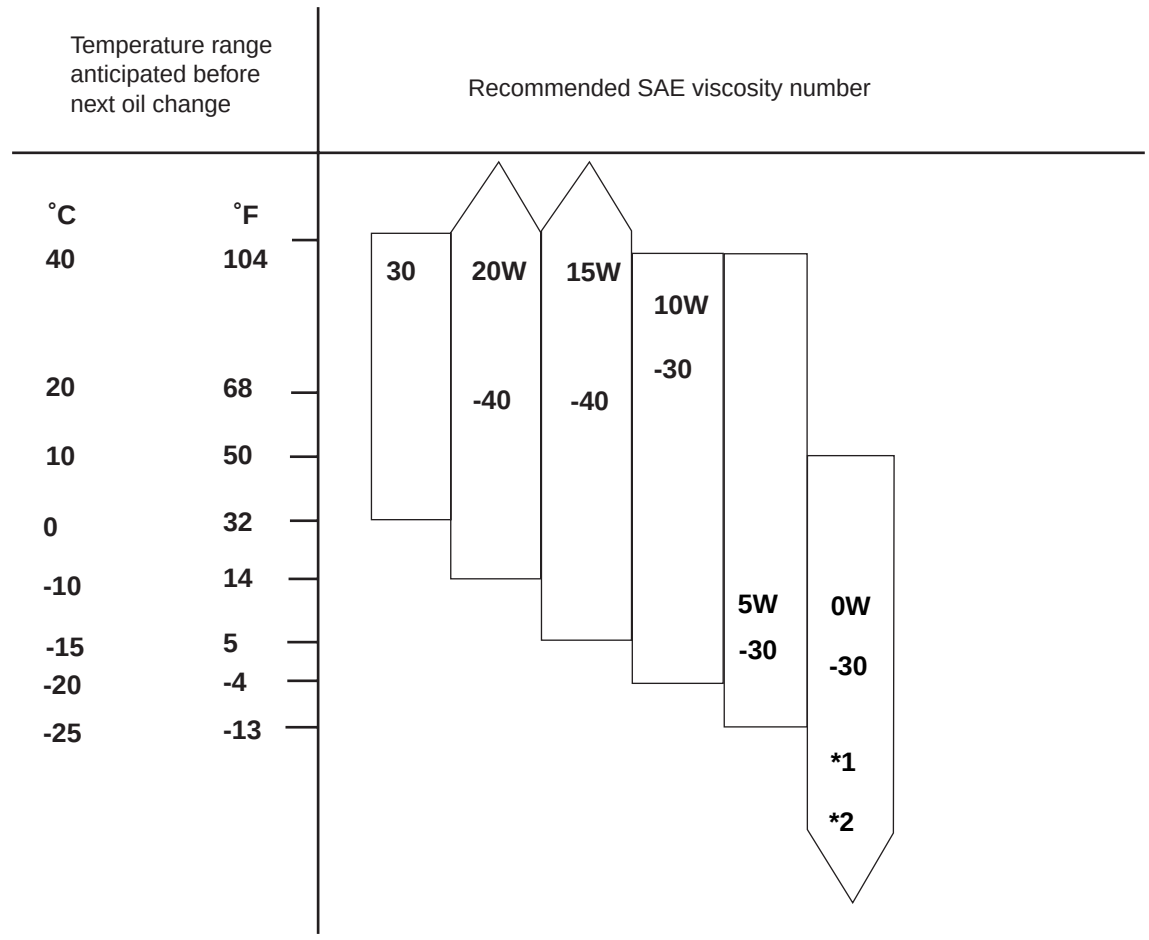

***1 Restricted by driving condition and environment.**
***2 Not recommended for sustained high speed vehicle operation**

LCIG053A

For best performance and maximum protection of all types of operation, selection only those lubricants which :

1) Satisfy the requirement of the API or ACEA classification.

2) Have the proper SAE grade number for expected ambient temperature range.

Lubricants which do not have both SAE grade number and an API or ACEA service classification on the container should not be used.

REMOVAL E2A45270

OIL PUMP

1. Drain the engine oil.
2. Remove the damper pulley(A).

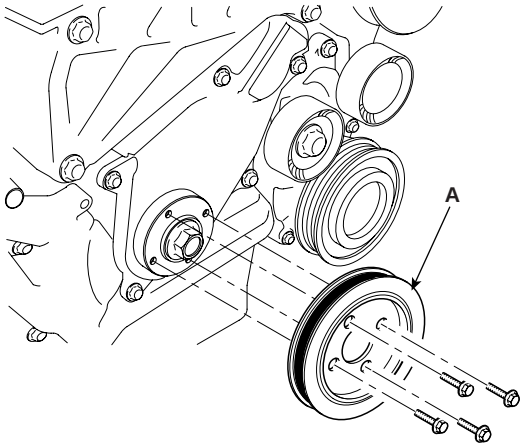

ACIE045A

3. Remove the timing belt assembly.
4. Remove the timing belt tensioner(A).

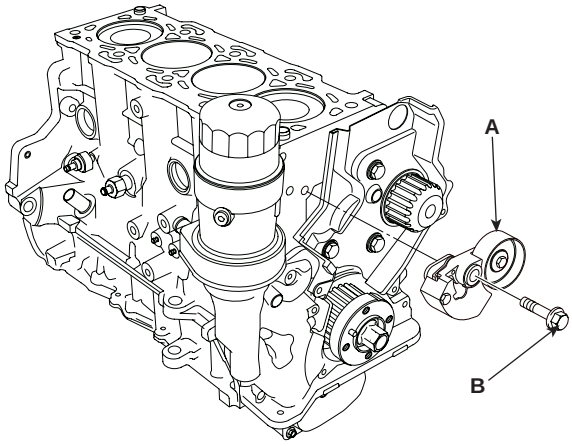

ACIE109A

5. Remove the timing rear cover(A).

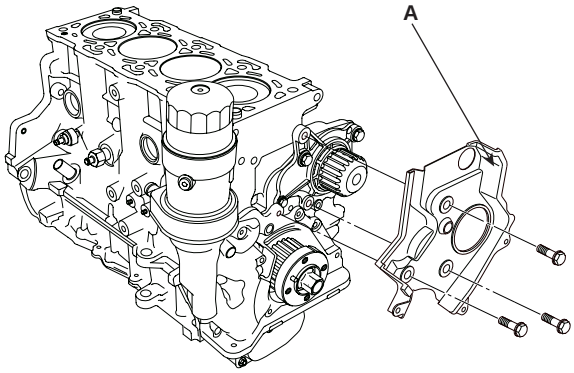

ACIE110A

6. Separate oil pan(A) from the engine block with an oil pan seal cutter.

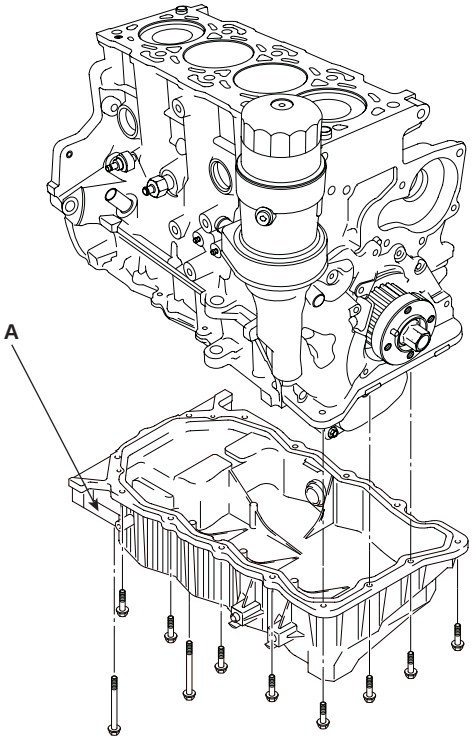

ACIE112A

7. Remove the crankshaft sproket(B) with bolt(A).

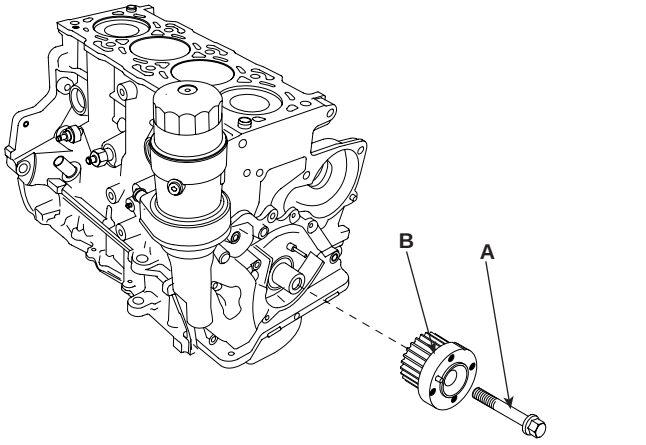

ACIE114A

8. Remove the oil screen.

9. Remove the mounting bolts(A) and the oil pump assembly(B).

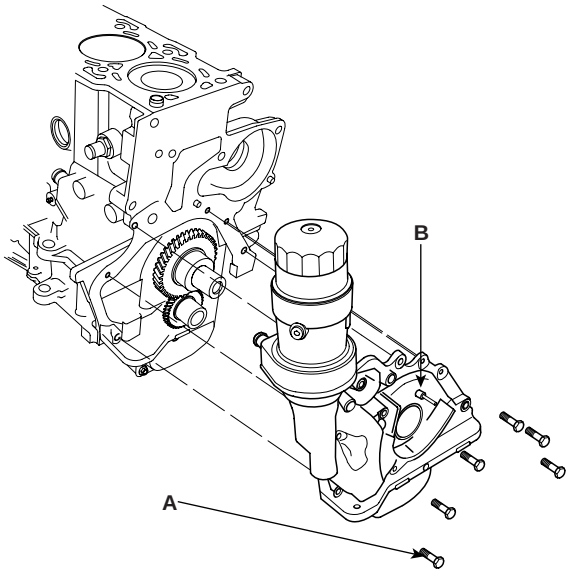

ACIE115A

DISASSEMBLY E587BEB1

OIL PUMP

1. Remove the three hexagon socket head bolts(A) from the oil pump cover(B).

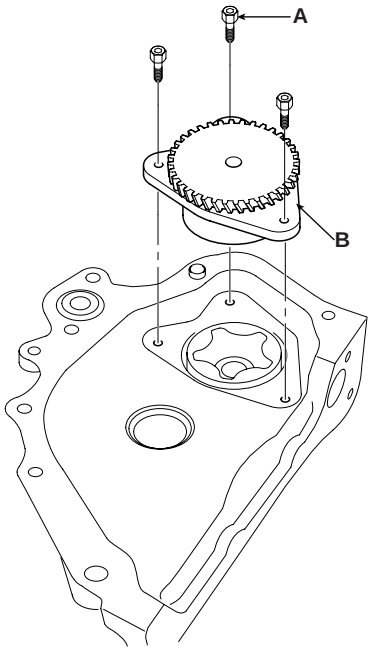

ACIE159A

2. Remove the oil pump cover with the inner rotor and the drive gear.

3. Remove the outer rotor from the oil pump case.

4. Remove the old oil seals from the oil pump case.

5. Remove the O ring(A) from the oil pump case(B).

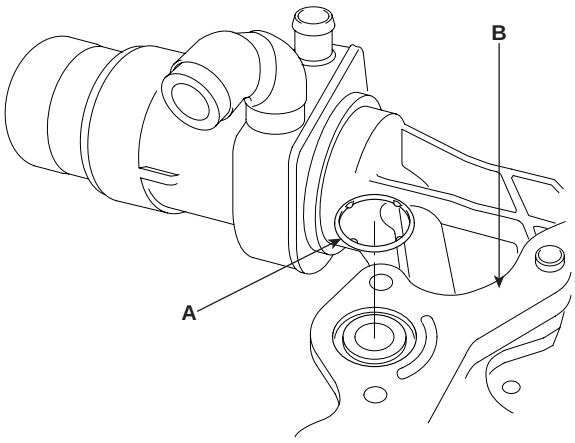

ACIE160A

6. Remove the relief cap(A), relief cap washer(B), relief spring(C) and relief plunger(D).

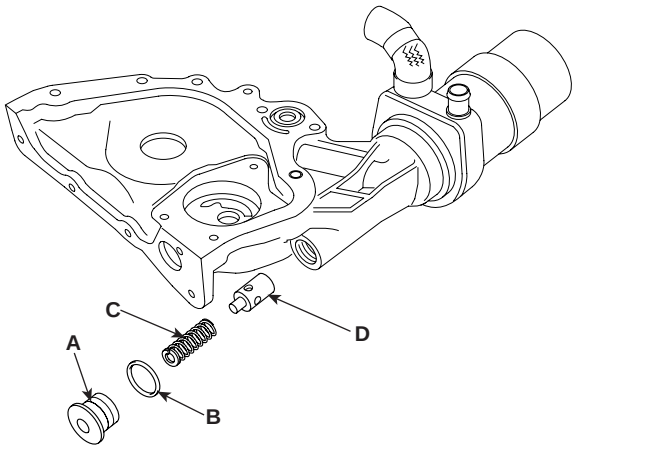

ACIE161A

7. Remove the oil filter. Refer to the engine oil filter replacement.

8. Remove the oil cooler and hose assembly after seperating the oil filter fitting.

INSPECTION EDDDB38B

OIL PUMP

1. Check the inner-to-outer rotor tip clearance between the inner rotor(A) and outer rotor(B). If the inner-to-outer rotor clearance exceeds the service limit, replace the inner and outer rotors.

Inner Rotor-to-Outer Rotor tip Clearance
Standard (New)
0.12 ~ 0.20mm (0.0047 ~ 0.0079in.)

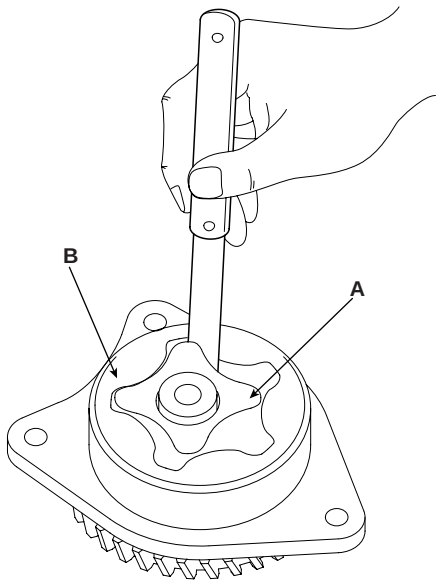

ACIE163A

2. Check the housing-to-rotor axial clearance between the rotor and oil pump cover housing. If the housing-to-rotor axial clearance exceeds the service limit, replace the set of inner and outer rotors and/or the pump housing.

Housing-to-Rotor Axial Clearance
Standard (New)
0.020 ~ 0.070mm (0.00079 ~ 0.00276in.)

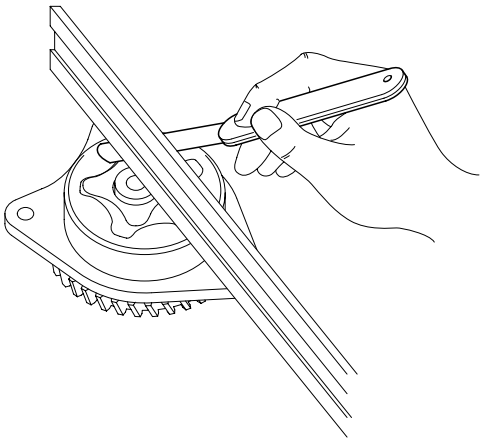

ACIE162A

3. Inspect both rotors and the oil pump cover housing for scoring or other damage. Replace parts if necessary.

OIL PRESSURE SWITCH

On Vehicle :

1. Remove the wire from the engine oil pressure switch(B).

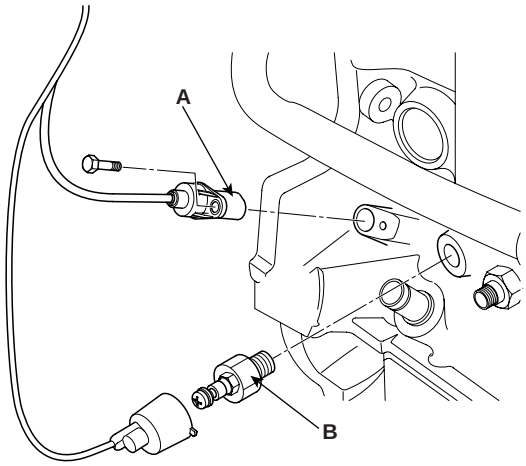

LCIF043A

2. Check for continuity between the positive terminal and the engine(ground). There should be continuity with the engine stopped. There should be no continuity with the engine running.

3. If the switch fails to operate, check the engine oil level. If the engine oil level is OK, check the engine oil pressure.

After diassembling engine :

1. Remove the oil pressure switch(A) from the engine block.
2. Connect a tester (ohm range) between the terminal(B) and the body(C) of the switch to check for continuity. The switch is normal if there is continuity. If they is no continuity, replace the switch.

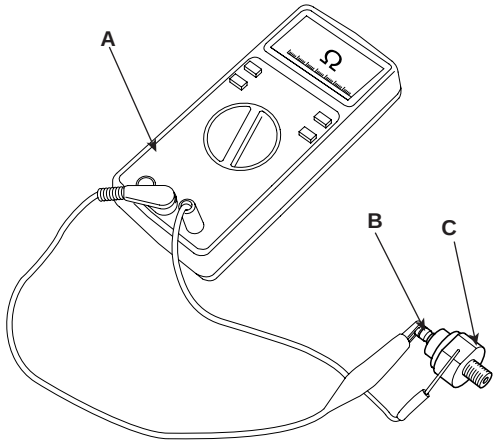

ACIE164A

3. Insert a thin rod(A) in the oil hole of the switch and push it in lightly. The switch is normal of no continuity as detected (infinite resistance on the tester). If there is continuity, replace the switch.

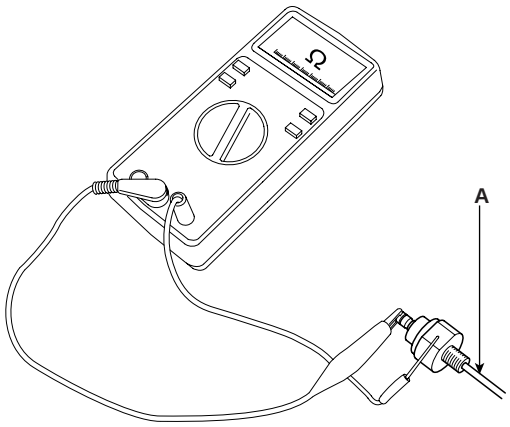

ACIE165A

REASSEMBLY E0DF6B94

OIL PUMP

1. Insert the relief plunger(D), the relief spring(C) and the relief cap washer(B). Then torque the relief cap(A).

Tightening torque
42 ~ 52N.m (4.2 ~ 5.2kgf.m, 30.98 ~ 38.35lb-ft)

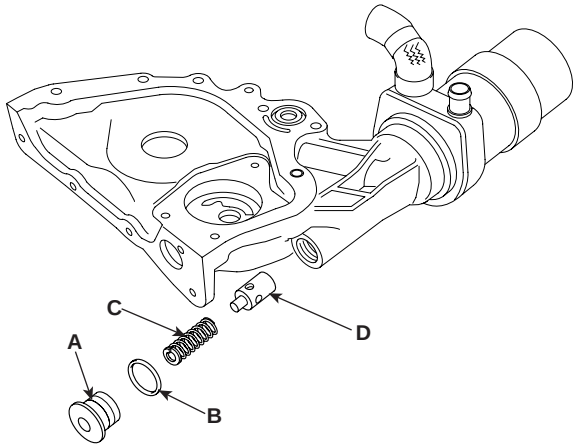

ACIE161A

2. Install the O ring(A) to the oil pump case(B)after applying engine oil.

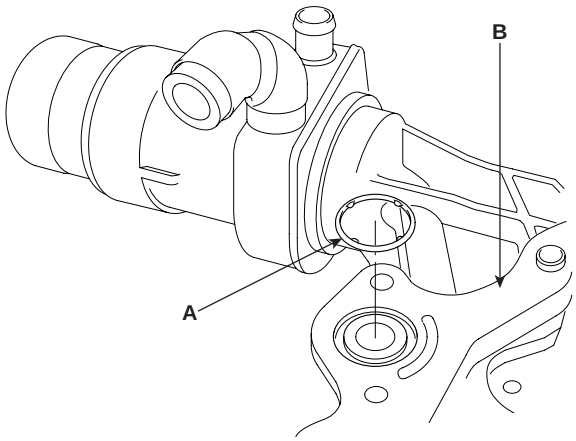

ACIE160A

3. Assemble the inner/outer rotors with engine oil the drive gear and the oil pump cover.

4. Install the oil pump cover(B)assembly to the oil pump case with the three hexagon socket head bolts(A).

Tightening torque
7.8 ~ 9.8N.m (0.8 ~ 1.0kgf.m, 5.8 ~ 7.2lb-ft)

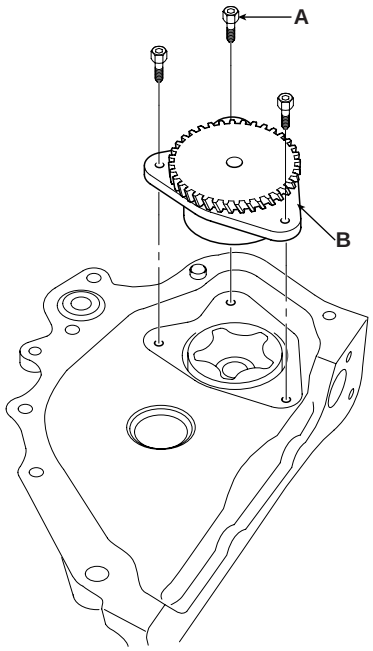

ACIE159A

5. The oil seal which was disassembled in 'Disassembly' step is recommended to be installed after the installation of the crankshaft.

INSTALLATION EF98A45A

1. Install the oil pump case(B) and the oil pan on the engine block.

Tightening torque
20 ~ 27N.m (2.0 ~ 2.7kgf.m, 15 ~ 20lb-ft)

NOTE

Standard liquid gasket : LOCTITE 5900, or equivalent.

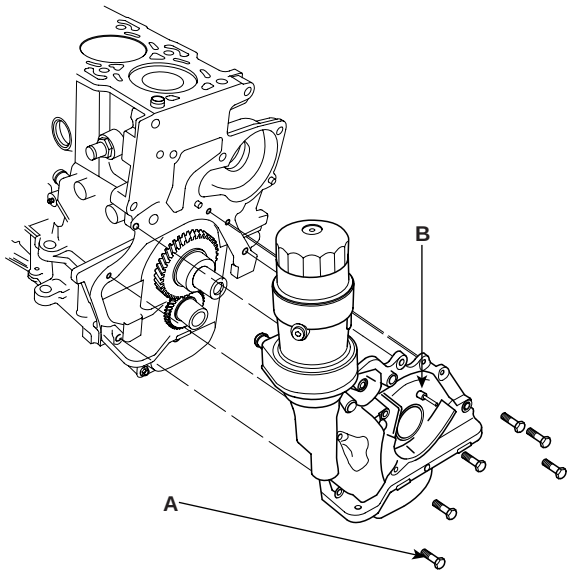

ACIE115A

2. Fill the engine oil in the room below the oil cooler (50cc)

3. Tightening the oil filter fitting, install the oil cooler and hose assembly.

NOTE

Before assembling the oil cooler. Apply SAE 20w oil on the O rings.

Tightening torque
48 ~ 52N.m (4.8 ~ 5.2kgf.m, 35.4 ~ 38.14lb.ft)

4. Install the oil filter for Eurpe LHD.
   - Install the non return valve assy of the oil filter lower case to the oil filter fitting.

Tightening torque
34 ~ 36N.m (3.4 ~ 3.6kgf.m, 25.08 ~ 26.55lb-ft)

   - After fixing the filter, tighten the oil filter upper cap.

Tightening torque
23 ~ 25N.m (2.3 ~ 2.5kgf.m, 16.96 ~ 18.44lb-ft)

5. Install the oil filter for the rest areas except Europe LHD.
   a. Torque the oil filter assy with the SST(09263-27000).

6. Install the oil screen(A).

Tightening torque
10 ~ 12N.m (1.0 ~ 1.2kgf.m, 7 ~ 9lb-ft)

7. Install the oil pan(A).

Tightening torque
10 ~ 12N.m (1.0 ~ 1.2kgf.m, 7 ~ 9lb-ft)

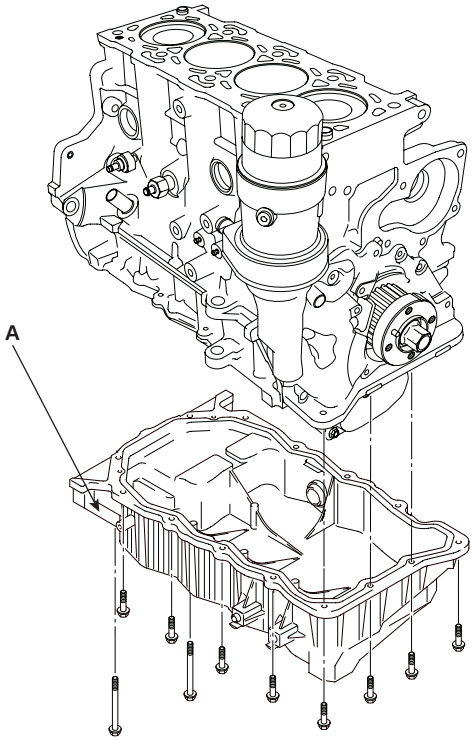

ACIE112A

NOTE

- *Standard liquid gasket : LOCTITE 5900*
- *Assemble the oil pan in 5 mimutes after applying the liquid gasket.*
- *Apply liquid gasket in a 3mm wide bead without stopping.*
- *The clearance between the liquid gasket and the flange inner end should be 2 ~ 3mm.*

8. Install the crankshaft sprocket(B) with bolt(A).

Tightening torque
196.1 ~ 205.9N.m (20.0 ~ 21.0kgf.m, 144.7 ~ 151.9lb-ft)

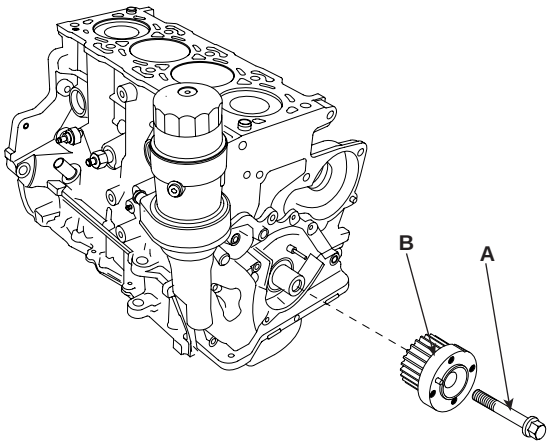

ACIE114A

9. Install the timing belt rear cover(A).

Tightening torque
8 ~ 12N.m (0.8 ~ 1.2kgf.m, 6 ~ 9lb-ft)

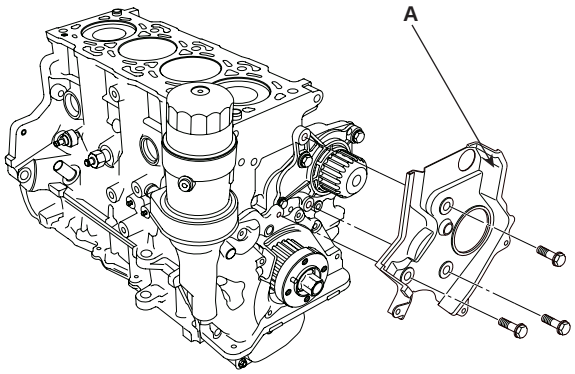

ACIE110A

10. Install the auto tensioner(A).

Tightening torque
50 ~ 55N.m (5.0 ~ 5.5kgf.m, 37 ~ 40.5lb-ft)

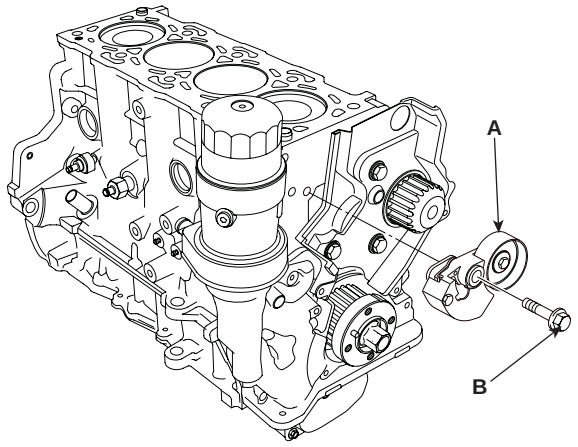

ACIE109A

11. Install the timing belt.

12. Install the crankshaft damper pulley(A).

Tightening torque
30 ~ 34N.m (3.0 ~ 3.4kgf.m, 22 ~ 25lb-ft)

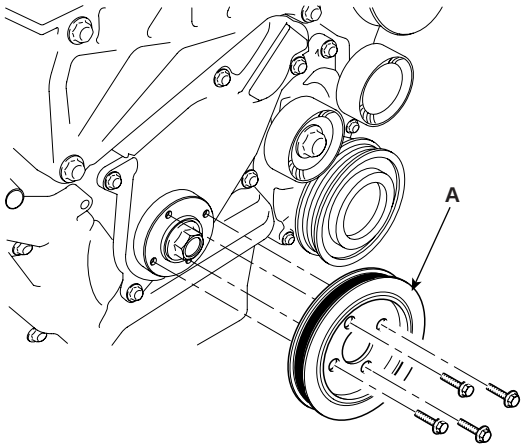

ACIE045A

INTAKE AND EXHAUST SYSTEM

COMPONENTS E86FAACF

INTAKE MANIFOLD

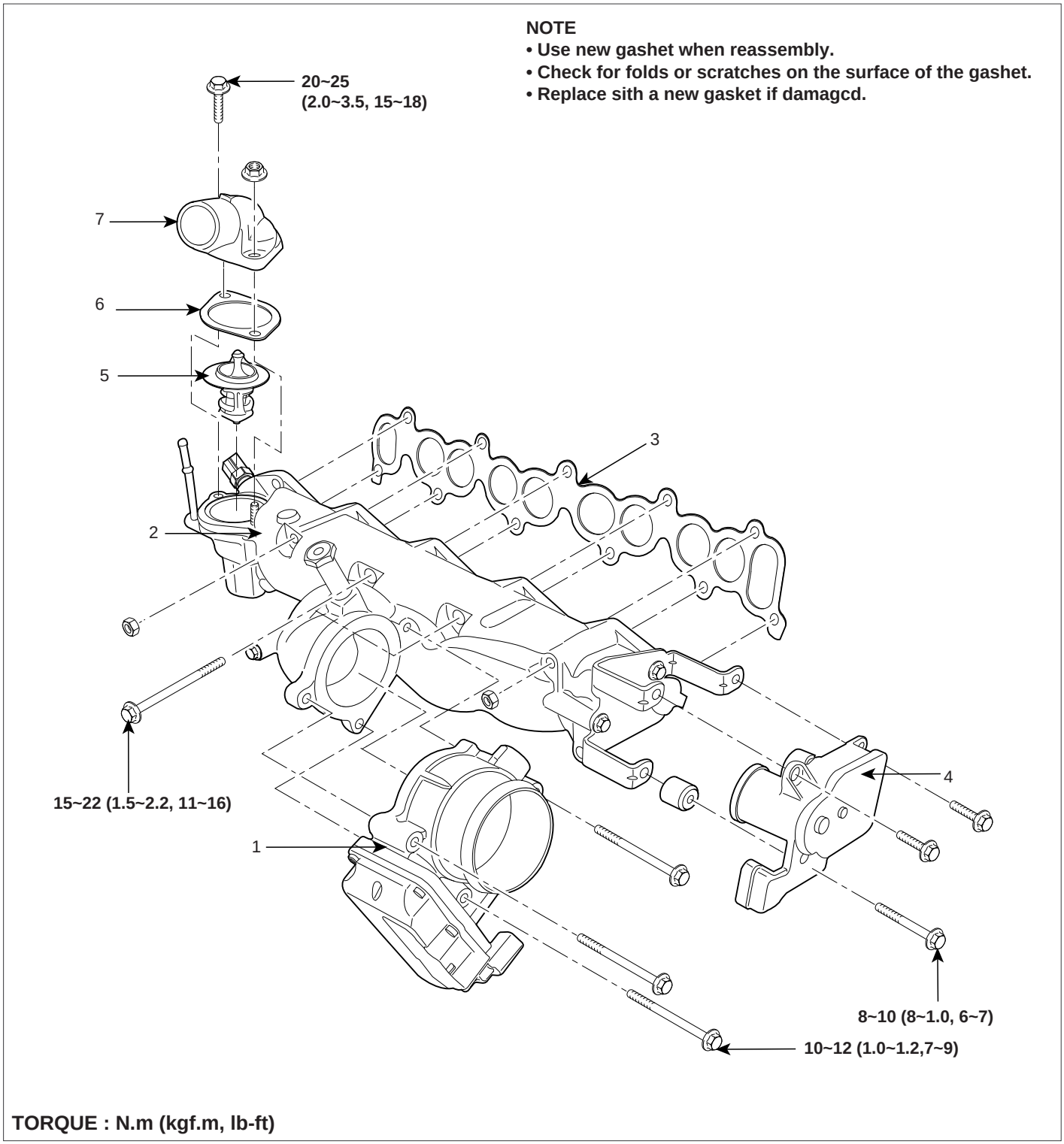

1. Throttle body
2. Intake manifold
3. Intake manifold gasket
4. Swirl valve actuator
5. Thermostat
6. Thermostat gasket
7. Thermostat housing

SCMM16017L

EXHAUST MANIFOLD

NOTE
- **Use new gashet and self-locking nut when assembly.**
- **Check for folds or scratches on the surface of the gashet.**
- **Replace with a new gasket if damaged.**

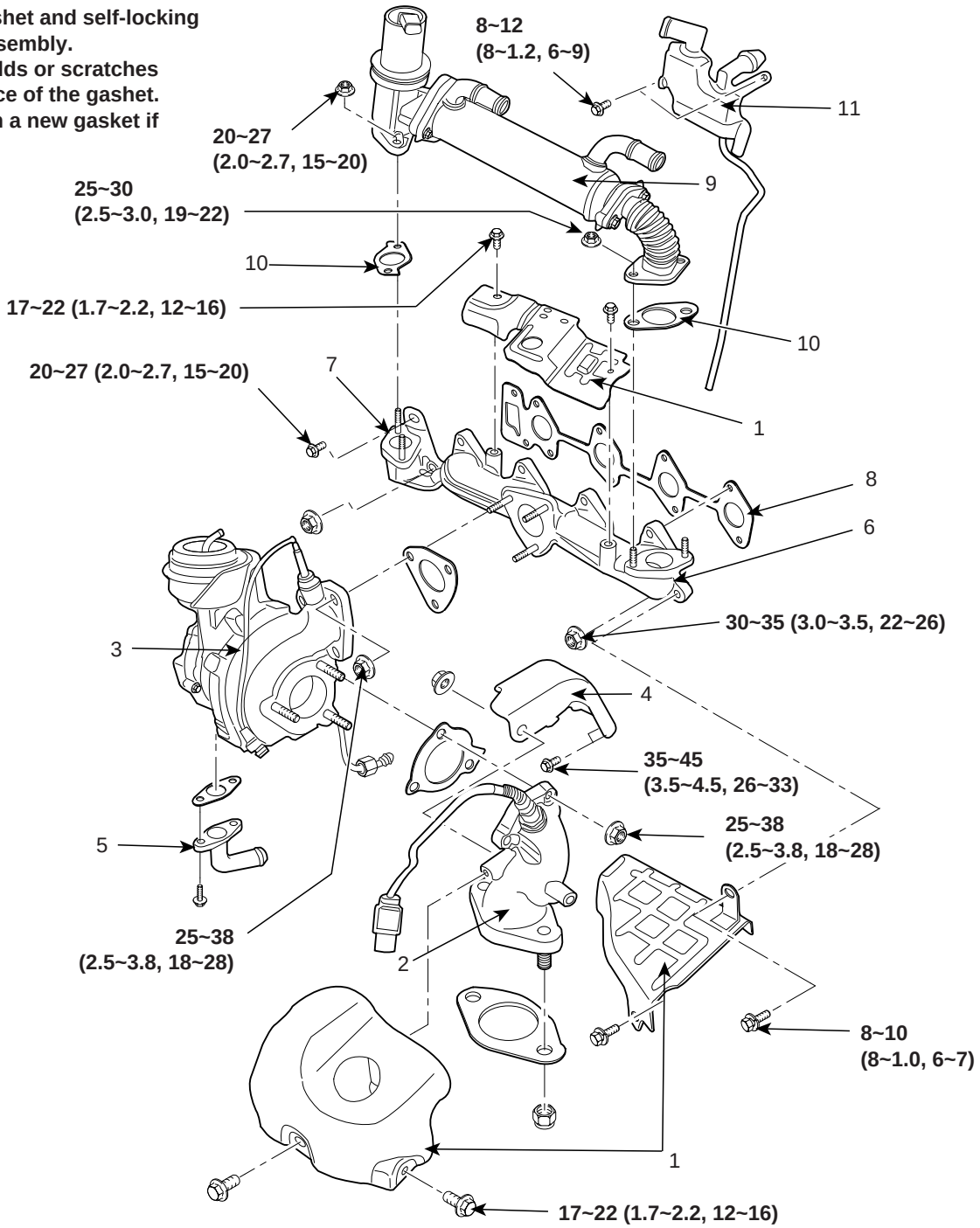

TORQUE : N.m (kgf.m, lb-ft)

1. Heat protector
2. Turbo charger discharge pipe
3. Turbo charger assembly
4. Turbo charger support bracket
5. Turbo charger oil drain pipe
6. Exhaust manifold
7. EGR elbow
8. Exhaust manifold gasket
9. EGR valve and cooler assembly
10. EGR valve and cooler assembly gasket
11. Oil separator assembly

SCMM16018L

MUFFLER

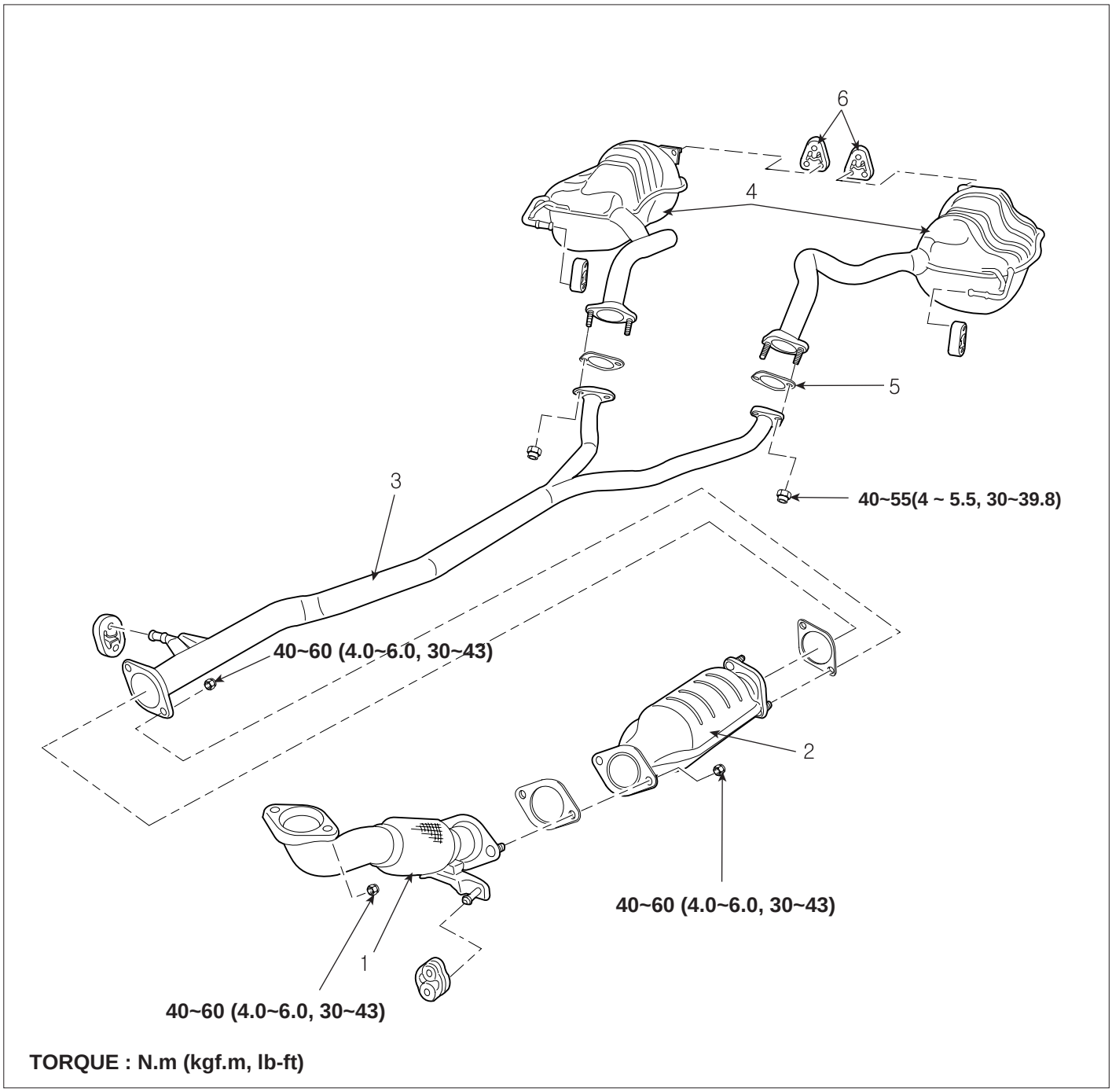

1. Front muffler
2. CPF(Catalyzed Particulate Filter)
3. Center muffler
4. Main muffler
5. Gasket
6. Rubber hanger

SCMM16019L

REMOVAL E4B0222C

INTAKE MANIFOLD

1. Remove the alternator. (See EE group - alternator)
2. Remove the intercooler hose.
3. Remove the engine coolant bleed hose.
4. Remove the radiator upper hose.
5. Disconnect the engine wire harness connectors from intake manifold side.
6. Remove the oil level gauge(A).

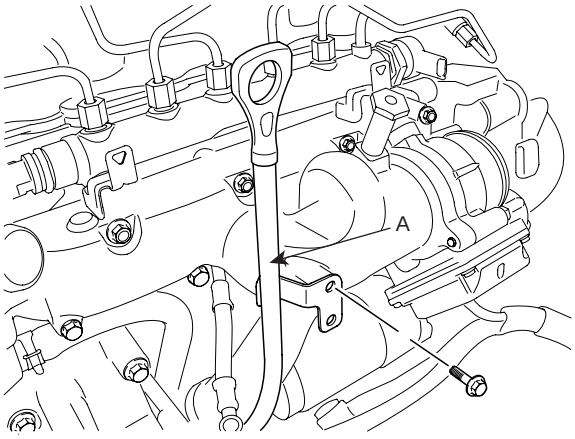

LCIG016A

7. Remove the common rail(A).(See FL group)

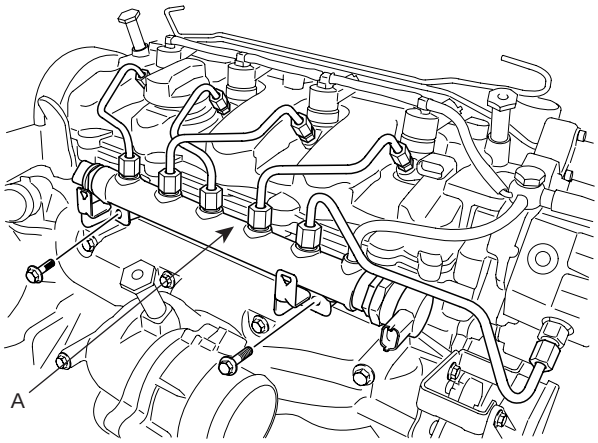

LCIG017A

8. Remove the thermostat housing(A).

Tightening torque :
20 ~ 25N.m (2.0 ~ 2.5kgf.m, 15 ~ 18lb-ft)

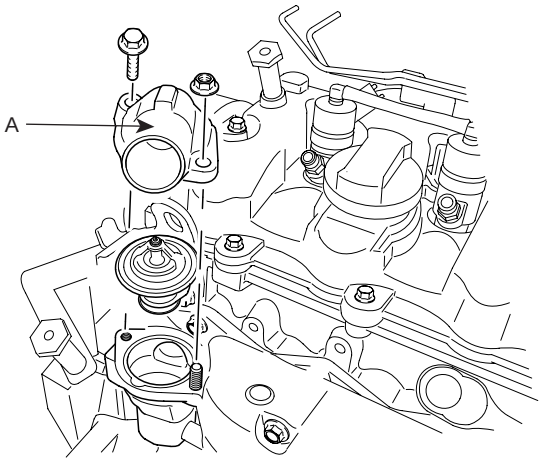

LCIG018A

9. Remove the EGR throttle body(A).

Tightening torque :
10 ~ 12N.m (1.0 ~ 1.2kgf.m, 7 ~ 9lb-ft)

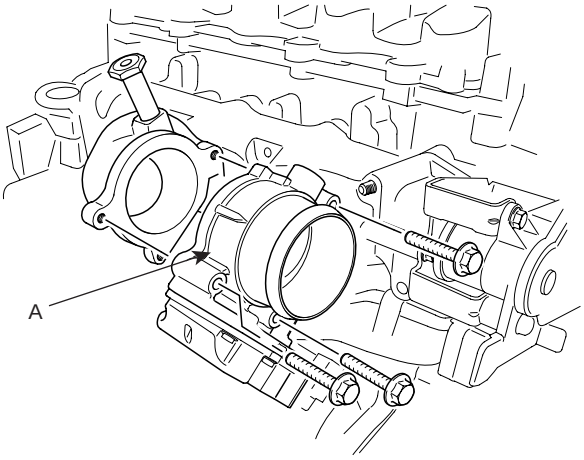

LCIG019A

10. Remove the intake manifold(A).

Tightening torque :
15 ~ 22N.m (1.5 ~ 2.2kgf.m, 11 ~ 16lb-ft)

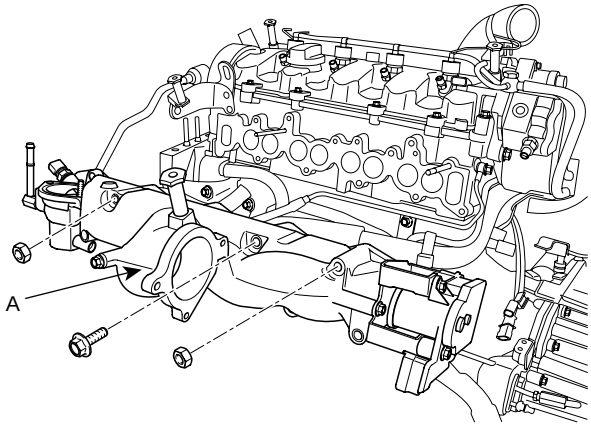

LCIG020A

11. Installation is in the reverse order of removal.

EXHAUST MANIFOLD

1. Remove the air duct and air cleaner housing.
2. Remove the battery tray.
3. Remove the intercooler pipe.
4. Disconnect the engine wire harness connectors from exhaust manifold side.
5. Disconnect the brake booster vacuum hose and heater hose.
6. Disconnect the EGR cooler hoses(A, B), lambda sensor connector(C) and VGT exhaust gas temperature sensor connector(D).

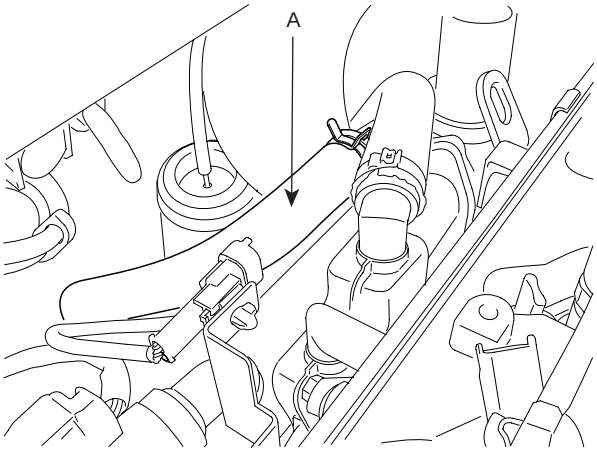

LCIG009A

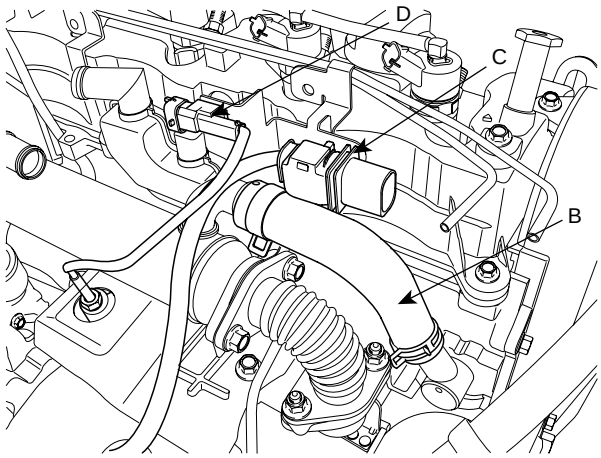

LCIG021A

7. Disconnect the turbo charger air intake hoses(A), breather hose(B) and VGT actuator vacuum hose(C).

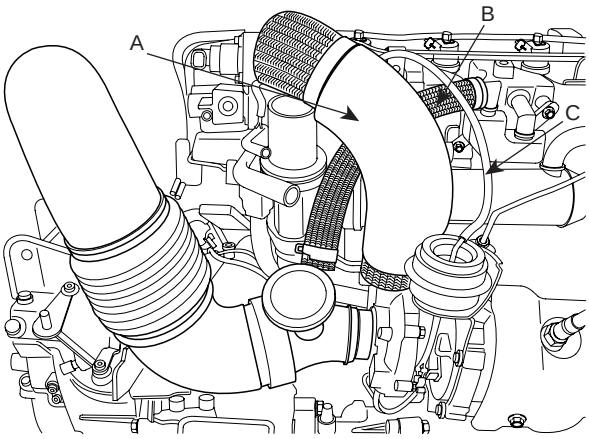

LCIG022A

NOTE

Using the SST(09495-3K000), install the breather hose clamp.

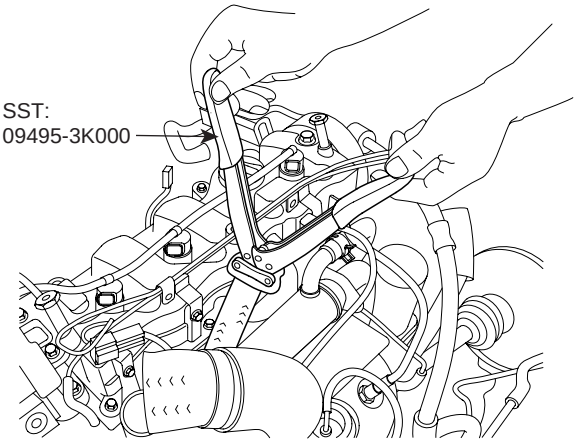

LCIG023A

8. Remove the EGR valve and cooler assembly(A).

Tightening torque :
Nuts(B), Bolt(C):
20 ~ 27N.m (2.0 ~ 2.7kgf.m, 15 ~ 20lb-ft)
Nuts(D) : 25 ~ 30N.m (250 ~ 300kgf.m, 19 ~ 22lb-ft)

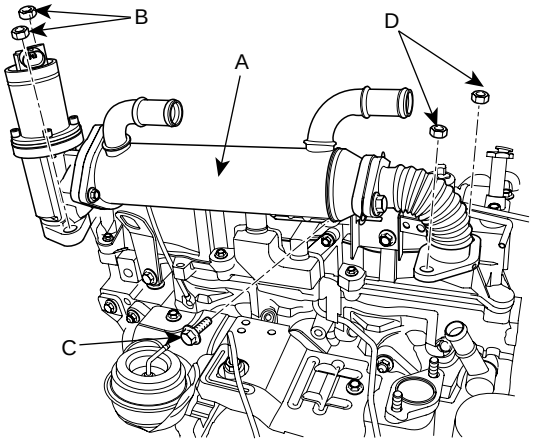

LCIG024A

9. Remove the oil separator(A).

Tightening torque :
8 ~ 12N.m (8 ~ 1.2kgf.m, 6 ~ 9lb-ft)

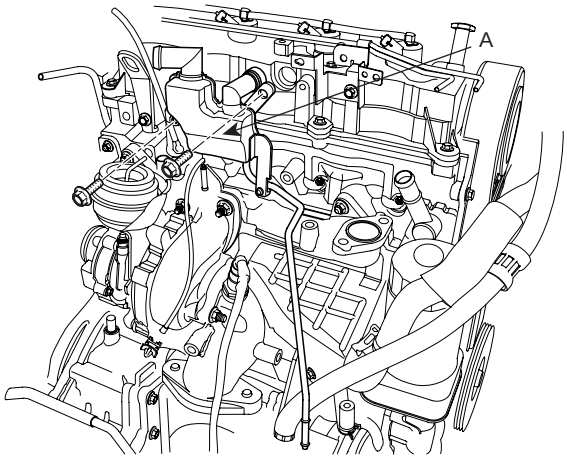

LCIG025A

10. Remove the turbo charger heat protector(A, B).

Tightening torque :
17 ~ 22N.m (170 ~ 220kgf.m, 12 ~ 16lb-ft)

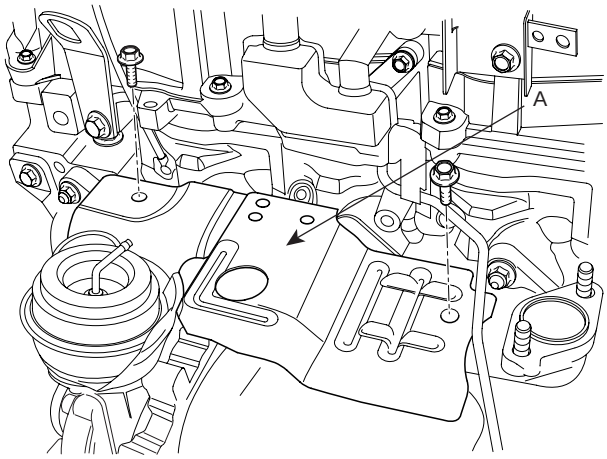

SCMEM6114D

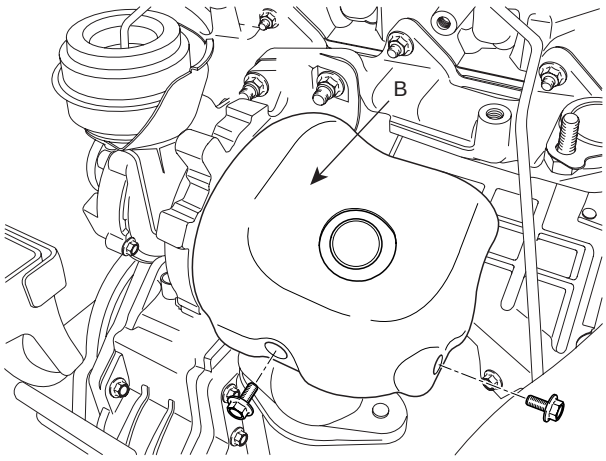

SCMEM6115D

11. Remove the heater pipe heat protector(A).

Tightening torque :
8 ~ 10N.m (8 ~ 1.0kgf.m, 6 ~ 7lb-ft)

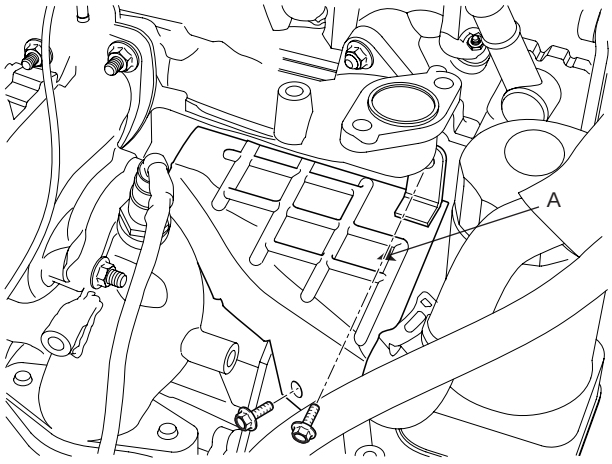

LCIG028A

12. Disconnect the turbo charger oil feed pipe(A) and oil return hose(B).

Tightening torque :
35 ~ 45N.m (3.5 ~ 4.5kgf.m, 25.3 ~ 32.5lb-ft)

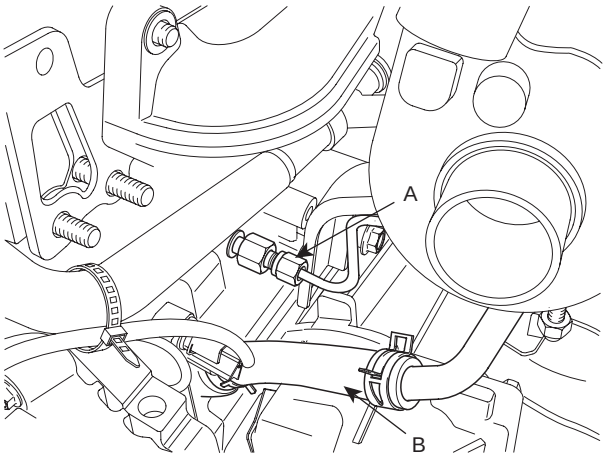

LCIG029A

13. Remove the turbocharger support bracket mounting bolts(A).

Tightening torque :
35 ~ 45N.m (3.5 ~ 4.5kgf.m, 26 ~ 33lb-ft)

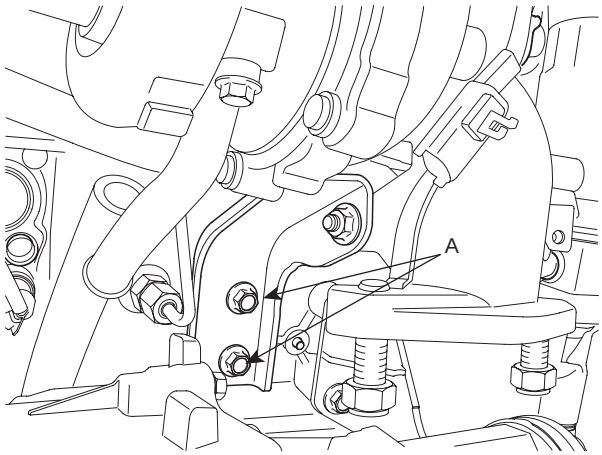

LCIG030A

14. Remove the front muffler(A).

Tightening torque :
40 ~ 60N.m (4.0 ~ 6.0kgf.m, 30 ~ 43lb-ft)

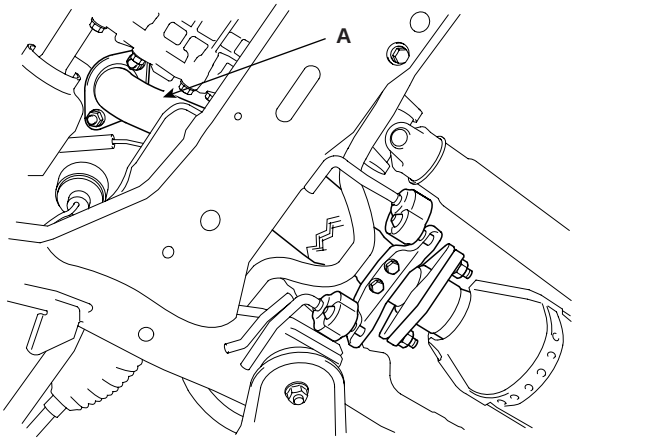

SCMEM6044D

15. Remove the EGR elbow(A) and turbocharger & exhaust manifold assembly(B).

Tightening torque :
EGR elbow bolt and nuts :
20 ~ 27N.m (2.0 ~ 2.7kgf.m, 15 ~ 20lb-ft)
Exhaust manifold nuts :
30 ~ 35N.m (3.0 ~ 3.5kgf.m, 22 ~ 26lb-ft)

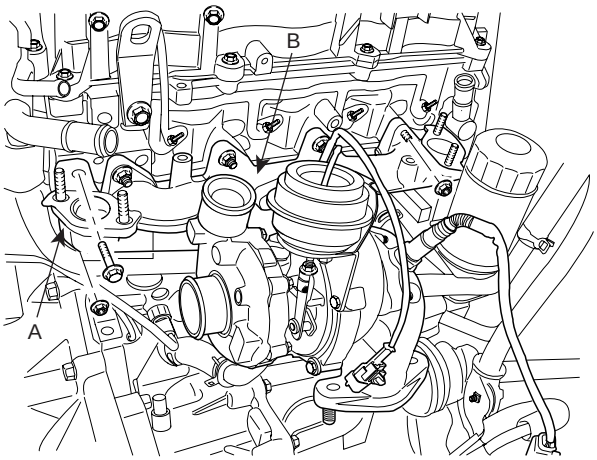

LCIG031A

16. Installation is in the reverse order of removal.

MUFFLER

1. Remove the front muffler(A).

Tightening torque :
40 ~ 60N.m (4.0 ~ 6.0kgf.m, 30 ~ 43lb-ft)

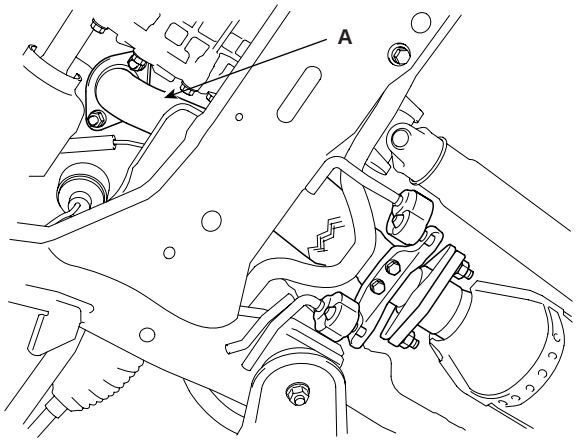

SCMEM6044D

2. Remove the catalytic convertor(A) and the center muffler(B).

Tightening torque :
40 ~ 60N.m (4.0 ~ 6.0kgf.m, 30 ~ 43lb-ft)

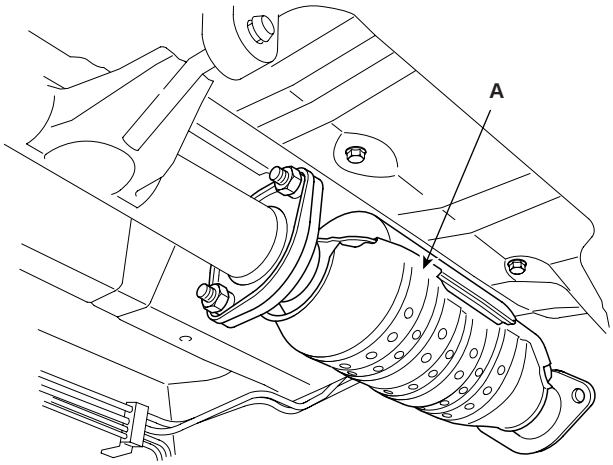

SCMEM6045D

3. Remove the main muffler(A).

Tightening torque :
40 ~ 55N.m (4.0 ~ 5.5kgf.m, 28.9 ~ 39.8lb-ft)

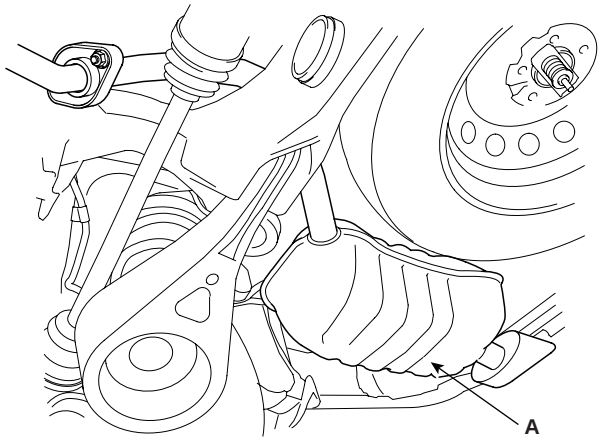

SCMEM6047D

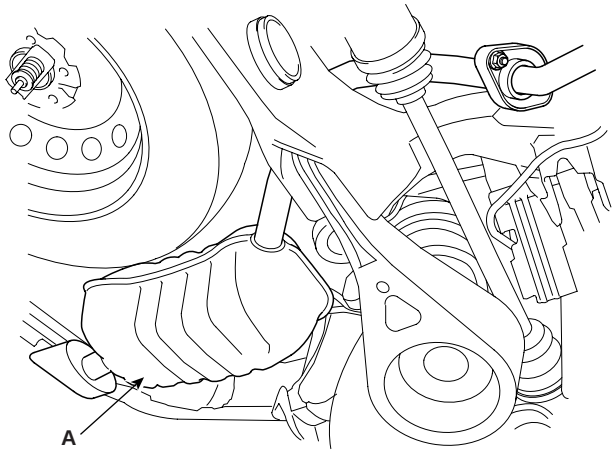

SCMEM6048D

4. Installation is in the reverse order of removal.

REPLACEMENT E41CC23B

INTERCOOLER

1. Remove the intercooler.

   1) Disconnect the integrated connector(C) that connectors the BPS(Boost Pressure sensor) sensor connector(A) and the VGT solenoid valve connector(B).

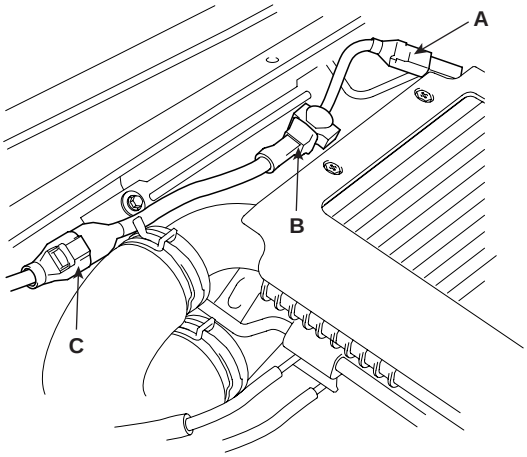

SCMEM6003D

   2) Remove the intercooler hose(A).

   3) Remove the VGT solenoid valve.

   4) Remove the intercooler(C).

Tightening torque
80 ~ 120N.m (0.8 ~ 1.2kgf.m, 5.8 ~ 8.7lb-ft)

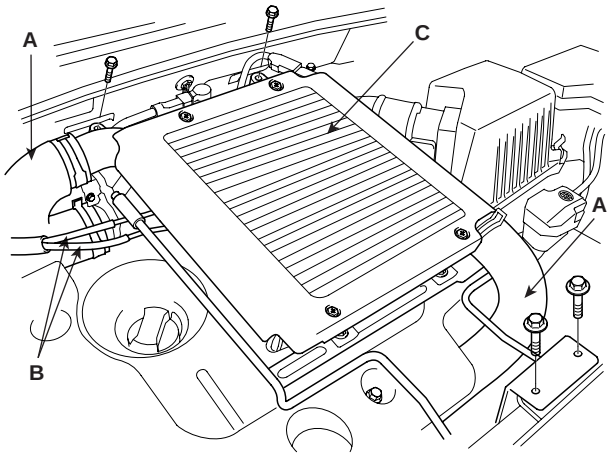

SCMEM6004D

INSTALLATION EE407A32

INTAKE MANIFOLD

1. Install the intake manifold.

Tightening torque
15 ~ 20N.m(1.5 ~ 2.0kgf.m, 10.8 ~ 14.5lb-ft)

2. Install the delivery pipe.(See FL group).
3. Install the throttle flap vacuum hose.
4. Install the coolant bleed hose.
5. Install the radiator hose.
6. Install the intercooler hose.
7. Install the alternator.

EXHAUST MANIFOLD

1. Install the exhaust manifold(A) on the cylinder head with a new gasket(B).
   Install the turbocharger supporting bracket and the oil feed/return pipes.

Tightening torque
Exhaust manifold : 30 ~ 35N.m(3.0 ~ 3.5kgf.m, 21.7 ~ 25.3lb-ft)
Turbo charger support bracket : 35 ~ 40N.m(3.5 ~ 4.0kgf.m, 25.3 ~ 28.9lb-ft)
Oil feed pipe : 12 ~ 18N.m(1.2 ~ 1.8kgf.m, 8.7 ~ 13lb-ft)

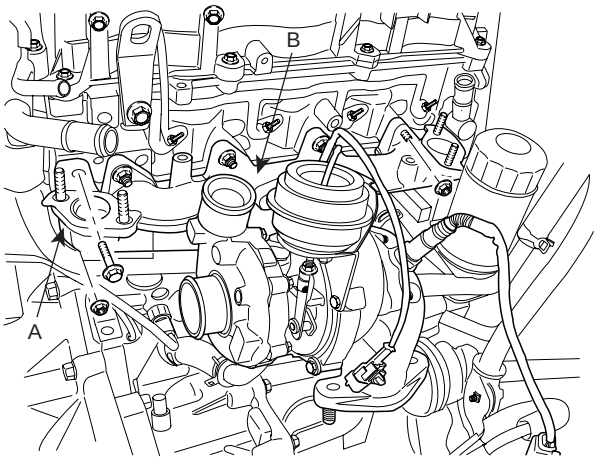

LCIG031A

2. Install the heat protector.

Tightening torque
12 ~ 16N.m(1.2 ~ 1.6kgf.m, 8.7 ~ 10.8lb-ft)

3. Install the EGR valve and EGR cooler assembly(A).

Tightening torque
25 ~ 30N.m(2.5 ~ 3.0kgf.m, 18.1 ~ 21.7lb-ft)

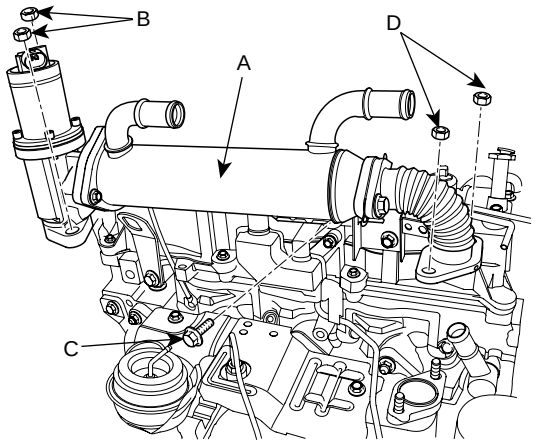

LCIG024A

4. Install the EGR valve vacuum hose.
5. Install the EGR cooler hose(A).

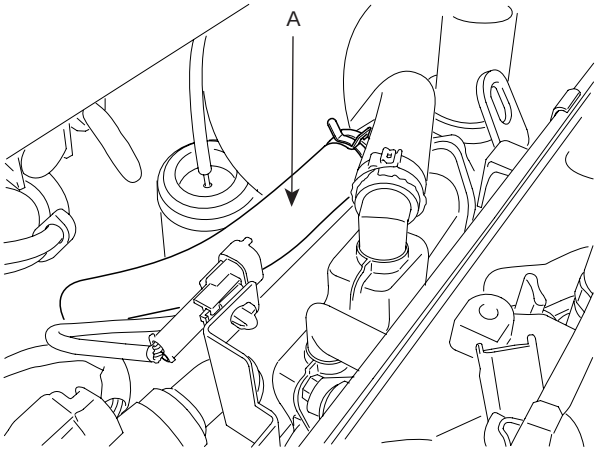

LCIG009A

Engine (G6EA - GSL 2.7)

GENERAL

ENGINE BLOCK

COOLING SYSTEM

LUBRICATION SYSTEM

INTAKE AND EXHAUST SYSTEM

CYLINDER HEAD ASSEMBLY

TIMING SYSTEM

ENGINE AND TRANSAXLE ASSEMBLY

GENERAL

SPECIFICATIONS EAFA9CDF

Description			Specifications	Limit
General				
Type			V-type, DOHC	
Number of cylinder			6	
Bore			86.7mm(3.4134in.)	
Stroke			75mm(2.9528in.)	
Total displacement			2,656cc	
Compression ratio			10.4	
Firing order			2-3-4-5-6-1	
Valve timing				
Intake valve	Opens (ATDC)		4° ~ -56°	
	Closes (ABDC)		60° ~ 0°	
Exhaust valve	Opens (BBDC)		46°	
	Closes (ATDC)		10°	
Cylinder head				
Flatness of gasket surface			0.03mm(0.0012in.) or less	0.05mm(0.0020in.)
Flatness of manifold mounting	Intake		0.15mm(0.0059in.) or less	
	Exhaust		0.15mm(0.0059in.) or less	
Camshaft				
Cam height	LH Camshaft	Intake	44.5mm(1.7520in.)	
		Exhaust	44.5mm(1.7520in.)	
	RH Camshaft	Intake	44.5mm(1.7520in.)	
		Exhaust	44.5mm(1.7520in.)	
Journal outer diameter	LH Camshaft	Intake	27.964 ~ 27.980mm(1.1009 ~ 1.1016in.)	
		Exhaust	27.964 ~ 27.980mm(1.1009 ~ 1.1016in.)	
	RH Camshaft	Intake	27.964 ~ 27.980mm(1.1009 ~ 1.1016in.)	
		Exhaust	27.964 ~ 27.980mm(1.1009 ~ 1.1016in.)	
Bearing oil clearance	Intake		0.020 ~ 0.057mm(0.0008 ~ 0.0022in.)	
	Exhaust		0.020 ~ 0.057mm(0.0008 ~ 0.0022in.)	
End play			0.05 ~ 0.15mm(0.0020 ~ 0.0059in.)	
Valve				
Valve length	Intake		110.1mm(4.3346in.)	
	Exhaust		111.1mm(4.3740in.)	
Stem outer diameter	Intake		5.965 ~ 5.980mm(0.2348 ~ 0.2354in.)	
	Exhaust		5.950 ~ 5.965mm(0.2343 ~ 0.2348in.)	
Face angle			45° ~ 45.5°	

Description		Specifications	Limit
Thickness of valvehead(margin)	Intake	1.0mm(0.0394in.)	
	Exhaust	1.3mm(0.0512in.)	
Valve stem to valve guide clearance	Intake	0.020 ~ 0.050mm(0.0008 ~ 0.0020in.)	0.10mm(0.0039in.) or less
	Exhaust	0.035 ~ 0.065mm(0.0014 ~ 0.0026in.)	0.13mm(0.0051in.) or less
Valve guide			
Inner diameter	Intake	6.000 ~ 6.015mm(2.2362 ~ 2.2368in.)	
	Exhaust	6.000 ~ 6.015mm(2.2362 ~ 2.2368in.)	
Length	Intake	45.8 ~ 46.2mm(1.8031 ~ 1.8189in.)	
	Exhaust	46.8 ~ 47.2mm(1.8425 ~ 1.8583in.)	
Valve spring			
Free length		46.8mm(1.8425in.)	
Load	Height: 35mm	180.5 ~ 199.5N(18.4 ~ 20.3Kgf, 40.6 ~ 44.8lb)	
	Height: 26.5mm	342 ~ 378N(34.9 ~ 38.6Kgf, 76.9 ~ 85.1lb)	
Out of squareness		1.5° or less	
MLA(Mechanical Lash Adjuster)			
MLA outer diameter	Intake	29.964 ~ 29.980mm(1.1797 ~ 1.1803in.)	
	Exhaust	29.964 ~ 29.980mm(1.1797 ~ 1.1803in.)	
Cylinder head tappet bore inner diameter	Intake	30.000 ~ 30.025mm(1.1811 ~ 1.1821in.)	
	Exhaust	30.000 ~ 30.025mm(1.1811 ~ 1.1821in.)	
MLA to tappet bore clearance	Intake	0.020 ~ 0.061mm(0.0008 ~ 0.0024in.)	0.07mm(0.0027in.) or less
	Exhaust	0.020 ~ 0.061mm(0.0008 ~ 0.0024in.)	0.07mm(0.0027in.) or less
Valve clearance			
Intake		0.17 ~ 0.23mm (0.0067 ~ 0.0090in.)	0.10 ~ 0.30mm (0.0039 ~ 0.0118in.)
Exhaust		0.27 ~ 0.33mm (0.0106 ~ 0.0129in.)	0.20 ~ 0.40mm (0.0078 ~ 0.0157in.)
Cylinder block			
Cylinder bore		96.00 ~ 96.03mm (3.7795 ~ 3.7807in.)	
Flatness of gasket surface		Less than 0.05mm (0.0019in.) [Less than 0.02mm (0.0008in.) / 150x150]	
Piston			
Piston outer diameter		95.96 ~ 95.99mm(3.7779 ~ 3.7791in.)	
Piston to cylinder clearance		0.03 ~ 0.05mm(0.0012 ~ 0.0020in.)	

Description		Specifications	Limit
Ring groove width	No. 1 ring groove	1.22 ~ 1.24mm (0.0480 ~ 0.0488in.)	
	No. 2 ring groove	1.22 ~ 1.24mm (0.0480 ~ 0.0488in.)	
	Oil ring groove	2.01 ~ 2.03mm (0.0791 ~ 0.0799in.)	
Piston O.S.		0.25mm(0.0098in.)	
Piston ring			
Side clearance	No. 1 ring	0.04 ~ 0.08mm(0.0016 ~ 0.0031in.)	0.1mm(0.0039in.)
	No. 2 ring	0.03 ~ 0.07mm(0.0012 ~ 0.0027in.)	0.1mm(0.0039in.)
	Oil ring	0.06 ~ 0.15mm(0.0024 ~ 0.0059in.)	0.2mm(0.0079in.)
End gap	No. 1 ring	0.15 ~ 0.30mm(0.0059 ~ 0.0118in.)	0.6mm(0.0236in.)
	No. 2 ring	0.30 ~ 0.45mm(0.0118 ~ 0.0177in.)	0.7mm(0.0275in.)
	Oil ring	0.20 ~ 0.70mm(0.0078 ~ 0.0275in.)	0.8mm(0.0315in.)
Piston ring O.S.		0.25mm(0.0098in.)	
Piston pin			
Piston pin outer diameter		21.001 ~ 21.007mm(0.8268 ~ 0.8270in.)	
Piston pin hole inner diameter		21.014 ~ 21.023mm(0.8273 ~ 0.8277in.)	
Piston pin hole clearance		0.007 ~ 0.022mm(0.0003 ~ 0.0009in.)	
Connecting rod small end inner diameter		20.974 ~ 20.985mm(0.8257 ~ 0.8262in.)	
Connecting rod small end hole clearance		0.016 ~ 0.033mm(0.0006 ~ 0.0013in.)	
Connecting rod			
Connecting rod big end inner diameter		51.000 ~ 51.018mm(2.0079 ~ 2.0086in.)	
Connecting rod bearing oil clearance		0.018 ~ 0.036mm(0.0007 ~ 0.0014in.)	
Side clearance		0.1 ~ 0.25mm (0.0039 ~ 0.0098in.)	0.4mm(0.0157in.)
Crankshaft			
Main journal outer diameter		61.982 ~ 62.000mm(2.4402 ~ 2.4409in.)	
Pin journal outer diameter		47.982 ~ 48.000mm(1.8891 ~ 1.8898in.)	
Main bearing oil clearance		0.004 ~ 0.022mm(0.0002 ~ 0.0009in.)	
End play		0.07 ~ 0.25mm(0.0028 ~ 0.0098in.)	0.30mm(0.0118in.)
Oil pump			
Relief valve opening pressure		490.33 ~ 588.40kPa(5.0 ~ 6.0kgf/cm², 71.12 ~ 85.34 psi)	
Engine oil			
Oil quantity (Total)		4.5L(4.76U.S.qts,3.96lmp.qts)	
Oil quantity (Oil pan)		4.2L(4.44U.S.qts,3.70lmp.qts)	
Oil quantity (Oil filter)		0.3L(0.32U.S.qts,0.26lmp.qts)	
Oil quality		Above SJ or SL	
Oil pressure		130kPa(1.32kgf/cm²,18.77psi) [at 1000rpm,110°C(230°F)]	
Cooling system			
Cooling method		Forced circulation with electrical fan	

Description		Specifications	Limit
Coolant quantity		8.2~8.3L(8.66~8.77U.S.qts,7.22~7.30lmp.qts)	
Thermostat	Type	Wax pellet type	
	Opening temperature	82±2°C (179.6±35.6°F)	
	Fully opened temperature	95°C (203°F)	
	Full lift	10mm (0.3937in.) or more	
Radiator cap	Main valve opening pressure	93.16 ~ 122.58kpa(0.95 ~ 1.25 kg/cm², 13.51 ~ 17.78psi)	
	Vacuum valve opening pressure	0.98 ~ 4.90 kpa(0.01 ~ 0.05 kg/cm², 0.14 ~ 0.71 psi)	
Engine coolant temperature sensor			
Type		Thermister type	
Resistance	20°C (68°F)	2.31 ~ 2.59 kΩ	
	80°C(176°F)	0.3222 kΩ	

TIGHTENING TORQUE

Item	Quan-tity	Nm	kgf.m	lb-ft
Oil seal case bolt	3	9.8 ~ 11.8	1.0 ~ 1.2	7.2 ~ 8.7
Main bearing cap bolt(M10)	8	29.4 + 90°	3.0 + 90°	21.7 + 90°
Main bearing cap bolt(M8)	8	15.7 + 90°	1.6 + 90°	11.6 ~ + 90°
Rear plate bolt	1	9.8 ~ 11.8	1.0 ~ 1.2	7.2 ~ 8.7
Oil pump case bolt(8×25)	1	18.6 ~ 23.5	1.9 ~ 2.4	13.7 ~ 17.4
Oil pump case bolt(8×35)	1	18.6 ~ 23.5	1.9 ~ 2.4	13.7 ~ 17.4
TimingOil pump case bolt(8×65)	1	18.6 ~ 23.5	1.9 ~ 2.4	13.7 ~ 17.4
TimiOil relief plug	1	39.2 ~ 49.0	4.0 ~ 5.0	28.9 ~ 36.2
Oil filter bracket bolt(8×35)	4	18.6 ~ 23.5	1.9 ~ 2.4	13.7 ~ 17.4
Oil filter bracket bolt(8×65)	2	18.6 ~ 23.5	1.9 ~ 2.4	13.7 ~ 17.4
Oil filter insert	1	44.1 ~ 53.9	4.5 ~ 5.5	32.5 ~ 39.8
Timing chain cover bolt	21	9.8 ~ 11.8	1.0 ~ 1.2	7.2 ~ 8.7
Upper oil pan bolt(8×22)	15	18.6 ~ 23.5	1.9 ~ 2.4	13.7 ~ 17.4
Upper oil pan bolt(163.5mm)	1	4.9 ~ 6.9	0.5 ~ 0.7	3.6 ~ 5.1
Upper oil pan bolt(154.5mm)	1	4.9 ~ 6.9	0.5 ~ 0.7	3.6 ~ 5.1
Lower oil pan bolt	11	9.8 ~ 11.8	1.0 ~ 1.2	7.2 ~ 8.7
Oil drain plug	1	34.3 ~ 44.1	3.5 ~ 4.5	25.3 ~ 32.5
Engine support bracket bolt(10×94)	2	58.8 ~ 68.6	6.0 ~ 7.0	43.4 ~ 50.6
Engine support bracket bolt(10×102.5)	1	58.8 ~ 68.6	6.0 ~ 7.0	43.4 ~ 50.6
Camshaft bearing cap bolt(6×38)	24	10.8 ~ 12.7	1.1 ~ 1.3	8.0 ~ 9.4
Camshaft bearing cap bolt(8×38)	12	20.6 ~ 25.5	2.1 ~ 2.6	15.2 ~ 18.8
Cylinder head bolt	16	24.5 + 60° + 45°	2.5 + 60° + 45°	18.1 + 60° + 45°
Cylinder head cover bolt	22	7.8 ~ 9.8	0.8 ~ 1.0	5.8 ~ 7.2
Crankshaft pulley bolt	1	166.7 ~ 176.5	17.0 ~ 18.0	123.0 ~ 130.2
Drive plate bolt	8	71.6 ~ 75.5	7.3 ~ 7.7	52.8 ~ 55.7
Connecting rod bearing cap bolt	12	19.6 ~ 90°	2.0 ~ 90°	14.5 ~ 90°
OCV(Oil Control Valve) bolt	2	7.8 ~ 9.8	0.8 ~ 1.0	5.8 ~ 7.2
CVVT & exhaust cam sprocket bolt	4	66.7 ~ 78.5	6.8 ~ 8.0	49.2 ~ 57.9
Timing chain auto tensioner bolt	4	10.8 ~ 12.7	1.1 ~ 1.3	8.0 ~ 9.4
Camshaft sprocket bolt	2	88.3 ~ 107.9	9.0 ~ 11.0	65.1 ~ 79.6
Timing belt idler bolt	1	49.0 ~ 58.8	5.0 ~ 6.0	36.2 ~ 43.4
Timing belt tensioner bolt	2	19.6 ~ 26.5	2.0 ~ 2.7	14.5 ~ 19.5
Timing belt tensioner arm bolt	1	34.3 ~ 53.9	3.5 ~ 5.5	25.3 ~ 39.8
Water pump bolt(8×20)	3	14.7 ~ 21.6	1.5 ~ 2.2	10.8 ~ 15.9
Water pump bolt(8×25)	4	14.7 ~ 21.6	1.5 ~ 2.2	10.8 ~ 15.9
Drive belt idler bolt	1	34.3 ~ 53.9	3.5 ~ 5.5	25.3 ~ 39.8

Item	Quan-tity	Nm	kgf.m	lb-ft
Drive belt tensioner bolt	1	34.3 ~ 53.9	3.5 ~ 5.5	25.3 ~ 39.8
Water pipe bolt	1	16.7 ~ 19.6	1.7 ~ 2.0	12.3 ~ 14.5
Water temp. control assembly nut	4	29.4 ~ 41.2	3.0 ~ 4.2	21.7 ~ 30.4
Oil level gauge bolt	1	18.6 ~ 23.5	1.9 ~ 2.4	13.7 ~ 17.4
Oil screen bolt	2	14.7 ~ 21.6	1.5 ~ 2.2	10.8 ~ 15.9
Water outlet pipe bolt	3	16.7 ~ 19.6	1.7 ~ 2.0	12.3 ~ 14.5
Water inlet pipe bolt	2	16.7 ~ 19.6	1.7 ~ 2.0	12.3 ~ 14.5
Water inlet pipe nut	1	16.7 ~ 19.6	1.7 ~ 2.0	12.3 ~ 14.5
Surge tank bolt(8×28)	3	18.6 ~ 23.5	1.9 ~ 2.4	13.7 ~ 17.4
Surge tank bolt(8×80)	2	18.6 ~ 23.5	1.9 ~ 2.4	13.7 ~ 17.4
Surge tank nut	2	18.6 ~ 23.5	1.9 ~ 2.4	13.7 ~ 17.4
Intake manifold bolt	4	18.6 ~ 23.5	1.9 ~ 2.4	13.7 ~ 17.4
Intake manifold nut	4	18.6 ~ 23.5	1.9 ~ 2.4	13.7 ~ 17.4
Surge tank bracket bolt	2	18.6 ~ 23.5	1.9 ~ 2.4	13.7 ~ 17.4
Exhaust manifold bolt	14	29.4 ~ 34.3	3.0 ~ 3.5	21.7 ~ 25.3
Heat protect bolt	6	16.7 ~ 21.6	1.7 ~ 2.2	12.3 ~ 15.9
Front muffler bolt	2	39.2 ~ 58.8	4.0 ~ 6.0	28.9 ~ 43.4

COMPRESSION PRESSURE INSPECTION EBCD8F14

NOTE

If the there is lack of power, excessive oil consumption or poor fuel economy, measure the compression pressure.

1. Warm up the engine until the normal operating temperature becoming 80~95°C(176~203°F).
2. Remove the surge tank.
3. Remove the ignition coil connectors(A) and ignition coils(B).

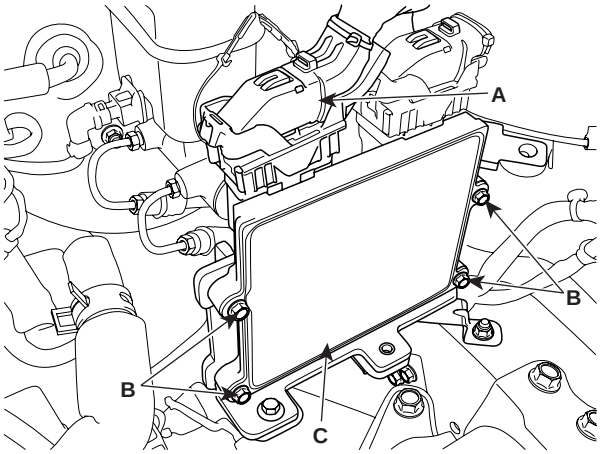

SCMEM6001L

4. Using a 16mm plug wrench, remove the 6 spark plugs.
5. Check cylinder compression pressure.
   1) Insert a compression gauge into the spark plug hole.
   2) Open the throttle fully.
   3) With the fully-open throttle in cranking, measure the compression pressure.

NOTE

Always use a fully charged battery to get the engine speed of 250 rpm or more.

Repeat steps 1) through 3) for each cylinder.

NOTE

This measurement must be done in as short a time as possible.

Compression pressure: 1,176.79kPa (12.0kgf/cm², 170.68psi) - 200 ~ 250rpm Minimum pressure: 1,029.69kPa (10.5kgf/cm², 149.34psi) Difference between cylinders: 98.07kPa (1.0kgf/cm², 14.22psi)

   4) If the compression pressure in 1 or more cylinders is lower than the specification above, pour a small amount of engine oil into the cylinder through the spark plug hole, repeat the steps (1) through (3) for the cylinder and measure the pressure again.
      - If adding oil increases the pressure up, the piston rings or cylinder bores might be worn or damaged.
      - If the pressure doesn't increase, a valve may be sticking or seating may be improper, or there may be leakage from the gasket.
6. Reinstall the spark plugs.
7. Install the ignition coils and connect ignition coil connectors.
8. Install the surge tank.

VALVE CLEARANCE INSPECTION AND ADJUSTMENT

NOTE

Inspect and adjust the valve clearance when the engine is cold (Engine coolant temperature : 20°C±5°C(59~77°F)) and cylinder head is installed on the cylinder block.

1. Remove the engine cover.
2. Remove air cleaner assembly.
3. Remove the surge tank.
4. Remove the cylinder head cover.
   1) Disconnect the ignition coil connector and remove the ignition coil.
   2) Remove the cylinder head cover.

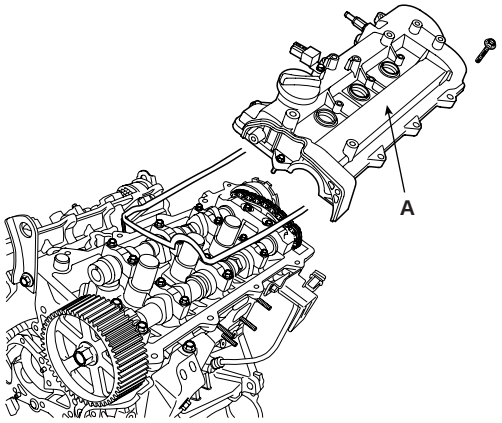

KCBF177A

5. Set the piston of the No.1 cylinder to TDC(Top Dead Center) position.
   1) Turn the crankshaft pulley clockwise and align its groove with the timing mark "T" of the timing chain cover.
   2) Check that the timing marks of the camshaft sprocket are in straight line on that of the cylinder head cover surface as shwn in the illustration. It makes the piston of the No.1 cylinder position at TDC.

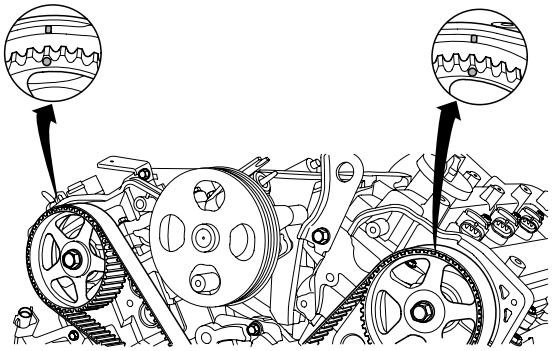

KCBF119B

NOTE

If not, turn the crankshaft one revolution clockwise.

6. Inspect the intake and the exhaust valve clearance.
   1) With the piston of the No.1 cylinder positioning at TDC, the valves which can be measured its clearance are as shown below.

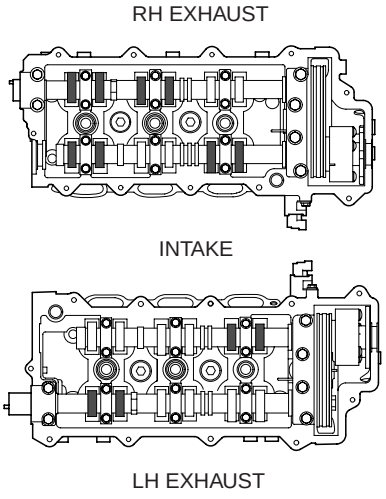

LDLG030A

Measurement method.
- Using a thickness gauge, measure the clearance between the tappet and the base circle of camshaft.
- Record the out-of-specification valve clearance measurements. They will be used later to determine the required adjusting tappet for replacement.

Specification
Limit (Engine coolant temperature : 20°C [68°F])
Intake : 0.10 ~ 0.30mm (0.0039 ~ 0.0118in.)
Exhaust : 0.20 ~ 0.40mm (0.0079 ~ 0.0157in.)

2) Turn the crankshaft pulley one revolution (360°) clockwise and align the groove with the timing mark "T" of the timing chain cover.

3) With the piston of the No.4 cylinder positioning at TDC, the valves which can be measured its clearance are as shown below.

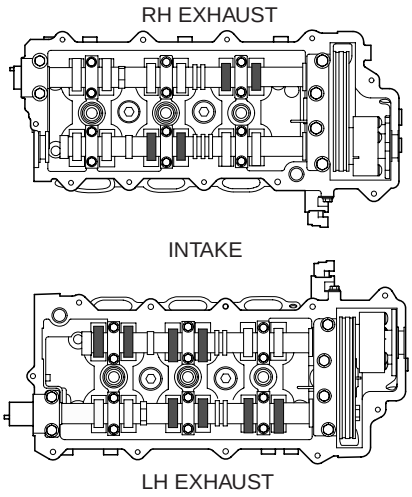

LDLG031A

7. Adjust the intake and the exhaust valve clearances.

1) Set the piston of the No.1 cylinder to the TDC/position.

2) Remove the timing belt.

3) Remove the camshaft bearing caps(A, B).

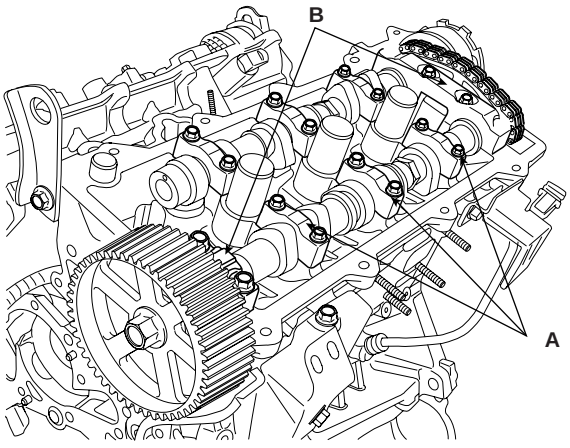

KCBF169A

4) Remove the camshaft assembly.

5) Remove MLA(Mechanical Lash Adjuster)s.

6) Measure the thickness of the removed tappet using a micrometer.

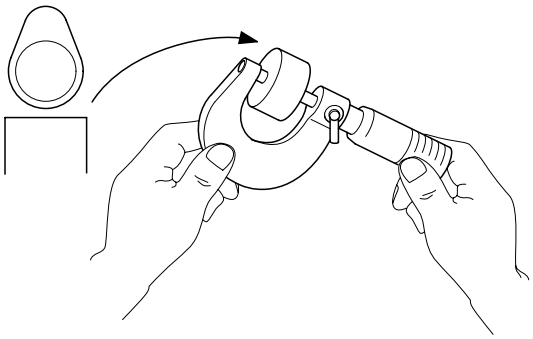

EDKE889D

7) Calculate the thickness of a new tappet so that the valve clearance comes within the specified value.

T : Thickness of removed tappet
A : Measured valve clearance
N : Thickness of new tappet
Intake : N = T + [A - 0.20mm(0.0079in.)]
Exhaust : N = T + [A - 0.30mm (0.0118in.)]

8) Select a new tappet with a thickness as close as possible to the calculated value.

NOTE

Tappets are available with 41different size increments of 0.015mm (0.0006in.) from 3.00mm (0.118in.) to 3.600mm (0.1417in.)

9) Place a new tappet on the cylinder head.

NOTE

Apply engine oil on the periphery surface of the selected tappet.

10) Install the intake and exhaust camshafts.

11) Install the bearing caps.

12) Install the timing belt.

13) Turn the crankshaft two revolutions in the operating direction(clockwise) and realign crankshaft sprocket and camshaft sprocket timing marks(A).

14) Recheck the valve clearance.

Specification (Engine coolant temperature: 20°C[68°F])
Intake : 0.17 ~ 0.23mm (0.0067 ~ 0.0090in.)
Exhaust : 0.27 ~ 0.33mm (0.0106 ~ 0.0129in.)

TROUBLESHOOTING EAB59BFE

Symptom	Suspect area	Remedy
Engine misfire with abnormal internal lower engine noises.	Worn crankshaft bearings. Loose or impropes engine drive plate.	Replace the crankshaft and bearings as required. Repair or replace the drive plate as required.
	Worn piston rings. (Oil consumption may or may not cause the engine to misfire.)	Inspect the cylinder for a loss of compression. Repair or replace as required.
	Worn crankshaft thrust bearings	Replace the crankshaft and bearings as required.
Engine misfire with abnormal valve train noise.	Stuck valves. (Carbon buildup on the valve stem)	Repair or replace as required.
	Excessive worn or mis-aligned timing chain.	Replace the timing chain and sprocket as required.
	Worn camshaft lobes.	Replace the camshaft and valve lifters.
Engine misfire with coolant consumption.	• Faulty cylinder head gasket and/or cranking or other damage to the cylinder head and engine block cooling system. • Coolant consumption may or may not cause the engine to overheat.	• Inspect the cylinder head and engine block for damage to the coolant passages and/or a faulty head gasket. • Repair or replace as required.
Engine misfire with excessive oil consumption.	Worn valves, guides and/or valve stem oil seals.	Repair or replace as required.
	Worn piston rings. (Oil consumption may or may not cause the engine to misfire)	• Inspect the cylinder for a loss of compression. • Repair or replace as required.
Engine noise on start-up, but only lasting a few seconds.	Incorrect oil viscosity.	• Drain the oil. • Install the correct viscosity oil.
	Worn crankshaft thrust bearing.	• Inspect the thrust bearing and crankshaft. • Repair or replace as required.

Symptom	Suspect area	Remedy
Upper engine noise,regardless of engine speed.	Low oil pressure.	Repair or replace as required.
	Broken valve spring.	Replace the valve spring.
	Worn or dirty valve lifters.	Replace the valve lifters.
	Stretched or broken timing chain and/or damaged sprocket teeth.	Replace the timing chain and sprockets.
	Worn timing chain tensioner, if applicable.	Replace the timing chain tensioner as required.
	Worn camshaft lobes.	• Inspect the camshaft lobes. • Replace the timing camshaft and valve lifters as required.
	Worn valve guides or valve stems.	Inspect the valves and valve guides,then repair as required.
	Stuck valves. Carbon on the valve stem or valve seat may cause the valve to stay open.	Inspect the valves and valve guides, then repair as required.
	Worn drive belt, idler, tensioner and bearing.	Replace as required.
Lower engine noise,regardless of engine speed.	Low oil pressure.	Repair as required.
	Loose or damaged drive plate.	Repair or replace the drive plate.
	Damaged oil pan, contacting the oil pump screen.	• Inspect the oil pan. • Inspect the oil pump screen. • Repair or replace as required.
	Oil pump screen loose, damaged or restricted.	• Inspect the oil pump screen. • Repair or replace as required.
	Excessive piston-to-cylinder bore clearance.	• Inspect the piston, piston pin and cylinder bore. • Repair as required.
	Excessive piston pin-to-piston clearance.	• Inspect the piston, piston pin and the connecting rod. • Repair or replace as required.
	Excessive connecting rod bearing clearance	Inspect the following components and repair as required. • The connecting rod bearings. • The connecting rods. • The crankshaft pin journals.
	Excessive crankshaft bearing clearance.	Inspect the following components, and repair as required. • The crankshaft bearings. • The crankshaft main journals. • The cylinder block.
	Incorrect piston, piston pin and connecting rod installation	• Verify the piston pins and connecting rods are installed correctly. • Repair as required.

Symptom	Suspect area	Remedy
Engine noise under load.	Low oil pressure	Repair or replace as required.
	Excessive connecting rod bearing clearance .	Inspect the following components and repair as required : • The connecting rod bearings. • The connecting rods. • The crankshaft.
	Excessive crankshaft bearing clearance.	Inspect the following components, and repair as required. • The crankshaft bearings. • The crankshaft main journals. • The cylinder block.
Engine will not crank-crankshaft will not rotate.	Hydraulically locked cylinder. • Coolant/antifreeze in cylinder. • Oil in cylinder. • Fuel in cylinder.	1. Remove spark plugs and check for fluid. 2. Inspect for broken head gasket. 3. Inspect for cracked engine block or cylinder head. 4. Inspect for a sticking fuel injector and/or leaking fuel regulator.
	Broken timing chain and/or timing chain and/or timing chain gears.	1. Inspect timing chain and gears. 2. Repair as required.
	Material in cylinder. • Broken valve • Piston material • Foreign material	1. Inspect cylinder for damaged components and/or foreign materials. 2. Repair or replace as required.
	Seized crankshaft or connecting rod bearings.	1. Inspect crankshaft and connecting rod bearing. 2. Repair as required.
	Bent or broken connecting rod.	1. Inspect connecting rods. 2. Repair as required.
	Broken crankshaft.	1. Inspect crankshaft. 2. Repair as required.

SPECIAL TOOLS EB132BF6

Tool (Number and name)	Illustration	Use
Crankshaft front oil seal installer (09214-33000)	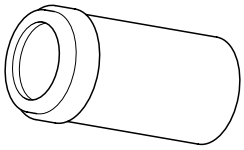 EDKA010A	Installation of the front oil seal
Torque angle adapter (09221-4A000)	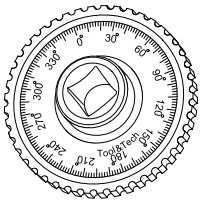 LCAC030A	Installation of bolts & nuts needing an angular method
Valve stem seal remover (09222-29000)	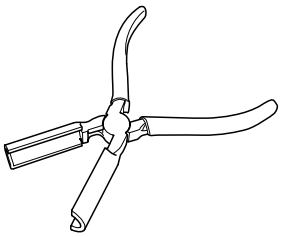 KDRF232A	Removal of the valve stem seal
Valve stem seal installer (09222-22001)	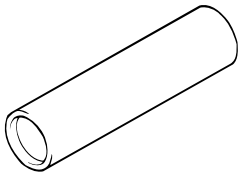 LCAC030D	Installation of the valve stem seal
Camshaft oil seal installer (09214-21000)	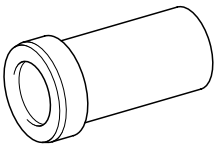 EDDA005B	Installation of the camshaft oil seal

Tool (Number and name)	Illustration	Use
Valve spring compressor & holder (09222-3K000) (09222-3C300)	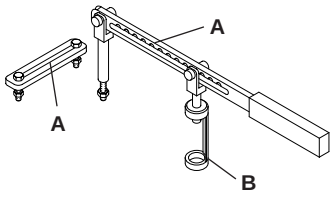 ECRF003A	Removal and installation of the intake or exhaust valves. A : 09222-3K000 B : 09222-3C300 (holder)
Crankshaft rear oil seal installer (09231-33000)	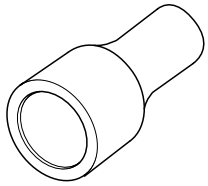 LDLG032A	Installation of the crankshaft rear oil seal
Oil pan remover (09215-3C000)	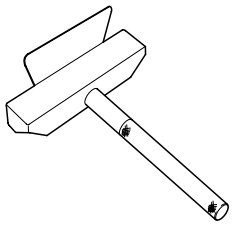 KDRF219A	Removal of oil pan
Valve guide installer (09221-3F100 A/B)	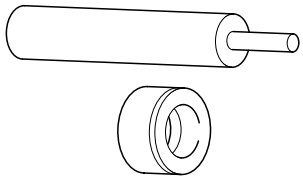 ECKA010B	Removal and installation of the valve guide

ENGINE BLOCK

COMPONENTS E98DF5AD

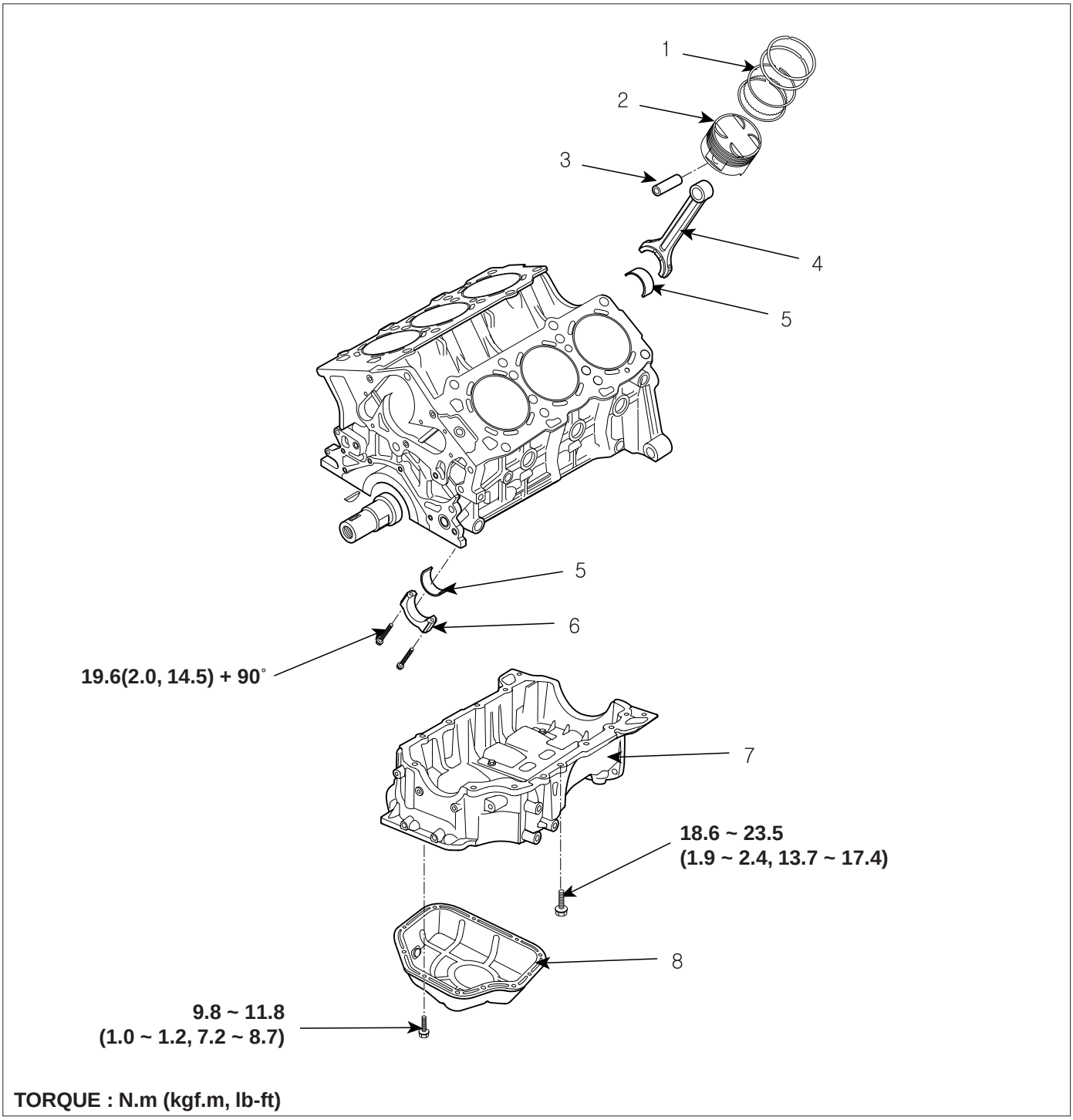

1. Piston ring
2. Piston
3. Piston pin
4. Connecting rod
5. Connecting rod bearing
6. Connecting rod cap
7. Upper oil pan
8. Lower oil pan

LDLG042A

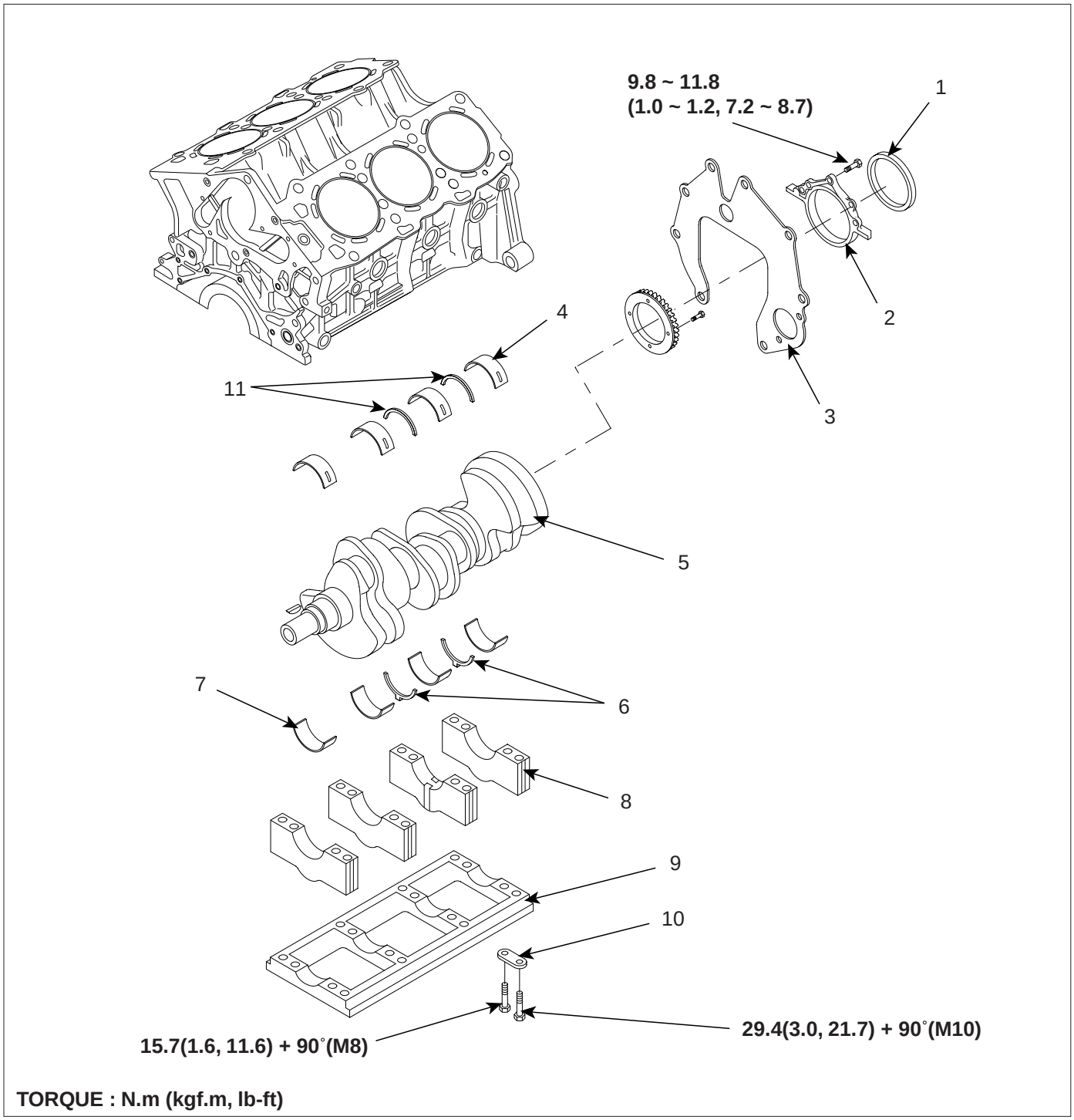

TORQUE : N.m (kgf.m, lb-ft)

1. Rear oil seal
2. Rear oil seal case
3. Rear plate
4. Crankshaft upper bearing
5. Crankshaft
6. Lower thrust bearing
7. Crankshaft lower bearing
8. Main bearing cap
9. Bearing cap bridge
10. Bearing cap bolt washer
11. Upper thrust bearing

LDLG043A

REMOVAL E2BF11E6

1. Remove the drive plate(A).

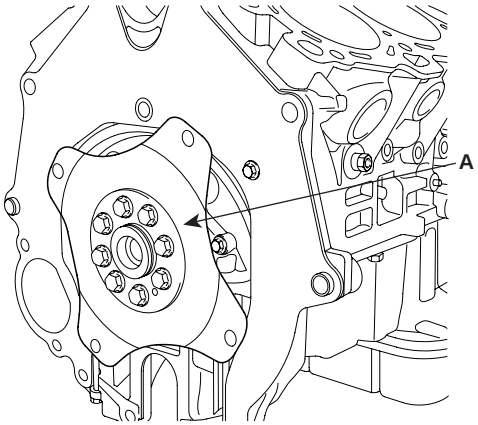

KCBF120A

2. Remove the rear plate(A).

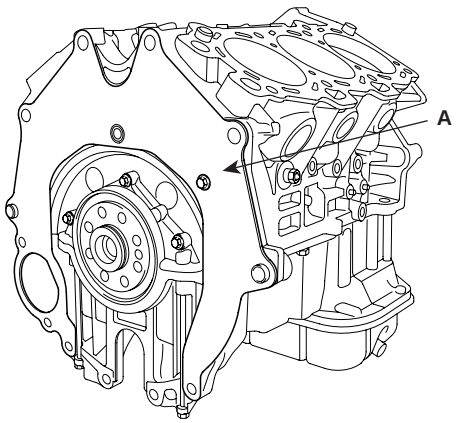

KCBF121A

3. Remove timing belt.
4. Remove intake manifold.
5. Remove exhaust manifold.
6. Remove generator from engine.(Refer to 'ST' group).
7. Remove power steering pump from engine.(Refer to 'HA' group).
8. Remove cylinder head.
9. Remove A/C compressor from engine.(Refer to 'EE' group).
10. Remove water pump assembly.

DISASSEMBLY EB2506EF

1. Remove the power steering pump bracket(A) and the knock sensor(B).

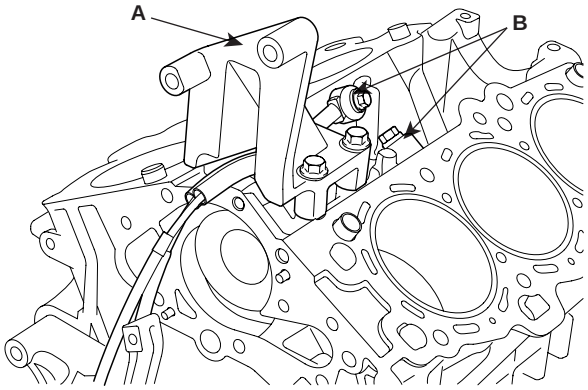

KCBF122A

2. Remove the air conditioning compressor bracket(A).

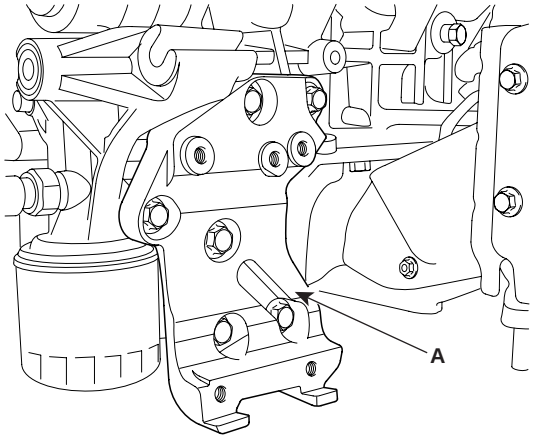

KCBF138A

3. Remove the lower oil pan(A).

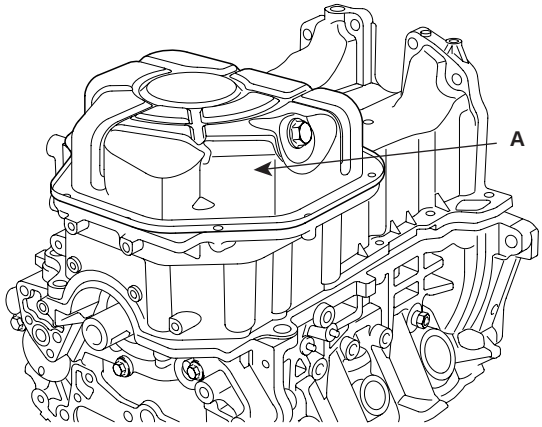

KCBF123A

4. Remove the oil screen(A).

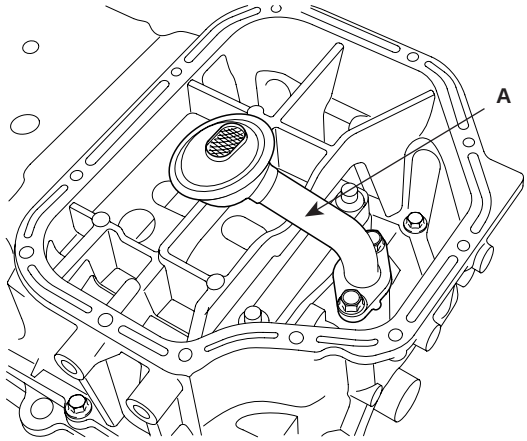

KCBF124A

5. Remove the upper oil pan(A).

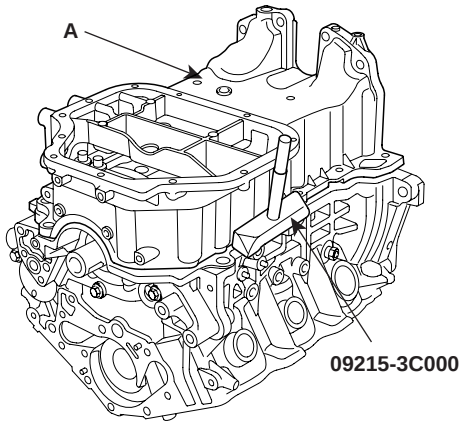

KCBF125B

CAUTION

When removing the oil pan, use the SST(09215-3C000) not to damage the contacting surface of the oil pan.

6. Check the connecting rod side clearance.
7. Check the connecting rod bearing oil clearance.
8. Remove the piston and connecting rod assemblies.

NOTE

- *Keep the bearings the connecting rods and the caps together.*
- *Arrange the piston and connecting rod assemblies in the correct order.*

9. Remove the oil pump case.
10. Remove the oil seal case(A).

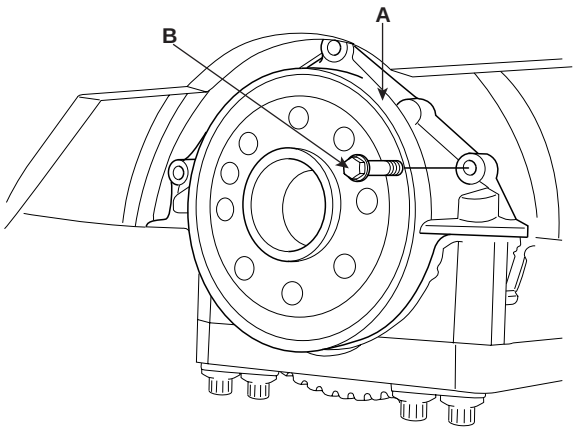

EDQF174B

11. Check the crankshaft end play.
12. Remove the crankshaft bearing cap and check oil clearance.

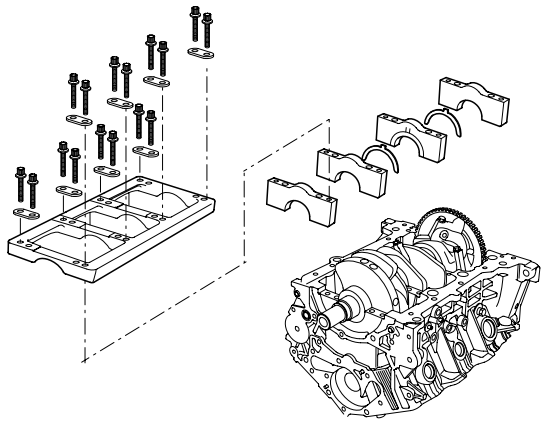

KCBF126A

NOTE

Arrange the bearings and the bearing caps in order.

13. Lift the crankshaft(A) out of the block, being careful not to damage journals.

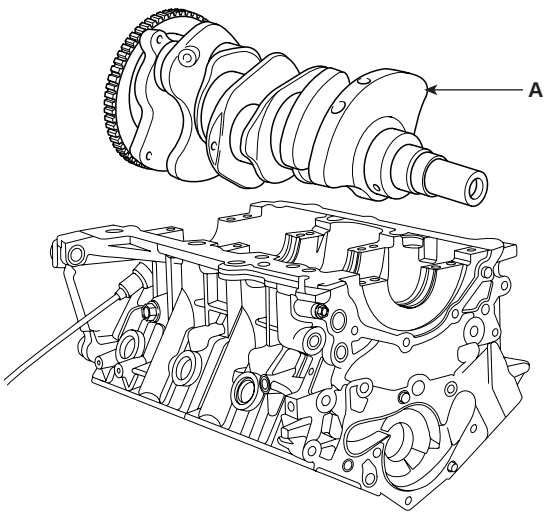

EDQF074A

14. Remove and arrange the main bearings and thrust bearings in the correct order.

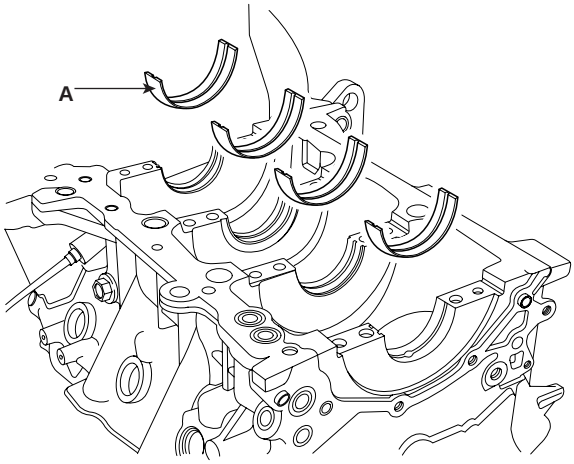

EDQF076A

15. Remove the CKP sensor(A).

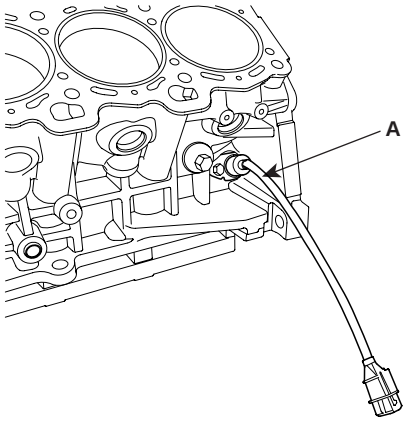

KCBF128A

16. Check the free play between a piston and a piston pin. Try to move the piston back and forth on the piston pin. If any movement is felt, replace the piston and the piston pin as a set.

17. Remove the piston rings.

    1) Using a piston ring expander, remove the 2 compression rings.

    2) Remove the 2 side rails and the oil ring by hand.

    NOTE

    Arrange the piston rings in the correct order only.

18. Disconnect the connecting rod from the piston. Using a press, remove the piston pin from the piston. (Press-in load : 2451.7 ~ 12258.3N(250 ~ 1250kg, 551.2 ~ 2755.81lb)

INSPECTION E3F92BD3

CONNECTING ROD AND CRANKSHAFT

1. Check the connecting rod side clearance.
   Using a feeler gauge, measure the side clearance while moving the connecting rod back and forth.

Specification
Standard : 0.1~ 0.25mm(0.0039 ~ 0.0098in.)
Limit : 0.4mm(0.0157in.)

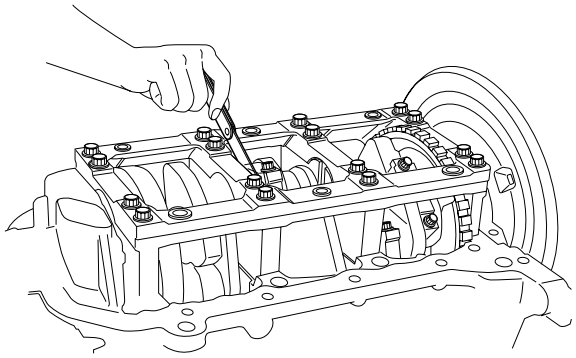

EDQF159A

- If out-of-tolerance, install a new connecting rod.
- If still out-of-tolerance, replace the crankshaft.

2. Check the connecting rod bearing oil clearance.

   1) Check the matchmarks on the connecting rod and cap are aligned to ensure correct reassembly.

   2) Remove the 2 connecting rod cap bolts.

   3) Remove the connecting rod cap and the lower bearing.

   4) Clean the crankshaft pin journal and the bearing.

   5) Place a plastigage across the crankshaft pin.

   6) Reinstall the lower bearing and the connecting rod cap and torque the bolts.

Tightening torque
19.6Nm (2.0kgf.m, 14.46lb-ft) + 90°

NOTE

Do not turn the crankshaft.

   7) Remove the connecting rod cap again.

   8) Measure the plastigage at its widest point.

Standard oil clearance
0.018 ~ 0.036mm(0.0007 ~ 0.0014in.)

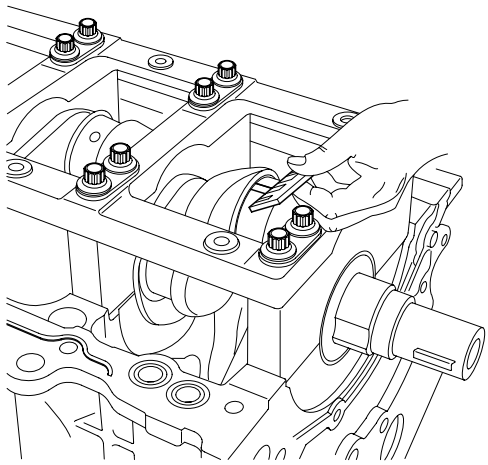

EDQF175A

   9) If the plastigage measures too wide or too narrow, remove the upper half of the bearing, install a new, complete bearing with the same color mark (select the color as shown in the next column), and recheck the clearance.

CAUTION

Do not file, shim, or scrape the bearings or the caps to adjust clearance.

   10) If the plastigage shows the clearance is still incorrect, try the next larger or smaller bearing (the color listed above or below that one), and check clearance again.

NOTE

If the proper clearance cannot be obtained by using the appropriate larger or smaller bearings, replace the crankshaft and start over.

CAUTION

If the marks are indecipherable because of an accumulation of dirt and dust, do not scrub them

with a wire brush or scraper. Clean them only with solvent or detergent.

CONNECTING ROD MARK LOCATION

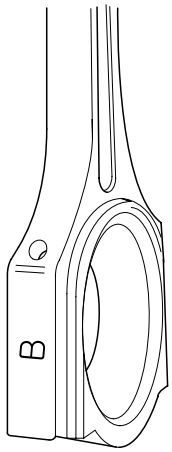

EDQF196A

DISCRIMINATION OF CONNECTING ROD

CLASS	MARK	INSIDE DIAMETER
0	a	51.000 ~ 51.006mm (2.0079 ~ 2.0081in.)
1	b	51.006 ~ 51.012mm (2.0081 ~ 2.0083in.)
2	c	51.012 ~ 51.018mm (2.0083 ~ 2.0086in.)

CRANKSHAFT PIN MARK LOCATION

DISCRIMINATION OF CRANKSHAFT

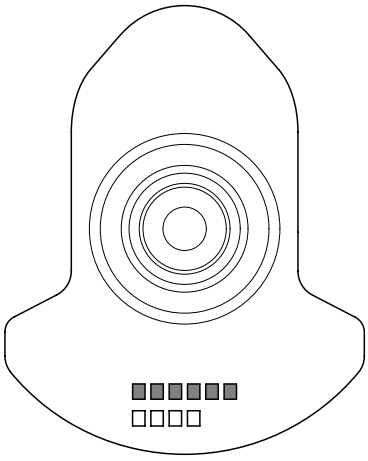

EDQF176B

DISCRIMINATION OF CRANKSHAFT

CLASS	MARK	OUTSIDE DIAMETER OF PIN
I	1 or A	47.994 ~ 48.000mm (1.8895 ~ 1.8898in.)
II	2 or B	47.988 ~ 47.994mm (1.8893 ~ 1.8895in.)
III	3 or C	47.982 ~ 47.988mm (1.8891 ~ 1.8893in.)

PLACE OF IDENTIFICATION MARK (CONNECTING ROD BEARING)

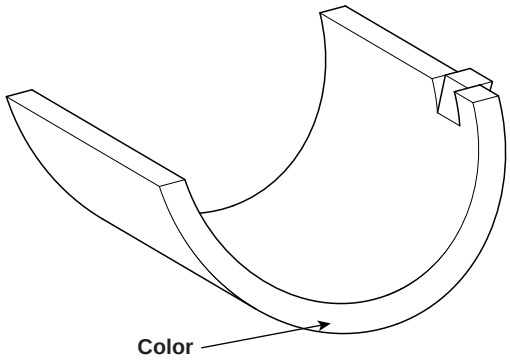

ECRF021A

DISCRIMINATION OF CONNECTING ROD BEARING

CLASS	MARK	THICKNESS OF BEARING
A	BLUE	1.5000 ~ 1.503mm (0.0591 ~ 0.0592in.)
B	BLACK	1.497 ~ 1.500mm (0.0589 ~ 0.0591in.)
C	-	1.494 ~ 1.497mm (0.0588 ~ 0.0589in.)
D	GREEN	1.491 ~ 1.494mm (0.0587 ~ 0.0588in.)
E	YELLOW	1.488 ~ 1.491mm (0.0586 ~ 0.0587in)

11) Select the proper connecting rod bearing from the table below.

		CONNECTING ROD IDENTIFICATION MARK		
		0(A)	1(B)	2(C)
CRANK-SHAFT INDEN-TIFICA-TION MARK	I(A)	E (YEL-LOW)	D (GREEN)	C (-)
	II(B)	D (GREEN)	C (-)	B (BLACK)
	III(C)	C (-)	B (BLACK)	A (BLUE)

3. Check the connecting rod.

1) When reinstalling, check the cylinder numbers on the connecting rods and the caps. When installing a new connecting rod, the notches for bearing fixing on the connecting rods and caps should face the same direction.

2) If one or both edge of the connecting rod thrust surface is damaged, replace the rod. If the inner surface of the rod is damaged or rough, also replace it.

3) Using a connecting rod aligner, measure the bent or torsion of the rod. If the measurement is near the specification, adjust the rod with a press. If the rod is bent or twisted excessily, replace it.

Bending : 0.05mm/100mm(0.0020in./3.9370in.)
Torsion : 0.1mm/100mm(0.0039in./3.9370in.)

NOTE

When assembling the rod without a bearing, there should be no difference.

4. Check the crankshaft bearing oil clearance.

1) To check main bearing-to-journal oil clearance, remove the main bearing caps and bearing halves.

2) Clean each main journal and bearing half with a clean shop tower.

3) Place one strip of plastigage across each main journal.

4) Reinstall the bearings and caps, then torque the bolts.

Tightening torque
M8 : 15.7Nm(1.6 kgf.m, 11.6lb-ft) + 90°
M10 : 29.4 Nm(3.0 kgf.m, 21.7lb-ft)+ 90°

NOTE

Tighten the bolts in order.

5) Remove the cap and bearing again, and measure the widest part of the plastigage.

Standard oil clearance
0.004~ 0.022mm (0.0002 ~ 0.0009in.)

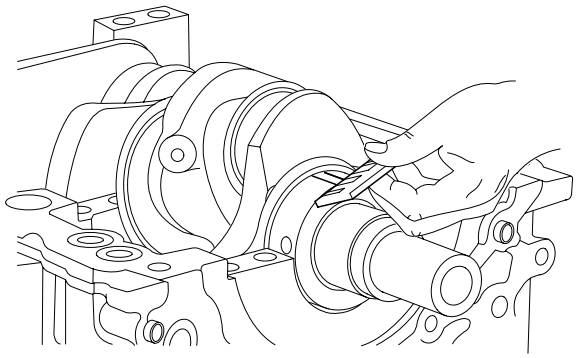

EDQF075A

6) If the plastigage measures too wide or too narrow, remove the upper half of the bearing, install a new, complete bearing with the same color mark (select the color as shown in the next column), and recheck the clearance.

CAUTION

Do not file, shim, or scrape the bearings or the caps to adjust clearance.

7) If the plastigage shows the clearance is still incorrect, try the next larger or smaller bearing (the color listed above or below that one), and check clearance again.

NOTE

If the proper clearance cannot be obtained by using the appropriate larger or smaller bearings, replace the crankshaft and start over.

CAUTION

If the marks are indecipherable because of an accumulation of dirt and dust, do not scrub them with a wire brush or scraper. Clean them only with solvent or detergent.

Crankshaft bore mark location

Letters have been stamped on the block as a mark for the each size of the 4 main journal bores. No.1 journal stamping mark starts from the front of the engine.

Use the size marks which are stamped on the block and the crankshaft for the journal bore inner diameter and the journal outer diameter to choose the correct bearings.

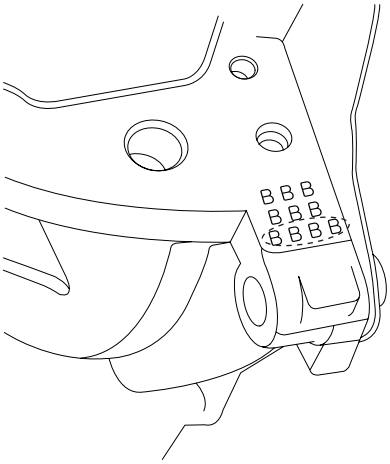

EDQF078A

DISCRIMINATION OF CYLINDER BLOCK

CLASS	MARK	INSIDE DIAMETER
a	A	66.000 ~ 66.006mm (2.5984 ~ 2.5987in.)
b	B	66.006 ~ 66.012mm (2.5987 ~ 2.5989in.)
c	C	66.012 ~ 66.018mm (2.5989 ~ 2.5991in.)

CRANKSHAFT JOURNAL MARK LOCATION

DISCRIMINATION OF CRANKSHAFT

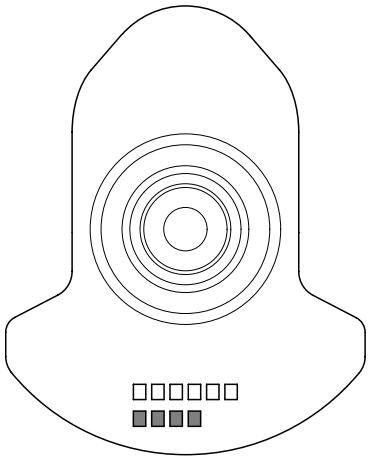

EDQF176A

DISCRIMINATION OF CRANKSHAFT

CLASS	MARK	OUTSIDE DIAMETER OF JOURNAL
I	A	61.994 ~ 62.000mm (2.4407 ~ 2.4409in.)
II	B	61.988 ~ 61.994mm (2.4405 ~ 2.4407in.)
III	C	61.982 ~ 61.988mm (2.4402 ~ 2.4405in.)

PLACE OF IDENTIFICATION MARK (CRANKSHAFT BEARING)

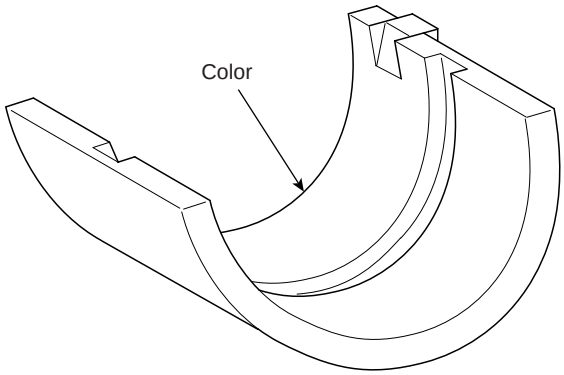

ECRF022A

DISCRIMINATION OF CRANKSHAFT BEARING

CLASS	MARK	THICKNESS OF BEARING
A	BLUE	2.007 ~ 2.010mm (0.0790 ~ 0.0791in.)
B	BLACK	2.004 ~ 2.007mm (0.0789 ~ 0.0790in.)
C	-	2.001 ~ 2.004mm (0.0788 ~ 0.0789in.)
D	GREEN	1.998 ~ 2.001mm (0.0787 ~ 0.0788in.)
E	YELLOW	1.995 ~ 1.998mm (0.0785 ~ 0.0787in.)

SELECTION TABLE

		CRANKSHAFT BORE IDENTIFICATION MARK		
		a(A)	b(B)	c(C)
CRANK-SHAFT IDEN-TIFICA-TION MARK	I(A)	E (YEL-LOW)	D (GREEN)	C (-)
	II(B)	D (GREEN)	C (-)	B (BLACK)
	III(C)	C (-)	B (BLACK)	A (BLUE)

5. Check crankshaft end play.
   Using a dial indicator, measure the thrust clearance while prying the crankshaft back and forth with a screwdriver.

Standard end play
0.07 ~ 0.25mm (0.0028 ~ 0.0098in.)
[Limit]
0.3mm(0.0118in.)

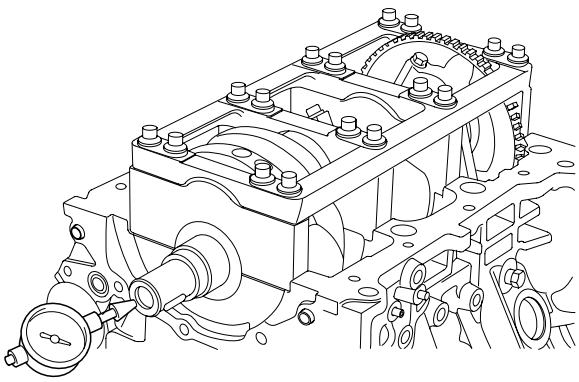

KCBF127A

   If the end play is greater than the maximum, replace the center bearing.

Thrust bearing thickness
1.925 ~ 1.965mm(0.0758 ~ 0.0774in.)

6. Inspect the main journals and the pin journals of the crankshaft.

7. Using a micrometer, measure the outer diameter of each main journal and pin journal.

Main journal diameter : 61.982~ 62.000mm
(2.4402 ~ 2.4409in.)
Crank pin diameter : 47.982 ~ 48.000mm
(1.8891 ~ 1.8898in.)

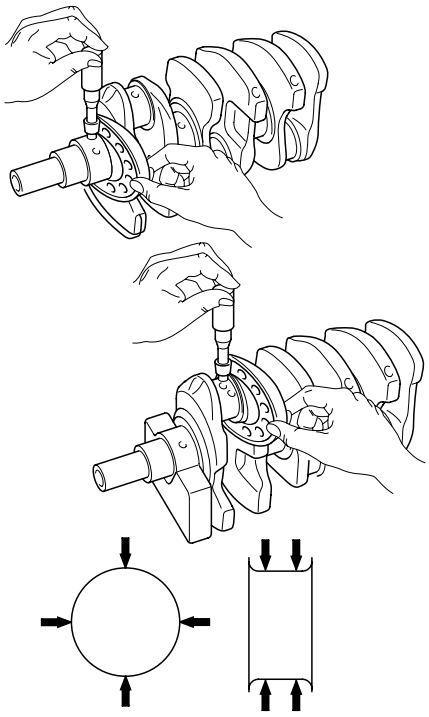

KCRF212A

CYLINDER BLOCK

1. Remove gasket materials.
   Using a gasket scraper, remove all the gasket material from the top surface of the cylinder block.

2. Clean cylinder block
   Using a soft brush and solvent, thoroughly clean the cylinder block.

3. Inspect the top surface of cylinder block for flatness.
   Using a precision straight edge and feeler gauge, measure the surface contacting the cylinder head gasket for warpage.

Flatness of cylinder block gasket surface
Standard : 0.03mm(0.0012in.) or less

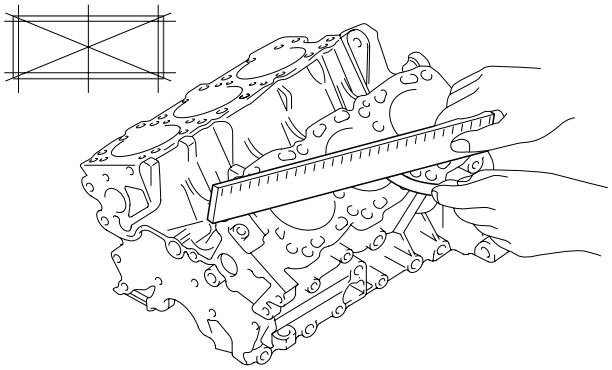

LDLG044A

4. Inspect cylinder bore diameter
   Visually check the cylinder for vertical scratchs.
   If deep scratches are present, replace the cylinder block or process the piston to be oversized.

5. Inspect the cylinder bore diameter
   Using a cylinder bore gauge, measure the cylinder bore diameter at position in the thrust and axial directions.

Standard diameter
86.70 ~ 86.73mm (3.4134 ~ 3.4146in.)

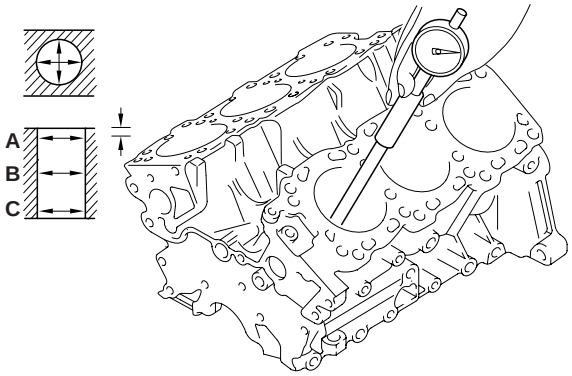

EDQF153A

6. Check the cylinder bore size code(A) on the cylinder block.

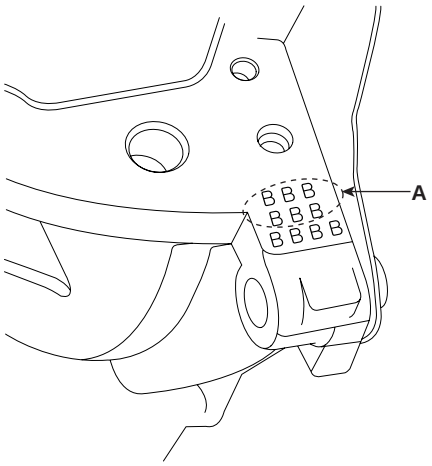

EDQF078B

Class	Size code	Cylinder bore inner diameter
A	A	86.70 ~ 86.71mm (3.4134 ~ 3.4138in.)
B	B	86.71 ~ 86.72mm (3.4138 ~ 3.4142in.)
C	C	86.72 ~ 86.73mm (3.4142 ~ 3.4146in.)

7. Check the piston size code(A) on the piston top face.

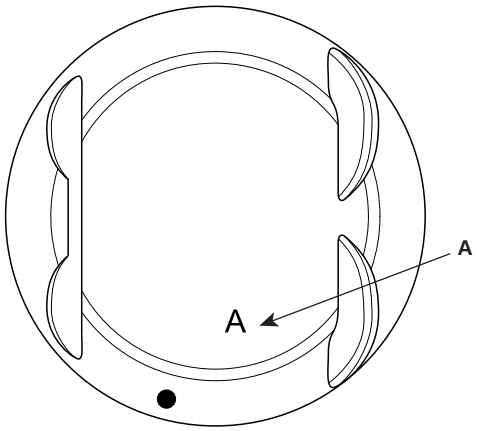

KCBF176D

Class	Size code	Piston outer diameter
A	A	86.67 ~ 86.68mm (3.4122 ~ 3.4126in.)
B	-	86.68 ~ 86.69mm (3.4126 ~ 3.4130in.)
C	C	86.69 ~ 86.70mm (3.4130 ~ 3.4134in.)

8. Select the proper piston related to the cylinder bore class.

Clearance : 0.02 ~ 0.04mm(0.0008 ~ 0.0016in.)

CYLINDER BORING

1. The over size piston is chosen on the maximum inner diameter of the cylinder.

NOTE

The piston size mark is on the top surface of the piston.

2. Measure the outer diameter of the piston which is installed before.

3. Calculate the new bore size with the measurement in the step 2.

New bore size = measured outer diameter of piston
+ 0.02 ~ 0.04mm(0.0008~0.0016in.)[clearance]
- 0.01mm(0.0004in.)[for horning]

4. Bore the cylinder to the calculated size.

CAUTION

Bore the cylinders in firing order to prevent the cylinders from be twisted by high temperature.

5. Stop boring and start horning for the proper clearance.

6. Measure the clearance between a piston and a cylinder.

Specification
0.02 ~ 0.04mm(0.0008 ~ 0.0016in.)

NOTE

Bore all the cylinders with the same over size.

PISTON AND RINGS

1. Clean pistons.
   1) Using a gasket scraper, remove the carbon from the piston top.
   2) Using a groove cleaning tool or a broken ring, clean the piston ring grooves.
   3) Using solvent and a brush, thoroughly clean the piston.

NOTE

Do not use a wire brush.

2. The standard measurement of the piston outside diameter is taken 14 mm (0.5512 in.) from the bottom of the piston.

Standard diameter
86.67 ~ 87.00(3.4122 ~ 3.4252in.)

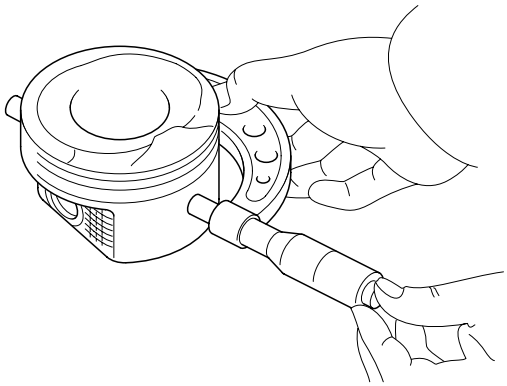

ECKD001D

3. Calculate the difference between the cylinder bore inner diameter and the piston outer diameter.

Piston-to-cylinder clearance
0.02 ~ 0.04mm(0.0008 ~ 0.0016in.)

4. Inspect the piston ring side clearance.
   Using a feeler gauge, measure the clearance between a new piston ring and the ring groove.

Piston ring side clearance
Standard
No.1 : 0.04 ~ 0.08mm (0.0016 ~ 0.0031in.)
No.2 : 0.03 ~ 0.07mm (0.0012 ~ 0.0027in.)
Oil ring : 0.06 ~ 0.15mm (0.0024 ~ 0.0059in.)
Limit
No.1 : 0.1mm (0.004in.)
No.2 : 0.1mm (0.004in.)
Oil ring : 0.2mm (0.008in.)

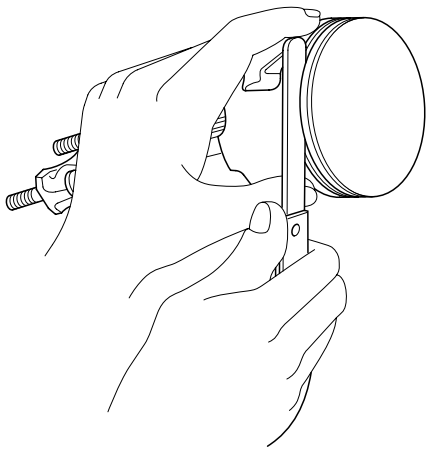

LDLG045A

If the clearance is greater than the maximum, replace the piston.

5. Inspect piston ring end gap.
   To measure the piston ring end gap, insert a piston ring into the cylinder bore. Position the ring at right angles to the cylinder wall by gently pressing it down with a piston. Measure the gap with a feeler gauge. If the gap exceeds the service limit, replace the piston ring. If the gap is too large, recheck the cylinder bore diameter. If the bore is over the service limit, the cylinder block must be replaced or bored

Piston ring end gap
Standard
No.1 : 0.15 ~ 0.30mm (0.0059 ~ 0.0118in.)
No.2 : 0.30 ~ 0.45m (0.0118 ~ 0.0177in.)
Oil ring : 0.20 ~ 0.70mm (0.0079 ~ 0.0275in.)
Limit
No.1 : 0.6mm (0.0236in.)
No.2 : 0.7mm (0.0275in.)
Oil ring : 0.8mm (0.0315in.)

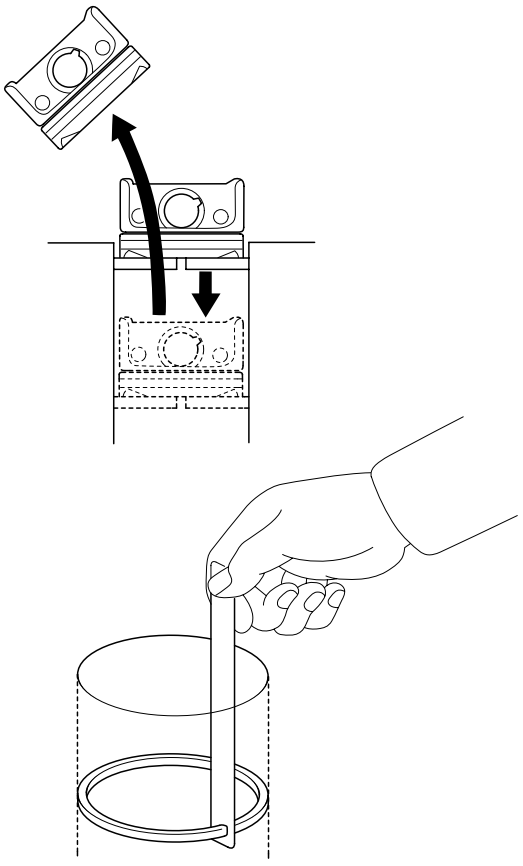

ECKD001K

PISTON PINS

1. Measure the outer diameter of the piston pin.

Piston pin outerdiameter
21.001 ~ 21.007mm (0.8268 ~ 0.8270in.)

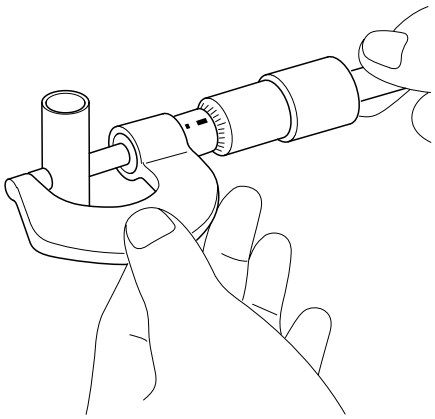

ECKD001Z

2. Measure the piston pin-to-piston clearance.

Piston pin-to-piston clearance
0.007 ~ 0.022mm (0.0003 ~ 0.0009in.)

3. Check the difference between the piston pin outer diameter and the connecting rod small end inner diameter.

Piston pin-to-connecting rod interference
-0.033 ~ -0.016mm (-0.0013 ~ -0.0006in.)

REASSEMBLY EBDEDDF4

NOTE

- *Thoroughly clean all parts before reassembling.*
- *Before installing the parts, apply fresh engine oil to all sliding and rotating surfaces.*
- *Replace all gaskets, O-rings and oil seals with new parts.*

1. Assemble the piston and the connecting rod.
   1) Use a hydraulic press for installation.
   2) The piston front mark(A) and the connecting rod front mark must face the timing belt side of the engine.

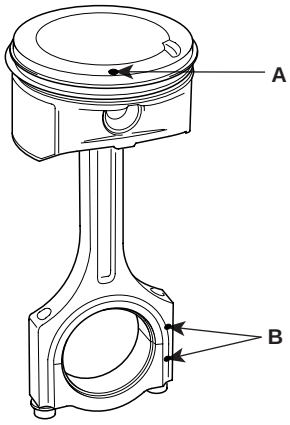

KCBF176E

2. Install piston rings.
   1) Install the oil ring spacer and 2 side rails by hand.
   2) Using a piston ring expander, install the 2 compression rings with the code mark facing upward.
   3) Position the piston rings so that the ring ends are as shown.

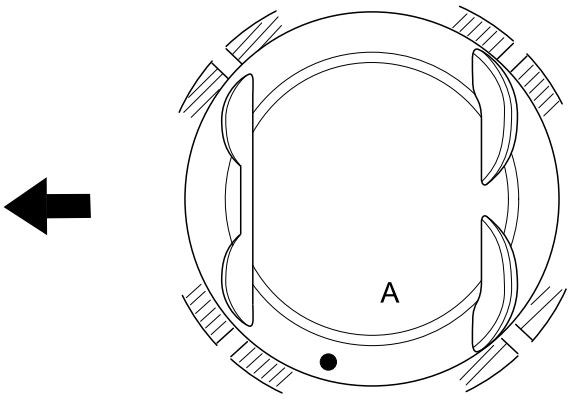

KCBF176F

3. Install the connecting rod bearings.
   1) Align the bearing(A) claw with the groove of the connecting rod or connecting rod cap(B).
   2) Install the bearings(A) in the connecting rod and connecting rod cap(B).

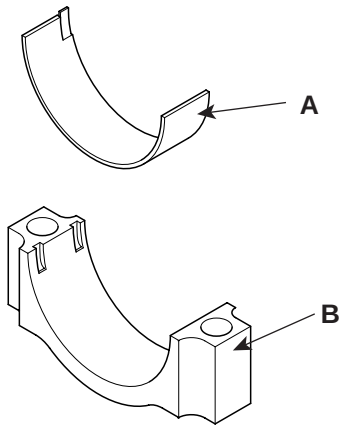

KCRF118B

CAUTION

When reassembling the connecting rods and the caps, ensure the front marks on them.

4. Install the CKP sensor(A).

Tightening torque
6.9 ~ 9.8Nm(0.7 ~ 1.0kgf.m, 5.1 ~ 7.2lb-ft)

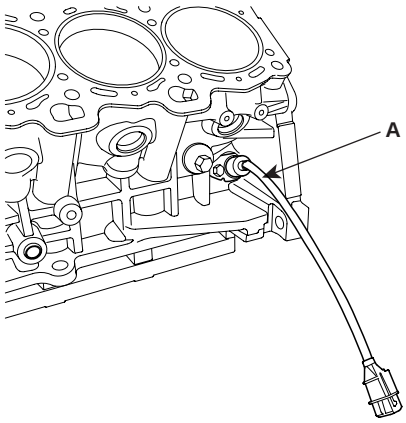

KCBF128A

5. Install main bearings.

NOTE

Upper bearings have the oil grooves of the oil holes; Lower bearings do not.

1) Aligning the bearing claw with the claw groove of the cylinder block, push in the 4 upper bearings(A).

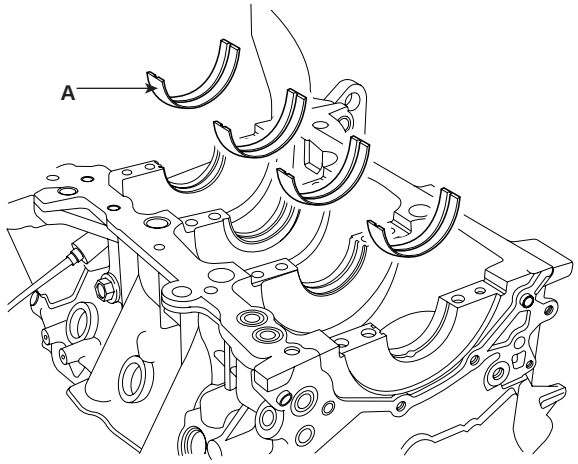

EDQF076A

2) Aligning the bearing claw with the claw groove of the main bearing cap, push in the 4 lower bearings(B) on the bearing caps(A).

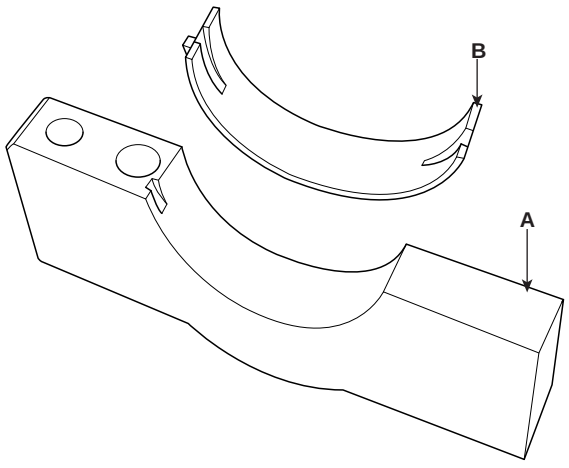

EDQF079A

6. Install thrust bearings.
Install the 2 thrust bearings(A) under the No.3 journal position of the cylinder block with the oil grooves facing outward.

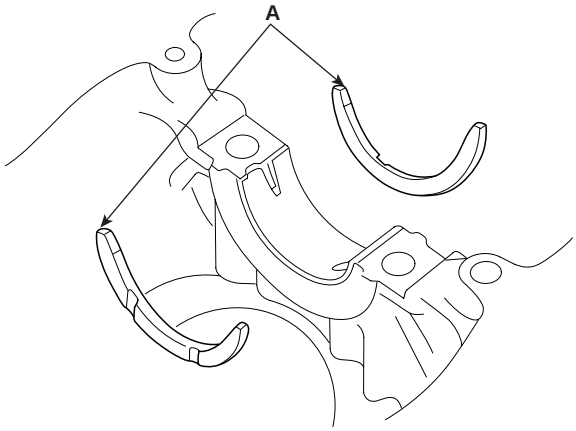

ECKD324A

7. Place crankshaft(A) on the cylinder block.

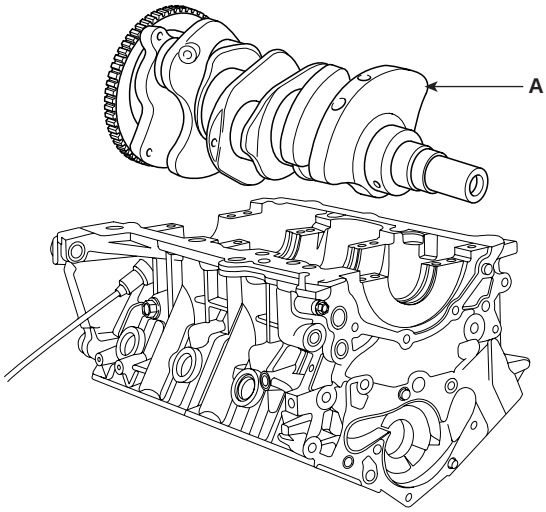

EDQF074A

8. Place main bearing caps on cylinder block.

9. Install main bearing cap bolts.

   1) Install and uniformly tighten the bearing cap bolts, in two steps, in the sequence shown.

Tightening torque
M8 : 15.7Nm(1.6 kgf.m, 11.6lb-ft) + 90°
M10 : 29.4Nm(3.0 kgf.m, 21.7lb-ft)+ 90°

NOTE

- *Use new main bearing cap bolt with engine oil applied.*
- *If any of the bearing cap bolts are broken or deformed, replace it.*
- *Washers have their direction(Up/Down)*
- *Assemble the bearing cap bridge on which its arrow mark faces the engine front.*
- *Before tightening, make the bearing caps be seated on the block firmly.*

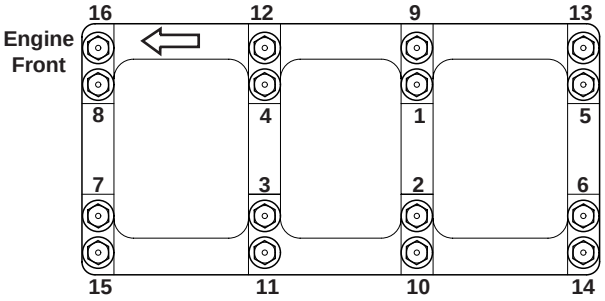

LDLG046A

NOTE

Use SST(09221-4A000), install main bearing cap bolts.

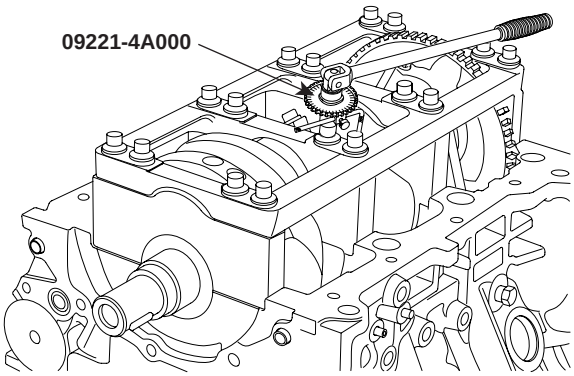

KCBF127B

   2) Check that the crankshaft turns smoothly.

10. Check crankshaft end play.

11. Install the piston and connecting rod assemblies.

NOTE

- *Before installing the pistons, apply a coat of engine oil to the ring grooves and cylinder bores.*
- *When installing the piston, ensure that the coat on the cylinder wall is not damaged or scratched.*

   1) Install the ring compressor, check that the bearing is securely in place, then position the piston in the cylinder, and tap it in using the wooden handle of a hammer.

   2) Stop inserting the piston when the ring inserted in the cylinder and check the alignment of the journal and the connecting rod.

   3) Apply engine oil to the bolt threads. Install the rod caps with bearings, and torque the bolts.

Tightening torque
19.6Nm (2.0kgf.m, 14.46lb-ft) + 90°

NOTE

- *Always use new connecting rod bolts.*
- *Maintain downward force on the ring compressor to prevent the rings from expanding before entering the cylinder bore.*

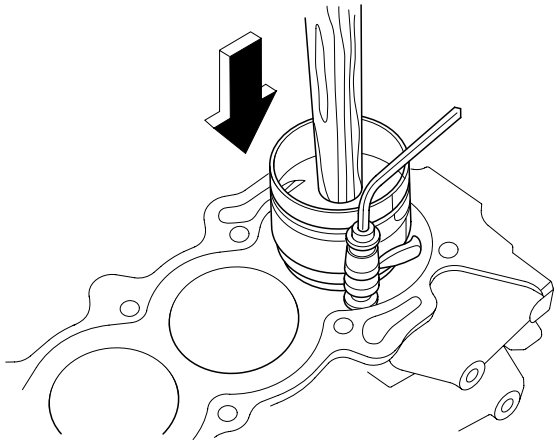

ECKD001F

- *Use SST(09221-4A000), install connecting rod bearing cap bolts.*

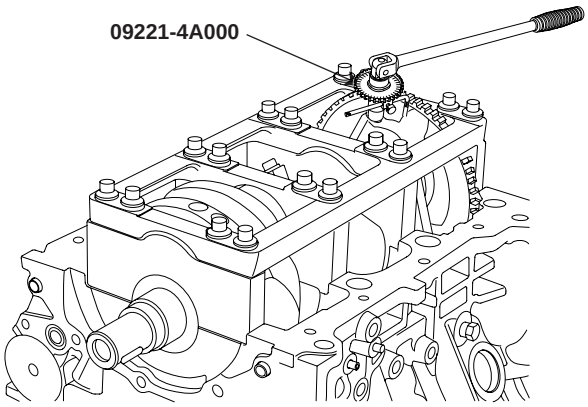

KCBF127C

12. Install the rear oil seal case.

Tightening torque
9.80 ~ 11.76Nm (1.0 ~ 1.2kgf.m, 7.23 ~ 8.67lb-ft)

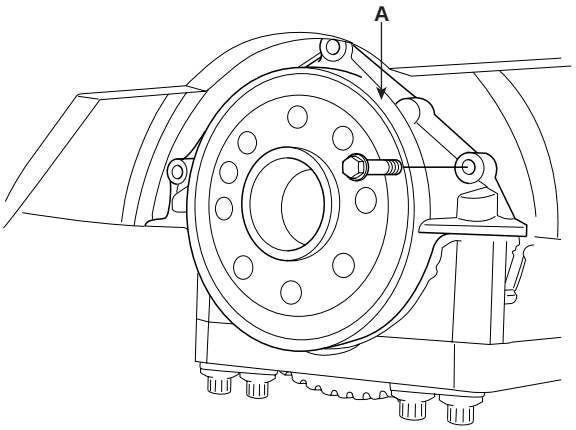

EDQF174A

1) Make clean the sealing face before assembling two parts.

NOTE

- *Remove harmful foreign materials on the sealing face before applying sealant*
- *Apply sealant to the inner threads of the bolt holes.*

2) Assembling rear oil seal case, the liquid sealant TB1217H should be applied to the rear oil seal case.
The part must be assembled within 5 minutes after sealant was applied.

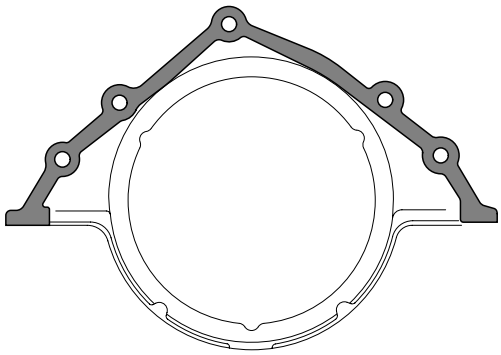

KCBF129A

13. Using SST(09231-33000), install rear oil seal after applying engine oil on the rip of the oil seal.

14. Install the oil pump case.

15. Install upper oil pan.

1) Using a gasket scraper, remove all the old packing material from the gasket surfaces.

2) Before assembling the oil pan, the liquid sealant TB1217H should be applied on upper oil pan.
The part must be assembled within 5 minutes after the sealant was applied.

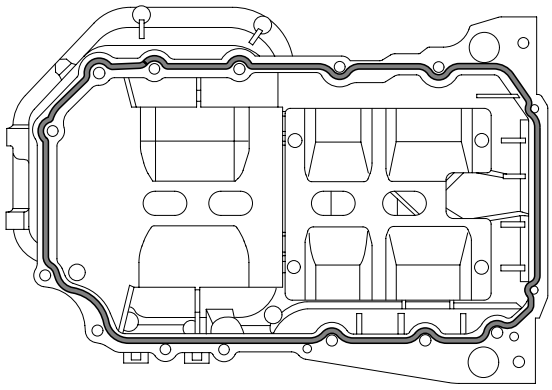

KCBF130A

NOTE

- *Clean the sealing face before assembling two parts.*
- *Remove harmful foreign materials on the sealing face before applying sealant.*
- *When applying sealant gasket, sealant must not protrude into the inside of oil pan.*
- *To prevent leakage of oil, apply sealant gasket to the inner threads of the bolt holes.*

3) Install upper oil pan.
Uniformly tighten the bolts in several passes.

Tightening torque
Bolts 1~15 : 18.6 ~ 23.5Nm(1.9 ~ 2.4kgf.m, 13.7 ~ 17.4lb-ft)
Bolts 16,17 : 4.9 ~ 6.9Nm(0.5 ~ 0.7kgf.m, 3.6 ~ 5.1lb-ft)

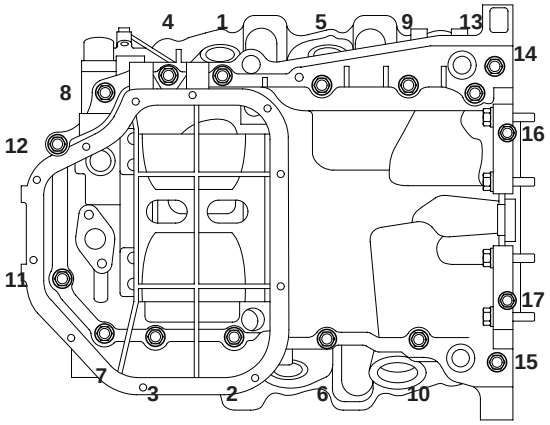

KCBF131A

16. Install the oil screen(A).

Tightening torque
14.7 ~ 21.6Nm (1.5 ~ 2.2kgf.m, 10.8 ~ 15.9lb-ft)

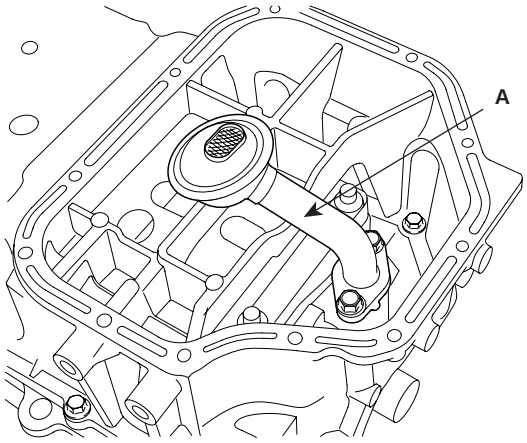

KCBF124A

17. Install the lower oil pan.

1) Using a gasket scraper, remove all the old packing material from the gasket surfaces.

2) Before assembling the oil pan, the liquid sealant TB1217H should be applied on lower oil pan.
The part must be assembled within 5 minutes after the sealant was applied.

NOTE

- *Clean the sealing face before assembling two parts.*
- *Remove harmful foreign materials on the sealing face before applying sealant.*
- *When applying sealant gasket, sealant must not protrude into the inside of oil pan.*
- *To prevent leakage of oil, apply sealant gasket to the inner threads of the bolt holes.*

3) Install lower oil pan.
Uniformly tighten the bolts in several passes.

Tightening torque
9.8 ~ 11.8Nm (1.0 ~ 1.2kgf.m, 7.2 ~ 8.7lb-ft)

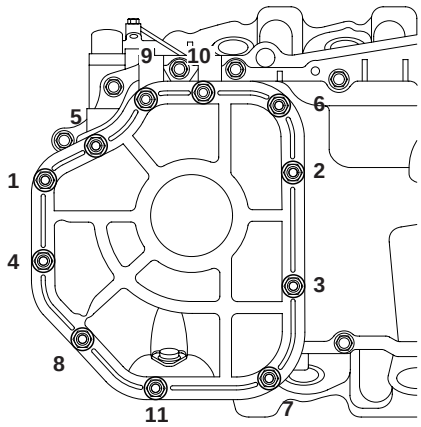

KCBF133A

18. Install the air conditioning compressor bracket(A). (Refer to 'HA' group)

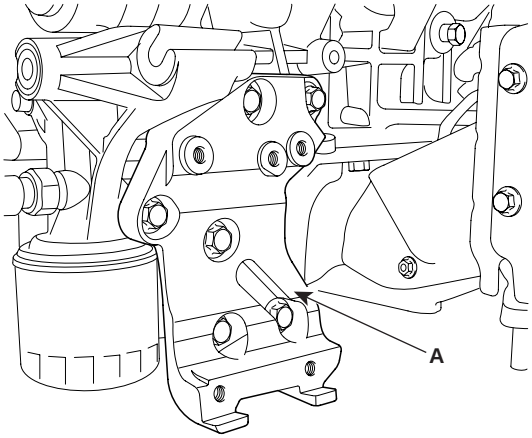

KCBF138A

19. Install the power steering pump bracket(A) and the knock sensor(B).

Tightening torque
18.6 ~ 23.5Nm (1.9 ~ 2.4kgf.m, 13.7 ~ 17.4lb-ft)

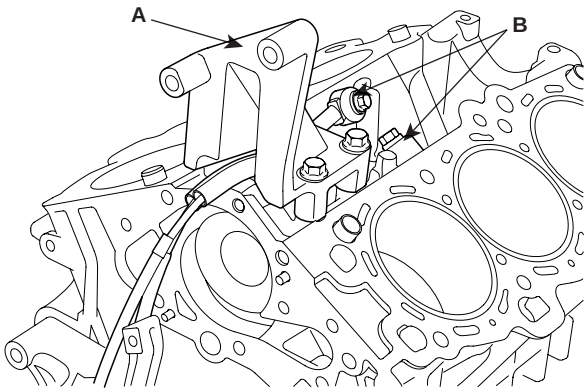

KCBF122A

CAUTION

- ***On Bank 1, the black knock sensor connector should be installed and on Bank 2, the gray one should.***

INSTALLATION EF30F311

1. Install the water pump.
2. Install the air conditioning compressor.(Refer to 'HA' group).
3. Install the cylinder head.
4. Install the power steering pump.(Refer to 'ST' group).
5. Install the generator.
6. Install the intake manifold.
7. Install the exhaust manifold.
8. Install the timing belt.
9. Install the rear plate(A).

Tightening torque
9.8 ~ 11.8Nm(1.0 ~ 1.2kgf.m, 7.2 ~ 8.7lb-ft)

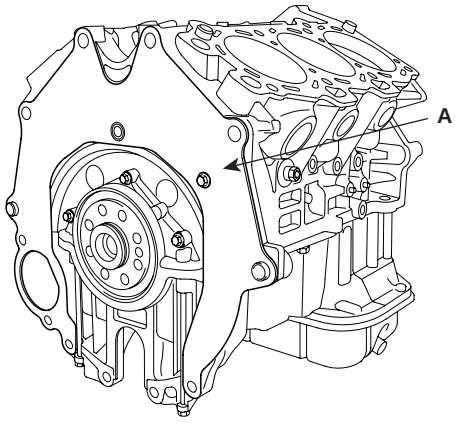

KCBF121A

10. Install the drive plate(A).

Tightening torque
71.6 ~ 75.5Nm(7.3 ~ 7.7kgf.m, 52.8 ~ 55.7lb-ft)

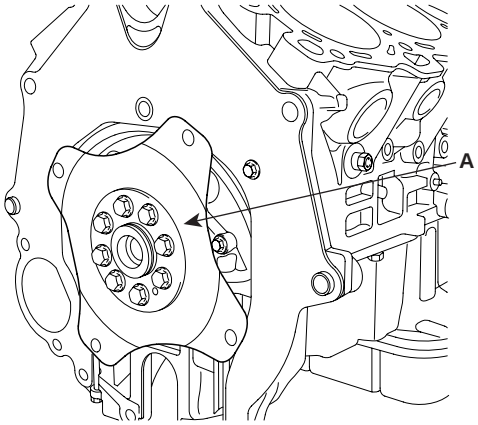

KCBF120A

COOLING SYSTEM

COMPONENTS E3589507

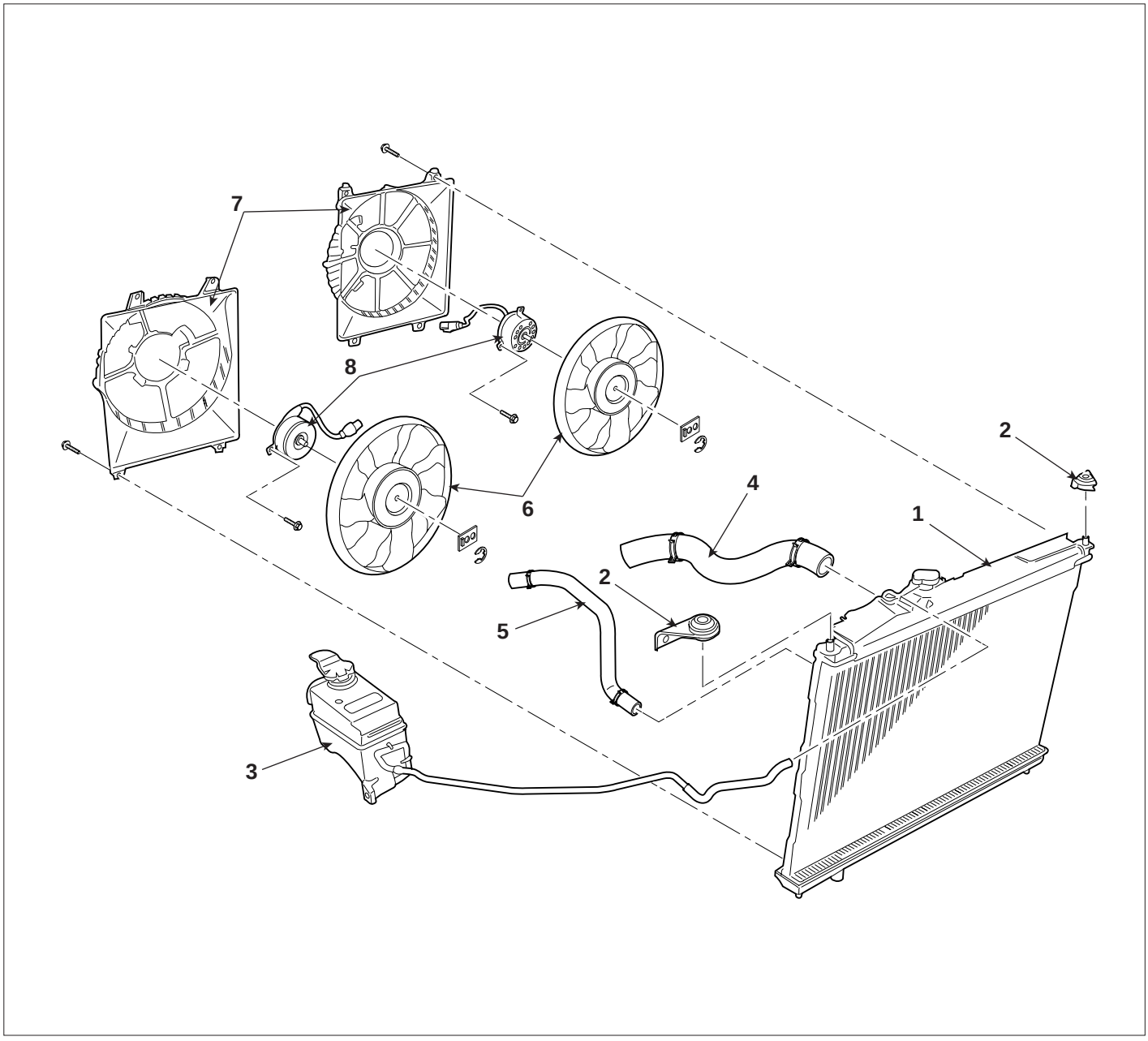

1. Radiator
2. Radiator bracket
3. Coolant reservoir tank
4. Radiator upper hose
5. Radiator lower hose
6. Radiator fan
7. Shroud
8. Motor assembly

SCMEM6010L

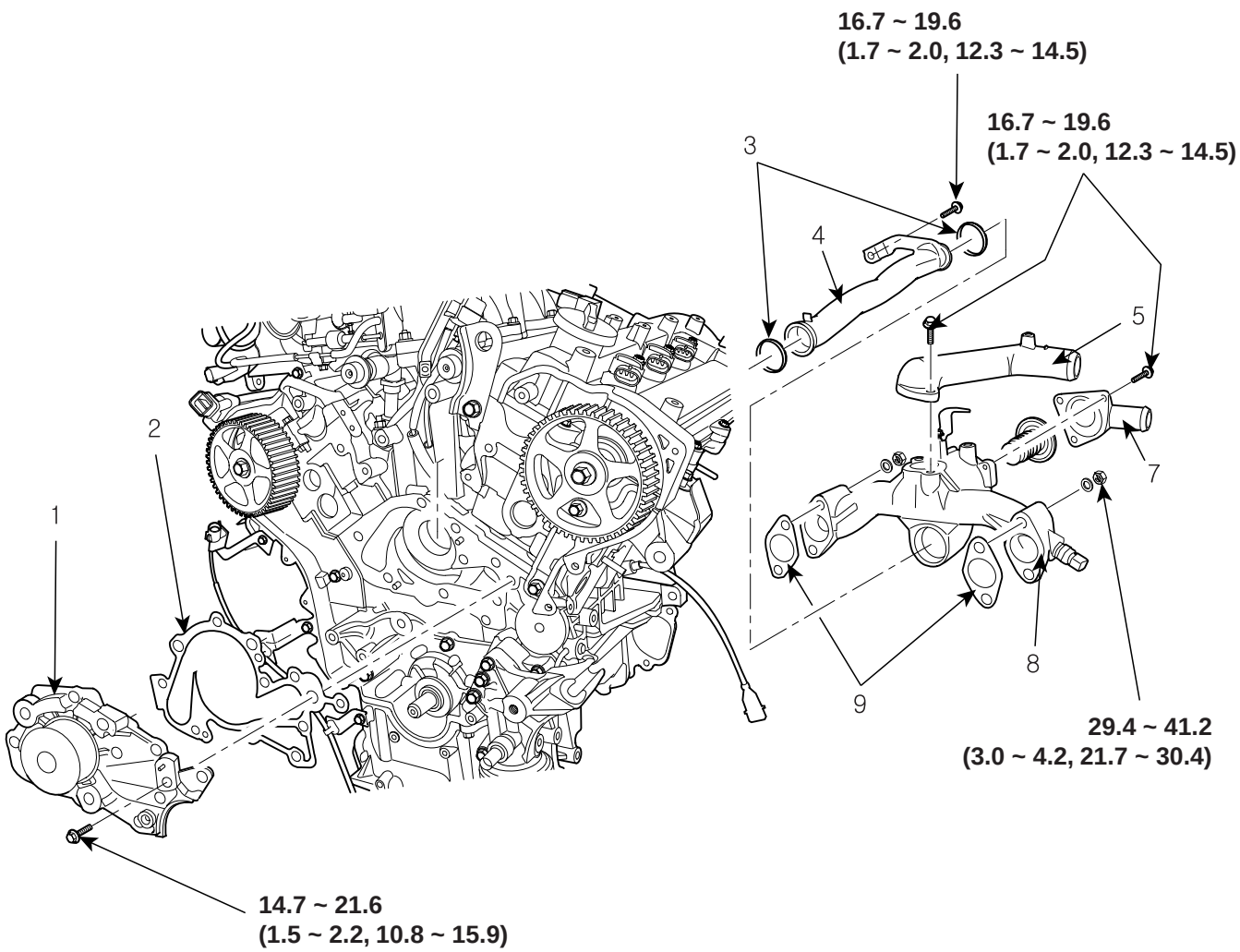

TORQUE : N.m (kgf.m, lb-ft)

1. Water pump
2. Water pump gasket
3. Water pipe O-ring
4. Water inlet pipe
5. Water outlet pitting
6. Thermostat
7. Water inlet pitting
8. Water temp. control assembly
9. Water temp. control assembly gasket

LDLG048A

ENGINE COOLANT REFILLING AND BLEEDING EDA90EDC

WARNING

Never remove the radiator cap when the engine is hot. Serious scalding could be caused by hot fluid under high pressure escaping from the radiator.

CAUTION

When pouring engine coolant, be sure to shut the relay box lid and not to let coolant spill on the electrical parts or the paint. If any coolant spills, rinse it off immediately.

1. Make sure the engine and radiator are cool to the touch.
2. Open the radiator cap.
3. Loosen the drain plug, and drain the coolant.
4. Tighten the radiator drain plug securely.
5. Remove, drain and clean the reservoir tank.
6. Fill water slowly through the radiator cap. Push the upper/lower hoses of the radiator so as to bleed air easily.
7. Warm the engine until the cooling fan operates 2~3 times.
   Accelerate the engine 2~3 times without load.
8. Wait until the engine is cold.
9. Repeat the steps 1~8 until the water drained is clean.
10. Fill fluid mixture with coolant and water(4 : 6) slowly through the radiator cap. Push the upper/lower hoses of the radiator so as to bleed air easily.
11. Start the engine and run so coolant circulates.
    When the cooling fan operates and coolant circulates, refill coolant through the radiator cap.
12. Repeat 11 until the cooling fan cycles 3 ~ 5 times and bleed air sufficiently out of the cooling system.
13. Install the radiator cap and fill the reservoir tank to the "MAX"(or "F") line with coolant.
14. Run the vehicle under idle until the cooling fan operates 2 ~ 3 times.
15. Stop the engine and wait until coolant gets cool.
16. Repeat 10 to 15 until the coolant level doesn't fall any more, bleeding air out of the cooling system.

NOTE

Check the coolant level again in the reservoir tank for 2 ~ 3 days after replacing coolant.

CAP TESTING

1. Remove the radiator cap, wet its seal with engine coolant, and install it to a pressure tester.

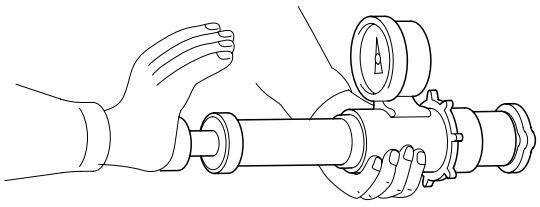

ECKD501X

2. Apply a pressure of 93 ~ 123kPa (0.95 ~ 1.25kgf/cm², 14 ~ 19psi).
3. Check for a drop in pressure.
4. If the pressure drops, replace the cap.

REMOVAL EEAF37FE

WATER PUMP

1. Drain the engine coolant.

WARNING

System is under high pressure when the engine is hot. To avoid danger of releasing scalding engine coolant, remove the cap only when the engine is cool.

2. Remove drive belt(A).

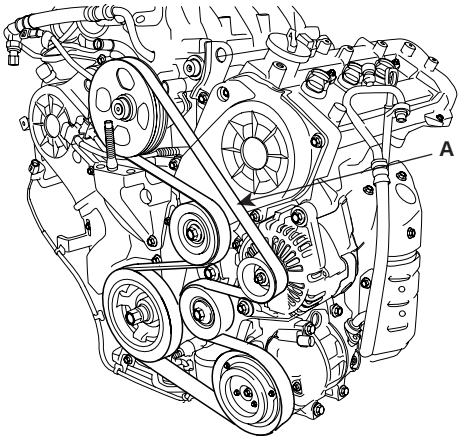

KCBF105A

3. Remove the timing belt.
4. Remove the water pump(A) and gasket(B).

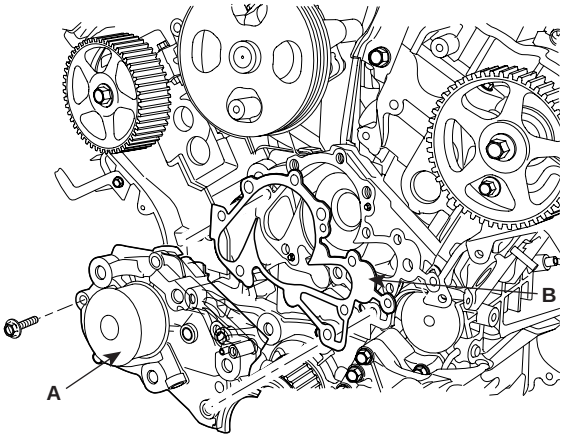

KCBF136A

WATER TEMPERATURE CONTROL ASSEMBLY

1. Drain the engine coolant.
2. Remove the air cleaner assembly.
3. Disconnect the radiator upper and lower hose(A, B).

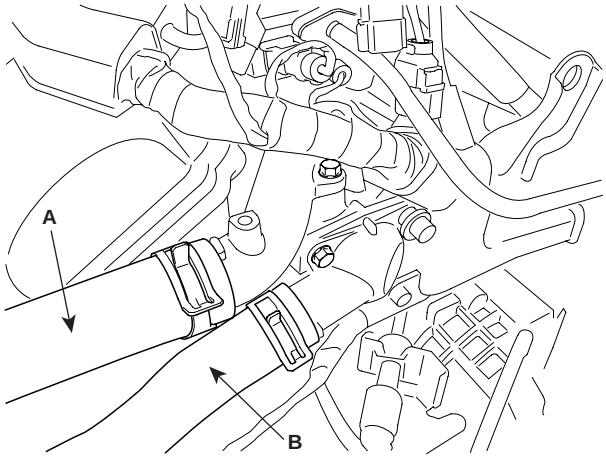

LDLG008A

4. Disconnect the ECT(Engine Coolant Temperature) sensor connector.
5. Remove the coolant hose related to the heater hoses and the ECT(Engine Coolant Temperature) system.
6. Remove wiring protector.
7. Remove water temperature control assembly(A) and the gaskets(B).

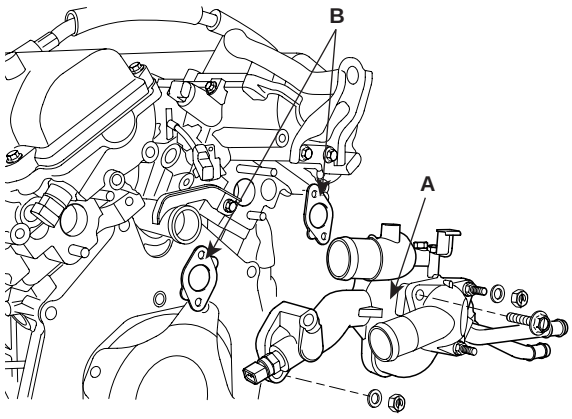

KCBF139A

8. Remove the water pipe(A).

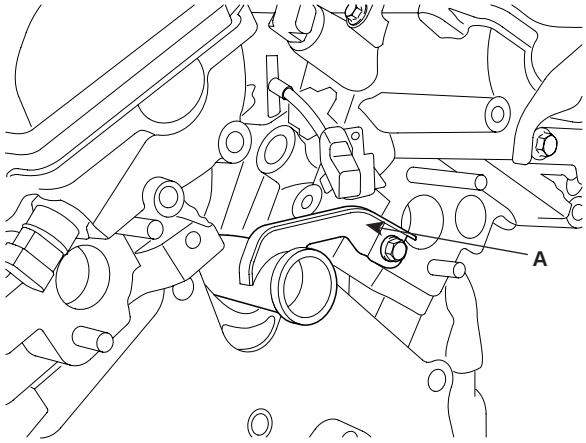

KCBF140A

THERMOSTAT

NOTE

Removal of the thermostat would have an adverse effect, causing a lowering of cooling efficiency. Do not remove the thermostat, even if the engine tends to overheat.

1. Drain engine coolant so its level is below thermostat.
2. Remove the coolant inlet pitting(A) and the thermostat(B).

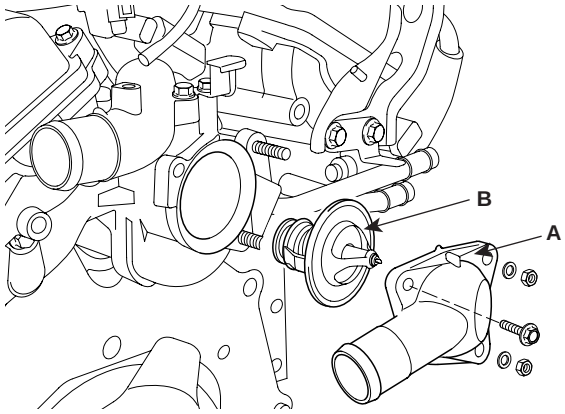

KCBF141A

RADIATOR

1. Drain the engine coolant. Remove the radiator cap to speed coolant draining.
2. Remove the air duct.
3. Remove the upper radiator hose(A) and lower radiator hose.

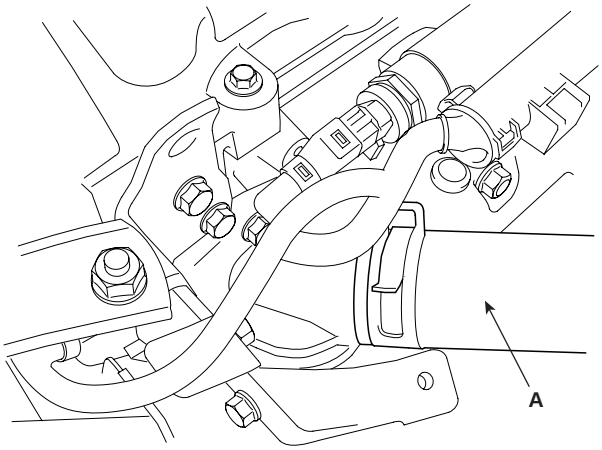

SCMEM6017D

4. Disconnect the radiator fan connector.(A, B)

LH

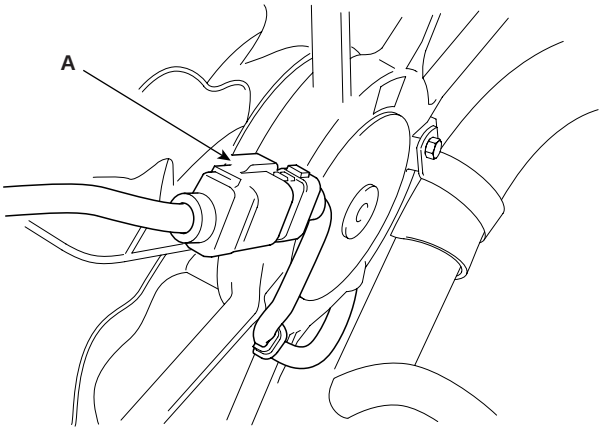

SCMEM6036D

RH

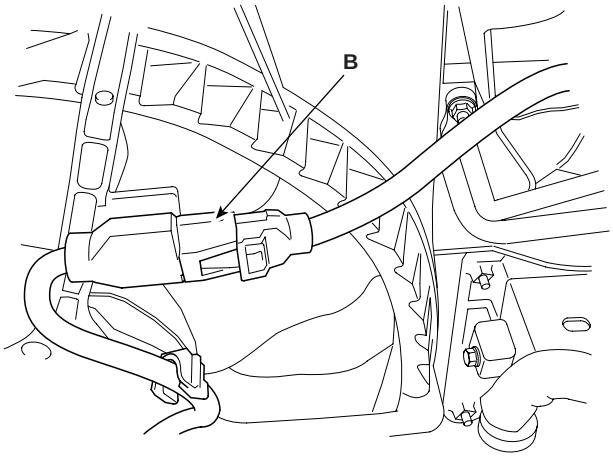

SCMEM6037D

5. Remove the radiator grill upper cover.(A)

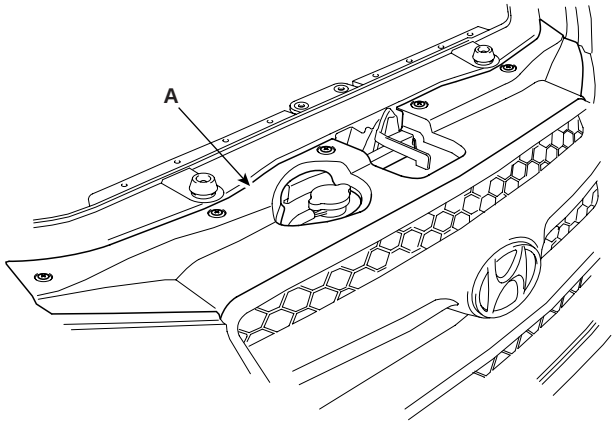

SCMEM6039D

6. Remove the head lamp washer nozzle cover and front bumper.(Refer to BD group)

7. Remove the radiator cap hose.(A)

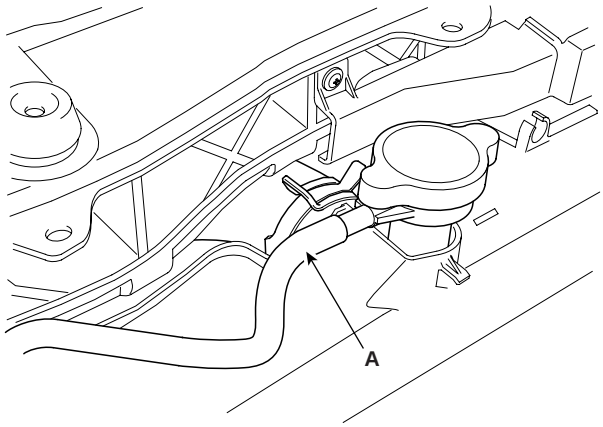

SCMEM6040D

8. First, remove the cooling fan.(First, separate LH side)

NOTE

Remove the bracket bolt of radiator lower hose.

9. Remove the radiator bracket bolt of the radiator upper side(A).

LH

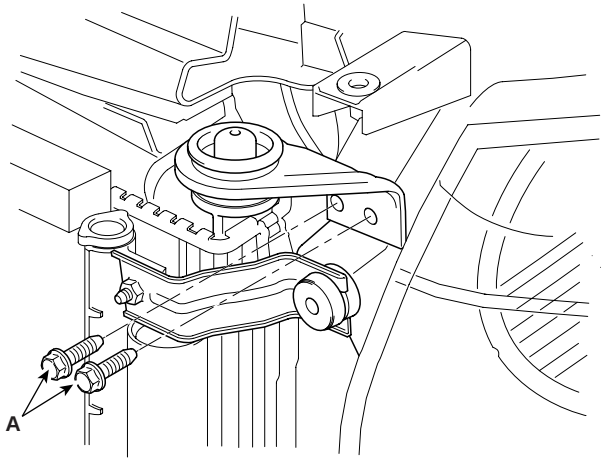

SCMEM6041D

RH

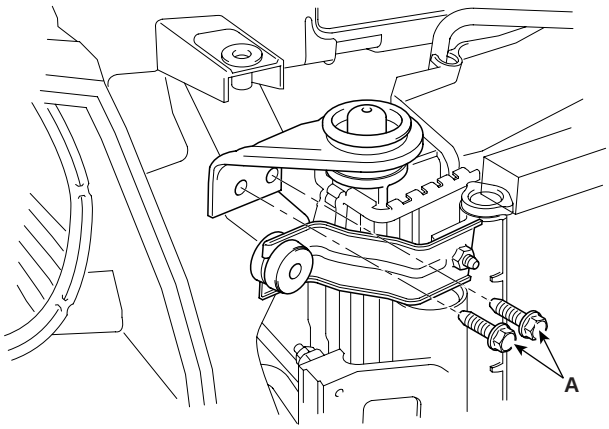

SCMEM6042D

10. Remove the radiator assembly from the engine.

INSPECTION ECD22755

WATER PUMP

1. Check each part for cracks, damage or wear, and replace the coolant pump assembly if necessary.
2. Check the bearing for damage, abnormal noise and sluggish rotation, and replace the coolant pump assembly if necessary.
3. Check for coolant leakage. If coolant leaks from hole, the seal is defective. Replace the coolant pump assembly.

NOTE

A small amount of "weeping" from the bleed hole is normal.

THERMOSTAT

1. Immerse the thermostat in water and gradually heat water.

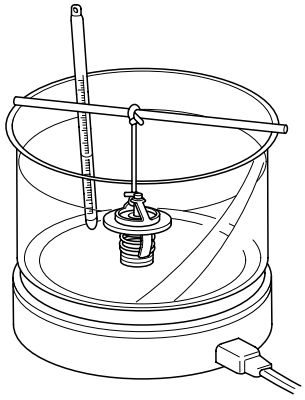

ECKD503B

2. Check the valve opening temperature.
   Valve opening temperature : 82°C (177°F)
   Full opening temperature : 95°C (205°F)
   If the valve opening temperature is not as specified, replace the thermostat.
3. Check the valve lift.
   Valve lift : Min. 10mm (0.4in.) at 95°C (205°F)
   If the valve lift is not as specified, replace the thermostat.

INSTALLATION E8886E63

WATER PUMP

1. Install the water pump(A) and a new gasket(B) with the bolts.

Tightening torque
14.7 ~ 21.6Nm (1.5 ~ 2.2kgf.m, 10.8 ~ 15.9lb-ft)

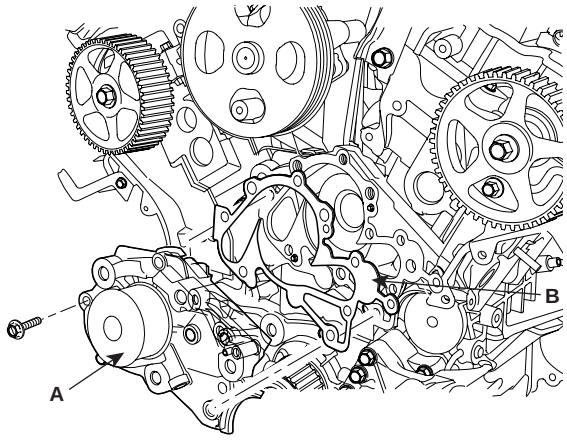

KCBF136A

NOTE

Clean the contacting face before assembling.

2. Install the timing belt.
3. Install drive belt(A).

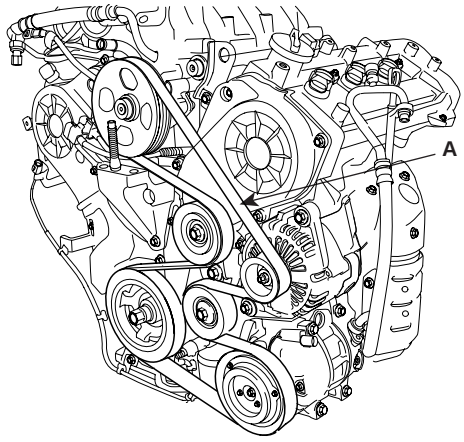

KCBF105A

4. Fill with engine coolant.
5. Start engine and check for leaks.
6. Recheck engine coolant level.

WATER TEMPERATURE CONTROL ASSEMBLY

1. Install the water pipe(A).

Tightening torque
16.7 ~ 19.6Nm (1.7 ~ 2.0kgf.m, 12.3 ~ 14.5lb-ft)

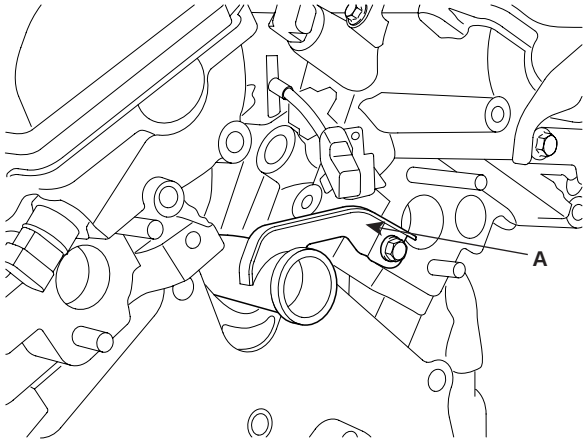

KCBF140A

2. Install the water temperature control assembly(A) with a new gasket(B).

Tightening torque
29.4 ~ 41.2Nm(3.0 ~ 4.2kgf.m, 21.7 ~ 30.4lb-ft

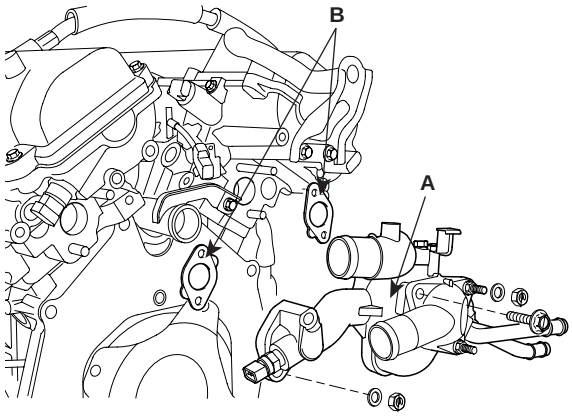

KCBF139A

NOTE

Use new O-rings and wet them with water or coolant when reassembling.

3. Install the wiring protector.
4. Connect the heater hose and ECT hose.
5. Connect the ECT sensor connector.
6. Connect the radiator upper and the lower hose(A).

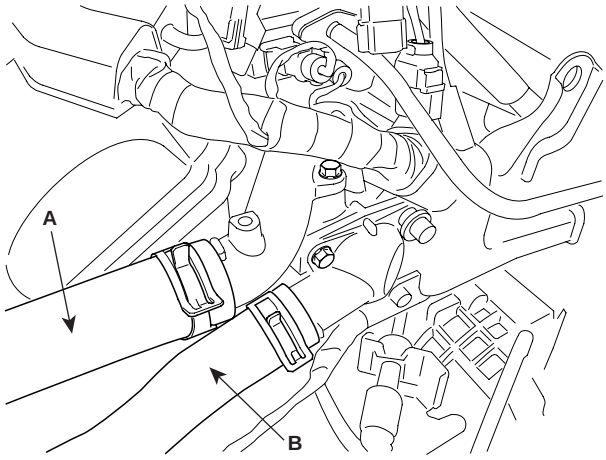

LDLG008A

7. Install the air cleaner assembly.
8. Fill with engine coolant.
9. Start engine and check for leaks.
10. Recheck engine coolant level.

THERMOSTAT

1. Place thermostat(B) in coolant inlet pitting(A). Install the thermostat with the jiggle valve upward.

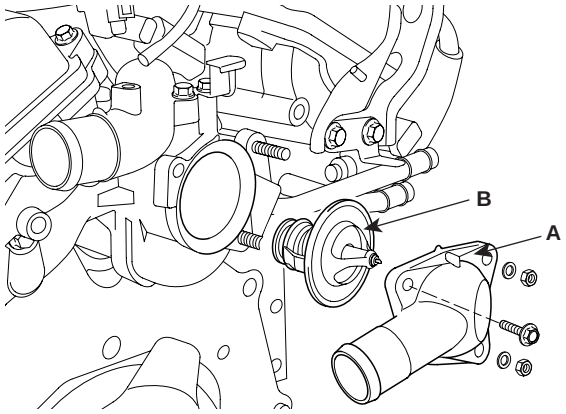

KCBF141A

2. Install the coolant inlet pitting(A).

Tightening torque
16.66 ~ 19.60Nm (1.7 ~ 2.0kgf.m, 12.30 ~ 14.47lb-ft)

3. Fill with engine coolant.
4. Start engine and check for leaks.

RADIATOR

1. Install the engine from radiator assembly.
2. Install the radiator bracket bolt.(A)

LH

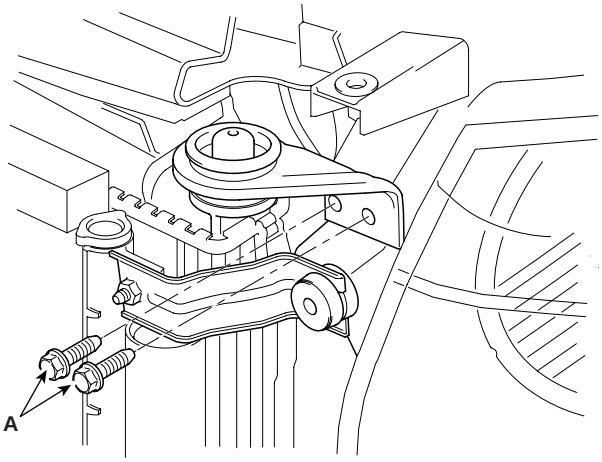

SCMEM6041D

RH

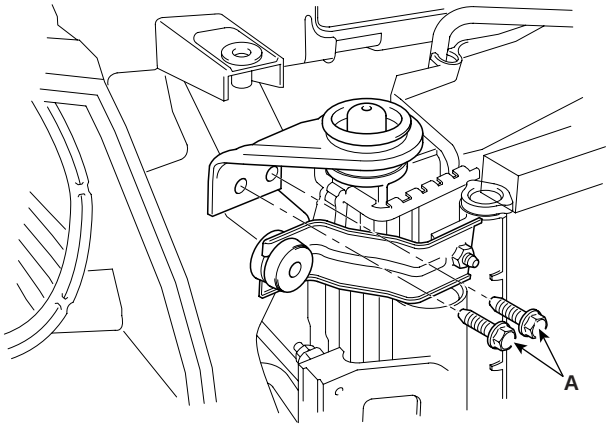

SCMEM6042D

3. Install the cooling fan.

4. Install the radiator cap hose.(A)

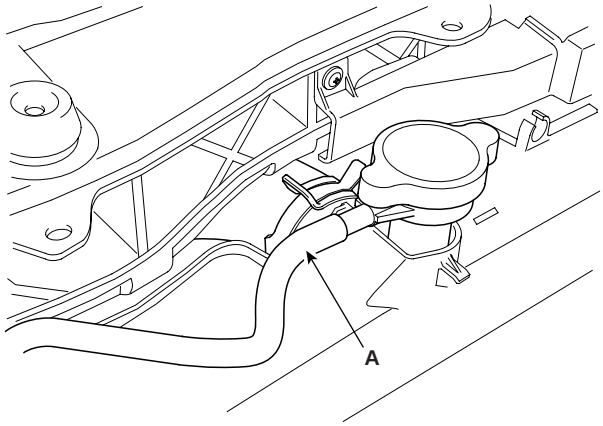

SCMEM6040D

5. Install the front bumper and head lamp washer nozzle cover.(Refer to BD group)

6. Install the radiator grill upper cover.(A)

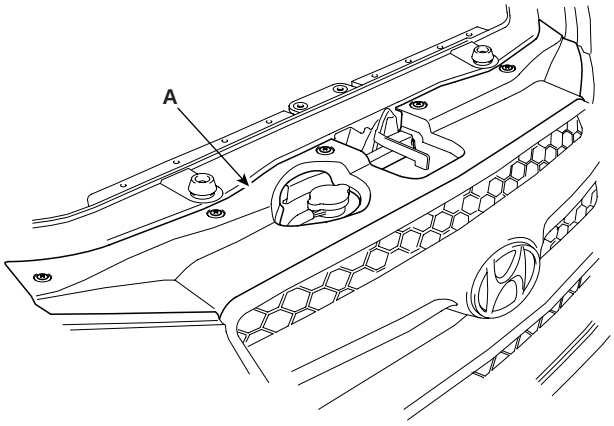

SCMEM6039D

7. Connect the radiator fan connector.(A, B)

LH

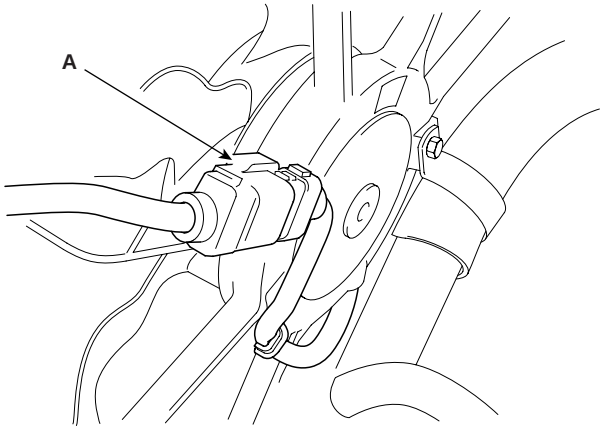

SCMEM6036D

RH

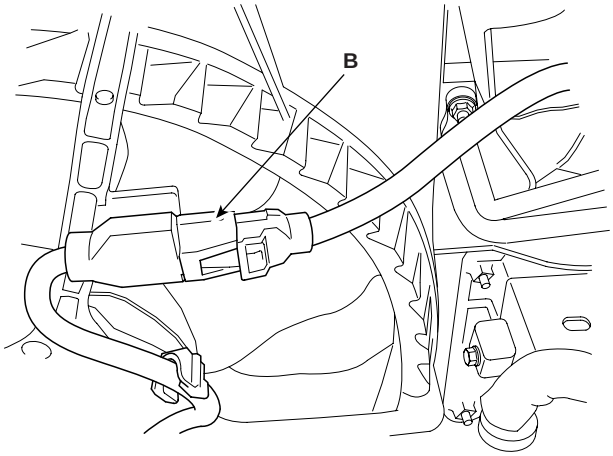

SCMEM6037D

8. Install the upper radiator hose.(A)

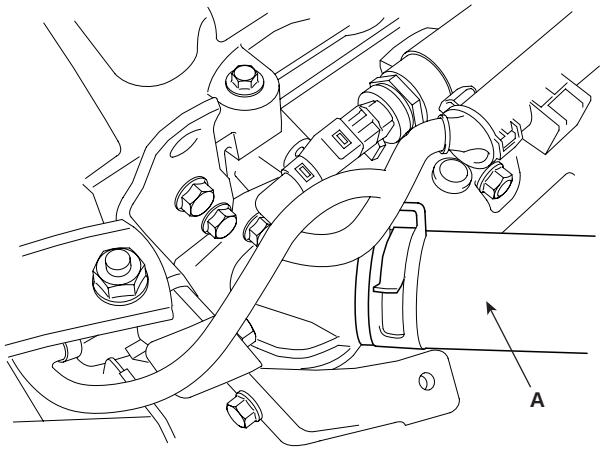

SCMEM6017D

9. Install the air duct.

10. Refill with engine coolant.

LUBRICATION SYSTEM

COMPONENTS ED860823

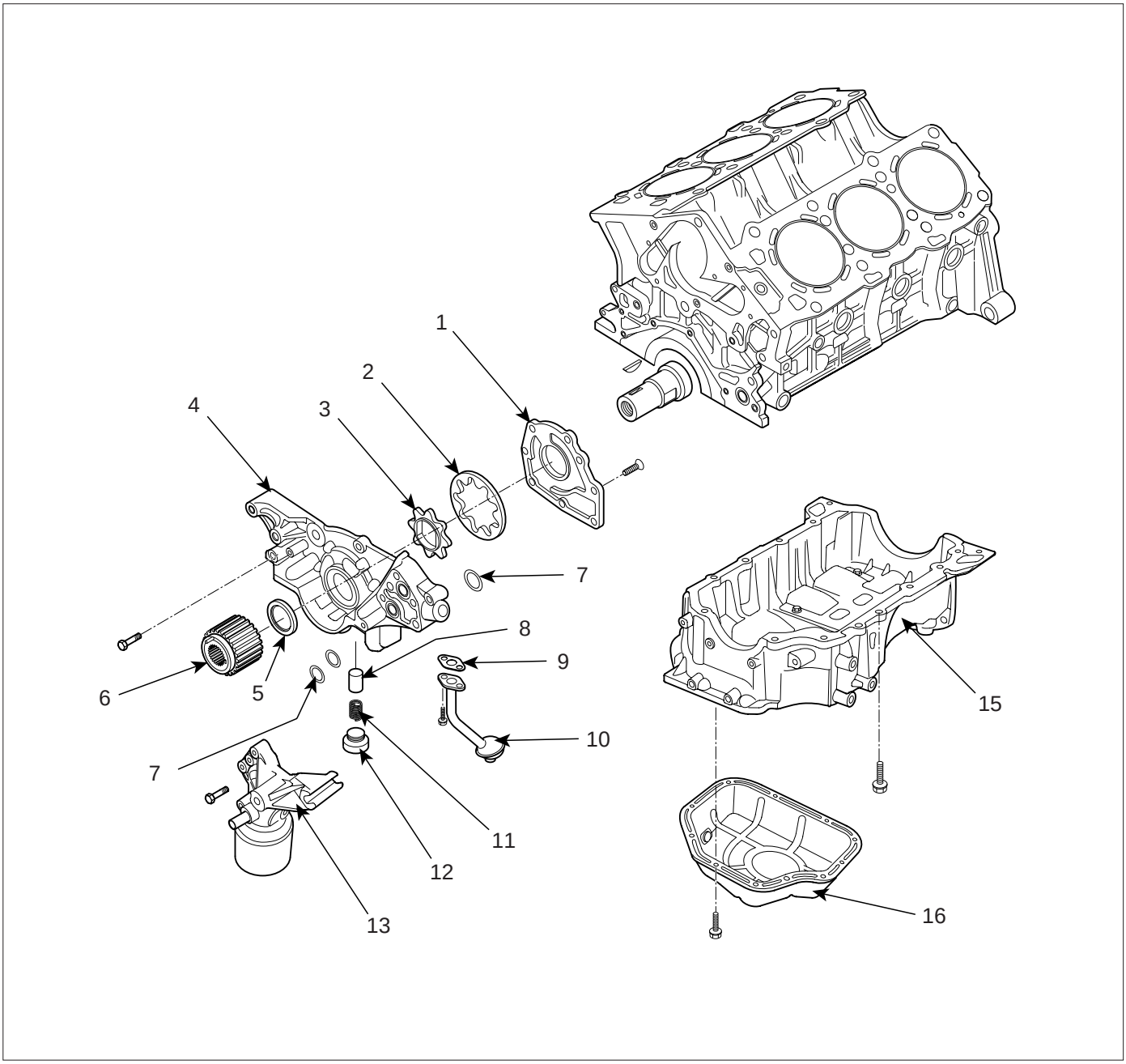

1. Oil pump cover
2. Oil pump outer rotor
3. Oil pump inner rotor
4. Oil pump case rotor
5. Oil seal
6. Crankshaft sprocket
7. O-ring
8. Relief plunger
9. Oil screen gasket
10. Oil screen
11. Relief spring
12. Plug
13. Oil filter bracket
15. Upper oil pan
16. Lower oil pan

LDLG051A

INSPECTION E56035AA

1. Check engine oil quality.
   Check the oil for deterioration, entry of water, discoloring or thinning.
   If the quality is visibly poor, replace oil.

2. Check the engine oil level.
   After warning up the engine, make the engine stand still for five minutes or more. The oil level should be between the 'L' and 'F' marks on the dipstick, then.
   If low, check for leakage and add oil up to the "F" mark.

NOTE

Do not fill with engine oil above the "F" mark.

SELECTION OF ENGINE OIL

Recommended API classification : Above SJ or SL
Recommended SAE viscosity grades : 5W-20

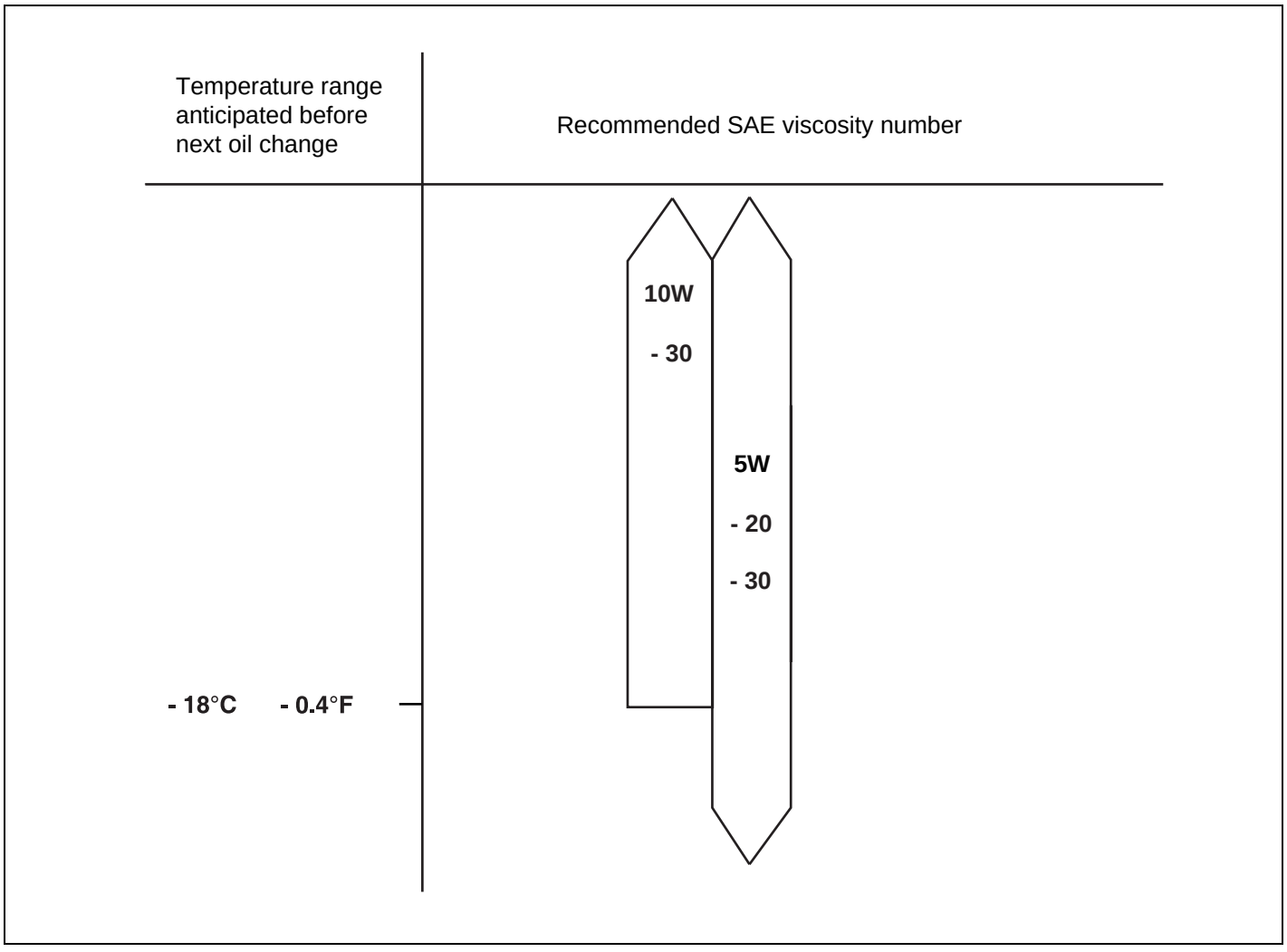

EDRF020A

NOTE

For best performance and maximum protection of all types of operation, select only those lubricants which :

- *Satisfy the requirement of the API classification.*
- *Have proper SAE grade number for expected ambient temperature range.*

Lubricants that do not have both an SAE grade number and API service classification on the container should not be used.

REMOVAL E21D8F6A

OIL PUMP CASE

1. Drain engine oil.
2. Remove the front right wheel and tire.
3. Remove the front right side cover.
4. Remove the front muffler.
5. Remove the generator.
6. Remove the timing belt.
7. Remove the oil filter bracket(A).

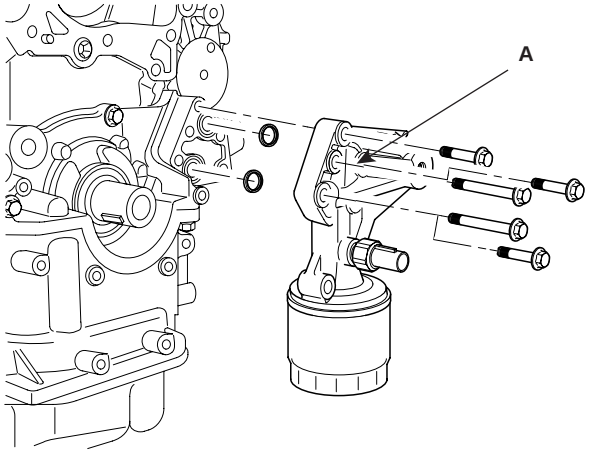

KCBF147A

8. Using SST(09215-3C000), remove the lower oil pan(A).

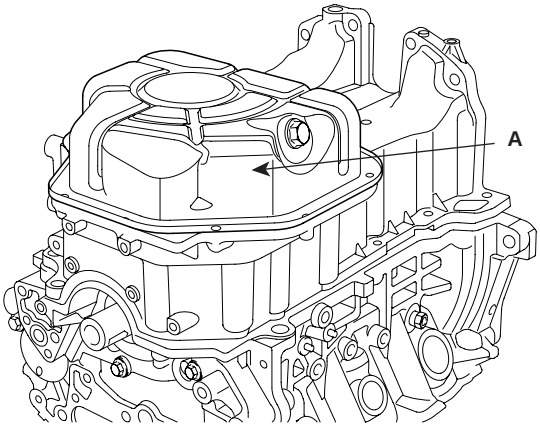

KCBF123A

⚠ *CAUTION*

Be careful not to damage the contact surfaces of upper oil pan and lower oil pan.

9. Remove the oil screen(A).

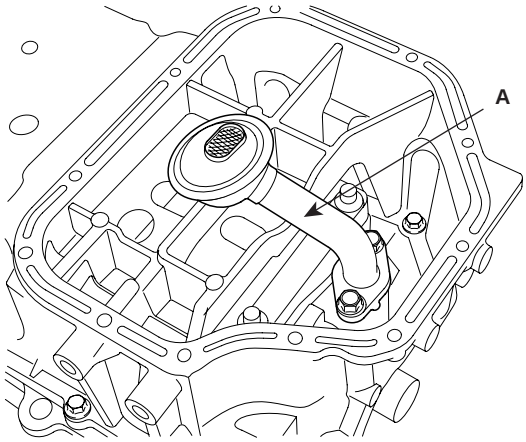

KCBF124A

10. Remove the upper oil pan, using the SST(09215-3C000)(A).

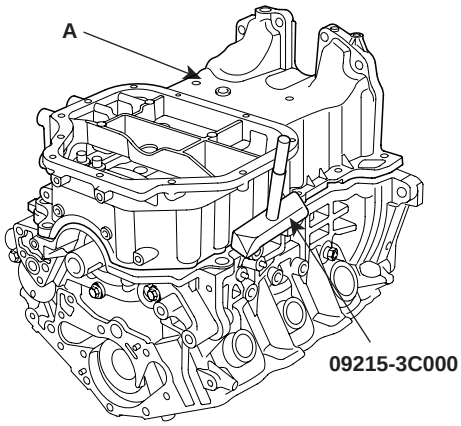

KCBF125B

⚠ *CAUTION*

Be careful not to damage the contact surfaces of upper oil pan and lower oil pan.

11. Remove the oil pump case(A).

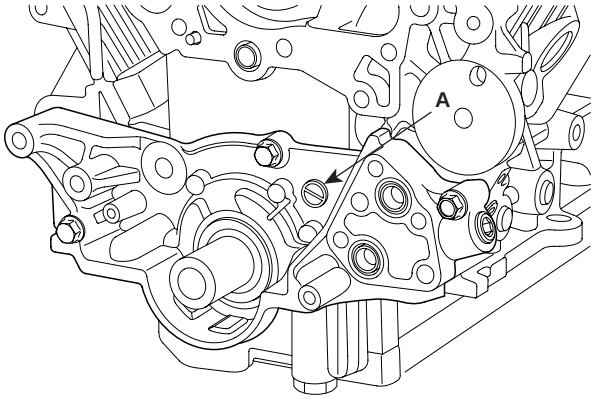

KCBF163A

12. After removing the plug(A), remove the relief spring(B) and the velief plunger(C).

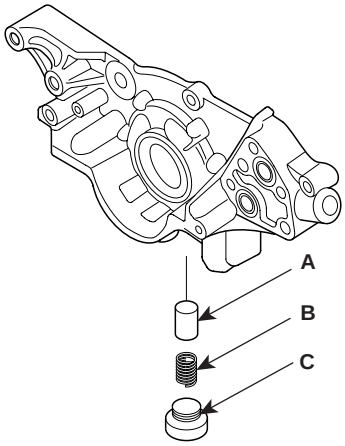

KCBF163C

INSPECTION EA202EEB

RELIEF SPRING

1. Check the relief plunger.
   Apply engine oil on the plunger and check that it moves smoothly in the hole. If it does not, replace the plunger or the front case only in necessary cases.

2. Check the relief valve spring.
   Check deformation or damage of the relief valve spring.

Specification
Free length : 43.8mm(1.7244in.)
Load : 36.3N(3.7kg, 8.21b)±3.9N(0.4kg, 0.9lb)
/ 40.1mm(1.5787in.)

OIL PRESSURE SWITCH

1. Check the continuity between the terminal and the body with an ohmmeter.
   If there is no continuity, replace the oil pressure switch.

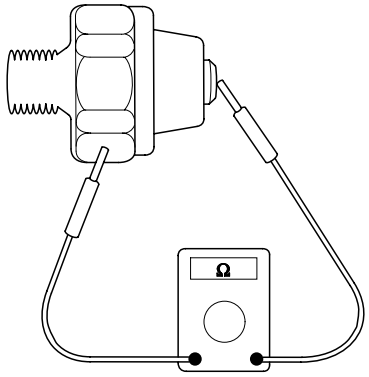

ECKD001W

2. Check the continuity between the terminal and the body when its hole is pushed by a fine rod(A). If there is continuity with pressed, replace the switch.

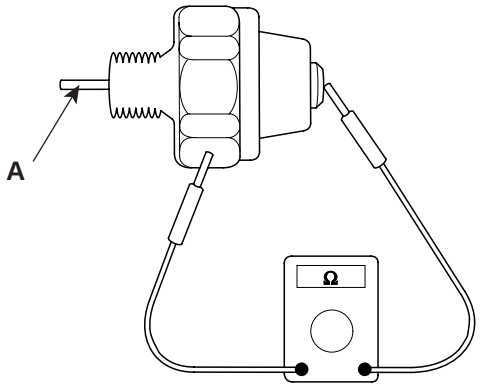

LDLG052A

3. If there is no continuity when the pressure 49.3kpa (0.5kg/cm², 7.11psi) is applied through the oil hole, the switch is operating properly.
   Check for air leakage. If air leaks, the diaphragm is broken. Replace the switch.

REPLACEMENT E4078D2D

OIL AND FILTER

CAUTION

- ***Prolonged and repeated contact with mineral oil will result in the removal of natural fats from the skin, leading to dryness, irritation and dermatitis. In addition, used engine oil contains potentially harmful contaminants which may cause skin cancer.***
- ***Wear protective clothing and gloves in order to minimize the length and frequency of contact of your skin to used oil. Wash your skin thoroughly with soap and water, or use water-less hand cleaner, to remove any used engine oil. Do not use gasoline, thinners, or solvents.***
- ***In order to preserve environment, used oil or used oil filter must be disposed only at designated disposal sites.***

1. Park the car on a level ground.
   Start the engine and let it warm up.
2. Turn the engine off.
3. Drain engine oil.
   1) Remove the oil filler cap.
   2) After lifting the car, remove the oil drain plug(A) and drain oil into a container.
4. Replace the oil filter.
   1) Remove the oil filter(B).

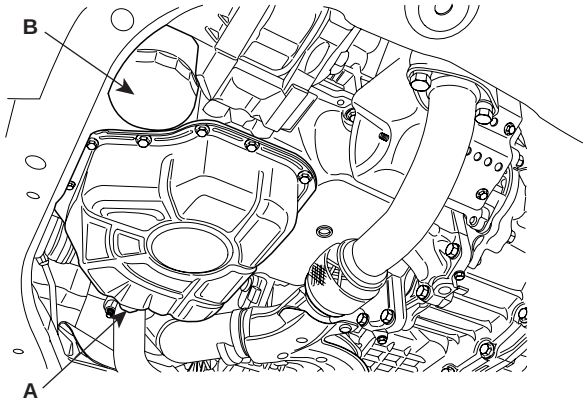

SCMEM6003L

2) Check the part number of a new oil filter is as the same as that of the old one.

3) Replace the oil filter.

4) Tighten it slightly until the o-ring of the filter cap contacting on its position.

5) Tighten it with the specified torque.

Tightening torque
16.7 ~ 24.5Nm(1.7 ~ 2.5kgf.m, 12.3 ~ 18.1lb-ft)

5. Refill with engine oil.

1) Install the oil drain plug with a new gasket.

Tightening torque
34.3 ~ 44.1Nm (3.5 ~ 4.5kgf.m, 25.3 ~ 32.5lb-ft)

2) Fill with fresh engine oil, after removing the engine oil level gauge.

Capacity
Total : 4.5L(4.76U.S.qts,3.96lmp.qts)
Oil pan : 4.2L(4.44U.S.qts,3.70lmp.qts)
Oil filter : 0.3L(0.32U.S.qts,0.26lmp.qts)

3) Install the oil filler cap and the oil level gauge.

6. Start the engine and ensure that no oil is leaking from the drain plug or the oil filter.

7. Recheck engine oil level.

INSTALLATION E811FEC1

OIL PUMP CASE

1. Assembly the relief spring(B) and the relief plunger(C) and tighten the plug(A).

Tightening torque
39.2 ~ 49.0Nm (4.0 ~ 5.0kgf.m, 28.9 ~ 36.2lb-ft)

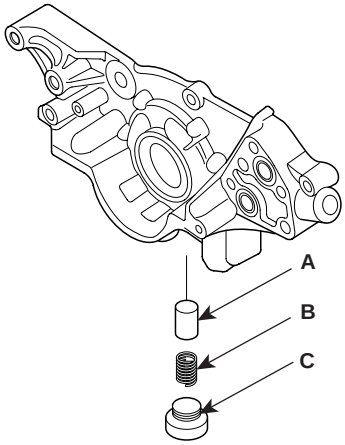

KCBF163C

2. Install oil pump case.

1) Using a gasket scraper, remove all the old packing material from the gasket surfaces.

2) Before assembling the oil pan, the liquid sealant TB1217H should be applied on the oil pan.
The part must be assembled within 5 minutes after the sealant was applied.

Bead width : 2.5mm(0.0984in.)

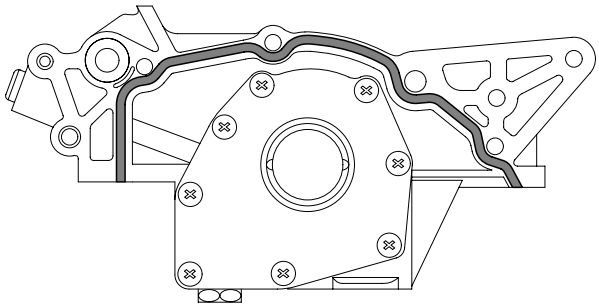

KCBF134A

CAUTION

- ***Make clean the sealing face before assembling two parts.***
- ***Remove harmful foreign materials on the sealing face before applying sealant.***
- ***When applying sealant gasket, sealant must not be protrude into the inside of oil pan.***
- ***To prevent leakage of oil, apply sealant gasket to the inner threads of the bolt holes.***
- ***After assembly, wait at least 30 minutes before filling the engine with oil.***

3) Install the oil pump case(A).

Tightening torque
18.6 ~ 23.5(1.9 ~ 2.4kgf.m, 13.7 ~ 17.4lb-ft)

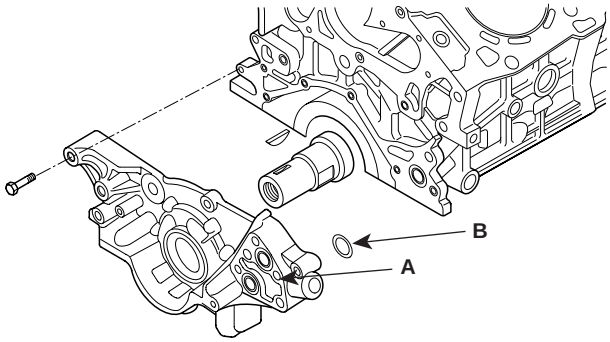

LDLG070A

CAUTION

In the installation of the oil pump, always use a new o-ring(B).

3. Using the SST(09214~33000), install the oil pump case oil seal.

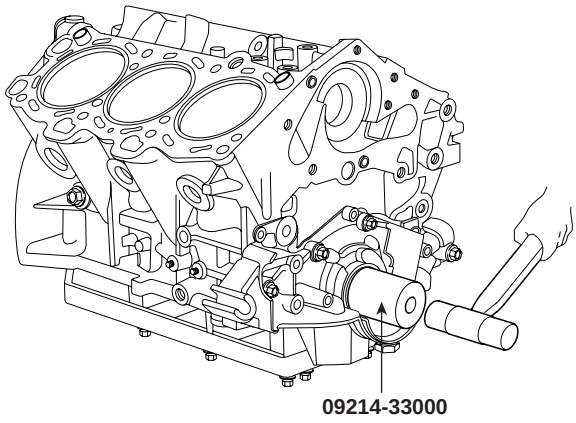

EDQF189A

4. Install the upper oil pan.

   1) Using a gasket scraper, remove all the old packing material from the gasket surfaces.

   2) Before assembling the oil pan, the liquid sealant TB1217H should be applied on the oil pan.
   The part must be assembled within 5 minutes after the sealant was applied.

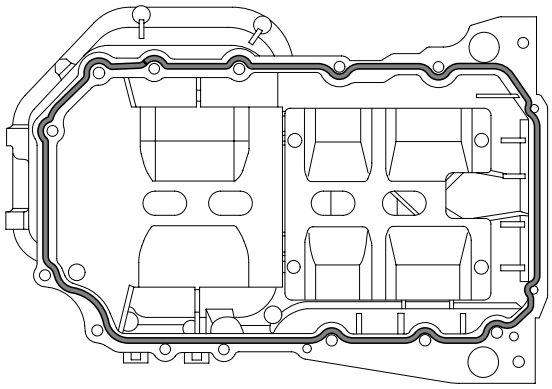

KCBF130A

CAUTION

- ***Make clean the sealing face before assembling two parts.***
- ***Remove harmful foreign materials on the sealing face before applying sealant.***
- ***When applying sealant gasket, sealant must not be protrude into the inside of oil pan.***
- ***To prevent leakage of oil, apply sealant gasket to the inner threads of the bolt holes.***
- ***After assembly, wait at least 30 minutes before filling the engine with oil.***

3) Fix the oil pan and tighten the bolts in several steps uniformly.

Tightening torque
Bolts 1~15 : 18.6 ~ 23.5Nm(1.9 ~ 2.4kgf.m, 13.7 ~ 17.4lb-ft)
Bolts 16,17 : 4.9 ~ 6.9Nm(0.5 ~ 0.7kgf.m, 3.6 ~ 5.1lb-ft)

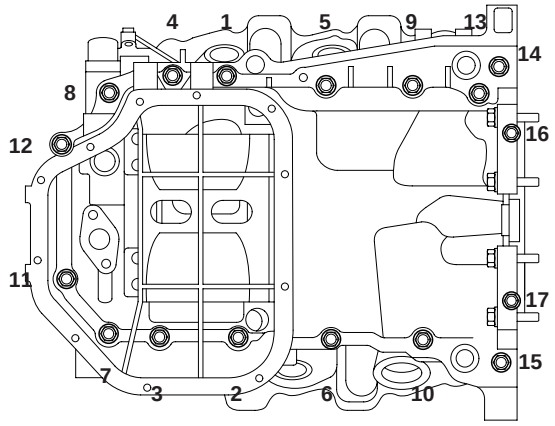

KCBF131A

5. Install the oil screen.

Tightening torque
14.7 ~ 21.6Nm(1.5 ~ 2.2kgf.m, 10.8 ~ 15.9lb-ft)

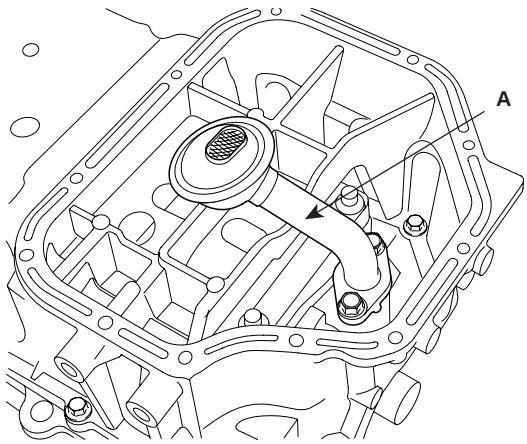

KCBF124A

NOTE

Always use a new gasket.

6. Install the lower oil pan.

1) Using a gasket scraper, remove all the old packing material from the gasket surfaces.

2) Before assembling the oil pan, the liquid sealant TB1217H should be applied on the oil pan.
The part must be assembled within 5 minutes after the sealant was applied.

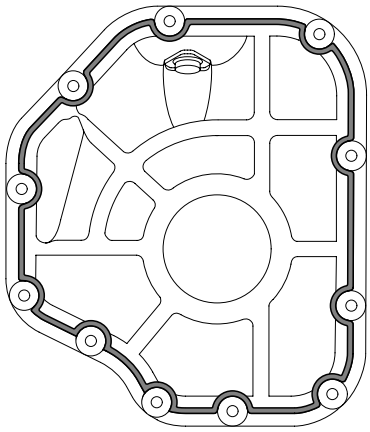

KCBF132A

CAUTION

- ***Make clean the sealing face before assembling two parts.***
- ***Remove harmful foreign materials on the sealing face before applying sealant.***
- ***When applying sealant gasket, sealant must not be protrude into the inside of oil pan.***
- ***To prevent leakage of oil, apply sealant gasket to the inner threads of the bolt holes.***
- ***After assembly, wait at least 30 minutes before filling the engine with oil.***

3) Fix the oil pan and tighten the bolts in several steps uniformly.

Tightening torque
9.8 ~ 11.8Nm(1.0 ~ 1.2kgf.m, 7.2 ~ 8.7lb-ft)

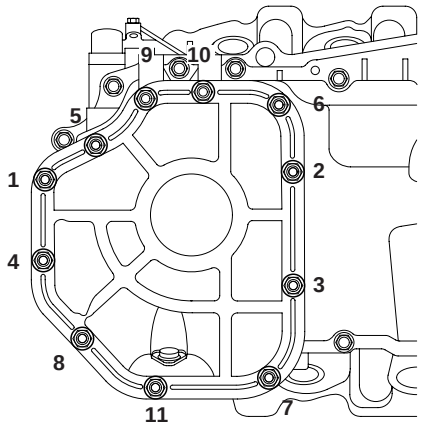

KCBF133A

7. Install the oil filter bracket(A).

Tightening torque
18.6 ~ 23.5Nm(1.9 ~ 2.4kgf.m, 13.7~ 17.4lb-ft)

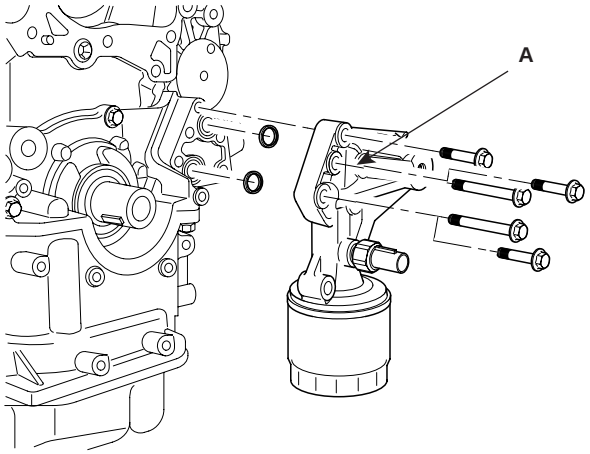

KCBF147A

CAUTION

Always use a new O-ring.

8. Install the timing belt, the generator and the front muffler.
9. Install the front right side cover and the wheel and tire.
10. Fill with engine coolant.
11. Start engine and check for leaks.
12. Recheck engine coolant level.

INTAKE AND EXHAUST SYSTEM

COMPONENTS E37D8ABE

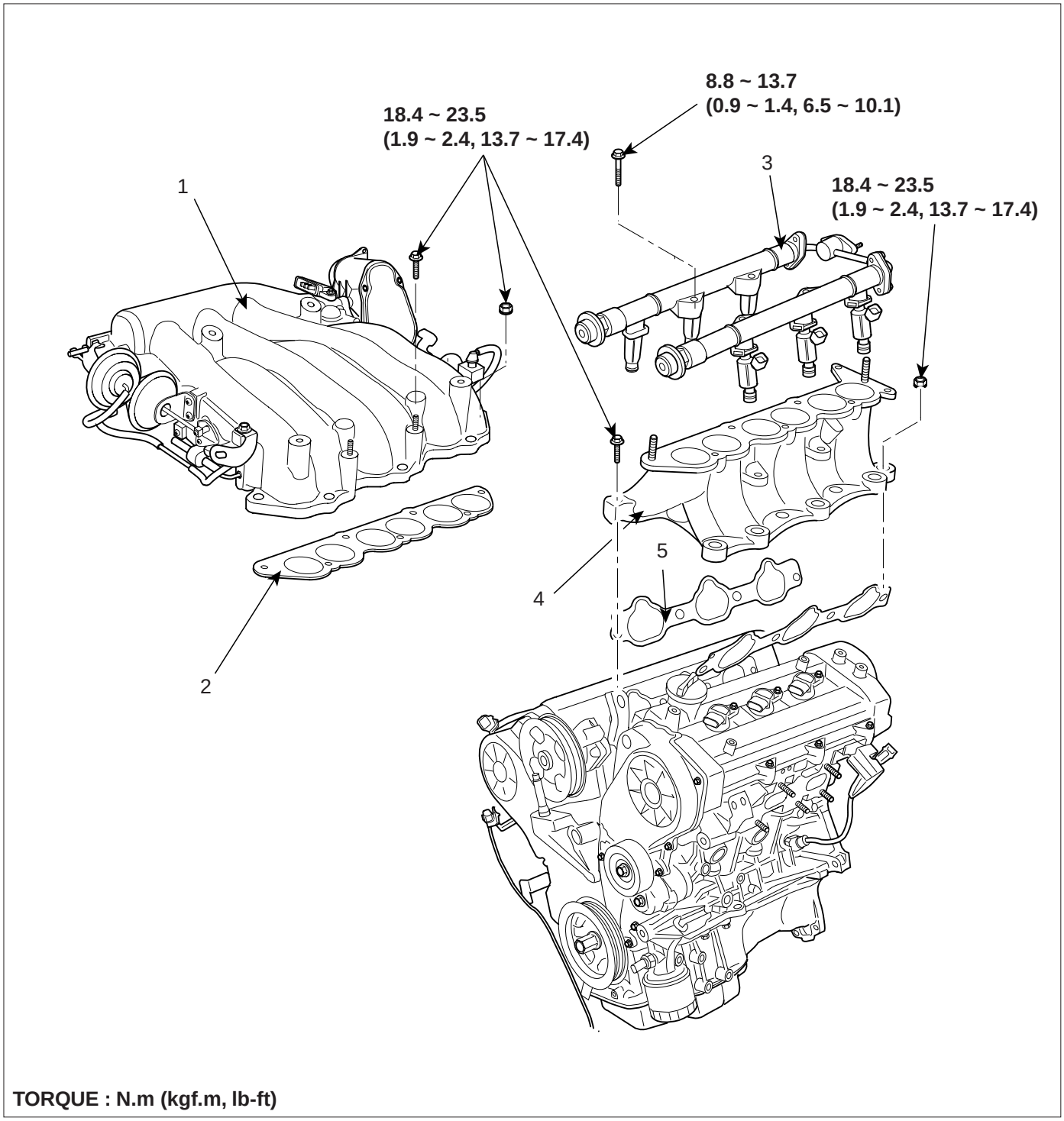

1. Surge tank
2. Surge tank gasket
3. Delivery pipe
4. Intake manifold
5. Intake manifold gasket

LDLG053A

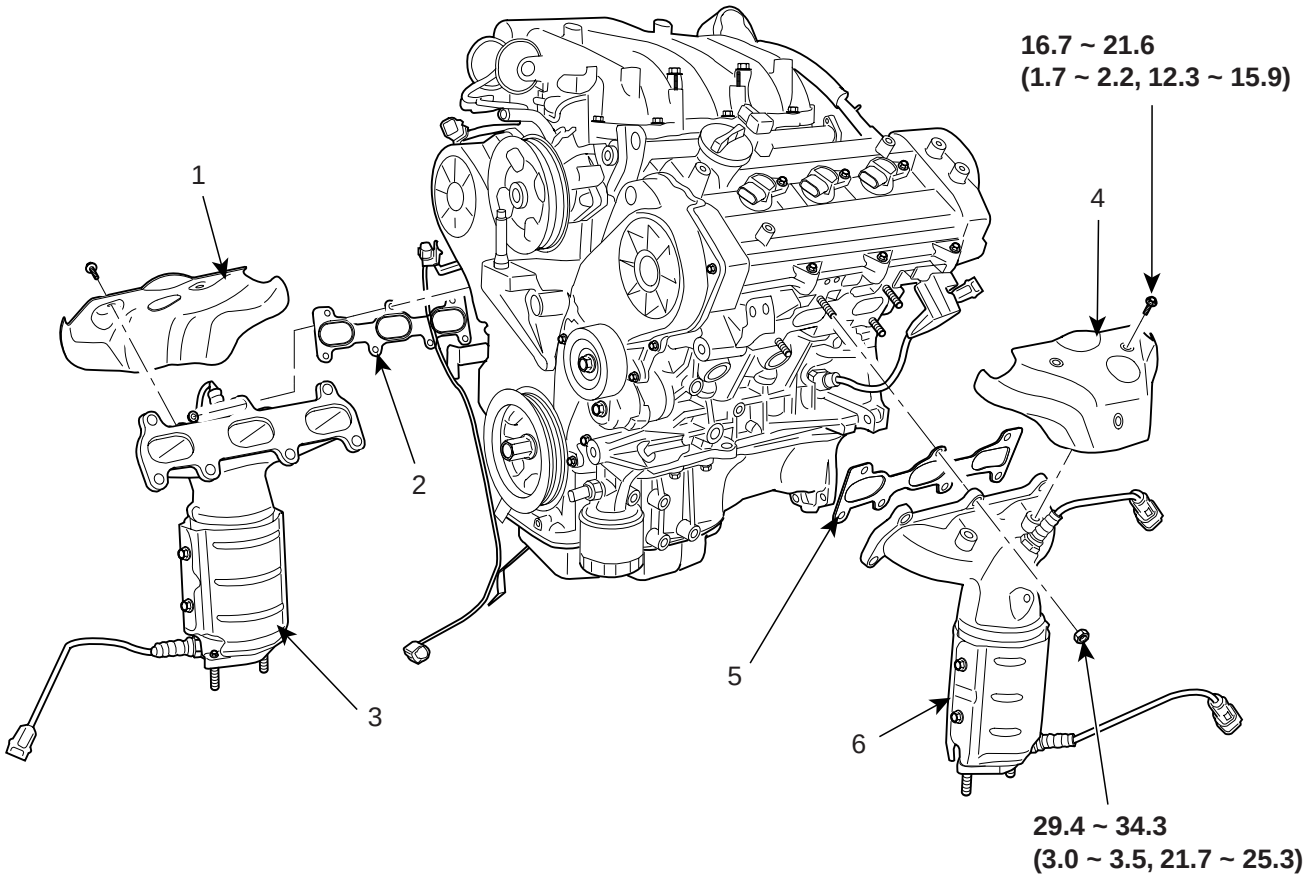

TORQUE : N.m (kgf.m, lb-ft)

1. Bank 1 heat protector
2. Bank 1 exhaust manifold
3. Bank 1 exhaust gasket
4. Bank 2 protector
5. Bank 2 exhaust manifold gasket
6. Bank 2 exhaust manifold

LDLG054A

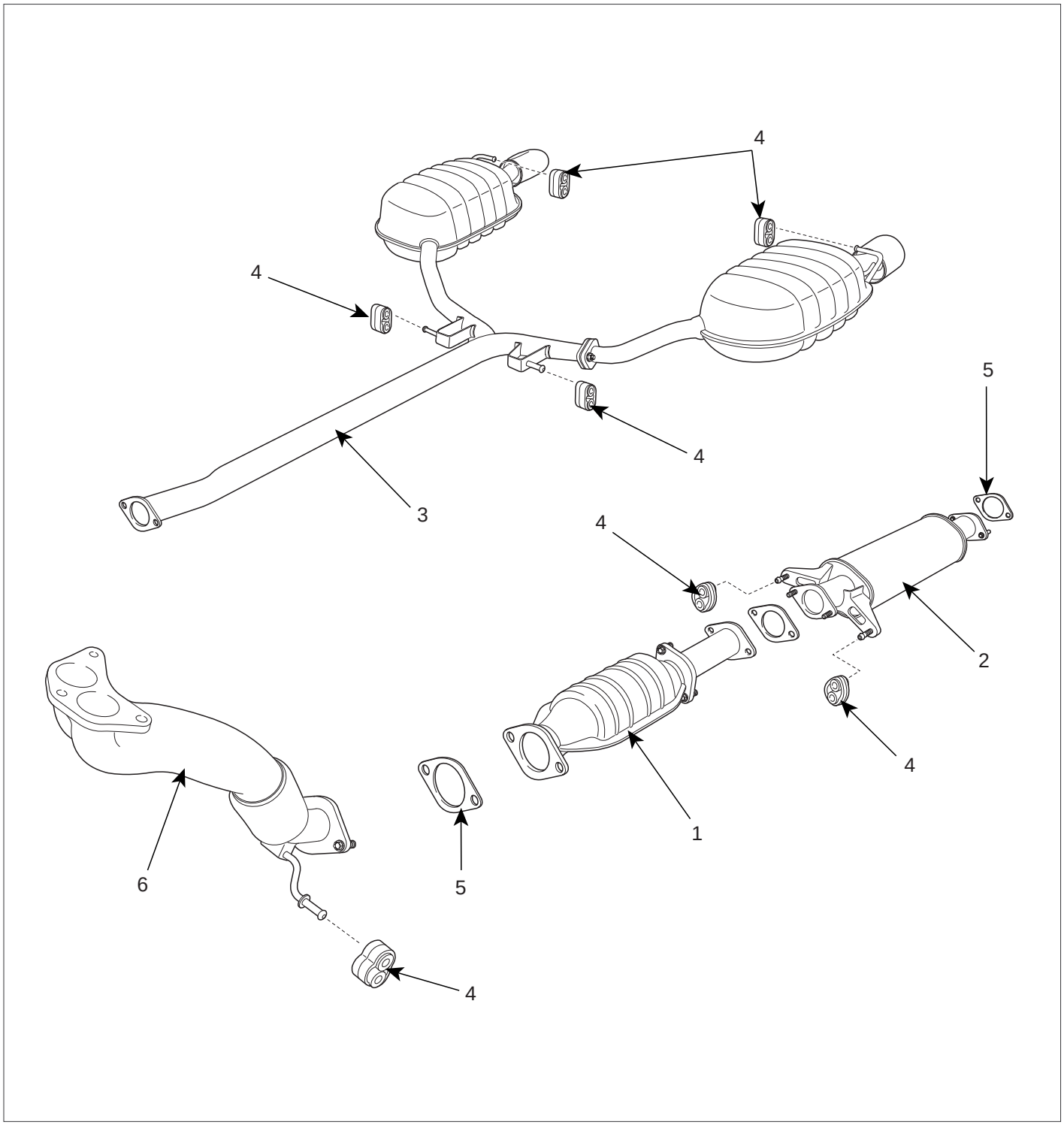

1. Catalytic convert
2. Center muffler
3. Main muffler
4. Lever hanger
5. Gasket
6. Front muffler

LDLG055A

REMOVAL E375DF19

INTAKE MANIFOLD ASSEMBLY

1. Remove the engine cover.
2. Remove the intake air hose and air cleaner assembly.
   1) Disconnect the MAF connector(A).
   2) Disconnect the breather hose(B) from air cleaner hose.
   3) Remove the intake air hose and air cleaner assembly(C).
   4) Disconnect the PCM connectors(D).

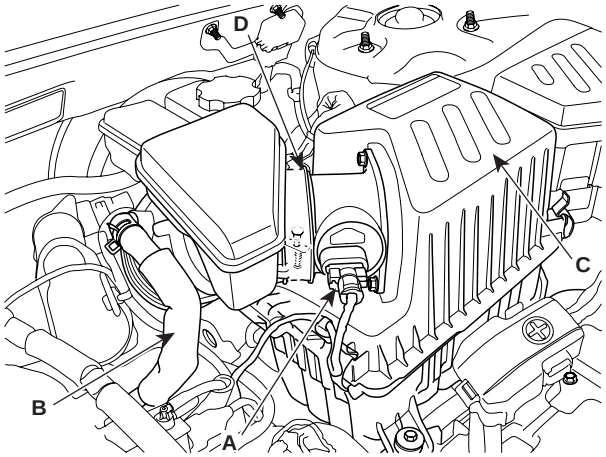

SCMEM6004L

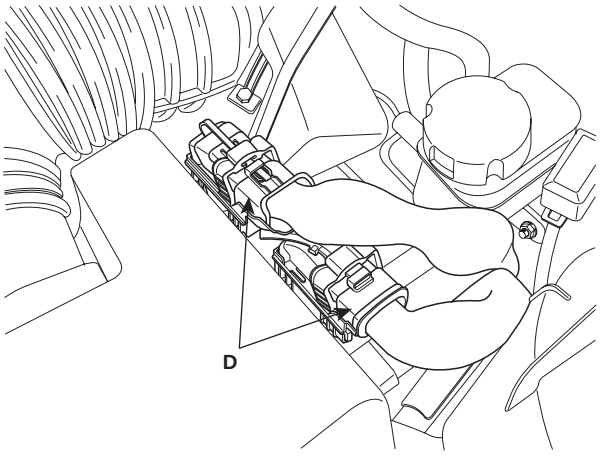

LDLG061A

3. Disconnect the engine wiring harness connectors.
   1) Disconnect the No.1/No.2 knock sensor connectors(A,B), the oil pressure switch connector(C), the ignition coil harness(D) and the No.1 VIS(Variable Induction System) connector(E).

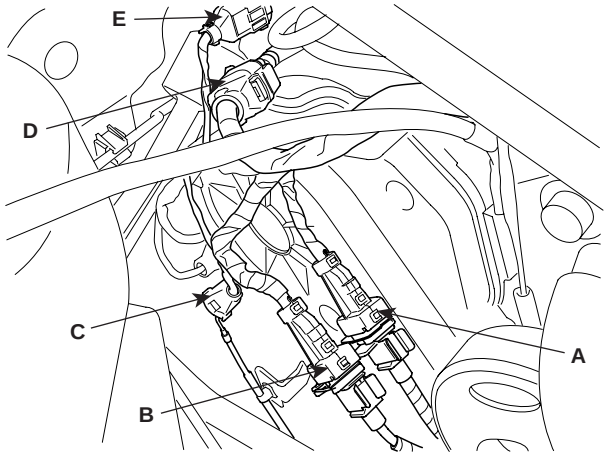

LDLG005A

   2) Disconnect the bank 1 front/rear O2 sensor connectors(A).

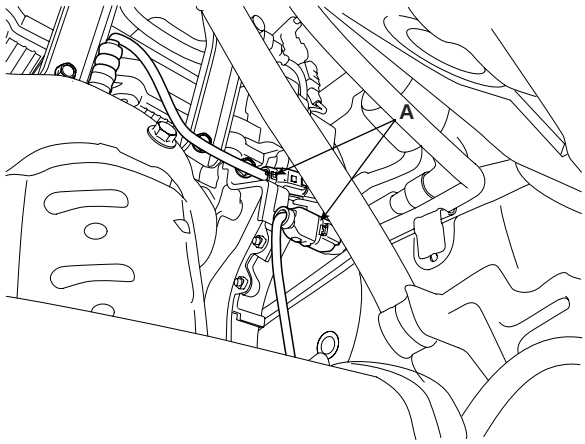

KCBF160A

3) Disconnect the injection connectors(A,B,C), the ground lines(D), the condensor connector(E) and the Ignition coil connectors(F).

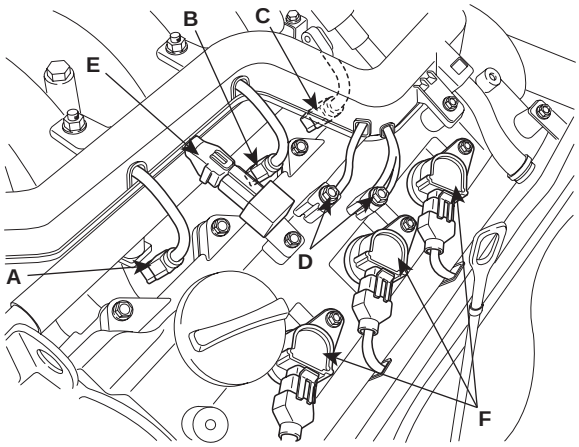

LDLG060A

4) Disconnect the injection harness connector(A), the No.2 VIS(Variable Induction System) connector(B), the No.1/No.2 OCV(Oil Control Valve) connectors(C,D) and the OTS(Oil Temperature Sensor) connector(E).

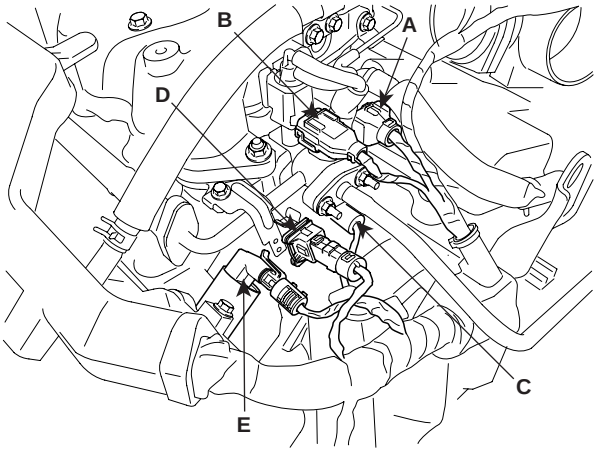

LDLG006A

5) Disconnect the MAPS(Manifold Absolute Pressure Sensor) connector(A), the ETC(Electronic Throttle Control) connector(B) and the PCSV(Purge Control Solenoid Valve) connector(C).

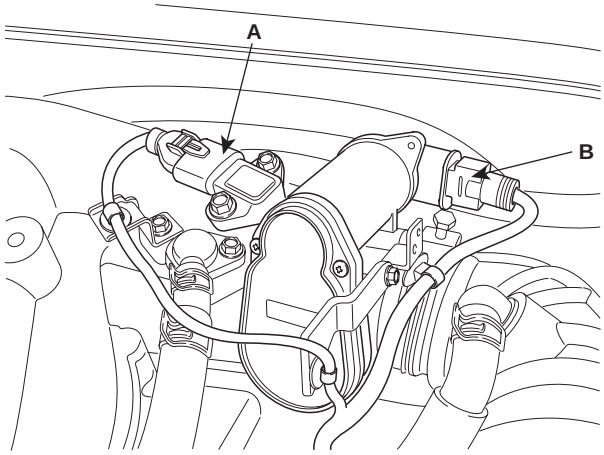

LDLG034A

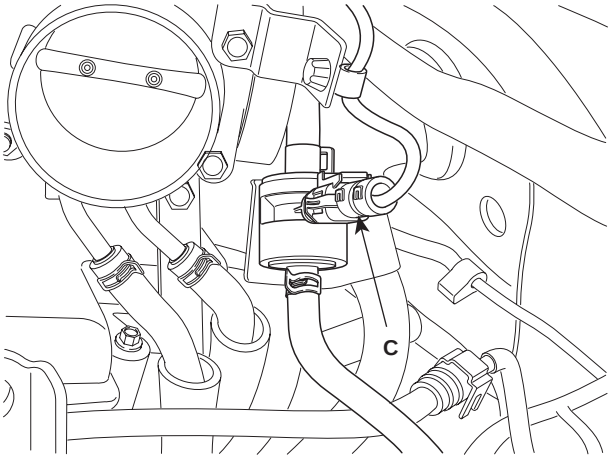

LDLG035A

6) Disconnect the generator connector(A) and the air conditioning compressor connector(B).

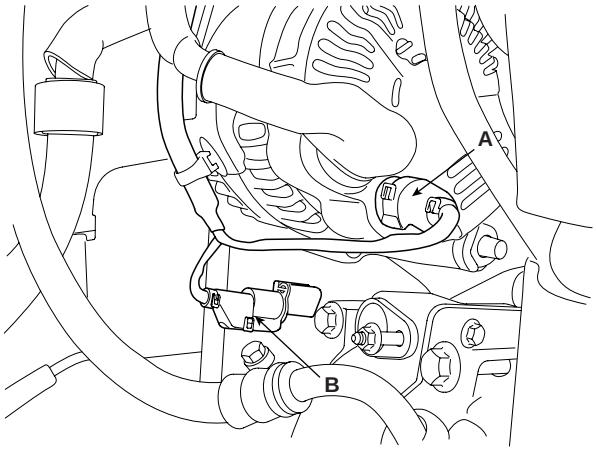

KCBF151A

7) Disconnect the bank 2 CMP sensor connector(A) and the ECT(Engine Coolant Temperature) sensor connector(B).

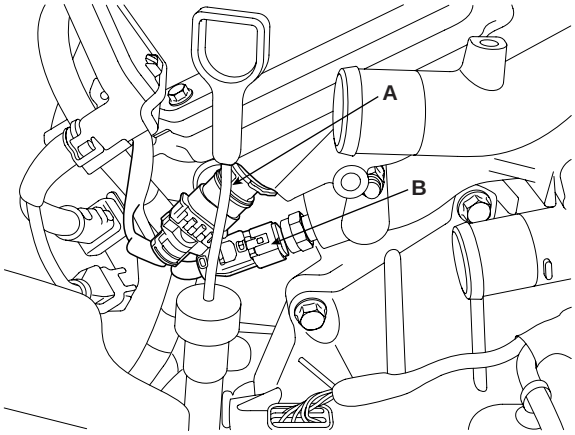

KCBF155A

8) Disconnect the bank 2 front/rear O2 sensor connectors(A,B) and the CKP sensor connector(C).

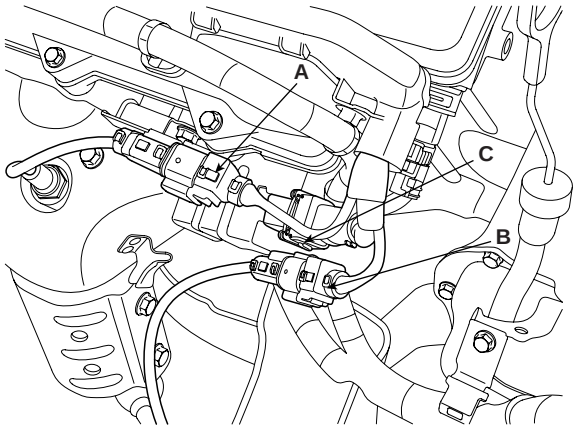

KCBF154A

9) Disconnect the bank 1 CMP sensor connector(A).

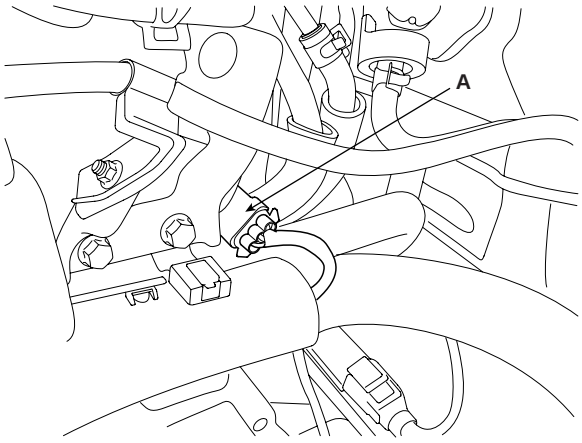

KCBF152A

4. Remove the PCV(Pulge Control Valve) hose(A).

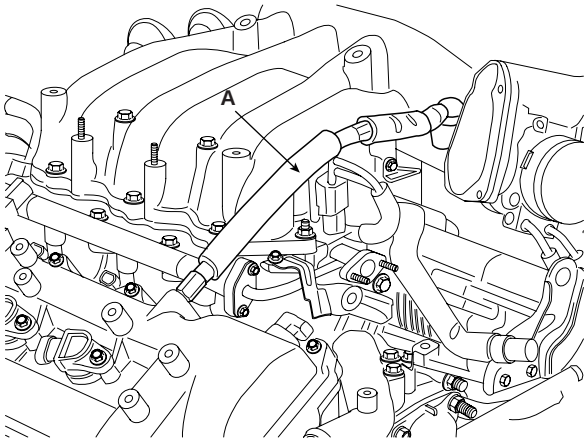

KCBF180A

5. Remove the ETC(Electric Throttle Control) bracket(A) and the cooling hoses(B).

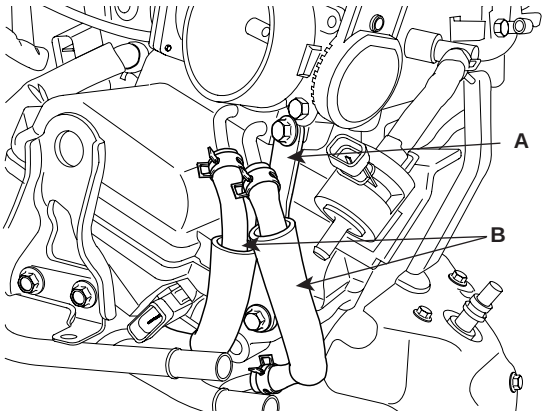

KCBF179A

6. Disconnect the brake vaccume hose(A).

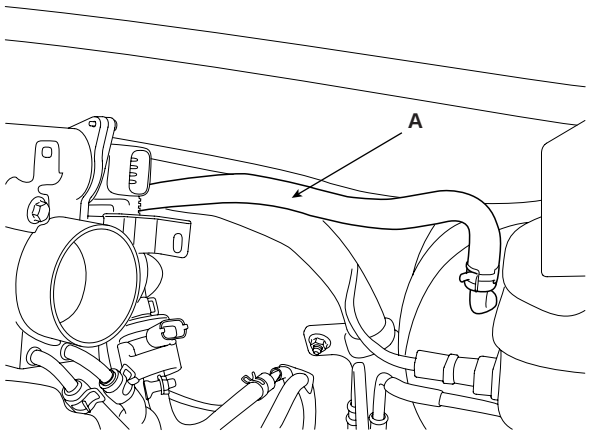

LDLG036A

7. Remove the surge tank mounting bracket(A).

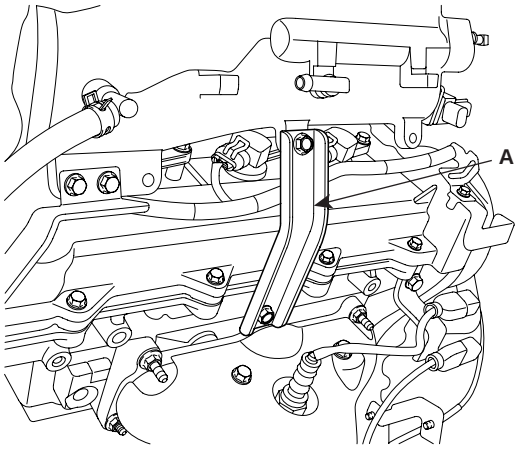

KCBF178A

8. Remove the surge tank(A).

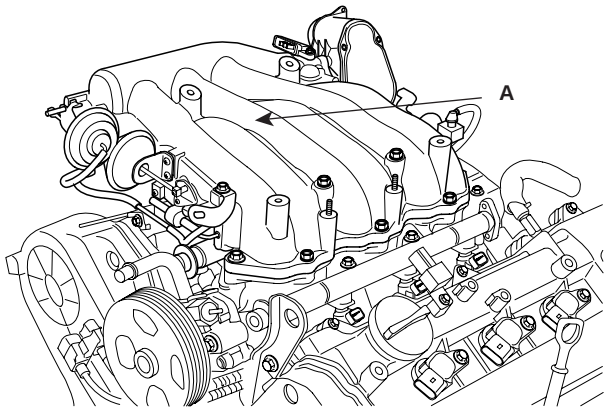

KCBF181A

9. Remove the delivery pipe assembly(A).

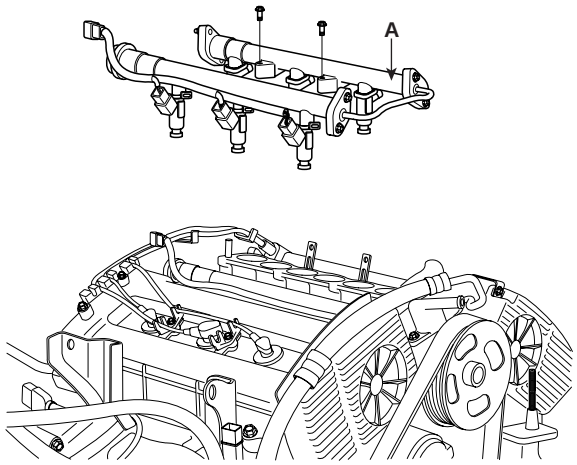

EDQF007A

10. Remove the intake manifold assembly(A).

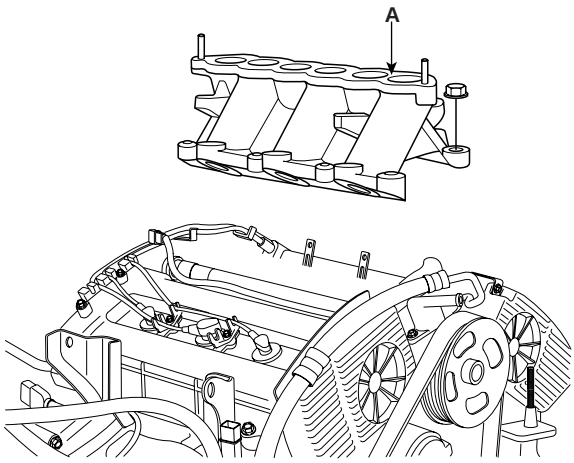

EDQF063A

EXHAUST MANIFOLD ASSEMBLY

1. Remove the under cover.
2. Remove the front muffler(A).

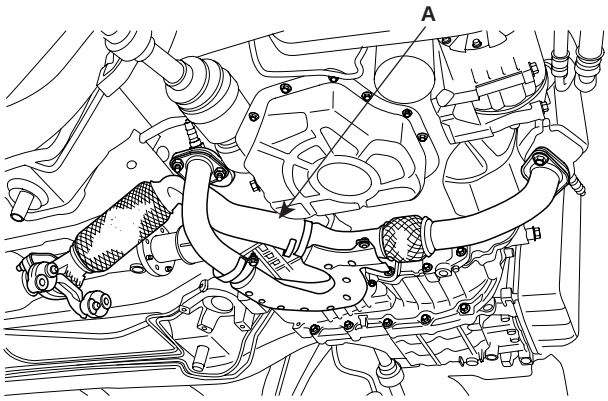

SCMEM6005L

3. Disconnect the oxygen sensor connectors(A).

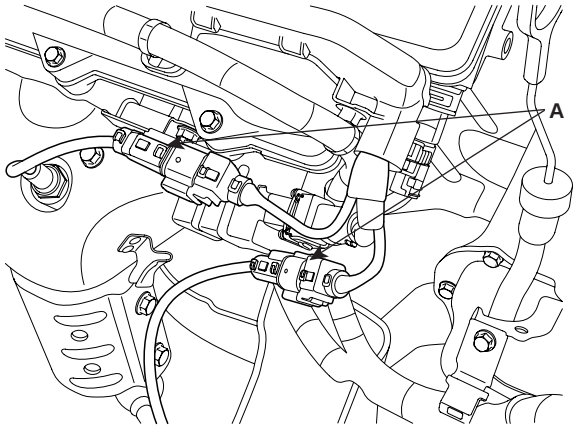

KCBF154B

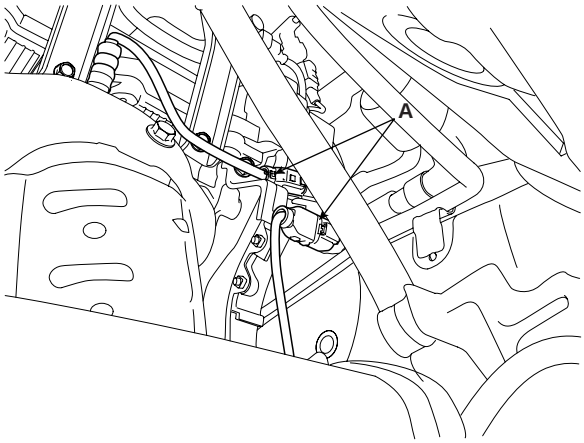

KCBF160A

4. Remove the oil level gauge.
5. Remove the heat protector(A).

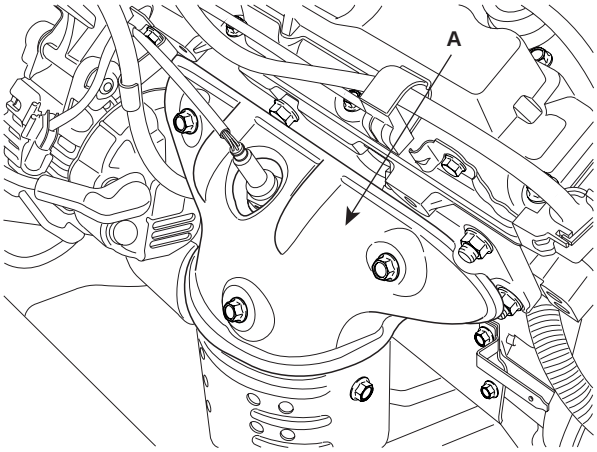

KDRF184A

6. Remove the exhaust manifold assembly(A).

INSTALLATION E8A999C8

INTAKE MANIFOLD ASSEMBLY

1. Install the intake manifold assembly with a new gasket to a cylinder head assembly. Tighten the bolts in two steps.

Tightening torque
Step 1(a~h): 3.9~5.9Nm(0.4~0.6kgf.m, 2.9~4.3lb-ft)
Step 2(1~8): 18.6~23.5Nm(1.9~2.4kgf.m, 13.7~17.4lb-ft)

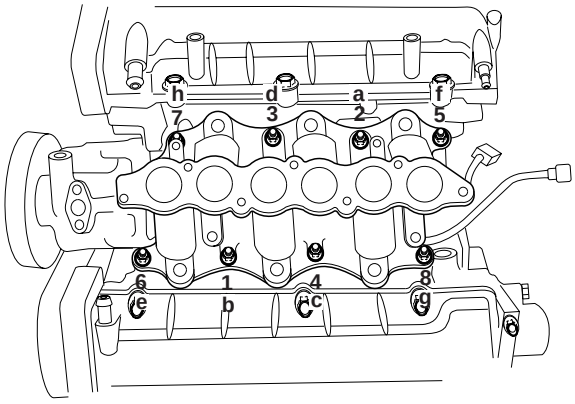

KCBF201A

CAUTION

When installing the gasket on the cylinder head, check the indentification marks(LH/RH) not to be installed wrong.

2. Install the delivery pipe.
3. Connect the LH injector connector.
4. Install the surge tank.

Tightening torque
18.6~23.5Nm(1.9~2.4kgf.m, 13.7~17.4lb-ft)

5. Install the surge tank mounting bracket.

Tightening torque
18.6~23.5Nm(1.9~2.4kgf.m, 13.7~17.4lb-ft)

6. Install the ETC(Electronic Throttle Control) system fixing bracket.
7. Connect the hoses and connectors.
8. Install the air cleaner assembly.
9. Install the engine cover.

EXHAUST MANIFOLD ASSEMBLY

1. Install the exhaust manifold assembly with a new gasket.

Tightening torque
29.4~34.3Nm(3.0~3.5kgf.m, 21.7~25.3lb-ft)

2. Install the heat protector.

Tightening torque
16.7~21.6Nm(1.7~2.2kgf.m, 12.3~15.9lb-ft)

3. Install the front muffler assembly.

Tightening torque
39.2~58.8Nm(4.0~6.0kgf.m, 28.9~43.4lb-ft)

4. Connect the oxygen sensor connector.
5. Install the under cover.

CYLINDER HEAD ASSEMBLY

COMPONENTS EBE1AEDF

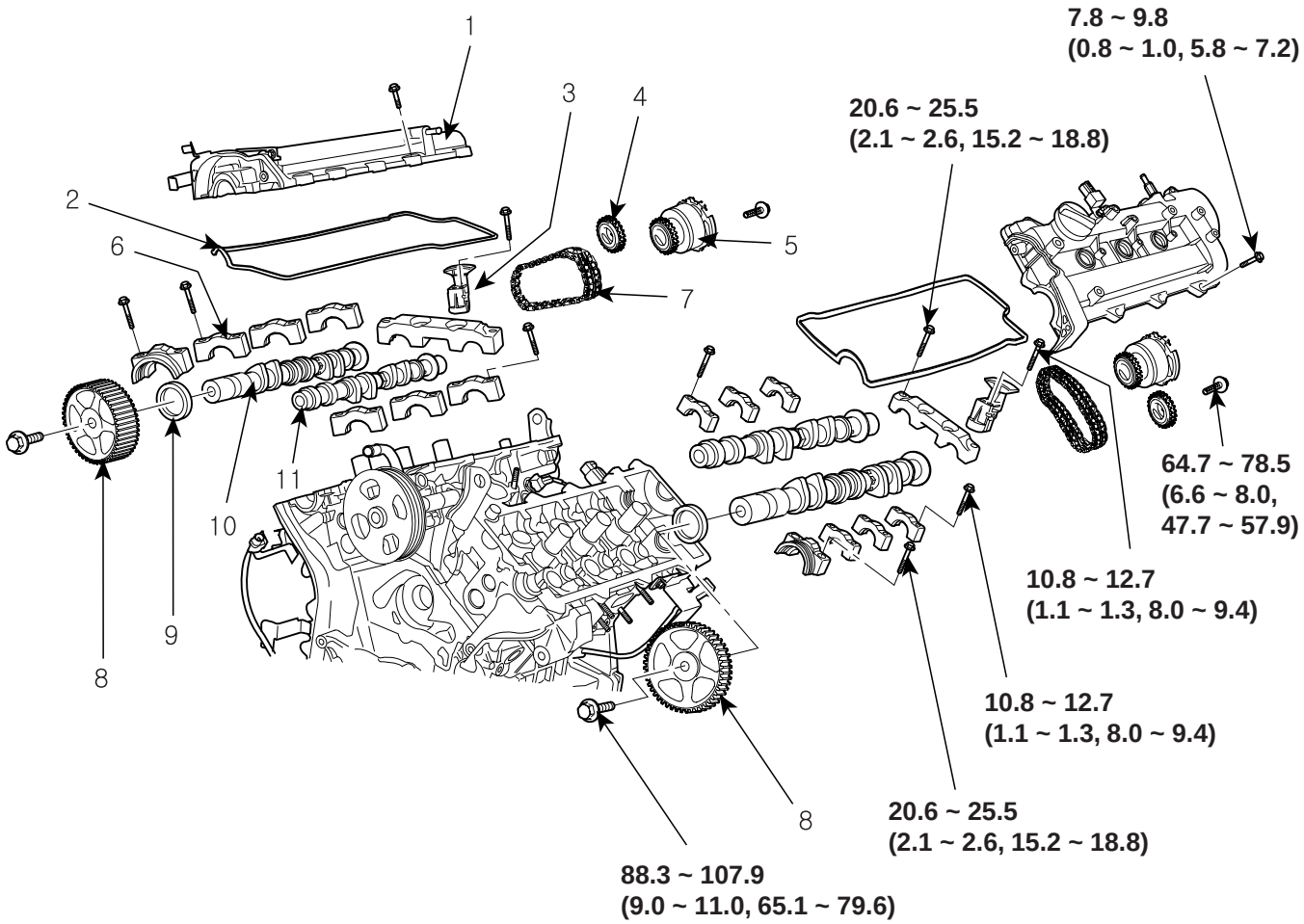

TORQUE : N.m (kgf.m, lb-ft)

1. Cylinder head cover
2. Cylinder head cover gasket
3. Timing chain auto tensioner
4. Exhaust camshaft chain sprocket
5. CVVT assembly
6. Camshaft bearing cap
7. Timing chain
8. Exhaust camshaft sprocket
9. Camshaft oil seal
10. Exhaust camshaft
11. Intake camshaft

LDLG040A

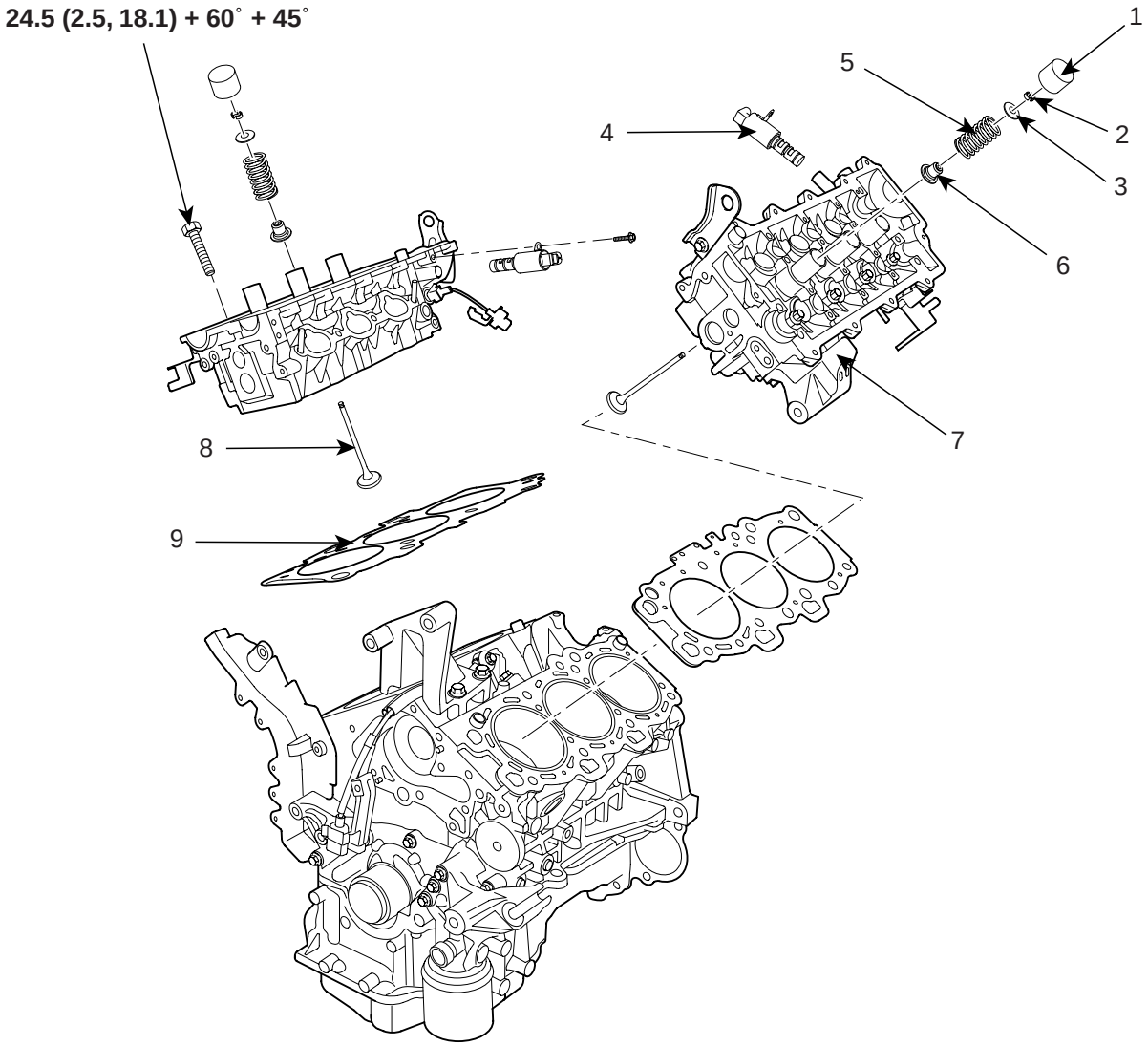

TORQUE : N.m (kgf.m, lb-ft)

1. MLA(Mechanical Lash Adjuster)
2. Retainer lock
3. Retainer
4. OCV(Oil Control Valve)
5. Valve spring
6. Valve stem seal
7. Cylinder head
8. Valve
9. Cylinder head gasket

LDLG041A

REMOVAL E84FDA9C

CAUTION

- ***Use fender covers to avoid damaging painted surfaces.***
- ***To avoid damaging the cylinder head, wait until the engine coolant temperature drops below normal temperature before removing it.***
- ***When handling a metal gasket, take care not to fold the gasket or damage the contact surface of the gasket.***
- ***To avoid damage, unplug the wiring connectors carefully while holding the connector portion.***

NOTE

- *Mark all wiring and hoses to avoid misconnection.*
- *Turn the crankshaft pulley so that the No. 1 piston is at top dead center.*

1. Remove the air duct and the battery(A) after disconnecting the terminals(B) from the battery.

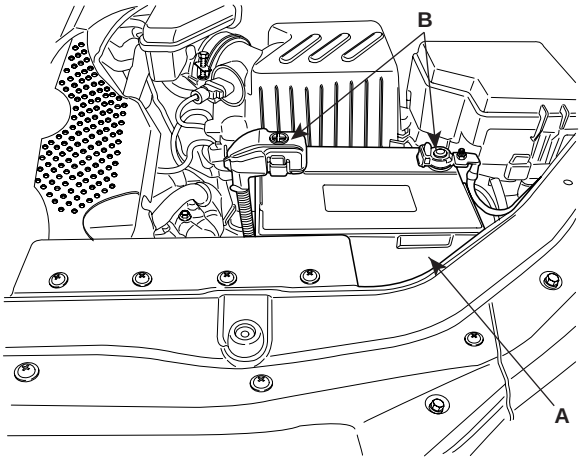

SCMEM6006L

2. Remove the engine cover.
3. Remove the intake air hose and air cleaner assembly.
   1) Disconnect the MAF connector(A).
   2) Disconnect the breather hose(B) from air cleaner hose.
   3) Remove the intake air hose and air cleaner assembly(C).
   4) Disconnect the PCM connectors(D).

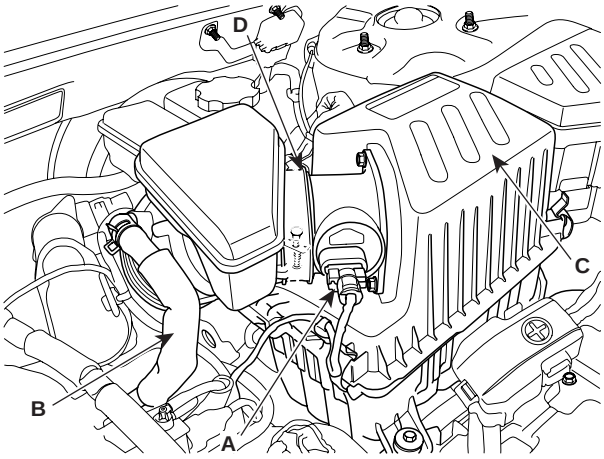

SCMEM6004L

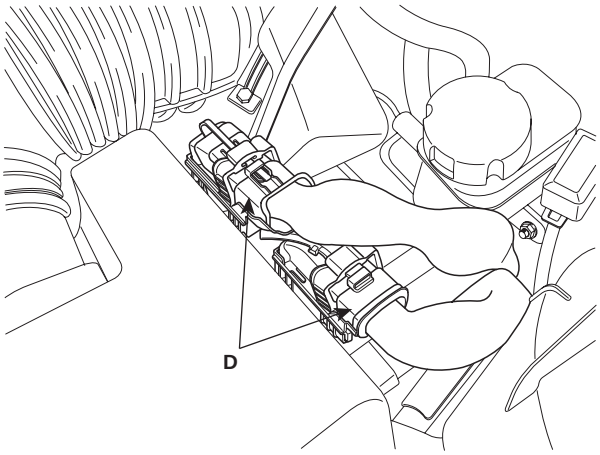

LDLG061A

4. Remove the upper radiator hose(A) and lower radiator hose(B).

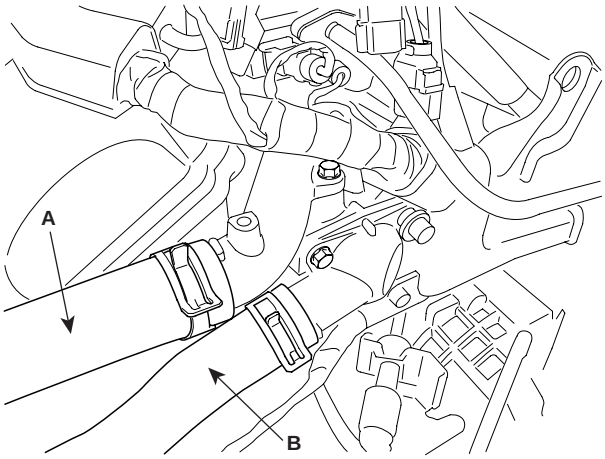

LDLG008A

5. Remove the fuel inlet hose(A) from the delivery pipe.

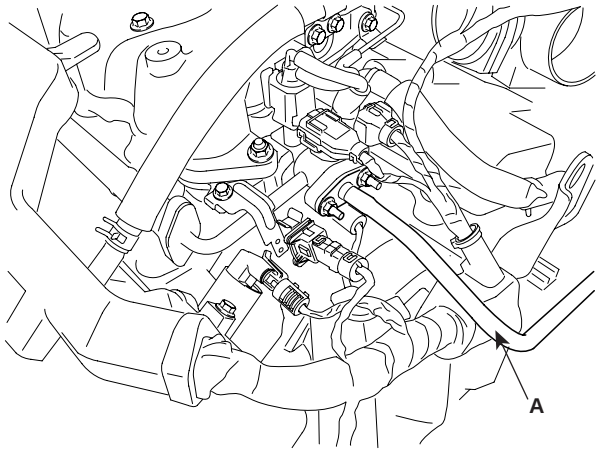

LDLG062A

6. Disconnect the engine wiring harness connectors.

   1) Disconnect the No.1/No.2 knock sensor connectors(A,B), the oil pressure switch connector(C), the ignition coil harness(D) and the No.1 VIS(Variable Induction System) connector(E).

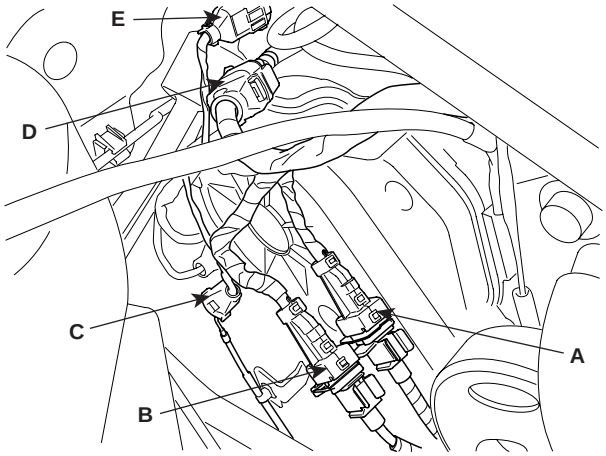

LDLG005A

   2) Disconnect the bank 1 front/rear O2 sensor connectors(A).

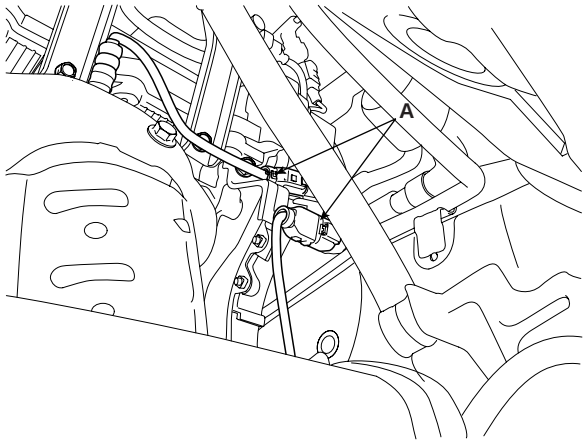

KCBF160A

   3) Disconnect the injection connectors(A,B,C), the ground lines(D), the condensor connector(E) and the Ignition coil connectors(F).

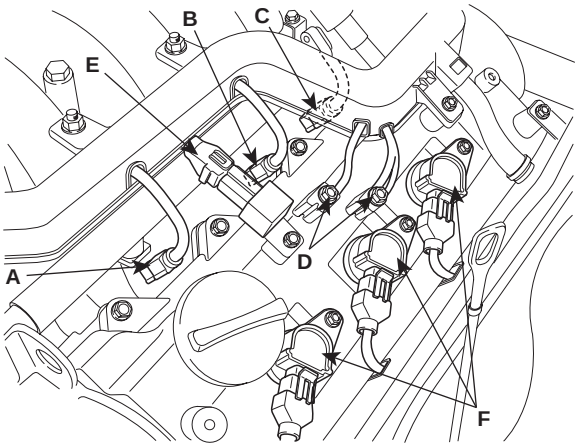

LDLG060A

   4) Disconnect the injection harness connector(A), the No.2 VIS(Variable Induction System) connector(B), the No.1/No.2 OCV(Oil Control Valve) connectors(C,D) and the OTS(Oil Temperature Sensor) connector(E).

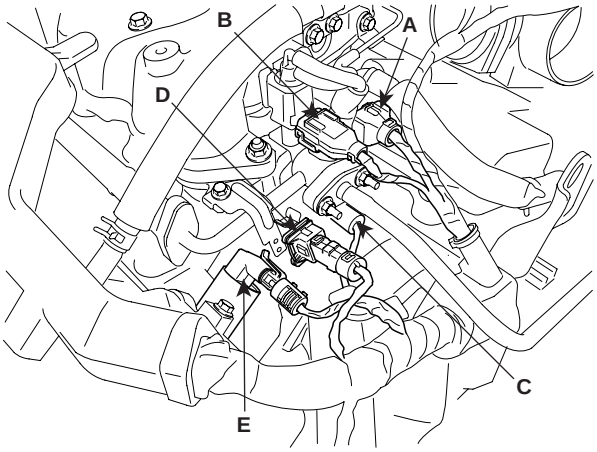

LDLG006A

5) Disconnect the MAPS(Manifold Absolute Pressure Sensor) connector(A), the ETC(Electronic Throttle Control) connector(B) and the PCSV(Purge Control Solenoid Valve) connector(C).

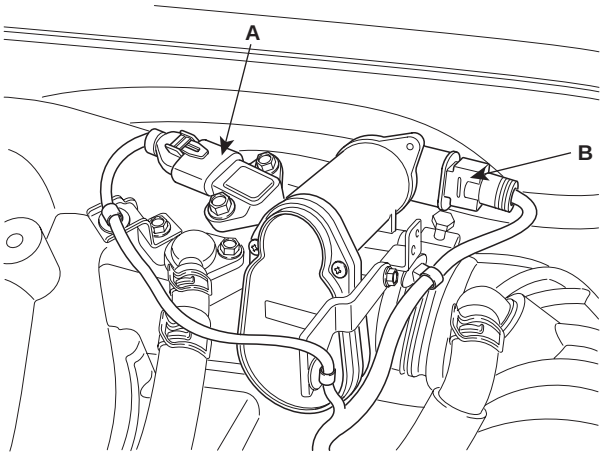

LDLG034A

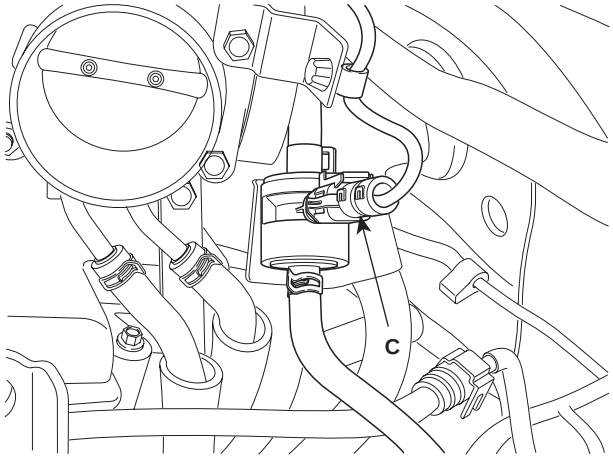

LDLG035A

6) Disconnect the generator connector(A) and the air conditioning compressor connector(B).

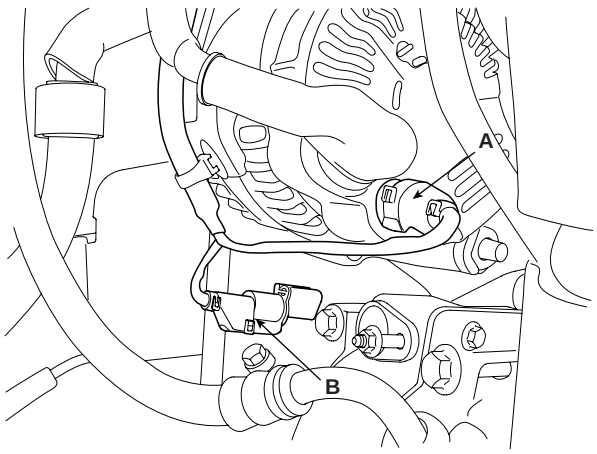

KCBF151A

7) Disconnect the bank 2 CMP sensor connector(A) and the ECT(Engine Coolant Temperature) sensor connector(B).

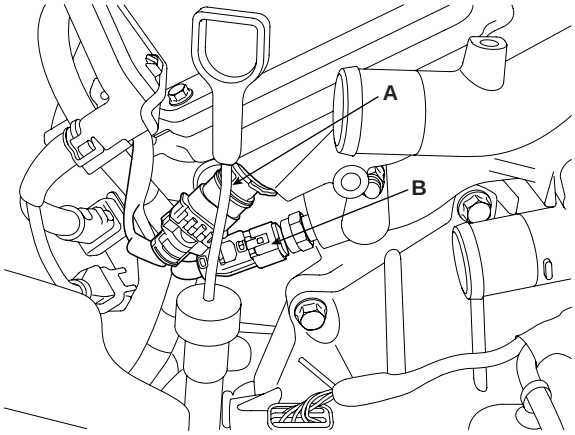

KCBF155A

8) Disconnect the bank 2 front/rear O2 sensor connectors(A,B) and the CKP sensor connector(C).

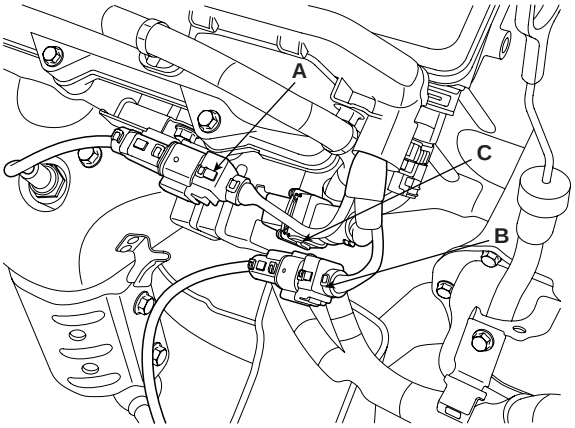

KCBF154A

9) Disconnect the bank 1 CMP sensor connector(A).

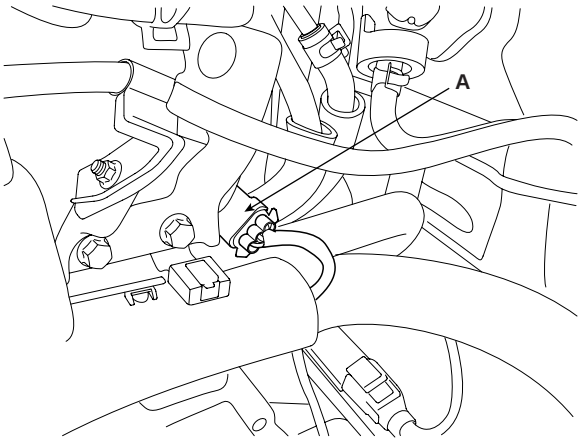

KCBF152A

7. Remove the PCV(Pulge Control Valve) hose(A).

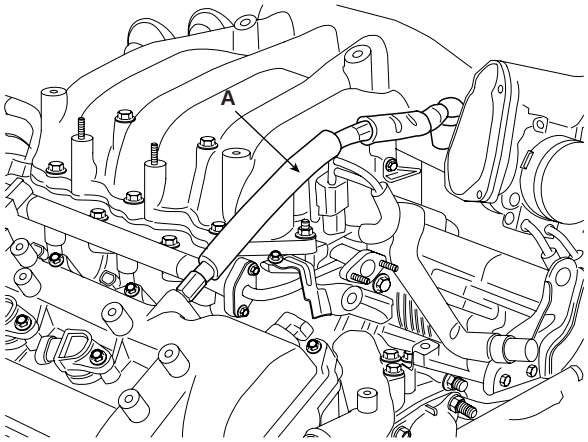

KCBF180A

8. Disconnect the brake vaccume hose(A).

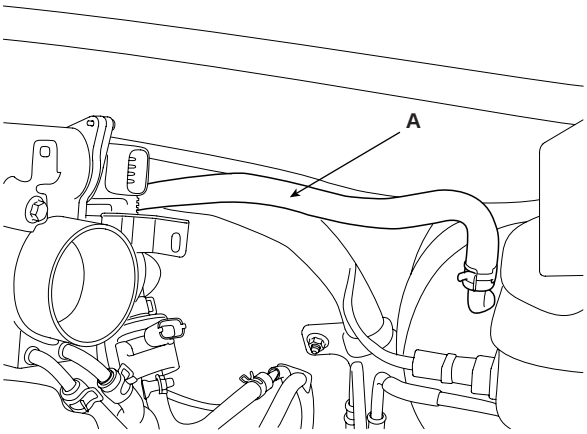

LDLG036A

9. Remove the heater hoses.

10. Remove the drive belt(A).

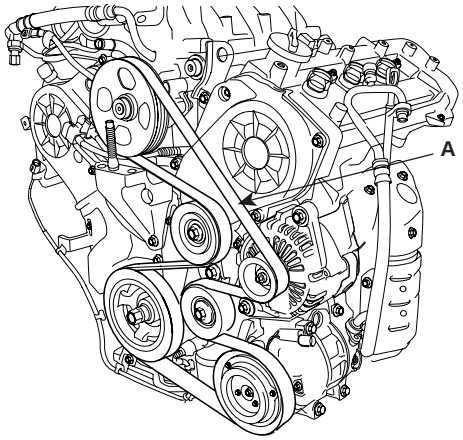

KCBF105A

11. Remove the power steering pump.(Refer to 'ST' group).

12. Remove the exhaust manifold assembly.(Refer to 'Intake and exhause system').

13. Remove the intake manifold assembly.(Refer to 'Intake and exhause system').

14. Remove the timing belt.(Refer to 'Timing system').

15. Remove the ignition coils.

16. Remove the water temp. control assembly.

17. Remove the cylinder head cover(A).

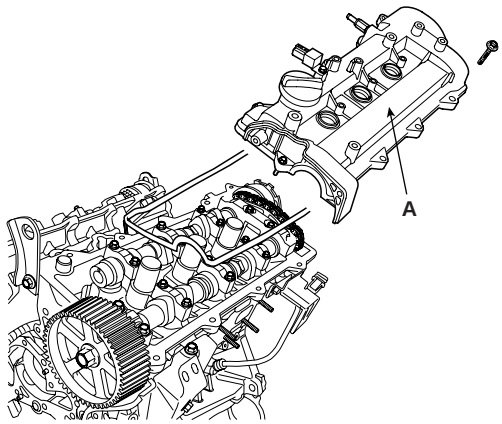

KCBF177A

18. Remove the camshaft bearing cap(A).

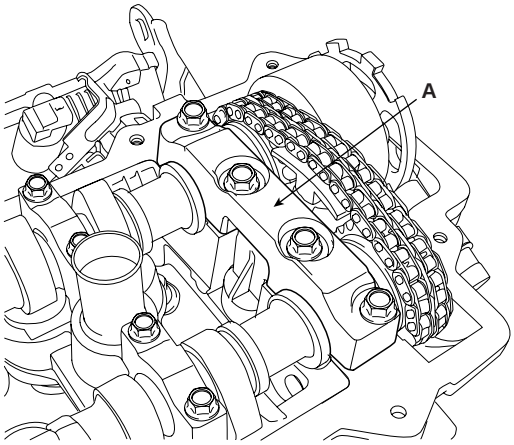

KCBF167A

19. Remove the timing chain tensioner(A).

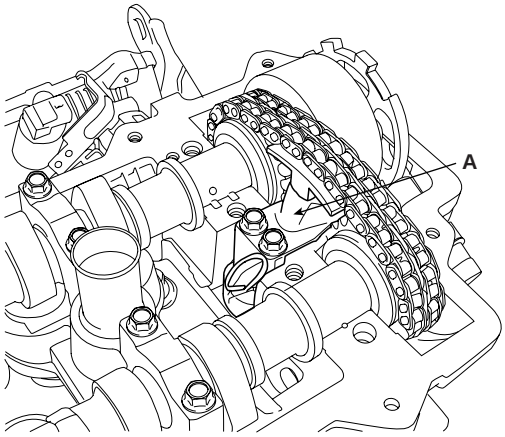

KCBF168A

20. Remove the camshaft.

21. Remove the bank 1 timing belt rear cover(A).

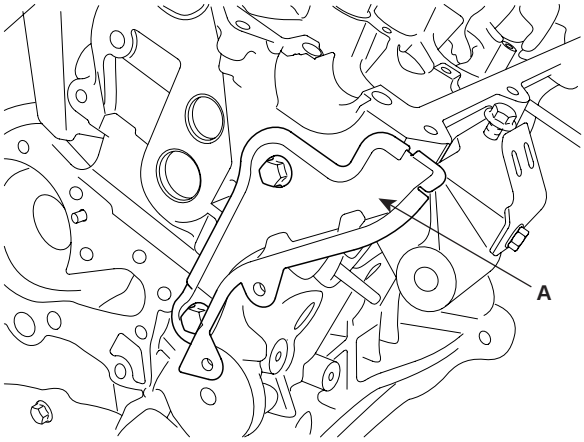

KCBF170A

22. Remove the bank 2 timing belt rear cover(A).

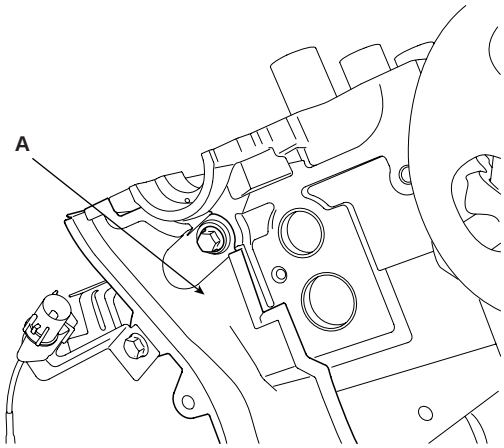

KCBF171A

23. Remove the CKP sensor connector bracket(A).

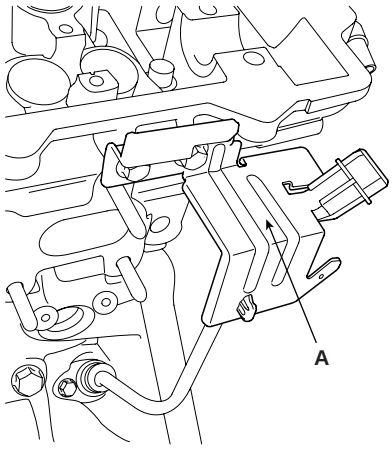

KCBF172A

24. Remove the cylinder head assembly.

1) Remove the bolts in 2~3 steps as following orders.

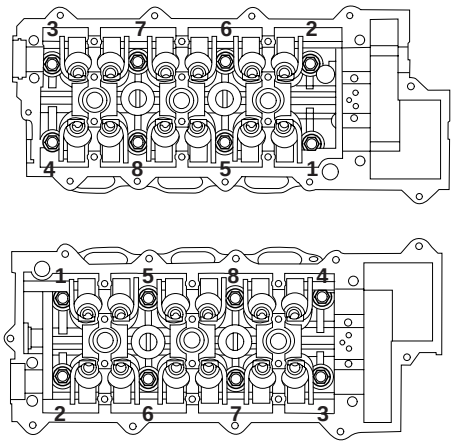

KCBF176A

CAUTION

If the bolts are not removed as the order, the deformation of the head assembly can be occurred.

2) Put the cylinder head assembly on a wooden block after removal from the cylinder block.

CAUTION

Ensure that the surface between the cylinder head and the block is not damaged.

DISASSEMBLY E63D4DE3

NOTE

Identify MLA(Mechanical Lash Adjuster), valves and valve springs as they are removed so that each item can be reinstalled in its original position.

1. Remove MLA(Mechanical Lash Adjuster)s(A).

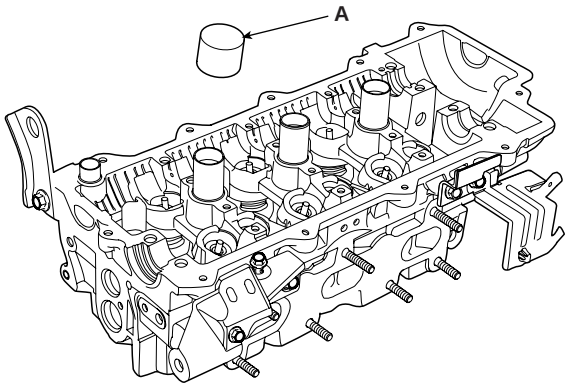

KCBF173D

2. Remove valves.

   1) Using SST(09222-3K000, 09222-3C300), compress the valve spring and remove retainer lock.

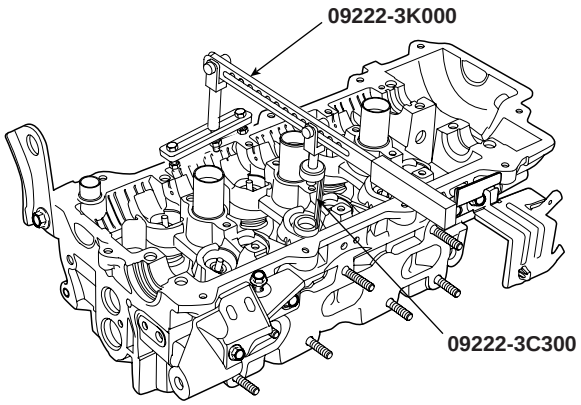

KCBF173C

   2) Remove the spring retainer.

   3) Remove the valve spring.

   4) Remove the valve.

   5) Using SST(09222-29000), remove the valve stem seal.

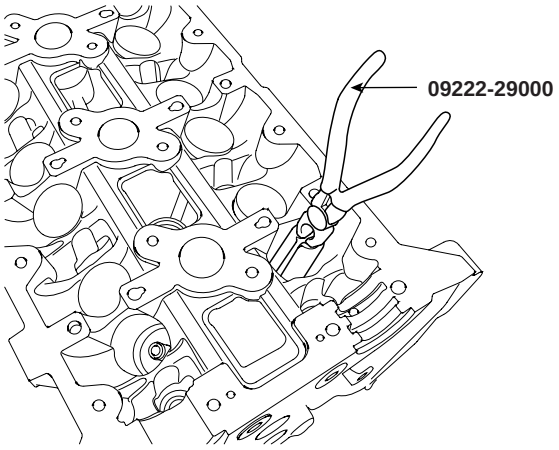

KDRF234A

NOTE

Do not reuse the removed valve stem seals.

3. Remove OCV(Oil Control Valve)(A).

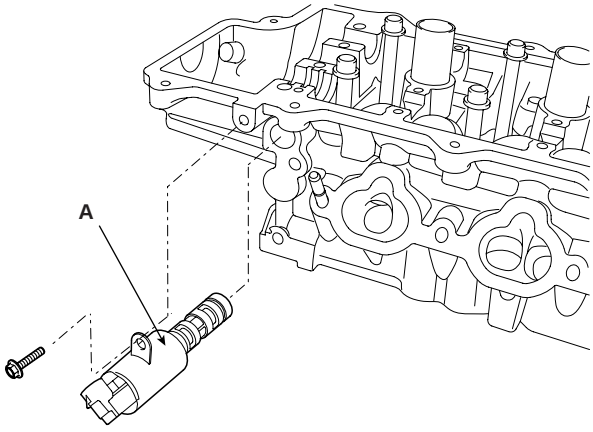

KCBF166A

INSPECTION EEB401B1

CYLINDER HEAD

1. Inspect for flatness.
   Using a precision straight edge and feeler gauge, measure the surface contacting cylinder block and the manifolds for warpage.

Flatness of cylinder head gasket surface
Standard : 0.03mm(0.0012in.) or less
Flatness of manifold gasket surface
Standard : 0.15mm(0.0059in.) or less

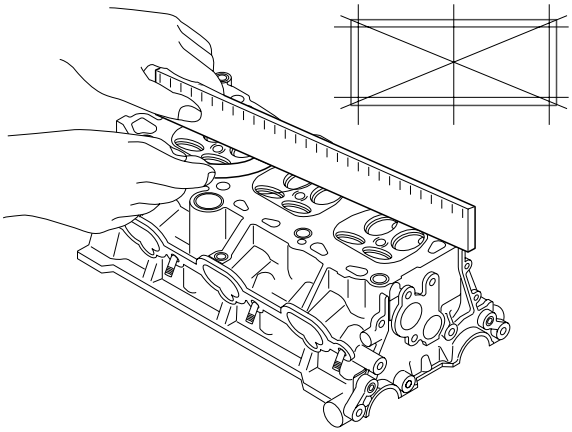

EDQF160A

2. Inspect for cracks.
   Check the combustion chamber, intake ports, exhaust ports and cylinder block surface for cracks. If cracked, replace the cylinder head.

VALVE AND VALVE SPRING

1. Inspect valve stems and valve guides.
   1) Using a caliper gauge, measure the inside diameter of the valve guide.

Valve guide inside diameter
Intake / Exhaust : 6.000 ~ 6.015mm (2.2362 ~ 2.2368in.)

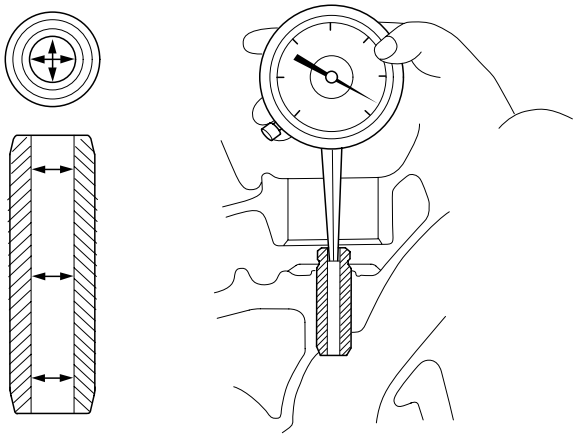

ECBF034A

   2) Using a micrometer, measure the outer diameter of the valve stem.

Valve stem outer diameter
Intake : 5.585 ~ 5.980mm (0.2348 ~ 0.2354in.)
Exhaust : 5.950 ~ 5.595mm (0.2343 ~ 0.2348in.)

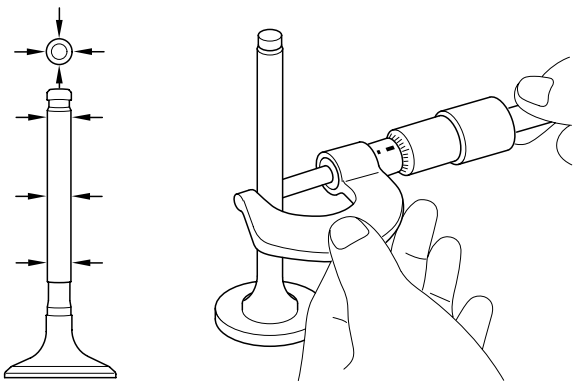

KCRF227A

3) Calculate the clearance between the valve guides and the stems by difference between the valve stem measured diameter and the valve guide measured inside diameter.

Valve stem-to-guide clearance
[Standard]
Intake : 0.020 ~ 0.050mm (0.0008 ~ 0.0020in.)
Exhaust : 0.035 ~ 0.065mm (0.0014 ~ 0.0026in.)
[Limit]
Intake : 0.10mm (0.0039in.) or less
Exhaust : 0.13mm (0.0051in.) or less

2. Inspect valves.

1) Check the valve face angle.

2) Check that the surface of the valve for wear.
If the valve face is worn, replace the valve.

3) Check the valve head margin thickness.
If the margin thickness is less than the specification, replace the valve.

Specification
Intake : 1.0mm(0.0394in.)
Exhaust : 1.3mm(0.0512.)

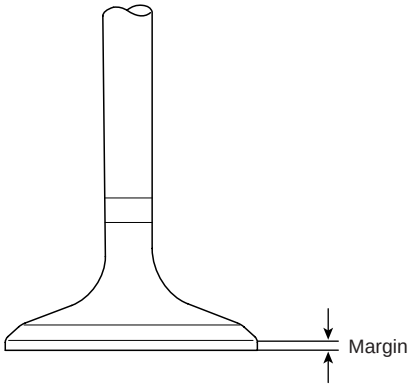

ECKD221A

4) Check the valve length.

Length
Intake : 110.1mm(4.3346in)
Exhaust : 111.1mm(4.3740in)

5) Check the surface of the valve stem tip for wear.
If the valve stem tip is worn, replace the valve.

3. Inspect valve seats

1) Check the valve seat for evidence of overheating or improper contact with the valve face.
If the valve seat is worn, replace cylinder head.

2) Before reconditioning the seat, check the valve guide for wear. If the valve guide is worn, replace the valve guide first.

3) Recondition the valve seat with a valve seat grinder or cutter. The valve seat contact width should be within specifications and centered on the valve face.

4. Inspect valve springs.

1) Using a steel square, measure the out-of-square of the valve spring.

2) Using vernier calipers, measure the free length of the valve spring.

Valve spring
[Standard]
Free height : 46.8mm (1.8425in.)
Out-of-square : 1.5° or less

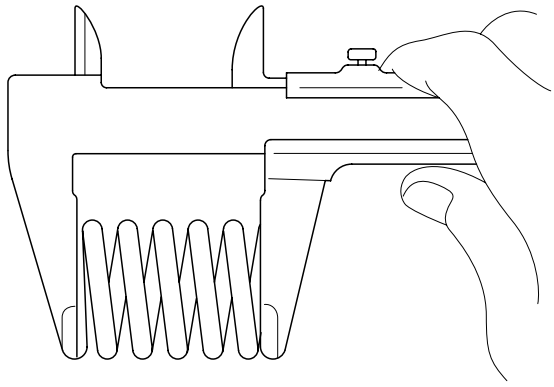

KCRF205A

MLA(MECHANICAL LASH ADJUSTER)

1. Inspect MLA.
   Using a micrometer, measure the MLA outside diameter.

MLA O.D.
Intake/Exhaust : 29.964 ~ 29.980mm(1.1797 ~ 1.1803in.)

2. Using a caliper gauge, measure MLA tappet bore inner diameter of cylinder head.

Tappet bore I.D.
Intake/Exhaust : 30.000 ~ 30.025mm(1.1811 ~ 1.1821in.)

3. Calculate the clearance by subtracting MLA outside diameter measurement from tappet bore inside diameter measurement.

MLA to tappet bore clearance
[Standard]
Intake/Exhaust : 0.020 ~ 0.061mm(0.0008 ~ 0.0024in.)
[Limit]
Intake/Exhaust : 0.07mm(0.0027in.) or less

CAMSHAFT

1. Inspect cam lobes.
   Using a micrometer, measure the cam lobe height.

Cam height
[Standard value]
Intake : 44.5mm (1.7520in.)
Exhaust : 44.5mm (1.7520in.)

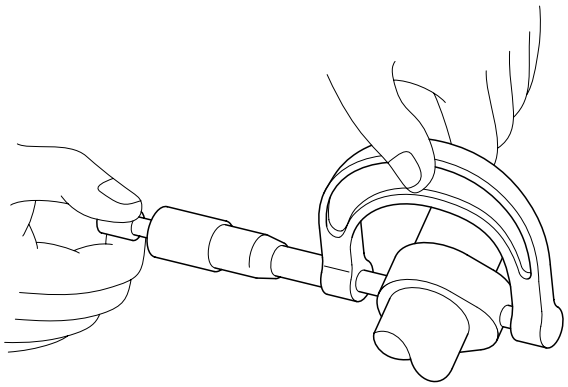

KCRF206A

If the cam lobe height is less than standard, replace the camshaft.

2. Check the cam lobe surface for wear or damage. If necessary, replace it.

3. Inspect camshaft journal clearance.

   1) Clean the bearing caps and camshaft journals.

   2) Place the camshafts on the cylinder head.

   3) Lay a strip of plastigage across each of the camshaft journals.

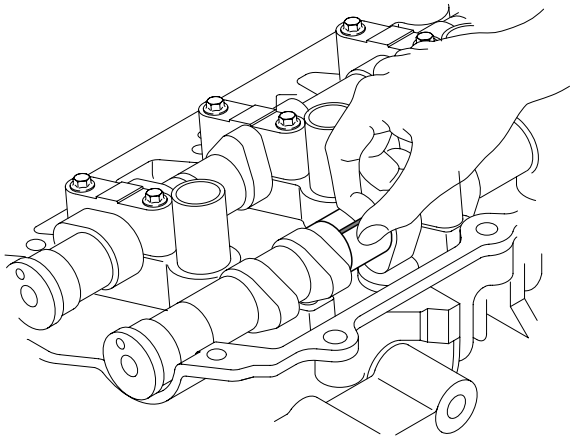

KCRF207A

4) Install the bearing caps with the tightening torque.

CAUTION

Do not turn the camshaft.

5) Remove the bearing caps.

6) Measure the plastigage at its widest point.

Bearing oil clearance
[Standard value]
Intake : 0.020 ~ 0.057mm (0.0008 ~ 0.0022in.)
Exhaust : 0.020 ~ 0.057mm (0.0008 ~ 0.0022in.)

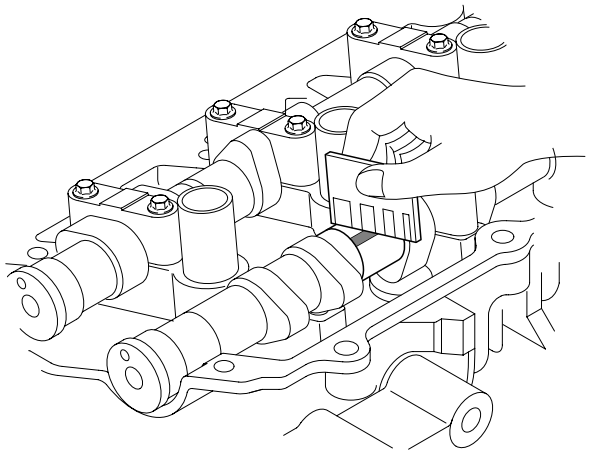

KCRF208A

If the oil clearance is greater than the maximum, replace the camshaft. If necessary, replace the cylinder head.

7) Completely remove the plastigage.

8) Remove the camshafts.

4. Inspect camshaft end play.

1) Install the camshafts.

2) Using a dial indicator, measure the end play while moving the camshaft back and forth.

Camshaft end play
[Standard value] : 0.05 ~ 0.15mm(0.0020 ~ 0.0059in.)

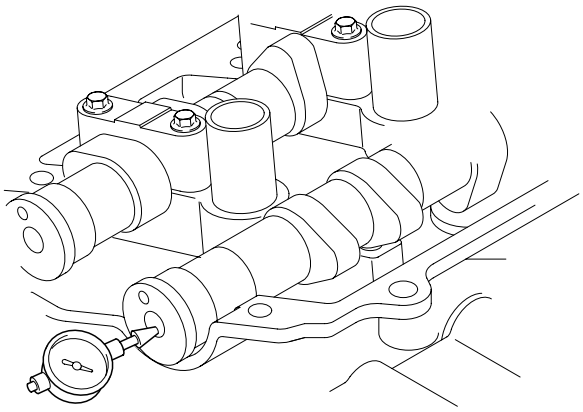

KCBF173E

If the end play is greater than the maximum, replace the camshaft. If necessary, replace the cylinder head.

3) Remove the camshafts.

CVVT ASSEMBLY

1. Inspect CVVT assembly.

   1) Fix the CVVT assembly with a vice. Ensure that the cam lobe and journal is not damaged.

   2) Check that the CVVT assembly will not turn. It should not be turned.

   3) Apply vinyl tape to the retard hole except the one(A) indicated by the arrow in the illustration.

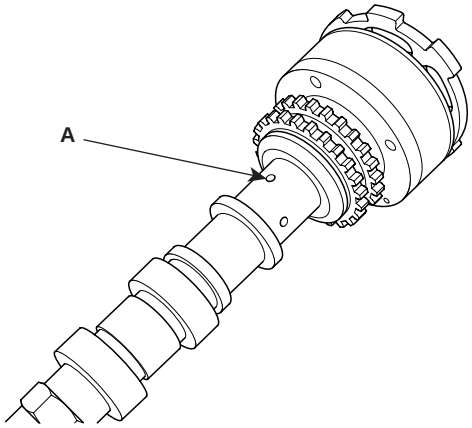

KCBF188A

   4) Wind tape around the tip of the air gun and apply air of approx. 150kpa(1.5kgf/cm², 21psi) to the port of the camshaft.
   (Perform this in order to release the lock pin for the maximum delay angle locking.)

NOTE

When the oil splashes, wipe it off with a shop rag.

   5) After the lock pin released, the CVVT assembly can turned in advanced direction.
   If the air applied is leaked much, the lock pin can not be released.

   6) Except the position where the lock pin meets at the maximum delay angle, let the CVVT assembly turn back and forth and check the movable range and that there is no resistance to movement.

Standard: Movable smoothly in the range about 60°

   7) Turn the CVVT assembly with your hand in retard direction and lock it at the maximum delay angle position.

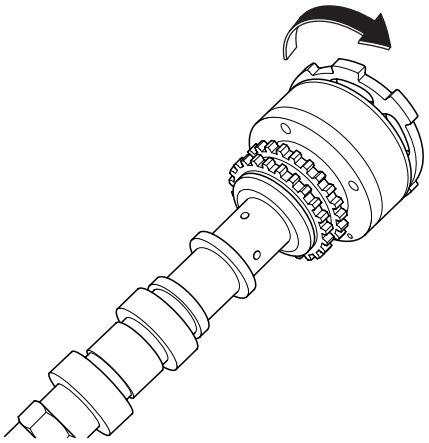

KCBF188B

REPLACEMENT E3AC3B4D

VALVE GUIDE

1. Using the SST(09221-3F100A), remove the valve guide from the downside of the cylinder head assembly.

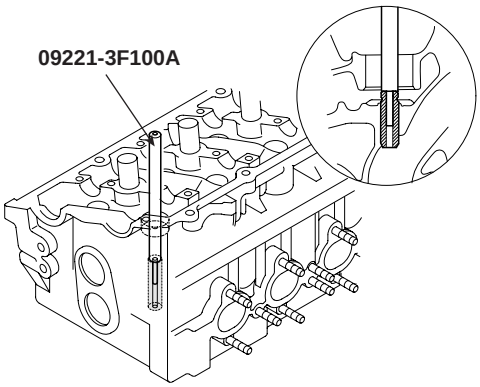

EDKD900A

2. Reprocess the valve guide hole for the oversized valve guide newly installed.

3. Using the SST(09221-3F100A/B), insert the valve guide in the upside of the cylinder head assembly. Be aware of the difference in length between the intake and the exhaust valve guides.

Specification
Intake valve guide: 45.8 ~ 46.2mm(1.8031 ~ 1.8189in.)
Exhaust valve guide: 46.8 ~ 47.2mm(1.8425 ~ 1.8583in.)

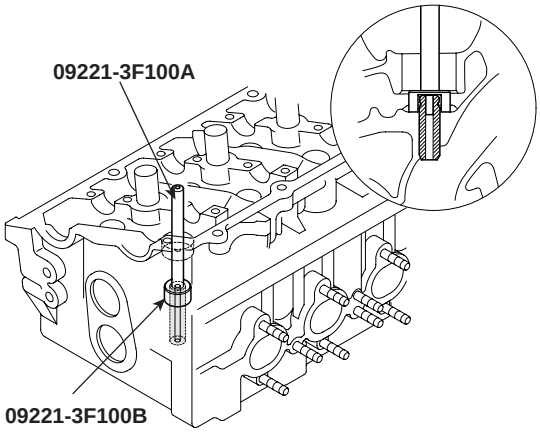

EDKD900B

4. After installing the valve guides, insert new valves and check the clearance between the valve stems and the valve guides.

5. After replacing the valve guides, check if they are properly installed with the valve seats. Reprocess valve seats if necessary.

REASSEMBLY ECABCEB6

NOTE

- *Thoroughly clean all parts to be assembled.*
- *Before installing the parts, apply fresh engine oil to all sliding and rotating surfaces.*
- *Replace oil seals with new ones.*

1. Install valves.

   1) Using SST(09222-22001), push in a new valve stem seal with applying engine oil.

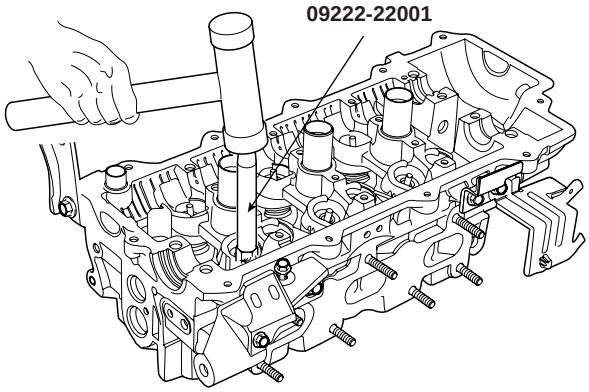

KCBF173B

NOTE

- *Do not reuse old valve stem seals.*
  Incorrect installation of the seal could result in oil leakage past the valve guides.
- *Reassemble the valve stem seals*

   2) After applying engine oil on the outer surface of each valve stem, insert the valve in the valve guide.
   Install the valve, valve spring and spring retainer.

NOTE

When installing valve springs, the side coated with enamel should face toward the valve spring retainer

   3) Using the SST(09222 - 3K000, 09222-3C300), compress the springs and install the retainer locks. After installing the valves, ensure that the retainer locks are correctly in place before releasing the valve spring compressor.

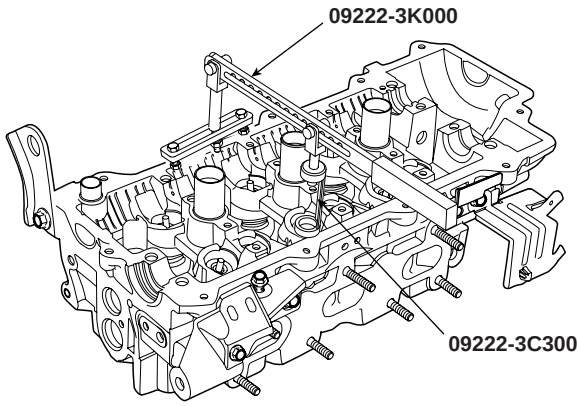

KCBF173C

   4) Lightly tap the end of each valve stem two or three times with the wooden handle of a hammer to ensure proper seating of the valve and retainer lock.

2. Install MLAs with engine oil applied on its surface. Check that the MLA rotates smoothly by hand.

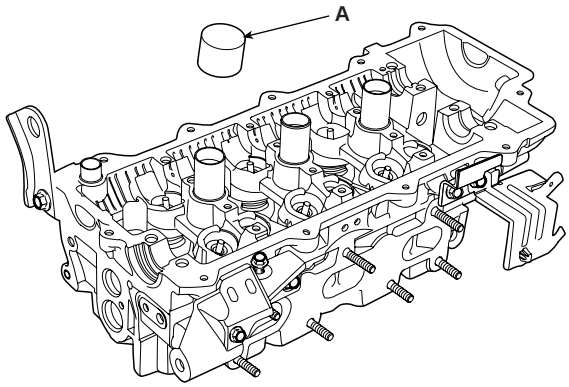

KCBF173D

NOTE

MLA should be reinstalled in its original position.

3. Install OCV(Oil Control Valve)(A).

Tightening torque
7.8 ~ 9.8Nm(0.8 ~ 1.0kgf.m, 5.8 ~ 7.2lb-ft)

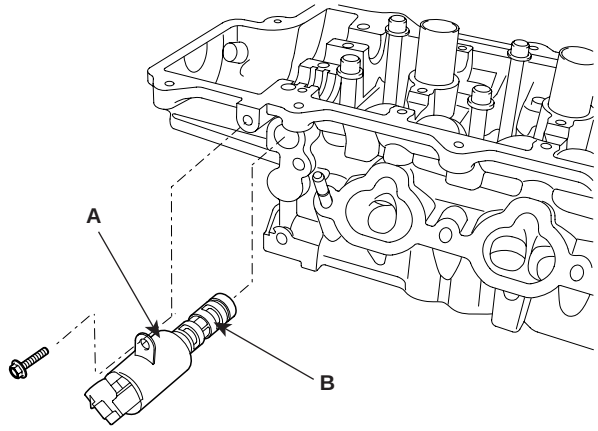

KCBF166B

NOTE

- *To install OCV with gray colored connector into RH bank.*
- *To install OCV with black colored connector into LH bank.*

CAUTION

- ***Do not reuse the OCV when dropped.***
- ***Keep clean the OCV.***
- ***Do not hold the OCV sleeve during servicing.***
- ***When the OCV is installed on the engine, do not move the engine while holding the OCV yoke.***
- ***If there is dust on the filter(B) of the OCV, clean it all.***

INSTALLATION E77C23D4

NOTE

- *Thoroughly clean all parts to be assembled.*
- *Always use a new head and manifold gasket.*
- *The cylinder head gasket is a metal gasket. Take care not to bend it.*
- *Rotate the crankshaft to set the No.1 cylinder piston at TDC.*

1. After putting the cylinder head gasket on the cylinder block, install the cylinder head.

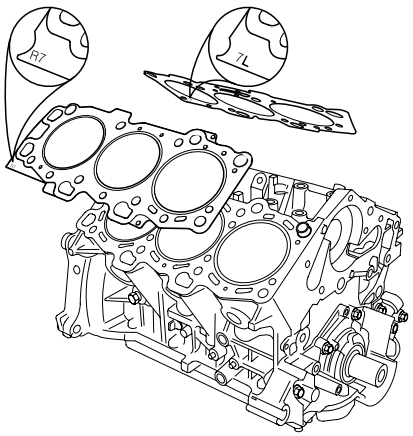

KCBF191A

CAUTION

Ensure the LH/RH classification of the cylinder head gasket when installing.

2. Tighten the cylinder head bolts with the plain washers in several steps as following order.

NOTE

- *In assembling washers, the marked surface should face upward.*
- *In installing the cylinder head bolts, apply engine oil on the thread of the bolts and the surface of the washers.*

Tightening torque
24.5Nm(2.5kgf.m, 18.1lb-ft) + 60° + 45°

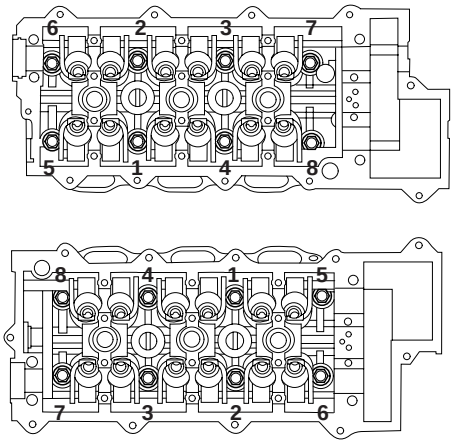

KCBF176B

NOTE

Using the SST(09221-4A000), tighten the bolts which need to be tightened with the angular tightening method.

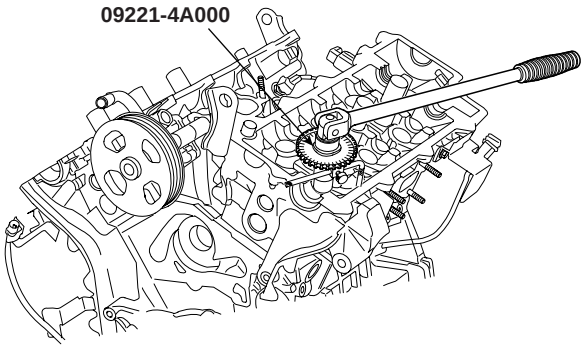

LDLG063A

3. Install the CVVT assembly and camshaft chain sprocket with the dowel pin in the CVVT installed to the intake camshaft. Ensure that the pin will not be installed in the hole for oil feeding.

Tightening torque
66.7~78.5Nm(6.8~8.0kgf.m, 49.2~57.9lb-ft)

NOTE

After tightening the CVVT bolts, rotate the CVVT assembly housing counterclockwise by hand to seat the lock pin in the CVVT assembly in good position.

CAUTION

Fix the hexagonal part of the camshaft in a vice when tightening the CVVT bolts. Do not fix the CVVT housing or sprocket in a vice.

4. Install the camshaft in the cylinder head assembly.

   1) Align the timing mark of the camshaft timinig chain.

LH CAMSHAFT CHAIN TIMING MARK

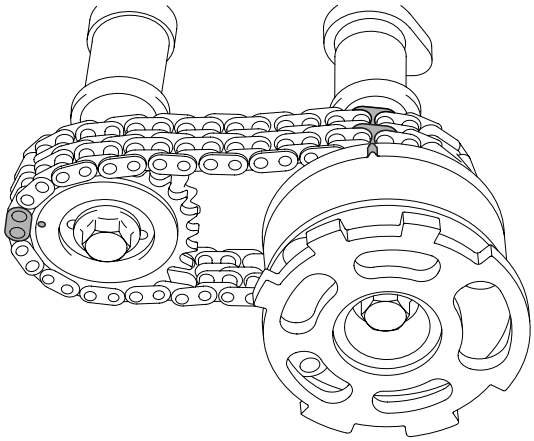

KCBF164A

RH CAMSHAFT CHAIN TIMING MARK

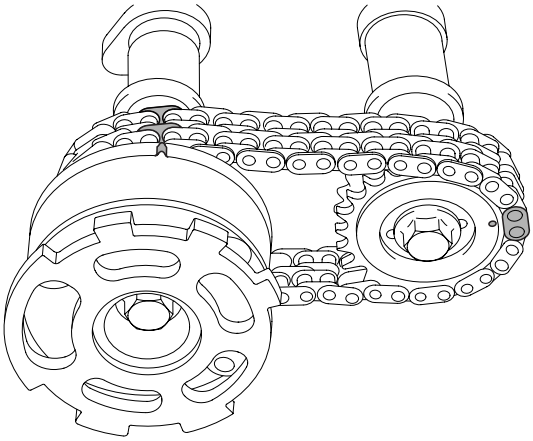

KCBF165A

CAUTION

Both timing marks should face upward in re-assemby.

5. Install the timing chain tensioner.

   1) Insert the set pin by pressing the timing chain tensioner.

   2) Install the chain tensioner(A) in the cylinder head assembly.

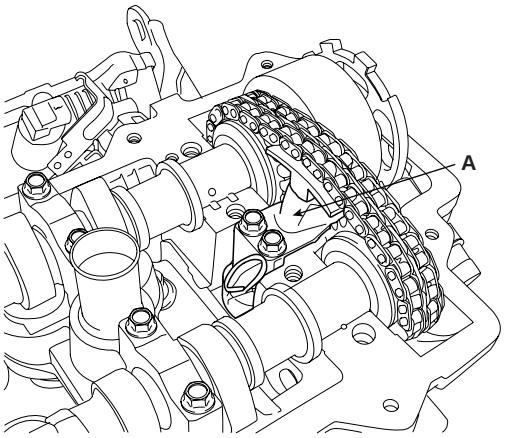

KCBF168A

6. Install the camshaft bearing caps.

Tightening torque
Bearing cap bolt(A: 6×38) - 10.8~12.7Nm(1.1~1.3kgf.m, 8.0~9.4lb-ft)
Bearing cap bolt(B: 8×38) - 20.6~22.5Nm(2.1~2.6kgf.m, 15.2~18.8lb-ft)

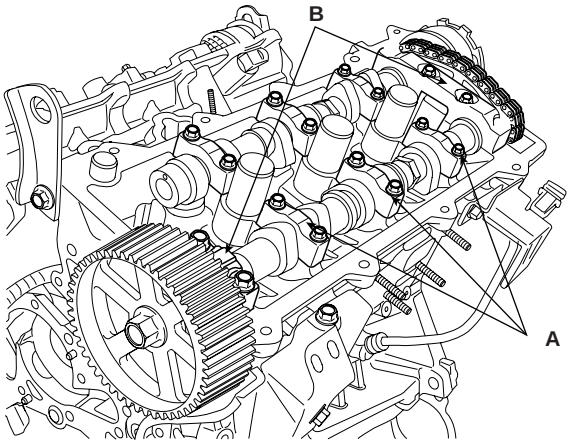

KCBF169A

NOTE

When installing the bearing caps, check the marks on them as shown below and install them in its proper position.

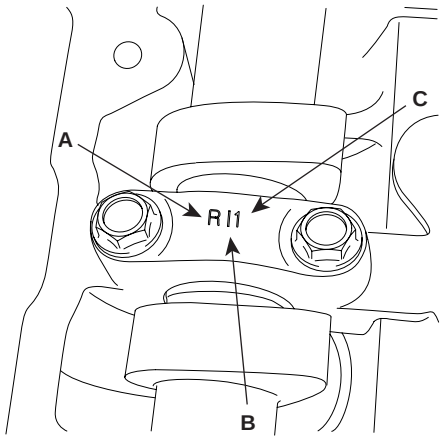

KDRF228A

A(LH/RH HEAD): L(LH), R(RH)
B(Intake/Exhaust): I(Intake), E(Exhaust)
C(Cap no.): 1,2,3

CAUTION

When installing the bearing caps, turn the crankshaft to place a piston in the middle of the block because linterference between valves and pistons can occur.

7. Using the SST(09214-21000), install the camshaft oil seal.

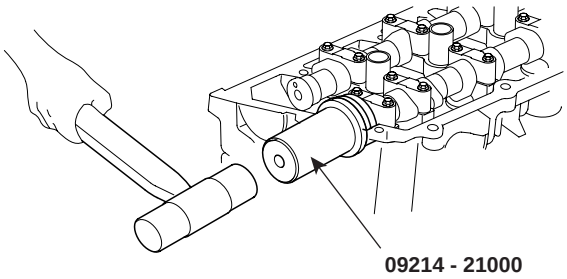

KCBF190A

NOTE

- *Befor installing, apply engine oil.*
- *The camshaft cap surface should adhere to the cylinder head assembly.*
- *Do not press an eccentric load.*

8. Install the CKP sensor connector bracket(A).

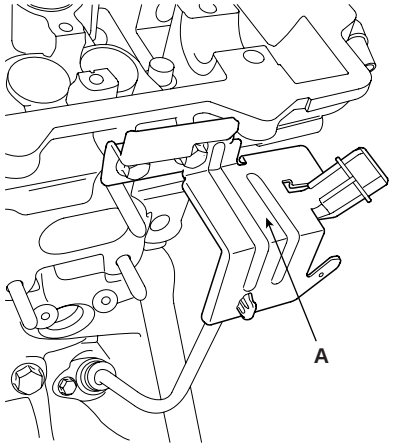

KCBF172A

9. Install the bank 2 timing belt rear cover(A).

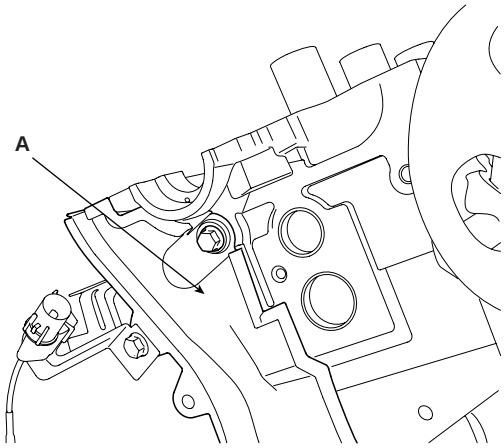

KCBF171A

10. Install the bank 1 timing belt rear cover(A).

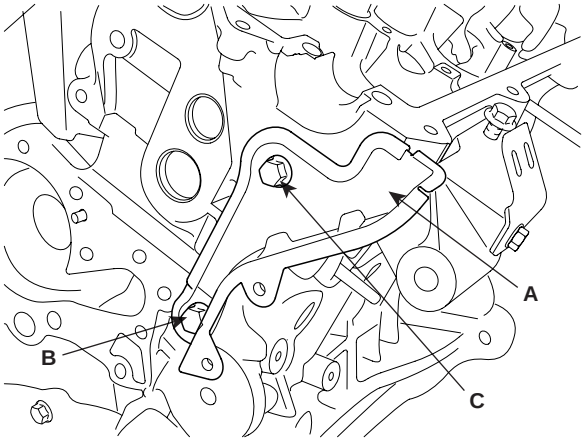

KCBF170B

NOTE

The length of the bolt B is longer than that of the bolt C.

11. Install the timing belt.(Refer to 'Timing system').

12. Check and adjust the valve clearance.

13. Install the cylinder head cover.

    1) Remove oil, dust or sealant on the upper surface of the cylinder before assembling cylinder head cover.

    2) Assemble the cylinder head cover in five minites after applying liquid gasket(LOCTITE 5900) on the camshaft cap and packing part.

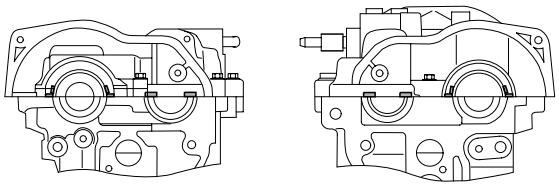

KCBF174A

    3) Tighten the cylinder head cover bolts as following order(A).

Tightening torque
7.8~9.8Nm(0.8~1.0kgf.m, 5.8~7.2lb-ft)

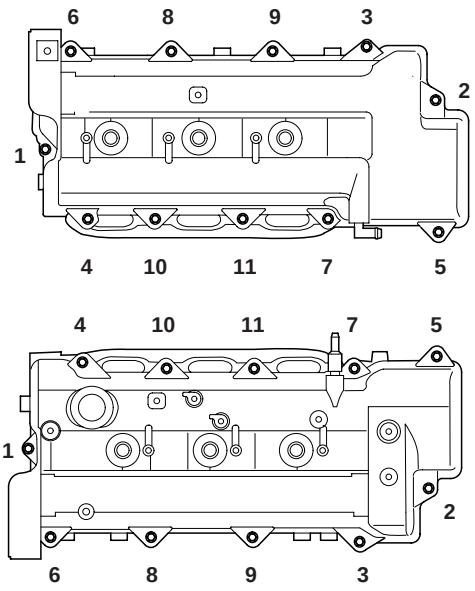

KCBF175A

NOTE

- *Do not start engine for thirty minites after assembling the cylinder head cover.*
- *Do not reuse the cylinder head cover gasket.*

14. Install the water temp. control assembly.
15. Install the intake manifold assembly.
16. Install the exhaust mainfold assembly.
17. Install the power steering pump.(Refer to 'ST' group).
18. Install the drive belt(A).

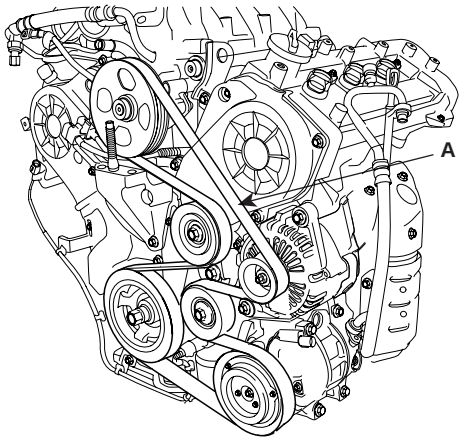

KCBF105A

19. Install the heater hose.
20. Connect the brake vaccume hose(A).

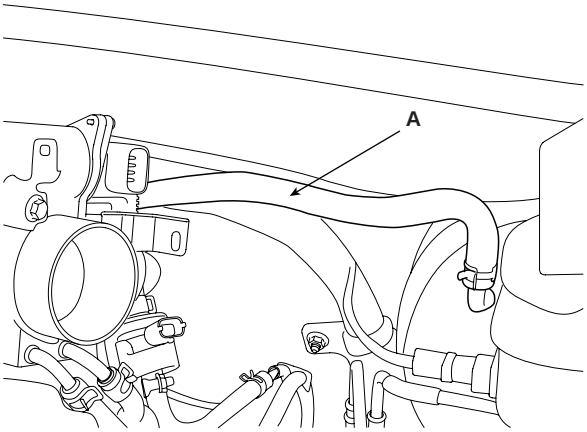

LDLG036A

21. Install the PCV(Pulge Control Valve) hose(A).

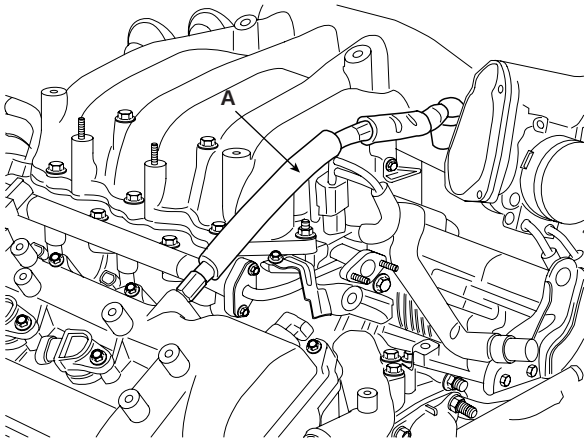

KCBF180A

22. Connect the engine wiring harness connectors.
    1) Connect the bank 1 CMP sensor connector(A).

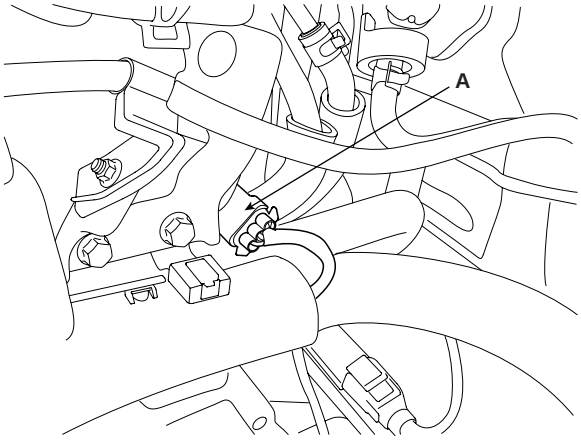

KCBF152A

    2) Connect the bank 2 front/rear O2 sensor connectors(A,B) and the CKP sensor connector(C).

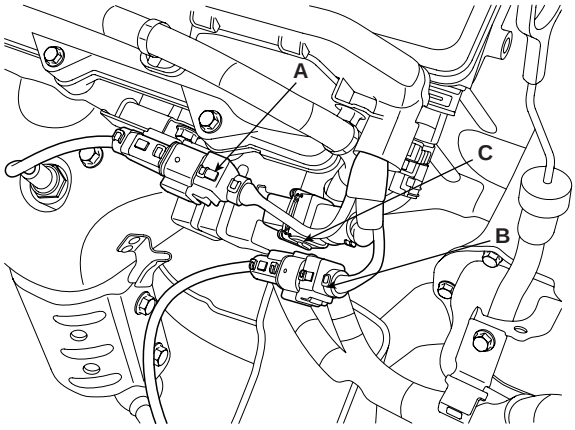

KCBF154A

3) Connect the bank 2 CMP sensor connector(A) and the WTS(Water Temperature Sensor) connector(B).

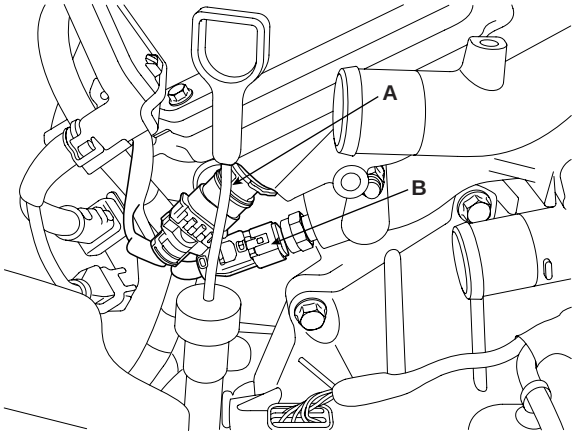

KCBF155A

4) Connect the generator connector(A) and the air conditioning compressor connector(B).

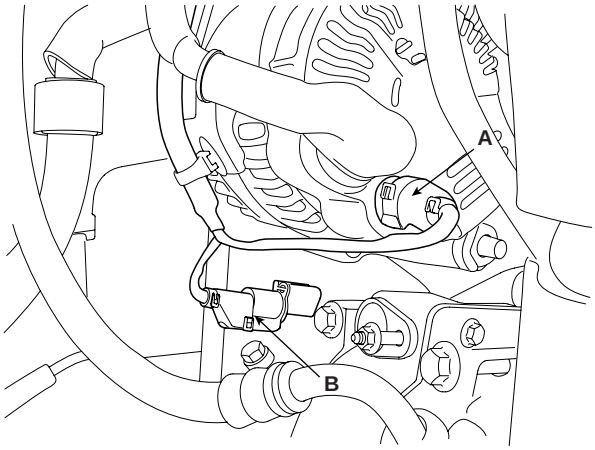

KCBF151A

5) Connect the MAPS(Manifold Absolute Pressure Sensor) connector(A), the ETC(Electronic Throttle Control) connector(B) and the PCSV(Purge Control Solenoid Valve) connector(C).

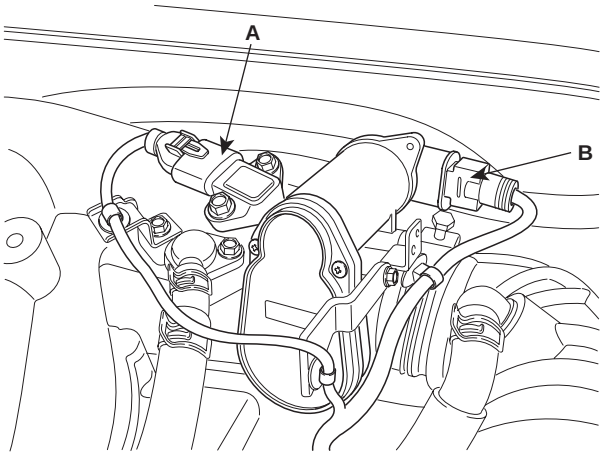

LDLG034A

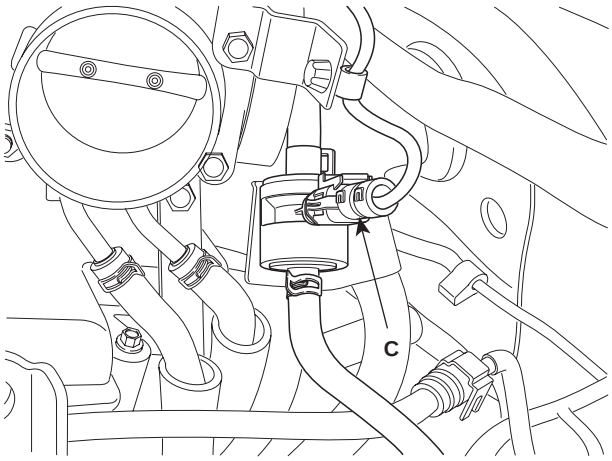

LDLG035A

6) Connect the injection harness connector(A), the No.2 VIS(Variable Induction System) connector(B), the No.1/No.2 OCV(Oil Control Valve) connectors(C,D) and the OTS(Oil Temperature Sensor) connector(E).

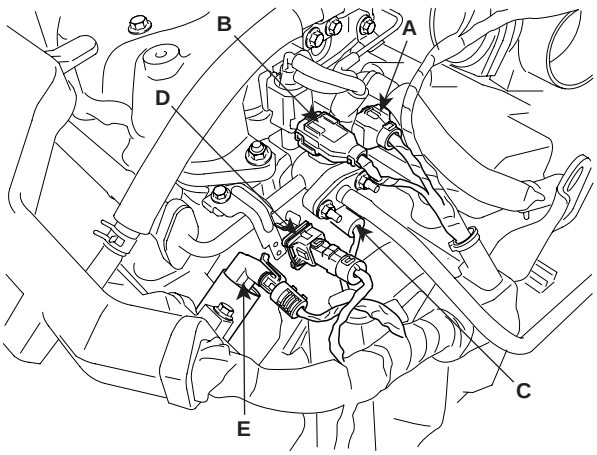

LDLG006A

7) Connect the injection connectors(A,B,C), the ground lines(D), the condensor connector(E) and the Ignition coil connectors(F).

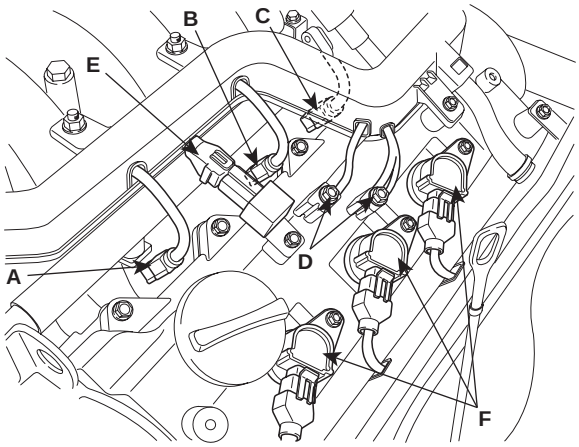

LDLG060A

8) Connect the bank 1 front/rear O2 sensor connectors(A).

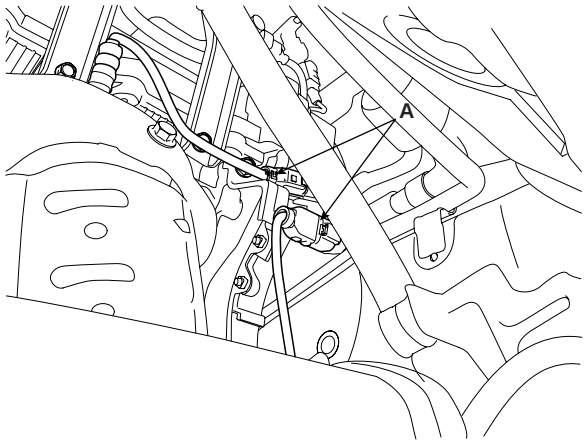

KCBF160A

9) Connect the No.1/No.2 knock sensor connectors(A,B), the oil pressure switch connector(C), the ignition coil harness(D) and the No.1 VIS(Variable Induction System) connector(E).

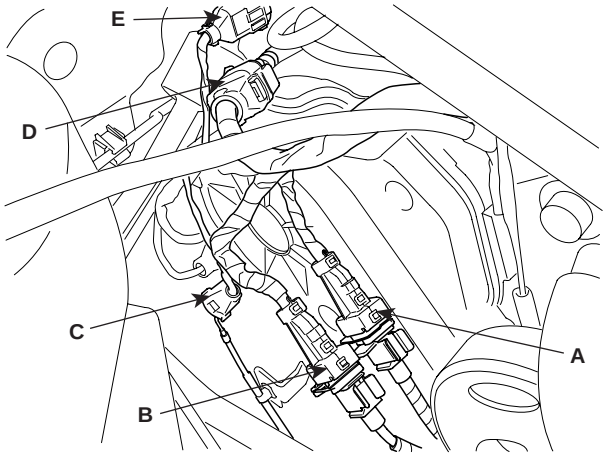

LDLG005A

23. Install the fuel inlet hose(A) from the delivery pipe.

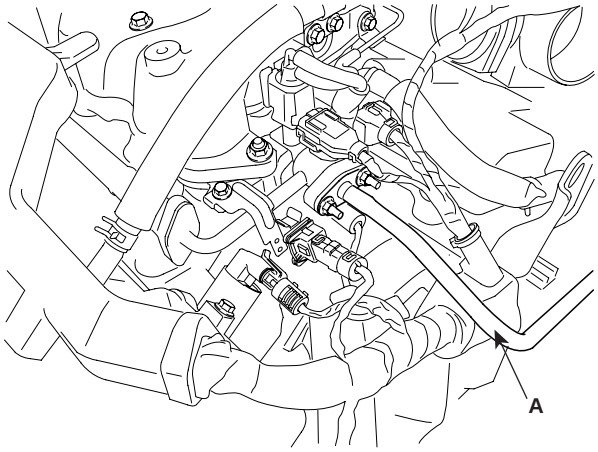

LDLG062A

24. Install the upper radiator hose(A) and lower radiator hose(B).

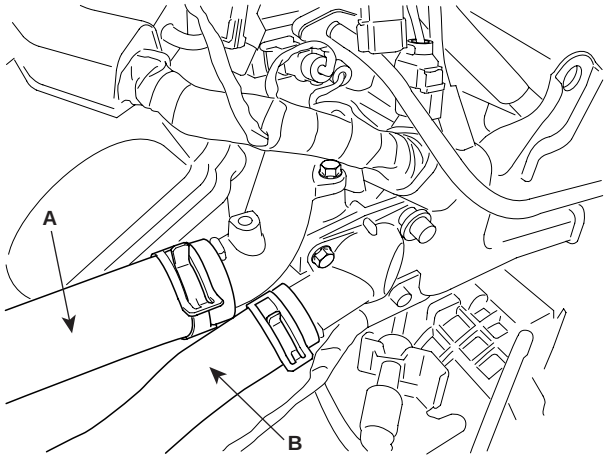

LDLG008A

25. Install the intake air hose and air cleaner assembly.

    1) Connect the PCM connectors(D).

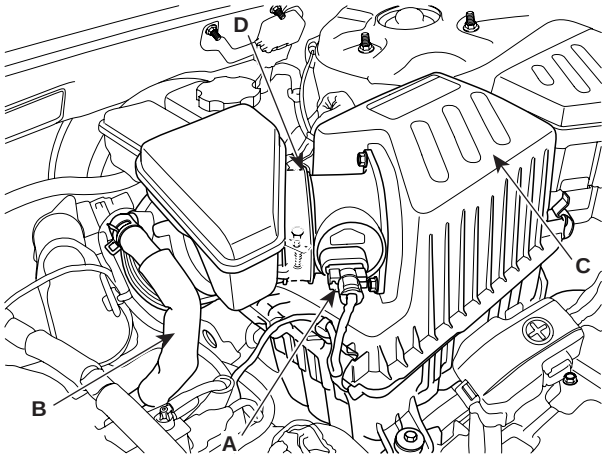

SCMEM6004L

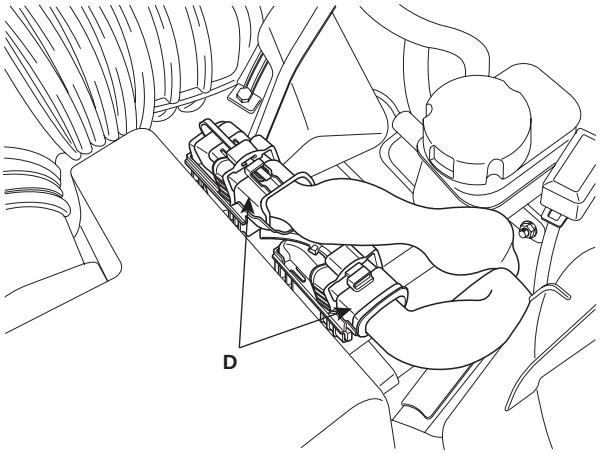

LDLG061A

    2) Install the intake air hose and air cleaner assembly(C).

    3) Connect the breather hose(B) from air cleaner hose.

    4) Connect the MAF connector(A).

26. Install the engine cover.

27. Refill engine coolant.

TIMING SYSTEM

COMPONENTS E19F8373

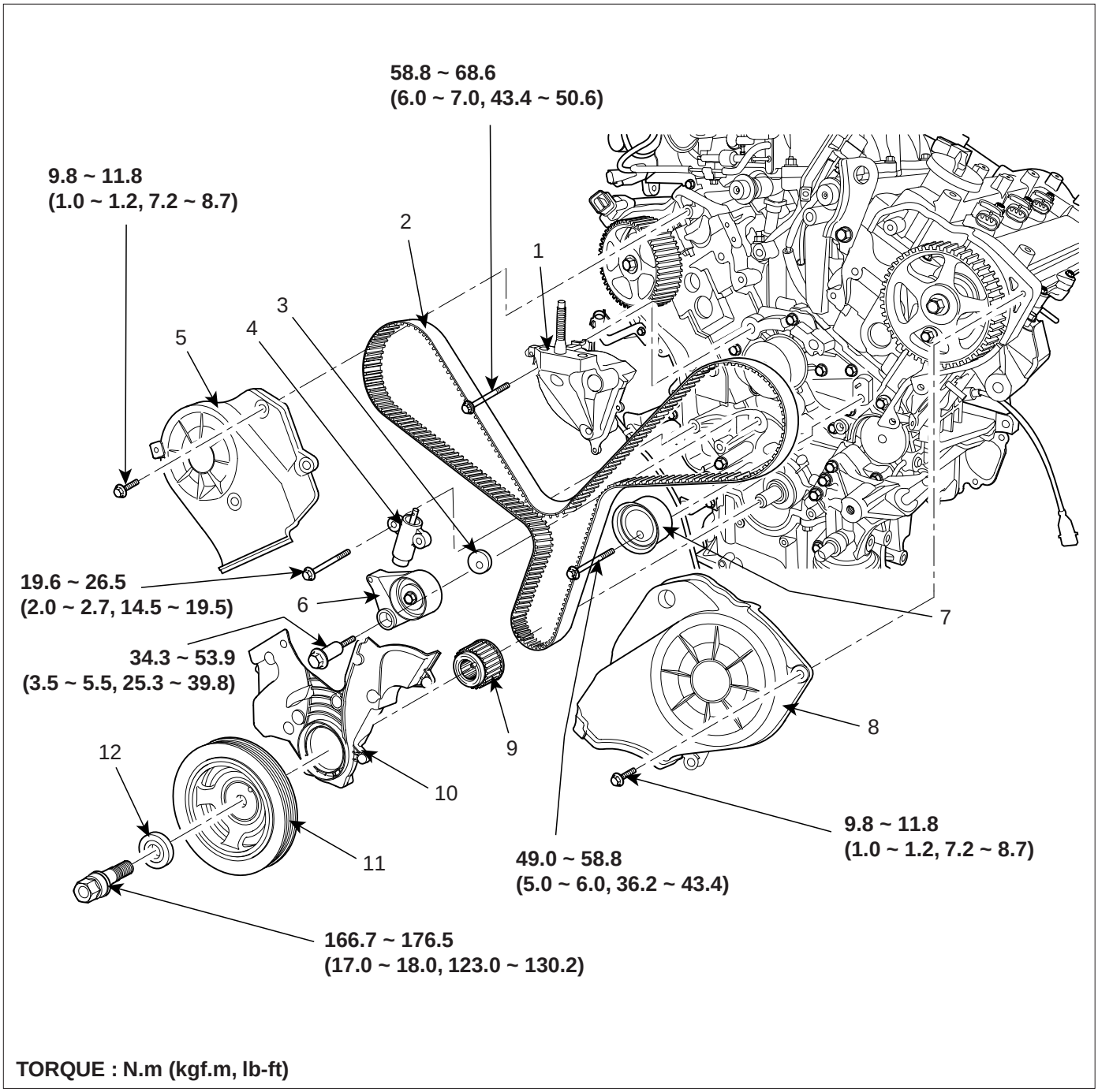

TORQUE : N.m (kgf.m, lb-ft)

1. Engine support bracket
2. Timing belt
3. Tensioner arm assembly washer
4. Timing belt auto tensioner
5. Bank 1 timing belt upper cover
6. Timing belt tensioner arm assembly
7. Idler pulley
8. Bank 2 timing belt upper cover
9. Crankshaft sprocket
10. Timing belt lower cover
11. Damper pulley
12. Special washer

LDLG039A

REMOVAL EDEF75A6

1. Remove the engine cover.
2. Remove the front right wheel and tire.
3. Remove the right side cover.
4. Remove the drive belt(A), the idler(B) and the tensioner(C).

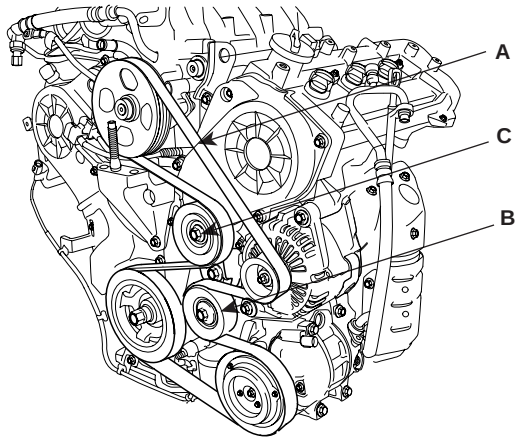

KCBF105B

NOTE

In removing the drive belt, fix a tool in the auto tensioner pulley bolt and turn the bolt counter clockwise.

5. Remove the timing belt upper cover(A).

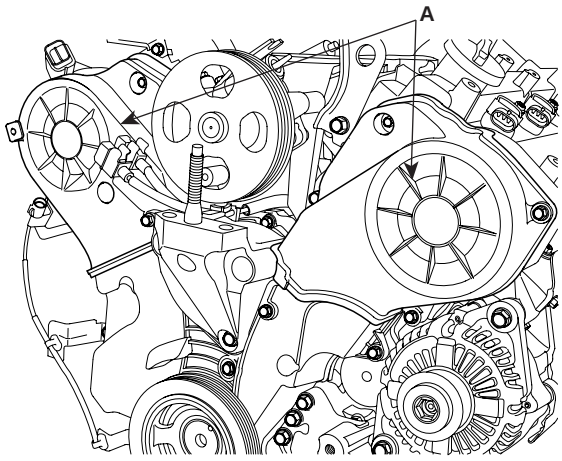

KCBF106A

6. Align the groove of the pulley with the timing mark of the timing belt cover by turning the crankshaft pulley clockwise. Check if the timing mark of the camshaft sprocket is aligned with that of the cylinder head cover at the moment.
(No.1 cylinder piston at TDC)

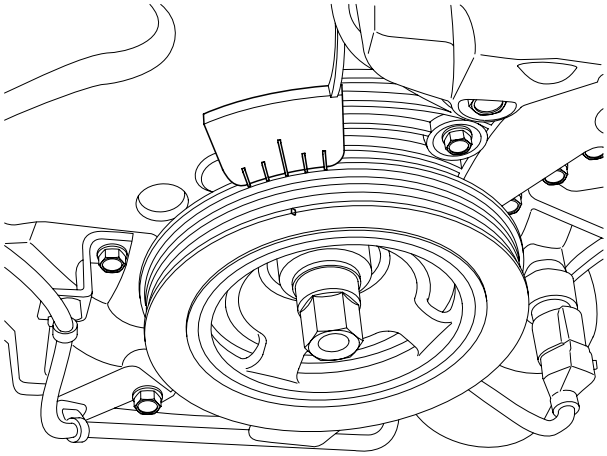

KCBF107A

7. Remove the engine mounting bracket.
   1) Sustain the engine oil pan with a jack.

CAUTION

Put a wooden or rubben block between the jack and the engine oil pan.

   2) Remove the engine mounting bracket(A).

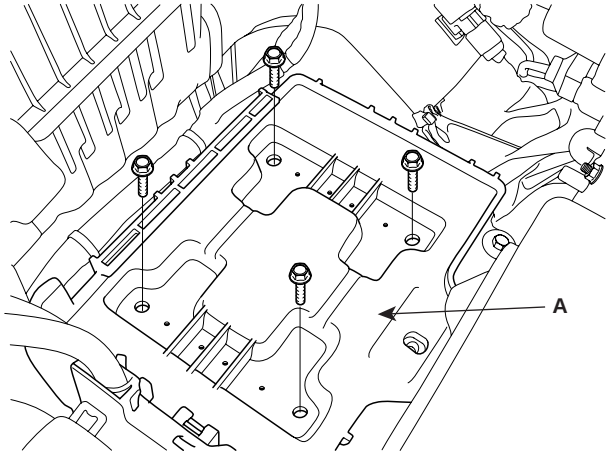

SCMEM6007L

8. Remove the crankshaft damper pulley(A).

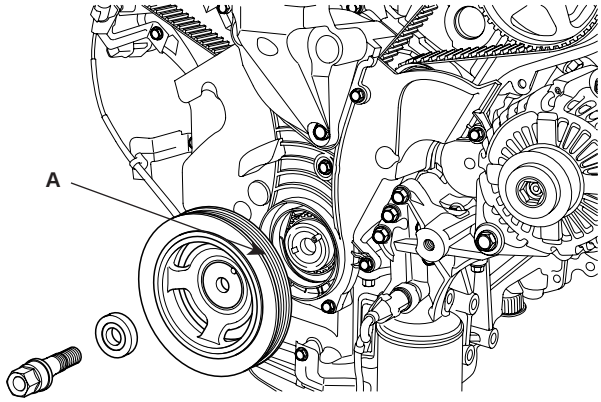

KCBF109A

9. Remove the timing belt lower cover(A).

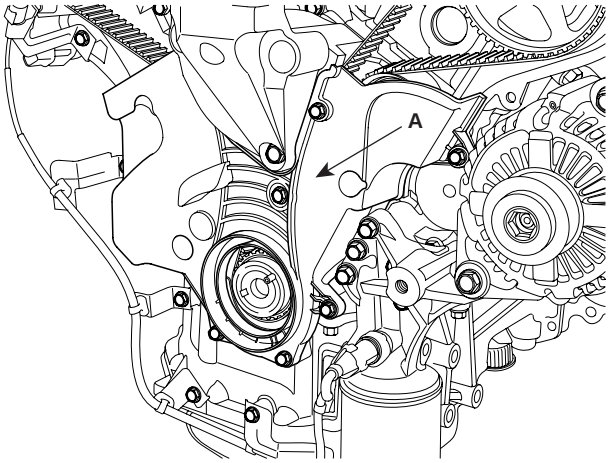

KCBF110A

10. Remove the engine support bracket(A).

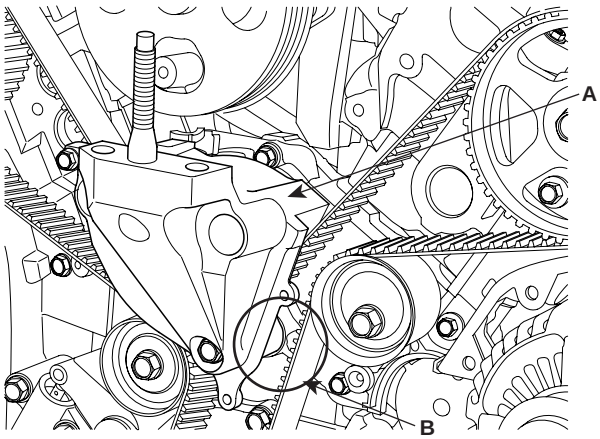

LDLG065A

NOTE

After the removal, engine coolant can be drained a little from that point(B) which is a matter of no importance.

11. Remove the timing belt auto tensioner(A).

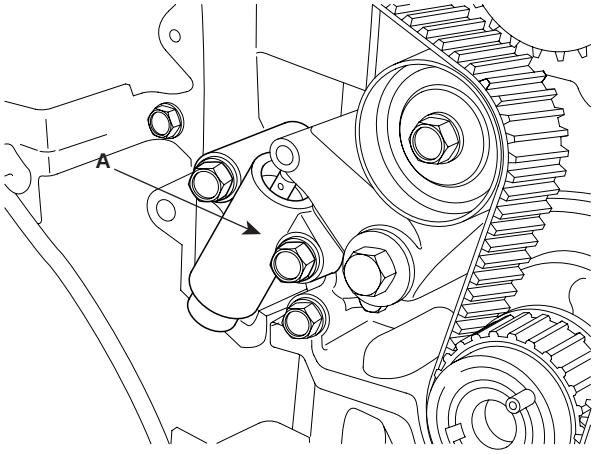

KCBF112A

12. Remove the timing belt(A).

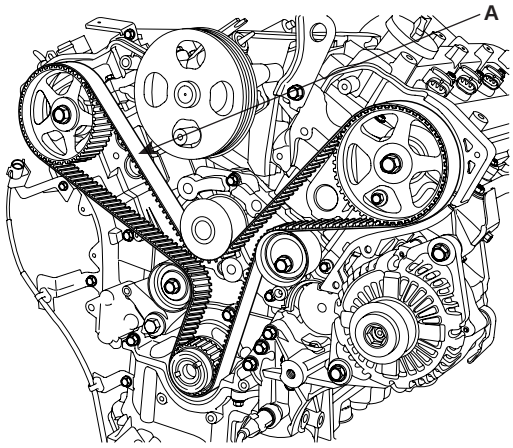

KCBF113A

NOTE

Make a direction mark of revolution on the timing belt for reusal.

13. Remove the tensioner arm assembly(A) and the idler(B).

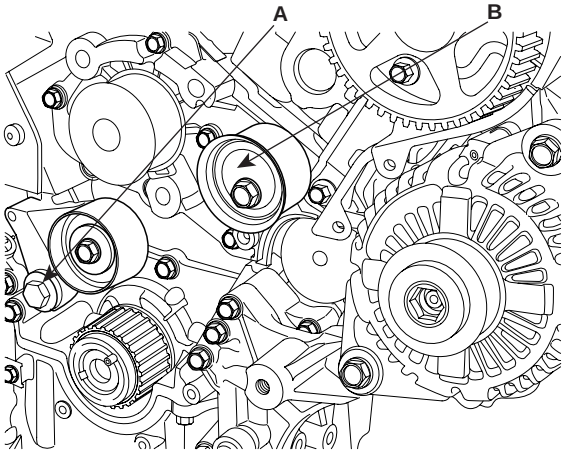

KCBF114A

14. Remove the crankshaft sprocket.

INSPECTION EFF268C6

SPROCKETS, TENSIONER, IDLER

1. Check the camshaft sprocket and crankshaft sprocket, tensioner pulley and idler pulley for abnormal wear, cracks, or damage. Replace as necessary.

2. Inspect the tensioner and the idler for easy and smooth rotation and check for play or noise. Replace as necessary.

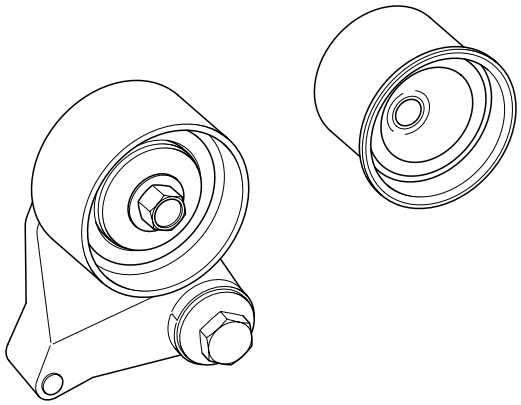

KCBF115A

3. Replace the tensioner and the idler if grease is leaked from bearings.

TIMING BELT

1. Check the belt for oil or dust deposits.
   Replace, if necessary.
   Small deposits should be wiped away with a dry cloth or paper. Do not clean with solvent.

2. When the engine is overhauled or belt tension adjusted, check the belt carefully. If any of the following flaws are evident, replace the belt.

   NOTE

   - *Do not bend, twist or turn the timing belt inside out.*
   - *Do not allow the timing belt to come into contact with oil, water and steam.*

3. Inspect the idler for easy and smooth rotation and check for play or noise.

INSTALLATION E8CBF683

1. Install the crankshaft sprocket.

2. Install the tensioner arm assembly(A) and the idler(B).

Tightening torque
Tensioner arm bolt : 34.3 ~ 53.9Nm(3.5 ~ 5.5kgf.m, 25.3~ 39.8lb-ft)
Idler pulley bolt : 49.0 ~ 58.8Nm(5.0 ~ 6.0kgf.m, 36.2~ 43.4lb-ft)

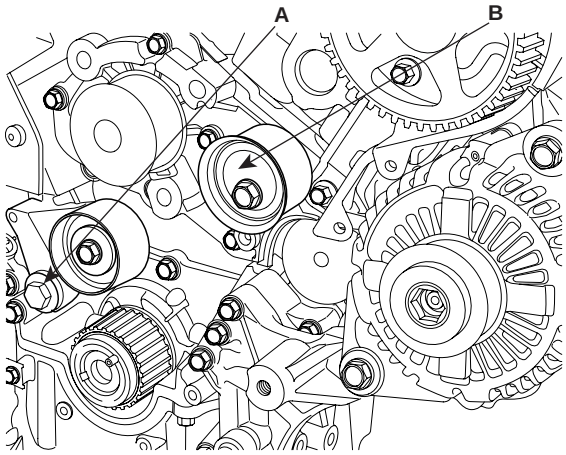

KCBF114A

3. Install the timing belt auto tensioner.

   1) Fixing the tensioner with a vice and compressing the rod, insert a set-pin.

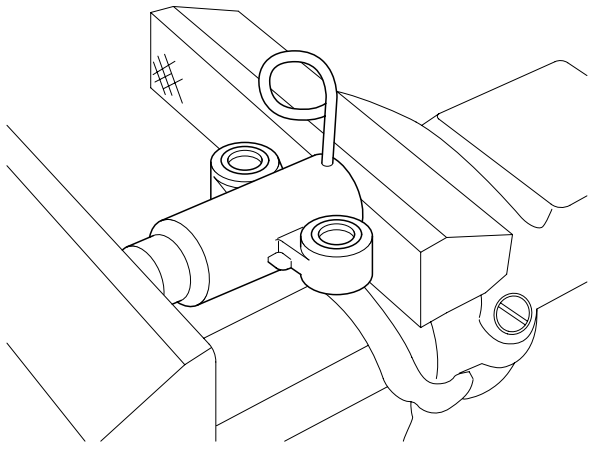

KCBF116A

NOTE

- *Do not lay down the auto tensioner.*
- *Do not compress the rod suddenly.*
- *When reinstalling the auto tensioner, ensure its direction.*

   2) Install the auto tensioner(A) to the front case with the set-pin inserted.

Tightening torque
19.6 ~ 26.5Nm(2.0 ~ 2.7kgf.m, 14.5 ~ 19.5lb-ft)

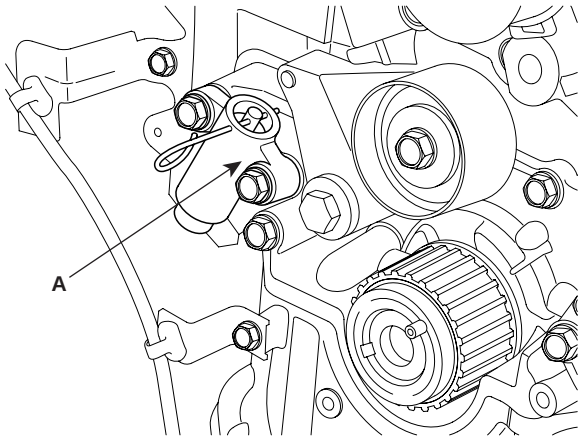

KCBF117A

4. Ensure the timing marks on the camshaft and the crankshaft sprockets.

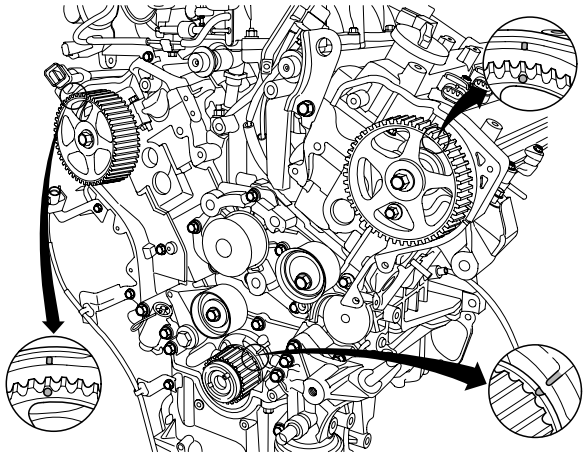

LDLG066A

5. Install the timing belt.
   Crankshaft sprocket(A) → Idler(B) → Bank 2 exhaust camsprocket(C) → Water pump pulley(D) → Bank 1 exhaust camsprocket(E) → Tensioner pulley(F).

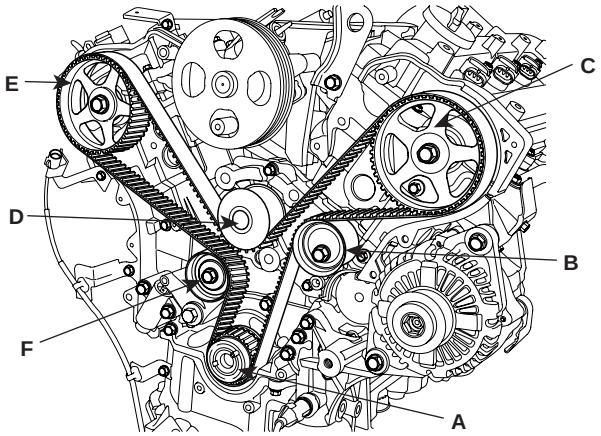

LDLG067A

6. Remove the auto tensioner set-pin.

7. Check the tension of the timing belt.

   1) Turn the crankshaft 2 rev. clockwise which makes the No.1 cylinder piston position at TDC.
   After 5minutes, measure the length of the projected rod.

Specification
5 ~ 7mm(0.1969 ~ 0.2756in.)

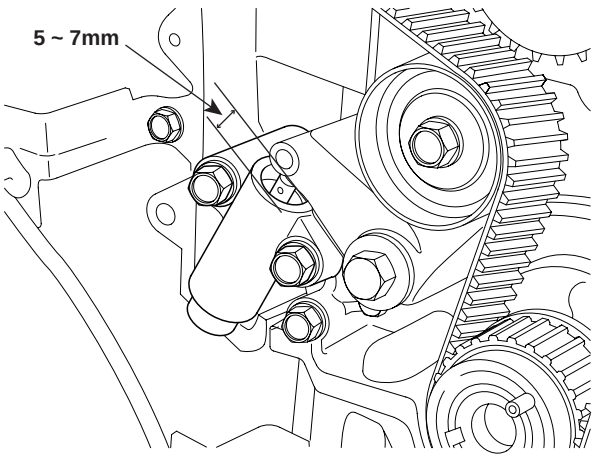

KCBF112B

   2) Ensure the locations of the timing marks for each sprocket.

8. Install the engine support bracket(A).

Tightening torque
58.8 ~ 68.6Nm(6.0 ~ 7.0kgf.m, 43.4 ~ 50.6lb-ft)

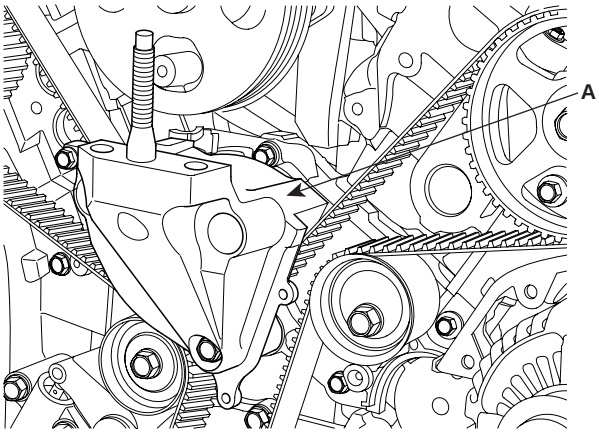

LDLG068A

9. Install the timing belt lower cover.

Tightening torque
9.8 ~ 11.8Nm(1.0 ~ 1.2kgf.m, 7.8 ~ 8.7lb-ft)

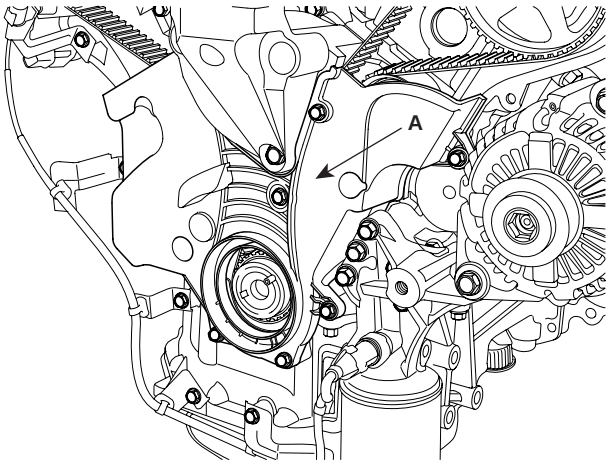

KCBF110A

10. Install the crankshaft damper pulley(A).

Tightening torque
166.7 ~ 176.5Nm(17.0 ~ 18.0kgf.m, 123.0 ~ 130.2lb-ft)

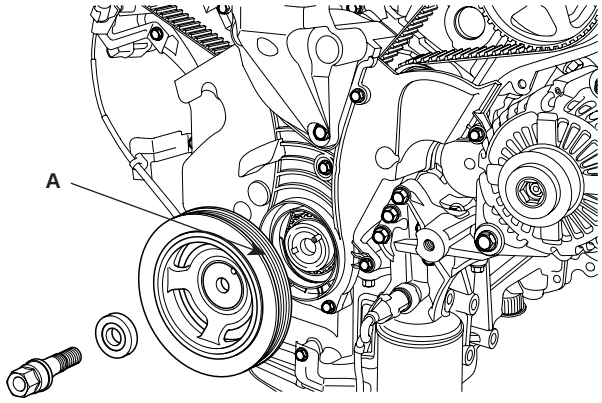

KCBF109A

11. Install the engine mounting bracket(A).

Tightening torque
63.7 ~ 83.4Nm(6.5 ~ 8.5kgf.m, 47.0 ~ 61.5lb-ft)

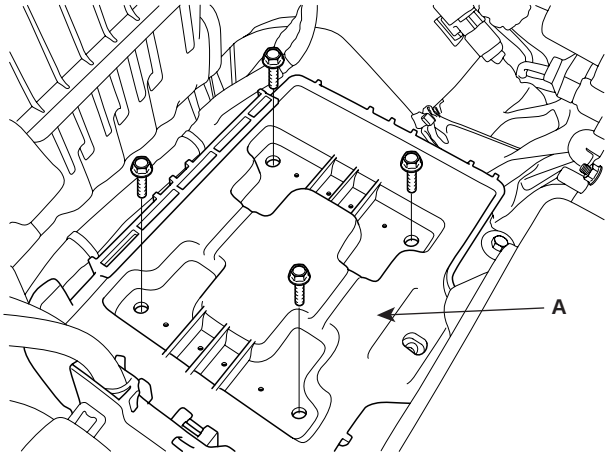

SCMEM6007L

12. Install the timing belt upper cover(A).

Tightening torque
9.8 ~ 11.8Nm(1.0 ~ 1.2kgf.m, 7.2 ~ 8.7lb-ft)

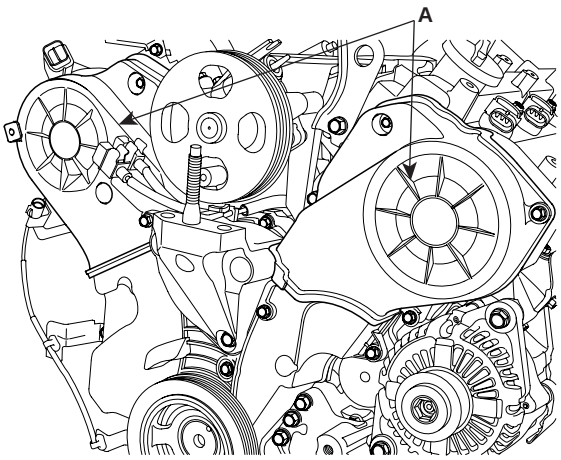

KCBF106A

13. Install the drive belt tensioner(C).

Tightening torque
34.3 ~ 53.9Nm(3.5 ~ 5.5kgf.m, 25.3 ~ 39.8lb-ft)

14. Install the drive belt idler and the drive belt(A).

Tightening torque
34.3 ~ 53.9Nm(3.5 ~ 5.5kgf.m, 25.3 ~ 39.8lb-ft)

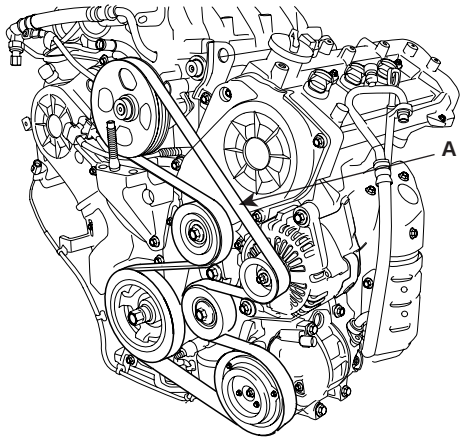

KCBF105A

15. Install the right side cover.

16. Install the front right wheel and tire.

17. Install the engine cover.

ENGINE AND TRANSAXLE ASSEMBLY

REMOVAL E73C468F

CAUTION

- ***Use fender covers to avoid damaging painted surfaces.***
- ***To avoid damage, unplug the wiring connectors carefully while holding the connector portion.***

NOTE

- *Mark all wiring and hoses to avoid misconnection.*

1. Remove the air duct and the battery(A) after disconnecting the terminals(B) from the battery.

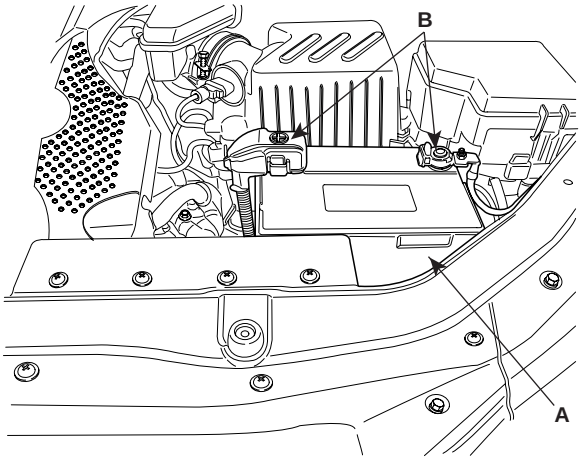

SCMEM6006L

2. Remove the engine cover.
3. Remove the intake air hose and air cleaner assembly.
   1) Disconnect the MAF connector(A).
   2) Disconnect the breather hose(B) from air cleaner hose.
   3) Remove the intake air hose and air cleaner assembly(C).
   4) Disconnect the PCM connectors(D).

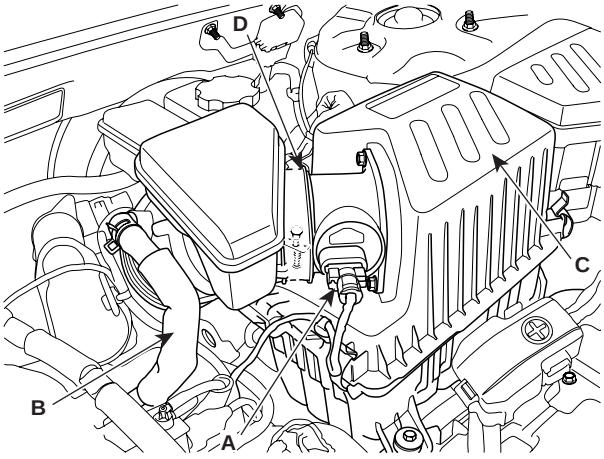

SCMEM6004L

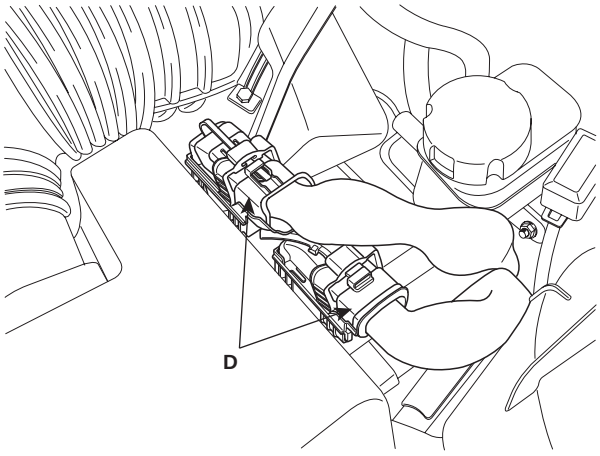

LDLG061A

4. Remove the battery tray(A) while recovering refrigerant.

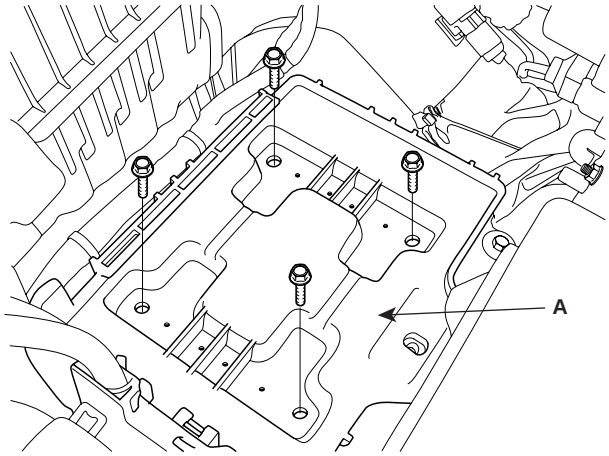

SCMEM6007L

5. Remove the upper radiator hose(A) and lower radiator hose(B).

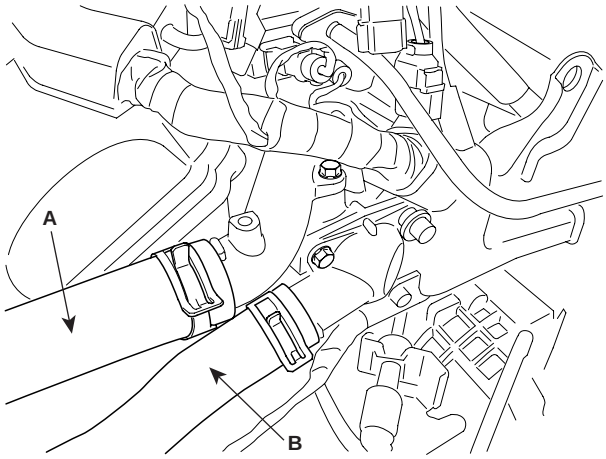

LDLG008A

6. Remove the transaxle oil cooler hoses(A/T vehicles only).

7. Remove the fuel inlet hose(A) from the delivery pipe.

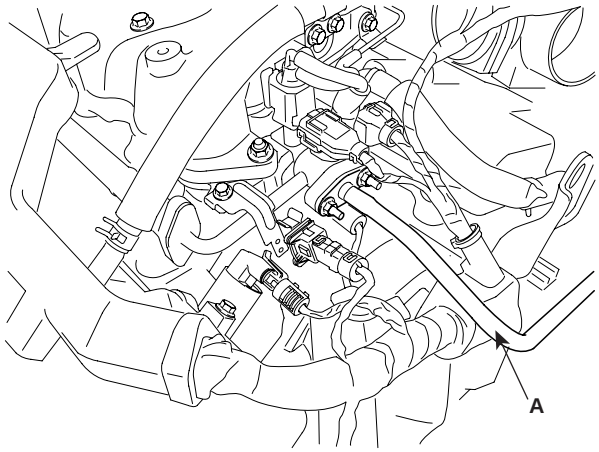

LDLG062A

8. Disconnect the engine wiring harness connectors.

   1) Disconnect the No.1/No.2 knock sensor connectors(A,B), the oil pressure switch connector(C), the ignition coil harness(D) and the No.1 VIS(Variable Induction System) connector(E).

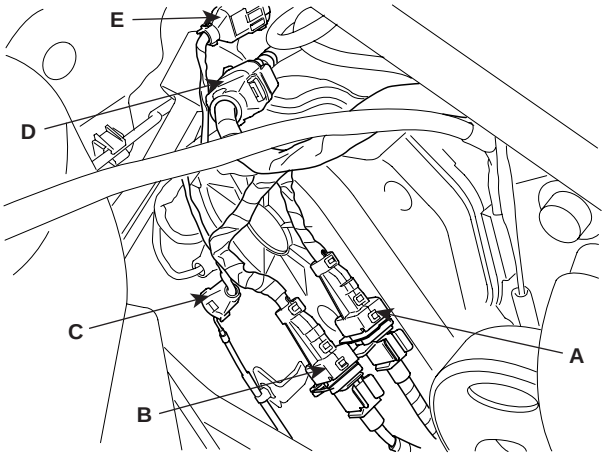

LDLG005A

   2) Disconnect the bank 1 front/rear O2 sensor connectors(A).

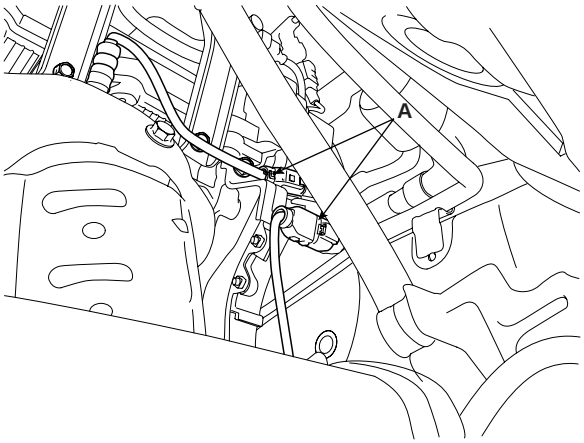

KCBF160A

   3) Disconnect the injection connectors(A,B,C), the ground lines(D), the condensor connector(E) and the Ignition coil connectors(F).

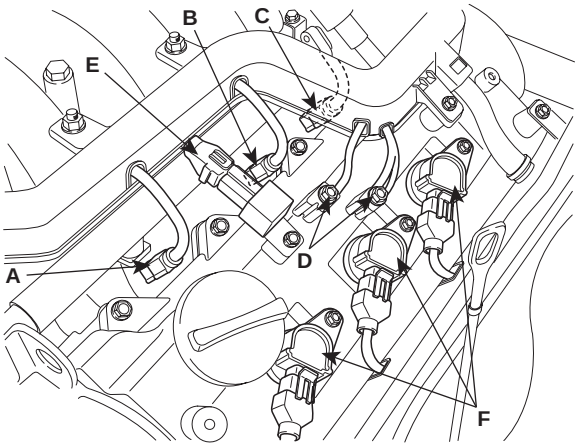

LDLG060A

4) Disconnect the injection harness connector(A), the No.2 VIS(Variable Induction System) connector(B), the No.1/No.2 OCV(Oil Control Valve) connectors(C,D) and the OTS(Oil Temperature Sensor) connector(E).

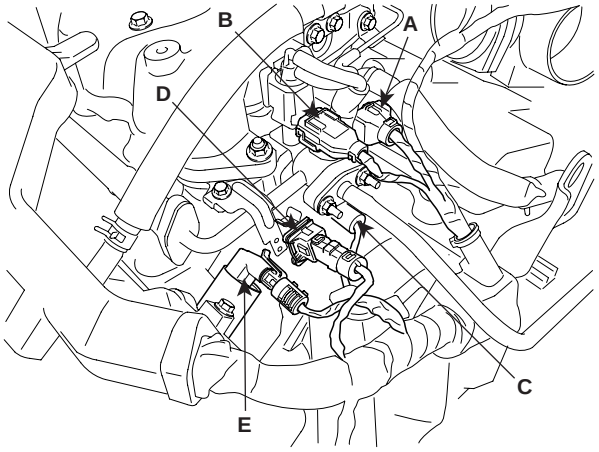

LDLG006A

5) Disconnect the MAPS(Manifold Absolute Pressure Sensor) connector(A), the ETC(Electronic Throttle Control) connector(B) and the PCSV(Purge Control Solenoid Valve) connector(C).

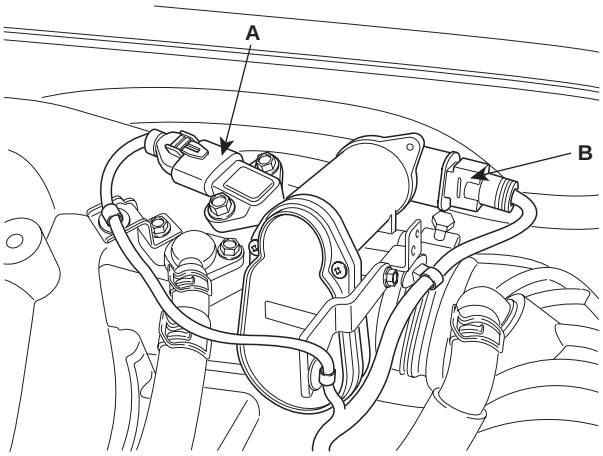

LDLG034A

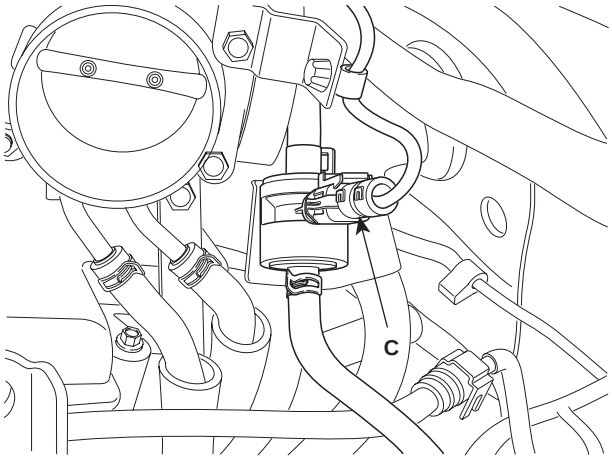

LDLG035A

6) Disconnect the generator connector(A) and the air conditioning compressor connector(B).

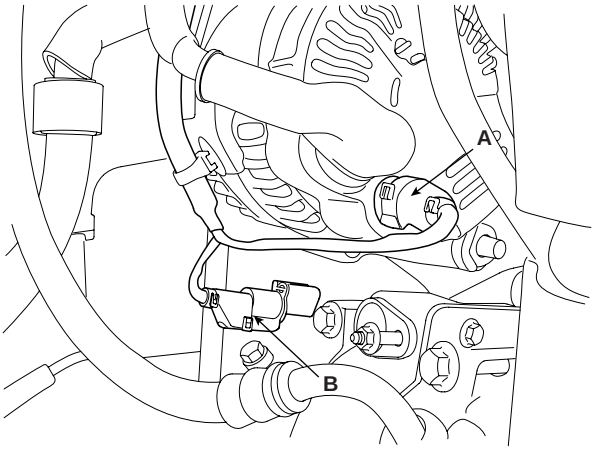

KCBF151A

7) Disconnect the bank 2 CMP sensor connector(A) and the WTS(Water Temperature Sensor) connector(B).

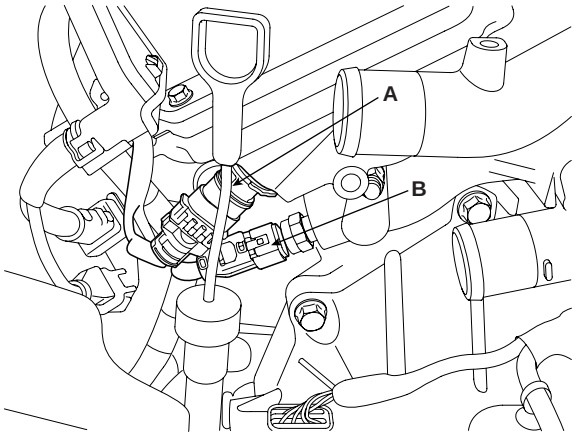

KCBF155A

8) Disconnect the bank 2 front/rear O2 sensor connectors(A,B) and the CKP sensor connector(C).

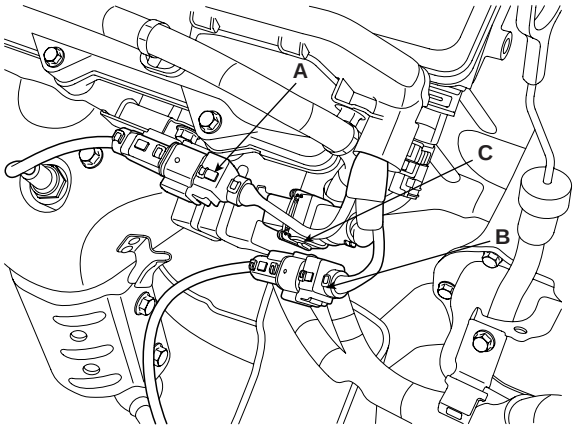

KCBF154A

9) Disconnect the bank 1 CMP sensor connector(A).

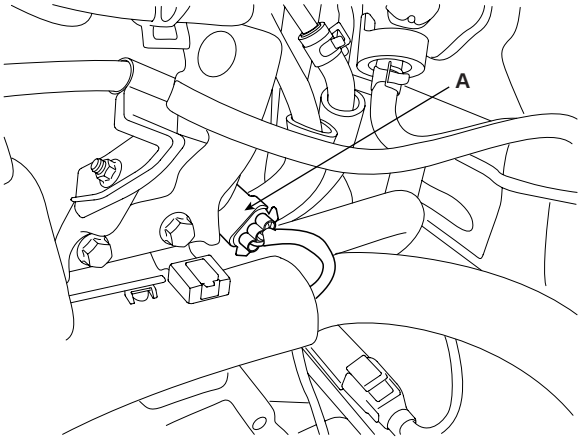

KCBF152A

9. Disconnect ground lines(A) from the engine and the transaxle assembly.

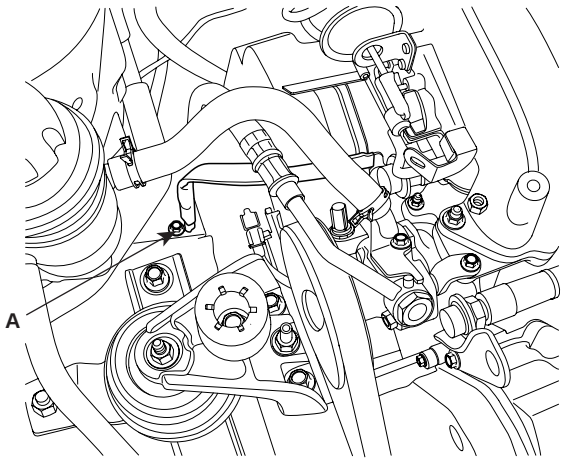

SCMEM6008L

10. Disconnect the battery wirings(A,B) from the engine room fuse & relay box(C).

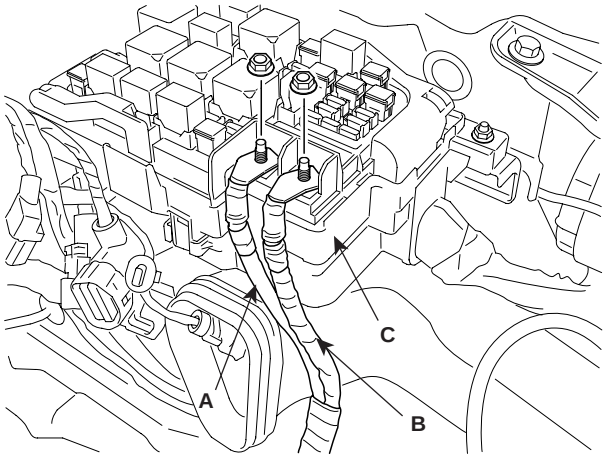

LDLG011A

11. Remove the heater hoses.

12. Disconnect the brake vaccume hose(A).

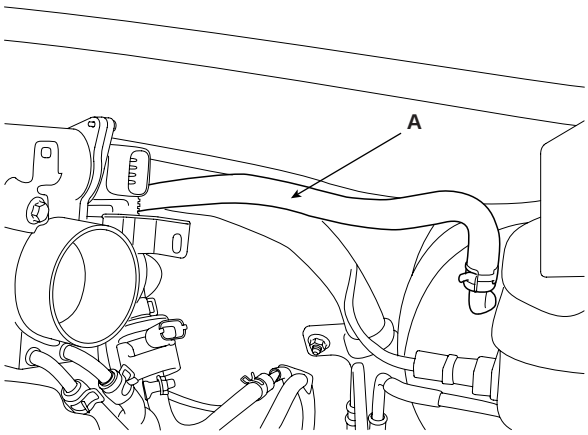

LDLG036A

13. Disconnect the transaxle wiring harness connectors.(Refer to AT group).

14. After draining or gathering power steering fluid, disconnect the power steering hose(A).

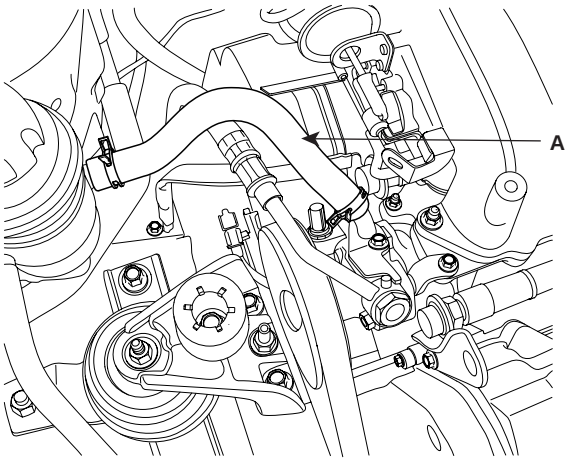

SCMEM6009L

15. Remove the steering column shaft joint bolt.(Refer to ST group).

16. Disconnect the air conditioning compressor hoses.(Refer to HA group).

17. Remove the front wheels and tires.(Refer to DS group).

18. Lifting the vehicle, remove the under cover.

19. Drain the engine coolant, engine oil and transaxle fluid. Remove the radiator cap to speed coolant draining.

20. Remove the brake caliper.(Refer to DS group).

21. Disconnect the ABS connectors.(Refer to BR group).

22. Disconnect the stabilizer bar link from the struts.(Refer to SS group).

23. Remove the knockles from the struts.(Refer to DS group).

24. Remove the front muffler(A).

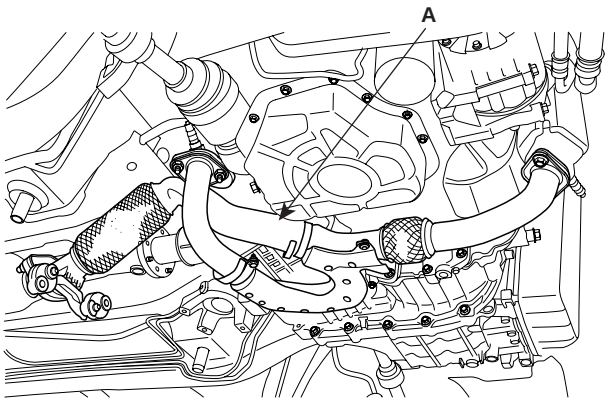

SCMEM6005L

25. Disconnect the power steering return hose.

26. Remove the engine mounting bracket(A).

[MT]

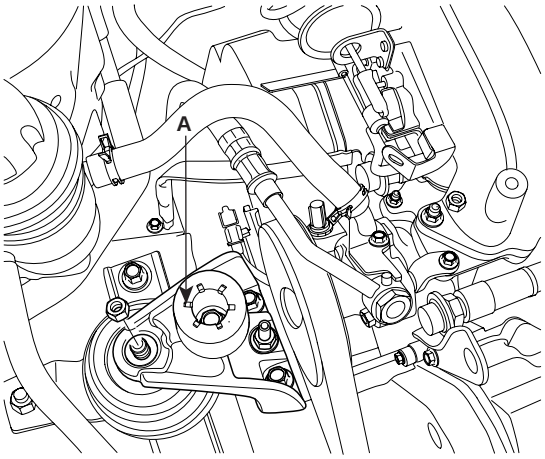

SCMEM6011L

NOTE

Remove the ECM(Electronic Controlled Mounting) nuts and the solenoid valve connector for A/T vehicles.

27. Remove the transaxle mounting bracket(A).

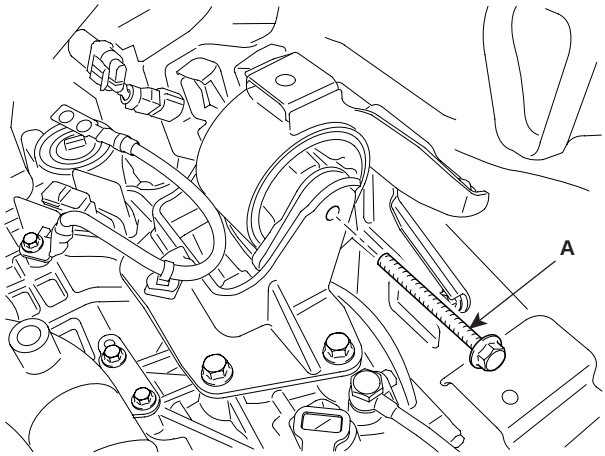

LDLG013A

28. Supporting the engine and transaxle assembly with a jack, remove the assembly from the vehicle by loosening the subframe mouting bolts and lifting up the vehicle slowly.

NOTE

When removing the engine and transaxle assembly, be careful not to damage any surrounding parts or body components.

INSTALLATION E4AC8DA7

Installation is in the reverse order of removal.
Perform the following :

- Adjust the shift cable.
- Refill the engine with engine oil.
- Refill the transaxle with fluid.
- Refill the radiator with engine coolant.
- Bleed air from the cooling system with the heater valve open.
- Clean the battery posts and cable terminals with sandpaper assemble them, then apply grease to prevent corrosion.
- Inspect for fuel leakage.
  After assembling the fuel line, turn on the ignition switch (do not operate the starter) so that the fuel pump runs for approximately two seconds and fuel line pressurizes.
  Repeat this operation two or three times, then check for fuel leakage at any point in the fuel lines.

Engine Electrical System

GENERAL

CHARGING SYSTEM
- ALTERNATOR
- BATTERY

STARTING SYSTEM

STATER

STARTER RELAY

PREHEATING SYSTEM

GENERAL

SPECIFICATION EEC7BAAD

STARTING SYSTEM

Item			Specifications
Starter	Type		Reduction drive (with planetary gear)
	Rated voltage		12V, 2.0KW
	No. of pinion teeth		9
	No-load charasteristics	Voltage	11.5V
		Amperage	120A, MAX
		Speed	4,000rpm, MIN

CHARGING SYSTEM

Item		Specifications
Alternator	Type	Battery voltage sensing
	Rated voltage	12V, 120A
	Voltage regulator	I.C regulator built-in type
	Regulator setting voltage	14.4 ± 0.3V
	Temperrature compensation	-10 ± 3mV/°C
Battery	Type	CMF 90L
	Cold cranking amperage at-18°C (0°F)	720A
	Reserve capacity	160min
	Specific gravity at 20°C (77°F)	1.280 ± 0.01

NOTE

- *COLD CRANKING AMPERAGE is the amperage a battery can deliver for 30 seconds and maintain a terminal voltage of 7.2V or greater at a specified temperature.*
- *REVERSE CAPACITY RATING is amount of time a battery can deliver 25A and maintain a minimum terminal voltage of 10.5V at 26.7°C(80°F)*

PREHEATING SYSTEM

Item		Specifications
Glow plug	Rated voltage	DC 11V
	Current	16A ± 1.5A after 4 seconds loading at rated voltage
Glow plug relay	Rated voltage	DC 12V
	Operating voltage range	DC 9V ~ DC 16V
	Operating temperature range	-40°C ~ 120°C
	Rated load current	DC 12V, 70A

TROUBLESHOOTING E23DF8A6

CHARGING SYSTEM

Symptom	Suspect Area	Remedy
Charging warning indicator does not light with ignition switch "ON" and engine off	Fuse blown Light burned out Wiring connection loose Electronic voltage regulator	Check fuses Replace light Tighten loose connections Replace voltage regulator
Charging warning indicator does not go out with engine running (Battery requires frequent recharging)	Drive belt loose or worn Battery cables loose, corroded or worn Fuse blown Fusible link blown Electronic voltage regulator or generator Wiring	Adjust tension or replace drive belt Repair or replace cables Check fuses Replace fusible link Test generator Repair wiring
Engine hesitates/poor acceleration Overcharge	Drive belt loose or worn Wiring connection loose or open circuit Fusible link blown Poor grounding Electronic voltage regulator or generator Worn battery Electronic voltage regulator Voltage sensing wire	Adjust tension or replace drive belt Tighten loose connection or repair wiring Replace fusible link Repair Test generator, if faulty, repair or replace Replace battery Replace voltage regulator Repair wire

STARTING SYSTEM

Symptom	Suspect Area	Remedy
Engine will not crank	Battery charge low Battery cables loose, corroded or worn out Transaxle range switch (Vehicle with automatic transaxle only) Fusible link blown Starter motor faulty Ignition switch faulty	Charge or replace battery Repair or replace cables Adjust or replace switch Replace fusible link Repair starter motor Inspect
Engine cranks slowly	Battery charge low Battery cables loose, corroded or worn out Starter motor	Charge or replace battery Repair or replace cables Repair starter motor
Starter keeps running	Starter motor Ignition switch	Repair starter motor Inspect
Starter spins but engine will not crank	Short in wiring Pinion gear teeth broken or starter motor Ring gear teeth broken	Repair wiring Repair starter motor Replace flywheel ring gear or torque converter

SPECIAL SERVICE TOOL ECC7A874

Tool (Number and name)	Illustration	Use
Alternator pulley remover wrench (09373–27000)	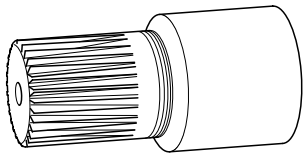 EBDD700A	Removal and installation of alternator pulley

REFERENCE SERVICE TOOLS

Tool (Number and name)	Illustration	Use
MCR-570 KIT Battery checker	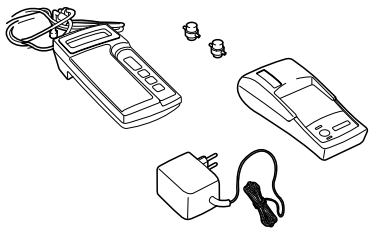 LBLG001A	For testing 12-volt automotive staring battery and for testing 12-volt charging system. (Using with Terminal Pinter_182-003A)

THE MICRO 570 ANALYZER E427CDBF

The MICRO 570 Analyzer provides the ability to test the charging and starting systems, including the battery, starter and generator.

CAUTION

Because of the possibility of personal injury, always use extreme caution and appropriate eye protection when working with batteries.

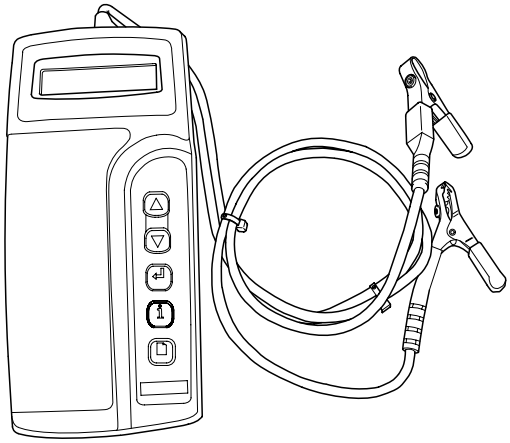

EBRF004A

KEYPAD

The MICRO570 button on the key pad provides the following functions :

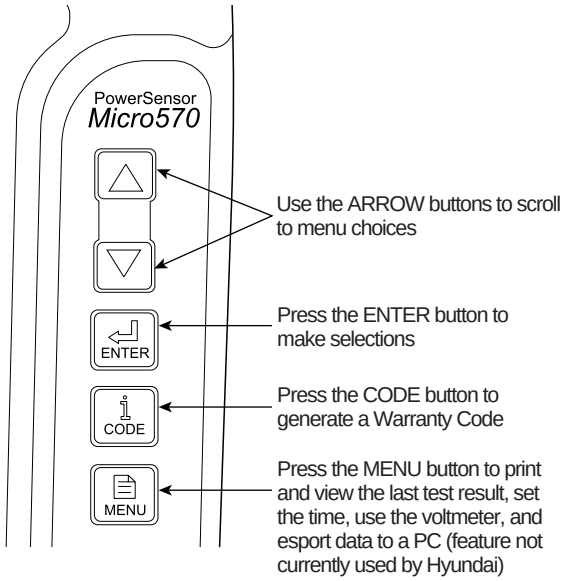

EBRF005A

BATTERY TEST PROCEDURE

1. Connect the tester to the battery.
   - Red clamp to battery positive (+) terminal.
   - Black clamp to battery negative (-) terminal.

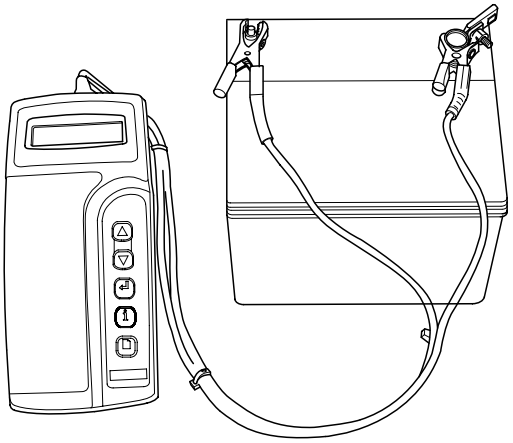

EBRF006A

CAUTION

Connect clamps securely. If "CHECK CONNECTION" message is displayed on the screen, reconnect clamps securely.

2. The tester will ask if the battery is connected "IN A VEHICLE" or "OUT OF A VEHICLE". Make your selection by pressing the arrow buttons; then press ENTER.

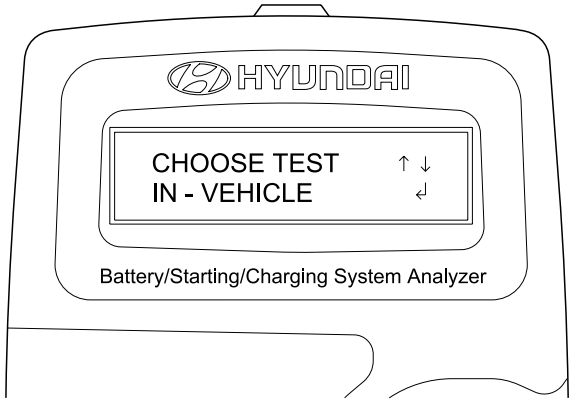

SCMEE6200L

3. Choose either CCA or CCP and press the ENTER button.

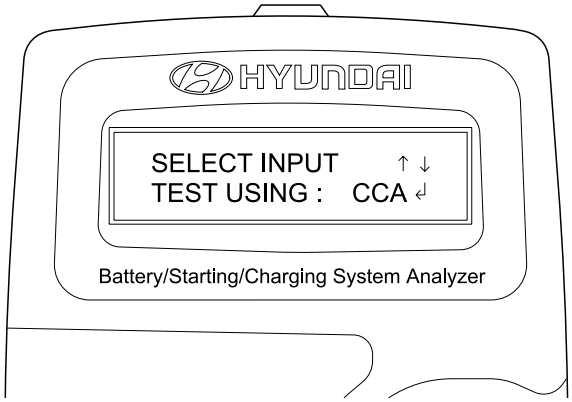

SCMEE6101L

NOTE

- *CCA : Cold cranking amps, is an SAE specification for cranking batteries at -18°C (0°F).*
- *CCP : Cold cranking amps, is an SAE specification for korean manufacturer's for cranking batteries at -18°C (0°F).*

4. Set the CCA value displayed on the screen to the CCA value marked on the battery label by pressing up and down buttons and press ENTER.

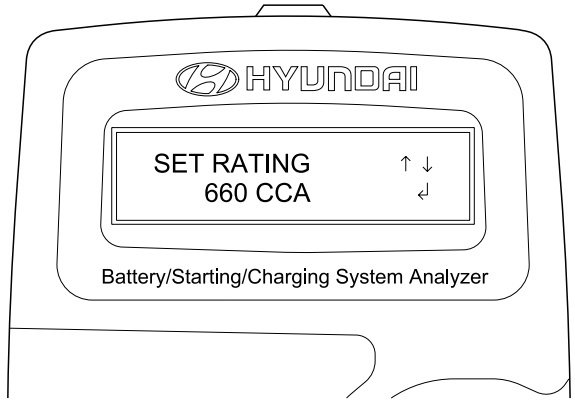

SCMEE6102L

NOTE

The battery ratings(CCA) displayed on the tester must be identical to the ratings marked on battery label.

5. The tester (Micro570) displays battery test results including voltage and battery ratings.
   A relevant action must be given according to the test results by referring to the battery test results as shown in the table below.

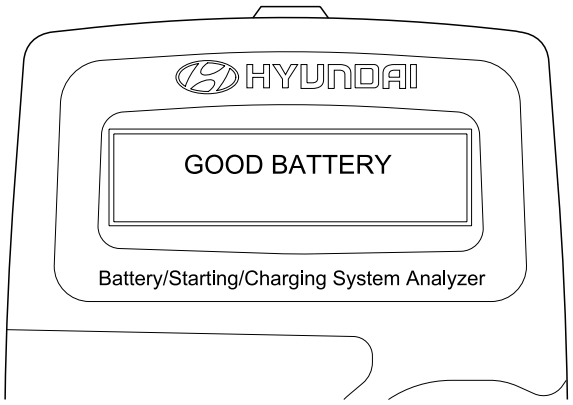

SCMEE6103L

NOTE

The battery ratings (CCA) displayed on the tester must be identical to the ratings marked on battery label.

6. To conduct starter test, press ENTER.

BATTERY TEST RESULTS

RESULT ON PRINTER	REMEDY
Good battery	No action is required
Good recharge	Battery is in a good state Recharge the battery and use
Charge & Retest	Battery is not charged properly => Charge and test the battery again (Failure to charge the battery fully may read incorrect measurement value)
Replace battery	=> Replace battery and recheck the charging system. (Improper connection between battery and vehicle cables may cause "REPLACE BATTERY", retest the battery after removing cables and connecting the tester to the battery terminal directly prior to replacing the battery)
Bad cell-replace	=> Charge and retest the battery. And then, test results may cause "REPLACE BATTERY", replace battery and recheck the charging system

WARNING

Whenever filing a claim for battery, the print out of the battery test results must be attached.

STARTER TEST PROCEDURE

1. After the battery test, press ENTER immediately for the starter test.

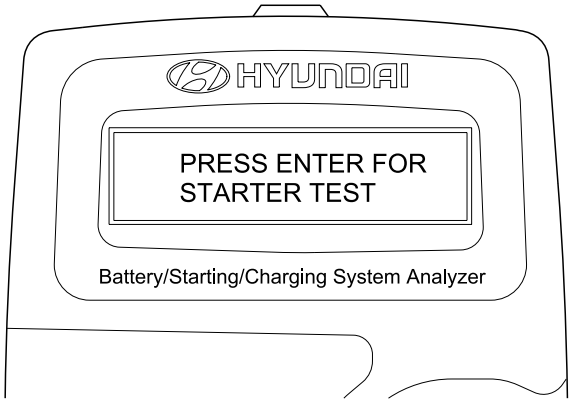

SCMEE6104L

2. After pressing ENTER key, start the engine.

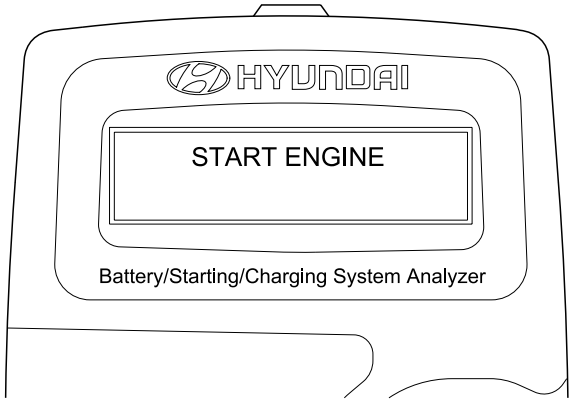

SCMEE6105L

3. Cranking voltage and starter test results will be displayed on the screen.
   Take a relevant action according to the test results by referring to the starter test results as given below.

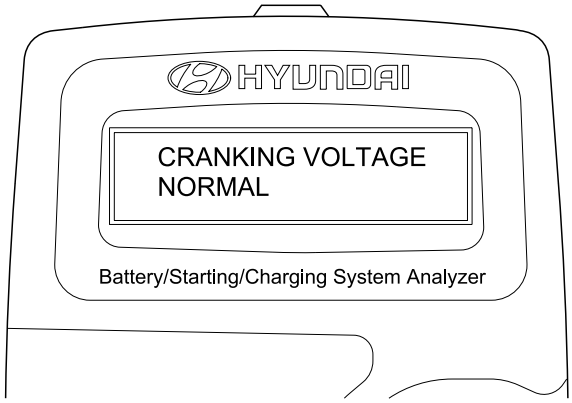

SCMEE6106L

4. To continue charging system test, press ENTER.

STARTER TEST RESULTS

RESULT ON PRINTER	REMEDY
Cranking voltage normal	System shows a normal starter draw
Cranking voltage low	Cranking voltage is lower than normal level => Check starter
Charge battery	The state of battery charge is too low to test => Charge the battery and retest
Replace battery	=> Replace battery => If the vehicle is not started though the battery condition of "Good and fully charged" is displayed. => Check wiring for open circuit, battery cable connection, starter and repair or replace as necessary.

CHARGING SYSTEM TEST PROCEDURE

1. Press ENTER to begin charging system test.

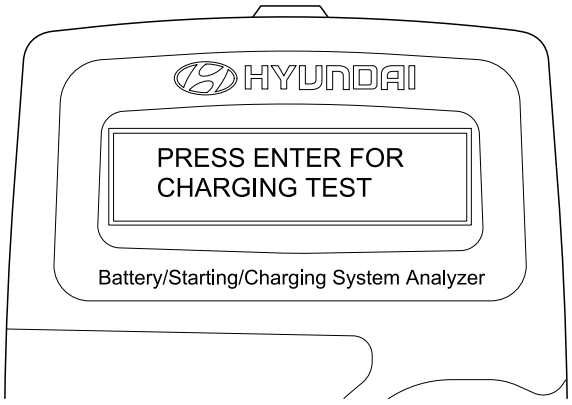

SCMEE6107L

2. ENTER button is pressed, the tester displays the actual voltage of generator.
   Press ENTER to test the charging system.

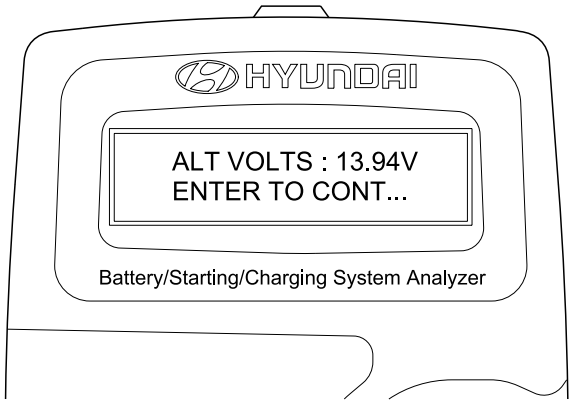

SCMEE6108L

3. The MICRO 570 will prompt you to rev the engine until the rev is detected. It will then collect the data.

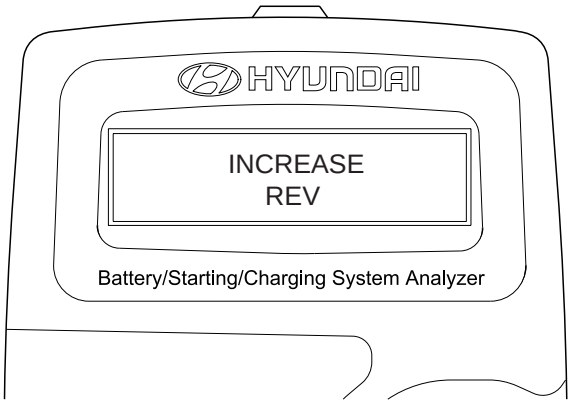

SCMEE6109L

4. Press ENTER.

SCMEE6110L

5. The MICRO 570 will analyze the charging system output at idle for comparison to other readings.

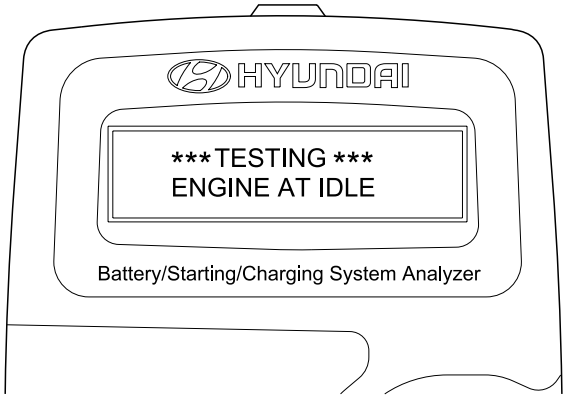

SCMEE6111L

6. The MICRO 570 will detect the amount of ripple from the charging system to the battery. Excessive ripple usually means the stator is damaged or that one or more generator diodes have failed.

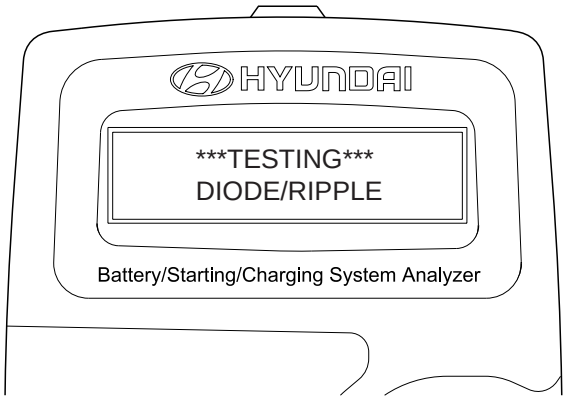

SCMEE6112L

7. The MICRO 570 will prompt you to turn on accessary loads. It will then test at idle and prompt you to rev the engine. The analyzer will determine if the charging system can provide enough current for the demands of the vehicle's electrical system.

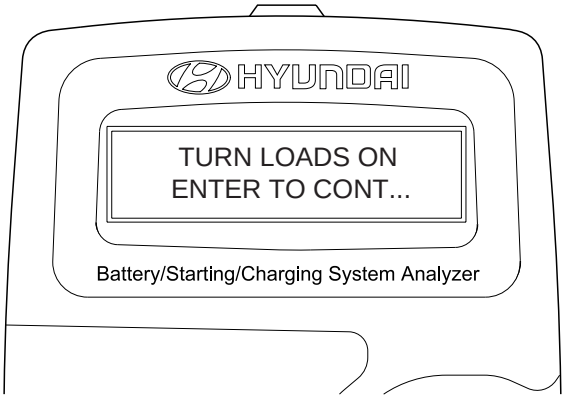

SCMEE6113L

NOTE

When asked to turn on the accessory loads, turn on the blower to high(heater), the high beam headlights, and rear defogger. DO NOT use cyclical loads such as air conditioning or wind-shield wipers.

8. After the test, the MICRO 570 will display the idle voltage, load voltage and the state results.

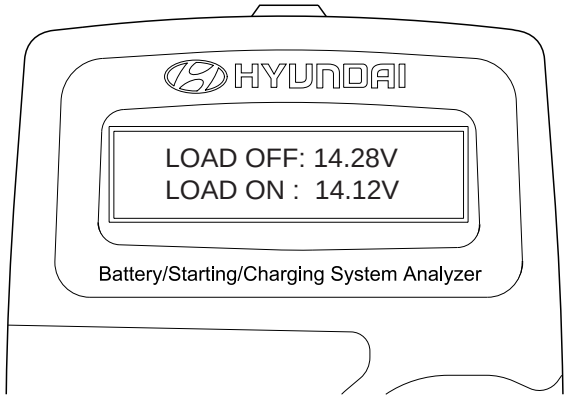

SCMEE6114L

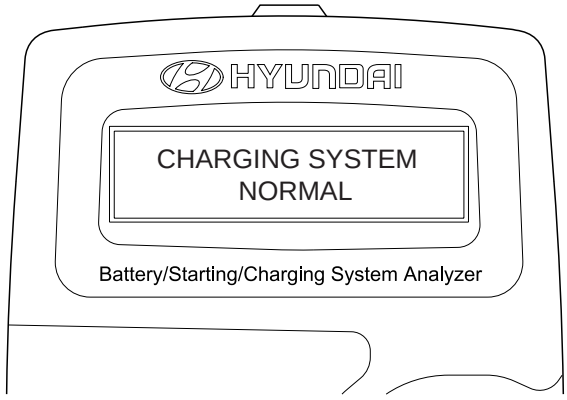

SCMEE6115L

CHARGING SYSTEM TEST RESULTS

RESULT ON PRINTER	REMEDY
Charging system normal/Diode ripple normal	Charging system is normal
No charging voltage	Generator does not supply charging current to battery => Check belts, connection between generator and battery Replace belts or cable or generator as necessary
Low charging voltage	Generator does not supply charging current to battery and electrical load to system fully => Check belts and generator and replace as necessary
High charging voltage	The voltage from generator to battery is higher than normal limit during voltage regulating. => Check connection and ground and replace regulator as necessary => Check electrolyte level in the battery
Excess ripple detected	One or more diodes in the generator is not functioning properly => Check generator mounting and belts and replace as necessary

CHARGING SYSTEM

DESCRIPTION EDCABFCE

The conventional internal voltage detection type alternator controls the charging voltage regardless of the battery condition and according to the external load change so that it sometimes causes battery under or over charging or causes flickering of meters and lamps due to ripples of generated voltage resulting from load fluctuation. The figure below show the internal circuits of the alternator and voltage regulator.

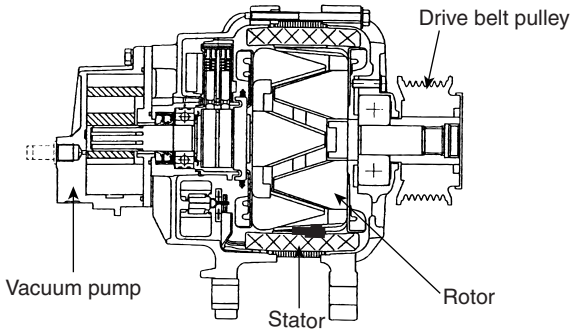

LBIF018A

ON-VEHICLE INSPECTION EE8EC6C0

CAUTION

- ***Check that the battery cables are connected to the correct terminals.***
- ***Disconnect the battery cables when the battery is given a quick charge.***
- ***Do not perform tests with a high voltage insulation resistance tester.***
- ***Never disconnect the battery while the engine is running.***

CHECK BATTERY VOLTAGE

1. After having driven the vehicle and in the case that 20 minutes have not passed after having stopped the engine, turn the ignition switch ON and turn on the electrical system (headlamp, blower motor, rear defogger etc.) for 60 seconds to remove the surface charge.

2. Turn the ignition switch OFF and turn off the electrical systems.

3. Measure the battery voltage between the negative (-) and positive (+) terminals of the battery.

Standard voltage : 12.5~12.9V at 20°C (68°C)

If the voltage is less than specification, charge the battery.

CHECK BATTERY TERMINALS, FUSIBLE LINK AND FUSES

1. Check that the battery terminals are not loose or corroded.

2. Check the fusible link and fuses for continuity.

INSPECT DRIVE BELT

1. Visually check the belt for excessive wear, frayed cords etc.
   If any defect has been found, replace the drive belt.

   NOTE

   Cracks on the rib side of a belt are considered acceptable. If the belt has chunks missing from the ribs, it should be replaced.

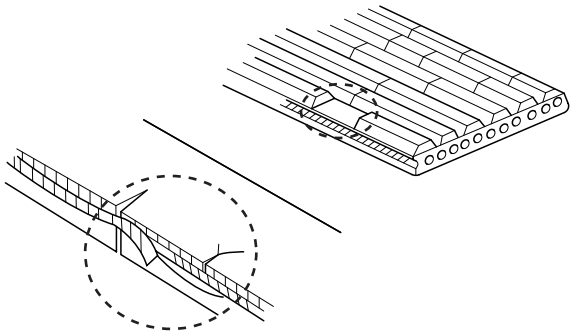

LBIF019A

2. Using a belt tension gauge, measure the drive belt tension.

VISUALLY CHECK ALTERNATOR WIRING AND LISTEN FOR ABNORMAL NOISES

1. Check that the wiring is in good condition.
2. Check that there is no abnormal noise from the alternator while the engine is running.

CHECK DISCHARGE WARNING LIGHT CIRCUIT

1. Warm up the engine and then turn it off.
2. Turn off all accessories.
3. Turn the ignition switch "ON". Check that the discharge warning light is it.
4. Start the engine. Check that the light goes off.

If the light does not go off as specified, troubleshoot the discharge light circuit.

INSPECT CHARGING SYSTEM

VOLTAGE DROP TEST OF ALTERNATOR OUTPUT WIRE

This test determines whether or not the wiring between the alternator "B" terminal and the battery (+) terminal is good by the voltage drop method.

PREPARATION

1. Turn the ignition switch to "OFF".

   NOTE

   To find abnormal conditions of the connection, actions should not be taken on the two terminals and each connection during the test.

2. Connect a digital voltmeter between the alternator "B" terminal and battery (+) lead wire to the battery (+) terminal. Connect the (+) lead wire of the voltmeter to the "B" terminal and the (-) lead wire to the battery (+) terminal.

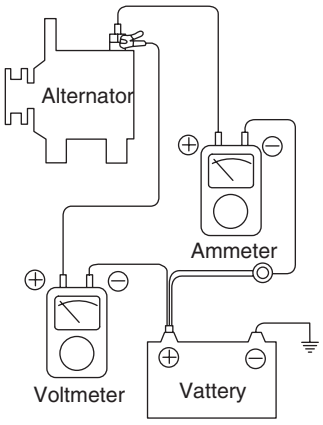

LBIF022A

CONDITIONS FOR THE TEST

1. Start the engine.
2. Switch on the headlamps, blower motor and so on. And then, read the voltmeter under this condition.

RESULT

1. The voltmeter may indicate the standard value.

Standard value: 0.2V max.

2. If the value of the voltmeter is higher than expected (above 0.2V max.), poor wiring is suspected. In this case check the wiring from the alternator "B" terminal to the fusible link to the battery (+) terminal. Check for loose connections, color change due to an over-heated harness, etc. Correct them before testing again.
3. Upon completion of the test, set the engine speed at idle. Turn off the head lamps, blower motor and the ignition switch.

OUTPUT CURRENT TEST

This test determines whether or not the alternator gives an output current that is equivalent to the nominal output.

PREPARATION

1. Prior to the test, check the following items and correct as necessary.
   Check the battery installed in the vehicle to ensure that it is in good condition. The battery checking method is described in "BATTERY".
   The battery that is used to test the output current should be one that has been partially discharged. With a fully charged battery, the test may not be conducted correctly due to an insufficient load.
   Check the tension of the alternator drive belt.
2. Turn off the ignition switch.
3. Disconnect the battery ground cable.
4. Disconnect the alternator output wire from the alternator "B" terminal.
5. Connect a DC ammeter (0 to 150A) in series between the "B" terminal and the disconnected output wire. Be sure to connect the (-) lead wire of the ammeter to the disconnected output wire.

   NOTE

   Tighten each connection securely, as a heavy current will flow. Do not rely on clips.

6. Connect a voltmeter (0 to 20V) between the "B" terminal and ground. Connect the (+) lead wire to the alternator "B" terminal and (-) lead wire to a good ground.
7. Attach an engine tachometer and connect the battery ground cable.
8. Leave the engine hood open.

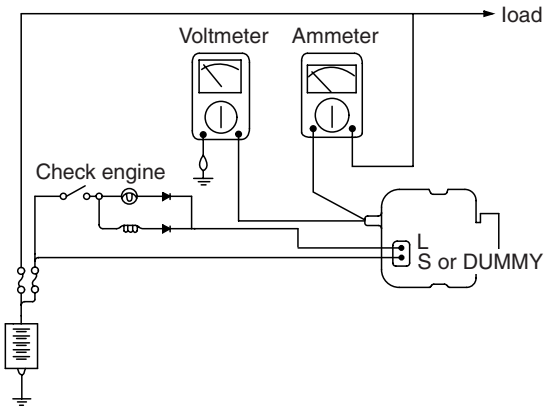

LBIF023A

TEST

1. Check to see that the voltmeter reads as the same value as the battery voltage. If the voltmeter reads 0V, and the open circuit in the wire between the alternator "B" terminal and battery (-) terminal, a blown fusible link or poor grounding is suspected.
2. Start the engine and turn on the headlights.
3. Set the headlights to high beam and the heater blower switch to HIGH, quickly increase the engine speed to 2,500 rpm and read the maximum output current value indicated by the ammeter.

   NOTE

   After the engine starts up, the charging current quickly drops. Therefore, the above operation must be done quickly to read the maximum current value correctly.

RESULT

1. The ammeter reading must be higher than the limit value. If it is lower but the alternator output wire is in good condition, remove the alternator from the vehicle and test it.

Limit value (90Aalternator): 63A min.

NOTE

- *The nominal output current value is shown on the nameplate affixed to the alternator body.*
- *The output current value changes with the electrical load and the temperature of the alternator itself. Therefore, the nominal output current may not be obtained. If such is the case, keep the headlights on the cause discharge of the battery, or use the lights of another vehicle to increase the electrical load.*
  The nominal output current may not be obtained if the temperature of the alternator itself or ambient temperature is too high.
  In such a case, reduce the temperature before testing again.

3. Upon completion of the output current test, lower the engine speed to idle and turn off the ignition switch.
4. Disconnect the battery ground cable.
5. Remove the ammeter and voltmeter and the engine tachometer.
6. Connect the alternator output wire to the alternator "B" terminal.
7. Connect the battery ground cable.

REGULATED VOLTAGE TEST

The purpose of this test is to check that the electronic voltage regulator controls voltage correctly.

PREPARATION

1. Prior to the test, check the following items and correct if necessary.
   Check that the battery installed on the vehicle is fully charged. For battery checking method, see "BATTERY".
   Check the alternator drive belt tension.
2. Turn ignition switch to "OFF".
3. Disconnect the battery ground cable.
4. Connect a digital voltmeter between the "B" terminal of the alternator and ground. Connect the (+) lead of the voltmeter to the "B" terminal of the alternator. Connect the (-) lead to good ground or the battery (-) terminal.
5. Disconnect the alternator output wire from the alternator "B" terminal.
6. Connect a DC ammeter (0 to 150A) in series between the "B" terminal and the disconnected output wire. Connect the (-) lead wire of the ammeter to the disconnected output wire.
7. Attach the engine tachometer and connect the battery ground cable.

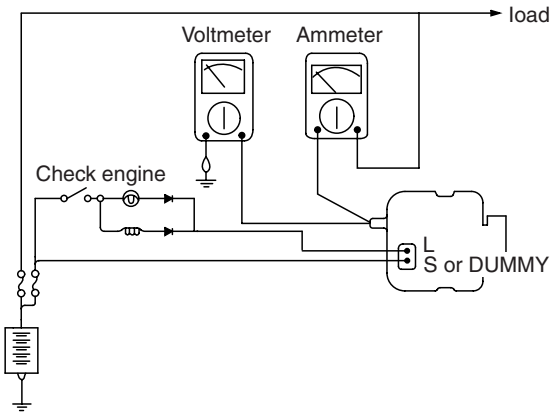

LBIF024A

TEST

1. Turn on the ignition switch and check to see that the voltmeter indicates the following value.

Voltage: Battery voltage

   If it reads 0V, there is an open circuit in the wire between the alternator "B" terminal and the battery and the battery (-), or the fusible link is blown.
2. Start the engine. Keep all lights and accessories off.
3. Run the engine at a speed of about 2,500 rpm and read the voltmeter when the alternator output current drops to 10A or less.

RESULT

1. If the voltmeter reading agrees with the value listed in the Regulating Voltage Table below, the voltage regulator is functioning correctly. If the reading is other than the standard value, the voltage regulator or the alternator is faulty.
   REGULATING VOLTAGE TABLE

Voltage regulator ambient temperature °C (°F)	Regulating voltage (V)
-30 (-22)	14.1 ~ 15.2
20 (68)	14.1 ~ 14.7
120 (248)	13.3 ~ 14.7

2. Upon completion of the test, reduce the engine speed to idle, and turn off the ignition switch.
3. Disconnect the battery ground cable.
4. Remove the voltmeter and ammeter and the engine tachometer.
5. Connect the alternator output wire to the alternator "B" terminal.
6. Connect the battery ground cable.

ALTERNATOR

COMPONENTS E7BABA5C

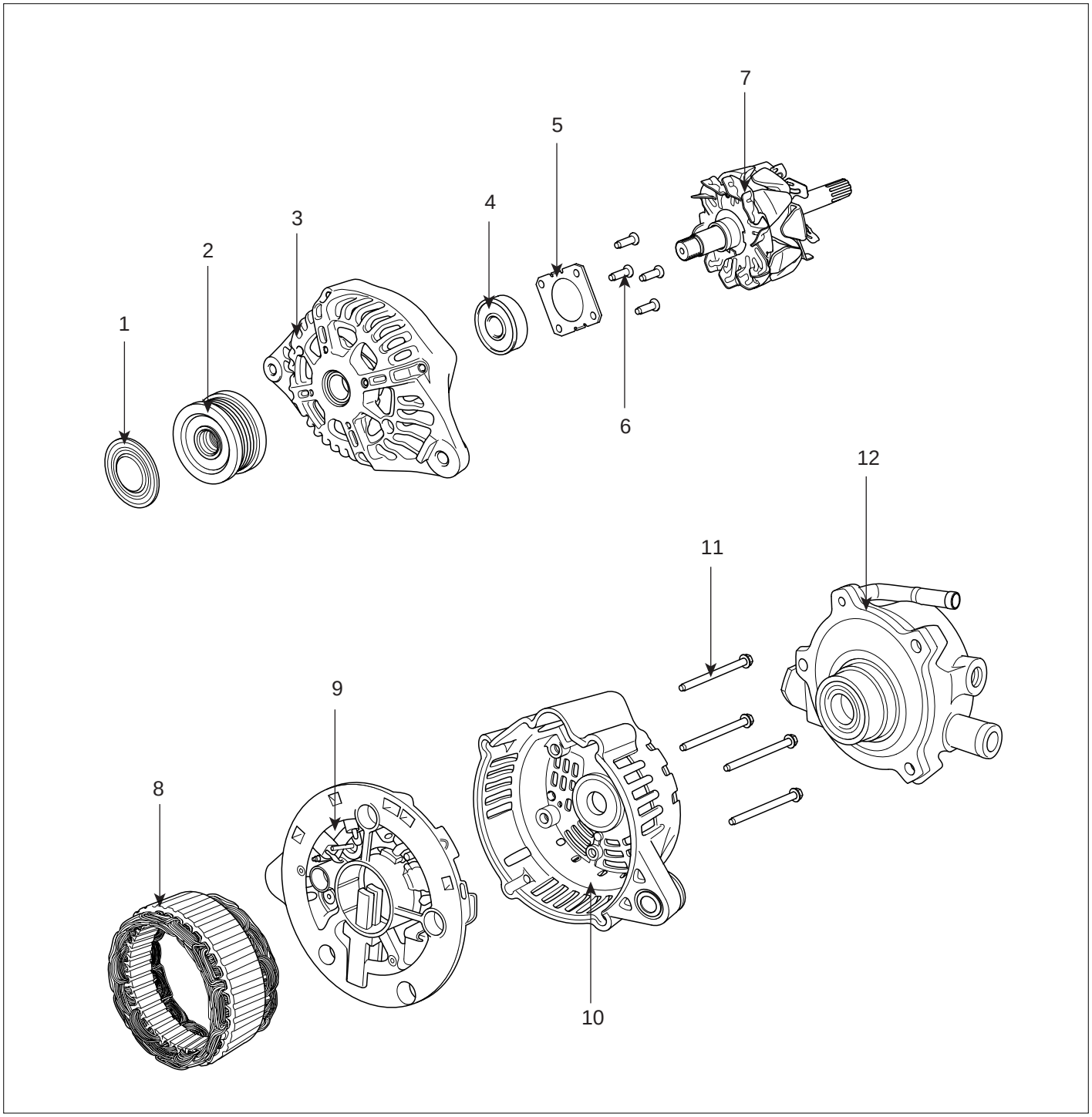

1. Pulley cover
2. Pulley
3. Front frame
4. Front bearing
5. Bearing cover
6. Bolts
7. Rotor
8. Stator
9. Brush & Regulator assembly
10. Rear frame
11. Throught bolts
12. Vacuum pump

LBIF033A

REPLACEMENT EB1AECC9

1. Disconnect the battery negative terminal frist, then the positive terminal.
2. Disconnect the alternator connector(A) and "B" terminal cable(B) from the alternator.
3. Disconnect the vacuum pump oil drain hose(C), vacuum pump oil feed hose(D) and vacuum hose(E).

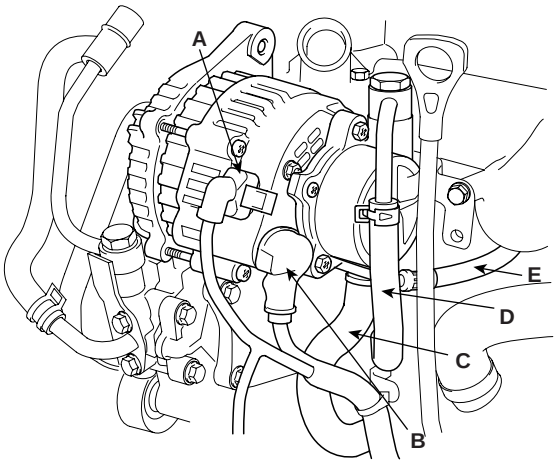

SCMEE6001D

4. Remove the mounting bolts(A,B) and the alternator(C).

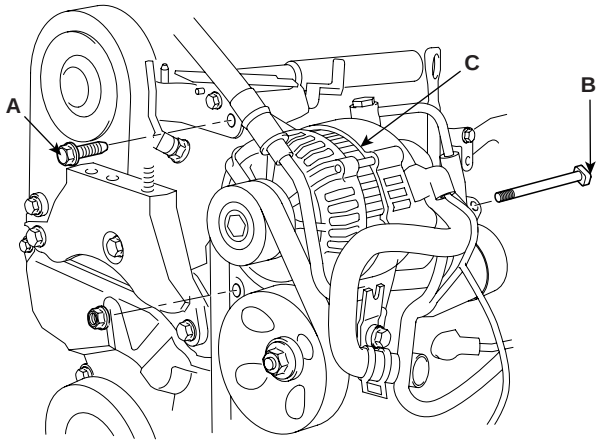

SCMEE6002D

5. Installation is the reverse of removal.

DISASSEMBLY ECB8FF64

1. Remove the pulley cover.
2. Remove the pulley(A) using the special tool(B).

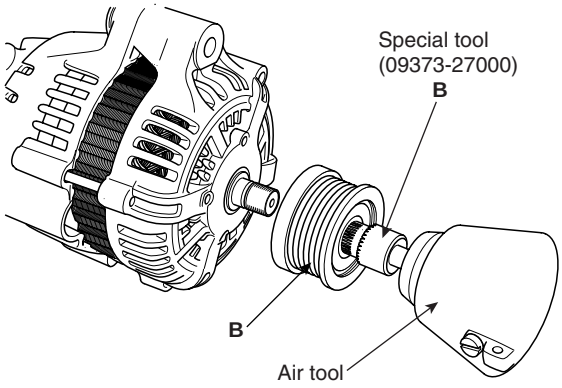

LBIF048A

3. After loosening the three bolts(A). Remove the vacuum pump(B).

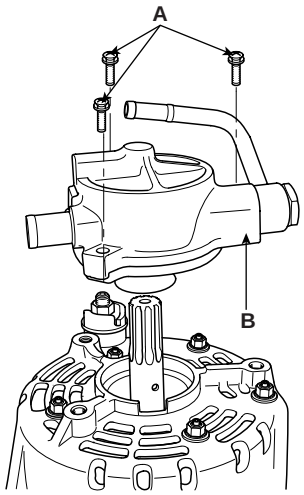

LBIF049A

4. Remove the B terminal insulator(A) and loosen the five rear cover mounting nuts(B).

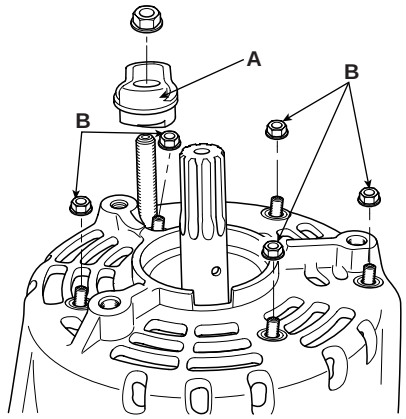

LBIF050A

5. After loosening the four through bolts(A), remove the rear cover(B).

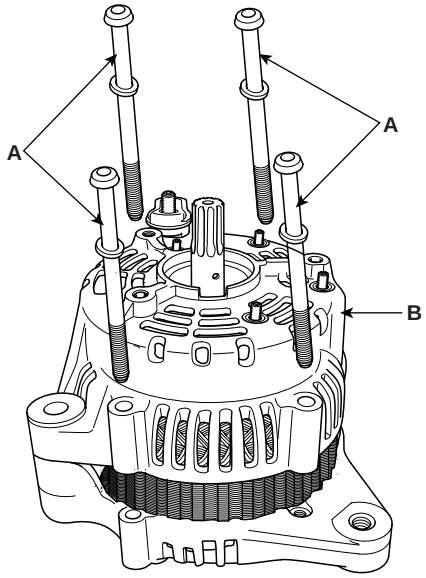

LBIF051A

6. After removing the weld between the stator lead and diode lead(A), remove the regulator assembly(B).

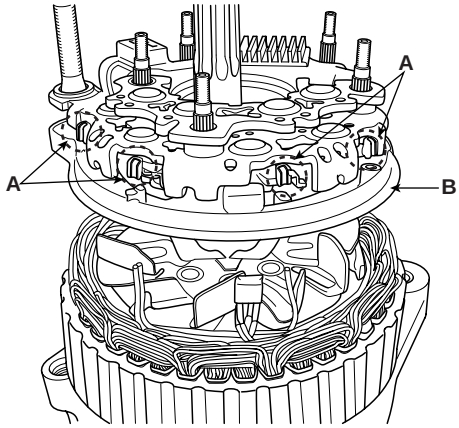

LBIF052A

7. Separate the rotor(A), stator(B), and front cover(C).

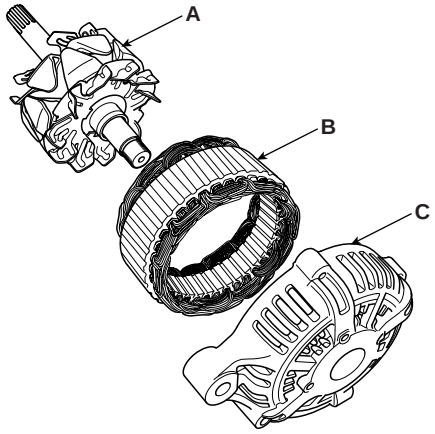

LBIF053A

8. Installation is the reverse of removal.

INSPECTION E00B85EA

INSPECT ROTOR

1. Check that there is continuity between the slip rings(A).

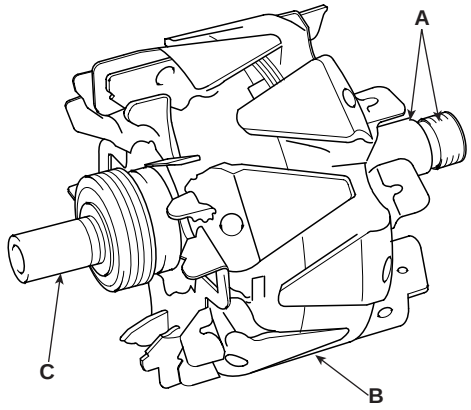

LBIF054A

2. Check that there is no continuity between the slip rings and the rotor(B) or rotor shaft(C).

3. If the rotor fails either continuity check, replace the alternator.

INSPECT STATOR

1. Check that there is continuity between each pair of leads(A).

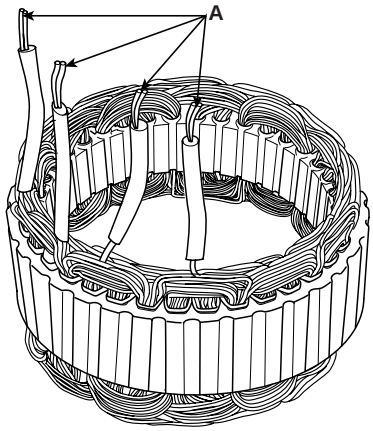

LBIF055A

2. Check that there is no continuity between each lead and the coil core.

3. If the coil fails either continuity check, replace the generator.

BATTERY

DESCRIPTION ECBDB3EF

1. The maintenance-free battery is, as the name implies, totally maintenance free and has no removable battery cell caps.
2. Water never needs to be added to the maintenance-free battery.
3. The battery is completely sealed, except for small vent holes in the cover.

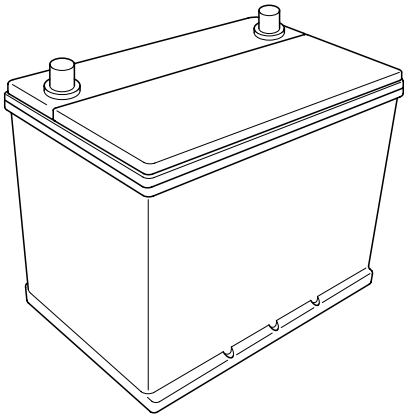

LBIF059A

INSPECTION EF4DE1EC

CHECKING PROCEDURE OF BATTERY

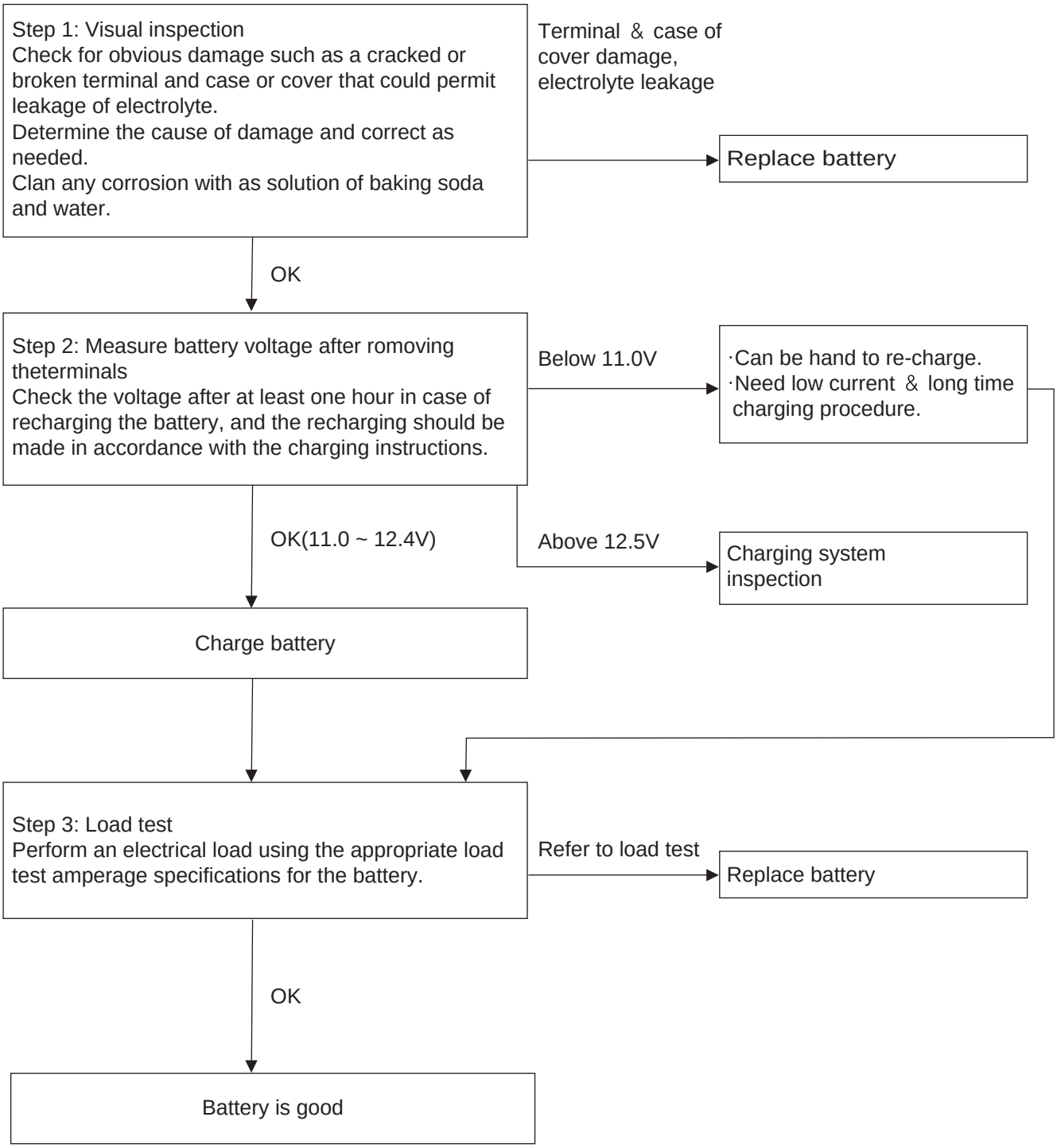

SKMEE6001D

CHECKING SHEET

Inspection Items & contents	Judgment criteria	Remarks
1. Acid Leakage * Type of acid leakage - Leakage on the fusion part for joining the case and cover. - Leakage on the terminal part - Leakage on the other parts * Clean the wet part or wash it, then dry it before checking with naked eyes. * Determine a part where leakage might have occurred ; check it by tipping the battery, if the leakage takes place again. * Conduct a visual inspection for breakage, deformation, or cracks.	1. Damage in the case or cover due to outside impact.	
	2. Acid leakage on the molding part of the case or cover. (weld line or gate hole)	
	3. Damage on the terminal or cracks in the cover.	
	4. Acid leakage due to the tipped battery or slant storage.	
	5. Acid leakage due to poor welding of the cover. (with no damage)	
2. Outside damage and breakage * Check with naked eyes.	1. Outside damage due to causes without damage due to mistreatment.	
	2. Outside damage due to mistreatment.	
	3. Damage due to a spark between terminals.	
	4. Damage and breakage due to heat.	
3. Measure the voltage for the battery ; but wait at least one day before measuring in case of recharging, and recharging should be made in accordance with the charging instructions.	1. 12.0V	Refer to load test
	2. 11.0V< battery voltage<12.0V due to over-discharge.	Refer to load test
	3. Below 11.0V due to charge condition failure.	Refer to load test
	4. Below 11.0V due to discharged for a long period.	Refer to load test
	5. Below 11.0V due to internal short circuit.	Refer to load test
4. Load test ; For 15 seconds with a half of the CCA electric current value, but the voltage on the dischaarging stage should be above 9.6V (27±5°C) - Conduct the test with a battery tester. (Refer to the tester manual)	1. Load test result: below 9.5V	
	2. Load test result: above 9.6V	Mfg. Defect usable

LOAD TEST

1. Perform the following steps to complete the load test procedure for maintenance free batteries.

2. Connect the load tester clamps to the terminals and proceed with the test as follow :
   a. If the battery has been on charge, remove the surface charge by connect a 300 ampere load for 15 seconds.
   b. Connect the voltmeter and apply the specified load.
   c. Read the voltage after the load has been applied for 15 seconds.
   d. Disconnect the load.
   e. Compare the voltage reading with the minimum and replace the battery if battery test voltage is below that shown in the voltage table.

Voltage(V)	Temperature
9.6	20°C (70°F) and above
9.5	16 °C (60 °F)
9.4	10 °C (50 °F)
9.3	4 °C (40 °F)
9.1	-1 °C (30 °F)
8.9	-7 °C (20 °F)
8.7	-12 °C (10 °F)
8.5	-18 °C (0 °F)

NOTE

- *If the voltage is less than shown in the table, the battery is good.*
- *If the voltage is greater than shown in the table, replace the battery.*

BATTERY DIAGNOSTIC TEST

1. Make sure the ignition switch and all accessories are in the OFF position.

2. Disconnect the battery cables (negative first).

3. Remove the battery from the vehicle.

   CAUTION

   Care should be taken in the event the battery case is cracked or leaking, to protect your skin from the electrolyte. Heavy rubber gloves (not the household type) should be worn when removing the battery.

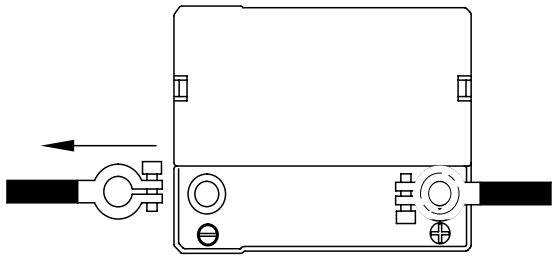

LBIF061A

4. Inspect the battery carrier for damage caused by the loss of electrolyte. If acid damage is present, it will be necessary to clean the area with a solution of clean warm water and baking soda. Scrub the area with a stiff brush and wipe off with a cloth moistened with baking soda and water.

5. Clean the top of the battery with the same solution as described in Step(3).

6. Inspect the battery case and cover for cracks. If cracks are present, the battery must be replaced.

7. Clean the battery posts with a suitable battery post tool.

8. Clean the inside surface of the terminal clamps with a suitable battery cleaning tool. Replace damaged or frayed cables and broken terminal clamps.

9. Install the battery in the vehicle.

10. Connect the cable terminals to the battery post, making sure the tops of the terminals are flush with the tops of the posts.

11. Tighten the terminal nuts securely.

12. Coat all connections with light mineral grease after tightening.

CAUTION

When batteries are being charged, an explosive gas forms beneath the cover of each cell. Do not smoke near batteries being charged or which have recently been charged. Do not break live circuits at the terminals of batteries being charged. A spark will occur when the circuit is broken. Keep open flames away from the battery.

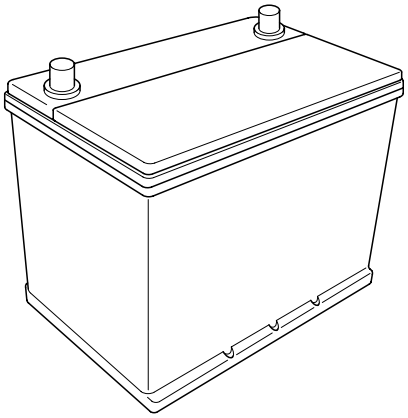

LBIF059A

STARTING SYSTEM

DESCRIPTION EFE0D698

The starting system includes the battery, starter motor, solenoid switch, ignition switch, inhibitor switch(A/T), ignition lock switch, connection wires and the battery cable.
When the ignition key is turned to the start position, current flows and energizes the starter motor's solenoid coil.
The solenoid plunger and clutch shift lever are activated, and the clutch pinion engages the ring gear.
The contacts close and the starter motor cranks. In order to prevent damage caused by excessive rotation of the starter armature when the engine starts, the clutch pinion gear overruns.

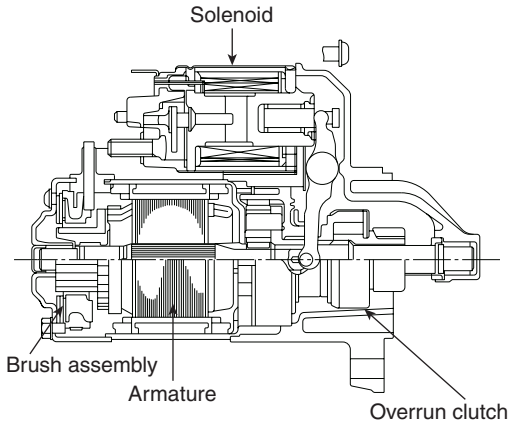

LBIF063A

INSPECTION E44C2FBC

START TEST

NOTE

The air temperature must be between 59 and 100°F (15 and 38°C) before testing.

Recommended procedure :
- Use a starter system tester.
- Connect and operate the equipment in accordance with the manufacturer's instructions.
- Test and troubleshoot as described.

Alternate Procedure :
- Use the following equipment :
  - Ammeter, 0~400A
  - Voltmeter, 0~20V (accurate within 0.1 volt)
  - Tachometer, 0~1,200 rpm
- Hook up a voltmeter and ammeter as shown.

NOTE

After this test, or any subsequent repair, reset the ECM/PCM to clear any codes.

Check the Starter Engagement :

1. Remove the ECM(B+) fuse from the fuse/relay box.

2. Turn the ignition switch to START (III) with the shift lever in N or P position (A/T) or with the clutch pedal depressed (M/T). The starter should crank the engine.
   - If the starter does not crank the engine, go to step 3.
   - If it cranks the engine erratically or too slowly, go to "Check for Wear and Damage" on the next page.

3. Check the battery, battery positive cable, ground, starter cut relay, and the wire connections for looseness and corrosion. Test again.
   If the starter still does not crank the engine, go to step 4.

4. Unplug the connector from the starter.

5. Connect a jumper wire from the battery positive (+) terminal to the solenoid terminal.
   The starter should crank the engine.
   - If the starter still does not crank the engine, remove it, and diagnose its internal problem.
   - If the starter cranks the engine, go to step 6.

6. Check the ignition switch.

7. Check the starter relay.

8. Check the A/T gear position switch (A/T) or the clutch interlock switch (M/T).

9. Check for an open in the wire between the ignition switch and starter.

CHECK FOR WEAR AND DAMAGE

The starter should crank the engine smoothly and steadily. If the starter engages, but cranks the engine erratically, remove it, and inspect the starter drive gear and torque converter ring gear for damage.

Check the drive gear overrunning clutch for binding or slipping when the armature is rotated with the drive gear held. If damaged, replace the gears.

STARTER SOLENOID TEST

1. Disconnect the wires from the Sterminal and the M terminal.

2. Connect the battery as shown. If the starter pinion pops out, it is working properly. To avoid damaging the starter, do not leave the battery connected for more than 10 seconds.

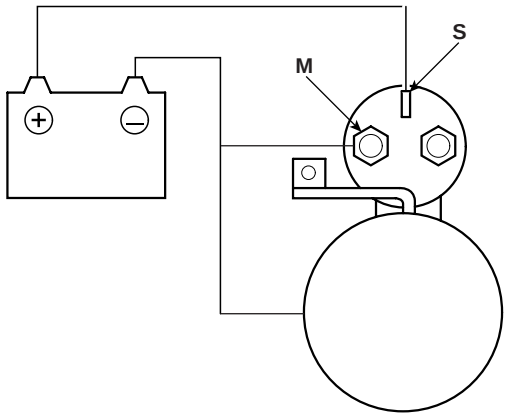

LBIF065A

3. Disconnect the battery from the M terminal.
If the pinion does not retract, the hold-in coil is working properly. To avoid damaging the starter, do not leave the battery connected for more than 10 seconds.

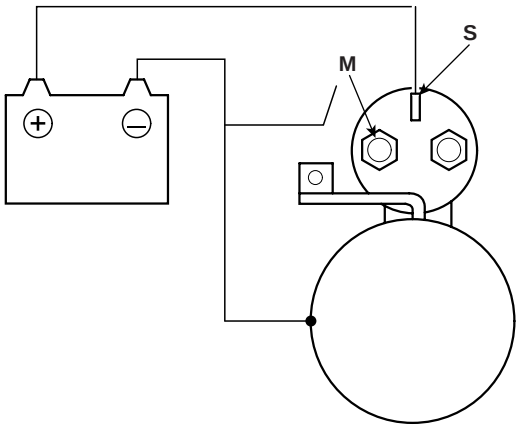

LBIF066A

4. Disconnect the battery also from the body. If the pinion retracts immediately, it is working properly.
   To avoid damaging the starter, do not leave the battery connected for more than 10 seconds.

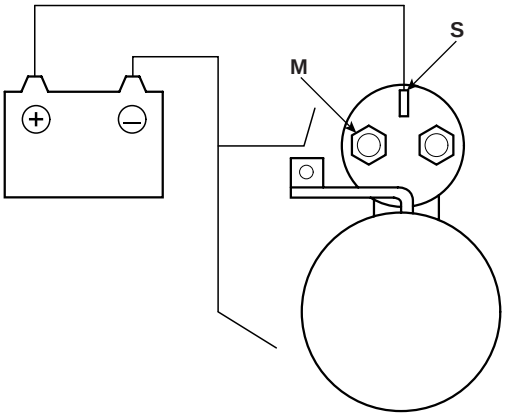

LBIF067A

FREE RUNNING TEST

1. Place the starter motor in a vise equipped with soft jaws and connecta fully-charged 12-volt battery to starter motor as follows :
2. Connect a test ammeter (100-ampere scale) and carbon pile rheostatas shown is the illustration.
3. Connect a voltmeter (15-volt scale) across starter motor.
4. Rotate carbon pile to the off position.
5. Connect the battery cable from battery's negative post to the starter motor body.
6. Adjust until battery voltage shown on the voltmeter reads 11 volts.
7. Confirm that the maximum amperage is within the specifications and that the starter motor turns smoothly and freely :

Current : Max. 120 Amps **Speed** : Min. 4,000 rpm

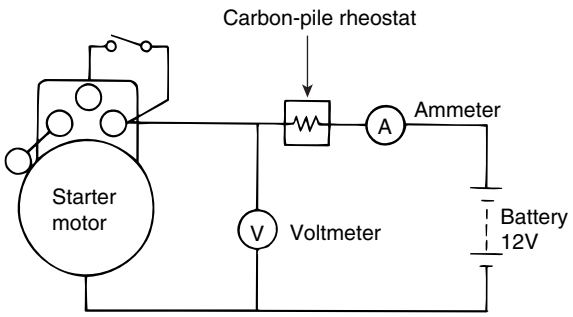

LBIF068A

CLEANING E8C3711A

1. Do not immerse parts in cleaning solvent. Immersing the yoke assembly and/or armature will damage the insulation. Wipe these parts with a cloth only.
2. Do not immerse the drive unit in cleaning solvent. The overrun clutch is pre-lubricated at the factory and solvent will wash lubrication from the clutch.
3. The drive unit may be cleaned with a brush moistened with cleaning solvent and wiped dry with a cloth.

STATER

COMPONENTS EBAF73D6

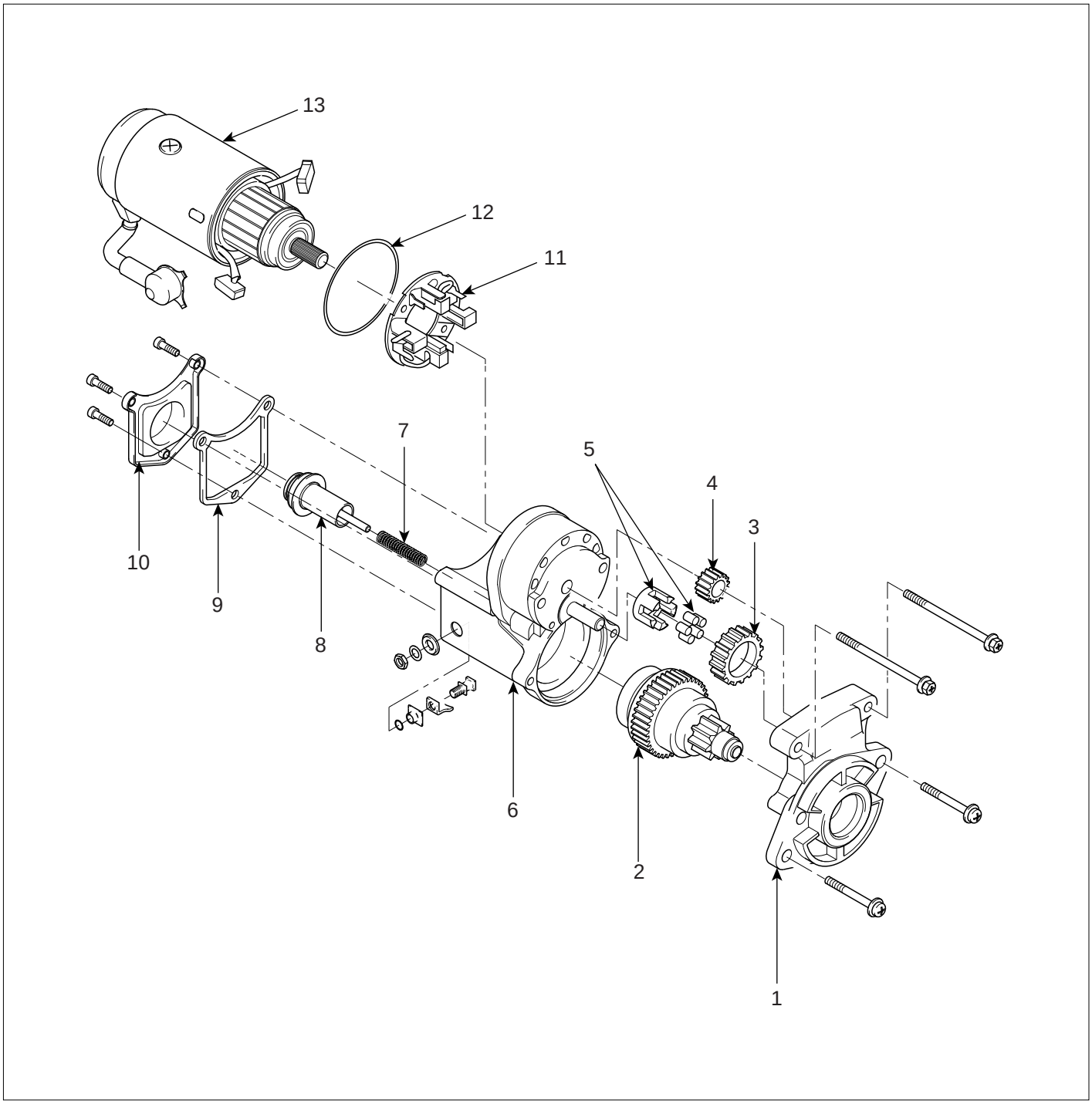

1. Front bracket
2. Overrun clutch assembly
3. Idle gear
4. Driver gear
5. Idle gear bearing
6. Housing
7. Spring
8. Magnetic switch
9. Packing
10. Rear cover
11. Brush holder
12. Packing
13. Yoke assembly

LBIF072A

REPLACEMENT E1BE77DD

1. Disconnect the battery negative cable.
2. Disconnect the starter cable(A) from the B terminal(B) on the solenoid(C), then disconnect the connector(D) from the S terminal(E).

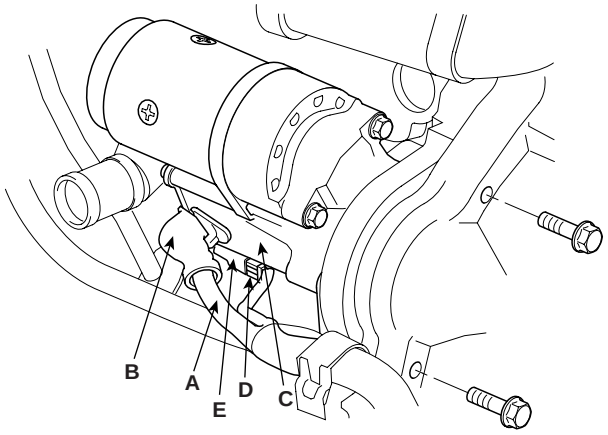

SCMEE6003D

3. Remove the 2 bolts holding the starter, then remove the starter.
4. Installation is the reverse of removal.
5. Connect the battery positive cable and negative cable to the battery.

DISASSEMBLY E8534E61

1. Remove the nut(A) and disconnect the lead wire(B) from the magnetic switch terminal(C).

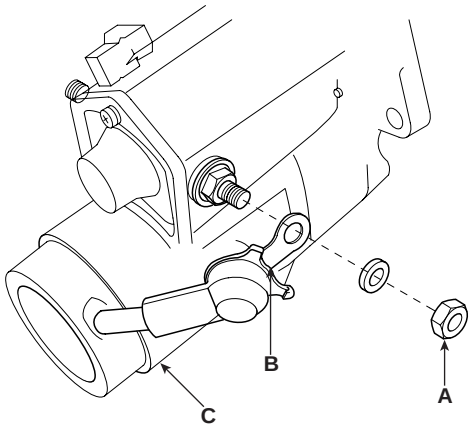

LBIF085A

2. Remove the 2 bolts(A) and pull out the yoke assembly(B) with the armature(C) from the front bracket(D).

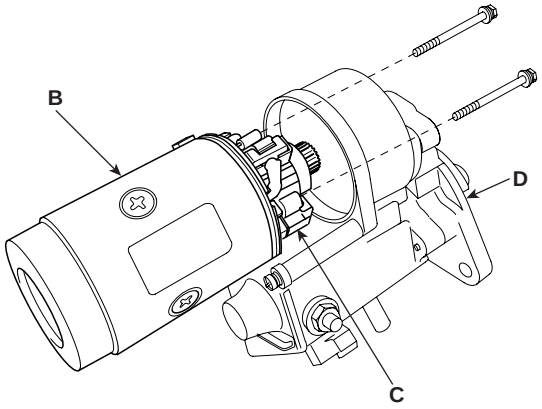

LBIF086A

3. Using a screwdriver, hold the spring tank back and disconnect the brush(A) from the brush holder(B). Disconnect the 2 brushed and remove the brush holder.

NOTE

Check that the positive(+) lead wires are not grounded.

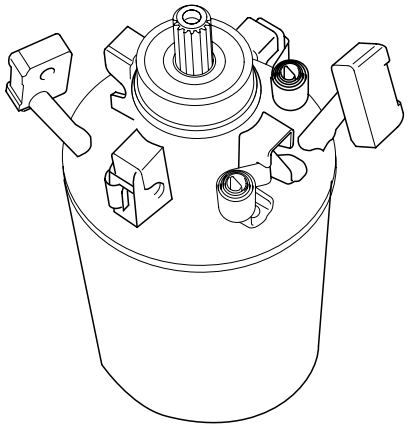

LBIF087A

4. Remove the 3 screws(A) and disconnect the housing rear cover(B) and packing(C).

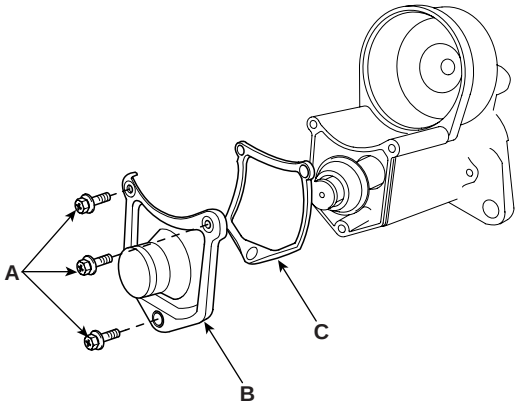

LBIF088A

5. Remove the magnetic switch(A) and spring coil(B).
6. Remove the 2 screws(A) and disconnect the clutch sub assembly(B), idle gear(C), idle gear bearing(D) and drive gear(E) from the housing(F).

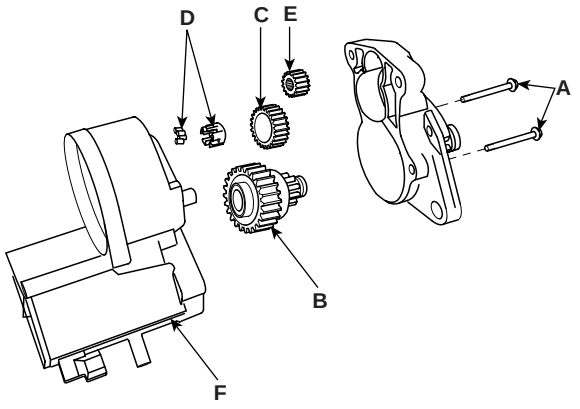

LBIF090A

7. Using a magnetic finger(A), remove the steel ball(B) from the clutch shaft hole.

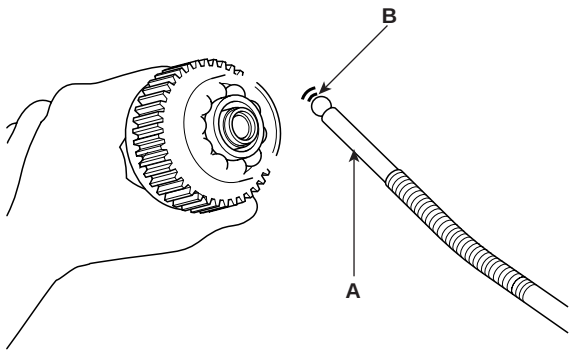

LBIF091A

8. Reassembly is the reverse of disassembly.

NOTE

When installing the yoke assembly(A), use a new O-ring(B) and align the mark(C) on the housing to the mark(D) range of the brush holder.

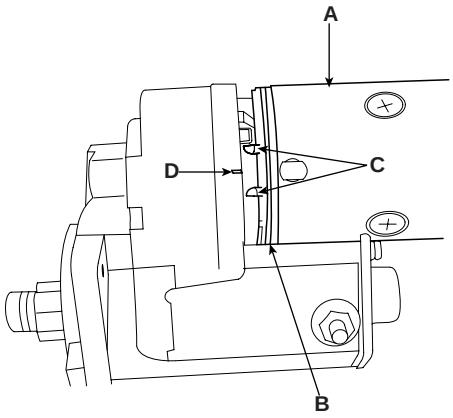

LBIF092A

INSPECTION E712D053

ARMATURE INSPECTION AND TEST

1. Remove the starter (see page EE-25).
2. Disassemble the starter as shown at the beginning of this procedure.
3. Inspect the armature for wear or damage from contact with the permanent magnet. If there is wear or damage, replace the armature.

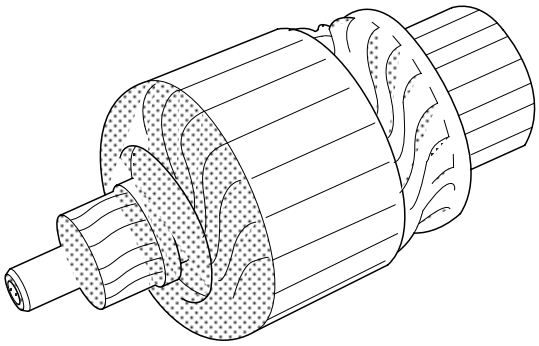

LBIF093A

4. Measure the commutator (A) runout.
   - If the commutator runout is within the service limit, check the commutator for carbon dust or brass chips between the segments.
   - If the commutator runout is not within the service limit, replace the armature.

Commutator Runout
Standard (New) : 0.02mm (0.001 in.) max.
Service limit : 0.05mm (0.002 in.)

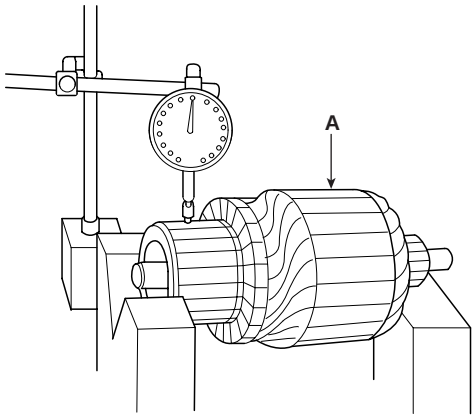

LBIF094A

5. Check for continuity between the segments of the commutator. If an open circuit exists between any segments, replace the armature.

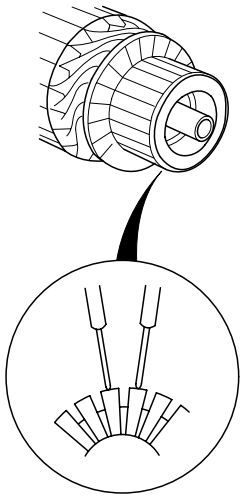

LBIF095A

6. Check with an ohmmeter that no continuity exists between the commutator (A) and armature coil core (B), and between the commutator and armature shaft (C). If continuity exists, replace the armature.

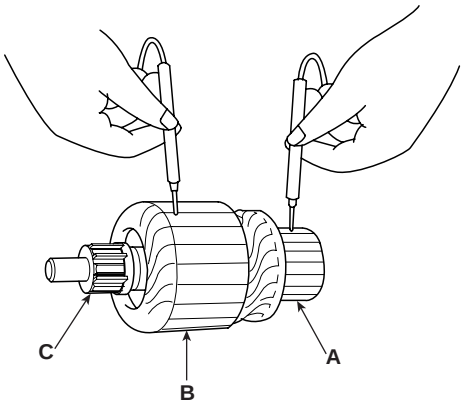

LBIF096A

INSPECT STARTER BRUSH

Brushes that are worn out, or oil-soaked, should be replaced.

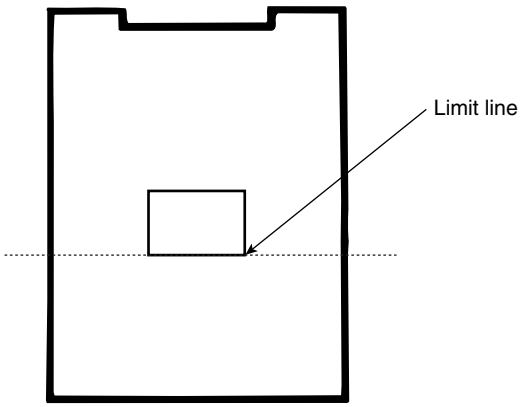

LBIF097A

STARTER BRUSH HOLDER TEST

Check that there is no continuity between the (+) brush holder (A) and (-) brush holder (B). If there is no continuity, replace the brush holder assembly.

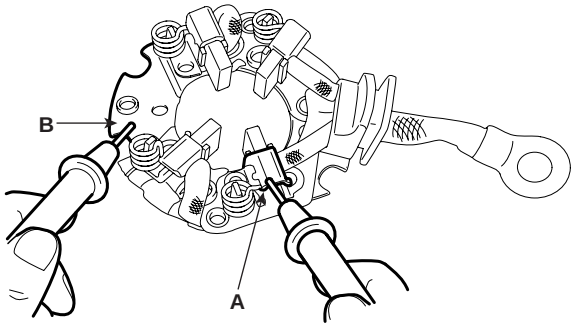

LBIF098A

INSPECT OVERRUNNING CLUTCH

1. Slide the overrunning clutch along the shaft. Replace it if does not slide smoothly.

2. Rotate the overrunning clutch (A) both ways. Does it lock in one direction and rotate smoothly in reverse? If it does not lock in either direction or it locks in both directions, replace it.

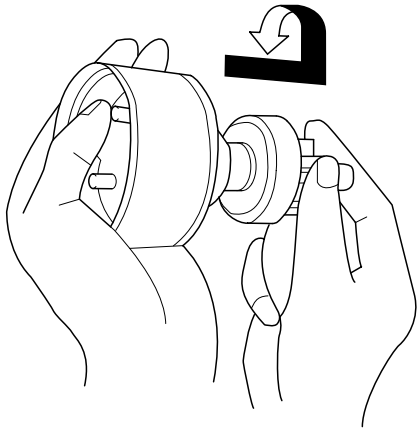

LBIF099A

3. If the starter driver gear (B) is worn or damaged, replace the overrunning clutch assembly: the gear is not available separately.
   Check the condition of the flywheel or torque converter ring gear if the starter drive gear teeth are damaged.

STARTER RELAY

INSPECTION EE48CFAA

1. Remove the fuse box cover.
2. Remove the starter relay.
3. Using an ohmmeter, check that there is continuity between each terminal.

Terminal	Continuity
30 - 87	NO
85 - 86	YES

4. Apply 12V to terminal 85 and ground to terminal 86. Check for continuity between terminals 30 and 87.

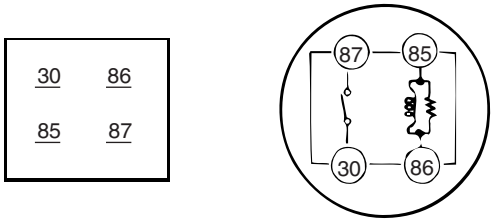

LDAD510B

5. If there is no continuity, replace the starter relay.
6. Install the starter relay.
7. Install the fuse box cover.

PREHEATING SYSTEM

COMPONENTS LOCATION E64278AC

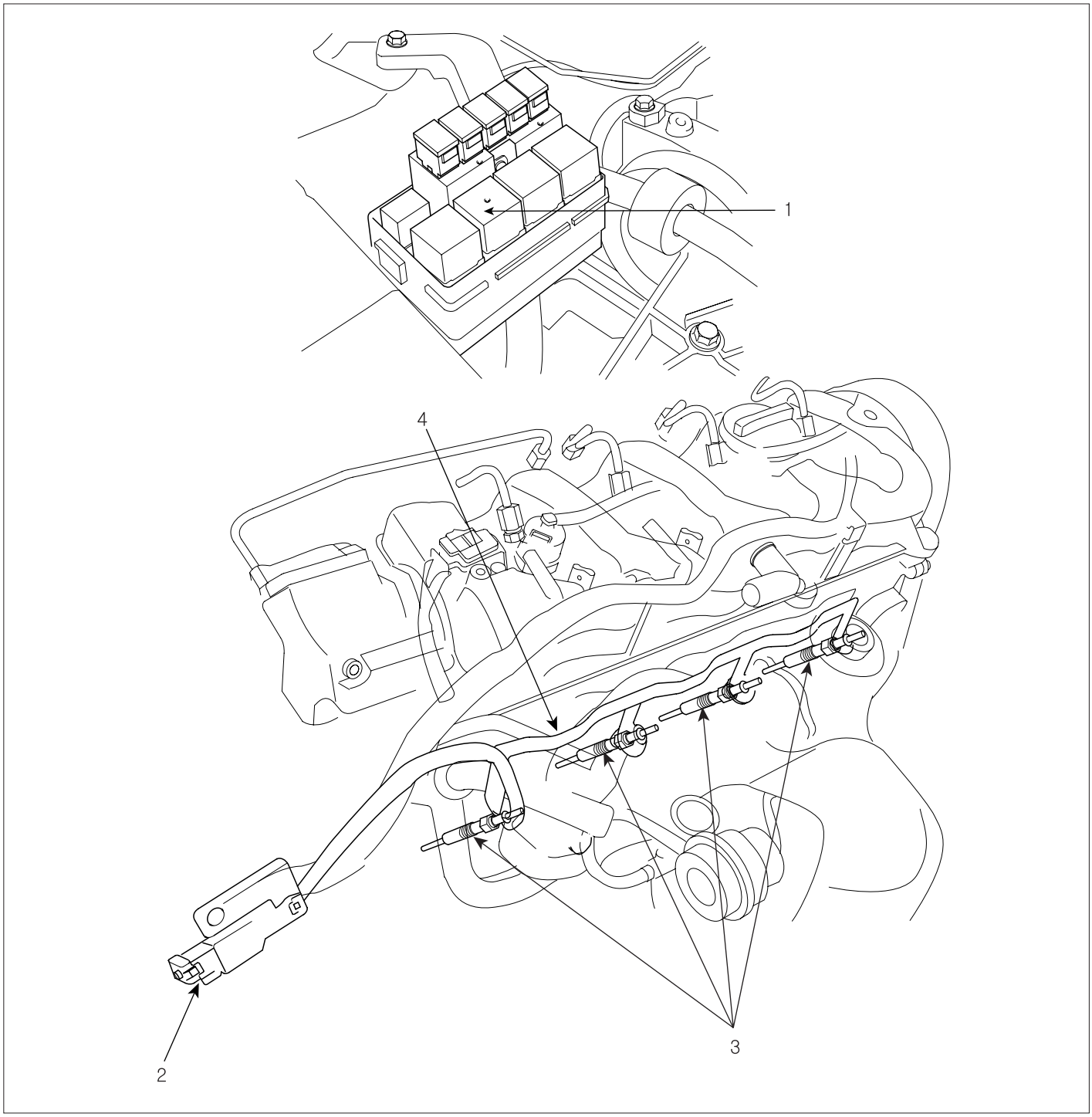

1. Glow plug relay
2. Glow plug connector
3. Glow plug
4. Plate

SCMEE6100L

INSPECT PREHEATING SYSTEM E812E6A0

Conditions before inspection :
Battery voltage : 12V

1. Connect voltmeter between glow plug plate and plug body (ground).
2. Check indicated value on voltmeter with ignition switch ON.
3. Check that preheat indication lamp lights for about 6 seconds and indicates battery voltage (about 9V or over) for about 36 seconds immediately afterignition-switch is turned on. [At cooling water temperature 20°C (68°F)]

   NOTE

   Continuity time varies depending upon cooling water temperature.

4. After checking 3, set ignition switch at START position.
5. The system is normal if battery voltage (about 9V or over) is generatedforabout 6 seconds during engine cranking and after start operation. [at coolingwater temperature 20°C (68°F)]
6. When the voltage or continuity time is not normal, check the terminal voltage in glow control unit, and single parts.

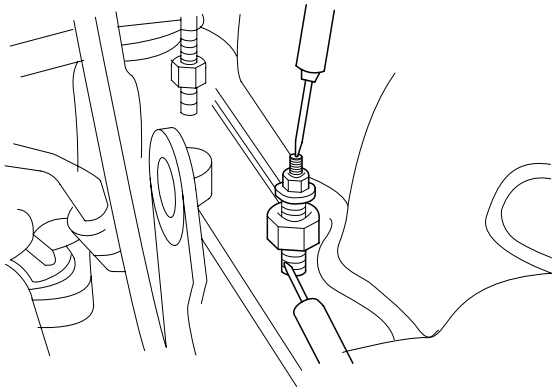

LBIF117A

INSPECT GLOW PLUS

1. Check the continuity between the terminal and body as illustrated. Replaceif discontinuity or with large resistance.

Standard value : 0.25Ω

CAUTION

Remove oil from plug before measuring as glow plug resistance is verysmall.

2. Check for rust on glow plug plate.
3. Check glow plug for damage.

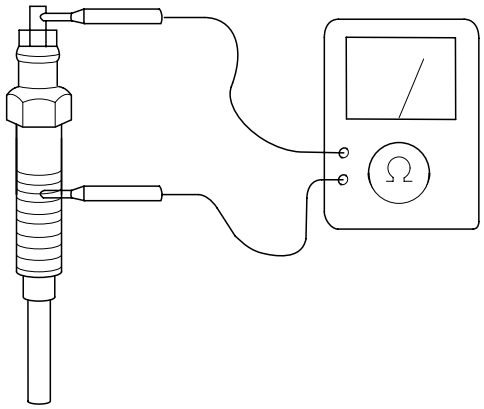

LBIF118A

INSPECT GLOW PLUG RELAY

1. Remove the glow plug relay.

2. Inspect the relay continuity.
   - Using an ohmmeter, check that there is continuity between terminals 2 and 4.
     If there is no continuity, replace the relay.
   - Check that there is no continuity between terminals 1 and 5.
     If there is continuity, replace the relay.

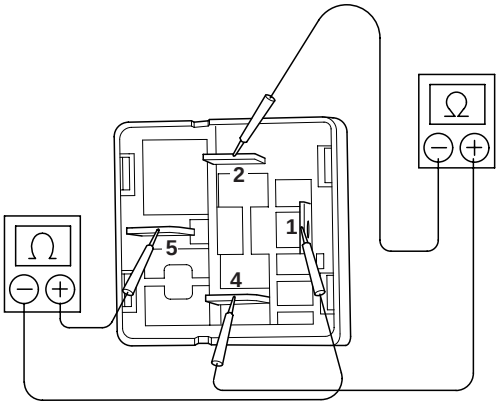

LBIF119A

3. Inspect the relay operation.
   - Apply battery positive voltage across terminals 2 and 4.
   - Using an ohmmeter, check that there is continuity between terminals 1 and 5.
     If there is no continuity, replace the relay.

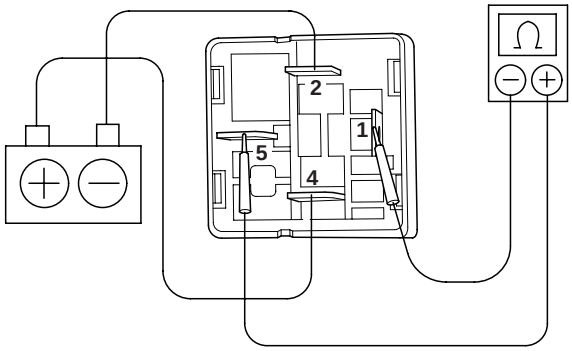

LBIF120A

4. Install the glow plug relay.

Engine Electrical System

GENERAL

IGNITION SYSTEM

CHARGING SYSTEM

ALTERNATOR
BATTERY

STARTING SYSTEM
STARTER
STARTER RELAY

GENERAL

SPECIFICATION EA14A9D5

IGNITION SYSTEM

Items		Specification
Ignition coil	Primary resistance	0.715 ± 0.015Ω
	Secondary resistance	-
Spark plugs	NGK	ILFR5B11
	Plugs Gap	1.0 ~ 1.1 mm (0.0394 ~ 0.0433 in)

STARTING SYSTEM

Items			Specification
Starter	Rated voltage		12 V, 1.2 kW
	No. of pinion teeth		8
	No-load characteristics	Voltage	11 V
		Ampere	90A, MAX
		Speed	2,800 rpm, MIN

CHARGING SYSTEM

Items		Specification
Alternator	Type	Battery voltage sensing
	Rate voltage	13.5 V, 110A
	Speed in use	1,000 ~ 18,000 rpm
	Voltage regulator	Electronic built-in type
	Regulator setting voltage	14.2 ~ 14.8 V
	Temperature compensation	-4 ± 4mV/°C
Battery	Type	MF 68AH
	Cold cranking amperage [at -18°C(-0.4°F)]	600 A
	Reserve capacity	110 min
	Specific gravity [at 20°C(68°F)]	1.280 ± 0.01

NOTE

- *COLD CRANKING AMPERAGE is the amperage a battery can deliver for 30 seconds and maintain a terminal voltage of 7.2V or greater at a specified temperature.*
- *RESERVE CAPACITY RATING is amount of time a battery can deliver 25A and maintain a minimum terminal voltage of 10.5V at 26.7°C(80.1°F).*

TROUBLE SHOOTING EFA63C2C

IGNITION SYSTEM

Symptom	Suspect area	Remedy
Engine will not start or is hard to start (Cranks OK)	Ignition lock switch	Inspect ignition lock switch, or replace as required
	Ignition coil	Inspect ignition coil, or replace as required
	Spark plugs	Inspect spark plugs, or replace as required
	Ignition wiring disconnected or broken	Repair wiring, or replace as required
Rough idle or stalls	Ignition wiring	Repair wiring, or replace as required
	Ignition coil	Inspect ignition coil, or replace as required
Engine hesitates/poor acceleration	Spark plugs and spark plug cables	Inspect spark plugs / cable, or replace as required
	Ignition wiring	Repair wiring, or replace as required
Poor mileage	Spark plugs and spark plug cables	Inspect spark plugs / cable, or replace as required

CHARGING SYSTEM

Symptom	Suspect area	Remedy
Charging warning indicator does not light with ignition switch "ON" and engine off.	Fuse blown	Check fuses
	Light burned out	Replace light
	Wiring connection loose	Tighten loose connection
	Electronic voltage regulator	Replace voltage regulator
Charging warning indicator does not go out with engine running. (Battery requires frequent recharging)	Drive belt loose or worn	Adjust belt tension or replace belt
	Battery cable loose, corroded or worn	Inspect cable connection, repair or replace cable
	Electronic voltage regulator or alternator	Replace voltage regulator or alternator
	Wiring	Repair or replace wiring
Overcharge	Electronic voltage regulator	Replace voltage regulator
	Voltage sensing wire	Repair or replace wiring
Discharge	Drive belt loose or worn	Adjust belt tension or replace belt
	Wiring connection loose or short circuit	Inspect wiring connection, repair or replace wiring
	Electronic voltage regulator or alternator	Replace voltage regulator or alternator
	Poor grounding	Inspect ground or repair
	Worn battery	Replace battery

STARTING SYSTEM

Symptom	Suspect area	Remedy
Engine will not crank	Battery charge low	Charge or replace battery
	Battery cables loose, corroded or worn out	Repair or replace cables
	Transaxle range switch (Vehicle with automatic transaxle only)	Refer to TR group-automatic transaxle
	Fuse blown	Replace fuse
	Starter motor faulty	Replace
	Ignition switch faulty	Replace
Engine cranks slowly	Battery charge low	Charge or replace battery
	Battery cables loose, corroded or worn out	Repair or replace cables
	Starter motor faulty	Replace
Starter keeps running	Starter motor	Replace
	Ignition switch	Replace
Starter spins but engine will not crank	Short in wiring	Repair wiring
	Pinion gear teeth broken or starter motor	Replace
	Ring gear teeth broken	Replace fly wheel or torque converter

SPECIAL SERVICE TOOL ECC7A874

Tool (Number and name)	Illustration	Use
Alternator pulley remover wrench (09373–27000)	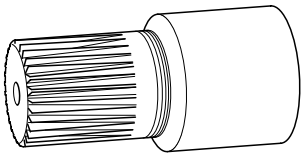 EBDD700A	Removal and installation of alternator pulley

REFERENCE SERVICE TOOLS

Tool (Number and name)	Illustration	Use
MCR-570 KIT Battery checker	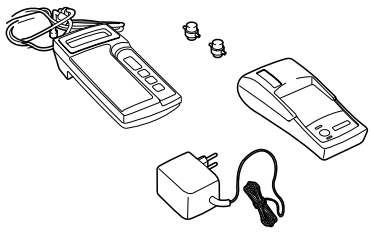 LBLG001A	For testing 12-volt automotive staring battery and for testing 12-volt charging system. (Using with Terminal Pinter_182-003A)

THE MICRO 570 ANALYZER E427CDBF

The MICRO 570 Analyzer provides the ability to test the charging and starting systems, including the battery, starter and generator.

CAUTION

Because of the possibility of personal injury, always use extreme caution and appropriate eye protection when working with batteries.

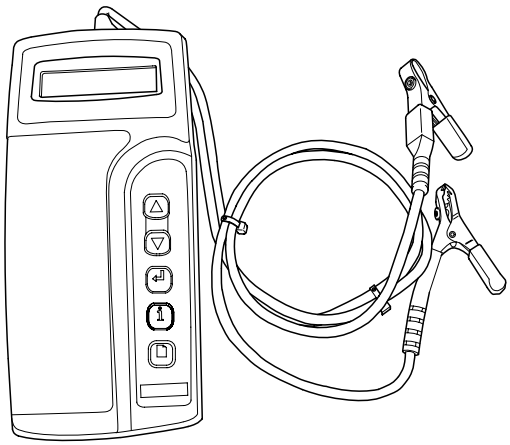

EBRF004A

KEYPAD

The MICRO570 button on the key pad provides the following functions :

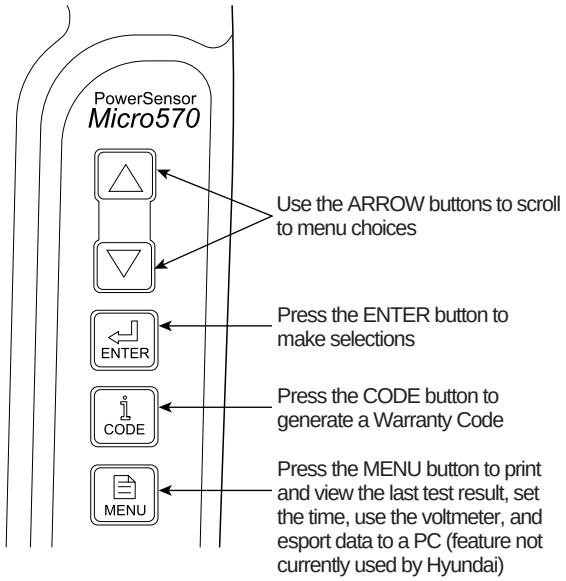

EBRF005A

BATTERY TEST PROCEDURE

1. Connect the tester to the battery.
   - Red clamp to battery positive (+) terminal.
   - Black clamp to battery negative (-) terminal.

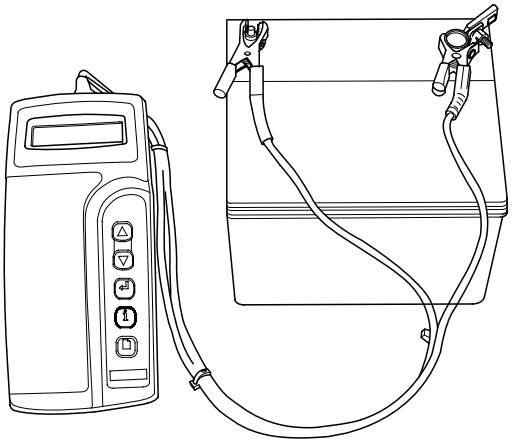

EBRF006A

CAUTION

Connect clamps securely. If "CHECK CONNECTION" message is displayed on the screen, reconnect clamps securely.

2. The tester will ask if the battery is connected "IN A VEHICLE" or "OUT OF A VEHICLE". Make your selection by pressing the arrow buttons; then press ENTER.

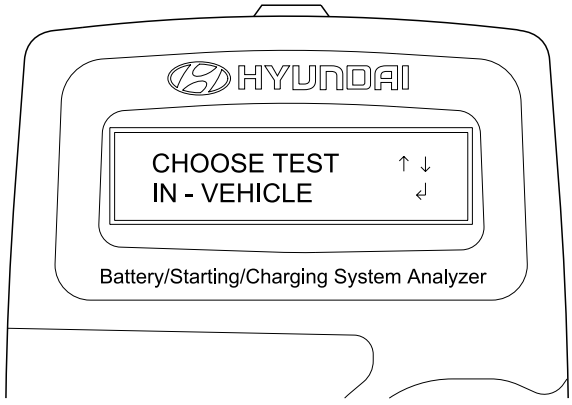

SCMEE6100L

3. Choose either CCA or CCP and press the ENTER button.

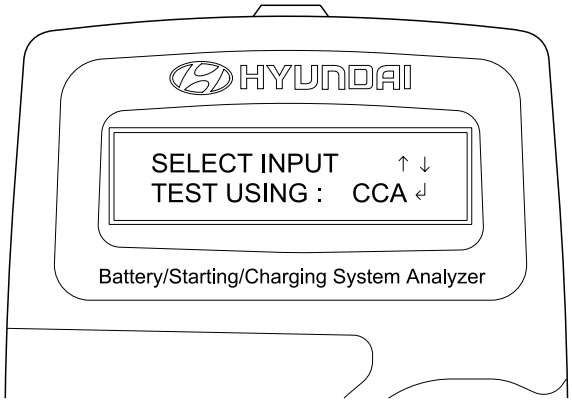

SCMEE6101L

NOTE

- *CCA : Cold cranking amps, is an SAE specification for cranking batteries at -18°C (0°F).*
- *CCP : Cold cranking amps, is an SAE specification for korean manufacturer's for cranking batteries at -18°C (0°F).*

4. Set the CCA value displayed on the screen to the CCA value marked on the battery label by pressing up and down buttons and press ENTER.

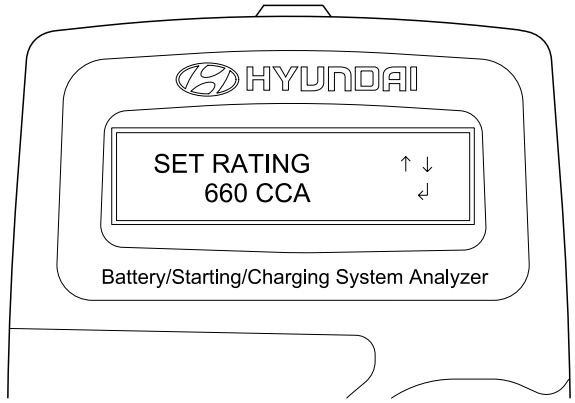

SCMEE6102L

NOTE

The battery ratings(CCA) displayed on the tester must be identical to the ratings marked on battery label.

5. The tester (Micro570) displays battery test results including voltage and battery ratings.
   A relevant action must be given according to the test results by referring to the battery test results as shown in the table below.

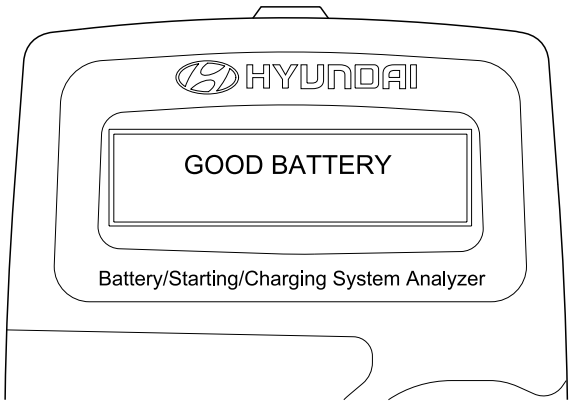

SCMEE6103L

NOTE

The battery ratings (CCA) displayed on the tester must be identical to the ratings marked on battery label.

6. To conduct starter test, press ENTER.

BATTERY TEST RESULTS

RESULT ON PRINTER	REMEDY
Good battery	No action is required
Good recharge	Battery is in a good state Recharge the battery and use
Charge & Retest	Battery is not charged properly => Charge and test the battery again (Failure to charge the battery fully may read incorrect measurement value)
Replace battery	=> Replace battery and recheck the charging system. (Improper connection between battery and vehicle cables may cause "REPLACE BATTERY", retest the battery after removing cables and connecting the tester to the battery terminal directly prior to replacing the battery)
Bad cell-replace	=> Charge and retest the battery. And then, test results may cause "REPLACE BATTERY", replace battery and recheck the charging system

WARNING

Whenever filing a claim for battery, the print out of the battery test results must be attached.

STARTER TEST PROCEDURE

1. After the battery test, press ENTER immediately for the starter test.

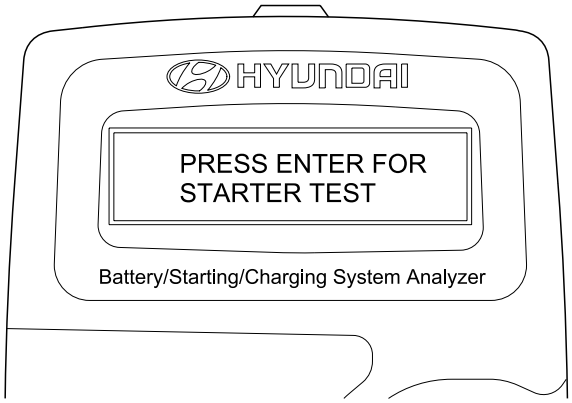

SCMEE6104L

2. After pressing ENTER key, start the engine.

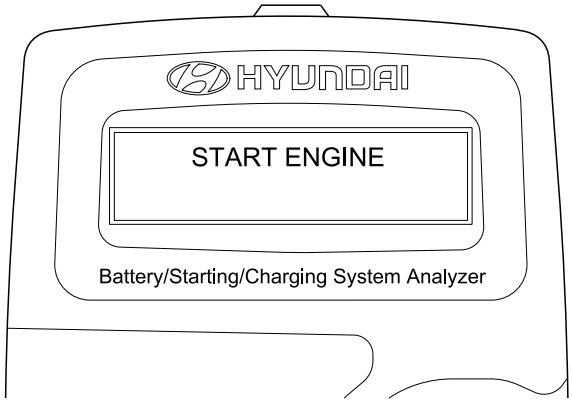

SCMEE6105L

3. Cranking voltage and starter test results will be displayed on the screen.
   Take a relevant action according to the test results by referring to the starter test results as given below.

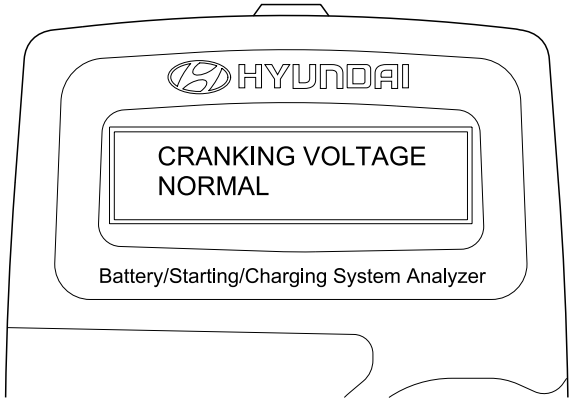

SCMEE6106L

4. To continue charging system test, press ENTER.

STARTER TEST RESULTS

RESULT ON PRINTER	REMEDY
Cranking voltage normal	System shows a normal starter draw
Cranking voltage low	Cranking voltage is lower than normal level => Check starter
Charge battery	The state of battery charge is too low to test => Charge the battery and retest
Replace battery	=> Replace battery => If the vehicle is not started though the battery condition of "Good and fully charged" is displayed. => Check wiring for open circuit, battery cable connection, starter and repair or replace as necessary.

CHARGING SYSTEM TEST PROCEDURE

1. Press ENTER to begin charging system test.

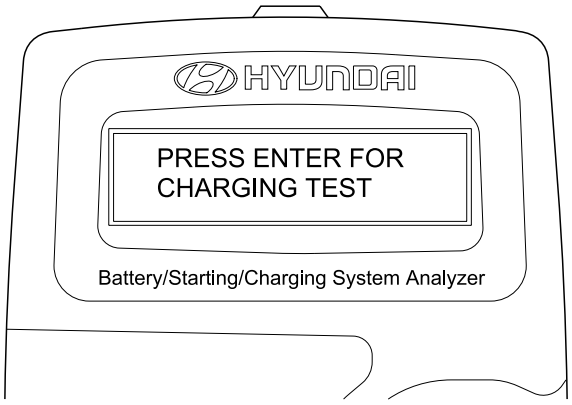

SCMEE6107L

2. ENTER button is pressed, the tester displays the actual voltage of generator.
   Press ENTER to test the charging system.

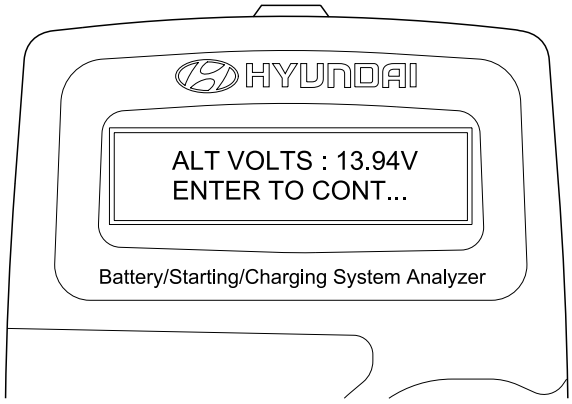

SCMEE6108L

3. The MICRO 570 will prompt you to rev the engine until the rev is detected. It will then collect the data.

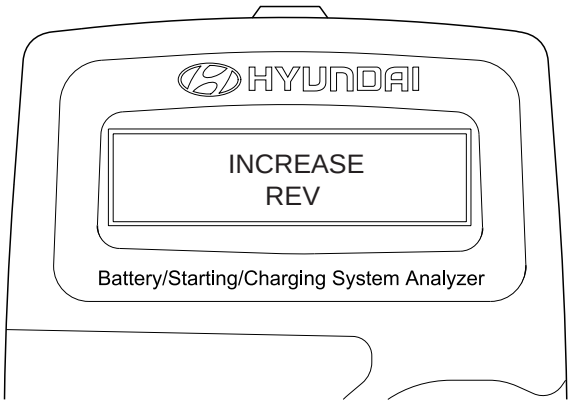

SCMEE6109L

4. Press ENTER.

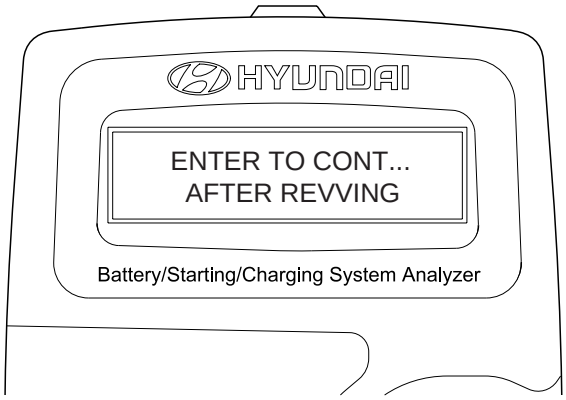

SCMEE6110L

5. The MICRO 570 will analyze the charging system output at idle for comparison to other readings.

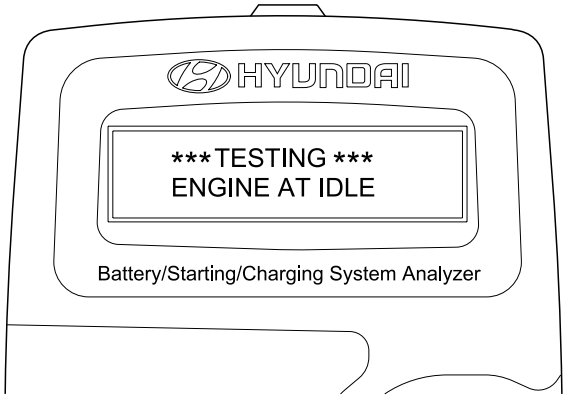

SCMEE6111L

6. The MICRO 570 will detect the amount of ripple from the charging system to the battery. Excessive ripple usually means the stator is damaged or that one or more generator diodes have failed.

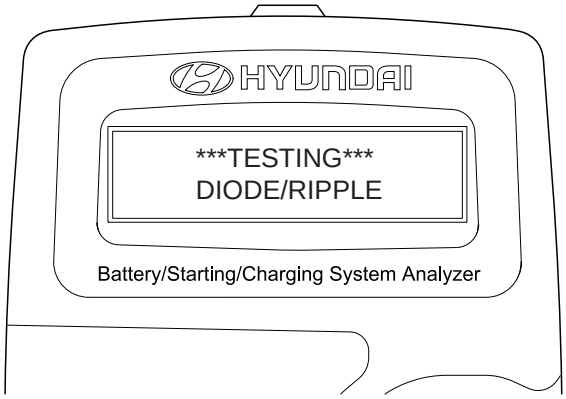

SCMEE6112L

7. The MICRO 570 will prompt you to turn on accessary loads. It will then test at idle and prompt you to rev the engine. The analyzer will determine if the charging system can provide enough current for the demands of the vehicle's electrical system.

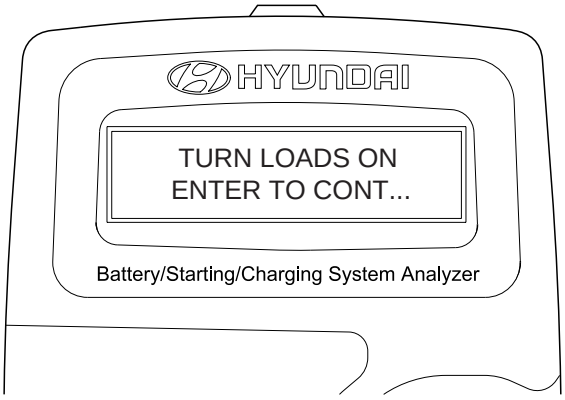

SCMEE6113L

NOTE

When asked to turn on the accessory loads, turn on the blower to high(heater), the high beam headlights, and rear defogger. DO NOT use cyclical loads such as air conditioning or wind-shield wipers.

8. After the test, the MICRO 570 will display the idle voltage, load voltage and the state results.

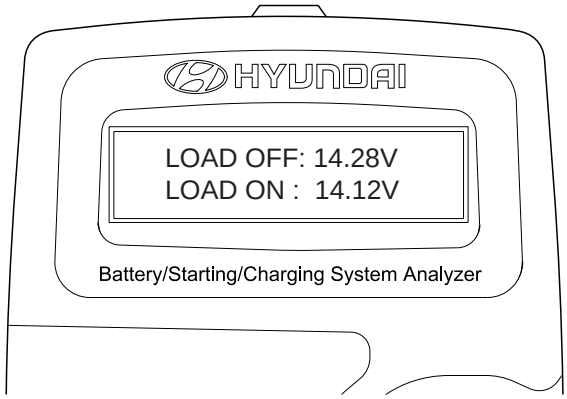

SCMEE6114L

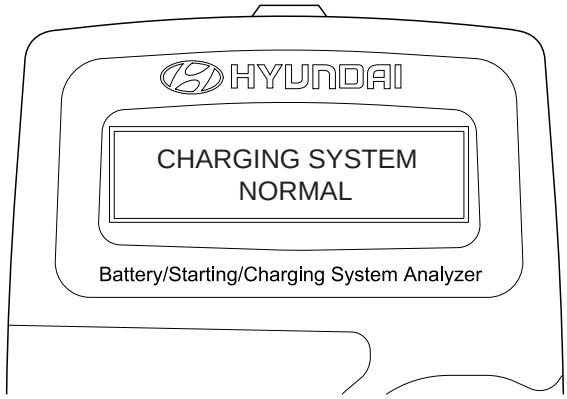

SCMEE6115L

CHARGING SYSTEM TEST RESULTS

RESULT ON PRINTER	REMEDY
Charging system normal/Diode ripple normal	Charging system is normal
No charging voltage	Generator does not supply charging current to battery => Check belts, connection between generator and battery Replace belts or cable or generator as necessary
Low charging voltage	Generator does not supply charging current to battery and electrical load to system fully => Check belts and generator and replace as necessary
High charging voltage	The voltage from generator to battery is higher than normal limit during voltage regulating. => Check connection and ground and replace regulator as necessary => Check electrolyte level in the battery
Excess ripple detected	One or more diodes in the generator is not functioning properly => Check generator mounting and belts and replace as necessary

IGNITION SYSTEM

DESCRITION E28927EF

Ignition timing is controlled by the electronic control ignition timing system. The standard reference ignition timing data for the engine operating conditions are preprogrammed in the memory of the ECM (Engine Control Module).

The engine operating conditions (speed, load, warm-up condition, etc.) are detected by the various sensors. Based on these sensor signals and the ignition timing data, signals to interrupt the primary current are sent to the ECM. The ignition coil is activated, and timing is controlled.

ON-VEHICLE INSPECTION EB0BB3A7

SPARK TEST

1. Remove the ignition coil connector(A).

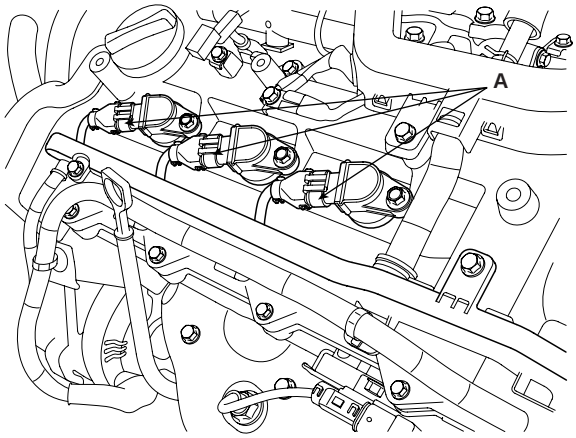

KCBF156A

NOTE

Disconnect the iguition coil connector while pulling up tre connector lock.

2. Remove the ignition coil.
3. Using a spark plug socket, remove the spark plug.
4. Install the spark plug to the ignition coil.

5. Ground the spark plug to the engine.

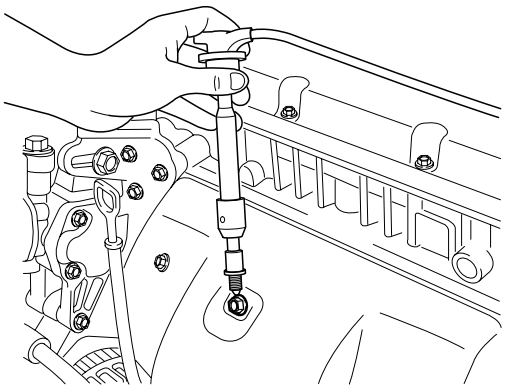

ABGE001A

6. Check is spark occurs while engine is being cranked.

   NOTE

   To prevent fuel being injected from injectors while the engine is being cranked, remove the fuel pump(A) relay from the fuse box.
   Crank the engine for no more than 5 ~ 10 seconds.

7. Inspect all the spark plugs.

8. Using a spark plug socket, install the spark plug.

9. Install the ignition coil.

10. Reconnect the ignition coil connector.

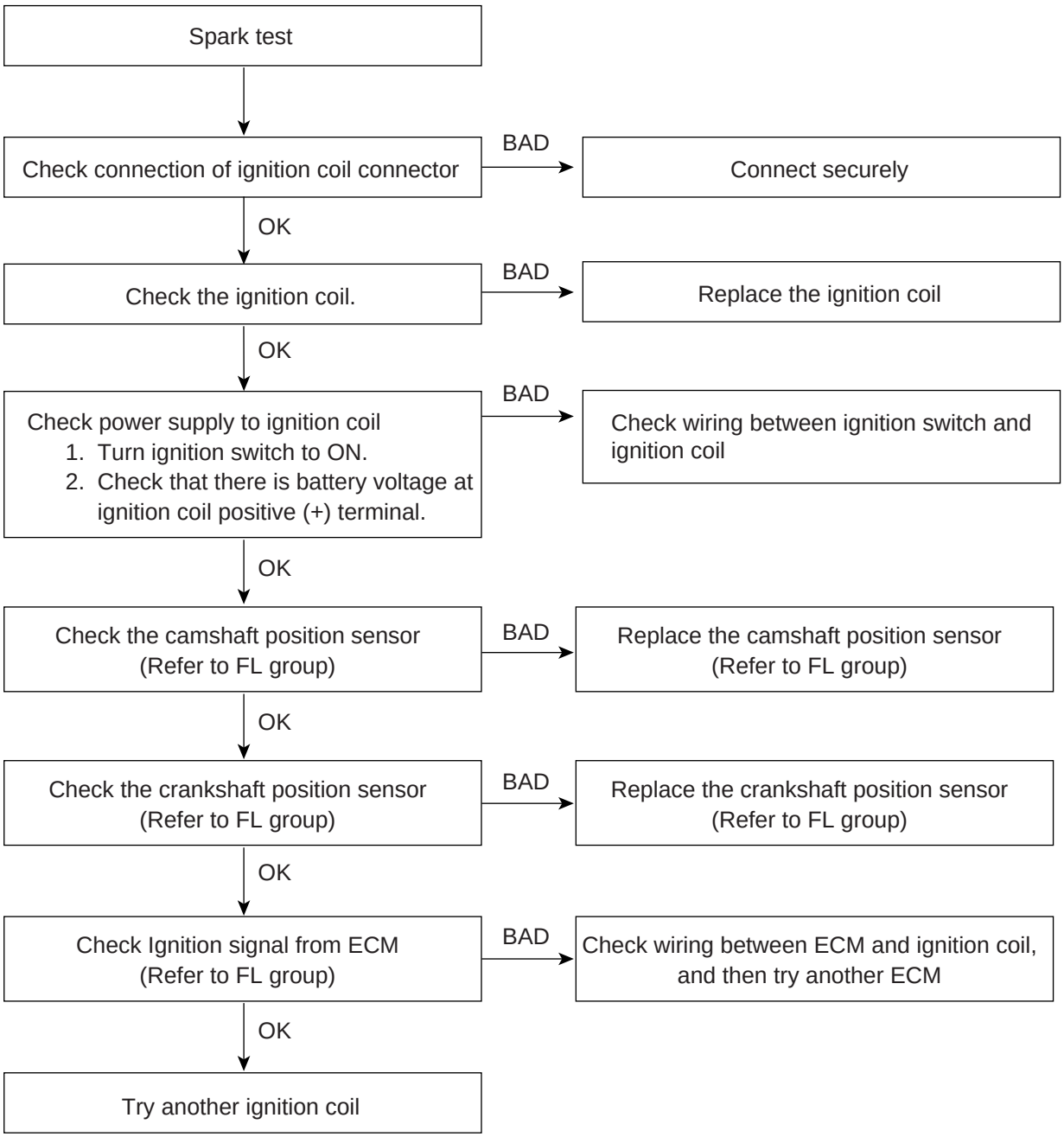
Spark test
Check connection of ignition coil connector
BAD
Connect securely
OK
Check the ignition coil.
BAD
Replace the ignition coil
OK
Check power supply to ignition coil
1. Turn ignition switch to ON.
2. Check that there is battery voltage at ignition coil positive (+) terminal.
BAD
Check wiring between ignition switch and ignition coil
OK
Check the camshaft position sensor (Refer to FL group)
BAD
Replace the camshaft position sensor (Refer to FL group)
OK
Check the crankshaft position sensor (Refer to FL group)
BAD
Replace the crankshaft position sensor (Refer to FL group)
OK
Check Ignition signal from ECM (Refer to FL group)
BAD
Check wiring between ECM and ignition coil, and then try another ECM
OK
Try another ignition coil

EBRF001A

INSPECT SPARK PLUG

1. Inspect the electrodes (A) and ceramic insulator (B).

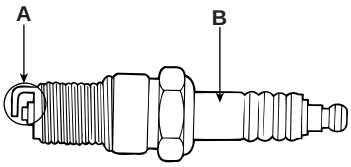

EBKD002K

INSPECTION OF ELECTRODES

Condition	Dark deposits	White deposits
Description	- Fuel mixture too rich - Low air intake	- Fuel mixture too lean - Advanced ignition timing - Insufficient plug tightening torque

2. Check the electrode gap (A).

Standard : 1.0 ~ 1.1 mm (0.0394 ~ 0.0433 in.)

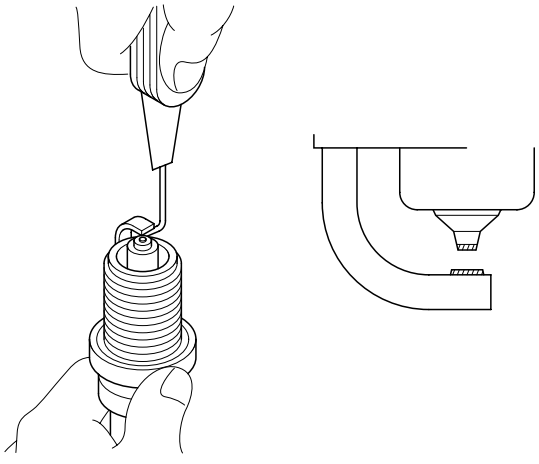

EBKE002L

INSPECT IGNITION COIL

1. Measure the primary coil resistance between terminals (+) and (-).

Standard : 00715 ± 0.015Ω

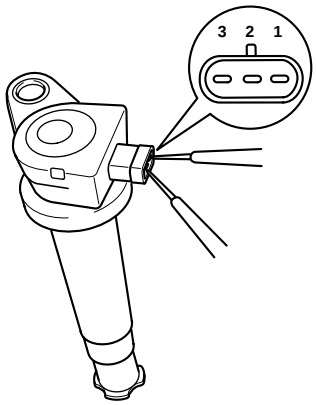

KBBF002A

NOTE

Mesure the resistance between the terminals No.1 and No.3.

REMOVAL E5CED4D1

IGNITION COIL

1. Remove the engine cover.
2. Remove the ignition coil connector(A).

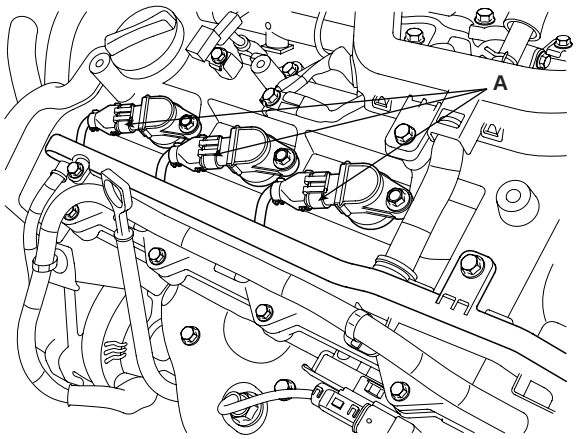

KCBF156A

3. 3. Remove the ignition coil.
4. Installation is the reverse of removal.

REPLACEMENT E5CED4D2

SPARK PLUC

1. Remove the ignition coil connector(A).

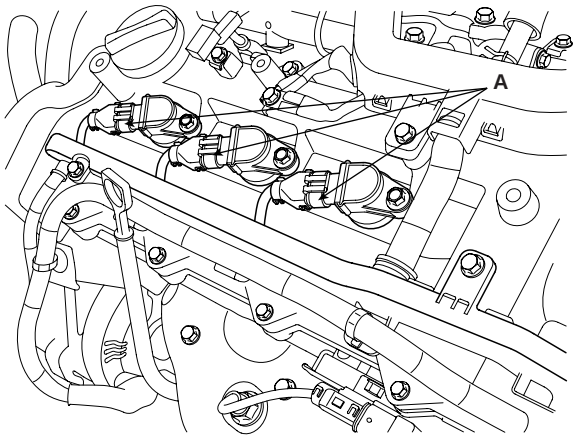

KCBF156A

2. Remove the ignition coil.
3. Using a spark plug socket, remove the spark plug.

   CAUTION

   Be careful that no contaminates enter through the spark plug holes..

4. When replacing the spark plug, always use the long reach type spark plug.
   Do not use a short reach type.

   1) Color Marking (Tip).

   - [2.7L]
     Unleaded : Yellow Marking
     Leaded : Green Marking
   - [Others]
     Marking Color is different or does not exist

   2) Length(Tip-Tip / PT Length).

   - 2.7L: 83.2mm/ 26.5mm
   - [Others]
     The length is different from the specification above.

   3) Part ID.

   - [2.7L]
     Unleaded : ILFR5B11
     Leaded : LFR5A

CHARGING SYSTEM

DESCRIPTION ECC3DBD3

The charging system included a battery, an alternator with a built-in regulator, and the charging indicator light and wire.
The Alternator has built-in diodes, each rectifying AC current to DC current.
Therefore, DC current appears at alternator "B" terminal.
In addition, the charging voltage of this alternator is regulated by the battery voltage detection system.
The alternator is regulated by the battery voltage detection system. The main components of the alternator are the rotor, stator, rectifier, capacitor brushes, bearings and V-ribbed belt pulley. The brush holder contains a built-in electronic voltage regulator.

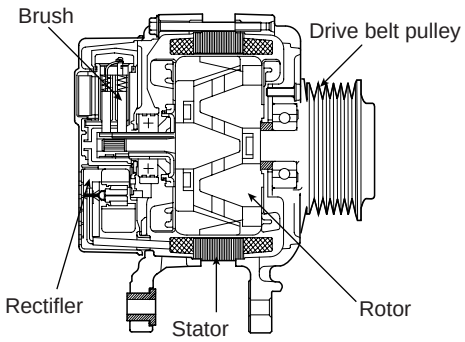

LBKG001B

ON-VEHICLE INPECTION E87FA4FF

CAUTION

- ***Check that the battery cables are connected to the correct terminals.***
- ***Disconnect the battery cables when the battery is given a quick charge.***
- ***Never disconnect the battery while the engine is running.***

CHECK BATTERY VOLTAGE

1. If 20 minutes have not passed since the engine was stopped, turn the ignition switch ON and turn on the electrical system (headlamp, blower motor, rear defogger etc.) for 60 seconds to remove the surface charge.

2. Turn the ignition switch OFF and turn off the electrical systems.

3. Measure the battery voltage between the negative (-) and positive (+) terminals of the battery.

Standard voltage : 12.5 ~ 12.9V at 20°C(68°F)

If the voltage is less than specification, charge the battery.

CHECK THE BATTERY TERMINALS AND FUSES

1. Check that the battery terminals are not loose or corroded.

2. Check the fuses for continuity.

INSPECT DRIVE BELT

Visually check the belt for excessive wear, frayed cords etc.
If any defect has been found, replace the drive belt.

NOTE

Cracks on the rib side of a belt are considered acceptable. If the belt has chunks missing from the ribs, it should be replaced.

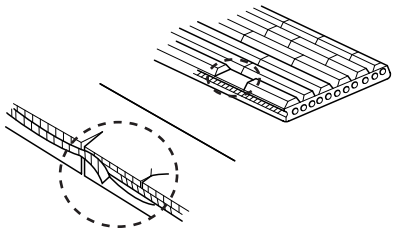

EBKD004B

VISUALLY CHECK ALTERNATOR WIRING AND LISTEN FOR ABNORMAL NOISES

1. Check that the wiring is in good condition.
2. Check that there is no abnormal noise from the alternator while the engine is running.

CHECK DISCHARGE WARNING LIGHT CIRCUIT

1. Warm up the engine and then turn it off.
2. Turn off all accessories.
3. Turn the ignition switch "ON". Check that the discharge warning light is lit.
4. Start the engine. Check that the light is lit.
   If the light does not go off as specified, troubleshoot the discharge light circuit.

INSPECT CHARGING SYSTEM

VOLTAGE DROP TEST OF ALTERNATOR OUTPUT WIRE

This test determines whether or not the wiring between the alternator "B" terminal and the battery (+) terminal is good by the voltage drop method.

PREPARATION

1. Turn the ignition switch to "OFF".
2. Disconnect the output wire from the alternator "B" terminal. Connect the (+) lead wire of ammeter to the "B" terminal of alternator and the (-) lead wire of ammeter to the output wire. Connect the (+) lead wire of voltmeter to the "B" terminal of alternator and the (-) lead wire of voltmeter to the (+) terminal of battery.

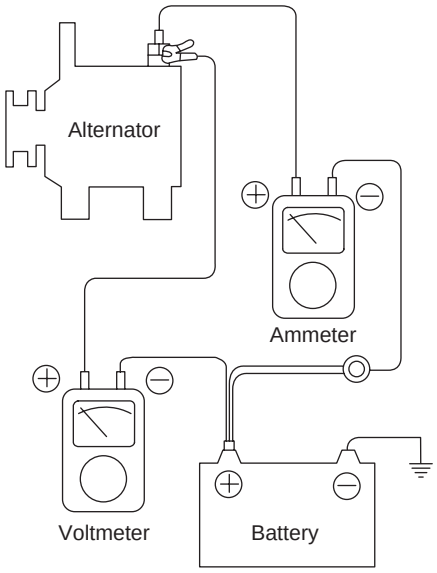

BBGE002A

TEST

1. Start the engine.
2. Turn on the headlamps and blower motor, and set the engine speed until the ammeter indicates 20A.
   And then, read the voltmeter at this time.

RESULT

1. The voltmeter may indicate the standard value.

Standard value: 0.2V max

2. If the value of the voltmeter is higher than expected (above 0.2V max.), poor wiring is suspected. In this case check the wiring from the alternator "B" terminal to the battery (+) terminal. Check for loose connections, color change due to an over-heated harness, etc. Correct them before testing again.

3. Upon completion of the test, set the engine speed at idle.
   Turn off the headlamps, blower motor and the ignition switch.

OUTPUT CURRENT TEST

This test determines whether or not the alternator gives an output current that is equivalent to the normal output.

PREPARATION

1. Prior to the test, check the following items and correct as necessary.
   Check the battery installed in the vehicle to ensure that it is good condition. The battery checking method is described in the section "Battery".
   The battery that is used to test the output current should be one that has been partially discharged. With a fully charged battery, the test may not be conducted correctly due to an insufficient load.
   Check the tension of the alternator drive belt. The belt tension check method is described in the section "Inspect drive belt".

2. Turn off the ignition switch.

3. Disconnect the battery ground cable.

4. Disconnect the alternator output wire from the alternator "B" terminal.

5. Connect a DC ammeter (0 to 150A) in series between the "B" terminal and the disconnected output wire. Be sure to connect the (-) lead wire of the ammeter to the disconnected output wire.

   NOTE

   Tighten each connection securely, as a heavy current will flow. Do not rely on clips.

6. Connect a voltmeter (0 to 20V) between the "B" terminal and ground. Connect the (+) lead wire to the alternator "B" terminal and (-) lead wire to a good ground.

7. Attach an engine tachometer and connect the battery ground cable.

8. Leave the engine hood open.

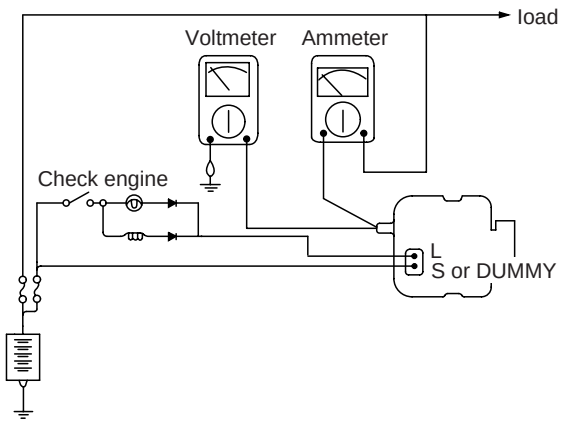

EBRF020A

TEST

1. Check to see that the voltmeter reads as the same value as the battery voltage. If the voltmeter reads 0V, and the open circuit in the wire between alternator "B" terminal and battery (-) terminal or poor grounding is suspected.

2. Start the engine and turn on the headlamps.

3. Set the headlamps to high beam and the heater blower switch to HIGH, quickly increase the engine speed to 2,500 rpm and read the maximum output current value indicated by the ammeter.

NOTE

After the engine start up, the charging current quickly drops.
Therefore, the above operation must be done quickly to read the maximum current value correctly.

RESULT

1. The ammeter reading must be higher than the limit value. If it is lower but the alternator output wire is in good condition, remove the alternator from the vehicle and test it.

Limit value : 70% of the rated current

NOTE

- *The nominal output current value is shown on the nameplate affixed to the alternator body.*
- *The output current value changes with the electrical load and the temperature of the alternator itself.*
  Therefore, the nominal output current may not be obtained. If such is the case, keep the headlamps on the cause discharge of the battery, or use the lights of another vehicle to increase the electrical load.
  The nominal output current may not be obtained if the temperature of the alternator itself or ambient temperature is too high.
  In such a case, reduce the temperature before testing again.

2. Upon completion of the output current test, lower the engine speed to idle and turn off the ignition switch.

3. Disconnect the battery ground cable.

4. Remove the ammeter and voltmeter and the engine tachometer.

5. Connect the alternator output wire to the alternator "B" terminal.

6. Connect the battery ground cable.

REGULATED VOLTAGE TEST

The purpose of this test is to check that the electronic voltage regulator controls voltage correctly.

PREPARATION

1. Prior to the test, check the following items and correct if necessary.
   Check that the battery installed on the vehicle is fully charged. The battery checking method is described in the section "Battery".
   Check the alternator drive belt tension. The belt tension check method is described in the section "Inspect drive belt".
2. Turn ignition switch to "OFF".
3. Disconnect the battery ground cable.
4. Connect a digital voltmeter between the "B" terminal of the alternator and ground. Connect the (+) lead of the voltmeter to the "B" terminal of the alternator. Connect the (-) lead to good ground or the battery (-) terminal.
5. Disconnect the alternator output wire from the alternator "B" terminal.
6. Connect a DC ammeter (0 to 150A) in series between the "B" terminal and the disconnected output wire. Connect the (-) lead wire of the ammeter to the disconnected output wire.
7. Attach the engine tachometer and connect the battery ground cable.

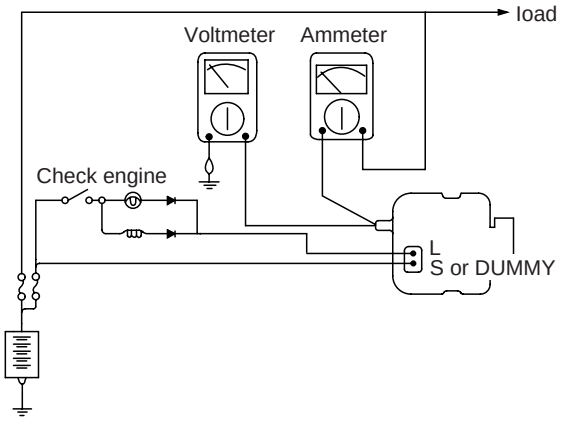

EBRF020A

TEST

1. Turn on the ignition switch and check to see that the voltmeter indicates the following value.

Voltage: Battery voltage

   If it reads 0V, there is an open circuit in the wire between the alternator "B" terminal and the battery and the battery (-) terminal.
2. Start the engine. Keep all lights and accessories off.
3. Run the engine at a speed of about 2,500 rpm and read the voltmeter when the alternator output current drops to 10A or less

RESULT

1. If the voltmeter reading agrees with the value listed in the regulating voltage table below, the voltage regulator is functioning correctly. If the reading is other than the standard value, the voltage regulator or the alternator is faulty.

REGULATING VOLTAGE TABLE

Voltage regulator ambient temperature °C (°F)	Regulating voltage (V)
-20 (-4)	14.2 ~ 15.4
20 (68)	14.0 ~ 15.0
60 (140)	13.7 ~ 14.9
80 (176)	13.5 ~ 14.7

2. Upon completion of the test, reduce the engine speed to idle, and turn off the ignition switch.
3. Disconnect the battery ground cable.
4. Remove the voltmeter and ammeter and the engine tachometer.
5. Connect the alternator output wire to the alternator "B" terminal.
6. Connect the battery ground cable.

ALTERNATOR

COMPONENTS EEEFA0CD

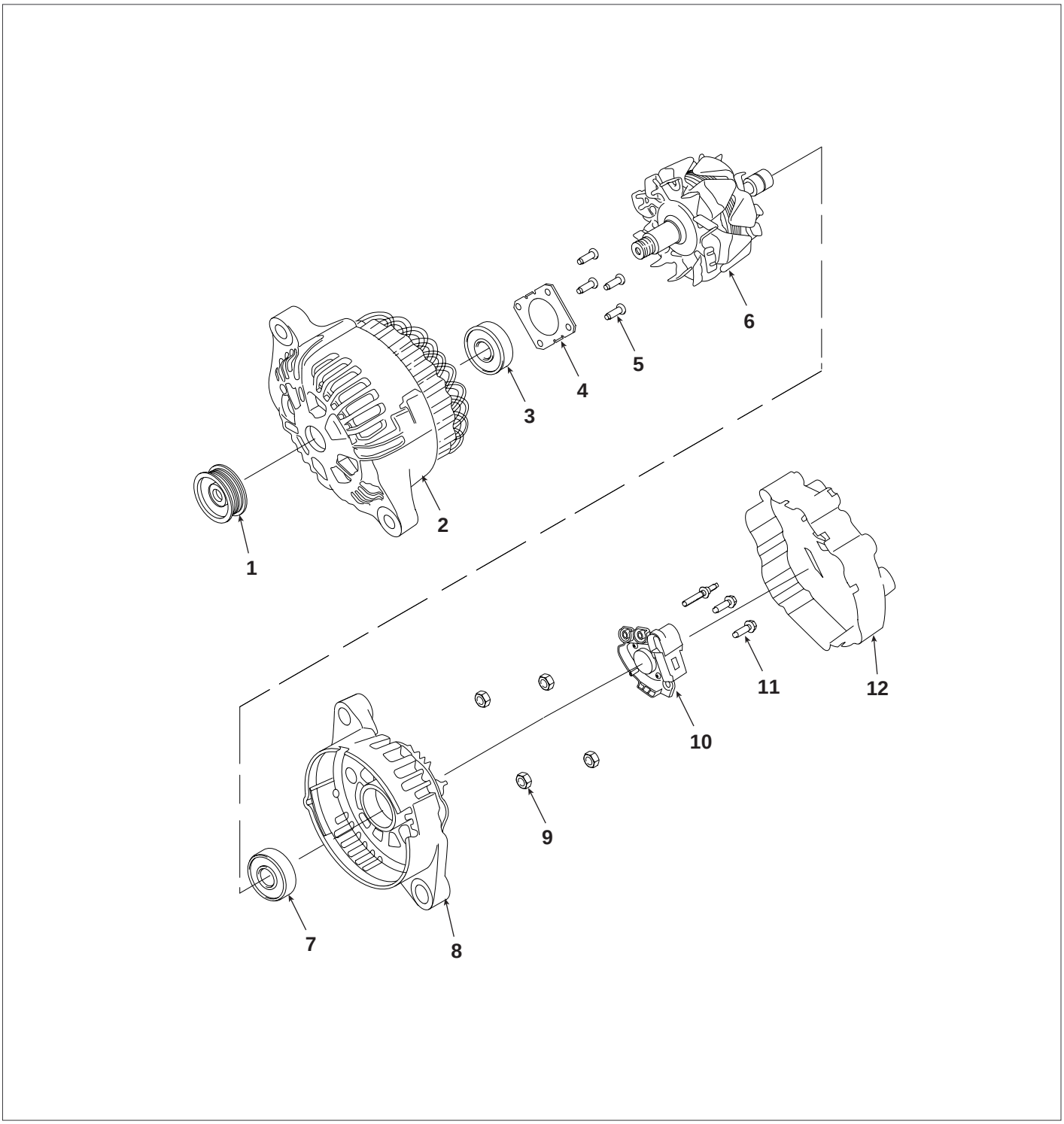

1. Pulley
2. Front bracket
3. Front bearing
4. Bearing cover
5. Bearing cover bolt
6. Rotor coil
7. Rear bearing
8. Rear bracket
9. Nut
10. Brush holder assembly
11. Brush holder bolt
12. Rear cover

EBBF001A

REMOVAL E743E5F6

1. Disconnect the battery negative terminal first, then the positive terminal.
2. Disconnect the alternator connector, and remove the cable from alternator "B" terminal.
3. Remove the drive belt.
4. Pull out the through bolt and then remove the alternator(A).

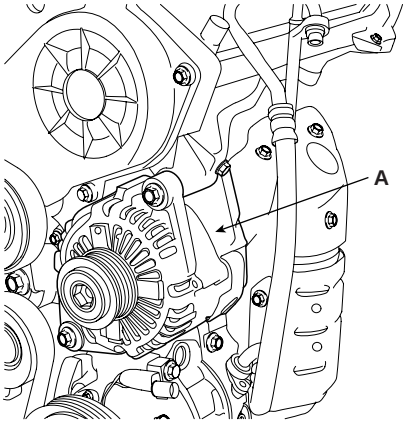

KBBF003A

5. Installation is the reverse of removal.

DISASSEMBLY E1EC0C79

1. Remove the alternator cover(A) using a screw driver(B).

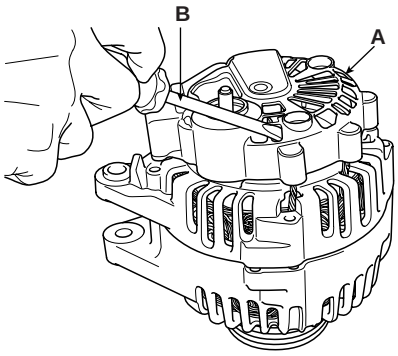

EBKD301A

2. Remove the slip ring guide(A).
3. Loosen the mounting bolts(B) and disconnect the brush holder assembly(C).

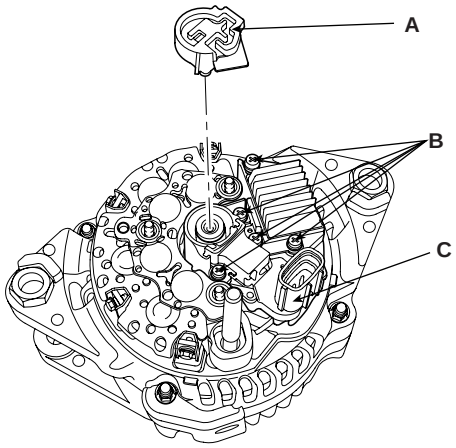

KBBF101A

4. Remove the rectifler(A) with 4 screws.

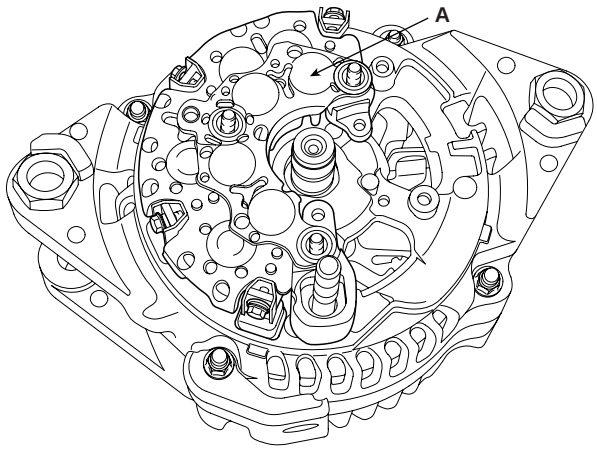

KBBF102A

5. Remove the nut, pulley(A) and spacer.

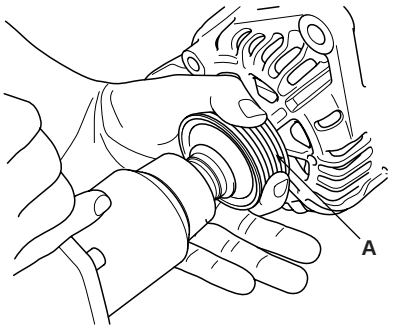

EBKD301D

6. Loosen the 4 through bolts(A).

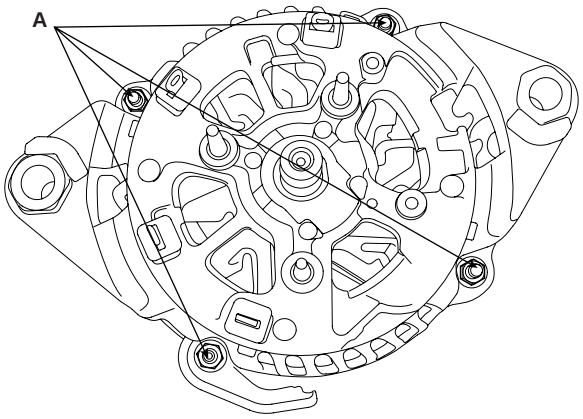

KBBF103A

7. Disconnect the rotor(A) and cover(B).

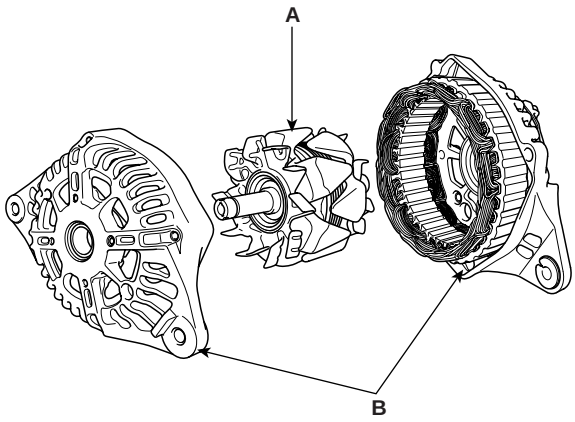

EBKD301G

8. Reassembly is the reverse order of disassembly.

INSPECTION EE34298B

INSPECT ROTOR

1. Check that there is continuity between the slip rings (A).

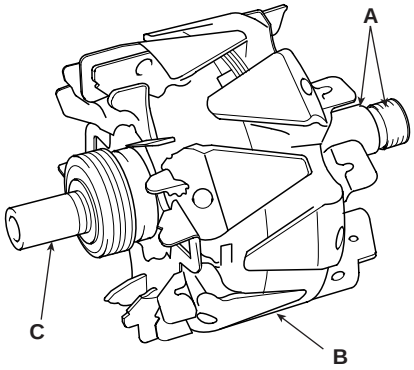

EBKD008A

2. Check that there is no continuity between the slip rings and the rotor (B) or rotor shaft (C).

3. If the rotor fails either continuity check, replace the alternator.

INSPECT STATOR

1. Check that there is continuity between each pair of leads (A).

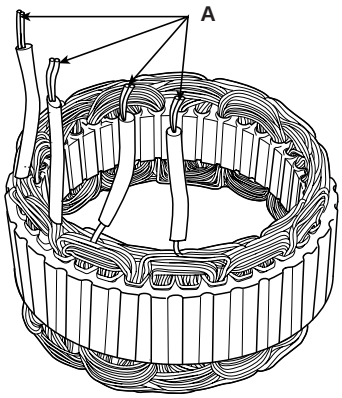

EBKD008B

2. Check that there is no continuity between each lead and the coil core.

3. If the coil fails either continuity check, replace the alternator.

BATTERY

DESCRIPTION EDA1FE6F

1. The maintenance-free battery is, as the name implies, totally maintenance free and has no removable battery cell caps.
2. Water never needs to be added to the maintenance-free battery.
3. The battery is completely sealed, except for small vent holes in the cover.

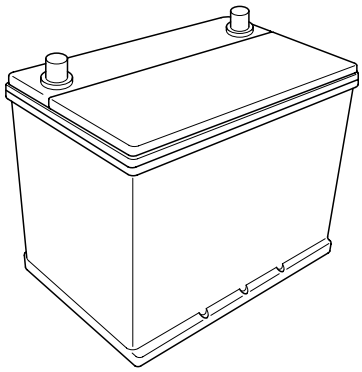

EBJD008A

INSPECTION EBDD0AA2

BATTERY DIAGNOSTIC TEST (1)

CHECKING FLOW

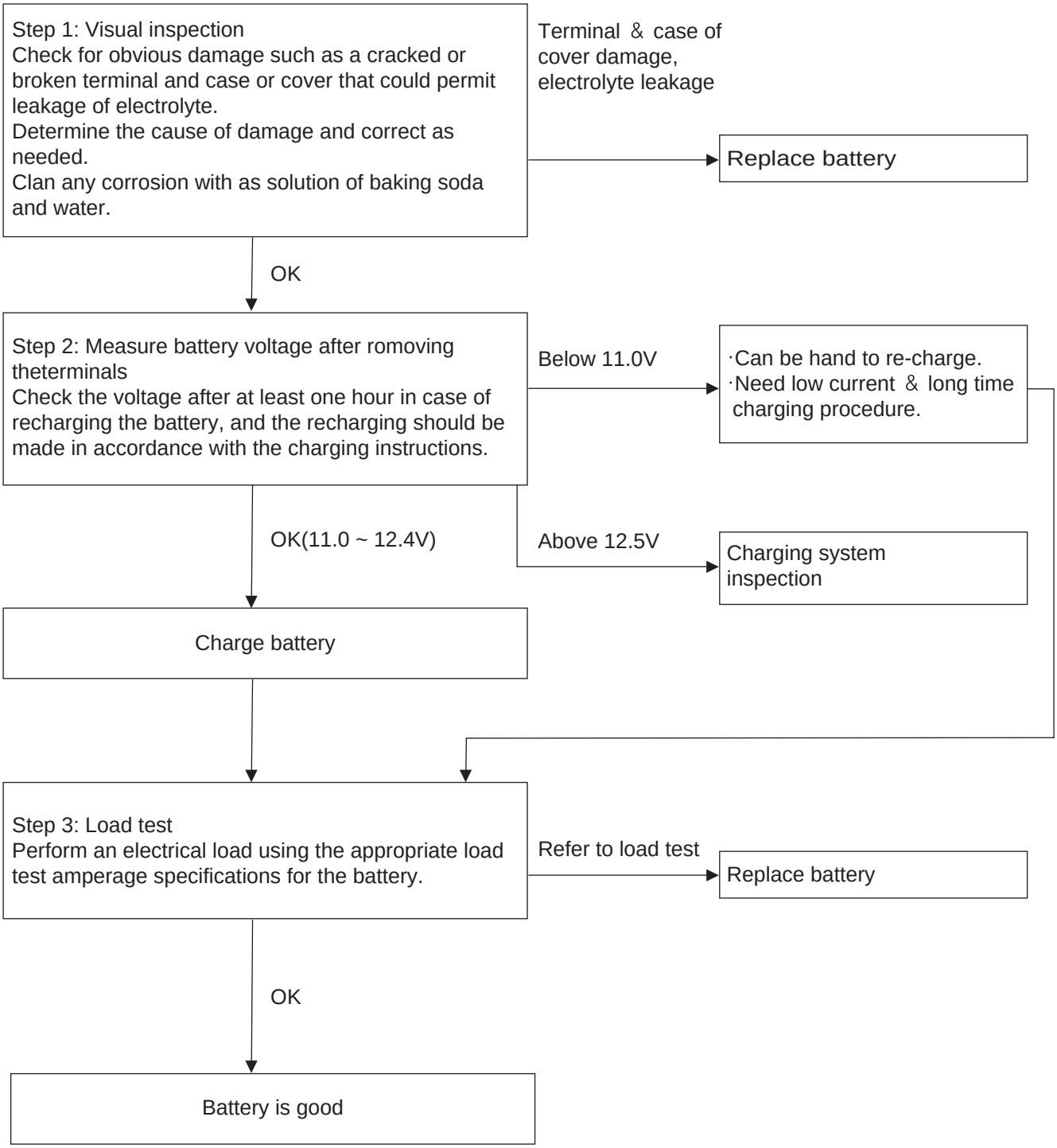

SKMEE6001D

LOAD TEST

1. Perform the following steps to complete the load test procedure for maintenance free batteries.

2. Connect the load tester clamps to the terminals and proceed with the test as follow:

   1) If the battery has been on charge, remove the surface charge by connect a 300ampere load for 15 seconds.

   2) Connect the voltmeter and apply the specified load.

   3) Read the voltage after the load has been applied for 15 seconds.

   4) Disconnect the load.

   5) Compare the voltage reading with the minimum and replace the battery if battery test voltage is below that shown in the voltage table.

Voltage	Temperature
9.6V	20°C (68.0°F) and above
9.5V	16°C (60.8°F)
9.4V	10°C (50.0°F)
9.3V	4°C (39.2°F)
9.1V	-1°C (30.2°F)
8.9V	-7°C (19.4°F)
8.7V	-12°C (10.4°F)
8.5V	-18°C (-0.4°F)

NOTE

- *If the voltage is greater shown in the table, the battery is good.*
- *If the voltage is less than shown in the table, replace the battery.*

BATTERY DIAGNOSTIC TEST (2)

1. Make sure the ignition switch and all accessories are in the OFF position.

2. Disconnect the battery cables (negative first).

3. Remove the battery from the vehicle.

   CAUTION

   Care should be taken in the event the battery case is cracked or leaking, to protect your skin from the electrolyte.
   Heavy rubber gloves (not the household type) should be wore when removing the battery.

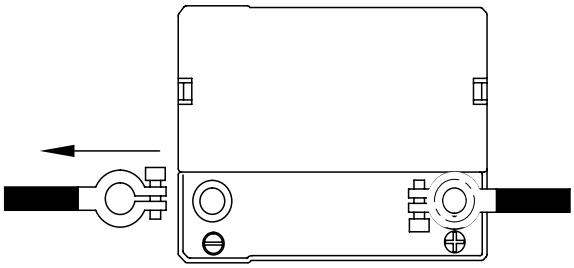

EBJD008B

4. Inspect the battery tray for damage caused by the loss of electrolyte. If acid damage is present, it will be necessary to clean the area with a solution of clean warm water and baking soda. Scrub the area with a stiff brush and wipe off with a cloth moistened with baking soda and water.

5. Clean the top of the battery with the same solution as described above.

6. Inspect the battery case and cover for cracks. If cracks are present, the battery must be replaced.

7. Clean the battery posts with a suitable battery post tool.

8. Clean the inside surface of the terminal clamps with a suitable battery cleaning tool. Replace damaged or frayed cables and broken terminal clamps.

9. Install the battery in the vehicle.

10. Connect the cable terminals to the battery post, making sure tops of the terminals are flush with the tops of the posts.

11. Tighten the terminal nuts securely.

12. Coat all connections with light mineral grease after tightening.

CAUTION

When batteries are being charged, an explosive gas forms beneath the cover of each cell. Do not smoke near batteries being charged or which have recently been charged. Do not break live circuit at the terminals of batteries being charged. A spark will occur when the circuit is broken. Keep open flames away form battery.

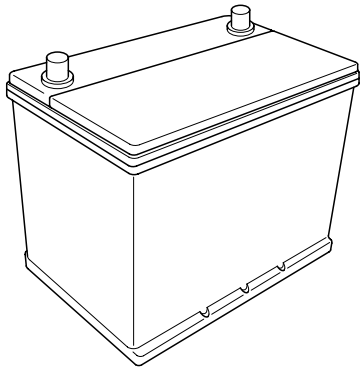

EBJD008A

STARTING SYSTEM

DESCRIPTION E1CE0D47

The starting system includes the battery, starter, solenoid switch, ignition switch, inhibitor switch (A/T), ignition lock switch, connection wires and the battery cable.
When the ignition key is turned to the start position, current flows and energizes the starter motor's solenoid coil.
The solenoid plunger and clutch shift lever are activated, and the clutch pinion engages the ring gear.
The contacts close and the starter motor cranks. In order to prevent damage caused by excessive rotation of the starter armature when the engine starts, the clutch pinion gear overruns.

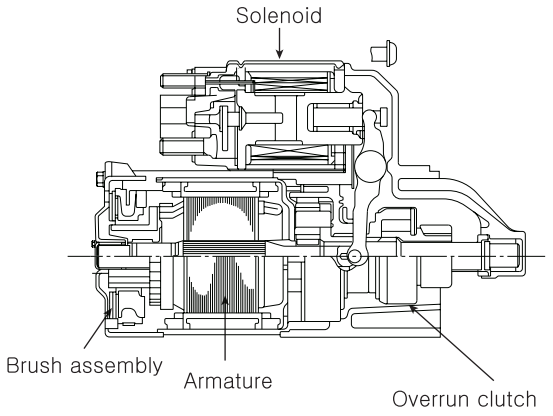

LBKG001C

STARTER CIRCUIT TROUBLESHOOTING ED0E08BF

NOTE

The battery must be in good condition and fully charged.

1. Remove the fuel pump relay(A) from the fuse box.

2. With the shift lever in N or P (A/T) or clutch pedal pressed (M/T), turn the ignition switch to "START"

   If the starter normally cranks the engine, starting system is OK. If the starter will not crank the engine at all, go to next step.

   If it won't disengage from the ring gear when you release key, check for the following until you find the cause.

   - Solenoid plunger and switch malfunction.
   - Dirty pinion gear or damaged overrunning clutch.

3. Check the battery condition. Check electrical connections at the battery, battery negative cable connected to the body, engine ground cables, and the starter for looseness and corrosion. Then try starting the engine again.

   If the starter cranks normally the engine, repairing the loose connection repaired the problem. The starting system is now OK.

   If the starter still does not crank the engine, go to next step.

4. Disconnect the connector from the S-terminal of solenoid. Connect a jumper wire from the B-terminal of solenoid to the S-terminal of solenoid.

   If the starter cranks the engine, go to next step.
   If the starter still does not crank the engine, remove the starter, and repair or replace as necessary.

5. Check the following items in the order listed until you find the open circuit.

   - Check the wire and connectors between the driver's under-dash fuse/relay box and the ignition switch, and between the driver's under-dash fuse/relay box and the starter.
   - Check the ignition switch (Refer to BE group - ignition system)
   - Check the transaxle range switch connector or ignition lock switch connector.
   - Inspect the starter relay.

STATER SOLENOID TEST

1. Disconnect the field coil wire from the M-terminal of solenoid switch.

2. Connect the battery as shown. If the starter pinion pops out, it is working properly. To avoid damaging the starter, do not leave the battery connected for more than 10 seconds.

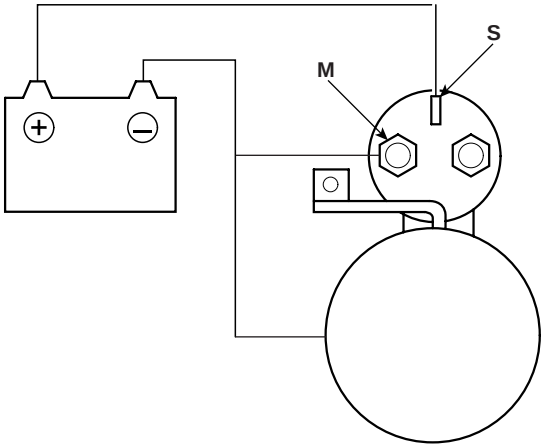

KBSE203D

3. Disconnect the battery from the M terminal.
If the pinion does not retract, the hold-in coil is working properly. To avoid damaging the starter, do not leave the battery connected for more than 10 seconds.

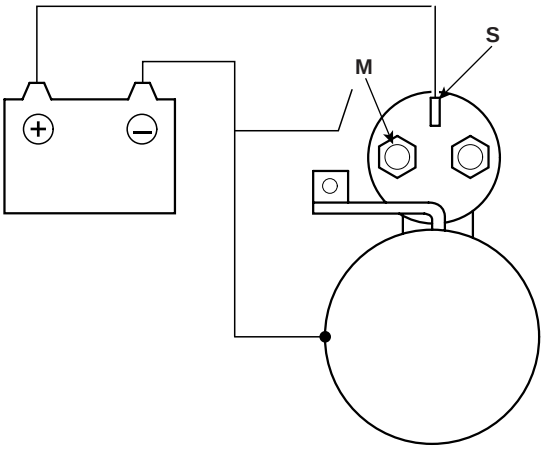

KBSE203E

4. Disconnect the battery also from the body. If the pinion retracts immediately, it is working properly. To avoid damaging the starter, do not leave the battery connected for more than 10 seconds.

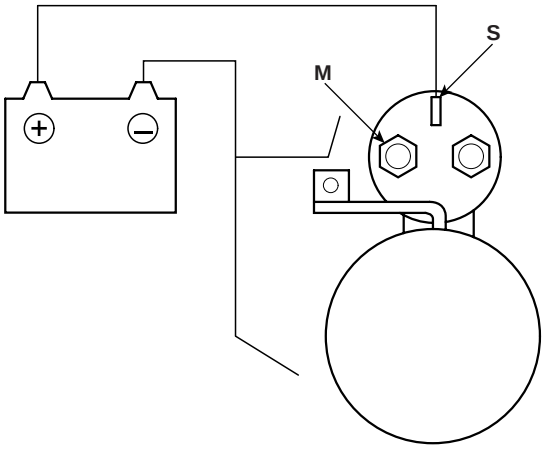

KBSE203F

FREE RUNNING TEST

1. Place the starter motor in a vise equipped with soft jaws and connect a fully-charged 12-volt battery to starter motor as follows.
2. Connect a test ammeter (100-ampere scale) and carbon pile rheostats shown is the illustration.
3. Connect a voltmeter (15-volt scale) across starter motor.

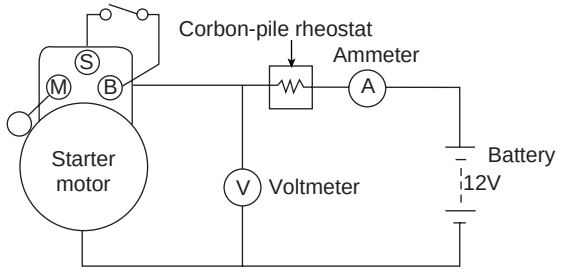

BBGE005A

4. Rotate carbon pile to the off position.
5. Connect the battery cable from battery's negative post to the starter motor body.
6. Adjust until battery voltage shown on the voltmeter reads 11volts.
7. Confirm that the maximum amperage is within the specifications and that the starter motor turns smoothly and freely.

Current : 90A max speed : 2,800 rpm

STARTER

COMPONENTS EEDAEEB0

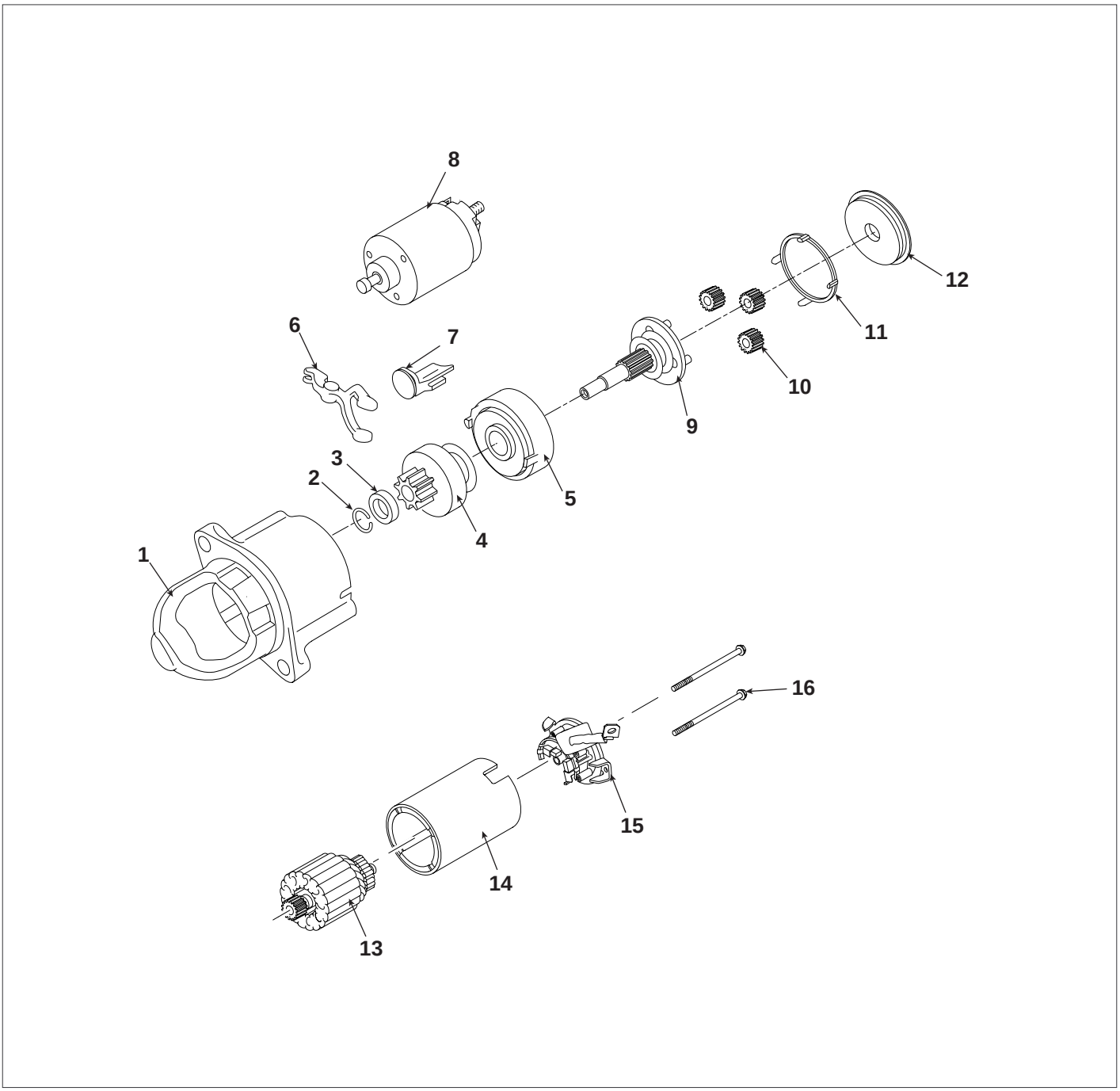

1. Front bracket
2. Stop ring
3. Stopper
4. Overrun clutch assembly
5. Internal gear assembly
6. Lever
7. Lever packing
8. Magnet switch assembly
9. Planet shaft assembly
10. Planetary gear assembly
11. Packing
12. Shield
13. Armature assembly
14. Yoke assembly
15. Brush holder assembly
16. Through bolt

EBRF003A

REMOVAL E2DAEAB6

1. Disconnect the battery negative cable.
2. Disconnect the starter cable (A) from the B terminal (B) on the solenoid (C), then disconnect the connector (D) from the S terminal (E).

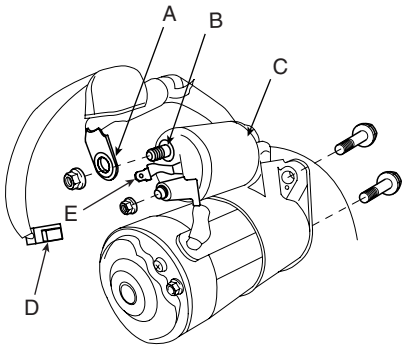

ABGE024A

3. Remove the 2 bolts holding the starter, then remove the starter.
4. Installation is the reverse of removal.
5. Connect the battery negative cable to the battery.

DISASSEMBLY EBCFFF4B

1. Disconnect the M-terminal (A) on the magnet switch assembly (B).

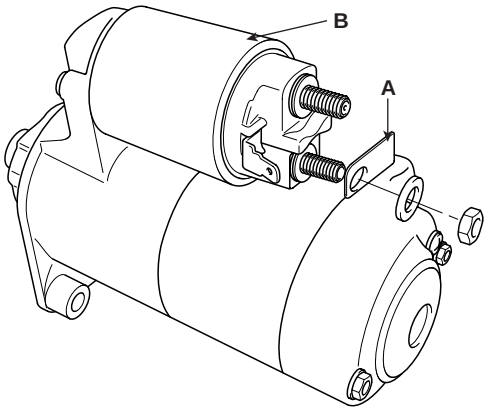

EBKD011C

2. After loosening the 3 screws (A), detach the magnet switch assembly (B).

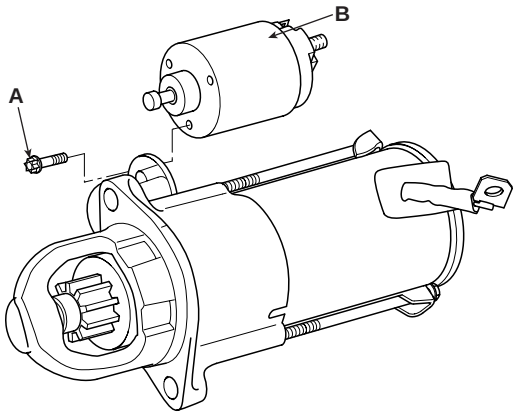

KBRF010A

3. Loosen the through bolts (A).

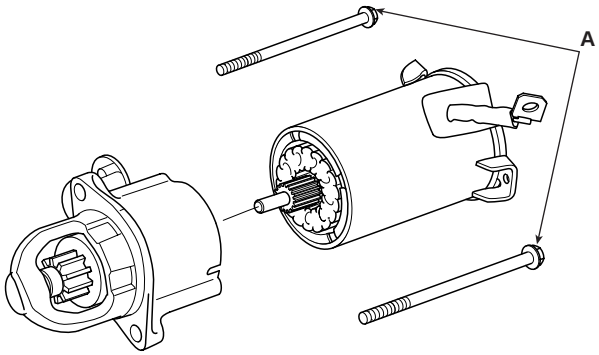

KBRF011A

4. Remove the brush holder assembly (A), yoke (b) and armature (C).

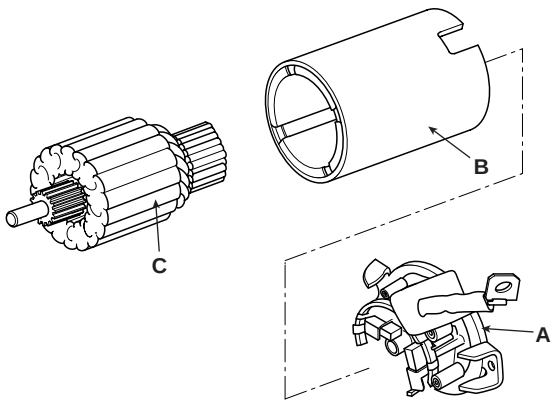

KBRF012A

5. Remove the shield (A) and packing (B).

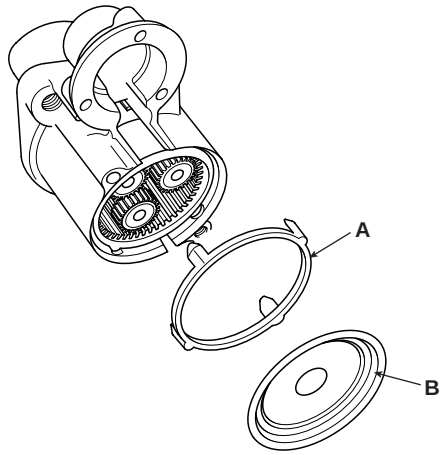

KBRF014A

6. Remove the lever plate (A) and lever packing (B).

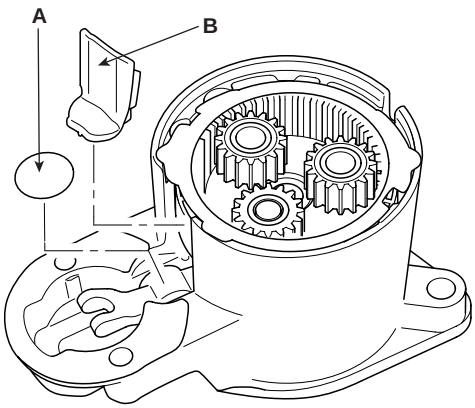

EBKD011H

7. Disconnect the planet gear (A).

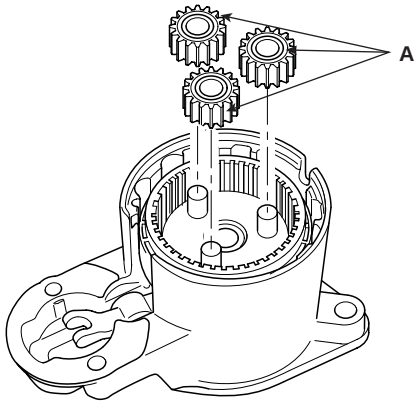

EBKD011I

8. Disconnect the planet shaft assembly (A) and lever (B).

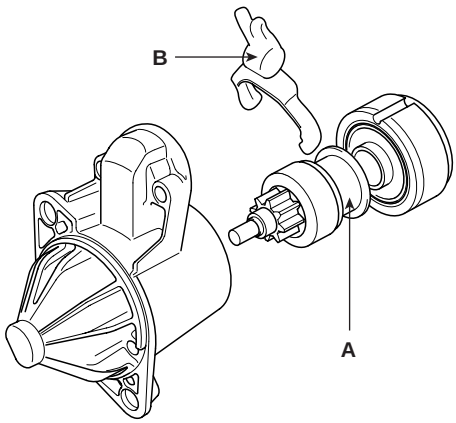

EBKD011J

9. Press the stop ring (A) using a socket (B).

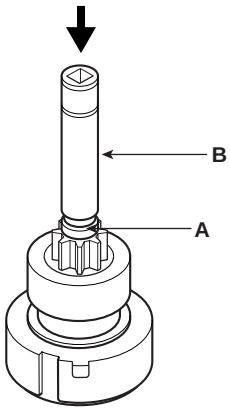

EBKD011K

10. After removing the stopper (A) using stopper pliers (B).

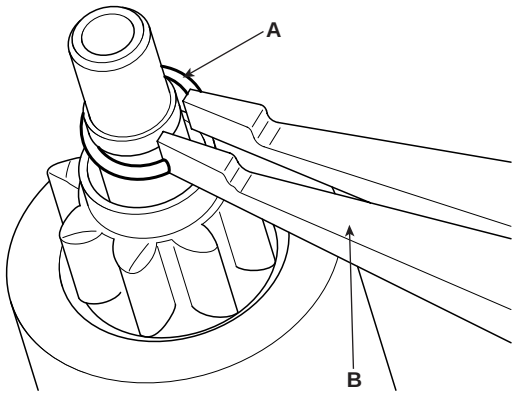

EBKD011L

11. Disconnect the stop ring (A), overrunning clutch (B), internal gear (C) and planet shaft (D).

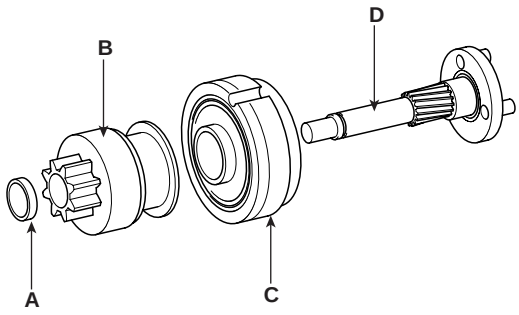

EBKD011M

12. Reassembly is the reverse of disassembly.

NOTE

Using a suitable pulling tool (A), pull the overrunning clutch stop ring (B) over the stopper (C).

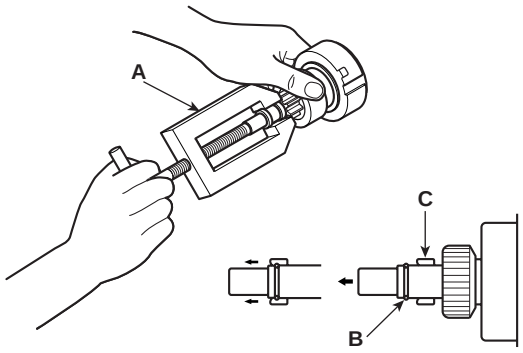

EBKD011O

INSPECTION E6EB24DE

ARMATURE INSPECTION AND TEST

1. Remove the starter.
2. Disassemble the starter as shown at the beginning of this procedure.
3. Inspect the armature for wear or damage from contact with the permanent magnet. If there is wear or damage, replace the armature.

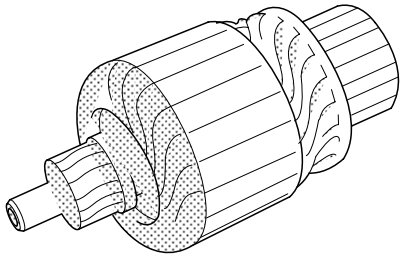

EBKD012A

4. Check the commutator (A) surface. If the surface is dirty or burnt, resurface with emery cloth or a lathe within the following specifications, or recondition with #500 or #600 sandpaper (B).

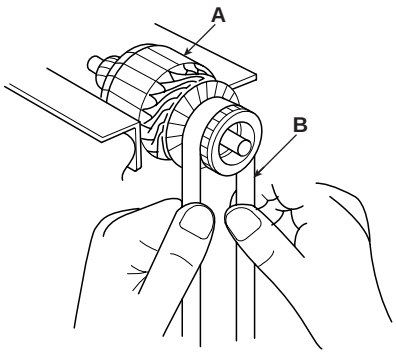

EBKD012B

5. Measure the commutator (A) runout.
   - If the commutator runout is within the service limit, check the commutator for carbon dust or brass chips between the segments.
   - If the commutator run out is not within the service limit, replace the armature.

Commutator runout
Standard (New): 0.02mm (0.0008in.) max
Service limit: 0.05mm (0.0020in.)

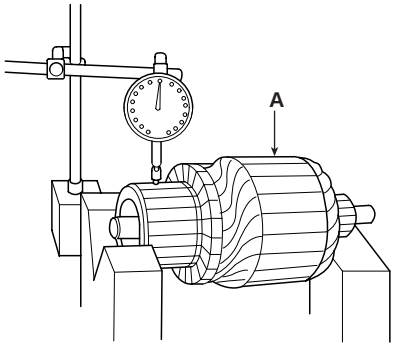

EBKD012D

6. Check the mica depth (A). If the mica is too high (B), undercut the mica with a hacksaw blade to the proper depth. Cut away all the mica (C) between the commutator segments. The undercut should not be too shallow, too narrow, or v-shaped (D).

Commutator mica depth
Standard (New) : 0.5 mm (0.0197 in.)
Limit : 0.2mm (0.0079 in.)

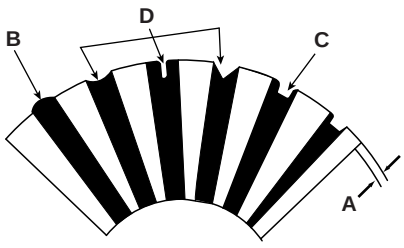

EBKD012E

7. Check for continuity between the segments of the commutator. If an open circuit exists between any segments, replace the armature.

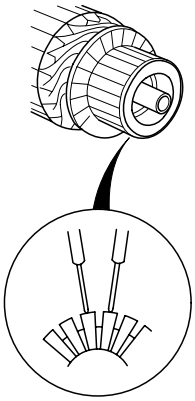

EBKD012F

8. Check with an ohmmeter that no continuity exists between the commutator (A) and armature coil core (B), and between the commutator and armature shaft (C). If continuity exists, replace the armature.

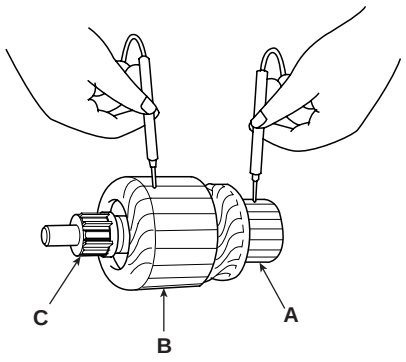

EBKD012G

INSPECT STARTER BRUSH

Brushes that are worm out, or oil-soaked, should be replaced.

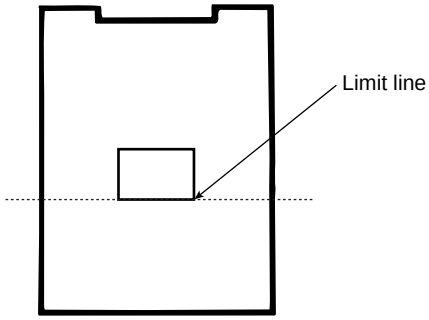

EBRF022A

STARTER BRUSH HOLDER TEST

1. Check that there is no continuity between the (+) brush holder (A) and (-) brush holder (B). If there is no continuity, replace the brush holder assembly.

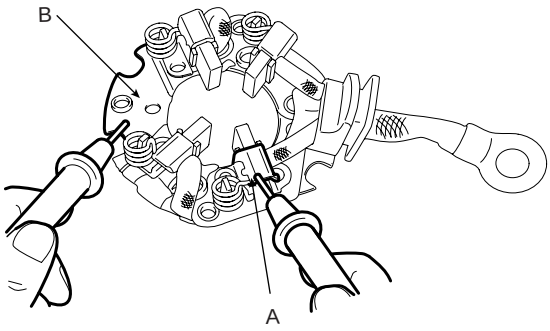

EBBD330A

2. Pry back each brush spring (A) with a screwdriver, then position the brush (B) about halfway out of its holder, and release the spring to hold it there.

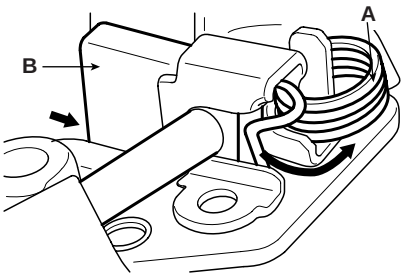

EBKD012K

3. Install the armature in the housing, and install the brush holder. Next, pry back each brush spring again, and push the brush down until it seats against the commutator, then release the spring against the end of the brush.

NOTE

To seat new brushes, slip a strip of #500 or #600 sandpaper, with the grit side up, between the commutator and each brush, and smoothly rotate the armature. The contact surface of the brushes will be sanded to the same contour as the commutator.

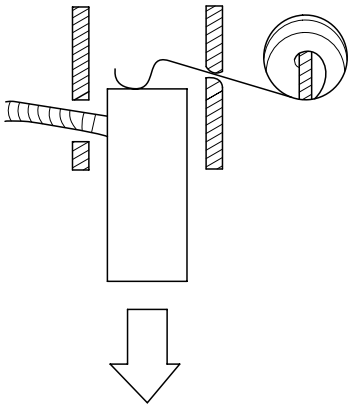

EBKD012I

INSPECT OVERRUNNING CLUTCH

1. Slide the overrunning clutch along the shaft. Replace it if does not slide smoothly.

2. Rotate the overrunning clutch both ways. Does it lock in one direction and rotate smoothly in reverse? If it does not lock in either direction of it locks in both directions, replace it.

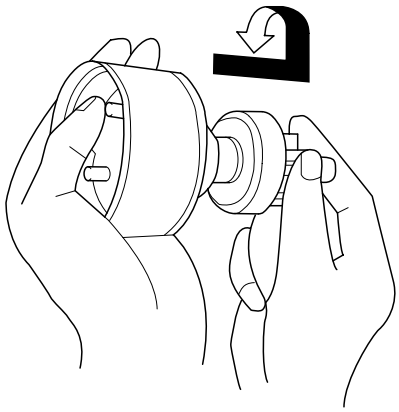

EBKD012J

3. If the starter drive gear is worn or damaged, replace the overrunning clutch assembly. (the gear is not available separately).
   Check the condition of the flywheel or torque converter ring gear if the starter drive gear teeth are damaged.

CLEANING

1. Do not immerse parts in cleaning solvent. Immersing the yoke assembly and/or armature will damage the insulation. Wipe these parts with a cloth only.

2. Do not immerse the drive unit in cleaning solvent. The overrun clutch is pre-lubricated at the factory and solvent will wash lubrication from the clutch.

3. The drive unit may be cleaned with a brush moistened with cleaning solvent and wiped dry with a cloth.

STARTER RELAY

INSPECTION EE48CFAA

1. Remove the fuse box cover.
2. Remove the starter relay.
3. Using an ohmmeter, check that there is continuity between each terminal.

Terminal	Continuity
30 - 87	NO
85 - 86	YES

4. Apply 12V to terminal 85 and ground to terminal 86. Check for continuity between terminals 30 and 87.

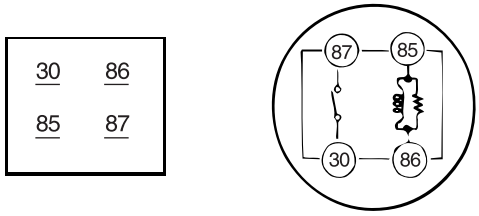

LDAD510B

5. If there is no continuity, replace the starter relay.
6. Install the starter relay.
7. Install the fuse box cover.

Emissions Control System

GENERAL

CRANKCASE EMISSION CONTROL SYSTEM
- POSITIVE CRANKCASE VENTILATION (PCV) VALVE

EVAPORATIVE EMISSION CONTROL SYSTEM
- CANISTER
- PURGE CONTROL SOLENOID VALVE (PCSV)
- FUEL TANK AIR FILTER
- FUEL FILLER CAP

EXHAUST EMISSION CONTROL SYSTEM
- CONTINUOUS VARIABLE VALVE TIMING (CVVT)

GENERAL

DESCRIPTION ED0CA305

Components	Function	Remarks
Crankcase Emission System - Positive Crankcase Ventilation (PCV) valve	HC reduction	Variable flow rate type
Evaporative Emission System - Evaporative emission canister - Purge Control Solenoid Valve (PCSV)	HC reduction HC reduction	Duty control solenoid valve
Exhaust Emission System - MFI system (air-fuel mixture control device) - Three-way catalytic converter	CO, HC, NOx reduction CO, HC, NOx reduction	Heated oxygen sensor feedback type Monolithic type

SPECIFICATIONS EF2996DD

PURGE CONTROL SOLENOID VALVE (PCSV)

▷ Specification

Item	Specification
Coil Resistance (Ω)	14.0 ~ 18.0 Ω [20℃ (68˚F)]

TIGHTENING TORQUES E34D5DE1

Item	N·m	kgf·m	lbf·m
Positive Crankcase Ventilation Valve	8.0 ~ 12.0	0.8 ~ 1.2	6.0 ~ 8.0

TROUBLESHOOTING E2236ADE

Symptom	Suspect area	Remedy
Engine will not start or hard to start	Vacuum hose disconnected or damaged	Repair or replace
	Malfunction of the Purge Control Solenoid Valve	Repair or replace
Rough idle or engine stalls	Vacuum hose disconnected or damaged	Repair or replace
	Malfunction of the PCV valve	Replace
	Malfunction of the evaporative emission canister purge system	Check the system; if there is a problem, check related components parts
Excessive oil consumption	Positive crankcase ventilation line clogged	Check positive crankcase ventilation system

COMPONENT LOCATION EB6479B1

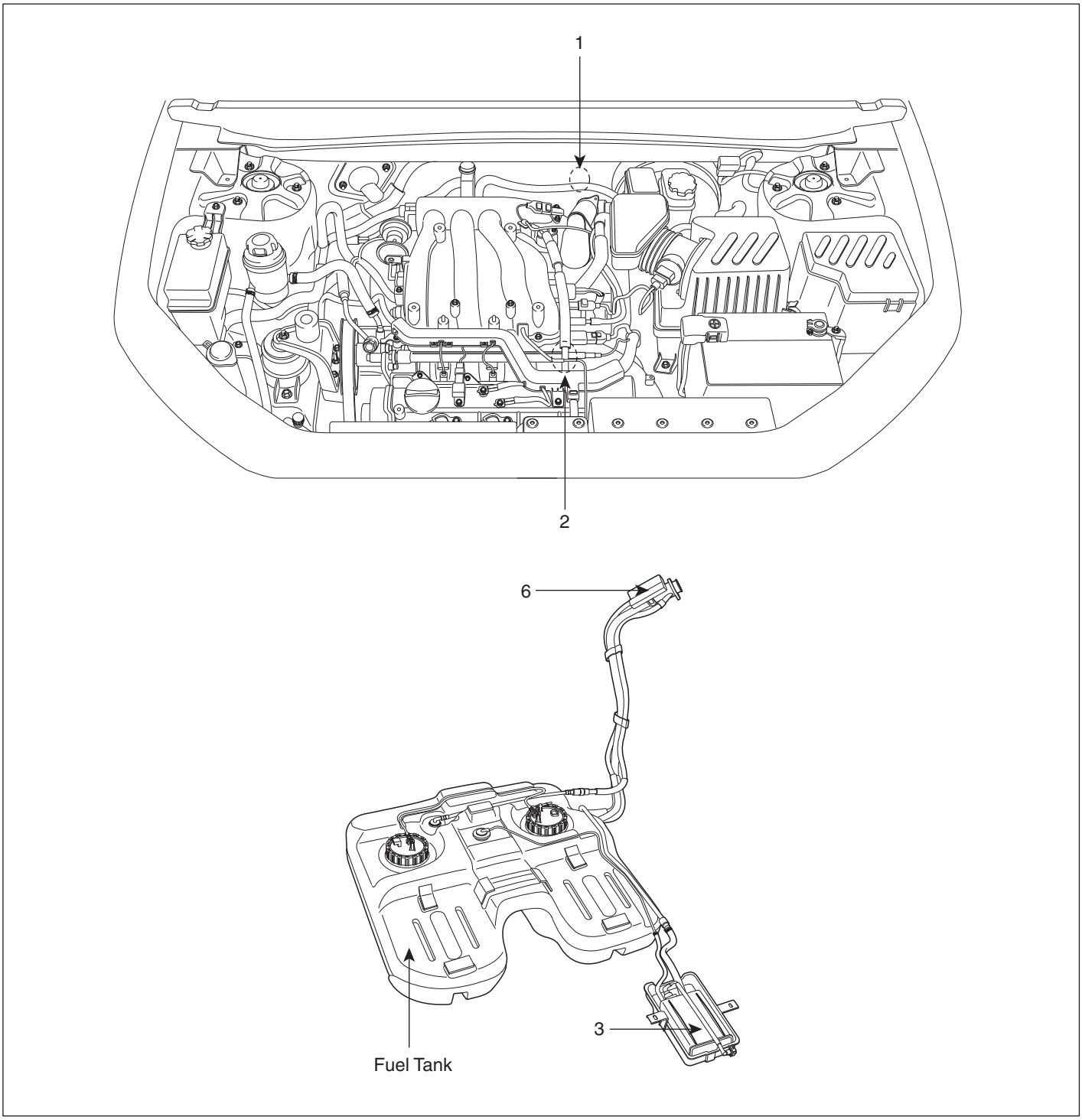

1. Purge Control Solenoid Valve (PCSV)
2. PCV Vlave
3. Canister
4. Catalytic Converter (Bank 1)
5. Catalytic Converter (Bank 2)
6. Fuel Tank Air Filter

SCMEC6001L

1	Purge Control Solenoid Valve (PCSV)	2	Positive Crankcase Ventilation (PCV) Valve

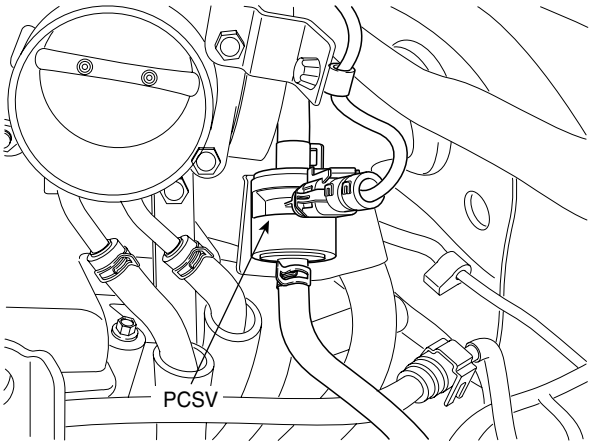

LGLG001L

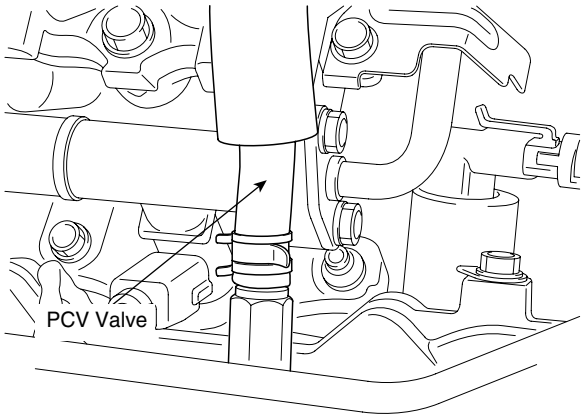

LELG001G

3	Canister	4	Catalytic Converter (Bank 1)

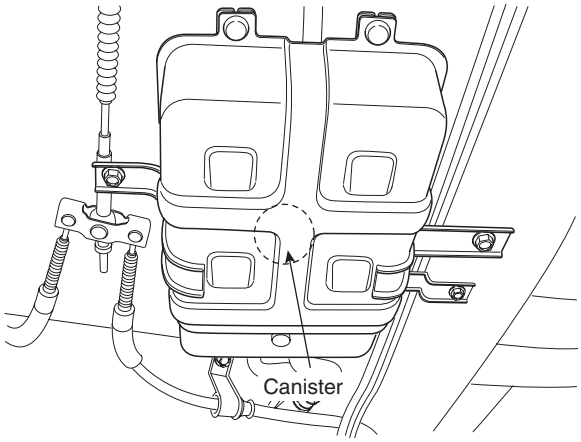

SCMEC6002L

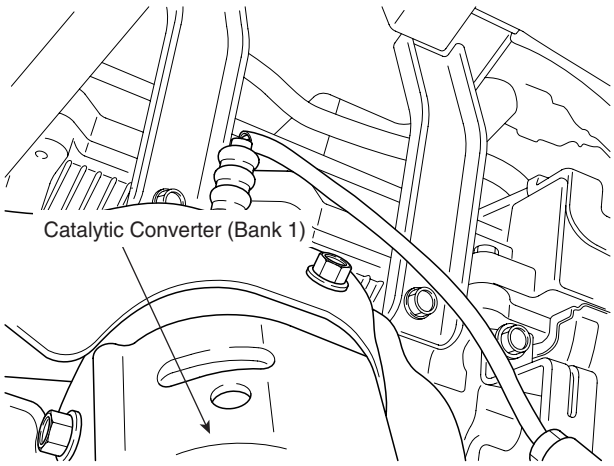

LELG001H

5	Catalytic Converter (Bank 2)	6	Fuel Tank Air Filtter

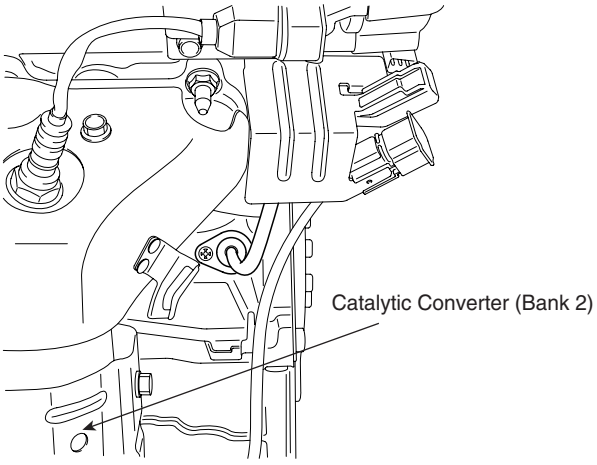

LELG001I

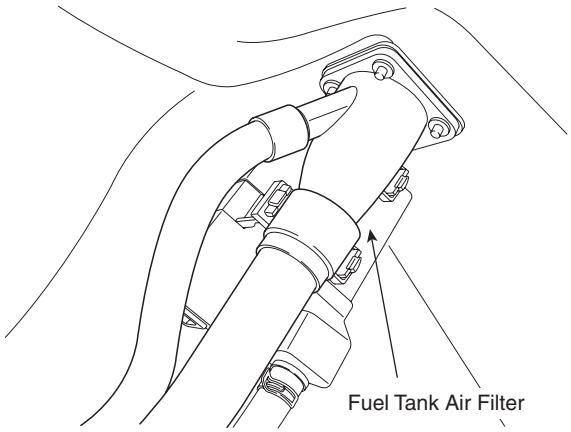

SCMEC6003L

SCHEMATIC DIAGRAM E6C3F98F

*1. Mass Air Flow Sensor (MAFS)
*2. Intake Air Temperature Sensor (IATS)
*3. Engine Coolant Tmeperature Sensor (ECTS)
*4. Throttle Position Sensor (TPS)
*5-1. Camshaft Position Sensor (CMPS) [BANK1]
*5-2. Camshaft Position Sensor (CMPS) [BANK2]
*6. Crankshaft Position Sensor (CKPS)
*7-1. Knock Sensor (KS) #1
*7-2. Knock Sensor (KS) #2
*8-1. Heated Oxygen Sensor (HO2S) [B1/S1]
*8-2. Heated Oxygen Sensor (HO2S) [B1/S2]
*9-1. Heated Oxygen Sensor (HO2S) [B2/S1]
*9-2. Heated Oxygen Sensor (HO2S) [B2/S2]
*10. Manifold Absolute Pressure Sensor (MAPS)
*11. CVVT Oil Temperature Sensor (OTS)

· Ignition Switch
· Battery Voltage
· Vehicle Speed Signal
· Coolant Load Signal
· "PNP" Switch (A/T only)
· Fuel Pump Relay Signal

PCM

**1. Fuel Injector
**2. Ignition Coil
**3. Purge Control Solenoid Valve (PCSV)
**4-1. CVVT Oil control valve (OCV) [BANK1]
**4-2. CVVT Oil control valve (OCV) [BANK2]
**5-1. Variable Intake Manifold Solenoid (VIS) Valve [Surge Tank]
**5-2. Variable Intake Manifold Solenoid (VIS) Valve [Intake Manifold]
**6. ETC Motor
. Fuel Pump Control
. Main Relay
. Cooler Relay
. Ignition Timing Control
. Disagnosis

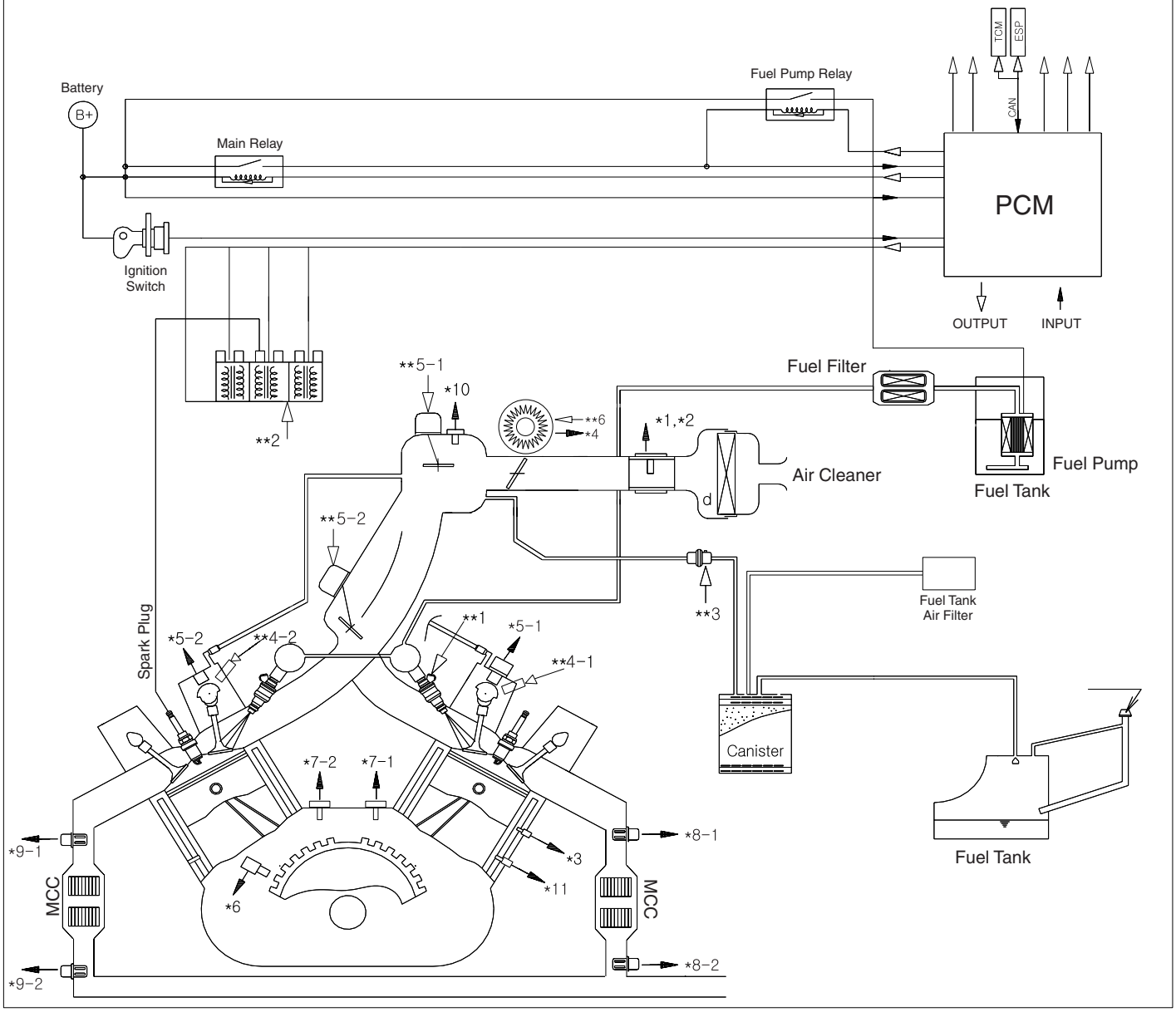

LELG001K

CRANKCASE EMISSION CONTROL SYSTEM

COMPONENTS EAB892E6

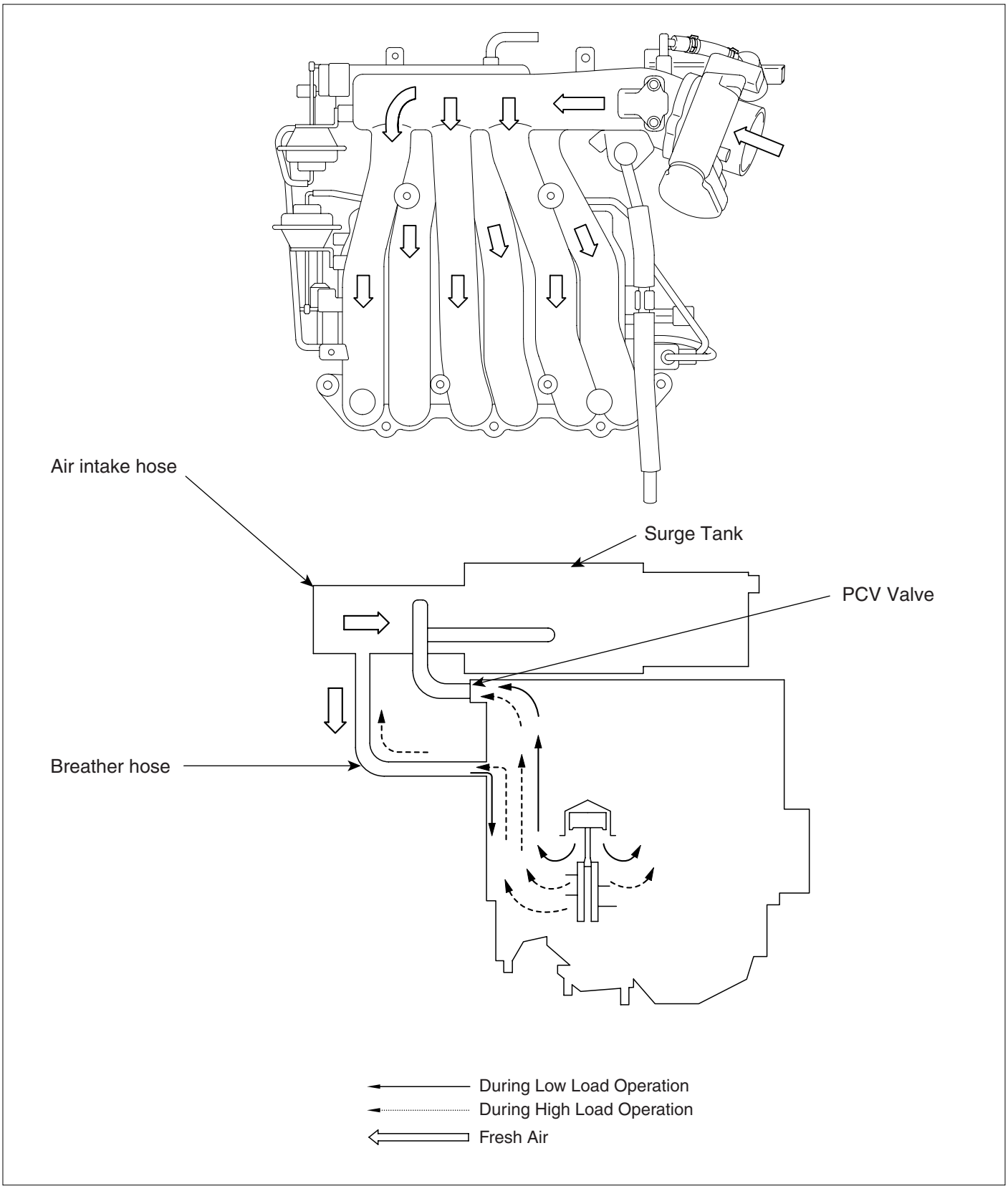

LELG001L

INSPECTION EE69E0AE

1. Disconnect the ventilation hose from the positive crankcase ventilation (PCV) valve. Remove the PCV valve from the rocker cover and reconnect it to the ventilation hose.

2. Run the engine at idle and put a finger on the open end of the PCV valve and make sure that intake manifold vacuum can be felt.

   NOTE

   The plunger inside the PCV valve will move back and forth.

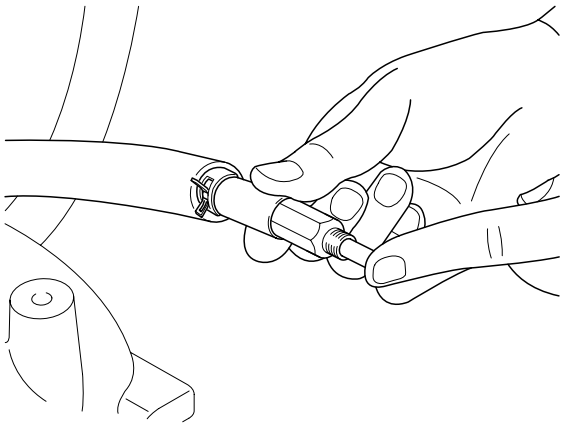

SCMEC6004L

POSITIVE CRANKCASE VENTILATION (PCV) VALVE

OPERATION EBB0DAB9

<table>
<tr><td colspan="2">Intake manifold side (No vacuum)
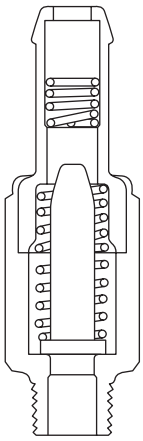
Rocker cover side
BEGE001S</td><td colspan="2">Intake manifold side (High vacuum)
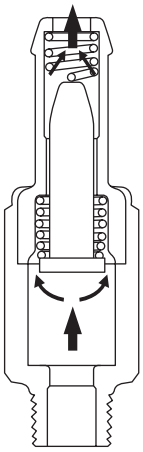
Rocker cover side
BEGE001T</td></tr>
<tr><td>Engine condition</td><td>Not running</td><td>Engine condition</td><td>Idling or decelerating</td></tr>
<tr><td>PCV valve</td><td>Not operating</td><td>PCV valve</td><td>Fully operating</td></tr>
<tr><td>Vacuum passage</td><td>Restricted</td><td>Vacuum passage</td><td>Small</td></tr>
<tr><td colspan="2">Intake manifold side (Moderate vacuum)
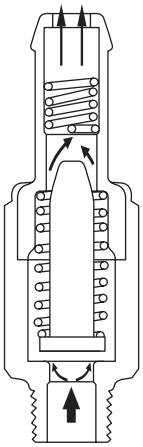
Rocker cover side
BEGE001U</td><td colspan="2">Intake manifold side (Low vacuum)
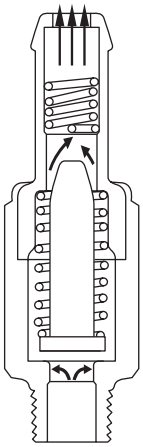
Rocker cover side
BEGE001V</td></tr>
<tr><td>Engine condition</td><td>Normal operation</td><td>Engine condition</td><td>Accelerating and high load</td></tr>
<tr><td>PCV valve</td><td>Properly operating</td><td>PCV valve</td><td>Slightly operating</td></tr>
<tr><td>Vacuum passage</td><td>Large</td><td>Vacuum passage</td><td>Very large</td></tr>
</table>

REMOVAL EB3C969B

1. Disconnect the vacuum hose (A) and remove the PCV valve (B).

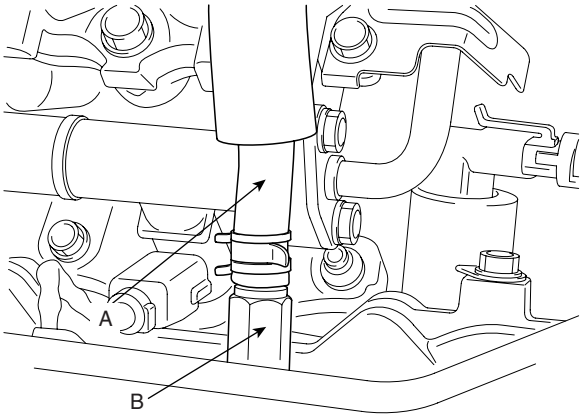

SCMEC6005L

INSPECTION EEDF42DC

1. Remove the PCV valve.
2. Insert a thin stick(A) into the PCV valve(B) from the threaded side to check that the plunger moves.
3. If the plunger does not move, the PCV valve is clogged. Clean it or replace.

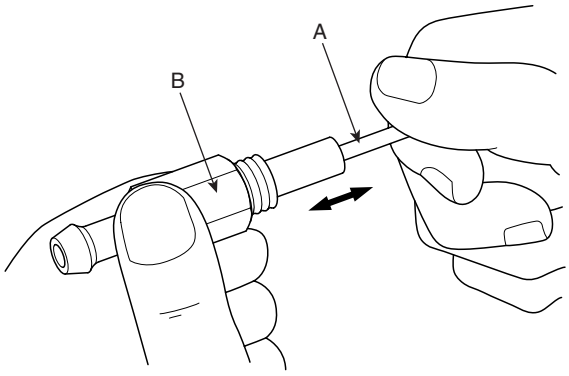

EERF600J

INSTALLATION E7FA321E

Install the PCV valve and tighten to the specified torque.

PCV Valve installation : 7.8 ~ 11.8 N·m (0.8 ~ 1.2 kgf·m, 5.8 ~ 8.7lbf·ft)

EVAPORATIVE EMISSION CONTROL SYSTEM

DESCRIPTION E4D6C1B7

Evaporative Emission Control System prevents fuel vapor stored in fuel tank from vaporizing into the atmosphere. When the fuel evaporates in the fuel tank, the vapor passes through vent hoses or tubes to the canister filled with charcoal and the canister temporarily holds the vapor in the charcoal. If ECM determines to draw the gathered vapor into the combustion chambers during certain operating conditions, it will use vacuum in intake manifold to move it.

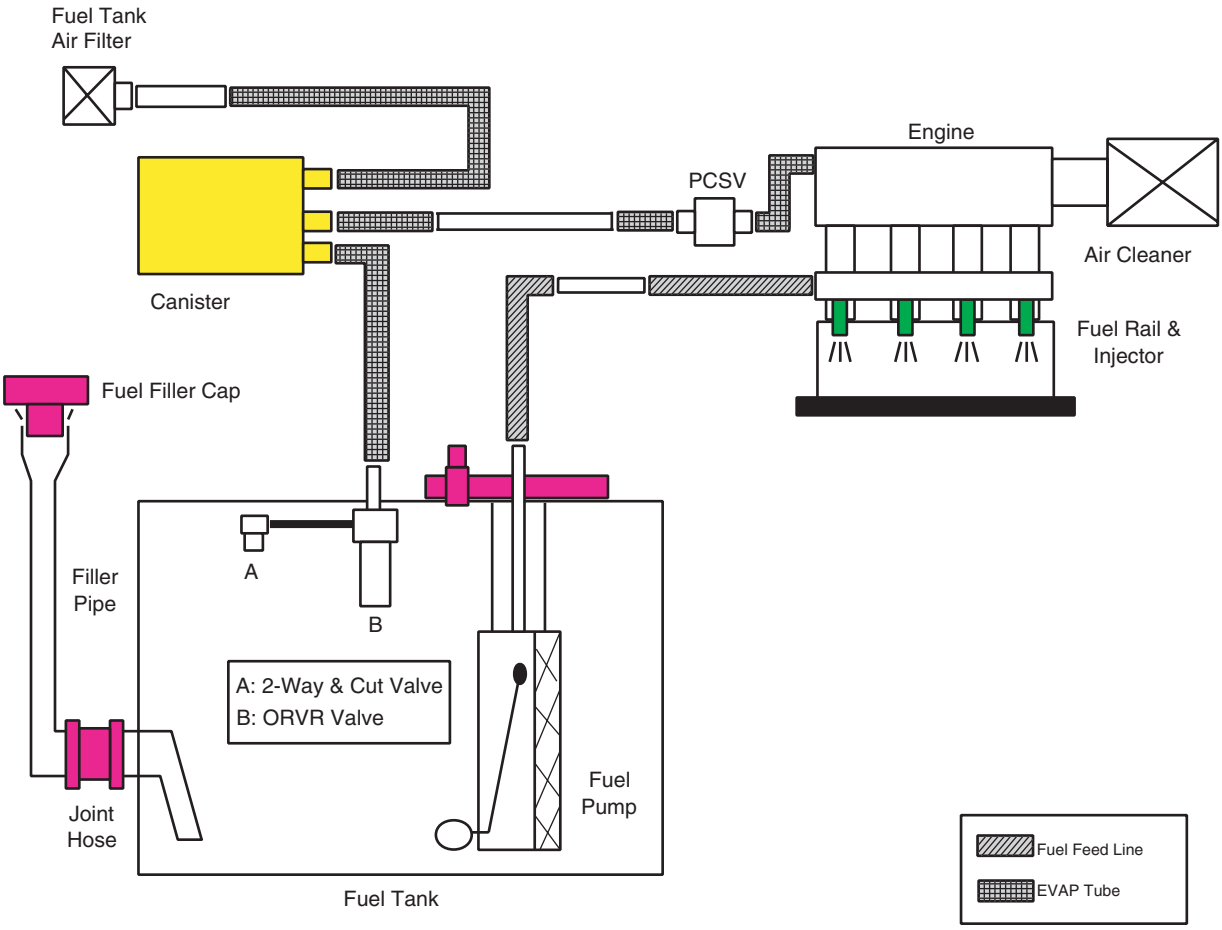

LEKG033A

CANISTER

Canister is filled with charcoal and absorbs evaporated vapor in fuel tank. The gathered fuel vapor in canister is drawn into the intake manifold by the ECM/PCM when appropriate conditions are set.

PURGE CONTROL SOLENOID VALVE (PCSV)

Purge Control Solenoid Valve (PCSV) is installed in the passage connecting canister and intake manifold. It is a duty type solenoid valve and is operated by ECM/PCM signal. To draw the absorbed vapor into the intake manifold, the ECM/PCM will open the PCSV, otherwise the passage remains closed.

FUEL FILLER CAP

A ratchet tightening device on the threaded fuel filler cap reduces the chances of incorrect installation, which would seal the fuel filler. After the gasket on the fuel filler cap and the fill neck flange contact each other, the ratchet produces a loud clicking noise indicating the seal has been set.

INSPECTION E2BCDF9E

1. Disconnect the vacuum hose from the throttle body, and connect a vacuum pump to the vacuum hose.
2. Check the following points when the engine is cold [engine coolant temperature 60°C(140°F) or below] and when it is warm [engine coolant temperature 80°C(176°F) or higher].

WHEN ENGINE IS COLD

Engine operating condition	Applied vacuum	Result
Idling	50 kPa (7.3 psi)	Vacuum is held
3,000 rpm		

WHEN ENGINE IS WARM

Engine operating condition	Applied vacuum	Result
Idling	50 kPa (7.3 psi)	Vacuum is held
Within 3 minutes after engine start at 3,000 rpm	Try to apply vacuum	Vacuum is released
After 3 minutes have passed after engine start at 3,000 rpm	50 kPa (7.3 psi)	Vacuum will be held momentarily, after which, it will be released

CANISTER

REMOVAL E2209E60

1. Disconnect the vacuum hoses (A,B).

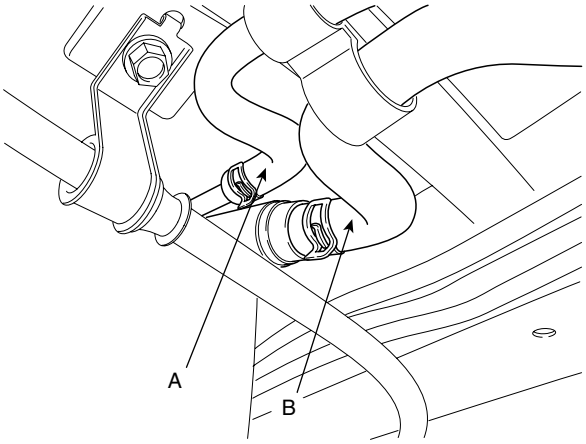

SCMEC6007L

2. Disconnect the vacuum hose quick-connector (A).

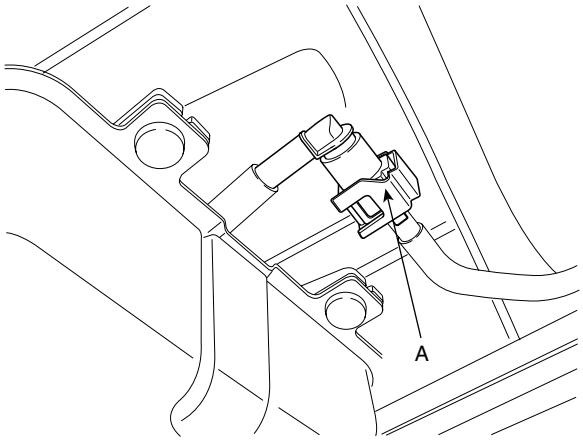

SCMEC6008L

3. Unscrew the mounting bolts (A) and remove the canister assembly (B) from the vehicle.

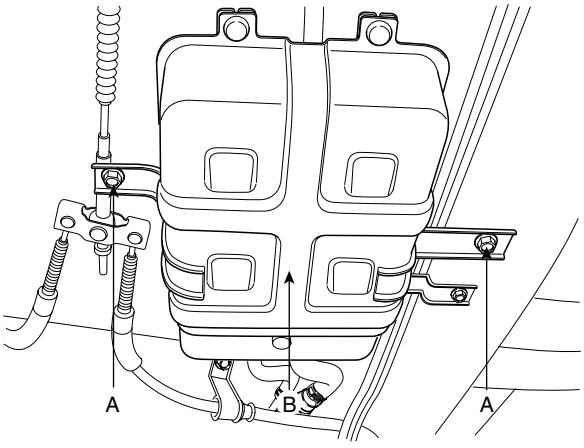

SCMEC6009L

INSPECTION E84A19DD

1. Look for loose connections, sharp bends or damage to the fuel vapor lines.
2. Look for distortion, cracks or fuel damage.
3. After removing the canister, inspect for cracks, damage or saturated canister.

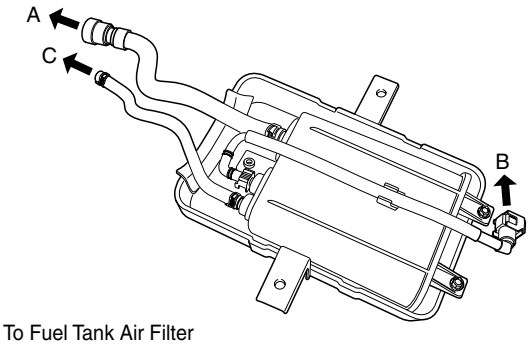

A : To Fuel Tank Air Filter
B : To Intake Manifold
C : To Fuel Tank

SCMEC6006L

INSTALLATION EF0FCEBE

Install the canister according to the reverse order of "REMOVAL" procedure.

PURGE CONTROL SOLENOID VALVE (PCSV)

INSPECTION ECF3916E

NOTE

When disconnecting the vacuum hose, make an identification mark on it so that it can be reconnected to its original position.

1. Disconnect the vacuum hose from the solenoid valve.
2. Detach the harness connector.
3. Connect a vacuum pump to the nipple which is connected to intake manifold.
4. Apply vacuum and check when voltage is applied to the PCSV and when the voltage is discontinued.

Battery voltage	Normal condition
When applied	Vacuum is released
When discontinued	Vacuum is maintained

5. Measure the resistance between the terminals of the solenoid valve.

PCSV coil resistance(Ω) : 14.0 ~ 18.0Ω at 20℃ (68°F)

FUEL TANK AIR FILTER

REPLACE EDCFC370

1. Remove the rear left wheel house inner cover (Refer to "BD" Group in this WORKSHOP MANUAL).

2. Disconnect the hose (A) connected with the canister and remove the fuel tank air filter (B) from the filler-neck assembly (C).

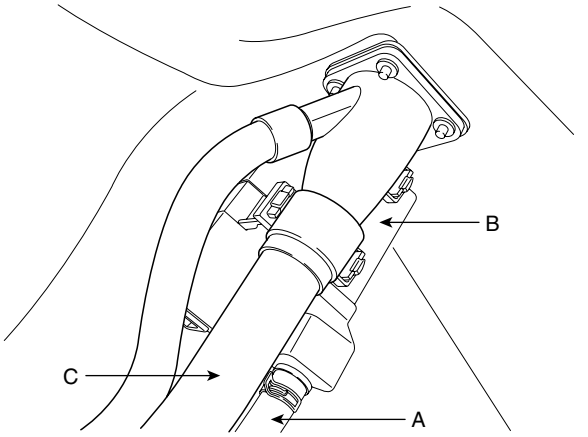

SCMEC6010L

FUEL FILLER CAP

DESCRIPTION EDD25DE3

A ratchet tightening device on the threaded fuel filler cap reduces the chances of incorrect installation, which would seal the fuel filler. After the gasket on the fuel filler cap and the filler neck flange contact each other, the ratchet produces a loud clicking noise indicating the seal has been set.

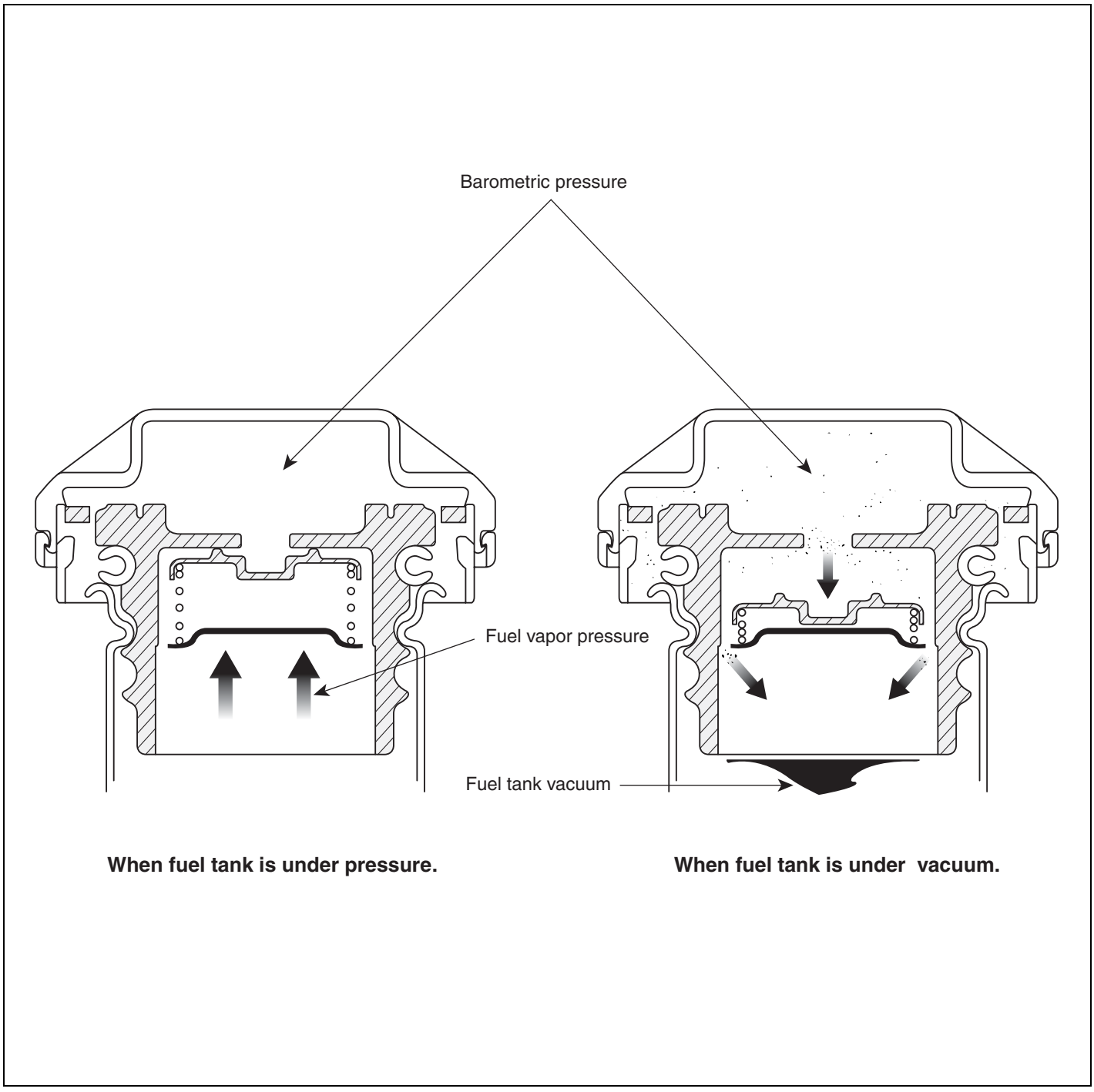

LEGE015A

EXHAUST EMISSION CONTROL SYSTEM

DESCRIPTION EBA45808

Exhaust emissions (CO, HC, NOx) are controlled by a combination of engine modifications and the addition of special control components.

Modifications to the combustion chamber, intake manifold, camshaft and ignition system form the basic control system.

These items have been integrated into a highly effective system which controls exhaust emissions while maintaining good driveability and fuel economy.

AIR/FUEL MIXTURE CONTROL SYSTEM [MULTIPORT FUEL INJECTION (MFI) SYSTEM]

The MFI system is a system which uses the signals from the heated oxygen sensor to activate and control the injector installed in the manifold for each cylinder, thus precisely regulating the air/fuel mixture ratio and reducing emissions.

This in turn allows the engine to produce exhaust gases of the proper composition to permit the use of a three way catalyst. The three way catalyst is designed to convert the three pollutants (1) hydrocarbons (HC), (2) carbon monoxide (CO), and (3) oxides of nitrogen (NOx) into harmless substances. There are two operating modes in the MFI system.

1. Open Loop air/fuel ratio is controlled by information programmed into the ECM.

2. Closed Loop air/fuel ratio is adjusted by the ECM based on information supplied by the oxygen sensor.

CONTINUOUS VARIABLE VALVE TIMING (CVVT)

DESCRIPTION ECBE8ABD

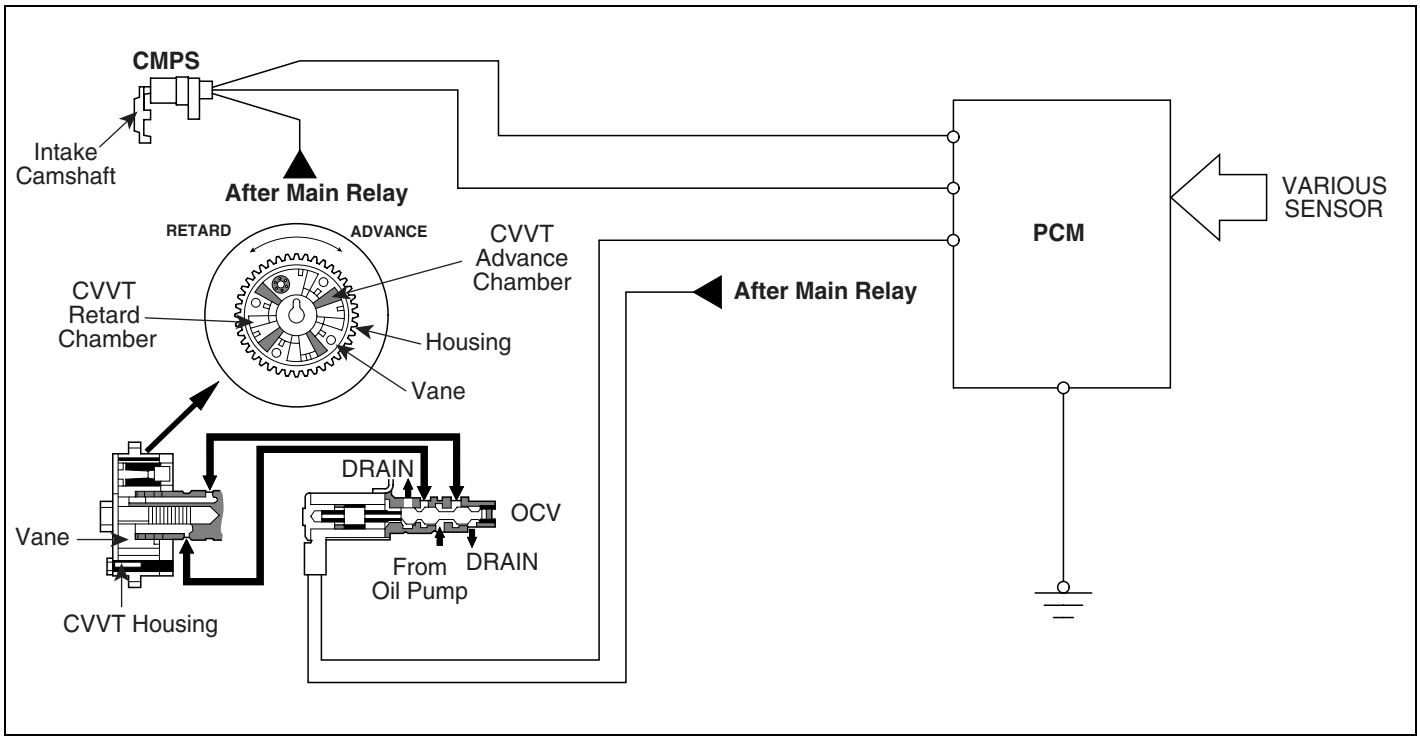

UEBG013A

The CVVT (Continuously Variable Valve Timing) which is installed on the exhaust camshaft controls intake valve open and close timing in order to improve engine performance.
The intake valve timing is optimized by CVVT system depending on engine rpm.

This CVVT system improves fuel efficiency and reduces NOx emissions at all levels of engine speed, vehicle speed, and engine load by EGR effect because of valve over-lap optimization.
The CVVT changes the phase of the intake camshaft via oil pressure.
It changes the intake valve timing continuously.

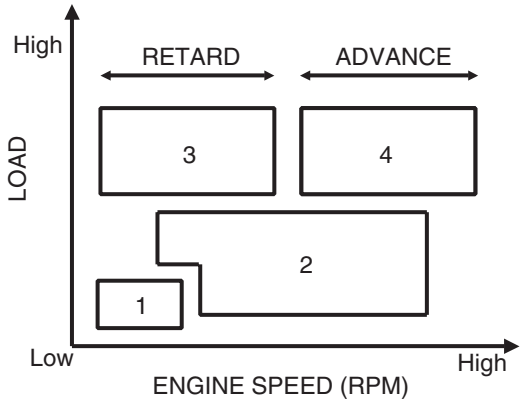

Driving Condition	Intake Valve Timing	Effect
Light load (1)	Retard	Stable combustion
Part load (2)	Advance	Enhanced fuel economy and exhaust emissions
High load& Low rpm (3)	Advance	Enhanced torque
High load& High rpm (4)	Retard	Enhanced Power

LEIF001Q

OPERATION EA7ECAF2

The CVVT system makes continuous intake valve timing changes based on operating conditions.

Intake valve timing is optimized to allow the engine to produce maximum power.
Cam angle is advanced to obtain the EGR effect and reduce pumping loss. The intake valve is closed quickly to

reduce the entry of the air/fuel mixture into the intake port and improve the changing effect.
Reduces the cam advance at idle, stabilizes combustion, and reduces engine speed.

If a malfunction occurs, the CVVT system control is disabled and the valve timing is fixed at the fully retarded position.

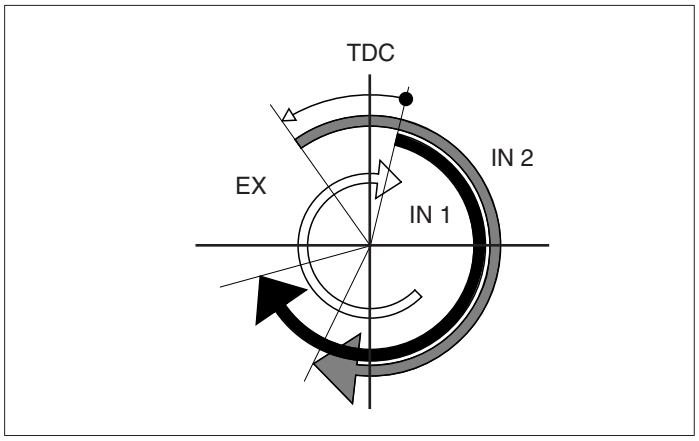

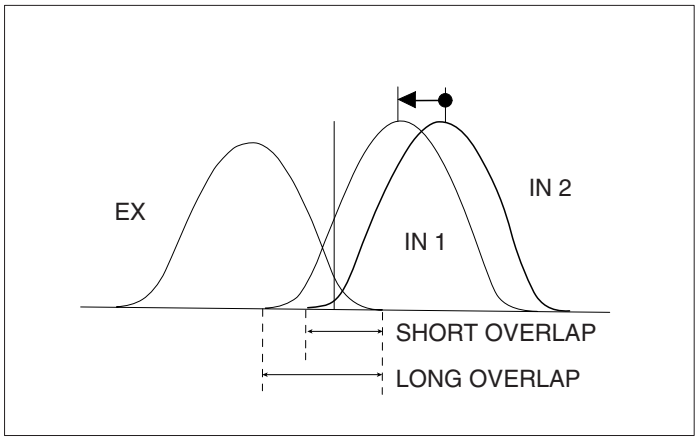

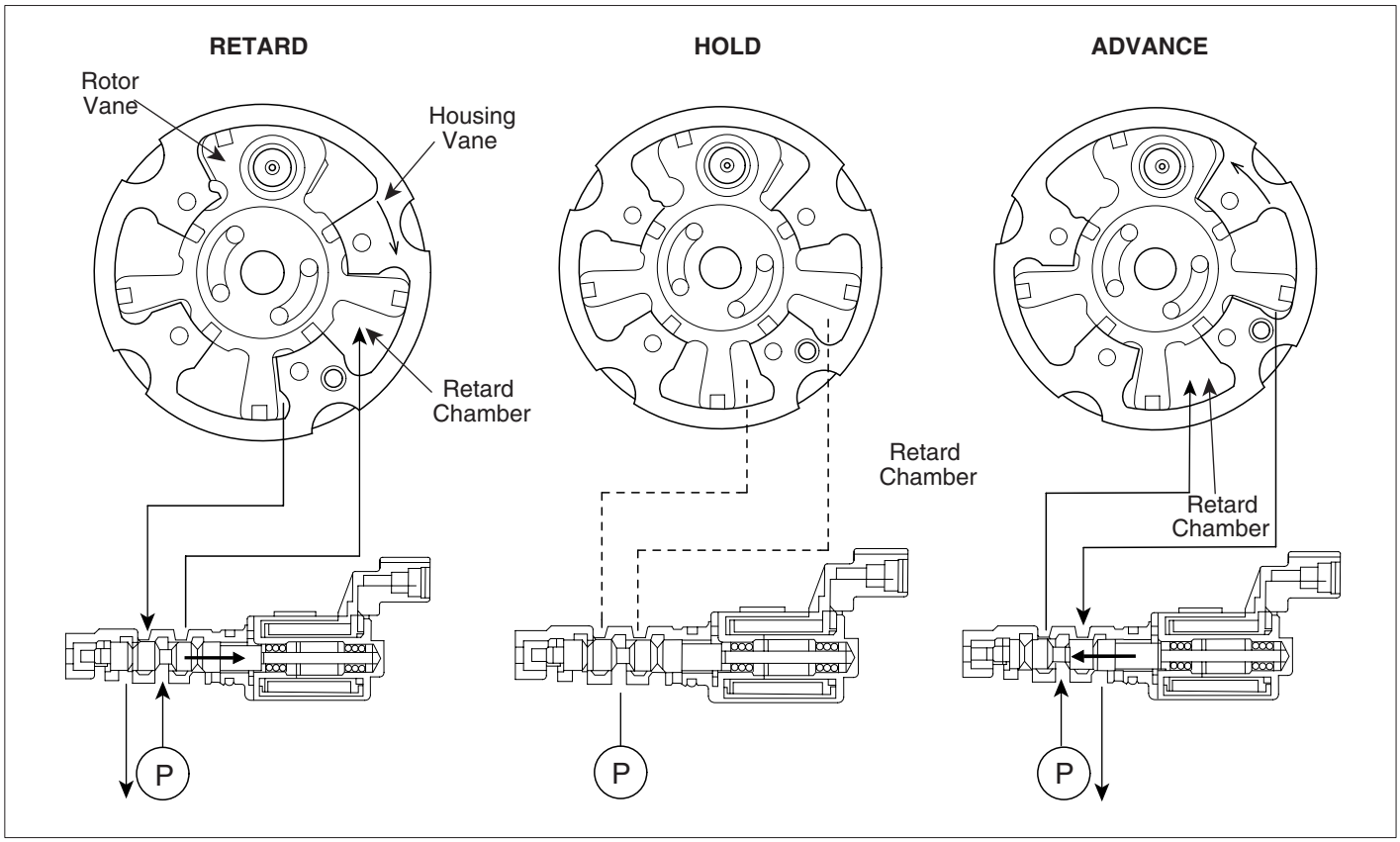

UEBG014A

1. The above figure shows the relative operation structures of the housing vane to the rotor vane.

2. If the CVVT is held a certain control angle, to hold this state, oil is replenished as much as oil leaks from the oil pump.

The OCV (Oil-flow Control Valve) spool location at this time is as follows.
Oil pump → Advance oil chamber (Little by little open the inflow side to the advance oil chamber) → Almost close the drain side

Be sure there might be a difference in the position according to the engine running state (rpm, oil temperature, and oil pressure).

Fuel System

GENERAL

DIESEL CONTROL SYSTEM

- ENGINE CONTROL MODULE (ECM)
- MASS AIR FLOW SENSOR (MAFS)
- BOOST PRESSURE SENSOR (BPS)
- INTAKE AIR TEMPERATURE SENSOR (IATS)
- ENGINE COOLANT TEMPERATURE SENSOR (ECTS)
- CAMSHAFT POSITION SENSOR (CMPS)
- CRANKSHAFT POSITION SENSOR (CKPS)
- ACCELERATOR POSITION SENSOR (APS)
- RAIL PRESSURE SENSOR (RPS)
- FUEL TEMPERATURE SENSOR (FTS)
- FUEL PRESSURE REGULATOR VALVE
- RAIL PRESSURE REGULATOR VALVE
- ELECTRIC EGR CONTROL VALVE
- THROTTLE CONTROL ACTUATOR
- VARIABLE SWIRL CONTROL ACTUATOR
- WATER SENSOR
- VGT CONTROL SOLENOID VALVE

DTC TROUBLESHOOTING PROCEDURES

FUEL DELIVERY SYSTEM-DIESEL

- FUEL TANK
- FUEL PUMP
- FILLER-NECK ASSEMBLY
- ACCELERATION PEDAL
- SUB FUEL SENDER
- FUEL FILTER
- HIGH PRESSURE FUEL PUMP
- COMMON RAIL
- INJECTOR

GENERAL

SPECIFICATIONS E670548B

FUEL DELIVERY SYSTEM

Items	Specification	
Fuel Tank	Capacity	75 lit. (15.32 Imp.gal., 19.81 U.S.gal.)
Fuel Return System	Type	Return Type
Fuel Filter	Type	High pressure type (Built in engine room)
High Pressure Fuel Pump	Type	Mechanical, Plunger Pumping Type
	Driven by	Camshaft
Fuel Pressure (Maximum)	Pressure	1,600 bar (160 MPa, 23,206 psi)

INPUT SENSORS

MASS AIR FLOW SENSOR (MAFS)
▷ Type: Hot-Film Type
▷ Specification
* At intake air temperature = 20℃(68℉)

Air Flow (kg/h)	Frequency (kHz)
8	1.94 ~ 1.96
10	1.98 ~ 1.99
15	2.06 ~ 2.07
75	2.72 ~ 2.75
160	3.36 ~ 3.41
310	4.44 ~ 4.53
640	7.66 ~ 8.01
800	10.13 ~ 11.17

* At intake air temperature = -15℃(5℉) or 80℃(176℉)

Air Flow (kg/h)	Frequency (kHz)
10	1.97 ~ 1.99
75	2.71 ~ 2.76
160	3.34 ~ 3.43
310	4.39 ~ 4.58

INTAKE AIR TEMPERATURE SENSOR (IATS) #1 [BUILT IN MAFS]
▷ Type: Thermistor type
▷ Specification

Temperature [℃(℉)]	Resistance(kΩ)
-40(-40)	35.14 ~ 43.76
-20(-4)	12.66 ~ 15.12
0(32)	5.12 ~ 5.89
20(68)	2.29 ~ 2.55
40(104)	1.10 ~ 1.24
60(140)	0.57 ~ 0.65
80(176)	0.31 ~ 0.37

BOOST PRESSURE SENSOR (BPS)
▷ Type: Piezo-resistive pressure sensor type
▷ Specification

Pressure (kPa)	Output Voltage (V)
70	1.02 ~ 1.17
140	2.13 ~ 2.28
210	3.25 ~ 3.40
270	4.20 ~ 4.35

INTAKE AIR TEMPERATURE SENSOR (IATS) #2 [BUILT IN BPS]
▷ Type: Thermistor type
▷ Specification

Temperature [℃(℉)]	Resistance(kΩ)
-40(-40)	40.93 ~ 48.35
-20(-4)	13.89 ~ 16.03
0(32)	5.38 ~ 6.09
20(68)	2.31 ~ 2.57
40(104)	1.08 ~ 1.21
60(140)	0.54 ~ 0.62
80(176)	0.29 ~ 0.34

ENGINE COOLANT TEMPERATURE SENSOR (ECTS)
▷ Type: Thermistor type
▷ Specification

Temperature [℃(°F)]	Resistance(kΩ)
-40(-40)	48.14
-20(-4)	14.13 ~ 16.83
0(32)	5.79
20(68)	2.31 ~ 2.59
40(104)	1.15
60(140)	0.59
80(176)	0.32

CAMSHAFT POSITION SENSOR (CMPS)
▷ Type: Hall effect type
▷ Specification

Level	Output Pulse (V)
High	5V
Low	0V

Items	Specification
Air Gap	1.0± 0.5mm

CRANKSHAFT POSITION SENSOR (CKPS)
▷ Type: Variable reluctance type
▷ Output Voltage (V): 0 ~ 5V

Items	Specification
Coil Resistance (Ω))	774 ~ 946Ω [20℃(68°F)]

ACCELERATOR POSITION SENSOR (APS)
▷ Type: Potentiometer type
▷ Specification

Test Condition	Output Voltage(V)	
	APS 1	APS 2
Idle	0.7 ~ 0.8	0.29 ~ 0.46
Fully depressed	3.85 ~ 4.35	1.92 ~ 2.18

FUEL TEMPERATURE SENSOR (FTS)
▷ Type: Thermistor type
▷ Specification

Temperature [℃(°F)]	Resistance(kΩ)
-30(-22)	27.00
-20(-4)	15.67
-10(14)	9.45
0(32)	5.89
20(68)	2.27 ~ 2.73
40(104)	1.17
50(122)	0.83
60(140)	0.60
70(158)	0.43
80(176)	0.30 ~ 0.32

RAIL PRESSURE SENSOR (RPS)
▷ Type: Piezo-electricity type
▷ Specification

Test Condition	Rail pressure (bar)	Output Voltage(V)
Idle	220 ~ 320	Below 1.7
Fully depressed	About 1,800	Approx. 4.5

VEHICLE SPEED SENSOR (VSS)
▷ Type: Inductive type

OUTPUT ACTUATORS

INJECTOR
▷ Number: 4
▷ Specification

Items	Specification
Coil Resistance (Ω)	0.215 ~ 0.295Ω [20℃ (68°F)]

FUEL PRESSURE REGULATOR VALVE
▷ Specification

Items	Specification
Coil Resistance (Ω)	2.9 ~ 3.15Ω [20℃(68°F)]

RAIL PRESSURE REGULATOR VALVE
▷ Specification

Items	Specification
Coil Resistance (Ω)	3.42 ~ 3.78Ω [20℃(68°F)]

THROTTLE CONTROL ACTUATOR
▷ Type : Duty control motor type
▷ Specification

Duty (%)	Throttle Valve Position
5	Open
5 ~ 94	Normal operation (Partially open in proportion to duty value)
94	Closed
94 ~ 95	Maintaining the last valid position
95 ~ 97	Fully closed

ELECTRIC EGR CONTROL VALVE
▷ Type: Linear solenoid type
▷ Specification

Items	Specification
Coil Resistance (Ω)	7.3 ~ 8.3Ω [20℃(68°F)]

VGT CONTROL SOLENOID VALVE
▷ Specification

Items	Specification
Coil Resistance (Ω)	14.7 ~ 16.1Ω [20℃(68°F)]

VARIABLE SWIRL CONTROL ACTUATOR
▷ Type: Motor Driven (including Position Sensor)
▷ Specification
Motor

Items	Specification
Coil Resistance (Ω)	3.4 ~ 4.4Ω [20℃(68°F)]

Position Sensor

Items	Specification
Coil Resistance (kΩ)	3.44 ~ 5.16kΩ [20℃(68°F)]

SERVICE STANDARD EA925EF7

Basic Idle rpm(After warm up)	A/C OFF	Neutral,N,P-range	790 ± 100 rpm
		D-range	790 ± 100 rpm
	A/C ON	Neutral,N,P-range	790 ± 100 rpm
		D-range	790 ± 100 rpm

TIGHTENING TORQUES E3562770

ENGINE CONTROL SYSTEM

Item	N·m	Kgf·m	lbf·ft
ECM bracket installation bolts	7.8 ~ 11.8	0.8 ~ 1.2	5.8 ~ 8.7
Boost pressure sensor installation bolts	7.8 ~ 11.8	0.8 ~ 1.2	5.8 ~ 8.7
Engine coolant temperature sensor installation	19.6 ~ 39.2	2.0 ~ 4.0	14.5 ~ 28.9
Crankshaft position sensor installation bolt	3.9 ~ 5.9	0.4 ~ 0.6	2.9 ~ 4.3
Camshaft position sensor installation bolt	3.9 ~ 5.9	0.4 ~ 0.6	2.9 ~ 4.3
Electric EGR control valve installation bolts	19.6 ~ 26.5	2.0 ~ 2.7	14.5 ~ 19.5
Variable swirl control actuator installation bolts	9.8 ~ 11.8	1.0 ~ 1.2	7.2 ~ 8.7
Throttle body installation bolts	9.8 ~ 11.8	1.0 ~ 1.2	7.2 ~ 8.7
Oil pressure switch installation	14.7 ~ 21.6	1.5 ~ 2.2	10.9 ~ 15.9

FUEL DELIVERY SYSTEM

Item	N·m	Kgf·m	lbf·ft
Injector clamp installation bolt	24.5 ~ 28.4	2.5 ~ 2.9	18.1 ~ 21.0
Common rail installation bolts	19.6 ~ 26.5	2.0 ~ 2.7	14.5 ~ 19.5
High pressure fuel pump installation bolts	24.5 ~ 34.3	2.5 ~ 3.5	18.0 ~ 25.3
High pressure pipe (Injector ↔ Common Rail) installation nuts	24.5 ~ 28.4	2.5 ~ 2.9	18.1 ~ 21.0
High pressure pipe (Common Rail ↔ High Pressure Fuel Pump) installation nuts	24.5 ~ 28.4	2.5 ~ 2.9	18.1 ~ 21.0
Fuel tank band installation bolts	39.2 ~ 54.0	4.0 ~ 5.5	28.9 ~ 39.8
Accelerator pedal installation bolts	16.6 ~ 25.5	1.7 ~ 2.6	12.3 ~ 18.8
Fuel pump / Sender plate cover tightening	5.9 ~ 6.9	0.6 ~ 0.7	4.3 ~ 5.1

SPECIAL SERVICE TOOLS E94FDF3C

Tool (Number and name)	Illustration	Application
09351-27210 Injector Remover Adapter	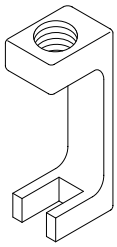 LCGF062A	Removing the injector
09351-4A200 Injector Remover	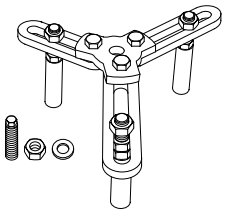 LXGF022A	Removing the injector
09314-27110(14mm) 09314-27120(17mm) Torque Wrench Socket	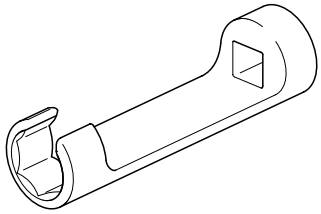 AFAF201B	Installing the high pressure pipe
09310-2B100 Fuel pump Plate Cover Wrench	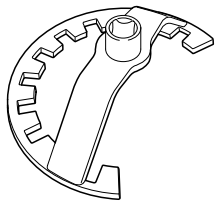 SCMFL6666D	Removing and Installing the low pressure fuel pump & sub fuel sender plate cover

REFERENCE SERVICE TOOLS (I) - WIRE HARNESS REPAIR KIT II

Tool Number	Tool name
TRK00A	Wiring Repair Kit

* For more information of the Wiring Repair Kit, please refer to BE group - “ REFERENCE SERVICE TOOLS”.

REFERENCE SERVICE TOOL (II) - COMMON RAIL TESTER

Tool Number	Tool Name
CRT-1010	Tool Case
CRT-1020	Regulator Valve
CRT-1021	Plug (for Delphi) M14mm
CRT-1022	Plug (for Bosch) M12mm
CRT-1023	Adapter (for Bosch)
CRT-1030	Flask & Holder
CRT-1031	Visible Tube
CRT-1032	Injector Return Hose Adapter
CRT-1033	Injector Return Hose Plug
CRT-1034	Flushing Tube
CRT-1035	Dust Cap
CRT-1040	High Pressure Meter
CRT-1041	Adapter Connector (for Delphi Old)
CRT-1042	Adapter Connector (for Delphi New)
CRT-1043	Adapter Connector (for Bosch)
CRT-1044	IMV Control Valve
CRT-1050	Vacuum Gauge
CRT-1051	Pressure Gauge
CRT-1052	Gauge Connection Tube
CRT-1053	Connection Adapter
CRT-1054	Connection Adapter with Hose
CRT-1055	Hose Clamp
CRT-1060	User's Guide

* To use this Common Rail Tester, refer to the user's guide included in this kit.

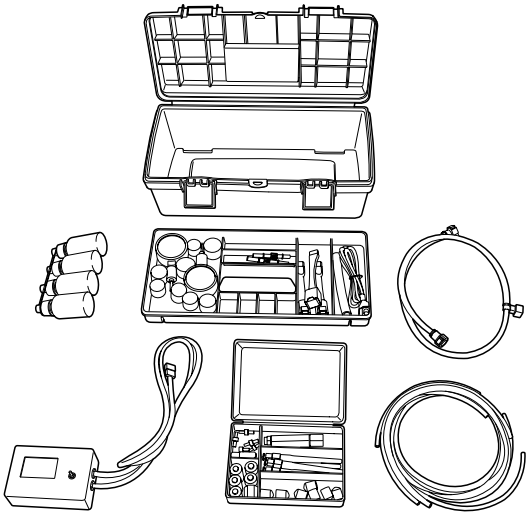

SCMFL6900L

BASIC TROUBLESHOOTING E7201775

BASIC TROUBLESHOOTING GUIDE

1	**Bring Vehicle to Workshop**

2	**Analyze Customer's Problem**

Ask the customer about the conditions and environment relative to the issue
(Use CUSTOMER PROBLEM ANALYSIS SHEET).

3	**Verify Symptom, and then Check DTC and Freeze Frame Data**

Connect Hi-Scan (Pro) to Diagnostic Link Connector (DLC).
Record the DTC and freeze frame data.

NOTE

To erase DTC and freeze frame data, refer to Step 5.

4	**Confirm the Inspection Procedure for the System or Part**

Using the SYMPTOM TROUBLESHOOTING GUIDE CHART, choose the correct inspection procedure for the system or part to be checked.

5	**Erase the DTC and Freeze Frame Data**

WARNING

NEVER erase DTC and freeze frame data before completing Step 2 MIL/DTC in "CUSTOMER PROBLEM ANALYSIS SHEET".

6	**Inspect Vehicle Visually**

Go to Step 11, if you recognize the problem.

7	**Recreate (Simulate) Symptoms of the DTC**

Try to recreate or simulate the symptoms and conditions of the malfunction as described by customer.
If DTC(s) is/are displayed, simulate the condition according to troubleshooting procedure for the DTC.

8	**Confirm Symptoms of Problem**

If DTC(s) is/are not displayed, go to Step 9.
If DTC(s) is/are displayed, go to Step 11.

9	**Recreate (Simulate) Symptom**

Try to recreate or simulate the condition of the malfunction as described by the customer.

10	**Check the DTC**

If DTC(s) does(do) not occur, refer to INTERMITTENT PROBLEM PROCEDURE in BASIC INSPECTION PROCEDURE.
If DTC(s) occur(s), go to Step 11.

11	**Perform troubleshooting procedure for DTC**

12	**Adjust or repair the vehicle**

13	**Confirmation test**

14	**END**

CUSTOMER PROBLEM ANALYSIS SHEET

1. VEHICLEINFORMAITON

VIN No.		Transmission	☐ M/T ☐ A/T ☐CVT ☐ etc.
Production date		Driving type	☐ 2WD (FF) ☐ 2WD (FR) ☐ 4WD
Odometer Reading	_____km/mile		

2. SYMPTOMS

☐ Unable to start	☐ Engine does not turn over ☐ Incomplete combustion ☐ Initial combustion does not occur
☐ Difficult to start	☐ Engine turns over slowly ☐ Other_____
☐ Poor idling	☐ Rough idling ☐ Incorrect idling ☐ Unstable idling (High:_____ rpm, Low:_____rpm) ☐ Other
☐ Engine stall	☐ Soon after starting ☐ After accelerator pedal depressed ☐ After accelerator pedal released ☐ During A/C ON ☐ Shifting from N to D-range ☐ Other_____
☐ Others	☐ Poor driving (Surge) ☐ Knocking ☐ Poor fuel economy ☐ Back fire ☐ After fire ☐ Other_____

3. ENVIRONMENT

Problem frequency	☐ Constant ☐ Sometimes (_____) ☐ Once only ☐ Other_____
Weather	☐ Fine ☐ Cloudy ☐ Rainy ☐ Snowy ☐ Other_____
Outdoor temperature	Approx. _____ °C/°F
Place	☐ Highway ☐ Suburbs ☐ Inner City ☐ Uphill ☐ Downhill ☐ Rough road ☐ Other_____
Engine temperature	☐ Cold ☐ Warming up ☐ After warming up ☐ Any temperature
Engine operation	☐ Starting ☐ Just after starting (____min) ☐ Idling ☐ Racing ☐ Driving ☐ Constant speed ☐ Acceleration ☐ Deceleration ☐ A/C switch ON/OFF ☐ Other_____

4. MIL/DTC

MIL (Malfunction Indicator Lamp)		☐ Remains ON ☐ Sometimes lights up ☐ Does not light
DTC	Normal check (Pre-check)	☐ Normal ☐ DTC (_____) ☐ Freeze Frame Data
	Check mode	☐ Normal ☐ DTC (_____) ☐ Freeze Frame Data

5. ECM/PCM INFORMATION

ECM/PCM Part No.	
ROM ID	

SCMFL6150L

BASIC INSPECTION PROCEDURE

MEASURING CONDITION OF ELECTRONIC PARTS' RESISTANCE

The measured resistance at high temperature after vehicle running may be high or low. So all resistance must be measured at ambient temperature (20℃, 68°F), unless stated otherwise.

NOTE

The measured resistance in except for ambient temperature (20℃, 68°F) is reference value.

INTERMITTENT PROBLEM INSPECTION PROCEDURE

Sometimes the most difficult case in troubleshooting is when a problem symptom occurs but does not occur again during testing. An example would be if a problem appears only when the vehicle is cold but has not appeared when warm. In this case, the technician should thoroughly make out a "CUSTOMER PROBLEM ANALYSIS SHEET" and recreate (simulate) the environment and condition which occurred when the vehicle was having the issue.

1. Clear Diagnostic Trouble Code (DTC).
2. Inspect connector connection, and check terminal for poor connections, loose wires, bent, broken or corroded pins, and then verify that the connectors are always securely fastened.

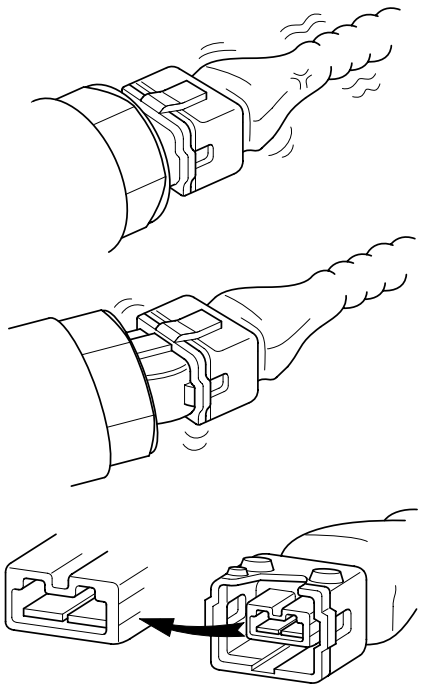

BFGE321A

3. Slightly shake the connector and wiring harness vertically and horizontally.
4. Repair or replace the component that has a problem.
5. Verify that the problem has disappeared with the road test.

● SIMULATING VIBRATION

a. Sensors and Actuators
: Slightly vibrate sensors, actuators or relays with finger.

WARNING

Strong vibration may break sensors, actuators or relays

b. Connectors and Harness
: Lightly shake the connector and wiring harness vertically and then horizontally.

● SIMULATING HEAT

a. Heat components suspected of causing the malfunction with a hair dryer or other heat source.

WARNING

- **DO NOT heat components to the point where they may be damaged.**
- **DO NOT heat the ECM directly.**

● SIMULATING WATER SPRINKLING

a. Sprinkle water onto vehicle to simulate a rainy day or a high humidity condition.

WARNING

DO NOT sprinkle water directly into the engine compartment or electronic components.

● SIMULATING ELECTRICAL LOAD

a. Turn on all electrical systems to simulate excessive electrical loads (Radios, fans, lights, rear window defogger, etc.).

CONNECTOR INSPECTION PROCEDURE

1. Handling of Connector
   a. Never pull on the wiring harness when disconnecting connectors.

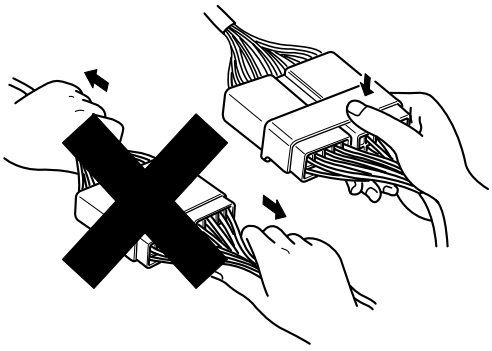

BFGE015F

   b. When removing the connector with a lock, press or pull locking lever.

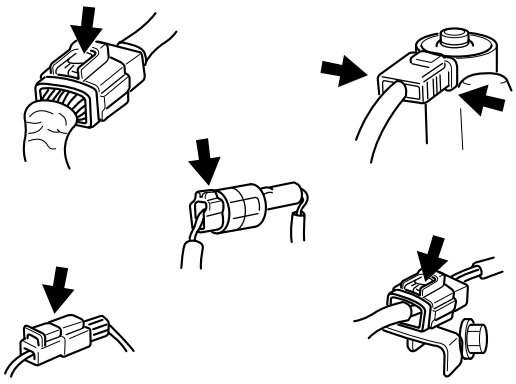

BFGE015G

   c. Listen for a click when locking connectors. This sound indicates that they are securely locked.

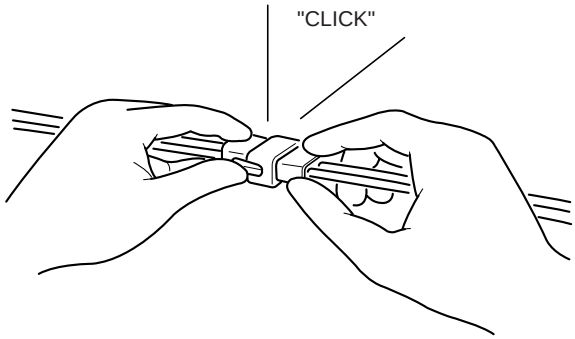

BFGE015H

   d. When a tester is used to check for continuity, or to measure voltage, always insert tester probe from wire harness side.

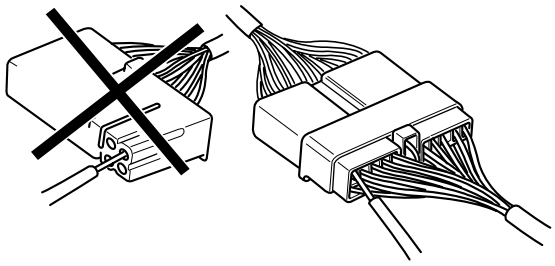

BFGE015I

   e. Check waterproof connector terminals from the connector side. Waterproof connectors cannot be accessed from harness side.

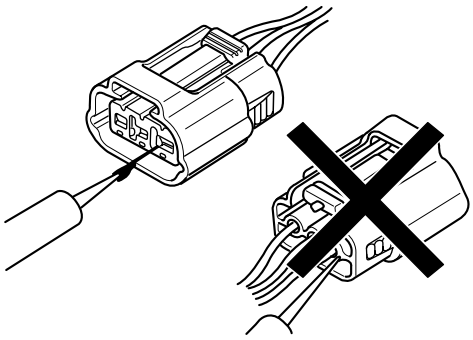

BFGE015J

NOTE

- *Use a fine wire to prevent damage to the terminal.*
- *Do not damage the terminal when inserting the tester lead.*

2. Checking Point for Connector
   a. While the connector is connected:
      Hold the connector, check connecting condition and locking efficiency.
   b. When the connector is disconnected:
      Check missed terminal, crimped terminal or broken core wire by slightly pulling the wire harness. Visually check for rust, contamination, deformation and bend.
   c. Check terminal tightening condition:
      Insert a spare male terminal into a female terminal, and then check terminal tightening conditions.
   d. Pull lightly on individual wires to ensure that each wire is secured in the terminal.

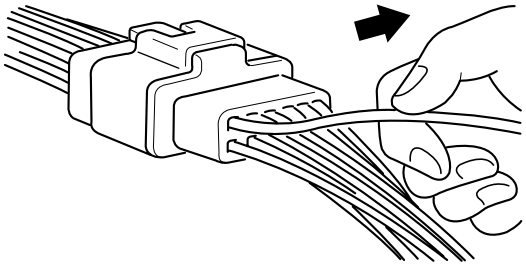

BFGE015K

3. Repair Method of Connector Terminal
   a. Clean the contact points using air gun and/or shop rag.

NOTE

Never use sand paper when polishing the contact points, otherwise the contact point may be damaged.

   b. In case of abnormal contact pressure, replace the female terminal.

WIRE HARNESS INSPECTION PROCEDURE

1. Before removing the wire harness, check the wire harness position and crimping in order to restore it correctly.
2. Check whether the wire harness is twisted, pulled or loosened.
3. Check whether the temperature of the wire harness is abnormally high.
4. Check whether the wire harness is rotating, moving or vibrating against the sharp edge of a part.
5. Check the connection between the wire harness and any installed part.
6. If the covering of wire harness is damaged; secure, repair or replace the harness.

ELECTRICAL CIRCUIT INSPECTION PROCEDURE

● CHECK OPEN CIRCUIT

1. Procedures for Open Circuit
   - Continuity Check
   - Voltage Check

   If an open circuit occurs (as seen in [FIG. 1]), it can be found by performing Step 2 (Continuity Check Method) or Step 3 (Voltage Check Method) as shown below.

FIG 1

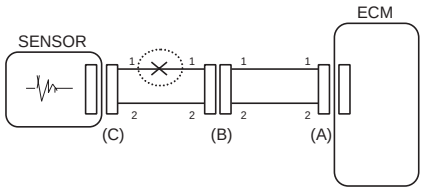

BFGE501A

2. Continuity Check Method

   NOTE

   When measuring for resistance, lightly shake the wire harness above and below or from side to side.

Specification (Resistance)
1Ω or less → Normal Circuit
1MΩ or Higher → Open Circuit

   a. Disconnect connectors (A), (C) and measure resistance between connector (A) and (C) as shown in [FIG. 2].

      In [FIG.2.] the measured resistance of line 1 and 2 is higher than 1MΩ and below 1 Ω respectively. Specifically the open circuit is line 1 (Line 2 is normal). To find exact break point, check sub line of line 1 as described in next step.

FIG 2

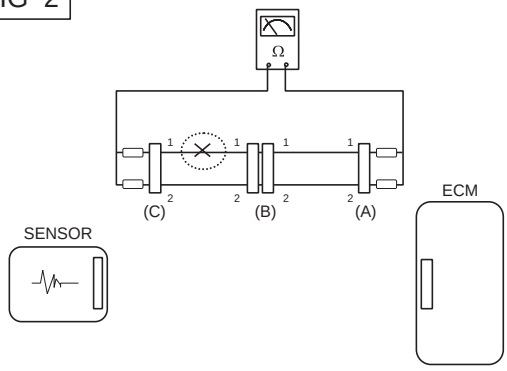

BFGE501B

   b. Disconnect connector (B), and measure for resistance between connector (C) and (B1) and between (B2) and (A) as shown in [FIG. 3].

      In this case the measured resistance between connector (C) and (B1) is higher than 1MΩ and the open circuit is between terminal 1 of connector (C) and terminal 1 of connector (B1).

FIG 3

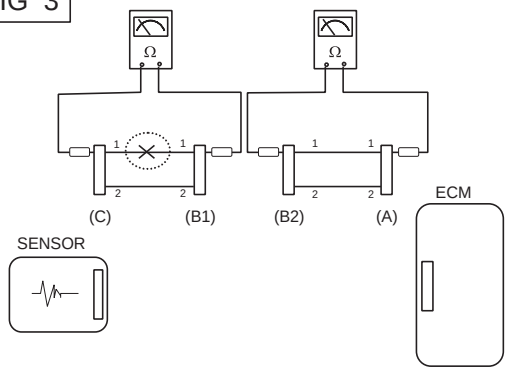

BFGE501C

3. Voltage Check Method
   a. With each connector still connected, measure the voltage between the chassis ground and terminal 1 of each connectors (A), (B) and (C) as shown in [FIG. 4].

      The measured voltage of each connector is 5V, 5V and 0V respectively. So the open circuit is between connector (C) and (B).

FIG 4

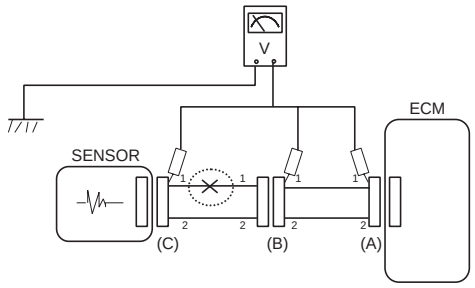

BFGE501D

● CHECK SHORT CIRCUIT

1. Test Method for Short to Ground Circuit
   - Continuity Check with Chassis Ground

   If short to ground circuit occurs as shown in [FIG. 5], the broken point can be found by performing Step 2 (Continuity Check Method with Chassis Ground) as shown below.

FIG 5

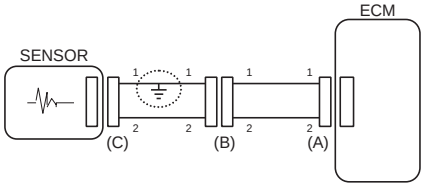

BFGE501E

2. Continuity Check Method (with Chassis Ground)

   NOTE

   Lightly shake the wire harness above and below, or from side to side when measuring the resistance.

Specification (Resistance)
1Ω or less → Short to Ground Circuit
1MΩ or Higher → Normal Circuit

   a. Disconnect connectors (A), (C) and measure for resistance between connector (A) and Chassis Ground as shown in [FIG. 6].

The measured resistance of line 1 and 2 in this example is below 1 Ω and higher than 1MΩ respectively. Specifically the short to ground circuit is line 1 (Line 2 is normal). To find exact broken point, check the sub line of line 1 as described in the following step.

FIG 6

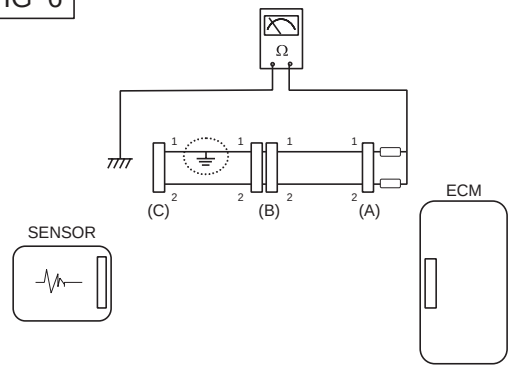

BFGE501F

   b. Disconnect connector (B), and measure the resistance between connector (A) and chassis ground, and between (B1) and chassis ground as shown in [FIG. 7].

   The measured resistance between connector (B1) and chassis ground is 1Ω or less. The short to ground circuit is between terminal 1 of connector (C) and terminal 1 of connector (B1).

FIG 7

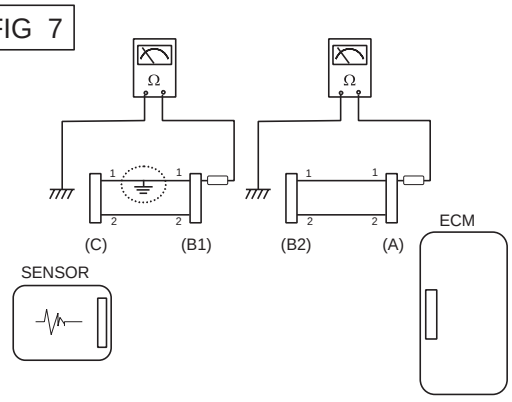

BFGE501G

SYMPTOM TROUBLESHOOTING GUIDE TABLE

(SYMPTOM 1) ENGINE DOES NOT START

Possible Cause	
• Run out of fuel • Starter faulty • Fuel pump hose supply cut • High pressure leakage • Fuse out of order • Drift of the rail pressure sensor not detected • Cam and Crank signals missing simultaneously • Battery voltage too low • Faulty immobilizer • Electric EGR control valve blocked open • Fuel pressure regulator valve contaminated, stuck, jammed • Rail pressure regulator valve contaminated, stuck, jammed • Fuel quality / presence of water	• Inversion of low pressure fuel connections • Fuel filter not adapted • Low pressure fuel circuit sealed • Sealed fuel filter • Intermittent fault connection • Air ingress in the low pressure fuel circuit • Fuel return circuit of the pump sealed • Engine compression too low • Leakage at the injector • Low pressure fuel pump faulty • High pressure fuel pump faulty • Injector jammed open • Bug software or hardware fault not detected • Glow system faulty

(SYMPTOM 2) ENGIEN STARTS WITH DIFFICULTY OR STARTS AND STALLS

Possible Cause	
• Run out of fuel • Fuel return hose of injector cut • High pressure leakage • Fuse faulty • Air filter sealed • Alternator or voltage regulator faulty • The compensation of individual injector not adapted • Drift of the engine coolant temperature sensor not detected • Drift of the rail pressure sensor not detected • Battery voltage too low • Electric EGR control valve blocked open • Fuel pressure regulator valve contaminated, stuck, jammed • Rail pressure regulator valve contaminated, stuck, jammed • Fuel quality / presence of water	• Inversion of low pressure fuel connections • Low pressure fuel circuit sealed • Sealed fuel filter • Oil level too high/too low • Catalytic converter sealed or damaged • Intermittent fault connection • Air ingress in the low pressure fuel circuit • Fuel return circuit of the pump sealed • Glow system faulty • Engine compression too low • Fuel return hose of injector sealed • Carbon deposit on the injector (sealed holes) • Needle stuck (injection possible over a certain pressure) • Gasoline in fuel • Bug software or hardware fault not detected

(SYMPTOM 3) POOR STARTING WHEN HOT

Possible Cause	
• The compensation of individual injector not adapted • Drift of the rail pressure sensor not detected • Electric EGR control valve blocked open • Fuel pressure regulator valve contaminated, stuck, jammed • Rail pressure regulator valve contaminated, stuck, jammed • Air filter sealed • Air ingress in the low pressure fuel circuit • Fuel quality / presence of water	• Fuel return circuit of the pump sealed • Sealed fuel filter • Engine compression too low • Intermittent fault connection • Carbon deposit on the injector (sealed holes) • Needle stuck (injection possible over a certain pressure) • Gasoline in fuel • Bug software or hardware fault not detected

(SYMPTOM 4) UNSTABLE IDLING

Possible Cause	
• Fuel return hose of injector cut • The compensation of individual injector not adapted • Drift of the rail pressure sensor not detected • Harness resistance increased • Air ingress in the low pressure fuel circuit • Fuel quality / presence of water • Sealed fuel filter • Air filter sealed • Fuel return hose of injector sealed • High pressure leakage	• Glow system faulty • Engine compression too low • Bad flanging of the injector • High pressure pump out of order • Injector not adapted • Carbon deposit on the injector (sealed holes) • Needle stuck (injection possible over a certain pressure) • Injector jammed open • Electric EGR control valve blocked open

(SYMPTOM 5) IDLE SPEED TOO HIGH OR TOO LOW

Possible Cause	
• Drift of the engine coolant temperature sensor not detected • Incorrect state of the electrical pack devices • Alternator or voltage regulator faulty	• Clutch not well set • Bug software or hardware fault not detected • Electric EGR control valve blocked open • Throttle control actuator faulty

(SYMPTOM 6) BLUE, WHITE, OR BLACK SMOKES

Possible Cause	
• The compensation of individual injector not adapted • Drift of the engine coolant temperature sensor not detected • Drift of the rail pressure sensor not detected • Electric EGR control valve blocked open • Fuel pressure regulator valve contaminated, stuck, jammed • Rail pressure regulator valve contaminated, stuck, jammed • Oil level too high/too low • Fuel quality / presence of water	• Catalytic converter sealed or damaged • Air filter sealed • Oil suction (engine racing) • Glow system faulty • Engine compression too low • Bad flanging of the injector • Injector washer not adapted, forgotten, doubled • Injector not adapted • Carbon deposit on the injector (sealed holes) • Injector jammed open • Gasoline in fuel

(SYMPTOM 7) ENGINE RATTLING, NOISY ENGINE

Possible Cause	
• The compensation of individual injector not adapted • Electric EGR control valve blocked closed (noisy engine) • Electric EGR control valve blocked open • Drift of the engine coolant temperature sensor not detected • Glow system faulty • Engine compression too low • Fuel return hose of injector sealed	• Drift of the rail pressure sensor not detected • Injector washer not adapted, forgotten, doubled • Injector not adapted • Carbon deposit on the injector (sealed holes) • Needle stuck (injection possible over a certain pressure) • Injector jammed open • Drift of engine coolant temperature sensor not detected

(SYMPTOM 8) BURST NOISE

Possible Cause	
• The compensation of individual injector not adapted • Intermittent fault connection • Exhaust system sealed • Drift of the rail pressure sensor not detected	• Fuel pressure regulator valve contaminated, stuck, jammed • Rail pressure regulator valve contaminated, stuck, jammed • Bug software or hardware fault not detected

(SYMPTOM 9) UNTIMELY ACCELERATION/DECELERATION AND ENGINE RACING

Possible Cause	
• Accelerator position sensor blocked • Electric EGR valve blocked open • Intermittent fault connection	• Oil suction (engine racing) • Drift of the rail pressure sensor not detected • Bug software or hardware fault not detected

(SYMPTOM 10) GAP WHEN ACCELERATING AND AT RE-COUPLING (RESPONSE TIME)

Possible Cause	
• Air inlet circuit open • Incorrect state of the electrical pack devices • Accelerator position sensor blocked • Electric EGR valve blocked open • Turbo charger damaged, vacuum hose line leakage • Sealed fuel filter	• Engine compression too low • High pressure leakage • Fuel pressure regulator valve contaminated, stuck, jammed • Rail pressure regulator valve contaminated, stuck, jammed • Needle stuck (injection possible over a certain pressure) • Bug software or hardware fault not detected

(SYMPTOM 11) ENGINE STOP OR STALLING

Possible Cause	
• Run out of fuel • Fuel pump hose supply cut • High pressure leakage • Fuse faulty • Fuel quality / presence of water • Low pressure fuel circuit sealed • Sealed fuel filter • Crank signals missing simultaneously • Electric EGR valve blocked open • Fuel pressure regulator valve contaminated, stuck, jammed	• Rail pressure regulator valve contaminated, stuck, jammed • Alternator or voltage regulator faulty • Intermittent fault connection • Catalytic converter sealed or damaged • Low pressure fuel pump faulty • High pressure pump faulty • Gasoline in fuel • Bug software or hardware fault not detected

(SYMPTOM 12) ENGINE JUDDER

Possible Cause	
• Run out of fuel • Fuel return hose of injector cut • Incorrect state of the electrical pack devices • The compensation of individual injector not adapted • Electric EGR valve blocked open • Fuel filter not adapted • Air ingress in the low pressure fuel circuit • Fuel quality / presence of water • Sealed fuel filter • Intermittent fault connection • Harness resistance increased	• Glow system faulty • Engine compression too low • Fuel return hose of injector sealed • Valve clearance • Low pressure fuel pump faulty • Injector washer not adapted, forgotten, doubled • Carbon deposit on the injector (sealed holes) • Needle stuck (injection possible over a certain pressure) • Injector jammed open • Gasoline in fuel • Bug software or hardware fault not detected

(SYMPTOM 13) LACK OF POWER

Possible Cause	
• The compensation of individual injector not adapted • Accelerator position sensor blocked • Incorrect state of the electrical pack devices • Electric EGR valve blocked open • Air inlet circuit open • Air filter sealed • Oil level too high/too low • Catalytic converter sealed or damaged • Turbo charger damaged, vacuum hose line leakage	• Sealed fuel filter • Leakage at the injector • Fuel return circuit of the pump sealed • Fuel return hose of injector sealed • Engine compression too low • Injector not adapted • Carbon deposit on the injector (sealed holes) • Valve clearance • Throttle control actuator faulty • Engine coolant temperature too high • Fuel temperature too high

(SYMPTOM 14) TOO MUCH POWER

Possible Cause	
• The compensation of individual injector not adapted • Oil suction (engine racing)	• Bug software or hardware fault not detected

(SYMPTOM 15) EXCESSIVE FUEL CONSUMPTION

Possible Cause	
• Fuel return hose of injector cut • Leakage at the Fuel pressure regulator valve • Leakage at fuel temperature sensor • Leakage at the spacers • High pressure leakage • Air inlet circuit open • Air filter sealed • The compensation of individual injector not adapted • Electric EGR valve blocked open	• Incorrect state of the electrical pack devices • Oil level too high/too low • Fuel quality / presence of water • Catalytic converter sealed or damaged • Turbo charger damaged • Engine compression too low • Injector not adapted • Bug software or hardware fault not detected

(SYMPTOM 16) OVER SPEED ENGINE WHEN CHANGING THE GEAR BOX RATIO

Possible Cause	
• Accelerator position sensor blocked • The compensation of individual injector not adapted • Intermittent fault connection • Clutch not well set	• Oil suction (engine racing) • Turbo charger damaged • Injector not adapted • Bug software or hardware fault not detected

(SYMPTOM 17) EXHAUST SMELLS

Possible Cause	
• Electric EGR control valve leakage • Oil suction (engine racing) • Turbo charger damaged • Oil level too high/too low • The compensation of individual injector not adapted • Catalytic converter sealed or damaged • Bad flanging of the injector	• Injector washer not adapted, forgotten, doubled • Injector not adapted • Carbon deposit on the injector (sealed holes) • Needle stuck (injection possible over a certain pressure) • Injector jammed open • Bug software or hardware fault not detected

(SYMPTOM 18) SMOKES (BLACK, WHITE, BLUE) WHEN ACCELERATING

Possible Cause	
• The compensation of individual injector not adapted • Electric EGR valve blocked open • Air filter sealed • Fuel quality / presence of water • Oil level too high/too low • Turbo charger damaged • Catalytic converter sealed or damaged • Oil suction (engine racing) • Air heaters out of order • Engine compression too low • High pressure leakage	• Intermittent fault connection • Bad flanging of the injector • Injector washer not adapted, forgotten, doubled • Injector not adapted • Carbon deposit on the injector (sealed holes) • Needle stuck (injection possible over a certain pressure) • Injector jammed open • Gasoline in fuel • Bug software or hardware fault not detected • Catalyzed Particulate Filter (CPF) fail

(SYMPTOM 19) FUEL SMELLS

Possible Cause	
• Fuel pump hose supply cut • Fuel return hose of injector cut • Leakage at the Fuel pressure regulator valve	• Leakage at fuel temperature sensor • Leakage at the spacers • High pressure leakage

(SYMPTOM 20) THE ENGINE COLLAPSES AT TAKE OFF

Possible Cause	
• Accelerator position sensor blocked • Incorrect state of the electrical pack devices • Air filter sealed • Inversion of low pressure fuel connections • Fuel filter not adapted • Fuel quality/presence of water • Air ingress in the low pressure fuel circuit • Sealed fuel filter	• Catalytic converter sealed or damaged • Clutch not well set • Intermittent fault connection • Drift of the rail pressure sensor not detected • Fuel pressure regulator valve contaminated, stuck, jammed • Rail pressure regulator valve contaminated, stuck, jammed • Gasoline in fuel • Bug software or hardware fault not detected

(SYMPTOM 21) THE ENGINE DOES NOT STOP

Possible Cause
• Oil suction (engine racing) • Bug software or hardware fault not detected

(SYMPTOM 22) DIFFERENT MECHANICAL NOISES

Possible Cause	
• Buzzer noise (discharge by the injectors) • Clip broken (vibrations, resonance, noises) • Incorrect state of the electrical pack devices • Catalytic converter sealed or damaged • Air inlet circuit open	• Bad flanging of the injector • Clutch not well set • Turbo charger damagedValve clearance • Valve clearance

DIESEL CONTROL SYSTEM

DESCRIPTION E02A4912

If the disel control system components (sensors, ECM, injector, etc.) fail, interruption to the fuel supply or failure to supply the proper amount of fuel for variousengine operating conditions will result. The following situations may be encountered

1. Engine is hard to start or does not start at all.
2. Nstable idle.
3. Poor driveability.

If any of the above conditions are noted, first perform a routine diagnosis that includes basic engine checks (ignition system malfunction, incorrectengine adjustment, etc.). Then, inspect the disel contorl system components with the HI-SCAN (Pro).

NOTE

- *Before removing or installing any part, read the diagnostic trouble codesand then disconnect the battery negative (-) terminal.*
- *Before disconnecting the cable from battery terminal, turn the ignition switch to OFF. Removal or connection of the battery cable during engine operationor while the ignition switch is ON could cause damage to the ECM.*
- *Wchecking the generator for the charging state, do not disconnect the battery '+' terminal to prevent the ECM from damage due to the voltage.*
- *Wcharging the battery with the external charger, disconnect the vehicleside battery terminals to prevent damage to the ECM.*

SELF-DIAGNOSIS

The ECM monitors the input/output signals (some signals at all times and theothers under specified conditions). When the ECM detects an irregularity, it records the diagnostic trouble code, and outputs the signal to the Data Link connector. The diagnosis results can be read with the MIL or HI-SCAN(Pro). Diagnostic Trouble Codes(DTC) will remain in the ECM as long as battery power is maintained. The diagnostic trouble codes will, however, be erased when the battery terminal or the engine control module(ECM) connector isdisconnected, or by the HI-SCAN (Pro).

NOTE

If a sensor connector is disconnected with the ignition switch turned on, the diagnostic trouble code (DTC) is recorded. In this case, disconnect the battery negative terminal (-) for 15 seconds or more, and the diagnosis memory will be erased.

CHECKING PROCEDURE (SELF-DIAGNOSIS)

NOTE

- *When attery voltage is excessively low, diagnostic trouble codes can not be read. Be sure to check the battery for voltage and the charging system before starting the test*
- *Diagnosis memory is erased if the battery or the ECM connector is disconnected. Do not disconnect the battery before the diagnostic trouble codes are completely read and recorded.*

INSPECTION PROCEDURE (USING GENERIC SCAN TOOL)

1. Turn OFF the ignition switch.
2. Connect the scan tool to the data link connector on the lower crash pad.

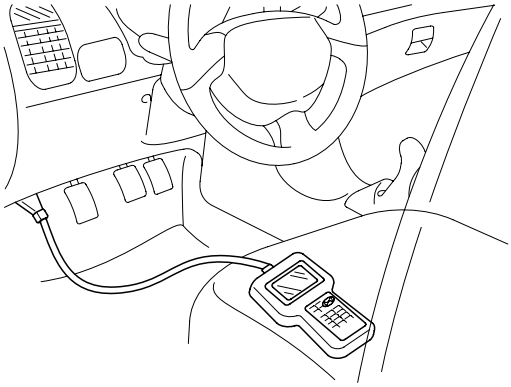

AWJF300D

3. Turn ON the ignition switch.
4. Use the scan tool to check the diagnostic trouble code.
5. Repair the faulty part from the diagnosis chart.
6. Erase the diagnostic trouble code.
7. Disconnect the GST.

NOTE

When deleting diagnostic trouble code, use scan tool as possible.

COMPONENT LOCATION E311F376

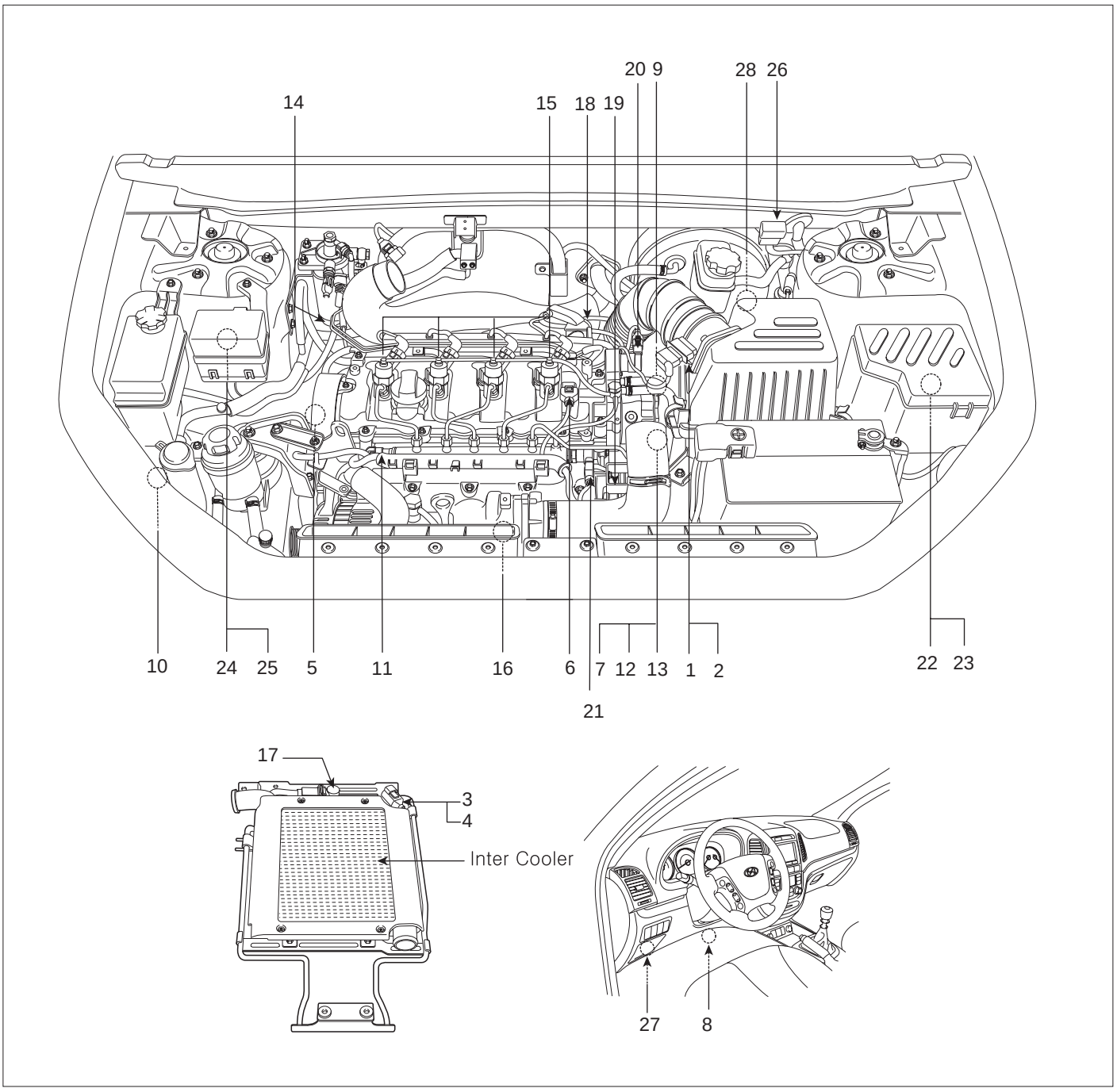

1. Mass Air Sensor (MAFS)
2. Intake Air Temperature Sensor (IATS) #1 built in MAFS
3. Boost Pressure Sensor (BPS)
4. Intake Air Temperature Sensor (IATS) #2 built in BPS
5. Engine Coolant Temperature Sensor (ECTS)
6. Camshaft Position Sensor (CMPS)
7. Crankshaft Position Sensor (CKPS)
8. Accelerator Position Sensor (APS)
9. Fuel Temperature Sensor (FTS)
10. A/C Pressure Transducer (APT)
11. Rail Pressure Sensor (RPS)
12. Vehicle Speed Sensor (VSS)
13. Oil Pressure Switch (OPS)
14. Water Sensor (included in Fuel Filter)
15. Injector
16. Throttle Control Actuator
17. VGT Control Solenoid Valve
18. Electric EGR Control Valve
19. Variable Swirl Control Actuator
20. Fuel Pressure Regulator Valve
21. Rail Pressure Regulator Valve
22. Main Relay
23. Fuel Pump Relay
24. Glow Relay
25. Auxiliary Heater Relay
26. Multi-Purpose Check Connector
27. Data Link Connector (DLC)
28. ECM (Engine Control Module)

SCMFL6101L

1. Mass Air Flow Sensor (MAFS)
2. Intake Air Temperature Sensor (IATS) #1 built in MAFS

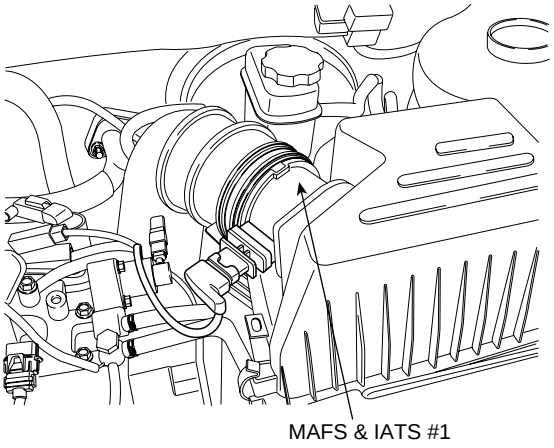

SCMFL6003D

3. Boost Pressure Sensor (BPS)
4. Intake Air Temperature Sensor (IATS) #2 built in BPS
17. VGT Control Solenoid Valve

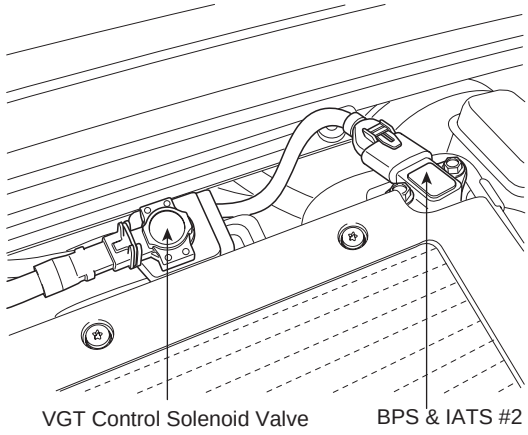

SCMFL6102L

5. Engine Coolant Temperature Sensor (ECTS)

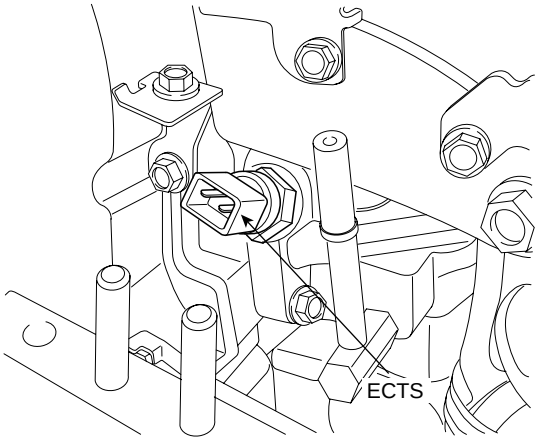

EFQG008A

6. Camshaft Position Sensor (CMPS)

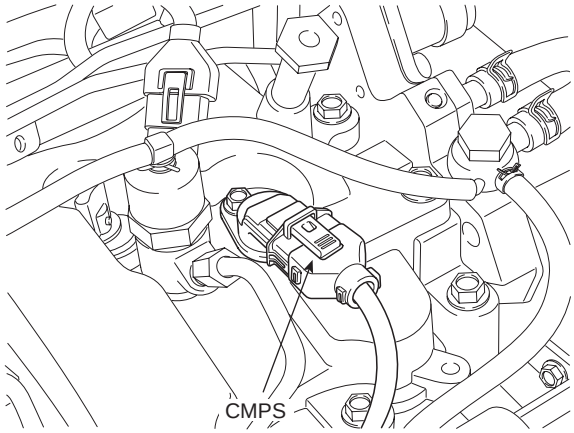

EFQG010A

7. Crankshaft Position Sensor (CKPS)
13. Oil Pressure Switch (OPS)

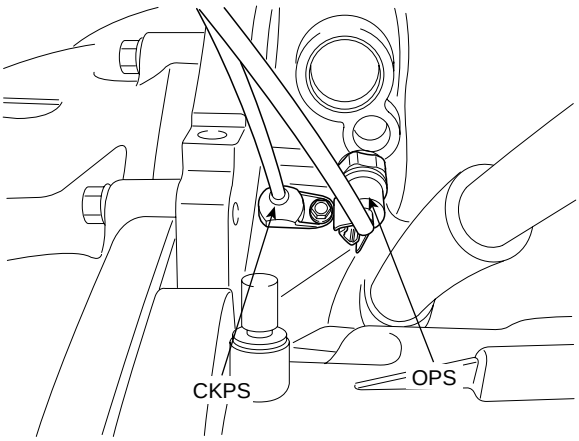

EFQG011A

8. Accelerator Pedal Position Sensor (APS)

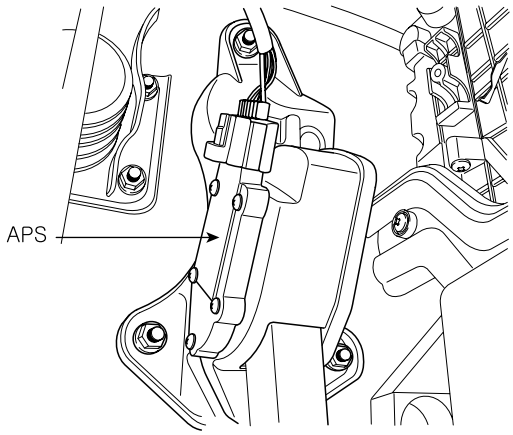

SCMFL6005D

9. Fuel Temperature Sensor (FTS)
20. Fuel Pressure Regulator Valve

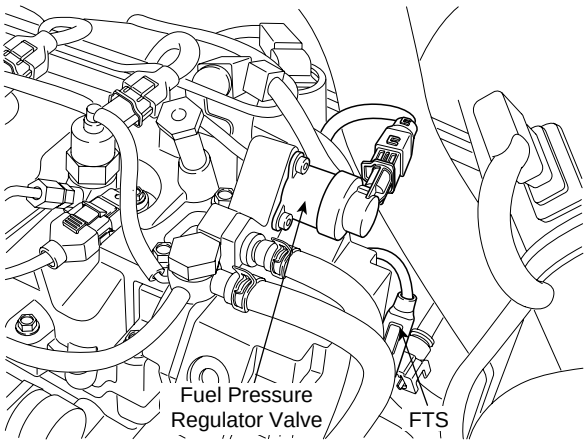

EFQG013A

10. A/C Pressure Transducer (APT)

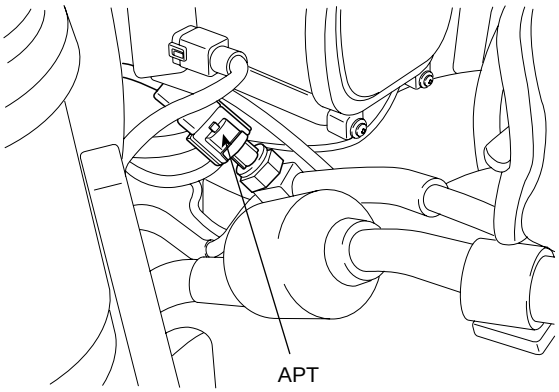

SCMFL6004D

11. Rail Pressure Sensor (RPS)

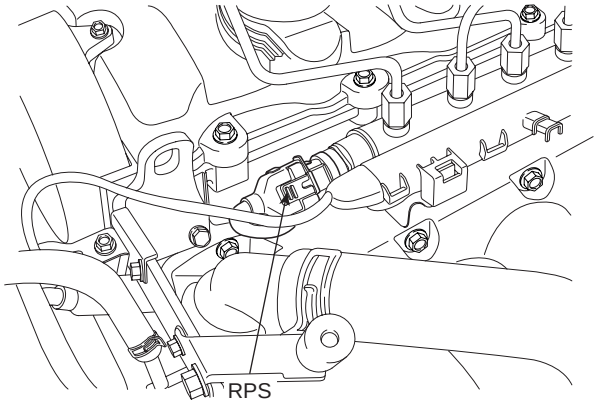

EFQG017A

12. Vehicle Speed Sensor (VSS)

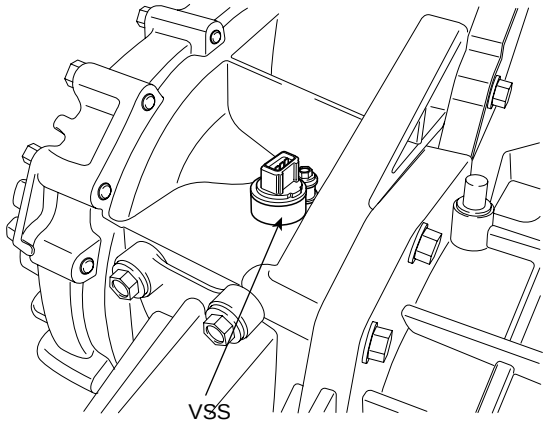

SCMFL6011D

14. Water Sensor (included in Fuel Filter)

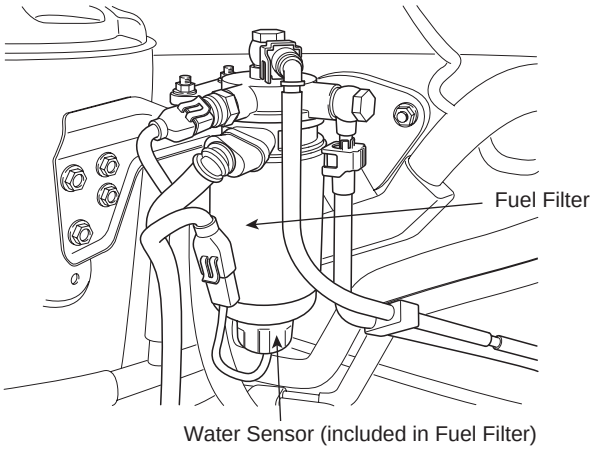

SCMFL6103L

15. Injector

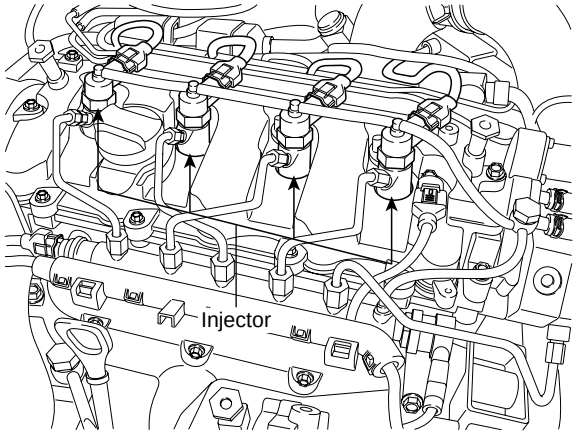

EFQG020A

16. Throttle Control Actuator

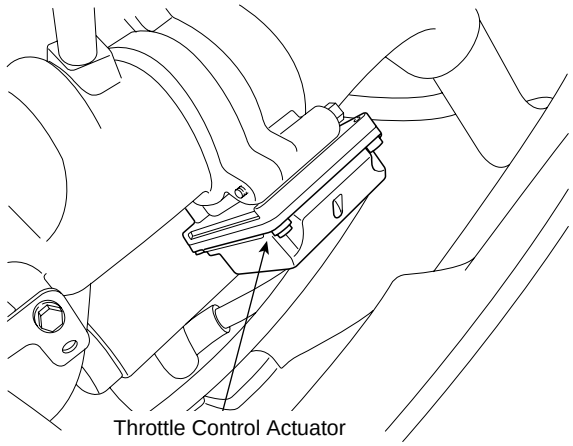

EFQG021A

18. ectric EGR Control Valve

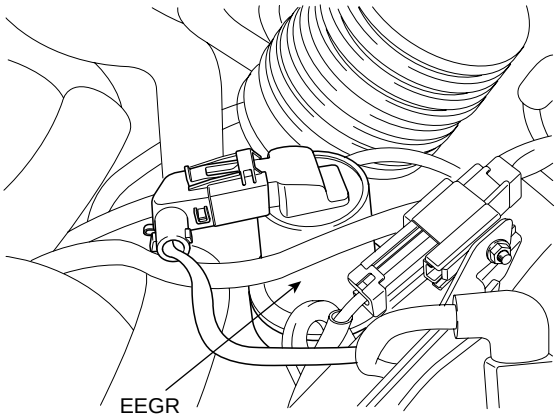

SCMFL6006D

19. Variable Swirl Control Actuater

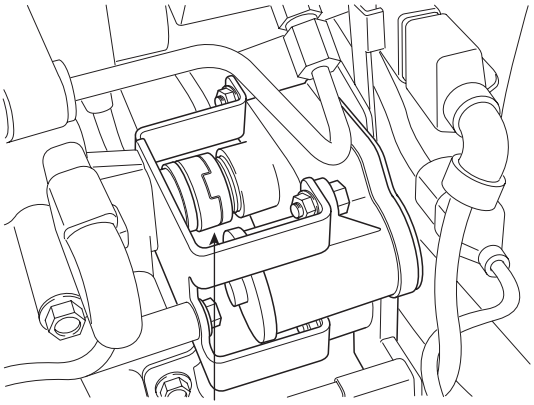

SCMFL6104L

21. Rail Pressure Regulator Valve

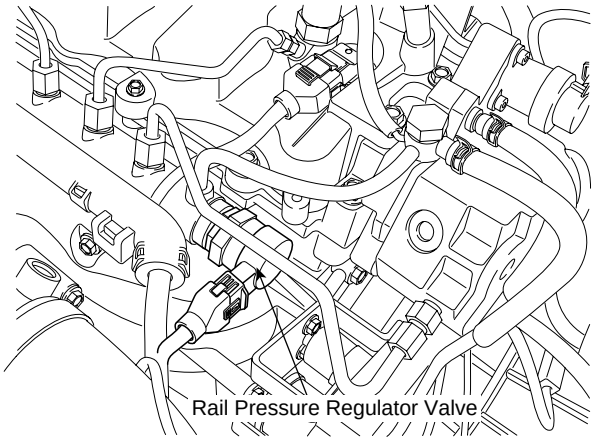

EFQG023A

22. Main Relay
23. Fuel Pump Relay

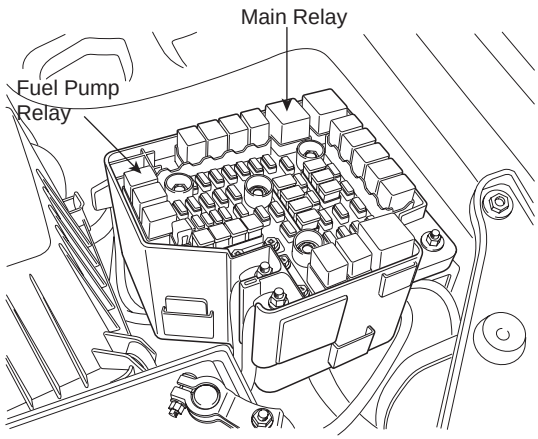

SCMFL6105L

24. Glow Relay
25. Auxiliary Heater Relay

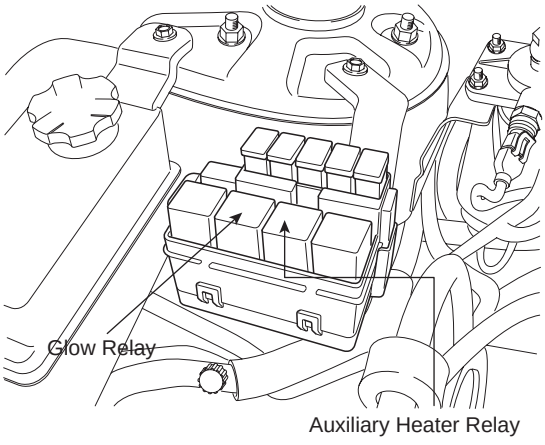

SCMFL6106L

26. Multi-Purpose Check Connector 28. ECM (Engine Control Module)	
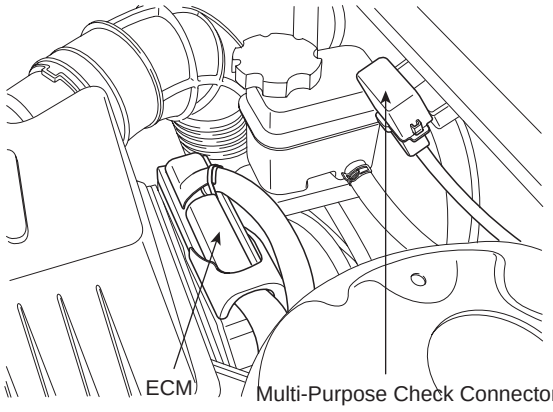 SCMFL6107L	

ENGINE CONTROL MODULE (ECM)

ECM (ENGINE CONTROL MODULE) E9D63F3D

1. ECM HARNESS CONNECTOR

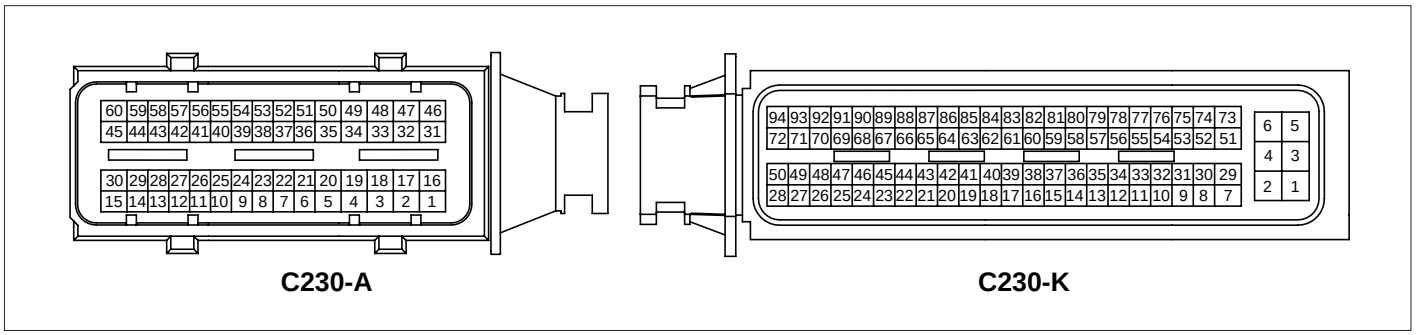

SCMFL6108L

2. ECM TERMINAL FUNCTION

CONNECTOR [C230-A]

Pin	Description	Connected to
1	Injector (Cylinder #3) [HIGH] control output	Injector (Cylinder #3)
2	Injector (Cylinder #2) [HIGH] control output	Injector (Cylinder #2)
3	-	
4	Battery power	Rail Pressure Regulator Valve
5	-	
6	Sensor ground	Position Sensor in Variable Swirl Control Actuator
7	Sensor shield	Crankshaft Position Sensor (CKPS)
8	Sensor ground	Rail Pressure Sensor (RPS)
9	-	
10	-	
11	-	
12	Crankshaft Position Sensor (CKPS) [-] signal input	Crankshaft Position Sensor (CKPS)
13	Reference voltage (+5V)	Boost Pressure Sensor (BPS)
14	-	
15	-	
16	Injector (Cylinder #1) [HIGH] control output	Injector (Cylinder #1)
17	Injector (Cylinder #4) [HIGH] control output	Injector (Cylinder #4)
18	-	
19	Battery power	Fuel Pressure Regulator Valve
20	Sensor ground	Camshaft Position Sensor (CMPS)
21	-	
22	-	

Pin	Description	Connected to
23	Sensor ground	Boost Pressure Sensor (BPS)
24	-	
25	-	
26	Reference voltage (+5V)	Position Sensor in Variable Swirl Control Actuator
27	Crankshaft Position Sensor (CKPS) [+] signal input	Crankshaft Position Sensor (CKPS)
28	Reference voltage (+5V)	Rail Pressure Sensor (RPS)
29	-	
30	Motor [-] control output	Variable Swirl Control Actuator
31	Injector (Cylinder #2) [LOW] control output	Injector (Cylinder #2)
32	-	
33	Injector (Cylinder #4) [LOW] control output	Injector (Cylinder #4)
34	Rail Pressure Regulator Valve control output	Rail Pressure Regulator Valve
35	-	
36	-	
37	Reference frequency	Mass Air Flow Sensor (MAFS)
38	-	
39	-	
40	Boost Pressure Sensor (BPS) signal input	Boost Pressure Sensor (BPS)
41	Sensor ground	Engine Coolant Temperature Sensor (ECTS)
42	Mass Air Flow Sensor (MAFS) signal input	Mass Air Flow Sensor (MAFS)
43	Rail Pressure Sensor (RPS) signal input	Rail Pressure Sensor (RPS)
44	Sensor ground	MAFS & IATS #1
45	Fuel Pump Relay output	Fuel Pump Relay
46	Injector (Cylinder #3) [LOW] control output	Injector (Cylinder #3)
47	Injector (Cylinder #1) [LOW] control output	Injector (Cylinder #1)
48	-	
49	Fuel Pressure Regulator Valve control output	Fuel Pressure Regulator Valve
50	Camshaft Position Sensor (CMPS) signal input	Camshaft Position Sensor (CMPS)
51	-	
52	-	
53	Intake Air Temperature Sensor (IATS) #2 signal input	Intake Air Temperature Sensor (IATS) #2 built in BPS
54	-	
55	-	
56	Position Sensor signal input	Position Sensor in Variable Swirl Control Actuator
57	-	
58	Engine Coolant Temperature Sensor (ECTS) signal input	Engine Coolant Temperature Sensor (ECTS)

Pin	Description	Connected to
59	Electric EGR Control Valve control output	Electric EGR Control Valve
60	Motor [+] control output	Variable Swirl Control Actuator

CONNECTOR [C230-K]

Pin	Description	Connected to
1	Batter voltage supply after main relay	Main Relay
2	Power ground	Chassis Ground
3	Batter voltage supply after main relay	Main Relay
4	Power ground	Chassis Ground
5	Batter voltage supply after main relay	Main Relay
6	Power ground	Chassis Ground
7	Cooling Fan Relay [HIGH] control output	Cooling Fan Relay [HIGH]
8	Sensor ground	Accelerator Position Sensor (APS) #2
9	Accelerator Position Sensor (APS) #1 signal input	Accelerator Position Sensor (APS) #1
10	Sensor ground	Fuel Temperature Sensor (FTS)
11	Fuel Temperature Sensor (FTS) signal input	Fuel Temperature Sensor (FTS)
12	Ground	A/C Pressure Transducer (APT)
13	A/C Pressure Transducer signal input	A/C Pressure Transducer (APT)
14	Ground	Cruise Control Switch
15	Cruise Control "ACTIVATOR" signal input	Cruise Control Switch
16	Ground	Immobilizer Control Module
17	-	
18	-	
19	ESP Auto Recognition signal input	With ESP : Open, Without ESP : Ground
20	-	
21	-	
22	Reference voltage (+5V)	A/C Pressure Transducer (APT)
23	-	
24	Reference voltage (+5V)	Cruise Control Switch
25	Diagnosis Data Line (K-Line)	Data Link Connector (DLC), Multi-Purpose Check Connector
26	-	
27	Fuel consumption signal output	Trip computer
28	Ignition switch signal input	Ignition Switch
29	VGT Control Solenoid Valve control output	VGT Control Solenoid Valve
30	Sensor ground	Accelerator Position Sensor (APS) #1
31	Accelerator Position Sensor (APS) #2 signal input	Accelerator Position Sensor (APS) #2
32	-	
33	-	
34	-	

Pin	Description	Connected to
35	-	
36	-	
37	-	
38	Brake Switch "Lamp" signal input	Brake Switch
39	-	
40	Water Sensor siganl input	Water Sensor in Fuel Filter
41	-	
42	Blower Switch Signal input	Blower Switch
43	-	
44	-	
45	Reference voltage (+5V)	Accelerator Position Sensor (APS) #1
46	Reference voltage (+5V)	Accelerator Position Sensor (APS) #2
47	Immobilizer Communication Line	Immobilizer Control Module
48	Engine speed signal output	Tachometer (Cluster)
49	Cruise Control "SET" Lamp control output	Cruise Control "SET" Lamp (Cluster)
50	-	
51	-	
52	-	
53	-	
54	A/C Switch "ON" signal input	A/C Switch
55	-	
56	Thermo Switch signal input	A/C Switch
57	Gear Neutral Switch signal input (MT Only)	Gear Neutral Switch
58	-	
59	-	
60	-	
61	-	
62	-	
63	-	
64	-	
65	-	
66	-	
67	-	
68	Malfunction Indicator Lamp (MIL) control output	Malfunction Indicator Lamp (MIL)
69	Glow Time Indicator Lamp contorl output	Glow Time Indicator Lamp (Cluster)
70	A/C Compressor Relay control output	A/C Compressor Relay
71	Cooling Fan Relay [LOW] control output	Cooling Fan Relay
72	Main Relay control output	Main Relay
73	-	

Pin	Description	Connected to
74	-	
75	Vehicle speed signal input	Vehicle Speed Sensor (VSS)
76	-	
77	Feedback signal input	Throttle Control Actuator
78	-	
79	Clutch Switch signal input	Clutch Switch
80	Brake Switch "Redundant" signal input	Brake Switch
81	MT/AT auto reconition signal input	M/T: Open, A/T: Ground
82	-	
83	CAN [LOW]	Other Control Modules
84	CAN [HIGH]	Other Control Modules
85	-	
86	-	
87	-	
88	-	
89	Intake Air Temperature Sensor (IATS) #1 signal input	Intake Air Temperature Sensor (IATS) #1 in MAFS
90	Throttle Control Actuator control output	Throttle Control Actuator
91	Cruise Control "MAIN" Lamp control output	Cruise Control "MAIN" Lamp (Cluster)
92	Immobilizer Lamp control output	Immobilizer Lamp (Cluster)
93	Glow Relay control output	Glow Relay
94	PTC Heater Relay control output	PTC Heater Relay

3. ECM TERMINAL INPUT/OUTPUT SIGNAL

CONNECTOR [C230-A]

Pin	Description	Type	Vehicle State	Level
1	Injector (Cylinder #3) [HIGH] control output	Idle	Pulse	B+ ~ 80V
2	Injector (Cylinder #2) [HIGH] control output	Idle	Pulse	B+ ~ 80V
3	-	-	-	-
4	Battery power	Idle	DC	Vbatt
5	-	-	-	-
6	Sensor ground	Idle	DC	Max. 50mV
7	Sensor shield	Idle	DC	Max. 50mV
8	Sensor ground	Idle	DC	Max. 50mV
9	-	-	-	-
10	-	-	-	-
11	-	-	-	-
12	Crankshaft Position Sensor (CKPS) [-] signal input	Idle	Sine Wave	Vp_p : Min.1.0V
13	Reference voltage (+5V)	IG OFF	DC	Max. 0.5V
		IG ON		4.9 ~ 5.1V
14	-	-	-	-
15	-	-	-	-
16	Injector (Cylinder #1) [HIGH] control output	Idle	Pulse	Vbatt ~ 80V
17	Injector (Cylinder #4) [HIGH] control output	Idle	Pulse	Vbatt ~ 80V
18	-	-	-	-
19	Battery power	IG OFF	DC	Max. 0.5 V
		IG ON		Vbatt
20	Sensor ground	Idle	DC	Max. 50 mV
21	-	-	-	-
22	-	-	-	-
23	Sensor ground	Idle	DC	Max. 50 mV
24	-	-	-	-
25	-	-	-	-
26	Reference voltage (+5V)	IG OFF	DC	Max. 0.5V
		IG ON		4.9 ~ 5.1V
27	Crankshaft Position Sensor (CKPS) [+] signal input	Idle	Sine Wave	Vp_p : Min.1.0V
28	Reference voltage (+5V)	IG OFF	DC	Max. 0.5V
		IG ON		4.9 ~ 5.1V
29	-	-	-	-
30	Motor [-] control output	Active	DC	Max.0.5V

Pin	Description	Type	Vehicle State	Level
31	Injector (Cylinder #2) [LOW] control output	Idle	Current	Peak Current : 19 ~ 21 A Hold Current : 11~ 13 A 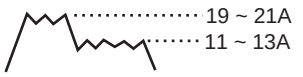 EFQG102A
32	-	-	-	-
33	Injector (Cylinder #4) [LOW] control output	Idle	Current	Peak Current : 19 ~ 21 A Hold Current : 11~ 13 A 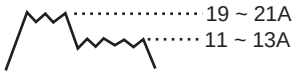 EFQG102A
34	Rail Pressure Regulator Valve control output	Idle	Current	Hi: Vbatt Lo: Max. 1.0V Frequency = 1kHz ± 2%
35	-	-	-	-
36	-	-	-	-
37	Reference frequency	Idle	Pulse	Hi: Vcc or Vbatt Lo: Max. 1.0V
38	-	-	-	-
39	-	-	-	-
40	Boost Pressure Sensor (BPS) signal input	IG ON	Analog	0.5 ~ 4.5V
41	Sensor ground	Idle	DC	Max. 50 mV
42	Mass Air Flow Sensor (MAFS) signal input	Idle	Pulse	Hi: Vcc or Vbatt Lo: Max. 1.0V
43	Rail Pressure Sensor (RPS) signal input	IG ON	Analog	Max. 1.0V
		Idle		1.0 ~ 1.5 V
		3000 RPM		1.5 ~ 3.0 V
44	Sensor ground	Idle	DC	Max. 50 mV
45	Fuel Pump Relay output	Relay OFF	DC	Vbatt
		Relay ON		Max. 1.0V
46	Injector (Cylinder #3) [LOW] control output	Idle	Current	Peak Current : 19 ~ 21 A Hold Current : 11~ 13 A 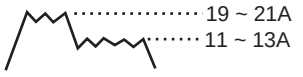 EFQG102A
47	Injector (Cylinder #1) [LOW] control output	Idle	Pulse	Peak Current : 19 ~ 21 A Hold Current : 11~ 13 A 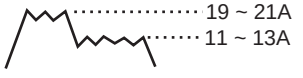 EFQG102A

Pin	Description	Type	Vehicle State	Level
48	-	-	-	-
49	Fuel Pressure Regulator Valve control output	Idle	Pulse	Hi: Vbatt Lo: Max. 1.0V
50	Camshaft Position Sensor (CMPS) signal input	Idle	Pulse	Hi: 4.8 ~ 12.0V Lo: Max. 1.0V
51	-	-	-	-
52	-	-	-	-
53	Intake Air Temperature Sensor (IATS) #2 signal input	Idle	Analog	0.5 ~ 4.5V
54	-	-	-	-
55	-	-	-	-
56	Position Sensor signal input	Idle	DC	0.5 ~ 4.5V
57	-	-	-	-
58	Engine Coolant Temperature Sensor (ECTS) signal input	Idle	Analog	0.5 ~ 4.5V
59	Electric EGR Control Valve control output	Idle	Pulse	Hi: Vbatt Lo: Max. 1.0V
60	Motor [+] control output	Active	Pulse	Hi: Vbatt Lo: Max. 1.0V

CONNECTOR [C230-K]

Pin	Description	Type	Vehicle State	Level
1	Batter voltage supply after main relay	IG OFF	DC	Max. 1.0 V
		IG ON		Vbatt
2	Power ground	Idle	DC	Max. 50 mV
3	Batter voltage supply after main relay	IG OFF	DC	Max. 1.0 V
		IG ON		Vbatt
4	Power ground	Idle	DC	Max. 50 mV
5	Batter voltage supply after main relay	IG OFF	DC	Max. 1.0 V
		IG ON		Vbatt
6	Power ground	Idle	DC	Max. 50 mV
7	Cooling Fan Relay [HIGH] control output	Relay OFF	DC	Vbatt
		Relay ON		Max. 1.0V
8	Sensor ground	Idle	DC	Max. 50 mV
9	Accelerator Position Sensor (APS) #1 signal input	C.T	Analog	0.3 ~ 0.9V
		W.O.T		4.0 ~ 4.8V
10	Sensor ground	Idle	DC	Max. 50 mV
11	Fuel Temperature Sensor (FTS) signal input	IG ON	Analog	0.5 ~ 4.5V
12	Ground	Idle	DC	Max. 50 mV
13	A/C Pressure Transducer signal input	A/C On	Analog	Max. 4.8V

Pin	Description	Type	Vehicle State	Level
14	Ground	Idle	DC	Max. 50mV
15	Cruise Control "ACTIVATOR" signal input	-	-	-
16	Ground	Idle	DC	Max. 50 mV
17	-	-	-	-
18	-	-	-	-
19	ESP Auto Recognition signal input	With ESP	DC	Max. 0.5V
		Without ESP		Vbatt
20	-	-	-	-
21	-	-	-	-
22	Reference voltage (+5V)	IG OFF	DC	Max. 0.5V
		IG ON		4.9 ~ 5.1V
23	-	-	-	-
24	Reference voltage (+5V)	IG OFF	DC	Max. 0.5V
		IG ON		4.9 ~ 5.1V
25	Diagnosis K-Line	When transmitting	Pulse	Hi: Min. Vbatt×80% Lo: Max. Vbatt×20%
		When receiving		Hi: Min. Vbatt×70% Lo: Max. Vbatt×30%
26	-	-	-	-
27	Fuel consumption signal output	Idle	Pulse	Hi: Vbatt or Vcc Lo: Max. 0.5V
28	Ignition switch signal input	IG OFF	DC	Max. 1.0V
		IG ON		Vbatt
29	VGT Control Solenoid Valve control output	Idle	Pulse	Hi: Vbatt Lo: Max. 0.5V
30	Sensor ground	Idle	DC	Max. 50 mV
31	Accelerator Position Sensor (APS) #2 signal input	C.T	Analog	0.3 ~ 0.9V
		W.O.T		1.5 ~ 3.0V
32	-	-	-	-
33	-	-	-	-
34	-	-	-	-
35	-	-	-	-
36	-	-	-	-
37	-	-	-	-
38	Brake Switch "Lamp" signal input	Release	DC	Max. 0.5V
		Push		Vbatt
39	-	-	-	-
40	Water Sensor siganl input	Full of Water	Analog	Vbatt
		No Water		Max. 1V
41	-	-	-	-

Pin	Description	Type	Vehicle State	Level
42	Blower Switch Signal input	Blower Off	DC	Vbatt
		Blower On		Max. 2V
43	-	-	-	-
44	-	-	-	-
45	Reference voltage (+5V)	IG OFF	DC	Max. 0.5V
		IG ON		4.9 ~ 5.1V
46	Reference voltage (+5V)	IG OFF	DC	Max. 0.5V
		IG ON		4.9 ~ 5.1V
47	Immobilizer Communication Line	After IG ON when communicating	Pulse	Hi: Min. 8.5V
				Lo: Max. 3.5V
48	Engine speed signal output	Idle	Pulse	Hi: Vbatt Lo: Max. 5V Frequency : 50~60Hz
49	Cruise Control "SET" Lamp control output	-	-	-
50	-	-	-	-
51	-	-	-	-
52	-	-	-	-
53	-	-	-	-
54	A/C Switch "ON" signal input	A/C SW OFF	DC	Max. 1.0V
		A/C SW ON		Vbatt
55	-	-	-	-
56	Thermo Switch signal input	A/C OFF	DC	Max. 0.5V
		A/C ON		Vbatt
57	Gear Neutral Switch signal input (MT Only)	SW OFF (Neutral)	DC	Vbatt
		SW ON (1st)		Max. 0.5V
58	-	-	-	-
59	-	-	-	-
60	-	-	-	-
61	-	-	-	-
62	-	-	-	-
63	-	-	-	-
64	-	-	-	-
65	-	-	-	-
66	-	-	-	-
67	-	-	-	-
68	Malfunction Indicator Lamp (MIL) control output	Lamp OFF	DC	Vbatt
		Lamp ON		Max. 1.0V
69	Glow Time Indicator Lamp control output	Glow OFF	DC	Vbatt
		Glow ON		Max. 1.0V

Pin	Description	Type	Vehicle State	Level
70	A/C Compressor Relay control output	A/Con OFF	DC	Vbatt
		A/Con ON		Max. 1.0V
71	Cooling Fan Relay [LOW] control output	Relay OFF	DC	Vbatt
		Relay ON		Max. 1.0V
72	Main Relay control output	Relay OFF	DC	Vbatt
		Relay ON		Max. 1.0V
73	-			
74	-	-	-	-
75	Vehicle speed signal input	Vehicle Run	Pulse	Hi: Min. 5.0V Lo: Max. 1.0V
76	-	-	-	-
77	Feedback signal input	Normal	DC	Vbatt
		Abnormal		Max. 0.5V
78	-	-	-	-
79	Clutch Switch signal input	Release	DC	Max. 0.5V
		Push		Vbatt
80	Brake Switch "Redundant" signal input	Release	DC	Vbatt
		Push		Max. 0.5V
81	MT/AT auto reconition signal input	MT	DC	Vbatt
		AT		Max. 0.5V
82	-	-	-	-
83	CAN [LOW]	Recessive	Pulse	2.0 ~ 3.0 V
		Dominant		0.5 2.25 V
84	CAN [HIGH]	Recessive	Pulse	2.0 ~ 3.0 V
		Dominant		2.75 4.5 V
85	-	-	-	-
86	-	-	-	-
87	-	-	-	-
88	-	-	-	-
89	Intake Air Temperature Sensor (IATS) #1 signal input	Idle	Analog	0.5V ~ 4.5V
90	Throttle Control Actuator control output	Key On/Key Off	Pulse	Hi: Vbatt Lo: Max. 1V
91	Cruise Control "MAIN" Lamp control output	-	-	-
92	Immobilizer Lamp control output	Lamp OFF	DC	Vbatt
		Lamp ON		Max. 1.0V
93	Glow Relay control output	Relay OFF	DC	Vbatt
		Relay ON		Max. 1.0V

Pin	Description	Type	Vehicle State	Level
94	PTC Heater Relay control output	Relay OFF	DC	Vbatt
		Relay ON		Max. 1.0V

CIRCUIT DIAGRAM ED23E502

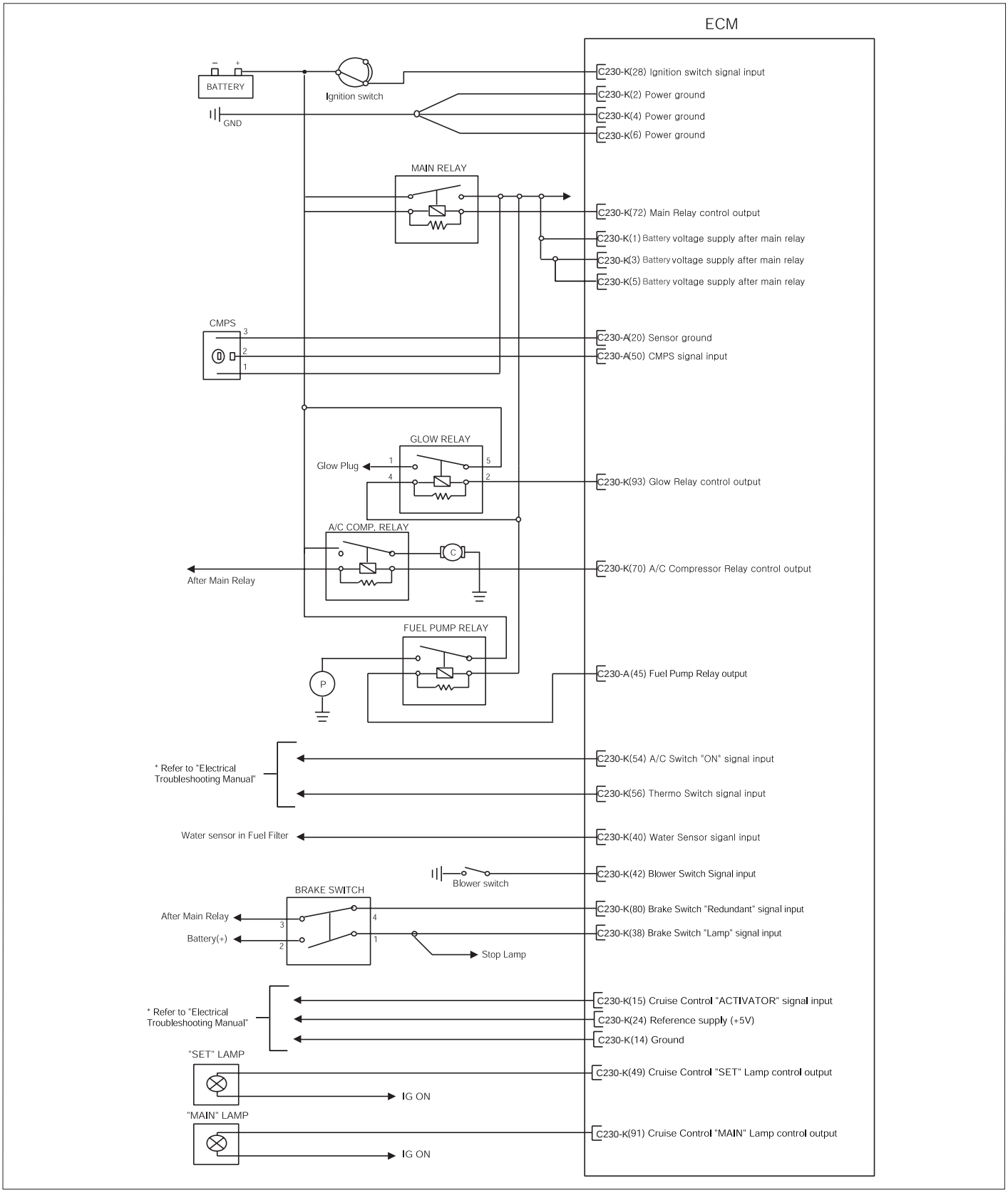

SCMFL6109L

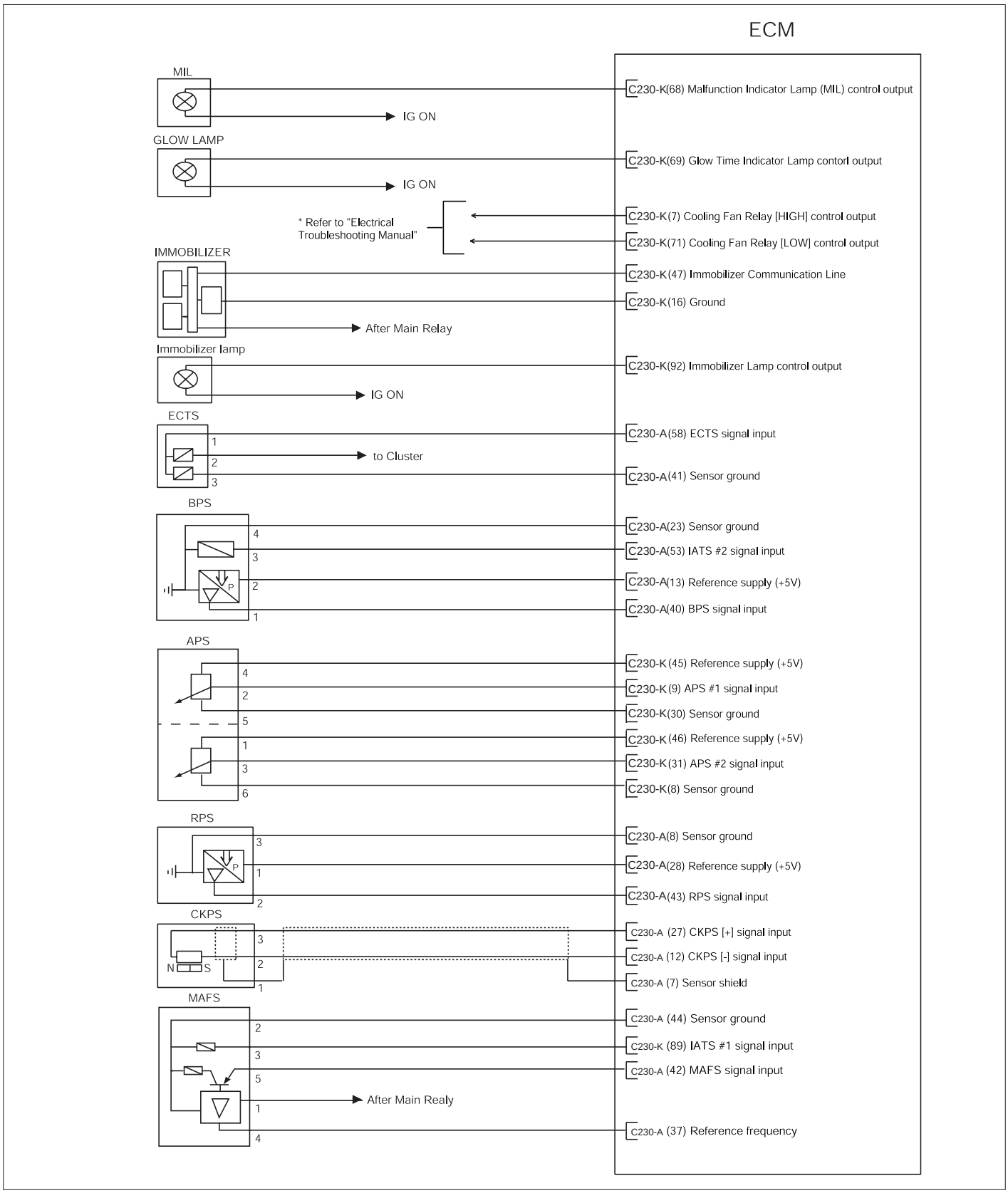
ECM
MIL
IG ON
C230-K(68) Malfunction Indicator Lamp (MIL) control output
GLOW LAMP
IG ON
C230-K(69) Glow Time Indicator Lamp contorl output
* Refer to "Electrical Troubleshooting Manual"
C230-K(7) Cooling Fan Relay [HIGH] control output
C230-K(71) Cooling Fan Relay [LOW] control output
IMMOBILIZER
C230-K(47) Immobilizer Communication Line
C230-K(16) Ground
After Main Relay
Immobilizer lamp
C230-K(92) Immobilizer Lamp control output
IG ON
ECTS
1
2
3
to Cluster
C230-A(58) ECTS signal input
C230-A(41) Sensor ground
BPS
4
3
2
1
P
C230-A(23) Sensor ground
C230-A(53) IATS #2 signal input
C230-A(13) Reference supply (+5V)
C230-A(40) BPS signal input
APS
4
2
5
1
3
6
C230-K(45) Reference supply (+5V)
C230-K(9) APS #1 signal input
C230-K(30) Sensor ground
C230-K(46) Reference supply (+5V)
C230-K(31) APS #2 signal input
C230-K(8) Sensor ground
RPS
3
1
2
P
C230-A(8) Sensor ground
C230-A(28) Reference supply (+5V)
C230-A(43) RPS signal input
CKPS
3
2
1
N
S
C230-A (27) CKPS [+] signal input
C230-A (12) CKPS [-] signal input
C230-A (7) Sensor shield
MAFS
2
3
5
1
4
After Main Realy
C230-A (44) Sensor ground
C230-K (89) IATS #1 signal input
C230-A (42) MAFS signal input
C230-A (37) Reference frequency

SCMFL6110L

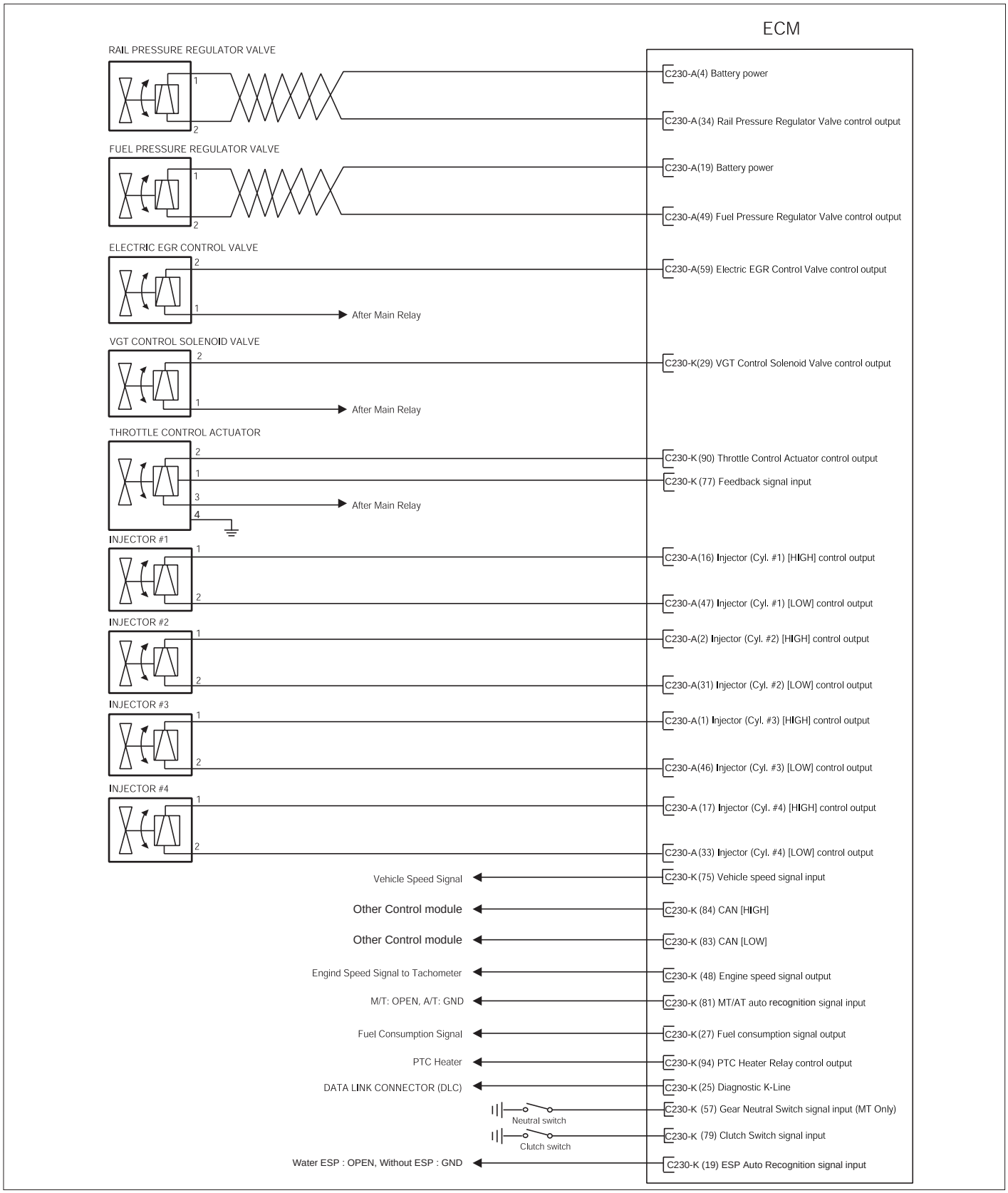
ECM
RAIL PRESSURE REGULATOR VALVE
C230-A(4) Battery power
C230-A(34) Rail Pressure Regulator Valve control output
FUEL PRESSURE REGULATOR VALVE
C230-A(19) Battery power
C230-A(49) Fuel Pressure Regulator Valve control output
ELECTRIC EGR CONTROL VALVE
C230-A(59) Electric EGR Control Valve control output
After Main Relay
VGT CONTROL SOLENOID VALVE
C230-K(29) VGT Control Solenoid Valve control output
After Main Relay
THROTTLE CONTROL ACTUATOR
C230-K (90) Throttle Control Actuator control output
C230-K (77) Feedback signal input
After Main Relay
INJECTOR #1
C230-A(16) Injector (Cyl. #1) [HIGH] control output
C230-A(47) Injector (Cyl. #1) [LOW] control output
INJECTOR #2
C230-A(2) Injector (Cyl. #2) [HIGH] control output
C230-A(31) Injector (Cyl. #2) [LOW] control output
INJECTOR #3
C230-A(1) Injector (Cyl. #3) [HIGH] control output
C230-A(46) Injector (Cyl. #3) [LOW] control output
INJECTOR #4
C230-A (17) Injector (Cyl. #4) [HIGH] control output
C230-A (33) Injector (Cyl. #4) [LOW] control output
Vehicle Speed Signal
C230-K (75) Vehicle speed signal input
Other Control module
C230-K (84) CAN [HIGH]
Other Control module
C230-K (83) CAN [LOW]
Engind Speed Signal to Tachometer
C230-K (48) Engine speed signal output
M/T: OPEN, A/T: GND
C230-K (81) MT/AT auto recognition signal input
Fuel Consumption Signal
C230-K (27) Fuel consumption signal output
PTC Heater
C230-K (94) PTC Heater Relay control output
DATA LINK CONNECTOR (DLC)
C230-K (25) Diagnostic K-Line
Neutral switch
C230-K (57) Gear Neutral Switch signal input (MT Only)
Clutch switch
C230-K (79) Clutch Switch signal input
Water ESP : OPEN, Without ESP : GND
C230-K (19) ESP Auto Recognition signal input

SCMFL6111L

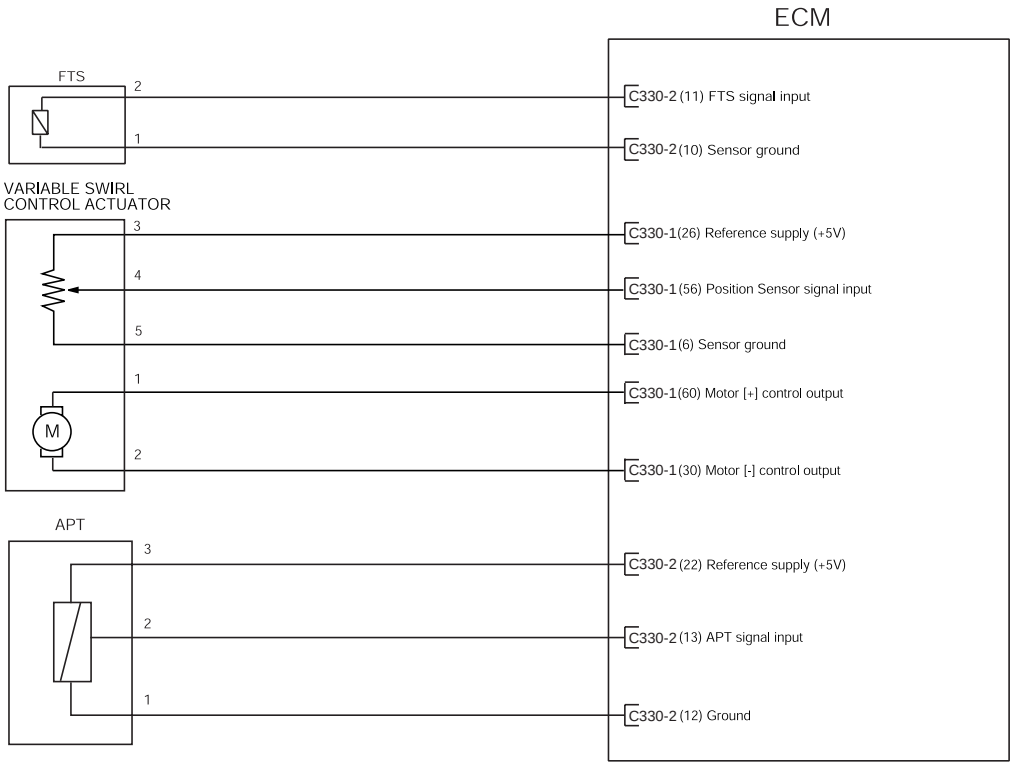
ECM
FTS
2
1
C330-2 (11) FTS signal input
C330-2 (10) Sensor ground
VARIABLE SWIRL
CONTROL ACTUATOR
3
4
5
1
2
M
C330-1 (26) Reference supply (+5V)
C330-1 (56) Position Sensor signal input
C330-1 (6) Sensor ground
C330-1 (60) Motor [+] control output
C330-1 (30) Motor [-] control output
APT
3
2
1
C330-2 (22) Reference supply (+5V)
C330-2 (13) APT signal input
C330-2 (12) Ground

SCMFL6112L

ECM PROBLEM INSPECTION PROCEDURE EF6D6E39

1. TEST ECM GROUND CIRCUIT: Measure resistance between ECM and chassis ground using the backside of ECM harness connector as ECM side check point. If the problem is found, repair it.
2. TEST ECM CONNECTOR: Disconnect the ECM connector and visually check the ground terminals on ECM side and harness side for bent pins or poor contact contact pressure. If the problem is found, repair it.
3. If problem is not found in Step 1 and 2, the ECM could be faulty. If so, replace the ECM with a new one, and then check the vehicle again. If the vehicle operates normally then the problem was likely with the ECM.
4. RE-TEST THE ORIGINAL ECM : Install the original ECM (may be broken) into a known-good vehicle and check the vehicle. If the problem occurs again, replace the original ECM with a new one. If problem does not occur, this is intermittent problem (Refer to INTERMITTENT PROBLEM PROCEDURE in BASIC INSPECTION PROCEDURE)

REPLACEMENT E54D9658

CAUTION

After replacing an ECM, MUST input the injector data (7 digit) of each cylinder into a new ECM. In the case of the vehicle eguipped with immobilizer, perform "KEY TEACHING" procedure with injector data input. (Refer to "BE" group in this shop Manual)

1. Turn ignition switch OFF.
2. Remove the battery negative (-) cable from the battery.
3. Disconnect the ECM connector (A) and unfasten the mounting bolts under the instrument panel.

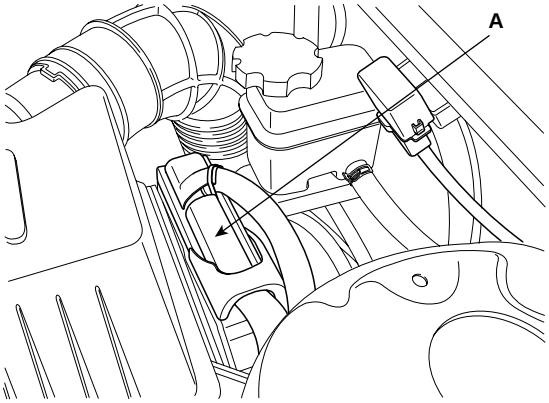

SCMFL6602D

4. Install a new ECM according to the reverse order of step 1, 2, and 3.

ECM mounting bolts/nuts : 0.8 ~ 1.2kgf·m (7.8 ~ 11.8 N·m, 5.8 ~ 8.6lbf·ft)

5. Connect a scan tool to Data Link Connector (DLC).
6. Connect the negative (-) battery cable.
7. Turn ignition switch on.

8. Proceed "INJECTOR SPECIFIC DATA" procedure.

1) Select "ENGINE (DIESEL)"



SCMFL6125L

2) Select "INJECTOR SPECFIC DATA".

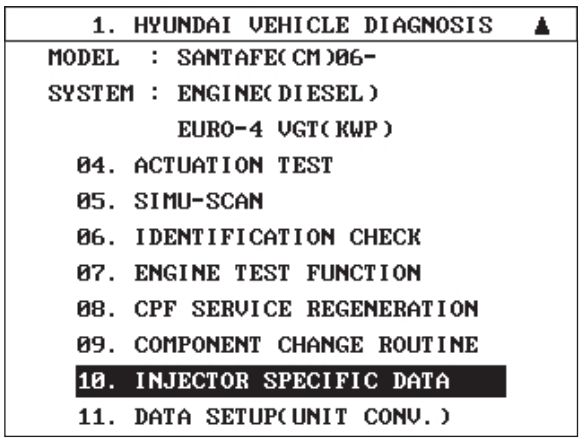

SCMFL6142L

3) Press "ENTER" key.

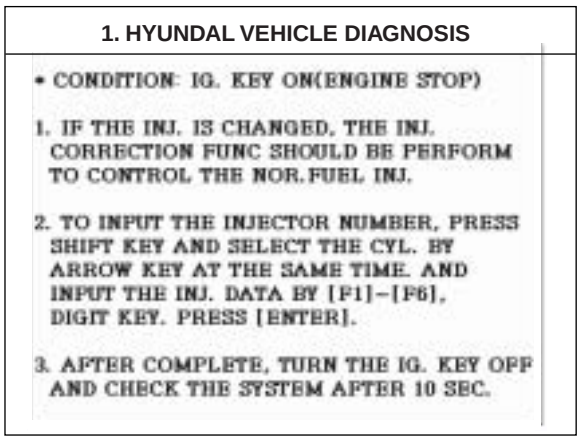

SCMFL6143L

4) Input the injector data (7 digit) written on the top of each injector with function keys ([F1] ~ [F6]) and number keys.

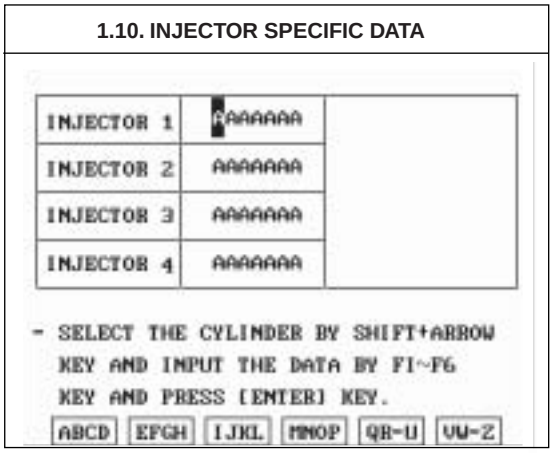

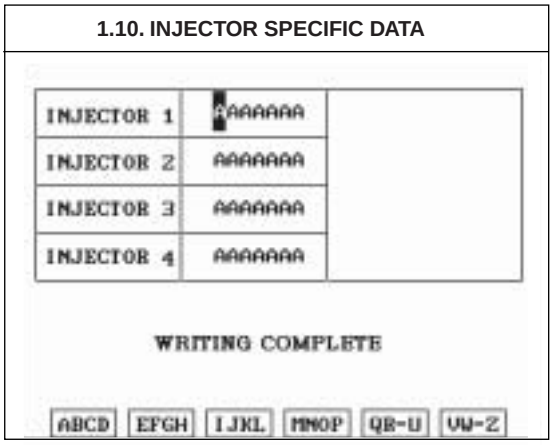

SCMFL6144L

9. Wait 10 seconds after displaying "WRITING COMPLETE", turn ignition switch OFF.

NOTE

When "WRITING FAIL" is displayed on the scan tool, input injector data (7 digits) of each cylinder into a new ECM again starting from 7th step.

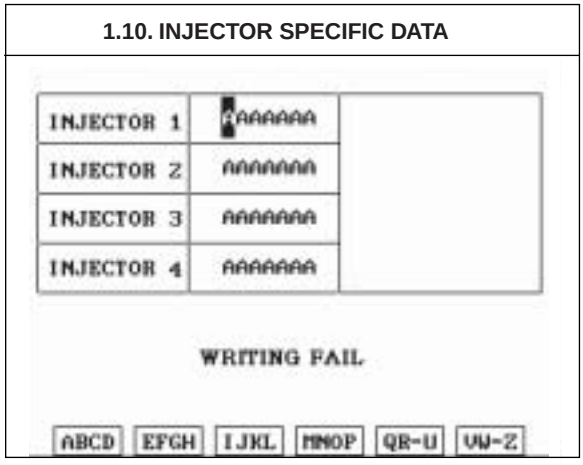

SCMFL6145L

MASS AIR FLOW SENSOR (MAFS)

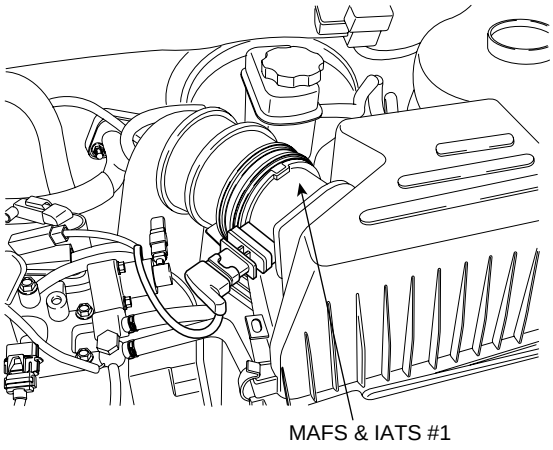

SCMFL6003D

INSPECTION E09E1CDA

FUNCTION AND OPERATION PRINCIPLE

MAFS uses a hot-film type sensing element to measure the mass of intake air entering the engine, and send the signal to ECM.
A large amount of intake air represents acceleration or high load conditions while a small amount of intake air represents deceleration or idle.
The ECM uses this information to control the EGR solenoid valve and correct the fuel amount.

SPECIFICATION

*At intake air temperature = 20℃(68˚F)

Air Flow (kg/h)	Frequency (kHz)
8	1.94 ~ 1.96
10	1.98 ~ 1.99
15	2.06 ~ 2.07
75	2.72 ~ 2.75
160	3.36 ~ 3.41
310	4.44 ~ 4.53
640	7.66 ~ 8.01
800	10.13 ~ 11.17

*At intake air temperature = -15℃(5˚F) or 80℃(176˚F)

Air Flow (kg/h)	Frequency (kHz)
10	1.97 ~ 1.99
75	2.71 ~ 2.76
160	3.34 ~ 3.43
310	4.39 ~ 4.58

EFQG034A

CIRCUIT DIAGRAM

[CIRCUIT DIAGRAM]

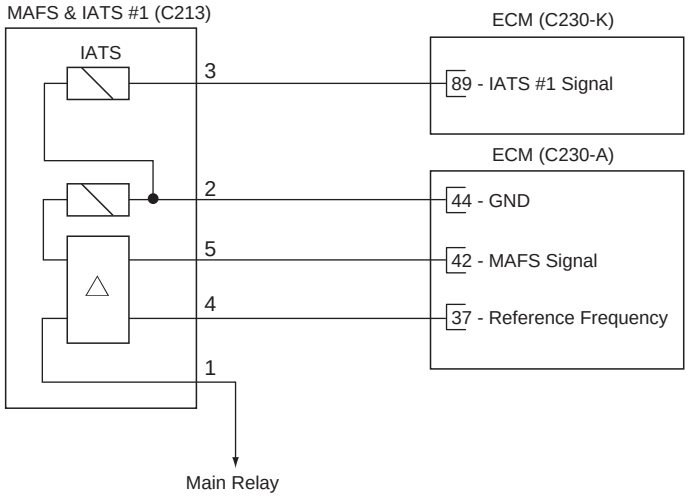

[CONNECTION INFORMATION]

Terminal	Connected to	Function
1	Main Relay	Battery Voltage (B+)
2	ECM C230-A (44)	Sensor Ground
3	ECM C230-K (89)	IATS #1 Signal
4	ECM C230-A (37)	Reference Frequency
5	ECM C230-A (42)	MAFS Signal

[HARNESS CONNECTORS]

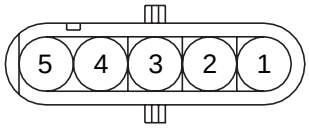

C213

MAFS & IATS #1

C230-A

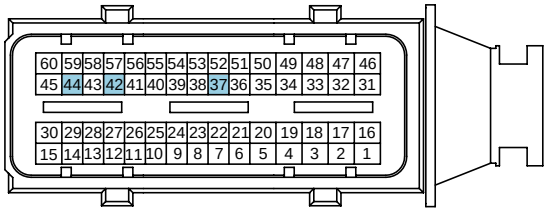

C230-K

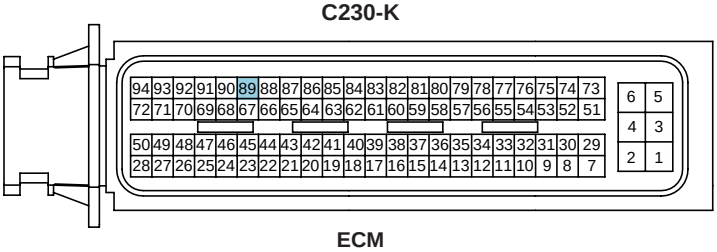

ECM

SCMFL6113L

SIGNAL WAVEFORM

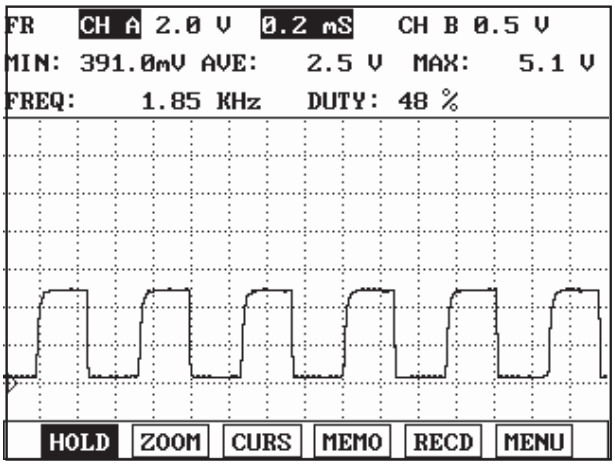

Fig.1

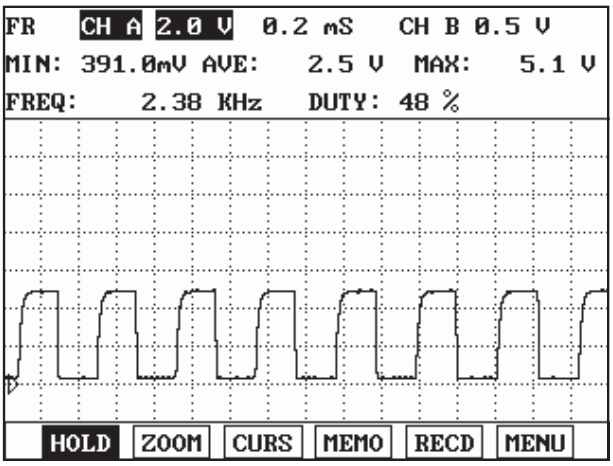

Fig.2

Fig.1) AFS signal waveform at IG KEY "ON". It shows digital signal of 50% duty, 1.8KHz.
Fig.2) AFS signal waveform at idle(790RPM, EGR actuator duty 5%, air flow for each cylinder 410mg/st). It shows digital signal of 50% duty, 2.2~2.7KHz.

EFQG222A

COMPONENT INSPECTION

1. Check the MAFS visually.
   - Mounting direction correct.
   - Any contamination, corrosion or damage on connector.
   - Air cleaner's clogging or wet.
   - MAFS cylinder's deforming or blocking by any foreign material.

2. Check any leakage on intake system and intercooler system.

REPLACEMENT EE06EA00

NOTE

After replacing a Mass Air Flow Sensor (MAFS) or Intake Air Temperature Sensor (IATS)#1, MUST proceed below procedure.

1. Turn ignition switch OFF.
2. Connect a scan tool to Data Link Connector (DLC).
3. Turn ignition switch ON.
4. Select "ENGINE (DIESEL)".

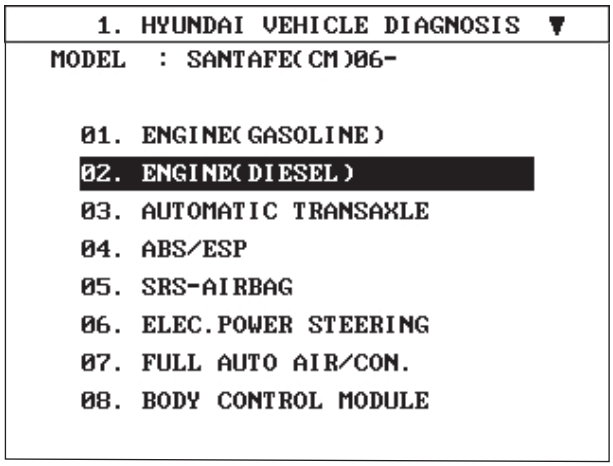

SCMFL6114L

5. Select "COMPONET CHANGE ROUTNE"

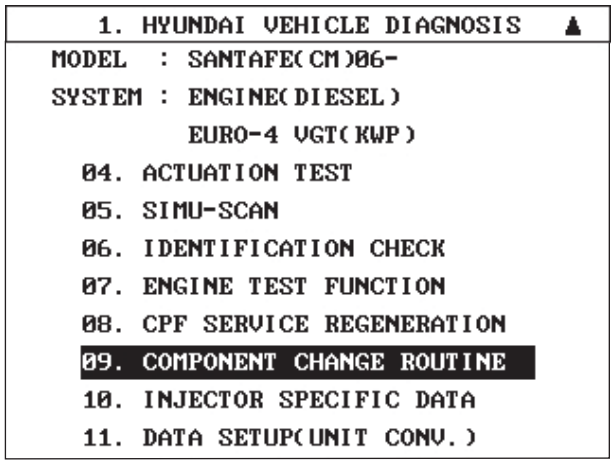

SCMFL6115L

6. Select "AIR FLOW SENSOR CHANGE".

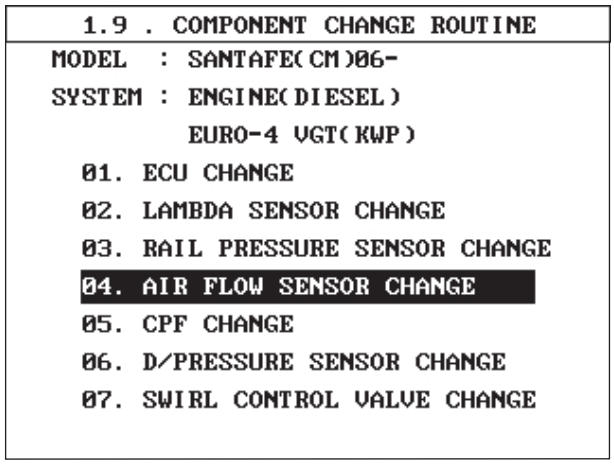

SCMFL6116L

7. Press "ENTER" key.

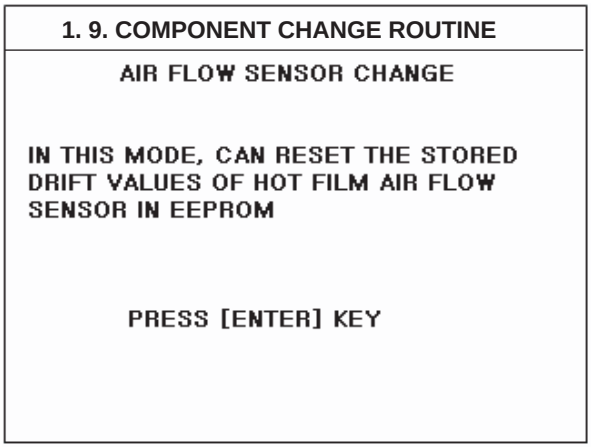

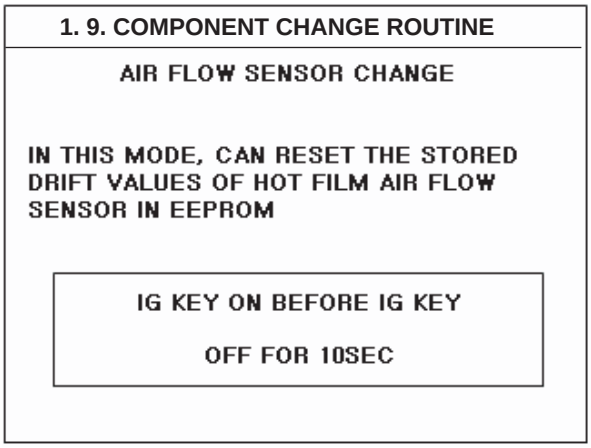

EFQG129A

8. Wait 10 seconds with IG ON.
9. Turn ignition switch off.

BOOST PRESSURE SENSOR (BPS)

INSPECTION E497534D

FUNCTION AND OPERATION PRINCIPLE

Boost pressure sensor (BPS) is installed on surge tank to measure the absolute intake manifold pressure. BPS input voltage is changed in proportion with absolute pressure in manifold. This information is used to control Variable Geometery Turbocharger (VGT) by ECM.

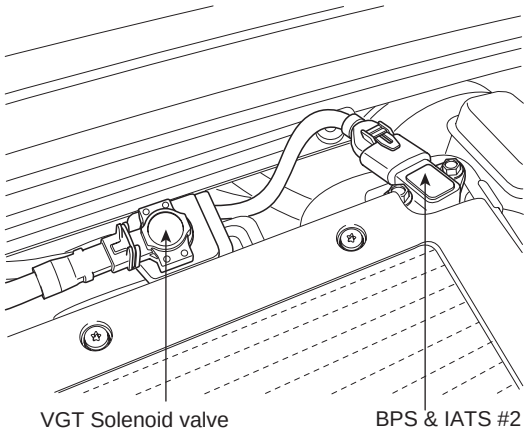

SCMFL6146L

SPECIFICATION

Pressure (kPa)	Output Voltage (V)
70	1.02 ~ 1.17
140	2.13 ~ 2.28
210	3.25 ~ 3.40
270	4.20 ~ 4.35

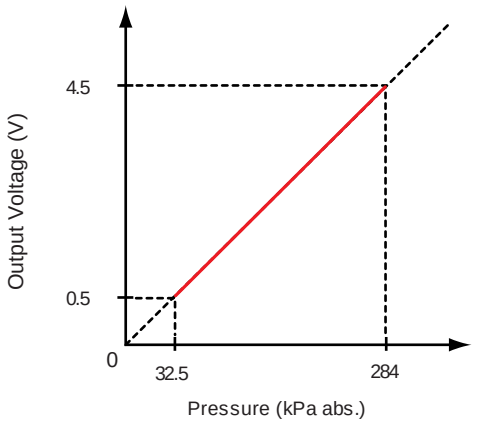

EFQG038A

[CIRCUIT DIAGRAM]

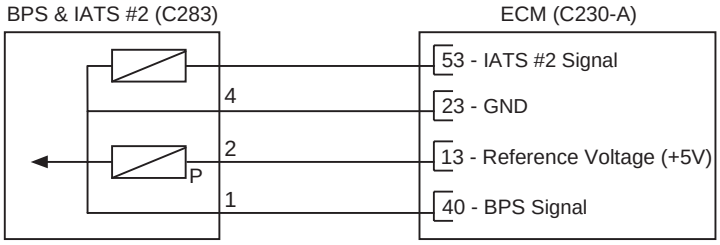

[CONNECTION INFORMATION]

Terminal	Connected to	Function
1	ECM C230-A (40)	BPS Signal
2	ECM C230-A (13)	Reference Voltage (+5V)
3	ECM C230-A (53)	IATS #2 Signal
4	ECM C230-A (23)	Sensor ground

[HARNESS CONNECTORS]

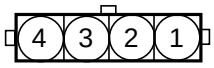

C283

BPS & IATS #2

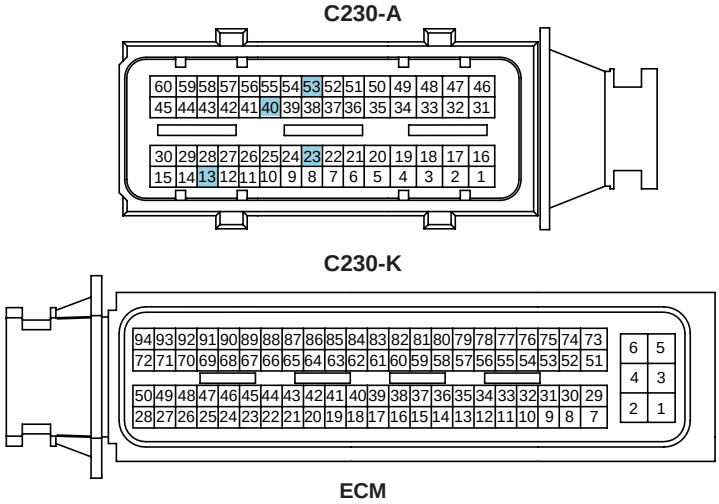

SCMFL6118L

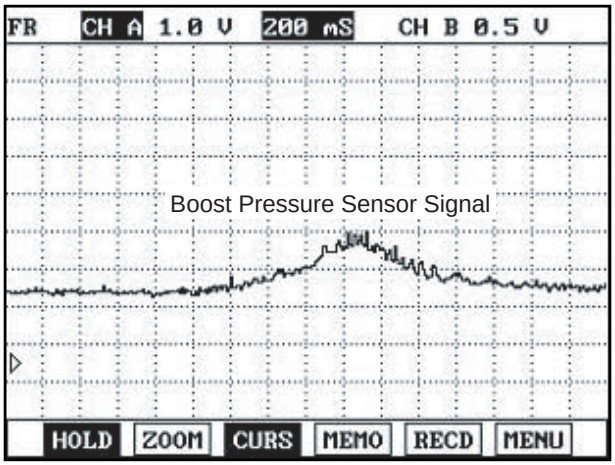

This illustration represents waveform of BPS when accelerating and decelerating.

EFQG040A

INTAKE AIR TEMPERATURE SENSOR (IATS)

INSPECTION E826298B

FUNCTION AND OPERATION PRINCIPLE

Intake Air Temperature Sensor (IATS) uses a Negative Temperature Characteristics (NTC) thermistor and senses intake air temperature. Two intake air temperature sensors are installed in this engine.

IATS #1 in Mass Air Flow Sensor (MAFS) and IATS #2 in Boost Pressure Sensor (BPS) are located in front of and behind turbo-charger respectively. IATS #1 senses air temperature entering turbo-charger and the other (IATS #2) does air temperature coming out from the turbo-charger.
Comparing these air temperature values from both sensors, more accurate sensing of intake air temperature is possible. ECM uses these air temperature signals to perform EGR control correction and fuel injection quantity correction.

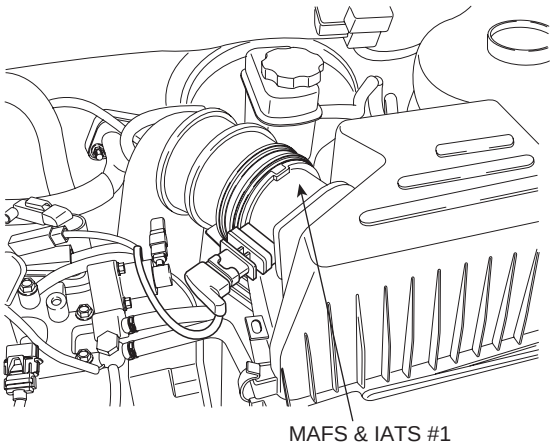

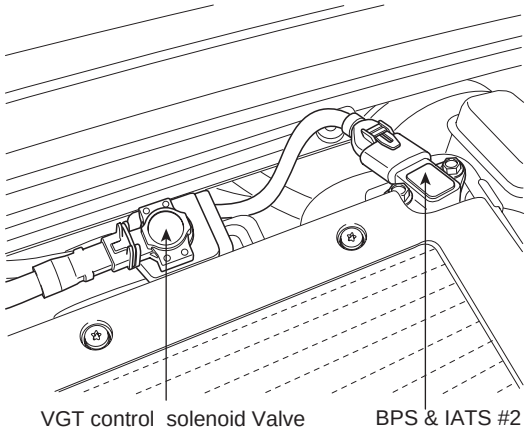

SCMFL6147L

SPECIFICATION

IATS #1 in MAFS

Temperature [℃(˚F)]	Resistance (kΩ)
-40(-40)	35.14 ~ 43.76
-20(-4)	12.66 ~ 15.12
0(32)	5.12 ~ 5.89
20(68)	2.29 ~ 2.55
40(104)	1.10 ~ 1.24
60(140)	0.57 ~ 0.65
80(176)	0.31 ~ 0.37

IATS #2 in BPS

Temperature [℃(˚F)]	Resistance (kΩ)
-40(-40)	40.93 ~ 48.35
-20(-4)	13.89 ~ 16.03
0(32)	5.38 ~ 6.09
20(68)	2.31 ~ 2.57
40(104)	1.08 ~ 1.21
60(140)	0.54 ~ 0.62
80(176)	0.29 ~ 0.34

EFQG042A

CIRCUIT DIAGRAM

[CIRCUIT DIAGRAM]

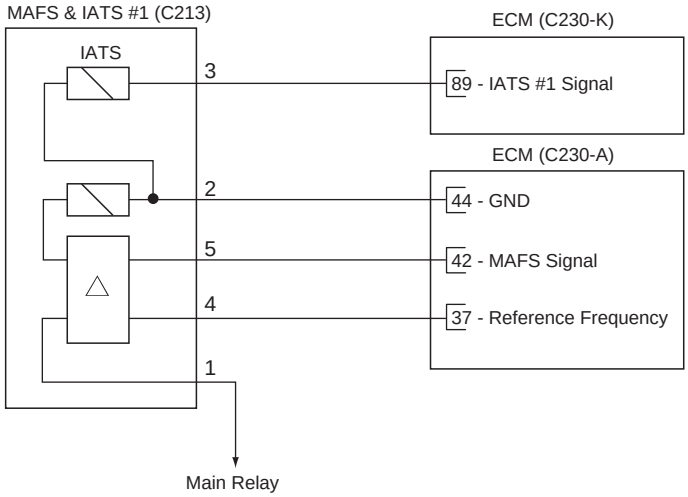

[CONNECTION INFORMATION]

Terminal	Connected to	Function
1	Main Relay	Battery Voltage (B+)
2	ECM C230-A (44)	Sensor Ground
3	ECM C230-K (89)	IATS #1 Signal
4	ECM C230-A (37)	Reference Frequency
5	ECM C230-A (42)	MAFS Signal

[HARNESS CONNECTORS]

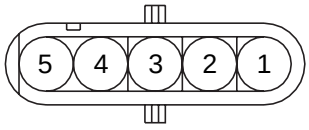

C213

MAFS & IATS #1

C230-A

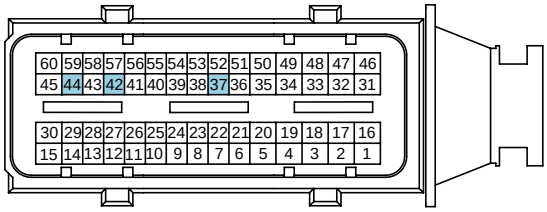

C230-K

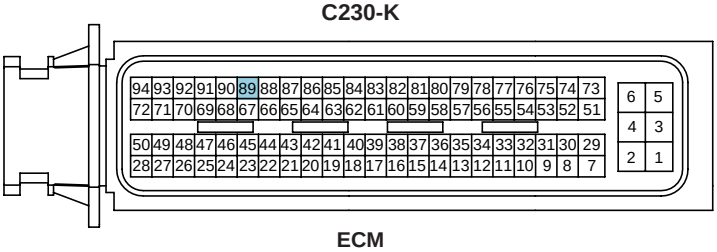

ECM

SCMFL6113L

[CIRCUIT DIAGRAM]

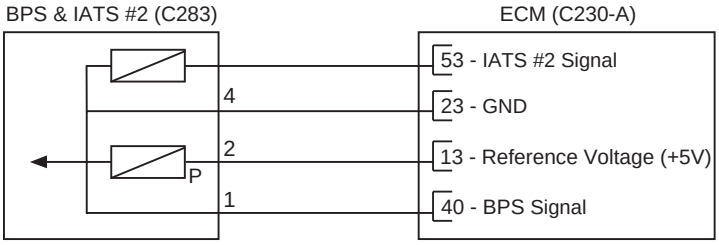

[CONNECTION INFORMATION]

Terminal	Connected to	Function
1	ECM C230-A (40)	BPS Signal
2	ECM C230-A (13)	Reference Voltage (+5V)
3	ECM C230-A (53)	IATS #2 Signal
4	ECM C230-A (23)	Sensor ground

[HARNESS CONNECTORS]

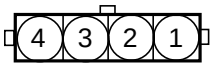

C283

BPS & IATS #2

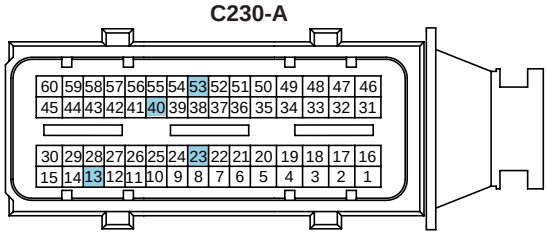

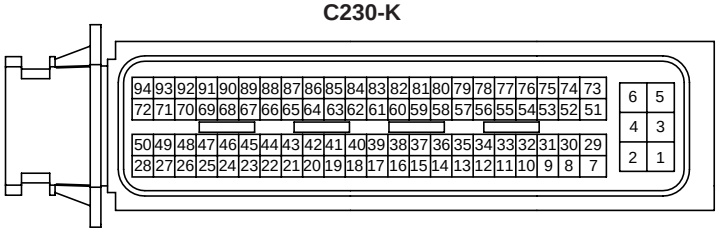

ECM

SCMFL6118L

SIGNAL WAVEFORM

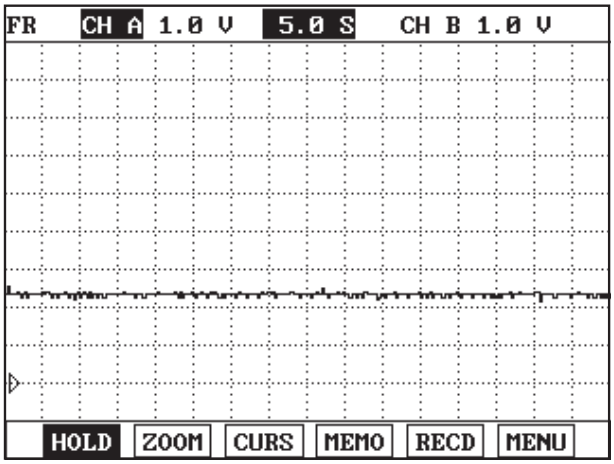

IATS signal should be smooth and continuous without any sudden changes.
After warmed-up, the IATS signal should not change significantly while ECTS signal drops.

EFQG043A

COMPONENT INSPECTION

1. Turn ignition switch OFF.
2. Disconnect the IATS #1 or the IATS #2 connector.
3. Measure resistance between IATS signal terminal and sensor ground terminal.
4. Check that the resistance is within the specification.

Specification: Refer to "SPECIFICATION".

REPLACEMENT EB9ACB19

NOTE

After replacing a Mass Air Flow Sensor (MAFS) or Intake Air Temperature Sensor (IATS)#1, MUST proceed below procedure.

1. Turn ignition switch OFF.
2. Connect a scan tool to Data Link Connector (DLC).
3. Turn ignition switch ON.
4. Select "ENGINE (DIESEL)".

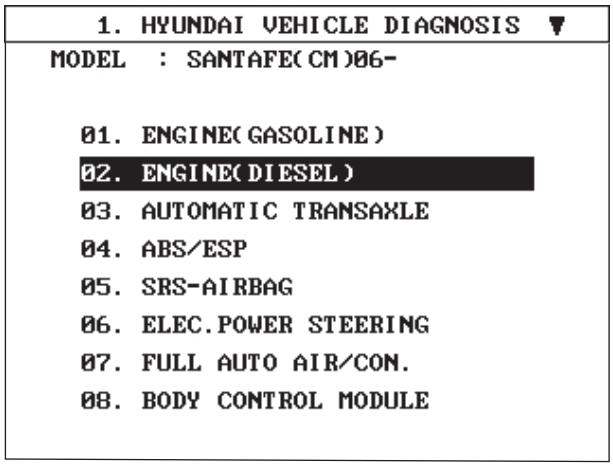

SCMFL6114L

5. Select "COMPONET CHANGE ROUTNE"

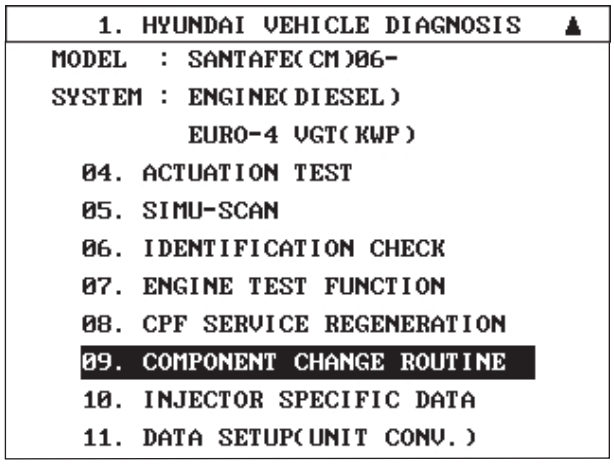

SCMFL6115L

6. Select "AIR FLOW SENSOR CHANGE".

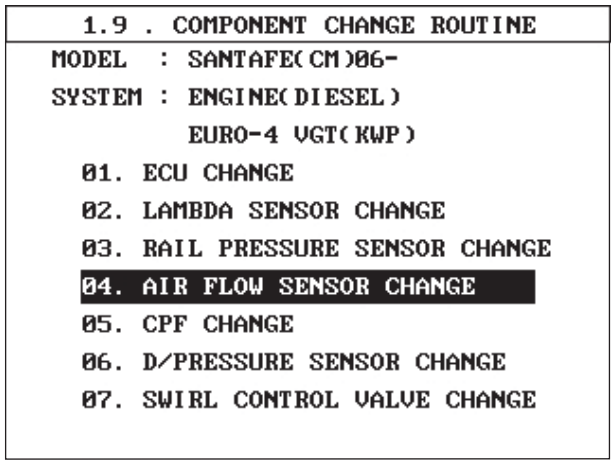

SCMFL6116L

7. Press "ENTER" key.

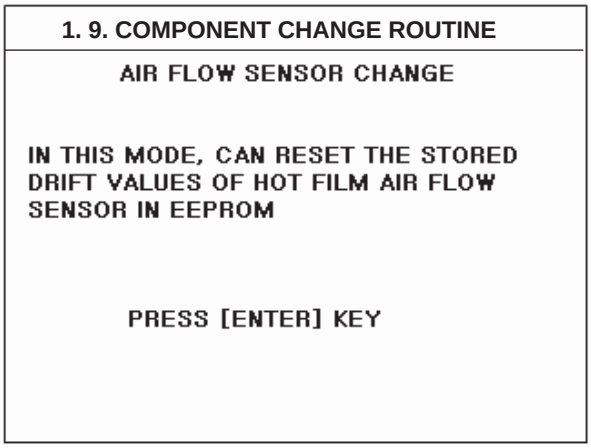

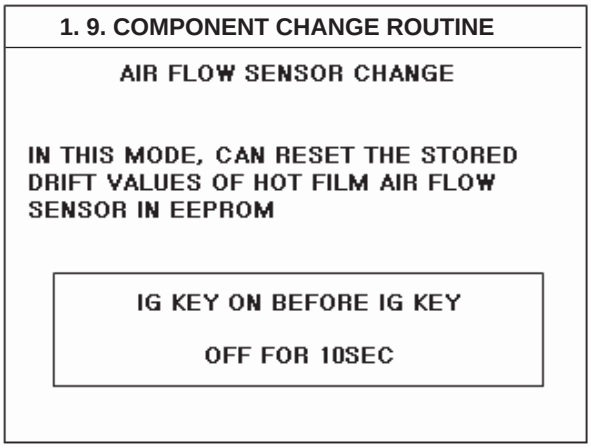

EFQG129A

8. Wait 10 seconds with IG ON.
9. Turn ignition switch off.

ENGINE COOLANT TEMPERATURE SENSOR (ECTS)

INSPECTION E1C34D15

FUNCTION AND OPERATION PRINCIPLE

Engine Coolant Temperature Sensor (ECTS) is located in the engine coolant passage of the cylinder head for detecting the engine coolant temperature. The ECTS uses a thermistor whose resistance changes with the temperature. The electrical resistance of the ECTS decreases as the temperature increases, and increases as the temperature decreases. The reference 5V in the ECM is supplied to the ECTS via a resistor in the ECM.
That is, the resistor in the ECM and the thermistor in the ECTS are connected in series. When the resistance value of the thermistor in the ECTS changes according to the engine coolant temperature, the output voltage also changes. During cold engine operation the ECM increases the fuel injection duration and controls the ignition timing using the information of engine coolant temperature to avoid engine stalling and improve drivability.

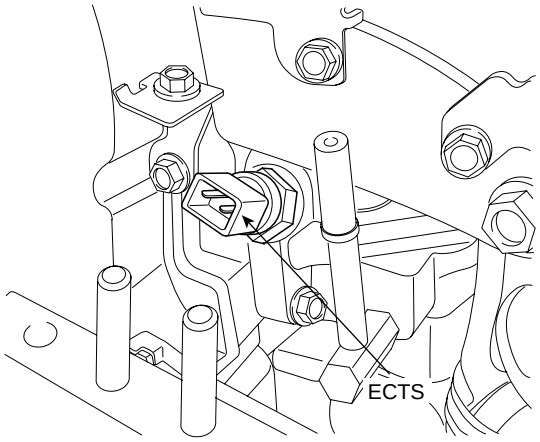

EFQG008A

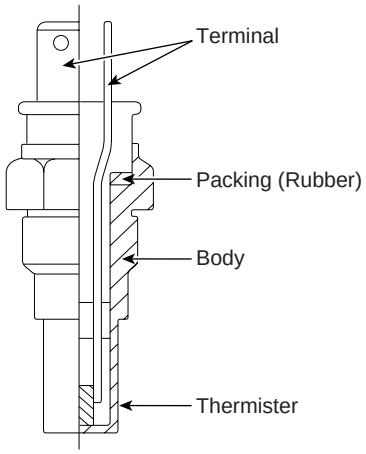

EGRF241A

SPECIFICATION

Temperature [℃(℉)]	Resistance(kΩ)
-40(-40)	48.14
-20(-4)	14.13 ~ 16.83
0(32)	5.79
20(68)	2.31 ~ 2.59
40(104)	1.15
60(140)	0.59
80(176)	0.32

CIRCUIT DIAGRAM

[CIRCUIT DIAGRAM]

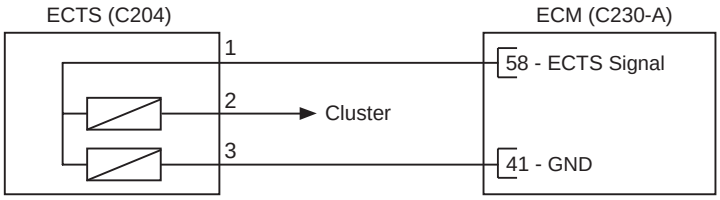

[CONNECTION INFORMATION]

Terminal	Connected to	Function
1	ECM C230-A (58)	ECTS Signal
2	Cluster	-
3	ECM C230-A (41)	Sensor ground

[HARNESS CONNECTORS]

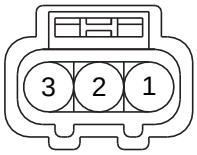

C204
ECTS

C230-A

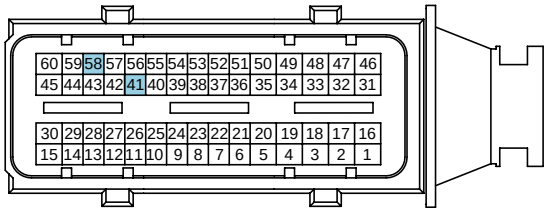

C230-K

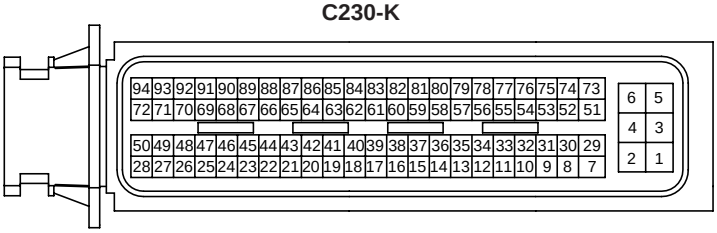

ECM

SCMFL6119L

COMPONENT INSPECTION

1. Turn ignition switch OFF.
2. Disconnect the engine coolant temperature sensor connector.
3. Remove the sensor.
4. After immersing the thermistor of the sensor into engine coolant, measure resistance between ECTS signal terminal and ground terminal.

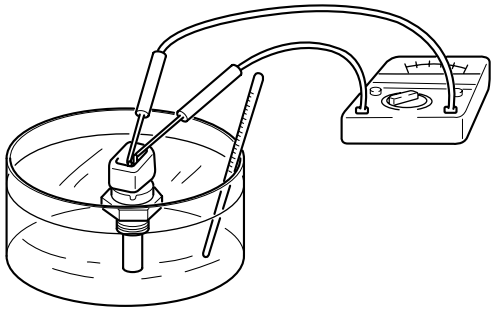

EFNF541A

5. Check that the resistance is within the specification.

Specification: Refer to "SPECIFICATION".

CAMSHAFT POSITION SENSOR (CMPS)

INSPECTION E9909235

FUNCTION AND OPERATION PRINCIPLE

Camshaft Position Sensor (CMPS) is a hall sensor and detects the camshaft position by using a hall element. It is related with Crankshaft Position Sensor (CKPS) and detects the piston position of the each cylinder which the CKPS can't detect. The two CMPS are installed on engine head cover and uses a target wheel installed on the camshaft. This sensor has a hall-effect IC which output voltage changes when magnetic field is made on the IC with current flow. So the sequential injection of the 4 cylinders is impossible without CMPS signal.

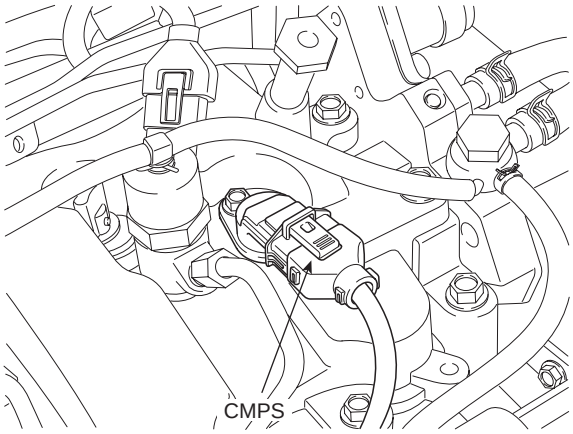

EFQG010A

SPECIFICATION

Level	Output Pulse (V)
High	5V
Low	0V

Items	Specification
Air Gap	1.0 ± 0.5 mm

CIRCUIT DIAGRAM

[CIRCUIT DIAGRAM]

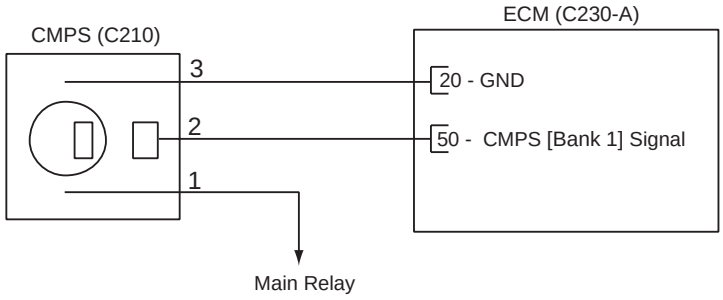

[CONNECTION INFORMATION]

Terminal	Connected to	Function
1	Main Relay	Battery Voltage
2	ECM C230-A (50)	CMPS Signal
3	ECM C230-A(20)	GND

[HARNESS CONNECTORS]



C210

CMPS

C230-A

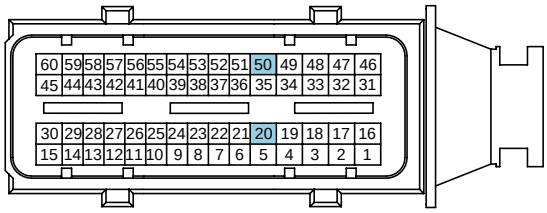

C230-K

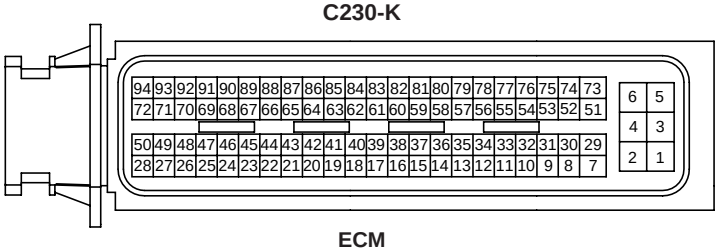

ECM

SCMFL6120L

SIGNAL WAVEFORM

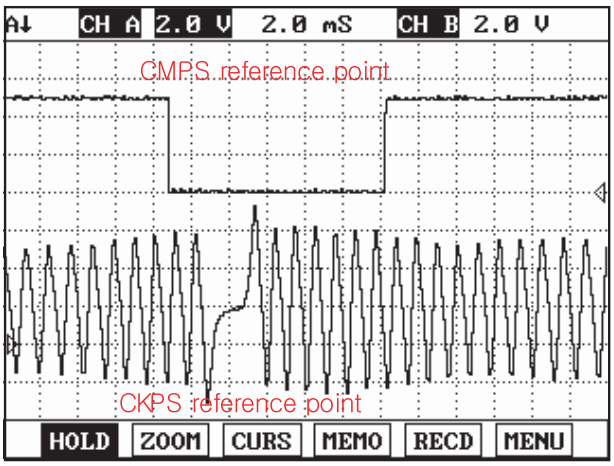

Fig.1

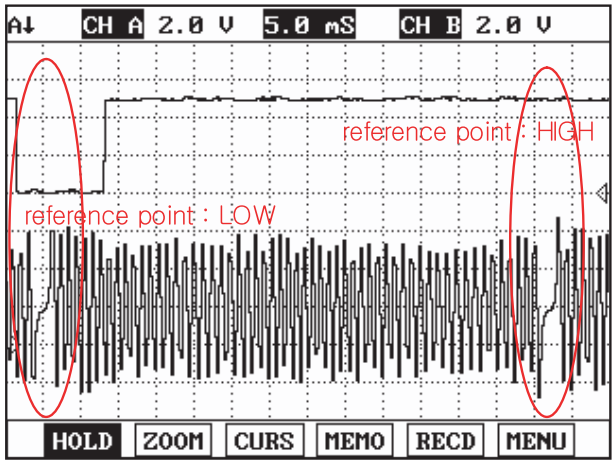

Fig.2

Fig.1) This shows waveform of Crank Shaft Position Sensor and Cam Shaft Position Sensor simulatneously. The middle area indicates reference points of Crank Shaft Position Sensor and Cam Shaft Position Sensor.

Fig.2) Crank Shaft Position Sensor and Cam Shaft Position Sensor signal are measured simultaneously.
Cam Shaft Position Sensor
signal is outputted once when Crank Shaft Position sensor signal is outputted twice. LOW and HIGH output of Cam Shaft Position sensor reference point is detected at Crank Shaft Position sensor reference point.
(Injection sequence is determined based on LOW and HIGH signal of Cam Shaft Position Sensor reference point as detecting cylinder position.)

EFQG299A

CRANKSHAFT POSITION SENSOR (CKPS)

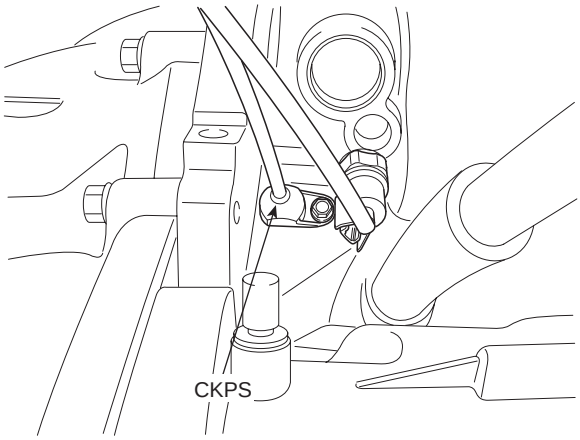

EFQG046A

INSPECTION E39BA5C3

FUNCTION AND OPERATION PRINCIPLE

Piston position on combustion chamber is the substantial to define the starting of injection timing. All engine pistons are connected to crankshaft by connecting rod. Sensor on crankshaft can supply the informations concerning all piston positions, revolution speed is defined by revolution perminute of crankshaft. Prior input variable is determined at ECM by using signal induced from crankshaft position sensor.

SPECIFICATION

Items	Specification
Coil Resistance (Ω)	774 ~ 946Ω [20℃(68°F)]

CIRCUIT DIAGRAM

[CIRCUIT DIAGRAM]

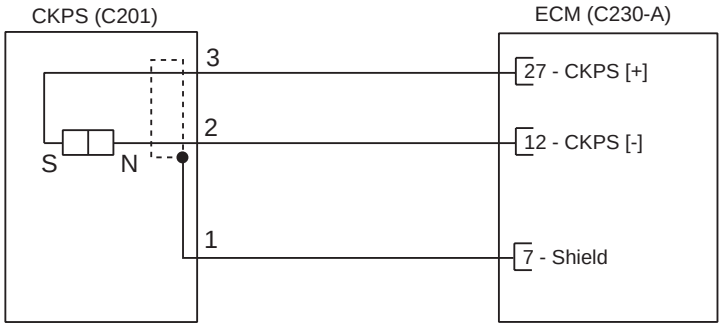

[CONNECTION INFORMATION]

Terminal	Connected to	Function
1	ECM C230-A (7)	Sensor Shield
2	ECM C230-A (12)	CKPS [-] Signal
3	ECM C230-A (27)	CKPS [+] Signal

[HARNESS CONNECTORS]



C201

CKPS

C230-A

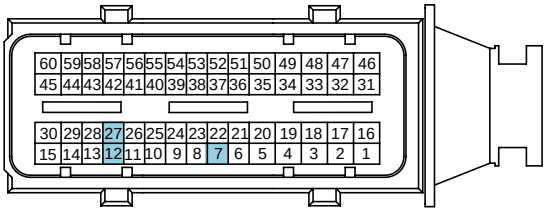

C230-K

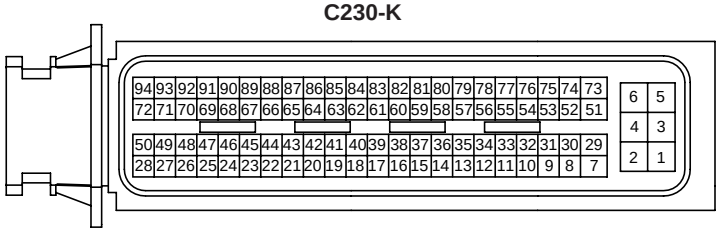

ECM

SCMFL6121L

SIGNAL WAVEFORM

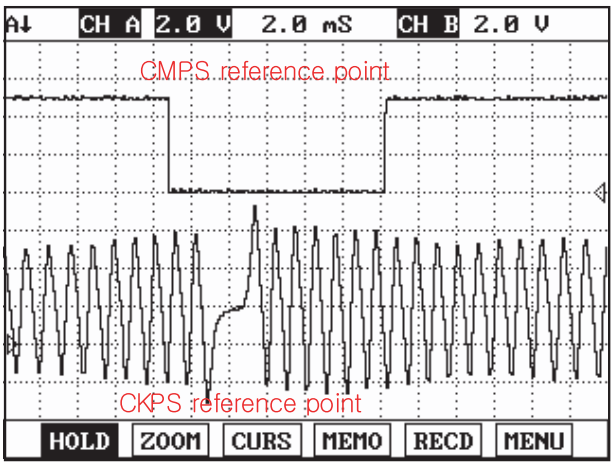

Fig.1

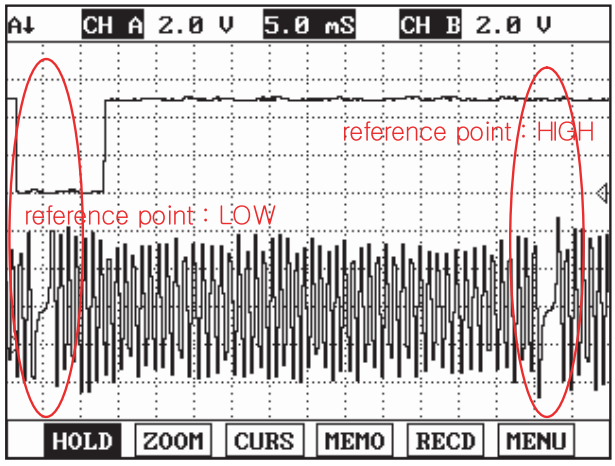

Fig.2

Fig.1) This shows waveform of Crank Shaft Position Sensor and Cam Shaft Position Sensor simulatneously. The middle area indicates reference points of Crank Shaft Position Sensor and Cam Shaft Position Sensor.

Fig.2) Crank Shaft Position Sensor and Cam Shaft Position Sensor signal are measured simultaneously.
Cam Shaft Position Sensor
signal is outputted once when Crank Shaft Position sensor signal is outputted twice. LOW and HIGH output of Cam Shaft Position sensor reference point is detected at Crank Shaft Position sensor reference point.
(Injection sequence is determined based on LOW and HIGH signal of Cam Shaft Position Sensor reference point as detecting cylinder position.)

EFQG299A

ACCELERATOR POSITION SENSOR (APS)

INSPECTION E66C7390

FUNCTION AND OPERATION PRINCIPLE

On electronic injection systems, there is no longer a load lever that mechanically controls the fuelling. The flow is caculated by the ECM depending on a number of parameters, including pedal position, which is measured using a potentiometer. The pedal sensor has two potentio-meters whoses slides are mechanically solid. The two potentiometers are supplied from distinct and different power sources so there is built in redundancy of information giving reliable driver's request information. A voltage is generated across the potentiometer in the acceleration position sensor as a function of the accelerator-pedal setting. Using a peogrammed characteristic curve, the pedal's position is then calculated from this voltage.

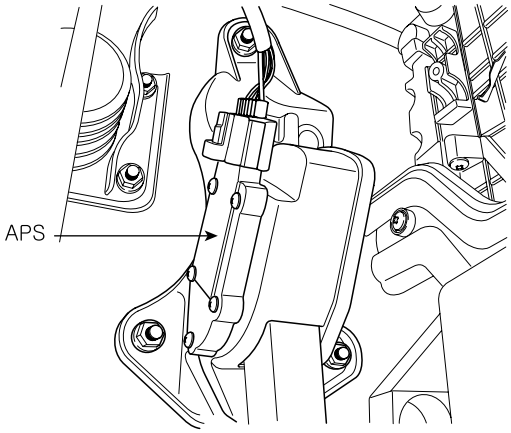

SCMFL6005D

SPECIFICATION

Test Condition	Output Voltage(V)	
	APS 1	APS 2
Idle	0.7 ~ 0.8	0.29 ~ 0.46
Fully depressed	3.85 ~ 4.35	1.93 ~ 2.18

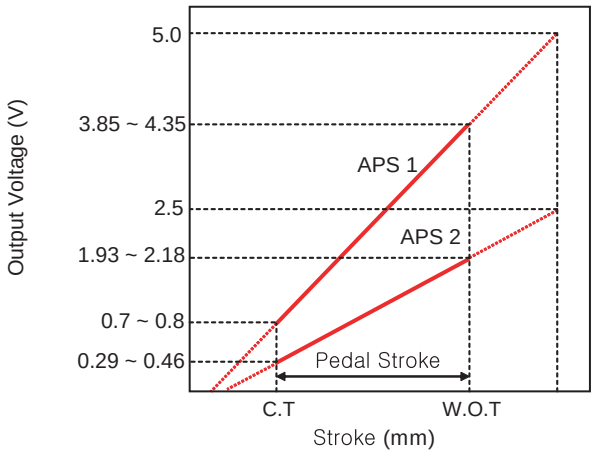

SCMFL6122L

CIRCUIT DIAGRAM

[CIRCUIT DIAGRAM]

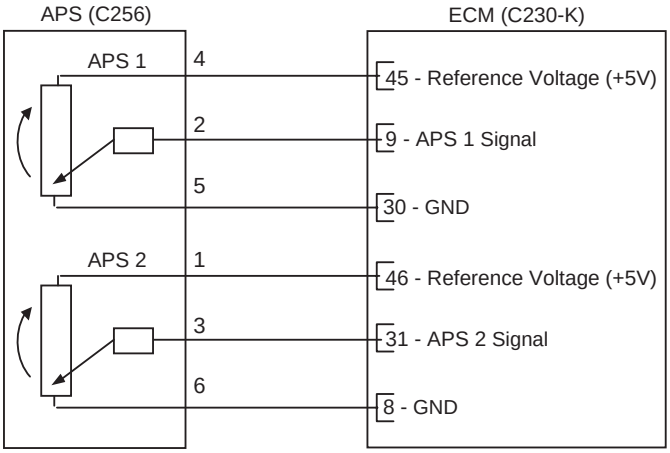

[CONNECTION INFORMATION]

Terminal	Connected to	Function
1	ECM C230-K (46)	APS 2 Reference Voltage (+5V)
2	ECM C230-K (9)	APS 1 Signal
3	ECM C230-K (31)	APS 2 Signal
4	ECM C230-K (45)	APS 1 Reference Voltage (+5V)
5	ECM C230-K (30)	APS 1 Ground
6	ECM C230-K (8)	APS 2 Ground

[HARNESS CONNECTORS]

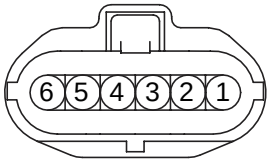

C256
APS

C230-A

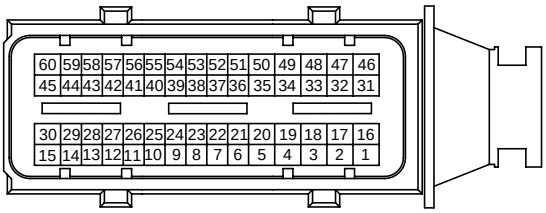

C230-K

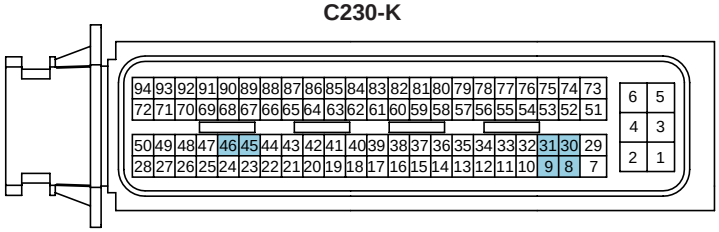

ECM

SCMFL6123L

SIGNAL WAVEFORM

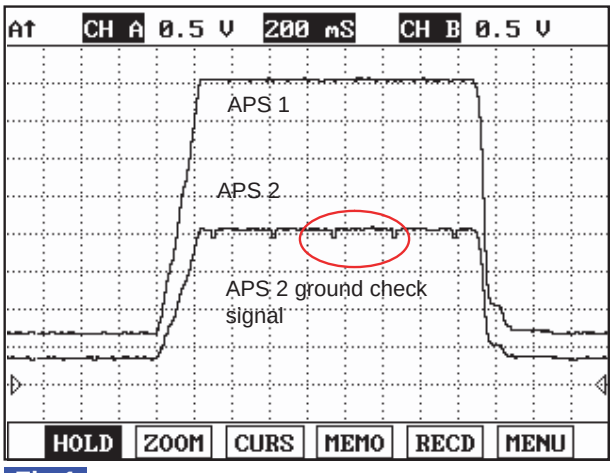

Fig.1

Fig.1) APS 1 and APS 2 signals are measured simultaneously, Check if output value is rising and APS 2 is 1/2 of APS 1 signal.

EFQG541A

RAIL PRESSURE SENSOR (RPS)

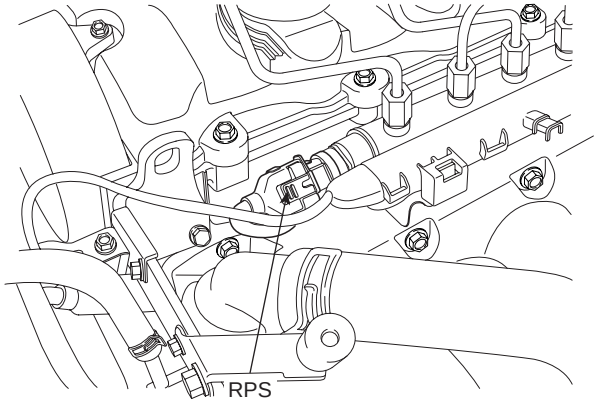

EFQG017A

INSPECTION E0734AD3

FUNCTION AND OPERATION PRINCIPLE

Rail Pressure Sensor (RPS) is installed at the end of the common rail and measures the instantaneous fuel pressure in the common rail by using its diaphragm. Its sensing element (semiconductor device) mounted on the diaphragm converts the fuel pressure to an electric signal.

SPECIFICATION

Test Condition	Rail pressure (bar)	Output Voltage (V)
Idle	220 ~ 320	Below 1.7
Fully depressed	About 1,800	Approx. 4.5

CIRCUIT DIAGRAM

[CIRCUIT DIAGRAM]

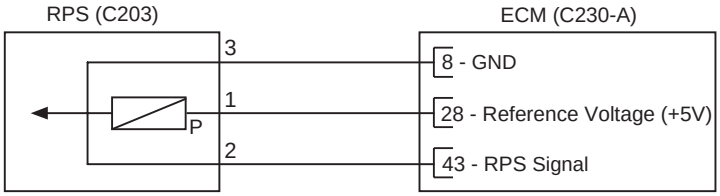

[CONNECTION INFORMATION]

Terminal	Connected to	Function
1	ECM C230-A (28)	Reference Voltage (+5V)
2	ECM C230-A (43)	RPS Signal
3	ECM C230-A (8)	Sensor Signal

[HARNESS CONNECTORS]



C203

RPS

C230-A

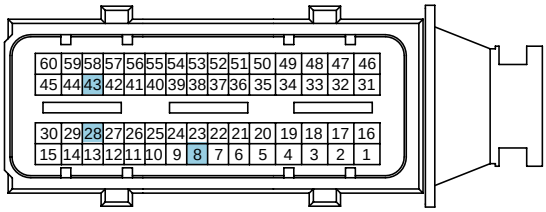

C230-K

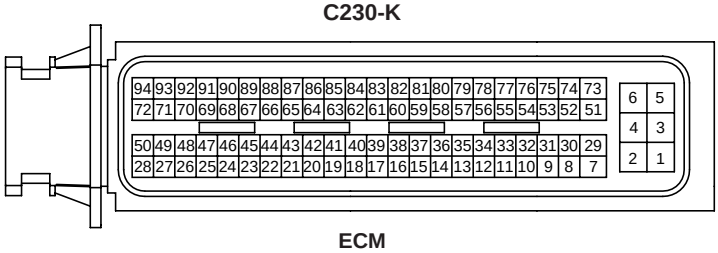

ECM

SCMFL6124L

SIGNAL WAVEFORM

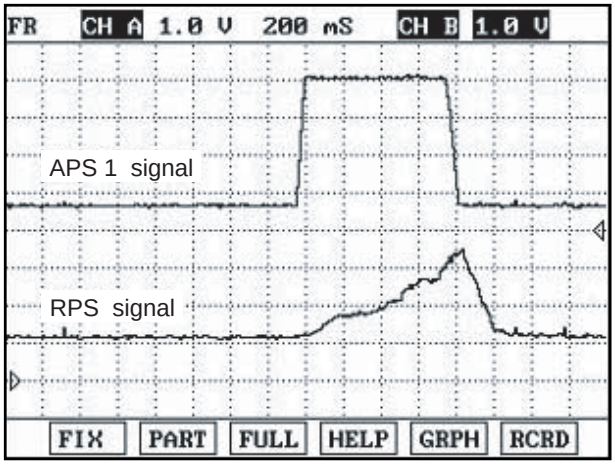

Rail Pressure Sensor (RPS) is to provide to the ECM the voltage signal corresponding to rail pressure.
The change in resistance is preportional to the rail pressure acting upon the diaphragm and rail pressure increases as load increases.

EFNF550A

REPLACEMENT E1CDDEAF

NOTE

After replacing a Rail Pressure Sensor (RPS), MUST proceed below procedure.

1. Turn ignition switch OFF.
2. Connect a scan tool to Data Link Connector (DLC).
3. Turn ignition switch ON.
4. Select "ENGINE (DIESEL)".

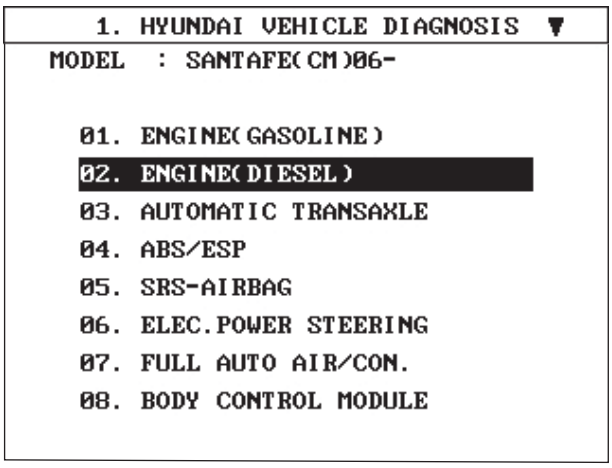

SCMFL6114L

5. Select "COMPONET CHANGE ROUTNE"

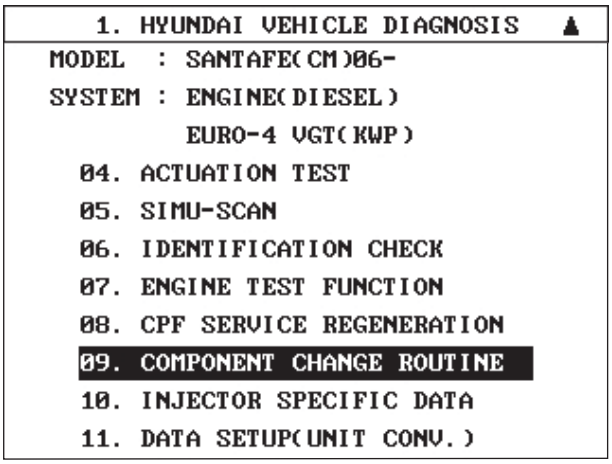

SCMFL6115L

6. Select "RAIL PRESSURE SENSOR CHANGE".

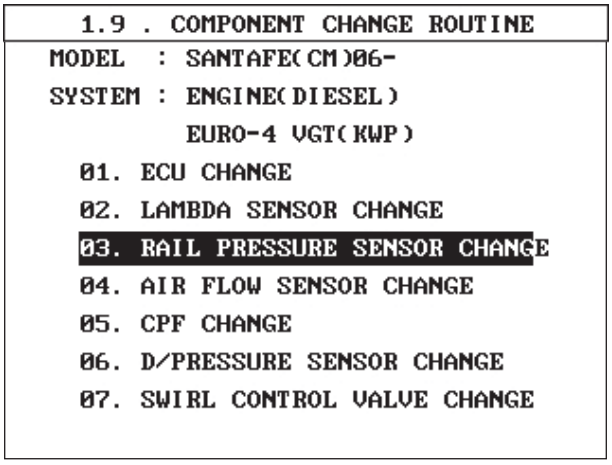

SCMFL6126L

7. Press "ENTER" key.

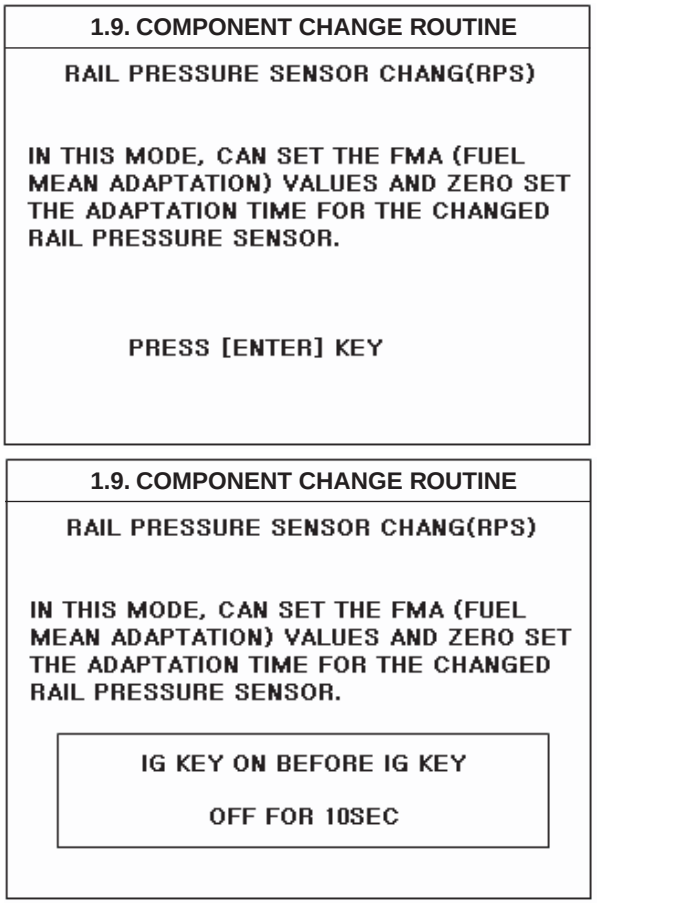

SCMFL6149L

8. Wait 10 seconds with IG ON.

9. Turn ignition switch off.

FUEL TEMPERATURE SENSOR (FTS)

INSPECTION E2D9DBE8

FUNCTION AND OPERATION PRINCIPLE

Fuel Temperature Sensor(FTS) is installed in fuel supplying line and senses the termperature of fuel supplied to high pressure pump. Fuel temperature is limmited to protect fuel such as high pressure pump and injectors from damages due to rapid deterioration by vapor-lock which can occur at high temperature or destruction of oil membrance.

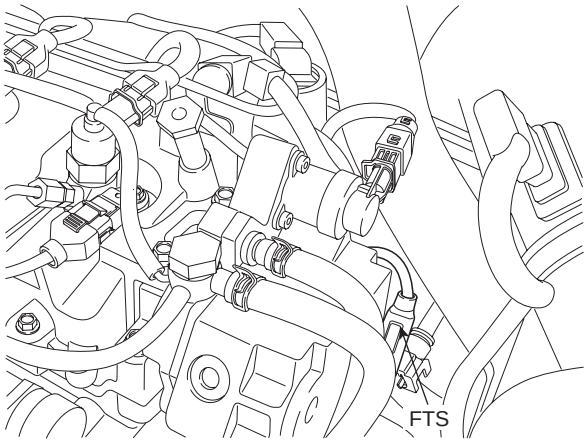

EFQG051A

SPECIFICATION

Temperature [℃(°F)]	Resistance (kΩ)
-30 (-22)	27.00
-20 (-4)	15.67
-10 (14)	9.45
0 (32)	5.89
20 (68)	2.27 ~ 2.73

Temperature [℃(°F)]	Resistance (kΩ)
40 (104)	1.17
50 (122)	0.83
60 (140)	0.60
70 (158)	0.43
80 (176)	0.30 ~ 0.32

EFQG052A

CIRCUIT DIAGRAM

[CIRCUIT DIAGRAM]

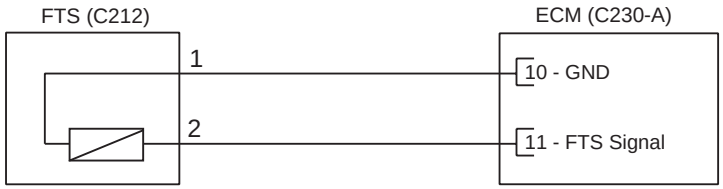

[CONNECTION INFORMATION]

Terminal	Connected to	Function
1	ECM C230-A (10)	Sensor ground
2	ECM C230-A (11)	FTS Signal

[HARNESS CONNECTORS]

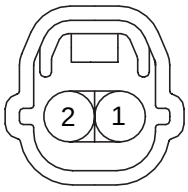

C212

FTS

C230-A

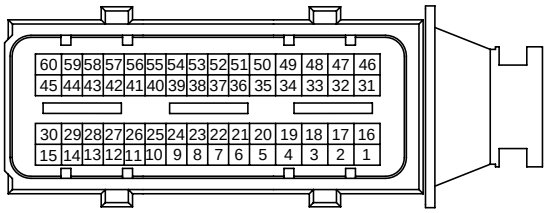

C230-K

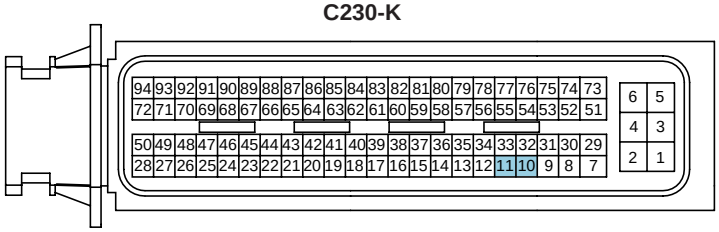

ECM

SCMFL6127L

SIGNAL WAVEFORM

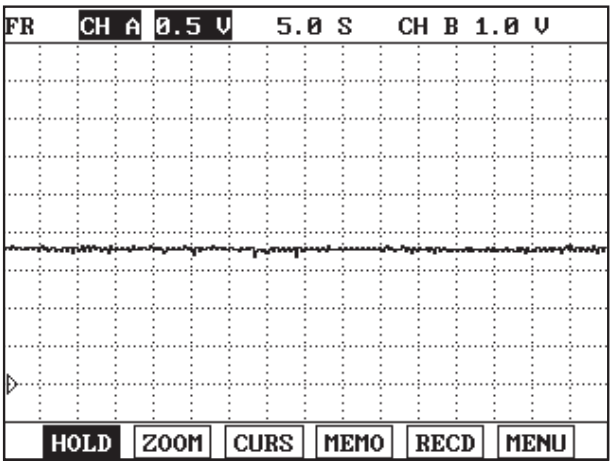

This illustration shows the waveform of fuel temperature sensor at 50℃.
The higher fuel temperature rises, the lower signal voltage becomes.

LGJF502I

COMPONENT INSPECTION

1. Turn ignition switch OFF.
2. Disconnect the fuel temperature sensor connector.
3. Measure resistance between sensor signal terminal and ground terminal.

Specification: Refer to "SPECIFICATION".

FUEL PRESSURE REGULATOR VALVE

INSPECTION E58A5218

FUNCTION AND OPERATION PRINCIPLE

The Fuel Pressure Regulator Valve and the Rail Pressure Regulator Valve are installed on high pressure pump and common rail respectively. These valves control fuel inlet (feed) from fuel tank via fuel filter and outlet (return) to fuel tank of high pressure fuel circuit.
This system is called "Dual Fuel Pressure Control System" and can precisely and quickly control the fuel pressure in accordance with various engine conditions by controlling the fuel inlet and outlet simultaneously.

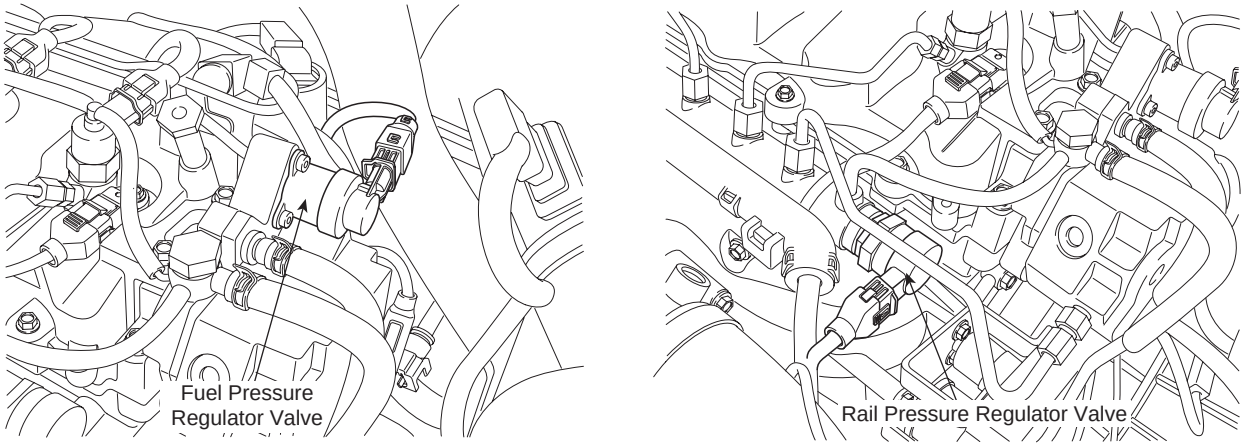

EFQG114A

SPECIFICATION

Items	Specification
Coil Resistance (Ω)	2.9 ~ 3.15Ω [20℃(68°F)]

CIRCUIT DIAGRAM

[CIRCUIT DIAGRAM]

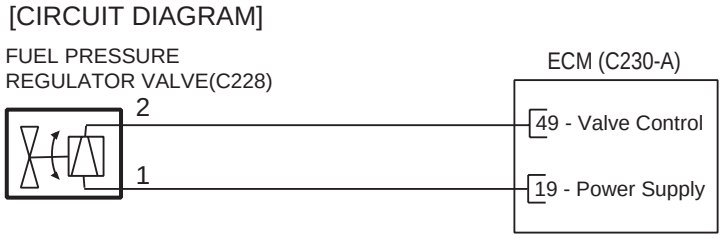

[CONNECTION INFORMATION]

Terminal	Connected to	Function
1	ECM C230-A (19)	Battery Voltage (B+)
2	ECM C230-A (49)	Valve Control

[HARNESS CONNECTORS]

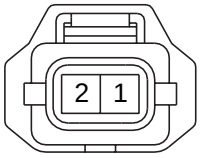

C228

FUEL PRESSURE REGULATOR VALVE

C230-A

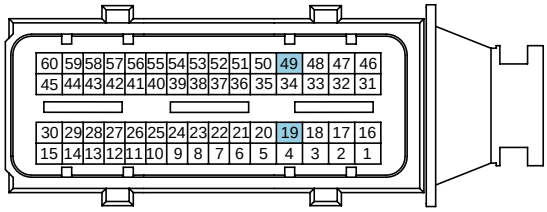

C230-K

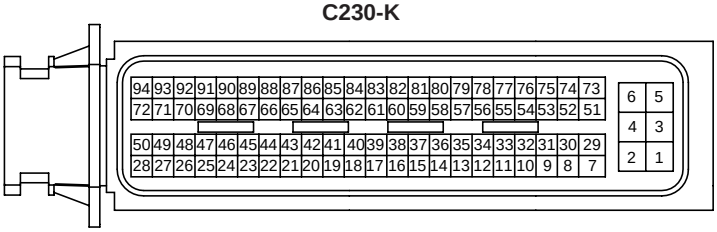

ECM

SCMFL6128L

SIGNAL WAVEFORM

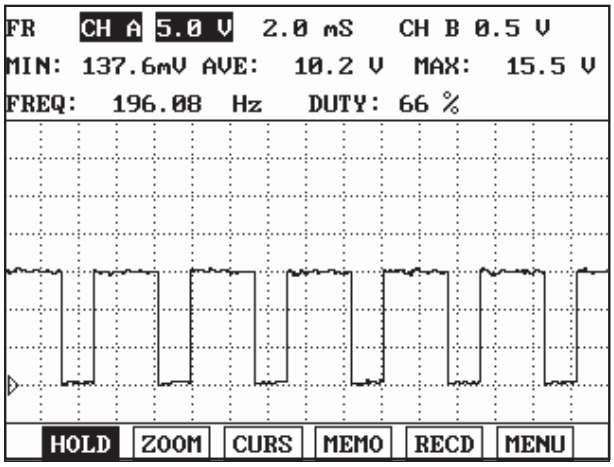

Fig.1

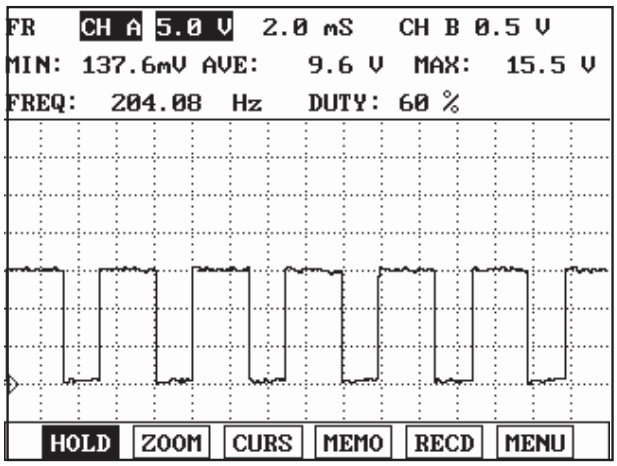

Fig.2

Fig.1) Waveform of fuel pressure regulator valve at idle. It shows approx. 34% duty((-)duty).
Fig.2) Waveform of fuel pressure regulator valve as accelerating. approx. 38% duty((-)duty) is outputted as engine load increases.

EFQG396A

COMPONENT INSPECTION

1. Turn ignition switch OFF.
2. Disconnect the fuel pressure regulator valve connector.
3. Measure resistance between terminal 1 and 2 of the valve.

Specification: Refer to "SPECIFICATION".

RAIL PRESSURE REGULATOR VALVE

INSPECTION EE7E3738

FUNCTION AND OPERATION PRINCIPLE

The Fuel Pressure Regulator Valve and the Rail Pressure Regulator Valve are installed on high pressure pump and common rail respectively. These valves control fuel inlet (feed) from fuel tank via fuel filter and outlet (return) to fuel tank of high pressure fuel circuit.
This system is called "Dual Fuel Pressure Control System" and can precisely and quickly control the fuel pressure in accordance with various engine conditions by controlling the fuel inlet and outlet simultaneously.

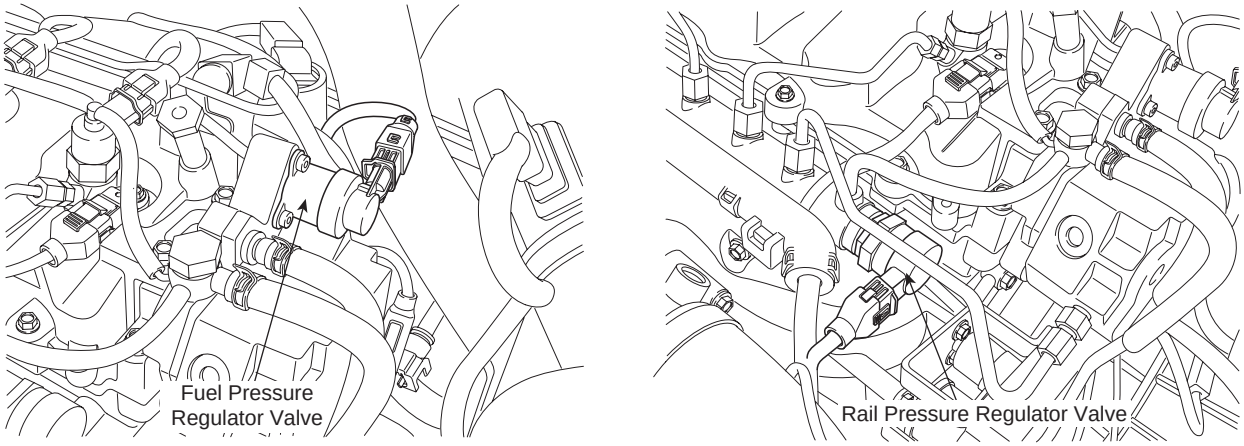

EFQG114A

SPECIFICATION

Items	Specification
Coil Resistance (Ω)	3.42 ~ 3.78Ω [20℃(68℉)]

CIRCUIT DIAGRAM

[CIRCUIT DIAGRAM]

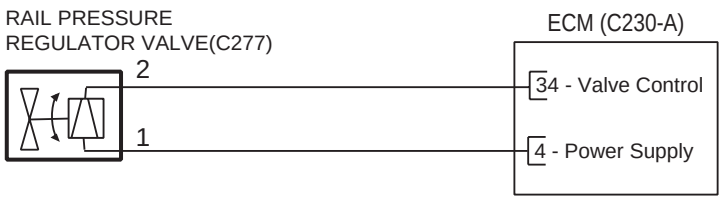

[CONNECTION INFORMATION]

Terminal	Connected to	Function
1	ECM C230-A (4)	Battery Voltage (B+)
2	ECM C230-A (34)	Valve Control

[HARNESS CONNECTORS]

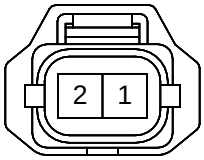

C277

RAIL PRESSURE REGULATOR VALVE

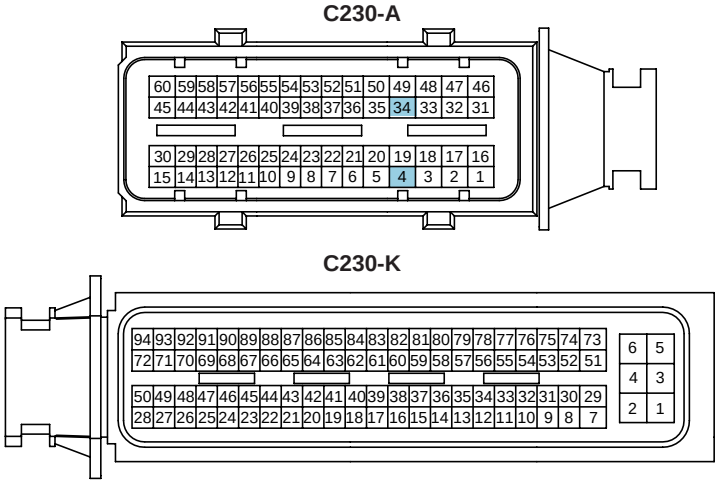

SCMFL6129L

SIGNAL WAVEFORM

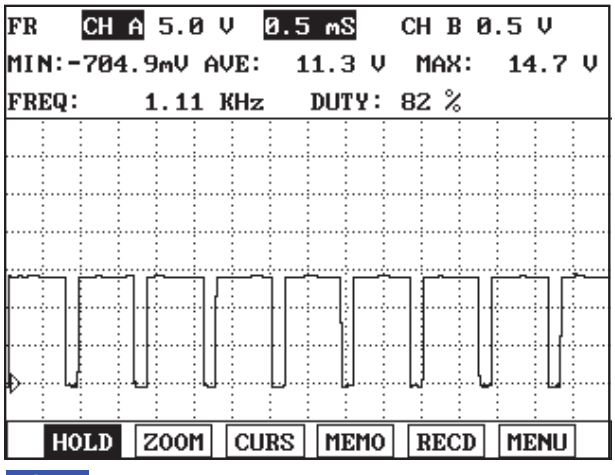

Fig.1

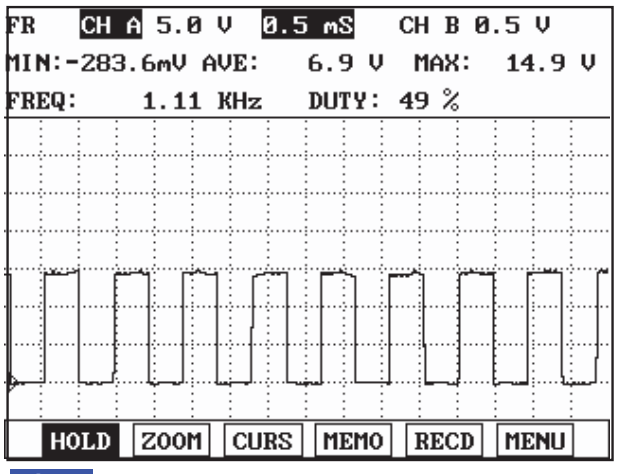

Fig.2

Fig.1) Waveform of rail pressure regulator valve at idle. It shows approx. 17% duty((-) duty).
Fig.2) Waveform of rail pressure regulator valve as accelerating. Approx. 50% duty is outputted as engine load increases.
(When rail pressure increases as accelerating, rail pressure regulator valve duty(current) rises.)

EFQG377A

COMPONENT INSPECTION

1. Turn ignition switch OFF.
2. Disconnect the rail pressure regulator valve connector.
3. Measure resistance between terminal 1 and 2 of the valve.

Specification: Refer to "SPECIFICATION".

ELECTRIC EGR CONTROL VALVE

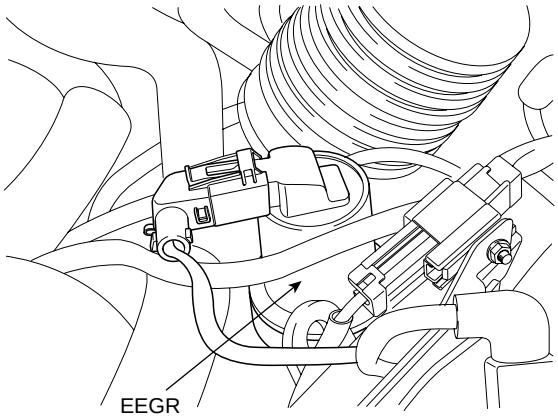

SCMFL6006D

INSPECTION E0CD3D42

FUNCTION AND OPERATION PRINCIPLE

The Exhaust Gas Recirculation (EGR) system is used to add the exhaust gas to intake air in order to reduce an excess of air and the temperature in the combustion chamber. The Electric EGR control valve is controlled by ECM' s duty control signal depending on engine load and the need of intake air and is operated by solenoid valve not vacuum valve.

SPECIFICATION

Items	Specification
Coil Resistance (Ω)	7.3 ~ 8.3Ω [20℃(68°F)]

CIRCUIT DIAGRAM

[CIRCUIT DIAGRAM]

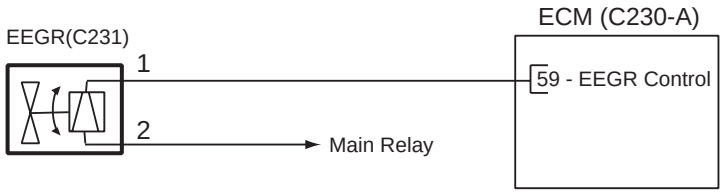

[CONNECTION INFORMATION]

Terminal	Connected to	Function
2	Main Relay	Battery Voltage (B+)
1	ECM C230-A (59)	EEGR Control

[HARNESS CONNECTORS]

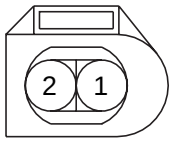

C231

EEGR

C230-A

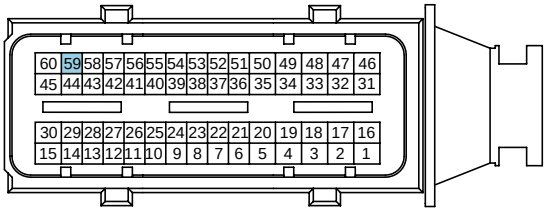

C230-K

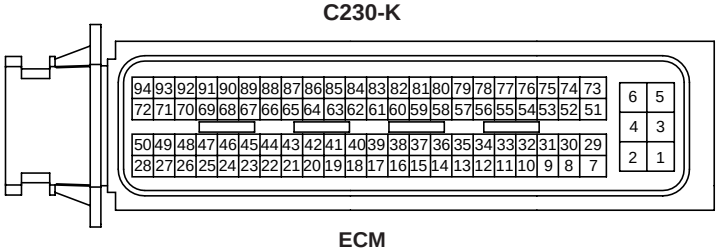

ECM

SCMFL6130L

SIGNAL WAVEFORM

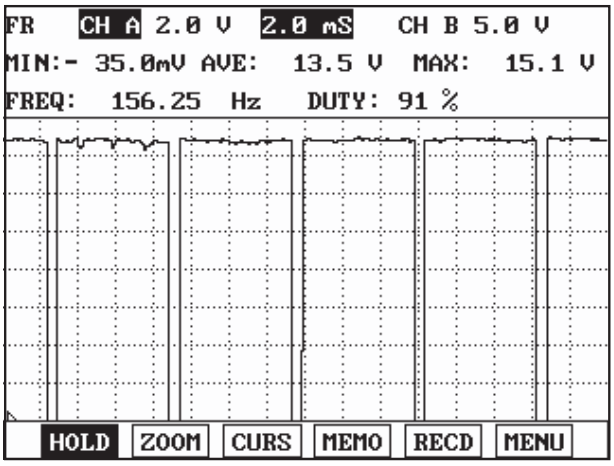

Fig.1

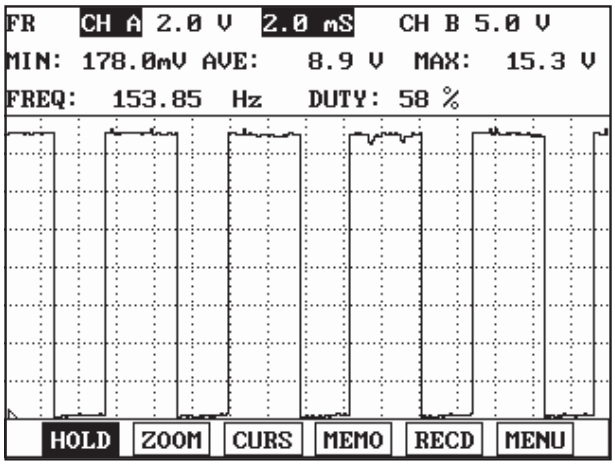

Fig.2

Fig.1) Approx. 10% duty((-)duty) signal waveform of EEGR actuator (with EEGR valve closed)
Fig.2) Approx. 40% duty((-)duty) signal waveform of EEGR actuator(with EEGR valve opened)

EFQG414A

COMPONENT INSPECTION

1. Turn ignition switch OFF.
2. Disconnect the electric EGR control valve connector.
3. Measure resistance between terminal 1 and 2 of the valve.

Specification: Refer to "SPECIFICATION".

THROTTLE CONTROL ACTUATOR

INSPECTION EE647E4E

FUNCTION AND OPERATION PRINCIPLE

The Throttle Control Actuator is mounted on throttle body of diesel engine and controls throttle valve according to PWM (Pulse With Modulation) signal from ECM.
It consists of;

- a DC motor which actuates the throttle valve,
- a 2-step gear (transmission ratio = 1:40) which is located in between the DC motor and the throttle valve and increases torque of the DC motor,
- a position sensor which is a hall-effect sensor and detects status of the throttle valve,
- an electric control unit which is a micro-controller and drives the DC motor by the PWM (Pulse With Modulation) signal from the ECM,
- and a reset spring which resets the de-energized throttle valve to its open position.

Its function is described below:

1. Anti-judder function: When engine is shut off, the ECM can prevent intake air from entering to intake manifold by fully closing the throttle valve for 1.5 seconds (95% < Duty < 97%) to reduce engine vibration.
2. Intake air control for EGR: When exhaust gas pressure is equal to or lower than intake air pressure (for example, when low engine speed), the exhaust gas would not enter to the intake manifold. At this time, the ECM partially closes the throttle valve (5% < Duty < 94%) to reduce the intake air quantity. The intake air pressure thus is lower than the exhaust gas pressure.
3. Exhaust gas temperature control for CPF regeneration (Vehicle equipped with CPF System) : When the Catalyzed Particulate Filter (CPF) is need to regenerate, the ECM partially closes the throttle valve (5% < Duty < 94%) to reduce the intake air quantity. At this time, the air-fuel ratio would become rich and the exhaust gas temperature would be high enough to burn the soot inside the CPF.

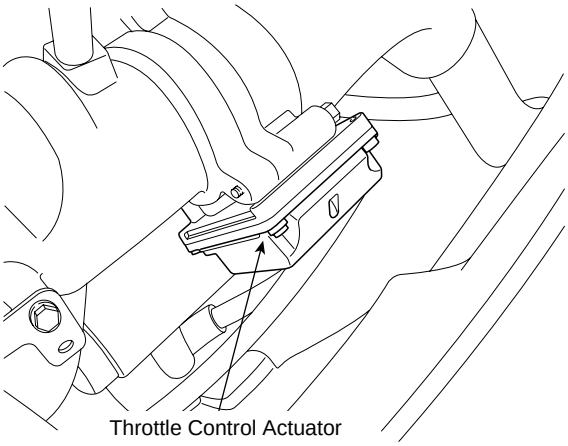

EFQG021A

SPECIFICATION

Duty (%)	Throttle Valve Position
5	Open
5 ~ 94	Normal operation (Partially open in proportion to duty value)
94	Closed
94 ~ 95	Maintaining the last valid position
95 ~ 97	Fully closed

CIRCUIT DIAGRAM

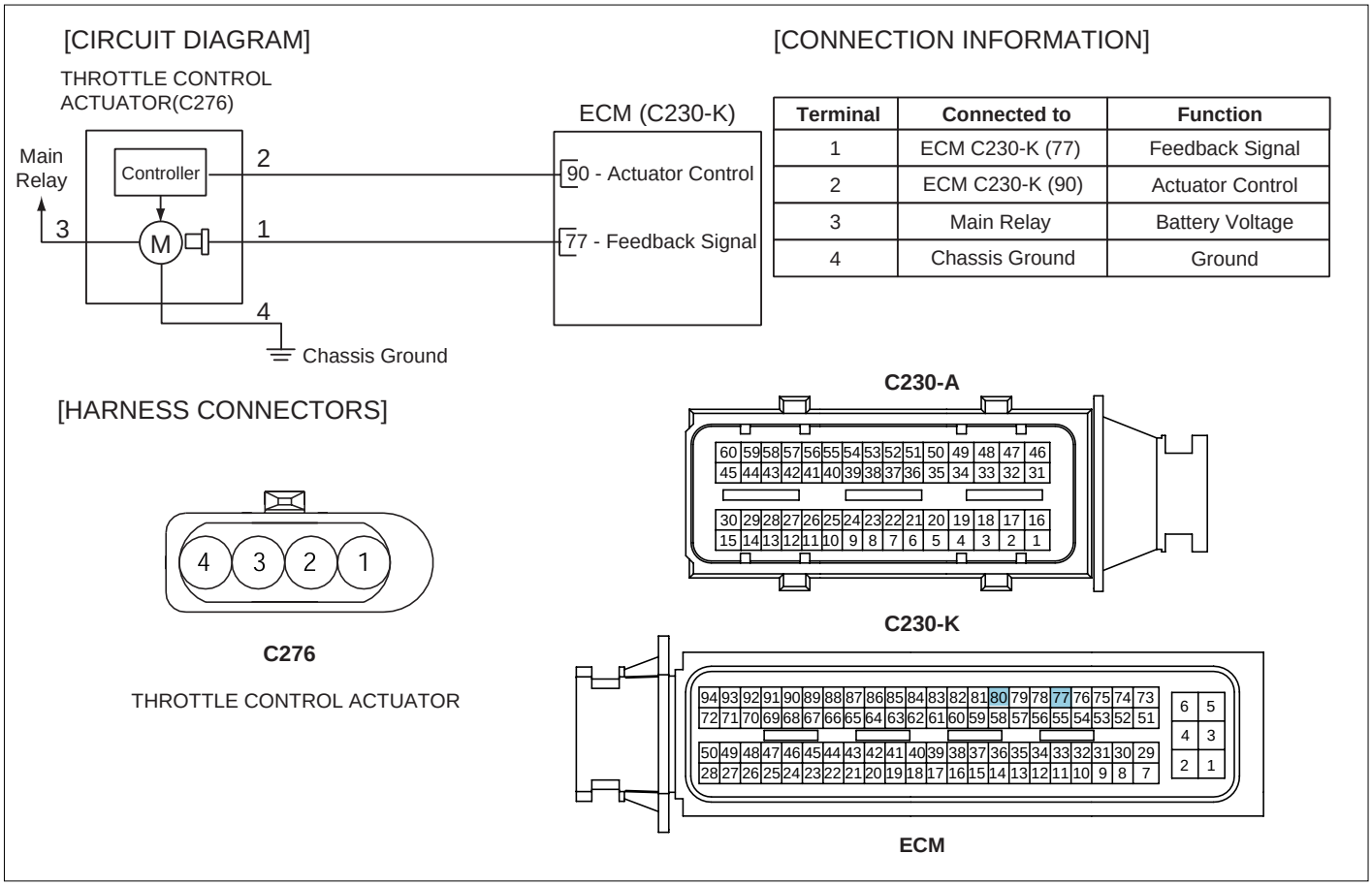

SCMFL6131L

SIGNAL WAVEFORM

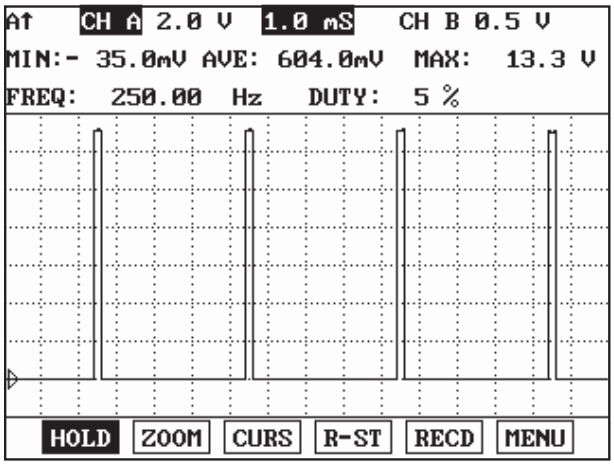

Fig.1

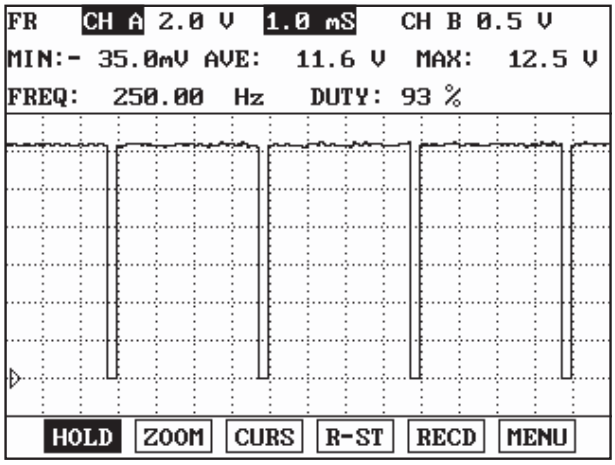

Fig.2

Fig.1) Waveform of Throttle control actuator at wide open(at idle) : At IG KEY "ON", ENGINE "ON", 5% duty is outputted continuously.
Fig.2) Waveform of Throttle control actuator at closed position : At IG KEY "OFF", 93% duty is outputted for about 1 sec.

EFQG529A

VARIABLE SWIRL CONTROL ACTUATOR

INSPECTION EF65DC23

FUNCTION AND OPERATION PRINCIPLE

Variable Swirl Control Actuator consists of DC motor and position sensor which detects the position of the swirl valve.
At idle or below 3000rpm, the swirl valve is closed. This swirl effect increases air flow rate.

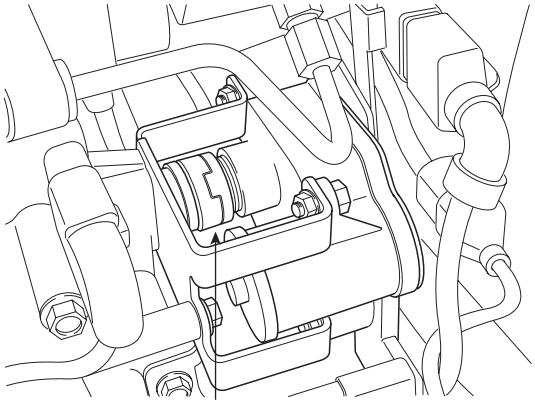

Variable Swirl Control Actuater

SCMFL6104L

	Low and Middle Load	High Load
Engine speed	Below 3000rpm	Above 3000rpm
Valve operation	CLOSE	OPEN
Description illustration	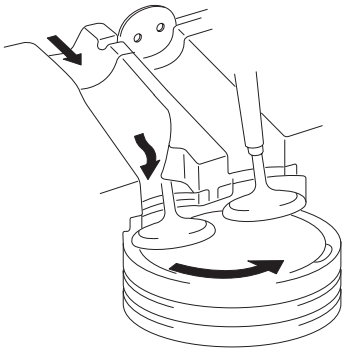 KGNF302A	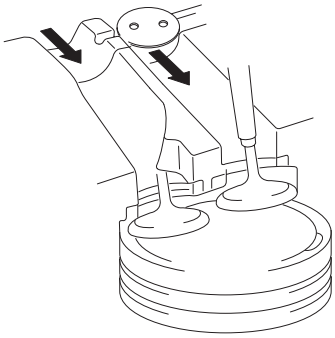 KGNF302B
Fail-safe	Fully opened	

NOTE

To prevent the swirl valve and the shaft from being stuck by foreign material and to learn max opening and closing position of the valve, the ECM fully opens and closes the valve twice when engine is being stopped.

SPECIFICATION

Motor

Items	Specification
Coil Resistance (Ω)	3.4 ~ 4.4Ω [20℃(68˚F)]

Position Sensor

Items	Specification
Coil Resistance (Ω)	3.44 ~ 5.16Ω [20℃(68˚F)]

EFQG058A

CIRCUIT DIAGRAM

[CIRCUIT DIAGRAM]

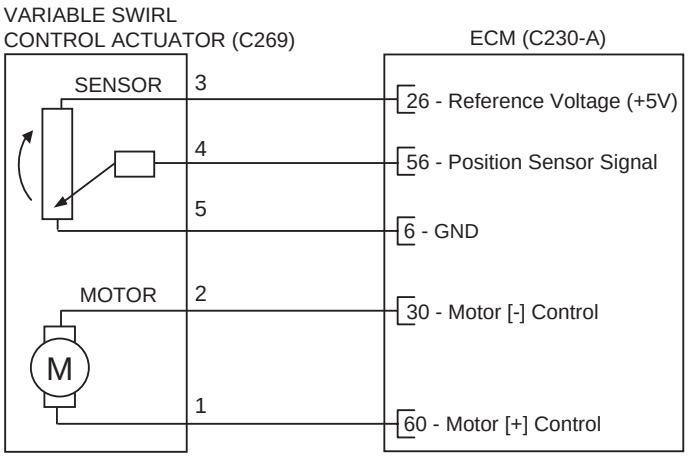

[CONNECTION INFORMATION]

Terminal	Connected to	Function
1	ECM C230-A (60)	Motor [+] Control
2	ECM C230-A (30)	Motor [-] Control
3	ECM C230-A (26)	Reference Voltage (+5V)
4	ECM C230-A (56)	Position Signal
5	ECM C230-A (6)	Sensor Ground

[HARNESS CONNECTORS]

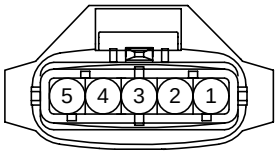

C269

VARIABLE SWIRL CONTROL ACTUATOR

C230-A

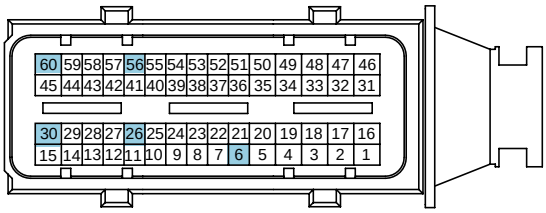

C230-K

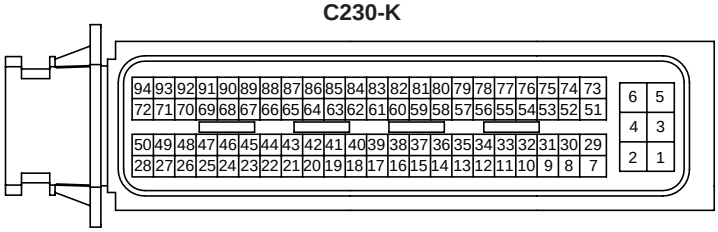

ECM

SCMFL6132L

SIGNAL WAVEFORM

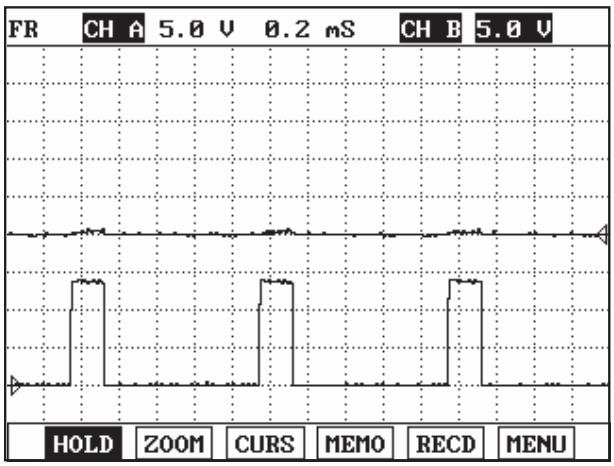

Fig.1

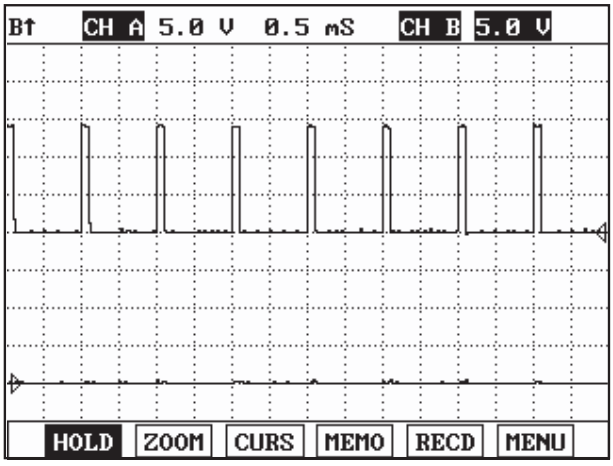

Fig.2

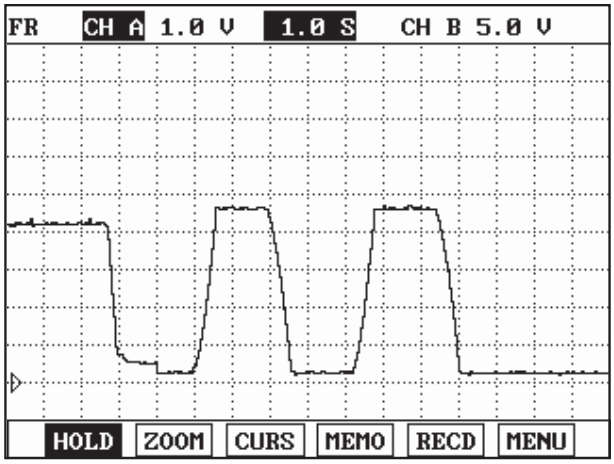

Fig.3

Fig.1) Waveform when variable swirl valve closed at idle. Terminal 5 is (+) and 4 is (-).
Fig. 2) Waveform when variable swirl valve opened at above 3000RPM. Terminal 5 is (-) and 4 is (+).
Fig. 3) Waveform of variable swirl control actuator motor position sensor at the point of turning engine OFF.
4.3V at swirl valve closed and 0.3V at swirl valve opened. Swirl valve is opened and closed twice at engine "OFF".

EFQG512A

COMPONENT INSPECTION

1. Turn ignition switch OFF.
2. Disconnect the electric EGR control valve connector.
3. Check that swirl valve is stuck by foreign material.
4. Measure resistance between motor (+) and (-) control terminals.

Specification: Refer to "SPECIFICATION".

5. Measure resistance between voltage supply terminal and ground terminal of position sensor.

Specification: Refer to "SPECIFICATION".

REPLACEMENT EB91BC1B

NOTE

After replacing a Mass Air Flow Sensor (MAFS) or Intake Air Temperature Sensor (IATS)#1, MUST proceed below procedure.

1. Turn ignition switch OFF.
2. Connect a scan tool to Data Link Connector (DLC).
3. Turn ignition switch ON.
4. Select "ENGINE (DIESEL)".

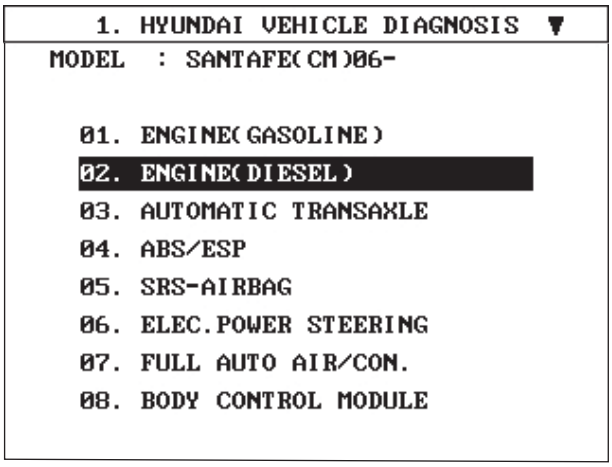

SCMFL6114L

5. Select "COMPONET CHANGE ROUTNE"

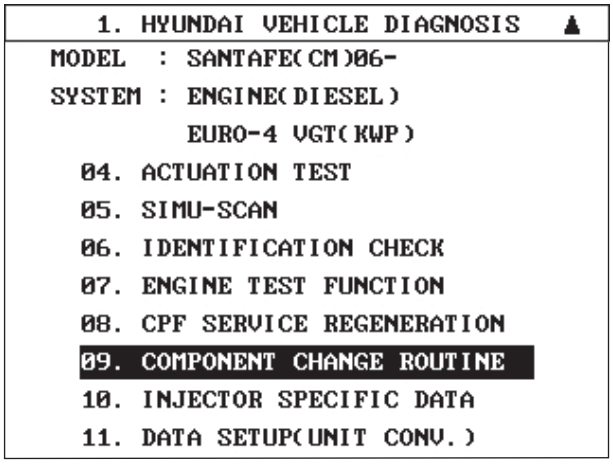

SCMFL6115L

6. Select "SWIRL CONTROL VALVE CHANGE".

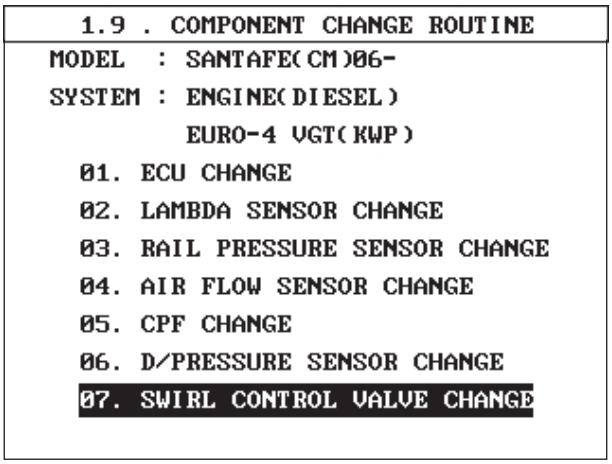

SCMFL6133L

7. Press "ENTER" key.

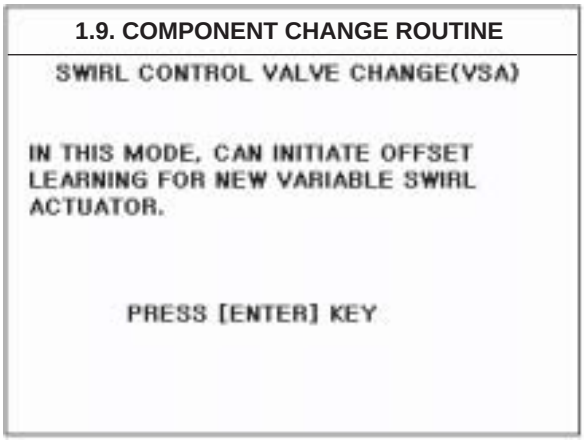

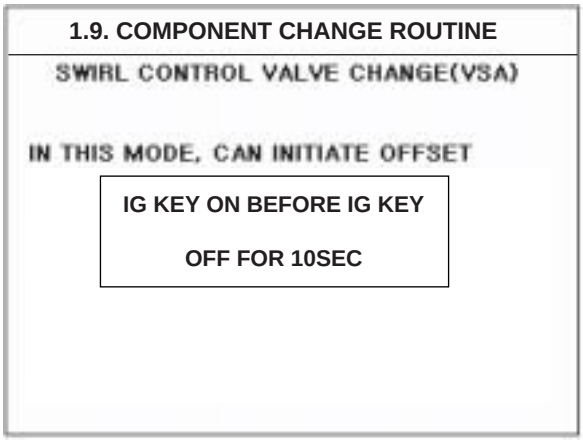

SCMFL6134L

8. Wait 10 seconds with IG ON.
9. Turn ignition switch off.

WATER SENSOR

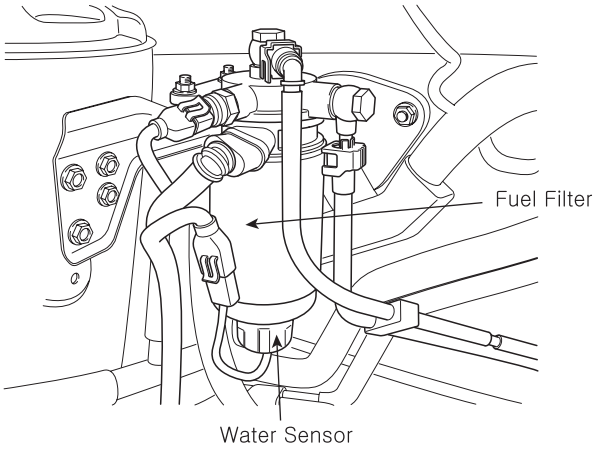

SCMFL6148L

INSPECTION E254D4A2

FUNCTION AND OPERATION PRINCIPLE

Water Sensor is installed on bottom end of fuel filter and detects presence of water in fuel. When the water level reaches the lower level of the upper electrode, the "WATER" lamp in cluster should flash. If the water level decreases below the lower electrode, the lamp should turn off.

NOTE

Without presence of water, the lamp should flash for 2 seconds and turn off afterward in order that this system has normal condition.

SPECIFICATION

Items	Specification
Warning Level of Water Presence (cc)	40 ~ 60

CIRCUIT DIAGRAM

[CIRCUIT DIAGRAM]

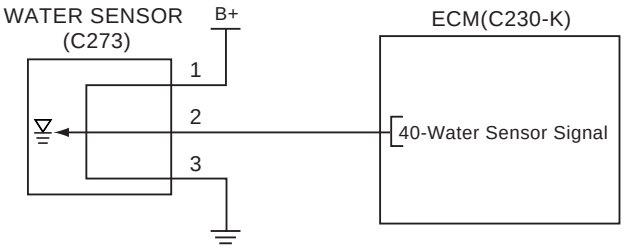

[CONNECTION INFORMATION]

Terminal	Connected to	Function
1	Main Relay	Battery voltage(B+)
2	ECM C230-K (40)	Sensor Signal
3	Chassis ground	Sensor ground

[HARNESS CONNECTOR]

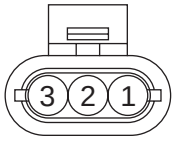

C273
WATER SENSOR

C230-A

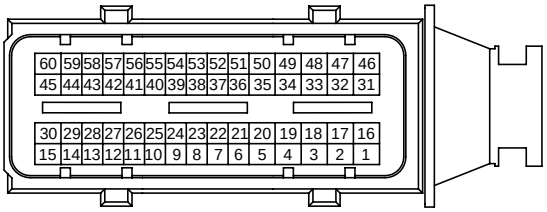

C230-K

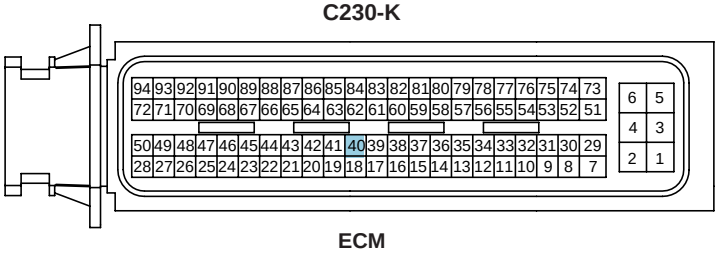

ECM

SCMFL6135L

VGT CONTROL SOLENOID VALVE

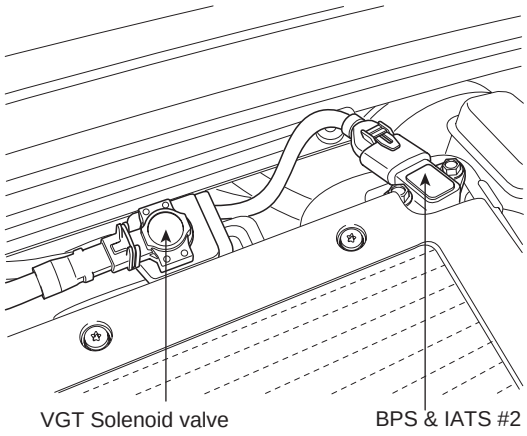

SCMFL6146L

INSPECTION E5398CFD

FUNCTION AND OPERATION PRINCIPLE

Variable Geometry Turbo-charger (VGT) is used to charge additional air into combustion chamber for improvement of combustion efficiency.
ECM controls the VGT with controlling duty of the VGT control solenoid valve according to engine load.

SPECIFICATION

Items	Specification
Coil Resistance (Ω)	14.7 ~ 16.1Ω [20℃(68°F)]

CIRCUIT DIAGRAM

[CIRCUIT DIAGRAM]

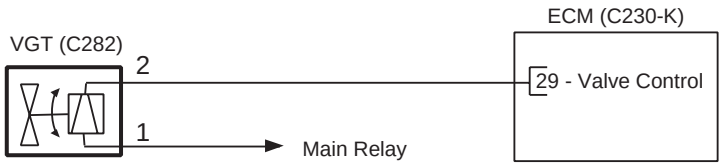

[CONNECTION INFORMATION]

Terminal	Connected to	Function
1	Main Relay	Battery Voltage (B+)
2	ECM C230-K (29)	Valve Control

[HARNESS CONNECTORS]

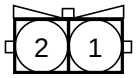

C282

VGT CONTROL SOLENOID VALVE

C230-A

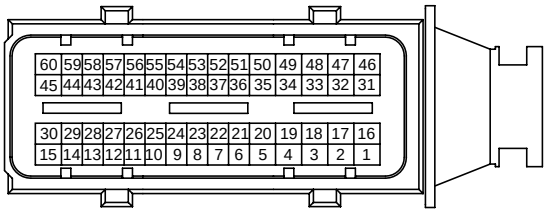

C230-K

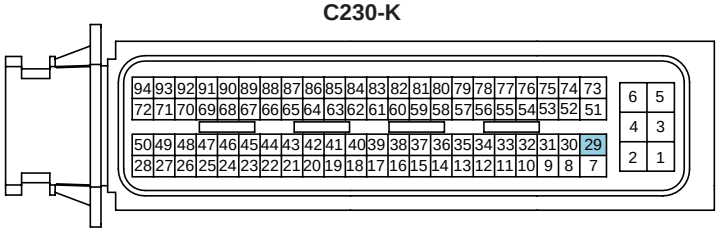

ECM

SCMFL6136L

SIGNAL WAVEFORM

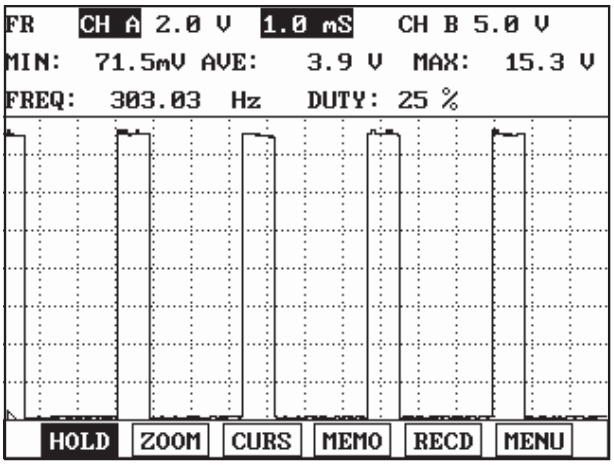

Fig.1

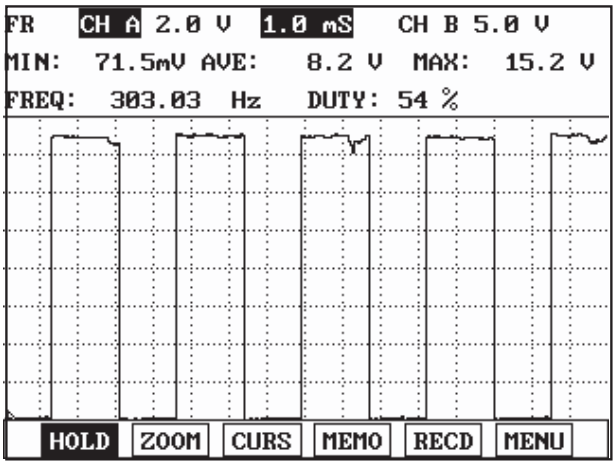

Fig.2

Fig.1) VGT actuator output waveform at 76% duty((-)duty). Duty decreases as boost pressure increases.
Fig.2) VGT actuator duty((-)duty) decreases as accelerating.

EFQG369A

COMPONENT INSPECTION

1. Turn ignition switch OFF.
2. Disconnect the VGT control solenoid valve connector.
3. Measure resistance between terminal 1 and 2 of the valve.

Specification: Refer to "SPECIFICATION".

DTC TROUBLESHOOTING PROCEDURES

INSPECTION CHART FOR DIAGNOSTIC TROUBLE CODES (DTC) EFBBBD88

DTC	DESCRIPTION	MIL	PAGE
P0047	VGT Vacuum Modulator Circuit Low	●	FL-91
P0048	VGT Vacuum Modulator Circuit High	●	FL-98
P0069	Boost Pressure Sensor Circuit Malfunction	▲	FL-102
P0087	Rail Pressure Monitoring-Minimum Pressure at Engine Speed Too Low	●	FL-107
P0088	Rail Pressure Monitoring-Maximum Pressure Exceeded	●	FL-112
P0089	Rail Pressure Regulator Valve Circuit Over Current	●	FL-113
P0091	Rail Pressure Regulator Valve Circuit Low	●	FL-120
P0092	Rail Pressure Regulator Valve Circuit High	●	FL-127
P0097	Intake Air Temperature Sensor 2 Circuit Low Input	▲	FL-130
P0098	Intake Air Temperature Sensor 2 Circuit High Input	▲	FL-136
P0101	Mass or Volume Air Flow Circuit Range/Performance	●	FL-140
P0102	Mass or Volume Air Flow Circuit Low Input	●	FL-148
P0103	Mass or Volume Air Flow Circuit high Input	●	FL-152
P0107	Atmospheric Pressure Circuit Low Input	●	FL-156
P0108	Atmospheric Pressure Circuit High Input	●	FL-159
P0112	Intake Air Temperature Sensor 1 Circuit Low Input	▲	FL-161
P0113	Intake Air Temperature Sensor 1 Circuit High Input	▲	FL-166
P0117	Engine Coolant Temperature Circuit Low Input	●	FL-170
P0118	Engine Coolant Temperature Circuit High Input	●	FL-176
P0182	Fuel Temperature Sensor A Circuit Low Input	▲	FL-182
P0183	Fuel Temperature Sensor A Circuit High Input	▲	FL-186
P0192	Fuel Rail Pressure Sensor Low input	●	FL-190
P0193	Fuel Rail Pressure Sensor High Input	●	FL-197
P0201	Cylinder 1-Injector Circuit/Open	●	FL-201
P0202	Cylinder 2-Injector Circuit/Open	●	FL-201
P0203	Cylinder 3-Injector Circuit/Open	●	FL-201
P0204	Cylinder 4-Injector Circuit/Open	●	FL-201
P0231	Electric Fuel Pump Relay-Open or Short Circuit	▲	FL-207
P0232	Electric Fuel Pump Relay-Short Circuit	▲	FL-213

DTC	DESCRIPTION	MIL	PAGE
P0234	Turbo/Super Charger Overboost Condition	●	FL-217
P0237	Boost Pressure Sensor Circuit Low Input	●	FL-222
P0238	Boost Pressure Sensor Circuit High Input	●	FL-226
P0252	Fuel Pressure Regulator Valve Circuit Over Current	●	FL-232
P0253	Fuel Pressure Regulator Valve Circuit Low	●	FL-238
P0254	Fuel Pressure Regulator Valve Circuit High	●	FL-241
P0262	Cylinder 1-Injector Circuit High	●	FL-245
P0265	Cylinder 2-Injector Circuit High	●	FL-245
P0268	Cylinder 3-Injector Circuit High	●	FL-245
P0271	Cylinder 4-Injector Circuit High	●	FL-245
P0299	Turbo/Super Charger Underboost Condition	●	FL-251
P0335	Crankshaft Position Sensor A Circuit	●	FL-254
P0336	Crankshaft Position Sensor A Circuit Range/Performance	●	FL-264
P0340	Camshaft Position Sensor A Circuit Malfunction (Bank 1 or Single Sensor)	●	FL-269
P0341	Camshaft Position Sensor A Circuit Range/Performance (Bank 1 or Single Sensor)	●	FL-276
P0381	Glow Indicator Lamp Circuit Malfunction	▲	FL-280
P0489	Exhaust Gas Recirculation Control Circuit Low Voltage	●	FL-285
P0490	Exhaust Gas Recirculation Control Circuit High Voltage	●	FL-292
P0501	Vehicle Speed Sensor A Range/Performance	▲	FL-295
P0504	Brake Pedal Position A/B Correlation	▲	FL-301
P0532	A/C Refrigerant Pressure Sensor "A" Circuit Low Input	▲	FL-307
P0533	A/C Refrigerant Pressure Sensor "A" Circuit High Input	▲	FL-314
P0562	System Voltage Low	▲	FL-318
P0563	System Voltage High	▲	FL-324
P0602	EEPROM-Programming Error	▲	FL-327
P0605	Internal Control Module Read Only Memory(ROM) Error	▲	FL-329
P0606	ECM/PCM Processor(ECM-SELF TEST Failed)	●	FL-331
P0611	Injector Circuit Malfunction (More than two injectors)	●	FL-334
P0642	Sensor Reference Voltage "A" Circuit Low	▲	FL-340
P0643	Sensor Reference Voltage "A" Circuit High	▲	FL-346
P0646	A/C Clutch Relay Control Circuit Low	▲	FL-349
P0647	A/C Clutch Relay Control Circuit High	▲	FL-355
P0650	Malfunction Indicator Lamp (MIL) Control Circuit	▲	FL-359

DTC	DESCRIPTION	MIL	PAGE
P0652	Sensor Reference Voltage "B" Circuit Low	●/▲	FL-363
P0653	Sensor Reference Voltage "B" Circuit High	●/▲	FL-370
P0670	Glow Relay Circuit Malfunction	▲	FL-374
P0685	ECM/PCM Power Relay Control Circuit /Open	▲	FL-381
P0698	Sensor Reference Voltage "C" Circuit Low	▲	FL-388
P0699	Sensor Reference Voltage "C" Circuit High	▲	FL-394
P0820	Neutral S/W Malfunction	▲	FL-397
P0830	Clutch Pedal Switch "A" Circuit	▲	FL-402
P1145	Overrun monitoring error	▲	FL-408
P1171	Minimum Rail Pressure Exceeded	▲	FL-410
P1172	Maximum Rail Pressure Exceeded	▲	FL-414
P1173	Set Value Of Rail Pressure Not In Plausibility Range	▲	FL-415
P1185	Fuel Pressure Monitoring-Maximum Pressure Exceeded	●	FL-416
P1186	Fuel Pressure Monitoring-Minimum Pressure at Engine Speed Too Low	●	FL-421
P1586	MT/AT Encoding	◆	FL-423
P1587	CAN Communication Error (MT/AT Recognition Error)	◆	FL-426
P1588	Signal Change Through MT/AT Line (During Engine Running)	◆	FL-433
P1634	Auxiliary Heater Malfunction	▲	FL-436
P1652	Ignition Switch Circuit Malfunction	▲	FL-443
P1670	Injector Specific Data Error	■	FL-447
P1671	Check-Sum Error	■	FL-449
P2009	Intake Manifold Runner Control Circuit Low (Bank 1)	▲	FL-451
P2010	Intake Manifold Runner Control Circuit High (Bank 1)	▲	FL-458
P2015	Intake Manifold Runner Position Sensor/Switch Circuit Range/Performance (Bank 1)	●/▲	FL-461
P2016	Intake Manifold Runner Position Sensor/Switch Circuit Low (Bank 1)	▲	FL-468
P2017	Intake Manifold Runner Position Sensor/Switch Circuit High (Bank 1)	▲	FL-472
P2111	Throttle Control Actuator Circuit High	●	FL-476
P2112	Throttle Control Actuator Circuit Low	●	FL-483
P2113	Throttle Control Actuator Circuit Malfunction - Range/Performance	▲	FL-487
P2123	Throttle/Pedal Position Sensor/Switch "D" Circuit High Input	●	FL-491
P2128	Throttle/Pedal Position Sensor/Switch "E" Circuit High Input	●	FL-498
P2138	Throttle/Pedal Position Sensor/Switch "D" / "E" Voltage Correlation	●	FL-502

DTC	DESCRIPTION	MIL	PAGE
P2264	Detection of Water in fuel	▲	FL-507
P2299	Brake Pedal Position / Accelerator Pedal Position Incompatible	▲	FL-512

NOTE

●*: MIL ON & Memory*
▲*: MIL OFF & Memory*
■*: MIL Blinking & MEMORY*
◆*: Glow Lamp Blinking & MEMORY*

DTC P0047 VGT VACUUM MODULATOR CIRCUIT LOW

COMPONENT LOCATION E2D3F84E

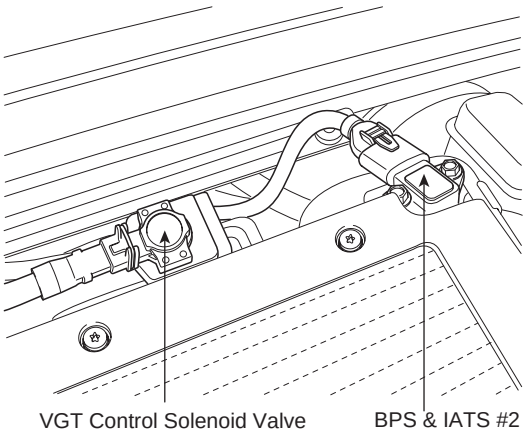

SCMFL6500L

GENERAL DESCRIPTION E309637A

VGT(Variable Geometric Turbocharger) is the device which increases the efficiency of turbocharger at low rpm and lasts optimum turbo efficiency at high rpm as varying the cross sectional area through which exhaust gas passes turbocharger impeller. It relieves turbo lag at low speed and increse engine power generation.Engine speed, APS signal, MAFS and Boost pressure sensor information is inputted to ECM. ECM actuates vacuum diafragm which controls exhaust gas line as controlling VGT actuator duty to maintain optimum state of air compression.

DTC DESCRIPTION EBA784B6

P0047 is set when "0"A is detected in VGT actuator control circuit for more than 1 sec.. This code is due to open or short to ground in VGT actuator circuit, or open in VGT actuator component.

DTC DETECTING CONDITION E1B0BA6B

Item	Detecting Condition			Possible Cause
DTC Strategy	• Signal monitoring			• VGT actuator circuit • VGT actuator component
Enable Conditions	• IG KEY "ON"			
Threshold Value	• short to GND, wiring open			
Diagnostic Time	• 1 sec.			
Fail Safe	Fuel cut	NO		
	EGR Off	YES		
	Fuel Limit	YES		
	Check Lamp	NO		

SPECIFICATION E71947EC

VGT actuator component resistance	VGT actuator operating Hz	VGT actuator operating duty
14.7 ~ 16.1Ω (20℃)	300Hz	76% at idle, decreases as accelerating

SCHEMATIC DIAGRAM E98D5878

[CIRCUIT DIAGRAM]

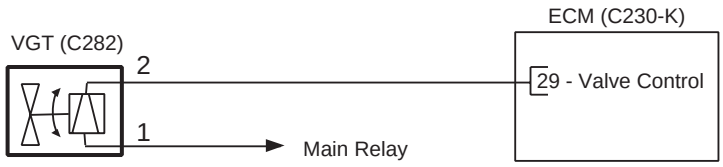

[CONNECTION INFORMATION]

Terminal	Connected to	Function
1	Main Relay	Battery Voltage (B+)
2	ECM C230-K (29)	Valve Control

[HARNESS CONNECTORS]

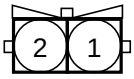

C282

VGT CONTROL SOLENOID VALVE

C230-A

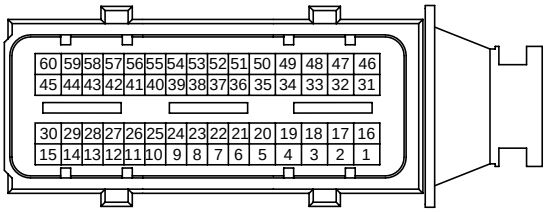

C230-K

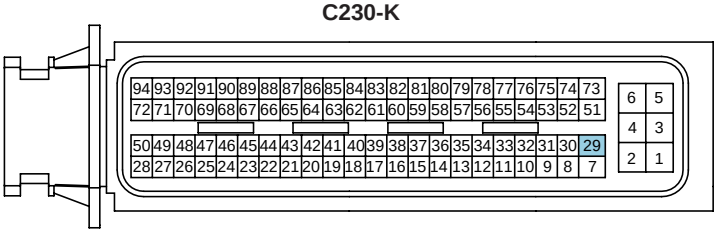

ECM

SCMFL6136L

SIGNAL WAVEFORM AND DATA E17569EF

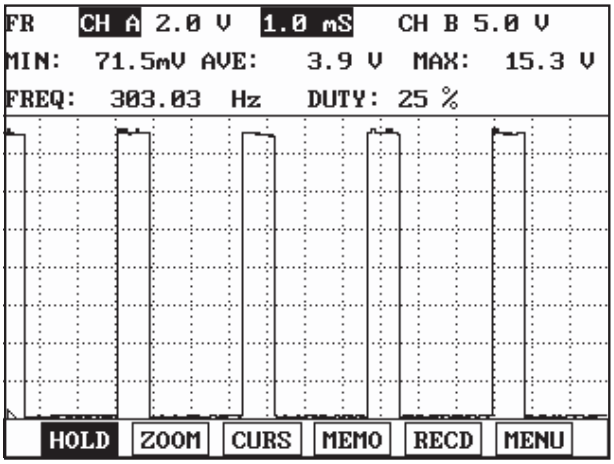

Fig.1

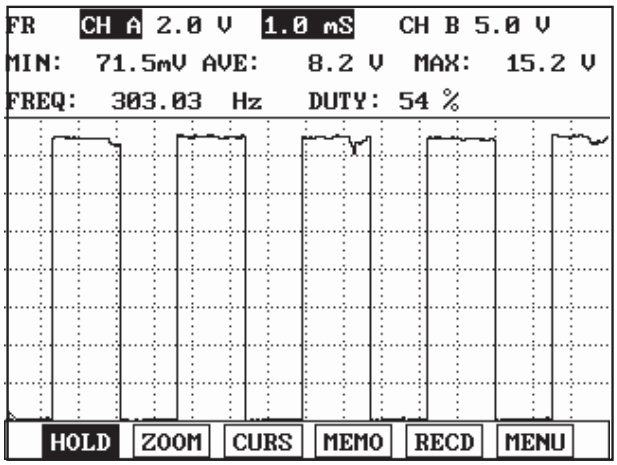

Fig.2

Fig.1) VGT actuator output waveform at 76% duty((-)duty). Duty decreases as boost pressure increases.
Fig.2) VGT actuator duty((-)duty) decreases as accelerating.

LFIG369A

MONITOR SCANTOOL DATA E08D4DA0

1. Connect Scantool to Data Link Connector (DLC).
2. Warm engine up to normal operating temperature.
3. Turn "OFF" electrical devices and A/C.
4. Monitor "BOOST PRESSURE SENSOR" parameter on the Scantool.

Specification : 1000hpa ± 100hpa(VGT actuator : approx. 76%) at idle

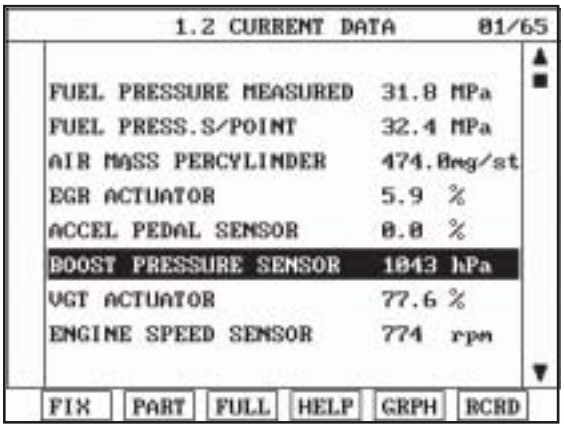

Fig.1

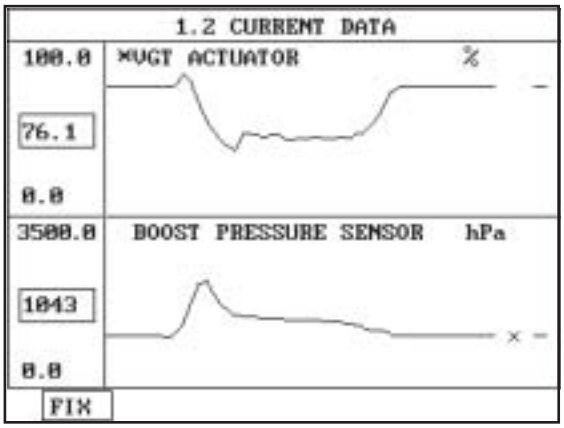

Fig.2

Fig1) Monitor "BOOST PRESSURE SENSOR" parameter on the Scantool at idle after warming engine up. 1000hpa±100hpa(approx. 1 atm) is correct value.
Fig.2) VGT actuator duty and boost pressure at acceleration is shown . If boost pressure rises and reaches certain value, VGT actuator duty stops to drop and keeps steady. Releasing accelerator pedal at this moment, VGT actuator duty drops to approx. 45%, then if RPM drops to idle range, duty returns to 76%.

SCMFL6253L

TERMINAL AND CONNECTOR INSPECTION EE9A6CFC

1. Electrical systems consist of a lot of harness and connectors, poor connection of terminals can cause various problems and damge of component.

2. Perform checking procedure as follows.

   1) Check damage of harness and terminals : Check terminals for contact resistance, corrosion and deformation.

   2) Check connecting condition of ECM and component connector : Check terminal seperation, damage of locking device and connecting condition between terminal and wiring.

   NOTE

   Disconnect the pin which requires checking at male connector and insert it to the terminal at female connector or checking connecting condition. (after checking, reconnect the pin at correct position.)

3. Is the problem found?

   YES

   ▶ Repair the trouble causing part and go to "Verification of Vehicle Repair".

   NO

   ▶ Go to "Power Circuit Inspection".

POWER CIRCUIT INSPECTION EBFD3161

1. Check power circuit voltage

   1) IG KEY "OFF", ENGINE "OFF"

   2) Disconnect VGT actuator connector

   3) IG KEY "ON"

   4) Measure the voltage of terminal 1 of VGT actuator.

Specification : 11.5V~13.0V

   5) Is the measured voltage within the specification?

   YES

   ▶ Go to "Control Circuit Inspection".

   NO

   ▶ Repair E/R FUSE & RELAY BOX 15A SENSOR #2 FUSE and related circuit and go to "Verification of Vehicle Repair".

CONTROL CIRCUIT INSPECTION EF9A84EE

1. Check monitoring voltage in control circuit

   1) IG KEY "OFF", ENGINE "OFF"

2) Disconnect VGT actuator connector

3) IG KEY "ON"

4) Measure the voltage of terminal 2 of VGT actuator.

Specification : 3.2V~3.7V

5) Is the measured voltage within the specification?

YES

▶ Go to "Component Inspection".

NO

▶ When voltage is not detected : Go to "2. Check open in control circuit" as follows.
▶ When high voltage is detected : Repair short to battery and go to "Verification of Vehicle Repair".

2. Check open in control circuit

1) IG KEY "OFF", ENGINE "OFF"

2) Disconnect VGT actuator connector and ECM connector.

3) Check continuity between VGT actuator connector terminal 2 and ECM connector (C230-K) terminal 29.

specification : Continuity (below 1.0Ω)

4) Is the measured resistance within the specification?

YES

▶ Repair short to ground and go to "Verification of Vehicle Repair".

NO

▶ Repair open in control circuit and go to "Verification of Vehicle Repair".

COMPONENT INSPECTION E4799834

1. Check VGT actuator component resistance

1) IG KEY "OFF", ENGINE "OFF"

2) Disconnect VGT actuator connector.

3) Measure the resistance between VGT actuator component terminal 1 and 2.

Specification : 14.7 ~ 16.1Ω (20℃)

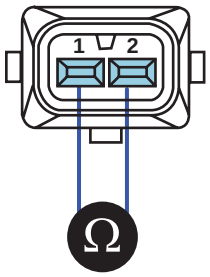

LFIG373A

4) Is VGT actuator component resistance within the specification?

YES

▶ Go to "2.Check VGT actuator operation" as follows.

NO

▶ Replace VGT actuator and go to "Verification of Vehicle Repair".

2. Check VGT actuator operation

1) IG KEY "ON", ENGINE "ON".

2) Check that VGT actuator operating duty is 76% after warming engine up.

3) Check if vacuum generates after disconnecting VGT valve vacuum hose.

4) Check if vacuum generates when decelerating after rapid acceleration (Vacuum must not generates, correct VGT actuator operating duty is 45%).

Specification : VGT actuator duty 76% : vacuum generates VGT actuator duty 45% : vacuum does not generate

YES

▶ Go to "Verification of Vehicle Repair".

NO

▶ Replace VGT actuator and go to "Verification of Vehicle Repair".

※ Repeat this process 2~3 times.

VERIFICATION OF VEHICLE REPAIR E308252D

After a repair, it is essential to verify that the fault is corrected.

1. After connecting Scantool select "DIAGNOSTIC TROUBLE CODES(DTCs)" mode.
2. Clear recorded DTC using Scantool.
3. Drive the vehicle within DTC "Enable conditions" in "General information".
4. After selecting "DIAGNOSTIC TROUBLE CODES(DTCs)" mode and check if DTC is recorded again.
5. Are any DTCs recorded ?

YES

▶ Go to the DTC guide of recorded NO. in Scantool.

NO

▶ System operates within specification.

DTC P0048 VGT VACUUM MODULATOR CIRCUIT HIGH

COMPONENT LOCATION E31DDD68

Refer to DTC P0047.

GENERAL DESCRIPTION E79C2EC2

Refer to DTC P0047.

DTC DESCRIPTION E1025927

P0048 is set when excessive current is detected in VGT actuator control circuit for more than 1 sec.. This code is due to short to battery in control circuit or internal short of VGT actuator component.

DTC DETECTING CONDITION EBDE4E4B

<table>
<tr><th>Item</th><th colspan="3">Detecting Condition</th><th>Possible Cause</th></tr>
<tr><td>DTC Strategy</td><td colspan="3">• Signal monitoring</td><td rowspan="6">• VGT actuator circuit
• VGT actuator component</td></tr>
<tr><td>Enable Conditions</td><td colspan="3">• IG KEY "ON"</td></tr>
<tr><td>Threshold Value</td><td colspan="3">• Short to battery</td></tr>
<tr><td>Diagnostic Time</td><td colspan="3">• 1 sec.</td></tr>
<tr><td rowspan="4">Fail Safe</td><td>Fuel cut</td><td>NO</td><td rowspan="4"></td></tr>
<tr><td>EGR Off</td><td>YES</td></tr>
<tr><td>Fuel Limit</td><td>YES</td></tr>
<tr><td>Check Lamp</td><td>NO</td></tr>
</table>

SPECIFICATION E44EFFDF

Refer to DTC P0047.

SCHEMATIC DIAGRAM E9230DEB

Refer to DTC P0047.

SIGNAL WAVEFORM AND DATA E944A3C3

Refer to DTC P0047.

MONITOR SCANTOOL DATA EEB997ED

Refer to DTC P0047.

TERMINAL AND CONNECTOR INSPECTION EFCF8A29

Refer to DTC P0047.

POWER CIRCUIT INSPECTION E7D4F518

1. Check power circuit voltage

   1) IG KEY "OFF", ENGINE "OFF"

   2) Disconnect VGT actuator connector

   3) IG KEY "ON"

   4) Measure the voltage of terminal 1 of VGT actuator.

Specification : 11.5V~13.0V

   5) Is the measured voltage within the specification?

   YES

   ▶ Go to "Control Circuit Inspection".

   NO

   ▶ Repair E/R FUSE & RELAY BOX 15A SENSOR #2 FUSE and related circuit and go to "Verification of Vehicle Repair".

CONTROL CIRCUIT INSPECTION E6DBA293

1. Check monitoring voltage in control circuit

   1) IG KEY "OFF", ENGINE "OFF"

   2) Disconnect VGT actuator connector

   3) IG KEY "ON"

   4) Measure the voltage of terminal 2 of VGT actuator.

Specification : 3.2V~3.7V

   5) Is the measured voltage within the specification?

   YES

   ▶ Go to "Component Inspection".

   NO

   ▶ When voltage is not detected : Go to "2. Check open in control circuit" as follows.
   ▶ When high voltage is detected : Repair short to battery and go to "Verification of Vehicle Repair".

2. Check open in control circuit

   1) IG KEY "OFF", ENGINE "OFF"

   2) Disconnect VGT actuator connector and ECM connector.

   3) Check continuity between VGT actuator connector terminal 2 and ECM connector (C230-K) terminal 29.

specification : Continuity (below 1.0Ω)

4) Is the measured resistance within the specification?

YES

▶ Repair short to ground and go to "Verification of Vehicle Repair".

NO

▶ Repair open in control circuit and go to "Verification of Vehicle Repair".

COMPONENT INSPECTION EB0EB6D3

1. Check VGT actuator component resistance

1) IG KEY "OFF", ENGINE "OFF"

2) Disconnect VGT actuator connector.

3) Measure the resistance between VGT actuator component terminal 1 and 2.

Specification : 14.7 ~ 16.1Ω (20℃)

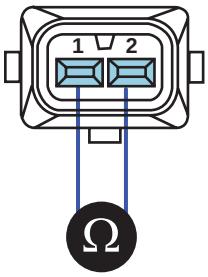

LFIG373A

4) Is VGT actuator component resistance within the specification?

YES

▶ Go to "2.Check VGT actuator operation" as follows.

NO

▶ Replace VGT actuator and go to "Verification of Vehicle Repair".

2. Check VGT actuator operation

1) IG KEY "ON", ENGINE "ON".

2) Check that VGT actuator operating duty is 76% after warming engine up.

3) Check if vacuum generates after disconnecting VGT valve vacuum hose.

4) Check if vacuum generates when decelerating after rapid acceleration (Vacuum must not generates, correct VGT actuator operating duty is 45%).

Specification : VGT actuator duty 76% : vacuum generates
VGT actuator duty 45% : vacuum does not generate

YES

▶ Go to "Verification of Vehicle Repair".

NO

▶ Replace VGT actuator and go to "Verification of Vehicle Repair".

※ Repeat this process 2~3 times.

VERIFICATION OF VEHICLE REPAIR E4F82FD7

Refer to DTC P0047.

DTC P0069 BOOST PRESSURE SENSOR CIRCUIT MALFUNCTION

COMPONENT LOCATION E1BE504F

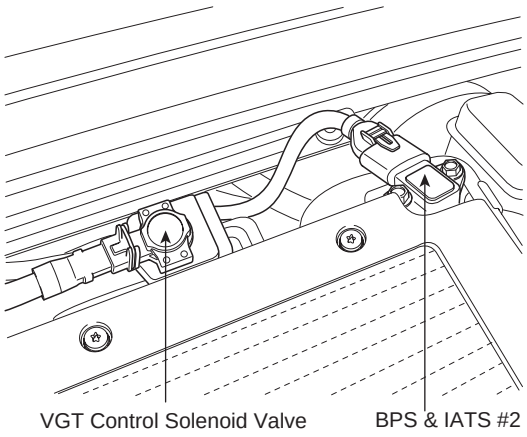

SCMFL6500L

GENERAL DESCRIPTION E18B084E

Boost Pressure Sensor(BPS) is installed in intake manifold and senses the pressure of air inside of intake manifold which is compressed by turbo charager.Measuring mass air flow accurately with the information of intake mainfold pressure, mass air flow and intake air temperature, ECM performs actuating correction of EGR and VGT.When excessive intake manifold pressure is detected, engine power generation is limited to protect engine because too highly compressed pressure due to turbo charger may harm engine.

DTC DESCRIPTION E1A24E17

P0069 is set when the difference between Boost pressure and atmospheric pressure sensor is above 100hpa at below 100RPM(in other word, IG KEY ON condition) for more than 2 sec. This code is due to abnormal output characteristic of BPS component.

DTC DETECTING CONDITION EAA4EA2C

<table>
<tr><th>Item</th><th colspan="3">Detecting Condition</th><th>Possible Cause</th></tr>
<tr><td>DTC Strategy</td><td colspan="3">• Voltage monitoring</td><td rowspan="6">• BPS circuit
• BPS component</td></tr>
<tr><td>Enable Conditions</td><td colspan="3">• IG KEY "ON" (below 100RPM)</td></tr>
<tr><td>Threshold Value</td><td colspan="3">• |Boost pressure - Atmospheric pressure| is above 100hpa.</td></tr>
<tr><td>Diagnostic Time</td><td colspan="3">• 2 sec.</td></tr>
<tr><td rowspan="4">Fail Safe</td><td>Fuel cut</td><td>NO</td><td rowspan="4">• Boost pressure is fixed at 1000 hpa.</td></tr>
<tr><td>EGR Off</td><td>YES</td></tr>
<tr><td>Fuel Limit</td><td>YES</td></tr>
<tr><td>Check Lamp</td><td>NO</td></tr>
</table>

SPECIFICATION E96F7817

Pressure [Kpa]	20	100	190	250
Output voltage [V]	0.4±0.077	1.878±0.063	3.541±0.063	4.650±0.077

SCHEMATIC DIAGRAM E12D020E

[CIRCUIT DIAGRAM]

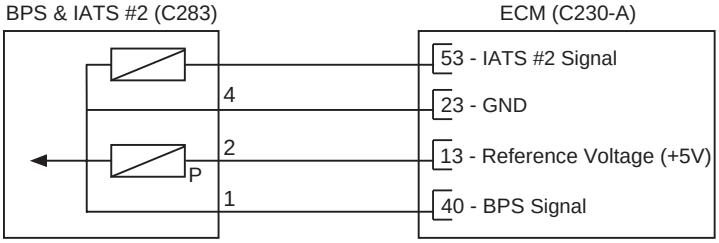

[CONNECTION INFORMATION]

Terminal	Connected to	Function
1	ECM C230-A (40)	BPS Signal
2	ECM C230-A (13)	Reference Voltage (+5V)
3	ECM C230-A (53)	IATS #2 Signal
4	ECM C230-A (23)	Sensor ground

[HARNESS CONNECTORS]

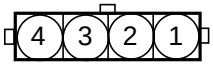

C283

BPS & IATS #2

C230-A

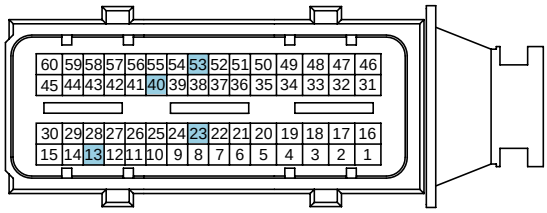

C230-K

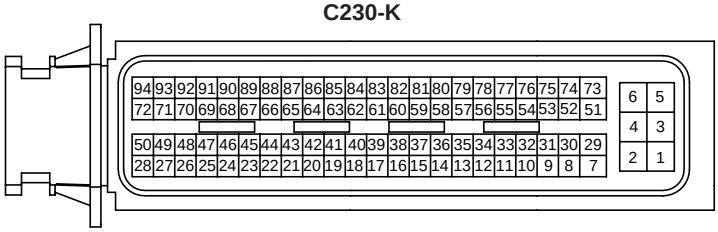

ECM

SCMFL6118L

SIGNAL WAVEFORM AND DATA E98FDD7C

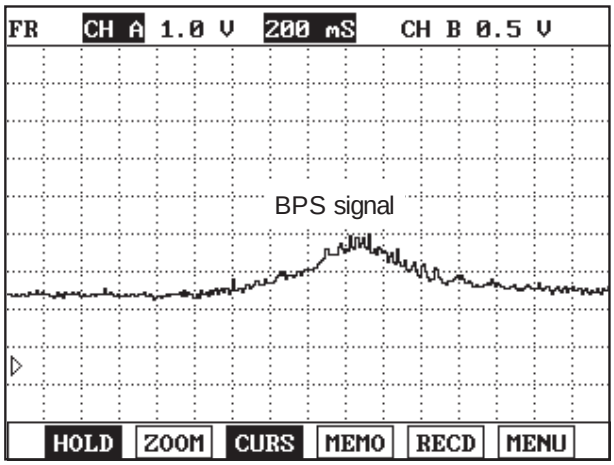

Fig.1

Fig1). This is the waveform of BPS as accelerating from idle state. Signal voltage rises as accelerating.

LFIG208A

MONITOR SCANTOOL DATA E9EBA7FE

1. Connect Scantool to Data Link Connector (DLC).
2. Warm engine up to normal operating temperature.
3. Turn "OFF" electrical devices and A/C.
4. Monitor "BOOST PRESSURE SENSOR" parameter on the Scantool.

Specification : 1000hpa ± 100hpa(VGT actuator : approx. 76%) at idle

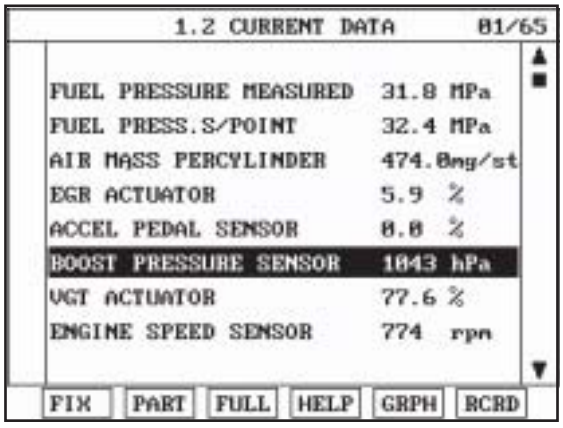

Fig.1

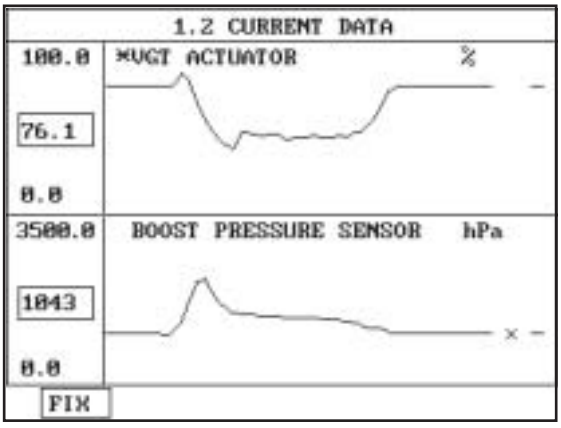

Fig.2

Fig1) Monitor "BOOST PRESSURE SENSOR" parameter on the Scantool at idle after warming engine up.
1000hpa ± 100hpa(approx. 1 atm) is correct value.
Fig.2) VGT actuator duty and boost pressure atacceleration is shown . If boost pressure rises and reaches certain value, VGT actuator duty stops to drop and keeps steady. Releasing accelerator pedal at this moment, VGT actuator duty drops to approx. 45%, then if RPM drops to idle range, duty returns to 76%.

SCMFL6205L

TERMINAL AND CONNECTOR INSPECTION EE7CA11A

1. Electrical systems consist of a lot of harness and connectors, poor connection of terminals can cause various problems and damge of component.

2. Perform checking procedure as follows.

   1) Check damage of harness and terminals : Check terminals for contact resistance, corrosion and deformation.

   2) Check connecting condition of ECM and component connector : Check terminal seperation, damage of locking device and connecting condition between terminal and wiring.

   NOTE

   Disconnect the pin which requires checking at male connector and insert it to the terminal at female connector for checking connecting condition. (after checking, reconnect the pin at correct position.)

3. Is the problem found?

   YES

   ▶ Repair the trouble causing part and go to "Verification of Vehicle Repair".

   NO

   ▶ Go to "Component Inspection ".

COMPONENT INSPECTION E42A32F0

1. BPS visual inspection

   1) IG KEY "OFF", ENGINE "OFF".

   2) Disconnect BPS connector.

   3) Check if corrosion and damage in BPS terminal is detected.

   4) Check BPS mounting state, leakage at O'ring, clogged carbon at pressure detecting hall.

   5) Are the problems relevant to BPS found?

      YES

      ▶ Replace BPS if necessary and go to "Verification of Vehicle Repair".

      NO

      ▶ Go to "2. Check BPS output voltage at IG KEY ON" as follows.

2. Check BPS output voltage at IG KEY ON

   1) IG KEY "OFF", ENGINE "OFF".

   2) Connect Scantool to Data Link Connector (DLC).

   3) IG KEY "ON"

   4) Monitor "ATMOSPHERIC PRESSURE" and "BOOST PRESSURE SENSOR" parameters on scantool.

5) Check if both "ATMOSPHERIC PRESSURE" and "BOOST PRESSURE SENSOR" indicates similar value at IG KEY "ON".

Specification : Refer to "Monitor Scantool Data" .

6) Is any BPS related problem is detected?

YES

▶ Replace BPS and go to "Verification of Vehicle Repair".

NO

▶ Go to "Verification of Vehicle Repair".

VERIFICATION OF VEHICLE REPAIR EE191B53

After a repair, it is essential to verify that the fault is corrected.

1. After connecting Scantool select "DIAGNOSTIC TROUBLE CODES(DTCs)" mode.
2. Clear recorded DTC using Scantool.
3. Drive the vehicle within DTC "Enable conditions" in "General information".
4. After selecting "DIAGNOSTIC TROUBLE CODES(DTCs)" mode and check if DTC is recorded again.
5. Are any DTCs recorded ?

YES

▶ Go to the DTC guide of recorded NO. in Scantool.

NO

▶ System operates within specification.

DTC P0087 RAIL PRESSURE MONITORING-MINIMUM PRESSURE AT ENGINE SPEED TOO LOW

COMPONENT LOCATION E7F91708

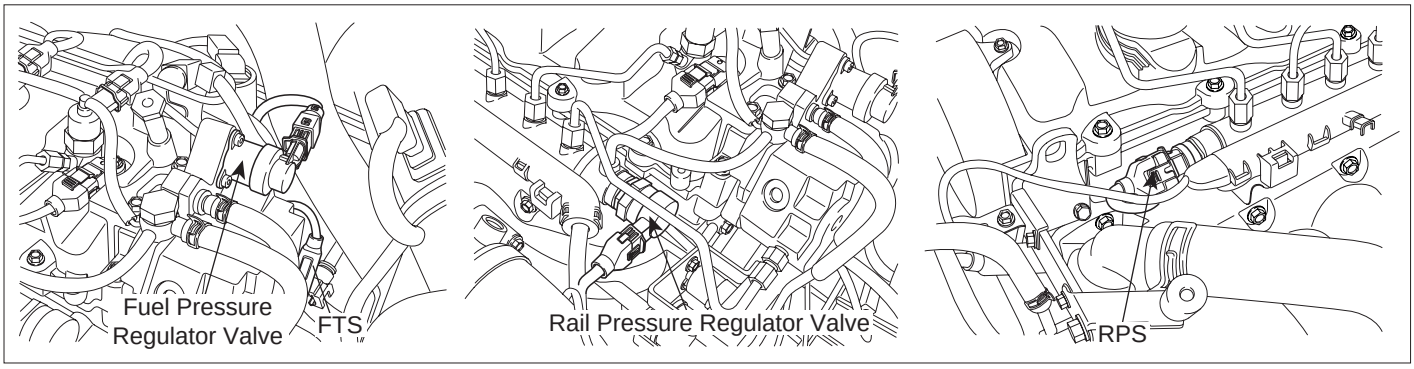

LFIG215A

GENERAL DESCRIPTION E1C6FF62

As inputted rail pressure sensor signal, ECM of Commom rail diesel engine controls fuel metering unit(FPRV-intergrated with high press. pump) and rail pressure control valve(RPRV-integrated with common rail) in order to maintain optimum rail pressure according to current engine rpm and load. However when the problem that leads rail pressure to out of target value intended by ECM occurs due to mechanical or electronical reason, ECM limits engine performance and sets DTC by limiting fuel (stops injector operation) in order to prevent engine from being controlled abnormally. "rail pressure monitoring error" is the DTC which diagnoses 1) supplying state of low pressure fuel and 2) mechanical operating conditions of high pressure pump and 3). RPRV indirectly based on RPS output voltage and RPS duty. Thus, repair relavant to this DTC requires mechanics the total understand of fuel system.

DTC DESCRIPTION EE69C2CE

P0087 is set when rail pressure is lower than target rail pressure by more than 250bar for more than 2 sec. in condition that rail press. is controlled by rail pressure regulator valve(RPRV) or rail pressure is below the lower limit value(200bar). This code is due to 1)fuel less than target value supplied to common rail or 2)excessive return of fuel supplied to common rail or 3)short to low voltage line in rail press. sensor.

DTC DETECTING CONDITION E1AF079E

<table>
<tr><th>Item</th><th colspan="3">Detecting Condition</th><th>Possible Cause</th></tr>
<tr><td>DTC Strategy</td><td colspan="3">• Voltage monitoring</td><td rowspan="7">• fuel pressure regulator valve (close stuck)
• rail pressure regulator valve (open stuck)
• Rail pressure sensor(Output fixed at low voltage line)</td></tr>
<tr><td>Enable Conditions</td><td colspan="3">• Engine running</td></tr>
<tr><td>Threshold Value</td><td colspan="3">• (Case1) : Rail pressure is below target rail pressure by more than 250bar at rail pressure regulator valve(RPRV) operating condition.
• (Case2) : Rail pressure is below minimum limiting value(200bar) at rail pressure regulator valve(RPRV) operating condition.</td></tr>
<tr><td>Diagnostic Time</td><td colspan="3">• 2 sec.</td></tr>
<tr><td rowspan="4">Fail Safe</td><td>Fuel cut</td><td>(Case1) NO
(Case2) YES</td></tr>
<tr><td>EGR Off</td><td>NO</td></tr>
<tr><td>Fuel Limit</td><td>(Case1) YES
(Case2) NO</td></tr>
<tr><td>Check Lamp</td><td>YES</td></tr>
</table>

MONITOR SCANTOOL DATA ED817027

1. Monitoring rail pressure data

   1) Connect Scantool to Data Link Connector (DLC).

   2) Warm engine up to normal operating temperature.

   3) Turn "OFF" electrical devices and A/C.

   4) Monitor "FUEL PRESSURE MEASURED", "FUEL PRESS. S/POINT", "RAIL PRESS. REGULATOR1", "INJ. PUMP REGULATOR" parameter on the Scantool.

Specification : FUEL PRESSURE MEASURED : similar to "FUEL PRESSURE-TARGET"
FUEL PRESS. S/POINT : 27 ± 5 Mpa
RAIL PRESS. REGULATOR1 : 16 ± 3%
INJ. PUMP REGULATOR : 34 ± 3%

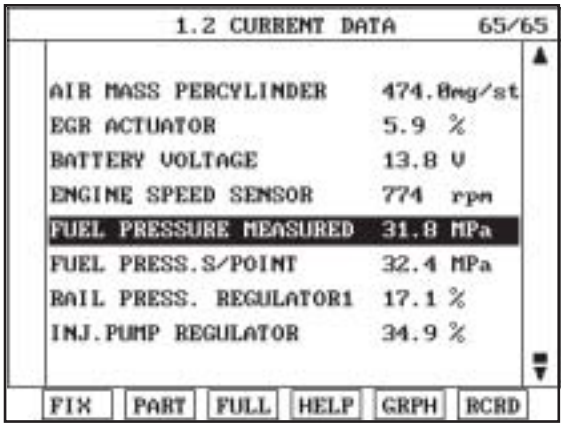

Fig.1

Fig.1) Monitor "FUEL PRESSURE MEASURED" at idle after warming engine up.

SCMFL6206L

Check if "FUEL PRESSURE MEASURED"data is similar to "FUEL PRESS. S/POINT". Not only former two data but also "RAIL PRESS. REGULATOR1" and "INJ. PUMP REGULATOR"should be monitored carefully. Although "FUEL PRESSURE MEASURED" is similar to "FUEL PRESS. S/POINT", if "RAIL PRESS. REGULATOR1" and "INJ. PUMP REGULATOR" is out of specification, it means wear, leakage, stuck of fuel system.

2. Monitoring rail pressure data at acceleration(loading condition).

   1) Connect Scantool to Data Link Connector (DLC).

   2) Warm engine up to normal operating temperature.

   3) Turn "OFF" electrical devices and A/C.

   4) Monitor "FUEL PRESSURE MEASURED", "INJ. PUMP REGULATOR","RAIL PRESS. REGULATOR1" parameter on the Scantool.

SPECIFICATION :

	Idle(without load)	Accelerating(stall test)	Diagnosis
FUEL PRESSURE MEASURED	27 ± 5 Mpa	above 75 Mpa	press. increases
INJ. PUMP REGULATOR	34 ± 3%	38 ± 3%	duty increases
RAIL PRESS. REGULATOR1	16 ± 3%	45 ± 3%	duty increases

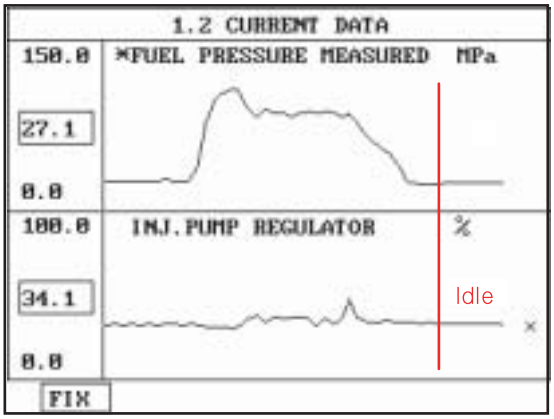

Fig.1

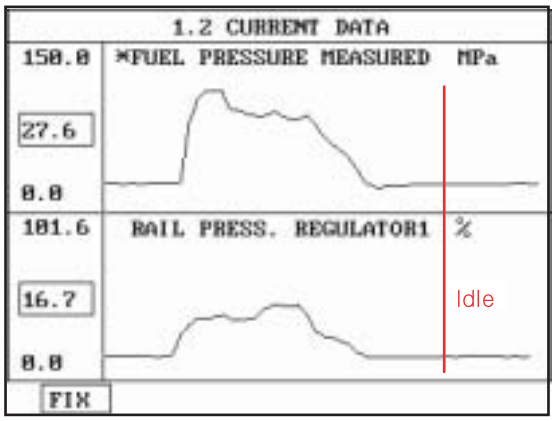

Fig.2

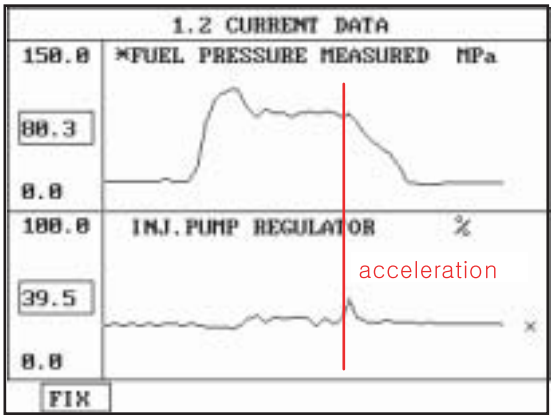

Fig.3

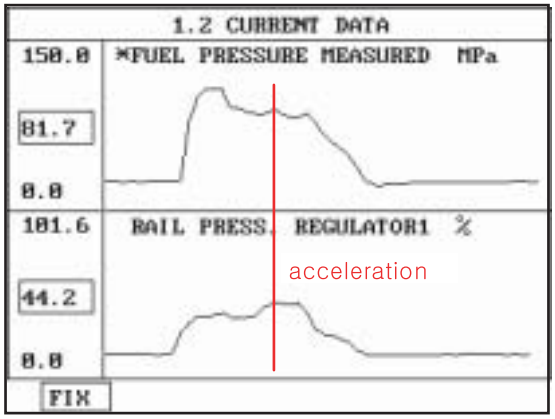

Fig.4

Fig.1) Fuel pressure and Fuel pressure regulator valve data at idle.
Fig.2) Fuel pressure and Rail pressure regulator valve data at idle.
Fig.3) Fuel pressure and Fuel pressure regulator valve data at acceleration.
Fig.4) Fuel pressure and Rail pressure regulator valve data at acceleration.

SCMFL6207L

NOTE

The waveform of fuel pressure regulator valve installed at high pressure pump(fuel detecting MPROP) shows 34 ± 3% duty at idle, duty rises to approx. 38% at acceleration to raise rail pressure.

The waveform of rail pressure regulator valve installed at common rail shows 16 ± 3% duty at idle, duty rises to approx. 45% at acceleration to raise rail pressure.

VERIFICATION OF VEHICLE REPAIR EBA939A2

After a repair, it is essential to verify that the fault is corrected.

1. After connecting Scantool select "DIAGNOSTIC TROUBLE CODES(DTCs)" mode.
2. Clear recorded DTC using Scantool.
3. Drive the vehicle within DTC "Enable conditions" in "General information".
4. After selecting "DIAGNOSTIC TROUBLE CODES(DTCs)" mode and check if DTC is recorded again.
5. Are any DTCs recorded ?

YES

▶ Go to the DTC guide of recorded NO. in Scantool.

NO

▶ System operates within specification.

DTC P0088 RAIL PRESSURE MONITORING-MAXIMUM PRESSURE EXCEEDED

COMPONENT LOCATION E95DA808

Refer to DTC P0087.

GENERAL DESCRIPTION E4AFDB7F

Refer to DTC P0087.

DTC DESCRIPTION E6A7625E

P0088 is set if 1)rail pressure is higher than target rail pressure by more than 200bar for more than 0.8 sec. at rail pressure regulator valve(PPRV) operating condition or 2)rail pressure is above upper limit value(1750bar) for more than 0.24 sec. at rail pressure regulator valve(PPRV) operating condition.This code is due to 1)fuel more than target value supplied to common rail or 2)poor return of fuel supplied to common rail or 3)short to high voltage line in rail press. sensor.

DTC DETECTING CONDITION E2791FDA

<table>
<tr><th>Item</th><th colspan="3">Detecting Condition</th><th>Possible Cause</th></tr>
<tr><td>DTC Strategy</td><td colspan="3">• Voltage monitoring</td><td rowspan="8">• fuel pressure regulator valve (open stuck)
• rail pressure regulator valve (close stuck)
• Rail pressure sensor(Output fixed at high voltage line)</td></tr>
<tr><td>Enable Conditions</td><td colspan="3">• Engine running</td></tr>
<tr><td>Threshold Value</td><td colspan="3">• Rail pressure is above target rail pressure by more than 200bar at rail pressure regulator valve(PPRV) operating condition.- 0.8 sec.
• Rail pressure is above upper limit value(1750bar) at rail pressure regulator valve(PPRV) operating condition. - 0.24 sec.</td></tr>
<tr><td>Diagnostic Time</td><td colspan="3">• Refer to threshold Value.</td></tr>
<tr><td rowspan="4">Fail Safe</td><td>Fuel cut</td><td>NO</td><td rowspan="4">• Engine shut down</td></tr>
<tr><td>EGR Off</td><td>NO</td></tr>
<tr><td>Fuel Limit</td><td>YES</td></tr>
<tr><td>Check Lamp</td><td>YES</td></tr>
</table>

MONITOR SCANTOOL DATA EB518E8A

Refer to DTC P0087.

VERIFICATION OF VEHICLE REPAIR EC3D3546

Refer to DTC P0087.

DTC P0089 RAIL PRESSURE REGULATOR VALVE CIRCUIT OVER CURRENT

COMPONENT LOCATION E438AB9C

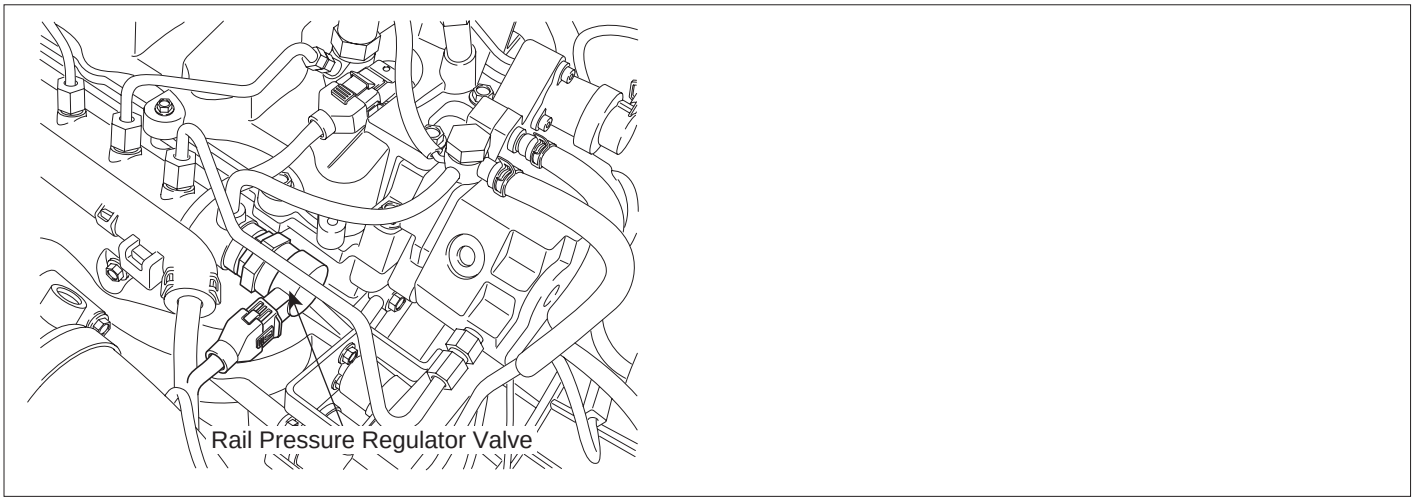

LFIG216A

GENERAL DESCRIPTION ED7CB6C0

Rail press. regulator valve(RPRV) is installed in common rail and controls common rail pressure fast as regulating returning quantity of fuel which is delivered to common rail when fast rise of rail pressure is required like the moment of turning engine ON or when fast relief of pressure is required like at the point of deceleration.The lower RPRV current is, the more fuel is supplied to common rail. Thus it leads rail pressure to be high. On the contrary, the higher RPRV current is, the less fuel is supplied to common rail.

DTC DESCRIPTION E78F4221

P0089 is set when excessive current in control circuit of Rail Pressure regulator valve(integrated with common rail) is detected for more than 0.28 sec.. This code is due to short to battery in control circuit or Rail Pressure regulator valve internal short.

DTC DETECTING CONDITION E60B09A8

<table>
<tr><th>Item</th><th colspan="3">Detecting Condition</th><th>Possible Cause</th></tr>
<tr><td>DTC Strategy</td><td colspan="3">• Voltage monitoring</td><td rowspan="6">• RPRV circuit
• RPRV component</td></tr>
<tr><td>Enable Conditions</td><td colspan="3">• IG KEY "ON"</td></tr>
<tr><td>Threshold Value</td><td colspan="3">• Short to battery in control circuit</td></tr>
<tr><td>Diagnostic Time</td><td colspan="3">• 0.28 sec.</td></tr>
<tr><td rowspan="4">Fail Safe</td><td>Fuel cut</td><td>YES</td><td rowspan="4"></td></tr>
<tr><td>EGR Off</td><td>NO</td></tr>
<tr><td>Fuel Limit</td><td>NO</td></tr>
<tr><td>Check Lamp</td><td>YES</td></tr>
</table>

SPECIFICATION E418C5A6

rail pressure regulator valve resistance	Operating frequancy
3.42 ~ 3.78Ω (20℃)	1000Hz(1KHz)

SCHEMATIC DIAGRAM E3F48E07

[CIRCUIT DIAGRAM]

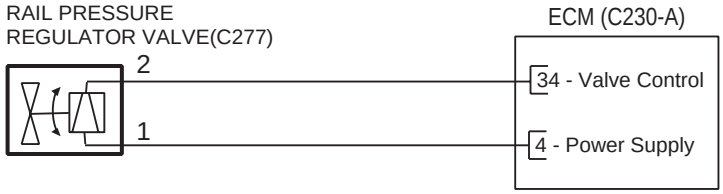

[CONNECTION INFORMATION]

Terminal	Connected to	Function
1	ECM C230-A (4)	Battery Voltage (B+)
2	ECM C230-A (34)	Valve Control

[HARNESS CONNECTORS]

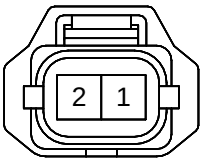

C277

RAIL PRESSURE REGULATOR VALVE

C230-A

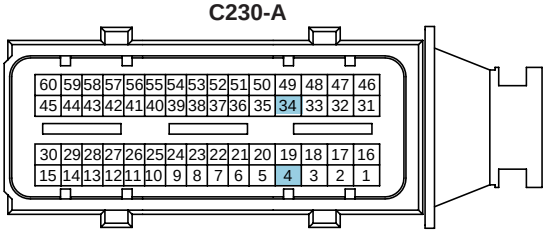

C230-K

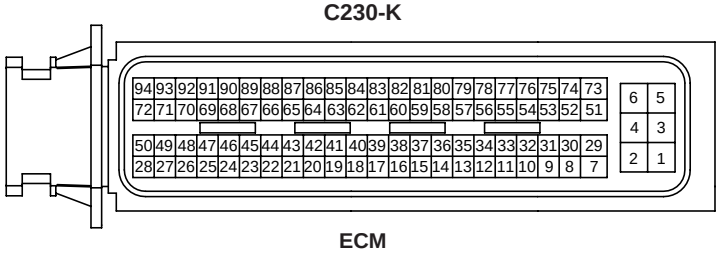

ECM

SCMFL6129L

SIGNAL WAVEFORM AND DATA E3734DDA

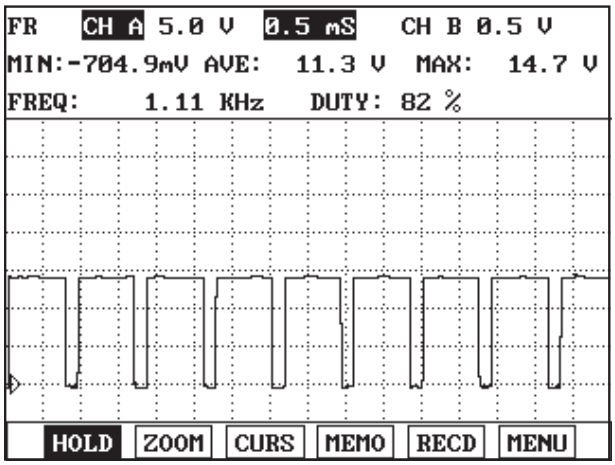

Fig.1

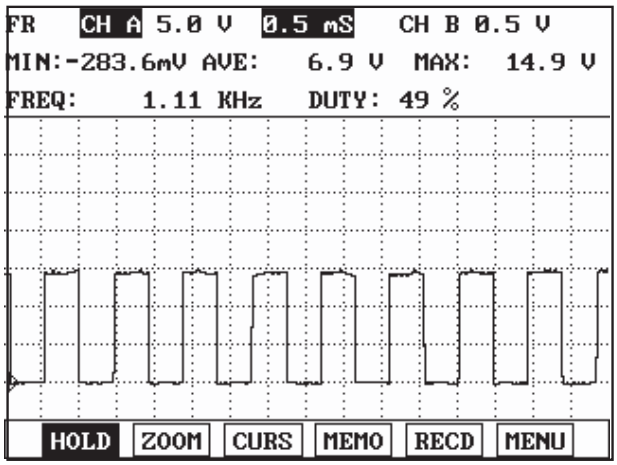

Fig.2

Fig.1) Waveform of rail pressure regulator valve at idle. It shows approx. 17% duty((-) duty).
Fig.2) Waveform of rail pressure regulator valve as accelerating. Approx. 50% duty is outputted as engine load increases.
(When rail pressure increases as accelerating, rail pressure regulator valve duty(current) rises.)

LFIG377A

MONITOR SCANTOOL DATA E1D0E757

1. Connect Scantool to Data Link Connector (DLC).
2. Warm engine up to normal operating temperature.
3. Turn "OFF" electrical devices and A/C.
4. Monitor "FUEL PRESSURE MEASURED", "INJ. PUMP REGULATOR","RAIL PRESS. REGULATOR1" parameter on the Scantool.

SPECIFICATION :

	Idle(without load)	Accelerating(stall test)	Diagnosis
FUEL PRESSURE MEASURED	27 ± 5 Mpa	above 75 Mpa	press. increases
INJ. PUMP REGULATOR	34 ± 3%	38 ± 3%	duty increases
RAIL PRESS. REGULATOR1	16 ± 3%	45 ± 3%	duty increases

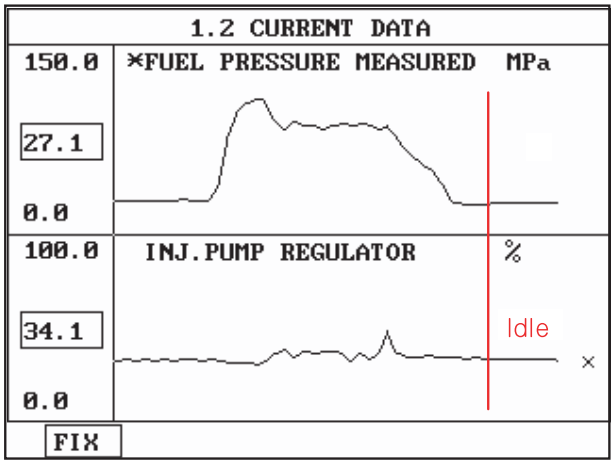

Fig.1

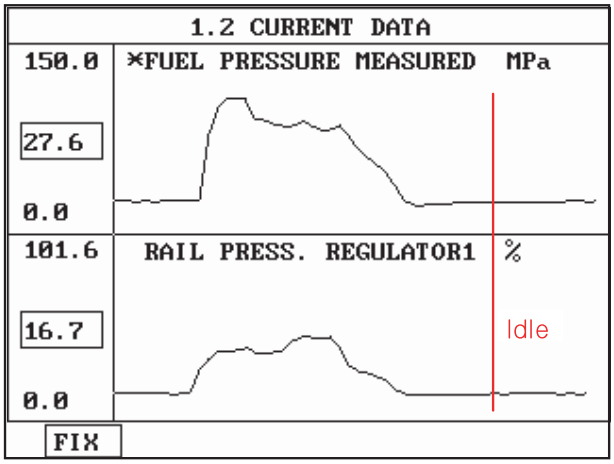

Fig.2

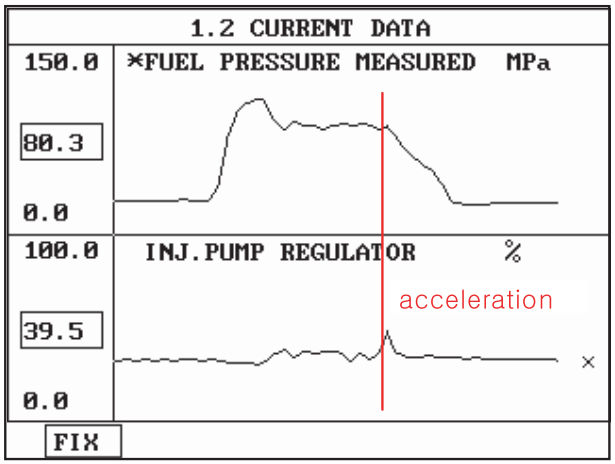

Fig.3

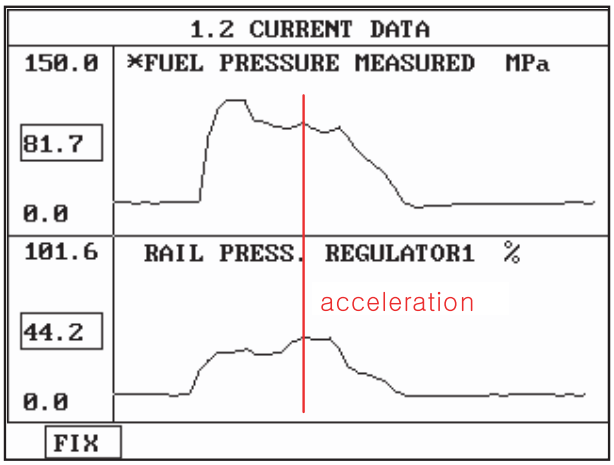

Fig.4

Fig.2) Fuel pressure and Fuel pressure regulator valve data at idle.
Fig.3) Fuel pressure and Rail pressure regulator valve data at idle.
Fig.4) Fuel pressure and Fuel pressure regulator valve data at acceleration.
Fig.5) Fuel pressure and Rail pressure regulator valve data at acceleration.

LFIG375A

NOTE

The waveform of fuel pressure regulator valve installed at high pressure pump(fuel detecting MPROP) shows 34 ± 3% duty at idle, duty rises to approx. 38% at acceleration to raise rail pressure.

The waveform of rail pressure regulator valve installed at common rail shows 16 ± 3% duty at idle, duty rises to approx. 45% at acceleration to raise rail pressure.

TERMINAL AND CONNECTOR INSPECTION E9CA1686

1. Electrical systems consist of a lot of harness and connectors, poor connection of terminals can cause various problems and damge of component.

2. Perform checking procedure as follows.

   1) Check damage of harness and terminals : Check terminals for contact resistance, corrosion and deformation.

   2) Check connecting condition of ECM and component connector : Check terminal seperation, damage of locking device and

NOTE

Disconnect the pin which requires checking at male connector and insert it to the terminal at female connector for checking connecting condition. (after checking, reconnect the pin at correct position.)

3. Is the problem found?

YES

▶ Repair the trouble causing part and go to "Verification of Vehicle Repair".

NO

▶ Go to "Power Circuit Inspection".

POWER CIRCUIT INSPECTION E872E161

1. Check power circuit voltage

   1) IG KEY "OFF", ENGINE "OFF"

   2) Disconnect RPRV connector.

   3) IG KEY "ON"

   4) Measure the voltage of RPRV connector terminal 1.

specification : 11.5V~13.0V

   5) Is the measured voltage within the specification?

YES

▶ Go to "Control Circuit Inspection".

NO

▶ Repair open between rail pressure regulator valve connector terminal 1 and ECM connector(C230-A) terminal 4

CONTROL CIRCUIT INSPECTION E6847DBA

1. Check monitoring voltage in control circuit

   1) IG KEY "OFF", ENGINE "OFF"

   2) Disconnect RPRV connector.

   3) IG KEY "ON"

   4) Measure the voltage of RPRV connector terminal 2.

specification : 3.2V~3.7V

   5) Is the measured voltage within the specification?

YES

▶ Go to "Component Inspection"

NO

▶ When voltage is not detected : Go to "2. Check open in control circuit" as follows.
▶ When high voltage is detected : Repair short to battery and go to "Verification of Vehicle Repair".

2. Check open in control circuit

1) IG KEY "OFF", ENGINE "OFF"

2) Disconnect RPRV connector and ECM connector.

3) Check continuity between RPRV connector terminal 2 and ECM connector (C230-A) terminal 34.

specification : Continuity (below 1.0Ω)

4) Is the measured resistance within the specification?

YES

▶ Repair short to ground in RPRV control circuit and go to "Verification of Vehicle Repair".

NO

▶ Repair open in RPRV control circuit and go to "Verification of Vehicle Repair".

COMPONENT INSPECTION EE7637AF

1. Check RPRV component resistance

1) IG KEY "OFF", ENGINE "OFF".

2) Disconnect RPRV connector.

3) Check RPRV component resistance.

Specification : 3.42 ~ 3.78Ω (20℃)

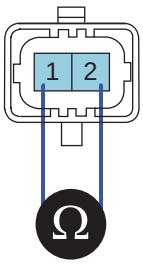

EGNG008I

4) Is the measured resistance within the specification?

YES

▶ Go to "Verification of Vehicle Repair".

NO

▶ Replace common rail assy' and go to "Verification of Vehicle Repair".

VERIFICATION OF VEHICLE REPAIR EBD95C7C

After a repair, it is essential to verify that the fault is corrected.

1. After connecting Scantool select "DIAGNOSTIC TROUBLE CODES(DTCs)" mode.
2. Clear recorded DTC using Scantool.
3. Drive the vehicle within DTC "Enable conditions" in "General information".
4. After selecting "DIAGNOSTIC TROUBLE CODES(DTCs)" mode and check if DTC is recorded again.
5. Are any DTCs recorded ?

YES

▶ Go to the DTC guide of recorded NO. in Scantool.

NO

▶ System operates within specification.

DTC P0091 RAIL PRESSURE REGULATOR VALVE CIRCUIT LOW

COMPONENT LOCATION EE6F4788

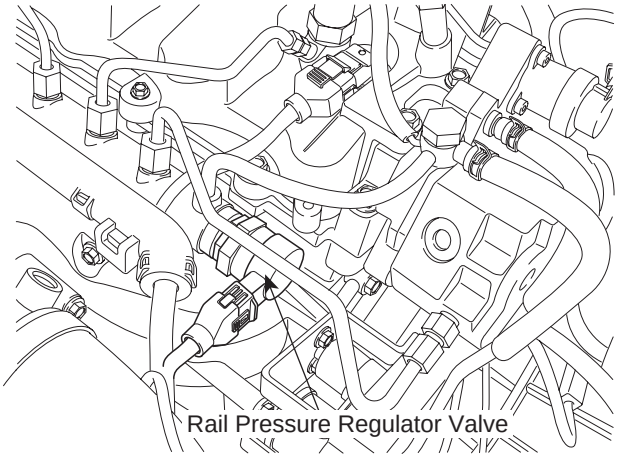

LFIG216A

GENERAL DESCRIPTION E015FD58

Rail press. regulator valve(RPRV) is installed in common rail and controls common rail pressure fast as regulating returning quantity of fuel which is delivered to common rail when fast rise of rail pressure is required like the moment of turning engine ON or when fast relief of pressure is required like at the point of deceleration.The lower RPRV current is, the more fuel is supplied to common rail. Thus it leads rail pressure to be high. On the contrary, the higher RPRV current is, the less fuel is supplied to common rail.

DTC DESCRIPTION E2D42A88

P0091 is set when "0"A in control circuit of Rail Pressure regulator valve(integrated with common rail) is detected for more than specified duration. This code is due to open or short to ground in control circuit or Rail Pressure regulator valve internal open.

DTC DETECTING CONDITION EA1128E7

<table>
<tr><th>Item</th><th colspan="3">Detecting Condition</th><th>Possible Cause</th></tr>
<tr><td>DTC Strategy</td><td colspan="3">• Voltage monitoring</td><td rowspan="8">• RPRV circuit
• RPRV component</td></tr>
<tr><td>Enable Conditions</td><td colspan="3">• IG KEY "ON"</td></tr>
<tr><td>Threshold Value</td><td colspan="3">• Short to GND - 0.22 sec.
• Wiring open - 0.28 sec.</td></tr>
<tr><td>Diagnostic Time</td><td colspan="3">• Refer to threshold Value.</td></tr>
<tr><td rowspan="4">Fail Safe</td><td>Fuel cut</td><td>YES</td><td rowspan="4">• Engine shut down</td></tr>
<tr><td>EGR Off</td><td>NO</td></tr>
<tr><td>Fuel Limit</td><td>NO</td></tr>
<tr><td>Check Lamp</td><td>YES</td></tr>
</table>

SPECIFICATION EDD3F929

rail pressure regulator valve resistance	Operating frequancy
3.42 ~ 3.78Ω (20℃)	1000Hz(1KHz)

SCHEMATIC DIAGRAM E004F6E8

[CIRCUIT DIAGRAM]

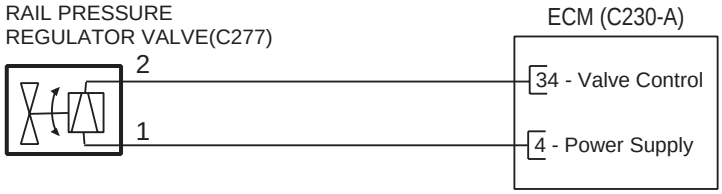

[CONNECTION INFORMATION]

Terminal	Connected to	Function
1	ECM C230-A (4)	Battery Voltage (B+)
2	ECM C230-A (34)	Valve Control

[HARNESS CONNECTORS]

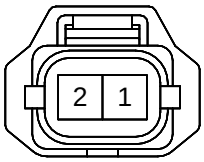

C277

RAIL PRESSURE REGULATOR VALVE

C230-A

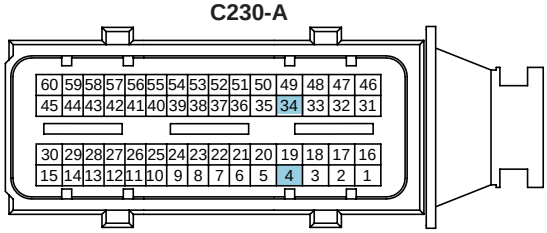

C230-K

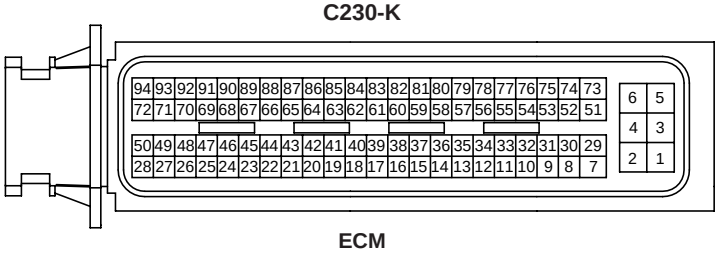

ECM

SCMFL6129L

SIGNAL WAVEFORM AND DATA E028F2AE

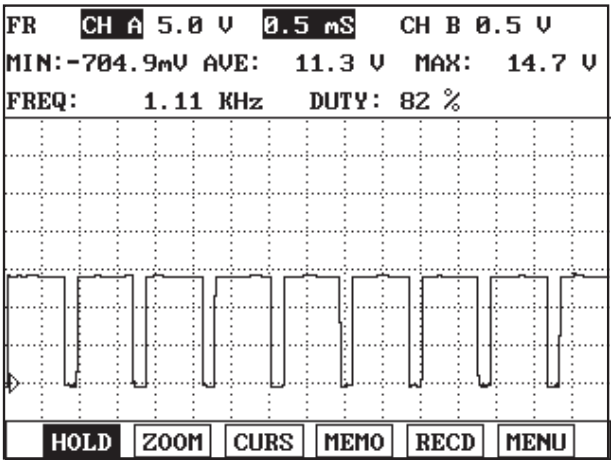

Fig.1

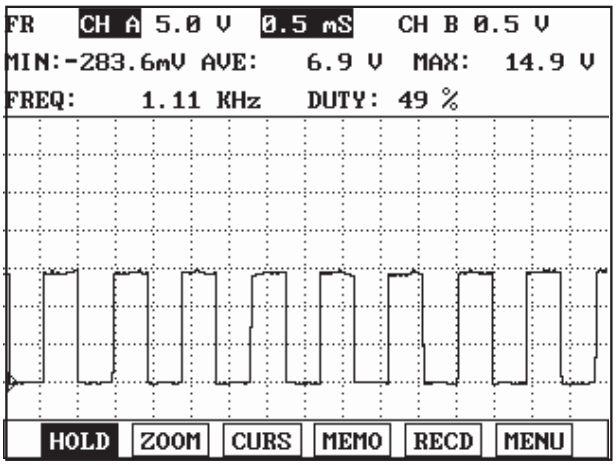

Fig.2

Fig.1) Waveform of rail pressure regulator valve at idle. It shows approx. 17% duty((-) duty).
Fig.2) Waveform of rail pressure regulator valve as accelerating. Approx. 50% duty is outputted as engine load increases.
(When rail pressure increases as accelerating, rail pressure regulator valve duty(current) rises.)

LFIG377A

MONITOR SCANTOOL DATA EF3C40CA

1. Connect Scantool to Data Link Connector (DLC).
2. Warm engine up to normal operating temperature.
3. Turn "OFF" electrical devices and A/C.
4. Monitor "FUEL PRESSURE MEASURED", "INJ. PUMP REGULATOR","RAIL PRESS. REGULATOR1" parameter on the Scantool.

SPECIFICATION :

	Idle(without load)	Accelerating(stall test)	Diagnosis
FUEL PRESSURE MEASURED	27 ± 5 Mpa	above 75 Mpa	press. increases
INJ. PUMP REGULATOR	34 ± 3%	38 ± 3%	duty increases
RAIL PRESS. REGULATOR1	16 ± 3%	45 ± 3%	duty increases

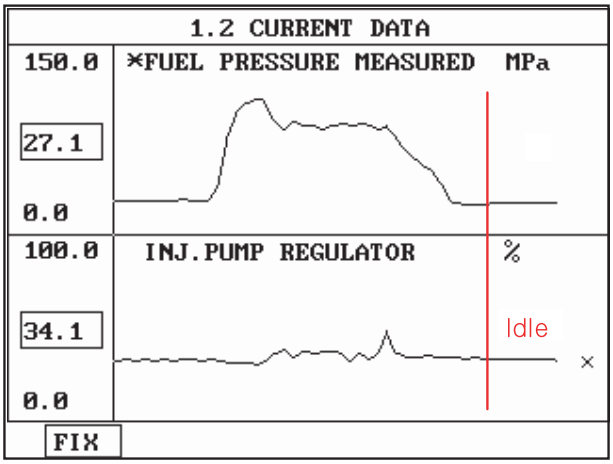

Fig.1

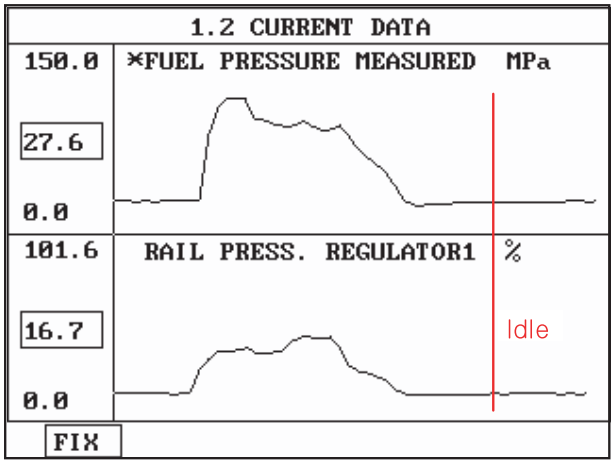

Fig.2

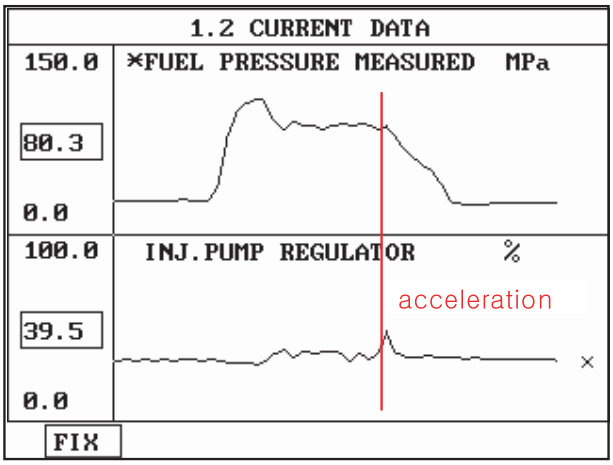

Fig.3

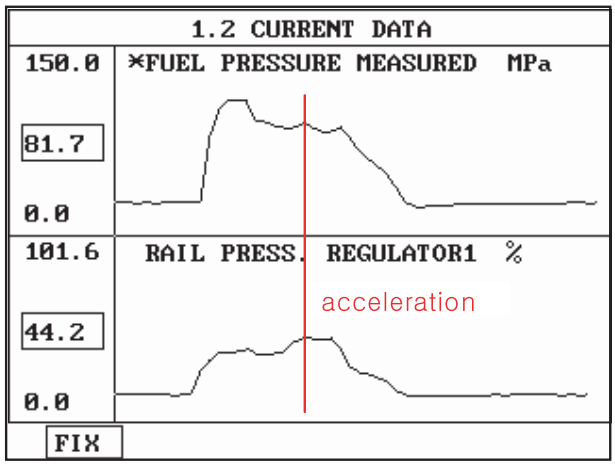

Fig.4

Fig.2) Fuel pressure and Fuel pressure regulator valve data at idle.
Fig.3) Fuel pressure and Rail pressure regulator valve data at idle.
Fig.4) Fuel pressure and Fuel pressure regulator valve data at acceleration.
Fig.5) Fuel pressure and Rail pressure regulator valve data at acceleration.

LFIG375A

NOTE

The waveform of fuel pressure regulator valve installed at high pressure pump(fuel detecting MPROP) shows 34 ± 3% duty at idle, duty rises to approx. 38% at acceleration to raise rail pressure.

The waveform of rail pressure regulator valve installed at common rail shows 16 ± 3% duty at idle, duty rises to approx. 45% at acceleration to raise rail pressure.

TERMINAL AND CONNECTOR INSPECTION E45C2DFB

1. Electrical systems consist of a lot of harness and connectors, poor connection of terminals can cause various problems and damge of component.

2. Perform checking procedure as follows.

   1) Check damage of harness and terminals : Check terminals for contact resistance, corrosion and deformation.

   2) Check connecting condition of ECM and component connector : Check terminal seperation, damage of locking device and

NOTE

Disconnect the pin which requires checking at male connector and insert it to the terminal at female connector for checking connecting condition. (after checking, reconnect the pin at correct position.)

3. Is the problem found?

YES

▶ Repair the trouble causing part and go to "Verification of Vehicle Repair".

NO

▶ Go to "Power Circuit Inspection".

POWER CIRCUIT INSPECTION E2F918E5

1. Check power circuit voltage

   1) IG KEY "OFF", ENGINE "OFF"

   2) Disconnect RPRV connector.

   3) IG KEY "ON"

   4) Measure the voltage of RPRV connector terminal 1.

specification : 11.5V~13.0V

   5) Is the measured voltage within the specification?

YES

▶ Go to "Control Circuit Inspection".

NO

▶ Repair open between rail pressure regulator valve connector terminal 1 and ECM connector(C230-A) terminal 4

CONTROL CIRCUIT INSPECTION ECBDD16F

1. Check monitoring voltage in control circuit

   1) IG KEY "OFF", ENGINE "OFF"

   2) Disconnect RPRV connector.

   3) IG KEY "ON"

   4) Measure the voltage of RPRV connector terminal 2.

specification : 3.2V~3.7V

   5) Is the measured voltage within the specification?

YES

▶ Go to "Component Inspection"

NO

▶ When voltage is not detected : Go to "2. Check open in control circuit" as follows.
▶ When high voltage is detected : Repair short to battery and go to "Verification of Vehicle Repair".

2. Check open in control circuit

1) IG KEY "OFF", ENGINE "OFF"

2) Disconnect RPRV connector and ECM connector.

3) Check continuity between RPRV connector terminal 2 and ECM connector (C230-A) terminal 34.

specification : Continuity (below 1.0Ω)

4) Is the measured resistance within the specification?

YES

▶ Repair short to ground in RPRV control circuit and go to "Verification of Vehicle Repair".

NO

▶ Repair open in RPRV control circuit and go to "Verification of Vehicle Repair".

COMPONENT INSPECTION E82ECC11

1. Check RPRV component resistance

1) IG KEY "OFF", ENGINE "OFF".

2) Disconnect RPRV connector.

3) Check RPRV component resistance.

Specification : 3.42 ~ 3.78Ω (20℃)

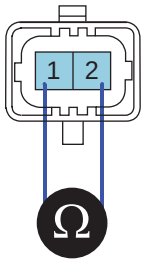

EGNG008I

4) Is the measured resistance within the specification?

YES

▶ Go to "Verification of Vehicle Repair".

NO

▶ Replace common rail assy' and go to "Verification of Vehicle Repair".

VERIFICATION OF VEHICLE REPAIR EF52AEC2

After a repair, it is essential to verify that the fault is corrected.

1. After connecting Scantool select "DIAGNOSTIC TROUBLE CODES(DTCs)" mode.
2. Clear recorded DTC using Scantool.
3. Drive the vehicle within DTC "Enable conditions" in "General information".
4. After selecting "DIAGNOSTIC TROUBLE CODES(DTCs)" mode and check if DTC is recorded again.
5. Are any DTCs recorded ?

YES

▶ Go to the DTC guide of recorded NO. in Scantool.

NO

▶ System operates within specification.

DTC P0092 RAIL PRESSURE REGULATOR VALVE CIRCUIT HIGH

COMPONENT LOCATION EA28FE1E

Refer to DTC P0091.

GENERAL DESCRIPTION EEED0BA5

Refer to DTC P0091.

DTC DESCRIPTION E01B3164

P0092 is set when excessive current in power circuit of Rail Pressure regulator valve(integrated with common rail) is detected for more than 0.28 sec.. This code is due to short to battery in power circuit or Rail pressure regulator valve internal short.

DTC DETECTING CONDITION EB66B445

<table>
<tr><th>Item</th><th colspan="3">Detecting Condition</th><th>Possible Cause</th></tr>
<tr><td>DTC Strategy</td><td colspan="3">• Voltage monitoring</td><td rowspan="6">• RPRV circuit
• RPRV component</td></tr>
<tr><td>Enable Conditions</td><td colspan="3">• IG KEY "ON"</td></tr>
<tr><td>Threshold Value</td><td colspan="3">• Short to battery (power circuit in rail pressure regulator valve)</td></tr>
<tr><td>Diagnostic Time</td><td colspan="3">• 0.28 sec.</td></tr>
<tr><td rowspan="4">Fail Safe</td><td>Fuel cut</td><td>YES</td><td rowspan="4">• Engine shut down</td></tr>
<tr><td>EGR Off</td><td>NO</td></tr>
<tr><td>Fuel Limit</td><td>NO</td></tr>
<tr><td>Check Lamp</td><td>YES</td></tr>
</table>

SPECIFICATION E2BADE99

Refer to DTC P0091.

SCHEMATIC DIAGRAM EFF54E8C

Refer to DTC P0091.

SIGNAL WAVEFORM AND DATA ED0669AE

Refer to DTC P0091.

MONITOR SCANTOOL DATA EADA623B

Refer to DTC P0091.

TERMINAL AND CONNECTOR INSPECTION ECBD4F31

Refer to DTC P0091.

POWER CIRCUIT INSPECTION ED82AADD

1. Check power circuit voltage

   1) IG KEY "OFF", ENGINE "OFF"

   2) Disconnect RPRV connector.

   3) IG KEY "ON"

   4) Measure the voltage of RPRV connector terminal 1.

specification : 11.5V~13.0V

   5) Is the measured voltage within the specification?

   YES

   ▶ Go to "Control Circuit Inspection".

   NO

   ▶ Repair open between rail pressure regulator valve connector terminal 1 and ECM connector(C230-A) terminal 4

CONTROL CIRCUIT INSPECTION E5C659E3

1. Check monitoring voltage in control circuit

   1) IG KEY "OFF", ENGINE "OFF"

   2) Disconnect RPRV connector.

   3) IG KEY "ON"

   4) Measure the voltage of RPRV connector terminal 2.

specification : 3.2V~3.7V

   5) Is the measured voltage within the specification?

   YES

   ▶ Go to "Component Inspection"

   NO

   ▶ When voltage is not detected : Go to "2. Check open in control circuit" as follows.
   ▶ When high voltage is detected : Repair short to battery and go to "Verification of Vehicle Repair".

2. Check open in control circuit

   1) IG KEY "OFF", ENGINE "OFF"

   2) Disconnect RPRV connector and ECM connector.

   3) Check continuity between RPRV connector terminal 2 and ECM connector (C230-A) terminal 34.

specification : Continuity (below 1.0Ω)

4) Is the measured resistance within the specification?

YES

▶ Repair short to ground in RPRV control circuit and go to "Verification of Vehicle Repair".

NO

▶ Repair open in RPRV control circuit and go to "Verification of Vehicle Repair".

COMPONENT INSPECTION E77176D0

1. Check RPRV component resistance

1) IG KEY "OFF", ENGINE "OFF".

2) Disconnect RPRV connector.

3) Check RPRV component resistance.

Specification : 3.42 ~ 3.78Ω (20℃)

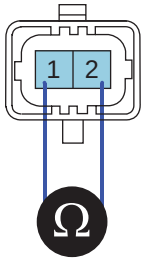

EGNG008I

4) Is the measured resistance within the specification?

YES

▶ Go to "Verification of Vehicle Repair".

NO

▶ Replace common rail assy' and go to "Verification of Vehicle Repair".

VERIFICATION OF VEHICLE REPAIR E7FD781E

Refer to DTC P0091.

DTC P0097 INTAKE AIR TEMPERATURE SENSOR 2 CIRCUIT LOW INPUT

COMPONENT LOCATION E67033BC

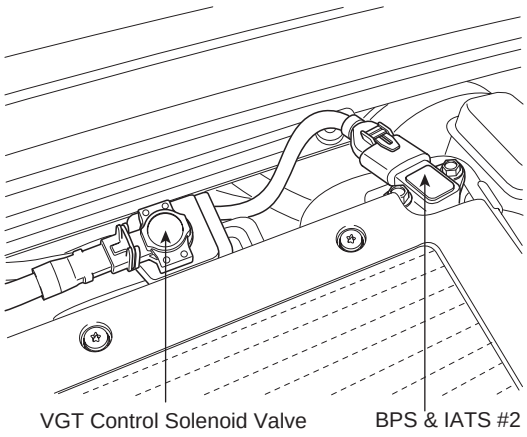

SCMFL6500L

GENERAL DESCRIPTION E9DA23FE

Intake Air Temperature Sensor(IATS) is NTC thermistor. Installed inside of both MAFS and BPS, it senses intake air temperature. In case of EURO-4 diesel engine, IATS is installed in front of turbocharger(inside of MAFS) and behind it(inside of BPS). Comparing air temperature from both sensors(one is intake air temperature, the other is air temperature passing through turbo charger), more accurate sensing of intake air temperature is possible.With intake air temperature signal, ECM performs EGR control correction and fuel injection quantity correction.(MAFS is needed for EGR FEED BACK control in electronically controlled diesel engine. The calculation of air density at certain temperture is required to perform EGR FEED BACK control correctly.)

DTC DESCRIPTION E3FE6714

P0097 is set when the voltage below 73mV - minimum output voltage of IATS(integrated with BPS) - is detected for more than 2.0 sec. This code is due to short to ground in IATS signal circuit.

DTC DETECTING CONDITION E925684D

<table>
<tr><th>Item</th><th colspan="3">Detecting Condition</th><th>Possible Cause</th></tr>
<tr><td>DTC Strategy</td><td colspan="3">• Voltage monitoring</td><td rowspan="6">• IATS circuit
• IATS component</td></tr>
<tr><td>Enable Conditions</td><td colspan="3">• IG KEY "ON"</td></tr>
<tr><td>Threshold Value</td><td colspan="3">• Output signal below minimum value(below 73mV)</td></tr>
<tr><td>Diagnostic Time</td><td colspan="3">• 2.0 sec.</td></tr>
<tr><td rowspan="4">Fail Safe</td><td>Fuel cut</td><td>NO</td><td rowspan="4">• Air temp. fixed at 28 ℃</td></tr>
<tr><td>EGR Off</td><td>NO</td></tr>
<tr><td>Fuel Limit</td><td>NO</td></tr>
<tr><td>Check Lamp</td><td>NO</td></tr>
</table>

SPECIFICATION E8B7F239

Temp.	-40℃	-20℃	0℃	20℃	40℃	60℃	80℃
Resistance	35.14 ~43.76KΩ	12.66 ~15.12KΩ	5.12 ~5.89KΩ	2.29 ~2.55KΩ	1.10 ~1.24KΩ	0.57 ~0.65KΩ	0.31 ~0.37KΩ

SCHEMATIC DIAGRAM ED9A170D

[CIRCUIT DIAGRAM]

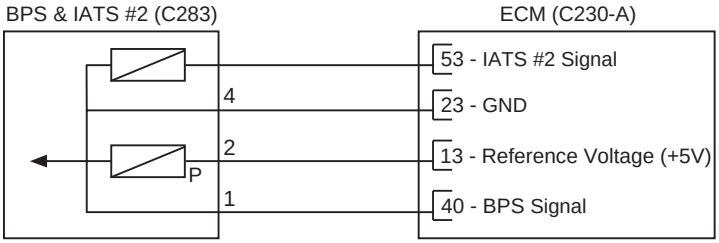

[CONNECTION INFORMATION]

Terminal	Connected to	Function
1	ECM C230-A (40)	BPS Signal
2	ECM C230-A (13)	Reference Voltage (+5V)
3	ECM C230-A (53)	IATS #2 Signal
4	ECM C230-A (23)	Sensor ground

[HARNESS CONNECTORS]

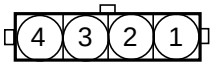

C283

BPS & IATS #2

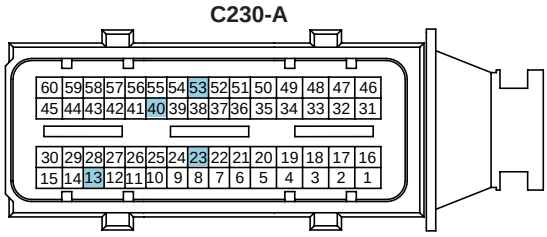

C230-A

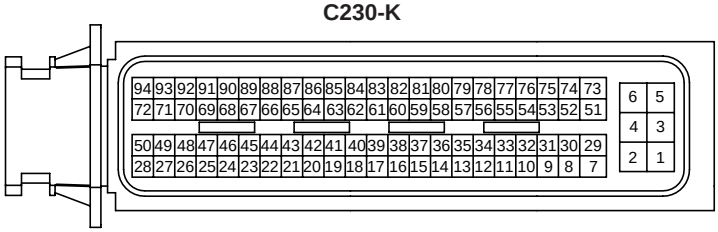

C230-K

ECM

SCMFL6118L

SIGNAL WAVEFORM AND DATA E395DB03

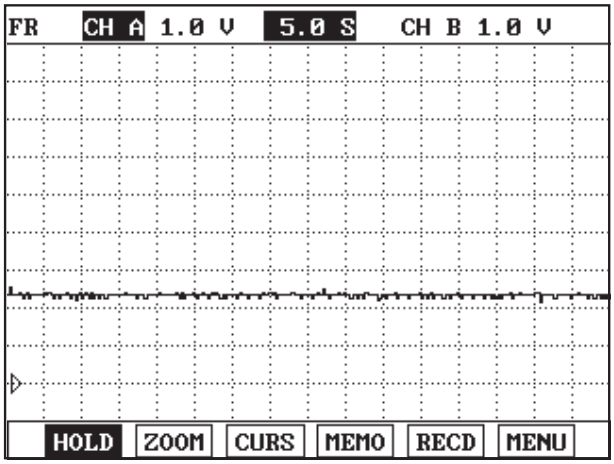

Fig.1

Fig.1) IATS output waveform at 45℃. The higher temperature is, the lower voltage becomes.

LFIG381A

MONITOR SCANTOOL DATA E5D4407A

1. Connect Scantool to Data Link Connector (DLC).
2. Warm engine up to normal operating temperature.
3. Turn "OFF" electrical devices and A/C.
4. Monitor "AIR TERMPERATURE SENSOR" parameter on the Scantool.

specification : current intake air temperture is displayed.

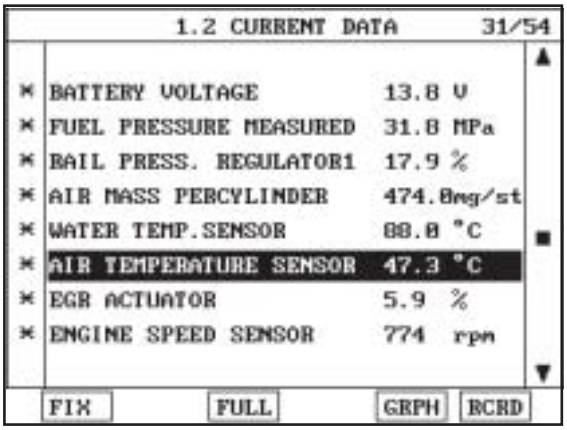

Fig.1

Fig.1) Check if current temperature is same as the value displayed on the Scantool.

SCMFL6211L

TERMINAL AND CONNECTOR INSPECTION E37C39EC

1. Electrical systems consist of a lot of harness and connectors, poor connection of terminals can cause various problems and damge of component.
2. Perform checking procedure as follows.

1) Check damage of harness and terminals : Check terminals for contact resistance, corrosion and deformation.

2) Check connecting condition of ECM and component connector : Check terminal seperation, damage of locking device and

NOTE

Disconnect the pin which requires checking at male connector and insert it to the terminal at female connector for checking connecting condition. (after checking, reconnect the pin at correct position.)

3. Is the problem found?

YES

▶ Repair the trouble causing part and go to "Verification of Vehicle Repair".

NO

▶ Go to "Signal Circuit Inspection".

SIGNAL CIRCUIT INSPECTION EB4A2F1F

1. Check signal circuit voltage

1) IG KEY "OFF", ENGINE "OFF"

2) Disconnect BPS connector.

3) IG KEY "ON"

4) Check the voltage of BPS connector terminal 3.

Specification : 4.8V~5.1V

5) Is the measured voltage within the specificaiton?

YES

▶ Go to "Component Inspection".

NO

▶ Repair "2. Check short to ground in signal circuit" as follows.

2. Check short to ground in signal circuit

1) IG KEY "OFF", ENGINE "OFF"

2) Disconnect BPS connector and ECM connector.

3) Check continuity between BPS connector terminal 3 and chassis ground.

Specification : Discontinuity(Infinite Ω)

4) Is the measured resistance within the specification?

YES

▶ Go to "Component Inspection".

NO

▶ Repair short to ground in signal circuit and go to "Verification of Vehicle Repair".
▶ Repair open in signal circuit and go to "Verification of Vehicle Repair".

COMPONENT INSPECTION E08990DE

1. IG KEY "OFF", ENGINE "OFF".
2. Disconnect BPS connector.
3. Measure resistance between IATS component terminal 3 and 4, referring to resistance characteristic table of specification of General information.

Specification : Refer to Specification of General Information

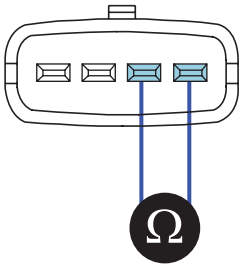

LFIG384A

4. Is the measured resistance at certain temperature within the specified resisance range at the temperature?

YES

▶ Go to "Verification of Vehicle Repair".

NO

▶ Replace BPS assy' and go to "Verification of Vehicle Repair".

VERIFICATION OF VEHICLE REPAIR E36A954E

After a repair, it is essential to verify that the fault is corrected.

1. After connecting Scantool select "DIAGNOSTIC TROUBLE CODES(DTCs)" mode.
2. Clear recorded DTC using Scantool.
3. Drive the vehicle within DTC "Enable conditions" in "General information".
4. After selecting "DIAGNOSTIC TROUBLE CODES(DTCs)" mode and check if DTC is recorded again.
5. Are any DTCs recorded ?

YES

▶ Go to the DTC guide of recorded NO. in Scantool.

NO

▶ System operates within specification.

DTC P0098 INTAKE AIR TEMPERATURE SENSOR 2 CIRCUIT HIGH INPUT

COMPONENT LOCATION E616B3FF

Refer to DTC P0097.

GENERAL DESCRIPTION EE99A887

Refer to DTC P0097.

DTC DESCRIPTION E6DFC952

P0098 is set when the voltage above 4965mV - maximum output voltage of IATS(integrated with BPS) - is detected for more than 2.0 sec.. This code is due to 1) open or 2)short to battery in IATS signal circuit.

DTC DETECTING CONDITION EA2C8C4D

<table>
<tr><th>Item</th><th colspan="3">Detecting Condition</th><th>Possible Cause</th></tr>
<tr><td>DTC Strategy</td><td colspan="3">• Voltage monitoring</td><td rowspan="6">• IATS circuit
• IATS component</td></tr>
<tr><td>Enable Conditions</td><td colspan="3">• IG KEY "ON"</td></tr>
<tr><td>Threshold Value</td><td colspan="3">• Output signal above maximum value(above 4965mV)</td></tr>
<tr><td>Diagnostic Time</td><td colspan="3">• 2.0 sec.</td></tr>
<tr><td rowspan="4">Fail Safe</td><td>Fuel cut</td><td>NO</td><td rowspan="4">• Air temp. fixed at 28 ℃</td></tr>
<tr><td>EGR Off</td><td>NO</td></tr>
<tr><td>Fuel Limit</td><td>NO</td></tr>
<tr><td>Check Lamp</td><td>NO</td></tr>
</table>

SPECIFICATION E898D2D7

Refer to DTC P0097.

SCHEMATIC DIAGRAM E96F6191

Refer to DTC P0097.

SIGNAL WAVEFORM AND DATA ECAC6CC0

Refer to DTC P0097.

MONITOR SCANTOOL DATA E6B65CF2

Refer to DTC P0097.

TERMINAL AND CONNECTOR INSPECTION EBC05B74

Refer to DTC P0097.

SIGNAL CIRCUIT INSPECTION E5C5C92B

1. Check signal circuit voltage

   1) IG KEY "OFF", ENGINE "OFF".

   2) Disconnect BPS connector.

   3) IG KEY "ON"

   4) Check the voltage of BPS connector terminal 3.

Specification : 4.8V~5.1V

   5) Is the measured voltage within the specificaiton?

   YES

   ▶ Go to "Ground Circuit Inspection".

   NO

   ▶ Go to "2.Check open in signal circuit" as follows.

2. Check open in signal circuit

   1) IG KEY "OFF", ENGINE "OFF".

   2) Disconnect BPS connector and ECM connector.

   3) Check continuity between BPS connector terminal 3 and ECM connector (C230-A) terminal 53.

Specification : Continuity (below 1.0Ω)

   4) Is the measured resistance within the specification?

   YES

   ▶ Go to "3. Check short to battery in signal circuit" as follows.

   NO

   ▶ Repair open in signal circuit and go to "Verification of Vehicle Repair".

3. Check short to battery in signal circuit

   1) IG KEY "OFF", ENGINE "OFF".

   2) Disconnect BPS connector and ECM connector.

   3) IG KEY "ON"

   4) Check the voltage of BPS connector terminal 3.

Specification : 0.0V~0.1V

   5) Is the measured voltage within the specification?(with both connector disconnected)

YES

▶ Go to "Ground Circuit Inspection".

NO

▶ Repair short to battery in signal circuit and go to "Verification of Vehicle Repair".

GROUND CIRCUIT INSPECTION E61BCC4C

1. IG KEY "OFF", ENGINE "OFF".
2. Disconnect BPS connector.
3. IG KEY "ON".
4. Measure the voltage of BPS connector terminal 3. [TEST "A"]
5. Measure the voltage between BPS connector terminal 3 and 4. [TEST "B"]
   (terminal 3 : Check + prove , terminal 4 : Check - prove)

Specification : [TEST "A"] Voltage - [TEST "B"] Voltage = below 200mV

6. Is the measured voltage within the specification?

YES

▶ Go to "Component Inspection".

NO

▶ When "B" voltage is not detected : Repair open in ground circuit and go to "Verification of Vehicle Repair".
▶ When the voltage difference between "A" and "B" is above 200mV : Eliminate the causes of excessive resistance and go to "Verification of Vehicle Repair".

COMPONENT INSPECTION EF39E398

1. IG KEY "OFF", ENGINE "OFF".
2. Disconnect BPS connector.
3. Measure resistance between IATS component terminal 3 and 4, referring to resistance characteristic table of specification of General information.

Specification : Refer to Specification of General Information

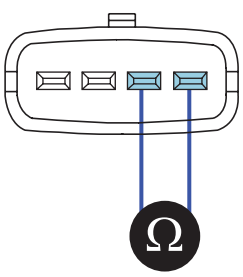

LFIG384A

4. Is the measured resistance at certain temperature within the specified resisance range at the temperature?

YES

▶ Go to "Verification of Vehicle Repair".

NO

▶ Replace BPS assy' and go to "Verification of Vehicle Repair".

VERIFICATION OF VEHICLE REPAIR E7F9E9F2

Refer to DTC P0097.

DTC P0101 MASS OR VOLUME AIR FLOW CIRCUIT RANGE/PERFORMANCE

COMPONENT LOCATION EEEE17FF

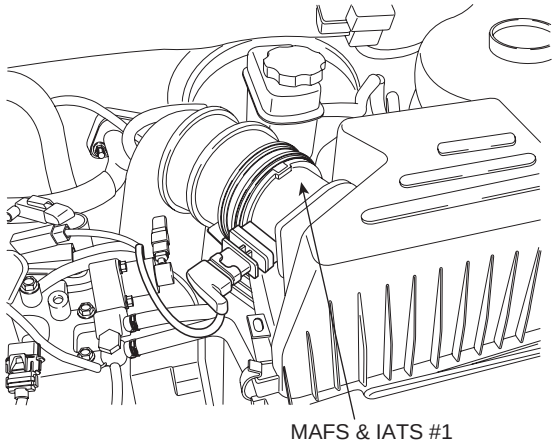

SCMFL6501L

GENERAL DESCRIPTION E53B271A

Mass Air Flow Sensor(MAFS) is digital sensor. Measuring mass of air flow, signal is outputted as frequency(Hz). ECM performs EGR system feed back control with the information of measured mass air flow. (The role of MAFS in diesel engine is different from gasoline engine. Fuel injection quantity is decided by MAFS signal in gasoline engine.)When the amount of EGR gas(contains no oxygen) flowing into combustion chamber increases, the air passing through MAFS(contains oxygen) decreases. Thus, with the output signal change of MAFS accompanied by EGR actuator actuation, ECM determines the amount of recirculated EGR gas quantity.

NOTE

NOx is produced in the reaction of nitrogen and oxygen.
If least intake air required for complete combustion flows into combustion chamber by controlling EGR gas(contains no oxygen) which is recirculated to combustion chamber, NOx decreases because there is no supplementary oxygen to react with nitrogen.

DTC DESCRIPTION E049FA0D

P0101 is set when short to battery or ground in MAFS or IATS signal circuit is detected for more than 0.58 sec.

DTC DETECTING CONDITION E02A7933

Item	Detecting Condition			Possible Cause
DTC Strategy	• Voltage monitoring			• MAFS circuit • MAFS component
Enable Conditions	• Engine running			
Threshold Value	• Shrot to battery or ground in MAFS or IATS circuit .			
Diagnostic Time	• 0.58 sec.			
Fail Safe	Fuel cut	NO		
	EGR Off	YES		
	Fuel Limit	YES		
	Check Lamp	YES		

SPECIFICATION E8013648

Intake air quantity (Kg/h)	Output frequency (KHz)		deviation [%]
	20℃	**80**℃	
8	1.97		±3
10	2.01	2.01	±2
40	2.50	2.50	±2
105	3.20	3.20	±2
220	4.30		±2
480	7.80	7.80	±2
560	9.50		±3

SCHEMATIC DIAGRAM EBA9E8D4

[CIRCUIT DIAGRAM]

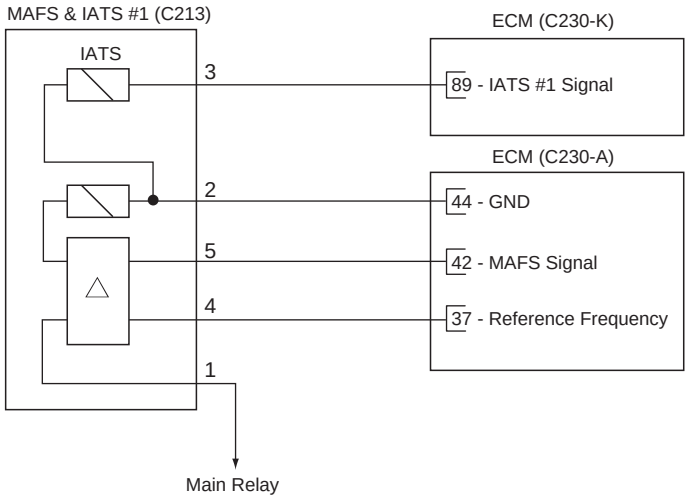

[CONNECTION INFORMATION]

Terminal	Connected to	Function
1	Main Relay	Battery Voltage (B+)
2	ECM C230-A (44)	Sensor Ground
3	ECM C230-K (89)	IATS #1 Signal
4	ECM C230-A (37)	Reference Frequency
5	ECM C230-A (42)	MAFS Signal

[HARNESS CONNECTORS]

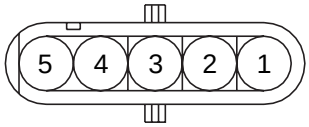

C213

MAFS & IATS #1

C230-A

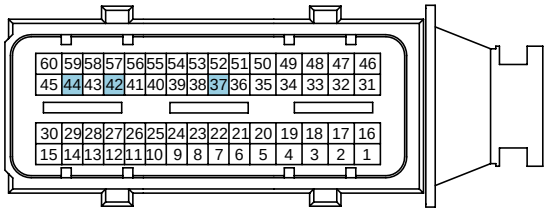

C230-K

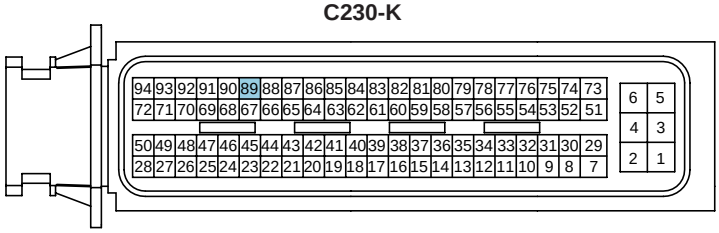

ECM

SCMFL6113L

SIGNAL WAVEFORM AND DATA EB833943

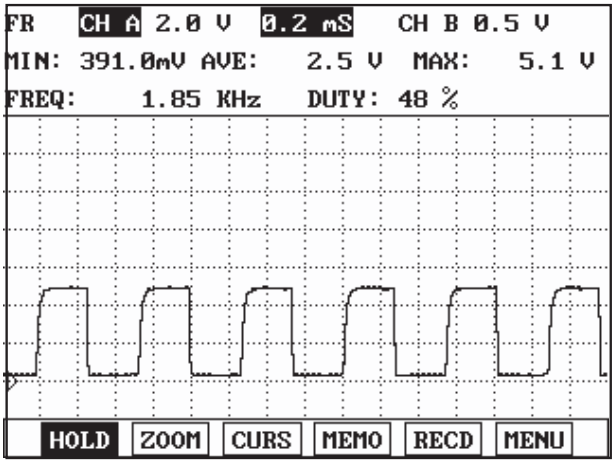

Fig.1

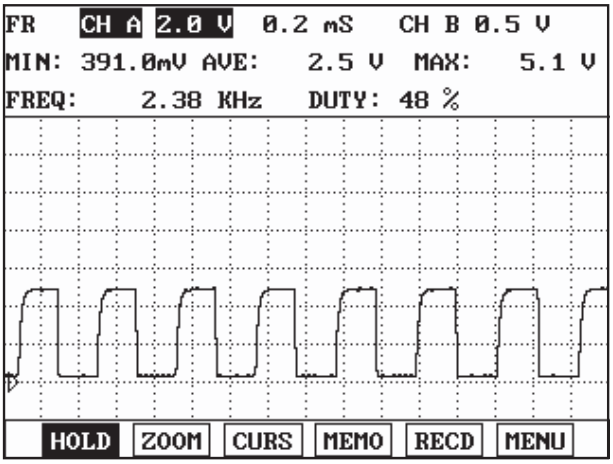

Fig.2

Fig.1) MAFS signal waveform at IG KEY "ON". It shows digital signal of 50% duty, 1.8KHz.
Fig.2) MAFS signal waveform at idle(750RPM, EGR actuator duty 5%, air flow for each cylinder 475mg/st). It shows digital signal of 50% duty, 2.2~2.7KHz.

SCMFL6390L

NOTE

Signal frequency increases as RPM rises.

MONITOR SCANTOOL DATA E9C207F9

1. Connect Scantool to Data Link Connector (DLC).
2. Warm engine up to normal operating temperature.
3. Turn "OFF" electrical devices and A/C.
4. Monitor "AIR MASS PERCYLINDER" parameter on the Scantool.

Specification : When EEGR actuator does not operate 5% duty) at idle : 450mg/st ± 50 mg/st
When EEGR actuator operates(Approx. 45% duty) at idle : 400mg/st ± 50 mg/st

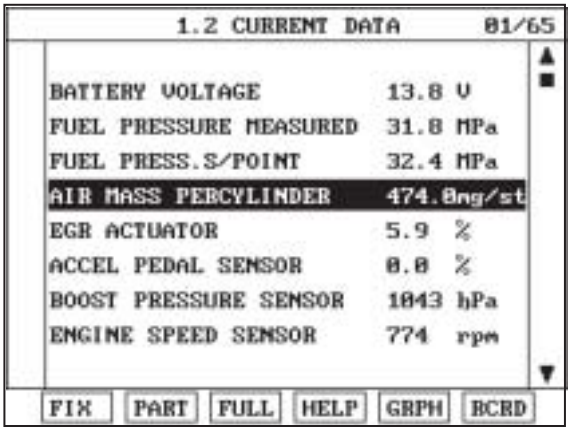

Fig.1

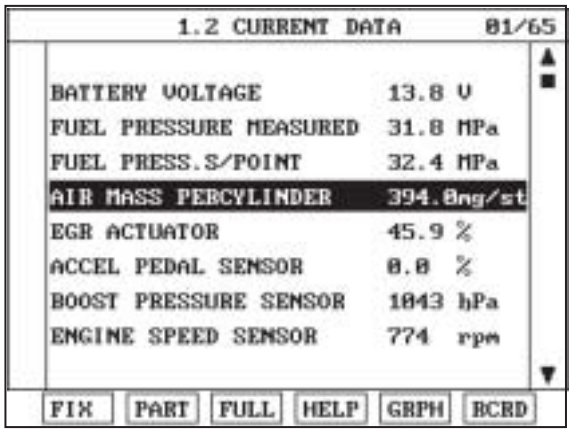

Fig.2

Fig.1) Check if "AIR MASS PERCYLINDER"l is 450mg/st ± 50mg/st without EEGR operation at warm idle (EEGR actuator 5% duty)
Fig.2) Check if "AIR MASS PERCYLINDER"l is 400mg/st ± 50mg/st with EEGR operation at warm idle (EEGR actuator approx. 45% duty)

SCMFL6391L

※EEGR actuator operates as decelerating after rapid acceleration when idle EEGR does not operate, EEGR actuator duty rises to approx. 45% at operating condition. This controlling process lasts for about 3 min. then EEGR actuator turns "OFF" (duty 5%).

NOTE

When IATS related DTC code(P0112, P0113) is set with this code, refer to IATS related DTC guide in advance.

TERMINAL AND CONNECTOR INSPECTION E5D4EF33

1. Electrical systems consist of a lot of harness and connectors, poor connection of terminals can cause various problems and damge of component.

2. Perform checking procedure as follows.

   1) Check damage of harness and terminals : Check terminals for contact resistance, corrosion and deformation.

   2) Check connecting condition of ECM and component connector : Check terminal seperation, damage of locking device and

NOTE

Disconnect the pin which requires checking at male connector and insert it to the terminal at female connector for checking connecting condition. (after checking, reconnect the pin at correct position.)

3. Is the problem found?

YES

▶ Repair the trouble causing part and go to "Verification of Vehicle Repair".

NO

▶ Go to "Power Circuit Inspection".

POWER CIRCUIT INSPECTION EE21F774

1. Check power circuit voltage

   1) IG KEY "OFF", ENGINE "OFF".

   2) Disconnect MAFS connector.

   3) IG KEY "ON".

   4) Measure the voltage of MAFS connector terminal 1 and 4.

Specification : Terminal 4 : 4.8V~5.1V (Sensor power)
Terminal 1 : 11.5V~13.0V (IG Power)

   5) Is the measured voltage within the specification?

YES

▶ Go to "Signal Circuit Inspection".

NO

   6) ▶ When output voltage is not detected at terminal 1 :
   ☞ Repair open in I/P junction box 10A ECU FUSE and related circuit and go to "Verification of Vehicle Repair".
   ▶ When output voltage is not detected at terminal 4 :
   ☞ Repair open between MAFS connector terminal 4 and ECM connector(C230-A) terminal 37,

SIGNAL CIRCUIT INSPECTION E9EFE38E

1. Check signal circuit voltage

   1) IG KEY "OFF", ENGINE "OFF".

   2) Disconnect MAFS connector and ECM connector.

   3) IG KEY "ON".

   4) Measure the voltage of MAFS connector terminal 3 and 5.

Specification : Terminal 3 : 4.8V~5.1V (IATS signal)
Terminal 5 : 4.8V~5.1V (MAFS signal)

   5) Is the measured voltage within the specification?

YES

▶ Go to "Ground Circuit Inspection".

NO

▶ Repair short to battery in signal circuit and go to "Verification of Vehicle Repair".

GROUND CIRCUIT INSPECTION E02158E5

1. IG KEY "OFF", ENGINE "OFF".

2. Disconnect MAFS connector.
3. IG KEY "ON".
4. Measure the voltage of MAFS connector terminal 4. [TEST "A"]
5. Measure the voltage between MAFS connector terminal 4 and 2. [TEST "B"]
   (terminal 4 : Check + prove , terminal 2 : Check - prove)

Specification : [TEST "A"] Voltage - [TEST "B"] Voltage = below 200mV

6. Is the measured voltage within the specification?

YES

▶ Go to "Component Inspection".

NO

▶ When "B" voltage is not detected : Repair open in ground circuit and go to "Verification of Vehicle Repair".
▶ When the voltage difference between "A" and "B" is above 200mV : Eliminate the causes of excessive resistance and go to "Verification of Vehicle Repair".

COMPONENT INSPECTION E15837EE

1. IG KEY "OFF", ENGINE "OFF".
2. Check that MAFS is installed in correctly according to the direction of arrow on MAFS assy'.
3. Check contamination of air cleaner filter.
4. IG KEY "ON", ENGINE "ON".
5. Let IDLE RPM last after warming engine up.
6. Check the leakage of intake system(the leakage or damage of intercooler).
7. Check that VGT operates correctly.(Check if vacuum operating state of VGT actuator is appropriate, if VGT diaphragm and unison ring are stuck.)
8. Check that EEGR actuator does not operate.
   (EEGR actuator turns "OFF" and 6% duty is outputted 3 min. after rapid acceleration. Disconnect EEGR actuator connector if needed.)
9. Monitor signal voltage of MAFS when engine speed lasts at approx. 750RPM using Scantool.
10. Check MAFS output signal at idle after rapid acceleration.(EEGR actuator duty 45%)

Specification : When EEGR actuator does not operate (6%) at idle : 450mg/st ± 50 mg/st
EEGR When EEGR actuator operates(45%) at idle : 400mg/st ± 50 mg/st

11. Is output signal within the specification?

YES

▶ Go to "Verification of Vehicle Repair".

NO

▶ Replace MAFS assy' and go to "Verification of Vehicle Repair".

VERIFICATION OF VEHICLE REPAIR ED479790

After a repair, it is essential to verify that the fault is corrected.

1. After connecting Scantool select "DIAGNOSTIC TROUBLE CODES(DTCs)" mode.
2. Clear recorded DTC using Scantool.
3. Drive the vehicle within DTC "Enable conditions" in "General information".
4. After selecting "DIAGNOSTIC TROUBLE CODES(DTCs)" mode and check if DTC is recorded again.
5. Are any DTCs recorded ?

YES

▶ Go to the DTC guide of recorded NO. in Scantool.

NO

▶ System operates within specification.

DTC P0102 MASS OR VOLUME AIR FLOW CIRCUIT LOW INPUT

COMPONENT LOCATION ED4B0D80

Refer to DTC P0101.

GENERAL DESCRIPTION EB44E49F

Refer to DTC P0101.

DTC DESCRIPTION E13C0747

P0102 is set when MAFS output voltage below 0.2V(below 1200Hz) is detected for more than 0.6 sec.. This code is due to 1)open in power circuit 2) open or short to ground in signal circuit.

DTC DETECTING CONDITION EAF070B9

<table>
<tr><th>Item</th><th colspan="3">Detecting Condition</th><th>Possible Cause</th></tr>
<tr><td>DTC Strategy</td><td colspan="3">• Voltage monitoring</td><td rowspan="6">• MAFS circuit
• MAFS component</td></tr>
<tr><td>Enable Conditions</td><td colspan="3">• Engine running</td></tr>
<tr><td>Threshold Value</td><td colspan="3">• Abnormal minimum output signal(below 1200Hz)</td></tr>
<tr><td>Diagnostic Time</td><td colspan="3">• 0.6 sec.</td></tr>
<tr><td rowspan="4">Fail Safe</td><td>Fuel cut</td><td>NO</td><td rowspan="4"></td></tr>
<tr><td>EGR Off</td><td>YES</td></tr>
<tr><td>Fuel Limit</td><td>YES</td></tr>
<tr><td>Check Lamp</td><td>YES</td></tr>
</table>

SPECIFICATION E66267A6

Refer to DTC P0101.

SCHEMATIC DIAGRAM E93FBC46

Refer to DTC P0101.

SIGNAL WAVEFORM AND DATA EA2E8122

Refer to DTC P0101.

MONITOR SCANTOOL DATA E112B01D

Refer to DTC P0101.

TERMINAL AND CONNECTOR INSPECTION E10F61EE

Refer to DTC P0101.

POWER CIRCUIT INSPECTION E6801C71

1. Check power circuit voltage

   1) IG KEY "OFF", ENGINE "OFF".

   2) Disconnect MAFS connector.

   3) IG KEY "ON".

   4) Measure the voltage of MAFS connector terminal 1 and 4.

Specification : Terminal 4 : 4.8V~5.1V (Sensor power)
Terminal 1 : 11.5V~13.0V (IG Power)

   5) Is the measured voltage within the specification?

   YES

   ▶ Go to "Signal Circuit Inspection".

   NO

   6) ▶ When output voltage is not detected at terminal 1 :
   ☞ Repair open in I/P junction box 10A ECU FUSE and related circuit and go to "Verification of Vehicle Repair".
   ▶ When output voltage is not detected at terminal 4 :
   ☞ Repair open between MAFS connector terminal 4 and ECM connector(C230-A) terminal 37, and go to "Verification of Vehicle Repair".

SIGNAL CIRCUIT INSPECTION EF16FF85

1. Check signal circuit voltage

   1) IG KEY "OFF", ENGINE "OFF".

   2) Disconnect MAFS connector.

   3) IG KEY "ON".

   4) Measure the voltage of MAFS connector terminal 5.

Specification : Continuity (below1.0 Ω)

   5) Is the measured voltage within the specification?

   YES

   ▶ Go to "Ground Circuit Inspection".

   NO

   ▶ Go to "2. Check open in signal circuit" as follows.

2. Check open in signal circuit

   1) IG KEY "OFF", ENGINE "OFF".

   2) Disconnect MAFS sensor connector and ECM connector.

3) Check continuity between MAFS connector terminal 5 and ECM connector (C230-A) terminal 42.

specification : Continuity (below 1.0Ω)

4) Is the measured resistance within the specification?

YES

▶ Go to "3. Check short to ground in signal circuit" as follows.

NO

▶ Repair open in signal circuit and go to "Verification of Vehicle Repair".

3. Check short to ground in signal circuit

1) IG KEY "OFF", ENGINE "OFF".

2) Disconnect MAFS sensor connector and ECM connector.

3) Check continuity between MAFS connector terminal 5 and chassis ground.

Specification : Discontinuity(Infinite Ω)

4) Is the measured resistance within the specification?

YES

▶ Go to "Ground Circuit Inspection".

NO

▶ Repair short to ground in signal circuit and go to "Verification of Vehicle Repair".

GROUND CIRCUIT INSPECTION ECB82765

1. IG KEY "OFF", ENGINE "OFF".
2. Disconnect MAFS connector.
3. IG KEY "ON".
4. Measure the voltage of MAFS connector terminal 4. [TEST "A"]
5. Measure the voltage between MAFS connector terminal 4 and 2. [TEST "B"]
   (terminal 4 : Check + prove , terminal 2 : Check - prove)

Specification : [TEST "A"] Voltage - [TEST "B"] Voltage = below 200mV

6. Is the measured voltage within the specification?

YES

▶ Go to "Component Inspection".

NO

▶ When "B" voltage is not detected : Repair open in ground circuit and go to "Verification of Vehicle Repair".
▶ When the voltage difference between "A" and "B" is above 200mV : Eliminate the causes of excessive resistance and go to "Verification of Vehicle Repair".

COMPONENT INSPECTION E5F4A381

1. IG KEY "OFF", ENGINE "OFF".
2. Check that MAFS is installed in correctly according to the direction of arrow on MAFS assy'.
3. Check contamination of air cleaner filter.
4. IG KEY "ON", ENGINE "ON".
5. Let IDLE RPM last after warming engine up.
6. Check the leakage of intake system(the leakage or damage of intercooler).
7. Check that VGT operates correctly.(Check if vacuum operating state of VGT actuator is appropriate, if VGT diaphragm and unison ring are stuck.)
8. Check that EEGR actuator does not operate.
   (EEGR actuator turns "OFF" and 6% duty is outputted 3 min. after rapid acceleration. Disconnect EEGR actuator connector if needed.)
9. Monitor signal voltage of MAFS when engine speed lasts at approx. 750RPM using Scantool.
10. Check MAFS output signal at idle after rapid acceleration.(EEGR actuator duty 45%)

Specification : When EEGR actuator does not operate (6%) at idle : 450mg/st ± 50 mg/st EEGR When EEGR actuator operates(45%) at idle : 400mg/st ± 50 mg/st

11. Is output signal within the specification?

YES

▶ Go to "Verification of Vehicle Repair".

NO

▶ Replace MAFS assy' and go to "Verification of Vehicle Repair".

VERIFICATION OF VEHICLE REPAIR EF8F6782

Refer to DTC P0101.

DTC P0103 MASS OR VOLUME AIR FLOW CIRCUIT HIGH INPUT

COMPONENT LOCATION E60D2AC9

Refer to DTC P0101.

GENERAL DESCRIPTION ED003DC6

Refer to DTC P0101.

DTC DESCRIPTION EF75F36A

P0103 is set when MAFS output voltage above 14100Hz is detected for more than 0.6 sec.. This code is due to excessive output voltage from sensor component or poor connection in sensor circuit.

DTC DETECTING CONDITION EB28A7B8

<table>
<tr><th>Item</th><th colspan="3">Detecting Condition</th><th>Possible Cause</th></tr>
<tr><td>DTC Strategy</td><td colspan="3">• Voltage monitoring</td><td rowspan="8">• MAFS circuit
• MAFS component</td></tr>
<tr><td>Enable Conditions</td><td colspan="3">• Engine running</td></tr>
<tr><td>Threshold Value</td><td colspan="3">• Abnormal maximum output signal(above 14100Hz)</td></tr>
<tr><td>Diagnostic Time</td><td colspan="3">• 0.6 sec.</td></tr>
<tr><td rowspan="4">Fail Safe</td><td>Fuel cut</td><td>NO</td><td rowspan="4"></td></tr>
<tr><td>EGR Off</td><td>YES</td></tr>
<tr><td>Fuel Limit</td><td>YES</td></tr>
<tr><td>Check Lamp</td><td>YES</td></tr>
</table>

SPECIFICATION E5180086

Refer to DTC P0101.

SCHEMATIC DIAGRAM EE0E1364

Refer to DTC P0101.

SIGNAL WAVEFORM AND DATA ED2962F4

Refer to DTC P0101.

MONITOR SCANTOOL DATA EC8612E2

Refer to DTC P0101.

TERMINAL AND CONNECTOR INSPECTION EEA31F85

Refer to DTC P0101.

POWER CIRCUIT INSPECTION E39961E4

1. Check power circuit voltage

   1) IG KEY "OFF", ENGINE "OFF".

   2) Disconnect MAFS connector.

   3) IG KEY "ON".

   4) Measure the voltage of MAFS connector terminal 1 and 4.

Specification : Terminal 4 : 4.8V~5.1V (Sensor power)
Terminal 1 : 11.5V~13.0V (IG Power)

   5) Is the measured voltage within the specification?

   YES

   ▶ Go to "Signal Circuit Inspection".

   NO

   6) ▶ When output voltage is not detected at terminal 1 :
   ☞ Repair open in I/P junction box 10A ECU FUSE and related circuit and go to "Verification of Vehicle Repair".
   ▶ When output voltage is not detected at terminal 4 :
   ☞ Repair open between MAFS connector terminal 4 and ECM connector(C230-A) terminal 37, and go to "Verification of Vehicle Repair".

SIGNAL CIRCUIT INSPECTION E1934BDA

1. Check signal circuit voltage

   1) IG KEY "OFF", ENGINE "OFF".

   2) Disconnect AMFS connector.

   3) IG KEY "ON".

   4) Measure the voltage of MAFS connector terminal 5.

Specification : Continuity (below1.0 Ω)

   5) Is the measured voltage within the specification?

   YES

   ▶ Go to "Ground Circuit Inspection".

   NO

   ▶ Go to "2. Check open in signal circuit" as follows.

2. Check open in signal circuit

   1) IG KEY "OFF", ENGINE "OFF".

   2) Disconnect MAFS sensor connector and ECM connector.

3) Check continuity between MAFS connector terminal 5 and ECM connector (C230-A) terminal 42.

specification : Continuity (below 1.0Ω)

4) Is the measured resistance within the specification?

YES

▶ Go to "3. Check short to ground in signal circuit" as follows.

NO

▶ Repair open in signal circuit and go to "Verification of Vehicle Repair".

3. Check short to ground in signal circuit

1) IG KEY "OFF", ENGINE "OFF".

2) Disconnect MAFS sensor connector and ECM connector.

3) Check continuity between MAFS connector terminal 5 and chassis ground.

Specification : Discontinuity(Infinite Ω)

4) Is the measured resistance within the specification?

YES

▶ Go to "Ground Circuit Inspection".

NO

▶ Repair short to ground in signal circuit and go to "Verification of Vehicle Repair".

GROUND CIRCUIT INSPECTION E4429775

1. IG KEY "OFF", ENGINE "OFF".
2. Disconnect MAFS connector.
3. IG KEY "ON".
4. Measure the voltage of MAFS connector terminal 4. [TEST "A"]
5. Measure the voltage between MAFS connector terminal 4 and 2. [TEST "B"]
   (terminal 4 : Check + prove , terminal 2 : Check - prove)

Specification : [TEST "A"] Voltage - [TEST "B"] Voltage = below 200mV

6. Is the measured voltage within the specification?

YES

▶ Go to "Component Inspection".

NO

▶ When "B" voltage is not detected : Repair open in ground circuit and go to "Verification of Vehicle Repair".
▶ When the voltage difference between "A" and "B" is above 200mV : Eliminate the causes of excessive resistance and go to "Verification of Vehicle Repair".

COMPONENT INSPECTION E94DAB42

1. IG KEY "OFF", ENGINE "OFF".
2. Check that MAFS is installed in correctly according to the direction of arrow on MAFS assy'.
3. Check contamination of air cleaner filter.
4. IG KEY "ON", ENGINE "ON".
5. Let IDLE RPM last after warming engine up.
6. Check the leakage of intake system(the leakage or damage of intercooler).
7. Check that VGT operates correctly.(Check if vacuum operating state of VGT actuator is appropriate, if VGT diaphragm and unison ring are stuck.)
8. Check that EEGR actuator does not operate.
   (EEGR actuator turns "OFF" and 6% duty is outputted 3 min. after rapid acceleration. Disconnect EEGR actuator connector if needed.)
9. Monitor signal voltage of MAFS when engine speed lasts at approx. 750RPM using Scantool.
10. Check MAFS output signal at idle after rapid acceleration.(EEGR actuator duty 45%)

Specification : When EEGR actuator does not operate (6%) at idle : 450mg/st ± 50 mg/st EEGR When EEGR actuator operates(45%) at idle : 400mg/st ± 50 mg/st

11. Is output signal within the specification?

YES

▶ Go to "Verification of Vehicle Repair".

NO

▶ Replace MAFS assy' and go to "Verification of Vehicle Repair".

VERIFICATION OF VEHICLE REPAIR EB6BD954

Refer to DTC P0101.

DTC P0107 ATMOSPHERIC PRESSURE CIRCUIT LOW INPUT

COMPONENT LOCATION E887340A

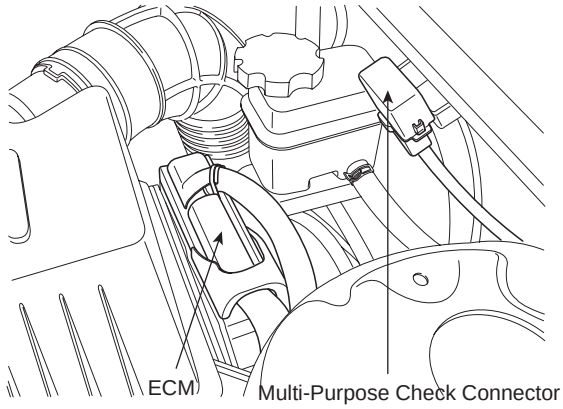

SCMFL6502L

GENERAL DESCRIPTION EE288751

Atmospheric sensor is installed in ECM and senses atmospheric pressure where the vehicle is.Based on singal of atmospheric sensor, air density is calculated. And atmospheric sensor is used to detect mass air flow with MAFS, IATS. This sensor is required to perform 1) fuel injection quantity correction in high altitude and 2) EGR control. Atmospheric pressure is fixed at 1000 hpa when atmospheric sensor fails.

DTC DESCRIPTION E60BA0C8

P0107 is set when the voltage below 0.25V - minimum output voltage of Atmospheric pressure sensor - is detected for more than 0.8 sec. This code is due to fhe failure of the sensor inside of ECM.

DTC DETECTING CONDITION E0AD6BA1

<table>
<tr><th>Item</th><th colspan="3">Detecting Condition</th><th>Possible Cause</th></tr>
<tr><td>DTC Strategy</td><td colspan="3">• Voltage monitoring</td><td rowspan="6">• Atmospheric pressure sensor(ECM component)</td></tr>
<tr><td>Enable Conditions</td><td colspan="3">• IG KEY "ON"</td></tr>
<tr><td>Threshold Value</td><td colspan="3">• When output voltage is below the minimum value.(below 0.25V)</td></tr>
<tr><td>Diagnostic Time</td><td colspan="3">• 0.8 sec.</td></tr>
<tr><td rowspan="4">Fail Safe</td><td>Fuel cut</td><td>NO</td><td rowspan="4">• Atmospheric pressure is fixed at 1000 hpa.</td></tr>
<tr><td>EGR Off</td><td>YES</td></tr>
<tr><td>Fuel Limit</td><td>NO</td></tr>
<tr><td>Check Lamp</td><td>NO</td></tr>
</table>

SPECIFICATION E6D72BDC

1atm is same as		
hpa (hecto pascal)	**mb**	**mmHg**
1013	1013	760

MONITOR SCANTOOL DATA E2E727D0

1. Connect Scantool to Data Link Connector (DLC).
2. Warm engine up to normal operating temperature.
3. Turn "OFF" electrical devices and A/C.
4. Monitor "ATMOSPHERIC PRESS. SNSR " parameter on the scantool.

Specification : Approx. 1 atm is displayed

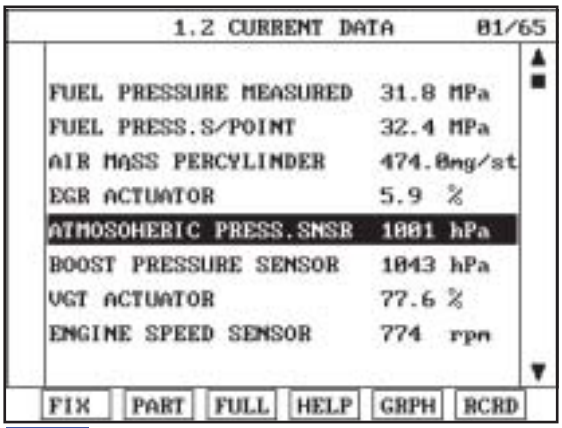

Fig.1

Fig.1) The atmospheric pressure where the vehicle is displayed. Atmospheric pressure decreases as vehicle going up to higher altitude. The pressure at average level of sea surface is considered as 1atm and, check if the pressure different from 1 atm is displayed. (1 atm is correct pressure)

SCMFL6417L

COMPONENT INSPECTION EC819D59

1. ECM Component Inspection
   1) IG KEY "OFF", ENGINE "OFF".
   2) Disconnect ECM.
   3) Replace ECM, check if abnormal operations disappear.
   4) If problems are corrected, replace ECM.

NOTE

Input injector IQA data(7 letters) using scantool at replacing ECM.
For immobilizer applied vehicle, input pin code.

VERIFICATION OF VEHICLE REPAIR E19D0072

After a repair, it is essential to verify that the fault is corrected.

1. After connecting Scantool select "DIAGNOSTIC TROUBLE CODES(DTCs)" mode.
2. Clear recorded DTC using Scantool.
3. Drive the vehicle within DTC "Enable conditions" in "General information".
4. After selecting "DIAGNOSTIC TROUBLE CODES(DTCs)" mode and check if DTC is recorded again.
5. Are any DTCs recorded ?

YES

▶ Go to the DTC guide of recorded NO. in Scantool.

NO

▶ System operates within specification.

DTC P0108 ATMOSPHERIC PRESSURE CIRCUIT HIGH INPUT

COMPONENT LOCATION E91DF613

Refer to DTC P0107.

GENERAL DESCRIPTION E8D790A9

Refer to DTC P0107.

DTC DESCRIPTION EE87F1B5

P0108 is set when the voltage above 4.85V - maximum output voltage of Barometric pressure sensor - is detected for more than 0.8 sec. This code is due to fhe failure of the sensor inside of ECM.

DTC DETECTING CONDITION EB79236E

<table>
<tr><th>Item</th><th colspan="3">Detecting Condition</th><th>Possible Cause</th></tr>
<tr><td>DTC Strategy</td><td colspan="3">• Voltage monitoring</td><td rowspan="6">• Atmospheric pressure sensor(ECM component)</td></tr>
<tr><td>Enable Conditions</td><td colspan="3">• IG KEY "ON"</td></tr>
<tr><td>Threshold Value</td><td colspan="3">• When output voltage is above the maximum value. (above 4.85V)</td></tr>
<tr><td>Diagnostic Time</td><td colspan="3">• 0.8 sec.</td></tr>
<tr><td rowspan="4">Fail Safe</td><td>Fuel cut</td><td>NO</td><td rowspan="4">• Atmospheric pressure is fixed at 1000 hpa.</td></tr>
<tr><td>EGR Off</td><td>YES</td></tr>
<tr><td>Fuel Limit</td><td>NO</td></tr>
<tr><td>Check Lamp</td><td>NO</td></tr>
</table>

SPECIFICATION E3C55B11

Refer to DTC P0107.

MONITOR SCANTOOL DATA EFF60DE3

Refer to DTC P0107.

COMPONENT INSPECTION EAAB6581

1. ECM Component Inspection

   1) IG KEY "OFF", ENGINE "OFF".

   2) Disconnect ECM.

   3) Replace ECM, check if abnormal operations disappear.

   4) If problems are corrected, replace ECM.

NOTE

Input injector IQA data(7 letters) using scantool at replacing ECM.
For immobilizer applied vehicle, input pin code.

VERIFICATION OF VEHICLE REPAIR E56D405C

Refer to DTC P0107.

DTC P0112 INTAKE AIR TEMPERATURE SENSOR1 CIRCUIT LOW INPUT

COMPONENT LOCATION E3C8B301

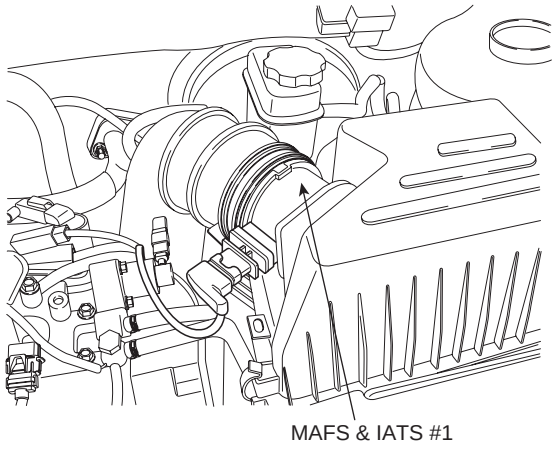

SCMFL6501L

GENERAL DESCRIPTION E0CAFEFF

Intake Air Temperature Sensor(IATS) is NTC thermistor. Installed inside of both MAFS and BPS, it senses intake air temperature. In case of EURO-4 diesel engine, IATS is installed in front of turbocharger(inside of MAFS) and behind it(inside of BPS). Comparing air temperature from both sensors(one is intake air temperature, the other is air temperature passing through turbo charger), more accurate sensing of intake air temperature is possible.With intake air temperature signal, ECM performs EGR control correction and fuel injection quantity correction.(MAFS is needed for EGR FEED BACK control in electronically controlled diesel engine. The calculation of air density at certain temperture is required to perform EGR FEED BACK control correctly.)

DTC DESCRIPTION E96E5888

P0112 is set when the voltage below 73mV - minimum output voltage of IATS(inside of MAFS) - is detected for more than 1 sec. This code is due to short to ground in IATS signal circuit.

DTC DETECTING CONDITION EB8B6F70

<table>
<tr><th>Item</th><th colspan="3">Detecting Condition</th><th>Possible Cause</th></tr>
<tr><td>DTC Strategy</td><td colspan="3">• Voltage monitoring</td><td rowspan="7">• IATS circuit
• IATS component</td></tr>
<tr><td>Enable Conditions</td><td colspan="3">• IG KEY "ON"</td></tr>
<tr><td>Threshold Value</td><td colspan="3">• When output signal is below the minimum value (below 0.073V)</td></tr>
<tr><td>Diagnostic Time</td><td colspan="3">• 1 sec.</td></tr>
<tr><td rowspan="4">Fail Safe</td><td>Fuel cut</td><td>NO</td><td rowspan="4">• Intake air temperature is considered as 20℃</td></tr>
<tr><td>EGR Off</td><td>NO</td></tr>
<tr><td>Fuel Limit</td><td>NO</td></tr>
<tr><td>Check Lamp</td><td>NO</td></tr>
</table>

SPECIFICATION EA5B229B

Tempera-ture	-40℃	-20℃	0℃	20℃	40℃	60℃	80℃
Resistance	35.14 ~43.76KΩ	12.66 ~15.12KΩ	5.12 ~5.89KΩ	2.29 ~2.55KΩ	1.10 ~1.24KΩ	0.57 ~0.65KΩ	0.31 ~0.37KΩ

SCHEMATIC DIAGRAM EAAD4B68

[CIRCUIT DIAGRAM]

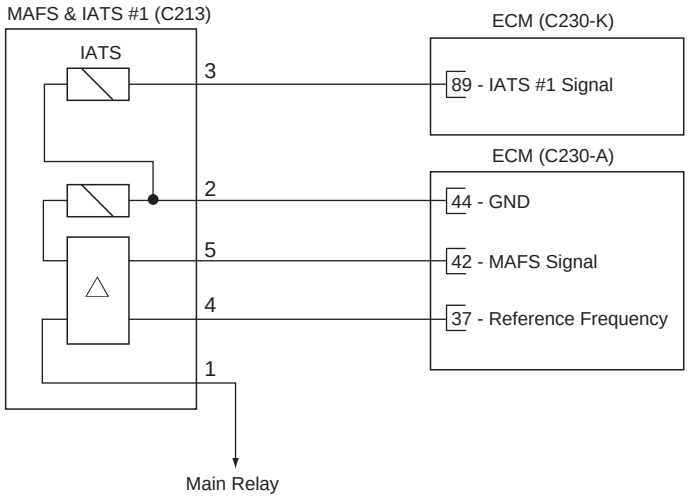

[CONNECTION INFORMATION]

Terminal	Connected to	Function
1	Main Relay	Battery Voltage (B+)
2	ECM C230-A (44)	Sensor Ground
3	ECM C230-K (89)	IATS #1 Signal
4	ECM C230-A (37)	Reference Frequency
5	ECM C230-A (42)	MAFS Signal

[HARNESS CONNECTORS]

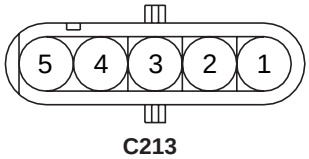

C213

MAFS & IATS #1

C230-A

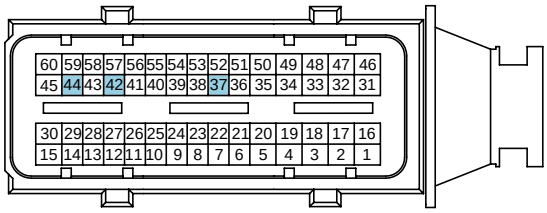

C230-K

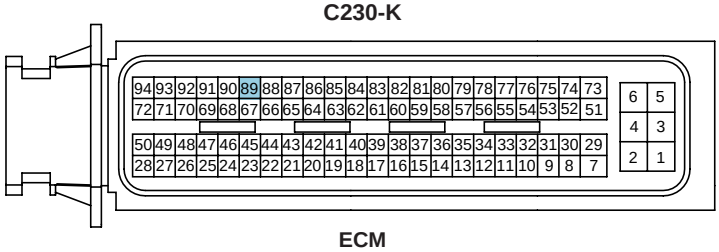

ECM

SCMFL6113L

SIGNAL WAVEFORM AND DATA E8B07533

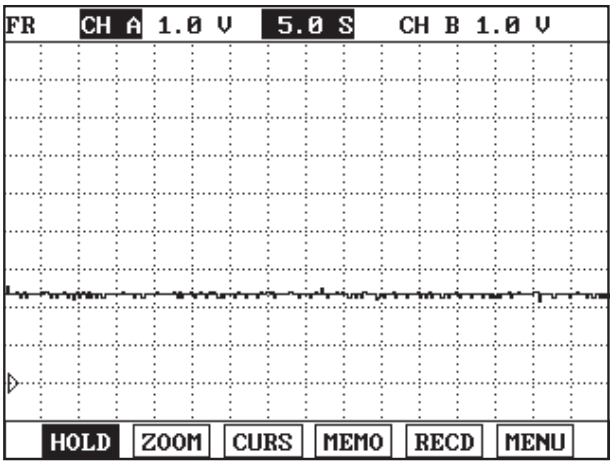

Fig.1

Fig.1) IATS output signal at warm idle.The higher temperature rises, the lower signal voltage becomes.

LFIG234A

TERMINAL AND CONNECTOR INSPECTION E8DFF227

1. Electrical systems consist of a lot of harness and connectors, poor connection of terminals can cause various problems and damge of component.
2. Perform checking procedure as follows.
   1) Check damage of harness and terminals : Check terminals for contact resistance, corrosion and deformation.
   2) Check connecting condition of ECM and component connector : Check terminal seperation, damage of locking device and connecting condition between terminal and wiring.

NOTE

Disconnect the pin which requires checking at male connector and insert it to the terminal at female connector for checking connecting condition. (after checking, reconnect the pin at correct position.)

3. Is the problem found?

YES

▶ Repair the trouble causing part and go to "Verification of Vehicle Repair".

NO

▶ Go to "Signal Circuit Inspection ".

SIGNAL CIRCUIT INSPECTION EFC4C008

1. Check signal circuit voltage
   1) IG KEY "OFF", ENGINE "OFF".
   2) Disconnect MAFS connector
   3) IG KEY "ON"
   4) Measure the voltage of terminal 3 of MAFS connector.

Specification : 4.8V~5.1V

5) Is the measured voltage within the specification?

YES

▶ Go to "Component Inspection"

NO

▶ Go to "2.Check short to ground in signal circuit" as follows.

2. Check short to ground in signal circuit

1) IG KEY "OFF", ENGINE "OFF".

2) Disconnect MAFS connector and ECM connector

3) Check continuity between MAFS connector terminal 3 and chassis ground.

Specification : Discontinuity (Infinite Ω)

4) Is the measured resistance within the specification?

YES

▶ Go to "Component Inspection".

NO

▶ Repair short to ground in signal circuit and go to "Verification of Vehicle Repair".

COMPONENT INSPECTION E64161C3

1. IG KEY "OFF", ENGINE "OFF"
2. Disconnect MAFS connector.
3. Measure resistance of IATS component terminal 3 and 2, referring to resistance characteristic table of specification of General information.

Specification : Refer to Specification of General Information.

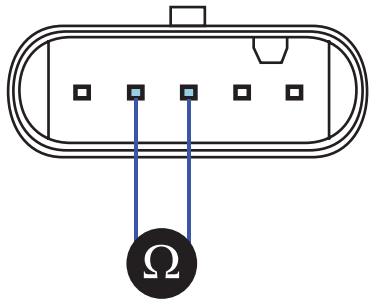

EGNG004S

4. Is the measured resistance at certain temperature within the specified resisance range at the temperature?

YES

▶ Go to "Verification of Vehicle Rapair"

NO

▶ Replace MAFS ASSY' and go to "Verification of Vehicle Repair".

VERIFICATION OF VEHICLE REPAIR E7F6435E

After a repair, it is essential to verify that the fault is corrected.

1. After connecting Scantool select "DIAGNOSTIC TROUBLE CODES(DTCs)" mode.
2. Clear recorded DTC using Scantool.
3. Drive the vehicle within DTC "Enable conditions" in "General information".
4. After selecting "DIAGNOSTIC TROUBLE CODES(DTCs)" mode and check if DTC is recorded again.
5. Are any DTCs recorded ?

YES

▶ Go to the DTC guide of recorded NO. in Scantool.

NO

▶ System operates within specification.

DTC P0113 INTAKE AIR TEMPERATURE SENSOR1 CIRCUIT HIGH INPUT

COMPONENT LOCATION E3BA2FB2

Refer to DTC P0112.

GENERAL DESCRIPTION EB72C8F3

Refer to DTC P0112.

DTC DESCRIPTION E7039491

P0113 is set when the voltage above 4.89V - maximum output voltage of IATS - is detected for more than 1 sec. This code is due to 1) open or 2) short to battery in IATS signal circuit.

DTC DETECTING CONDITION E93AB657

<table>
<tr><th>Item</th><th colspan="3">Detecting Condition</th><th>Possible Cause</th></tr>
<tr><td>DTC Strategy</td><td colspan="3">• Voltage monitoring</td><td rowspan="6">• IATS circuit
• IATS component</td></tr>
<tr><td>Enable Conditions</td><td colspan="3">• IG KEY "ON"</td></tr>
<tr><td>Threshold Value</td><td colspan="3">• When output signal is above the maximum value (above 4.89V)</td></tr>
<tr><td>Diagnostic Time</td><td colspan="3">• 1 sec.</td></tr>
<tr><td rowspan="4">Fail Safe</td><td>Fuel cut</td><td>NO</td><td rowspan="4">• Intake air temperature is considered as 20℃</td></tr>
<tr><td>EGR Off</td><td>NO</td></tr>
<tr><td>Fuel Limit</td><td>NO</td></tr>
<tr><td>Check Lamp</td><td>NO</td></tr>
</table>

SPECIFICATION E6EA3ABB

Refer to DTC P0112.

SCHEMATIC DIAGRAM E4B998B7

Refer to DTC P0112.

SIGNAL WAVEFORM AND DATA E32EDF8B

Refer to DTC P0112.

TERMINAL AND CONNECTOR INSPECTION E4A2FFF6

Refer to DTC P0112.

SIGNAL CIRCUIT INSPECTION EA6595CC

1. Check signal circuit voltage

1) IG KEY "OFF", ENGINE "OFF".

2) Disconnect MAFS connector.

3) IG KEY "ON"

4) Measure the voltage of terminal 3 of MAFS connector.

Specification : 4.8~5.1V

5) Is the measured voltage within the specification?

YES

▶ Go to "Component Inspection"

NO

▶ Go to "2.Check open in signal circuit" as follows.

2. Check open in signal circuit

1) IG KEY "OFF", ENGINE "OFF".

2) Disconnect MAFS connector and ECM connector.

3) Check continuity between MAFS connector terminal 3 and ECM connector (C230-K) terminal 89.

Specification : Continuity (below 1.0Ω)

4) Is the measured resistance within the specification?

YES

▶ Go to "3.Check short to battery in signal circuit " as follows

NO

▶ Repair open in signal circuit and go to "Verification of Vehicle Repair".

3. Check short to battery in signal circuit

1) IG KEY "OFF", ENGINE "OFF".

2) Disconnect MAFS connector and ECM connector.

3) IG KEY "ON".

4) Measure the voltage of terminal 3 of MAFS connector.

Specification : 0~0.1V

5) Is the measured voltage within the specification?

YES

▶ Go to "Ground Circuit Inspection".

NO

▶ Repair short to battery and go to "Verification of Vehicle Repair".

GROUND CIRCUIT INSPECTION EC57554A

1. IG KEY "OFF", ENGINE "OFF".
2. Disconnect MAFS connector and ECM connector
3. IG KEY "ON"
4. Measure the voltage of terminal 3 of MAFS connector. [TEST "A"]
5. Measure the voltage of MAFS terminal 3 and terminal 2. [TEST "B"]
   (terminal 3 : Check + prove , terminal 2 : Check - prove)

Specification : the voltage difference between TEST "A" and TEST "B" is within 200mV

6. Is the measured voltage within the specification?

YES

▶ Go to "Component Inspection"

NO

▶ When "B" voltage is not detected : Repair open in ground circuit and go to "Verification of Vehicle Repair".
▶ When the voltage difference between "A" and "B" is above 200mV : Eliminate the causes of excessive resistance and go to "Verification of Vehicle Repair".

COMPONENT INSPECTION E378C8EC

1. IG KEY "OFF", ENGINE "OFF"
2. Disconnect MAFS connector.
3. Measure resistance of IATS component terminal 3 and 2, referring to resistance characteristic table of specification of General information.

Specification : Refer to Specification of General Information.

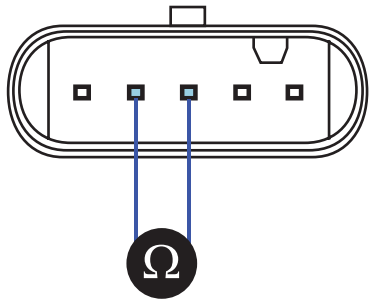

EGNG004S

4. Is the measured resistance at certain temperature within the specified resisance range at the temperature?

YES

▶ Go to "Verification of Vehicle Rapair"

NO

▶ Replace MAFS ASSY' and go to "Verification of Vehicle Repair".

VERIFICATION OF VEHICLE REPAIR E31D2BA8

Refer to DTC P0112.

DTC P0117 ENGINE COOLANT TEMPERATURE CIRCUIT LOW INPUT

COMPONENT LOCATION E356AAFA

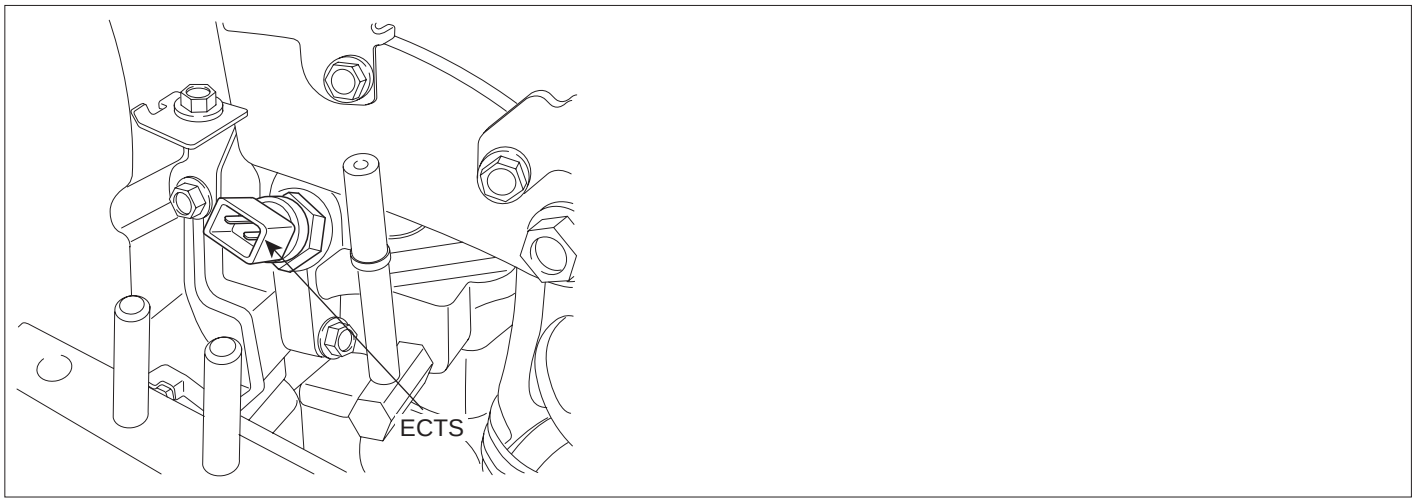

LFIG385A

GENERAL DESCRIPTION E0EDC9B9

Engine Coolant Temperature Sensor(ECTS), installed in coolant line, senses engine coolant temperature.With the information about engine coolant temperature, ECM performs fuel injection quantity correction, cooling fan control and glow relay operating duration control.Especially, because ECTS signal is main variable of fuel injection quantity correction when engine is cold, sensor trouble makes starting engine difficult when engine is cold.If engine is running when ECTS is out of order, ECM considers engine coolant temperature as 80℃. And during cranking, ECM considers engine coolant temperature as -10℃. Besides, cooling fan, which is controlled based on ECTS signal, operates at HIGH-MODE to prevent engine from being overheated and supplementary heater is deactivated.

DTC DESCRIPTION E89F57FF

P0117 is set when the voltage below 0.083V - minimum output voltage of ECTS - is detected for more than 2.0 sec. This code is due to short to ground in signal circuit.

DTC DETECTING CONDITION E23715EB

<table>
<tr><th>Item</th><th colspan="3">Detecting Condition</th><th>Possible Cause</th></tr>
<tr><td>DTC Strategy</td><td colspan="3">• Voltage monitoring</td><td rowspan="8">• ECTS circuit
• ECTS component</td></tr>
<tr><td>Enable Conditions</td><td colspan="3">• IG KEY "ON"</td></tr>
<tr><td>Threshold Value</td><td colspan="3">• Output signal below the minimum value.(below 0.083 V)</td></tr>
<tr><td>Diagnostic Time</td><td colspan="3">• 2.0 sec.</td></tr>
<tr><td rowspan="4">Fail Safe</td><td>Fuel cut</td><td>NO</td><td rowspan="4">• A/C condensor fan control operation based on engine coolant temperature inhibited.
• PTC heater inhibited.
• Cooling fan is fixed at HIGH-MODE.
• During engine operation : temperature is fixed at 80℃
• At cold and cranking : temperature is fixed at -10℃</td></tr>
<tr><td>EGR Off</td><td>YES</td></tr>
<tr><td>Fuel Limit</td><td>NO</td></tr>
<tr><td>Check Lamp</td><td>NO</td></tr>
</table>

SPECIFICATION EDD59882

Temperature	-40	-20	0	20	40
Resistance	48.14㏀	15.48±1.35㏀	5.790㏀	2.45±0.14㏀	1.148㏀
Temperature	60	80	100	110	120
Resistance	0.586㏀	0.322㏀	0.188㏀	0.147±0.002㏀	0.116㏀

SCHEMATIC DIAGRAM E4689316

[CIRCUIT DIAGRAM]

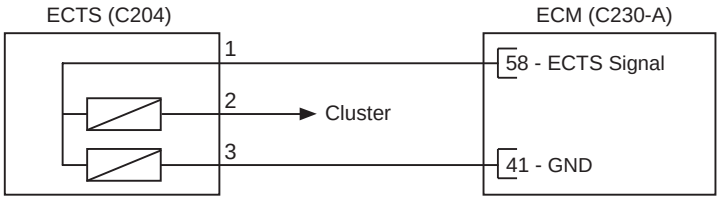

[CONNECTION INFORMATION]

Terminal	Connected to	Function
1	ECM C230-A (58)	ECTS Signal
2	Cluster	-
3	ECM C230-A (41)	Sensor ground

[HARNESS CONNECTORS]

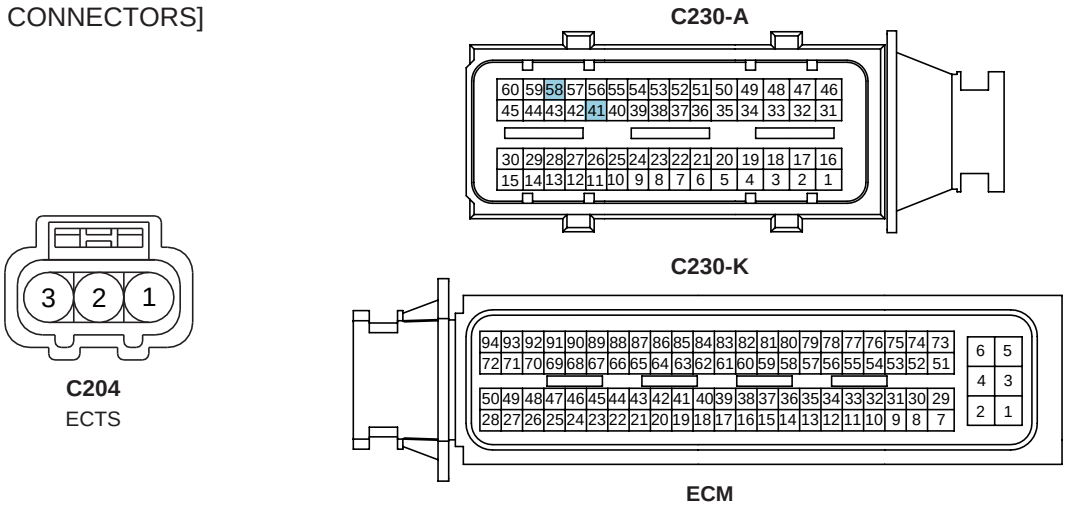

SCMFL6119L

SIGNAL WAVEFORM AND DATA E635F8BF

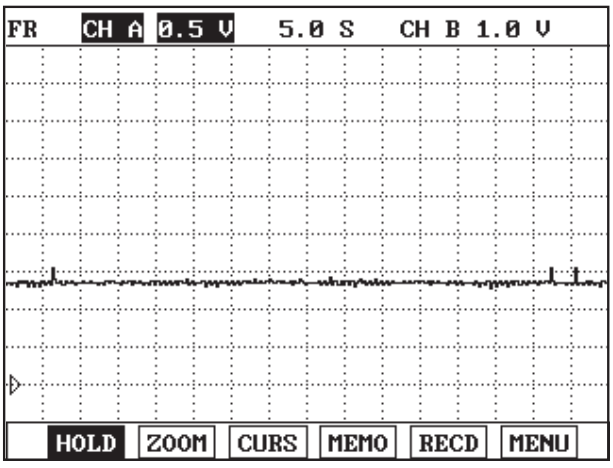

Fig.1

Fig.1) ECTS output signal at 80℃.The higher temperature rises, the lower signal voltage becomes.

LFIG387A

MONITOR SCANTOOL DATA ED4A0ECB

1. Connect Scantool to Data Link Connector (DLC).

2. Warm engine up to normal operating temperature.

3. Turn "OFF" electrical devices and A/C.

4. Monitor "ECTS" parameter on the Scantool.

Specification : Current enigne coolant temperature is displayed.

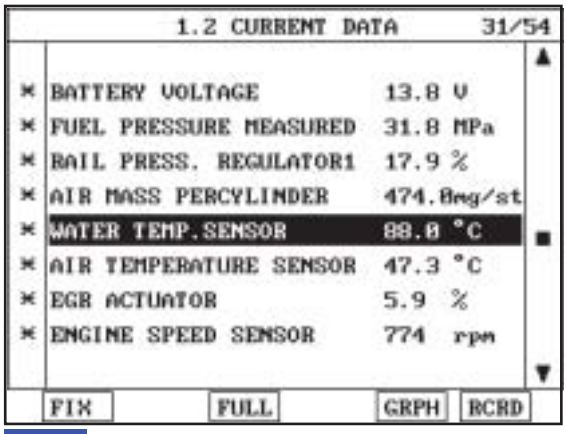

Fig.1

Fig.1) Check if 1) incorrect value is displayed 2) coolant temperature is fixed at 80℃ suddenly during driving 3)coolant temperature is fixed at -10℃ when turning IG KEY "ON". That coolant temperature is fixed at -10℃ or 80℃ means failure of ECTS. To prevent overheat of engine due to ECTS , if ECTS fails, cooling fan operates continuously.

SCMFL6227L

TERMINAL AND CONNECTOR INSPECTION E633DB0B

1. Electrical systems consist of a lot of harness and connectors, poor connection of terminals can cause various problems and damge of component.

2. Perform checking procedure as follows.

   1) Check damage of harness and terminals : Check terminals for contact resistance, corrosion and deformation.

   2) Check connecting condition of ECM and component connector : Check terminal seperation, damage of locking device and connecting condition between terminal and wiring.

   NOTE

   Disconnect the pin which requires checking at male connector and insert it to the terminal at female connector for checking connecting condition. (after checking, reconnect the pin at correct position.)

3. Is the problem found?

   YES

   ▶ Repair the trouble causing part and go to "Verification of Vehicle Repair".

   NO

   ▶ Go to "Signal Circuit Inspection ".

SIGNAL CIRCUIT INSPECTION EA1B1C97

1. Check signal circuit voltage

1) IG KEY "OFF", ENGINE "OFF"

2) Disconnect ECTS connector.

3) IG KEY "ON"

4) Measure the voltage of ECTS connector terminal 1.

Specification : 4.8V~5.1V

5) Is the measured voltage within the specification?

YES

▶ Go to "Component Inspection".

NO

▶ Go to "2.Check short to ground in signal circuit" as follows.

2. Check short to ground in signal circuit

1) IG KEY "OFF", ENGINE "OFF"

2) Disconnect ECTS connector and ECM connector.

3) Check continuity between ECTS connector terminal 1 and chassis ground.

Specification : Discontinuity (Infinite Ω)

4) Is the measured resistance within the specification?

YES

▶ Go to "Component Inspection".

NO

▶ Repair short to ground in signal circuit and go to "Verification of Vehicle Repair".

COMPONENT INSPECTION E9CA9562

1. IG KEY "OFF", ENGINE "OFF".

2. Disconnect ECTS connector.

3. Measure resistance between ECTS terminal 1 and 3, referring to resistance characteristic table of specification of General information.

Specification : Refer to Specification of General Information

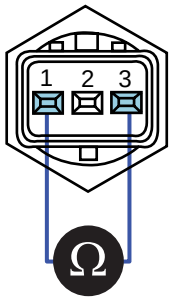

LFIG391A

4. Is the measured resistance at certain temperature within the specified resisance range at the temperature?

YES

▶ Go to "Verification of Vehicle Repair".

NO

▶ Replace ECTS and go to "Verification of Vehicle Repair".

VERIFICATION OF VEHICLE REPAIR EA8FE41C

After a repair, it is essential to verify that the fault is corrected.

1. After connecting Scantool select "DIAGNOSTIC TROUBLE CODES(DTCs)" mode.
2. Clear recorded DTC using Scantool.
3. Drive the vehicle within DTC "Enable conditions" in "General information".
4. After selecting "DIAGNOSTIC TROUBLE CODES(DTCs)" mode and check if DTC is recorded again.
5. Are any DTCs recorded ?

YES

▶ Go to the DTC guide of recorded NO. in Scantool.

NO

▶ System operates within specification.

DTC P0118 ENGINE COOLANT TEMPERATURE CIRCUIT HIGH INPUT

COMPONENT LOCATION EBBA68BC

Refer to DTC P0117.

GENERAL DESCRIPTION EA380FEE

Refer to DTC P0117.

DTC DESCRIPTION E9AFE60A

P0118 is set when the voltage above 4.965V - maximum output voltage of ECTS - is detected for more than 2.0 sec. This code is due to open or short to battery in signal circuit or open in ground circuit.

DTC DETECTING CONDITION E5E011D3

<table>
<tr><th>Item</th><th colspan="3">Detecting Condition</th><th>Possible Cause</th></tr>
<tr><td>DTC Strategy</td><td colspan="3">• Voltage monitoring</td><td rowspan="6">• ECTS circuit
• ECTS component</td></tr>
<tr><td>Enable Conditions</td><td colspan="3">• IG KEY "ON"</td></tr>
<tr><td>Threshold Value</td><td colspan="3">• Output signal above the maximum value(above 4.965V)</td></tr>
<tr><td>Diagnostic Time</td><td colspan="3">• 2.0 sec.</td></tr>
<tr><td rowspan="4">Fail Safe</td><td>Fuel cut</td><td>NO</td><td rowspan="4">• A/C condensor fan control operation based on engine coolant temperature inhibited.
• PTC heater inhibited.
• Cooling fan is fixed at HIGH-MODE.
• During engine operation : temperature is fixed at 80℃
• At cold and cranking : temperature is fixed at -10℃</td></tr>
<tr><td>EGR Off</td><td>YES</td></tr>
<tr><td>Fuel Limit</td><td>NO</td></tr>
<tr><td>Check Lamp</td><td>NO</td></tr>
</table>

SPECIFICATION E86F4553

Refer to DTC P0117.

SCHEMATIC DIAGRAM EB249A7C

Refer to DTC P0117.

SIGNAL WAVEFORM AND DATA EA21413F

Refer to DTC P0117.

MONITOR SCANTOOL DATA E9D1B2CA

Refer to DTC P0117.

TERMINAL AND CONNECTOR INSPECTION EE38B71D

Refer to DTC P0117.

SIGNAL CIRCUIT INSPECTION ECFE1A35

1. Check signal circuit voltage
   1) IG KEY "OFF", ENGINE "OFF"
   2) Disconnect ECTS connector.
   3) IG KEY "ON"
   4) Measure the voltage of ECTS connector terminal 1.

Specification : 4.8V~5.1V

   5) Is the measured voltage within the specification?

YES

▶ Go to "Component Inspection".

NO

▶ Go to "2.Check open in signal circuit" as follows.

2. Check open in signal circuit
   1) IG KEY "OFF", ENGINE "OFF"
   2) Disconnect ECTS connector and ECM connector.
   3) Check continuity between ECTS connector terminal 1 and ECM connector (C230-A) terminal 58.

Specification : continuity (below 1.0Ω)

   4) Is the measured resistance within the specification?

YES

▶ Go to "3.Check short to battery in signal circuit" as follows.

NO

▶ Repair open in signal circuit and go to "Verification of Vehicle Repair".

3. Check short to battery in signal circuit
   1) IG KEY "OFF", ENGINE "OFF"
   2) Disconnect ECTS connector and ECM connector.
   3) IG KEY "ON"
   4) Measure the voltage of ECTS connector terminal 1.

Specification : 0.0V~0.1V

5) Is the measured voltage within the specification?

YES

▶ Go to "Ground Circuit Inspection".

NO

▶ Repair short to battery in signal circuit and go to "Verification of Vehicle Repair".

GROUND CIRCUIT INSPECTION E33FEF79

1. IG KEY "OFF", ENGINE "OFF"
2. Disconnect ECTS connector.
3. IG KEY "ON"
4. Measure the voltage of ECTS connector terminal 1. [TEST "A"]
5. Measure the voltage between ECTS connector terminal 1 and 3. [TEST "B"]
   (terminal 1 : Check + prove , terminal 3 : Check - prove)

Specification : [TEST "A"] Voltage - [TEST "B"] Voltage = below 200mV

6. Is the measured voltage within the specification?

YES

▶ Go to "Component Inspection".

NO

▶ When "B" voltage is not detected : Repair open in ground circuit and go to "Verification of Vehicle Repair".
▶ When the voltage difference between "A" and "B" is above 200mV : Eliminate the causes of excessive resistance and go to "Verification of Vehicle Repair".

COMPONENT INSPECTION E1B394C1

1. IG KEY "OFF", ENGINE "OFF".
2. Disconnect ECTS connector.
3. Measure resistance between ECTS terminal 1 and 3, referring to resistance characteristic table of specification of General information.

Specification : Refer to Specification of General Information

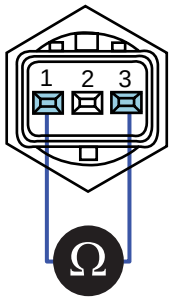

LFIG391A

4. Is the measured resistance at certain temperature within the specified resisance range at the temperature?

YES

▶ Go to "Verification of Vehicle Repair".

NO

▶ Replace ECTS and go to "Verification of Vehicle Repair".

VERIFICATION OF VEHICLE REPAIR E1DA77D4

Refer to DTC P0117.

DTC P0182 FUEL TEMP SENSOR A CIRCUIT LOW INPUT

COMPONENT LOCATION EDC6B4D4

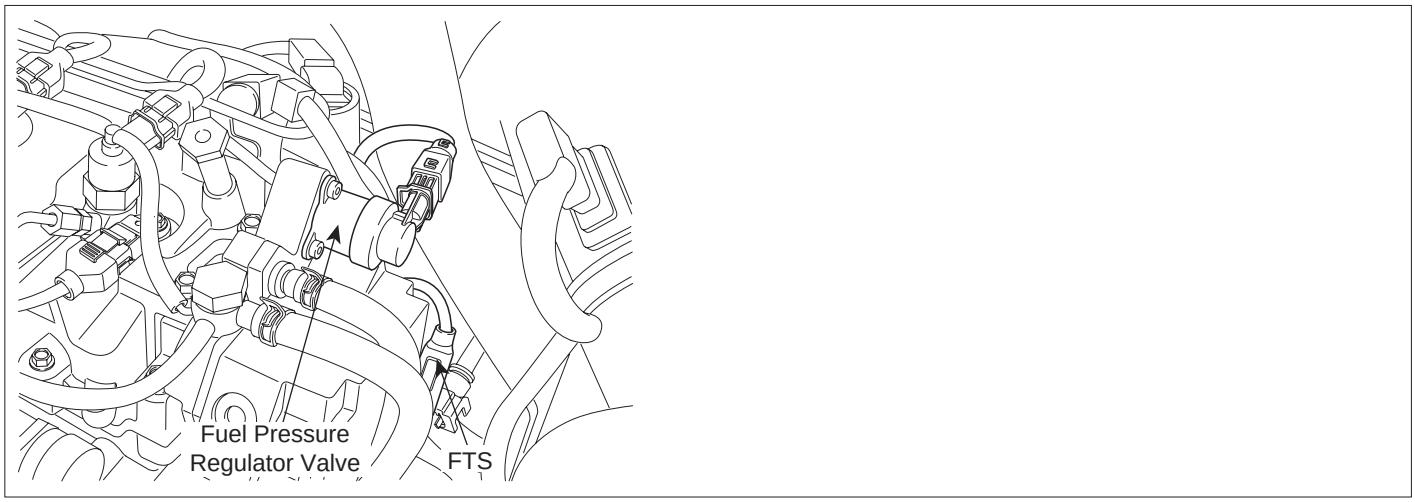

LFIG240A

GENERAL DESCRIPTION EA7FCF36

Fuel Temperature Sensor is NTC thermistor installed in fuel supplying line. It senses the temperature of fuel supplied to high pressure pump.Fuel temperature is limited (engine power is limited) to keep fuel temperature from reaching at 120℃.This limit is to protect fuel line such as high pressure pump and injectors from damages due to rapid deterioration by vapor-lock phenomenon which can occur at high temperature or destruction of oil membrane.

DTC DESCRIPTION EAA3ACA6

P0182 is set when the voltage below 0.053V - minimum voltage of FTS output - is detected for more than 2.0 sec.. This code is due to short to ground in FTS signal circuit.

DTC DETECTING CONDITION E8AA4FEC

<table>
<tr><th>Item</th><th colspan="3">Detecting Condition</th><th>Possible Cause</th></tr>
<tr><td>DTC Strategy</td><td colspan="3">• Voltage monitoring</td><td rowspan="7">• FTS circuit
• FTS component</td></tr>
<tr><td>Enable Conditions</td><td colspan="3">• IG KEY "ON"</td></tr>
<tr><td>Threshold Value</td><td colspan="3">• When output signal is below the minimum value.(below 0.053V)</td></tr>
<tr><td>Diagnostic Time</td><td colspan="3">• 2.0 sec.</td></tr>
<tr><td rowspan="4">Fail Safe</td><td>Fuel cut</td><td>NO</td><td rowspan="4">• Fuel temp. fixed at 85℃</td></tr>
<tr><td>EGR Off</td><td>NO</td></tr>
<tr><td>Fuel Limit</td><td>NO</td></tr>
<tr><td>Check Lamp</td><td>NO</td></tr>
</table>

SPECIFICATION E76FB9BC

Temperature	-30℃	-20℃	-10℃	0℃	20℃
Resistance	22.22~31.78kΩ	13.24~18.10kΩ	8.16~10.74kΩ	5.18~6.60kΩ	2.27~2.73kΩ
Temperature	40℃	50℃	60℃	70℃	
Resistance	1.059~1.281kΩ	0.748~0.904kΩ	0.538~0.650kΩ	0.392~0.476kΩ	

SCHEMATIC DIAGRAM EFF8722D

[CIRCUIT DIAGRAM]

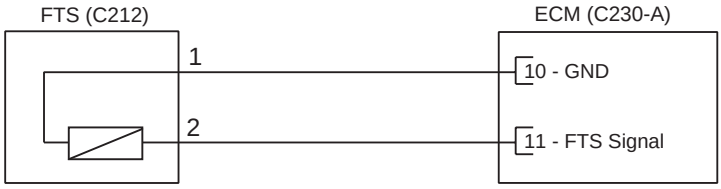

[CONNECTION INFORMATION]

Terminal	Connected to	Function
1	ECM C230-A (10)	Sensor ground
2	ECM C230-A (11)	FTS Signal

[HARNESS CONNECTORS]

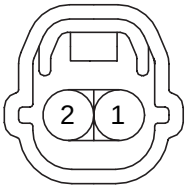

C212

FTS

C230-A

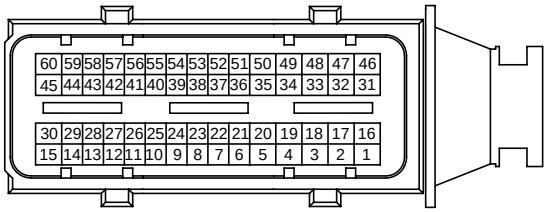

C230-K

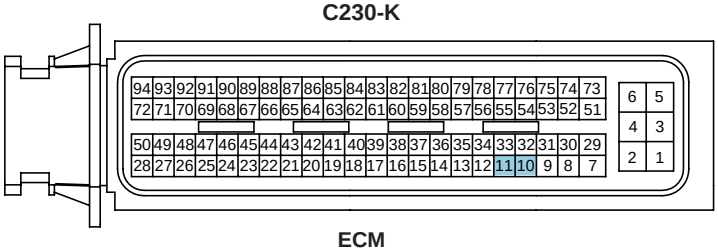

ECM

SCMFL6127L

SIGNAL WAVEFORM AND DATA E237835A

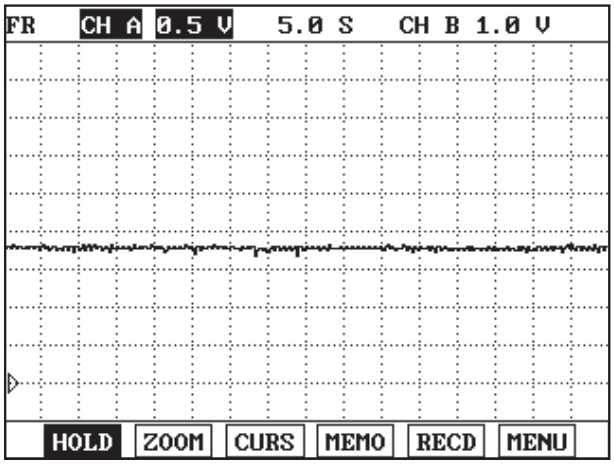

Fig.1

Fig.1) FTS output signal at 50℃.The higher temperature rises, the lower signal voltage becomes.

LFIG242A

MONITOR SCANTOOL DATA E9CDB7EE

1. Connect Scantool to Data Link Connector (DLC).
2. Warm engine up to normal operating temperature.
3. Turn "OFF" electrical devices and A/C.
4. Monitor "FUEL TEMPERATURE " parameter on the scantool.

Specification : Fuel temperature is displayed

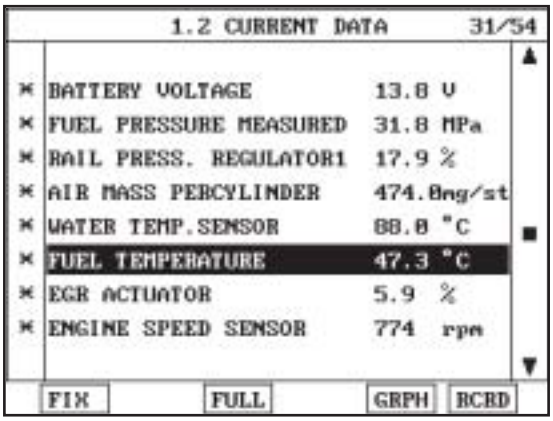

Fig.1

Fig.1) Check if too high or low temperature is displayed.(too high or low temperature is abnormal value.)

SCMFL6232L

TERMINAL AND CONNECTOR INSPECTION E237490F

1. Electrical systems consist of a lot of harness and connectors, poor connection of terminals can cause various problems and damge of component.
2. Perform checking procedure as follows.

1) Check damage of harness and terminals : Check terminals for contact resistance, corrosion and deformation.

2) Check connecting condition of ECM and component connector : Check terminal seperation, damage of locking device and connecting condition between terminal and wiring.

NOTE

Disconnect the pin which requires checking at male connector and insert it to the terminal at female connector for checking connecting condition. (after checking, reconnect the pin at correct position.)

3. Is the problem found?

YES

▶ Repair the trouble causing part and go to "Verification of Vehicle Repair".

NO

▶ Go to "Signal Circuit Inspection ".

SIGNAL CIRCUIT INSPECTION E86E55F0

1. Check signal circuit voltage

1) IG KEY "OFF", ENGINE "OFF".

2) Disconnect FTS connector.

3) IG KEY "ON"

4) Measure the voltage of terminal 2 of FTS connector.

Specification : 4.8V~5.1V

5) Is the measured voltage within the specification?

YES

▶ Go to "Component Inspection"

NO

▶ Go to "2.Check short to ground in signal circuit" as follows.

2. Check short to ground in signal circuit

1) IG KEY "OFF", ENGINE "OFF".

2) Disconnect FTS connector and ECM connector.

3) Check continuity between FTS connector terminal 2 and chassis ground.

Specification : Discontinuity (Infinite Ω)

4) Is the measured resistance within the specification?

YES

▶ Go to "Component Inspection".

NO

▶ Repair short to ground in signal circuit and go to "Verification of Vehicle Repair".

COMPONENT INSPECTION E7426B3E

1. IG KEY "OFF", ENGINE "OFF"
2. Disconnect FTS connector.
3. Measure resistance of FTS component terminal 1 and 2, referring to resistance characteristic table of specification of General information.

Specification : Refer to Specification of General Information.

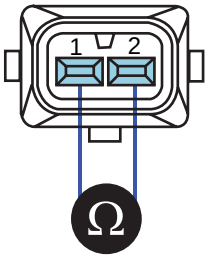

LFIG246A

4. Is the measured resistance at certain temperature within the specified resisance range at the temperature?

YES

▶ Go to "Verification of Vehicle Rapair"

NO

▶ Replace FTS and go to "Verification of Vehicle Rapair".

VERIFICATION OF VEHICLE REPAIR E5157BAD

After a repair, it is essential to verify that the fault is corrected.

1. After connecting Scantool select "DIAGNOSTIC TROUBLE CODES(DTCs)" mode.
2. Clear recorded DTC using Scantool.
3. Drive the vehicle within DTC "Enable conditions" in "General information".
4. After selecting "DIAGNOSTIC TROUBLE CODES(DTCs)" mode and check if DTC is recorded again.
5. Are any DTCs recorded ?

YES

▶ Go to the DTC guide of recorded NO. in Scantool.

NO

▶ System operates within specification.

DTC P0183 FUEL TEMP SENSOR A CIRCUIT HIGH INPUT

COMPONENT LOCATION ED9FFBA8

Refer to DTC P0182.

GENERAL DESCRIPTION E794CA13

Refer to DTC P0182.

DTC DESCRIPTION E994022B

P0183 is set when the voltage above 4.912V - maximum voltage of FTS output - is detected for more than 2.0 sec.. This code is due to 1)open or short to battery in FTS signal circuit or 2)open in ground circuit.

DTC DETECTING CONDITION E7551B39

<table>
<tr><th>Item</th><th colspan="3">Detecting Condition</th><th>Possible Cause</th></tr>
<tr><td>DTC Strategy</td><td colspan="3">• Voltage monitoring</td><td rowspan="6">• FTS circuit
• FTS component</td></tr>
<tr><td>Enable Conditions</td><td colspan="3">• IG KEY "ON"</td></tr>
<tr><td>Threshold Value</td><td colspan="3">• When output signal is above the maximum value.(above 4.912V)</td></tr>
<tr><td>Diagnostic Time</td><td colspan="3">• 2.0 sec.</td></tr>
<tr><td rowspan="4">Fail Safe</td><td>Fuel cut</td><td>NO</td><td rowspan="4">• Fuel temp. fixed at 85℃</td></tr>
<tr><td>EGR Off</td><td>NO</td></tr>
<tr><td>Fuel Limit</td><td>NO</td></tr>
<tr><td>Check Lamp</td><td>NO</td></tr>
</table>

SPECIFICATION E510A89A

Refer to DTC P0182.

SCHEMATIC DIAGRAM EA9250B0

Refer to DTC P0182.

SIGNAL WAVEFORM AND DATA E66075A6

Refer to DTC P0182.

MONITOR SCANTOOL DATA E1FAE76B

Refer to DTC P0182.

TERMINAL AND CONNECTOR INSPECTION E63D6AEF

Refer to DTC P0182.

SIGNAL CIRCUIT INSPECTION E7084471

1. Check signal circuit voltage

   1) IG KEY "OFF", ENGINE "OFF".

   2) Disconnect FTS connector.

   3) IG KEY "ON"

   4) Measure the voltage of terminal 2 of FTS connector.

Specification : 4.8V~5.1V

   5) Is the measured voltage within the specification?

   YES

   ▶ Go to "Ground Circuit Inspection".

   NO

   ▶ Go to "2.Check open in signal circuit" as follows.

2. Check open in signal circuit

   1) IG KEY "OFF", ENGINE "OFF".

   2) Disconnect FTS connector and ECM connector.

   3) Check continuity between FTS connector terminal 2 and ECM connector (C230-K) terminal 11.

Specification : Continuity (below 1.0Ω)

   4) Is the measured resistance within the specification?

   YES

   ▶ Go to "3. Check short to battery in signal circuit" as follows.

   NO

   ▶ Repair open in signal circuit and go to "Verification of Vehicle Repair".

3. Check short to battery in signal circuit

   1) IG KEY "OFF", ENGINE "OFF".

   2) Disconnect FTS connector and ECM connector

   3) IG KEY "ON"

   4) Measure the voltage of terminal 2 of FTS connector.

Specification : 0.0V~0.1V

   5) Is the measured resistance within the specification?

YES

▶ Go to "Ground Circuit Inspection".

NO

▶ Repair short to battery and go to "Verification of Vehicle Repair". .

GROUND CIRCUIT INSPECTION EACA4CC7

1. IG KEY "OFF", ENGINE "OFF".
2. Disconnect FTS connector and ECM connector
3. IG KEY "ON"
4. Measure the voltage of terminal 2 of FTS connector.[TEST "A"]
5. Measure the voltage between FTS connector terminal 2 and 1. [TEST "B"]
   (terminal 2 : Check + prove , terminal 1 : Check - prove)

Specification : [TEST "A"] Voltage - [TEST "B"] Voltage = below 200mV

6. Is the measured voltage within the specification?

YES

▶ Go to "Component Inspection".

NO

▶ When "B" voltage is not detected : Repair open in ground circuit and go to "Verification of Vehicle Repair".
▶ When the voltage difference between "A" and "B" is above 200mV : Eliminate the causes of excessive resistance and go to "Verification of Vehicle Repair".

COMPONENT INSPECTION E76F14E6

1. IG KEY "OFF", ENGINE "OFF"
2. Disconnect FTS connector.
3. Measure resistance of FTS component terminal 1 and 2, referring to resistance characteristic table of specification of General information.

Specification : Refer to Specification of General Information.

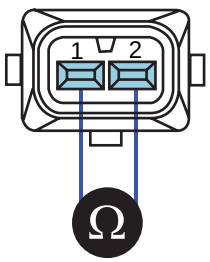

LFIG246A

4. Is the measured resistance at certain temperature within the specified resisance range at the temperature?

YES

▶ Go to "Verification of Vehicle Rapair"

NO

▶ Replace FTS and go to "Verification of Vehicle Rapair".

VERIFICATION OF VEHICLE REPAIR E879ADF7

Refer to DTC P0182.

DTC P0192 FUEL RAIL PRESS. SENSOR-LOW INPUT

COMPONENT LOCATION E739C00E

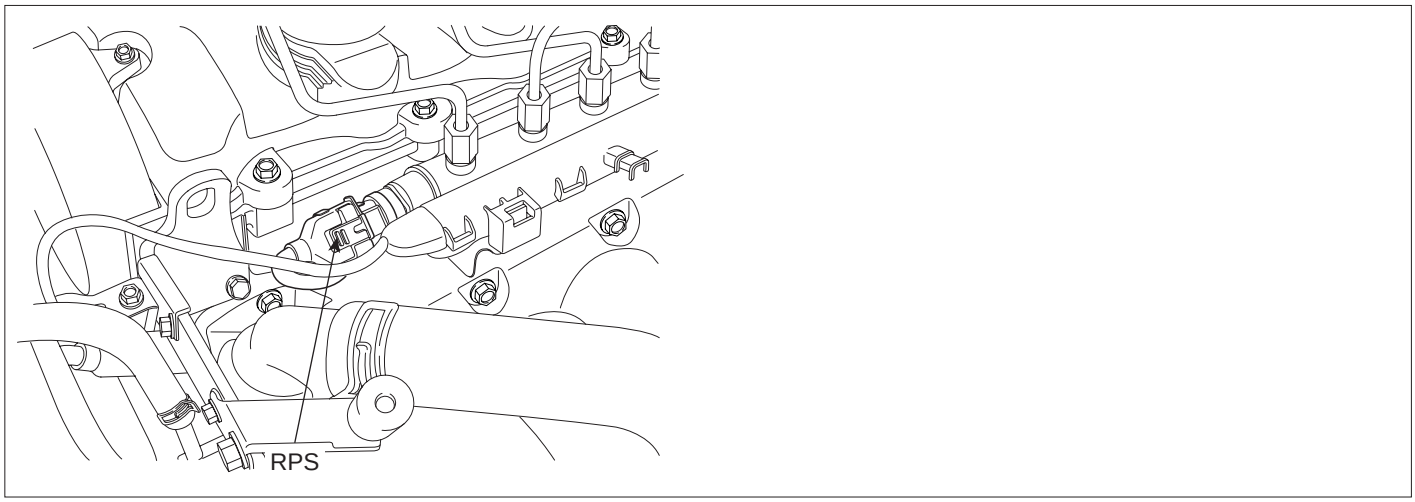

LFIG249A

GENERAL DESCRIPTION EEC13490

RPS(Rail Pressure Sensor), consists of piezzo electric element, measures rail pressure inside of common rail. ECM determines optimum fuel injection quantity at specific engine condition based on RPS signal. RPS signal is also used as rail pressure regualtor feed back signal in order to achieve optimum rail pressure at certain engine condition.

DTC DESCRIPTION E67297D6

P0192 is set when RPS output voltage is below the minimum value of 0.254V for more than 0.2 sec.. This code is due to the open in power circuit or the short to ground in signal circuit.

DTC DETECTING CONDITION EB5D921E

<table>
<tr><th>Item</th><th colspan="3">Detecting Condition</th><th>Possible Cause</th></tr>
<tr><td>DTC Strategy</td><td colspan="3">• Voltage monitoring</td><td rowspan="6">• RPS circuit
• RPS component</td></tr>
<tr><td>Enable Conditions</td><td colspan="3">• Engine running</td></tr>
<tr><td>Threshold Value</td><td colspan="3">• Output sinal below minimum value (below 0.254V)</td></tr>
<tr><td>Diagnostic Time</td><td colspan="3">• 0.2 sec.</td></tr>
<tr><td rowspan="4">Fail Safe</td><td>Fuel cut</td><td>NO</td><td rowspan="4">• Rail press. Sensor value fixed at 330bar</td></tr>
<tr><td>EGR Off</td><td>NO</td></tr>
<tr><td>Fuel Limit</td><td>YES</td></tr>
<tr><td>Check Lamp</td><td>YES</td></tr>
</table>

SPECIFICATION E0AA2EF8

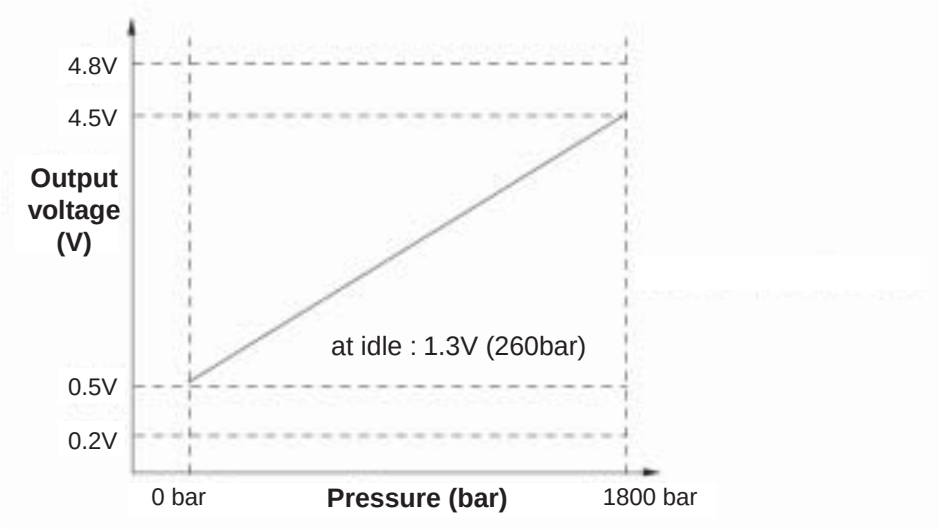

EGNG010O

SCHEMATIC DIAGRAM EB6FDAB0

[CIRCUIT DIAGRAM]

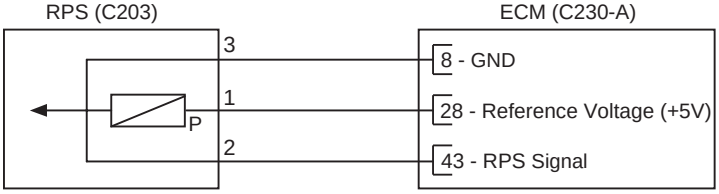

[CONNECTION INFORMATION]

Terminal	Connected to	Function
1	ECM C230-A (28)	Reference Voltage (+5V)
2	ECM C230-A (43)	RPS Signal
3	ECM C230-A (8)	Sensor Signal

[HARNESS CONNECTORS]



C203

RPS

C230-A

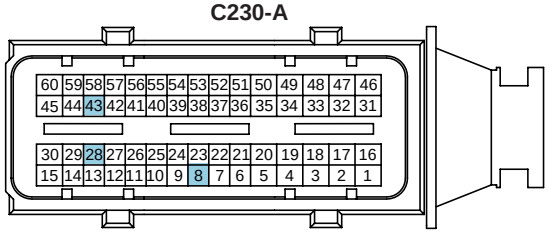

C230-K

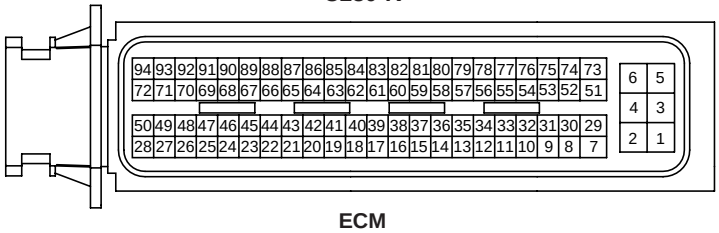

ECM

SCMFL6124L

SIGNAL WAVEFORM AND DATA E72D43DF

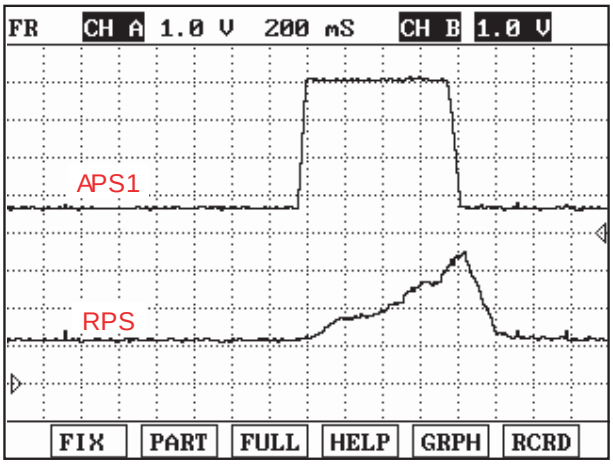

Fig.1

Fig.1) APS 1 and RPS signals are measured simultaneously.
This waveform shows the rise of RPS output voltage at rapid acceleration.

LFIG251A

MONITOR SCANTOOL DATA EE9EB2BC

1. Connect Scantool to Data Link Connector (DLC).
2. Warm engine up to normal operating temperature.
3. Turn "OFF" electrical devices and A/C.
4. Monitor "FUEL PRESSURE MEASURED", "INJ. PUMP REGULATOR","RAIL PRESS. REGULATOR1" parameter on the Scantool.

SPECIFICATION :

	Idle(without load)	Accelerating(stall test)	Diagnosis
FUEL PRESSURE MEASURED	27 ± 5 Mpa	above 75 Mpa	press. increases
INJ. PUMP REGULATOR	34 ± 3%	38 ± 3%	duty increases
RAIL PRESS. REGULATOR1	16 ± 3%	45 ± 3%	duty increases

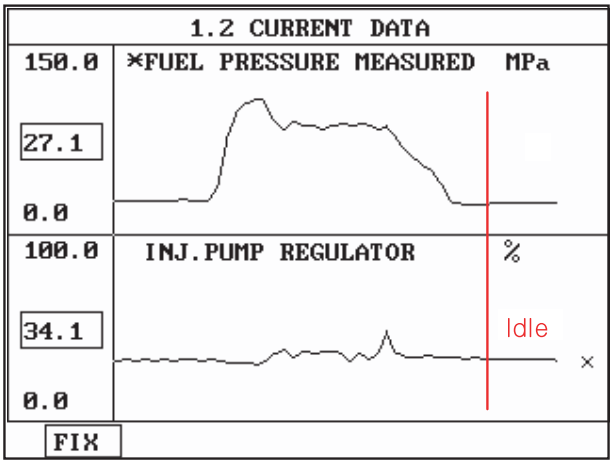

Fig.1

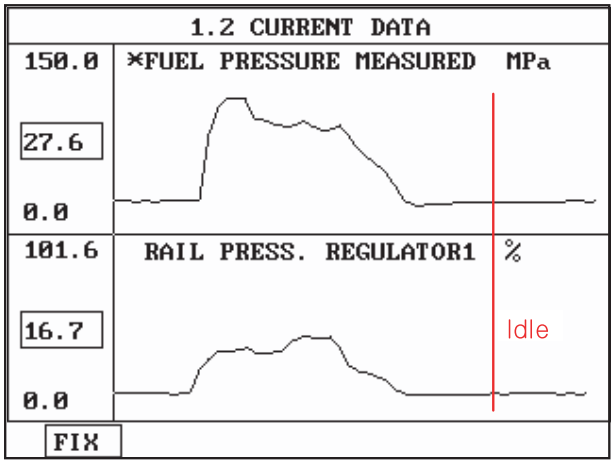

Fig.2

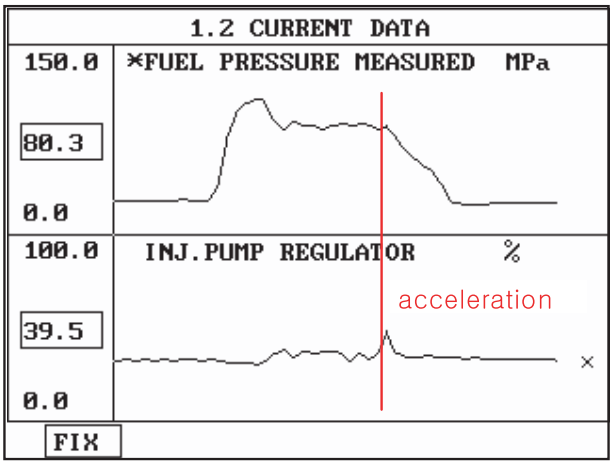

Fig.3

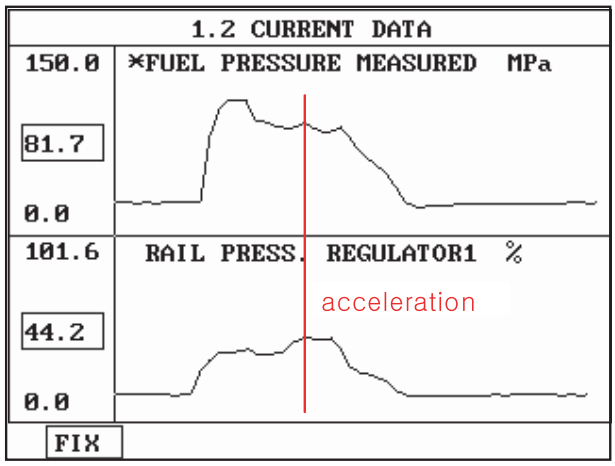

Fig.4

Fig.2) Fuel pressure and Fuel pressure regulator valve data at idle.
Fig.3) Fuel pressure and Rail pressure regulator valve data at idle.
Fig.4) Fuel pressure and Fuel pressure regulator valve data at acceleration.
Fig.5) Fuel pressure and Rail pressure regulator valve data at acceleration.

LFIG375A

NOTE

The waveform of fuel pressure regulator valve installed at high pressure pump(fuel detecting MPROP) shows 34 ± 3% duty at idle, duty rises to approx. 38% at acceleration to raise rail pressure.

The waveform of rail pressure regulator valve installed at common rail shows 16 ± 3% duty at idle, duty rises to approx. 45% at acceleration to raise rail pressure.

TERMINAL AND CONNECTOR INSPECTION E7C78F86

1. Electrical systems consist of a lot of harness and connectors, poor connection of terminals can cause various problems and damge of component.

2. Perform checking procedure as follows.

   1) Check damage of harness and terminals : Check terminals for contact resistance, corrosion and deformation.

   2) Check connecting condition of ECM and component connector : Check terminal seperation, damage of locking device and connecting condition between terminal and wiring.

NOTE

Disconnect the pin which requires checking at male connector and insert it to the terminal at female connector for checking connecting condition. (after checking, reconnect the pin at correct position.)

3. Is the problem found?

YES

▶ Repair the trouble causing part and go to "Verification of Vehicle Repair".

NO

▶ Go to "Power Circuit Inspection".

POWER CIRCUIT INSPECTION E82D2EB8

1. IG KEY "OFF", ENGINE "OFF".
2. Disconnect RPS connector.
3. IG KEY "ON".
4. Measure the voltage of RPS connector terminal "1".

Specification : 4.8V~5.1V

5. Is the measured voltage within the specification?

YES

▶ Go to "Signal Circuit Inspection".

NO

▶ Repair open in RPS power circuit and go to "Verification of Vehicle Repair".
[Check between RPS connector terminal 1 and ECM connector(C230-A) terminal 28.]

SIGNAL CIRCUIT INSPECTION E1A21937

1. Check signal circuit voltage
   1) IG KEY "OFF", ENGINE "OFF".
   2) Disconnect RPS connector.
   3) IG KEY "ON".
   4) Measure the voltage of RPS connector terminal 2.

Specification : 4.8V~5.1V

   5) Is the measured voltage within the specification?

YES

▶ Go to "Component Inspection".

NO

▶ Go to "2.Check short to ground in signal circuit" as follows.

2. Check short to ground in signal circuit

1) IG KEY "OFF", ENGINE "OFF".

2) Disconnect RPS connector and ECM connector.

3) Check continuity between RPS connector terminal 2 and chassis ground.

Specification : Discontinuity (Infinite Ω)

4) Is the measured resistance within the specification?

YES

▶ Go to "Component Inspection".

NO

▶ Repair short to ground in signal circuit and go to "Verification of Vehicle Repair".

COMPONENT INSPECTION EB0A9855

1. Visual Inspection of RPS

1) IG KEY "OFF", ENGINE "OFF".

2) Disconnect RPS connector.

3) Check if corrosion or damage in RPS terminal is detected.

4) Check RPS mounting torque and oil leakage.

5) Are the problems relevant to RPS found?

YES

▶ Replace RPS if necessary and go to "Verification of Vehicle Repair".

NO

▶ Go to "RPS waveform Inspection".

2. RPS Waveform Inspection

1) IG KEY "OFF", ENGINE "OFF".

2) Connect RPS connector.

3) Connect an Oscilloscope to RPS connector terminal 2.

4) After turning engine "ON", Check waveform at idle and during acceleration.

Specification : Refer to "Signal Waveform & Data" of "General Information".

5) Does RPS waveform look similar to standard "Signal Waveform & Data"?

YES

▶ Go to "Verification of Vehicle Repair".

NO

▶ Replace RPS and go to "Verification of Vehicle Repair".

VERIFICATION OF VEHICLE REPAIR EC493B21

After a repair, it is essential to verify that the fault is corrected.

1. After connecting Scantool select "DIAGNOSTIC TROUBLE CODES(DTCs)" mode.
2. Clear recorded DTC using Scantool.
3. Drive the vehicle within DTC "Enable conditions" in "General information".
4. After selecting "DIAGNOSTIC TROUBLE CODES(DTCs)" mode and check if DTC is recorded again.
5. Are any DTCs recorded ?

YES

▶ Go to the DTC guide of recorded NO. in Scantool.

NO

▶ System operates within specification.

DTC P0193 FUEL RAIL PRESS. SENSOR-HIGH INPUT

COMPONENT LOCATION E28EC543

Refer to DTC P0192.

GENERAL DESCRIPTION EFC038E5

Refer to DTC P0192.

DTC DESCRIPTION EFFF1CB2

P0193 is set when RPS output voltage is above the maximum value of 4.75V for more than 0.2 sec.. This code is due to 1) short to battery in signal circuit 2) open in signal circuit or 3) open in ground circuit.

DTC DETECTING CONDITION EFB534E1

<table>
<tr><th>Item</th><th colspan="3">Detecting Condition</th><th>Possible Cause</th></tr>
<tr><td>DTC Strategy</td><td colspan="3">• Voltage monitoring</td><td rowspan="9">• RPS circuit
• RPS component</td></tr>
<tr><td>Enable Conditions</td><td colspan="3">• Engine running</td></tr>
<tr><td>Threshold Value</td><td colspan="3">• Output signal above the maximum value(above 4.75V)</td></tr>
<tr><td>Diagnostic Time</td><td colspan="3">• 0.2 sec.</td></tr>
<tr><td rowspan="4">Fail Safe</td><td>Fuel cut</td><td>NO</td><td rowspan="4">• Rail press. Sensor value fixed at 330bar</td></tr>
<tr><td>EGR Off</td><td>NO</td></tr>
<tr><td>Fuel Limit</td><td>YES</td></tr>
<tr><td>Check Lamp</td><td>YES</td></tr>
</table>

SPECIFICATION E876DB3D

Refer to DTC P0192.

SCHEMATIC DIAGRAM EDACB51F

Refer to DTC P0192.

SIGNAL WAVEFORM AND DATA EAC923AA

Refer to DTC P0192.

MONITOR SCANTOOL DATA E45B1C20

Refer to DTC P0192.

TERMINAL AND CONNECTOR INSPECTION E75ECF8B

Refer to DTC P0192.

POWER CIRCUIT INSPECTION E62DCA6E

1. IG KEY "OFF", ENGINE "OFF".
2. Disconnect RPS connector.
3. IG KEY "ON".
4. Measure the voltage of RPS connector terminal "1".

Specification : 4.8V~5.1V

5. Is the measured voltage within the specification?

YES

▶ Go to "Signal Circuit Inspection".

NO

▶ Repair open in RPS power circuit and go to "Verification of Vehicle Repair".
[Check open between RPS connector terminal 1 and ECM connector(C230-A) terminal 28.]

SIGNAL CIRCUIT INSPECTION EB449233

1. Check signal circuit voltage
   1) IG KEY "OFF", ENGINE "OFF".
   2) Disconnect RPS connector.
   3) IG KEY "ON".
   4) Measure the voltage of RPS connector terminal 2.

Specification : 4.8V~5.1V

   5) Is the measured voltage within the specification?

YES

▶ Go to "Ground Circuit Inspection".

NO

▶ Go to "2. Check open in signal circuit" as follows.

2. Check open in signal circuit
   1) IG KEY "OFF", ENGINE "OFF".
   2) Disconnect RPS connector and ECM connector.
   3) Check continuity between RPS connector terminal 2 and ECM connector (C230-A) terminal 43.

Specification : continuity (below 1.0Ω)

   4) Is the measured resistance within the specification?

YES

▶ Go to "3. Check short to battery in signal circuit" as follows.

NO

▶ Repair open in RPS signal circuit and go to "Verification of Vehicle Repair".
[Check the circuit between Rail Pressure sensor terminal 2 and ECM connector terminal 43.]

3. Check short to battery in signal circuit

   1) IG KEY "OFF", ENGINE "OFF".

   2) Disconnect RPS connector and ECM connector.

   3) IG KEY "ON".

   4) Measure the voltage of RPS connector terminal 2.

Specification : 0.0V~0.1V

   5) Is the measured resistance within the specification?

YES

▶ Go to "Ground Circuit Inspection".

NO

▶ Repair short to battery in signal circuit and go to "Verification of Vehicle Repair".

GROUND CIRCUIT INSPECTION EA17760C

1. IG KEY "OFF", ENGINE "OFF".
2. Disconnect RPS connector.
3. IG KEY "ON".
4. Measure the voltage of RPS connector terminal 2. [TEST "A"]
5. Measure the voltage between RPS connector terminal 2 and 3. [TEST "B"]
   (terminal 2 : Check + prove , terminal 3 : Check - prove)

Specification : [TEST "A"] Voltage - [TEST "B"] Voltage = below 200mV

6. Is the measured voltage within the specification?

YES

▶ Go to "Component Inspection".

NO

▶ When "B" voltage is not detected : Repair open in ground circuit and go to "Verification of Vehicle Repair".
▶ When the voltage difference between "A" and "B" is above 200mV : Eliminate the causes of excessive resistance and go to "Verification of Vehicle Repair".

COMPONENT INSPECTION E70011A5

1. Visual Inspection of RPS
   1) IG KEY "OFF", ENGINE "OFF".
   2) Disconnect RPS connector.
   3) Check if corrosion or damage in RPS terminal is detected.
   4) Check RPS mounting torque and oil leakage.
   5) Are the problems relevant to RPS found?

      YES

      ▶ Replace RPS if necessary and go to "Verification of Vehicle Repair".

      NO

      ▶ Go to "RPS waveform Inspection".
2. RPS Waveform Inspection
   1) IG KEY "OFF", ENGINE "OFF".
   2) Connect RPS connector.
   3) Connect an Oscilloscope to RPS connector terminal 2.
   4) After turning engine "ON", Check waveform at idle and during acceleration.

Specification : Refer to "Signal Waveform & Data" of "General Information".

   5) Does RPS waveform look similar to standard "Signal Waveform & Data"?

      YES

      ▶ Go to "Verification of Vehicle Repair".

      NO

      ▶ Replace RPS and go to "Verification of Vehicle Repair".

VERIFICATION OF VEHICLE REPAIR EA7E9B14

Refer to DTC P0192.

DTC P0201 CYLINDER 1-INJECTOR CIRCUIT/OPEN
DTC P0202 CYLINDER 2-INJECTOR CIRCUIT/OPEN
DTC P0203 CYLINDER 3-INJECTOR CIRCUIT/OPEN
DTC P0204 CYLINDER 4-INJECTOR CIRCUIT/OPEN

COMPONENT LOCATION EB5A36F5

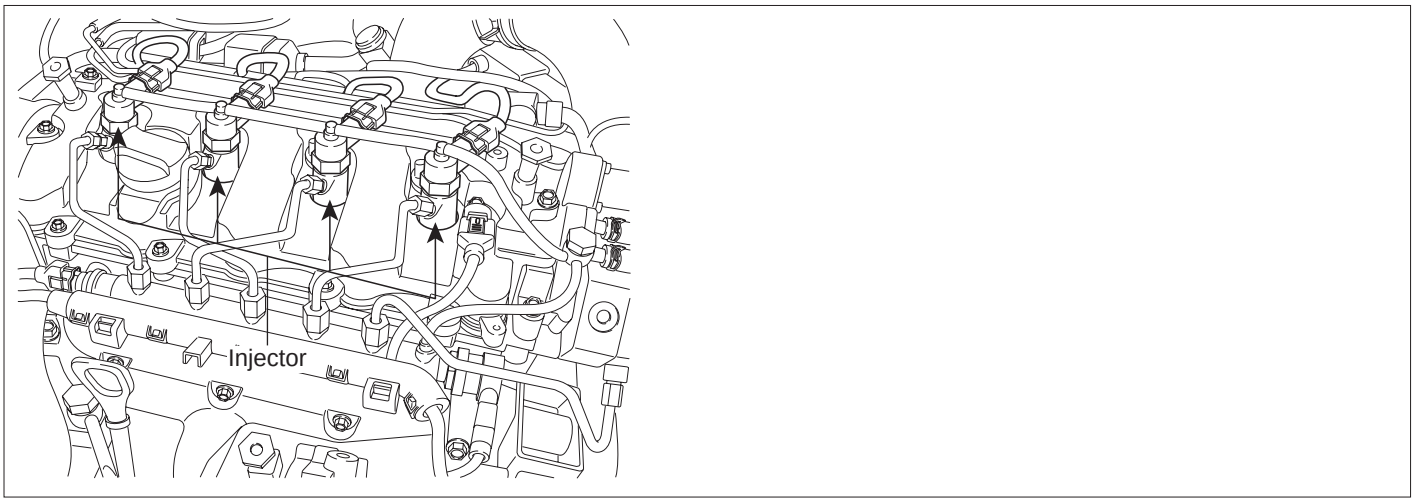

LFIG257A

GENERAL DESCRIPTION EAE7276C

Injectors spray fuel in the highly compressed combustion chamber, and power generates through combustion process. Fuel pressure is raised to 1600bar in common rail diesel engine for the purpose of making fuel into minute particles. And fuel devided into minute particles leads smoke reduction, high power generation, and improved fuel efficiency. To control pressure of 1600bar with solenoid, oil pressure servo is applied. And injector solenoids is actuated by solenoid operating voltage raised to 80V with the method of current control.

DTC DESCRIPTION ED92DC9D

P0201/P0202/P0203/P0204 is set when no current is detected in injector power and control circuit at injector #1/2/3/4 operating condition. This code is due to open in injector circuit or open in injector component coil.

DTC DETECTING CONDITION EB127AE5

<table>
<tr><th>Item</th><th colspan="3">Detecting Condition</th><th>Possible Cause</th></tr>
<tr><td>DTC Strategy</td><td colspan="3">• Current monitoring</td><td rowspan="8">• Open in injector circuit
• Injector component</td></tr>
<tr><td>Enable Conditions</td><td colspan="3">• IG KEY "ON"</td></tr>
<tr><td>Threshold Value</td><td colspan="3">• Open in injector circuit</td></tr>
<tr><td>Diagnostic Time</td><td colspan="3">• Immediately</td></tr>
<tr><td rowspan="4">Fail Safe</td><td>Fuel cut</td><td>NO</td><td rowspan="4">• Open circuit of More than 2 injectors : Engine OFF</td></tr>
<tr><td>EGR Off</td><td>NO</td></tr>
<tr><td>Fuel Limit</td><td>YES</td></tr>
<tr><td>Check Lamp</td><td>YES</td></tr>
</table>

SPECIFICATION EB15543C

Injector Component Resistance	Injector Operating Voltage	Injector Operating Current	Injector Control Type
0.330Ω (20±1℃)	80V	Peak current : 20±1A Hold in current : 12±1A Recharging current : 7A	Current control

SCHEMATIC DIAGRAM E1042F9F

[CIRCUIT DIAGRAM]

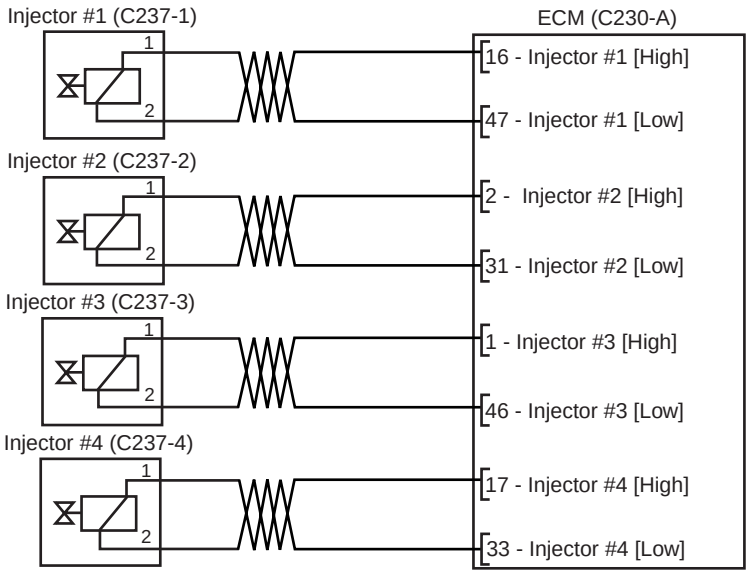

[CONNECTION INFORMATION]

[Injector #1]

Terminal	Connected to	Function
1	ECM C230-A (16)	Injector #1 High side
2	ECM C230-A (47)	Injector #1 Low side

[Injector #2]

Terminal	Connected to	Function
1	ECM C230-A (2)	Injector #2 High side
2	ECM C230-A (31)	Injector #2 Low side

[Injector #3]

Terminal	Connected to	Function
1	ECM C230-A (1)	Injector #3 High side
2	ECM C230-A (46)	Injector #3 Low side

[Injector #4]

Terminal	Connected to	Function
1	ECM C230-A (17)	Injector #4 High side
2	ECM C230-A (33)	Injector #4 Low side

[HARNESS CONNECTORS]

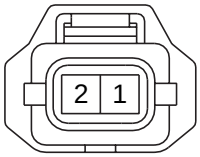

C237-1,2,3,4
INJECTOR #1,#2,#3,#4

C230-A

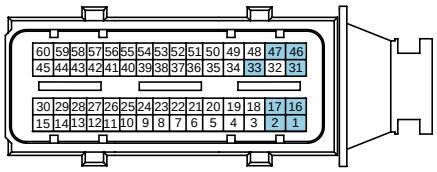

C230-K

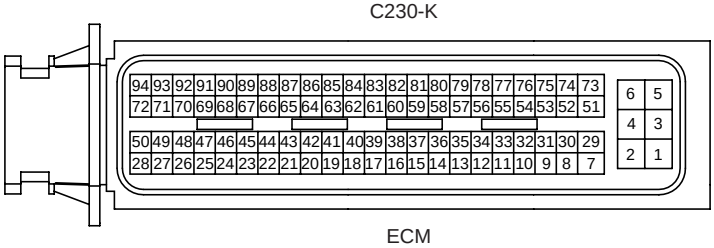

ECM

SCMFL6397L

SIGNAL WAVEFORM AND DATA EF0042F8

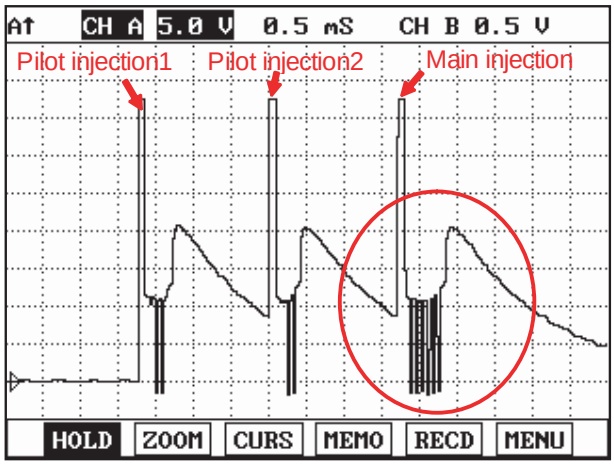

Fig.1

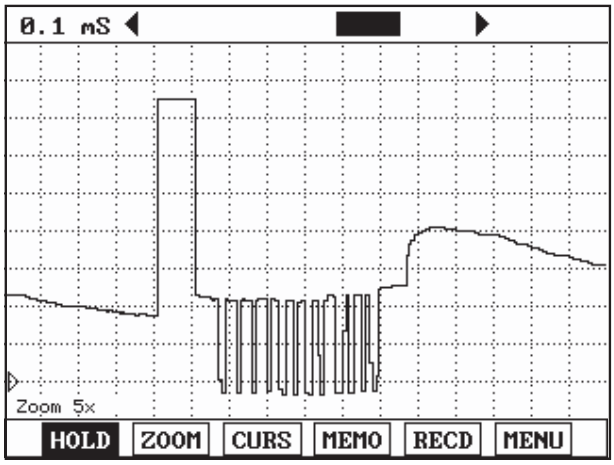

Fig.2

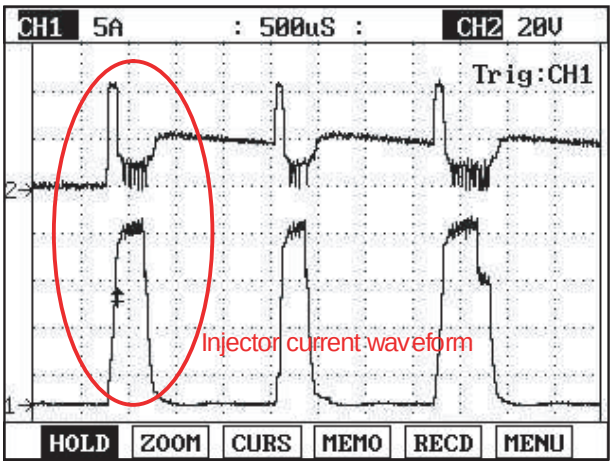

Fig.3

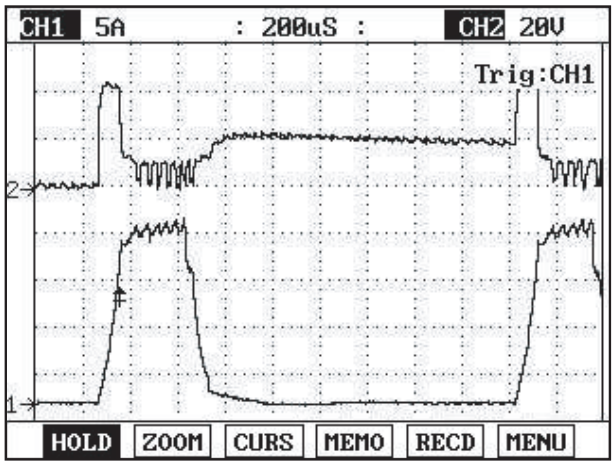

Fig.4

Fig.1) Injector operating waveform at Low side, It shows 2 pilot and 1 main injection.
Fig.2) Magnified waveform of main injection at Fig.1)
Fig.3) Injector voltage and current waveforms are measured at the same time using current prove of scope meter.
Fig.4) Magnified waveform of pilot injection at Fig.3)

LFIG259A

TERMINAL AND CONNECTOR INSPECTION E4982099

1. Electrical systems consist of a lot of harness and connectors, poor connection of terminals can cause various problems and damge of component.

2. Perform checking procedure as follows.

   1) Check damage of harness and terminals : Check terminals for contact resistance, corrosion and deformation.

   2) Check connecting condition of ECM and component connector : Check terminal seperation, damage of locking device and connecting condition between terminal and wiring.

   NOTE

   Disconnect the pin which requires checking at male connector and insert it to the terminal at female connector for checking connecting condition. (after checking, reconnect the pin at correct position.)

3. Is the problem found?

YES

▶ Repair the trouble causing part and go to "Verification of Vehicle Repair".

NO

▶ Go to "Power Circuit Inspection".

POWER CIRCUIT INSPECTION ED0A8269

1. Check open in power circuit(High side)

   1) IG KEY "OFF", ENGINE "OFF".

   2) Disconnect injector connector and ECM connector.

   3) [P0201] Check continuity between injector #1 connector terminal 1 and ECM connector (C230-A) terminal 16.
   [P0202] Check continuity between injector #2 connector terminal 1 and ECM connector (C230-A) terminal 2.
   [P0203] Check continuity between injector #3 connector terminal 1 and ECM connector (C230-A) terminal 1.
   [P0204] Check continuity between injector #4 connector terminal 1 and ECM connector (C230-A) terminal 17.

Specification : Continuity (below 1.0Ω)

   4) Is the measured resistance within the specification?

YES

▶ Go to "Control Circuit Inspection".

NO

▶ Repair open in injector #1 power circuit and go to "Verification of Vehicle Repair".

CONTROL CIRCUIT INSPECTION E6A03E03

1. Check open in control circuit(Low side)

   1) IG KEY "OFF", ENGINE "OFF".

   2) Disconnect injector connector and ECM connector.

   3) [P0201] Check continuity between injector #1 connector terminal 2 and ECM connector (C230-A) terminal 47.
   [P0202] Check continuity between injector #2 connector terminal 2 and ECM connector (C230-A) terminal 31.
   [P0203] Check continuity between injector #3 connector terminal 2 and ECM connector (C230-A) terminal 46.
   [P0204] Check continuity between injector #4 connector terminal 2 and ECM connector (C230-A) terminal 33.

Specification : Continuity (below 1.0Ω)

   4) Is the measured resistance within the specification?

YES

▶ Go to "Component Inspection".

NO

▶ Repair open in injector #1 control circuit and go to "Verification of Vehicle Repair".

COMPONENT INSPECTION E25144D3

1. Check injector component resistance

   1) IG KEY "OFF", ENGINE "OFF".

   2) Disconnect injector connector.

   3) Measure the resistance between injector component terminal 1 and 2.

Specification : 0.33Ω (20℃)

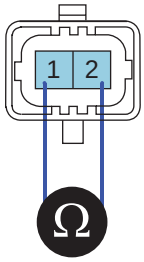

EGNG008I

   4) Is the measured resistance(of injector solenoid) within the specification?

YES

▶ Go to "Verification of Vehicle Repair".

NO

▶ Replace injector and go to "Verification of Vehicle Repair".

NOTE

Replacing injectors, peculiar IQA code of each injector should be inputted to ECM
Perform this process using "INJECTOR CORRECTION" function on scantool, Refer to P1670, P1671 for more detailed information.

VERIFICATION OF VEHICLE REPAIR E39AD433

After a repair, it is essential to verify that the fault is corrected.

1. After connecting Scantool select "DIAGNOSTIC TROUBLE CODES(DTCs)" mode.
2. Clear recorded DTC using Scantool.
3. Drive the vehicle within DTC "Enable conditions" in "General information".
4. After selecting "DIAGNOSTIC TROUBLE CODES(DTCs)" mode and check if DTC is recorded again.
5. Are any DTCs recorded ?

YES

▶ Go to the DTC guide of recorded NO. in Scantool.

NO

▶ System operates within specification.

DTC P0231 ELECTRIC FUEL PUMP RELAY-OPEN OR SHORT CIRCUIT

COMPONENT LOCATION E8E43295

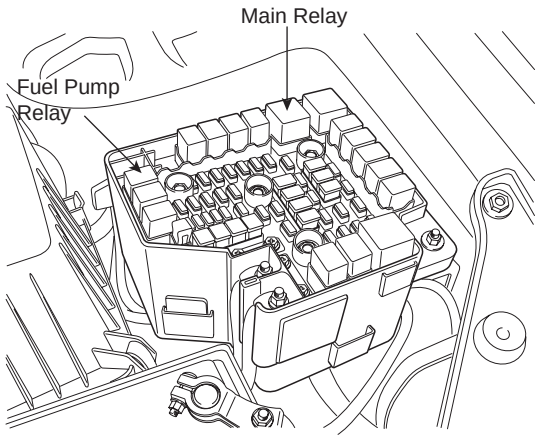

SCMFL6503L

GENERAL DESCRIPTION EE38D8C4

Vain pump type fuel pump which is driven by electric motor is applied to this vehicle. Fuel pump which is installed inside of fuel tank supplies fuel to high pressure pump. ECM controls Fuel pump relay to supply power to low pressure fuel pump. The relay operates for 1.5 sec. for the diagnosis fuel pump relay at IG KEY ON, then if engine speed above 45rpm is detected by CKPS, relay turns ON and fuel is supplied to high pressure pump.

DTC DESCRIPTION E251BDEA

P0231 is set when no current or excessively low current is detected in fuel pump relay control circuit for more than 1 sec. at Fuel pump relay ON condition. This code is due to open or short to ground in glow relay control circuit or internal open in Fuel pump relay component.

DTC DETECTING CONDITION E2A6ACE0

<table>
<tr><th>Item</th><th colspan="3">Detecting Condition</th><th>Possible Cause</th></tr>
<tr><td>DTC Strategy</td><td colspan="3">• Voltage monitoring</td><td rowspan="7">• Fuel pump relay control circuit
• Fuel pump relay component</td></tr>
<tr><td>Enable Conditions</td><td colspan="3">• IG KEY "ON" (monitoring only performed within relay operating condition)</td></tr>
<tr><td>Threshold Value</td><td colspan="3">• Short to GND, Wiring open</td></tr>
<tr><td>Diagnostic Time</td><td colspan="3">• 1.0 sec.</td></tr>
<tr><td rowspan="4">Fail Safe</td><td>Fuel cut</td><td>NO</td><td rowspan="4"></td></tr>
<tr><td>EGR Off</td><td>NO</td></tr>
<tr><td>Fuel Limit</td><td>NO</td></tr>
<tr><td>Check Lamp</td><td>NO</td></tr>
</table>

SPECIFICATION EF3D2C62

Relay Coil Resistance	Motor Type	Pumping Pressure
85±10Ω (20°C)	Electric motor type vein pump	4 - 5 bar

SCHEMATIC DIAGRAM E850BADE

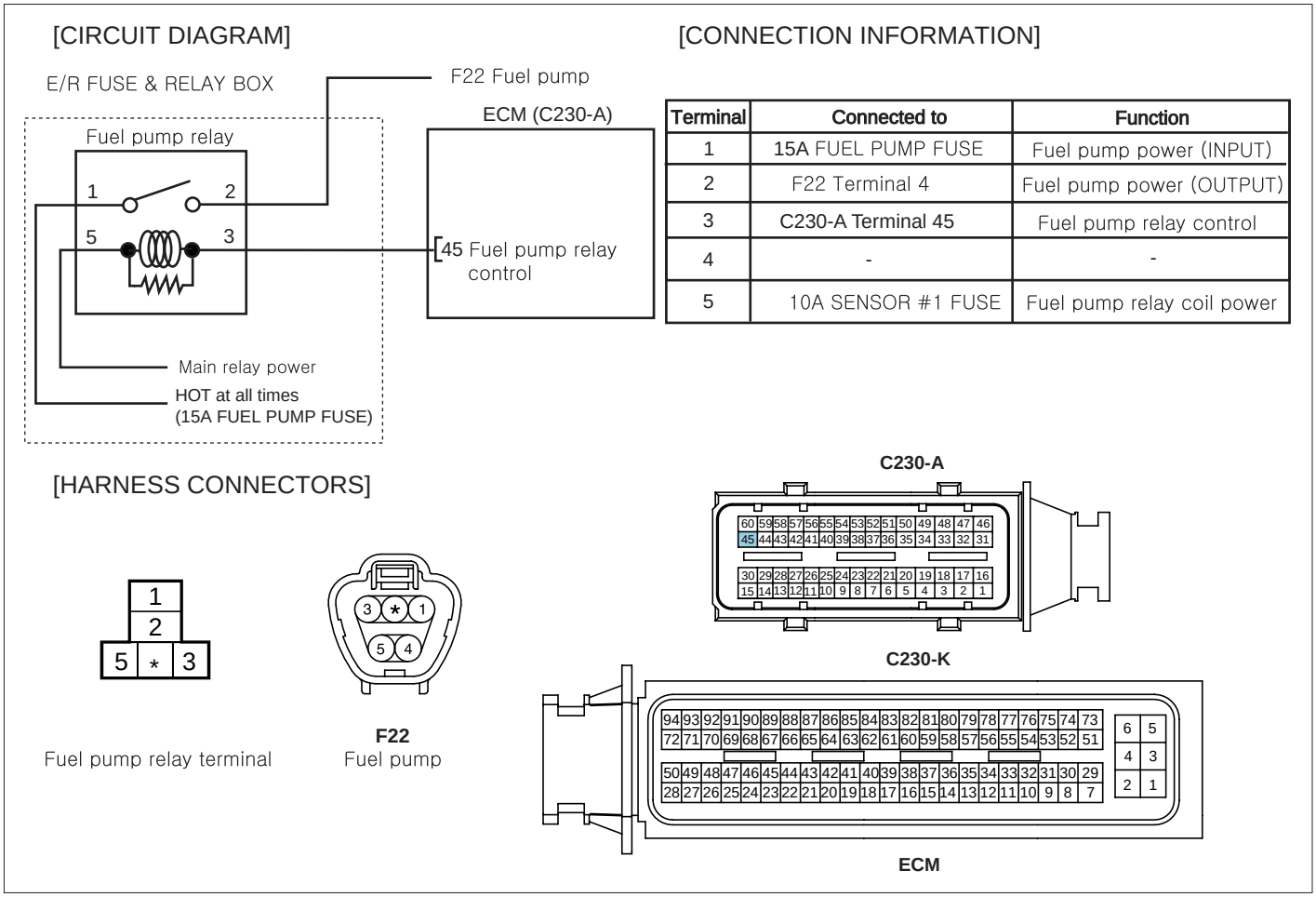

SCMFL6398L

TERMINAL AND CONNECTOR INSPECTION E66FC9AE

1. Electrical systems consist of a lot of harness and connectors, poor connection of terminals can cause various problems and damge of component.

2. Perform checking procedure as follows.

   1) Check damage of harness and terminals : Check terminals for contact resistance, corrosion and deformation.

   2) Check connecting condition of ECM and component connector : Check terminal seperation, damage of locking device and connecting condition between terminal and wiring.

   NOTE

   Disconnect the pin which requires checking at male connector and insert it to the terminal at female connector for checking connecting condition. (after checking, reconnect the pin at correct position.)

3. Is the problem found?

YES

▶ Repair the trouble causing part and go to "Verification of Vehicle Repair".

NO

▶ Go to "Power Circuit Inspection".

POWER CIRCUIT INSPECTION E5EFA67E

1. Check Relay coil power circuit voltage

   1) IG KEY "OFF", ENGINE "OFF".

   2) Disconnect fuel pump relay.

   3) Measure the voltage of fuel pump relay connector terminal 1.

Specification : 11.5V~13.0V

   4) Is the measured voltage within the specification?

   YES

   ▶ Go to "2. Check Fuel pump motor power(Input) voltage" as follows.

   NO

   ▶ Repair open in E/R FUSE & RELAY BOX Main relay component or related circuit and go to "Verification of Vehicle Repair".

2. Check Fuel pump motor power(Input) voltage

   1) IG KEY "OFF", ENGINE "OFF".

   2) Disconnect fuel pump relay.

   3) IG KEY "ON".

   4) Measure the voltage of fuel pump relay connector terminal 5.

Specification : 11.5V~13.0V

   5) Is the measured voltage within the specification?

   YES

   ▶ Go to "Control Circuit Inspection".

   NO

   ▶ Repair E/R FUSE & RELAY BOX 15A FUEL PUMP FUSE and related circuit and go to "Verification of Vehicle Repair".

CONTROL CIRCUIT INSPECTION EA267F34

1. Check short to ground in control circuit

1) IG KEY "OFF", ENGINE "OFF".

2) Disconnect fuel pump relay.

3) IG KEY "ON".

4) Measure the voltage of fuel pump relay connector terminal 3.

Specification : 3.2V~3.7V

5) Is the measured voltage within the specification?

YES

▶ Go to "Component Inspection".

NO

▶ When no value is detected : Go to "2. Check open in control circuit".
▶ When high voltage is detected : Repair short to battery in signal circuit and go to "Verification of Vehicle Repair".

2. Check open in control circuit

1) IG KEY "OFF", ENGINE "OFF".

2) Disconnect fuel pump relay and ECM connector.

3) Check continuity between fuel pump relay connector terminal 3 and ECM connector (C230-A) terminal 45.

specification : Continuity (below 1.0Ω)

4) Is the measured resistance within the specification?

YES

▶ Repair short to ground and go to "Verification of Vehicle Repair".

NO

▶ Repair open in control circuit and go to "Verification of Vehicle Repair".

COMPONENT INSPECTION ECB31A37

1. Check fuel pump relay component coil resistance

1) IG KEY "OFF", ENGINE "OFF".

2) Disconnect glow relay.

3) Measure the resistance of glow relay component coil.

Specification : 95±5 Ω (20℃)

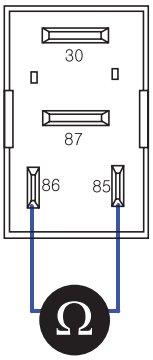

SCMFL6418L

4) Is the measured resistance within the specification?

YES

▶ Go to "2. Check glow relay component operation" as follows.

NO

▶ Replace glow relay and go to "Verification of Vehicle Repair".

2. Check glow relay component operation

1) IG KEY "OFF", ENGINE "OFF".

2) Disconnect glow relay.

3) Supplies random B+ and ground to coil sides of glow relay (terminal 85, terminal 86).

4) Check continuity between glow relay terminal 30 and terminal 87.

specification : When power is supplied : Continuity (below 1.0Ω)
When power is not supplied : Discontinuity (Infinite Ω)

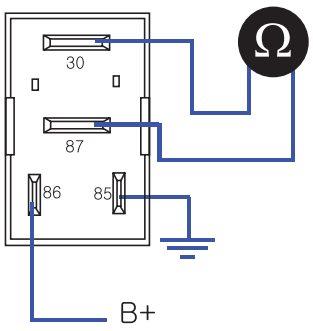

SCMFL6419L

5) Is the measured resistance within the specification?

YES

▶ Go to "Verification of Vehicle Repair".

NO

▶ Replace glow relay and go to "Verification of Vehicle Repair".

※ Repeat this process 2~3 times.

VERIFICATION OF VEHICLE REPAIR EF47981B

After a repair, it is essential to verify that the fault is corrected.

1. After connecting Scantool select "DIAGNOSTIC TROUBLE CODES(DTCs)" mode.
2. Clear recorded DTC using Scantool.
3. Drive the vehicle within DTC "Enable conditions" in "General information".
4. After selecting "DIAGNOSTIC TROUBLE CODES(DTCs)" mode and check if DTC is recorded again.
5. Are any DTCs recorded ?

YES

▶ Go to the DTC guide of recorded NO. in Scantool.

NO

▶ System operates within specification.

DTC P0232 ELECTRIC FUEL PUMP RELAY-SHORT CIRCUIT

COMPONENT LOCATION ECB826BF

Refer to DTC P0231.

GENERAL DESCRIPTION EAE261E3

Refer to DTC P0231.

DTC DESCRIPTION ED083760

P0232 is set when excessive voltage is detected in Fuel pump relay control circuit for more than 1 sec. at Fuel pump relay ON condition. This code is due to short to battery in Fuel pump relay control circuit.

DTC DETECTING CONDITION E79A2371

<table>
<tr><th>Item</th><th colspan="3">Detecting Condition</th><th>Possible Cause</th></tr>
<tr><td>DTC Strategy</td><td colspan="3">• Voltage monitoring</td><td rowspan="6">• Fuel pump relay control circuit
• Fuel pump relay component</td></tr>
<tr><td>Enable Conditions</td><td colspan="3">• IG KEY "ON" (monitoring only performed within relay operating condition)</td></tr>
<tr><td>Threshold Value</td><td colspan="3">• short to battery</td></tr>
<tr><td>Diagnostic Time</td><td colspan="3">• 1.0 sec.</td></tr>
<tr><td rowspan="4">Fail Safe</td><td>Fuel cut</td><td>NO</td><td rowspan="4"></td></tr>
<tr><td>EGR Off</td><td>NO</td></tr>
<tr><td>Fuel Limit</td><td>NO</td></tr>
<tr><td>Check Lamp</td><td>NO</td></tr>
</table>

SPECIFICATION E86209F7

Refer to DTC P0231.

SCHEMATIC DIAGRAM E051A4CA

Refer to DTC P0231.

TERMINAL AND CONNECTOR INSPECTION E998FFCB

Refer to DTC P0231.

POWER CIRCUIT INSPECTION E1749BD3

1. Check Relay coil power circuit voltage
   1) IG KEY "OFF", ENGINE "OFF".
   2) Disconnect fuel pump relay.
   3) Measure the voltage of fuel pump relay connector terminal 1.

Specification : 11.5V~13.0V

4) Is the measured voltage within the specification?

YES

▶ Go to "2. Check Fuel pump motor power(Input) voltage" as follows.

NO

▶ Repair open in E/R FUSE & RELAY BOX Main relay component or related circuit and go to "Verification of Vehicle Repair".

2. Check Fuel pump motor power(Input) voltage

1) IG KEY "OFF", ENGINE "OFF".

2) Disconnect fuel pump relay.

3) IG KEY "ON".

4) Measure the voltage of fuel pump relay connector terminal 5.

Specification : 11.5V~13.0V

5) Is the measured voltage within the specification?

YES

▶ Go to "Control Circuit Inspection".

NO

▶ Repair E/R FUSE & RELAY BOX 15A FUEL PUMP FUSE and related circuit and go to "Verification of Vehicle Repair".

CONTROL CIRCUIT INSPECTION EDF8E4AB

1. Check short to ground in control circuit

1) IG KEY "OFF", ENGINE "OFF".

2) Disconnect fuel pump relay.

3) IG KEY "ON".

4) Measure the voltage of fuel pump relay connector terminal 3.

Specification : 3.2V~3.7V

5) Is the measured voltage within the specification?

YES

▶ Go to "Component Inspection".

NO

▶ When no value is detected : Go to "2. Check open in control circuit".
▶ When high voltage is detected : Repair short to battery in signal circuit and go to "Verification of Vehicle Repair".

2. Check open in control circuit

1) IG KEY "OFF", ENGINE "OFF".

2) Disconnect fuel pump relay and ECM connector.

3) Check continuity between fuel pump relay connector terminal 3 and ECM connector (C230-A) terminal 45.

specification : Continuity (below 1.0Ω)

4) Is the measured resistance within the specification?

YES

▶ Repair short to ground and go to "Verification of Vehicle Repair".

NO

▶ Repair open in control circuit and go to "Verification of Vehicle Repair".

COMPONENT INSPECTION E24AAB6F

1. Check fuel pump relay component coil resistance

1) IG KEY "OFF", ENGINE "OFF".

2) Disconnect glow relay.

3) Measure the resistance of glow relay component coil.

Specification : 95±5 Ω (20℃)

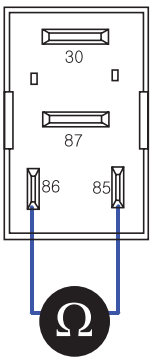

SCMFL6418L

4) Is the measured resistance within the specification?

YES

▶ Go to "2. Check glow relay component operation" as follows.

NO

▶ Replace glow relay and go to "Verification of Vehicle Repair".

2. Check glow relay component operation

1) IG KEY "OFF", ENGINE "OFF".

2) Disconnect glow relay.

3) Supplies random B+ and ground to coil sides of glow relay (terminal 85, terminal 86).

4) Check continuity between glow relay terminal 30 and terminal 87.

specification : When power is supplied : Continuity (below 1.0Ω)
When power is not supplied : Discontinuity (Infinite Ω)

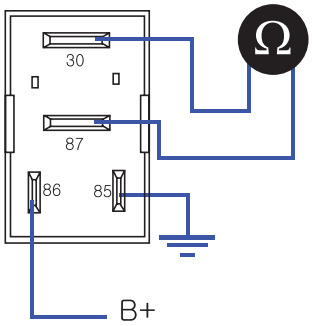

SCMFL6419L

5) Is the measured resistance within the specification?

YES

▶ Go to "Verification of Vehicle Repair".

NO

▶ Replace glow relay and go to "Verification of Vehicle Repair".

※ Repeat this process 2~3 times.

VERIFICATION OF VEHICLE REPAIR E6420640

Refer to DTC P0231.

DTC P0234 TURBO/SUPER CHARGER OVERBOOST CONDITION

COMPONENT LOCATION ED0ED326

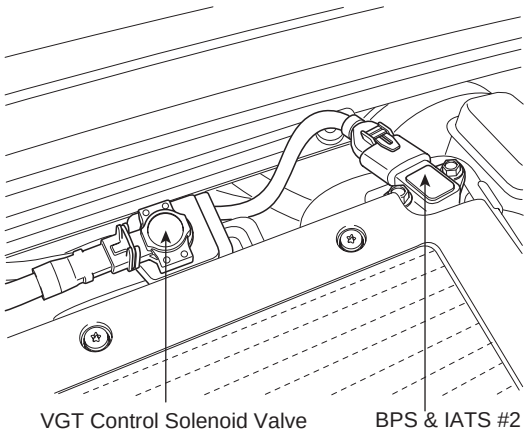

SCMFL6500L

GENERAL DESCRIPTION E31EB5D2

VGT(Variable Geometric Turbocharger) is the device which increases the efficiency of turbocharger at low rpm and lasts optimum turbo efficiency at high rpm as varying the cross sectional area through which exhaust gas passes turbocharger impeller. It relieves turbo lag at low speed and increse engine power generation.Engine speed, APS signal, MAFS and Boost pressure sensor information is inputted to ECM. ECM actuates vacuum diafragm which controls exhaust gas line as controlling VGT actuator duty to maintain optimum state of air compression.

DTC DESCRIPTION E306B38F

P0234 is set when real boost pressure is much higher than target boost pressure for more than 12 sec. at above 1750RPM and 22mg/hub of fuel injection quantity. This code is due to poor connection of VGT solenoid valve vacuum hose, vacuum leakage, clogging, VGT turbo charger component failure.

DTC DETECTING CONDITION E3E9A4DC

<table>
<tr><th>Item</th><th colspan="3">Detecting Condition</th><th>Possible Cause</th></tr>
<tr><td>DTC Strategy</td><td colspan="3">• Signal monitoring</td><td rowspan="8">• VGT solenoid component
• VGT vacuum line
• VGT turbo charger component</td></tr>
<tr><td>Enable Conditions</td><td colspan="3">• Engine running(at above 1750RPM and 22mg/hub of fuel injection quantity)</td></tr>
<tr><td>Threshold Value</td><td colspan="3">• Real boost press. is much higher than target boost press.</td></tr>
<tr><td>Diagnostic Time</td><td colspan="3">• 12 sec.</td></tr>
<tr><td rowspan="4">Fail Safe</td><td>Fuel cut</td><td>NO</td><td rowspan="4"></td></tr>
<tr><td>EGR Off</td><td>YES</td></tr>
<tr><td>Fuel Limit</td><td>YES</td></tr>
<tr><td>Check Lamp</td><td>YES</td></tr>
</table>

SPECIFICATION E920E0BD

VGT actuator component resistance	VGT actuator operating Hz	VGT actuator operating duty
14.7 ~ 16.1Ω (20℃)	300Hz	76% at idle, decreases as accelerating

SCHEMATIC DIAGRAM EE260480

[CIRCUIT DIAGRAM]

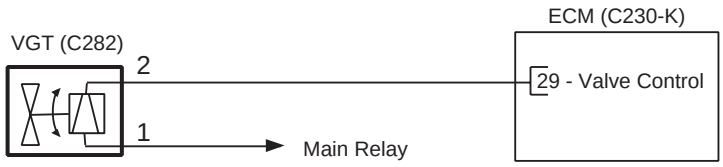

[CONNECTION INFORMATION]

Terminal	Connected to	Function
1	Main Relay	Battery Voltage (B+)
2	ECM C230-K (29)	Valve Control

[HARNESS CONNECTORS]

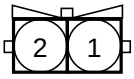

C282

VGT CONTROL SOLENOID VALVE

C230-A

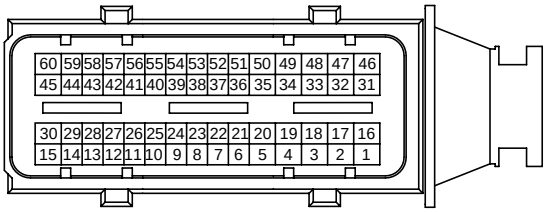

C230-K

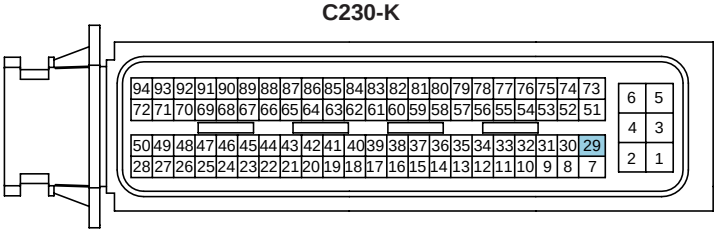

ECM

SCMFL6136L

SIGNAL WAVEFORM AND DATA E2F56275

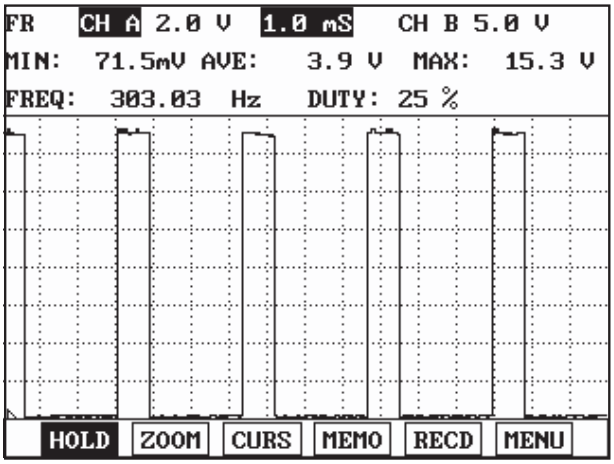

Fig.1

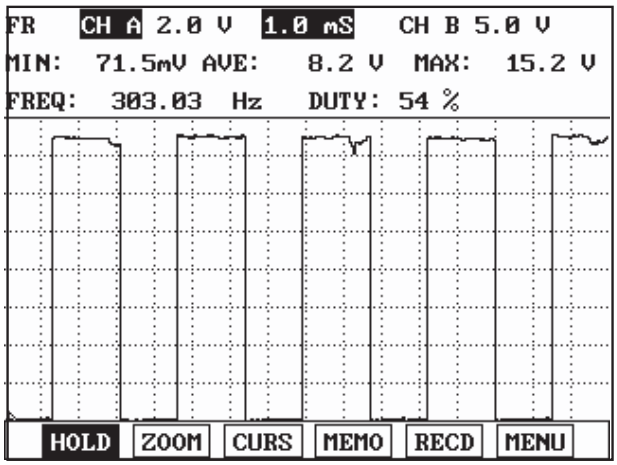

Fig.2

Fig.1) VGT actuator output waveform at 76% duty((-)duty). Duty decreases as boost pressure increases.
Fig.2) VGT actuator duty((-)duty) decreases as accelerating.

LFIG369A

MONITOR SCANTOOL DATA E177CE6C

1. Connect Scantool to Data Link Connector (DLC).
2. Warm engine up to normal operating temperature.
3. Turn "OFF" electrical devices and A/C.
4. Monitor "BOOST PRESSURE SENSOR" parameter on the Scantool.

Specification : 1000hpa ± 100hpa(VGT actuator : approx. 76%) at idle

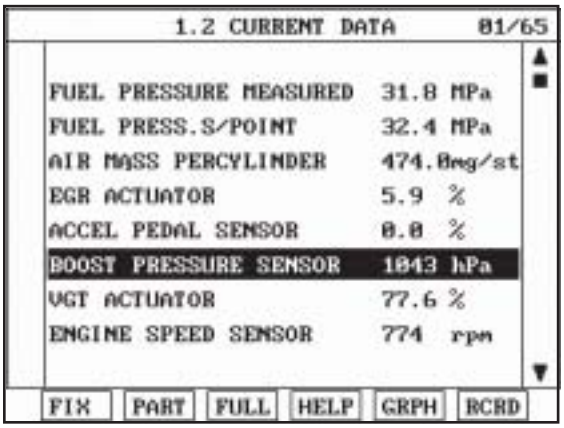

Fig.1

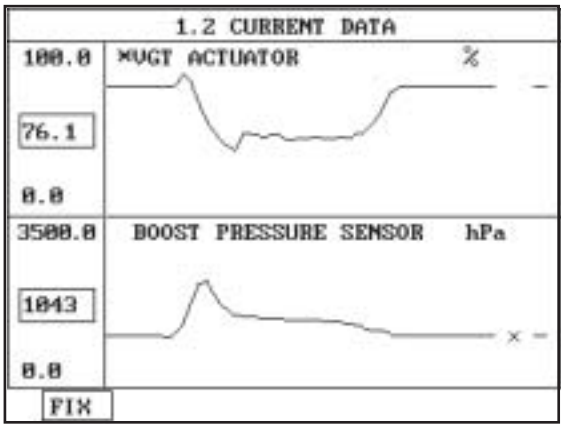

Fig.2

Fig1) Monitor "BOOST PRESSURE SENSOR" parameter on the Scantool at idle after warming engine up. 1000hpa±100hpa(approx. 1 atm) is correct value.
Fig.2) VGT actuator duty and boost pressure at acceleration is shown . If boost pressure rises and reaches certain value, VGT actuator duty stops to drop and keeps steady. Releasing accelerator pedal at this moment, VGT actuator duty drops to approx. 45%, then if RPM drops to idle range, duty returns to 76%.

SCMFL6253L

TERMINAL AND CONNECTOR INSPECTION E2E1D5E1

1. Electrical systems consist of a lot of harness and connectors, poor connection of terminals can cause various problems and damge of component.

2. Perform checking procedure as follows.

   1) Check damage of harness and terminals : Check terminals for contact resistance, corrosion and deformation.

   2) Check connecting condition of ECM and component connector : Check terminal seperation, damage of locking device and connecting condition between terminal and wiring.

   NOTE

   Disconnect the pin which requires checking at male connector and insert it to the terminal at female connector or checking connecting condition. (after checking, reconnect the pin at correct position.)

3. Is the problem found?

   YES

   ▶ Repair the trouble causing part and go to "Verification of Vehicle Repair".

   NO

   ▶ Go to "Component Inspection".

COMPONENT INSPECTION E8F6720A

1. Check VGT actuator component resistance

   1) IG KEY "OFF", ENGINE "OFF"

   2) Disconnect VGT actuator connector.

   3) Measure the resistance between VGT actuator component terminal 1 and 2.

Specification : 14.7 ~ 16.1Ω (20℃)

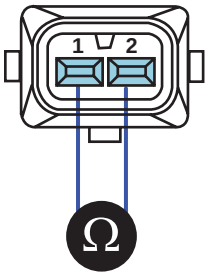

LFIG373A

   4) Is VGT actuator component resistance within the specification?

   YES

   ▶ Go to "2.Check VGT actuator operation" as follows.

   NO

   ▶ Replace VGT actuator and go to "Verification of Vehicle Repair".

2. Check VGT actuator operation

   1) IG KEY "ON", ENGINE "ON".

   2) Check that VGT actuator operating duty is 76% after warming engine up.

   3) Check if vacuum generates after disconnecting VGT valve vacuum hose.

   4) Check if vacuum generates when decelerating after rapid acceleration (Vacuum must not generates, correct VGT actuator operating duty is 45%).

Specification : VGT actuator duty 76% : vacuum generates VGT actuator duty 45% : vacuum does not generate

YES

▶ Go to "Verification of Vehicle Repair".

NO

▶ Replace VGT actuator and go to "Verification of Vehicle Repair".

※ Repeat this process 2~3 times.

VERIFICATION OF VEHICLE REPAIR E73800D6

After a repair, it is essential to verify that the fault is corrected.

1. After connecting Scantool select "DIAGNOSTIC TROUBLE CODES(DTCs)" mode.
2. Clear recorded DTC using Scantool.
3. Drive the vehicle within DTC "Enable conditions" in "General information".
4. After selecting "DIAGNOSTIC TROUBLE CODES(DTCs)" mode and check if DTC is recorded again.
5. Are any DTCs recorded ?

YES

▶ Go to the DTC guide of recorded NO. in Scantool.

NO

▶ System operates within specification.

DTC P0237 BOOST PRESSURE SENSOR CIRCUIT LOW INPUT

COMPONENT LOCATION EDAB9384

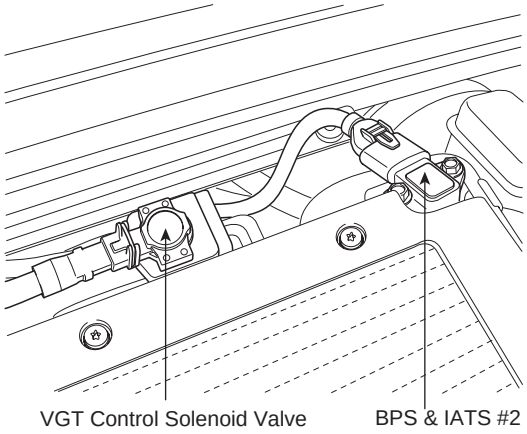

SCMFL6500L

GENERAL DESCRIPTION EAB17743

Boost Pressure Sensor(BPS) is installed in intake manifold and senses the pressure of air inside of intake manifold which is compressed by turbo charager.Measuring mass air flow accurately with the information of intake mainfold pressure, mass air flow and intake air temperature, ECM performs actuating correction of EGR and VGT.When excessive intake manifold pressure is detected, engine power generation is limited to protect engine because too highly compressed pressure due to turbo charger may harm engine.

DTC DESCRIPTION ECCB5E26

P0237 is set when the voltage below 0.2V - mimimum output voltage of BPS - is detected for more than 2 sec.. This code is due to open in power circuit or short to ground in signal circuit.

DTC DETECTING CONDITION EAF655CC

<table>
<tr><th>Item</th><th colspan="3">Detecting Condition</th><th>Possible Cause</th></tr>
<tr><td>DTC Strategy</td><td colspan="3">• Voltage monitoring</td><td rowspan="6">• BPS circuit
• BPS component</td></tr>
<tr><td>Enable Conditions</td><td colspan="3">• IG KEY "ON"</td></tr>
<tr><td>Threshold Value</td><td colspan="3">• Output signal below minimum value(below 200mV)</td></tr>
<tr><td>Diagnostic Time</td><td colspan="3">• 2 sec.</td></tr>
<tr><td rowspan="4">Fail Safe</td><td>Fuel cut</td><td>NO</td><td rowspan="4">• Boost pressure is fixed at 1000 hpa.</td></tr>
<tr><td>EGR Off</td><td>YES</td></tr>
<tr><td>Fuel Limit</td><td>YES</td></tr>
<tr><td>Check Lamp</td><td>YES</td></tr>
</table>

SPECIFICATION E86C9D22

Pressure [Kpa]	20	100	190	250
Output voltage [V]	0.4±0.077	1.878±0.063	3.541±0.063	4.650±0.077

SCHEMATIC DIAGRAM E069DAF8

[CIRCUIT DIAGRAM]

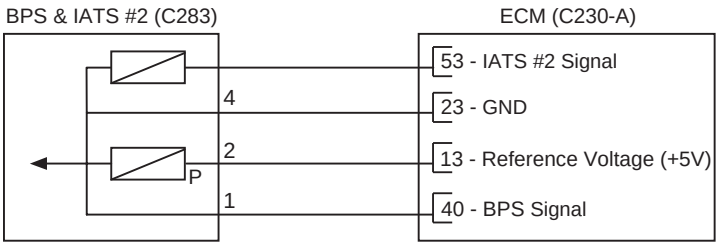

[CONNECTION INFORMATION]

Terminal	Connected to	Function
1	ECM C230-A (40)	BPS Signal
2	ECM C230-A (13)	Reference Voltage (+5V)
3	ECM C230-A (53)	IATS #2 Signal
4	ECM C230-A (23)	Sensor ground

[HARNESS CONNECTORS]

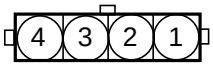

C283

BPS & IATS #2

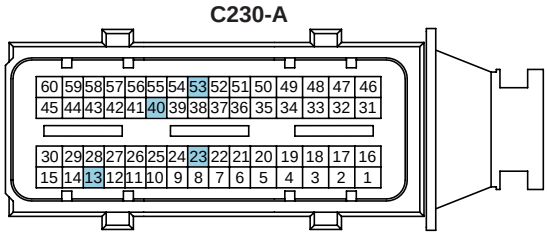

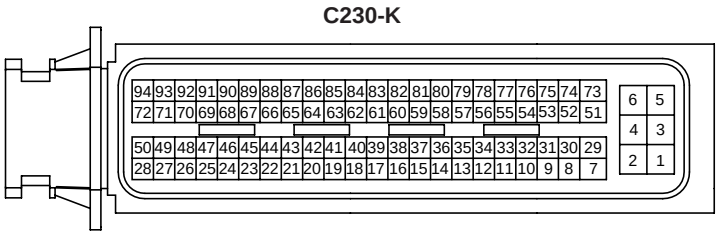

SCMFL6118L

SIGNAL WAVEFORM AND DATA EF4BFE1E

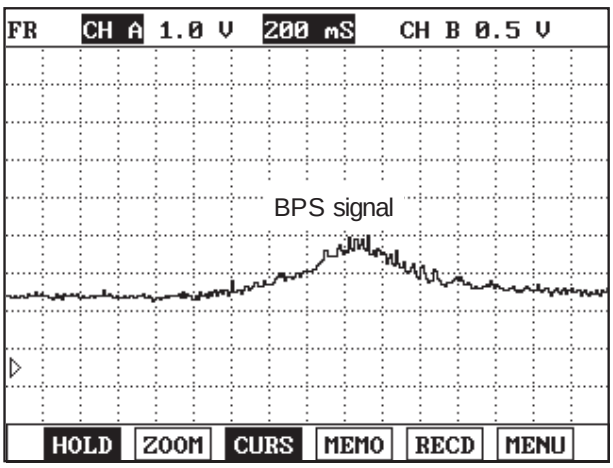

Fig.1

Fig1). This is the waveform of BPS as accelerating from idle state. Signal voltage rises as accelerating.

LFIG208A

MONITOR SCANTOOL DATA EBE79CFF

1. Connect Scantool to Data Link Connector (DLC).

2. Warm engine up to normal operating temperature.

3. Turn "OFF" electrical devices and A/C.

4. Monitor "BOOST PRESSURE SENSOR" parameter on the Scantool.

Specification : 1000hpa ± 100hpa(VGT actuator : approx. 76%) at idle

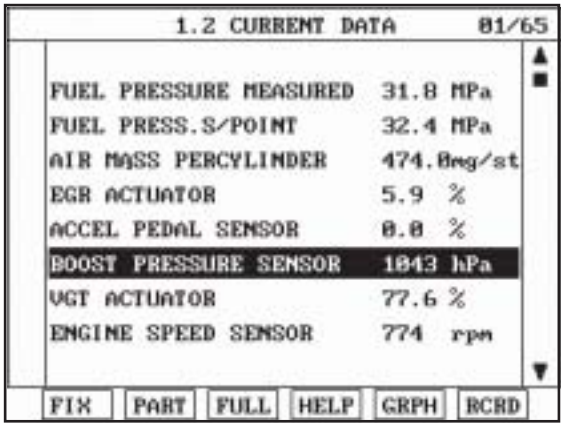

Fig.1

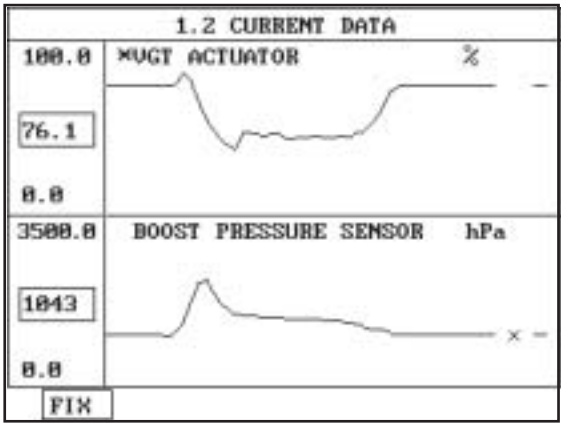

Fig.2

Fig1) Monitor "BOOST PRESSURE SENSOR" parameter on the Scantool at idle after warming engine up. 1000hpa±100hpa(approx. 1 atm) is correct value.

Fig.2) VGT actuator duty and boost pressure at acceleration is shown . If boost pressure rises and reaches certain value, VGT actuator duty stops to drop and keeps steady. Releasing accelerator pedal at this moment, VGT actuator duty drops to approx. 45%, then if RPM drops to idle range, duty returns to 76%.

SCMFL6253L

TERMINAL AND CONNECTOR INSPECTION EE30EC4D

1. Electrical systems consist of a lot of harness and connectors, poor connection of terminals can cause various problems and damge of component.

2. Perform checking procedure as follows.

   1) Check damage of harness and terminals : Check terminals for contact resistance, corrosion and deformation.

   2) Check connecting condition of ECM and component connector : Check terminal seperation, damage of locking device and connecting condition between terminal and wiring.

NOTE

Disconnect the pin which requires checking at male connector and insert it to the terminal at female connector for checking connecting condition. (after checking, reconnect the pin at correct position.)

3. Is the problem found?

YES

▶ Repair the trouble causing part and go to "Verification of Vehicle Repair".

NO

▶ Go to "Power Circuit Inspection".

POWER CIRCUIT INSPECTION E863B4E7

1. IG KEY "OFF", ENGINE "OFF".
2. Disconnect BPS connector.
3. IG KEY "ON".
4. Measure the voltage of BPS connector terminal 2.

Specification : 4.8V~5.1V

5. Is the measured voltage within the specification?

YES

▶ Go to "Signal Circuit Inspection".

NO

▶ Repair open in power circuit and go to "Verification of Vehicle Repair".

SIGNAL CIRCUIT INSPECTION EEE0DDF7

1. Check signal circuit voltage
   1) IG KEY "OFF", ENGINE "OFF".
   2) Disconnect BPS connector.
   3) IG KEY "ON"
   4) Measure the voltage of BPS connector terminal 1.

Specification : 4.8V~5.1V

   5) Is the measured voltage within the specification?

YES

▶ Go to "Component Inspection".

NO

▶ Go to "2. Check short to ground in signal circuit" as follows.

2. Check short to ground in signal circuit
   1) IG KEY "OFF", ENGINE "OFF"
   2) Disconnect BPS connector and ECM connector.
   3) Check continuity between BPS connector terminal 1 and chassis ground.

Specification : Discontinuity (Infinite Ω)

   4) Is the measured resistance within the specification?

YES

▶ Go to "Component Inspection".

NO

▶ Repair short to ground in signal circuit and go to "Verification of Vehicle Repair".

COMPONENT INSPECTION E0895801

1. BPS visual inspection

   1) IG KEY "OFF", ENGINE "OFF".

   2) Disconnect BPS connector.

   3) Check if corrosion and damage in BPS terminal is detected.

   4) Check BPS mounting state, leakage at O'ring, clogged carbon at pressure detecting hall.

   5) Are the problems relevant to BPS found?

      YES

      ▶ Replace BPS if necessary and go to "Verification of Vehicle Repair".

      NO

      ▶ Go to "2. Check VGT Turbo charger and leakage in intake system".

2. Check VGT turbo charger and leakage in intake system

   1) IG KEY "OFF", ENGINE "OFF".

   2) Check if VGT actuating rod which is connected to diaphragm of VGT turbo charger assy' is at the bottom position.

   3) IG KEY "ON"., ENGINE "ON".

   4) Check if VGT actuating rod is pulled upward Approx. 10mm when engine is about to start.

   5) As accelerating and decelerating, Check if VGT actuating rod moves upward and downward.

   6) Check if intake air leak is detected at intake hose at acceleration.
      (Check if intake hose inflates properly.)

   7) Are the problems relevant to VGT turbo charger and intake hose found?

      YES

      ▶ VGT actuating rod does not work.
      ☞ If any problem is not detected after checking connecting condition of VGT actuator vacuum hose and VGT actuator operating states(refer to "Component Inspection" of P0048), VGT actuator variable controlling part is considered to be stuck. Replace VGT turbo charger in this case.

      ▶ Intake air leak is detected.
      ☞ Checking intake hose is not damaged and band clamp is fastened well, repair trouble causing parts.

      If trouble causing parts are repaired, go to "Verification of Vehicle Repair".

NO

▶ Go to "3. BPS Waveform inspection".

3. BPS Waveform inspection

   1) IG KEY "ON", ENGINE "OFF".

   2) Connect BPS.

   3) Connect Oscilloscope to BPS connector terminal 1.

   4) Monitor the waveform at idle and acceleration.

Specification : Refer to "Signal Waveform & Data" of "General Information".

   5) Is BPS waveform displayed correctly?

YES

▶ Go to "Verification of Vehicle Repair".

NO

▶ Replace BPS and go to "Verification of Vehicle Repair".

VERIFICATION OF VEHICLE REPAIR E4D09EDB

After a repair, it is essential to verify that the fault is corrected.

1. After connecting Scantool select "DIAGNOSTIC TROUBLE CODES(DTCs)" mode.
2. Clear recorded DTC using Scantool.
3. Drive the vehicle within DTC "Enable conditions" in "General information".
4. After selecting "DIAGNOSTIC TROUBLE CODES(DTCs)" mode and check if DTC is recorded again.
5. Are any DTCs recorded ?

YES

▶ Go to the DTC guide of recorded NO. in Scantool.

NO

▶ System operates within specification.

DTC P0238 BOOST PRESSURE SENSOR CIRCUIT HIGH INPUT

COMPONENT LOCATION EB67C22E

Refer to DTC P0237.

GENERAL DESCRIPTION E75D5C0C

Refer to DTC P0237.

DTC DESCRIPTION EE30B4C5

P0238 is set when the voltage above 4.9V - maximum output voltage of BPS - is detected for more than 2 sec.. This code is due to 1) short to battery or open in signal circuit or 3) open in ground circuit.

DTC DETECTING CONDITION EFF0BEB4

<table>
<tr><th>Item</th><th colspan="3">Detecting Condition</th><th>Possible Cause</th></tr>
<tr><td>DTC Strategy</td><td colspan="3">• Voltage monitoring</td><td rowspan="6">• BPS circuit
• BPS component</td></tr>
<tr><td>Enable Conditions</td><td colspan="3">• IG KEY "ON"</td></tr>
<tr><td>Threshold Value</td><td colspan="3">• Output signal above maximum value(above 4.9V)</td></tr>
<tr><td>Diagnostic Time</td><td colspan="3">• 2 sec.</td></tr>
<tr><td rowspan="4">Fail Safe</td><td>Fuel cut</td><td>NO</td><td rowspan="4">• Boost pressure is fixed at 1000 hpa.</td></tr>
<tr><td>EGR Off</td><td>YES</td></tr>
<tr><td>Fuel Limit</td><td>YES</td></tr>
<tr><td>Check Lamp</td><td>NO</td></tr>
</table>

SPECIFICATION E36C5ED7

Refer to DTC P0237.

SCHEMATIC DIAGRAM EDED8AC0

Refer to DTC P0237.

SIGNAL WAVEFORM AND DATA EC06895A

Refer to DTC P0237.

MONITOR SCANTOOL DATA E950BDCB

Refer to DTC P0237.

TERMINAL AND CONNECTOR INSPECTION EBADE34C

Refer to DTC P0237.

POWER CIRCUIT INSPECTION EE9894CE

1. IG KEY "OFF", ENGINE "OFF".
2. Disconnect BPS connector.
3. IG KEY "ON".
4. Measure the voltage of BPS connector terminal 2.

Specification : 4.8V~5.1V

5. Is the measured voltage within the specification?

YES

▶ Go to "Signal Circuit Inspection".

NO

▶ Repair open in power circuit and go to "Verification of Vehicle Repair".

SIGNAL CIRCUIT INSPECTION E948D14B

1. Check signal circuit voltage
   1) IG KEY "OFF", ENGINE "OFF".
   2) Disconnect BPS connector.
   3) IG KEY "ON"
   4) Measure the voltage of BPS connector terminal 1.

Specification : 4.8V~5.1V

   5) Is the measured voltage within the specification?

YES

▶ Go to "Ground Circuit Inspection".

NO

▶ Go to "2. Check open in signal circuit" as follows.

2. Check open in signal circuit
   1) IG KEY "OFF", ENGINE "OFF"
   2) Disconnect BPS connector and ECM connector.
   3) Check continuity between BPS connector terminal 1 and ECM connector (C230-A) terminal 40.

Specification : continuity (below 1.0Ω)

   4) Is the measured resistance within the specification?

YES

▶ Repair short to battery in signal circuit and go to "Verification of Vehicle Repair".

NO

▶ Repair open in BPS signal circuit and go to "Verification of Vehicle Repair".

GROUND CIRCUIT INSPECTION E5201409

1. IG KEY "OFF", ENGINE "OFF".
2. Disconnect BPS connector.
3. IG KEY "ON".
4. Measure the voltage of BPS connector terminal 2. [TEST "A"]
5. Measure the voltage between BPS connector terminal 2 and 4. [TEST "B"]
   (terminal 2 : Check + prove , terminal 4 : Check - prove)

Specification : [TEST "A"] Voltage - [TEST "B"] Voltage = below 200mV

6. Is the measured voltage within the specification?

YES

▶ Go to "Component Inspection".

NO

▶ When "B" voltage is not detected : Repair open in ground circuit and go to "Verification of Vehicle Repair".
▶ When the voltage difference between "A" and "B" is above 200mV : Eliminate the causes of excessive resistance and go to "Verification of Vehicle Repair".

COMPONENT INSPECTION E3567416

1. BPS visual inspection
   1) IG KEY "OFF", ENGINE "OFF".
   2) Disconnect BPS connector.
   3) Check if corrosion and damage in BPS terminal is detected.
   4) Check BPS mounting state, leakage at O'ring, clogged carbon at pressure detecting hall.
   5) Are the problems relevant to BPS found?

YES

▶ Replace BPS if necessary and go to "Verification of Vehicle Repair".

NO

▶ Go to "2. Check VGT Turbo charger and leakage in intake system".

2. Check VGT turbo charger and leakage in intake system

1) IG KEY "OFF", ENGINE "OFF".

2) Check if VGT actuating rod which is connected to diaphragm of VGT turbo charger assy' is at the bottom position.

3) IG KEY "ON"., ENGINE "ON".

4) Check if VGT actuating rod is pulled upward Approx. 10mm when engine is about to start.

5) As accelerating and decelerating, Check if VGT actuating rod moves upward and downward.

6) Check if intake air leak is detected at intake hose at acceleration.
(Check if intake hose inflates properly.)

7) Are the problems relevant to VGT turbo charger and intake hose found?

YES

▶ VGT actuating rod does not work.
☞ If any problem is not detected after checking connecting condition of VGT actuator vacuum hose and VGT actuator operating states(refer to "Component Inspection" of P0048), VGT actuator variable controlling part is considered to be stuck. Replace VGT turbo charger in this case.

▶ Intake air leak is detected.
☞ Checking intake hose is not damaged and band clamp is fastened well, repair trouble causing parts.

If trouble causing parts are repaired, go to "Verification of Vehicle Repair".

NO

▶ Go to "3. BPS Waveform inspection".

3. BPS Waveform inspection

1) IG KEY "ON", ENGINE "OFF".

2) Connect BPS.

3) Connect Oscilloscope to BPS connector terminal 1.

4) Monitor the waveform at idle and acceleration.

Specification : Refer to "Signal Waveform & Data" of "General Information".

5) Is BPS waveform displayed correctly?

YES

▶ Go to "Verification of Vehicle Repair".

NO

▶ Replace BPS and go to "Verification of Vehicle Repair".

VERIFICATION OF VEHICLE REPAIR EB580DF1

Refer to DTC P0237.

DTC P0252 FUEL PRESSURE REGULATOR VALVE CIRCUIT OVER CURRENT

COMPONENT LOCATION EF46378F

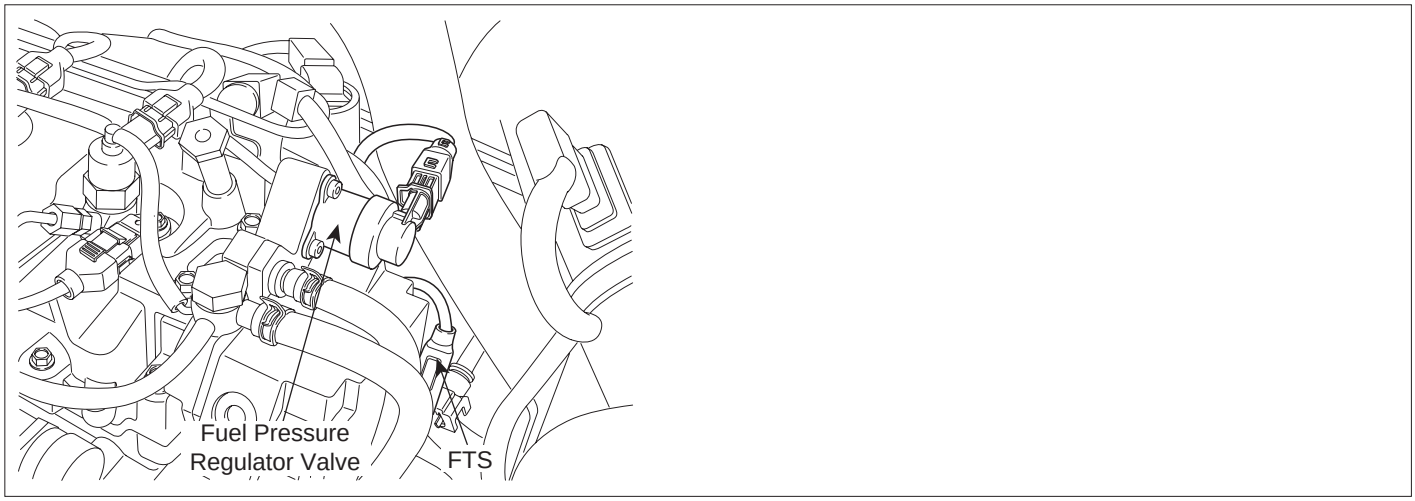

LFIG394A

GENERAL DESCRIPTION E5A5B14B

Fuel Pressure Regulator Valve(FPRV) is integrated with high pressure pump and controls common rail pressure as regulating the quantity of fuel which is delivered to common rail. In order to control rail pressure to be optimum to current driving condition, ECM controls fuel pressure regulator valve operating current(with the method of duty-control) using RPCV signal, RPM and APS signal.The lower Fuel pressure regulator valve current is, the more fuel is supplied to common rail. Thus it leads rail pressure to be high. On the contrary, the higher Fuel pressure regulator valve current is, the less fuel is supplied to common rail. Thus it leads rail pressure to be low. Therefore, when Fuel metering unit current becomes "0", as if there is open spot in Fuel metering unit circuit or connector is disconnected, maximum fuel quantity is supplied to common rail, so the pressure of common rail rise to maximum value.

DTC DESCRIPTION ECE5431D

P0252 is set when excessive current in control circuit of Fuel metering unit(integrated with high pressure pump) is detected for more than 0.22 sec.. This code is due to short to battery in control circuit or Fuel metering unit internal short.

DTC DETECTING CONDITION E49F55F3

<table>
<tr><th>Item</th><th colspan="3">Detecting Condition</th><th>Possible Cause</th></tr>
<tr><td>DTC Strategy</td><td colspan="3">• Voltage monitoring</td><td rowspan="8">• FPRV circuit
• FPRV component</td></tr>
<tr><td>Enable Conditions</td><td colspan="3">• IG KEY "ON"</td></tr>
<tr><td>Threshold Value</td><td colspan="3">• Short to battery (control circuit in FPRV)</td></tr>
<tr><td>Diagnostic Time</td><td colspan="3">• 0.22 sec.</td></tr>
<tr><td rowspan="4">Fail Safe</td><td>Fuel cut</td><td>NO</td><td rowspan="4"></td></tr>
<tr><td>EGR Off</td><td>NO</td></tr>
<tr><td>Fuel Limit</td><td>YES</td></tr>
<tr><td>Check Lamp</td><td>YES</td></tr>
</table>

SPECIFICATION E4B5298A

Rail pressure regulator valve resistance	Operating frequancy
2.9 ~ 3.15Ω (20℃)	185 Hz

SCHEMATIC DIAGRAM E9A37367

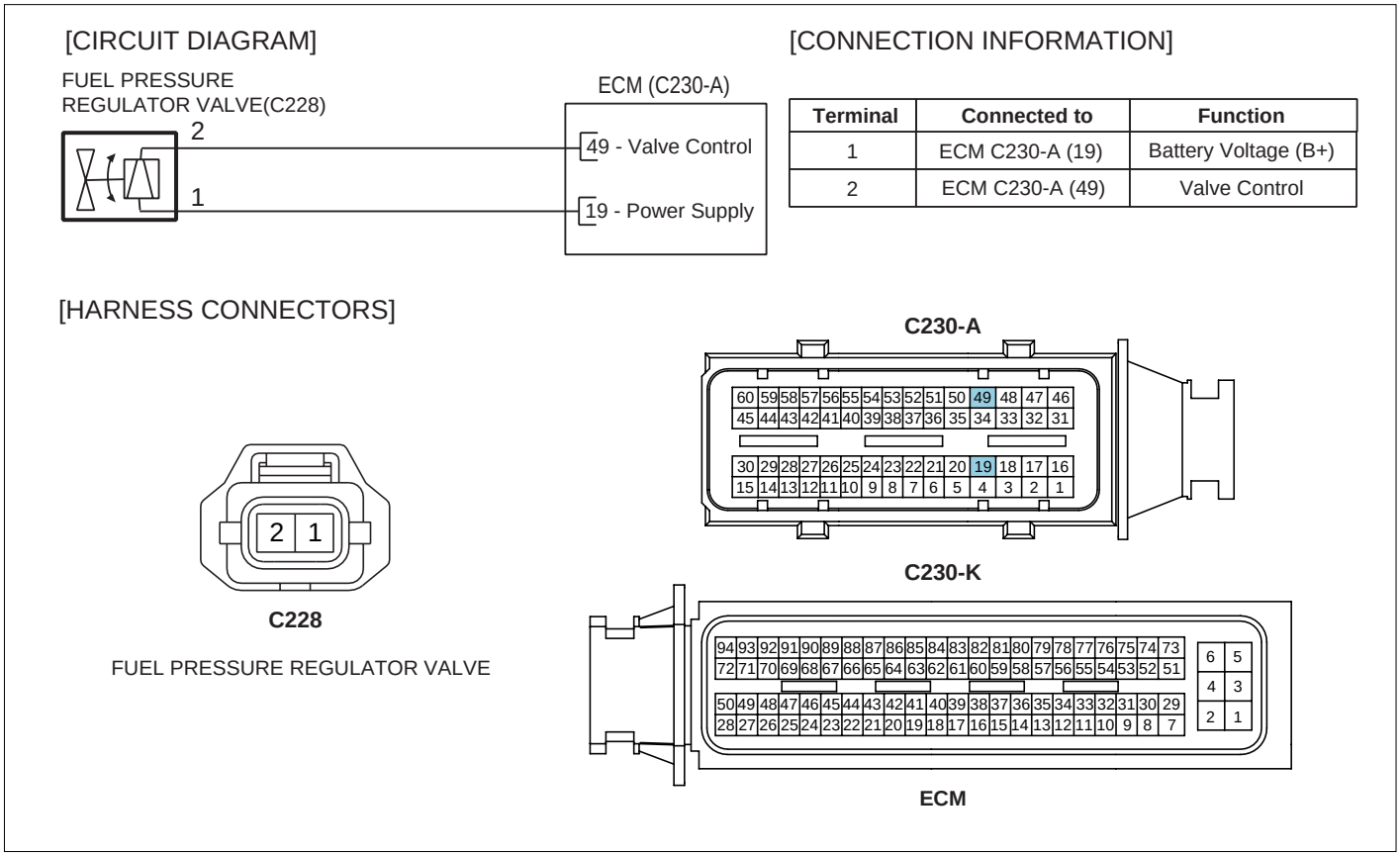

SCMFL6128L

SIGNAL CIRCUIT INSPECTION EAAAEDF2

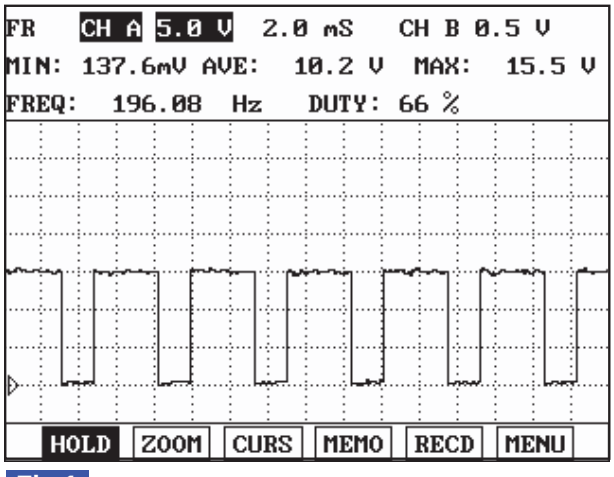

Fig.1

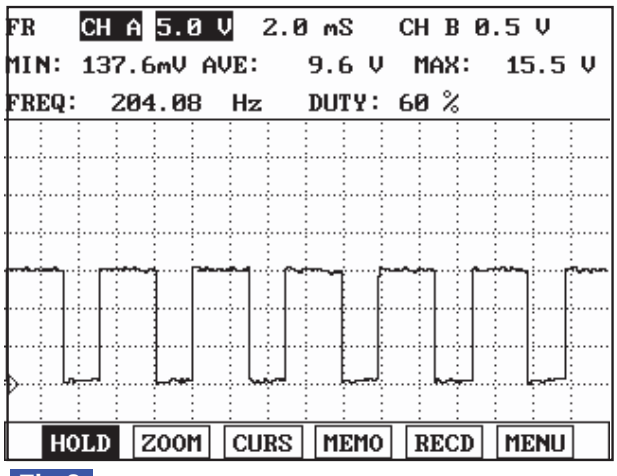

Fig.2

Fig.1) Waveform of fuel pressure regulator valve at idle. It shows approx. 34% duty((-)duty).
Fig.2) Waveform of fuel pressure regulator valve as accelerating. approx. 38% duty((-)duty) is outputted as engine load increases.

LFIG396A

MONITOR SCANTOOL DATA E98E8154

1. Connect Scantool to Data Link Connector (DLC).
2. Warm engine up to normal operating temperature.
3. Turn "OFF" electrical devices and A/C.
4. Monitor "FUEL PRESSURE MEASURED", "INJ. PUMP REGULATOR","RAIL PRESS. REGULATOR1" parameter on the Scantool.

SPECIFICATION :

	Idle(without load)	Accelerating(stall test)	Diagnosis
FUEL PRESSURE MEASURED	27 ± 5 Mpa	above 75 Mpa	press. increases
INJ. PUMP REGULATOR	34 ± 3%	38 ± 3%	duty increases
RAIL PRESS. REGULATOR1	16 ± 3%	45 ± 3%	duty increases

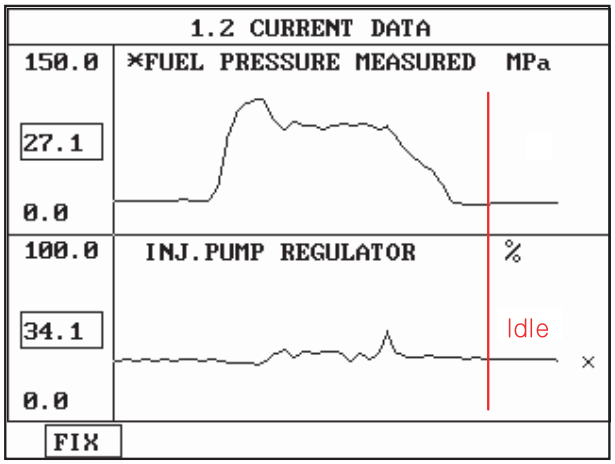

Fig.1

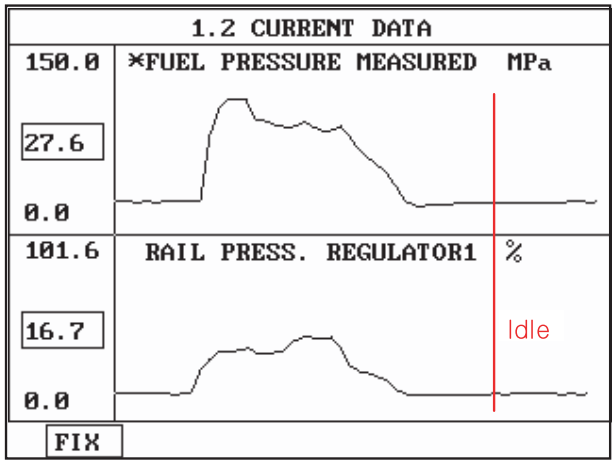

Fig.2

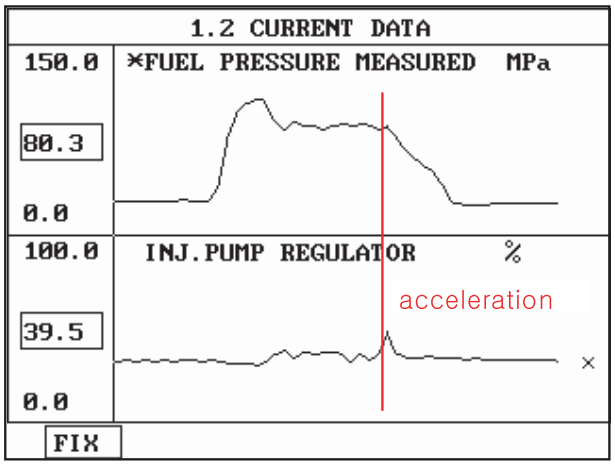

Fig.3

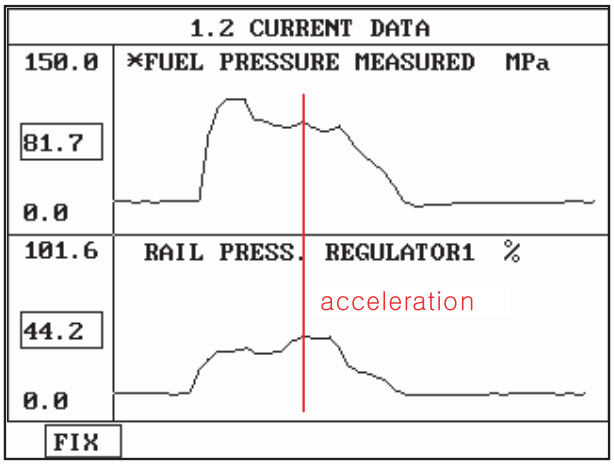

Fig.4

Fig.2) Fuel pressure and Fuel pressure regulator valve data at idle.
Fig.3) Fuel pressure and Rail pressure regulator valve data at idle.
Fig.4) Fuel pressure and Fuel pressure regulator valve data at acceleration.
Fig.5) Fuel pressure and Rail pressure regulator valve data at acceleration.

LFIG375A

NOTE

The waveform of fuel pressure regulator valve installed at high pressure pump(fuel detecting MPROP) shows 34 ± 3% duty at idle, duty rises to approx. 38% at acceleration to raise rail pressure.

The waveform of rail pressure regulator valve installed at common rail shows 16 ± 3% duty at idle, duty rises to approx. 45% at acceleration to raise rail pressure.

TERMINAL AND CONNECTOR INSPECTION E6D71921

1. Electrical systems consist of a lot of harness and connectors, poor connection of terminals can cause various problems and damge of component.
2. Perform checking procedure as follows.
   1) Check damage of harness and terminals : Check terminals for contact resistance, corrosion and deformation.
   2) Check connecting condition of ECM and component connector : Check terminal seperation, damage of locking device and connecting condition between terminal and wiring.

NOTE

Disconnect the pin which requires checking at male connector and insert it to the terminal at female connector for checking connecting condition. (after checking, reconnect the pin at correct position.)

3. Is the problem found?

YES

▶ Repair the trouble causing part and go to "Verification of Vehicle Repair".

NO

▶ Go to "Power Circuit Inspection".

POWER CIRCUIT INSPECTION E2F2B1D7

1. Check power circuit voltage
   1) IG KEY "OFF", ENGINE "OFF"
   2) Disconnect FPRV connector.
   3) IG KEY "ON"
   4) Measure the voltage of FPRV connector terminal 1.

specification : 11.5V~13.0V

   5) Is the measured voltage within the specification?

YES

▶ Go to "Control Circuit Inspection".

NO

▶ Repair open between FPRV connector terminal 1 and ECM connector(C230-A) terminal 19 and go to "Verification of Vehicle Repair".

CONTROL CIRCUIT INSPECTION E112BAF6

1. Check monitoring voltage in control circuit

   1) IG KEY "OFF", ENGINE "OFF"

   2) Disconnect FPRV connector.

   3) IG KEY "ON"

   4) Measure the voltage of FPRV connector terminal 2.

specification : 3.2V~3.7V

   5) Is the measured voltage within the specification?

   YES

   ▶ Go to "Component Inspection"

   NO

   ▶ When voltage is not detected : Go to "2. Check open in control circuit" as follows.
   ▶ When high voltage is detected : Repair short to battery and go to "Verification of Vehicle Repair".

2. Check open in control circuit

   1) IG KEY "OFF", ENGINE "OFF"

   2) Disconnect FPRV and ECM connector.

   3) Check continuity between FPRV connector terminal 2 and ECM connector (C230-A) terminal 49.

specification : Continuity (below 1.0Ω)

   4) Is the measured resistance within the specification?

   YES

   ▶ Repair short to ground in FPRV control circuit and go to "Verification of Vehicle Repair".

   NO

   ▶ Repair open in FPRV control circuit and go to "Verification of Vehicle Repair".

COMPONENT INSPECTION EA345771

1. Check FPRV component resistance

   1) IG KEY "OFF", ENGINE "OFF".

   2) Disconnect rail pressure regulator valve connector.

   3) Check FPRV component resistance.

Specification : 2.9 ~ 3.15Ω (20℃)

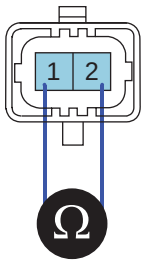

EGNG008I

4) Is FPRV component resistance within the specification?

YES

▶ Go to "Verification of Vehicle Repair".

NO

▶ Replace High pressure pump ass'y and go to "Verification of Vehicle Repair".

VERIFICATION OF VEHICLE REPAIR E62637B7

After a repair, it is essential to verify that the fault is corrected.

1. After connecting Scantool select "DIAGNOSTIC TROUBLE CODES(DTCs)" mode.
2. Clear recorded DTC using Scantool.
3. Drive the vehicle within DTC "Enable conditions" in "General information".
4. After selecting "DIAGNOSTIC TROUBLE CODES(DTCs)" mode and check if DTC is recorded again.
5. Are any DTCs recorded ?

YES

▶ Go to the DTC guide of recorded NO. in Scantool.

NO

▶ System operates within specification.

DTC P0253 FUEL PRESSURE REGULATOR VALVE CIRCUIT LOW

COMPONENT LOCATION E0C15A1C

Refer to DTC P0252.

GENERAL DESCRIPTION E61F2B67

Refer to DTC P0252.

DTC DESCRIPTION E6C7EAAA

P0253 is set when "0"A in control circuit of Fuel metering unit(integrated with high pressure pump) is detected for more than specified duration. This code is due to open or short to ground in control circuit or Fuel metering unit internal open.

DTC DETECTING CONDITION EAE87B60

<table>
<tr><th>Item</th><th colspan="3">Detecting Condition</th><th>Possible Cause</th></tr>
<tr><td>DTC Strategy</td><td colspan="3">• Voltage monitoring</td><td rowspan="6">• FPRV circuit
• FPRV component</td></tr>
<tr><td>Enable Conditions</td><td colspan="3">• IG KEY "ON"</td></tr>
<tr><td>Threshold Value</td><td colspan="3">• Short to GND - 0.28 sec.
• Wiring open - 0.22 sec.</td></tr>
<tr><td>Diagnostic Time</td><td colspan="3">• Refer to threshold value</td></tr>
<tr><td rowspan="4">Fail Safe</td><td>Fuel cut</td><td>NO</td><td rowspan="4"></td></tr>
<tr><td>EGR Off</td><td>NO</td></tr>
<tr><td>Fuel Limit</td><td>YES</td></tr>
<tr><td>Check Lamp</td><td>YES</td></tr>
</table>

SPECIFICATION E0330F4F

Refer to DTC P0252.

SCHEMATIC DIAGRAM E67C30ED

Refer to DTC P0252.

SIGNAL CIRCUIT INSPECTION E77EAE9B

Refer to DTC P0252.

MONITOR SCANTOOL DATA EA125B08

Refer to DTC P0252.

TERMINAL AND CONNECTOR INSPECTION E858EA64

Refer to DTC P0252.

POWER CIRCUIT INSPECTION E17EFB76

1. Check power circuit voltage

   1) IG KEY "OFF", ENGINE "OFF"

   2) Disconnect FPRV connector.

   3) IG KEY "ON"

   4) Measure the voltage of FPRV connector terminal 1.

specification : 11.5V~13.0V

   5) Is the measured voltage within the specification?

   YES

   ▶ Go to "Control Circuit Inspection".

   NO

   ▶ Repair open between FPRV connector terminal 1 and ECM connector(C230-A) terminal 19 and go to "Verification of Vehicle Repair".

CONTROL CIRCUIT INSPECTION EDC13CE2

1. Check monitoring voltage in control circuit

   1) IG KEY "OFF", ENGINE "OFF"

   2) Disconnect FPRV connector.

   3) IG KEY "ON"

   4) Measure the voltage of FPRV connector terminal 2.

specification : 3.2V~3.7V

   5) Is the measured voltage within the specification?

   YES

   ▶ Go to "Component Inspection"

   NO

   ▶ When voltage is not detected : Go to "2. Check open in control circuit" as follows.
   ▶ When high voltage is detected : Repair short to battery and go to "Verification of Vehicle Repair".

2. Check open in control circuit

   1) IG KEY "OFF", ENGINE "OFF"

   2) Disconnect FPRV and ECM connector.

   3) Check continuity between FPRV connector terminal 2 and ECM connector (C230-A) terminal 49.

specification : Continuity (below 1.0Ω)

4) Is the measured resistance within the specification?

YES

▶ Repair short to ground in FPRV control circuit and go to "Verification of Vehicle Repair".

NO

▶ Repair open in FPRV control circuit and go to "Verification of Vehicle Repair".

COMPONENT INSPECTION E340AEA1

1. Check FPRV component resistance

1) IG KEY "OFF", ENGINE "OFF".

2) Disconnect rail pressure regulator valve connector.

3) Check FPRV component resistance.

Specification : 2.9 ~ 3.15Ω (20℃)

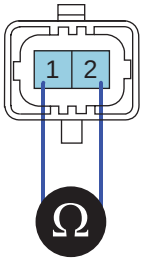

EGNG008I

4) Is FPRV component resistance within the specification?

YES

▶ Go to "Verification of Vehicle Repair".

NO

▶ Replace High pressure pump ass'y and go to "Verification of Vehicle Repair".

VERIFICATION OF VEHICLE REPAIR E75F43B9

Refer to DTC P0252.

DTC P0254 FUEL PRESSURE REGULATOR VALVE CIRCUIT HIGH

COMPONENT LOCATION E96A7D25

Refer to DTC P0252.

GENERAL DESCRIPTION EFCDF818

Refer to DTC P0252.

DTC DESCRIPTION EF088AC1

P0254 is set when excessive current in power circuit of Fuel metering unit(integrated with high pressure pump) is detected for more than 0.22 sec.. This code is due to short to battery in power circuit or Fuel metering unit internal short.

DTC DETECTING CONDITION E7B3B771

<table>
<tr><th>Item</th><th colspan="3">Detecting Condition</th><th>Possible Cause</th></tr>
<tr><td>DTC Strategy</td><td colspan="3">• Voltage monitoring</td><td rowspan="7">• FPRV circuit
• FPRV component</td></tr>
<tr><td>Enable Conditions</td><td colspan="3">• IG KEY "ON"</td></tr>
<tr><td>Threshold Value</td><td colspan="3">• Short to battery (power circuit in fuel pressure regulator valve)</td></tr>
<tr><td>Diagnostic Time</td><td colspan="3">• 0.22 sec.</td></tr>
<tr><td rowspan="4">Fail Safe</td><td>Fuel cut</td><td>NO</td><td rowspan="4"></td></tr>
<tr><td>EGR Off</td><td>NO</td></tr>
<tr><td>Fuel Limit</td><td>YES</td></tr>
<tr><td>Check Lamp</td><td>YES</td></tr>
</table>

SPECIFICATION E47A73AA

Refer to DTC P0252.

SCHEMATIC DIAGRAM E93891D0

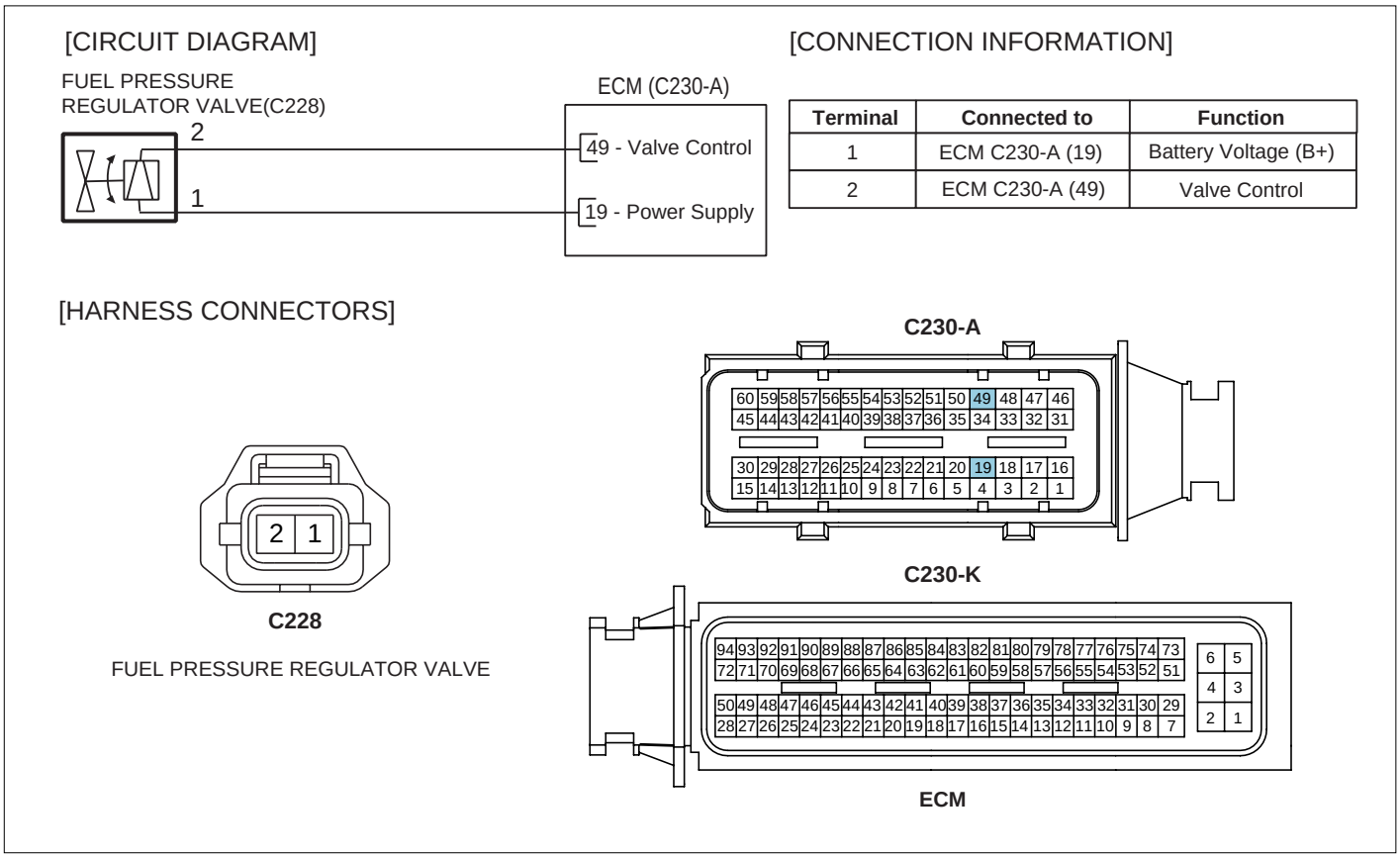

SCMFL6128L

SIGNAL CIRCUIT INSPECTION E65CD8C3

Refer to DTC P0252.

MONITOR SCANTOOL DATA E1D2ED03

Refer to DTC P0252.

TERMINAL AND CONNECTOR INSPECTION EE35ED47

Refer to DTC P0252.

POWER CIRCUIT INSPECTION EF6C7AC2

1. Check power circuit voltage
   1) IG KEY "OFF", ENGINE "OFF"
   2) Disconnect FPRV connector.
   3) IG KEY "ON"
   4) Measure the voltage of FPRV connector terminal 1.

specification : 11.5V~13.0V

5) Is the measured voltage within the specification?

YES

▶ Go to "Control Circuit Inspection".

NO

▶ Repair open between FPRV connector terminal 1 and ECM connector(C230-A) terminal 19 and go to "Verification of Vehicle Repair".

CONTROL CIRCUIT INSPECTION E45E9811

1. Check monitoring voltage in control circuit

1) IG KEY "OFF", ENGINE "OFF"

2) Disconnect FPRV connector.

3) IG KEY "ON"

4) Measure the voltage of FPRV connector terminal 2.

specification : 3.2V~3.7V

5) Is the measured voltage within the specification?

YES

▶ Go to "Component Inspection"

NO

▶ When voltage is not detected : Go to "2. Check open in control circuit" as follows.
▶ When high voltage is detected : Repair short to battery and go to "Verification of Vehicle Repair".

2. Check open in control circuit

1) IG KEY "OFF", ENGINE "OFF"

2) Disconnect FPRV and ECM connector.

3) Check continuity between FPRV connector terminal 2 and ECM connector (C230-A) terminal 49.

specification : Continuity (below 1.0Ω)

4) Is the measured resistance within the specification?

YES

▶ Repair short to ground in FPRV control circuit and go to "Verification of Vehicle Repair".

NO

▶ Repair open in FPRV control circuit and go to "Verification of Vehicle Repair".

COMPONENT INSPECTION E705195E

1. Check FPRV component resistance

   1) IG KEY "OFF", ENGINE "OFF".

   2) Disconnect rail pressure regulator valve connector.

   3) Check FPRV component resistance.

Specification : 2.9 ~ 3.15Ω (20℃)

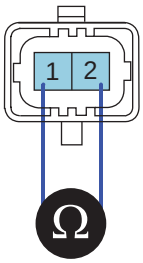

EGNG008I

   4) Is FPRV component resistance within the specification?

YES

▶ Go to "Verification of Vehicle Repair".

NO

▶ Replace High pressure pump ass'y and go to "Verification of Vehicle Repair".

VERIFICATION OF VEHICLE REPAIR E8D0F449

Refer to DTC P0252.

DTC P0262 CYLINDER 1-INJECTOR CIRCUIT HIGH
DTC P0265 CYLINDER 2-INJECTOR CIRCUIT HIGH
DTC P0268 CYLINDER 3-INJECTOR CIRCUIT HIGH
DTC P0271 CYLINDER 4-INJECTOR CIRCUIT HIGH

COMPONENT LOCATION EFBC7F1A

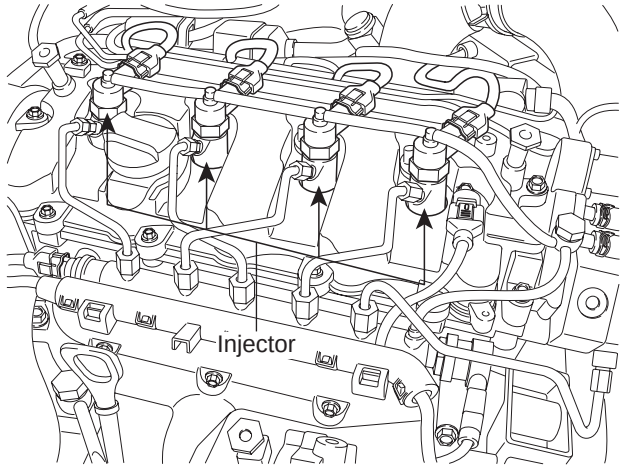

LFIG257A

GENERAL DESCRIPTION EE5BDFA6

Injectors spray fuel in the highly compressed combustion chamber, and power generates through combustion process. Fuel pressure is raised to 1600bar in common rail diesel engine for the purpose of making fuel into minute particles. And fuel devided into minute particles leads smoke reduction, high power generation, and improved fuel efficiency. To control pressure of 1600bar with solenoid, oil pressure servo is applied. And injector solenoids is actuated by solenoid operating voltage raised to 80V with the method of current control.

DTC DESCRIPTION E51F67F8

P0262/P0265/P0268/P0271 is set when 1)short between injector power circuit(High side) and control circuit(Low side) or 2)short between control circuit(Low side) and battery occurs at injector #1/2/3/4 operating condition.

DTC DETECTING CONDITION E18F5210

<table>
<tr><th>Item</th><th colspan="3">Detecting Condition</th><th>Possible Cause</th></tr>
<tr><td>DTC Strategy</td><td colspan="3">• Current monitoring</td><td rowspan="6">• Short in injector circuit
• Injector component</td></tr>
<tr><td>Enable Conditions</td><td colspan="3">• IG KEY "ON"</td></tr>
<tr><td>Threshold Value</td><td colspan="3">• Highside short to Lowside, Lowside short to battery</td></tr>
<tr><td>Diagnostic Time</td><td colspan="3">• Immediately</td></tr>
<tr><td rowspan="4">Fail Safe</td><td>Fuel cut</td><td>YES</td><td rowspan="4">• Open circuit of More than 2 injectors : Engine OFF</td></tr>
<tr><td>EGR Off</td><td>NO</td></tr>
<tr><td>Fuel Limit</td><td>NO</td></tr>
<tr><td>Check Lamp</td><td>YES</td></tr>
</table>

SPECIFICATION E2E599C4

Injector Component Resistance	Injector Operating Voltage	Injector Operating Current	Injector Control Type
0.330Ω (20±1℃)	80V	Peak current : 20±1A Hold in current : 12±1A Recharging current : 7A	Current control

SCHEMATIC DIAGRAM E4B91D5B

[CIRCUIT DIAGRAM]

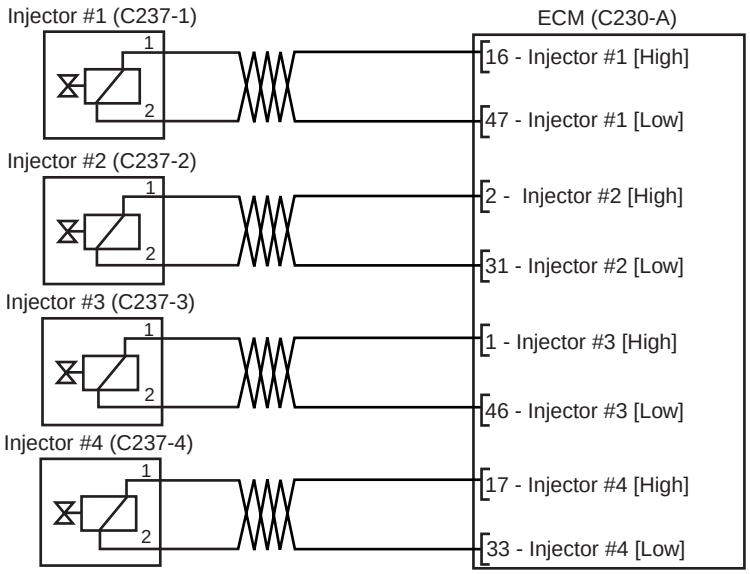

[CONNECTION INFORMATION]

[Injector #1]

Terminal	Connected to	Function
1	ECM C230-A (16)	Injector #1 High side
2	ECM C230-A (47)	Injector #1 Low side

[Injector #2]

Terminal	Connected to	Function
1	ECM C230-A (2)	Injector #2 High side
2	ECM C230-A (31)	Injector #2 Low side

[Injector #3]

Terminal	Connected to	Function
1	ECM C230-A (1)	Injector #3 High side
2	ECM C230-A (46)	Injector #3 Low side

[Injector #4]

Terminal	Connected to	Function
1	ECM C230-A (17)	Injector #4 High side
2	ECM C230-A (33)	Injector #4 Low side

[HARNESS CONNECTORS]

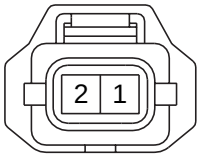

C237-1,2,3,4
INJECTOR #1,#2,#3,#4

C230-A

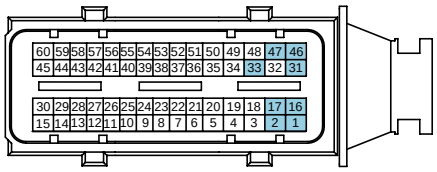

C230-K

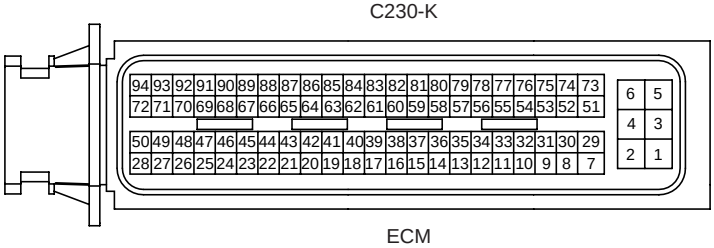

ECM

SCMFL6397L

SIGNAL WAVEFORM AND DATA EBEE0C02

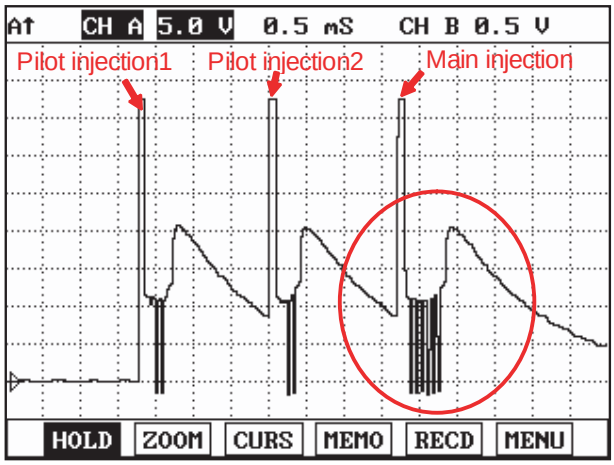

Fig.1

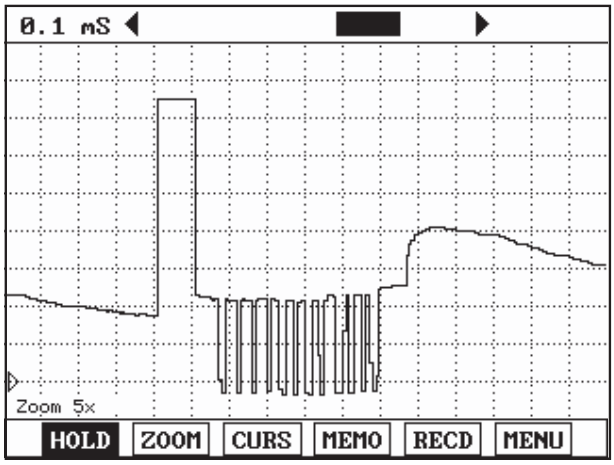

Fig.2

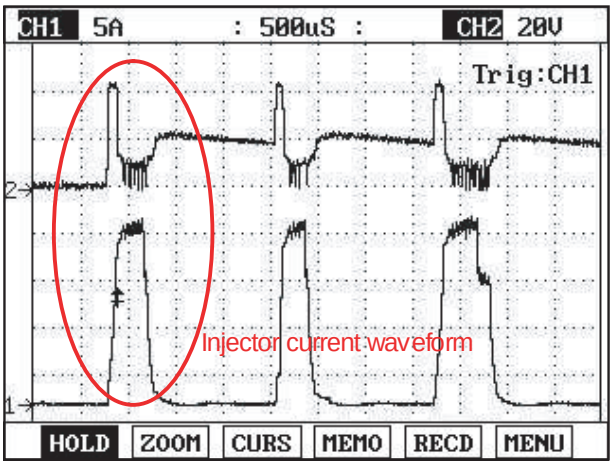

Fig.3

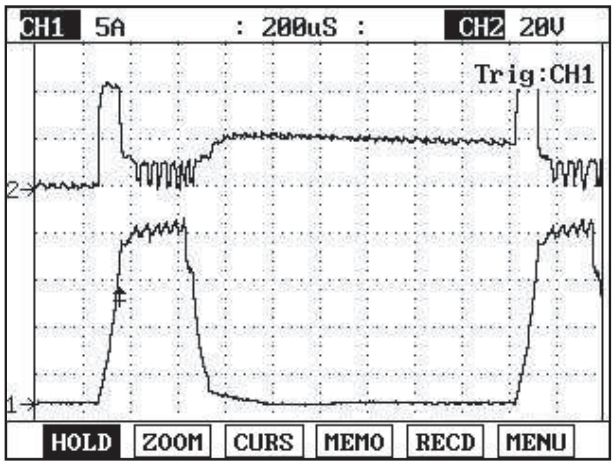

Fig.4

Fig.1) Injector operating waveform at Low side, It shows 2 pilot and 1 main injection.
Fig.2) Magnified waveform of main injection at Fig.1)
Fig.3) Injector voltage and current waveforms are measured at the same time using current prove of scope meter.
Fig.4) Magnified waveform of pilot injection at Fig.3)

LFIG259A

TERMINAL AND CONNECTOR INSPECTION E0F93F52

1. Electrical systems consist of a lot of harness and connectors, poor connection of terminals can cause various problems and damge of component.

2. Perform checking procedure as follows.

   1) Check damage of harness and terminals : Check terminals for contact resistance, corrosion and deformation.

   2) Check connecting condition of ECM and component connector : Check terminal seperation, damage of locking device and connecting condition between terminal and wiring.

   NOTE

   Disconnect the pin which requires checking at male connector and insert it to the terminal at female connector for checking connecting condition. (after checking, reconnect the pin at correct position.)

3. Is the problem found?

YES

▶ Repair the trouble causing part and go to "Verification of Vehicle Repair".

NO

▶ Go to "Power Circuit Inspection".

POWER CIRCUIT INSPECTION E87DA964

1. Check open in power circuit(High side)

   1) IG KEY "OFF", ENGINE "OFF"

   2) Disconnect injector connector and ECM connector.

   3) [P0262] Check continuity between injector #1 connector terminal 1 and ECM connector (C230-A) terminal 16.
   [P0265] Check continuity between injector #2 connector terminal 1 and ECM connector (C230-A) terminal 2.
   [P0268] Check continuity between injector #3 connector terminal 1 and ECM connector (C230-A) terminal 1.
   [P0271] Check continuity between injector #4 connector terminal 1 and ECM connector (C230-A) terminal 17.

Specification : Continuity (below 1.0Ω)

   4) Is the measured resistance within the specification?

   YES

   ▶ Go to "2. Check short between power circuit and control circuit" as follows.

   NO

   ▶ Repair open in injector power circuit and go to "Verification of Vehicle Repair".

2. Check short between power circuit and control circuit

   1) IG KEY "OFF", ENGINE "OFF".

   2) Disconnect injector #1 connector and ECM connector.

   3) Check continuity between injector #1 connector terminal 1 and 2.

Specification : Discontinuity (Infinite Ω)

   4) Is the measured resistance within the specification?

   YES

   ▶ Go to "Control Circuit Inspection".

   NO

   ▶ Repair short between injector power circuit and control circuit and go to "Verification of Vehicle Repair".

CONTROL CIRCUIT INSPECTION E3C92118

1. Check open in control circuit(Low side)

1) IG KEY "OFF", ENGINE "OFF"

2) Disconnect injector connector and ECM connector.

3) [P0262] Check continuity between injector #1 connector terminal 2 and ECM connector (C230-A) terminal 47.
[P0265] Check continuity between injector #2 connector terminal 2 and ECM connector (C230-A) terminal 31.
[P0268] Check continuity between injector #3 connector terminal 2 and ECM connector (C230-A) terminal 46.
[P0271] Check continuity between injector #4 connector terminal 2 and ECM connector (C230-A) terminal 33.

Specification : Continuity (below 1.0Ω)

4) Is the measured resistance within the specification?

YES

▶ Go to "Component Inspectiont".

NO

▶ Repair open in injector #1 control circuit and go to "Verification of Vehicle Repair".

COMPONENT INSPECTION E3ECB9CF

1. Check injector component resistance

1) IG KEY "OFF", ENGINE "OFF".

2) Disconnect injector connector.

3) Measure the resistance between injector component terminal 1 and 2.

Specification : 0.33Ω (20℃)

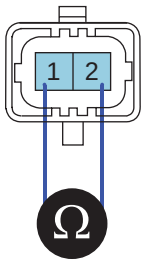

EGNG008I

4) Is the measured resistance(of injector solenoid) within the specification?

YES

▶ Go to "Verification of Vehicle Repair".

NO

▶ Replace injector and go to "Verification of Vehicle Repair".

NOTE

Replacing injectors, peculiar IQA code of each injector should be inputted to ECM

Perform this process using "INJECTOR CORRCTION" function on scantool, Refer to P1670, P1671 for more detailed information.

VERIFICATION OF VEHICLE REPAIR E6C81F9D

After a repair, it is essential to verify that the fault is corrected.

1. After connecting Scantool select "DIAGNOSTIC TROUBLE CODES(DTCs)" mode.
2. Clear recorded DTC using Scantool.
3. Drive the vehicle within DTC "Enable conditions" in "General information".
4. After selecting "DIAGNOSTIC TROUBLE CODES(DTCs)" mode and check if DTC is recorded again.
5. Are any DTCs recorded ?

YES

▶ Go to the DTC guide of recorded NO. in Scantool.

NO

▶ System operates within specification.

DTC P0299 TURBO/SUPER CHARGER UNDERBOOST CONDITION

COMPONENT LOCATION E22A62B7

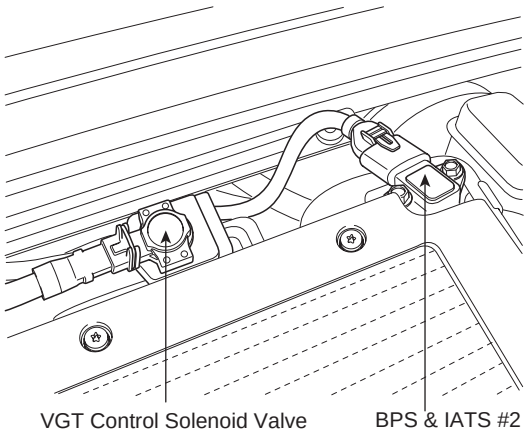

SCMFL6500L

GENERAL DESCRIPTION EE6DEDEF

VGT(Variable Geometric Turbocharger) is the device which increases the efficiency of turbocharger at low rpm and lasts optimum turbo efficiency at high rpm as varying the cross sectional area through which exhaust gas passes turbocharger impeller. It relieves turbo lag at low speed and increse engine power generation.Engine speed, APS signal, MAFS and Boost pressure sensor information is inputted to ECM. ECM actuates vacuum diafragm which controls exhaust gas line as controlling VGT actuator duty to maintain optimum state of air compression.

DTC DESCRIPTION E9634186

P0299 is set when real boost pressure is much lower than target boost pressure for more than 12 sec. at above 1750RPM and 22mg/hub of fuel injection quantity.This code is due to poor connection of VGT solenoid valve vacuum hose, vacuum leakage, clogging, VGT turbo charger component failure.

DTC DETECTING CONDITION E7B34F1D

<table>
<tr><th>Item</th><th colspan="3">Detecting Condition</th><th>Possible Cause</th></tr>
<tr><td>DTC Strategy</td><td colspan="3">• Signal monitoring</td><td rowspan="8">• VGT solenoid component
• VGT vacuum line
• VGT turbo charger component</td></tr>
<tr><td>Enable Conditions</td><td colspan="3">• Engine running(at above 1750RPM and 22mg/hub of fuel injection quantity)</td></tr>
<tr><td>Threshold Value</td><td colspan="3">• Real boost press. is much lower than target boost press.</td></tr>
<tr><td>Diagnostic Time</td><td colspan="3">• 12 sec.</td></tr>
<tr><td rowspan="4">Fail Safe</td><td>Fuel cut</td><td>NO</td><td rowspan="4"></td></tr>
<tr><td>EGR Off</td><td>YES</td></tr>
<tr><td>Fuel Limit</td><td>YES</td></tr>
<tr><td>Check Lamp</td><td>YES</td></tr>
</table>

SPECIFICATION E115195D

VGT actuator component resistance	VGT actuator operating Hz	VGT actuator operating duty
14.7 ~ 16.1Ω (20℃)	300Hz	76% at idle, decreases as accelerating

SCHEMATIC DIAGRAM E8203EA1

[CIRCUIT DIAGRAM]

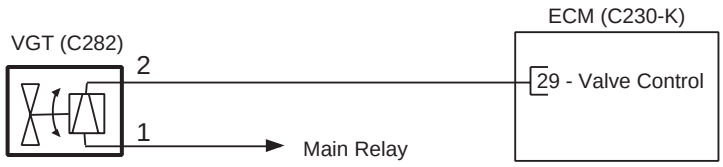

[CONNECTION INFORMATION]

Terminal	Connected to	Function
1	Main Relay	Battery Voltage (B+)
2	ECM C230-K (29)	Valve Control

[HARNESS CONNECTORS]

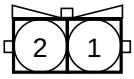

C282

VGT CONTROL SOLENOID VALVE

C230-A

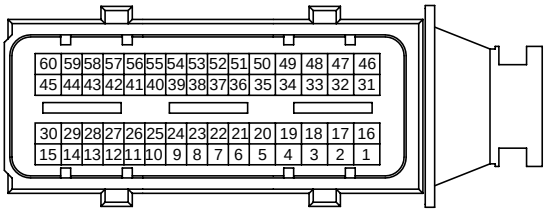

C230-K

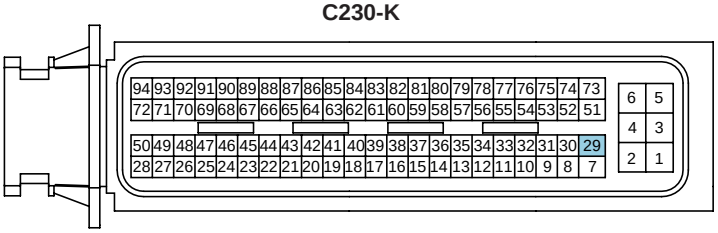

ECM

SCMFL6136L

SIGNAL WAVEFORM AND DATA E6E1F414

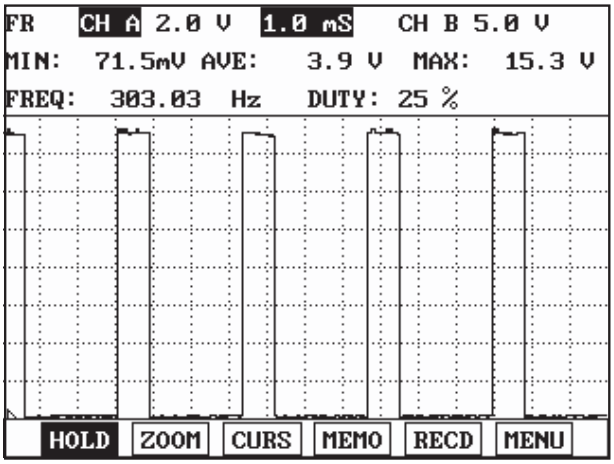

Fig.1

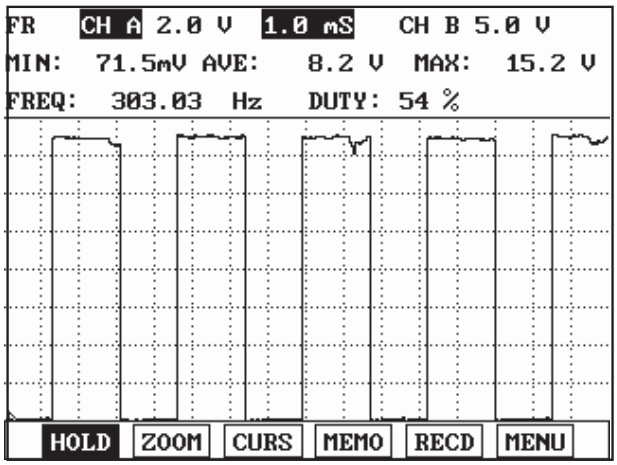

Fig.2

Fig.1) VGT actuator output waveform at 76% duty((-)duty). Duty decreases as boost pressure increases.
Fig.2) VGT actuator duty((-)duty) decreases as accelerating.

LFIG369A

MONITOR SCANTOOL DATA E17E5543

1. Connect Scantool to Data Link Connector (DLC).
2. Warm engine up to normal operating temperature.
3. Turn "OFF" electrical devices and A/C.
4. Monitor "BOOST PRESSURE SENSOR" parameter on the Scantool.

Specification : 1000hpa ± 100hpa(VGT actuator : approx. 76%) at idle

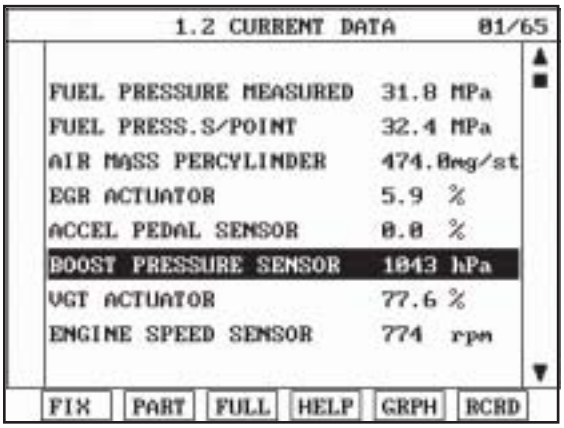

Fig.1

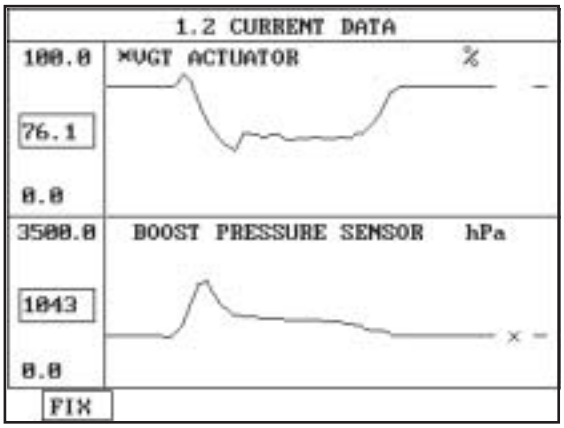

Fig.2

Fig1) Monitor "BOOST PRESSURE SENSOR" parameter on the Scantool at idle after warming engine up. 1000hpa±100hpa(approx. 1 atm) is correct value.
Fig.2) VGT actuator duty and boost pressure at acceleration is shown . If boost pressure rises and reaches certain value, VGT actuator duty stops to drop and keeps steady. Releasing accelerator pedal at this moment, VGT actuator duty drops to approx. 45%, then if RPM drops to idle range, duty returns to 76%.

SCMFL6253L

TERMINAL AND CONNECTOR INSPECTION E015498F

1. Electrical systems consist of a lot of harness and connectors, poor connection of terminals can cause various problems and damge of component.

2. Perform checking procedure as follows.

   1) Check damage of harness and terminals : Check terminals for contact resistance, corrosion and deformation.

   2) Check connecting condition of ECM and component connector : Check terminal seperation, damage of locking device and connecting condition between terminal and wiring.

   NOTE

   Disconnect the pin which requires checking at male connector and insert it to the terminal at female connector or checking connecting condition. (after checking, reconnect the pin at correct position.)

3. Is the problem found?

   YES

   ▶ Repair the trouble causing part and go to "Verification of Vehicle Repair".

   NO

   ▶ Go to "Component Inspection".

COMPONENT INSPECTION E274811D

1. Check VGT actuator component resistance

   1) IG KEY "OFF", ENGINE "OFF"

   2) Disconnect VGT actuator connector.

   3) Measure the resistance between VGT actuator component terminal 1 and 2.

Specification : 14.7 ~ 16.1Ω (20℃)

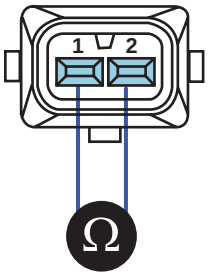

LFIG373A

   4) Is VGT actuator component resistance within the specification?

   YES

   ▶ Go to "2.Check VGT actuator operation" as follows.

   NO

   ▶ Replace VGT actuator and go to "Verification of Vehicle Repair".

2. Check VGT actuator operation

   1) IG KEY "ON", ENGINE "ON".

   2) Check that VGT actuator operating duty is 76% after warming engine up.

   3) Check if vacuum generates after disconnecting VGT valve vacuum hose.

   4) Check if vacuum generates when decelerating after rapid acceleration (Vacuum must not generates, correct VGT actuator operating duty is 45%).

Specification : VGT actuator duty 76% : vacuum generates VGT actuator duty 45% : vacuum does not generate

YES

▶ Go to "Verification of Vehicle Repair".

NO

▶ Replace VGT actuator and go to "Verification of Vehicle Repair".

※ Repeat this process 2~3 times.

VERIFICATION OF VEHICLE REPAIR E4067EAA

After a repair, it is essential to verify that the fault is corrected.

1. After connecting Scantool select "DIAGNOSTIC TROUBLE CODES(DTCs)" mode.
2. Clear recorded DTC using Scantool.
3. Drive the vehicle within DTC "Enable conditions" in "General information".
4. After selecting "DIAGNOSTIC TROUBLE CODES(DTCs)" mode and check if DTC is recorded again.
5. Are any DTCs recorded ?

YES

▶ Go to the DTC guide of recorded NO. in Scantool.

NO

▶ System operates within specification.

DTC P0335 CRANKSHAFT POSITION SENSOR A CIRCUIT

COMPONENT LOCATION E5A3953F

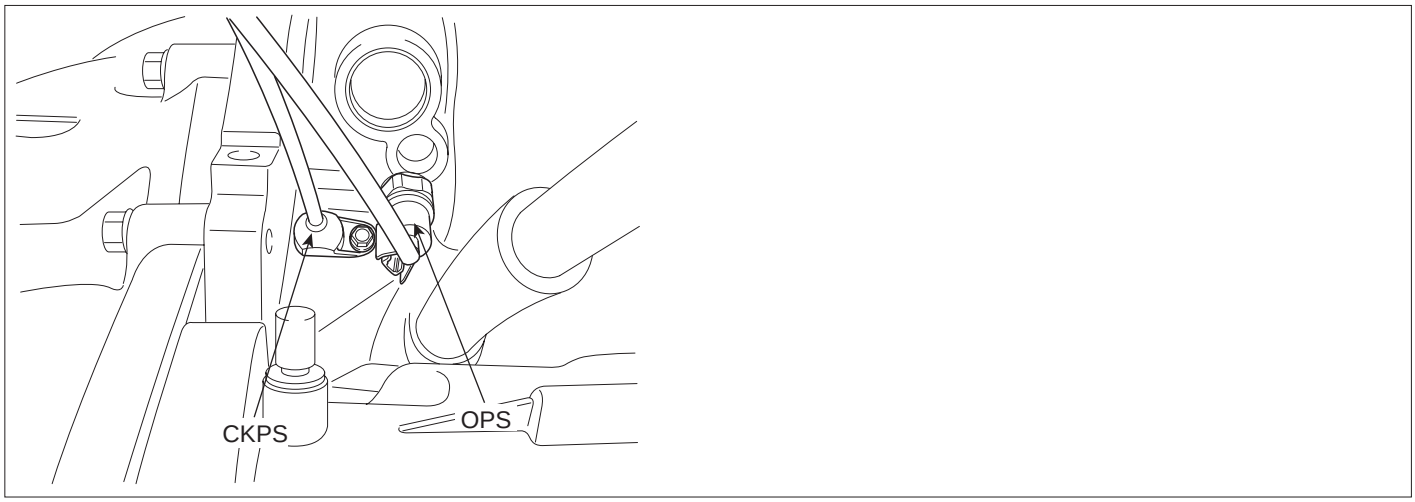

LFIG287A

GENERAL DESCRIPTION EE023A66

Crank Shaft Position Sensor(CKPS) is magnetic inductive type. Mounted on transaxle hausing, it senses tone wheel position of fly wheel.As tone wheel is devided with 58 teeth and 2 missing teeth (referrence point), 1 tooth corresponds to 6 degree.CKPS which calculates RPM and crank angle is important to determine fuel injection quantity and injection timing with APS.crank shaft position is closely related to engine starting.

DTC DESCRIPTION E39484BC

P0335 is set when CKPS signal does not generate for more than 0.7 sec. while CMPS signal is outputted. This code is due to CKPS circuit or component failure. If CKPS signal is not inputted during driving, RPM is calculated based on CMPS signal.

DTC DETECTING CONDITION E9232897

<table>
<tr><th>Item</th><th colspan="3">Detecting Condition</th><th>Possible Cause</th></tr>
<tr><td>DTC Strategy</td><td colspan="3">• Signal monitoring</td><td rowspan="6">• CKPS circuit
• CKPS component
• Abnormal deformation of Crank Shaft tone wheel</td></tr>
<tr><td>Enable Conditions</td><td colspan="3">• During accelerating and turning engine "ON"</td></tr>
<tr><td>Threshold Value</td><td colspan="3">• CMPS signal is outputted while CKPS signal does not generate.</td></tr>
<tr><td>Diagnostic Time</td><td colspan="3">• tone wheel rotates 4 times</td></tr>
<tr><td rowspan="4">Fail Safe</td><td>Fuel cut</td><td>YES</td><td rowspan="4">• RPM is considered as double speed of CAM rotation.</td></tr>
<tr><td>EGR Off</td><td>NO</td></tr>
<tr><td>Fuel Limit</td><td>NO</td></tr>
<tr><td>Check Lamp</td><td>YES</td></tr>
</table>

SPECIFICATION EF48BD49

Sensor Type	Output Signal Characteristic	Air Gab	Low RPM Minimum Detecting Voltage	High RPM Minimum Detecting Voltage
Magnetic inductive	A/C waveform	1.8mm	230mV	2769 mV

SCHEMATIC DIAGRAM EEA9BEB3

[CIRCUIT DIAGRAM]

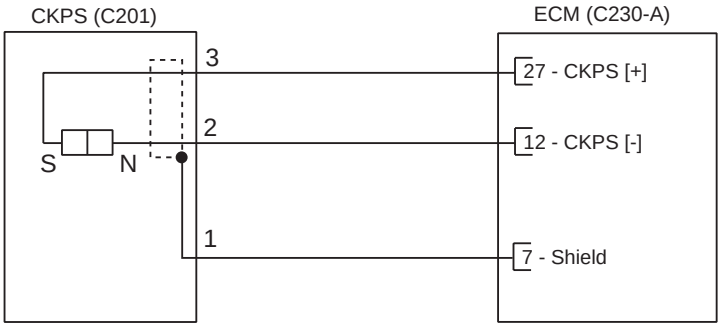

[CONNECTION INFORMATION]

Terminal	Connected to	Function
1	ECM C230-A (7)	Sensor Shield
2	ECM C230-A (12)	CKPS [-] Signal
3	ECM C230-A (27)	CKPS [+] Signal

[HARNESS CONNECTORS]

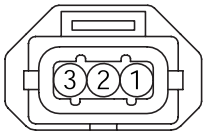

C201

CKPS

C230-A

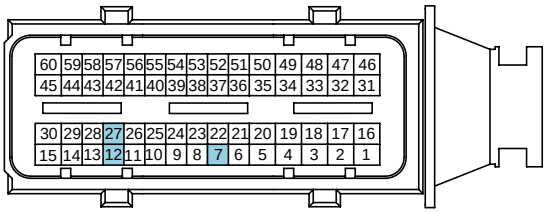

C230-K

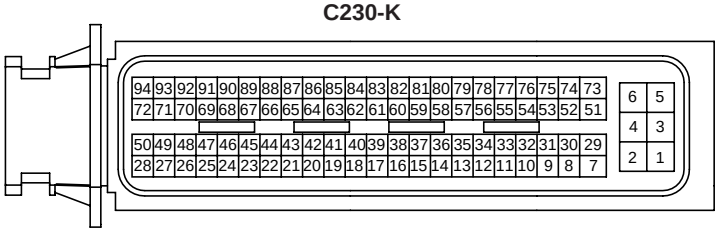

ECM

SCMFL6121L

SIGNAL WAVEFORM AND DATA E66D28CA

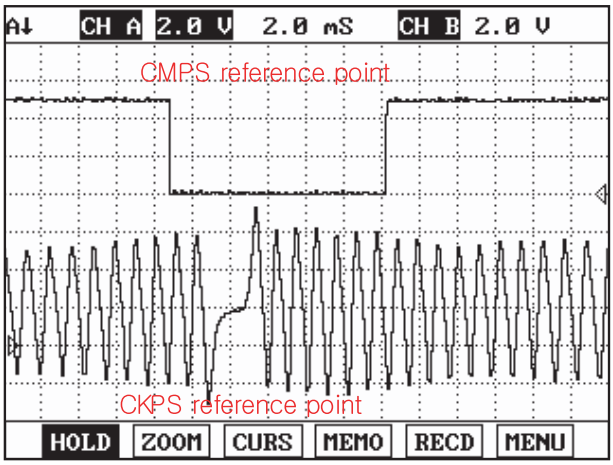

Fig.1

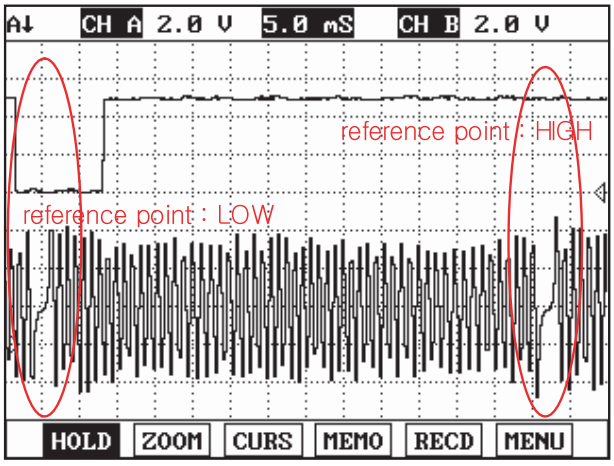

Fig.2

Fig.1) This shows waveform of Crank Shaft Position Sensor and Cam Shaft Position Sensor simulatneously. The middle area indicates reference points of Crank Shaft Position Sensor and Cam Shaft Position Sensor.

Fig.2) Crank Shaft Position Sensor and Cam Shaft Position Sensor signal are measured simultaneously.
Cam Shaft Position Sensor signal is outputted once when Crank Shaft Position sensor signal is outputted twice.
LOW and HIGH output of Cam Shaft Position sensor reference point is detected at Crank Shaft Position sensor reference point.
(Injection sequence is determined based on LOW and HIGH signal of Cam Shaft Position Sensor reference point as detecting cylinder position.)

LFIG289A

※ SIGNAL ANALYSIS

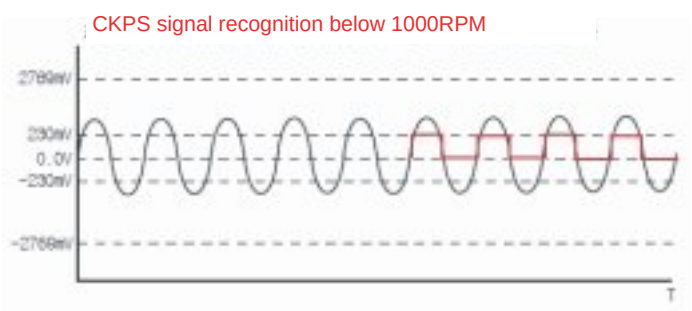

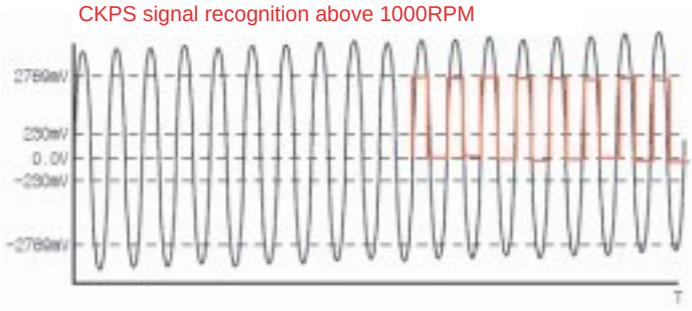

LFIG290A

1. The output voltage of CKPS signal varies according to rpm(the speed of tone wheel passing by sensor)
(low voltage is inducted for low speed and high voltage is inducted for high speed.)

2. CKPS should detect from low rpm at cranking to above 5000rpm. If minimum detecting voltage is set low for the ease of signal detection at low rpm, 1) the abnormal signal at high rpm from which high voltage generates or 2) electrical noise through circuit can be recognized as Crank signal. Thus minimum detecting voltages at low rpm and high rpm are set differently.

3. ECM convert analog signal like the waveform illustrated above into digital signal with A/D converter.The voltage above minimum detecting voltage of crank signal and "-"voltage below 0.0V is meaningless at converting process. RPM is detected as Hz.(signal detecting period)

MONITOR SCANTOOL DATA E979AAD7

1. Connect Scantool to Data Link Connector (DLC).

2. Warm engine up to normal operating temperature.
3. Turn "OFF" electrical devices and A/C.
4. Monitor "ENGINE SPEED SENSOR" parameter on the Scantool.

Specification : 750±50 RPM at idle

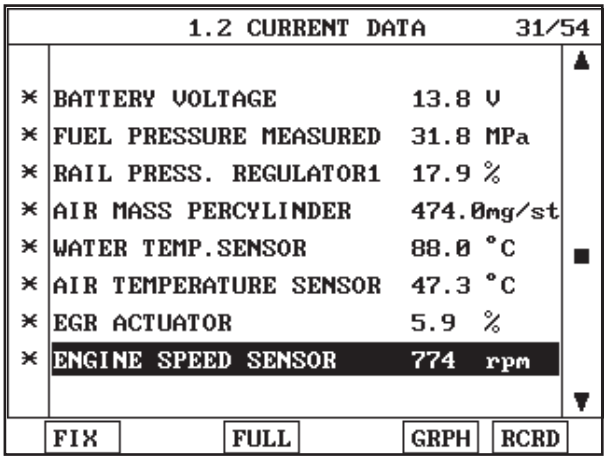

Fig.1

Fig.1) Check "ENGINE SPEED SENSOR" parameter carefully after warming engine up, also check engine stall and rpm instability or engine shut down.

SCMFL6277L

TERMINAL AND CONNECTOR INSPECTION E10B825D

1. Electrical systems consist of a lot of harness and connectors, poor connection of terminals can cause various problems and damge of component.
2. Perform checking procedure as follows.
   1) Check damage of harness and terminals : Check terminals for contact resistance, corrosion and deformation.
   2) Check connecting condition of ECM and component connector : Check terminal seperation, damage of locking device and connecting condition between terminal and wiring.

   NOTE

   Disconnect the pin which requires checking at male connector and insert it to the terminal at female connector for checking connecting condition. (after checking, reconnect the pin at correct position.)
3. Is the problem found?

   YES

   ▶ Repair the trouble causing part and go to "Verification of Vehicle Repair".

   NO

   ▶ Go to "Signal Circuit Inspection ".

SIGNAL CIRCUIT INSPECTION E5DB71CF

1. Check signal circuit voltage

1) IG KEY "OFF", ENGINE "OFF".
2) Disconnect CKPS connector.
3) IG KEY "ON".
4) Measure the voltage of CKPS connector terminal 2 and 3.

Specification : 2.4V~2.6V

5) Is the measured voltage within the specification?

YES

▶ Go to "3.Check short between signal circuits."

NO

▶ Go to "2.Check open in signal circuit" as follows.

2. Check open in signal circuit

1) IG KEY "OFF", ENGINE "OFF".
2) Disconnect CKPS connector and ECM connector.
3) Check continuity between CKPS connector terminal 2 and ECM connector (C230-A) terminal 12.
4) Check continuity between CKPS connector terminal 3 and ECM connector (C230-A) terminal 27.

Specification : continuity (below 1.0Ω)

5) Is the measured resistance within the specification?

YES

▶ Go to "3. Check short between signal circuits".

NO

▶ Repair open in signal circuit and go to "Verification of Vehicle Repair".

3. Check short between signal circuits

1) IG KEY "OFF", ENGINE "OFF".
2) Disconnect CKPS connector and ECM connector.
3) Check continuity between CKPS connector terminal 2 and 3.

Specification : Discontinuity (Infinite Ω)

4) Is the measured resistance within the specification?

YES

▶ Go to "4. Check short to ground in signal circuit" as follows.

NO

▶ Repair short between signal circuits and go to "Verification of Vehicle Repair".

4. Check short to ground in signal circuit

   1) IG KEY "OFF", ENGINE "OFF".

   2) Disconnect CKPS connector and ECM connector.

   3) Check continuity between CKPS connector terminal 1(shield ground) and 2,3(crank signal)

Specification : Discontinuity (Infinite Ω)

   4) Is the measured resistance within the specification?

YES

▶ Go to "Ground Circuit Inspection".

NO

▶ Repair the short between signal circuit and shield ground and go to "Verification of Vehicle Repair".

GROUND CIRCUIT INSPECTION E616F32A

1. IG KEY "OFF", ENGINE "OFF".
2. Disconnect CKPS connector.
3. Check continuity between CKPS connector terminal 1(shield ground) and chassis ground.

Specification : continuity (below 1.0Ω)

4. Is the measured resistance within the specification?

YES

▶ Go to "Component Inspection".

NO

▶ Repair open or poor connection in ground circuit and go to "Verification of Vehicle Repair".

COMPONENT INSPECTION EEBC9CC9

1. Check Resistance of CKPS component

   1) IG KEY "OFF", ENGINE "OFF".

   2) Disconnect CKPS connector.

   3) Check resistance between CKPS connector terminal 2 and 3 at component side.

Specification : 860Ω ±10% (20℃)

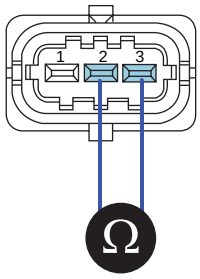

EGNG006B

4) Is the measured resistance within the specification?

YES

▶ Go to "Check short to ground in CKPS component" as follows.

NO

▶ Replace CKPS and go to "Verification of Vehicle Repair".

2. Check short to ground in CKPS component

1) IG KEY "OFF", ENGINE "OFF".

2) Disconnect CKPS connector.

3) Check resistance between CKPS connector terminal 1 and 3 at component side.

Specification : Discontinuity (Infinite Ω)

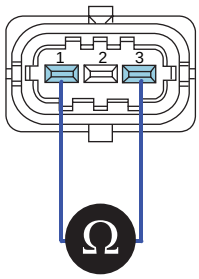

EGNG006C

4) Is the measured resistance within the specification? (Is the inside of component insulated correctly?)

YES

▶ Go to "Check CKPS waveform".

NO

▶ Replace CKPS and go to "Verification of Vehicle Repair".

3. Check CKPS waveform

1) IG KEY "OFF", ENGINE "OFF".

2) Connect CKPS connector.

3) Connect Oscilloscope to CKPS connector terminal 2.

4) Check if CKPS waveform is outputted correctly as cranking or turning engine on.

Specification : Refer to "Signal waveform & data" of "General Information".

5) Is CKPS waveform outputted correctly?

YES

▶ Go to "Verification of Vehicle Repair".

NO

▶ Replace CKPS and go to "Verification of Vehicle Repair".

VERIFICATION OF VEHICLE REPAIR ED949564

After a repair, it is essential to verify that the fault is corrected.

1. After connecting Scantool select "DIAGNOSTIC TROUBLE CODES(DTCs)" mode.
2. Clear recorded DTC using Scantool.
3. Drive the vehicle within DTC "Enable conditions" in "General information".
4. After selecting "DIAGNOSTIC TROUBLE CODES(DTCs)" mode and check if DTC is recorded again.
5. Are any DTCs recorded ?

YES

▶ Go to the DTC guide of recorded NO. in Scantool.

NO

▶ System operates within specification.

DTC P0336 CRANKSHAFT POSITION SENSOR A CIRCUIT RANGE/PERFORMANCE

COMPONENT LOCATION E7C0CD86

Refer to DTC P0335.

GENERAL DESCRIPTION EBE4B5BF

Refer to DTC P0335.

DTC DESCRIPTION E3CE13EE

P0336 is set when 1). engine speed detected by CKPS is above 6000RPM, or 2). CKPS signal pulse is abnormal. For repair, check temporary poor connection in CKPS circuit, component failure or deformation of tone wheel.

DTC DETECTING CONDITION E259CD3D

<table>
<tr><th>Item</th><th colspan="3">Detecting Condition</th><th>Possible Cause</th></tr>
<tr><td>DTC Strategy</td><td colspan="3">• Signal monitoring</td><td rowspan="6">• CKPS circuit
• CKPS component
• Abnormal deformation of Crank Shaft tone wheel</td></tr>
<tr><td>Enable Conditions</td><td colspan="3">• During accelerating and turning engine "ON"</td></tr>
<tr><td>Threshold Value</td><td colspan="3">• Engine speed sensed at CKPS above 6000RPM
• Abnormal crank signal pulse</td></tr>
<tr><td>Diagnostic Time</td><td colspan="3">• Immediately</td></tr>
<tr><td rowspan="4">Fail Safe</td><td>Fuel cut</td><td>YES</td><td rowspan="4"></td></tr>
<tr><td>EGR Off</td><td>NO</td></tr>
<tr><td>Fuel Limit</td><td>NO</td></tr>
<tr><td>Check Lamp</td><td>YES</td></tr>
</table>

SPECIFICATION E763E76E

Refer to DTC P0335.

SCHEMATIC DIAGRAM E90EA2AB

Refer to DTC P0335.

SIGNAL WAVEFORM AND DATA E5F982DE

Refer to DTC P0335.

MONITOR SCANTOOL DATA EE83BEE3

Refer to DTC P0335.

TERMINAL AND CONNECTOR INSPECTION EC699D59

Refer to DTC P0335.

SIGNAL CIRCUIT INSPECTION EF9AF39F

1. Check signal circuit voltage

   1) IG KEY "OFF", ENGINE "OFF".

   2) Disconnect CKPS connector.

   3) IG KEY "ON".

   4) Measure the voltage of CKPS connector terminal 2 and 3.

Specification : 2.4V~2.6V

   5) Is the measured voltage within the specification?

   YES

   ▶ Go to "3.Check short between signal circuits."

   NO

   ▶ Go to "2.Check open in signal circuit" as follows.

2. Check open in signal circuit

   1) IG KEY "OFF", ENGINE "OFF".

   2) Disconnect CKPS connector and ECM connector.

   3) Check continuity between CKPS connector terminal 2 and ECM connector (C230-A) terminal 12.

   4) Check continuity between CKPS connector terminal 3 and ECM connector (C230-A) terminal 27.

Specification : continuity (below 1.0Ω)

   5) Is the measured resistance within the specification?

   YES

   ▶ Go to "3. Check short between signal circuits".

   NO

   ▶ Repair open in signal circuit and go to "Verification of Vehicle Repair".

3. Check short between signal circuits

   1) IG KEY "OFF", ENGINE "OFF".

   2) Disconnect CKPS connector and ECM connector.

   3) Check continuity between CKPS connector terminal 2 and 3.

Specification : Discontinuity (Infinite Ω)

   4) Is the measured resistance within the specification?

YES

▶ Go to "4. Check short to ground in signal circuit" as follows.

NO

▶ Repair short between signal circuits and go to "Verification of Vehicle Repair".

4. Check short to ground in signal circuit

   1) IG KEY "OFF", ENGINE "OFF".

   2) Disconnect CKPS connector and ECM connector.

   3) Check continuity between CKPS connector terminal 1(shield ground) and 2,3(crank signal)

Specification : Discontinuity (Infinite Ω)

   4) Is the measured resistance within the specification?

YES

▶ Go to "Ground Circuit Inspection".

NO

▶ Repair the short between signal circuit and shield ground and go to "Verification of Vehicle Repair".

GROUND CIRCUIT INSPECTION ED539D75

1. IG KEY "OFF", ENGINE "OFF".
2. Disconnect CKPS connector.
3. Check continuity between CKPS connector terminal 1(shield ground) and chassis ground.

Specification : continuity (below 1.0Ω)

4. Is the measured resistance within the specification?

YES

▶ Go to "Component Inspection".

NO

▶ Repair open or poor connection in ground circuit and go to "Verification of Vehicle Repair".

COMPONENT INSPECTION EC395804

1. Check Resistance of CKPS component

   1) IG KEY "OFF", ENGINE "OFF".

   2) Disconnect CKPS connector.

   3) Check resistance between CKPS connector terminal 2 and 3 at component side.

Specification : 860Ω ±10% (20℃)

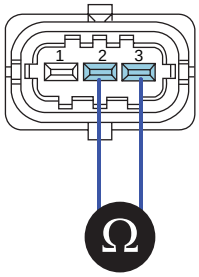

EGNG006B

4) Is the measured resistance within the specification?

YES

▶ Go to "Check short to ground in CKPS component" as follows.

NO

▶ Replace CKPS and go to "Verification of Vehicle Repair".

2. Check short to ground in CKPS component

1) IG KEY "OFF", ENGINE "OFF".

2) Disconnect CKPS connector.

3) Check resistance between CKPS connector terminal 1 and 3 at component side.

Specification : Discontinuity (Infinite Ω)

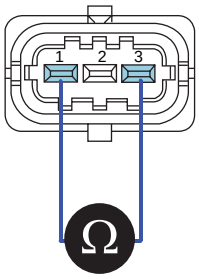

EGNG006C

4) Is the measured resistance within the specification? (Is the inside of component insulated correctly?)

YES

▶ Go to "Check CKPS waveform".

NO

▶ Replace CKPS and go to "Verification of Vehicle Repair".

3. Check CKPS waveform

1) IG KEY "OFF", ENGINE "OFF".

2) Connect CKPS connector.

3) Connect Oscilloscope to CKPS connector terminal 2.

4) Check if CKPS waveform is outputted correctly as cranking or turning engine on.

Specification : Refer to "Signal waveform & data" of "General Information".

5) Is CKPS waveform outputted correctly?

YES

▶ Go to "Verification of Vehicle Repair".

NO

▶ Replace CKPS and go to "Verification of Vehicle Repair".

VERIFICATION OF VEHICLE REPAIR E5914F6A

Refer to DTC P0335.

DTC P0340 CAMSHAFT POSITION SENSOR A CIRCUIT MALFUNCTION (BANK 1 OR SINGLE SENSOR)

COMPONENT LOCATION E96A3409

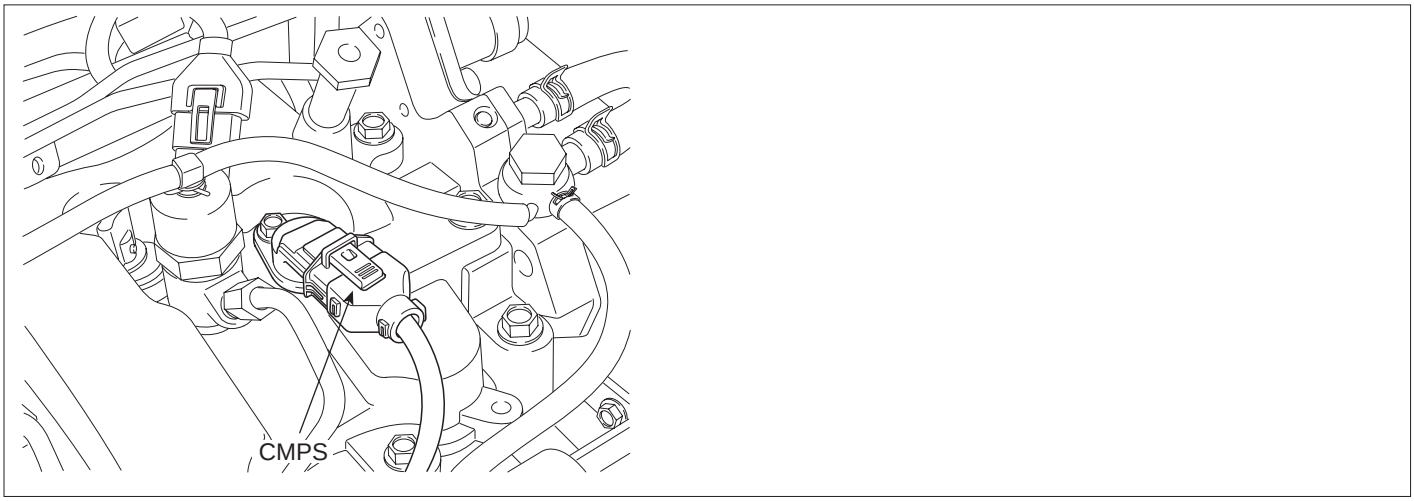

LFIG297A

GENERAL DESCRIPTION E8FD63BB

Cam Shaft Position Sensor(CMPS) is hall sensor type. Sensing the teeth attatch at the end of exhaust cam shaft, CMPS detects rotation of Cam shaft (1 signal per 1 lotation)As Cam shaft rotates once while Crank shaft does twice, CMPS referrence point generates once while CKPS' do twice.As this signal inputted to ECM, it distinguishes crank angle and the cylinder which requires fuel injection in order to determine injection sequence and duration.

DTC DESCRIPTION EC75AD9D

P0340 is set when CMPS signal does not generate while CKPS signal is outputted for the duration that crank shaft rotates 4 times. This code is due to the failure relevant to CMPS related circuit and sensor component.

DTC DETECTING CONDITION EC53A6C3

<table>
<tr><th>Item</th><th colspan="3">Detecting Condition</th><th>Possible Cause</th></tr>
<tr><td>DTC Strategy</td><td colspan="3">• Signal monitoring</td><td rowspan="6">• CMPS circuit
• CMPS component</td></tr>
<tr><td>Enable Conditions</td><td colspan="3">• During accelerating and turning engine "ON"</td></tr>
<tr><td>Threshold Value</td><td colspan="3">• CKPS signal is outputted while CMPS signal does not generate.</td></tr>
<tr><td>Diagnostic Time</td><td colspan="3">• Crank Shaft rotates 4 times</td></tr>
<tr><td rowspan="4">Fail Safe</td><td>Fuel cut</td><td>YES</td><td rowspan="4"></td></tr>
<tr><td>EGR Off</td><td>NO</td></tr>
<tr><td>Fuel Limit</td><td>NO</td></tr>
<tr><td>Check Lamp</td><td>YES</td></tr>
</table>

SPECIFICATION E7EC0A4A

Sensor Type	Output Signal Characteristic	Air Gab	Low RPM Minimum Detecting Voltage	High RPM Minimum Detecting Voltage
Hall effect type	0V~5V Digital signal output	1.25mm	below 2.0V	above 3.8V

SCHEMATIC DIAGRAM E9AA72A7

[CIRCUIT DIAGRAM]

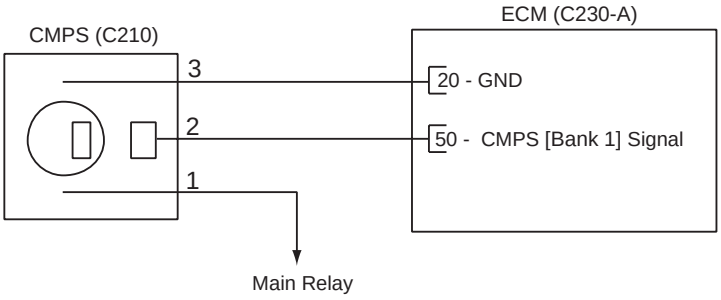

[CONNECTION INFORMATION]

Terminal	Connected to	Function
1	Main Relay	Battery Voltage
2	ECM C230-A (50)	CMPS Signal
3	ECM C230-A(20)	GND

[HARNESS CONNECTORS]



C210

CMPS

C230-A

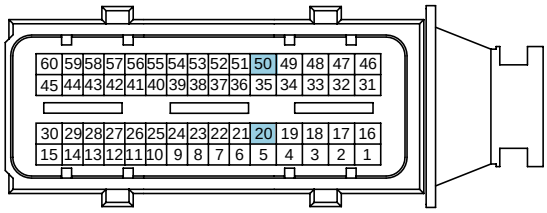

C230-K

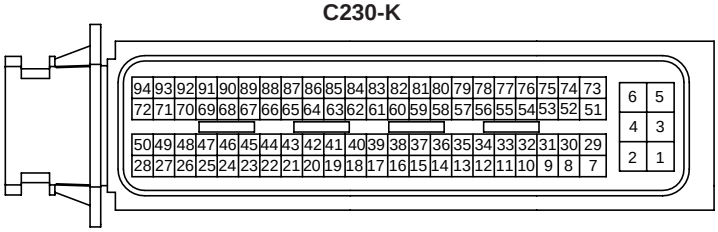

ECM

SCMFL6120L

SIGNAL WAVEFORM AND DATA EC12B23B

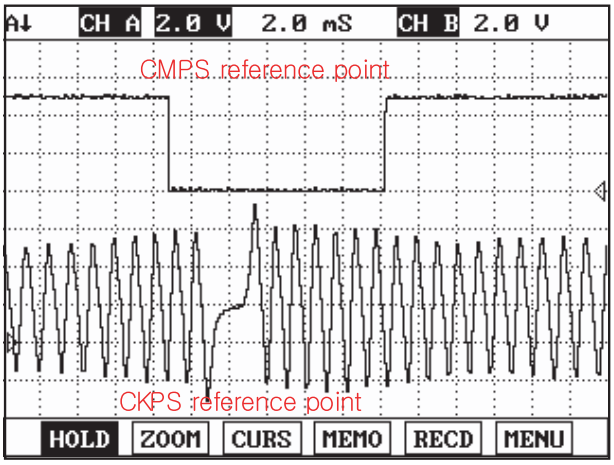

Fig.1

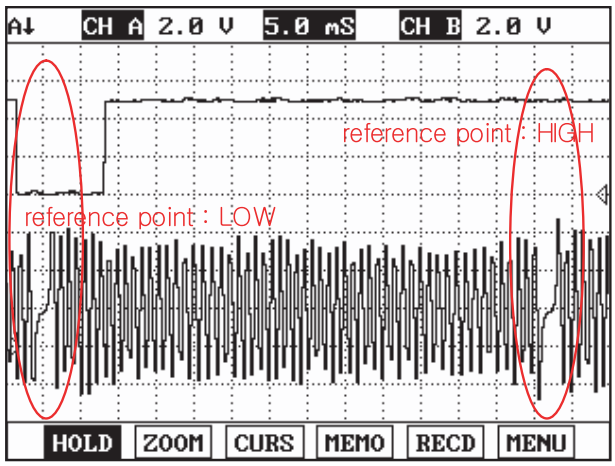

Fig.2

Fig.1) This shows waveform of Crank Shaft Position Sensor and Cam Shaft Position Sensor simulatneously. The middle area indicates reference points of Crank Shaft Position Sensor and Cam Shaft Position Sensor.

Fig.2) Crank Shaft Position Sensor and Cam Shaft Position Sensor signal are measured simultaneously.
Cam Shaft Position Sensor
signal is outputted once when Crank Shaft Position sensor signal is outputted twice. LOW and HIGH output of Cam Shaft Position sensor reference point is detected at Crank Shaft Position sensor reference point.
(Injection sequence is determined based on LOW and HIGH signal of Cam Shaft Position Sensor reference point as detecting cylinder position.)

LFIG299A

※ SIGNAL ANALYSIS

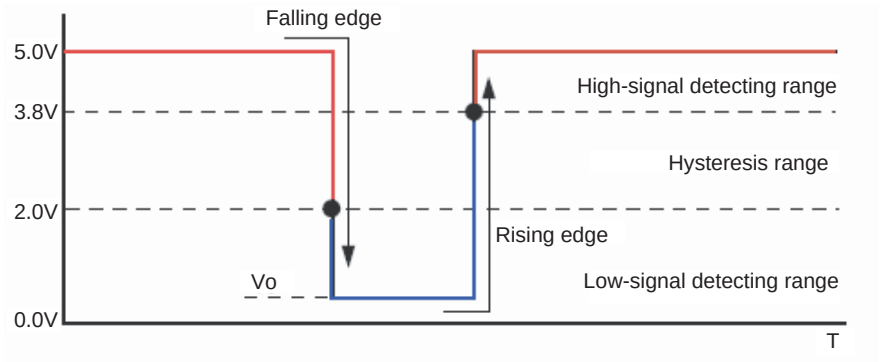

LFIG300A

1. ECM recognizes HIGH signal as LOW signal when CMPS signal drops below 2.0V and LOW signal as HIGH signal when CMPS signal rises above 3.8V.

2. V0 - the Minimum voltage of LOW signal does not drop below 0.0V due to the hall sensor inside resistance. When the Minimum voltage of LOW signal is above 0.6V during signal waveform inspection, check excessive resistance inside of CMPS component or in ground circuit.

MONITOR SCANTOOL DATA EB35BB16

1. Connect Scantool to Data Link Connector (DLC).

2. Warm engine up to normal operating temperature.

3. Turn "OFF" electrical devices and A/C.

4. Monitor "ENGINE SPEED SENSOR" parameter on the Scantool.

Specification : 750±50RPM at idle

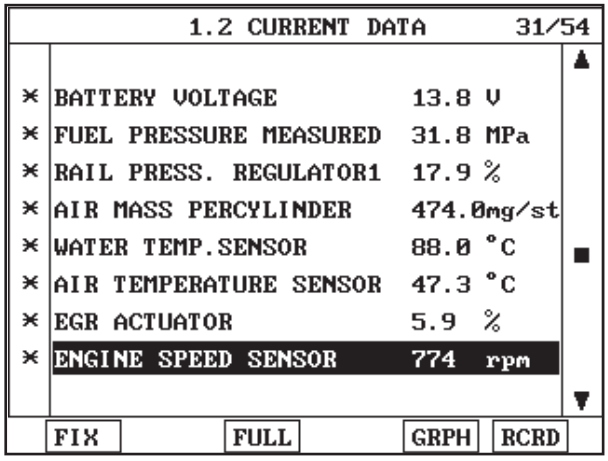

Fig.1

Fig.1) Check "ENGINE SPEED SENSOR" parameter carefully after warming engine up, also check engine stall and rpm instability or engine shut down.

SCMFL6277L

TERMINAL AND CONNECTOR INSPECTION E9A94F7B

1. Electrical systems consist of a lot of harness and connectors, poor connection of terminals can cause various problems and damge of component.
2. Perform checking procedure as follows.
   1) Check damage of harness and terminals : Check terminals for contact resistance, corrosion and deformation.
   2) Check connecting condition of ECM and component connector : Check terminal seperation, damage of locking device and connecting condition between terminal and wiring.

NOTE

Disconnect the pin which requires checking at male connector and insert it to the terminal at female connector for checking connecting condition. (after checking, reconnect the pin at correct position.)

3. Is the problem found?

YES

▶ Repair the trouble causing part and go to "Verification of Vehicle Repair".

NO

▶ Go to "Power Circuit Inspection".

POWER CIRCUIT INSPECTION E81DF3F4

1. IG KEY "OFF", ENGINE "OFF".
2. Disconnect CMPS connector.
3. IG KEY "ON".

4. Measure the voltage of CMPS connector terminal 1.

Specification : 11.0V~13.0V (Main relay "ON" power)

5. Is the measured voltage within the specification?

YES

▶ Go to "Signal Circuit Inspection".

NO

▶ Repair open in Main relay power circuit and fuse, and go to "Verification of Vehicle Repair".
[Check open in E/R FUSE & RELAY BOX 15A SENSOR #2 FUSE and related circuit.]
※ If the fuse is damaged again after replacing the damaged fuse, repair short to ground in Main relay power circuit.

SIGNAL CIRCUIT INSPECTION E78B31BB

1. Check CMPS signal voltage
   1) IG KEY "OFF", ENGINE "OFF".
   2) Disconnect CMPS connector.
   3) IG KEY "ON".
   4) Measure the voltage of CMPS connector terminal 2.

Specification : 4.8V~5.1V

   5) Is the measured voltage within the specification?

YES

▶ Go to "Ground Circuit Inspection".

NO

▶ Go to "Check open in signal circuit" as follows.

2. Check open in signal circuit
   1) IG KEY "OFF", ENGINE "OFF".
   2) Disconnect CMPS connector and ECM connector.
   3) Check continuity between CMPS connector terminal 2 and ECM connector (C230-A) terminal 50.

Specification : continuity (below 1.0Ω)

   4) Is the measured resistance within the specification? (Is continuity confirmed?)

YES

▶ Go to "Check short to ground in signal circuit" as follows.

NO

▶ Repair open in the circuit between CMPS connector terminal 2 and ECM connector terminal 50 and go to "Verification of Vehicle Repair".

3. Check short to ground in signal circuit

   1) IG KEY "OFF", ENGINE "OFF".

   2) Disconnect CMPS connector and ECM connector.

   3) Check continuity between CMPS connector terminal 2 and chassis ground.

Specification : Discontinuity (Infinite Ω)

   4) Is the measured resistance within the specification?

YES

▶ Go to "Component Inspection".

NO

▶ Repair short to ground in signal circuit and go to "Verification of Vehicle Repair".

GROUND CIRCUIT INSPECTION E109ED58

1. IG KEY "OFF", ENGINE "OFF".
2. Disconnect CMPS connector.
3. IG KEY "ON".
4. Check the voltage of CMPS connetor terminal 2. [TEST "A"]
5. Check the voltage between CMPS connetor terminal 2 and 3. [TEST "B"]
   (terminal 2 : Check + prove , terminal 3 : Check - prove)

Specification : [TEST "A"] Voltage - [TEST "B"] Voltage = below 200mV

6. Is the measured voltage within the specification?

YES

▶ Go to "Component Inspection".

NO

▶ When "B" voltage is not detected : Repair open in ground circuit and go to "Verification of Vehicle Repair".
▶ When the voltage difference between "A" and "B" is above 200mV : Eliminate the causes of excessive resistance and go to "Verification of Vehicle Repair".

COMPONENT INSPECTION E3BD4005

1. Cam shaft detecting teeth inspection

   1) IG KEY "OFF", ENGINE "OFF".

   2) Disconnect CMPS connector.

3) Disconnect CMPS.

4) Check the condition of Cam shaft detecting teeth through CMPS mounting hall.

5) Is abnormal deformation of Cam shaft detecting teeth found?

YES

▶ Replace Cam shaft assy' or Cylinder head assy' and go to "Verification of Vehicle Repair".

NO

▶ Go to "CMPS waveform Inspection" as follows.

2. CMPS waveform inspection

1) IG KEY "OFF", ENGINE "OFF".

2) Connect CMPS connector.

3) Connect Oscilloscope to CMPS connector terminal 2.

4) Monitor if CMPS waveform is outputted normally as cranking or turning engine "ON".

Specification : Refer to "Signal waveform & Data" of "General Information".

5) Is CMPS waveform displayed correctly?

YES

▶ Go to "Verification of Vehicle Repair".

NO

▶ Replace CMPS and go to "Verification of Vehicle Repair".

VERIFICATION OF VEHICLE REPAIR EC52C3CC

After a repair, it is essential to verify that the fault is corrected.

1. After connecting Scantool select "DIAGNOSTIC TROUBLE CODES(DTCs)" mode.
2. Clear recorded DTC using Scantool.
3. Drive the vehicle within DTC "Enable conditions" in "General information".
4. After selecting "DIAGNOSTIC TROUBLE CODES(DTCs)" mode and check if DTC is recorded again.
5. Are any DTCs recorded ?

YES

▶ Go to the DTC guide of recorded NO. in Scantool.

NO

▶ System operates within specification.

DTC P0341 CAMSHAFT POSITION SENSOR A CIRCUIT RANGE/PERFORMANCE (BANK 1 OR SINGLE SENSOR)

COMPONENT LOCATION E497B9B1

Refer to DTC P0340.

GENERAL DESCRIPTION E3DA2AFA

Refer to DTC P0340.

DTC DESCRIPTION EF450093

P0341 is set when CMPS reference point is detected more or less than twice while CKPS reference point is recognized 4 times. This code is due to temporary poor connection or short to ground in CMPS circuit. CMPS component failure.

DTC DETECTING CONDITION E532D45B

<table>
<tr><th>Item</th><th colspan="3">Detecting Condition</th><th>Possible Cause</th></tr>
<tr><td>DTC Strategy</td><td colspan="3">• Signal monitoring</td><td rowspan="6">• CMPS circuit
• CMPS component</td></tr>
<tr><td>Enable Conditions</td><td colspan="3">• During accelerating and turning engine "ON"</td></tr>
<tr><td>Threshold Value</td><td colspan="3">• When RPM from CMPS correlates with RPM from CKPS abnormally.</td></tr>
<tr><td>Diagnostic Time</td><td colspan="3">• Crank Shaft rotates 4 times</td></tr>
<tr><td rowspan="4">Fail Safe</td><td>Fuel cut</td><td>YES</td><td rowspan="4"></td></tr>
<tr><td>EGR Off</td><td>NO</td></tr>
<tr><td>Fuel Limit</td><td>NO</td></tr>
<tr><td>Check Lamp</td><td>YES</td></tr>
</table>

SPECIFICATION ED93DEBB

Refer to DTC P0340.

SCHEMATIC DIAGRAM EC8FAF5E

Refer to DTC P0340.

SIGNAL WAVEFORM AND DATA E1578F66

Refer to DTC P0340.

MONITOR SCANTOOL DATA ED19F1B9

Refer to DTC P0340.

TERMINAL AND CONNECTOR INSPECTION E1463867

Refer to DTC P0340.

POWER CIRCUIT INSPECTION E573AA3B

1. IG KEY "OFF", ENGINE "OFF".
2. Disconnect CMPS connector.
3. IG KEY "ON".
4. Measure the voltage of CMPS connector terminal 1.

Specification : 11.0V~13.0V (Main relay "ON" power)

5. Is the measured voltage within the specification?

YES

▶ Go to "Signal Circuit Inspection".

NO

▶ Repair open in Main relay power circuit and fuse, and go to "Verification of Vehicle Repair".
[Check open in E/R FUSE & RELAY BOX 15A SENSOR #2 FUSE and related circuit.]
※ If the fuse is damaged again after replacing the damaged fuse, repair short to ground in Main relay power circuit.

SIGNAL CIRCUIT INSPECTION E90982D5

1. Check CMPS signal voltage
   1) IG KEY "OFF", ENGINE "OFF".
   2) Disconnect CMPS connector.
   3) IG KEY "ON".
   4) Measure the voltage of CMPS connector terminal 2.

Specification : 4.8V~5.1V

   5) Is the measured voltage within the specification?

YES

▶ Go to "Ground Circuit Inspection".

NO

▶ Go to "Check open in signal circuit" as follows.

2. Check open in signal circuit
   1) IG KEY "OFF", ENGINE "OFF".
   2) Disconnect CMPS connector and ECM connector.
   3) Check continuity between CMPS connector terminal 2 and ECM connector (C230-A) terminal 50.

Specification : continuity (below 1.0Ω)

4) Is the measured resistance within the specification? (Is continuity confirmed?)

YES

▶ Go to "Check short to ground in signal circuit" as follows.

NO

▶ Repair open in the circuit between CMPS connector terminal 2 and ECM connector terminal 50 and go to "Verification of Vehicle Repair".

3. Check short to ground in signal circuit

1) IG KEY "OFF", ENGINE "OFF".

2) Disconnect CMPS connector and ECM connector.

3) Check continuity between CMPS connector terminal 2 and chassis ground.

Specification : Discontinuity (Infinite Ω)

4) Is the measured resistance within the specification?

YES

▶ Go to "Component Inspection".

NO

▶ Repair short to ground in signal circuit and go to "Verification of Vehicle Repair".

GROUND CIRCUIT INSPECTION EC63FFE9

1. IG KEY "OFF", ENGINE "OFF".
2. Disconnect CMPS connector.
3. IG KEY "ON".
4. Check the voltage of CMPS connetor terminal 2. [TEST "A"]
5. Check the voltage between CMPS connetor terminal 2 and 3. [TEST "B"]
   (terminal 2 : Check + prove , terminal 3 : Check - prove)

Specification : [TEST "A"] Voltage - [TEST "B"] Voltage = below 200mV

6. Is the measured voltage within the specification?

YES

▶ Go to "Component Inspection".

NO

▶ When "B" voltage is not detected : Repair open in ground circuit and go to "Verification of Vehicle Repair".
▶ When the voltage difference between "A" and "B" is above 200mV : Eliminate the causes of excessive resistance and go to "Verification of Vehicle Repair".

COMPONENT INSPECTION E97380A2

1. Cam shaft detecting teeth inspection

   1) IG KEY "OFF", ENGINE "OFF".

   2) Disconnect CMPS connector.

   3) Disconnect CMPS.

   4) Check the condition of Cam shaft detecting teeth through CMPS mounting hall.

   5) Is abnormal deformation of Cam shaft detecting teeth found?

      YES

      ▶ Replace Cam shaft assy' or Cylinder head assy' and go to "Verification of Vehicle Repair".

      NO

      ▶ Go to "CMPS waveform Inspection" as follows.

2. CMPS waveform inspection

   1) IG KEY "OFF", ENGINE "OFF".

   2) Connect CMPS connector.

   3) Connect Oscilloscope to CMPS connector terminal 2.

   4) Monitor if CMPS waveform is outputted normally as cranking or turning engine "ON".

Specification : Refer to "Signal waveform & Data" of "General Information".

   5) Is CMPS waveform displayed correctly?

      YES

      ▶ Go to "Verification of Vehicle Repair".

      NO

      ▶ Replace CMPS and go to "Verification of Vehicle Repair".

VERIFICATION OF VEHICLE REPAIR ECC8BF2A

Refer to DTC P0340.

DTC P0381 GLOW INDICATOR LAMP - CIRCUIT MALFUNCTION

GENERAL DESCRIPTION E7427052

Heating combustion chamber, glow plug increases fuel ignitibility and makes fuel in the foggy state easily when engine is cold. Thus, glow plug makes engine starting easily and decreases exhaust gas produced just after turning engine on when engine is cold.ECM controls operation and operating duration of glow plug relay which supplies power to glow plug with ECTS signal, battery voltage and IG KEY ON signal.Through glow lamp in cluster, ECM let drivers know if glow plug is ON.

DTC DESCRIPTION E44CC376

P0381 is set when 1)excessive voltage is detected or 2)no current is detected like open or short to ground in glow lamp control circuit for more than 1 sec. at glow lamp ON condition. This code is due to open in glow lamp control circuit or internal open in filament of glow lamp component.

DTC DETECTING CONDITION E76CEDE3

<table>
<tr><th>Item</th><th colspan="3">Detecting Condition</th><th>Possible Cause</th></tr>
<tr><td>DTC Strategy</td><td colspan="3">• Voltage monitoring</td><td rowspan="6">• Open in glow lamp
• Glow lamp circuit</td></tr>
<tr><td>Enable Conditions</td><td colspan="3">• IG KEY "ON" (monitoring only performed within lamp operating condition)</td></tr>
<tr><td>Threshold Value</td><td colspan="3">• Short to battery
• Short to GND, Wiring open</td></tr>
<tr><td>Diagnostic Time</td><td colspan="3">• 1.0 sec.</td></tr>
<tr><td rowspan="4">Fail Safe</td><td>Fuel cut</td><td>NO</td><td rowspan="4"></td></tr>
<tr><td>EGR Off</td><td>NO</td></tr>
<tr><td>Fuel Limit</td><td>NO</td></tr>
<tr><td>Check Lamp</td><td>NO</td></tr>
</table>

SCHEMATIC DIAGRAM E1655D21

[CIRCUIT DIAGRAM]

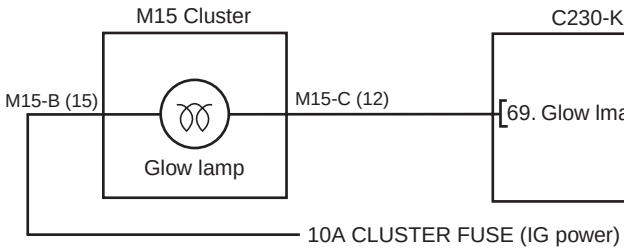

[CONNECTION INFORMATION]

Terminal	Connected to	Function
M15-B terminal 12	C230-K terminal 69	Glow lamp control
M15-C terminal 15	10A CLUSTER FUSE	IG power

[HARNESS CONNECTORS]

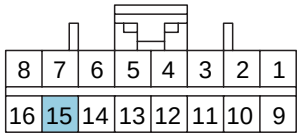

M15-B

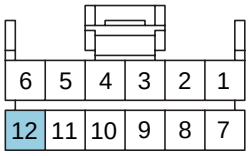

M15-C
Cluster

C230-A

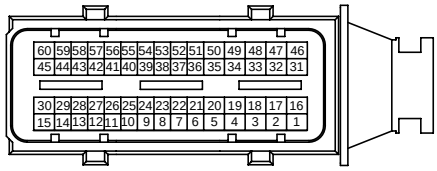

C230-K

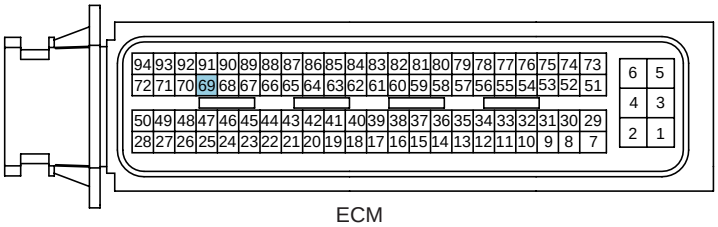

ECM

SCMFL6399L

MONITOR SCANTOOL DATA E2EC6B21

1. Connect Scantool to Data Link Connector (DLC).
2. Warm engine up to normal operating temperature.
3. Turn "OFF" electrical devices and A/C.
4. Select "ACTUATION TEST" parameter on the scantool.

specification : Lamp turns ON at ACTUATION TEST of Glow lamp

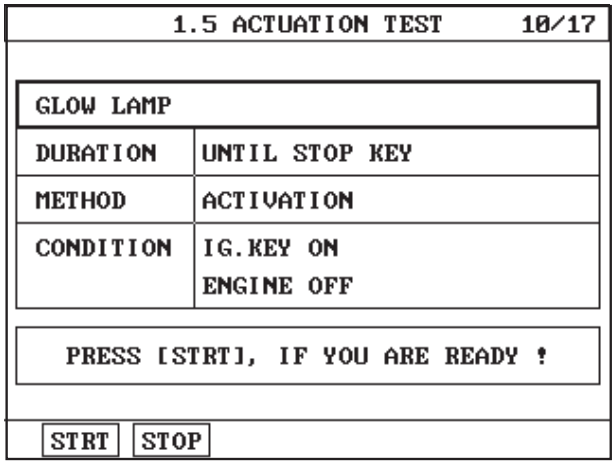

Fig.1

Fig.1) Diagnosing problem is convenient through ACTUATION TEST of glow lamp.

LFIG308A

TERMINAL AND CONNECTOR INSPECTION E8F21B48

1. Electrical systems consist of a lot of harness and connectors, poor connection of terminals can cause various problems and damge of component.

2. Perform checking procedure as follows.

   1) Check damage of harness and terminals : Check terminals for contact resistance, corrosion and deformation.

   2) Check connecting condition of ECM and component connector : Check terminal seperation, damage of locking device and connecting condition between terminal and wiring.

   NOTE

   Disconnect the pin which requires checking at male connector and insert it to the terminal at female connector for checking connecting condition. (after checking, reconnect the pin at correct position.)

3. Is the problem found?

   YES

   ▶ Repair the trouble causing part and go to "Verification of Vehicle Repair".

   NO

   ▶ Go to "Control Circuit Inspection".

CONTROL CIRCUIT INSPECTION E0EB1485

1. Check voltage in control circuit

   1) IG KEY "OFF", ENGINE "OFF".

   2) Disconnect ECM connector .

   3) IG KEY "ON".

   4) Measure the voltage of terminal 69 of ECM connector (C230-K).

Specification : 10.8V~13.0V

5) Is the measured voltage within the specification?

YES

▶ Go to "2. Grounding test of glow lamp control circuit"..

NO

▶ Check open in filament of glow lamp. (Refer to Component Inspection)
▶ Repair open between cluster connector(M15-C) terminal 12 and ECM connecotr(C230-K) terminal 69, and go to "Verification of Vehicle Repair".

2. Grounding test of glow lamp control circuit

1) IG KEY "OFF", ENGINE "OFF".

2) Disconnect ECM connector.

3) IG KEY "ON".

4) Ground ECM connector (C230-K) terminal 69 to chassis ground.

specification : Glow lamp turns ON.

5) Does glow lamp turn ON?

YES

▶ Go to "Verification of Vehicle Repair".

NO

▶ Repair short to battery in glow lamp control circuit and go to "Verification of Vehicle Repair".

COMPONENT INSPECTION E825953E

1. IG KEY "OFF", ENGINE "OFF".
2. Dismount cluster and disconnect glow lamp.
3. Check filament of glow lamp.
4. supply 12V to glow lamp to turn lamp ON.

specification : Lamp turns ON when 12V is supplied.

5. Does glow lamp turn ON?

YES

▶ Go to "Verification of Vehicle Repair".

NO

▶ Replace glow lamp and go to "Verification of Vehicle Repair".

VERIFICATION OF VEHICLE REPAIR EEDF802C

After a repair, it is essential to verify that the fault is corrected.

1. After connecting Scantool select "DIAGNOSTIC TROUBLE CODES(DTCs)" mode.
2. Clear recorded DTC using Scantool.
3. Drive the vehicle within DTC "Enable conditions" in "General information".
4. After selecting "DIAGNOSTIC TROUBLE CODES(DTCs)" mode and check if DTC is recorded again.
5. Are any DTCs recorded ?

YES

▶ Go to the DTC guide of recorded NO. in Scantool.

NO

▶ System operates within specification.

DTC P0489 EXHAUST GAS RECIRCULATION CONTROL CIRCUIT LOW VOLTAGE

COMPONENT LOCATION E3D6B455

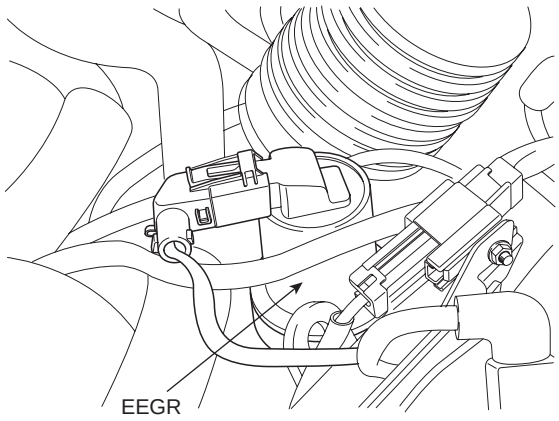

SCMFL6504L

GENERAL DESCRIPTION ED079CFB

Receiving ECM signal, linear solenoid type electronic EGR actuator operates EEGR valve directly.ECM performs EGR system feed back control with the information of measured mass air flow (The role of AFS in diesel engine is different from gasoline engine. Fuel injection quantity is decided by AFS signal in gasoline engine.)When EGR gas(contains no oxygen) flowing into combustion chamber increases, the air passing through AFS(contains oxygen) decreases. Thus, with the output signal change of AFS accompanied by EEGR actuator actuation, ECM determine the amount of recirculated EGR gas quantity.

NOTE

NOx is produced from the reaction of nitrogen and oxygen. Controlling EGR gas(contains no oxyger) which is recirculated to combustion chamber, if least intake air required for complete combustion flows into combustion chamber, NOx decreases because there is no supplementary oxygen to react with nitrogen.

DTC DESCRIPTION EC76B7FA

P0489 is set when ’0’A is detected in EEGR actuator circuit for more than 0.5 sec.. This code is due to open or short to ground in EEGR actuator circuit or internal open in EEGR component.

DTC DETECTING CONDITION E252D1F2

Item	Detecting Condition			Possible Cause
DTC Strategy	• Signal monitoring			• EGR actuator circuit • EGR actuator component
Enable Conditions	• Engine running			
Threshold Value	• short to GND, wiring open			
Diagnostic Time	• 0.5 sec.			
Fail Safe	Fuel cut	NO		
	EGR Off	YES		
	Fuel Limit	NO		
	Check Lamp	NO		

SPECIFICATION ED548F01

EGR actuatorcomponent resistance	EGR actuator operating Hz	EGR actuator operating duty
7.3~ 8.8Ω (30℃)	142Hz	approx.5%(closed)~40%(opened)

SCHEMATIC DIAGRAM EDC91FD1

[CIRCUIT DIAGRAM]

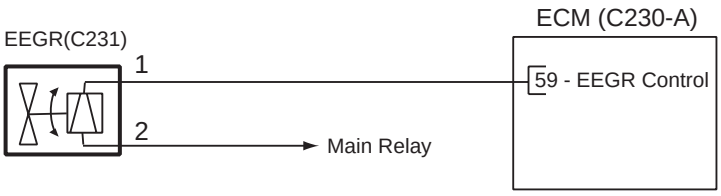

[CONNECTION INFORMATION]

Terminal	Connected to	Function
2	Main Relay	Battery Voltage (B+)
1	ECM C230-A (59)	EEGR Control

[HARNESS CONNECTORS]

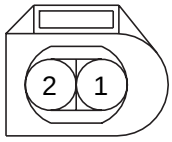

C231

EEGR

C230-A

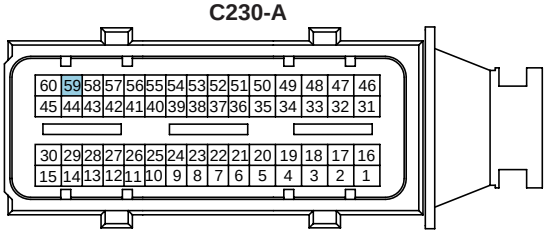

C230-K

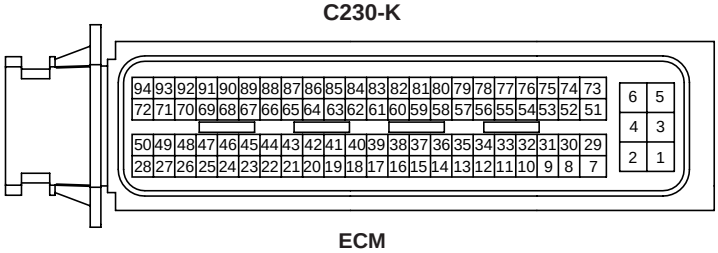

ECM

SCMFL6130L

SIGNAL WAVEFORM AND DATA EC4F06EA

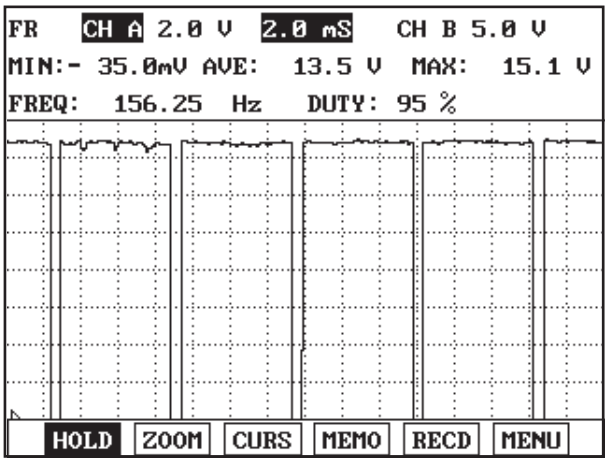

Fig.1

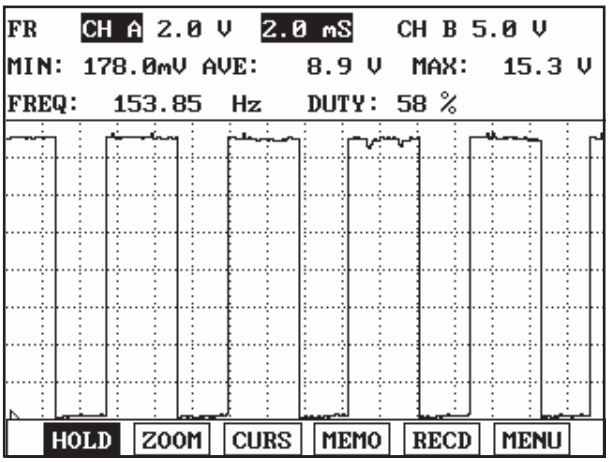

Fig.2

Fig.1) Approx. 5% duty((-)duty) signal waveform of EEGR actuator (with EEGR valve closed)
Fig.2) Approx. 40% duty((-)duty) signal waveform of EEGR actuator(with EEGR valve opened)

SCMFL6285L

NOTE

The output of approx. 5% duty is mainly for the diagnosis of EEGR actuator circuit than actuating EEGR.

MONITOR SCANTOOL DATA E29AB5B5

1. Connect Scantool to Data Link Connector (DLC).
2. Warm engine up to normal operating temperature.
3. Turn "OFF" electrical devices and A/C.
4. Monitor "AIR MASS PERCYLINDER" parameter on the Scantool.

Specification : When EEGR actuator does not operate 5% duty) at idle : 450mg/st ± 50 mg/st
When EEGR actuator operates(Approx. 45% duty) at idle : 400mg/st ± 50 mg/st

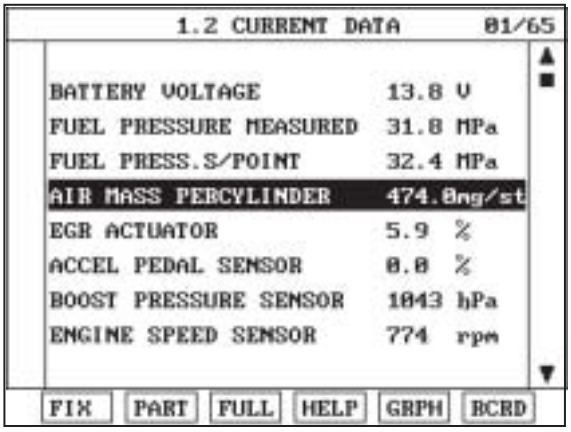

Fig.1

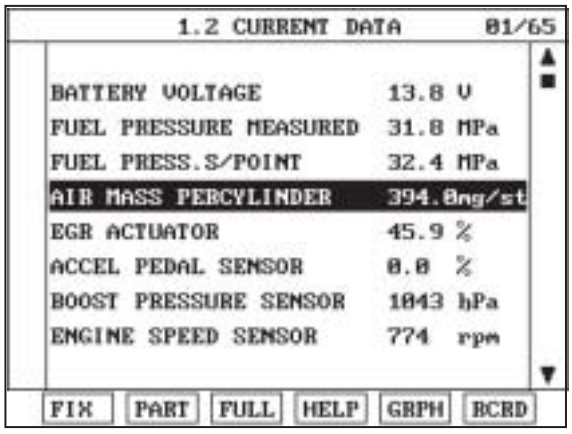

Fig.2

Fig.1) Check if "AIR MASS PERCYLINDER"l is 450mg/st ± 50mg/st without EEGR operation at warm idle (EEGR actuator 5% duty)
Fig.2) Check if "AIR MASS PERCYLINDER"l is 400mg/st ± 50mg/st with EEGR operation at warm idle (EEGR actuator approx. 45% duty)

SCMFL6391L

※EEGR actuator operates as decelerating after rapid acceleration when idle EEGR does not operate, EEGR actuator duty rises to approx. 45% at operating condition. This controlling process lasts for about 3 min. then EEGR actuator turns "OFF" (duty 5%).

NOTE

duty rises to approx. 45% at operating condition. This controlling process lasts for about 3 min. then EEGR actuator turns "OFF" (duty 5%).

TERMINAL AND CONNECTOR INSPECTION E42512D6

1. Electrical systems consist of a lot of harness and connectors, poor connection of terminals can cause various problems and damge of component.

2. Perform checking procedure as follows.

   1) Check damage of harness and terminals : Check terminals for contact resistance, corrosion and deformation.

   2) Check connecting condition of ECM and component connector : Check terminal seperation, damage of locking device and connecting condition between terminal and wiring.

NOTE

Disconnect the pin which requires checking at male connector and insert it to the terminal at female connector for checking connecting condition. (after checking, reconnect the pin at correct position.)

3. Is the problem found?

YES

▶ Repair the trouble causing part and go to "Verification of Vehicle Repair".

NO

▶ Go to "Power Circuit Inspection".

POWER CIRCUIT INSPECTION E8BFDA17

1. Check power circuit voltage

   1) IG KEY "OFF", ENGINE "OFF"

   2) Disconnect EGR actuator connector

   3) IG KEY "ON"

   4) Measure the voltage of terminal 2 of EGR actuator connector.

Specification : 11.5V~13.0V

   5) Is the measured voltage within the specification?

   YES

   ▶ Go to "Control Circuit Inspection".

   NO

   ▶ Repair E/R FUSE & RELAY BOX 15A SENSOR #2 FUSE and related circuit and go to "Verification of Vehicle Repair".

CONTROL CIRCUIT INSPECTION E44292FB

1. Check control circuit monitoring voltage

   1) IG KEY "OFF", ENGINE "OFF"

   2) Disconnect EGR actuator connector.

   3) IG KEY "ON"

   4) Measure the voltage of terminal 1 of EGR actuator connector.

Specification : 3.2V~3.7V

   5) Is the measured voltage within the specification?

   YES

   ▶ Go to "Component Inspection".

   NO

   ▶ When voltage is not detected : Go to "2. Check open in control circuit" as follows.
   ▶ When high voltage is detected : Repair short to battery and go to "Verification of Vehicle Repair".

2. Check open in control circuit

   1) IG KEY "OFF", ENGINE "OFF"

   2) Disconnect EGR actuator connector and ECM connector

   3) Check continuity between EGR actuator terminal 1 and ECM connector (C230-A) terminal 59.

specification : Continuity (below 1.0Ω)

4) Is the measured resistance within the specification?

YES

▶ Repair short to ground and go to "Verification of Vehicle Repair".

NO

▶ Repair open in control circuit and go to "Verification of Vehicle Repair".

COMPONENT INSPECTION E80FEECF

1. Check EGR actuator component resistance

   1) IG KEY "OFF", ENGINE "OFF".

   2) Disconnect EGR actuator.

   3) Measure the resistance between EGR actuator component terminal 1 and 2.

Specification : 7.3~ 8.8Ω (30℃)

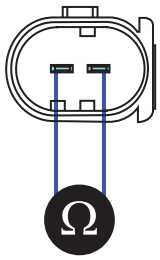

LFIG418A

   4) Is EEGR actuator component resistance within the specification?

YES

▶ Go to "Verification of Vehicle Repair".

NO

▶ Replace EEGR actuator and go to "Verification of Vehicle Repair".

VERIFICATION OF VEHICLE REPAIR E6753BE9

After a repair, it is essential to verify that the fault is corrected.

1. After connecting Scantool select "DIAGNOSTIC TROUBLE CODES(DTCs)" mode.
2. Clear recorded DTC using Scantool.
3. Drive the vehicle within DTC "Enable conditions" in "General information".
4. After selecting "DIAGNOSTIC TROUBLE CODES(DTCs)" mode and check if DTC is recorded again.

5. Are any DTCs recorded ?

YES

▶ Go to the DTC guide of recorded NO. in Scantool.

NO

▶ System operates within specification.

DTC P0490 EXHAUST GAS RECIRCULATION CONTROL CIRCUIT HIGH VOLTAGE

COMPONENT LOCATION E92CCACE

Refer to DTC P0489.

GENERAL DESCRIPTION E26B51E6

Refer to DTC P0489.

DTC DESCRIPTION E9FEBBF5

P0490 is set when excessive current is detected in EEGR actuator circuit for more than 0.5 sec.. This code is due to short to battery in EEGR actuator control circuit or internal short in EEGR component.

DTC DETECTING CONDITION EEEBC657

<table>
<tr><th>Item</th><th colspan="3">Detecting Condition</th><th>Possible Cause</th></tr>
<tr><td>DTC Strategy</td><td colspan="3">• Signal monitoring</td><td rowspan="6">• EGR actuator circuit
• EGR actuator component</td></tr>
<tr><td>Enable Conditions</td><td colspan="3">• Engine running</td></tr>
<tr><td>Threshold Value</td><td colspan="3">• Short to battery</td></tr>
<tr><td>Diagnostic Time</td><td colspan="3">• 0.5 sec.</td></tr>
<tr><td rowspan="4">Fail Safe</td><td>Fuel cut</td><td>NO</td><td rowspan="4"></td></tr>
<tr><td>EGR Off</td><td>YES</td></tr>
<tr><td>Fuel Limit</td><td>NO</td></tr>
<tr><td>Check Lamp</td><td>NO</td></tr>
</table>

SPECIFICATION EE90B70B

Refer to DTC P0489.

SCHEMATIC DIAGRAM E2FE5EE9

Refer to DTC P0489.

SIGNAL WAVEFORM AND DATA E71CE5C0

Refer to DTC P0489.

MONITOR SCANTOOL DATA E7A64DBB

Refer to DTC P0489.

TERMINAL AND CONNECTOR INSPECTION E97F6D2D

Refer to DTC P0489.

POWER CIRCUIT INSPECTION E5791A48

1. Check power circuit voltage

   1) IG KEY "OFF", ENGINE "OFF"

   2) Disconnect EGR actuator connector

   3) IG KEY "ON"

   4) Measure the voltage of terminal 2 of EGR actuator connector.

Specification : 11.5V~13.0V

   5) Is the measured voltage within the specification?

   YES

   ▶ Go to "Control Circuit Inspection".

   NO

   ▶ Repair E/R FUSE & RELAY BOX 15A SENSOR #2 FUSE and related circuit and go to "Verification of Vehicle Repair".

CONTROL CIRCUIT INSPECTION EAE2BD4A

1. Check control circuit monitoring voltage

   1) IG KEY "OFF", ENGINE "OFF"

   2) Disconnect EGR actuator connector.

   3) IG KEY "ON"

   4) Measure the voltage of terminal 1 of EGR actuator connector.

Specification : 3.2V~3.7V

   5) Is the measured voltage within the specification?

   YES

   ▶ Go to "Component Inspection".

   NO

   ▶ When voltage is not detected : Go to "2. Check open in control circuit" as follows.
   ▶ When high voltage is detected : Repair short to battery and go to "Verification of Vehicle Repair".

2. Check open in control circuit

   1) IG KEY "OFF", ENGINE "OFF"

   2) Disconnect EGR actuator connector and ECM connector

   3) Check continuity between EGR actuator terminal 1 and ECM connector (C230-A) terminal 59.

specification : Continuity (below 1.0Ω)

4) Is the measured resistance within the specification?

YES

▶ Repair short to ground and go to "Verification of Vehicle Repair".

NO

▶ Repair open in control circuit and go to "Verification of Vehicle Repair".

COMPONENT INSPECTION E712E587

1. Check EGR actuator component resistance

1) IG KEY "OFF", ENGINE "OFF".

2) Disconnect EGR actuator.

3) Measure the resistance between EGR actuator component terminal 1 and 2.

Specification : 7.3~ 8.8Ω (30℃)

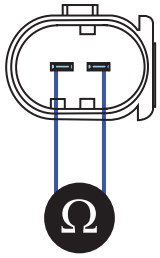

LFIG418A

4) Is EEGR actuator component resistance within the specification?

YES

▶ Go to "Verification of Vehicle Repair".

NO

▶ Replace EEGR actuator and go to "Verification of Vehicle Repair".

VERIFICATION OF VEHICLE REPAIR E932B6BA

Refer to DTC P0489.

DTC P0501 VEHICLE SPEED SENSOR A RANGE/PERFORMANCE

COMPONENT LOCATION EF2D198E

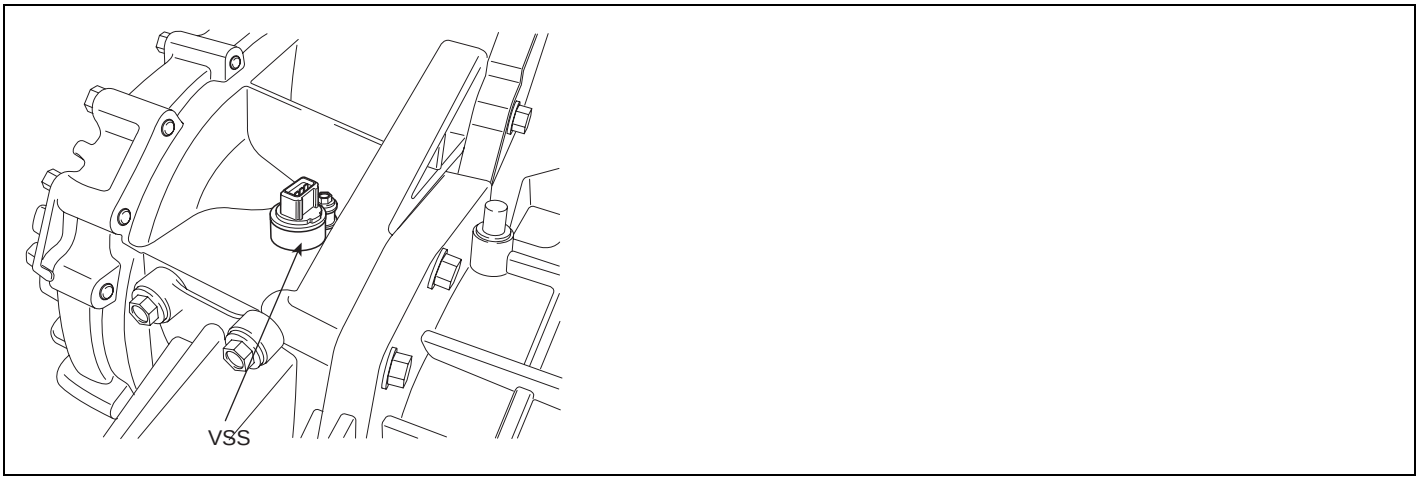

SCMFL6505L

GENERAL DESCRIPTION E6CA14C8

Vehicle Speed Sensor(VSS) is hall sensor type and senses the rotating speed of differential gear mounted on transaxle.Comparing engine speed with vehicle speed calculated based on vehicle speed sensor signal, ECM recognizes engaged gear. And based on the information about engaged gear, ECM performs optimum fuel injection quantity correction. VSS signal is also used in speed meter of cluster, ETACS(or BCM), aircon control module, navigation system, etc.

DTC DESCRIPTION E93D55D0

P0501 is set when vehicle speed below 15Km/h is detected for more than 1 sec. at above 3500RPM and above 38.25 mg/hub of fuel injection quantity

DTC DETECTING CONDITION EB992519

<table>
<tr><th>Item</th><th colspan="3">Detecting Condition</th><th>Possible Cause</th></tr>
<tr><td>DTC Strategy</td><td colspan="3">• Signal monitoring</td><td rowspan="7">• Vehicle speed sensor circuit
• Vehicle speed sensor component</td></tr>
<tr><td>Enable Conditions</td><td colspan="3">• Engine running</td></tr>
<tr><td>Threshold Value</td><td colspan="3">• When vehicle speed below 15Km/h is detected for more than 1.0 sec. at above 3500RPM and above 38.25 mg/hub of fuel injection quantity.</td></tr>
<tr><td>Diagnostic Time</td><td colspan="3">• Refer to threshold Value</td></tr>
<tr><td rowspan="4">Fail Safe</td><td>Fuel cut</td><td>NO</td><td rowspan="4"></td></tr>
<tr><td>EGR Off</td><td>NO</td></tr>
<tr><td>Fuel Limit</td><td>NO</td></tr>
<tr><td>Check Lamp</td><td>NO</td></tr>
</table>

SPECIFICATION EDB7381D

Sensing Type	LOW Signal Voltage	HIGH Signal Voltage	Signal Duty
Hall sensor type	below 1.5V	above 3.5V	50±5%

SCHEMATIC DIAGRAM E9F53019

[CIRCUIT DIAGRAM]

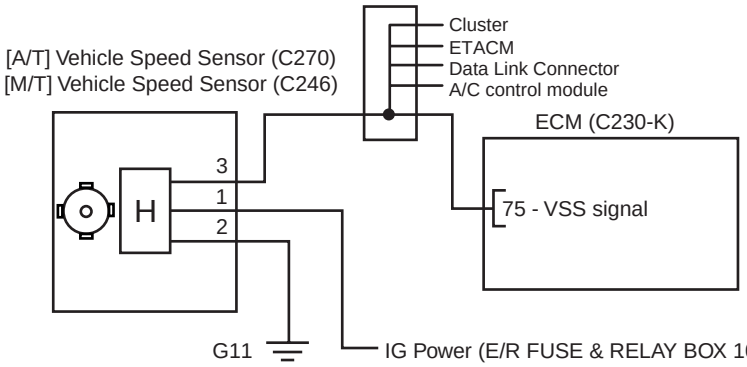

[CONNECTOR INFORMATION]

Terminal	Connected to	Function
1	U/H-C terminal 13	IG Power
2	G11 ground point	Chassis Ground
3	ECM C230-K (75)	VSS signal

[HARNESS CONNECTOR]

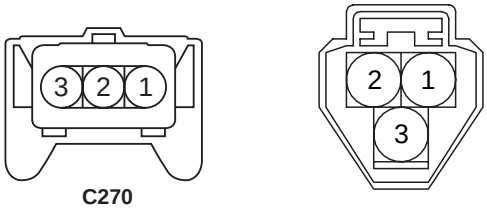

C270
VSS [A/T]

C246
VSS [M/T]

C230-A

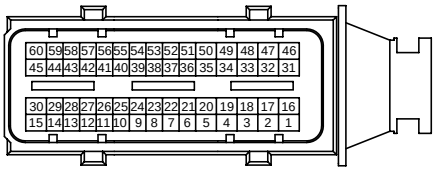

C230-K

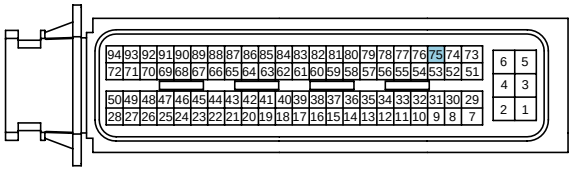

ECM

SCMFL6400L

SIGNAL WAVEFORM AND DATA ECE31503

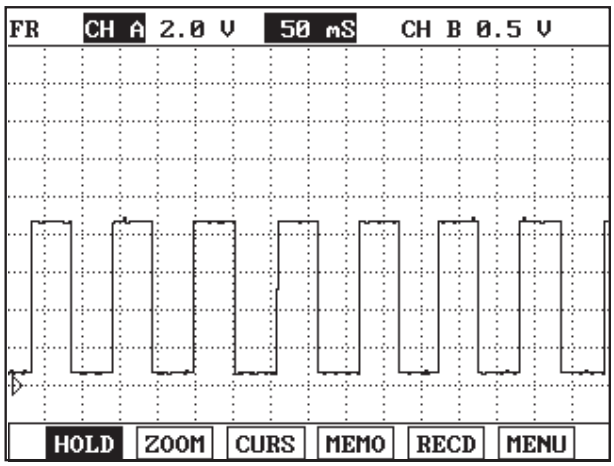

Fig.1

Fig.1) This is the signal waveform of vehicle speed sensor. Digital waveform, LOW 0.8V, HIGH : 10V with 50% duty is outputted. ECM detects vehicle speed, sensing this ON-OFF period (Hz).

LFIG432A

MONITOR SCANTOOL DATA EAB7AE87

1. Connect Scantool to Data Link Connector (DLC).
2. Warm engine up to normal operating temperature.
3. Turn "OFF" electrical devices and A/C.
4. Monitor "VEHICLE SPEED SENSOR " parameter on the Scantool.

specification : current vehicle speed is displayed.

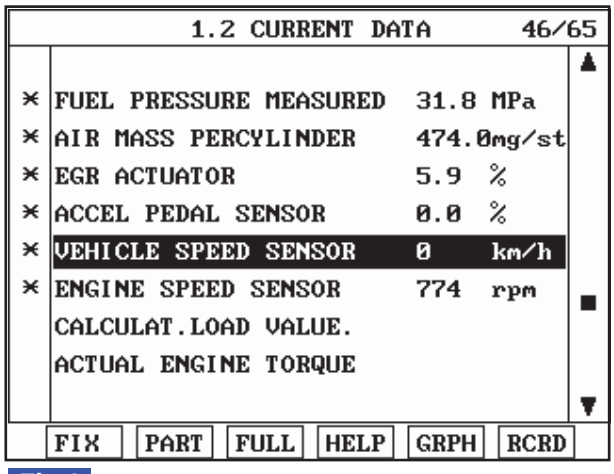

Fig.1

Fig.1) Check if current vehicle speed is same as vehicle speed displayed on the Scantool.

SCMFL6289L

TERMINAL AND CONNECTOR INSPECTION E3727CDC

1. Electrical systems consist of a lot of harness and connectors, poor connection of terminals can cause various problems and damge of component.

2. Perform checking procedure as follows.

   1) Check damage of harness and terminals : Check terminals for contact resistance, corrosion and deformation.

   2) Check connecting condition of ECM and component connector : Check terminal seperation, damage of locking device and connecting condition between terminal and wiring.

   NOTE

   Disconnect the pin which requires checking at male connector and insert it to the terminal at female connector for checking connecting condition. (after checking, reconnect the pin at correct position.)

3. Is the problem found?

   YES

   ▶ Repair the trouble causing part and go to "Verification of Vehicle Repair".

   NO

   ▶ Go to "Power Circuit Inspection".

POWER CIRCUIT INSPECTION E11C8A07

1. Check power circuit voltage

   1) IG KEY "OFF", ENGINE "OFF"

   2) Disconnect Vehicle Speed Sensor connector.

   3) IG KEY "ON"

   4) Measure the voltage of VSS connector terminal 1.

Specification : 11.5V~13.0V

   5) Is the measured voltage within the specification?

      YES

      ▶ Go to "Signal Circuit Inspection".

      NO

      ▶ Repair E/R FUSE & RELAY BOX 10A ECU FUSE and related circuit, and go to "Verification of Vehicle Repair".

SIGNAL CIRCUIT INSPECTION E7B8598C

1. IG KEY "OFF", ENGINE "OFF"
2. Disconnect VSS connector.
3. IG KEY "ON"
4. Measure the voltage of VSS connector terminal 3.

Specification : 8.0V~11.5V

5. Is the measured voltage within the specification?

YES

▶ Go to "Ground Circuit Inspection".

NO

▶ Repair poor connection or open between VSS connector terminal 3 and ECM connector(C230-K) terminal 75, and go to "Verification of Vehicle Repair".

GROUND CIRCUIT INSPECTION E8B95D68

1. IG KEY "OFF", ENGINE "OFF"
2. Disconnect VSS connector.
3. IG KEY "ON"
4. Measure the voltage of VSS connector terminal 3. [TEST "A"]
5. Measure the voltage between VSS connector terminal 3 and 2. [TEST "B"]
   (terminal 3 : Check + prove , terminal 2 : Check - prove)

Specification : [TEST "A"] Voltage - [TEST "B"] Voltage = below 200mV

6. Is the measured voltage within the specification?

YES

▶ Go to "Component Inspection".

NO

▶ When "B" voltage is not detected : Repair open in ground circuit and go to "Verification of Vehicle Repair".
▶ When the voltage difference between "A" and "B" is above 200mV : Eliminate the causes of excessive resistance and go to "Verification of Vehicle Repair".

COMPONENT INSPECTION E9450E59

1. IG KEY "OFF", ENGINE "OFF".
2. Disconnect VSS connector.
3. Disconnect VSS and Driven gear assy'.
4. Check rotating state of VSS driven gear.
5. Connect VSS connector and IG KEY "ON".
6. Rotate Driven gear with hand.

Specification : Vehicle Speed Signal generates.

7. Does vehicle speed signal generate?

YES

▶ Go to "Verification of Vehicle Repair".

NO

▶ Replace vehicle speed sensor and go to "Verification of Vehicle Repair".

VERIFICATION OF VEHICLE REPAIR EF4A4254

After a repair, it is essential to verify that the fault is corrected.

1. After connecting Scantool select "DIAGNOSTIC TROUBLE CODES(DTCs)" mode.
2. Clear recorded DTC using Scantool.
3. Drive the vehicle within DTC "Enable conditions" in "General information".
4. After selecting "DIAGNOSTIC TROUBLE CODES(DTCs)" mode and check if DTC is recorded again.
5. Are any DTCs recorded ?

YES

▶ Go to the DTC guide of recorded NO. in Scantool.

NO

▶ System operates within specification.

DTC P0504 BRAKE SWITCH "A"/"B" CORRELATION

GENERAL DESCRIPTION E54A7148

Brake switch is connected to brake pedal and transmits brake operating state to ECM.When the output signal of APS is higher than what driver intended during driving (e.g. short to high voltage line in APS circuit, false signal), driver depresses brake pedal.Like this, if driver's decelerating intension is transmitted to ECM (break pedal depressed)when APS output voltage is high, ECM recognizes APS trouble and Limp Home mode is activated.At Limp Home mode, engine speed is fixed at approx. 1000RPM and engine power generation is limitted.Even at Limp home mode, if correct APS signal is detected, Limp Home mode is deactivated. Brake switch, which monitors proper operation of APS, is devided 1 and 2 for the fidelity of brake switch.

DTC DESCRIPTION EC47044E

When brake switch operates correctly, switch 1 is OFF and switch 2 is ON when releasing brake pedal, while switch 1 is ON and switch 2 is OFF when depressing brake pedal. thus when the signal from a switch is different from the other's, brake switch is in good condition. When the signal from a switch is same as the other's, brake switch is fault.

DTC DETECTING CONDITION E3E7B167

<table>
<tr><th>Item</th><th colspan="3">Detecting Condition</th><th>Possible Cause</th></tr>
<tr><td>DTC Strategy</td><td colspan="3">• Signal monitoring</td><td rowspan="6">• Brake switch component
• Abnormal brake pedal height
• Brake switch circuit</td></tr>
<tr><td>Enable Conditions</td><td colspan="3">• IG KEY "ON"</td></tr>
<tr><td>Threshold Value</td><td colspan="3">• Wiring(ECM C230-K terminal 38,80) open or short</td></tr>
<tr><td>Diagnostic Time</td><td colspan="3">• 180 sec.</td></tr>
<tr><td rowspan="4">Fail Safe</td><td>Fuel cut</td><td>NO</td><td rowspan="4">• Cruise control inhibited</td></tr>
<tr><td>EGR Off</td><td>NO</td></tr>
<tr><td>Fuel Limit</td><td>NO</td></tr>
<tr><td>Check Lamp</td><td>NO</td></tr>
</table>

SPECIFICATION EB1C8246

Condition	Brake Pedal Released		Brake Pedal Depressed	
switch state	Switch 1	Switch 2	Switch 1	Switch 2
	Opened	Closed	Closed	Opened

SCHEMATIC DIAGRAM EA387AD9

[CIRCUIT DIAGRAM]

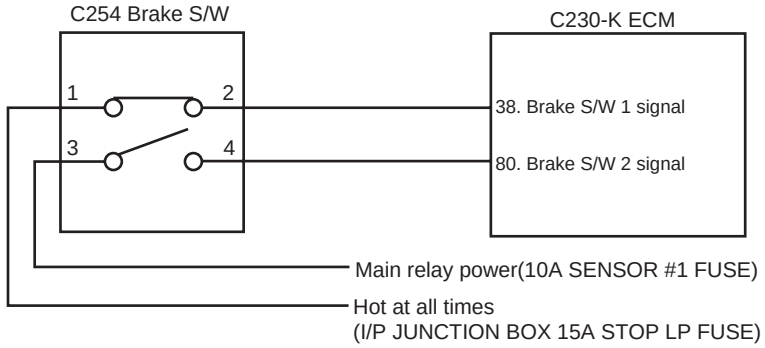

[CONNECTOR INFORMATION]

Terminal	Connected to	Function
1	15A STOP LP FUSE	Hot at all times
2	C230-K terminal 38	Brake S/W 1 signal
3	10A SENSOR #1 FUSE	Main relay power
4	C230-K terminal 80	Brake S/W 2 signal

[HARNESS CONNECTOR]

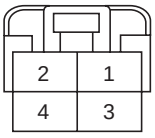

Brake S/W
C254

C230-A

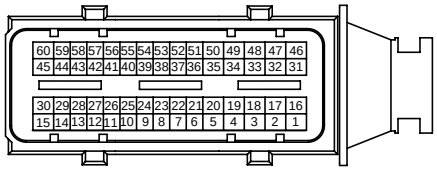

C230-K

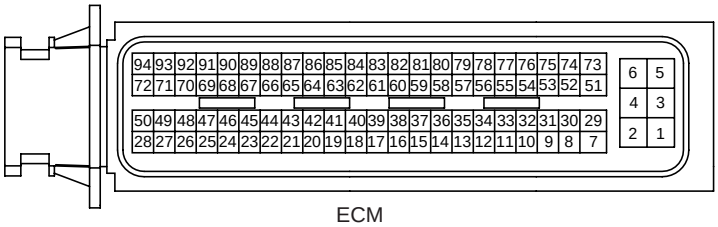

ECM

SCMFL6401L

SIGNAL WAVEFORM AND DATA EF4BE3CA

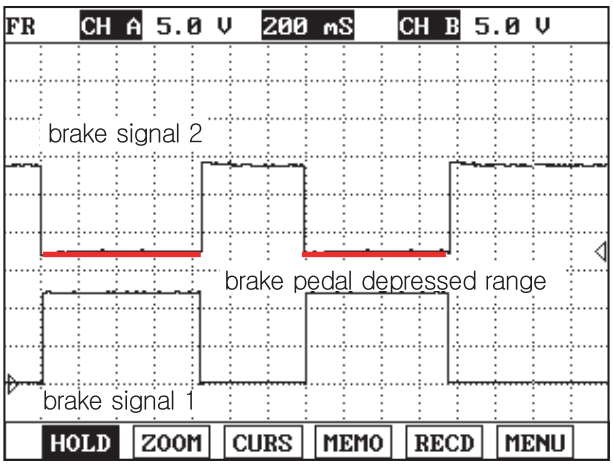

Fig.1

Fig.1) The waveform of brake signal 1 and 2 are measured simultaneously. Both waveforms are symmetrical.

LFIG313A

MONITOR SCANTOOL DATA E36704C3

1. Connect Scantool to Data Link Connector (DLC).
2. Warm engine up to normal operating temperature.
3. Turn "OFF" electrical devices and A/C.
4. Monitor "BRAKE SWITCH" and "REDUNDANT BRAKE SWITCH" parameter on the Scantool.

specification : When brake pedal is released : "BRAKE SWITCH" and "REDUNDANT BRAKE SWITCH" : OFF
When brake pedal is depressed : "BRAKE SWITCH" and "REDUNDANT BRAKE SWITCH" : ON

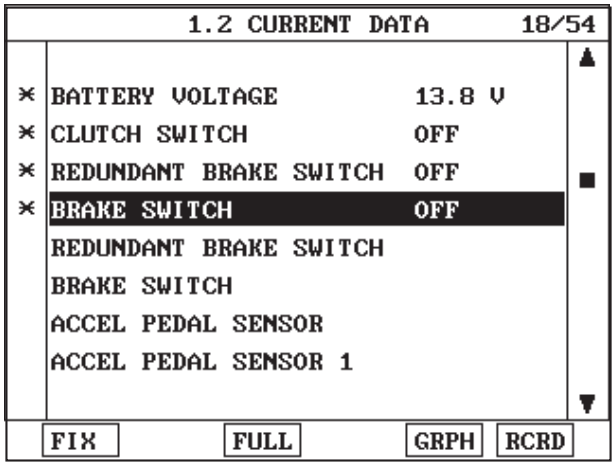

Fig.1

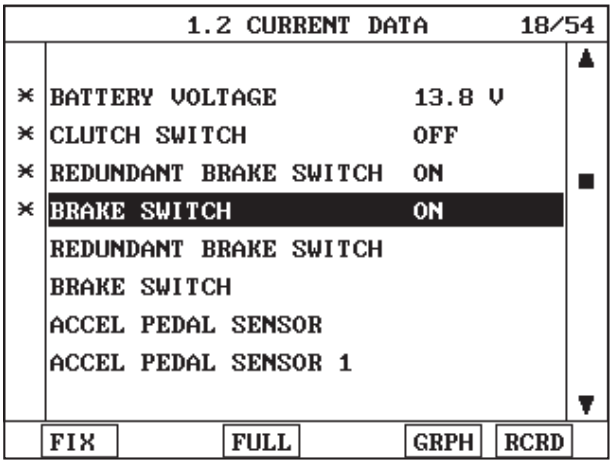

Fig.2

Fig.1) Data when brake switch(brake pedal) is deactivated(released) :
"BRAKE SWITCH" and "REDUNDANT BRAKE SWITCH" : OFF
Fig.2) Data when brake switch(brake pedal) is activated(depressed) :
"BRAKE SWITCH" and "REDUNDANT BRAKE SWITCH" : ON

LFIG314A

TERMINAL AND CONNECTOR INSPECTION E989CFB5

1. Electrical systems consist of a lot of harness and connectors, poor connection of terminals can cause various problems and damge of component.
2. Perform checking procedure as follows.
   1) Check damage of harness and terminals : Check terminals for contact resistance, corrosion and deformation.
   2) Check connecting condition of ECM and component connector : Check terminal seperation, damage of locking device and connecting condition between terminal and wiring.

NOTE

Disconnect the pin which requires checking at male connector and insert it to the terminal at female connector for checking connecting condition. (after checking, reconnect the pin at correct position.)

3. Is the problem found?

YES

▶ Repair the trouble causing part and go to "Verification of Vehicle Repair".

NO

▶ Go to "Power Circuit Inspection".

POWER CIRCUIT INSPECTION E369C6F6

1. Check brake switch 1 "HOT AT ALL TIMES"

   1) IG KEY "OFF", ENGINE "OFF".

   2) Disconnect brake switch connector.

   3) Measure the voltage of terminal 1 of brake switch connector.

Specification : 11.5V~13.0V

   4) Is the measured voltage within the specification?

   YES

   ▶ Go to "2.Check brake switch 2 main relay power" as follows.

   NO

   ▶ Repair I/P JUNCTION BOX 15A STOP LP FUSE and related circuit and go to "Verification of Vehicle Repair".

2. Check brake switch 2 main relay power

   1) IG KEY "OFF", ENGINE "OFF".

   2) Disconnect brake switch connector.

   3) IG KEY "ON".

   4) Measure the voltage of brake switch connector terminal 3.

Specification : 11.5V~13.0V

   5) Is the measured voltage within the specification?

   YES

   ▶ Go to "Signal Circuit Inspection".

   NO

   ▶ Repair E/R FUSE & RELAY BOX 10A SENSOR #1 FUSE and related circuit and go to "Verification of Vehicle Repair".

SIGNAL CIRCUIT INSPECTION EBEAD6E4

1. Check brake switch signal circuit voltage

   1) IG KEY "OFF", ENGINE "OFF".

   2) Disconnect ECM connector with brake switch connector connected.

   3) Disconnect E/R FUSE & RELAY BOX main relay, connect main relay terminal 1 and 5 using jump wire.

   4) Measure the voltage of ECM connector (C230-K) terminals 38 and 80 as depressing brake pedal.

SPECIFICATION :

	Brake Pedal Released	Brake Pedal Depressed
Brake switch 1 (terminal 38)	0.0V~0.1V	11.5V~13.0V
Brake switch 2 (terminal 80)	11.5V~13.0V	0.0V~0.1V

5) Is the measured voltage within the specification?

YES

▶ Go to "2. Check open in signal circuit".

NO

▶ Go to "Component Inspection".

2. Check open in signal circuit

1) IG KEY "OFF", ENGINE "OFF".

2) Disconnect brake switch connector and ECM connector.

3) Check continuity between brake switch connector terminal 2 and ECM connector (C230-K) terminal 38. (brake switch 1 circuit)

4) Check continuity between brake switch connector terminal 4 and ECM connector (C230-K) terminal 80. (brake switch 2 circuit)

specification : Continuity (below 1.0Ω)

5) Is the measured resistance within the specification?

YES

▶ Repair short in signal circuit and go to "Verification of Vehicle Repair".

NO

▶ Repair open in signal circuit and go to "Verification of Vehicle Repair".

COMPONENT INSPECTION E5469650

1. IG KEY "OFF", ENGINE "OFF".
2. Disconnect brake switch connector.
3. Check continuity between brake switch component terminal 1and 2 as depressing brake pedal. (brake switch 1)
4. Check continuity between brake switch component terminal 3and 4 as depressing brake pedal. (brake switch 2)

SPECIFICATION :

Brake Pedal Released		Brake Pedal Depressed	
Switch 1	**Switch 2**	**Switch 1**	**Switch 2**
Discontinuity	Continuity	Continuity	Discontinuity

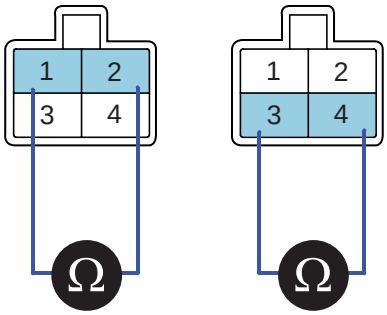

EGNG004B

5. Does brake switch operate correctly?

YES

▶ Go to "Verification of Vehicle Repair".

NO

▶ Unless any problem is detected after checking height of brake pedal, replace brake switch component and go to "Verification of Vehicle Repair".

VERIFICATION OF VEHICLE REPAIR E38D2612

After a repair, it is essential to verify that the fault is corrected.

1. After connecting Scantool select "DIAGNOSTIC TROUBLE CODES(DTCs)" mode.
2. Clear recorded DTC using Scantool.
3. Drive the vehicle within DTC "Enable conditions" in "General information".
4. After selecting "DIAGNOSTIC TROUBLE CODES(DTCs)" mode and check if DTC is recorded again.
5. Are any DTCs recorded ?

YES

▶ Go to the DTC guide of recorded NO. in Scantool.

NO

▶ System operates within specification.

DTC P0532 A/C REFRIGERANT PRESSURE SENSOR "A" CIRCUIT LOW INPUT

COMPONENT LOCATION E567B01B

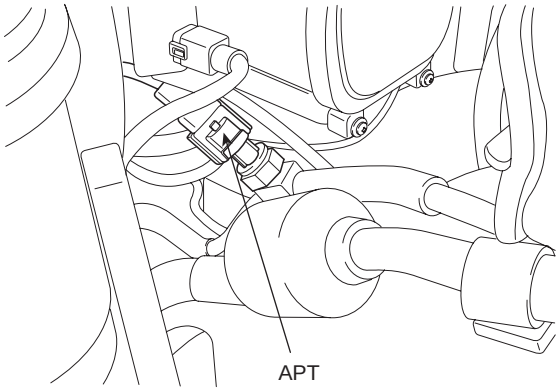

SCMFL6506L

GENERAL DESCRIPTION E0804A39

A/C pressure transducer consists of piezoelectric element and it detects aircon refrigerant pressure. Piezoeletric type is more advantageous to obtain linear data of pressure than existing switch type. Thus, optimum control of aircon compressor and fan is realized and improved fuel efficiency follows with it.

DTC DESCRIPTION E1FD20AE

P0532 is set when the voltage below 0.18V - minimum voltage of A/C pressure transducer signal - is detected for more than 0.6 sec.. This code is due to 1) open in power circuit or 2) open or short to ground in signal circuit of A/C pressure transducer.

DTC DETECTING CONDITION E4D0AD11

<table>
<tr><th>Item</th><th colspan="3">Detecting Condition</th><th>Possible Cause</th></tr>
<tr><td>DTC Strategy</td><td colspan="3">• Voltage monitoring</td><td rowspan="8">• A/C pressure transducer circuit
• A/C pressure transducer component</td></tr>
<tr><td>Enable Conditions</td><td colspan="3">• IG KEY "ON"</td></tr>
<tr><td>Threshold Value</td><td colspan="3">• When output voltage is below the minimum value (below 0.18V)</td></tr>
<tr><td>Diagnostic Time</td><td colspan="3">• 0.6 sec.</td></tr>
<tr><td rowspan="4">Fail Safe</td><td>Fuel cut</td><td>NO</td><td rowspan="4">• A/C pressure fixed at 50 hPa</td></tr>
<tr><td>EGR Off</td><td>NO</td></tr>
<tr><td>Fuel Limit</td><td>NO</td></tr>
<tr><td>Check Lamp</td><td>NO</td></tr>
</table>

SPECIFICATION EF7D07B1

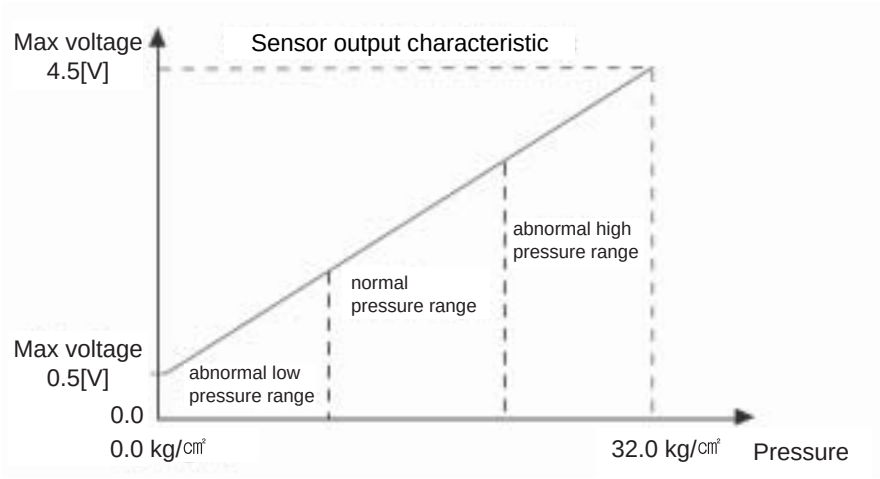

LFIG438A

SCHEMATIC DIAGRAM EA3F8DFC

[CIRCUIT DIAGRAM]

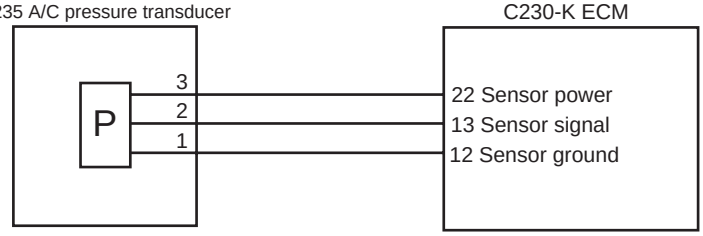

[CONNECTOR INFORMATION]

Terminal	Connected to	Function
1	C230-K terminal 12	Sensor ground
2	C230-K terminal 13	Sensor signal
3	C230-K terminal 22	Sensor power

[HARNESS CONNECTOR]

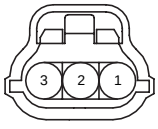

A/C pressure transducer
C235

C230-A

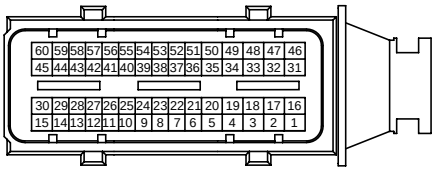

C230-K

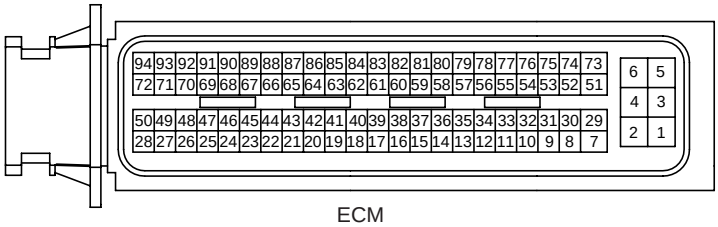

ECM

SCMFL6402L

SIGNAL WAVEFORM AND DATA EA9D3A88

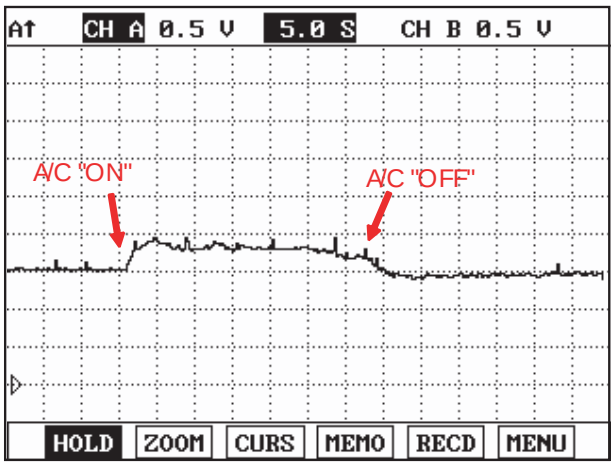

Fig.1

Fig.1) Waveform of A/C pressure transducer in accordance with aircon operation.(aircon compressor operation)

LFIG440A

NOTE

Output signal(voltage) changes in accordance with the amount of refrigerant and the change of weather. Check if normal pressure change occurs in accordance with aircon compressor operation at normal pressure range shown in "Specification".

MONITOR SCANTOOL DATA E0034705

1. Connect Scantool to Data Link Connector (DLC).
2. Warm engine up to normal operating temperature.
3. Turn "OFF" electrical devices and A/C.
4. Monitor " A/C PRESSURE SENSOR " parameter on the scantool.

Specification : A/C "OFF" : 1200mV~1800mV
A/C "ON" : higher than A/C "OFF" pressure by more than 500mV

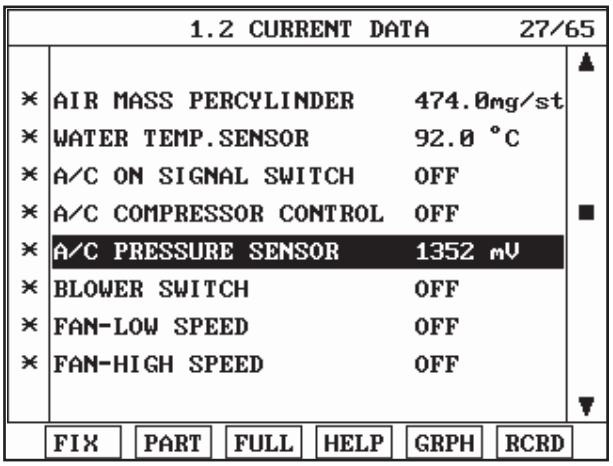

Fig.1

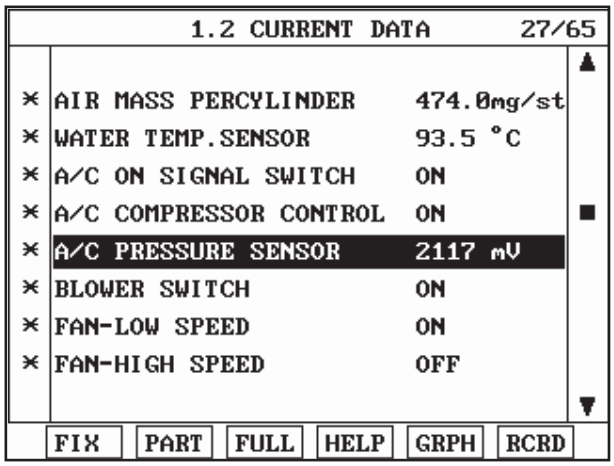

Fig.2

Fig.1) Data at idle and aircon "OFF", Aircon pressure sensor output voltage is 1352mV.
Fig.2) Data at idle and aircon "ON". Aircon pressure sensor output voltage increases as aircon compressor operates.
※ A/C Pressure sensor transducer voltage varies too much, therefore do not concern too much about the figure instead, check the rising tendancy of A/C Pressure transducer.

SCMFL6297L

TERMINAL AND CONNECTOR INSPECTION E93E9DD3

1. Electrical systems consist of a lot of harness and connectors, poor connection of terminals can cause various problems and damge of component.

2. Perform checking procedure as follows.

   1) Check damage of harness and terminals : Check terminals for contact resistance, corrosion and deformation.

   2) Check connecting condition of ECM and component connector : Check terminal seperation, damage of locking device and connecting condition between terminal and wiring.

   NOTE

   Disconnect the pin which requires checking at male connector and insert it to the terminal at female connector for checking connecting condition. (after checking, reconnect the pin at correct position.)

3. Is the problem found?

   YES

   ▶ Repair the trouble causing part and go to "Verification of Vehicle Repair".

   NO

   ▶ Go to "Power Circuit Inspection".

POWER CIRCUIT INSPECTION E99A2654

1. IG KEY "OFF", ENGINE "OFF"

2. Disconnect A/C pressure transducer connector.

3. IG KEY "ON"

4. Measure the voltage of A/C pressure transducer terminal 3.

Specification : 4.8V~5.1V

5. Is the measured voltage within the specification ?

YES

▶ Go to "Signal Circuit Inspection".

NO

▶ Repair open in power circuit of A/C pressure transducer and go to "Verification of Vehicle Repair".
[Check open between aircon pressure sensor connector terminal 3 and ECM connector(C230-K) terminal 22.]

SIGNAL CIRCUIT INSPECTION EA07A4BE

1. Check open in signal circuit

   1) IG KEY "OFF", ENGINE "OFF"

   2) Disconnect A/C pressure transducer connector and ECM connector.

   3) Check continuity between A/C pressure transducer connector terminal 2 and ECM connector (C230-K) terminal 13.

Specification : Continuity (below 1.0Ω)

   4) Is the measured resistance within the specification?

YES

▶ Go to "2. Check short to ground in signal circuit" as follows.

NO

▶ Repair open in signal circuit and go to "Verification of Vehicle Repair".

2. Check short to ground in signal circuit

   1) IG KEY "OFF", ENGINE "OFF"

   2) Disconnect A/C pressure transducer connector and ECM connector.

   3) Check continuity between A/C pressure transducer connector terminal 2 and chassis ground.

Specification : Discontinuity (Infinite Ω)

   4) Is the measured resistance within the specification?

YES

▶ Go to "Component Inspection".

NO

▶ Repair short to ground in signal circuit and go to "Verification of Vehicle Repair".

COMPONENT INSPECTION E3EB568E

1. Aircon pressure sensor visual inspection
   1) IG KEY "OFF", ENGINE "OFF"
   2) Disconnect A/C pressure transducer connector.
   3) Check if corrosion and contamination at aircon pressure sensor terminal is detected.
   4) Check aircon pressure sensor connecting torque and aircon refrigerant leakage.
   5) Does any problem is detected at aircon pressure sensor?

      YES

      ▶ Replace aircon pressure sensor and go to "Verification of Vehicle Repair".

      NO

      ▶ Go to "2. Check A/C pressure transducer waveform " as follows.
2. Check A/C pressure transducer waveform
   1) IG KEY "OFF", ENGINE "OFF"
   2) Connect A/C pressure transducer connector.
   3) Connect oscilloscope to A/C pressure transducer connector terminal 2.
   4) Monitor aircon pressure sensor waveform at idle as turning Aircon "ON".

Specification : Refer to "Signal waveform & data"

   5) Is A/C pressure transducer waveform outputted correctly?

      YES

      ▶ Go to "Verification of Vehicle Rapair".

      NO

      ▶ Replace A/C pressure transducer and go to "Verification of Vehicle Repair".

VERIFICATION OF VEHICLE REPAIR E152C1B2

After a repair, it is essential to verify that the fault is corrected.

1. After connecting Scantool select "DIAGNOSTIC TROUBLE CODES(DTCs)" mode.
2. Clear recorded DTC using Scantool.
3. Drive the vehicle within DTC "Enable conditions" in "General information".
4. After selecting "DIAGNOSTIC TROUBLE CODES(DTCs)" mode and check if DTC is recorded again.
5. Are any DTCs recorded ?

   YES

▶ Go to the DTC guide of recorded NO. in Scantool.

NO

▶ System operates within specification.

DTC P0533 A/C REFRIGERANT PRESSURE SENSOR "A" CIRCUIT HIGH INPUT

COMPONENT LOCATION E70CA3EA

Refer to DTC P0532.

GENERAL DESCRIPTION ECFA1EF0

Refer to DTC P0532.

DTC DESCRIPTION E209BD48

P0533 is set when the voltage above 4.7V - maximum voltage of A/C pressure transducer signal - is detected for more than 0.6 sec.. This code is due to short to battery in signal circuit or open in ground circuit of A/C pressure transducer.

DTC DETECTING CONDITION E0598DE6

<table>
<tr><th>Item</th><th colspan="3">Detecting Condition</th><th>Possible Cause</th></tr>
<tr><td>DTC Strategy</td><td colspan="3">• Voltage monitoring</td><td rowspan="6">• A/C pressure transducer circuit
• A/C pressure transducer component</td></tr>
<tr><td>Enable Conditions</td><td colspan="3">• IG KEY "ON"</td></tr>
<tr><td>Threshold Value</td><td colspan="3">• When output signal is above the maximum value (above 4.7V)</td></tr>
<tr><td>Diagnostic Time</td><td colspan="3">• 0.6 sec.</td></tr>
<tr><td rowspan="4">Fail Safe</td><td>Fuel cut</td><td>NO</td><td rowspan="4">• A/C pressure fixed at 50 hPa</td></tr>
<tr><td>EGR Off</td><td>NO</td></tr>
<tr><td>Fuel Limit</td><td>NO</td></tr>
<tr><td>Check Lamp</td><td>NO</td></tr>
</table>

SPECIFICATION EC722FD3

Refer to DTC P0532.

SCHEMATIC DIAGRAM E19C1803

Refer to DTC P0532.

SIGNAL WAVEFORM AND DATA EAE45C99

Refer to DTC P0532.

MONITOR SCANTOOL DATA E0380EF9

Refer to DTC P0532.

TERMINAL AND CONNECTOR INSPECTION E317A702

Refer to DTC P0532.

POWER CIRCUIT INSPECTION E83F3A58

1. IG KEY "OFF", ENGINE "OFF"
2. Disconnect A/C pressure transducer connector.
3. IG KEY "ON"
4. Measure the voltage of A/C pressure transducer terminal 3.

Specification : 4.8V~5.1V

5. Is the measured voltage within the specification ?

YES

▶ Go to "Signal Circuit Inspection".

NO

▶ Repair open in power circuit of A/C pressure transducer and go to "Verification of Vehicle Repair".
[Check open between A/C Pressure Sensor connector terminal 3 and ECM connector(C230-K) terminal 22.]

SIGNAL CIRCUIT INSPECTION EBEDE63B

1. Check short to battery in signal circuit
   1) IG KEY "OFF", ENGINE "OFF"
   2) Disconnect A/C pressure transducer connector and ECM connector.
   3) IG KEY "ON"
   4) Measure the voltage of A/C pressure transducer terminal 2.

Specification : 0.0V~0.1V

   5) Is abnormal voltage detected in the circuit with both connector disconnected?

YES

▶ Repair short to battery and go to "Verification of Vehicle Repair".

NO

▶ Go to "Ground Circuit Inspection".

GROUND CIRCUIT INSPECTION E47E4DDF

1. IG KEY "OFF", ENGINE "OFF"
2. Disconnect A/C pressure transducer connector.
3. IG KEY "ON"
4. Measure the voltage of A/C pressure transducer terminal 3. [TEST "A"]
5. Measure the voltage of A/C pressure transducer terminal 3 and terminal 1. [TEST "B"]

(terminal 3: Check + prove , terminal 1 : Check - prove)

Specification : the voltage difference between TEST "A" and TEST "B" is within 200mV

6. Is the measured voltage within the specification?

YES

▶ Go to "Component Inspection"

NO

▶ When "B" voltage is not detected : Repair open in ground circuit and go to "Verification of Vehicle Repair".
▶ When the voltage difference between "A" and "B" is above 200mV : Eliminate the causes of excessive resistance and go to "Verification of Vehicle Repair".

COMPONENT INSPECTION EDAC38F3

1. Aircon pressure sensor visual inspection

   1) IG KEY "OFF", ENGINE "OFF"

   2) Disconnect A/C pressure transducer connector.

   3) Check if corrosion and contamination at aircon pressure sensor terminal is detected.

   4) Check aircon pressure sensor connecting torque and aircon refrigerant leakage.

   5) Does any problem is detected at aircon pressure sensor?

      YES

      ▶ Replace aircon pressure sensor and go to "Verification of Vehicle Repair".

      NO

      ▶ Go to "2. Check A/C pressure transducer waveform " as follows.

2. Check A/C pressure transducer waveform

   1) IG KEY "OFF", ENGINE "OFF"

   2) Connect A/C pressure transducer connector.

   3) Connect oscilloscope to A/C pressure transducer connector terminal 2.

   4) Monitor aircon pressure sensor waveform at idle as turning Aircon "ON".

Specification : Refer to "Signal waveform & data"

   5) Is A/C pressure transducer waveform outputted correctly?

      YES

      ▶ Go to "Verification of Vehicle Rapair".

      NO

▶ Replace A/C pressure transducer and go to "Verification of Vehicle Repair".

VERIFICATION OF VEHICLE REPAIR EDCBC152

Refer to DTC P0532.

DTC P0562 SYSTEM VOLTAGE LOW

COMPONENT LOCATION EE4FD5BD

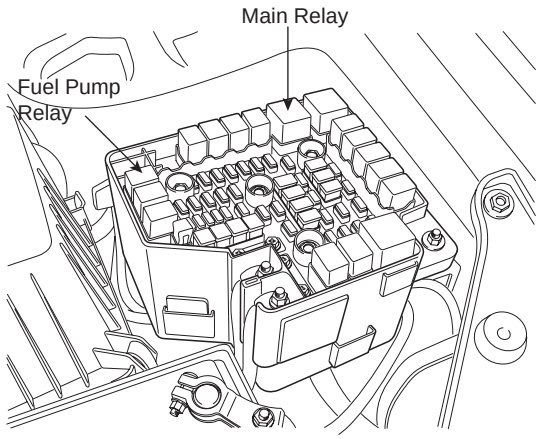

SCMFL6507L

GENERAL DESCRIPTION E927203F

Normally, battery voltage fluctuates from 11.5V to 14.5V. Especially at cranking, voltage can drop to 9.8V. Therefore, actuators which require 12V power supply meet fluctuation of power by 5V.A little change of voltage supply can shift controlling characteristic of actuators, such as injectors, RPCV and EGR actuator, which should be controlled delicately. To correct controlling characteristic change arrised from voltage fluctuation, ECM performs actuator operating correction according to voltage change as detecting battery voltage change.

DTC DESCRIPTION ED7E01EF

P0562 is set when battery voltage below 5.8V is detected for more than 5 sec. Check charging system.(charging circuit, alternator component)

▶ ECM senses battery voltage as monitoring the voltages in ECM(C230-K) connector terminal 1,3,5 which are transmitted from main relay.

DTC DETECTING CONDITION EF9B8A2E

<table>
<tr><th>Item</th><th colspan="3">Detecting Condition</th><th>Possible Cause</th></tr>
<tr><td>DTC Strategy</td><td colspan="3">• Voltage monitoring</td><td rowspan="7">• Charging circuit
• Alternator component</td></tr>
<tr><td>Enable Conditions</td><td colspan="3">• IG KEY "ON"</td></tr>
<tr><td>Threshold Value</td><td colspan="3">• when battery voltage is below 5.8V</td></tr>
<tr><td>Diagnostic Time</td><td colspan="3">• 5 sec.</td></tr>
<tr><td rowspan="4">Fail Safe</td><td>Fuel cut</td><td>NO</td><td rowspan="4">• Battery voltage is considered as 12V.</td></tr>
<tr><td>EGR Off</td><td>NO</td></tr>
<tr><td>Fuel Limit</td><td>NO</td></tr>
<tr><td>Check Lamp</td><td>NO</td></tr>
</table>

SCHEMATIC DIAGRAM E0138C7C

[CIRCUIT DIAGRAM]

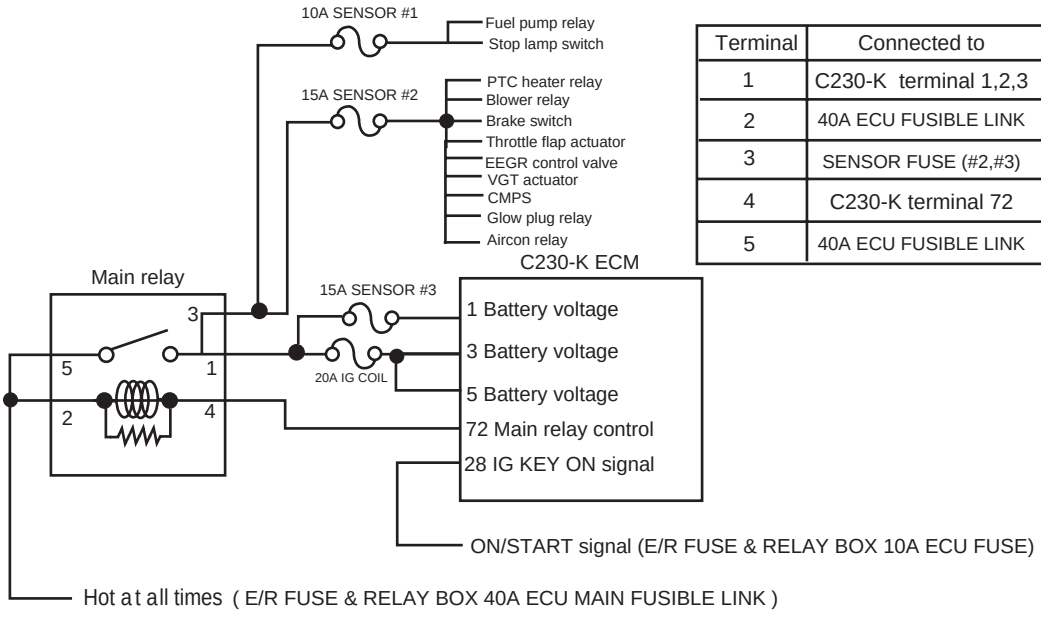

[CONNECTOR INFORMATION]

Terminal	Connected to	Function
1	C230-K terminal 1,2,3	Power supply to ECM, Sensor, Actuator
2	40A ECU FUSIBLE LINK	Main relay coil power
3	SENSOR FUSE (#2,#3)	Power supply to ECM, Sensor, Actuator
4	C230-K terminal 72	Main relay control
5	40A ECU FUSIBLE LINK	Hot at all times

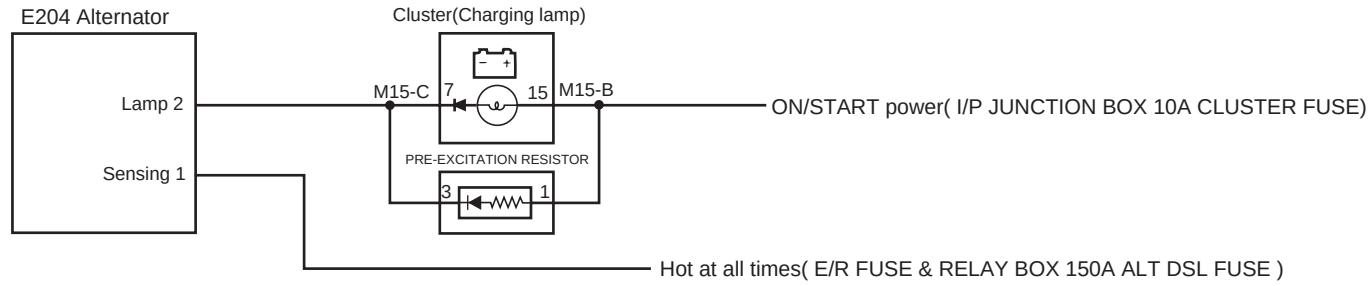

[HARNESS CONNECTOR]

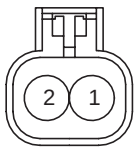

Alternator
E204

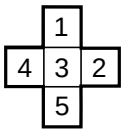

Main relay

C230-A

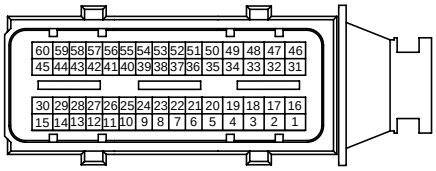

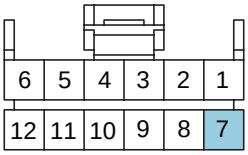

M15-C
Cluster

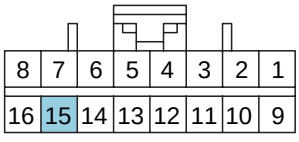

M15-B
Cluster

C230-K

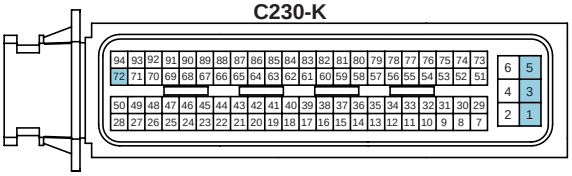

ECM

SCMFL6403L

SIGNAL WAVEFORM AND DATA EA8B40D5

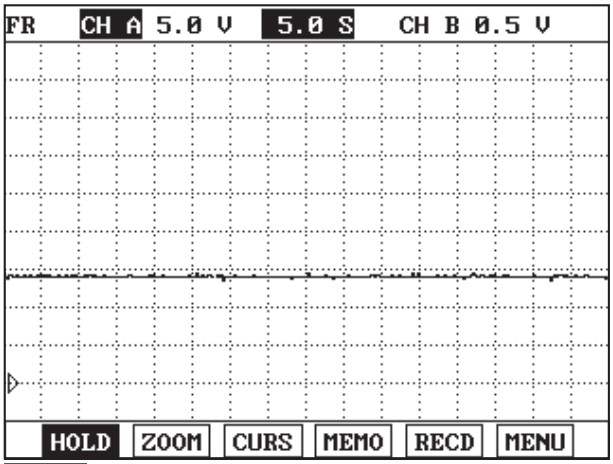

Fig.1

Fig.1) This is alternator charging waveform during engine running. Check if battery voltage drops dramatically as turning on the electrical device such as head lamp, defogger and A/C.

LFIG321A

MONITOR SCANTOOL DATA EB16879A

1. Connect Scantool to Data Link Connector (DLC).
2. Warm engine up to normal operating temperature.
3. Turn "OFF" electrical devices and A/C.
4. Monitor "BATTERY VOLTAGE" parameter on the Scantool.

specification :12.5V~14.5V at idle without any load(800RPM)

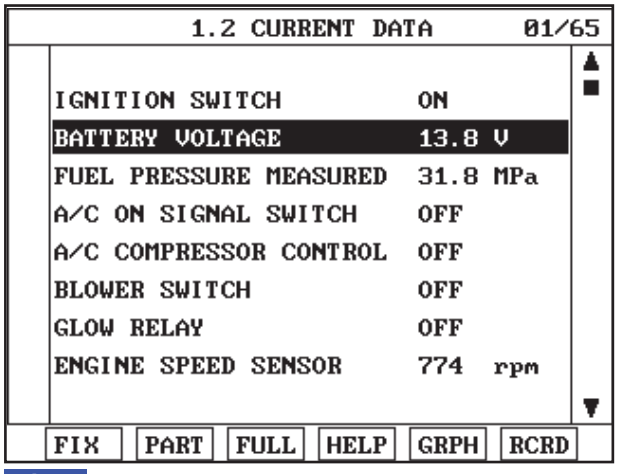

Fig.1

Fig 1) "BATTERY VOLTAGE" data at idle after warming engine up.
Check if the symptoms listed below occur as checking if battery voltage drops dramatically when turning on the electrical devices.

SCMFL6302L

※ The vehicles with the alternator of poor charging efficiency
1. Lamps are dim at idle, while lamps are bright at acceleration.
2. Intermitently RPM drops excessively or engine shut down at low RPM close to idle state at times.

3. Smooth cranking happens rarely. (Warning lamps in cluster turn dimmer excessively at cranking and poor crankinghappen.)
4. Charging lamp turns on during driving.

TERMINAL AND CONNECTOR INSPECTION EB6748B5

1. Electrical systems consist of a lot of harness and connectors, poor connection of terminals can cause various problems and damge of component.

2. Perform checking procedure as follows.

   1) Check damage of harness and terminals : Check terminals for contact resistance, corrosion and deformation.

   2) Check connecting condition of ECM and component connector : Check terminal seperation, damage of locking device and connecting condition between terminal and wiring.

   NOTE

   Disconnect the pin which requires checking at male connector and insert it to the terminal at female connector for checking connecting condition. (after checking, reconnect the pin at correct position.)

3. Is the problem found?

   YES

   ▶ Repair the trouble causing part and go to "Verification of Vehicle Repair".

   NO

   ▶ Go to "Power Circuit Inspection".

POWER CIRCUIT INSPECTION E24A7776

1. Check power supply in alternator connector

   1) IG KEY "ON", Turn engine "OFF".

   2) Disconnect alternator connector.

   3) Measure the voltage of terminal 2 of alternator connector.

Specification : 10.5V~12.0V

   4) Is the measured voltage within the specification?

      YES

      ▶ Go to "2. Check charging lamp operation".

      NO

      ▶ When no voltage is detected at terminal 2.
      ▶ Check charging lamp on cluster and charging lamp resistor and repair the open E/R FUSE & RELAY BOX 10A Alternator FUSE related circuit and go to "Verification of Vehicle Repair".

2. Check charging lamp operation

   1) IG KEY "ON", ENGINE "OFF".

2) Disconnect alternator connector.

3) Ground alternator connector terminal 2 to chassis ground using jump wire.

specification : charging lamp "ON" when grounded to chassis ground.

4) Does charging lamp turn ON?

YES

▶ Go to "3.Check voltage drop of aternator B+ cable".

NO

▶ Replace lamp and go to "Verification of Vehicle Repair".

3. Check voltage drop of aternator B+ cable

1) IG KEY "ON", Turn engine "ON".

2) Measure the voltage difference between alternator B+ terminal and battery + terminal.
(connect + terminal of multimeter to alternator B+ and connect - terminal of multimeter to battery +terminal.)

specification : below 0.2V (below 200mV)

3) Is the measured voltage within the specification? (Is the voltage drop in alternator B+ cable normal?)

YES

▶ Go to "Component Inspection".

NO

▶ After checking corrosion and deformation of alternator B+ cable and replace it if needed and go to "Verification of Vehicle Repair".

COMPONENT INSPECTION E732F286

1. IG KEY "OFF", ENGINE "OFF".
2. Check belt tension which operates alternator .
3. Check battery terminal and fusible link, poor connection or corrosion of alternator B+ terminal.
4. Turn Engien "ON".
5. Operate the electrical device such as head lamp,defroster and blower motor.
6. Check battery voltage at above 2000 RPM.

Specification : 12.5V~14.5V

7. Is the measured voltage within the specification?

YES

▶ Alternator is performing within the specification.

NO

▶ Replace alternator and go to "Verification of Vehicle Repair" .

VERIFICATION OF VEHICLE REPAIR E974E350

After a repair, it is essential to verify that the fault is corrected.

1. After connecting Scantool select "DIAGNOSTIC TROUBLE CODES(DTCs)" mode.
2. Clear recorded DTC using Scantool.
3. Drive the vehicle within DTC "Enable conditions" in "General information".
4. After selecting "DIAGNOSTIC TROUBLE CODES(DTCs)" mode and check if DTC is recorded again.
5. Are any DTCs recorded ?

YES

▶ Go to the DTC guide of recorded NO. in Scantool.

NO

▶ System operates within specification.

DTC P0563 SYSTEM VOLTAGE HIGH

COMPONENT LOCATION E35E17B0

Refer to DTC P0562.

GENERAL DESCRIPTION EB36C59A

Refer to DTC P0562.

DTC DESCRIPTION E09C125F

P0563 is set when battery voltage above 17.3V is detected for more than 5 sec.. Check alternator component. (over-charging of alternator)
▶ ECM senses battery voltage as monitoring the voltages in ECM(C230-K)connector terminal 1,3,5 which are transmitted from main relay.

DTC DETECTING CONDITION E6F65752

<table>
<tr><th>Item</th><th colspan="4">Detecting Condition</th><th>Possible Cause</th></tr>
<tr><td>DTC Strategy</td><td colspan="4">• Voltage monitoring</td><td rowspan="8">• Charging circuit
• Alternator component</td></tr>
<tr><td>Enable Conditions</td><td colspan="4">• IG KEY "ON"</td></tr>
<tr><td>Threshold Value</td><td colspan="4">• when battery voltage is above 17.3V</td></tr>
<tr><td>Diagnostic Time</td><td colspan="4">• 5 sec.</td></tr>
<tr><td rowspan="4">Fail Safe</td><td>Fuel cut</td><td>NO</td><td rowspan="4">• Battery voltage is considered as 12V.</td></tr>
<tr><td>EGR Off</td><td>NO</td></tr>
<tr><td>Fuel Limit</td><td>NO</td></tr>
<tr><td>Check Lamp</td><td>NO</td></tr>
</table>

SCHEMATIC DIAGRAM E64CC9F4

Refer to DTC P0562.

SIGNAL WAVEFORM AND DATA E26DF378

Refer to DTC P0562.

MONITOR SCANTOOL DATA EEBC41B1

Refer to DTC P0562.

TERMINAL AND CONNECTOR INSPECTION E02E898A

Refer to DTC P0562.

POWER CIRCUIT INSPECTION E844356A

1. Check power supply in alternator connector

1) IG KEY "ON", Turn engine "OFF".

2) Disconnect alternator connector.

3) Measure the voltage of terminal 2 of alternator connector.

Specification : 10.5V~12.0V

4) Is the measured voltage within the specification?

YES

▶ Go to "2. Check charging lamp operation".

NO

▶ When no voltage is detected at terminal 2.
▶ Check charging lamp on cluster and charging lamp resistor and repair the open E/R FUSE & RELAY BOX 10A Alternator FUSE related circuit and go to "Verification of Vehicle Repair".

2. Check charging lamp operation

1) IG KEY "ON", ENGINE "OFF".

2) Disconnect alternator connector.

3) Ground alternator connector terminal 2 to chassis ground using jump wire.

specification : charging lamp "ON" when grounded to chassis ground.

4) Does charging lamp turn ON?

YES

▶ Go to "3.Check voltage drop of aternator B+ cable".

NO

▶ Replace lamp and go to "Verification of Vehicle Repair".

3. Check voltage drop of aternator B+ cable

1) IG KEY "ON", Turn engine "ON".

2) Measure the voltage difference between alternator B+ terminal and battery + terminal.
(connect + terminal of multimeter to alternator B+ and connect - terminal of multimeter to battery +terminal.)

specification : below 0.2V (below 200mV)

3) Is the measured voltage within the specification? (Is the voltage drop in alternator B+ cable normal?)

YES

▶ Go to "Component Inspection".

NO

▶ After checking corrosion and deformation of alternator B+ cable and replace it if needed and go to "Verification of Vehicle Repair".

COMPONENT INSPECTION E8D527E5

1. IG KEY "OFF", ENGINE "OFF".
2. Check belt tension which operates alternator .
3. Check battery terminal and fusible link, poor connection or corrosion of alternator B+ terminal.
4. Turn Engien "ON".
5. Operate the electrical device such as head lamp,defroster and blower motor.
6. Check battery voltage at above 2000 RPM.

Specification : 12.5V~14.5V

7. Is the measured voltage within the specification?

YES

▶ Alternator is performing within the specification.

NO

▶ Replace alternator and go to "Verification of Vehicle Repair" .

VERIFICATION OF VEHICLE REPAIR E450729F

Refer to DTC P0562.

DTC P0602 EEPROM-PROGRAMING ERROR

GENERAL DESCRIPTION E16ACCF3

ECM is activated by power supply. Signals from several sensors, such as CKPS and APS, is inputted to ECM. Comparing inputted signals with control LOGIC saved at micro controller and EEPROM, ECM controlls engine as actuating injectors, solenoids and relays. To guarantee accurate control, ECM performs SELF TEST, DIAGNOSIS of several sensors and actuators. And if serious trouble which affects vehicle performance occurrs, ECM sets DTCs.At certain cases, ECM shuts down whole systems in order to prevent dangerous situation due to incorrect control.

DTC DESCRIPTION EF088B88

P0602 is set when data writing on EEPROM inside of ECM is impossible.This code is due to the failure of ECM(ECM hardware failure).

DTC DETECTING CONDITION EC8A9145

<table>
<tr><th>Item</th><th colspan="3">Detecting Condition</th><th>Possible Cause</th></tr>
<tr><td>DTC Strategy</td><td colspan="3">• EEPROM monitorting</td><td rowspan="7">• ECM component failure</td></tr>
<tr><td>Enable Conditions</td><td colspan="3">• Engine running</td></tr>
<tr><td>Threshold Value</td><td colspan="3">• Communication error between control modules inside of ECM
• Hardware related error control
• Timer(inside of ECM) monitoring error
• CPU error
• ECM hardware error</td></tr>
<tr><td>Diagnostic Time</td><td colspan="3">• Immediately</td></tr>
<tr><td rowspan="4">Fail Safe</td><td>Fuel cut</td><td>YES</td><td rowspan="4"></td></tr>
<tr><td>EGR Off</td><td>NO</td></tr>
<tr><td>Fuel Limit</td><td>NO</td></tr>
<tr><td>Check Lamp</td><td>NO</td></tr>
</table>

COMPONENT INSPECTION E64AC9F1

1. ECM Component Inspection

   1) IG KEY "OFF", ENGINE "OFF".

   2) Disconnect ECM.

   3) Replace ECM, check if abnormal operations disappear.

   4) If problems are corrected, replace ECM.

NOTE

Input injector IQA data(7 letters) using scantool at replacing ECM.
For immobilizer applied vehicle, input pin code.

VERIFICATION OF VEHICLE REPAIR E2C1C9FF

After a repair, it is essential to verify that the fault is corrected.

1. After connecting Scantool select "DIAGNOSTIC TROUBLE CODES(DTCs)" mode.
2. Clear recorded DTC using Scantool.
3. Drive the vehicle within DTC "Enable conditions" in "General information".
4. After selecting "DIAGNOSTIC TROUBLE CODES(DTCs)" mode and check if DTC is recorded again.
5. Are any DTCs recorded ?

YES

▶ Go to the DTC guide of recorded NO. in Scantool.

NO

▶ System operates within specification.

DTC P0605 INTERNAL CONTROL MODULE READ ONLY MEMORY(ROM) ERROR

GENERAL DESCRIPTION E7A43BB4

ECM is activated by power supply. Signals from several sensors, such as CKPS and APS, is inputted to ECM. Comparing inputted signals with control LOGIC saved at micro controller and EEPROM, ECM controlls engine as actuating injectors, solenoids and relays. To guarantee accurate control, ECM performs SELF TEST, DIAGNOSIS of several sensors and actuators. And if serious trouble which affects vehicle performance occurrs, ECM sets DTCs.At certain cases, ECM shuts down whole systems in order to prevent dangerous situation due to incorrect control.

DTC DESCRIPTION EA4B51C2

P0605 is set when 1)communication error between micro controller inside of ECM and EEP ROM is detected or 2)a different vesion of ECM is installed.

DTC DETECTING CONDITION E63BFEFD

<table>
<tr><th>Item</th><th colspan="3">Detecting Condition</th><th>Possible Cause</th></tr>
<tr><td>DTC Strategy</td><td colspan="3">• EEPROM monitorting</td><td rowspan="7">• Version difference between ECM and ECMcommunication module
• ECM component failure</td></tr>
<tr><td>Enable Conditions</td><td colspan="3">• Engine running</td></tr>
<tr><td>Threshold Value</td><td colspan="3">• (EEPROM communication error): communication failure between micro controller inside of ECM and EEPROM
• Each data range is activated abnormally.
• self test about optional devices(A/C, immobilizer, cruise control)</td></tr>
<tr><td>Diagnostic Time</td><td colspan="3">• Immediately</td></tr>
<tr><td rowspan="4">Fail Safe</td><td>Fuel cut</td><td>YES</td><td rowspan="4"></td></tr>
<tr><td>EGR Off</td><td>NO</td></tr>
<tr><td>Fuel Limit</td><td>NO</td></tr>
<tr><td>Check Lamp</td><td>NO</td></tr>
</table>

COMPONENT INSPECTION E49BD40C

1. ECM Component Inspection

   1) IG KEY "OFF", ENGINE "OFF".

   2) Disconnect ECM.

   3) Replace ECM, check if abnormal operations disappear.

   4) If problems are corrected, replace ECM.

NOTE

Input injector IQA data(7 letters) using scantool at replacing ECM.
For immobilizer applied vehicle, input pin code.

VERIFICATION OF VEHICLE REPAIR E7D3C8AE

After a repair, it is essential to verify that the fault is corrected.

1. After connecting Scantool select "DIAGNOSTIC TROUBLE CODES(DTCs)" mode.
2. Clear recorded DTC using Scantool.
3. Drive the vehicle within DTC "Enable conditions" in "General information".
4. After selecting "DIAGNOSTIC TROUBLE CODES(DTCs)" mode and check if DTC is recorded again.
5. Are any DTCs recorded ?

YES

▶ Go to the DTC guide of recorded NO. in Scantool.

NO

▶ System operates within specification.

DTC P0606 ECM/PCM PROCESSOR(ECM-SELF TEST FAILED)

GENERAL DESCRIPTION E9A500E2

ECM is activated by power supply. Signals from several sensors, such as CKPS and APS, is inputted to ECM. Comparing inputted signals with control LOGIC saved at micro controller and EEPROM, ECM controlls engine as actuating injectors, solenoids and relays. To guarantee accurate control, ECM performs SELF TEST, DIAGNOSIS of several sensors and actuators. And if serious trouble which affects vehicle performance occurrs, ECM sets DTCs.At certain cases, ECM shuts down whole systems in order to prevent dangerous situation due to incorrect control.

DTC DESCRIPTION E9272743

P0606 is set when 1) writing/reading error inside of ECM occurs. 2) error of APS 2 ground checking which is repeated every 0.2 sec. or 3) the voltage of sensor power supply 1 and 2 (the standard voltage of A/D converter) are below 4.7V or above 5.1V. This code is due to ECM internal failure.

DTC DETECTING CONDITION EDD416B5

<table>
<tr><th>Item</th><th colspan="3">Detecting Condition</th><th>Possible Cause</th></tr>
<tr><td>DTC Strategy</td><td colspan="3">• Signal monitoring</td><td rowspan="7">• ECM component failure</td></tr>
<tr><td>Enable Conditions</td><td colspan="3">• IG KEY "ON"</td></tr>
<tr><td>Threshold Value</td><td colspan="3">• writing/reading error inside of ECM
• APS 2 ground checking error
• APS 2 ground checking error</td></tr>
<tr><td>Diagnostic Time</td><td colspan="3">• Immediately</td></tr>
<tr><td rowspan="4">Fail Safe</td><td>Fuel cut</td><td>NO</td><td rowspan="4"></td></tr>
<tr><td>EGR Off</td><td>NO</td></tr>
<tr><td>Fuel Limit</td><td>NO</td></tr>
<tr><td>Check Lamp</td><td>YES</td></tr>
</table>

SIGNAL WAVEFORM AND DATA E245EC4A

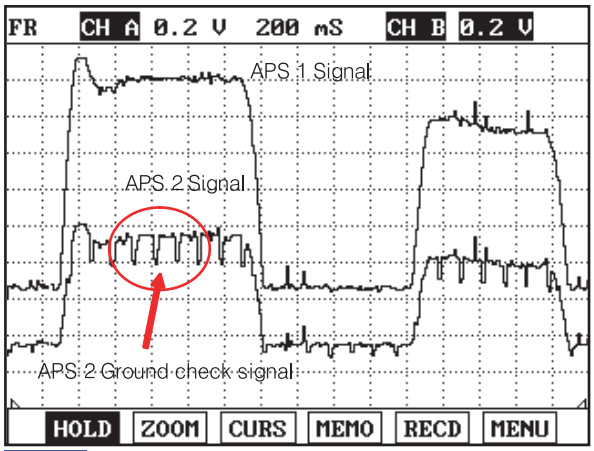

Fig.1

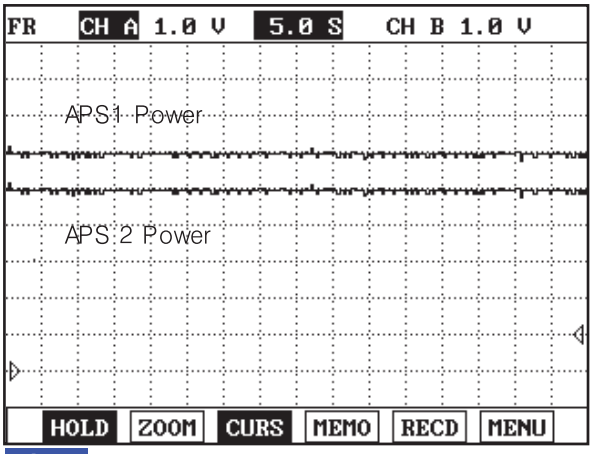

Fig.2

Fig.1) Ground checking signal of APS 2 signal is for ECM to monitor APS 2. This signal drops APS 2 output voltage to below 200.39mV every 200msec. If APS 2 output voltage does not drop to below 200.39mV, ECM sets DTC as recognizing ground circuit error of APS 2

※ The waveform below 200.39mV is not detectable in ground checking signal waveform of APS 2 signal. Instead, the waveform which drops a little is detected. If APS 2 data of "SERVICE DATA" on the Scantool varies from 350mV to 0mV periodically, it means it works normally.

Fig.2) APS 1 and APS 2 signals are measured simultaneously, Check if 5V sensor voltage(the standard voltage of A/D converter inside of ECM) is from 4.8V to 5.16V.

SCMFL6422L

COMPONENT INSPECTION E44F7A10

1. ECM Component Inspection

   1) IG KEY "OFF", ENGINE "OFF".

   2) Disconnect ECM.

   3) Replace ECM, check if abnormal operations disappear.

   4) If problems are corrected, replace ECM.

NOTE

Input injector IQA data(7 letters) using scantool at replacing ECM.
For immobilizer applied vehicle, input pin code.

VERIFICATION OF VEHICLE REPAIR EC4492D6

After a repair, it is essential to verify that the fault is corrected.

1. After connecting Scantool select "DIAGNOSTIC TROUBLE CODES(DTCs)" mode.
2. Clear recorded DTC using Scantool.
3. Drive the vehicle within DTC "Enable conditions" in "General information".
4. After selecting "DIAGNOSTIC TROUBLE CODES(DTCs)" mode and check if DTC is recorded again.
5. Are any DTCs recorded ?

YES

▶ Go to the DTC guide of recorded NO. in Scantool.

NO

▶ System operates within specification.

DTC P0611 INJECTOR CIRCUIT MALFUNCTION (MORE THAN TWO INJECTORS)

COMPONENT LOCATION ECDE1443

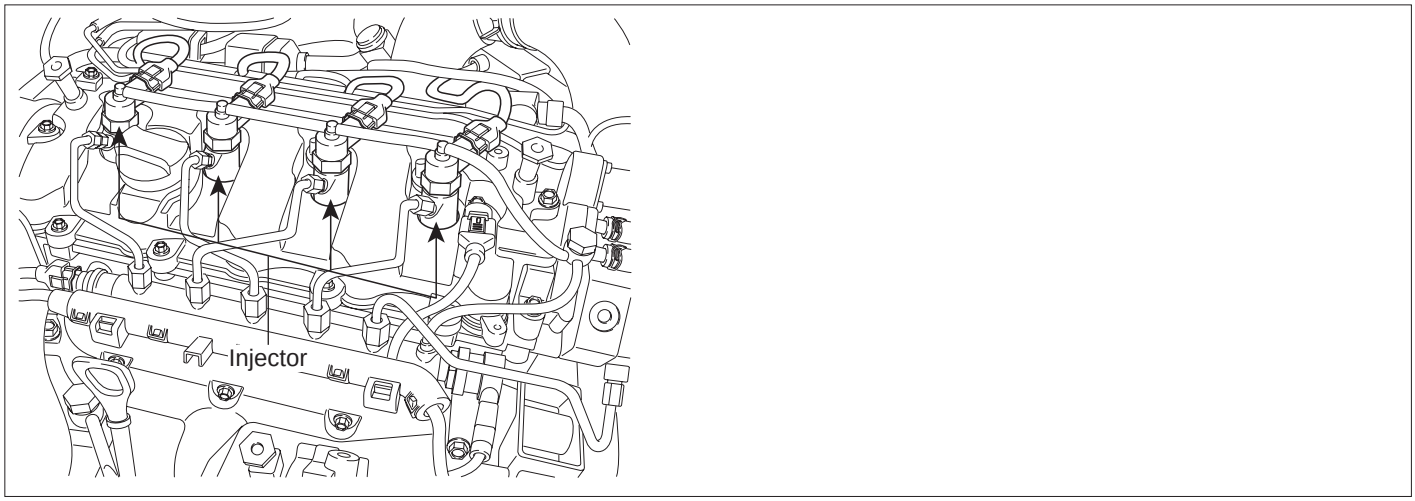

LFIG257A

GENERAL DESCRIPTION EB9B42E6

Injectors spray fuel in the highly compressed combustion chamber, and power generates through combustion process. Fuel pressure is raised to 1600bar in common rail diesel engine for the purpose of making fuel into minute particles. And fuel devided into minute particles leads smoke reduction, high power generation, and improved fuel efficiency. To control pressure of 1600bar with solenoid, oil pressure servo is applied. And injector solenoids is actuated by solenoid operating voltage raised to 80V with the method of current control.

DTC DESCRIPTION ED515DBC

P0611 is set when the problems of more than 2 injector circuits are detected thus, it is difficult to find abnormal injector. Check "Circuit Inspection" of all injectors

DTC DETECTING CONDITION E056E881

<table>
<tr><th>Item</th><th colspan="3">Detecting Condition</th><th>Possible Cause</th></tr>
<tr><td>DTC Strategy</td><td colspan="3">• Current monitoring</td><td rowspan="6">• Short in Injector circuit
• Injector component</td></tr>
<tr><td>Enable Conditions</td><td colspan="3">• IG KEY "ON"</td></tr>
<tr><td>Threshold Value</td><td colspan="3">• Failed cylinder recognition is impossible due to the failure more than 2 injectors.</td></tr>
<tr><td>Diagnostic Time</td><td colspan="3">• Immediately</td></tr>
<tr><td rowspan="4">Fail Safe</td><td>Fuel cut</td><td>YES</td><td rowspan="4"></td></tr>
<tr><td>EGR Off</td><td>NO</td></tr>
<tr><td>Fuel Limit</td><td>NO</td></tr>
<tr><td>Check Lamp</td><td>YES</td></tr>
</table>

SPECIFICATION E530AC90

Injector Component Resistance	Injector Operating Voltage	Injector Operating Current	Injector Control Type
0.330Ω (20±1℃)	80V	Peak current : 20±1A Hold in current : 12±1A Recharging current : 7A	Current control

SCHEMATIC DIAGRAM EFD8DDF4

[CIRCUIT DIAGRAM]

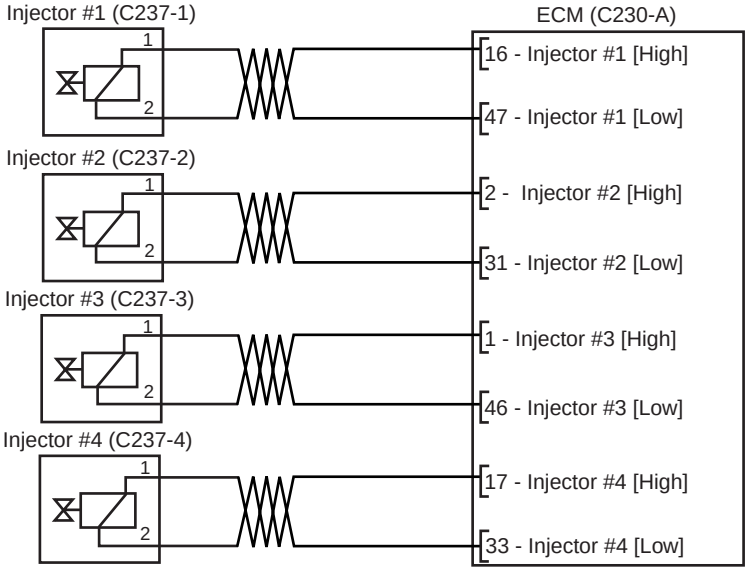

[CONNECTION INFORMATION]

[Injector #1]

Terminal	Connected to	Function
1	ECM C230-A (16)	Injector #1 High side
2	ECM C230-A (47)	Injector #1 Low side

[Injector #2]

Terminal	Connected to	Function
1	ECM C230-A (2)	Injector #2 High side
2	ECM C230-A (31)	Injector #2 Low side

[Injector #3]

Terminal	Connected to	Function
1	ECM C230-A (1)	Injector #3 High side
2	ECM C230-A (46)	Injector #3 Low side

[Injector #4]

Terminal	Connected to	Function
1	ECM C230-A (17)	Injector #4 High side
2	ECM C230-A (33)	Injector #4 Low side

[HARNESS CONNECTORS]

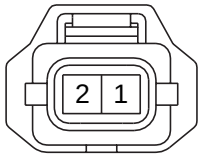

C237-1,2,3,4
INJECTOR #1,#2,#3,#4

C230-A

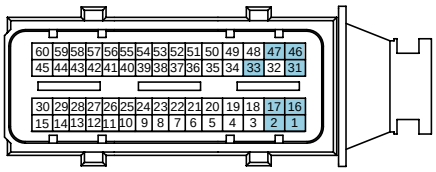

C230-K

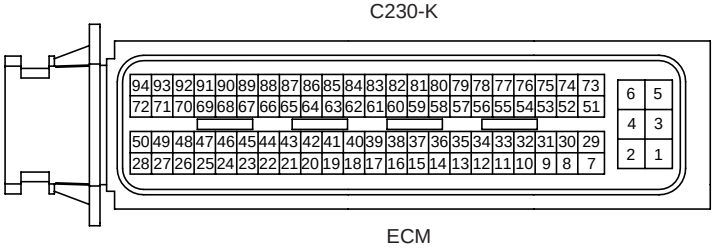

ECM

SCMFL6397L

SIGNAL WAVEFORM AND DATA EC8D6DBA

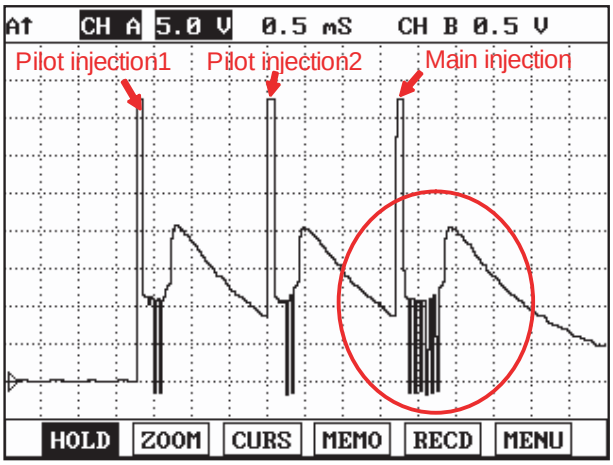

Fig.1

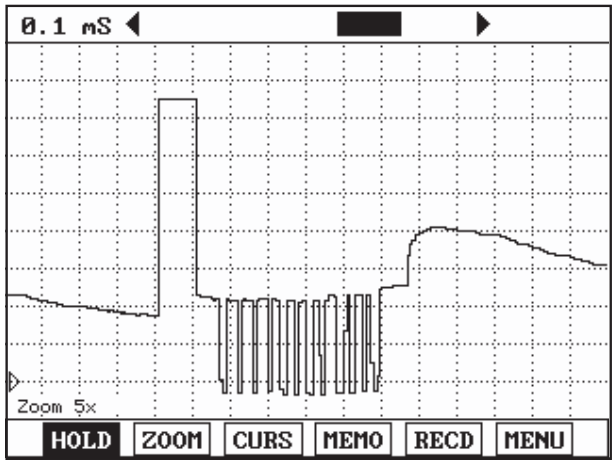

Fig.2

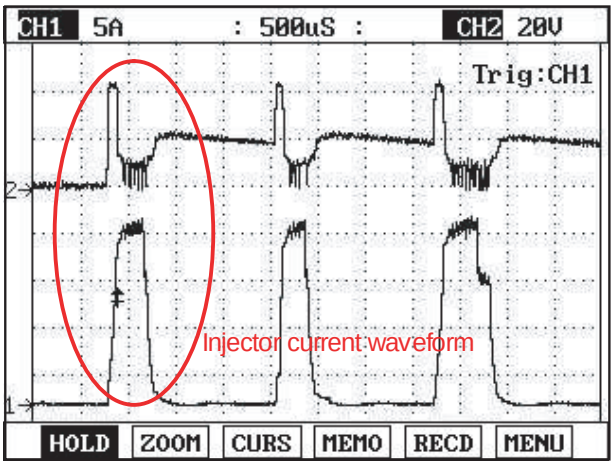

Fig.3

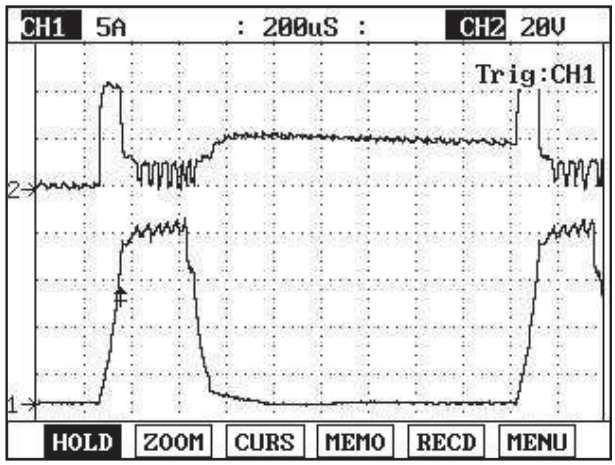

Fig.4

Fig.1) Injector operating waveform at Low side, It shows 2 pilot and 1 main injection.
Fig.2) Magnified waveform of main injection at Fig.1)
Fig.3) Injector voltage and current waveforms are measured at the same time using current prove of scope meter.
Fig.4) Magnified waveform of pilot injection at Fig.3)

LFIG259A

TERMINAL AND CONNECTOR INSPECTION EEE364CD

1. Electrical systems consist of a lot of harness and connectors, poor connection of terminals can cause various problems and damge of component.

2. Perform checking procedure as follows.

   1) Check damage of harness and terminals : Check terminals for contact resistance, corrosion and deformation.

   2) Check connecting condition of ECM and component connector : Check terminal seperation, damage of locking device and connecting condition between terminal and wiring.

NOTE

Disconnect the pin which requires checking at male connector and insert it to the terminal at female connector for checking connecting condition. (after checking, reconnect the pin at correct position.)

3. Is the problem found?

YES

▶ Repair the trouble causing part and go to "Verification of Vehicle Repair".

NO

▶ Go to "Power Circuit Inspection".

POWER CIRCUIT INSPECTION E60B9162

1. Check injector connector terminal voltage (failed injector analysis)

   1) IG KEY "OFF", ENGINE "OFF".

   2) Disconnect all injector connectors and ECM connector.

   3) IG KEY "ON".

   4) Check continuity between injector #1 connector terminal 1 and ECM connector(C230-A) terminal 16.
   Check continuity between injector #1 connector terminal 2 and ECM connector(C230-A) terminal 47.
   Check continuity between injector #2 connector terminal 1 and ECM connector(C230-A) terminal 2.
   Check continuity between injector #2 connector terminal 2 and ECM connector(C230-A) terminal 31.
   Check continuity between injector #3 connector terminal 1 and ECM connector(C230-A) terminal 1.
   Check continuity between injector #3 connector terminal 2 and ECM connector(C230-A) terminal 46.
   Check continuity between injector #4 connector terminal 1 and ECM connector(C230-A) terminal 17.
   Check continuity between injector #4 connector terminal 2 and ECM connector(C230-A) terminal 33.

Specification : Continuity (below 1.0Ω)

   5) Are continuity tests within the specification?

   YES

   ▶ Go to "Component Inspection".

   NO

   ▶ Refer to "DTC" guide corresponding to each problem occurred injector.

   Injector #1 related problem :
   Refer to P0201 for open in injector circuit.
   Refer to P0262 for short in injectoer circuit.

   Injector #2 related problem :
   Refer to P0202 for open in injector circuit.
   Refer to P0265 for short in injectoer circuit.

   Injector #3 related problem :
   Refer to P0203 for open in injector circuit.
   Refer to P0268 for short in injectoer circuit.

   Injector #4 related problem :
   Refer to P0204 for open in injector circuit.
   Refer to P0271 for short in injectoer circuit.

COMPONENT INSPECTION ED9E4369

1. Check injector component resistance

   1) IG KEY "OFF", ENGINE "OFF".

   2) Disconnect injector connector.

   3) Measure the resistance between injector component terminal 1 and 2.

Specification : 0.33Ω (20℃)

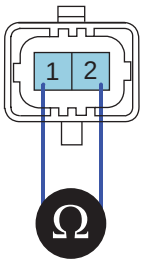

EGNG008I

   4) Is the measured resistance(of injector solenoid) within the specification?

YES

▶ Go to "Verification of Vehicle Repair".

NO

▶ Replace injector and go to "Verification of Vehicle Repair".

NOTE

Replacing injectors, peculiar IQA code of each injector should be inputted to ECM
Perform this process using "INJECTOR CORRECTION" function on scantool, Refer to P1670, P1671 for more detailed information.

VERIFICATION OF VEHICLE REPAIR E62E741F

After a repair, it is essential to verify that the fault is corrected.

1. After connecting Scantool select "DIAGNOSTIC TROUBLE CODES(DTCs)" mode.
2. Clear recorded DTC using Scantool.
3. Drive the vehicle within DTC "Enable conditions" in "General information".
4. After selecting "DIAGNOSTIC TROUBLE CODES(DTCs)" mode and check if DTC is recorded again.
5. Are any DTCs recorded ?

YES

▶ Go to the DTC guide of recorded NO. in Scantool.

NO

▶ System operates within specification.

DTC P0642 SENSOR REFERENCE VOLTAGE "A" CIRCUIT LOW

GENERAL DESCRIPTION EC7DA3AD

ECM is activated by power supply. Signals from several sensors, such as CKPS and APS, is inputted to ECM. Comparing inputted siganals with control LOGIC saved at micro controller and EEPROM, ECM controlls engine as actuating injectors, solenoids and relays. To guarantee accurate control, ECM performs SELF TEST, DIAGNOSIS of several sensors and actuators. And if serious trouble which affects vehicle performance occurrs, ECM sets DTCs.At certain cases, ECM shuts down whole systems in order to prevent dangerous situation due to incorrect control.

DTC DESCRIPTION E391557F

P0642 is set when the voltage below 4.7V - minimum voltage of sensor power supply 1 generates from ECM - is detected for more than 0.1 sec.. This code is due to the short to ground in sensor power circuit or the voltage problem inside of ECM.

DTC DETECTING CONDITION EA9F074F

<table>
<tr><th>Item</th><th colspan="3">Detecting Condition</th><th>Possible Cause</th></tr>
<tr><td>DTC Strategy</td><td colspan="3">• Voltage monitoring</td><td rowspan="6">• MAFS power supply circuit
• APS 1 power supply circuit
• ECM component</td></tr>
<tr><td>Enable Conditions</td><td colspan="3">• IG KEY "ON"</td></tr>
<tr><td>Threshold Value</td><td colspan="3">• when the voltage is below the minimum voltage of sensor power supply. (below 4.7V)</td></tr>
<tr><td>Diagnostic Time</td><td colspan="3">• 0.1 sec.</td></tr>
<tr><td rowspan="4">Fail Safe</td><td>Fuel cut</td><td>NO</td><td rowspan="4"></td></tr>
<tr><td>EGR Off</td><td>NO</td></tr>
<tr><td>Fuel Limit</td><td>YES</td></tr>
<tr><td>Check Lamp</td><td>NO</td></tr>
</table>

SPECIFICATION E3B931C6

Sensor power 1	Sensor power 2	Sensor power 3
MAFS, APS 1 4830mV~5158mV	RPS, APS 2,BPS 4830mV~5158mV	A/C pressure transducer,VSA position Sensor 4830mV~5158mV

SCHEMATIC DIAGRAM E82B0251

[CIRCUIT DIAGRAM]

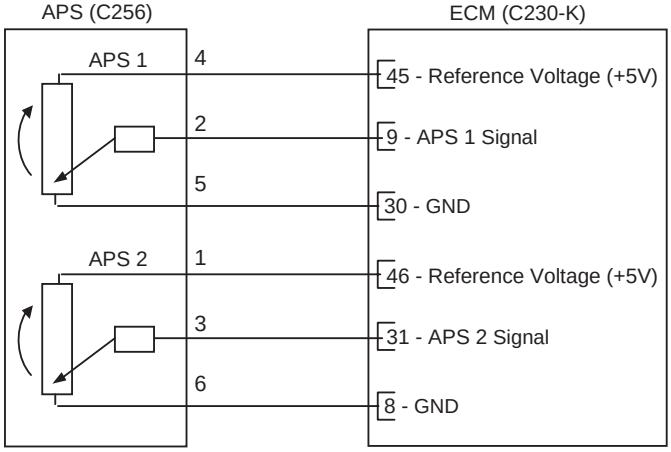

[CONNECTION INFORMATION]

Terminal	Connected to	Function
1	ECM C230-K (46)	APS 2 Reference Voltage (+5V)
2	ECM C230-K (9)	APS 1 Signal
3	ECM C230-K (31)	APS 2 Signal
4	ECM C230-K (45)	APS 1 Reference Voltage (+5V)
5	ECM C230-K (30)	APS 1 Ground
6	ECM C230-K (8)	APS 2 Ground

[HARNESS CONNECTORS]

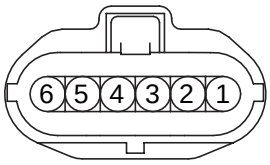

C256
APS

C230-A

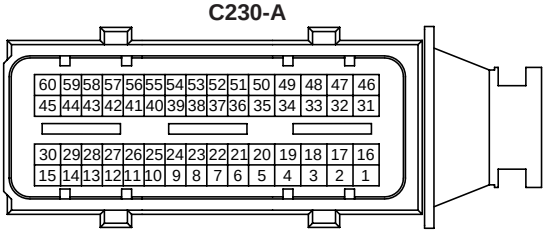

C230-K

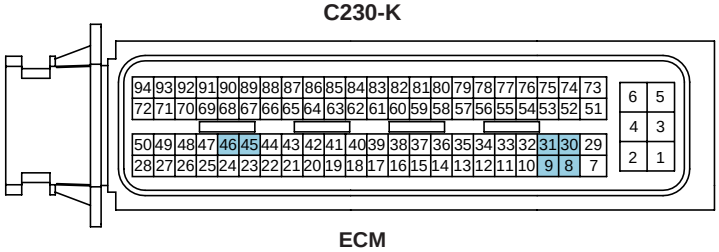

ECM

SCMFL6123L

[CIRCUIT DIAGRAM]

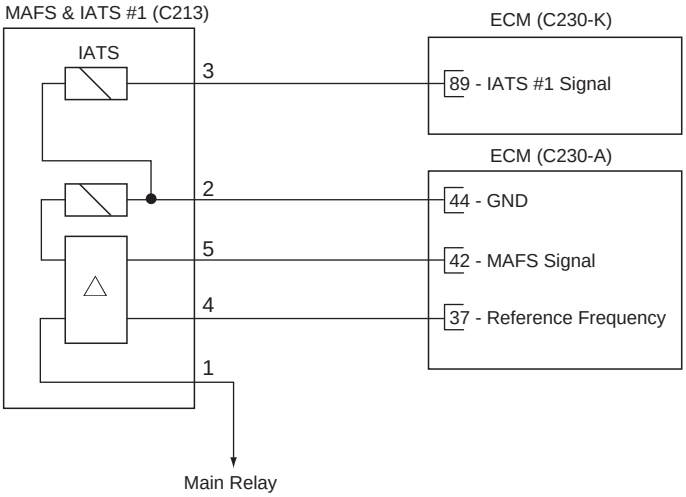

[CONNECTION INFORMATION]

Terminal	Connected to	Function
1	Main Relay	Battery Voltage (B+)
2	ECM C230-A (44)	Sensor Ground
3	ECM C230-K (89)	IATS #1 Signal
4	ECM C230-A (37)	Reference Frequency
5	ECM C230-A (42)	MAFS Signal

[HARNESS CONNECTORS]

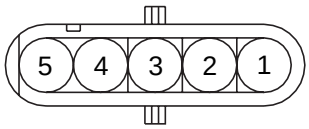

C213

MAFS & IATS #1

C230-A

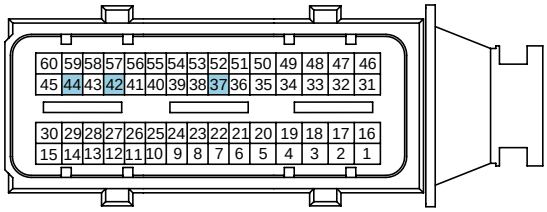

C230-K

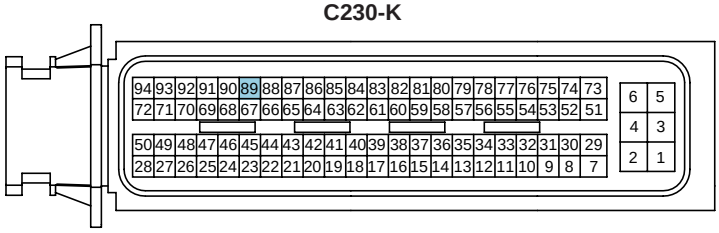

ECM

SCMFL6113L

SIGNAL WAVEFORM AND DATA E1662D85

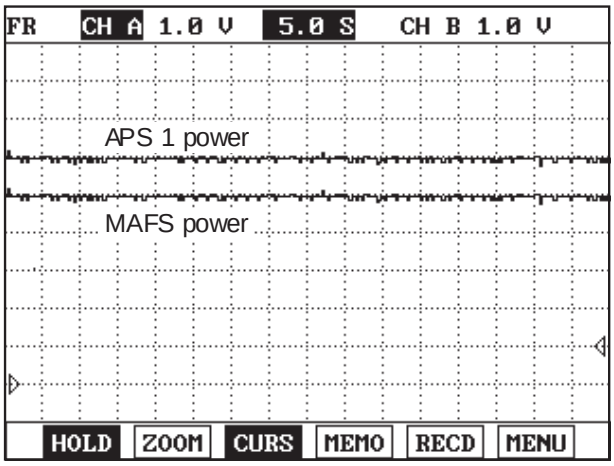

Fig.1

Fig.1) APS 1 and MAFS power supply is measured simultaneously , check if this waveform is within the specification (4.8~5.1V) when turning ignition "ON".

SCMFL6420L

TERMINAL AND CONNECTOR INSPECTION E527D191

1. Electrical systems consist of a lot of harness and connectors, poor connection of terminals can cause various problems and damge of component.

2. Perform checking procedure as follows.

   1) Check damage of harness and terminals : Check terminals for contact resistance, corrosion and deformation.

   2) Check connecting condition of ECM and component connector : Check terminal seperation, damage of locking device and connecting condition between terminal and wiring.

   NOTE

   Disconnect the pin which requires checking at male connector and insert it to the terminal at female connector for checking connecting condition. (after checking, reconnect the pin at correct position.)

3. Is the problem found?

   YES

   ▶ Repair the trouble causing part and go to "Verification of Vehicle Repair".

   NO

   ▶ Go to "Power Circuit Inspection".

POWER CIRCUIT INSPECTION ED0B5405

1. Check power circuit voltage

   1) IG KEY "OFF", ENGINE "OFF".

   2) Disconnector MAFS connector and APS connector.

   3) IG KEY "ON".

4) Measure the voltage between MAFS connector terminal 4 or APS connector terminal 4 and chassis ground.

Specification : 4.8V~5.1V

5) Is the measured voltage within the specification?

YES

▶ Go to "Component Inspection".

NO

▶ Go to "2. Check short to ground in power circuit" as follows.

2. Check short to ground in power circuit

1) IG KEY "OFF", ENGINE "OFF".

2) Disconnect MAFS connector, APS connector and ECM connectors.

3) Check continuity between MAFS connector terminal 4 or APS connector terminal 4 and chassis ground.

specification : Discontinuity (Infinite Ω)

4) Is the measured resistance within the specification?

YES

▶ If the circuit is insulated well and the sensor power supply from ECM is low, replace ECM and go to "Verification of Vehicle Repair".

NO

▶ Repair short to ground and go to "Verification of Vehicle Repair".

COMPONENT INSPECTION E64A5CBD

1. IG KEY "OFF", ENGINE "OFF".
2. Disconnect MAFS connector(C213) and APS connector(C256).
3. Check that sensor connector power supply is within the specification after turning IG KEY "ON".
4. Connect MAFS connector and APS connector in turn.
5. Measure the voltage of power circuit of each sensor with all connector connected.

Specification : sensor power supply should not change as connecting MAFS connector and APS connector.
(If the change of sensor power supply occur as connecting sensor connector, this means the occurrence of short inside of sensor.)

6. Does change of sensor power supply occur as connecting sensor connector?

YES

▶ Replace MAFS or APS.

NO

▶ Go to "Verification of Vehicle Repair".

VERIFICATION OF VEHICLE REPAIR E0C30DE2

After a repair, it is essential to verify that the fault is corrected.

1. After connecting Scantool select "DIAGNOSTIC TROUBLE CODES(DTCs)" mode.
2. Clear recorded DTC using Scantool.
3. Drive the vehicle within DTC "Enable conditions" in "General information".
4. After selecting "DIAGNOSTIC TROUBLE CODES(DTCs)" mode and check if DTC is recorded again.
5. Are any DTCs recorded ?

YES

▶ Go to the DTC guide of recorded NO. in Scantool.

NO

▶ System operates within specification.

DTC P0643 SENSOR REFERENCE VOLTAGE "A" CIRCUIT HIGH

GENERAL DESCRIPTION E0BACFA5

Refer to DTC P0642.

DTC DESCRIPTION EBE58970

P0643 is set when the voltage above 5.158V - maximum voltage of sensor power supply 1 generates from ECM - is detected for more than 0.1 sec.. This code is due to the short to battery in sensor power circuit or the voltage problem inside of ECM.

DTC DETECTING CONDITION EEEBD270

Item	Detecting Condition		Possible Cause
DTC Strategy	• Voltage monitoring		• MAFS power supply circuit • APS 1 power supply circuit • ECM component
Enable Conditions	• IG KEY "ON"		
Threshold Value	• when the voltage is above the maximum voltage of sensor power supply.(above 5.158V)		
Diagnostic Time	• 0.1 sec.		
Fail Safe	Fuel cut	NO	
	EGR Off	NO	
	Fuel Limit	YES	
	Check Lamp	NO	

SPECIFICATION EA1AD87A

Refer to DTC P0642.

SCHEMATIC DIAGRAM ED600D9E

Refer to DTC P0642.

SIGNAL WAVEFORM AND DATA E90BC064

Refer to DTC P0642.

TERMINAL AND CONNECTOR INSPECTION E4EAEA04

Refer to DTC P0642.

POWER CIRCUIT INSPECTION E516470E

1. Check power circuit voltage
   1) IG KEY "OFF", ENGINE "OFF".
   2) Disconnector MAFS connector and APS connector.

3) IG KEY "ON".

4) Measure the voltage between MAFS connector terminal 4 or APS connector terminal 4 and chassis ground.

Specification : 4.8V~5.1V

5) Is the measured voltage within the specification?

YES

▶ Go to "Component Inspection".

NO

▶ Go to "2. Check open in power circuit" as follows.

2. Check open in power circuit

1) IG KEY "OFF", ENGINE "OFF".

2) Disconnector MAFS connector, APS connector and ECM connector.

3) Measure the registance between MAFS connector terminal 4 and ECM connector(C230-A) terminal 37.
Measure the registance between APS connector terminal 4 and ECM connector(C230-K) terminal 45.

Specification : Continuity (below 1.0Ω)

4) Is the measured resistance within the specification?

YES

▶ Go to "3. Check short to battery in power circuit" as follows.

NO

▶ Repair open in power circuit and go to "Verification of Vehicle Repair".

3. Check short to battery in power circuit

1) IG KEY "OFF", ENGINE "OFF".

2) Disconnector MAFS connector, APS connector and ECM connector.

3) IG KEY "ON".

4) Measure the voltage between MAFS connector terminal 4 or APS connector terminal 4 and chassis ground.

Specification : 0.0V~0.1V

5) Is the measured voltage within the specification?

YES

▶ If the circuit is insulated well and the sensor power supply from ECM is high, replace ECM and go to "Verification of Vehicle Repair".

NO

▶ Repair short to battery and go to "Verification of Vehicle Repair".

COMPONENT INSPECTION E87EEE95

1. IG KEY "OFF", ENGINE "OFF".
2. Disconnect MAFS connector(C213) and APS connector(C256).
3. Check that sensor connector power supply is within the specification after turning IG KEY "ON".
4. Connect MAFS connector and APS connector in turn.
5. Measure the voltage of power circuit of each sensor with all connector connected.

Specification : sensor power supply should not change as connecting MAFS connector and APS connector.
(If the change of sensor power supply occur as connecting sensor connector, this means the occurrence of short inside of sensor.)

6. Does change of sensor power supply occur as connecting sensor connector?

YES

▶ Replace MAFS or APS.

NO

▶ Go to "Verification of Vehicle Repair".

VERIFICATION OF VEHICLE REPAIR E2280185

Refer to DTC P0642.

DTC P0646 A/C CLUTCH RELAY CONTROL CIRCUIT LOW

GENERAL DESCRIPTION E962F179

Aircon Relay which is controled by ECM supplies and cut electrical power to Aircon compressor. ECM activates or deactivates Aircon Relay based on inputted signal such as aircon switch siganl and Aircon switch signal.As controlling Aircon Relay, ECM 1)turns OFF aircon compressor at rapid acceleration to retain suffiecient capacity for acceleration, 2)actively performs idle-up function to cope with the change of engine load which happens during aircon compressor operation.

DTC DESCRIPTION EC208B40

P0646 is set when '0A' is detected in Aircon relay control circuit for more than 1 sec.. This code is due to open or short to ground in Aircon relay control circuit or internal open in relay component.

DTC DETECTING CONDITION E52A59E6

<table>
<tr><th>Item</th><th colspan="3">Detecting Condition</th><th>Possible Cause</th></tr>
<tr><td>DTC Strategy</td><td colspan="3">• Voltage monitoring</td><td rowspan="8">• A/C relay circuit
• A/C relay component</td></tr>
<tr><td>Enable Conditions</td><td colspan="3">• IG KEY "ON"</td></tr>
<tr><td>Threshold Value</td><td colspan="3">• Short to GND, Wiring open</td></tr>
<tr><td>Diagnostic Time</td><td colspan="3">• 1.0 sec.</td></tr>
<tr><td rowspan="4">Fail Safe</td><td>Fuel cut</td><td>NO</td><td rowspan="4"></td></tr>
<tr><td>EGR Off</td><td>NO</td></tr>
<tr><td>Fuel Limit</td><td>NO</td></tr>
<tr><td>Check Lamp</td><td>NO</td></tr>
</table>

SCHEMATIC DIAGRAM EA097066

[CIRCUIT DIAGRAM]

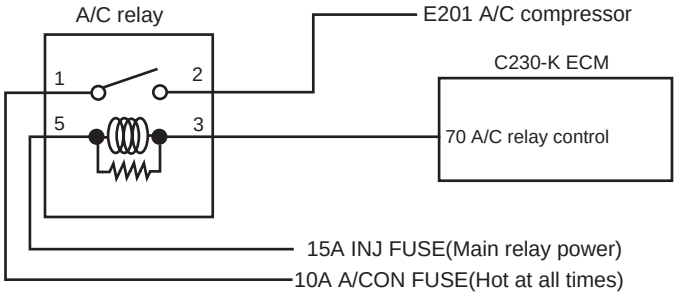

[CONNECTOR INFORMATION]

Terminal	Connected to	Function
1	10A A/CON FUSE(Hot at all times)	Relay power(INPUT)
2	A/C compressor	Relay power(OUTPUT)
3	C230-K terminal 70	Relay control
4	*	*
5	15A INJ FUSE(Main relay power)	Relay coil power

[HARNESS CONNECTOR]

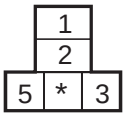

A/C relay

C230-A

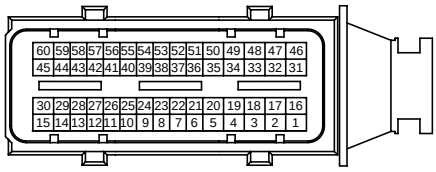

C230-K

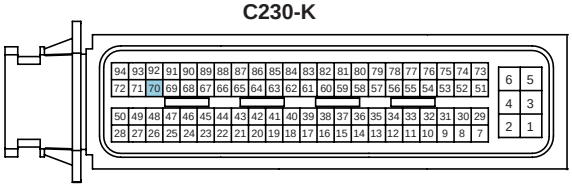

ECM

SCMFL6404L

MONITOR SCANTOOL DATA E2DFAF58

1. Connect scantool to Data Link Cable (DLC).
2. Warm engine up to normal operating temperature.
3. Turn "OFF" electrical devices and A/C.
4. Monitor "A/C COMPRESSOR CONTROL" parameter on the scantool.

specification : A/C switch "ON" : A/C RELAY "ON" (Aircon compressor turns ON and OFF periodically by Aircon pressure S/W.)
A/C switch "OFF" : A/C RELAY "OFF"

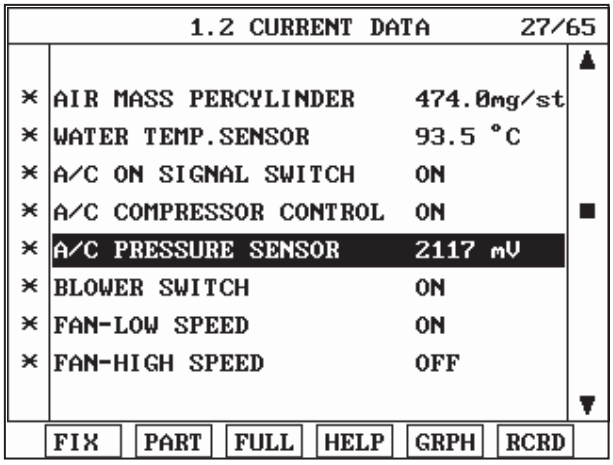

Fig.1

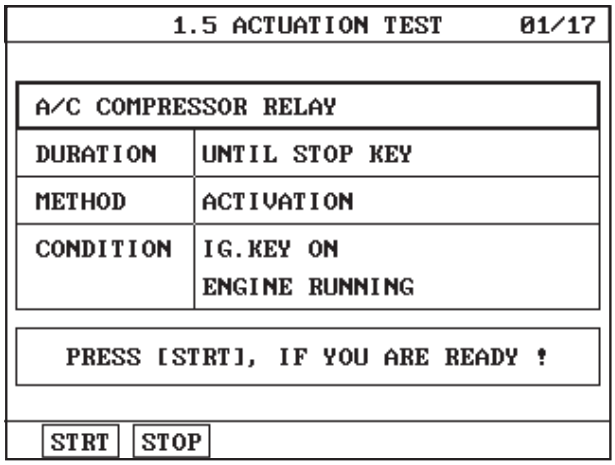

Fig.2

Fig.1) The operating condition of aircon relay is shown. Check if aircon compressor works properly when aircon switch is turning ON.
Fig.2) Diagnosing problem of "A/C RELAY" and "AIRCON COMPRESSOR" is convenient through ACTUATION TEST on the Scantool.

SCMFL6310L

TERMINAL AND CONNECTOR INSPECTION ECA5DD0F

1. Electrical systems consist of a lot of harness and connectors, poor connection of terminals can cause various problems and damge of component.

2. Perform checking procedure as follows.

   1) Check damage of harness and terminals : Check terminals for contact resistance, corrosion and deformation.

   2) Check connecting condition of ECM and component connector : Check terminal seperation, damage of locking device and connecting condition between terminal and wiring.

   NOTE

   Disconnect the pin which requires checking at male connector and insert it to the terminal at female connector for checking connecting condition. (after checking, reconnect the pin at correct position.)

3. Is the problem found?

   YES

   ▶ Repair the trouble causing part and go to "Verification of Vehicle Repair".

   NO

   ▶ Go to "Power Circuit Inspection".

POWER CIRCUIT INSPECTION E7FE6D95

1. Check power circuit voltage

   1) IG KEY "OFF", ENGINE "OFF".

   2) Disconnect A/CON relay.

   3) Measure the voltage of A/CON relay terminal 1.

specification : 11.5V~13.0V

4) Is the measured voltage within the specification?

YES

▶ Go to "2. Check IG KEY "ON" power circuit" .

NO

▶ Repair problems of E/R FUSE & RELAY BOX 15A A/CON FUSE and related circuit and go to "Verification of Vehicle Repair".

2. Check IG KEY "ON" power circuit

1) IG KEY "OFF", ENGINE "OFF".

2) Disconnect A/CON relay.

3) IG KEY "ON".

4) Measure the voltage of glow relay terminal 5.

specification : 11.5V~13.0V

5) Is the measured voltage within the specification?

YES

▶ Go to "Control Circuit Inspection".

NO

▶ Repair problems of Main relay component and Main relay related circuit and go to "Verification of Vehicle Repair".

CONTROL CIRCUIT INSPECTION E37EF207

1. Check monitoring voltage in control circuit

1) IG KEY "OFF", ENGINE "OFF".

2) Disconnect A/CON relay.

3) IG KEY "ON".

4) Measure the voltage of A/CON relay terminal 3.

specification : 3.2V~3.7V

5) Is the measured voltage within the specification?

YES

▶ Go to "Component Inspection".

NO

▶ When voltage is not detected : Go to "2. Check open in control circuit" as follows.
▶ When high voltage is detected : Repair short to battery and go to "Verification of Vehicle Repair".

2. Check open in control circuit

1) IG KEY "OFF", ENGINE "OFF".

2) Disconnect A/CON relay and ECM connector .

3) Check continuity between glow relay terminal 3 and ECM connector (C230-K) terminal 70.

specification : Continuity (below 1.0Ω)

4) Is the measured resistance within the specification?

YES

▶ Repair short to ground and go to "Verification of Vehicle Repair".

NO

▶ Repair open in control circuit and go to "Verification of Vehicle Repair".

COMPONENT INSPECTION E401C3B8

1. Check A/CON relay component resistance

1) IG KEY "OFF", ENGINE "OFF".

2) Disconnect A/CON relay.

3) Measure the coil resistance of A/CON relay.

specification : 85±5 Ω (20℃)

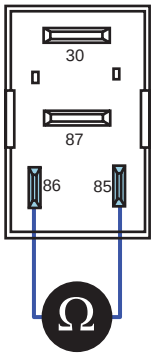

EGNG001H

4) Is the measured resistance within the specification?

YES

▶ Go to "2. Check A/CON relay component operation" as follows.

NO

▶ Replace A/CON relay and go to "Verification of Vehicle Repair".

2. Check A/CON relay component operation

   1) IG KEY "OFF", ENGINE "OFF".

   2) Disconnect A/CON relay.

   3) Supplies random B+ and ground to coil sides of A/C relay (terminal 85, terminal 86).

   4) Check continuity between A/C relay terminal 30 and terminal 87.

specification : When power is supplied : Continuity (below 1.0Ω)
When power is not supplied : Discontinuity (Infinite Ω)

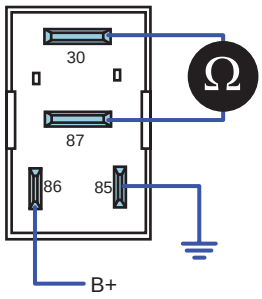

EGNG001I

   5) Is the continuity test within the specification?

YES

▶ Go to "Verification of Vehicle Repair".

NO

▶ Replace A/CON relay and go to "Verification of Vehicle Repair".

※ Repeat this process 2~3 times.

VERIFICATION OF VEHICLE REPAIR E505004D

After a repair, it is essential to verify that the fault is corrected.

1. After connecting Scantool select "DIAGNOSTIC TROUBLE CODES(DTCs)" mode.
2. Clear recorded DTC using Scantool.
3. Drive the vehicle within DTC "Enable conditions" in "General information".
4. After selecting "DIAGNOSTIC TROUBLE CODES(DTCs)" mode and check if DTC is recorded again.
5. Are any DTCs recorded ?

YES

▶ Go to the DTC guide of recorded NO. in Scantool.

NO

▶ System operates within specification.

DTC P0647 A/C CLUTCH RELAY CONTROL CIRCUIT HIGH

GENERAL DESCRIPTION E377A26F

Refer to DTC P0646.

DTC DESCRIPTION E71515B1

0647 is set when excessive current is detected in Aircon relay control circuit for more than 1 sec.. This code is due to short to battery in Aircon relay control circuit or internal short in relay component.

DTC DETECTING CONDITION E4F44700

Item	Detecting Condition			Possible Cause
DTC Strategy	• Voltage monitoring			• A/C relay circuit • A/C relay component
Enable Conditions	• IG KEY "ON"			
Threshold Value	• Short to battery			
Diagnostic Time	• 1.0 sec.			
Fail Safe	Fuel cut	NO		
	EGR Off	NO		
	Fuel Limit	NO		
	Check Lamp	NO		

SCHEMATIC DIAGRAM ED516334

Refer to DTC P0646.

MONITOR SCANTOOL DATA E7BA72E3

Refer to DTC P0646.

TERMINAL AND CONNECTOR INSPECTION E7DE28D1

Refer to DTC P0646.

POWER CIRCUIT INSPECTION E0DA793D

1. Check power circuit voltage

   1) IG KEY "OFF", ENGINE "OFF".

   2) Disconnect A/CON relay.

   3) Measure the voltage of A/CON relay terminal 1.

specification : 11.5V~13.0V

   4) Is the measured voltage within the specification?

YES

▶ Go to "2. Check IG KEY "ON" power circuit" .

NO

▶ Repair problems of E/R FUSE & RELAY BOX 15A A/CON FUSE and related circuit and go to "Verification of Vehicle Repair".

2. Check IG KEY "ON" power circuit

1) IG KEY "OFF", ENGINE "OFF".

2) Disconnect A/CON relay.

3) IG KEY "ON".

4) Measure the voltage of glow relay terminal 5.

specification : 11.5V~13.0V

5) Is the measured voltage within the specification?

YES

▶ Go to "Control Circuit Inspection".

NO

▶ Repair problems of Main relay component and Main relay related circuit and go to "Verification of Vehicle Repair".

CONTROL CIRCUIT INSPECTION E00E7754

1. Check monitoring voltage in control circuit

1) IG KEY "OFF", ENGINE "OFF".

2) Disconnect A/CON relay.

3) IG KEY "ON".

4) Measure the voltage of A/CON relay terminal 3.

specification : 3.2V~3.7V

5) Is the measured voltage within the specification?

YES

▶ Go to "Component Inspection".

NO

▶ When voltage is not detected : Go to "2. Check open in control circuit" as follows.
▶ When high voltage is detected : Repair short to battery and go to "Verification of Vehicle Repair".

2. Check open in control circuit

1) IG KEY "OFF", ENGINE "OFF".

2) Disconnect A/CON relay and ECM connector .

3) Check continuity between glow relay terminal 3 and ECM connector (C230-K) terminal 70.

specification : Continuity (below 1.0Ω)

4) Is the measured resistance within the specification?

YES

▶ Repair short to ground and go to "Verification of Vehicle Repair".

NO

▶ Repair open in control circuit and go to "Verification of Vehicle Repair".

COMPONENT INSPECTION ECDBE7D6

1. Check A/CON relay component resistance

1) IG KEY "OFF", ENGINE "OFF".

2) Disconnect A/CON relay.

3) Measure the coil resistance of A/CON relay.

specification : 85±5 Ω (20℃)

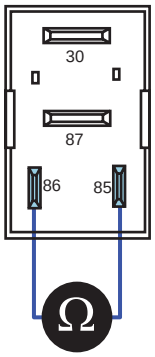

EGNG001H

4) Is the measured resistance within the specification?

YES

▶ Go to "2. Check A/CON relay component operation" as follows.

NO

▶ Replace A/CON relay and go to "Verification of Vehicle Repair".

2. Check A/CON relay component operation

1) IG KEY "OFF", ENGINE "OFF".

2) Disconnect A/CON relay.

3) Supplies random B+ and ground to coil sides of A/C relay (terminal 85, terminal 86).

4) Check continuity between A/C relay terminal 30 and terminal 87.

specification : When power is supplied : Continuity (below 1.0Ω)
When power is not supplied : Discontinuity (Infinite Ω)

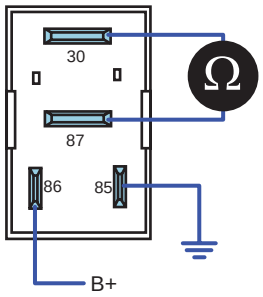

EGNG001I

5) Is the continuity test within the specification?

YES

▶ Go to "Verification of Vehicle Repair".

NO

▶ Replace A/CON relay and go to "Verification of Vehicle Repair".

※ Repeat this process 2~3 times.

VERIFICATION OF VEHICLE REPAIR E33F5D68

Refer to DTC P0646.

DTC P0650 MALFUNCTION INDICATOR LAMP(MIL) CONTROL CIRCUIT

GENERAL DESCRIPTION E3CFDE6C

As monitoring the errors of several sensors and actuator circuit, TCM related problem and ECM error, if any problem occurs, ECM turns Engine Check Lamp ON at cluster to notify driver the occurence of a problem. Generally, Engine Check Lamp turns ON at Ignition ON and turns OFF within couple of seconds after turning engine ON. If engine check lamp turns on during driving, perform diagnosis of engine system and auto-transaxle system.

DTC DESCRIPTION E01ACF53

P0650 is set when 1)excessive current is detected in engine check lamp control circuit for more than 2 sec.. at engine check lamp ON condition or 2)like open or short to ground, no current is detected. This code is due to open in control circuit or opened filament of lamp component.

DTC DETECTING CONDITION EF1E1552

<table>
<tr><th>Item</th><th colspan="3">Detecting Condition</th><th>Possible Cause</th></tr>
<tr><td>DTC Strategy</td><td colspan="3">• Voltage monitoring</td><td rowspan="6">• Open in engine check lamp
• Engine check lamp circuit.</td></tr>
<tr><td>Enable Conditions</td><td colspan="3">• IG KEY "ON" (Monitoring only performed within lamp operating condition)</td></tr>
<tr><td>Threshold Value</td><td colspan="3">• Short to battery
• Short to GND, Wiring open</td></tr>
<tr><td>Diagnostic Time</td><td colspan="3">• 2 sec.</td></tr>
<tr><td rowspan="4">Fail Safe</td><td>Fuel cut</td><td>NO</td><td rowspan="4"></td></tr>
<tr><td>EGR Off</td><td>NO</td></tr>
<tr><td>Fuel Limit</td><td>NO</td></tr>
<tr><td>Check Lamp</td><td>NO</td></tr>
</table>

SCHEMATIC DIAGRAM E20DEEC4

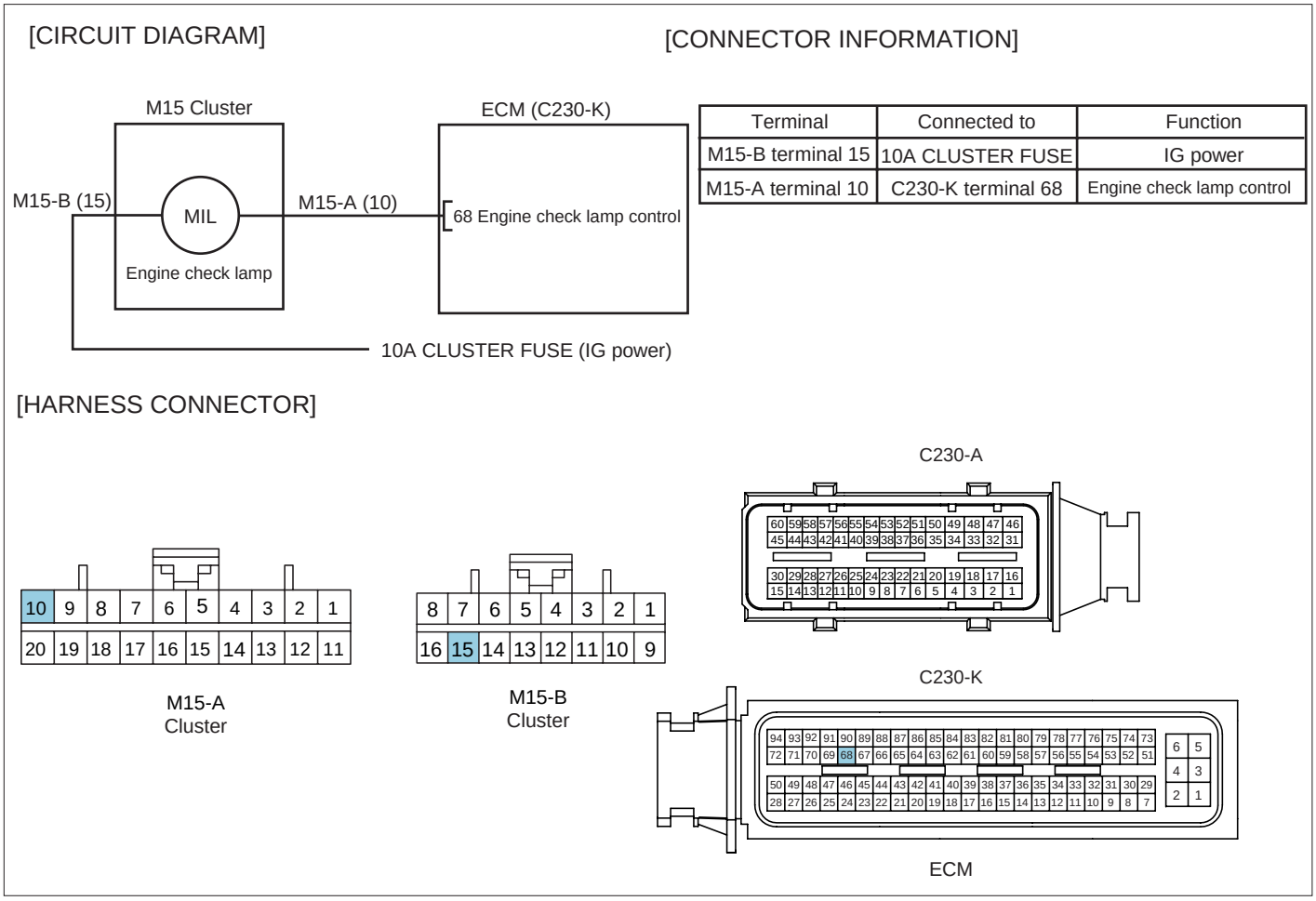

Terminal	Connected to	Function
M15-B terminal 15	10A CLUSTER FUSE	IG power
M15-A terminal 10	C230-K terminal 68	Engine check lamp control

SCMFL6405L

TERMINAL AND CONNECTOR INSPECTION E5CAECA4

1. Electrical systems consist of a lot of harness and connectors, poor connection of terminals can cause various problems and damge of component.

2. Perform checking procedure as follows.

   1) Check damage of harness and terminals : Check terminals for contact resistance, corrosion and deformation.

   2) Check connecting condition of ECM and component connector : Check terminal seperation, damage of locking device and connecting condition between terminal and wiring.

   NOTE

   Disconnect the pin which requires checking at male connector and insert it to the terminal at female connector for checking connecting condition. (after checking, reconnect the pin at correct position.)

3. Is the problem found?

   YES

   ▶ Repair the trouble causing part and go to "Verification of Vehicle Repair".

   NO

▶ Go to "Control Circuit Inspection".

CONTROL CIRCUIT INSPECTION E7DF2DCD

1. Check control circuit voltage

   1) IG KEY "OFF", ENGINE "OFF".

   2) Disconnect ECM connector.

   3) IG KEY "ON".

   4) Measure the voltage of terminal 68 of ECM connector (C230-K).

Specification : 10.8V~13.0V

   5) Is the measured voltage within the specification?

   YES

   ▶ Go to "2. Grounding test of check lamp control circuit" as follows.

   NO

   ▶ Check open in filament of check lamp. (Refer to Component Inspection)
   ▶ Repair open between cluster connector(M15-A) terminal 10 and ECM connector(C230-K) terminal 68 and go to "Verification of Vehicle Repair",

2. Grounding test of check lamp control circuit

   1) IG KEY "OFF", ENGINE "OFF".

   2) Disconnect ECM connector.

   3) IG KEY "ON".

   4) Ground ECM connector (C230-K) terminal 68 to chassis ground.

specification : check lamp turns ON.

   5) Does check lamp turn ON?

   YES

   ▶ Go to "Verification of Vehicle Repair".

   NO

   ▶ Repair short to battery in check lamp control circuit and go to "Verification of Vehicle Repair".

COMPONENT INSPECTION ECE5AC65

1. IG KEY "OFF", ENGINE "OFF".
2. Dismount cluster and disconnect check lamp.
3. Check filament of check lamp.

4. supply 12V to "check lamp" to turn lamp ON

specification : lamp turns ON when 12V is supplied.

5. Does check lamp turn ON?

YES

▶ Go to "Verification of Vehicle Repair".

NO

▶ Replace check lamp and go to "Verification of Vehicle Repair".

VERIFICATION OF VEHICLE REPAIR E779A0FA

After a repair, it is essential to verify that the fault is corrected.

1. After connecting Scantool select "DIAGNOSTIC TROUBLE CODES(DTCs)" mode.
2. Clear recorded DTC using Scantool.
3. Drive the vehicle within DTC "Enable conditions" in "General information".
4. After selecting "DIAGNOSTIC TROUBLE CODES(DTCs)" mode and check if DTC is recorded again.
5. Are any DTCs recorded ?

YES

▶ Go to the DTC guide of recorded NO. in Scantool.

NO

▶ System operates within specification.

DTC P0652 SENSOR REFERENCE VOLTAGE "B" CIRCUIT LOW

GENERAL DESCRIPTION E16D8AB6

As monitoring the errors of several sensors and actuator circuit, TCM related problem and ECM error, if any problem occurs, ECM turns Engine Check Lamp ON at cluster to notify driver the occurence of a problem.Generally, Engine Check Lamp turns ON at Ignition ON and turns OFF within couple of seconds after turning engine ON. If engine check lamp turns on during driving, perform diagnosis of engine system and auto-transaxle system.

DTC DESCRIPTION E77C406A

P0652 is set when the voltage below 4.7V - minimum voltage of sensor power supply 2 generates from ECM - is detected for more than 0.1 sec.. This code is due to the short to ground in sensor power circuit or the voltage problem inside of ECM.

DTC DETECTING CONDITION E422D052

<table>
<tr><th>Item</th><th colspan="3">Detecting Condition</th><th>Possible Cause</th></tr>
<tr><td>DTC Strategy</td><td colspan="3">• Voltage monitoring</td><td rowspan="6">• RPS power supply circuit
• APS 2 power supply circuit
• BPS power supply circuit
• ECM component</td></tr>
<tr><td>Enable Conditions</td><td colspan="3">• IG KEY "ON"</td></tr>
<tr><td>Threshold Value</td><td colspan="3">• when the voltage is below the minimum voltage of sensor power supply (below 4.7V)</td></tr>
<tr><td>Diagnostic Time</td><td colspan="3">• 0.1 sec.</td></tr>
<tr><td rowspan="4">Fail Safe</td><td>Fuel cut</td><td>NO</td><td rowspan="4"></td></tr>
<tr><td>EGR Off</td><td>NO</td></tr>
<tr><td>Fuel Limit</td><td>YES</td></tr>
<tr><td>Check Lamp</td><td>NO</td></tr>
</table>

SPECIFICATION E71043FC

Sensor power 1	Sensor power 2	Sensor power 3
AFS, APS 1 4830mV~5158mV	RPS, APS 2,BPS 4830mV~5158mV	A/C pressure transducer,VSA position Sensor 4830mV~5158mV

SCHEMATIC DIAGRAM E127962D

[CIRCUIT DIAGRAM]

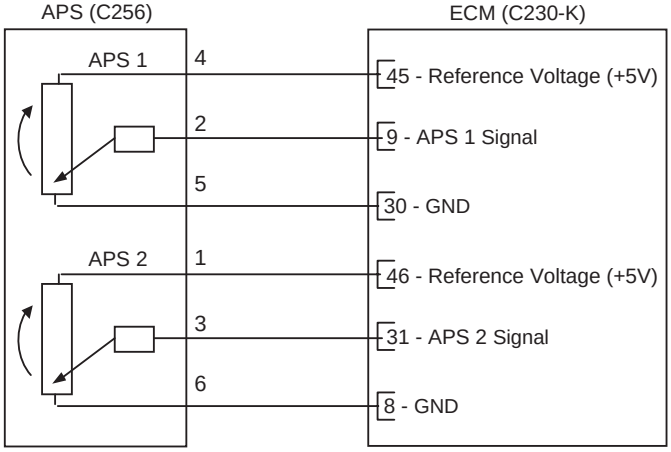

[CONNECTION INFORMATION]

Terminal	Connected to	Function
1	ECM C230-K (46)	APS 2 Reference Voltage (+5V)
2	ECM C230-K (9)	APS 1 Signal
3	ECM C230-K (31)	APS 2 Signal
4	ECM C230-K (45)	APS 1 Reference Voltage (+5V)
5	ECM C230-K (30)	APS 1 Ground
6	ECM C230-K (8)	APS 2 Ground

[HARNESS CONNECTORS]

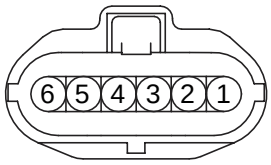

C256
APS

C230-A

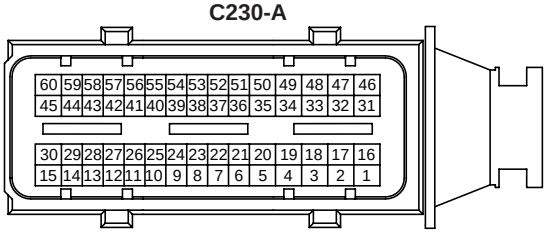

C230-K

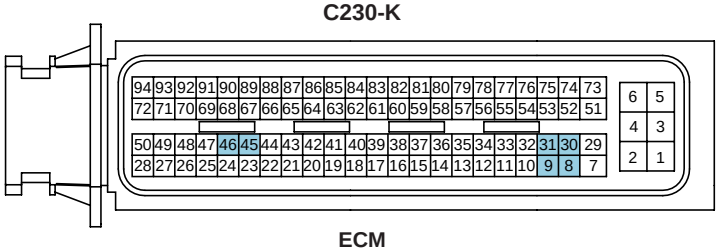

ECM

SCMFL6123L

[CIRCUIT DIAGRAM]

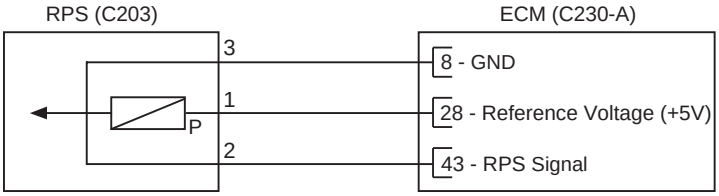

[CONNECTION INFORMATION]

Terminal	Connected to	Function
1	ECM C230-A (28)	Reference Voltage (+5V)
2	ECM C230-A (43)	RPS Signal
3	ECM C230-A (8)	Sensor Signal

[HARNESS CONNECTORS]



C203

RPS

C230-A

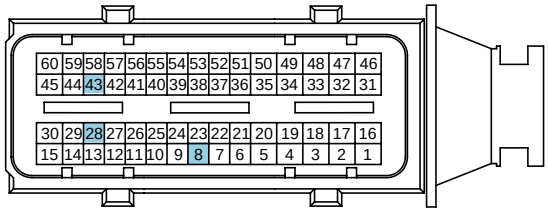

C230-K

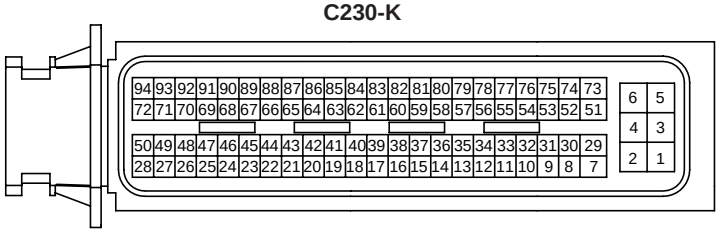

ECM

SCMFL6124L

[CIRCUIT DIAGRAM]

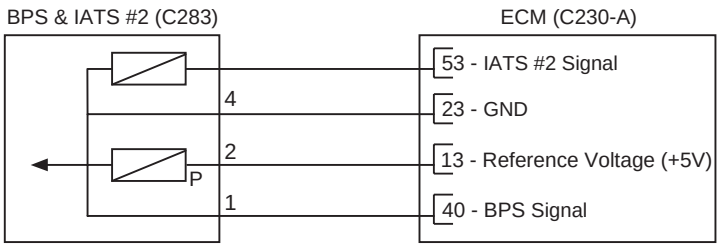

[CONNECTION INFORMATION]

Terminal	Connected to	Function
1	ECM C230-A (40)	BPS Signal
2	ECM C230-A (13)	Reference Voltage (+5V)
3	ECM C230-A (53)	IATS #2 Signal
4	ECM C230-A (23)	Sensor ground

[HARNESS CONNECTORS]

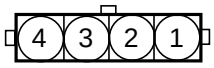

C283

BPS & IATS #2

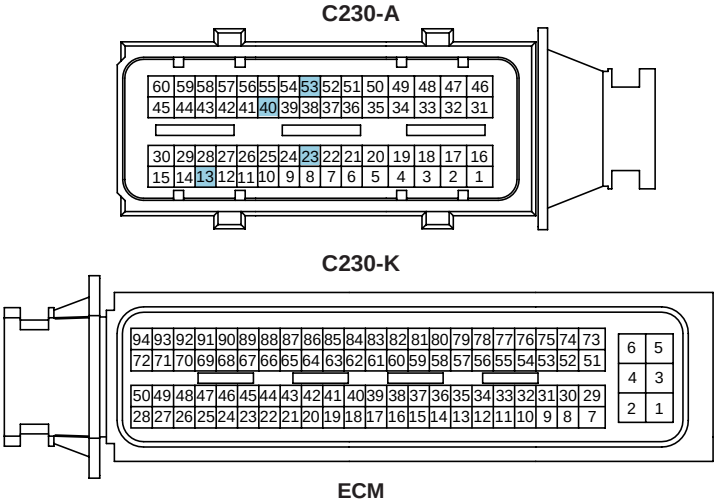

SCMFL6118L

SIGNAL WAVEFORM AND DATA E9902EF6

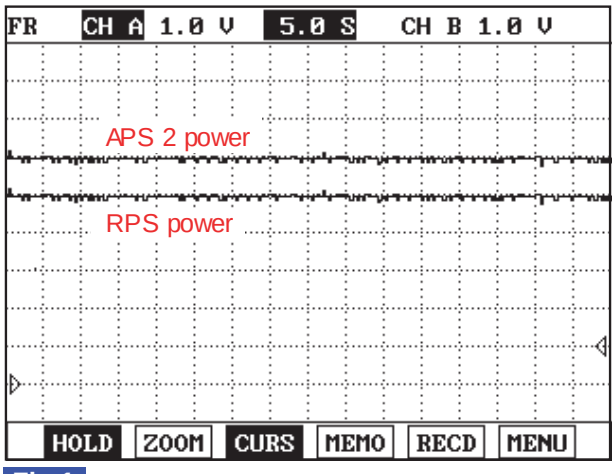

Fig.1

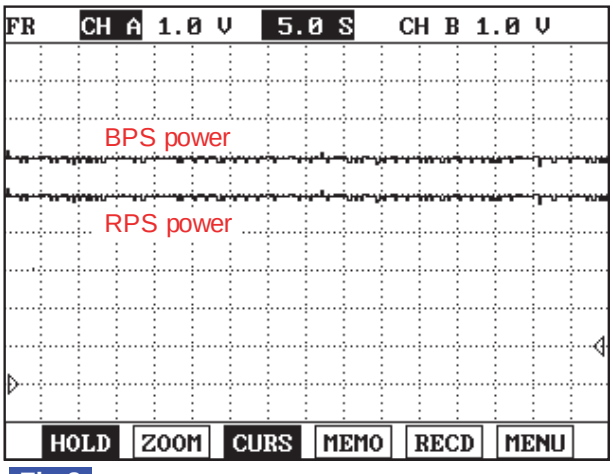

Fig.2

Fig.1) APS2 and RPS power supply signals are measured simultaneously. Check if the voltages are within the specification (4.8~5.1V) at IG KEY "ON".

Fig.2) BPS and RPS power supply signals are measured simultaneously. Check if the voltages are within the specification (4.8~5.1V) at IG KEY "ON".

LFIG347A

TERMINAL AND CONNECTOR INSPECTION EBF273D1

1. Electrical systems consist of a lot of harness and connectors, poor connection of terminals can cause various problems and damge of component.
2. Perform checking procedure as follows.
   1) Check damage of harness and terminals : Check terminals for contact resistance, corrosion and deformation.
   2) Check connecting condition of ECM and component connector : Check terminal seperation, damage of locking device and connecting condition between terminal and wiring.

   NOTE

   Disconnect the pin which requires checking at male connector and insert it to the terminal at female connector for checking connecting condition. (after checking, reconnect the pin at correct position.)
3. Is the problem found?

   YES

   ▶ Repair the trouble causing part and go to "Verification of Vehicle Repair".

   NO

   ▶ Go to "Power Circuit Inspection".

POWER CIRCUIT INSPECTION E66EC9F6

1. Check power circuit voltage
   1) IG KEY "OFF", ENGINE "OFF".
   2) Disconnector RPS connector, APS connector and BPS connector.
   3) IG KEY "ON".
   4) Measure the voltage of RPS connector terminal 1, APS connector terminal 1 and BPS terminal 2.

Specification : 4.8V~5.1V

   5) Is the measured voltage within the specification?

      YES

      ▶ Go to "Component Inspection".

      NO

      ▶ Go to "2. Check short to ground in power circuit" as follows.
2. Check short to ground in power circuit
   1) IG KEY "OFF", ENGINE "OFF".
   2) Disconnect RPS connector, APS connector, BPS connector and ECM connectors.
   3) Check continuity between RPS connector terminal 1(APS connector terminal 1, BPS terminal 2) and chassis ground.

specification : Discontinuity (Infinite Ω)

4) Is the measured resistance within the specification?

YES

▶ If the circuit is insulated well and the sensor power supply from ECM is low, replace ECM and go to "Verification of Vehicle Repair".

NO

▶ Repair short to ground and go to "Verification of Vehicle Repair".

COMPONENT INSPECTION ECB1AE5B

1. IG KEY "OFF", ENGINE "OFF".
2. Disconnect RPS connector, APS connector, BPS connector.
3. Check that sensor connector power supply is within the specification after turning IG KEY "ON".
4. Connect RPS connector and APS connector in turn.
5. Measure the voltage of power circuit of each sensor with all connector connected.

Specification : sensor power supply should not change as connecting RPS connector, APS connector, BPS connector. (If the change of sensor power supply occur as connecting sensor connector, this means the occurrence of short inside of sensor.)

6. Does change of sensor power supply occur as connecting sensor connector?

YES

▶ Replace related sensors.(rail pressure sensor, accel pedal sensor, boost pressure sensor)

NO

▶ Go to "Verification of Vehicle Repair".

VERIFICATION OF VEHICLE REPAIR EB460508

After a repair, it is essential to verify that the fault is corrected.

1. After connecting Scantool select "DIAGNOSTIC TROUBLE CODES(DTCs)" mode.
2. Clear recorded DTC using Scantool.
3. Drive the vehicle within DTC "Enable conditions" in "General information".
4. After selecting "DIAGNOSTIC TROUBLE CODES(DTCs)" mode and check if DTC is recorded again.
5. Are any DTCs recorded ?

YES

▶ Go to the DTC guide of recorded NO. in Scantool.

NO

▶ System operates within specification.

DTC P0653 SENSOR REFERENCE VOLTAGE "B" CIRCUIT HIGH

GENERAL DESCRIPTION E6E1BFEF

Refer to DTC P0652.

DTC DESCRIPTION EBEA1843

P0653 is set when the voltage above 5.158V - maximum voltage of sensor power supply 2 generates from ECM - is detected for more than 0.1 sec.. This code is due to the short to battery in sensor power circuit or the voltage problem inside of ECM.

DTC DETECTING CONDITION E1037AE3

<table>
<tr><th>Item</th><th colspan="3">Detecting Condition</th><th>Possible Cause</th></tr>
<tr><td>DTC Strategy</td><td colspan="3">• Voltage monitoring</td><td rowspan="6">• RPS power supply circuit
• APS 2 power supply circuit
• BPS power supply circuit
• ECM component</td></tr>
<tr><td>Enable Conditions</td><td colspan="3">• IG KEY "ON"</td></tr>
<tr><td>Threshold Value</td><td colspan="3">• when the voltage is above the maximum voltage of sensor power supply.(above 5.158V)</td></tr>
<tr><td>Diagnostic Time</td><td colspan="3">• 0.1 sec.</td></tr>
<tr><td rowspan="4">Fail Safe</td><td>Fuel cut</td><td>NO</td><td rowspan="4"></td></tr>
<tr><td>EGR Off</td><td>NO</td></tr>
<tr><td>Fuel Limit</td><td>YES</td></tr>
<tr><td>Check Lamp</td><td>NO</td></tr>
</table>

SPECIFICATION E88D96CE

Refer to DTC P0652.

SCHEMATIC DIAGRAM E9721A2D

Refer to DTC P0652.

SIGNAL WAVEFORM AND DATA E3F156DC

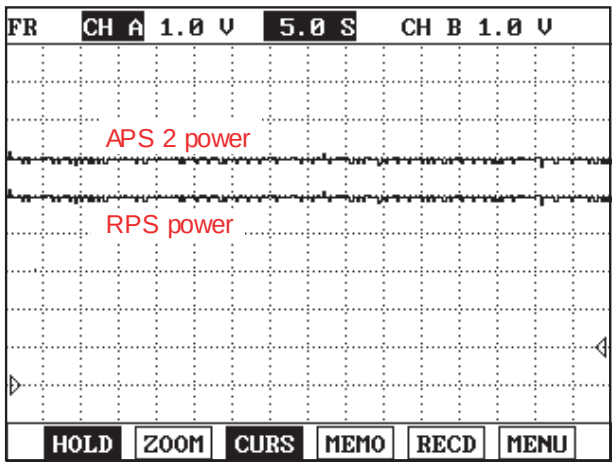

Fig.1

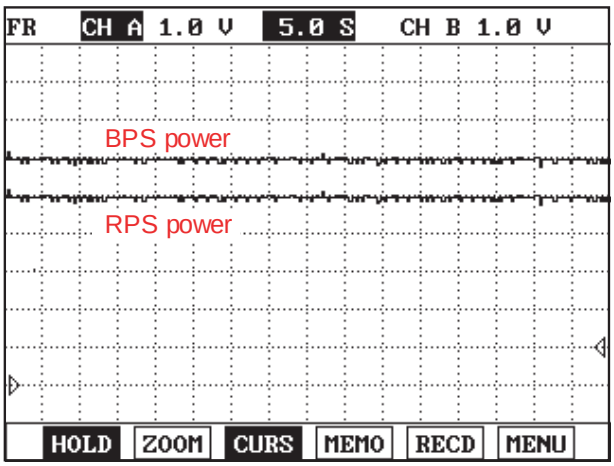

Fig.2

Fig.1) APS2 and RPS power supply signals are measured simultaneously. Check if the voltages are within the specification (4.8~5.1V) at IG KEY "ON".
Fig.2) BPS and RPS power supply signals are measured simultaneously. Check if the voltages are within the specification (4.8~5.1V) at IG KEY "ON".

LFIG347A

TERMINAL AND CONNECTOR INSPECTION E40BAF73

Refer to DTC P0652.

POWER CIRCUIT INSPECTION EF4E87F8

1. Check power circuit voltage

   1) IG KEY "OFF", ENGINE "OFF".

   2) Disconnector RPS connector, APS connector and BPS connector.

   3) IG KEY "ON".

   4) Measure the voltage of RPS connector terminal 1, APS connector terminal 1 and BPS terminal 2.

Specification : 4.8V~5.1V

   5) Is the measured voltage within the specification?

   YES

   ▶ Go to "Component Inspection".

   NO

   ▶ Go to "2. Check open in power circuit" as follows

2. Check open in power circuit

   1) IG KEY "OFF", ENGINE "OFF".

   2) Disconnector RPS connector, APS connector, BPS connector and ECM connector.

3) Measure the registance between RPS connector terminal 1 and ECM connector(C230-A) terminal 28.
Measure the registance between APS connector terminal 1 and ECM connector(C230-K) terminal 46.
Measure the registance between BPS connector terminal 2 and ECM connector(C230-A) terminal 13.

Specification : Continuity (below 1.0Ω)

4) Is the measured resistance within the specification?

YES

▶ Go to "3. Check short to battery in power circuit" as follows.

NO

▶ Repair open in power circuit and go to "Verification of Vehicle Repair".

3. Check short to battery in power circuit

1) IG KEY "OFF", ENGINE "OFF".

2) Disconnector RPS connector, APS connector, BPS connector and ECM connector.

3) IG KEY "ON".

4) Measure the voltage between RPS connector terminal 1 or APS connector terminal 1 or BPS connector terminal 2 and chassis ground.

Specification : 0.0V~0.1V

5) Is the measured voltage within the specification?

YES

▶ If the circuit is insulated well and the sensor power supply from ECM is high, replace ECM and go to "Verification of Vehicle Repair".

NO

▶ Repair short to battery and go to "Verification of Vehicle Repair".

COMPONENT INSPECTION E89CFEE5

1. IG KEY "OFF", ENGINE "OFF".
2. Disconnect RPS connector, APS connector, BPS connector.
3. Check that sensor connector power supply is within the specification after turning IG KEY "ON".
4. Connect RPS connector and APS connector in turn.
5. Measure the voltage of power circuit of each sensor with all connector connected.

Specification : sensor power supply should not change as connecting RPS connector, APS connector, BPS connector.
(If the change of sensor power supply occur as connecting sensor connector, this means the occurrence of short inside of sensor.)

6. Does change of sensor power supply occur as connecting sensor connector?

YES

▶ Replace related sensors.(rail pressure sensor, accel pedal sensor, boost pressure sensor)

NO

▶ Go to "Verification of Vehicle Repair".

VERIFICATION OF VEHICLE REPAIR E4C6AA40

Refer to DTC P0652.

DTC P0670 GLOW RELAY CIRCUIT MALFUNCTION

COMPONENT LOCATION ED0542EA

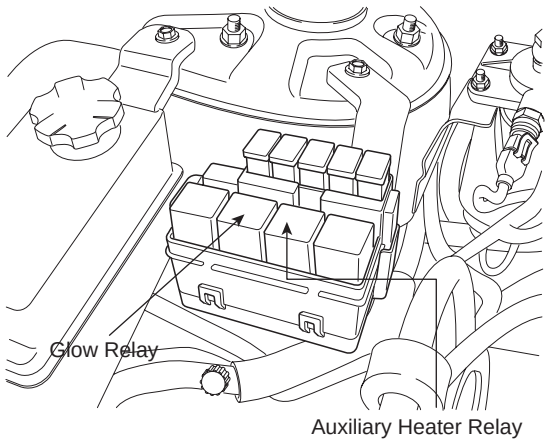

SCMFL6508L

GENERAL DESCRIPTION ED2AA0E4

Heating combustion chamber, glow plug increases fuel ignitibility and makes fuel in the foggy state easily when engine is cold. Thus, glow plug makes engine starting easily and decreases exhaust gas produced just after turning engine on when engine is cold.ECM controls operation and operating duration of glow plug relay which supplies power to glow plug with ECTS signal, battery voltage and IG KEY ON signal.Through glow lamp in cluster, ECM let drivers know if glow plug is ON.

DTC DESCRIPTION E7020BF3

P0670 is set when 1)excessive voltage is detected or 2)no current is detected like open or short to ground in glow relay control circuit for more than 1 sec. at glow relay ON condition. This code is due to open in glow relay control circuit or internal open in glow relay component.

DTC DETECTING CONDITION EF4807F1

<table>
<tr><th>Item</th><th colspan="3">Detecting Condition</th><th>Possible Cause</th></tr>
<tr><td>DTC Strategy</td><td colspan="3">• Voltage monitoring</td><td rowspan="7">• Glow relay control circuit
• Glow relay component</td></tr>
<tr><td>Enable Conditions</td><td colspan="3">• IG KEY "ON" (monitoring only performed within relay operating condition)</td></tr>
<tr><td>Threshold Value</td><td colspan="3">• short to battery
• Short to GND, Wiring open</td></tr>
<tr><td>Diagnostic Time</td><td colspan="3">• 1.0 sec.</td></tr>
<tr><td rowspan="4">Fail Safe</td><td>Fuel cut</td><td>NO</td><td rowspan="4"></td></tr>
<tr><td>EGR Off</td><td>NO</td></tr>
<tr><td>Fuel Limit</td><td>NO</td></tr>
<tr><td>Check Lamp</td><td>NO</td></tr>
</table>

SPECIFICATION E971562A

※ **RELAY OPERATING TIME**

	- 20℃	**-10**℃	**10**℃	**50**℃
10V	16sec	10sec	4sec	2.0sec
14.9V	16sec	10sec	4sec	2.0sec

SCHEMATIC DIAGRAM E832E495

[CIRCUIT DIAGRAM]

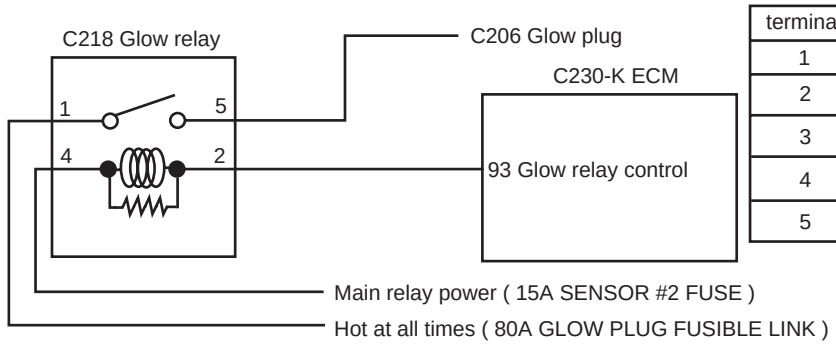

[CONNECTOR INFORMATION]

terminal	Connected to	Function
1	80A GLOW PLUG FUSIBLE LINK	Glow plug power(INPUT)
2	C230-K terminal 93	Glow relay control
3	-	-
4	15A SENSOR #2 FUSE	Glow relay coil power
5	C206 terminal 1	Glow plug power(OUTPUT)

[HARNESS CONNECTOR]

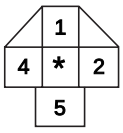

Glow relay
C218

C230-A

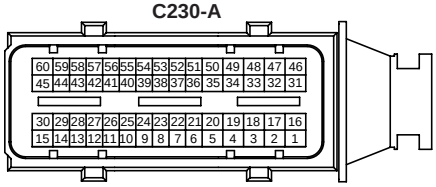

C230-K

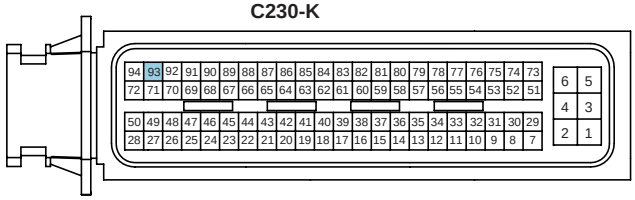

ECM

SCMFL6406L

MONITOR SCANTOOL DATA EFD64FA9

1. Connect Scantool to Data Link Connector (DLC).
2. Warm engine up to normal operating temperature.
3. Turn "OFF" electrical devices and A/C.
4. Monitor "GLOW RELAY" parameter on the Scantool.

specification : After operating according to engine coolant temperature and battery voltage, Glow relay turns "OFF". at IG KEY "ON". (Refer to Specification)

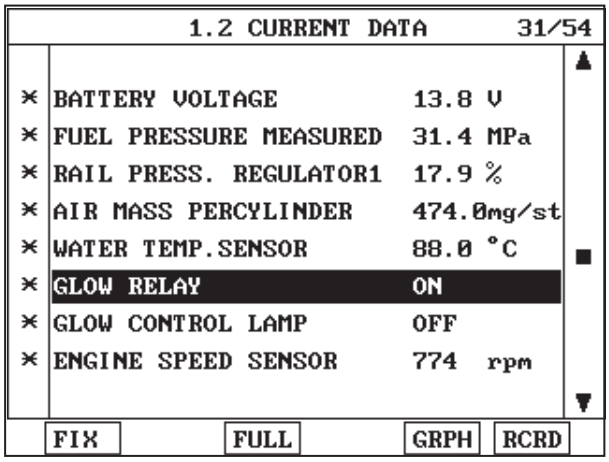

Fig.1

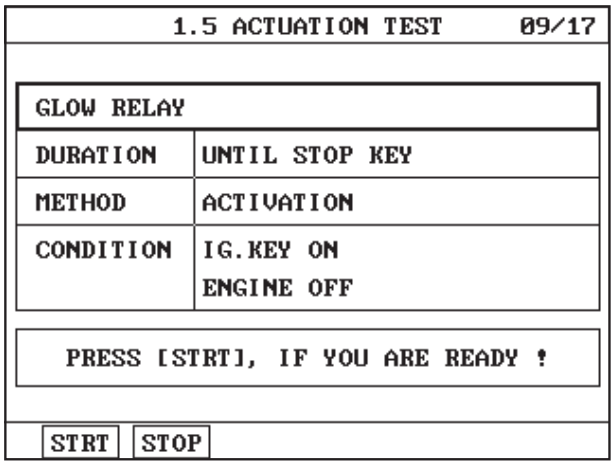

Fig.2

Fig 1) Operating state of Glow relay is shown. However, it is difficult to check operating state because Glow relay turns OFF 2~3 sec. after operation at normal temp.
Fig.2) Checking glow relay operation and power supply to glow plug using "ACTUATION TEST" on Scantool is convenient.

SCMFL6320L

TERMINAL AND CONNECTOR INSPECTION ED7D66C4

1. Electrical systems consist of a lot of harness and connectors, poor connection of terminals can cause various problems and damge of component.

2. Perform checking procedure as follows.

   1) Check damage of harness and terminals : Check terminals for contact resistance, corrosion and deformation.

   2) Check connecting condition of ECM and component connector : Check terminal seperation, damage of locking device and connecting condition between terminal and wiring.

NOTE

Disconnect the pin which requires checking at male connector and insert it to the terminal at female connector for checking connecting condition. (after checking, reconnect the pin at correct position.)

3. Is the problem found?

YES

▶ Repair the trouble causing part and go to "Verification of Vehicle Repair".

NO

▶ Go to "Power Circuit Inspection".

POWER CIRCUIT INSPECTION E7CB40A7

1. Check HOT AT ALL TIMES power circuit voltage

   1) IG KEY "OFF", ENGINE "OFF".

   2) Disconnect glow relay.

   3) Measure the voltage of glow relay connector terminal 1.

Specification : 11.5V~13.0V

4) Is the measured voltage within the specification?

YES

▶ Go to "2. Check IG KEY "ON" power circuit voltage" as follows.

NO

▶ Repair FUSIBLE LINK BOX 80A GLOW PLUG FUSIBLE LINK and related circuit and go to "Verification of Vehicle Repair".

2. Check IG KEY "ON" power circuit voltage

1) IG KEY "OFF", ENGINE "OFF".

2) Disconnect glow relay.

3) IG KEY "ON".

4) Measure the voltage of glow relay connector terminal 4.

Specification : 11.5V~13.0V

5) Is the measured voltage within the specification?

YES

▶ Go to "Control Circuit Inspection".

NO

▶ Repair E/R FUSE & RELAY BOX 15A SENSOR #2 FUSE and related circuit and go to "Verification of Vehicle Repair".

CONTROL CIRCUIT INSPECTION ECEF7E5F

1. Check control circuit monitoring voltage

1) IG KEY "OFF", ENGINE "OFF".

2) Disconnect glow relay.

3) IG KEY "ON".

4) Measure the voltage of glow relay connector terminal 2.

Specification : 3.2V~3.7V

5) Is the measured voltage within the specification?

YES

▶ Go to "Component Inspection".

NO

▶ When no value is detected : Go to "2. Check open in control circuit".
▶ When high voltage is detected : Repair short to battery in signal circuit and go to "Verification of Vehicle Repair".

2. Check open in control circuit

1) IG KEY "OFF", ENGINE "OFF".

2) Disconnect glow relay and ECM connector.

3) Check continuity between glow relay connector terminal 2 and ECM connector (C230-K) terminal 93.

specification : Continuity (below 1.0Ω)

4) Is the measured resistance within the specification?

YES

▶ Repair short to ground and go to "Verification of Vehicle Repair".

NO

▶ Repair open in control circuit and go to "Verification of Vehicle Repair".

COMPONENT INSPECTION E0118EC9

1. Check golw relay component coil resistance

1) IG KEY "OFF", ENGINE "OFF".

2) Disconnect glow relay.

3) Measure the resistance of glow relay component coil.

Specification : 55±5 Ω (20℃)

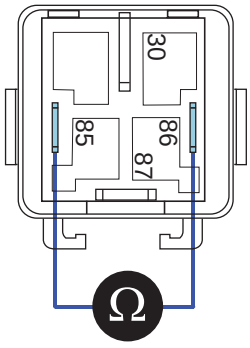

EGNG007M

4) Is the measured resistance within the specification?

YES

▶ Go to "2. Check glow relay component operation" as follows.

NO

▶ Replace glow relay and go to "Verification of Vehicle Repair".

2. Check glow relay component operation

   1) IG KEY "OFF", ENGINE "OFF".

   2) Disconnect glow relay.

   3) Supplies random B+ and ground to coil sides of glow relay (terminal 85, terminal 86).

   4) Check continuity between glow relay terminal 30 and terminal 87.

specification : When power is supplied : Continuity (below 1.0Ω)
When power is not supplied : Discontinuity (Infinite Ω)

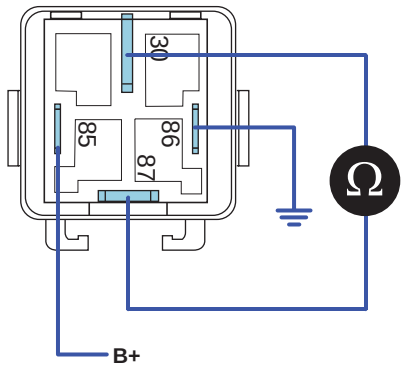

EGNG007N

   5) Is the measured resistance within the specification?

YES

▶ Go to "Verification of Vehicle Repair".

NO

▶ Replace glow relay and go to "Verification of Vehicle Repair".

※ Repeat this process 2~3 times.

VERIFICATION OF VEHICLE REPAIR E5386DA9

After a repair, it is essential to verify that the fault is corrected.

1. After connecting Scantool select "DIAGNOSTIC TROUBLE CODES(DTCs)" mode.
2. Clear recorded DTC using Scantool.
3. Drive the vehicle within DTC "Enable conditions" in "General information".
4. After selecting "DIAGNOSTIC TROUBLE CODES(DTCs)" mode and check if DTC is recorded again.
5. Are any DTCs recorded ?

YES

▶ Go to the DTC guide of recorded NO. in Scantool.

NO

▶ System operates within specification.

DTC P0685 ECM/PCM POWER RELAY CONTROL CIRCUIT /OPEN

COMPONENT LOCATION E84BCA07

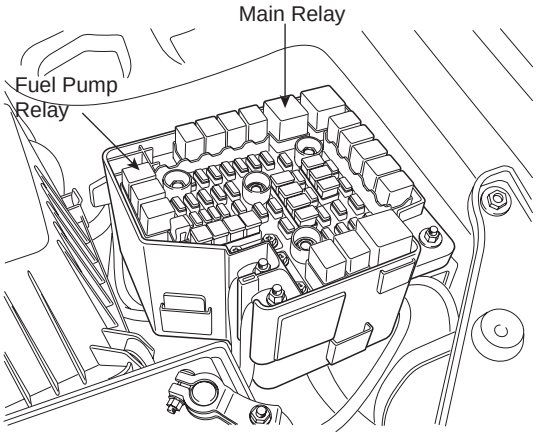

SCMFL6507L

GENERAL DESCRIPTION ED9CFAB0

Main relay operates when Ignition ON signal is inputted to ECM connector(C230-K) terminal 28 and it supplies power to ECM, fuel pump relay, CMP, EGR actuator, throttle flap actuator, PTC heater relay and brake switch, etc. Especially, the power supplied to ECM is used as a main power of injectors, rail pressure control valve and ECM operation.When IG KEY ON signal is shut off during turning engine OFF, ECM stops injector operation then engine turns OFF. Approx. after 16 sec., ECM shuts OFF main relay and system turns OFF. Main relay is very important for engine operation, so careful inspection is strongly required.

DTC DESCRIPTION E3790076

When IG KEY OFF signal is imputted to ECM. ECM stops injector operation and engine turns OFF. Then, After-run(turning off process of ECM internal system) is performed in order to shut system down. During this process, if main relay power supply is cut too late or power supply is cut too early before After-run process completes, ECM detect main relay error and P0685 is set.

DTC DETECTING CONDITION E6C9ECE0

<table>
<tr><th>Item</th><th colspan="3">Detecting Condition</th><th>Possible Cause</th></tr>
<tr><td>DTC Strategy</td><td colspan="3">• Voltage monitoring</td><td rowspan="8">• Main relay circuit
• Main relay component</td></tr>
<tr><td>Enable Conditions</td><td colspan="3">• Engine running</td></tr>
<tr><td>Threshold Value</td><td colspan="3">• When main relay responds to IG KEY - ON/OFF signal too fast or slow
(After-run finished and it requires more than 2 sec. for Main relay to be deactivated.Main relay deactivated before After-run finished more than 3 times.)</td></tr>
<tr><td>Diagnostic Time</td><td colspan="3">• Immediately</td></tr>
<tr><td rowspan="4">Fail Safe</td><td>Fuel cut</td><td>NO</td><td rowspan="4"></td></tr>
<tr><td>EGR Off</td><td>NO</td></tr>
<tr><td>Fuel Limit</td><td>NO</td></tr>
<tr><td>Check Lamp</td><td>NO</td></tr>
</table>

SPECIFICATION E402657B

Main Relay Coil Resistance	85±10 Ω (20℃)

SCHEMATIC DIAGRAM EB7ED8A6

[CIRCUIT DIAGRAM]

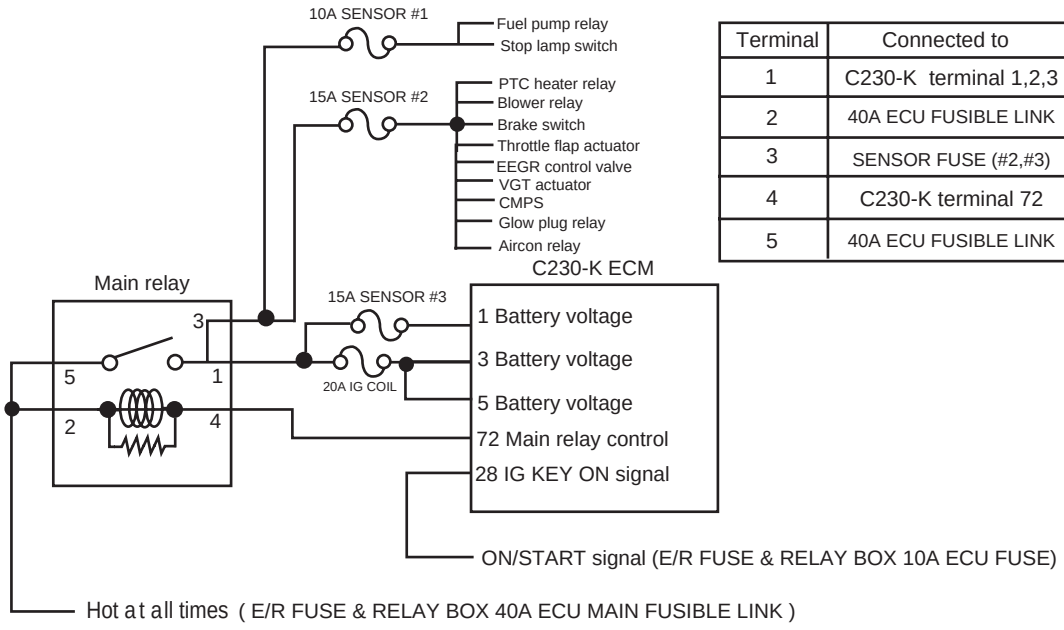

[CONNECTOR INFORMATION]

Terminal	Connected to	Function
1	C230-K terminal 1,2,3	Power supply to ECM, Sensor, Actuator
2	40A ECU FUSIBLE LINK	Main relay coil power
3	SENSOR FUSE (#2,#3)	Power supply to ECM, Sensor, Actuator
4	C230-K terminal 72	Main relay control
5	40A ECU FUSIBLE LINK	Hot at all times

[HARNESS CONNECTOR]

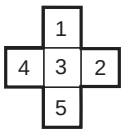

Main relay

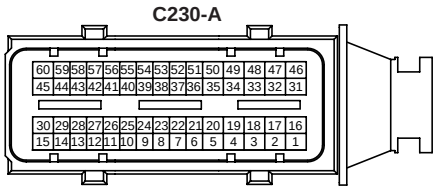

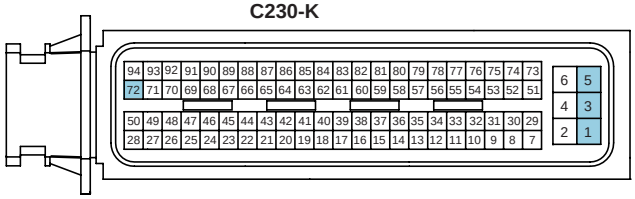

ECM

SCMFL6407L

SIGNAL WAVEFORM AND DATA EE4A0870

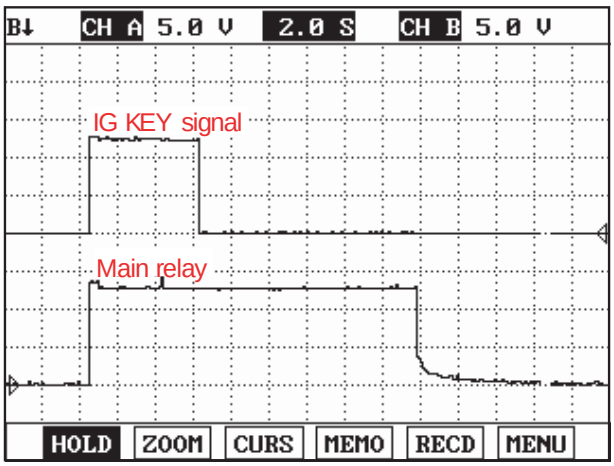

Fig.1

Fig.1) Main relay operates when IG KEY "ON" (C230-K terminal 28 ON signal), it turns "OFF" in 16 sec. after IG KEY "OFF".

SCMFL6392L

TERMINAL AND CONNECTOR INSPECTION E0B082ED

1. Electrical systems consist of a lot of harness and connectors, poor connection of terminals can cause various problems and damge of component.

2. Perform checking procedure as follows.

   1) Check damage of harness and terminals : Check terminals for contact resistance, corrosion and deformation.

   2) Check connecting condition of ECM and component connector : Check terminal seperation, damage of locking device and connecting condition between terminal and wiring.

   NOTE

   Disconnect the pin which requires checking at male connector and insert it to the terminal at female connector for checking connecting condition. (after checking, reconnect the pin at correct position.)

3. Is the problem found?

   YES

   ▶ Repair the trouble causing part and go to "Verification of Vehicle Repair".

   NO

   ▶ Go to "Power Circuit Inspection".

POWER CIRCUIT INSPECTION E6CF3DDE

1. Check power circuit voltage

   1) IG KEY "OFF", ENGINE "OFF".

   2) Disconnect main relay.

   3) Measure the voltage of main relay terminal 2 and 5.

Specification : 11.5V~13.0V

4) Is the measured voltage within the specification?

YES

▶ Go to "Check power supply line(relay→actuator)" as follows.

NO

▶ Repair E/R FUSE & RELAY BOX 40A ECU MAIN FUSIBLE LINK and related circuit and go to "Verification of Vehicle Repair".

2. Check power supply line(relay→actuator)

1) IG KEY "OFF", ENGINE "OFF".

2) Disconnect main relay and ECM connector.

3) Connect main relay terminal 5 and 1 using jump wire.

4) Measure the voltage of ECM connector (C230-K) terminal 1,3,5.

specification : 11.5V~13.0V

5) Is the measured voltage within the specification?

YES

▶ Go to "Control Circuit Inspection".

NO

▶ Repair open in the circuit from which no voltage is detected, and go to "Verification of Vehicle Repair".

CONTROL CIRCUIT INSPECTION E02B93DD

1. Check open in control circuit

1) IG KEY "OFF", ENGINE "OFF".

2) Disconnect main relay and ECM connector.

3) Check continuity between main relay terminal 4 and ECM connector (C230-K) 72.

specification : Continuity (below 1.0Ω)

4) Is the measured resistance within the specification?

YES

▶ Go to "2. Check short to ground in control circuit" as follows.

NO

▶ Repair open in control circuit and go to "Verification of Vehicle Repair".

2. Check short to ground in control circuit

   1) IG KEY "OFF", ENGINE "OFF".

   2) Disconnect main relay and ECM connector.

   3) Check continuity between main relay terminal 4 and chassis ground.

specification : Discontinuity (Infinite Ω)

   4) Is the measured resistance within the specification?

YES

▶ Go to "3.Check short to battery in control circuit" as follows.

NO

▶ Repair short to ground in control circuit and go to "Verification of Vehicle Repair".

3. Check short to battery in control circuit

   1) IG KEY "OFF", ENGINE "OFF".

   2) Disconnect main relay and ECM connector.

   3) IG KEY "ON".

   4) Measure the voltage of main relay connector terminal 4.

specification : 0.0V~0.1V

   5) Is the measured resistance within the specification?

YES

▶ Go to "Component Inspection".

NO

▶ Repair short to battery in signal circuit and go to "Verification of Vehicle Repair".

COMPONENT INSPECTION E23A6338

1. Check main relay component resistance

   1) IG KEY "OFF", ENGINE "OFF".

   2) Disconnect main relay.

   3) Measure the resistance between main relay coil component terminal 85 and 86.

Specification : 85±10 Ω (20℃)

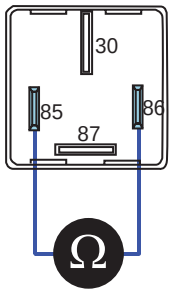

EGNG010F

4) Is the measured resistance within the specification?

YES

▶ Go to "2. Check main relay component operation" as follows.

NO

▶ Replace main relay and go to "Verification of Vehicle Repair".

2. Check main relay component operation

1) IG KEY "OFF", ENGINE "OFF".

2) Disconnect main relay.

3) Supplies random B+ and ground to coil sides of main relay. (terminal 85, terminal 86)

4) Check continuity between main relay component terminal 30 and 87.

specification : When power is supplied : Continuity (below 1.0Ω)
When power is not supplied : Discontinuity (Infinite Ω)

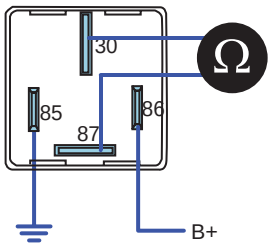

EGNG010G

5) Is the continuity test within the specification?

YES

▶ Go to "Verification of Vehicle Repair".

NO

▶ Replace main relay and go to "Verification of Vehicle Repair".

※ Repeat this process 2~3 times.

VERIFICATION OF VEHICLE REPAIR EFBCBCD3

After a repair, it is essential to verify that the fault is corrected.

1. After connecting Scantool select "DIAGNOSTIC TROUBLE CODES(DTCs)" mode.
2. Clear recorded DTC using Scantool.
3. Drive the vehicle within DTC "Enable conditions" in "General information".
4. After selecting "DIAGNOSTIC TROUBLE CODES(DTCs)" mode and check if DTC is recorded again.
5. Are any DTCs recorded ?

YES

▶ Go to the DTC guide of recorded NO. in Scantool.

NO

▶ System operates within specification.

DTC P0698 SENSOR REFERENCE VOLTAGE "C" CIRCUIT LOW

GENERAL DESCRIPTION EDE30970

ECM is activated by power supply. Signals from several sensors, such as CKPS and APS, is inputted to ECM. Comparing inputted siganals with control LOGIC saved at micro controller and EEPROM, ECM controlls engine as actuating injectors, solenoids and relays. To guarantee accurate control, ECM performs SELF TEST, DIAGNOSIS of several sensors and actuators. And if serious trouble which affects vehicle performance occurrs, ECM sets DTCs.At certain cases, ECM shuts down whole systems in order to prevent dangerous situation due to incorrect control.

DTC DESCRIPTION E9F08875

P0698 is set when the voltage below 4.7V - minimum voltage of sensor power supply 3 generates from ECM - is detected for more than 0.1 sec.. This code is due to the short to ground in sensor power circuit or the voltage problem inside of ECM.

DTC DETECTING CONDITION E2C2A9A5

<table>
<tr><th>Item</th><th colspan="3">Detecting Condition</th><th>Possible Cause</th></tr>
<tr><td>DTC Strategy</td><td colspan="3">• Voltage monitoring</td><td rowspan="6">• A/C pressure transducer power supply circuit
• variable swirl control actuator power supply circuit
• ECM component</td></tr>
<tr><td>Enable Conditions</td><td colspan="3">• IG KEY "ON"</td></tr>
<tr><td>Threshold Value</td><td colspan="3">• when the voltage is below the minimum voltage of sensor power supply (below 4.7V)</td></tr>
<tr><td>Diagnostic Time</td><td colspan="3">• 0.1 sec.</td></tr>
<tr><td rowspan="4">Fail Safe</td><td>Fuel cut</td><td>NO</td><td rowspan="4"></td></tr>
<tr><td>EGR Off</td><td>NO</td></tr>
<tr><td>Fuel Limit</td><td>YES</td></tr>
<tr><td>Check Lamp</td><td>NO</td></tr>
</table>

SPECIFICATION EF3F308F

Sensor power 1	Sensor power 2	Sensor power 3
MAFS, APS 1 4830mV~5158mV	RPS, APS 2,BPS 4830mV~5158mV	A/C pressure transducer,VSA position Sensor 4830mV~5158mV

SCHEMATIC DIAGRAM E8A07FC2

[CIRCUIT DIAGRAM]

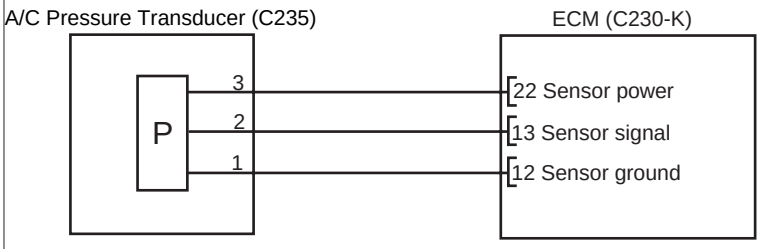

[CONNECTOR INFORMATION]

Terminal	Connected to	Function
1	ECM C230-K (12)	Sensor ground
2	ECM C230-K (13)	Sensor signal
3	ECM C230-K (22)	Sensor power

[HARNESS CONNECTOR]

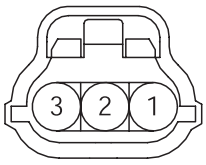

C235
A/C pressure transducer

C230-A

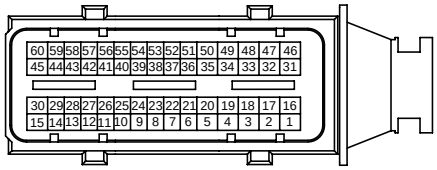

C230-K

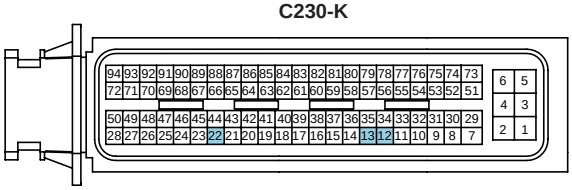

ECM

SCMFL6408L

[CIRCUIT DIAGRAM]

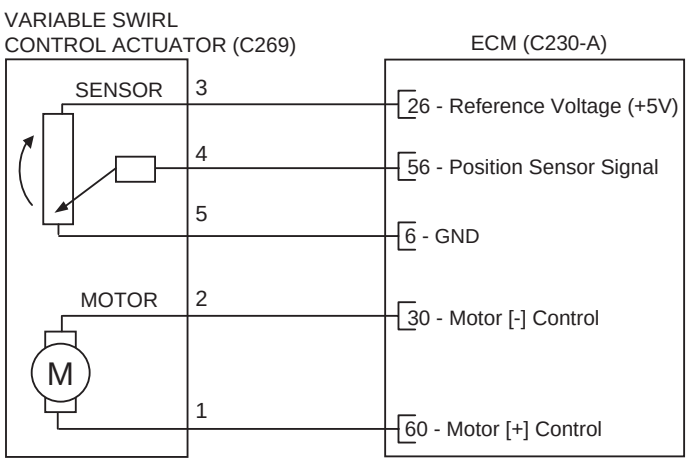

[CONNECTION INFORMATION]

Terminal	Connected to	Function
1	ECM C230-A (60)	Motor [+] Control
2	ECM C230-A (30)	Motor [-] Control
3	ECM C230-A (26)	Reference Voltage (+5V)
4	ECM C230-A (56)	Position Signal
5	ECM C230-A (6)	Sensor Ground

[HARNESS CONNECTORS]

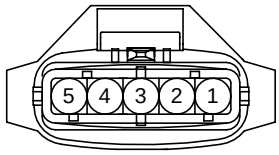

C269

VARIABLE SWIRL CONTROL ACTUATOR

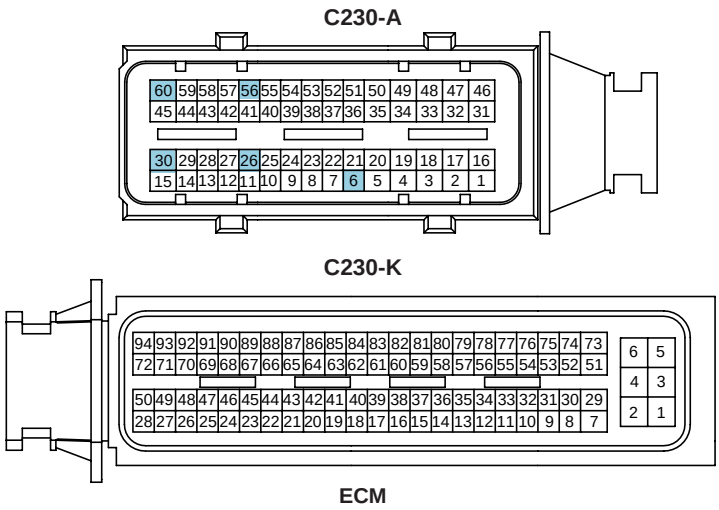

SCMFL6132L

SIGNAL WAVEFORM AND DATA E2B9B3AE

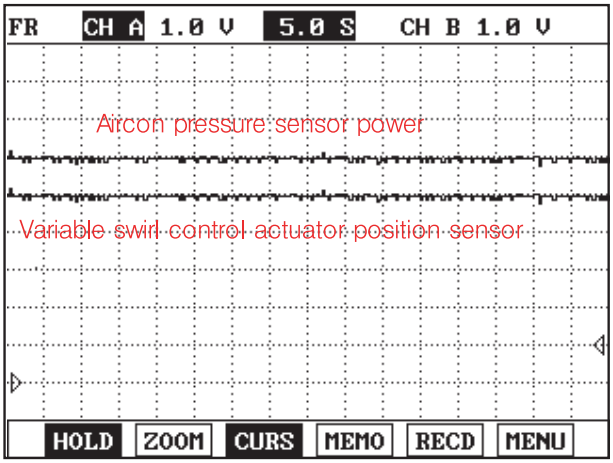

Fig.1

Fig.1) A/C pressure transducer and VSA position Sensor power supply signals are measured simultaneously.
Check if the voltages are within the specification (4.8~5.1V) at IG KEY "ON"

LFIG455A

TERMINAL AND CONNECTOR INSPECTION EC175D89

1. Electrical systems consist of a lot of harness and connectors, poor connection of terminals can cause various problems and damge of component.

2. Perform checking procedure as follows.

   1) Check damage of harness and terminals : Check terminals for contact resistance, corrosion and deformation.

   2) Check connecting condition of ECM and component connector : Check terminal seperation, damage of locking device and connecting condition between terminal and wiring.

   NOTE

   Disconnect the pin which requires checking at male connector and insert it to the terminal at female connector for checking connecting condition. (after checking, reconnect the pin at correct position.)

3. Is the problem found?

   YES

   ▶ Repair the trouble causing part and go to "Verification of Vehicle Repair".

   NO

   ▶ Go to "Power Circuit Inspection".

POWER CIRCUIT INSPECTION EC2CF9CF

1. Check power circuit voltage

   1) IG KEY "OFF", ENGINE "OFF"

   2) Disconnect A/C pressure transducer connector and variable swirl control actuator connector.

   3) IG KEY "ON"

   4) Measure the voltage between A/C pressure transducer connector terminal 3 or variable swirl control actuator connector terminal 3 and chassis ground.

specification : 4.8V~5.1V

   5) Is the measured voltage within the specification?

   YES

   ▶ Go to "Component Inspection".

   NO

   ▶ Go to "2. Check short to ground in power circuit" as follows.

2. Check short to ground in power circuit

   1) IG KEY "OFF", ENGINE "OFF"

   2) Disconnect A/C pressure transducer connector, variable swirl control actuator connector, ECM connectors.

3) Check continuity between A/C pressure transducer connector terminal 3 or variable swirl control actuator connector terminal 3 and chassis ground.

specification : Discontinuity (Infinite Ω)

4) Is the measured resistance within the specification?

YES

▶ If the circuit is insulated well and the sensor power supply from ECM is low, replace ECM and go to "Verification of Vehicle Repair".

NO

▶ Repair short to ground and go to "Verification of Vehicle Repair".

COMPONENT INSPECTION E66A05E8

1. IG KEY "OFF", ENGINE "OFF"
2. Disconnect A/C pressure transducer connector and variable swirl control actuator connector.
3. Check that sensor connector power supply is within the specification after turning IG KEY "ON".
4. Connect A/C pressure transducer connector and variable swirl control actuator connector in turn.
5. Measure the voltage of power circuit of each sensor with all connector connected.

Specification : sensor power supply should not change as connecting A/C pressure transducer connector and variable swirl control actuator connector.
(If the change of sensor power supply occur as connecting sensor connector, this means the occurrence of short inside of sensor.)

6. Does change of sensor power supply occur as connecting sensor connector?

YES

▶ Replace A/C pressure transducer or variable swirl control actuator.

NO

▶ Go to "Verification of Vehicle Repair".

VERIFICATION OF VEHICLE REPAIR EE2EADFB

After a repair, it is essential to verify that the fault is corrected.

1. After connecting Scantool select "DIAGNOSTIC TROUBLE CODES(DTCs)" mode.
2. Clear recorded DTC using Scantool.
3. Drive the vehicle within DTC "Enable conditions" in "General information".
4. After selecting "DIAGNOSTIC TROUBLE CODES(DTCs)" mode and check if DTC is recorded again.
5. Are any DTCs recorded ?

YES

▶ Go to the DTC guide of recorded NO. in Scantool.

NO

▶ System operates within specification.

DTC P0699 SENSOR REFERENCE VOLTAGE "C" CIRCUIT HIGH

GENERAL DESCRIPTION E6EB821A

Refer to DTC P0698.

DTC DESCRIPTION E8533693

P0699 is set when the voltage above 5.158V - maximum voltage of sensor power supply 3 generates from ECM - is detected for more than 0.1 sec.. This code is due to the short to battery in sensor power circuit or the voltage problem inside of ECM.

DTC DETECTING CONDITION E7645EBA

<table>
<tr><th>Item</th><th colspan="3">Detecting Condition</th><th>Possible Cause</th></tr>
<tr><td>DTC Strategy</td><td colspan="3">• Voltage monitoring</td><td rowspan="6">• A/C pressure transducer power supply circuit
• variable swirl control actuator power supply circuit
• ECM component</td></tr>
<tr><td>Enable Conditions</td><td colspan="3">• IG KEY "ON"</td></tr>
<tr><td>Threshold Value</td><td colspan="3">• when the voltage is above the maximum voltage of sensor power supply(above 5.158V)</td></tr>
<tr><td>Diagnostic Time</td><td colspan="3">• 0.1 sec.</td></tr>
<tr><td rowspan="4">Fail Safe</td><td>Fuel cut</td><td>NO</td><td rowspan="4"></td></tr>
<tr><td>EGR Off</td><td>NO</td></tr>
<tr><td>Fuel Limit</td><td>YES</td></tr>
<tr><td>Check Lamp</td><td>NO</td></tr>
</table>

SPECIFICATION E1291B6F

Refer to DTC P0698.

SCHEMATIC DIAGRAM EA7E13E7

Refer to DTC P0698.

SIGNAL WAVEFORM AND DATA E71B02FB

Refer to DTC P0698.

TERMINAL AND CONNECTOR INSPECTION ED0D429C

Refer to DTC P0698.

POWER CIRCUIT INSPECTION E0F941F7

1. Check power circuit voltage

   1) IG KEY "OFF", ENGINE "OFF"

   2) Disconnect A/C pressure transducer connector and variable swirl control actuator connector.

3) IG KEY "ON"

4) Measure the voltage between A/C pressure transducer connector terminal 3 or variable swirl control actuator connector terminal 3 and chassis ground.

specification : 4.8V~5.1V

5) Is the measured voltage within the specification?

YES

▶ Go to "Component Inspection".

NO

▶ Go to "2. Check short to ground in power circuit" as follows.

2. Check open in power circuit

1) IG KEY "OFF", ENGINE "OFF"

2) Disconnect A/C pressure transducer connector, variable swirl control actuator connector and ECM connector.

3) Measure the registance between A/C pressure transducer connector terminal 3 and ECM connector(C230-K) terminal 22.
Measure the registance between variable swirl control actuator connector terminal 3 and ECM connector(C230-A) terminal 26.

Specification : Continuity (below 1.0Ω)

4) Is the measured resistance within the specification?

YES

▶ Go to "3. Check short to battery in power circuit" as follows.

NO

▶ Repair open in power circuit and go to "Verification of Vehicle Repair".

3. Check short to battery in power circuit

1) IG KEY "OFF", ENGINE "OFF"

2) Disconnect A/C pressure transducer connector, variable swirl control actuator connector and ECM connector.

3) IG KEY "ON"

4) Measure the voltage between A/C pressure transducer connector terminal 3 or variable swirl control actuator connector terminal 3 and chassis ground.

Specification : 0.0V~0.1V

5) Is the measured voltage within the specification?

YES

▶ If the circuit is insulated well and the sensor power supply from ECM is high, replace ECM and go to "Verification of Vehicle Repair".

NO

▶ Repair short to battery and go to "Verification of Vehicle Repair".

COMPONENT INSPECTION E3E2A5C8

1. IG KEY "OFF", ENGINE "OFF"
2. Disconnect A/C pressure transducer connector and variable swirl control actuator connector.
3. Check that sensor connector power supply is within the specification after turning IG KEY "ON".
4. Connect A/C pressure transducer connector and variable swirl control actuator connector in turn.
5. Measure the voltage of power circuit of each sensor with all connector connected.

Specification : sensor power supply should not change as connecting A/C pressure transducer connector and variable swirl control actuator connector.
(If the change of sensor power supply occur as connecting sensor connector, this means the occurrence of short inside of sensor.)

6. Does change of sensor power supply occur as connecting sensor connector?

YES

▶ Replace A/C pressure transducer or variable swirl control actuator.

NO

▶ Go to "Verification of Vehicle Repair".

VERIFICATION OF VEHICLE REPAIR E30F29AE

Refer to DTC P0698.

DTC P0820 NEUTRAL S/W MALFUNCTION

GENERAL DESCRIPTION E4EA39B2

Neutral Gear Switch is installed in M/T vehicle and senses driver's intension to shift gear(driver's intension to drive).ECM recognizes engaged gear based on vehicle speed sensor signal and engine RPM in M/T vehicle. And Black Smoke limiting fuel quantity value varies according to engaged gear.(As higher gear shift is engaged, maximum possible fuel injection quantity increases to raise power generation.)The recognition of engaged gear is available when vehicle speed reachs to 2Km/h - the minimum speed for ECM to detect. When vehicle starts to move after standing for a while and vehicle speed does not reach to 2Km/h, fuel quantity mapping value at neutral gear is adopted to vehicle. Moreover, this phenomenon is more serious when vehicle requires high power generation such as the situation when vehicle is on the slope. To cope with this problem, neutral gear switch which senses driver's intension of starting to move is applied. And fuel injection quantity mapping value suitable for 1st gear is adopted immediately.

NOTE

To reduce black smoke produced during rapid acceleration when no load is applied, fuel injection quantity at none load condition is 70% of that at 1st gear.

DTC DESCRIPTION EB1D0877

P0820 is set when 1)gear is engaged at engine ON, but clutch signal is not detected or 2)only neutral signal is detected at above 80Km/h. for more than 5 sec.. This code is due to open, short to battery or ground in neutral gear switch circuit.

DTC DETECTING CONDITION E27AF4E6

<table>
<tr><th>Item</th><th colspan="3">Detecting Condition</th><th>Possible Cause</th></tr>
<tr><td>DTC Strategy</td><td colspan="3">• Signal monitoring</td><td rowspan="6">• Nertral gear switch component
• Nertral gear switch circuit</td></tr>
<tr><td>Enable Conditions</td><td colspan="3">• Engine running</td></tr>
<tr><td>Threshold Value</td><td colspan="3">• gear is engaged at engine ON, but clutch signal is not detected
• Only neutral signal is detected at above 80Km/h</td></tr>
<tr><td>Diagnostic Time</td><td colspan="3">• 5.0sec</td></tr>
<tr><td rowspan="4">Fail Safe</td><td>Fuel cut</td><td>NO</td><td rowspan="4"></td></tr>
<tr><td>EGR Off</td><td>NO</td></tr>
<tr><td>Fuel Limit</td><td>NO</td></tr>
<tr><td>Check Lamp</td><td>NO</td></tr>
</table>

SPECIFICATION E5BDB6EE

Signal Voltage	Neutral Position	Except Neutral Position
11.0V~13.5V	0.0V~0.2V(LOW)	11.0V~13.5V(HIGH)

SCHEMATIC DIAGRAM E93A62F3

[CIRCUIT DIAGRAM]

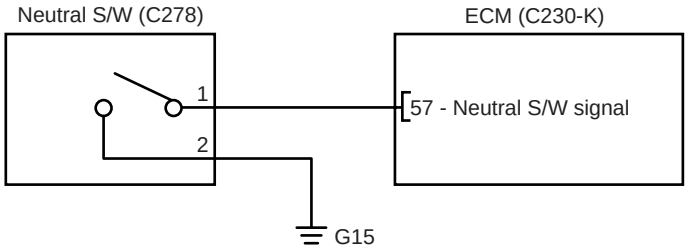

[CONNECTOR INFORMATION]

Terminal	Connected to	Function
1	ECM C230-K (57)	Neutral S/W signal
2	G15 Ground point	Chassis ground

[HARNESS CONNECTOR]

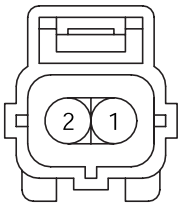

C278
Neutral S/W

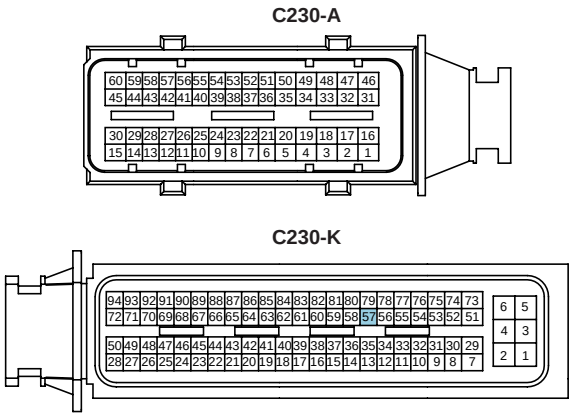

SCMFL6409L

SIGNAL WAVEFORM AND DATA EC9226B5

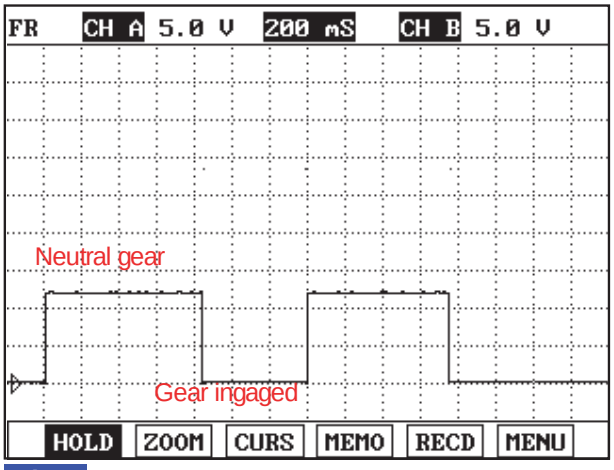

Fig.1

Fig 1) 12V at neutral gear position, 0V at any gear position except neutral position.

LFIG462A

TERMINAL AND CONNECTOR INSPECTION E26DFBE2

1. Electrical systems consist of a lot of harness and connectors, poor connection of terminals can cause various problems and damge of component.

2. Perform checking procedure as follows.

   1) Check damage of harness and terminals : Check terminals for contact resistance, corrosion and deformation.

   2) Check connecting condition of ECM and component connector : Check terminal seperation, damage of locking device and connecting condition between terminal and wiring.

   NOTE

   Disconnect the pin which requires checking at male connector and insert it to the terminal at female connector for checking connecting condition. (after checking, reconnect the pin at correct position.)

3. Is the problem found?

   YES

   ▶ Repair the trouble causing part and go to "Verification of Vehicle Repair".

   NO

   ▶ Go to "Signal Circuit Inspection".

SIGNAL CIRCUIT INSPECTION EC583E92

1. Neutral gear switch Voltage Inspection

   1) IG KEY "OFF", ENGINE "OFF"

   2) Disconnect neutral gear switch connector.

   3) IG KEY "ON"

   4) Check the voltage of neutral gear switch connector terminal 1.

Specification : 11.5V~13.0V

   5) Is the measured voltage within the specification?

      YES

      ▶ Go to "Ground Circuit Inspection".

      NO

      ▶ Go to "2. Check open in neutral gear switch signal cicuit" as follows.

2. Check open in neutral gear switch signal cicuit

   1) IG KEY "OFF", ENGINE "OFF"

   2) Disconnect neutral gear switch connector and ECM connector.

   3) Check the continuity between neutral gear switch connector terminal 1 and ECM connector (C230-K) terminal 57.

specification : Continuity (below 1.0Ω)

   4) Is the continuity test within within the specification?

YES

▶ Repair short to ground in signal circuit and go to "Verification of Vehicle Repair".

NO

▶ Repair open in signal circuit and go to "Verification of Vehicle Repair".

GROUND CIRCUIT INSPECTION E56122CD

1. IG KEY "OFF", ENGINE "OFF"
2. Disconnect neutral gear switch connector and ECM connector.
3. IG KEY "ON"
4. Measure the voltage of neutral gear switch connector terminal 1. [TEST "A"]
5. Measure the voltage between neutral gear switch connector terminal 1 and terminal 2. [TEST "B"]
   (Terminal 1 : Check + prove , terminal 2 : Check - prove)

Specification : [TEST "A"] Voltage - [TEST "B"] Voltage = below 200mV

6. Is the measured voltage within the specification?

YES

▶ Go to "Component Inspection".

NO

▶ When "B" voltage is not detected : Repair open in ground circuit and go to "Verification of Vehicle Repair".
▶ When the voltage difference between "A" and "B" is above 200mV : Eliminate the causes of excessive resistance and go to "Verification of Vehicle Repair".

COMPONENT INSPECTION E3414D89

1. IG KEY "OFF", ENGINE "OFF"
2. Disconnect neutral gear switch connector and ECM connector.
3. Check the contituity between neutral gear switch component terminal 1 and 2 as shifting gear lever two or three times.

specifications : The measured resistance varies from below 1.0Ω (Continuity) to infinite Ω (Discontinuity) in accordance with gear shifting.

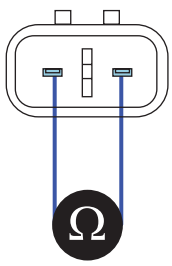

LFIG466A

4. Is the measured resistance within the specification?

YES

▶ Go to "Verification of Vehicle Repair".

NO

▶ Replace neutral gear switch and go to Verification of Vehicle Repair".

VERIFICATION OF VEHICLE REPAIR ECB80C0D

After a repair, it is essential to verify that the fault is corrected.

1. After connecting Scantool select "DIAGNOSTIC TROUBLE CODES(DTCs)" mode.
2. Clear recorded DTC using Scantool.
3. Drive the vehicle within DTC "Enable conditions" in "General information".
4. After selecting "DIAGNOSTIC TROUBLE CODES(DTCs)" mode and check if DTC is recorded again.
5. Are any DTCs recorded ?

YES

▶ Go to the DTC guide of recorded NO. in Scantool.

NO

▶ System operates within specification.

DTC P0830 CLUTCH PEDAL SWITCH "A" CIRCUIT

GENERAL DESCRIPTION E75EDA1B

Clutch switch is connected to clutch pedal and transmits clutch operating state to ECM.When clutch pedal is depressed during driving, engine load changes from loaded to none loaded condition. However, ECM considers vehicle to be loaded becuase VSS signal is still inputted to it. therefore, ECM controls none loaded engine with the condition suitable for loaded engine.Accordingly, optimum fuel injection control is not performed then, RPM becomes unstable and smoke is produced. Clutch operation is detected through clutch switch signal. This signal enables ECM to cope with instant change of load condition. Besides, clutch switch signal is used to detect engaged gear with vehicle speed and engine speed.

DTC DESCRIPTION E32611C9

P0830 is set when no clutch switch signal change is detected while gear shifts 3 times at above 1500rpm. This code is due to 1) clutch switch component failure or 2) open or short in circuit 3) improper height of clutch pedal.
※ECM recognizes ingaged gear with rpm and vehicle speed sensor signal.

DTC DETECTING CONDITION E260193B

Item	Detecting Condition			Possible Cause
DTC Strategy	• Signal monitoring			• Clutch S/W circuit • Clutch S/W component • Clutch S/W pedal hight
Enable Conditions	• Engine running			
Threshold Value	• No clutch switch signal change is detected until gear shifts 3 times at above 1500rpm			
Diagnostic Time	• immediately			
Fail Safe	Fuel cut	NO		
	EGR Off	NO		
	Fuel Limit	NO		
	Check Lamp	NO		

SPECIFICATION E507992F

Condition	Clutch Pedal Depressed	Clutch Pedal Released
Switch Operation	Switch ON	Switch OFF

SCHEMATIC DIAGRAM EF1072D3

[CIRCUIT DIAGRAM]

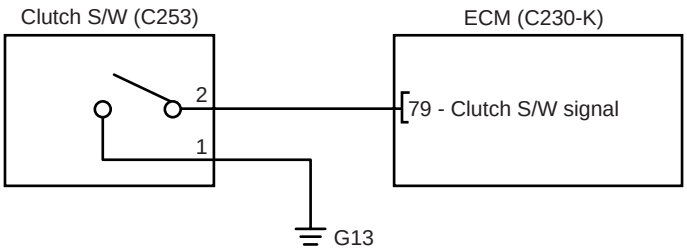

[CONNECTOR INFORMATION]

Terminal	Connected to	Function
1	G13 Ground point	Chassis ground
2	ECM C230-K (79)	Clutch S/W signal

[HARNESS CONNECTOR]

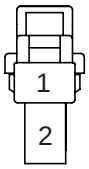

C253
Clutch S/W

C230-A

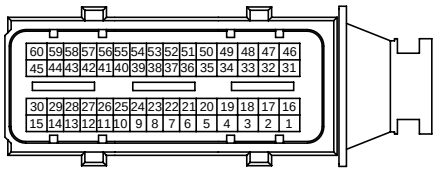

C230-K

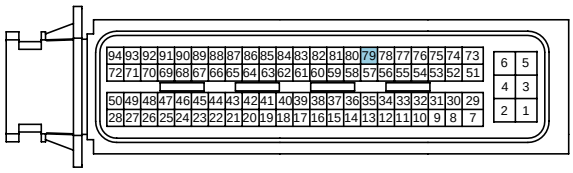

ECM

SCMFL6410L

SIGNAL WAVEFORM AND DATA EA044C63

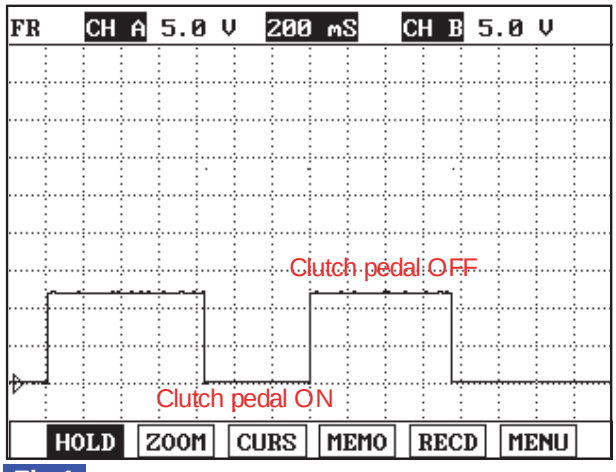

Fig.1

Fig.1) The waveform of clutch switch when clutch pedal is depressed. The output voltage of clutch pedal is 0V when clutch pedal is depressed and 12V when released.

Even though clutch pedal is not depressed just after turning engine on, signal voltage is outputted as 0V. Therefore even if clutch pedal is not depressed, engine can be turned on. However, if pedal is depressed once, clutch switch signal is no more 0V. In this case, turning engine on is possible only when clutch pedal is depressed.

LFIG469A

MONITOR SCANTOOL DATA E7F21DC5

1. Connect Scantool to Data Link Connector (DLC).
2. Warm engine up to normal operating temperature.
3. Turn "OFF" electrical devices and A/C.
4. Select "CLUTCH SWITCH" parameter on the Scantool.

Specification : When clutch switch released : "CLUTCH SWITCH" : OFF
When clutch switch depressed : "CLUTCH SWITCH" : ON

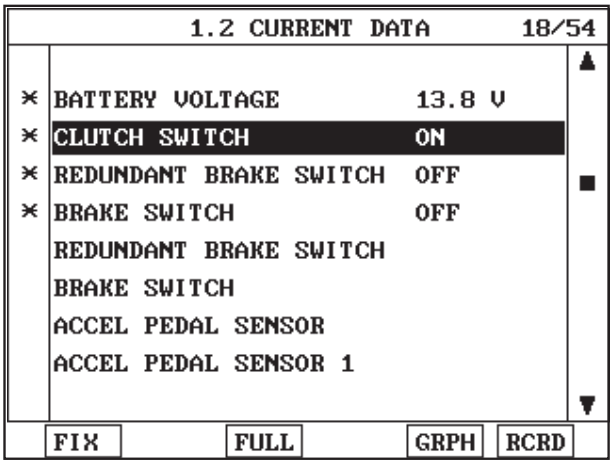

Fig.1

Fig. 1) Check if "CLUTCH SWITCH" parameter changes correctly from "ON" to "OFF" and vice versa as activating clutch pedal.

LFIG470A

TERMINAL AND CONNECTOR INSPECTION E3922764

1. Electrical systems consist of a lot of harness and connectors, poor connection of terminals can cause various problems and damge of component.
2. Perform checking procedure as follows.
   1) Check damage of harness and terminals : Check terminals for contact resistance, corrosion and deformation.
   2) Check connecting condition of ECM and component connector : Check terminal seperation, damage of locking device and connecting condition between terminal and wiring.

NOTE

Disconnect the pin which requires checking at male connector and insert it to the terminal at female connector for checking connecting condition. (after checking, reconnect the pin at correct position.)

3. Is the problem found?

YES

▶ Repair the trouble causing part and go to "Verification of Vehicle Repair".

NO

▶ Go to "Signal Circuit Inspection".

SIGNAL CIRCUIT INSPECTION E01CA26E

1. Check clutch switch pull-up voltage

   1) IG KEY "OFF", ENGINE "OFF"

   2) Disconnect clutch switch connector.

   3) IG KEY "ON"

   4) Measure the voltage of terminal 2 of clutch switch connector.

Specification : 11.5V~13.0V

   5) Is the measured voltage within the specification?

   YES

   ▶ Go to "Ground Circuit Inspection".

   NO

   ▶ Go to "2.Check open in clutch switch signal circuit" as follows.

2. Check open in clutch switch signal circuit

   1) IG KEY "OFF", ENGINE "OFF"

   2) Disconnect clutch switch connector and ECM connector.

   3) Check continuity between clutch switch connector terminal 2 and ECM connector (C230-K) terminal 79.

specification : Continuity (below 1.0Ω)

   4) Is the measured resistance within the specification?

   YES

   ▶ Repair short to ground in signal circuit and go to "Verification of Vehicle Repair".

   NO

   ▶ Repair open in signal circuit and go to "Verification of Vehicle Repair".

GROUND CIRCUIT INSPECTION E7BB632C

1. IG KEY "OFF", ENGINE "OFF"
2. Disconnect clutch switch connector and ECM connector.
3. IG KEY "ON"
4. Measure the voltage of clutch switch connector terminal 2. [TEST "A"]
5. Measure the voltage between clutch switch connector terminal 2 and terminal 1. [TEST "B"]
   (Terminal 2 : Check + prove , terminal 1 : Check - prove)

Specification : [TEST "A"] Voltage - [TEST "B"] Voltage = below 200mV

6. Is the measured voltage within the specification?

YES

▶ Go to "Component Inspection".

NO

▶ When "B" voltage is not detected : Repair open in ground circuit and go to "Verification of Vehicle Repair".
▶ When the voltage difference between "A" and "B" is above 200mV : Eliminate the causes of excessive resistance and go to "Verification of Vehicle Repair".

COMPONENT INSPECTION EEFE74DD

1. IG KEY "OFF", ENGINE "OFF"
2. Disconnect clutch switch connector.
3. Check continuity between clutch switch component terminal 1 and 2 as depressing clutch pedal.

Clutch pedal depressed : Continuity (below 1Ω)
Clutch pedal depressed : Discontinuity (Infinite Ω)

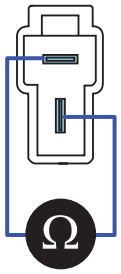

LFIG474A

4. Is the measured resistance within the specification?

YES

▶ Go to "Verification of Vehicle Repair".

NO

▶ After checking height of clutch pedal, if therer is no problem, replace clutch switch and go to "Verification of Vehicle Repair".

VERIFICATION OF VEHICLE REPAIR E7CCE96F

After a repair, it is essential to verify that the fault is corrected.

1. After connecting Scantool select "DIAGNOSTIC TROUBLE CODES(DTCs)" mode.
2. Clear recorded DTC using Scantool.
3. Drive the vehicle within DTC "Enable conditions" in "General information".
4. After selecting "DIAGNOSTIC TROUBLE CODES(DTCs)" mode and check if DTC is recorded again.
5. Are any DTCs recorded ?

YES

▶ Go to the DTC guide of recorded NO. in Scantool.

NO

▶ System operates within specification.

DTC P1145 OVERRUN MONITORING ERROR

GENERAL DESCRIPTION E5F490AB

ECM is activated by power supply. Signals from several sensors, such as CKPS and APS, is inputted to ECM. Comparing inputted signals with control LOGIC saved at micro controller and EEPROM, ECM controlls engine as actuating injectors, solenoids and relays. To guarantee accurate control, ECM performs SELF TEST, DIAGNOSIS of several sensors and actuators. And if serious trouble which affects vehicle performance occurrs, ECM sets DTCs.At certain cases, ECM shuts down whole systems in order to prevent dangerous situation due to incorrect control.

DTC DESCRIPTION EE63CE3D

P1145 is set if fuel supplied to injector is not limited(fuel cut disabled) and injector operates when accelerator pedal is released(when vehicle coasts). This code is due to the case that ECM fails to cut power of injector operating system inside of ECM.

DTC DETECTING CONDITION E44DC5E9

<table>
<tr><th>Item</th><th colspan="3">Detecting Condition</th><th>Possible Cause</th></tr>
<tr><td>DTC Strategy</td><td colspan="3">• Software monitoring</td><td rowspan="8">• ECM internal error</td></tr>
<tr><td>Enable Conditions</td><td colspan="3">• Engine running</td></tr>
<tr><td>Threshold Value</td><td colspan="3">• Injector operating signal duration exceeds max value for more than 12 times.
• The difference between engins speed and segment speed is above 320rpm. - 0.8 sec.</td></tr>
<tr><td>Diagnostic Time</td><td colspan="3">• Refer to Threshold value</td></tr>
<tr><td rowspan="4">Fail Safe</td><td>Fuel cut</td><td>NO</td><td rowspan="4"></td></tr>
<tr><td>EGR Off</td><td>NO</td></tr>
<tr><td>Fuel Limit</td><td>NO</td></tr>
<tr><td>Check Lamp</td><td>NO</td></tr>
</table>

COMPONENT INSPECTION E9099A5F

1. ECM Component Inspection

   1) IG KEY "OFF", ENGINE "OFF".

   2) Disconnect ECM.

   3) Replace ECM, check if abnormal operations disappear.

   4) If problems are corrected, replace ECM.

   NOTE

   Input injector IQA data(7 letters) using scantool at replacing ECM.
   For immobilizer applied vehicle, input pin code.

VERIFICATION OF VEHICLE REPAIR E0710F7C

After a repair, it is essential to verify that the fault is corrected.

1. After connecting Scantool select "DIAGNOSTIC TROUBLE CODES(DTCs)" mode.
2. Clear recorded DTC using Scantool.
3. Drive the vehicle within DTC "Enable conditions" in "General information".
4. After selecting "DIAGNOSTIC TROUBLE CODES(DTCs)" mode and check if DTC is recorded again.
5. Are any DTCs recorded ?

YES

▶ Go to the DTC guide of recorded NO. in Scantool.

NO

▶ System operates within specification.

DTC P1171 MINIMUM RAIL PRESSURE EXCEEDED

COMPONENT LOCATION E58ECD38

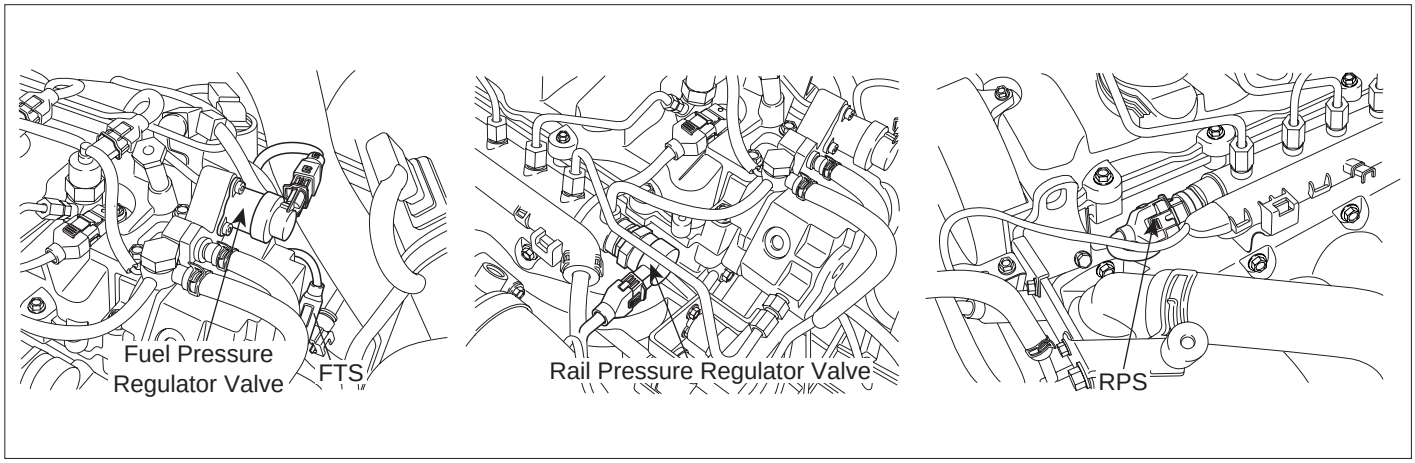

LFIG475A

GENERAL DESCRIPTION E3669CDD

As inputted rail pressure sensor signal, ECM of Commom rail diesel engine controls fuel metering unit(FPRV-intergrated with high press. pump) and rail pressure control valve(RPRV-integrated with common rail) in order to maintain optimum rail pressure according to current engine rpm and load. However when the problem that leads rail pressure to out of target value intended by ECM occurs due to mechanical or electronical reason, ECM limits engine performance and sets DTC by limiting fuel (stops injector operation) in order to prevent engine from being controlled abnormally. "rail pressure monitoring error" is the DTC which diagnoses 1) supplying state of low pressure fuel and 2) mechanical operating conditions of high pressure pump and 3). RPRV indirectly based on RPS output voltage and RPS duty. Thus, repair relavant to this DTC requires mechanics the total understand of fuel system.

DTC DESCRIPTION E54C6EAC

Rail pressure is controlled by 1)only RPRV or 2)both RPRV and FPRV or 3)only RPRV depending on engine condition. These three modes are called 'CPC mode'. During transition from one mode to another mode, if rail pressure is below the minimum rail pressure for each certain engine condition for more than 300ms. P1171 is set then, rail pressure is controlled by RPRV alone.

DTC DETECTING CONDITION E8E237BC

<table>
<tr><th>Item</th><th colspan="3">Detecting Condition</th><th>Possible Cause</th></tr>
<tr><td>DTC Strategy</td><td colspan="3">• Signal monitoring</td><td rowspan="8">• ECM internal error
• RPRV component
• FPRV component
• RPS componet</td></tr>
<tr><td>Enable Conditions</td><td colspan="3">• Engine running</td></tr>
<tr><td>Threshold Value</td><td colspan="3">• If rail pressure is below the minimum rail pressure for each certain engine condition</td></tr>
<tr><td>Diagnostic Time</td><td colspan="3">• 0.3 sec.</td></tr>
<tr><td rowspan="4">Fail Safe</td><td>Fuel cut</td><td>NO</td><td rowspan="4">• Rail press. is controlled by RPRV</td></tr>
<tr><td>EGR Off</td><td>NO</td></tr>
<tr><td>Fuel Limit</td><td>NO</td></tr>
<tr><td>Check Lamp</td><td>NO</td></tr>
</table>

MONITOR SCANTOOL DATA EE0FFC84

1. Monitoring rail pressure data

   1) Connect Scantool to Data Link Connector (DLC).

   2) Warm engine up to normal operating temperature.

   3) Turn "OFF" electrical devices and A/C.

   4) Monitor "FUEL PRESSURE MEASURED", "FUEL PRESS. S/POINT", "RAIL PRESS. REGULATOR1", "INJ. PUMP REGULATOR" parameter on the Scantool.

Specification : FUEL PRESSURE MEASURED similar to "FUEL PRESS. S/POINT"
FUEL PRESS. S/POINT : 27 ± 5 Mpa
RAIL PRESS. REGULATOR1 : 16 ± 3%
INJ. PUMP REGULATOR : 34 ± 3%

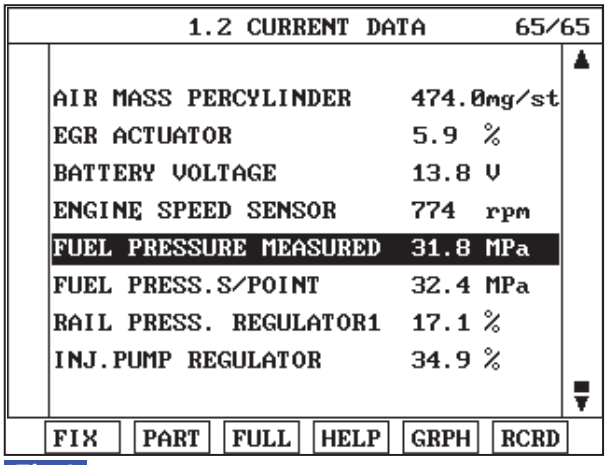

Fig.1

Fig.1) Monitor "FUEL PRESSURE MEASURED" at idle after warming engine up.

SCMFL6339L

Check if "FUEL PRESSURE MEASURED"data is similar to "FUEL PRESS. S/POINT". Not only former two data but also "RAIL PRESS. REGULATOR1" and "INJ. PUMP REGULATOR"should be monitored carefully. Although "FUEL PRESSURE MEASURED" is similar to "FUEL PRESS. S/POINT", if "RAIL PRESS. REGULATOR1" and "INJ. PUMP REGULATOR" is out of specification, it means wear, leakage, stuck of fuel system.

2. Monitoring rail pressure data at acceleration(loading condition).

   1) Connect Scantool to Data Link Connector (DLC).

   2) Warm engine up to normal operating temperature.

   3) Turn "OFF" electrical devices and A/C.

   4) Monitor "FUEL PRESSURE MEASURED", "INJ. PUMP REGULATOR","RAIL PRESS. REGULATOR1" parameter on the Scantool.

SPECIFICATION :

	Idle(without load)	Accelerating(stall test)	Diagnosis
FUEL PRESSURE MEASURED	27 ± 5 Mpa	above 75 Mpa	press. increases
INJ. PUMP REGULATOR	34 ± 3%	38 ± 3%	duty increases
RAIL PRESS. REGULATOR1	16 ± 3%	45 ± 3%	duty increases

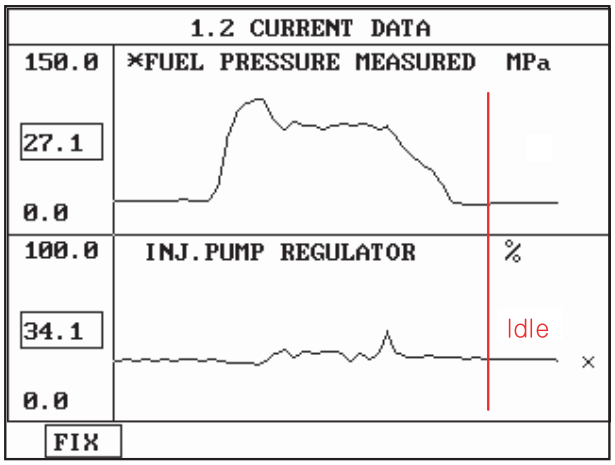

Fig.1

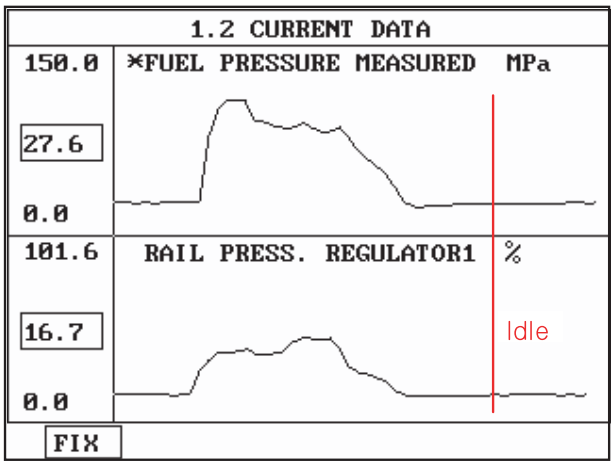

Fig.2

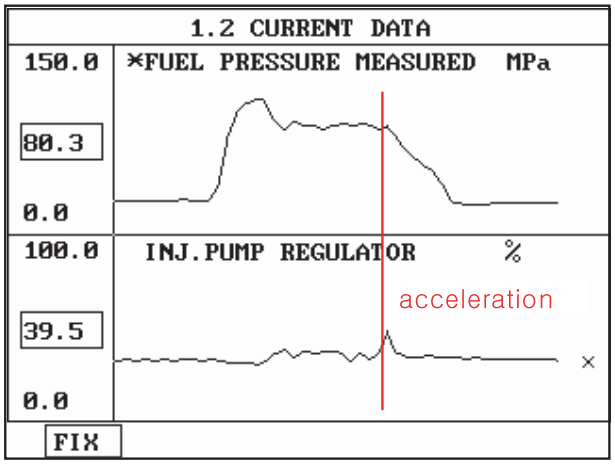

Fig.3

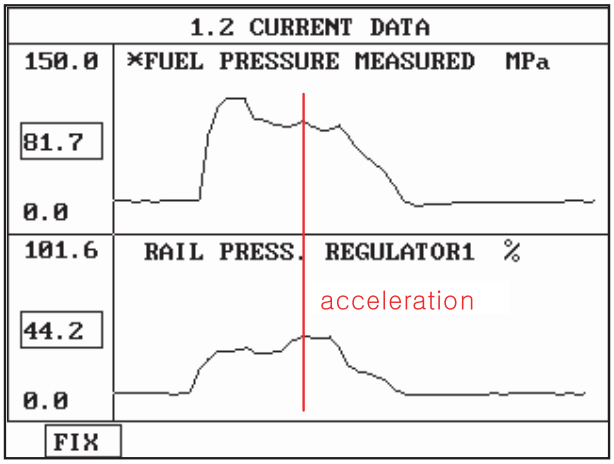

Fig.4

Fig.2) Fuel pressure and Fuel pressure regulator valve data at idle.
Fig.3) Fuel pressure and Rail pressure regulator valve data at idle.
Fig.4) Fuel pressure and Fuel pressure regulator valve data at acceleration.
Fig.5) Fuel pressure and Rail pressure regulator valve data at acceleration.

LFIG375A

NOTE

The waveform of fuel pressure regulator valve installed at high pressure pump(fuel detecting MPROP) shows 34 ± 3% duty at idle, duty rises to approx. 38% at acceleration to raise rail pressure.

The waveform of rail pressure regulator valve installed at common rail shows 16 ± 3% duty at idle, duty rises to approx. 45% at acceleration to raise rail pressure.

VERIFICATION OF VEHICLE REPAIR E9C74079

After a repair, it is essential to verify that the fault is corrected.

1. After connecting Scantool select "DIAGNOSTIC TROUBLE CODES(DTCs)" mode.
2. Clear recorded DTC using Scantool.
3. Drive the vehicle within DTC "Enable conditions" in "General information".
4. After selecting "DIAGNOSTIC TROUBLE CODES(DTCs)" mode and check if DTC is recorded again.
5. Are any DTCs recorded ?

YES

▶ Go to the DTC guide of recorded NO. in Scantool.

NO

▶ System operates within specification.

DTC P1172 MAXIMUM RAIL PRESSURE EXCEEDED

COMPONENT LOCATION EDBFC90B

Refer to DTC P1171.

GENERAL DESCRIPTION E6C5B1E8

Refer to DTC P1171.

DTC DESCRIPTION ED4E77F8

Rail pressure is controlled by 1)only RPRV or 2)both RPRV and FPRV or 3)only RPRV depending on engine condition. These three modes are called 'CPC mode'. During transition from one mode to another mode, if rail pressure is above the maximum rail pressure for each certain engine condition for more than 240ms. P1172 is set then, rail pressure is controlled by RPRV alone.

DTC DETECTING CONDITION ED2B0C07

<table>
<tr><th>Item</th><th colspan="4">Detecting Condition</th><th>Possible Cause</th></tr>
<tr><td>DTC Strategy</td><td colspan="4">• Signal monitoring</td><td rowspan="9">• ECM internal error
• RPRV component
• FPRV component
• RPS componet</td></tr>
<tr><td>Enable Condi-tions</td><td colspan="4">• Engine running</td></tr>
<tr><td>Thresh-old Value</td><td colspan="4">• If rail pressure is above the maximum rail pressure for each certain engine condition</td></tr>
<tr><td>Diag-nostic Time</td><td colspan="4">• 0.24 sec.</td></tr>
<tr><td rowspan="4">Fail Safe</td><td>Fuel cut</td><td>NO</td><td rowspan="4">• Rail press. is controlled by RPRV</td></tr>
<tr><td>EGR Off</td><td>NO</td></tr>
<tr><td>Fuel Limit</td><td>NO</td></tr>
<tr><td>Check Lamp</td><td>NO</td></tr>
</table>

MONITOR SCANTOOL DATA EDEB0A0E

Refer to DTC P1171.

VERIFICATION OF VEHICLE REPAIR E745FE2D

Refer to DTC P1171.

DTC P1173 IMPROPER MOTER VOLTAGE-ETS (GASOLINE) / SET VALUE OF RAIL PRESSURE NOT IN PLAUSIBILITY RANGE (DIESEL)

COMPONENT LOCATION EA44DDC9

Refer to DTC P1171.

GENERAL DESCRIPTION E81E91F5

Refer to DTC P1171.

DTC DESCRIPTION E11D3DB1

When too many correction signals are loaded to PCV, PCV fails to be controlled and its governing voltage is fixed to certain value. If this condition lasts for more than 5 sec. P1173 is set then, rail pressure is controlled by FPRV alone.

DTC DETECTING CONDITION E6082719

<table>
<tr><th>Item</th><th colspan="3">Detecting Condition</th><th>Possible Cause</th></tr>
<tr><td>DTC Strategy</td><td colspan="3">• Signal monitoring</td><td rowspan="6">• ECM internal error
• RPRV component
• FPRV component
• RPS componet</td></tr>
<tr><td>Enable Conditions</td><td colspan="3">• Engine running</td></tr>
<tr><td>Threshold Value</td><td colspan="3">• PCV fails to be controlled and its governing voltage is fixed to certain value</td></tr>
<tr><td>Diagnostic Time</td><td colspan="3">• 5 sec.</td></tr>
<tr><td rowspan="4">Fail Safe</td><td>Fuel cut</td><td>NO</td><td rowspan="4">• Rail press. is controlled by FPRV</td></tr>
<tr><td>EGR Off</td><td>NO</td></tr>
<tr><td>Fuel Limit</td><td>NO</td></tr>
<tr><td>Check Lamp</td><td>NO</td></tr>
</table>

MONITOR SCANTOOL DATA E4EF877B

Refer to DTC P1171.

VERIFICATION OF VEHICLE REPAIR EA43A592

Refer to DTC P1171.

DTC P1185 FUEL PRESSURE MONITORING-MAXIMUM PRESSURE EXCEEDED

COMPONENT LOCATION E4ADC0C3

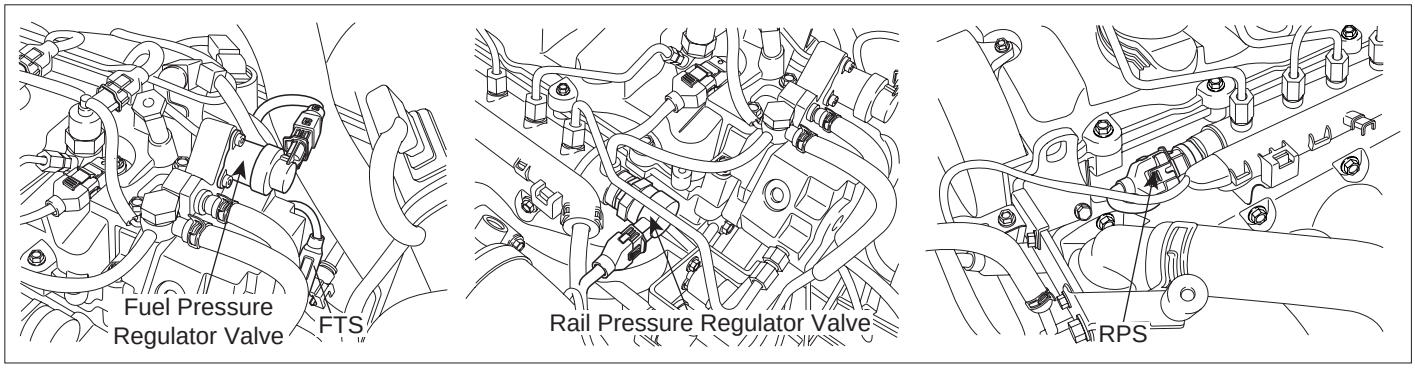

LFIG476A

GENERAL DESCRIPTION E83AD4C5

As inputted rail pressure sensor signal, ECM of Commom rail diesel engine controls fuel metering unit(MPROP-intergrated with high press. pump) and rail pressure control valve(PCV-integrated with common rail) in order to maintain optimum rail pressure according to current engine rpm and load. However when the problem that leads rail pressure to out of target value intended by ECM occurs due to mechanical or electronical reason, ECM limits engine performance and sets DTC by limiting fuel (stops injector operation) in order to prevent engine from being controlled abnormally. "rail pressure monitoring error" is the DTC which diagnose 1).supplying state of low pressure fuel and 2).mechanical operating conditions of high pressure pump and 3). RPCV indirectly based on RPS output voltage and RPS duty. thus, repair relavant to this DTC requires mechanics the total understand of fuel system.

DTC DESCRIPTION EF4165F7

P1185 is set when 1)rail press. is higher than target rail press. by 150bar in condition that rail press. is controlled by fuel metering unit(MPROP) or 2)rail press. exceeds maximum limiting value. This code is due to 1)more than intended fuel supply to common rail or 2)poor return of fuel supplied to common rail or 3)short to high voltage line in fuel press. sensor.

DTC DETECTING CONDITION E129418D

<table>
<tr><th>Item</th><th colspan="3">Detecting Condition</th><th>Possible Cause</th></tr>
<tr><td>DTC Strategy</td><td colspan="3">• Voltage monitoring</td><td rowspan="6">• Fuel pressure regulator valve(open stuck)
• Rail pressure regulator valve(close stuck)
• Rail pressure sensor(Output fixed at high voltage line)</td></tr>
<tr><td>Enable Conditions</td><td colspan="3">• Engine running</td></tr>
<tr><td>Threshold Value</td><td colspan="3">• (Case1) Rail pressure is above maximum limiting value(1750bar) at fuel pressure regulator valve(MPROP) operating condition. - 0.24 sec.
• (Case2) Actual rail press. is above the maximum posible rail press. at certain temp. at fuel pressure regulator valve(MPROP) operating condition. - 0.8 sec.
• (Case3) Rail pressure is above target rail pressure by more than 150bar at fuel pressure regulator valve(MPROP) operating condition.- 0.75 sec.</td></tr>
<tr><td>Diagnostic Time</td><td colspan="3">• Refer to threshold Value</td></tr>
<tr><td rowspan="4">Fail Safe</td><td>Fuel cut</td><td>NO</td><td rowspan="4"></td></tr>
<tr><td>EGR Off</td><td>NO</td></tr>
<tr><td>Fuel Limit</td><td>Case1,2: YES
Case 3: NO</td></tr>
<tr><td>Check Lamp</td><td>Case1,2: YES
Case 3: NO</td></tr>
</table>

MONITOR SCANTOOL DATA EE9D7AAD

1. Monitoring rail pressure data

   1) Connect Scantool to Data Link Connector (DLC).

   2) Warm engine up to normal operating temperature.

   3) Turn "OFF" electrical devices and A/C.

   4) Monitor "FUEL PRESSURE MEASURED", "FUEL PRESS. S/POINT", "RAIL PRESS. REGULATOR1", "INJ. PUMP REGULATOR" parameter on the Scantool.

Specification : FUEL PRESSURE MEASURED similar to "FUEL PRESS. S/POINT"
FUEL PRESS. S/POINT : 27 ± 5 Mpa
RAIL PRESS. REGULATOR1 : 16 ± 3%
INJ. PUMP REGULATOR : 34 ± 3%

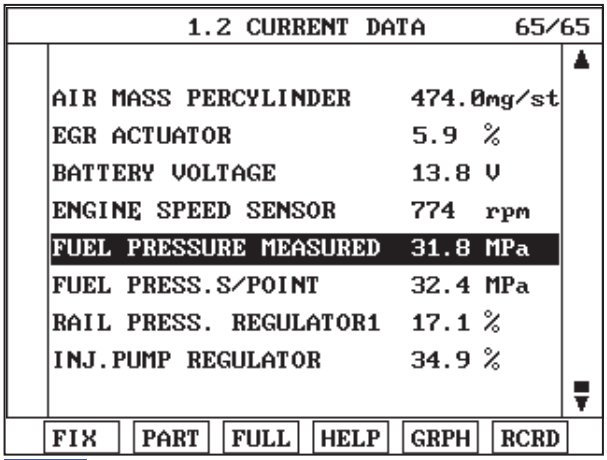

Fig.1

Fig.1) Monitor "FUEL PRESSURE MEASURED" at idle after warming engine up.

SCMFL6339L

Check if "FUEL PRESSURE MEASURED"data is similar to "FUEL PRESS. S/POINT". Not only former two data but also "RAIL PRESS. REGULATOR1" and "INJ. PUMP REGULATOR"should be monitored carefully. Although "FUEL PRESSURE MEASURED" is similar to "FUEL PRESS. S/POINT", if "RAIL PRESS. REGULATOR1" and "INJ. PUMP REGULATOR" is out of specification, it means wear, leakage, stuck of fuel system.

2. Monitoring rail pressure data at acceleration(loading condition).

   1) Connect Scantool to Data Link Connector (DLC).

   2) Warm engine up to normal operating temperature.

   3) Turn "OFF" electrical devices and A/C.

   4) Monitor "FUEL PRESSURE MEASURED", "INJ. PUMP REGULATOR","RAIL PRESS. REGULATOR1" parameter on the Scantool.

SPECIFICATION :

	Idle(without load)	Accelerating(stall test)	Diagnosis
FUEL PRESSURE MEASURED	27 ± 5 Mpa	above 75 Mpa	press. increases
INJ. PUMP REGULATOR	34 ± 3%	38 ± 3%	duty increases
RAIL PRESS. REGULATOR1	16 ± 3%	45 ± 3%	duty increases

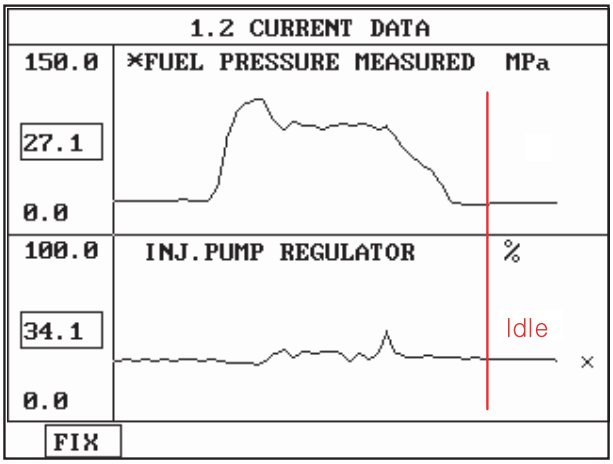

Fig.1

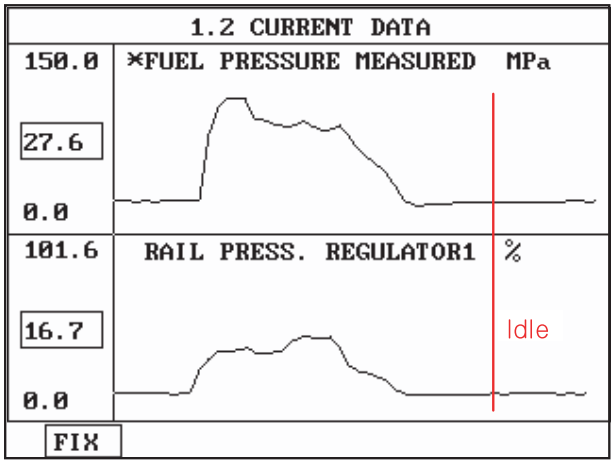

Fig.2

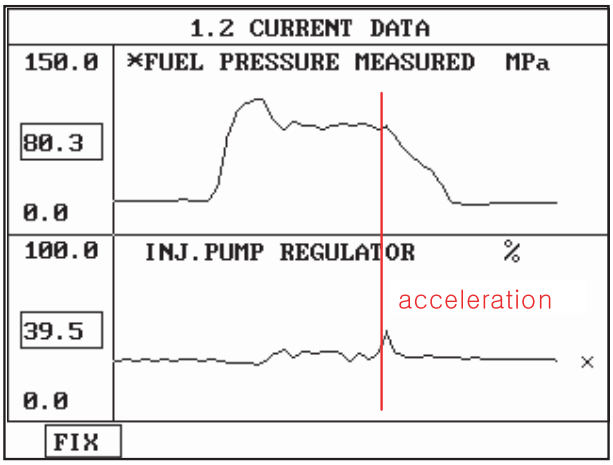

Fig.3

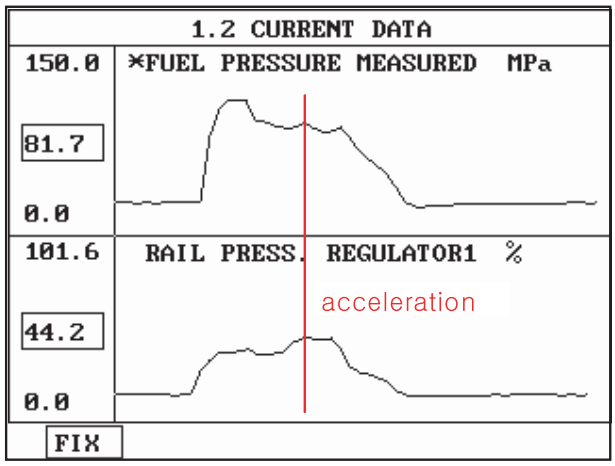

Fig.4

Fig.2) Fuel pressure and Fuel pressure regulator valve data at idle.
Fig.3) Fuel pressure and Rail pressure regulator valve data at idle.
Fig.4) Fuel pressure and Fuel pressure regulator valve data at acceleration.
Fig.5) Fuel pressure and Rail pressure regulator valve data at acceleration.

LFIG375A

NOTE

The waveform of fuel pressure regulator valve installed at high pressure pump(fuel detecting MPROP) shows 34 ± 3% duty at idle, duty rises to approx. 38% at acceleration to raise rail pressure.

The waveform of rail pressure regulator valve installed at common rail shows 16 ± 3% duty at idle, duty rises to approx. 45% at acceleration to raise rail pressure.

VERIFICATION OF VEHICLE REPAIR EA2EA934

After a repair, it is essential to verify that the fault is corrected.

1. After connecting Scantool select "DIAGNOSTIC TROUBLE CODES(DTCs)" mode.
2. Clear recorded DTC using Scantool.
3. Drive the vehicle within DTC "Enable conditions" in "General information".
4. After selecting "DIAGNOSTIC TROUBLE CODES(DTCs)" mode and check if DTC is recorded again.
5. Are any DTCs recorded ?

YES

▶ Go to the DTC guide of recorded NO. in Scantool.

NO

▶ System operates within specification.

DTC P1186 FUEL PRESSURE MONITORING-MINIMUM PRESSURE AT ENGINE SPEED TOO LOW

COMPONENT LOCATION E68C7240

Refer to DTC P1185.

GENERAL DESCRIPTION E556BA91

Refer to DTC P1185.

DTC DESCRIPTION E9E4EDB4

P1186 is set when rail press. is lower than target rail press. by 200bar in condition that rail press. is controlled by fuel metering unit(MPROP) and fuel flow quantity in High pressure pump reaches to the upper limit value. This code is due to 1)less than intended fuel supply to common rail or 2)excessive return of fuel supplied to common rail or 3)short to low voltage line in fuel press. sensor.

DTC DETECTING CONDITION E0647F0A

<table>
<tr><th>Item</th><th colspan="3">Detecting Condition</th><th>Possible Cause</th></tr>
<tr><td>DTC Strategy</td><td colspan="3">• Voltage monitoring</td><td rowspan="8">• Fuel pressure regulator valve(close stuck)
• Rail pressure control valve(open stuck)
• Rail pressure sensor(Output fixed at high voltage line)</td></tr>
<tr><td>Enable Conditions</td><td colspan="3">• Engine running</td></tr>
<tr><td>Threshold Value</td><td colspan="3">• (Case1) Actual rail press. is below the minimum posible rail press. at certain temp. at fuel pressure regulator valve(MPROP) operating condition. - 0.3 sec.
• (Case2) Actual rail press. is below the minimum posible rail press. at certain temp. at fuel pressure regulator valve(MPROP) operating condition and target high press. pump flow is below min value(-990㎣/s) - 2 sec.</td></tr>
<tr><td>Diagnostic Time</td><td colspan="3">• 2 sec.</td></tr>
<tr><td rowspan="4">Fail Safe</td><td>Fuel cut</td><td>NO</td><td rowspan="4"></td></tr>
<tr><td>EGR Off</td><td>NO</td></tr>
<tr><td>Fuel Limit</td><td>Case1: YES Case 2: NO</td></tr>
<tr><td>Check Lamp</td><td>Case1: YES Case 3: NO</td></tr>
</table>

MONITOR SCANTOOL DATA E9BA4B25

Refer to DTC P1185.

VERIFICATION OF VEHICLE REPAIR EE9206BE

Refer to DTC P1185.

DTC P1586 MT/AT ENCODING

GENERAL DESCRIPTION E44E6A14

Because both A/T and M/T fuel control map is inputted in one type of ECM and selecting option is possible, one type is applied to both A/T and M/T option.When ECM is installed to vehicle, A/T and M/T recognition is performed by ECM automatically as checking whether ground line(ECM connector C230-K terminal 81) is grounded or opened.(A/T and M/T recognition is performed every IG KEY ON process.) If A/T, M/T recognition is not fulfilled well or any error occurs during the process, engine power generation is not sufficient and glow lamp on cluster blinks.

A/T : ECM connector C230-K erminal 81 is grounded
M/T : ECM connector C230-K terminal 81 is opened(no wiring exists)

DTC DESCRIPTION EE52DB1E

P1586 is set when recognized A/T, M/T data based on ECM 230-K terminal 81 state(grounded or opened) is not readable or writable at EEP ROM. This code is due to ECM failure.

DTC DETECTING CONDITION E1241E39

<table>
<tr><th>Item</th><th colspan="3">Detecting Condition</th><th>Possible Cause</th></tr>
<tr><td>DTC Strategy</td><td colspan="3">• software monitoring</td><td rowspan="6">• ECM component failure</td></tr>
<tr><td>Enable Conditions</td><td colspan="3">• IG KEY "ON"</td></tr>
<tr><td>Threshold Value</td><td colspan="3">• A/T, M/T learning error
(when data writing on EEPROM inside of ECM is impossible)</td></tr>
<tr><td>Diagnostic Time</td><td colspan="3">• At the point of ECU initialization</td></tr>
<tr><td rowspan="4">Fail Safe</td><td>Fuel cut</td><td>NO</td><td rowspan="4">• Glow Lamp blinks.</td></tr>
<tr><td>EGR Off</td><td>NO</td></tr>
<tr><td>Fuel Limit</td><td>NO</td></tr>
<tr><td>Check Lamp</td><td>NO</td></tr>
</table>

SCHEMATIC DIAGRAM EC1B59F5

[CIRCUIT DIAGRAM]

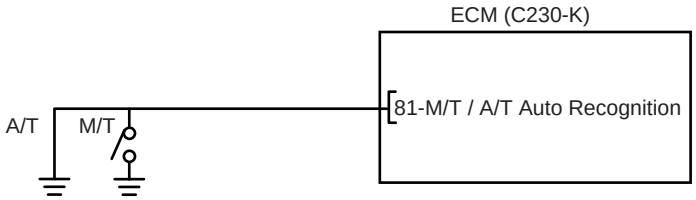

[HARNESS CONNECTOR]

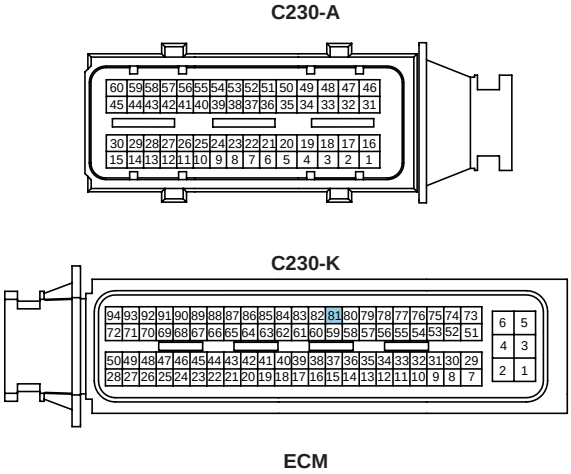

SCMFL6411L

COMPONENT INSPECTION EFE2D4E7

1. ECM Component Inspection
   1) IG KEY "OFF", ENGINE "OFF".
   2) Disconnect ECM.
   3) Replace ECM, check if abnormal operations disappear.
   4) If problems are corrected, replace ECM.

NOTE

Input injector IQA data(7 letters) using scantool at replacing ECM.
For immobilizer applied vehicle, input pin code.

VERIFICATION OF VEHICLE REPAIR E41007B8

After a repair, it is essential to verify that the fault is corrected.

1. After connecting Scantool select "DIAGNOSTIC TROUBLE CODES(DTCs)" mode.
2. Clear recorded DTC using Scantool.
3. Drive the vehicle within DTC "Enable conditions" in "General information".
4. After selecting "DIAGNOSTIC TROUBLE CODES(DTCs)" mode and check if DTC is recorded again.

5. Are any DTCs recorded ?

YES

▶ Go to the DTC guide of recorded NO. in Scantool.

NO

▶ System operates within specification.

DTC P1587 CAN COMMUNICATION ERROR (MT/AT RECOGNITION ERROR)

GENERAL DESCRIPTION EA2971F0

Because both A/T and M/T fuel control map is inputted in one type of ECM and selecting option is possible, one type is applied to both A/T and M/T option.When ECM is installed to vehicle, A/T and M/T recognition is performed by ECM automatically as checking whether ground line(ECM connector C230-K terminal 81) is grounded or opened.(A/T and M/T recognition is performed every IG KEY ON process.) If A/T, M/T recognition is not fulfilled well or any error occurs during the process, engine power generation is not sufficient and glow lamp on cluster blinks.

A/T : ECM connector C230-K terminal 81 is grounded
M/T : ECM connector C230-K terminal 81 is opened(no wiring exists)

DTC DESCRIPTION EA904FAB

P1587 is set when ECM is recognized as 1)A/T but CAN communication signal is not transmitted from TCM 2)M/T but CAN communication signal is transmitted from TCM. After checking if A/T, M/T auto recognition terminal is correct for each vehicle option, if no problem is detected, check poor connection in CAN communication circuit or CAN communication problem of TCM.

DTC DETECTING CONDITION E0D1E93B

<table>
<tr><th>Item</th><th colspan="3">Detecting Condition</th><th>Possible Cause</th></tr>
<tr><td>DTC Strategy</td><td colspan="3">• Voltage monitoring</td><td rowspan="8">• A/T, M/T recognition terminal circuit
• CAN communication line circuit
• TCM component failure
• ECM component failure</td></tr>
<tr><td>Enable Conditions</td><td colspan="3">• Engine running</td></tr>
<tr><td>Threshold Value</td><td colspan="3">• TCM signal is not detected at A/T vehicle
TCM signal is detected at M/T vehicle</td></tr>
<tr><td>Diagnostic Time</td><td colspan="3">• 1.0 sec.</td></tr>
<tr><td rowspan="4">Fail Safe</td><td>Fuel cut</td><td>NO</td><td rowspan="4">• Glow Lamp blinks.</td></tr>
<tr><td>EGR Off</td><td>NO</td></tr>
<tr><td>Fuel Limit</td><td>NO</td></tr>
<tr><td>Check Lamp</td><td>NO</td></tr>
</table>

SCHEMATIC DIAGRAM E9C6CAAD

[CIRCUIT DIAGRAM]

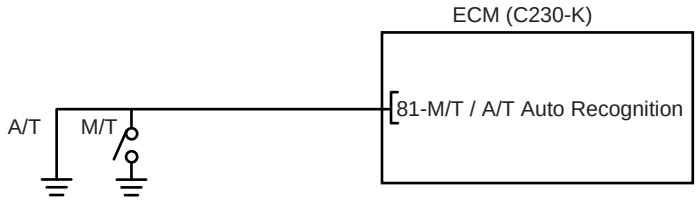

[HARNESS CONNECTOR]

C230-A

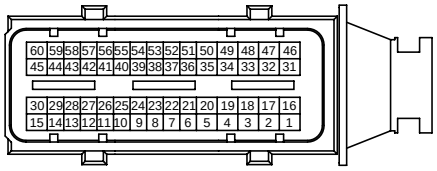

C230-K

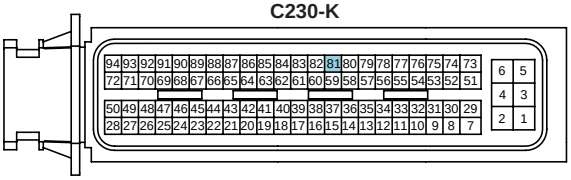

ECM

SCMFL6411L

[CIRCUIT DIAGRAM]

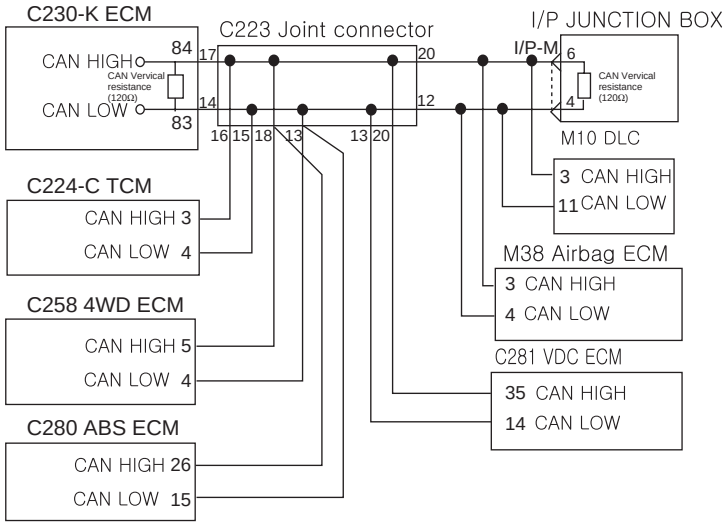

[CONNECTOR INFORMATION]

terminal	Connected to	Function
84	I/P-M terminal 4 C224-C terminal 3 C258 terminal 5 C280 terminal 26 C281 terminal 35 M38 terminal 3 M24 terminal 3	CAN HIGH
83	I/P-M terminal 6 C224-C terminal 4 C258 terminal 4 C280 terminal 15 C281 terminal 14 M38 terminal 4 M24 terminal 11	CAN LOW

[HARNESS CONNECTOR]

C230-A

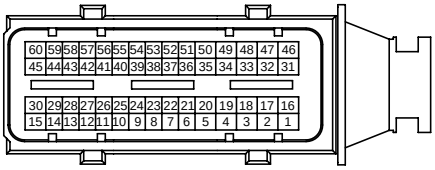

ECM

C330-K

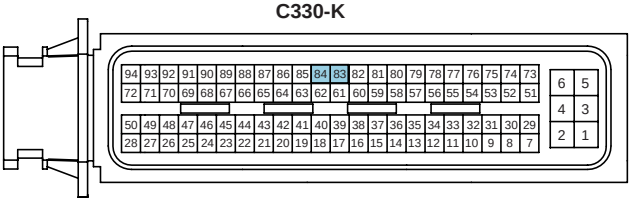

ECM

C224-C TCM

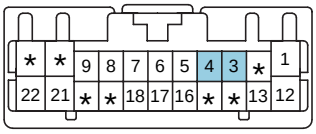

C258 4WD ECM

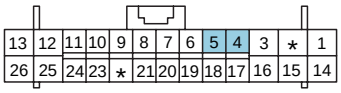

C280 ABS ECM

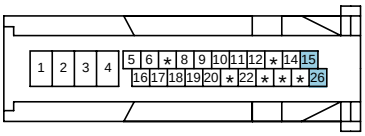

M10 DLC Terminal

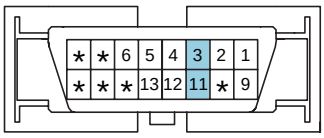

M38 Airbag ECM

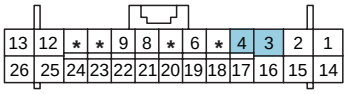

C281 VDC ECM

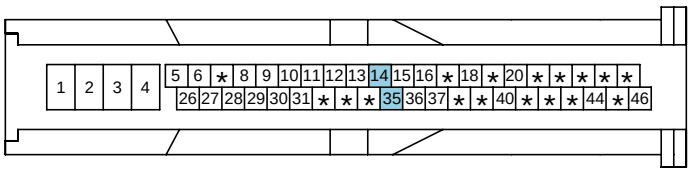

SCMFL6412L

TERMINAL AND CONNECTOR INSPECTION EE2299F2

1. Electrical systems consist of a lot of harness and connectors, poor connection of terminals can cause various problems and damge of component.

2. Perform checking procedure as follows.

   1) Check damage of harness and terminals : Check terminals for contact resistance, corrosion and deformation.

2) Check connecting condition of ECM and component connector : Check terminal seperation, damage of locking device and connecting condition between terminal and wiring.

NOTE

Disconnect the pin which requires checking at male connector and insert it to the terminal at female connector for checking connecting condition. (after checking, reconnect the pin at correct position.)

3. Is the problem found?

YES

▶ Repair the trouble causing part and go to "Verification of Vehicle Repair".

NO

▶ Go to "Ground Circuit Inspection".

GROUND CIRCUIT INSPECTION E47C0B26

1. IG KEY "OFF", ENGINE "OFF".
2. Disconnect ECM connector.
3. Check continuity between ECM connector(C230-K) terminal 81 and chassis ground.

Specification : Continuity (below 1.0Ω)

4. Is A/T, M/T auto recognition terminal grounded well?

YES

▶ Go to "CAN communication line inspection".

NO

▶ Repair poor connection or open in G15 ground point related circuit and go to "Verification of Vehicle Repair".

CAN COMMUNICATION LINE INSPECTION

1. Check CAN BUS vertical resistance
   1) IG KEY "OFF", ENGINE "OFF"
   2) Measure the resistance between DLC terminal 3 and 11.
   3) Disconnect ECM connector.
   4) Measure the resistance between DLC terminal 3 and 11.

Specification : Both ECM and TCM are connected : 60 ± 3Ω
Both ECM and TCM are disconnected : 120 ± 3Ω

   5) Is measured CAN BUS vertical resistance value within the specification?

YES

▶ Go to "2. Check short to ground in CAN BUS" as follows.

NO

▶ When measured resistances for both cases are below 10Ω : Repair short between one CAN BUS CAN and another one, and go to "Verification of Vehicle Repair".
▶ When measured resistances for both cases are 120Ω : Go to"4. CAN BUS continuity test"
▶ When measured resistances for both cases are infiniteΩ :Repair open in CAN communication circuit between DLC terminal box.When measured resistances for both cases are infiniteΩ :Repair open in CAN communication circuit between DLC terminal box.

2. Check short to ground in CAN BUS

1) IG KEY "OFF", ENGINE "OFF"

2) Disconnect ECM connector and TCM connector.

3) Check the continuity between DLC terminal 3 and chassis ground. (CAN HIGH)

4) Check the continuity between DLC terminal 11 and chassis ground. (CAN LOW)

Specification : Discontinuity (Infinite Ω)

5) Is CAN BUS insulated with ground correctly?

YES

▶ Go to "3. Check short to battery in CAN BUS" as follows.

NO

▶ Repair short to ground and go to "Verification of Vehicle Repair".

3. Check short to battery in CAN BUS

1) IG KEY "OFF", ENGINE "OFF"

2) Disconnect ECM connector and TCM connector.

3) IG KEY "ON"

4) Measure the voltage of DLC terminal 3.(CAN HIGH)

5) Measure the voltage of DLC terminal 11.(CAN LOW)

Specification : 0.0V~0.1V

6) Is abnormal voltage detected with both connectors disconnected?

YES

▶ Repair short to battery and go to "Verification of Vehicle Repair".

NO

▶ Go to "4. CAN BUS continuity test" as follows.

4. CAN BUS continuity test

1) IG KEY "OFF", ENGINE "OFF"

2) Disconnect ECM connector and TCM connector.(Disconnect "CAN communication" related connectors.)

3) Check continuity between DLC terminal 3 and CAN HIGH terminal or each module.
(CAN HIGH : ECM connector terminal 84, TCM connector terminal 3, ABS connector terminal 3, VDC connector terminal 35, 4WD ECM connector terminal 5, Airbag ECM connector terminal 3)

4) Check continuity between DLC terminal 11 and CAN LOW terminal or each module.
(CAN HIGH : ECM connector terminal 83, TCM connector terminal 4, ABS connector terminal 15, VDC connector terminal 14, 4WD ECM connector terminal 4, Airbag ECM connector terminal 4)

Specification : Continuity(below 1.0Ω)

5) Is continuity of CAN BUS line confirmed?

YES

▶ Go to "Component Inspection".

NO

▶ Repair open in CAN communication line and go to "verification of Vehicle Repair".

COMPONENT INSPECTION EDA8FACB

1. CAN communication waveform inspection

1) IG KEY "OFF", ENGINE "OFF".

2) Connect 2 channel scope to DLC terminal 3(CAN HIGH) and 11(CAN LOW),

3) Connect only ECM connector to CAN BUS and turn IG KEY "ON".

4) Connect only TCM connector to CAN BUS and turn IG KEY "ON".

Specification : The waveform similar to the waveform above is displayed at "IG KEY "ON".

※ If both CAN High and Low signals are fixed at 2.5V or High signal is 3.5V and Low signal, this means communicaiton error of each module.

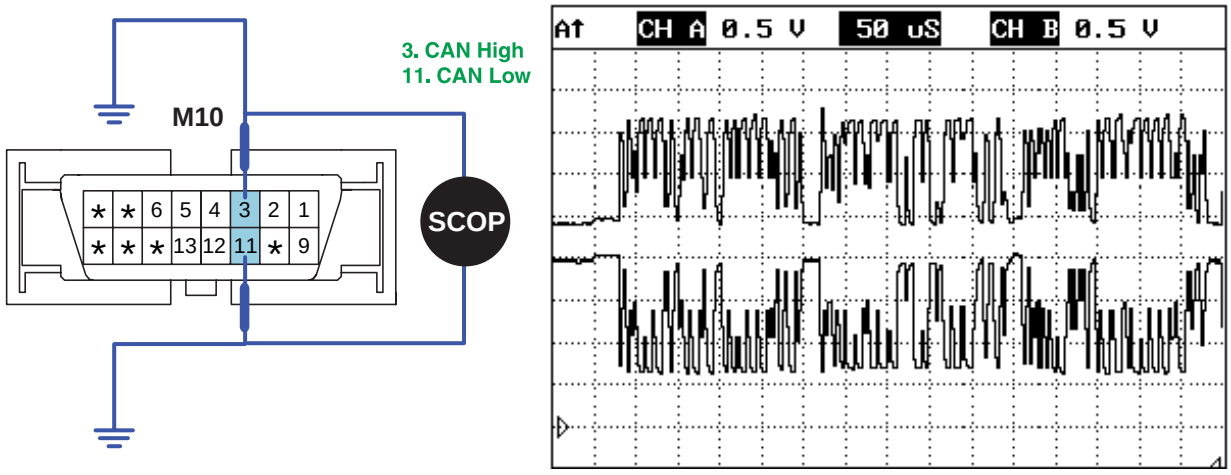

SCMFL6345L

5) Is waveform similar to above waveform displayed?

YES

▶ Go to "Verification of vehicle Repair.

NO

▶ Replace the module from which abnormal waveform is outputted, and go to "Verification of Vehicle Repair".

VERIFICATION OF VEHICLE REPAIR EC87E8C8

After a repair, it is essential to verify that the fault is corrected.

1. After connecting Scantool select "DIAGNOSTIC TROUBLE CODES(DTCs)" mode.
2. Clear recorded DTC using Scantool.
3. Drive the vehicle within DTC "Enable conditions" in "General information".
4. After selecting "DIAGNOSTIC TROUBLE CODES(DTCs)" mode and check if DTC is recorded again.
5. Are any DTCs recorded ?

YES

▶ Go to the DTC guide of recorded NO. in Scantool.

NO

▶ System operates within specification.

DTC P1588 SIGNAL CHANGE THROUGH MT/AT LINE (DURING ENGINE RUNNING)

GENERAL DESCRIPTION E77B2569

Because both A/T and M/T fuel control map is inputted in one type of ECM and selecting option is possible, one type is applied to both A/T and M/T option.When ECM is installed to vehicle, A/T and M/T recognition is performed by ECM automatically as checking whether ground line(ECM connector C230-K terminal 81) is grounded or opened.(A/T and M/T recognition is performed every IG KEY ON process.) If A/T, M/T recognition is not fulfilled well or any error occurs during the process, engine power generation is not sufficient and glow lamp on cluster blinks.

A/T : ECM connector C230-K terminal 81 is grounded
M/T : ECM connector C230-K terminal 81 is opened(no wiring exists)

DTC DESCRIPTION E75757F4

P1588 is set when the signal from A/T, M/T auto recognition terminal(ECM C230-K terminal 81) changes during engine running. This code is due to open in terminal for A/T option, grounded condition for M/T option. This code is normally arises from A/T option vehicle. Check the grounding condition of A/T, M/T auto recognition terminal.

DTC DETECTING CONDITION EBFD9D32

<table>
<tr><th>Item</th><th colspan="3">Detecting Condition</th><th>Possible Cause</th></tr>
<tr><td>DTC Strategy</td><td colspan="3">• Voltage monitoring</td><td rowspan="7">• A/T, M/T recognition terminal circuit
• ECM component failure</td></tr>
<tr><td>Enable Conditions</td><td colspan="3">• Engine running</td></tr>
<tr><td>Threshold Value</td><td colspan="3">• A/T, M/T auto recognition signal changes at engine ON.</td></tr>
<tr><td>Diagnostic Time</td><td colspan="3">• 0.6 sec.</td></tr>
<tr><td rowspan="4">Fail Safe</td><td>Fuel cut</td><td>NO</td><td rowspan="4">• Glow Lamp blinks.</td></tr>
<tr><td>EGR Off</td><td>NO</td></tr>
<tr><td>Fuel Limit</td><td>NO</td></tr>
<tr><td>Check Lamp</td><td>NO</td></tr>
</table>

SCHEMATIC DIAGRAM EA62BD0E

[CIRCUIT DIAGRAM]

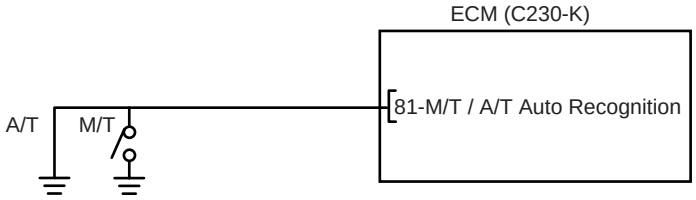

[HARNESS CONNECTOR]

C230-A

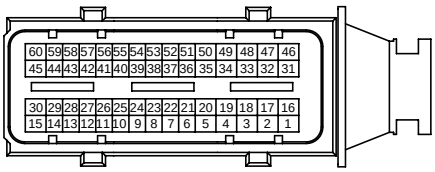

C230-K

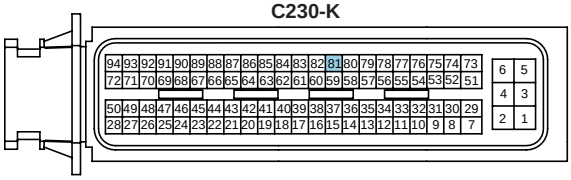

ECM

SCMFL6411L

TERMINAL AND CONNECTOR INSPECTION EBC79C67

1. Electrical systems consist of a lot of harness and connectors, poor connection of terminals can cause various problems and damge of component.

2. Perform checking procedure as follows.

   1) Check damage of harness and terminals : Check terminals for contact resistance, corrosion and deformation.

   2) Check connecting condition of ECM and component connector : Check terminal seperation, damage of locking device and connecting condition between terminal and wiring.

   NOTE

   Disconnect the pin which requires checking at male connector and insert it to the terminal at female connector for checking connecting condition. (after checking, reconnect the pin at correct position.)

3. Is the problem found?

   YES

   ▶ Repair the trouble causing part and go to "Verification of Vehicle Repair".

   NO

   ▶ Go to "Ground Circuit Inspection".

GROUND CIRCUIT INSPECTION EF29C5CD

1. IG KEY "OFF", ENGINE "OFF".
2. Disconnect ECM connector.
3. Check continuity between ECM connector(C230-K) terminal 81 and chassis ground.

Specification : Continuity (below 1.0Ω)

4. Is A/T, M/T auto recognition terminal grounded well?

YES

▶ Go to "Component Inspection".

NO

▶ Repair poor connection or open in G15 ground point related circuit and go to "Verification of Vehicle Repair".

COMPONENT INSPECTION E1FAA4BD

1. ECM Component Inspection
   1) IG KEY "OFF", ENGINE "OFF".
   2) Disconnect ECM.
   3) Replace ECM, check if abnormal operations disappear.
   4) If problems are corrected, replace ECM.

NOTE

Input injector IQA data(7 letters) using scantool at replacing ECM.
For immobilizer applied vehicle, input pin code.

VERIFICATION OF VEHICLE REPAIR E5E8DCBD

After a repair, it is essential to verify that the fault is corrected.

1. After connecting Scantool select "DIAGNOSTIC TROUBLE CODES(DTCs)" mode.
2. Clear recorded DTC using Scantool.
3. Drive the vehicle within DTC "Enable conditions" in "General information".
4. After selecting "DIAGNOSTIC TROUBLE CODES(DTCs)" mode and check if DTC is recorded again.
5. Are any DTCs recorded ?

YES

▶ Go to the DTC guide of recorded NO. in Scantool.

NO

▶ System operates within specification.

DTC P1634 AUX. HEATER MALFUNCTION

COMPONENT LOCATION EACE7ED0

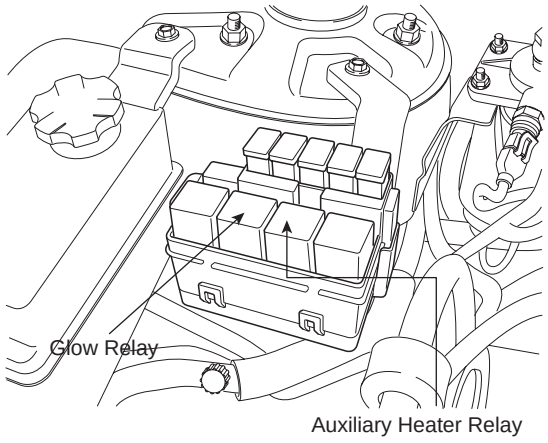

SCMFL6508L

GENERAL DESCRIPTION E39F3A0D

Because thermal efficiency of electronically controlled diesel engine is higher than that of gasoline engine, heat loss to cylinder wall is lower. This enables electronically controlled diesel engine to generate high power and have high fuel efficiency. However in other point of view, due to low engine coolant temperature, heating efficiency lowered then, driver is unsatisfied with the heating. To cope with this situation, PTC heater is installed in coolant line and it raises heating efficiency and raise coolant temperature.

※ Heater relay operating condition : When all the following condition are met.Blower ON, Engine speed below 700RPM, Battery voltage above 12.5V, Aircon OFF, Air temperature below 5℃, engine coolant temperature below 70℃ - Maximum operating duration is limited to 40 min.

DTC DESCRIPTION EDEFAF51

P1634 is set when excessive current or "0"A is detected in heater relay control circuit for more than 1.0 sec. at heater relay operating condition. This code is due to 1)open or 2)short to battery or ground in heater relay control circuit or 3)component problem.

DTC DETECTING CONDITION EFEA2E97

<table>
<tr><th>Item</th><th colspan="3">Detecting Condition</th><th>Possible Cause</th></tr>
<tr><td>DTC Strategy</td><td colspan="3">• Voltage monitoring</td><td rowspan="8">• PTC heater relay #1control circuit
• Heater relay component</td></tr>
<tr><td>Enable Conditions</td><td colspan="3">• IG KEY "ON" (monitoring only performed at relay operating condition)</td></tr>
<tr><td>Threshold Value</td><td colspan="3">• Short to Battery
• short to GND, wiring open</td></tr>
<tr><td>Diagnostic Time</td><td colspan="3">• 1.0 sec.</td></tr>
<tr><td rowspan="4">Fail Safe</td><td>Fuel cut</td><td>NO</td><td rowspan="4"></td></tr>
<tr><td>EGR Off</td><td>NO</td></tr>
<tr><td>Fuel Limit</td><td>NO</td></tr>
<tr><td>Check Lamp</td><td>NO</td></tr>
</table>

SPECIFICATION EC5C3A00

Heater relay coil resistance	PTC heater operating temperature	PTC heater operating condition
80±5Ω (20℃)	Refer to "General Information"	Refer to "General Information"

SCHEMATIC DIAGRAM EEEEA097

[CIRCUIT DIAGRAM]

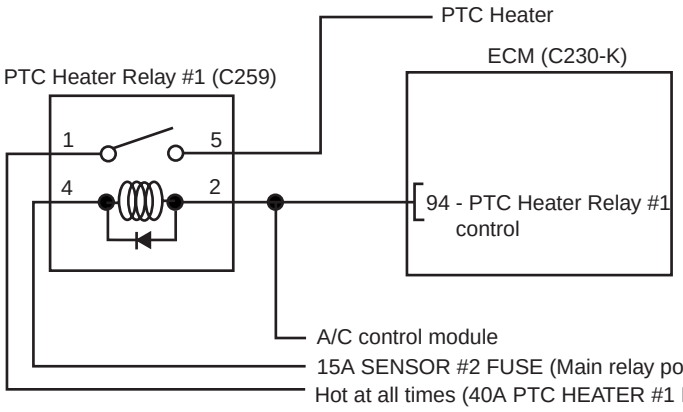

[CONNECTOR INFORMATION]

Terminal	Connected to	Function
1	40A PTC HTR #1 FUSIBLE LINK	PTC Heater Relay power(INPUT)
2	ECM C230-K (94)	PTC Heater Relay #1 control
3	-	-
4	15A SENSOR #2 FUSE	PTC Heater Relay coil power
5	C259 terminal 3	PTC Heater Relay power(OUTPUT)

[HARNESS CONNECTOR]

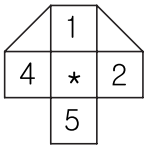

C214
PTC Heater Relay #1

C230-A

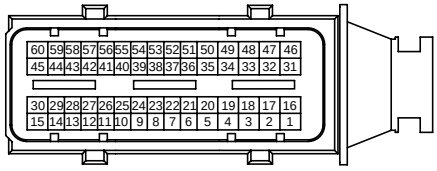

C230-K

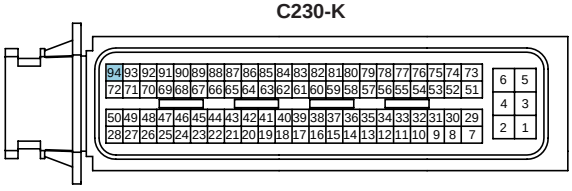

ECM

SCMFL6413L

MONITOR SCANTOOL DATA E7D014EC

1. Connect Scantool to Data Link Connector (DLC).
2. ENGINE "ON".(Engine coolant temp. below 70℃,Intake air temp. below 5℃)
3. Blower switch "ON".
4. Monitor "AUXILIARY HEATER" parameter on the Scantool.
   (As soon as turning engine ON "AUXILIARY HEATER" parameter turns "ON". Check if the parameter turns "OFF" after engine is warmed up.)

specification : Engine coolant temp. below 70℃(Intake air temp. below 5℃) : "AUXILIARY HEATER" "ON"
Engine coolant temp. above 70℃ : "AUXILIARY HEATER" "OFF"

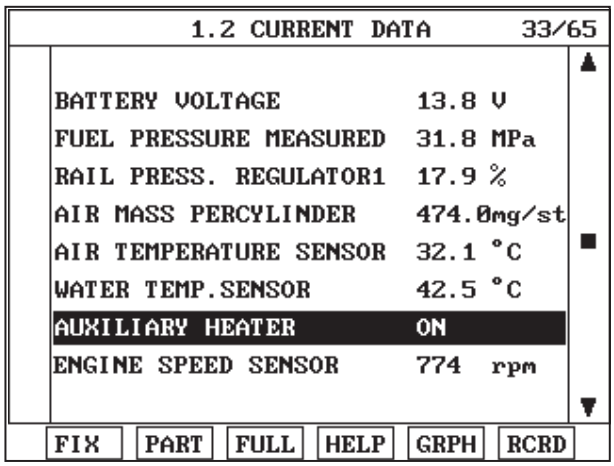

Fig.1

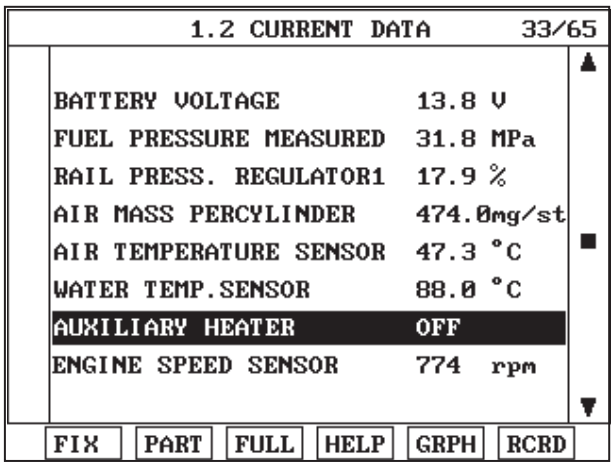

Fig.2

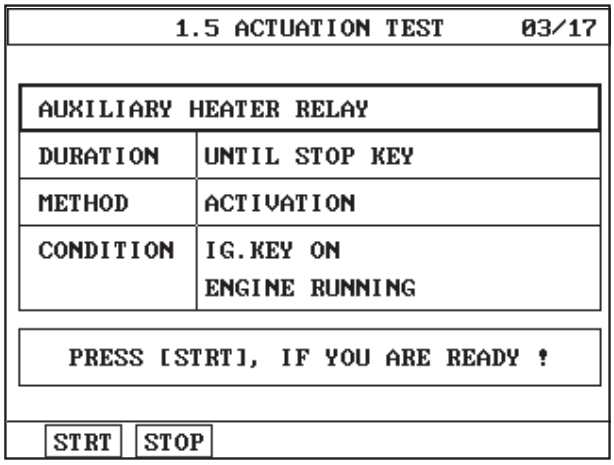

Fig.3

Fig.1) "AUXILIARY HEATER" operates only when Intake air temp. is below 5℃ and Engine coolant temp. is below 70℃.
"ON" state of "AUXILIARY HEATER" lasts till Engine coolant temp. reaches 70℃.
Fig.2) "AUXILIARY HEATER" turns "OFF" as soon as engine coolant temp. reaches 70℃.
Fig.3) If it is difficult to cool engine when current condition does not meat "AUXILIARY HEATER" operating condition, check relay operation using "ACTUATION TEST" function on the Scantool.

SCMFL6347L

TERMINAL AND CONNECTOR INSPECTION EE5C6C40

1. Electrical systems consist of a lot of harness and connectors, poor connection of terminals can cause various problems and damge of component.

2. Perform checking procedure as follows.

   1) Check damage of harness and terminals : Check terminals for contact resistance, corrosion and deformation.

   2) Check connecting condition of ECM and component connector : Check terminal seperation, damage of locking device and connecting condition between terminal and wiring.

NOTE

Disconnect the pin which requires checking at male connector and insert it to the terminal at female connector for checking connecting condition. (after checking, reconnect the pin at correct position.)

3. Is the problem found?

YES

▶ Repair the trouble causing part and go to "Verification of Vehicle Repair".

NO

▶ Go to "Power Circuit Inspection".

POWER CIRCUIT INSPECTION E3849909

1. Check HOT AT ALL TIMES power circuit voltage

   1) IG KEY "OFF", ENGINE "OFF"

   2) Disconnect PTC heater relay #1.

   3) Measure the voltage of PTC heater relay #1 connector terminal 1.

Specification : 11.5V~13.0V

   4) Is the measured voltage within the specification?

   YES

   ▶ Go to "2. Check IG KEY "ON" power circuit voltage" as follows.

   NO

   ▶ Repair FUSIBLE LINK BOX 40A PTC HEATER #1 FUSIBLE LINK and related circuit and go to "Verification of Vehicle Repair".

2. Check IG KEY "ON" power circuit voltage

   1) IG KEY "OFF", ENGINE "OFF"

   2) Disconnect PTC heater relay #1.

   3) IG KEY "ON"

   4) Measure the voltage of PTC heater relay #1 connector terminal 4.

Specification : 11.5V~13.0V

   5) Is the measured voltage within the specification?

   YES

   ▶ Go to "Control Circuit Inspection".

   NO

   ▶ Repair E/R FUSE & RELAY BOX 15A SENSOR #2 FUSE and related circuit and go to "Verification of Vehicle Repair".

CONTROL CIRCUIT INSPECTION EF7657E4

1. Check control circuit monitoring voltage

1) IG KEY "ON", ENGINE "OFF".
2) Disconnect PTC heater relay #1.
3) IG KEY "ON"
4) Measure the voltage of PTC heater relay #1connector terminal 2.

Specification : 8.0V~10.0V

5) Is the measured voltage within the specification?

YES

▶ Go to "2. Check open in control circuit" as follows.

NO

▶ Repair short to battery in control circuit and go to "Verification of Vehicle Repair".

2. Check open in control circuit

1) IG KEY "OFF", ENGINE "OFF"
2) Disconnect PTC heater relay #1 and ECM connector.
3) Check continuity between PTC heater relay #1 connector terminal 2 and ECM connector (C230-K) terminal 94.

specification : Continuity (below 1.0Ω)

4) Is the measured resistance within the specification?

YES

▶ Go to "3. Check short to ground in control circuit" as follows.

NO

▶ Repair open in control circuit and go to "Verification of Vehicle Repair".

3. Check short to ground in control circuit

1) IG KEY "OFF", ENGINE "OFF"
2) Disconnect PTC heater relay #1 and ECM connector.
3) Measure the resistance of PTC heater relay #1 connector terminal 2.

specification : Discontinuity (Infinite Ω)

4) Is the measured resistance within the specification?

YES

▶ Go to "Component Inspection".

NO

▶ Repair short to ground in control circuit and go to "Verification of Vehicle Repair".

COMPONENT INSPECTION EFFBE24C

1. Check PTC heater relay #1 component coil resistance

   1) IG KEY "OFF", ENGINE "OFF".

   2) Disconnect PTC heater relay #1.

   3) Measure the resistance of PTC heater relay #1 component coil.

Specification : 80±5 Ω (20℃)

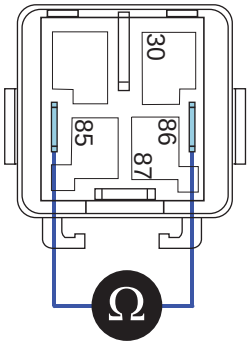

EGNG007M

   4) Is the measured resistance within the specification?

YES

▶ Go to "2. Check PTC heater relay #1 component operation" as follows.

NO

▶ Replace PTC heater relay #1 and go to "Verification of Vehicle Repair".

2. Check PTC heater relay #1 component operation

   1) IG KEY "OFF", ENGINE "OFF"

   2) Disconnect PTC heater relay #1.

   3) Supplies random B+ and ground to coil sides of PTC heater relay #1. (terminal 85, 86)

   4) Check continuity between PTC heater relay #1 terminal 30 and terminal 87.

specification : When power is supplied : Continuity (below 1.0Ω)
When power is not supplied : Discontinuity (Infinite Ω)

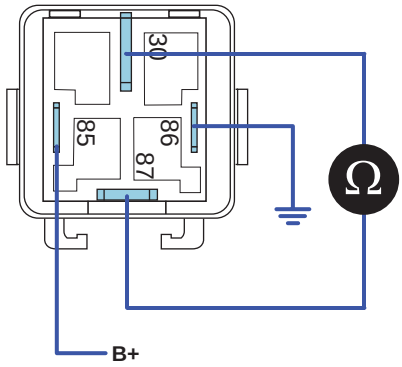

EGNG007N

5) Is the measured resistance within the specification?

YES

▶ Go to "Verification of Vehicle Repair".

NO

▶ Replace PTC heater relay #1 and go to "Verification of Vehicle Repair".

※ Repeat this process 2~3 times.

VERIFICATION OF VEHICLE REPAIR E032A36B

After a repair, it is essential to verify that the fault is corrected.

1. After connecting Scantool select "DIAGNOSTIC TROUBLE CODES(DTCs)" mode.
2. Clear recorded DTC using Scantool.
3. Drive the vehicle within DTC "Enable conditions" in "General information".
4. After selecting "DIAGNOSTIC TROUBLE CODES(DTCs)" mode and check if DTC is recorded again.
5. Are any DTCs recorded ?

YES

▶ Go to the DTC guide of recorded NO. in Scantool.

NO

▶ System operates within specification.

DTC P1652 IGNITION SWITCH CIRCUIT MALFUNCTION

GENERAL DESCRIPTION E642BD67

When a driver turns on IG KEY, IG KEY ON signal is inputted to ECM connector(C230-K) terminal 28 through IG KEY switch. This signal initializes(boots) ECM accordingly, main relay operates. Main relay supplies powers for ECM, sensors and actuators in order to enable engine to start.When IG KEY ON signal is shut off during turning engine OFF, ECM stops injector operation then engine turns OFF. Approx. after 16 sec., ECM shuts OFF main relay and system turns OFF.

DTC DESCRIPTION EA1CA742

When the condition that IG KEY ON signal turns OFF while ECM, to which IG signal inputted, is initialized (booting, Approx. 25ms is required), IG KEY switch error is recognized and P1652 is set (monitored only once every IG KEY ON initialization process). This code is due to poor connection in IG KEY ON signal circuit.

DTC DETECTING CONDITION E12F403E

<table>
<tr><th>Item</th><th colspan="3">Detecting Condition</th><th>Possible Cause</th></tr>
<tr><td>DTC Strategy</td><td colspan="3">• Voltage monitoring</td><td rowspan="9">• IG KEY "ON"signal circuit
• IG KEY switch</td></tr>
<tr><td>Enable Conditions</td><td colspan="3">• Engine running</td></tr>
<tr><td>Threshold Value</td><td colspan="3">• No signal through IG line after IG KEY "ON"</td></tr>
<tr><td>Diagnostic Time</td><td colspan="3">• Immediately</td></tr>
<tr><td rowspan="4">Fail Safe</td><td>Fuel cut</td><td>NO</td><td rowspan="4"></td></tr>
<tr><td>EGR Off</td><td>NO</td></tr>
<tr><td>Fuel Limit</td><td>NO</td></tr>
<tr><td>Check Lamp</td><td>NO</td></tr>
</table>

SCHEMATIC DIAGRAM E4EEBE7A

[CIRCUIT DIAGRAM]

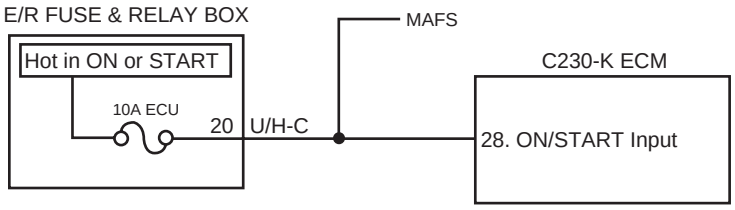

[CONNECTION INFORMATION]

Terminal	Connected to	Function
28	U/H-C terminal 20	ON/START Input

[HARNESS CONNECTOR]

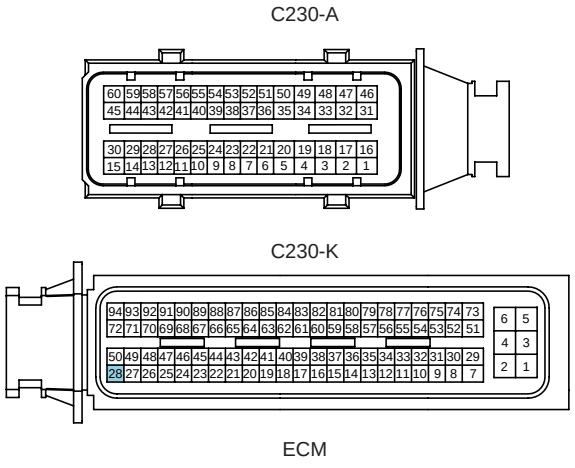

SCMFL6414L

SIGNAL WAVEFORM AND DAT E8C889F7

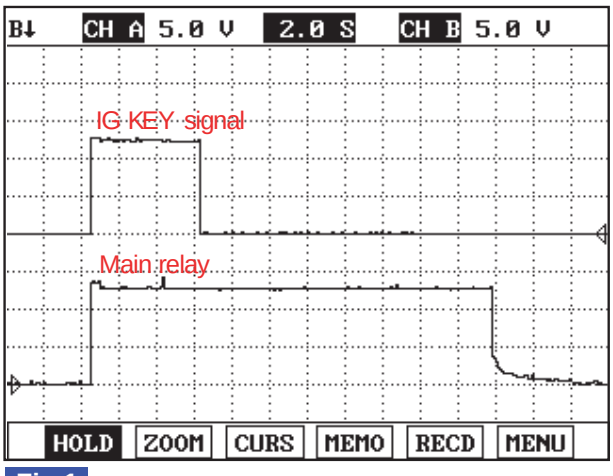

Fig.1

Fig.1) The waveforms of IG KEY "ON" signal and main relay operation are measured simultaneously. Check poor connection at the point of IG KEY "ON".

LFIG501A

TERMINAL AND CONNECTOR INSPECTION EAB886D1

1. Electrical systems consist of a lot of harness and connectors, poor connection of terminals can cause various problems and damge of component.

2. Perform checking procedure as follows.

   1) Check damage of harness and terminals : Check terminals for contact resistance, corrosion and deformation.

   2) Check connecting condition of ECM and component connector : Check terminal seperation, damage of locking device and connecting condition between terminal and wiring.

   NOTE

   Disconnect the pin which requires checking at male connector and insert it to the terminal at female connector for checking connecting condition. (after checking, reconnect the pin at correct position.)

3. Is the problem found?

   YES

   ▶ Repair the trouble causing part and go to "Verification of Vehicle Repair".

   NO

   ▶ Go to "Signal Circuit Inspection".

SIGNAL CIRCUIT INSPECTION E622514F

1. IG KEY "OFF", ENGINE "OFF"
2. Connect Oscilloscope to ECM connector terminal 28 with ECM connector being connected.
3. Check IG KEY "ON" signal waveform at IG KEY "ON".

specification : The signals indicate poor connection should not exist at IG KEY "ON" range.

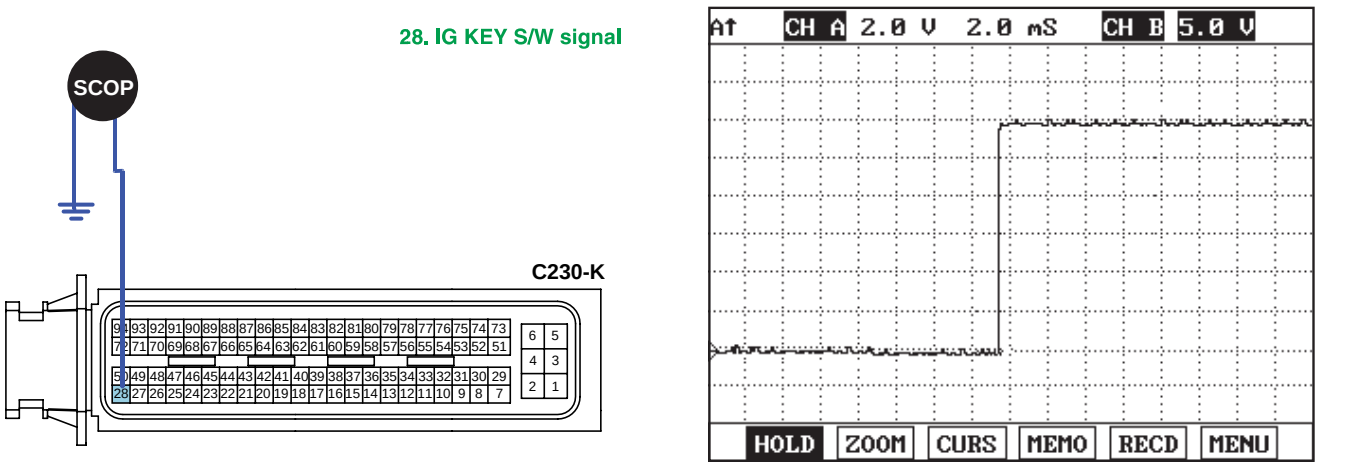

SCMFL6353L

4. Does abnormal waveform generate at IG KEY "ON" range?

   YES

   ▶ Repair IG KEY S/W and poor connection of I/P JUNCTION BOX 10A ECU FUSE and related circuit, and go to "Verification of Vehicle Repair".

   NO

▶ Go to "Verification of Vehicle Repair".

※ Repeat this process 2~3 times.

VERIFICATION OF VEHICLE REPAIR E8AFD11E

After a repair, it is essential to verify that the fault is corrected.

1. After connecting Scantool select "DIAGNOSTIC TROUBLE CODES(DTCs)" mode.
2. Clear recorded DTC using Scantool.
3. Drive the vehicle within DTC "Enable conditions" in "General information".
4. After selecting "DIAGNOSTIC TROUBLE CODES(DTCs)" mode and check if DTC is recorded again.
5. Are any DTCs recorded ?

YES

▶ Go to the DTC guide of recorded NO. in Scantool.

NO

▶ System operates within specification.

DTC P1670 INJECTOR SPECIFIC DATA ERROR

GENERAL DESCRIPTION E59E39E4

IQA (Injector Quantity Adjustment) means adjusting fuel injection quantity difference between injectors which occurs inevitably at manufacturing process as allotting serial number consists of 7 letters to each injectors.Inputting IQA code of injectors installed in each cylinder to ECM, ECM recognizes the fuel injection quantity difference between each injectors. ECM adjusts every injector to have same fuel injecting characteristic as recognizing specific fuel injection map which is different for each serial number.

DTC DESCRIPTION E7BCED66

P1670 is set when 'IQA read or write error' occurs in EEP ROM where IQA data is saved. This code is due to incorrect input of IQA code to ECM.

DTC DETECTING CONDITION EC1B54FF

<table>
<tr><th>Item</th><th colspan="3">Detecting Condition</th><th>Possible Cause</th></tr>
<tr><td>DTC Strategy</td><td colspan="3">• EEP ROM monitoring</td><td rowspan="6">• ECM internal error</td></tr>
<tr><td>Enable Conditions</td><td colspan="3">• IG KEY "ON"</td></tr>
<tr><td>Threshold Value</td><td colspan="3">• incorrect input of IQA code to ECM.</td></tr>
<tr><td>Diagnostic Time</td><td colspan="3">• Immediately</td></tr>
<tr><td rowspan="4">Fail Safe</td><td>Fuel cut</td><td>NO</td><td rowspan="4">• Engine Check Lamp blinks.</td></tr>
<tr><td>EGR Off</td><td>NO</td></tr>
<tr><td>Fuel Limit</td><td>NO</td></tr>
<tr><td>Check Lamp</td><td>BLINK</td></tr>
</table>

COMPONENT INSPECTION E918A224

1. Check injector class input state

   1) IG KEY "OFF", ENGINE "OFF".

   2) Using Scantool, select "ENGINE CONTROL" - "INJECTOR CORRECTION".

   3) Check currently inputted "injector class input state".

Specification : IQA data inputted to ECM should be identical with IQA data of injector.

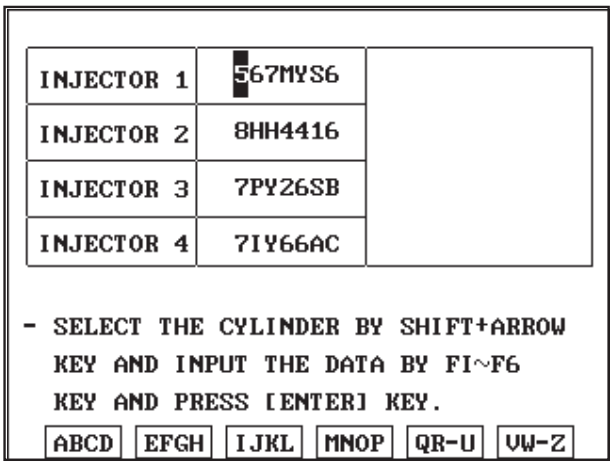

LFIG504A

4) Are both data identical?

YES

▶ Go to "Verification of Vehicle Repair".

NO

▶ If error is not corrected after reperforming "INJECTOR CORRECTION" procedure, replace ECM.

NOTE

Input IQA data of injector mounted at cylinder at replacing ECM using scantool.
If this process is not performed, engine check lamp on cluster blinks and normal engine power generation is impossible.

VERIFICATION OF VEHICLE REPAIR E02F40D4

After a repair, it is essential to verify that the fault is corrected.

1. After connecting Scantool select "DIAGNOSTIC TROUBLE CODES(DTCs)" mode.
2. Clear recorded DTC using Scantool.
3. Drive the vehicle within DTC "Enable conditions" in "General information".
4. After selecting "DIAGNOSTIC TROUBLE CODES(DTCs)" mode and check if DTC is recorded again.
5. Are any DTCs recorded ?

YES

▶ Go to the DTC guide of recorded NO. in Scantool.

NO

▶ System operates within specification.

DTC P1671 CHECK-SUM ERROR

GENERAL DESCRIPTION E0471CED

IQA (Injector Quantity Adjustment) means adjusting fuel injection quantity difference between injectors which occurs inevitably at manufacturing process as allotting serial number consists of 7 letters to each injectors.Inputting IQA code of injectors installed in each cylinder to ECM, ECM recognizes the fuel injection quantity difference between each injectors. ECM adjusts every injector to have same fuel injecting characteristic as recognizing specific fuel injection map which is different for each serial number.

DTC DESCRIPTION EA89C6FE

P1671 is set when IQA data is not inputted to ECM during initialization of ECM.

DTC DETECTING CONDITION E8CC34CE

<table>
<tr><th>Item</th><th colspan="3">Detecting Condition</th><th>Possible Cause</th></tr>
<tr><td>DTC Strategy</td><td colspan="3">• EEP ROM monitoring</td><td rowspan="9">• IQA not inputted to ECM</td></tr>
<tr><td>Enable Conditions</td><td colspan="3">• IG KEY "ON"</td></tr>
<tr><td>Threshold Value</td><td colspan="3">• IQA code not inputted to ECM</td></tr>
<tr><td>Diagnostic Time</td><td colspan="3">• Immediately</td></tr>
<tr><td rowspan="4">Fail Safe</td><td>Fuel cut</td><td>NO</td><td rowspan="4">• Engine Check Lamp blinks.</td></tr>
<tr><td>EGR Off</td><td>NO</td></tr>
<tr><td>Fuel Limit</td><td>NO</td></tr>
<tr><td>Check Lamp</td><td>BLINK</td></tr>
</table>

COMPONENT INSPECTION EEA2B9A6

1. Check injector class input state

   1) IG KEY "OFF", ENGINE "OFF".

   2) Using Scantool, select "ENGINE CONTROL" - "INJECTOR CORRECTION".

   3) Check currently inputted "injector class input state".

Specification : IQA data inputted to ECM should be identical with IQA data of injector.

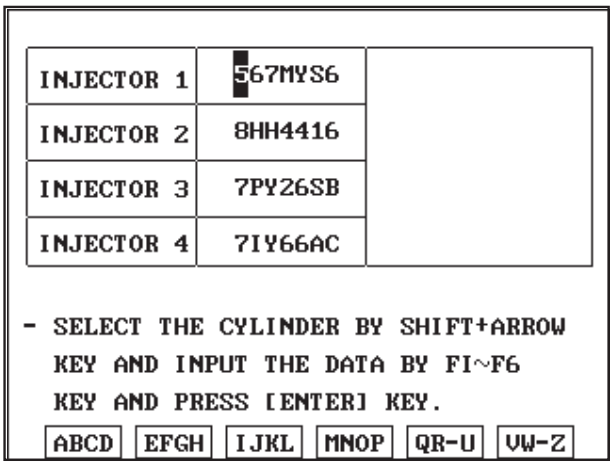

LFIG504A

4) Are both data identical?

YES

▶ Go to "Verification of Vehicle Repair".

NO

▶ If error is not corrected after reperforming "INJECTOR CORRECTION" procedure, replace ECM.

NOTE

Input IQA data of injector mounted at cylinder at replacing ECM using scantool.
If this process is not performed, engine check lamp on cluster blinks and normal engine power generation is impossible.

VERIFICATION OF VEHICLE REPAIR EF565CD3

After a repair, it is essential to verify that the fault is corrected.

1. After connecting Scantool select "DIAGNOSTIC TROUBLE CODES(DTCs)" mode.
2. Clear recorded DTC using Scantool.
3. Drive the vehicle within DTC "Enable conditions" in "General information".
4. After selecting "DIAGNOSTIC TROUBLE CODES(DTCs)" mode and check if DTC is recorded again.
5. Are any DTCs recorded ?

YES

▶ Go to the DTC guide of recorded NO. in Scantool.

NO

▶ System operates within specification.

DTC P2009 INTAKE MANIFOLD RUNNER CONTROL CIRCUIT LOW(BANK 1)

COMPONENT LOCATION EFE7A7B3

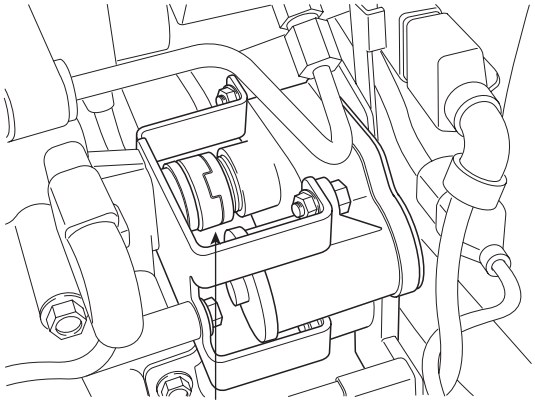

Variable Swirl Control Actuater

SCMFL6509L

GENERAL DESCRIPTION E6F57131

Variable swirl control actuator consists of DC motor and motor position sensor(potentiometer) which detects the position of swirl valve.As closing one intake port out of two at idle and below 3000RPM, swirl effect is taken on intake air. This swirl effect increases air flow rate.

However, because air flow rate is too high, swirl effect is neglectable thus, swirl valve is opened for efficiency of intake air.

To prevent swirl valve and shaft form being stuck by foreign metarial, and to learn max opening and closing position of swirl valve, it is fully opened and closed twice at turning engine OFF.

※Swirl
The air flow which indicates Intake air swirls with respect to the axis passing through the centre of piston with length-direction by intake port which is eccentric from the centre of combustion chamber.

DTC DESCRIPTION E52AFD3E

P2009 is set when 1) short to ground in variable swirl actuator driving motor (+) or (-) output terminal. or 2) tiny open in motor (-) output terminal for a long period occurs.The polarity of (+) and (-) lines shift each other in accordance with the condition of swirl valve(opened or closed) thus, checking both (+) and (-) circuits is required.

DTC DETECTING CONDITION E37B62CE

Item	Detecting Condition			Possible Cause
DTC Strategy	• Voltage monitoring			• Variable swirl valve motor circuit
Enable Conditions	• IG KEY "ON"			
Threshold Value	• Short to ground in motor output terminal - 0.2 sec. • Tiny open in motor circuit - 0.3 sec.			
Diagnostic Time	• Refer to Threshold value			
Fail Safe	Fuel cut	NO	• Swirl valve opened at variable swirl control actuator failure	
	EGR Off	NO		
	Fuel Limit	NO		
	Check Lamp	NO		

SPECIFICATION E045EB87

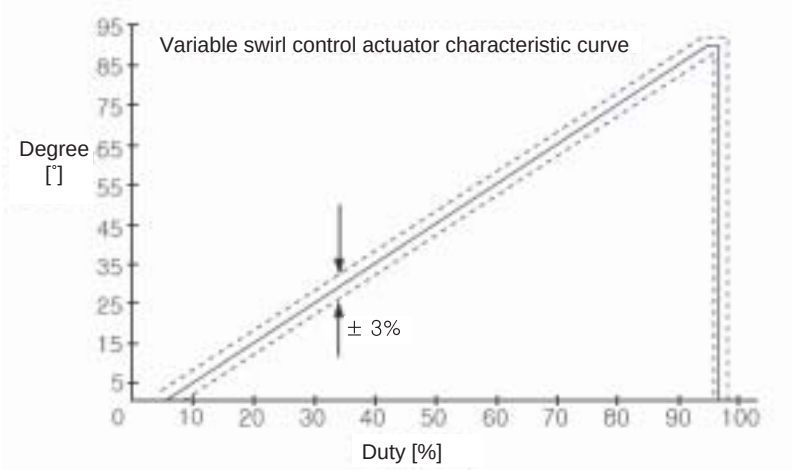

LFIG510A

SCHEMATIC DIAGRAM E70B0D6D

[CIRCUIT DIAGRAM]

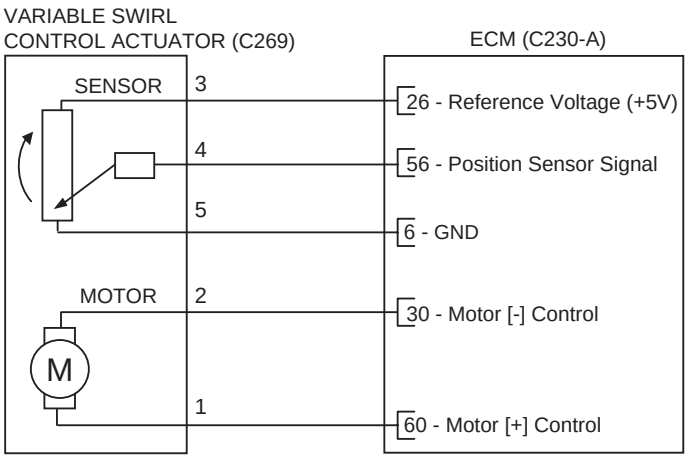

[CONNECTION INFORMATION]

Terminal	Connected to	Function
1	ECM C230-A (60)	Motor [+] Control
2	ECM C230-A (30)	Motor [-] Control
3	ECM C230-A (26)	Reference Voltage (+5V)
4	ECM C230-A (56)	Position Signal
5	ECM C230-A (6)	Sensor Ground

[HARNESS CONNECTORS]

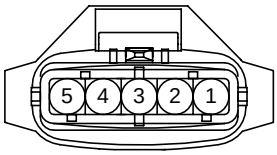

C269

VARIABLE SWIRL CONTROL ACTUATOR

C230-A

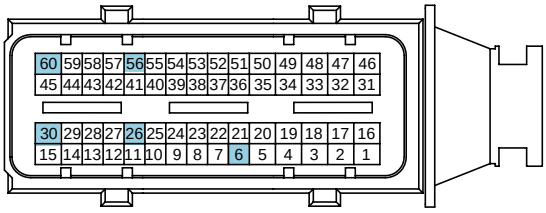

C230-K

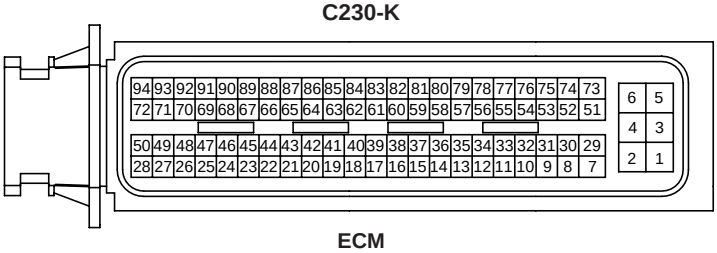

ECM

SCMFL6132L

SIGNAL WAVEFORM AND DATA E5AED65D

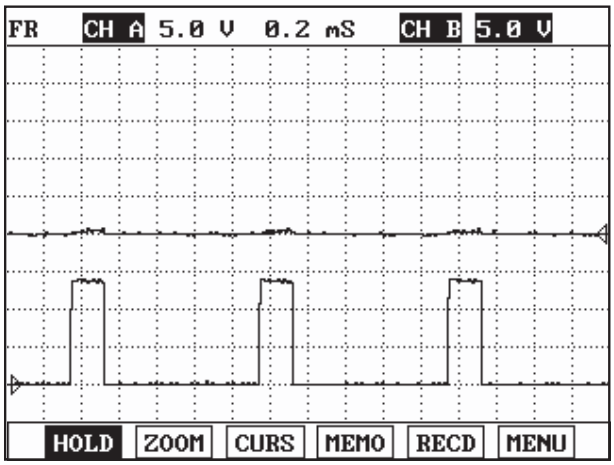

Fig.1

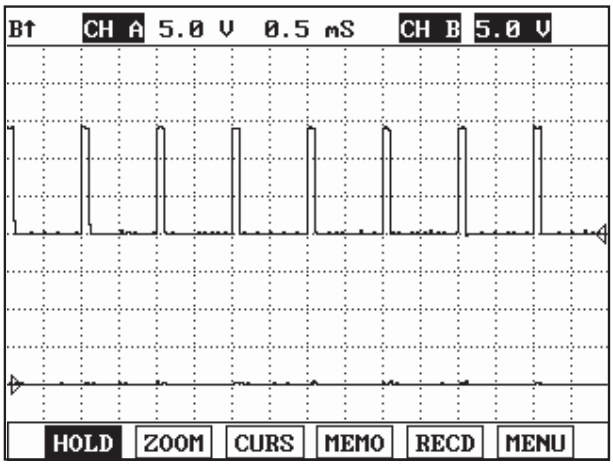

Fig.2

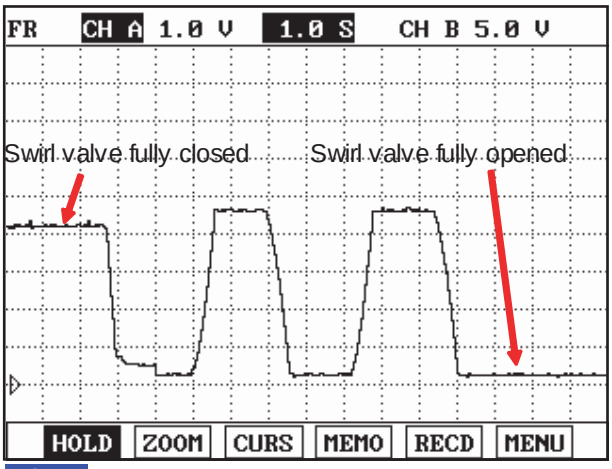

Fig.3

Fig.1) Waveform when variable swirl valve closed at idle. Terminal 1 is (+) and 2 is (-).
Fig. 2) Waveform when variable swirl valve opened at above 3000RPM. Terminal 1 is (-) and 2 is (+).
Fig. 3) Waveform of variable swirl control actuator motor position sensor at the point of turning engine OFF.
4.3V at swirl valve closed and 0.3V at swirl valve opened. Swirl valve is opened and closed twice at engine "OFF".
(Measured at terminal 4)

SCMFL6421L

TERMINAL AND CONNECTOR INSPECTION E41E065B

1. Electrical systems consist of a lot of harness and connectors, poor connection of terminals can cause various problems and damge of component.

2. Perform checking procedure as follows.

   1) Check damage of harness and terminals : Check terminals for contact resistance, corrosion and deformation.

   2) Check connecting condition of ECM and component connector : Check terminal seperation, damage of locking device and connecting condition between terminal and wiring.

NOTE

Disconnect the pin which requires checking at male connector and insert it to the terminal at female connector for checking connecting condition. (after checking, reconnect the pin at correct position.)

3. Is the problem found?

YES

▶ Repair the trouble causing part and go to "Verification of Vehicle Repair".

NO

▶ Go to "Control Circuit Inspection".

CONTROL CIRCUIT INSPECTION EC7554F9

1. Check short to ground in control circuit

   1) IG KEY "OFF", ENGINE "OFF"

   2) Disconnect variable swirl control actuator connector and ECM connector.

   3) Check continuity between variable swirl control actuator connector terminal 1(or 2) and chassis ground.

Specification : Discontinuity(Infinite Ω)

   4) Is the measured resistance within the specification?

   YES

   ▶ Go to "2.Check open in motor circuit" as follows.

   NO

   ▶ Repair short to ground in variable swirl control actuator motor circuit and go to "Verification of Vehicle Repair".

2. Check open in motor circuit

   1) IG KEY "OFF", ENGINE "OFF"

   2) Disconnect variable swirl control actuator connector and ECM connector.

   3) Check continuity between variable swirl control actuator connector terminal 1 and ECM connecor (C230-A) terminal 60.

   4) Check continuity between variable swirl control actuator connector terminal 2 and ECM connecor (C230-A) terminal 30.

Specification : Continuity (below 1.0Ω)

   5) Is the measured resistance within the specification?

   YES

   ▶ Go to "Component Inspection".

   NO

   ▶ Repair open in variable swirl control actuator motor circuit and go to "Verification of Vehicle Repair".

COMPONENT INSPECTION E9387396

1. Check motor coil resistance

1) IG KEY "OFF", ENGINE "OFF"

2) Disconnect variable swirl control actuator connector.

3) Measure the resistance between variable swirl control actuator component terminal 1 and 2.

Specification : 15.0 ± 3 Ω (20℃)

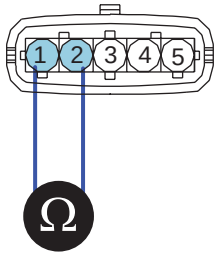

LFIG514A

4) Is the measured resistance within the specification?

YES

▶ Go to "2. Check motor operation".

NO

▶ Replace variable swirl control actuator assy'.

2. Check motor operation

1) IG KEY "ON" , ENGINE "ON".

2) Keep engine at idle state.

3) Monitor the waveform of variable swirl control actuator terminal 1and 2 with two channel oscilloscope.

4) Accelerating engine to above 3000RPM, let variable swirl control actuator be opened(operates).

Specification : Refer to Signal Waveform & Data Fig.1 & 2

5) Does variable swirl control actuator operate correctly?

YES

▶ Go to "Verification of Vehicle Repair".

NO

▶ Replace variable swirl control actuator assy' and go to "Verification of Vehicle Repair".

VERIFICATION OF VEHICLE REPAIR EAF94093

After a repair, it is essential to verify that the fault is corrected.

1. After connecting Scantool select "DIAGNOSTIC TROUBLE CODES(DTCs)" mode.

2. Clear recorded DTC using Scantool.

3. Drive the vehicle within DTC "Enable conditions" in "General information".
4. After selecting "DIAGNOSTIC TROUBLE CODES(DTCs)" mode and check if DTC is recorded again.
5. Are any DTCs recorded ?

YES

▶ Go to the DTC guide of recorded NO. in Scantool.

NO

▶ System operates within specification.

DTC P2010 INTAKE MANIFOLD RUNNER CONTROL CIRCUIT HIGH(BANK 1)

COMPONENT LOCATION EEDFACA0

Refer to DTC P2009.

GENERAL DESCRIPTION E49CCADB

Refer to DTC P2009.

DTC DESCRIPTION EF654F44

P2010 is set when 1) short to battery in variable swirl actuator driving motor (+) or (-) output terminal. or 2) tiny short in motor (-) output terminal for a long period occurs.The polarity of (+) and (-) lines shift each other in accordance with the condition of swirl valve(opened or closed) thus, checking both (+) and (-) circuits is required.

DTC DETECTING CONDITION E44CD13C

<table>
<tr><th>Item</th><th colspan="3">Detecting Condition</th><th>Possible Cause</th></tr>
<tr><td>DTC Strategy</td><td colspan="3">• Voltage monitoring</td><td rowspan="6">• Variable swirl valve motor circuit</td></tr>
<tr><td>Enable Conditions</td><td colspan="3">• IG KEY "ON"</td></tr>
<tr><td>Threshold Value</td><td colspan="3">• Short to battery in motor output terminal
• Tiny short to ground in motor circuit</td></tr>
<tr><td>Diagnostic Time</td><td colspan="3">• 0.2 sec.</td></tr>
<tr><td rowspan="4">Fail Safe</td><td>Fuel cut</td><td>NO</td><td rowspan="4">• Swirl valve opened at variable swirl control actuator failure</td></tr>
<tr><td>EGR Off</td><td>NO</td></tr>
<tr><td>Fuel Limit</td><td>NO</td></tr>
<tr><td>Check Lamp</td><td>NO</td></tr>
</table>

SPECIFICATION E9C79534

Refer to DTC P2009.

SCHEMATIC DIAGRAM EDF132A7

Refer to DTC P2009.

SIGNAL WAVEFORM AND DATA E8445959

Refer to DTC P2009.

TERMINAL AND CONNECTOR INSPECTION EAADC0F4

Refer to DTC P2009.

CONTROL CIRCUIT INSPECTION E15F7283

1. Check control circuit voltage

   1) IG KEY "OFF", ENGINE "OFF"

   2) Disconnect variable swirl control actuator connector.

   3) IG KEY "ON"

   4) Measure the voltage of variable swirl control actuator connector terminal 1 and 2.

Specification : 0.0V~0.1V

   5) Is the measured voltage within the specification?

   YES

   ▶ Check "2. Check short to ground in motor circuit" as follows.

   NO

   ▶ Repair short to battery in variable swirl control actuator motor circuit and go to "Verification of Vehicle Repair".

2. Check short to ground in motor circuit

   1) IG KEY "OFF", ENGINE "OFF"

   2) Disconnect variable swirl control actuator connector and ECM connector.

   3) Check continuity between variable swirl control actuator connector terminal 1(or 2) and chassis ground.

Specification : Discontinuity(Infinite Ω)

   4) Is the measured resistance within the specification?

   YES

   ▶ Go to "Component Inspection".

   NO

   ▶ Repair short to ground in variable swirl control actuator motor circuit and go to "Verification of Vehicle Repair".

COMPONENT INSPECTION E2271805

1. Check motor coil resistance

   1) IG KEY "OFF", ENGINE "OFF"

   2) Disconnect variable swirl control actuator connector.

   3) Measure the resistance between variable swirl control actuator component terminal 1 and 2.

Specification : 15.0 ± 3 Ω (20℃)

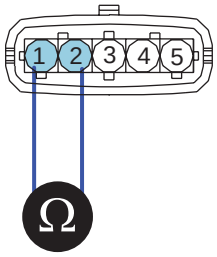

LFIG514A

4) Is the measured resistance within the specification?

YES

▶ Go to "2. Check motor operation".

NO

▶ Replace variable swirl control actuator assy'.

2. Check motor operation

1) IG KEY "ON" , ENGINE "ON".

2) Keep engine at idle state.

3) Monitor the waveform of variable swirl control actuator terminal 1and 2 with two channel oscilloscope.

4) Accelerating engine to above 3000RPM, let variable swirl control actuator be opened(operates).

Specification : Refer to Signal Waveform & Data "Fig.1)", " Fig.2)".

5) Does variable swirl control actuator operate correctly?

YES

▶ Go to "Verification of Vehicle Repair".

NO

▶ Replace variable swirl control actuator assy' and go to "Verification of Vehicle Repair".

VERIFICATION OF VEHICLE REPAIR E11F06B8

Refer to DTC P2009.

DTC P2015 INTAKE MANIFOLD RUNNER POSITION SENSOR/SWITCH CIRCUIT RANGE/PERFORMANCE(BANK 1)

COMPONENT LOCATION EA2B3D8F

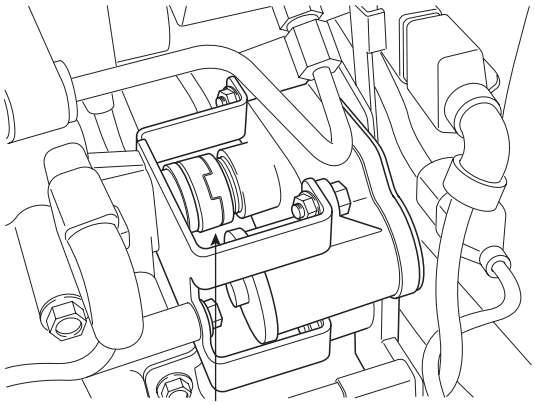

Variable Swirl Control Actuater

SCMFL6509L

GENERAL DESCRIPTION E5F64157

Variable swirl control actuator consists of DC motor and motor position sensor(potentiometer) which detects the position of swirl valve.As closing one intake port out of two at idle and below 3000RPM, swirl effect is taken on intake air. This swirl effect increases air flow rate.

However, because air flow rate is too high, swirl effect is neglectable thus, swirl valve is opened for efficiency of intake air.

To prevent swirl valve and shaft form being stuck by foreign metarial, and to learn max opening and closing position of swirl valve, it is fully opened and closed twice at turning engine OFF.

※Swirl
The air flow which indicates Intake air swirls with respect to the axis passing through the centre of piston with length-direction by intake port which is eccentric from the centre of combustion chamber.

DTC DESCRIPTION E1BFA188

P2015 is set if variable swirl valve position fails to reach target position within 1 sec. while ECM already outputted motor driving signal(swirl valve fully open or close signal). This code is due to 1)swirl valve shaft stuck or problem of link device or 2)variable swirl valve position sensor output value stuck.

DTC DETECTING CONDITION E5E34C80

<table>
<tr><th>Item</th><th colspan="3">Detecting Condition</th><th>Possible Cause</th></tr>
<tr><td>DTC Strategy</td><td colspan="3">• Voltage monitoring</td><td rowspan="7">• Variable swirl valve shaft stuck
• Variable swirl valve link device problem
• Variable swirl valve position sensor component</td></tr>
<tr><td>Enable Conditions</td><td colspan="3">• Engine running</td></tr>
<tr><td>Threshold Value</td><td colspan="3">• (Case 1) VSCA real value is higher than VSCA target value by more than 5%.
• (Case 2) VSCA real value is lower than VSCA target value by more than 7%.
• (Case 3) Variable swirl valve operating motor is mechanically stuck during operation
• (Case 4) Variable swirl valve operating motor is mechanically stuck during learning 'closing' process.</td></tr>
<tr><td>Diagnostic Time</td><td colspan="3">• (Case 1,2,3) 1 sec.
• (Case 4) 3 sec.</td></tr>
<tr><td rowspan="4">Fail Safe</td><td>Fuel cut</td><td>NO</td><td rowspan="4">• Swirl valve opened at variable swirl control actuator failure</td></tr>
<tr><td>EGR Off</td><td>(Case1,2) : NO
(Case3,4) : YES</td></tr>
<tr><td>Fuel Limit</td><td>NO</td></tr>
<tr><td>Check Lamp</td><td>NO</td></tr>
</table>

SPECIFICATION E5DFC840

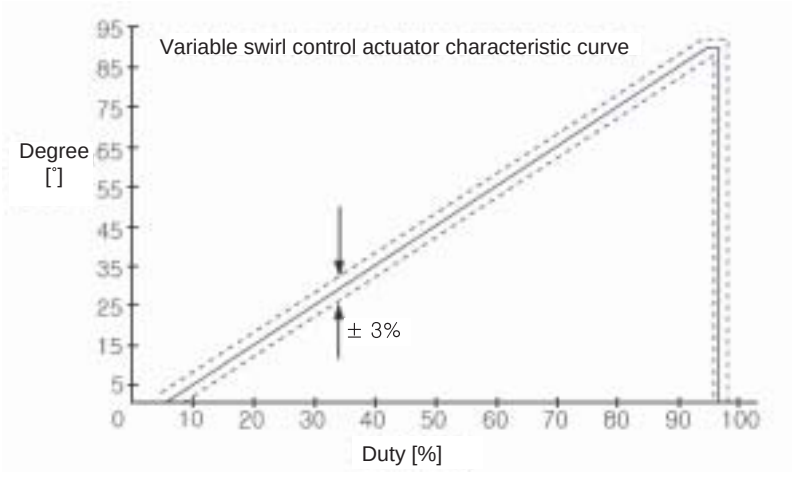

LFIG510A

SCHEMATIC DIAGRAM E89AC280

[CIRCUIT DIAGRAM]

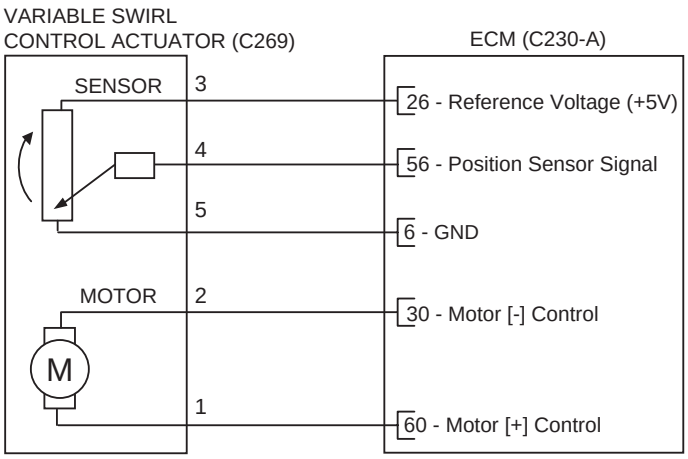

[CONNECTION INFORMATION]

Terminal	Connected to	Function
1	ECM C230-A (60)	Motor [+] Control
2	ECM C230-A (30)	Motor [-] Control
3	ECM C230-A (26)	Reference Voltage (+5V)
4	ECM C230-A (56)	Position Signal
5	ECM C230-A (6)	Sensor Ground

[HARNESS CONNECTORS]

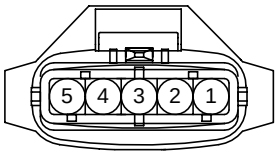

C269

VARIABLE SWIRL CONTROL ACTUATOR

C230-A

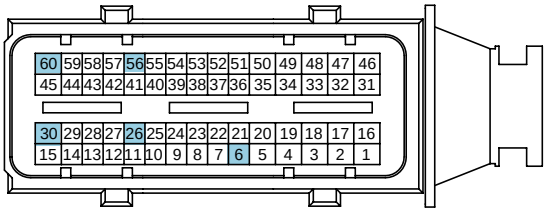

C230-K

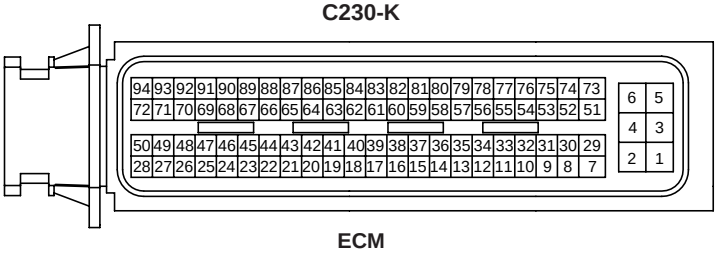

ECM

SCMFL6132L

SIGNAL WAVEFORM AND DATA EE057353

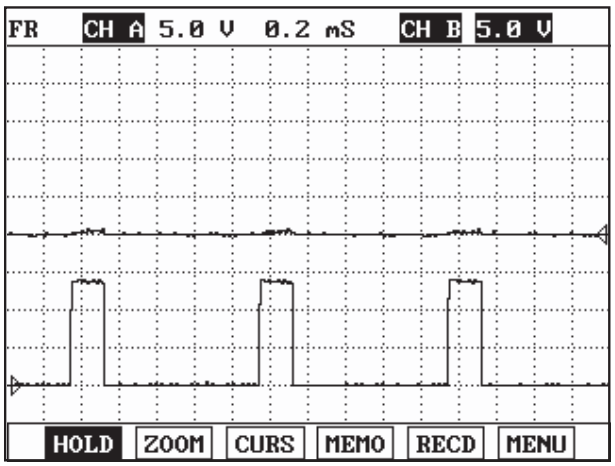

Fig.1

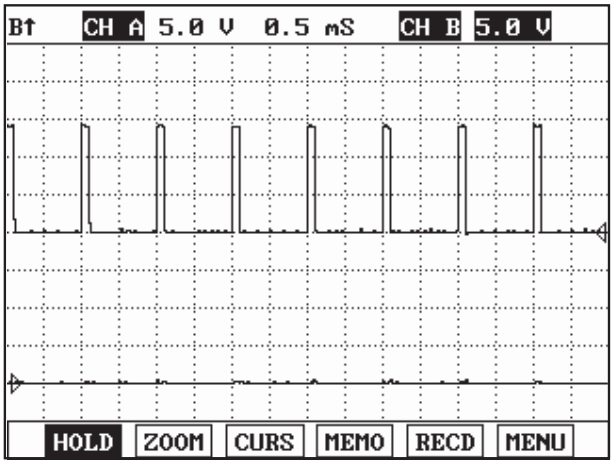

Fig.2

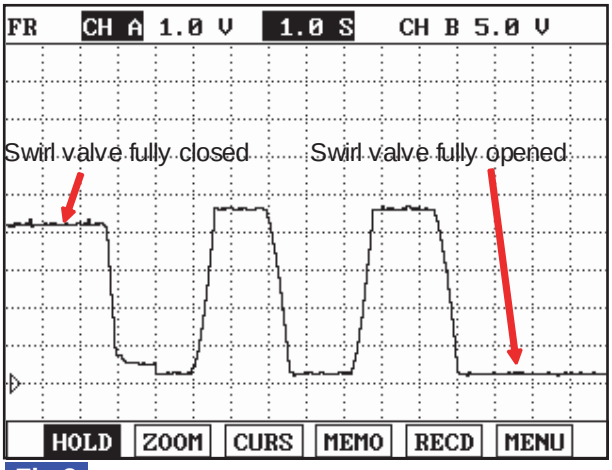

Fig.3

Fig.1) Waveform when variable swirl valve closed at idle. Terminal 1 is (+) and 2 is (-).
Fig. 2) Waveform when variable swirl valve opened at above 3000RPM. Terminal 1 is (-) and 2 is (+).
Fig. 3) Waveform of variable swirl control actuator motor position sensor at the point of turning engine OFF.
4.3V at swirl valve closed and 0.3V at swirl valve opened. Swirl valve is opened and closed twice at engine "OFF".
(Measured at terminal 4)

SCMFL6421L

COMPONENT INSPECTION E52F7BF8

1. Check variable swirl control actuator link device operation

   1) IG KEY "OFF", ENGINE "OFF"

   2) Wait for approx. 16 sec. and check that Main relay turns "OFF".

   3) Disconnect variable swirl control actuator connector.

   4) Pressing variable swirl control actuator link with hands, check if shaft stuck, tightness or problem of link device is detected.

Specification : variable swirl control actuator link device should move smoothly.

   5) Does variable swirl control actuator move slowly?

YES

▶ Go to "2. Check motor coil resistance".

NO

▶ Replace stuck or too tight parts of component(intake manifold assy' or swirl actuator) and go to "Verification of Vehicle Repair".

2. Check motor coil resistance

1) IG KEY "OFF", ENGINE "OFF"

2) Disconnect variable swirl control actuator.

3) Measure the resistance between variable swirl control actuator component terminal 1 and 2.

Specification : 15.0 ± 3 Ω (20℃)

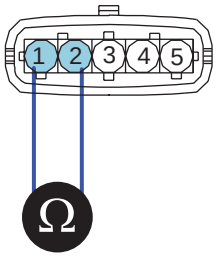

1. MTR(+)
2. MTR(-)
3. VSCA position Sensor power
4. VSCA position Sensor signal
5. VSCA position Sensor ground

SCMFL6394L

4) Is the measured resistance within the specification?

YES

▶ Go to "3. Check variable swirl control actuator position sensor resistance".

NO

▶ Replace variable swirl control actuator and go to "Verification of Vehicle Repair".

3. Check variable swirl control actuator position sensor resistance

1) IG KEY "OFF", ENGINE "OFF"

2) Disconnect variable swirl control actuator.

3) Measure the resistance of variable swirl control actuator component terminal 3,4,5 referring "Terminal resistance table" as follows.

SPECIFICATION : TERMINAL RESISTANCE TABLE

	Detecting terminal	Resistance (KΩ 20℃)		Characteristic	Component connector shape
		valve fully opend	valve fully closed		
variable swirl control actuator position sensor	3(power)-5(ground)	4.47±0.1KΩ	4.47±0.1KΩ	stable	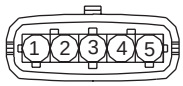 LFIG515A
	3(power)-4(signal)	4.81±0.1KΩ	0.85±0.1KΩ	resistance drops	
	4(signal)-5(ground)	0.75±0.1KΩ	4.71±0.1KΩ	resistance rises	

4) Is the measured resistance within the specification?

YES

▶ Go to "4. Check motor operation" as follows.

NO

▶ Replace variable swirl control actuator assy' and go to "Verification of Vehicle Repair".

4. Check motor operation

1) IG KEY "ON" , ENGINE "ON".

2) Keep engine at idle state.

3) Monitor the waveform of variable swirl control actuator terminal 1and 2 with two channel oscilloscope.

4) Accelerating engine to above 3000RPM, let variable swirl control actuator be opened(operates).

Specification : Refer to Signal Waveform & Data "Fig.1)", " Fig.2)".

5) Does variable swirl control actuator operate correctly?

YES

▶ Go to "5. Check variable swirl control actuator position sensor operation".

NO

▶ Replace variable swirl control actuator assy' and go to "Verification of Vehicle Repair".

5. Check variable swirl control actuator position sensor operation

1) IG KEY "ON", ENGINE "ON".

2) Keep engine at idle state.

3) Monitor the waveform of variable swirl control actuator terminal 4 with oscilloscope.

4) Turning off engine, monitor the waveform of variable swirl control actuator at the point of operation stop.

Specification : Refer to Signal Waveform & Data "Fig.3)"

5) Does variable swirl control actuator and position sensor operations are OK?

YES

▶ Go to "Verification of Vehicle Repair".

NO

▶ Replace variable swirl control actuator assy' and go to "Verification of Vehicle Repair".

VERIFICATION OF VEHICLE REPAIR E0179541

After a repair, it is essential to verify that the fault is corrected.

1. After connecting Scantool select "DIAGNOSTIC TROUBLE CODES(DTCs)" mode.
2. Clear recorded DTC using Scantool.
3. Drive the vehicle within DTC "Enable conditions" in "General information".
4. After selecting "DIAGNOSTIC TROUBLE CODES(DTCs)" mode and check if DTC is recorded again.
5. Are any DTCs recorded ?

YES

▶ Go to the DTC guide of recorded NO. in Scantool.

NO

▶ System operates within specification.

DTC P2016 INTAKE MANIFOLD RUNNER POSITION SENSOR/SWITCH CIRCUIT LOW(BANK 1)

COMPONENT LOCATION E9AACE7C

Refer to DTC P2015.

GENERAL DESCRIPTION E3D6528E

Refer to DTC P2015.

DTC DESCRIPTION E14A7F8B

P2016 is set when variable swirl valve position sensor output voltage below 0.18V is detected for more than 0.6 sec. This code is due to open in power circuit or short to ground in signal circuit.

DTC DETECTING CONDITION E65F18F8

<table>
<tr><th>Item</th><th colspan="3">Detecting Condition</th><th>Possible Cause</th></tr>
<tr><td>DTC Strategy</td><td colspan="3">• Voltage monitoring</td><td rowspan="6">• Variable swirl valve position sensor circuit
• Variable swirl valve position sensor component</td></tr>
<tr><td>Enable Conditions</td><td colspan="3">• IG KEY "ON"</td></tr>
<tr><td>Threshold Value</td><td colspan="3">• Output voltage below minimum value(below 180mV)</td></tr>
<tr><td>Diagnostic Time</td><td colspan="3">• 0.6 sec.</td></tr>
<tr><td rowspan="4">Fail Safe</td><td>Fuel cut</td><td>NO</td><td rowspan="4">• Swirl valve opened at variable swirl control actuator failure</td></tr>
<tr><td>EGR Off</td><td>NO</td></tr>
<tr><td>Fuel Limit</td><td>NO</td></tr>
<tr><td>Check Lamp</td><td>NO</td></tr>
</table>

SPECIFICATION E639AC6F

Refer to DTC P2015.

SCHEMATIC DIAGRAM E94BD04B

Refer to DTC P2015.

SIGNAL WAVEFORM AND DATA EE62AB6C

Refer to DTC P2015.

TERMINAL AND CONNECTOR INSPECTION EE274E69

Refer to DTC P2015.

POWER CIRCUIT INSPECTION EA348F51

1. Check power circuit voltage

1) IG KEY "OFF", ENGINE "OFF"

2) Disconnect variable swirl control actuator connector.

3) IG KEY "ON"

4) Measure the voltage of variable swirl control actuator connector terminal 3.

Specification : 4.8V~5.1V

5) Is the measured voltage within the specification?

YES

▶ Go to "Signal Circuit Inspection".

NO

▶ Repair open in power circuit and go to "Verification of Vehicle Repair".

SIGNAL CIRCUIT INSPECTION EFC18B64

1. Check signal circuit voltage

1) IG KEY "OFF", ENGINE "OFF"

2) Disconnect variable swirl control actuator connector.

3) IG KEY "ON"

4) Measure the voltage of variable swirl control actuator connector terminal 4.

Specification : 4.8V~5.1V

5) Is the measured voltage within the specification?

YES

▶ Go to "Component Inspection".

NO

▶ Go to "2. Check short to ground in signal circuit" as follows.

2. Check short to ground in signal circuit

1) IG KEY "OFF", ENGINE "OFF"

2) Disconnect variable swirl control actuator connector and ECM connector.

3) Check continuity between variable swirl control actuator connector terminal 4 and chassis ground.

Specification : Discontinuity(Infinite Ω)

4) Is the measured resistance within the specificaiton?

YES

▶ Go to "Component Inspection".

NO

▶ Repair short to ground in signal circuit and go to "Verification of Vehicle Repair".

COMPONENT INSPECTION E2DFC158

1. Check variable swirl control actuator position sensor resistance

   1) IG KEY "OFF", ENGINE "OFF"

   2) Disconnect variable swirl control actuator.

   3) Measure the resistance of variable swirl control actuator component terminal 3,4,5 referring "Terminal resistance table" as follows.

SPECIFICATION : TERMINAL RESISTANCE TABLE

	Detecting terminal	Resistance (KΩ 20℃)		Characteristic	Component connector shape
		valve fully opend	valve fully closed		
variable swirl control actuator position sensor	3(power)-5(ground)	4.47±0.1KΩ	4.47±0.1KΩ	stable	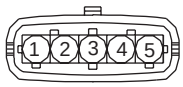 LFIG515A
	3(power)-4(signal)	4.81±0.1KΩ	0.85±0.1KΩ	resistance drops	
	4(signal)-5(ground)	0.75±0.1KΩ	4.71±0.1KΩ	resistance rises	

   4) Is the measured resistance within the specification?

YES

▶ Go to "2. Check variable swirl control actuator position sensor operation" as follows.

NO

▶ Replace variable swirl control actuator assy' and go to "Verification of Vehicle Repair".

2. Check variable swirl control actuator position sensor operation

   1) IG KEY "ON", ENGINE "ON".

   2) Keep engine at idle state.

   3) Monitor the waveform of variable swirl control actuator terminal 4 with oscilloscope.

   4) Turning off engine, monitor the waveform of variable swirl control actuator at the point of operation stop.

Specification : Refer to Signal Waveform & Data "Fig.3)"

   5) Does variable swirl control actuator and position sensor operations are OK?

YES

▶ Go to "Verification of Vehicle Repair".

NO

▶ Replace variable swirl control actuator assy' and go to "Verification of Vehicle Repair".

VERIFICATION OF VEHICLE REPAIR E883AB14

Refer to DTC P2015.

DTC P2017 INTAKE MANIFOLD RUNNER POSITION SENSOR/SWITCH CIRCUIT HIGH(BANK 1)

COMPONENT LOCATION EA2FD03A

Refer to DTC P2015.

GENERAL DESCRIPTION E8244E54

Refer to DTC P2015.

DTC DESCRIPTION EA66DCC8

P2017 is set when variable swirl valve position sensor output voltage above 4.9V is detected for more than 0.6 sec. This code is due to 1)open in signal circuit or ground circuit or 2)short to battery in power circuit or signal circuit.

DTC DETECTING CONDITION EA06271E

<table>
<tr><th>Item</th><th colspan="3">Detecting Condition</th><th>Possible Cause</th></tr>
<tr><td>DTC Strategy</td><td colspan="3">• Voltage monitoring</td><td rowspan="6">• Variable swirl valve position sensor circuit
• Variable swirl valve position sensor component</td></tr>
<tr><td>Enable Conditions</td><td colspan="3">• IG KEY "ON"</td></tr>
<tr><td>Threshold Value</td><td colspan="3">• Output voltage above minimum value(above 4900mV)</td></tr>
<tr><td>Diagnostic Time</td><td colspan="3">• 0.6 sec.</td></tr>
<tr><td rowspan="4">Fail Safe</td><td>Fuel cut</td><td>NO</td><td rowspan="4">• Swirl valve opened at variable swirl control actuator failure</td></tr>
<tr><td>EGR Off</td><td>NO</td></tr>
<tr><td>Fuel Limit</td><td>NO</td></tr>
<tr><td>Check Lamp</td><td>NO</td></tr>
</table>

SPECIFICATION E146C4CD

Refer to DTC P2015.

SCHEMATIC DIAGRAM EAF0B058

Refer to DTC P2015.

SIGNAL WAVEFORM AND DATA E0786455

Refer to DTC P2015.

TERMINAL AND CONNECTOR INSPECTION E838F660

Refer to DTC P2015.

POWER CIRCUIT INSPECTION E0AD542B

1. Check power circuit voltage

1) IG KEY "OFF", ENGINE "OFF"

2) Disconnect variable swirl control actuator connector.

3) IG KEY "ON"

4) Measure the voltage of variable swirl control actuator connector terminal 3.

Specification : 4.8V~5.1V

5) Is the measured voltage within the specification?

YES

▶ Go to "Signal Circuit Inspection".

NO

▶ Repair open in power circuit and go to "Verification of Vehicle Repair".

SIGNAL CIRCUIT INSPECTION ED08E1E3

1. Check signal circuit voltage

1) IG KEY "OFF", ENGINE "OFF"

2) Disconnect variable swirl control actuator connector.

3) IG KEY "ON"

4) Measure the voltage of variable swirl control actuator connector terminal 4.

Specification : 4.8V~5.1V

5) Is the measured voltage within the specification?

YES

▶ Go to "Ground Circuit Inspection".

NO

▶ Go to "2. Check open in signal circuit" as follows.

2. Check open in signal circuit

1) IG KEY "OFF", ENGINE "OFF"

2) Disconnect variable swirl control actuator connector and ECM connector.

3) Check continuity between variable swirl control actuator connector terminal 4 and ECM connector (C230-A) terminal 56.

Specification : Discontinuity(Infinite Ω)

4) Is the measured resistance within the specificaiton?

YES

▶ Go to "Ground Circuit Inspection".

NO

▶ Repair open in signal circuit and go to "Verification of Vehicle Repair".

GROUND CIRCUIT INSPECTION E6B6E0CD

1. IG KEY "OFF", ENGINE "OFF"
2. Disconnect variable swirl control actuator connector.
3. IG KEY "ON"
4. Measure the voltage of variable swirl control actuator connector terminal 3. [TEST "A"]
5. Measure the voltage between variable swirl control actuator connector terminal 3 and 5. [TEST "B"]
   (terminal 3 : Check + prove , terminal 5 : Check - prove)

Specification : [TEST "A"] Voltage - [TEST "B"] Voltage = below 200mV

6. Is the measured voltage within the specification?

YES

▶ Go to "Component Inspection".

NO

▶ When "B" voltage is not detected : Repair open in ground circuit and go to "Verification of Vehicle Repair".
▶ When the voltage difference between "A" and "B" is above 200mV : Eliminate the causes of excessive resistance and go to "Verification of Vehicle Repair".

COMPONENT INSPECTION E4687A25

1. Check variable swirl control actuator position sensor resistance
   1) IG KEY "OFF", ENGINE "OFF"
   2) Disconnect variable swirl control actuator.
   3) Measure the resistance of variable swirl control actuator component terminal 3,4,5 referring "Terminal resistance table" as follows.

SPECIFICATION : TERMINAL RESISTANCE TABLE

	Detecting terminal	Resistance (KΩ 20℃)		Characteristic	Component connector shape
		valve fully opend	valve fully closed		
variable swirl control actuator position sensor	3(power)-5(ground)	4.47±0.1KΩ	4.47±0.1KΩ	stable	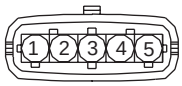 LFIG515A
	3(power)-4(signal)	4.81±0.1KΩ	0.85±0.1KΩ	resistance drops	
	4(signal)-5(ground)	0.75±0.1KΩ	4.71±0.1KΩ	resistance rises	

4) Is the measured resistance within the specification?

YES

▶ Go to "2. Check variable swirl control actuator position sensor operation".

NO

▶ Replace variable swirl control actuator assy' and go to "Verification of Vehicle Repair".

2. Check variable swirl control actuator position sensor operation

1) IG KEY "ON", ENGINE "ON".

2) Keep engine at idle state.

3) Monitor the waveform of variable swirl control actuator terminal 4 with oscilloscope.

4) Turning off engine, monitor the waveform of variable swirl control actuator at the point of operation stop.

Specification : Refer to Signal Waveform & Data "Fig.3)"

5) Does variable swirl control actuator and position sensor operations are OK?

YES

▶ Go to "Verification of Vehicle Repair".

NO

▶ Replace variable swirl control actuator assy' and go to "Verification of Vehicle Repair".

VERIFICATION OF VEHICLE REPAIR E291FD79

Refer to DTC P2015.

DTC P2111 THROTTLE CONTROL ACTUATOR CIRCUIT HIGH

COMPONENT LOCATION E38EFF63

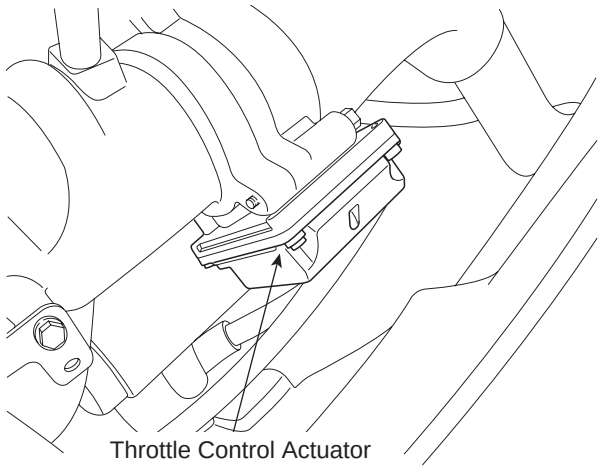

LFIG527A

GENERAL DESCRIPTION EE8F95DA

The Throttle Control Actuator is mounted on throttle body of diesel engine and controls throttle valve according to PWM (Pulse With Modulation) signal from ECM.
It consists of;

- a DC motor which actuates the throttle valve,
- a 2-step gear (transmission ratio = 1:40) which is located in between the DC motor and the throttle valve and increases torque of the DC motor,
- a position sensor which is a hall-effect sensor and detects status of the throttle valve,
- an electric control unit which is a micro-controller and drives the DC motor by the PWM (Pulse With Modulation) signal from the ECM,
- and a reset spring which resets the de-energized throttle valve to its open position.

Its function is described below:

1. Anti-judder function: When engine is shut off, the ECM can prevent intake air from entering to intake manifold by fully closing the throttle valve for 1.5 seconds (95% < Duty <97%) to reduce engine vibration.

2. Intake air control for EGR: When exhaust gas pressure is equal to or lower than intake air pressure (for example, when low engine speed), the exhaust gas would not enter to the intake manifold. At this time, the ECM partially closes the throttle valve (5% < Duty < 94%) to reduce the intake air quantity. The intake air pressure thus is lower than the exhaust gas pressure.

3. Exhaust gas temperature control for CPF regeneration: When the Catalyzed Particulate Filter (CPF) is need to re-generate, the ECM partially closes the throttle valve (5% < Duty < 94%) to reduce the intake air quantity. At this time, the air-fuel ratio would become rich and the exhaust gas temperature would be high enough to burn the soot inside the CPF.

DTC DESCRIPTION E2D105F3

P2111 is set when excessive current in throttle control actuator is detected for more than 1 sec. this code is due to short to battery in control circuit or internal short of actuator component.

DTC DETECTING CONDITION E124CCFF

Item	Detecting Condition			Possible Cause
DTC Strategy	• Voltage monitoring			• Throttle Control Actuator circuit • Throttle Control Actuator component
Enable Conditions	• IG KEY "ON"			
Threshold Value	• Short to battery			
Diagnostic Time	• 1 sec.			
Fail Safe	Fuel cut	NO		
	EGR Off	YES		
	Fuel Limit	NO		
	Check Lamp	NO		

SPECIFICATION E8392C38

Throttle control actuator fully opened	Throttle control actuator fully closed	Throttle control actuator operating Hz
5%	95%	250±7.5 Hz

SCHEMATIC DIAGRAM E7AB2F9E

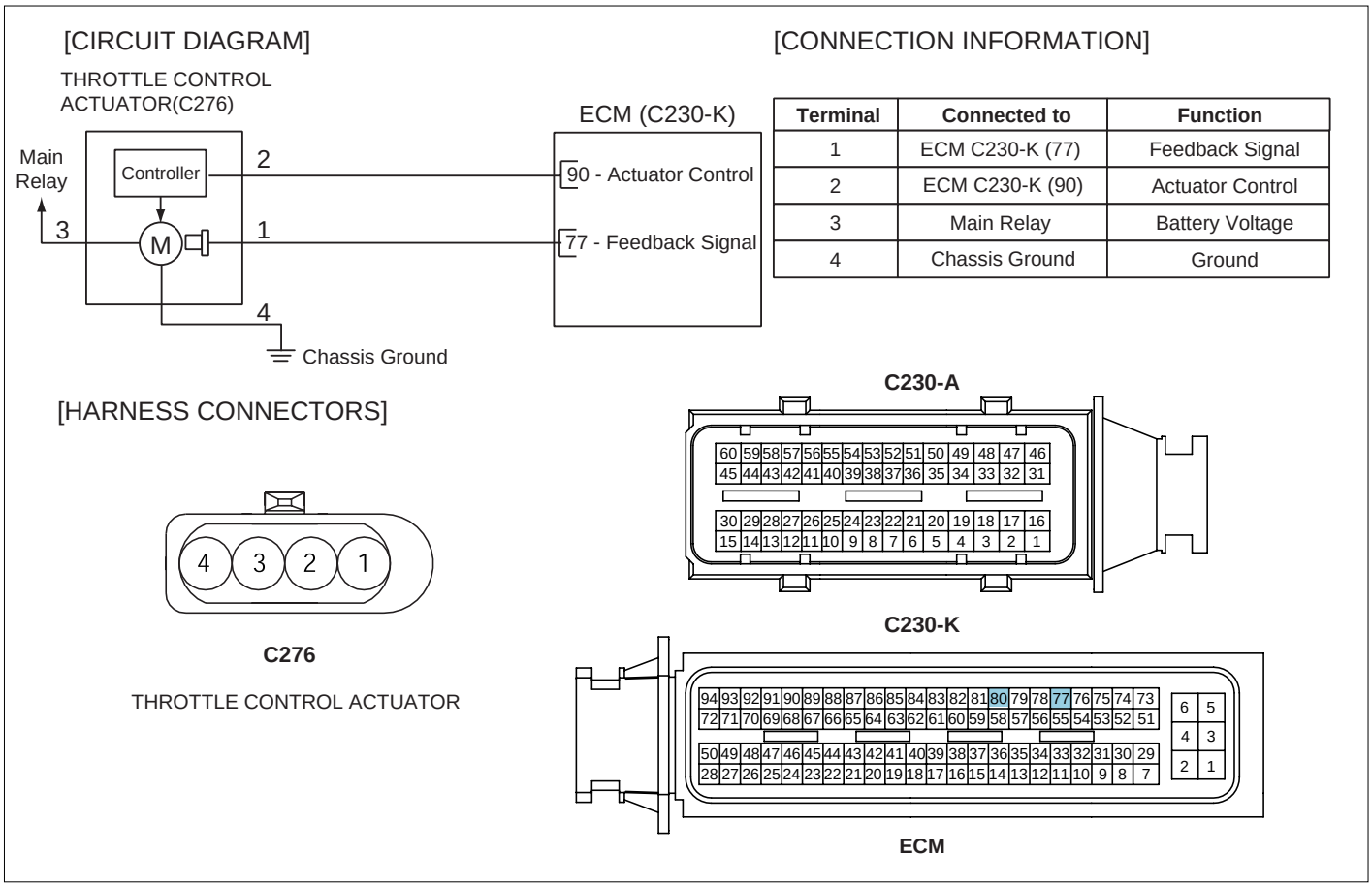

SCMFL6131L

SIGNAL WAVEFORM AND DATA E533D69D

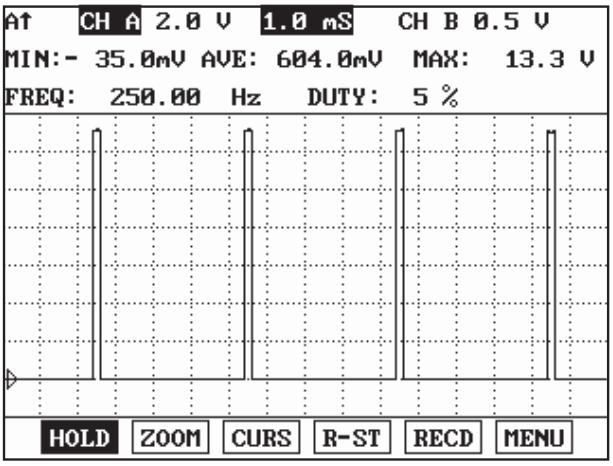

Fig.1

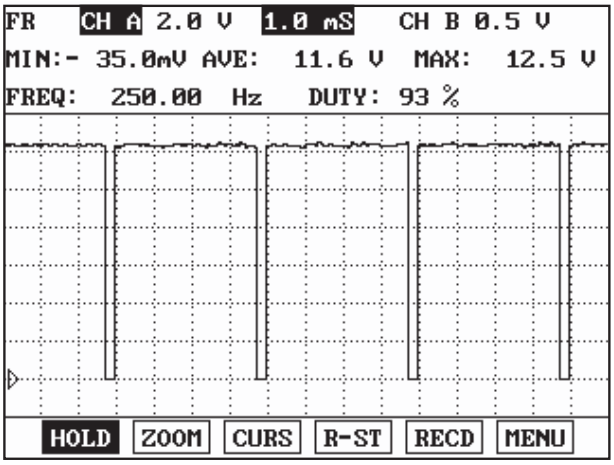

Fig.2

Fig.1) Waveform of Throttle control actuator at wide open(at idle) : At IG KEY "ON", ENGINE "ON", 5% duty is outputted continuously.
Fig.2) Waveform of Throttle control actuator at closed position : At IG KEY "OFF", 93% duty is outputted for about 1 sec.

LFIG529A

MONITOR SCANTOOL DATA EE6C6BF4

1. Connect Scantool to Data Link Connector (DLC).
2. Warm engine up to normal operating temperature.
3. Turn "OFF" electrical devices and A/C.
4. Monitor "INLET THROTTLE ACTUATOR." parameter on the Scantool.

Specification : 4.7% duty outputted except the operation of throttle flap
95% duty outputted at the operation of throttle flap

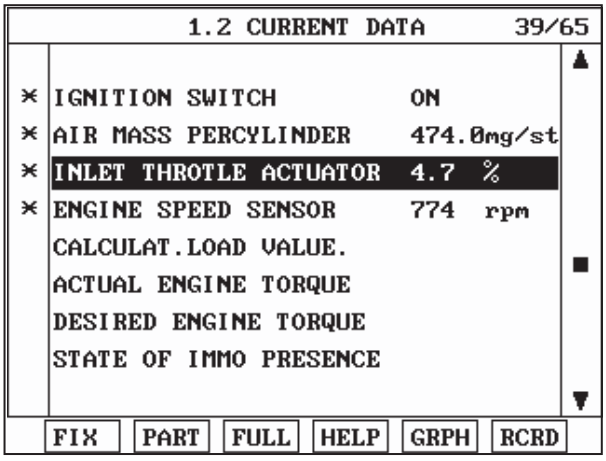

Fig.1

Fig 1) The duty of "INLET THROTTLE ACTUATOR." is 4.7% at IG KEY "ON" and ENGINE "ON".
The duty of "INLET THROTTLE ACTUATOR." is 95% at the point of turning IG KEY "OFF".

SCMFL6363L

※Monitoring if the state of throttle control actuator changes at turning engine OFF because the communication through Scantool is comleted 3 sec. after turning engine ON. It is the easiest way to check if throttle control actuator is closed for about 1 sec. and opened again with eyes(visually) or ears(sound) in order to inspect component operation.

TERMINAL AND CONNECTOR INSPECTION ED3A94F2

1. Electrical systems consist of a lot of harness and connectors, poor connection of terminals can cause various problems and damge of component.

2. Perform checking procedure as follows.

   1) Check damage of harness and terminals : Check terminals for contact resistance, corrosion and deformation.

   2) Check connecting condition of ECM and component connector : Check terminal seperation, damage of locking device and connecting condition between terminal and wiring.

   NOTE

   Disconnect the pin which requires checking at male connector and insert it to the terminal at female connector for checking connecting condition. (after checking, reconnect the pin at correct position.)

3. Is the problem found?

   YES

   ▶ Repair the trouble causing part and go to "Verification of Vehicle Repair".

   NO

   ▶ Go to "Power Circuit Inspection".

POWER CIRCUIT INSPECTION ED97A04A

1. IG KEY "OFF", ENGINE "OFF"

2. Disconnect Throttle control actuator.

3. IG KEY "ON"

4. Measure the voltage of Throttle control actuator connector terminal 3.

Specification : 11.5V~13.0V

5. Is the measured voltage within the specification?

   YES

   ▶ Go to "Control Circuit Inspection".

   NO

   ▶ Repair E/R FUSE & RELAY BOX 15A SENSOR #2 FUSE and related circuit and go to "Verification of Vehicle Repair".

CONTROL CIRCUIT INSPECTION E0C9A313

1. Check control circuit voltage

   1) IG KEY "OFF", ENGINE "OFF"

   2) Disconnect Throttle control actuator connector.

   3) IG KEY "ON"

   4) Measure the voltage of Throttle control actuator connector terminal 2.

specification : 0.0V~0.1V

   5) Is the measured voltage within the specification?

   YES

   ▶ Go to "2.Check open in control circuit".

   NO

   ▶ Repair short to battery in control circuit and go to "Verification of Vehicle Repair".

2. Check open in control circuit

   1) IG KEY "OFF", ENGINE "OFF"

   2) Disconnect Throttle control actuator connector and ECM connector.

   3) Check continuity between throttle control actuator connector terminal 2 and ECM connector (C230-K) terminal 90.

specification : Continuity (below 1.0Ω)

   4) Is the measured resistance within the specification? (Is continuity confirmed?)

   YES

   ▶ Go to "3. Check short to ground in control circuit" as follows.

   NO

   ▶ Repair open in throttle control actuator control circuit and go to "Varification of Vehicle Repair".

3. Check short to ground in control circuit

   1) IG KEY "OFF", ENGINE "OFF"

   2) Disconnect Throttle control actuator connector.

   3) Check continuity between throttle control actuator connector terminal 2 and chassis ground.

specification : Discontinuity (Infinite Ω)

   4) Is the measured resistance within the specification? (Is control circuit insulated with ground?)

   YES

▶ Go to "Ground Circuit Inspection".

NO

▶ Repair short to ground in control circuit and go to "Verification of Vehicle Repair".

GROUND CIRCUIT INSPECTION ED251993

1. IG KEY "OFF", ENGINE "OFF"
2. Disconnect Throttle control actuator connector.
3. IG KEY "ON"
4. Measure the voltage of Throttle control actuator connector terminal 3. [TEST "A"]
5. Measure the voltage between Throttle control actuator connector terminal 3 and 4. [TEST "B"]
   (terminal 3 : Check + prove , terminal 4 : Check - prove)

Specification : [TEST "A"] Voltage - [TEST "B"] Voltage = below 200mV

6. Is the measured voltage within the specification?

YES

▶ Go to "Component Inspection".

NO

▶ When "B" voltage is not detected : Repair open in ground circuit(G15 ground point related circuit) and go to "Verification of Vehicle Repair".
▶ When the voltage difference between "A" and "B" is above 200mV : Eliminate the causes of excessive resistance and go to "Verification of Vehicle Repair".

COMPONENT INSPECTION EA699941

1. Throttle control actuator component visual inspection

   1) IG KEY "OFF", ENGINE "OFF"

   2) Disconnect intake hose connected to throttle control actuator.

   3) Check if throttle control actuator is contaminated with carbon fraction.

   4) Check if throttle flap moves smoothly as touching it with hand (perform this process at IG KEY "OFF" state.)
      ※ Check if abnormal noise, valve shaft stuck, too much wear are detected.

Specification : Flap moves smoothly and carbon fraction, too much wear, abnormal noise are not detected.

   5) Is throttle control actuator is OK after performing visual inspection?

YES

▶ Go to "2. Throttle control actuator operating test" as follows.

NO

▶ If same symptom is detected after clear carbon fraction up, replace throttle control actuator and go to "Verification of Vehicle Repair".

2. Throttle control actuator operating test

   1) IG KEY "OFF", ENGINE "OFF"

   2) Disconnect intake hose connected to throttle control actuator.

   3) ENGINE "ON"

   4) Check if throttle control actuator is in wide open state during engine running.

   5) ENGINE "OFF"

   6) Check if throttle flap is closed once and opened again at the point of turning engine OFF.
      ※ Check if abnormal noise or irregular moving of flap is detected.

Specification : Throttle flap moves smoothly.
at engine ON : Throttle control actuator opened
at the point of turning engine OFF : Throttle flap is closed once and opened again

   7) Is throttle flap moves smoothly?

   YES

   ▶ Go to "Verification of Vehicle Repair".

   NO

   ▶ Replace throttle control actuator and go to "Verification of Vehicle Repair".

VERIFICATION OF VEHICLE REPAIR EC673E59

After a repair, it is essential to verify that the fault is corrected.

1. After connecting Scantool select "DIAGNOSTIC TROUBLE CODES(DTCs)" mode.
2. Clear recorded DTC using Scantool.
3. Drive the vehicle within DTC "Enable conditions" in "General information".
4. After selecting "DIAGNOSTIC TROUBLE CODES(DTCs)" mode and check if DTC is recorded again.
5. Are any DTCs recorded ?

   YES

   ▶ Go to the DTC guide of recorded NO. in Scantool.

   NO

   ▶ System operates within specification.

DTC P2112 THROTTLE CONTROL ACTUATOR CIRCUIT LOW

COMPONENT LOCATION EBE9595E

Refer to DTC P2111.

GENERAL DESCRIPTION ED51D372

Refer to DTC P2111.

DTC DESCRIPTION ECD1FA6B

P2112 is set when "0"A in throttle control actuator is detected for more than 1 sec. this code is due to 1)open or short to ground in control circuit or 2)internal open in actuator component.

DTC DETECTING CONDITION EC050951

<table>
<tr><th>Item</th><th colspan="3">Detecting Condition</th><th>Possible Cause</th></tr>
<tr><td>DTC Strategy</td><td colspan="3">• Voltage monitoring</td><td rowspan="6">• Throttle Control Actuator circuit
• Throttle Control Actuator component</td></tr>
<tr><td>Enable Conditions</td><td colspan="3">• IG KEY "ON"</td></tr>
<tr><td>Threshold Value</td><td colspan="3">• Short to GND, Wiring open</td></tr>
<tr><td>Diagnostic Time</td><td colspan="3">• 1 sec.</td></tr>
<tr><td rowspan="4">Fail Safe</td><td>Fuel cut</td><td>NO</td><td rowspan="4"></td></tr>
<tr><td>EGR Off</td><td>YES</td></tr>
<tr><td>Fuel Limit</td><td>NO</td></tr>
<tr><td>Check Lamp</td><td>NO</td></tr>
</table>

SPECIFICATION ED3A85AF

Refer to DTC P2111.

SCHEMATIC DIAGRAM E6F11D73

Refer to DTC P2111.

SIGNAL WAVEFORM AND DATA E387F5E0

Refer to DTC P2111.

MONITOR SCANTOOL DATA EAE1DE42

Refer to DTC P2111.

TERMINAL AND CONNECTOR INSPECTION E3B7B7CB

Refer to DTC P2111.

POWER CIRCUIT INSPECTION EEAB65F4

1. IG KEY "OFF", ENGINE "OFF"
2. Disconnect Throttle control actuator.
3. IG KEY "ON"
4. Measure the voltage of Throttle control actuator connector terminal 3.

Specification : 11.5V~13.0V

5. Is the measured voltage within the specification?

YES

▶ Go to "Control Circuit Inspection".

NO

▶ Repair E/R FUSE & RELAY BOX 15A SENSOR #2 FUSE and related circuit and go to "Verification of Vehicle Repair".

CONTROL CIRCUIT INSPECTION EB9D339C

1. Check control circuit voltage
   1) IG KEY "OFF", ENGINE "OFF"
   2) Disconnect Throttle control actuator connector.
   3) IG KEY "ON"
   4) Measure the voltage of Throttle control actuator connector terminal 2.

specification : 0.0V~0.1V

   5) Is the measured voltage within the specification?

YES

▶ Go to "2.Check open in control circuit".

NO

▶ Repair short to battery in control circuit and go to "Verification of Vehicle Repair".

2. Check open in control circuit
   1) IG KEY "OFF", ENGINE "OFF"
   2) Disconnect Throttle control actuator connector and ECM connector.
   3) Check continuity between throttle control actuator connector terminal 2 and ECM connector (C230-K) terminal 90.

specification : Continuity (below 1.0Ω)

4) Is the measured resistance within the specification? (Is continuity confirmed?)

YES

▶ Go to "3. Check short to ground in control circuit" as follows.

NO

▶ Repair open in throttle control actuator control circuit and go to "Varification of Vehicle Repair".

3. Check short to ground in control circuit

1) IG KEY "OFF", ENGINE "OFF"

2) Disconnect Throttle control actuator connector.

3) Check continuity between throttle control actuator connector terminal 2 and chassis ground.

specification : Discontinuity (Infinite Ω)

4) Is the measured resistance within the specification? (Is control circuit insulated with ground?)

YES

▶ Go to "Ground Circuit Inspection".

NO

▶ Repair short to ground in control circuit and go to "Verification of Vehicle Repair".

GROUND CIRCUIT INSPECTION EC1DB582

1. IG KEY "OFF", ENGINE "OFF"
2. Disconnect Throttle control actuator connector.
3. IG KEY "ON"
4. Measure the voltage of Throttle control actuator connector terminal 3. [TEST "A"]
5. Measure the voltage between Throttle control actuator connector terminal 3 and 4. [TEST "B"]
   (terminal 3 : Check + prove , terminal 4 : Check - prove)

Specification : [TEST "A"] Voltage - [TEST "B"] Voltage = below 200mV

6. Is the measured voltage within the specification?

YES

▶ Go to "Component Inspection".

NO

▶ When "B" voltage is not detected : Repair open in ground circuit(G15 ground point related circuit) and go to "Verification of Vehicle Repair".
▶ When the voltage difference between "A" and "B" is above 200mV : Eliminate the causes of excessive resistance and go to "Verification of Vehicle Repair".

COMPONENT INSPECTION E8FF1122

1. Throttle control actuator component visual inspection

   1) IG KEY "OFF", ENGINE "OFF"

   2) Disconnect intake hose connected to throttle control actuator.

   3) Check if throttle control actuator is contaminated with carbon fraction.

   4) Check if throttle flap moves smoothly as touching it with hand (perform this process at IG KEY "OFF" state.)
      ※ Check if abnormal noise, valve shaft stuck, too much wear are detected.

Specification : Flap moves smoothly and carbon fraction, too much wear, abnormal noise are not detected.

   5) Is throttle control actuator is OK after performing visual inspection?

      YES

      ▶ Go to "2. Throttle control actuator operating test" as follows.

      NO

      ▶ If same symptom is detected after clear carbon fraction up, replace throttle control actuator and go to "Verification of Vehicle Repair".

2. Throttle control actuator operating test

   1) IG KEY "OFF", ENGINE "OFF"

   2) Disconnect intake hose connected to throttle control actuator.

   3) ENGINE "ON"

   4) Check if throttle control actuator is in wide open state during engine running.

   5) ENGINE "OFF"

   6) Check if throttle flap is closed once and opened again at the point of turning engine OFF.
      ※ Check if abnormal noise or irregular moving of flap is detected.

Specification : Throttle flap moves smoothly. at engine ON : Throttle control actuator opened at the point of turning engine OFF : Throttle flap is closed once and opened again

   7) Is throttle flap moves smoothly?

      YES

      ▶ Go to "Verification of Vehicle Repair".

      NO

      ▶ Replace throttle control actuator and go to "Verification of Vehicle Repair".

VERIFICATION OF VEHICLE REPAIR EC565060

Refer to DTC P2111.

DTC P2113 THROTTLE CONTROL ACTUATOR CIRCUIT MALFUNCTION - RANGE/PERFORMANCE

COMPONENT LOCATION E5AC6BA2

Refer to DTC P2111.

GENERAL DESCRIPTION E12D6C63

Refer to DTC P2111.

DTC DESCRIPTION E5D7EAAD

P2113 is set when 1)throttle control actuator error or 2)open or short of Feedback line is detected for more than 5 sec. This code is due to throttle control actuator stuck, open or short in feed back signal circuit.

DTC DETECTING CONDITION E1936057

<table>
<tr><th>Item</th><th colspan="3">Detecting Condition</th><th>Possible Cause</th></tr>
<tr><td>DTC Strategy</td><td colspan="3">• Voltage monitoring</td><td rowspan="8">• Throttle Control Actuator circuit
• Throttle Control Actuator component</td></tr>
<tr><td>Enable Conditions</td><td colspan="3">• IG KEY "ON"</td></tr>
<tr><td>Threshold Value</td><td colspan="3">• Short to GND, Wiring open</td></tr>
<tr><td>Diagnostic Time</td><td colspan="3">• 5 sec.</td></tr>
<tr><td rowspan="4">Fail Safe</td><td>Fuel cut</td><td>NO</td><td rowspan="4"></td></tr>
<tr><td>EGR Off</td><td>NO</td></tr>
<tr><td>Fuel Limit</td><td>NO</td></tr>
<tr><td>Check Lamp</td><td>NO</td></tr>
</table>

SPECIFICATION EF22E9DB

Refer to DTC P2111.

SCHEMATIC DIAGRAM EF04C5F9

Refer to DTC P2111.

SIGNAL WAVEFORM AND DATA E9D4DE2D

Refer to DTC P2111.

MONITOR SCANTOOL DATA E0ADC05D

Refer to DTC P2111.

TERMINAL AND CONNECTOR INSPECTION EAB64BF3

Refer to DTC P2111.

SIGNAL CIRCUIT INSPECTION E44F6A4E

1. Check feed back signal circuit voltage

   1) IG KEY "OFF", ENGINE "OFF"

   2) Disconnect Throttle control actuator connector.

   3) IG KEY "ON"

   4) Measure the voltage of Throttle control actuator connector terminal 1.

specification : 0.0V~0.1V

   5) Is the measured voltage within the specification?

   YES

   ▶ Go to "2.Check open in feed back signal circuit".

   NO

   ▶ Repair short to battery in feed back signal circuit and go to "Verification of Vehicle Repair".

2. Check open in feed back signal circuit

   1) IG KEY "OFF", ENGINE "OFF"

   2) Disconnect Throttle control actuator connector and ECM connector.

   3) Check continuity between throttle control actuator connector terminal 1 and ECM connector (C230-K) terminal 77.

specification : Continuity (below 1.0Ω)

   4) Is the measured resistance within the specification? (Is continuity confirmed?)

   YES

   ▶ Go to "3. Check short to ground in feed back signal circuit" as follows.

   NO

   ▶ Repair open in throttle control actuator feed back signal circuit and go to "Varification of Vehicle Repair".

3. Check short to ground in feed back signal circuit

   1) IG KEY "OFF", ENGINE "OFF"

   2) Disconnect Throttle control actuator connector.

   3) Check continuity between throttle control actuator connector terminal 1 and chassis ground.

specification : Discontinuity (Infinite Ω)

   4) Is the measured resistance within the specification? (Is feed back signal circuit insulated with ground?)

   YES

▶ Go to "Ground Circuit Inspection".

NO

▶ Repair short to ground in feed back signal circuit and go to "Verification of Vehicle Repair".

GROUND CIRCUIT INSPECTION E5F5FFFD

1. IG KEY "OFF", ENGINE "OFF"
2. Disconnect Throttle control actuator connector.
3. IG KEY "ON"
4. Measure the voltage of Throttle control actuator connector terminal 3. [TEST "A"]
5. Measure the voltage between Throttle control actuator connector terminal 3 and 4. [TEST "B"]
   (terminal 3 : Check + prove , terminal 4 : Check - prove)

Specification : [TEST "A"] Voltage - [TEST "B"] Voltage = below 200mV

6. Is the measured voltage within the specification?

YES

▶ Go to "Component Inspection".

NO

▶ When "B" voltage is not detected : Repair open in ground circuit(G15 ground point related circuit) and go to "Verification of Vehicle Repair".
▶ When the voltage difference between "A" and "B" is above 200mV : Eliminate the causes of excessive resistance and go to "Verification of Vehicle Repair".

COMPONENT INSPECTION ED512F85

1. Throttle control actuator component visual inspection
   1) IG KEY "OFF", ENGINE "OFF"
   2) Disconnect intake hose connected to throttle control actuator.
   3) Check if throttle control actuator is contaminated with carbon fraction.
   4) Check if throttle flap moves smoothly as touching it with hand (perform this process at IG KEY "OFF" state.)
      ※ Check if abnormal noise, valve shaft stuck, too much wear are detected.

Specification : Flap moves smoothly and carbon fraction, too much wear, abnormal noise are not detected.

   5) Is throttle control actuator is OK after performing visual inspection?

YES

▶ Go to "2. Throttle control actuator operating test" as follows.

NO

▶ If same symptom is detected after clear carbon fraction up, replace throttle control actuator and go to "Verification of Vehicle Repair".

2. Throttle control actuator operating test

   1) IG KEY "OFF", ENGINE "OFF"

   2) Disconnect intake hose connected to throttle control actuator.

   3) ENGINE "ON"

   4) Check if throttle control actuator is in wide open state during engine running.

   5) ENGINE "OFF"

   6) Check if throttle flap is closed once and opened again at the point of turning engine OFF.
      ※ Check if abnormal noise or irregular moving of flap is detected.

Specification : Throttle flap moves smoothly.
at engine ON : Throttle control actuator opened
at the point of turning engine OFF : Throttle flap is closed once and opened again

   7) Is throttle flap moves smoothly?

YES

▶ Go to "Verification of Vehicle Repair".

NO

▶ Replace throttle control actuator and go to "Verification of Vehicle Repair".

VERIFICATION OF VEHICLE REPAIR E33F6F74

Refer to DTC P2111.

DTC P2123 THROTTLE/PEDAL POSITION SENSOR/SWITCH "D" CIRCUIT HIGH INPUT

COMPONENT LOCATION EB2AF71B



SCMFL6510L

GENERAL DESCRIPTION ED829AA8

Driver's intension to accelerate is transmitted to ECM through Accelerator Pedal Sensor(APS) . And APS, whose mechanism is same as TPS, is required for ECM to determine optimum fuel injection quantity. As fidelity of APS is strongly required, APS is devided into two. One is APS1, which outputs main signals and the other is APS2, which monitors APS1 performance.APS1 and 2 do not share power supply and ground. Normally, APS2 output voltage is the half of APS1 and if the ratio of two signal is out of specified value, error is recognized then, Limp Home mode is activated.When Limp Home mode is activated, engine speed is fixed at 1200RPM and driving performance is limited to prevent excessive power generation due to APS false signal.

DTC DESCRIPTION ECD47C82

P2123 is set when output voltage of APS 1 is above the maximum value of 4.79V for more than 0.18 sec. This code is due to the short to battery in APS 1 power circuit and signal circuit or open in sensor ground circuit.

DTC DETECTING CONDITION E5C0DED3

<table>
<tr><th>Item</th><th colspan="3">Detecting Condition</th><th>Possible Cause</th></tr>
<tr><td>DTC Strategy</td><td colspan="3">• Voltage monitoring</td><td rowspan="8">• APS 1 Circuit
• APS component</td></tr>
<tr><td>Enable Conditions</td><td colspan="3">• IG KEY "ON"</td></tr>
<tr><td>Threshold Value</td><td colspan="3">• When output signal is above the maximum value (above 4.79V)</td></tr>
<tr><td>Diagnostic Time</td><td colspan="3">• 0.18 sec.</td></tr>
<tr><td rowspan="4">Fail Safe</td><td>Fuel cut</td><td>NO</td><td rowspan="4">• APS standard value is 0%.
• Limp home idle is fixed at (1200RPM)
• A/C operation stops according to Vehicle/Engine speed
• Cruise control deactivated (for Cruise control option applied vehicle)</td></tr>
<tr><td>EGR Off</td><td>NO</td></tr>
<tr><td>Fuel Limit</td><td>YES</td></tr>
<tr><td>Check Lamp</td><td>YES</td></tr>
</table>

SPECIFICATION E53B94F4

	Pedal released	Pedal depressed	Sensor Type
APS 1	0.7V~0.8V	3.8V~4.4V	Variable resistance type(Potentiometer)
APS 2	0.275V~0.475V	1.75V~2.35V	

SCHEMATIC DIAGRAM E15919E5

[CIRCUIT DIAGRAM]

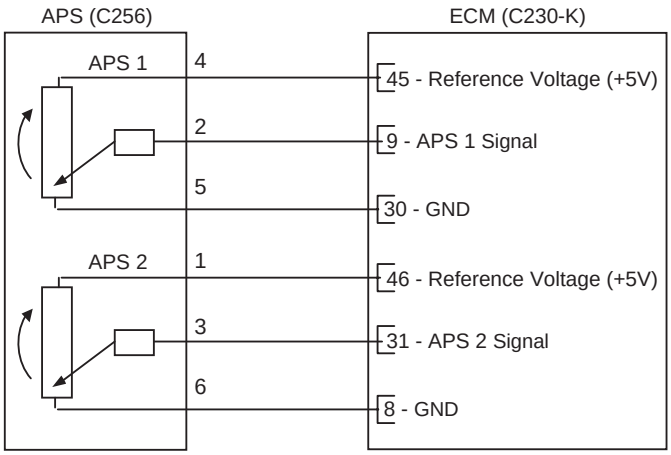

[CONNECTION INFORMATION]

Terminal	Connected to	Function
1	ECM C230-K (46)	APS 2 Reference Voltage (+5V)
2	ECM C230-K (9)	APS 1 Signal
3	ECM C230-K (31)	APS 2 Signal
4	ECM C230-K (45)	APS 1 Reference Voltage (+5V)
5	ECM C230-K (30)	APS 1 Ground
6	ECM C230-K (8)	APS 2 Ground

[HARNESS CONNECTORS]

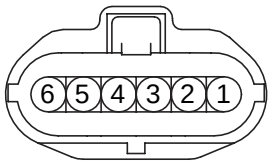

C256
APS

C230-A

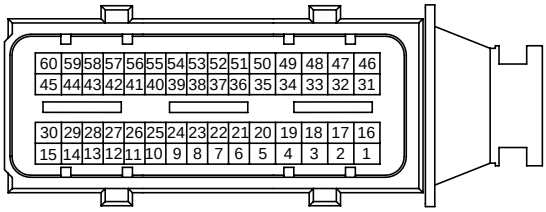

C230-K

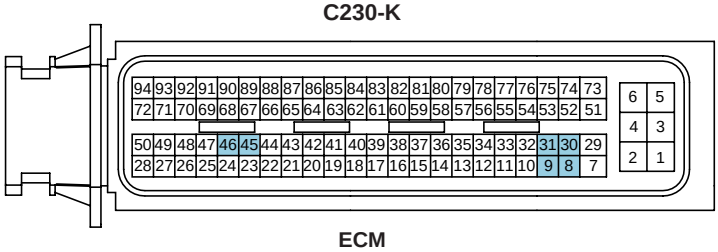

ECM

SCMFL6123L

SIGNAL WAVEFORM AND DATA EB6B7FB2

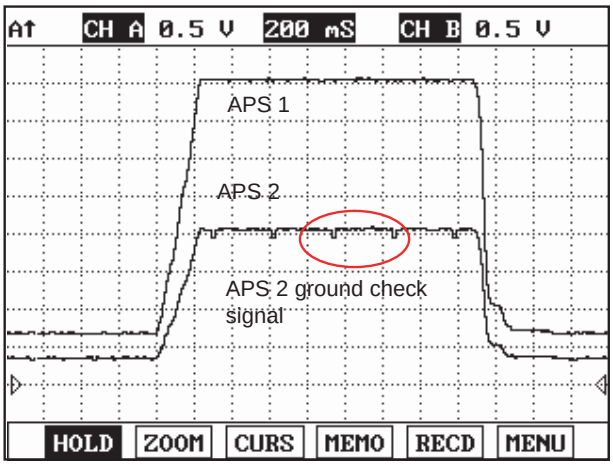

Fig.1

Fig.1) APS 1 and APS 2 signals are measured simultaneously, Check if output value is rising and APS 2 is 1/2 of APS 1 signal.

LFIG541A

NOTE

APS 2 Ground checking signal is for ECM to monitor APS 2. This signal drops APS 2 output voltage to below 200.39mV per 200msec. If APS 2 output voltage does not drop to below 200.39mV, ECM sets DTC as recognizing ground circuit error of APS 2 .

※ The waveform below 200.39mV is not detectable in Ground checking signal waveform of APS 2 signal. Instead, the waveform which drops a little is detected. If APS 2 data of "SERVICE DATA" on the Scantool varies from 350mV to 0mV periodically, it means it works well.

MONITOR SCANTOOL DATA E16F3322

1. Connect Scantool to Data Link Connector (DLC).
2. Warm engine up to normal operating temperature.
3. Turn "OFF" electrical devices and A/C.
4. Monitor "Accelerator position sensor", "Accelerator position sensor 1", "Accelerator position sensor 2 " parameter on the scantool.

Specification : at idle(0%) Accelerator position sensor 1 : 600mV~800mV
Accelerator position sensor 2 : 1/2 of Accelerator position sensor 1

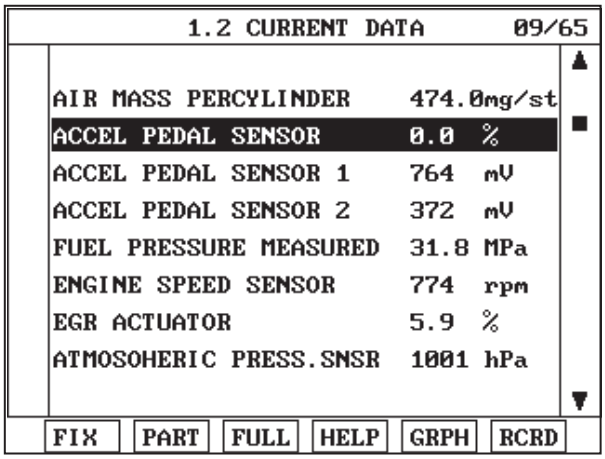

Fig.1

Fig.1) APS output data at warm idle. Check if output value is rising and "Accelerator position sensor 2" is 1/2 of "Accelerator position sensor 1" signal.

SCMFL6371L

TERMINAL AND CONNECTOR INSPECTION E3725B2E

1. Electrical systems consist of a lot of harness and connectors, poor connection of terminals can cause various problems and damge of component.
2. Perform checking procedure as follows.
   1) Check damage of harness and terminals : Check terminals for contact resistance, corrosion and deformation.
   2) Check connecting condition of ECM and component connector : Check terminal seperation, damage of locking device and connecting condition between terminal and wiring.

NOTE

Disconnect the pin which requires checking at male connector and insert it to the terminal at female connector for checking connecting condition. (after checking, reconnect the pin at correct position.)

3. Is the problem found?

YES

▶ Repair the trouble causing part and go to "Verification of Vehicle Repair".

NO

▶ Go to "Power Circuit Inspection" as follows.

POWER CIRCUIT INSPECTION EFDB4451

1. IG KEY "OFF", ENGINE "OFF"
2. Disconnect APS connector.
3. IG KEY "ON"
4. Measure the voltage of terminal 4 of APS connector.

Specification : 4.8V~5.1V

5. Is the measured voltage within the specification?

YES

▶ Go to "Signal Circuit Inspection".

NO

▶ If the measured voltage is not within the specified value, find and repair short to battery in APS 1 power circuit and go to "Verification of Vehicle Repair".

SIGNAL CIRCUIT INSPECTION E475F142

1. Check open in signal circuit

   1) IG KEY "OFF", ENGINE "OFF"

   2) Disconnect APS connector and ECM connector.

   3) Check continuity between APS connector terminal 2 and ECM connector (C230-K) terminal 9

Specification : Continuity (below 1.0Ω)

   4) Is the measured resistance within the specification?

YES

▶ Go to "Check short to battery in signal circuit" as follows.

NO

▶ Repair open in signal circuit and go to "Verification of Vehicle Repair".

2. Check short to battery in signal circuit

   1) IG KEY "OFF", ENGINE "OFF"

   2) Disconnect APS connector and ECM connector.

   3) IG KEY "ON"

   4) Measure the voltage of terminal 2 of APS connector.

Specification : 0.0V~0.1V

   5) Is the measured voltage within the specification?

YES

▶ Go to "Ground Circuit Inspection".

NO

▶ Repair short to battery and go to "Verification of Vehicle Repair".

GROUND CIRCUIT INSPECTION E1D944BB

1. IG KEY "OFF", ENGINE "OFF"
2. Disconnect APS connector.
3. IG KEY "ON"
4. Measure the voltage of APS terminal 4. [TEST "A"]
5. Measure the voltage of APS terminal 4 and terminal 5. [TEST "B"]
   (terminal 4 : Check + prove , terminal 5 : Check - prove)

Specification : [TEST "A"] Voltage - [TEST "B"] Voltage = below 200mV

6. Is the measured voltage within the specification?

YES

▶ Go to "Component Inspection".

NO

▶ When "B" voltage is not detected : Repair open in ground circuit and go to "Verification of Vehicle Repair".
▶ When the voltage difference between "A" and "B" is above 200mV : Eliminate the causes of excessive resistance and go to "Verification of Vehicle Repair".

COMPONENT INSPECTION E351FBBE

1. IG KEY "OFF", ENGINE "OFF".
2. Disconnect APS connector (C256).
3. Check resistance for each terminal refering to Resistance characteristic table.

SPECIFICATION : RESISTANCE CHARACTERISTIC TABLE FOR EACH TERMINAL

	checking point	Resistance(KΩ 20℃)		Characteristic	Component Connector Shape
		Pedal Depressed	Pedal released		
APS 1	4(power)-5(ground)	1.0±0.1KΩ	1.0±0.1KΩ	Unchanged	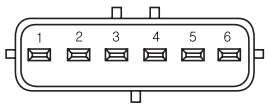 SCMFL6395L
	4(power)-2(signal)	1.8±0.1KΩ	1.1±0.1KΩ	Resistance drops	
	2(signal)-5(ground)	1.1±0.1KΩ	1.8±0.1KΩ	Resistance rises	
APS 2	1(power)-6(ground)	2.0±0.1KΩ	2.0±0.1KΩ	Unchanged	
	1(power)-3(signal)	2.9±0.1KΩ	2.1±0.1KΩ	Resistance drops	
	3(signal)-6(ground)	1.1±0.1KΩ	1.8±0.1KΩ	Resistance rises	

4. Are resistances for each terminal measured correctly?

YES

▶ Go to "Verification of Vehicle Rapair".

NO

▶ Replace APS and go to "Verification of Vehicle Rapair".

VERIFICATION OF VEHICLE REPAIR EAC51234

After a repair, it is essential to verify that the fault is corrected.

1. After connecting Scantool select "DIAGNOSTIC TROUBLE CODES(DTCs)" mode.
2. Clear recorded DTC using Scantool.
3. Drive the vehicle within DTC "Enable conditions" in "General information".
4. After selecting "DIAGNOSTIC TROUBLE CODES(DTCs)" mode and check if DTC is recorded again.
5. Are any DTCs recorded ?

YES

▶ Go to the DTC guide of recorded NO. in Scantool.

NO

▶ System operates within specification.

DTC P2128 THROTTLE/PEDAL POSITION SENSOR/SWITCH "E" CIRCUIT HIGH INPUT

COMPONENT LOCATION E004DBE2

Refer to DTC P2123.

GENERAL DESCRIPTION EA08D8FF

Refer to DTC P2123.

DTC DESCRIPTION E8F8F8E8

P2128 is set when output voltage of APS 2 is above the maximum value of 2.463V for more than 0.18 sec. This code is due to the short to battery in APS 2 power circuit and signal circuit or open in sensor ground circuit.

DTC DETECTING CONDITION E25721DC

<table>
<tr><th>Item</th><th colspan="3">Detecting Condition</th><th>Possible Cause</th></tr>
<tr><td>DTC Strategy</td><td colspan="3">• Voltage monitoring</td><td rowspan="6">• APS 2 Circuit
• APS component</td></tr>
<tr><td>Enable Conditions</td><td colspan="3">• IG KEY "ON"</td></tr>
<tr><td>Threshold Value</td><td colspan="3">• When output signal is above the maximum value (above 2.463V)</td></tr>
<tr><td>Diagnostic Time</td><td colspan="3">• 0.18 sec.</td></tr>
<tr><td rowspan="4">Fail Safe</td><td>Fuel cut</td><td>NO</td><td rowspan="4">• APS standard value is 0%.
• Limp home idle is fixed at (1200RPM)
• A/C operation stops according to Vehicle/Engine speed
• Cruise control deactivated (for Cruise control option applied vehicle)</td></tr>
<tr><td>EGR Off</td><td>NO</td></tr>
<tr><td>Fuel Limit</td><td>YES</td></tr>
<tr><td>Check Lamp</td><td>YES</td></tr>
</table>

SPECIFICATION E2D40DF9

Refer to DTC P2123.

SCHEMATIC DIAGRAM E6DC1215

Refer to DTC P2123.

SIGNAL WAVEFORM AND DATA E345F746

Refer to DTC P2123.

MONITOR SCANTOOL DATA E646E8EC

Refer to DTC P2123.

TERMINAL AND CONNECTOR INSPECTION EF3928C7

Refer to DTC P2123.

POWER CIRCUIT INSPECTION EEBAE6DF

1. IG KEY "OFF", ENGINE "OFF"
2. Disconnect APS connector.
3. IG KEY "ON"
4. Measure the voltage of terminal 1 of APS connector.

Specification : 4.8V~5.1V

5. Is the measured voltage within the specification?

YES

▶ Go to "Signal Circuit Inspection".

NO

▶ If the measured voltage is not within the specified value, find and repair short to battery in APS 2 power circuit and go to "Verification of Vehicle Repair".

SIGNAL CIRCUIT INSPECTION EF45BD9E

1. Check open in signal circuit
   1) IG KEY "OFF", ENGINE "OFF"
   2) Disconnect APS connector and ECM connector.
   3) Check continuity between APS connector terminal 3 and ECM connector (C230-K) terminal 31.

Specification : Continuity (below 1.0Ω)

   4) Is the measured resistance within the specification?

YES

▶ Go to "Check short to battery in signal circuit" as follows.

NO

▶ Repair open in signal circuit and go to "Verification of Vehicle Repair".

2. Check short to battery in signal circuit
   1) IG KEY "OFF", ENGINE "OFF"
   2) Disconnect APS connector and ECM connector.
   3) IG KEY "ON"
   4) Measure the voltage of terminal 3 of APS connector.

Specification : 0.0V~0.1V

5) Is abnormal voltage detected in signal circuit with both connector disconnected?

YES

▶ Repair short to battery and go to "Verification of Vehicle Repair".

NO

▶ Go to "Ground Circuit Inspection".

GROUND CIRCUIT INSPECTION E31BE44D

1. IG KEY "OFF", ENGINE "OFF"
2. Disconnect APS connector.
3. IG KEY "ON"
4. Measure the voltage of APS terminal 1. [TEST "A"]
5. Measure the voltage of APS terminal 1 and terminal 6. [TEST "B"]
   (terminal 1 : Check + prove , terminal 6 : Check - prove)

Specification : [TEST "A"] Voltage - [TEST "B"] Voltage = below 200mV

6. Is the measured voltage within the specification?

YES

▶ Go to "Component Inspection".

NO

▶ When "B" voltage is not detected : Repair open in ground circuit and go to "Verification of Vehicle Repair".
▶ When the voltage difference between "A" and "B" is above 200mV : Eliminate the causes of excessive resistance and go to "Verification of Vehicle Repair".

COMPONENT INSPECTION E186656E

1. IG KEY "OFF", ENGINE "OFF".
2. Disconnect APS connector (C256).
3. Check resistance for each terminal refering to Resistance characteristic table.

SPECIFICATION : RESISTANCE CHARACTERISTIC TABLE FOR EACH TERMINAL

	checking point	Resistance(KΩ 20℃)		Characteristic	Component Connector Shape
		Pedal Depressed	Pedal released		
APS 1	4(power)-5(ground)	1.0±0.1KΩ	1.0±0.1KΩ	Unchanged	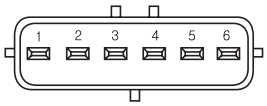 SCMFL6395L
	4(power)-2(signal)	1.8±0.1KΩ	1.1±0.1KΩ	Resistance drops	
	2(signal)-5(ground)	1.1±0.1KΩ	1.8±0.1KΩ	Resistance rises	
APS 2	1(power)-6(ground)	2.0±0.1KΩ	2.0±0.1KΩ	Unchanged	
	1(power)-3(signal)	2.9±0.1KΩ	2.1±0.1KΩ	Resistance drops	
	3(signal)-6(ground)	1.1±0.1KΩ	1.8±0.1KΩ	Resistance rises	

4. Are resistances for each terminal measured correctly?

YES

▶ Go to "Verification of Vehicle Rapair".

NO

▶ Replace APS and go to "Verification of Vehicle Rapair".

VERIFICATION OF VEHICLE REPAIR EE983AD1

Refer to DTC P2123.

DTC P2138 THROTTLE/PEDAL POSITION SENSOR/SWITCH "D" / "E" VOLTAGE CORRELATION

COMPONENT LOCATION E8B3F1F5

Refer to DTC P2123.

GENERAL DESCRIPTION E6846744

Refer to DTC P2123.

DTC DESCRIPTION E8FA412A

P2138 is set when APS 2 output voltage which is not 1/2 of APS 1 output voltage is detected for more than 0.24 sec. Careful inspection of poor connection between APS 1 and APS 2, resistance characteristic of APS component is needed.

DTC DETECTING CONDITION EB1C4BF0

<table>
<tr><th>Item</th><th colspan="3">Detecting Condition</th><th>Possible Cause</th></tr>
<tr><td>DTC Strategy</td><td colspan="3">• Voltage monitoring</td><td rowspan="6">• APS 1 Circuit
• APS 2 Circuit
• APS component</td></tr>
<tr><td>Enable Conditions</td><td colspan="3">• IG KEY "ON"(APS depressed)</td></tr>
<tr><td>Threshold Value</td><td colspan="3">• When APS 1,2 is depressed approx. 7%, the difference between APS1 and 2 is above 308mV
• When APS 1,2 is depressed above 7%, the difference between APS 1and 2 is above 406mV</td></tr>
<tr><td>Diagnostic Time</td><td colspan="3">• 0.24 sec.</td></tr>
<tr><td rowspan="4">Fail Safe</td><td>Fuel cut</td><td>NO</td><td rowspan="4">• APS standard value is 0%.
• Limp home idle is fixed at (1200RPM)
• A/C operation stops according to Vehicle/Engine speed
• Cruise control deactivated (for Cruise control option applied vehicle)</td></tr>
<tr><td>EGR Off</td><td>NO</td></tr>
<tr><td>Fuel Limit</td><td>YES</td></tr>
<tr><td>Check Lamp</td><td>YES</td></tr>
</table>

SPECIFICATION EBB21B42

Refer to DTC P2123.

SCHEMATIC DIAGRAM EAD04A1D

Refer to DTC P2123.

SIGNAL WAVEFORM AND DATA E74E39CB

Refer to DTC P2123.

MONITOR SCANTOOL DATA E0E7D465

Refer to DTC P2123.

TERMINAL AND CONNECTOR INSPECTION E5BA0617

Refer to DTC P2123.

POWER CIRCUIT INSPECTION E00EEDCB

1. IG KEY "OFF", ENGINE "OFF"
2. Disconnect APS connector.
3. IG KEY "ON"
4. Measure the voltage of terminal 1 and 4 of APS connector.

Specification : 4.8V~5.1V

5. Is the measured voltage within the specification?

YES

▶ Go to "Signal Circuit Inspection".

NO

▶ If the measured voltage is not within the specified value, find and repair trouble causing part in circuits and go to "Verification of Vehicle Repair".
When the measured voltage is higher than the specified value :
Refer to P0643 Circuit Inspection. (APS1)
Refer to P0653 Circuit Inspection.(APS2)
When the measured voltage is lower than the specified value :
Refer to P0642 Circuit Inspection.(APS1)
Refer to P0652 Circuit Inspection.(APS2)

SIGNAL CIRCUIT INSPECTION EA5B1C47

1. Check open in signal circuit
   1) IG KEY "OFF", ENGINE "OFF"
   2) Disconnect APS connector and ECM connector.
   3) Check continuity between APS connector terminal 2 and ECM connector (C230-K) terminal 9. (APS 1)
      Check continuity between APS connector terminal 3 and ECM connector (C230-K) terminal 31. (APS 2)

Specification : Continuity (below 1.0Ω)

   4) Is the measured resistance within the specification?

YES

▶ Go to "Check short in signal circuit".

NO

▶ Repair open in signal circuit and go to "Verification of Vehicle Repair".

2. Check short in signal circuit (APS 1)

1) IG KEY "OFF", ENGINE "OFF"

2) Disconnect APS connector and ECM connector.

3) IG KEY "ON"

4) Check continuity between APS connector terminal 2 and chassis ground. (check short to ground)
Measure the voltage of terminal 2 of APS connector. (check short to battery)

Specification : Check short to ground : Discontinuity (Infinite Ω)
Check short to battery : 0.0V~0.1V

---

5) Is APS 1 signal circuit insulated well?

YES

▶ Go to "3.Signal Circuit Inspection (APS 2)" as follows.

NO

▶ Repair short in circuit and go to "Verification of Vehicle Repair".

3. Signal Circuit Inspection (APS 2)

1) IG KEY "OFF", ENGINE "OFF"

2) Disconnect APS connector and ECM connector.

3) IG KEY "ON"

4) Check continuity between APS connector terminal 3 and chassis ground. (check short to ground)
Measure the voltage of terminal 3 of APS connector. (check short to battery)

Specification : Check short to ground : Discontinuity (Infinite Ω)
Check short to battery : 0.0V~0.1V

---

5) Is APS 2 signal circuit insulated well?

YES

▶ Go to "Ground Circuit Inspection".

NO

▶ Repair short in circuit and go to "Verification of Vehicle Repair".

GROUND CIRCUIT INSPECTION EE6B60FA

1. Check ground circuit (APS1)

1) IG KEY "OFF", ENGINE "OFF"

2) Disconnect APS connector.

3) IG KEY "ON"

4) Measure the voltage of APS terminal 4. [TEST "A"]

5) Measure the voltage of APS terminal 4 and terminal 5. [TEST "B"]
(terminal 4: Check + prove , terminal 5 : Check - prove)

Specification : [TEST "A"] Voltage - [TEST "B"] Voltage = below 200mV

6) Is the measured voltage within the specification?

YES

▶ Go to "2. Check ground circuit (APS2)".

NO

▶ When "B" voltage is not detected : Repair open in ground circuit and go to "Verification of Vehicle Repair".
▶ When the voltage difference between "A" and "B" is above 200mV : Eliminate the causes of excessive resistance and go to "Verification of Vehicle Repair".

2. Check ground circuit (APS2)

1) IG KEY "OFF", ENGINE "OFF"

2) Disconnect APS connector.

3) IG KEY "ON"

4) Measure the voltage of APS terminal 1. [TEST "A"]

5) Measure the voltage of APS terminal 1 and terminal 6. [TEST "B"]
(terminal 1 : Check + prove , terminal 6 : Check - prove)

Specification : [TEST "A"] Voltage - [TEST "B"] Voltage = below 200mV

6) Is the measured voltage within the specification?

YES

▶ Go to "Component Inspection".

NO

▶ When "B" voltage is not detected : Repair open in ground circuit and go to "Verification of Vehicle Repair".
▶ When the voltage difference between "A" and "B" is above 200mV : Eliminate the causes of excessive resistance and go to "Verification of Vehicle Repair".

COMPONENT INSPECTION E4BBE2B6

1. IG KEY "OFF", ENGINE "OFF".

2. Disconnect APS connector (C256).

3. Check resistance for each terminal refering to Resistance characteristic table.

SPECIFICATION : RESISTANCE CHARACTERISTIC TABLE FOR EACH TERMINAL

	checking point	Resistance(KΩ 20℃)		Characteristic	Component Connector Shape
		Pedal Depressed	Pedal released		
APS 1	4(power)-5(ground)	1.0±0.1KΩ	1.0±0.1KΩ	Unchanged	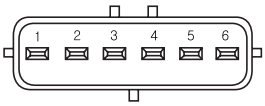 SCMFL6395L
	4(power)-2(signal)	1.8±0.1KΩ	1.1±0.1KΩ	Resistance drops	
	2(signal)-5(ground)	1.1±0.1KΩ	1.8±0.1KΩ	Resistance rises	
APS 2	1(power)-6(ground)	2.0±0.1KΩ	2.0±0.1KΩ	Unchanged	
	1(power)-3(signal)	2.9±0.1KΩ	2.1±0.1KΩ	Resistance drops	
	3(signal)-6(ground)	1.1±0.1KΩ	1.8±0.1KΩ	Resistance rises	

4. Are resistances for each terminal measured correctly?

YES

▶ Go to "Verification of Vehicle Rapair".

NO

▶ Replace APS and go to "Verification of Vehicle Rapair".

VERIFICATION OF VEHICLE REPAIR E7A1E718

Refer to DTC P2123.

DTC P2264 DETECTION OF WATER IN FUEL

COMPONENT LOCATION EFA8FD0B

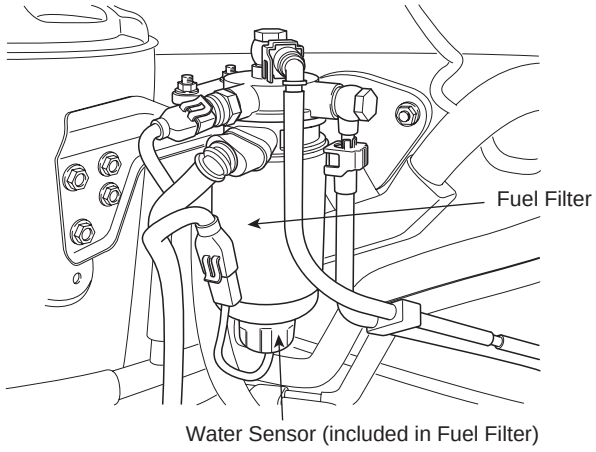

SCMFL6511L

GENERAL DESCRIPTION E3D65CEF

Diesel fuel filter can seperate water from fuel. If water more than specified amount is detected by "water in fuel sensor" installed at the bottom of fuel filter, "Fuel warning lamp" on cluster turns ON.Especially for high pressure pump and injectors of common rail diesel engine water is fatal. because water causes poor lubrication and corrosion in such accurate devices, furthermore, it leads engine hesitation. In order to prevent this harsh condition to engine, "Water warning lamp" turns ON to let driver relief the gathered water from the filter and engine power generation is limited .

NOTE

If sensing prove of water in fuel sensor contacts with water, impressed voltage on prove is grounded to chassis ground, then 12V is outputted from signal line. With this method, ECM recognizes the amount of water.

DTC DESCRIPTION E4F1A423

P2264 is set when water in fuel sensor operates for more than 4 sec. Water warning lamp turns on and engine power generation is limited in this condition. When this code is set, water in the filter should be removed to prevent engine from water contained fuel. If same code is set even after removing water, check short to battery in water in fuel sensor signal circuit or component failure.

DTC DETECTING CONDITION E442E3BD

<table>
<tr><th>Item</th><th colspan="3">Detecting Condition</th><th>Possible Cause</th></tr>
<tr><td>DTC Strategy</td><td colspan="3">• Voltage monitoring</td><td rowspan="8">• Water stored inside of fuel filter(remove water inside of filter)
• Water sensor circuit(short to battery)
• Water sensor component</td></tr>
<tr><td>Enable Conditions</td><td colspan="3">• IG KEY "ON"</td></tr>
<tr><td>Threshold Value</td><td colspan="3">• Signal voltage detected at Water sensor</td></tr>
<tr><td>Diagnostic Time</td><td colspan="3">• 4.0 sec.</td></tr>
<tr><td rowspan="4">Fail Safe</td><td>Fuel cut</td><td>NO</td><td rowspan="4"></td></tr>
<tr><td>EGR Off</td><td>NO</td></tr>
<tr><td>Fuel Limit</td><td>YES</td></tr>
<tr><td>Check Lamp</td><td>NO</td></tr>
</table>

SCHEMATIC DIAGRAM E43E0DF6

[CIRCUIT DIAGRAM]

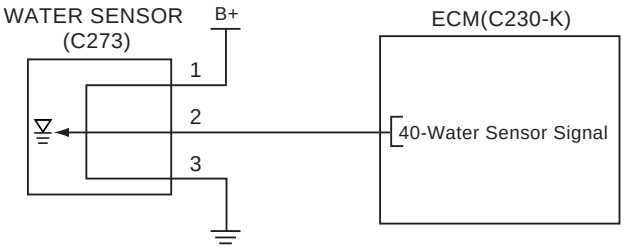

[CONNECTION INFORMATION]

Terminal	Connected to	Function
1	Main Relay	Battery voltage(B+)
2	ECM C230-K (40)	Sensor Signal
3	Chassis ground	Sensor ground

[HARNESS CONNECTOR]

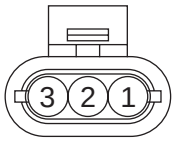

C273
WATER SENSOR

C230-A

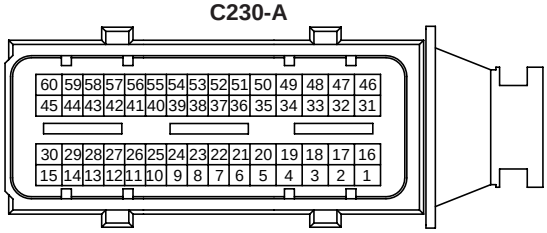

C230-K

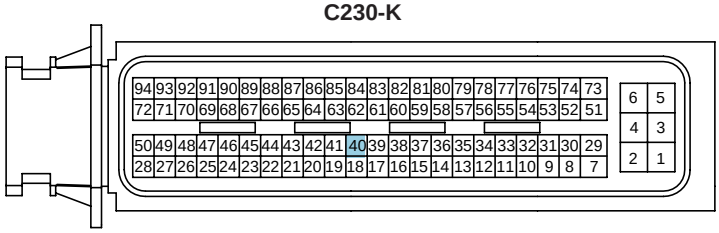

ECM

SCMFL6135L

TERMINAL AND CONNECTOR INSPECTION E048B963

1. Electrical systems consist of a lot of harness and connectors, poor connection of terminals can cause various problems and damge of component.

2. Perform checking procedure as follows.

   1) Check damage of harness and terminals : Check terminals for contact resistance, corrosion and deformation.

   2) Check connecting condition of ECM and component connector : Check terminal seperation, damage of locking device and connecting condition between terminal and wiring.

   NOTE

   Disconnect the pin which requires checking at male connector and insert it to the terminal at female connector for checking connecting condition. (after checking, reconnect the pin at correct position.)

3. Is the problem found?

   YES

   ▶ Repair the trouble causing part and go to "Verification of Vehicle Repair".

   NO

▶ Go to "Power Circuit Inspection" as follows.

POWER CIRCUIT INSPECTION E70F622C

1. IG KEY "OFF", ENGINE "OFF".
2. Disconnect Water sensor connector.
3. IG KEY "ON"
4. Measure the voltage of terminal 1 of Water sensor connector.

Specification : 11.0V~12.5V

5. Is the measured voltage within the specification?

YES

▶ Go to "Signal Circuit Inspection".

NO

▶ Repair open in I/P JUNCTION BOX 10A ABS FUSE and related circuit and go to "Verification of Vehicle Repair".

SIGNAL CIRCUIT INSPECTION EC353D94

1. Check signal circuit voltage
   1) IG KEY "OFF", ENGINE "OFF".
   2) Disconnect Water sensor connector.
   3) IG KEY "ON"
   4) Measure the voltage of terminal 2 of Water sensor connector.

Specification : 0.0V~0.1V

   5) Is the measured voltage within the specification?

YES

▶ Go to "2. Water warning lamp operation test" as follows.

NO

▶ Repair short to battery and go to "Verification of Vehicle Repair".

2. Water warning lamp operation test
   1) IG KEY "OFF", ENGINE "OFF".
   2) Disconnect Water sensor connector .
   3) IG KEY "ON"
   4) Connect Water sensor connector terminal 1 and 2 using jump wire.

Specification : Water warning lamp on cluster turns ON. 12V battery voltage is detected at ECM connector(C230-K) terminal 40.

5) Does water warning lamp turn ON? And is 12V battery voltage detected at ECM connector(C230-K) terminal 40?

YES

▶ Go to "Ground Circuit Inspection".

NO

▶ Repair open in water warning lamp filament and related circuit and go to "Verification of Vehicle Repair".

GROUND CIRCUIT INSPECTION E8C42CFA

1. IG KEY "OFF", ENGINE "OFF".
2. Disconnect Water sensor connector
3. Check continuity between Water sensor connector terminal 3 and chassis ground.

Specification : Discontinuity (Infinite Ω)

4. Is the measured resistance within the specification?

YES

▶ Go to "Component Inspection".

NO

▶ Repair short to ground in signal circuit and go to "Verification of Vehicle Repair".

COMPONENT INSPECTION E99CBD5F

1. Check water inside of fuel filter
   1) IG KEY "OFF", ENGINE "OFF"
   2) Disconnect fuel filter assy' from vehicle. (note : fuel filter should be maintained to stand up vertically at disconnecting.)
   3) Set up clean vessel like beaker to collect fuel outflowed from filter.
   4) Disconnect Water sensor and collect fuel and water mixed to it.

Specification : Outflowed fuel must not contain much water.

5) Does fuel contains much water?

YES

▶ Checking odometer and filter used duration, replace fuel filter if needed. If too much water flowed to fuel filter, check if water flowed into fuel tank and clean up inside of fuel tank.
▶ After replacing filter and clean up fuel tank and go to "Verification of Vehicle Repair".

NO

▶ Go to "2.Check Water sensor component" as follows.

2. Check Water sensor component

   1) IG KEY "OFF", ENGINE "OFF"

   2) Disconnect fuel filter assy' from vehicle. (note : fuel filter should be maintained to stand up vertically at disconnecting.)

   3) Set up clean vessel like beaker to collect fuel outflowed from filter.

   4) Disconnect fuel warning sensor from disconnected fuel filter.

   5) Connect Water sensor to disconnected wiring connector.

   6) IG KEY "ON".

   7) Touch water sensing prove of Water sensor to chassis ground.

Specification : Water warning lamp turns ON when touching water sensing prove to chassis ground.

   8) Does water warning lamp operate well?

YES

▶ Go to "Verification of Vehicle Repair".

NO

▶ Replace Water sensor and go to "Verification of Vehicle Repair".

VERIFICATION OF VEHICLE REPAIR EF82566D

After a repair, it is essential to verify that the fault is corrected.

1. After connecting Scantool select "DIAGNOSTIC TROUBLE CODES(DTCs)" mode.
2. Clear recorded DTC using Scantool.
3. Drive the vehicle within DTC "Enable conditions" in "General information".
4. After selecting "DIAGNOSTIC TROUBLE CODES(DTCs)" mode and check if DTC is recorded again.
5. Are any DTCs recorded ?

YES

▶ Go to the DTC guide of recorded NO. in Scantool.

NO

▶ System operates within specification.

DTC P2299 BRAKE PEDAL POSITION / ACCELERATOR PEDAL POSITION INCOMPATIBLE

COMPONENT LOCATION E671B891

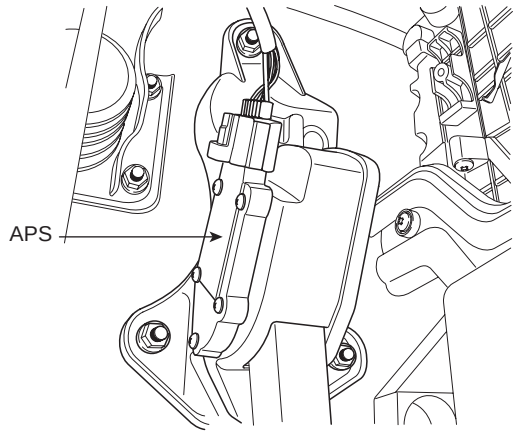

SCMFL6510L

GENERAL DESCRIPTION E864BC89

Brake switch monitors malfunction of accel pedal sensor(APS).Drivers depress brake pedal when 1).the voltage higher than driver's intension is detected due to APS malfunction(signal circuit short to high voltage) 2).engine power generates excessively due to fault signal.Like previous example, if driver's intension to decelerate is transmitted to ECM(brake pedal depressed) when APS signal is high, ECM consider APS to be fault and Limp Home mode is activated.When Limp Home mode is activated, engine speed is fixed at 1200RPM and driving performance is limited, later, if correct APS signal is detected, Limp Home mode is deactivated immediately.

DTC DESCRIPTION E626EDFA

P2299 is set when brake signal is inputted to ECM for more than 0.5 sec. while APS is depressed more than 5% at below 770RPM and 4Km/h. And Limp Home mode is activated with the DTC code occurence. Later, if correct APS signal is detected, Limp Home mode is deactivated immediately. This code is set when APS signal is a bit higher than the voltage at accelerator released position and driver's pedal manipulation, therefore careful inspection of APS and checking driver's pedal depressing habit is required.

DTC DETECTING CONDITION EE8CB550

<table>
<tr><th>Item</th><th colspan="3">Detecting Condition</th><th>Possible Cause</th></tr>
<tr><td>DTC Strategy</td><td colspan="3">• Voltage monitoring</td><td rowspan="6">• APS 1 Circuit
• APS 2 Circuit
• APS component</td></tr>
<tr><td>Enable Conditions</td><td colspan="3">• Engine running (engine speed below 770RPM, vehicle speed below 4Km/h)</td></tr>
<tr><td>Threshold Value</td><td colspan="3">• Brake pedal singal inputted at APS output voltage above 5%(Error disappears when brake pedal released or accelerator pedal depressed 200% per sec.)</td></tr>
<tr><td>Diagnostic Time</td><td colspan="3">• 0.5 sec.</td></tr>
<tr><td rowspan="4">Fail Safe</td><td>Fuel cut</td><td>NO</td><td rowspan="4">• APS standard value is 0%.
• Limp home idle is fixed at (1200RPM)
• A/C operation stops according to Vehicle/Engine speed
• Cruise control deactivated (for Cruise control option applied vehicle)</td></tr>
<tr><td>EGR Off</td><td>NO</td></tr>
<tr><td>Fuel Limit</td><td>YES</td></tr>
<tr><td>Check Lamp</td><td>NO</td></tr>
</table>

SPECIFICATION E86A2630

	Pedal released	Pedal depressed	Sensor Type
APS 1	0.7V~0.8V	3.8V~4.4V	Variable resistance type(Potentiometer)
APS 2	0.275V~0.475V	1.75V~2.35V	

SCHEMATIC DIAGRAM EFFA706D

[CIRCUIT DIAGRAM]

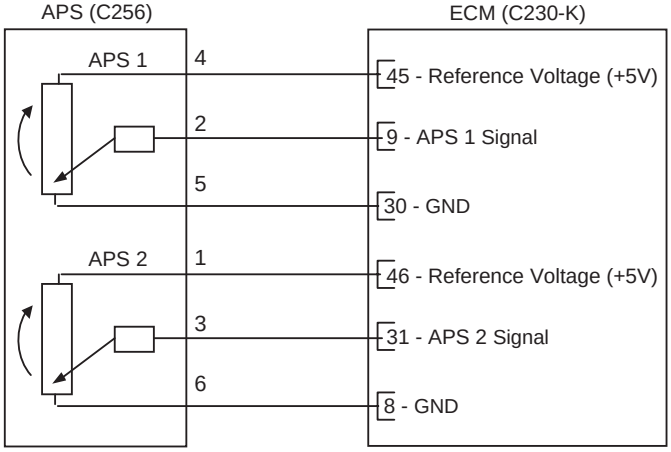

[CONNECTION INFORMATION]

Terminal	Connected to	Function
1	ECM C230-K (46)	APS 2 Reference Voltage (+5V)
2	ECM C230-K (9)	APS 1 Signal
3	ECM C230-K (31)	APS 2 Signal
4	ECM C230-K (45)	APS 1 Reference Voltage (+5V)
5	ECM C230-K (30)	APS 1 Ground
6	ECM C230-K (8)	APS 2 Ground

[HARNESS CONNECTORS]

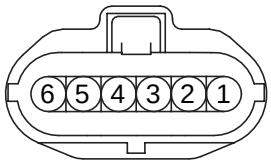

C256
APS

C230-A

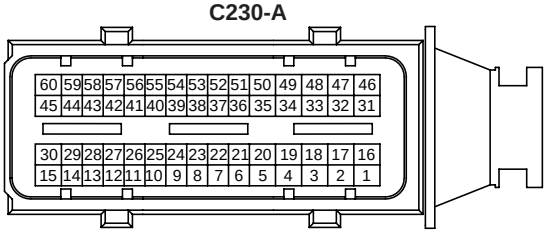

C230-K

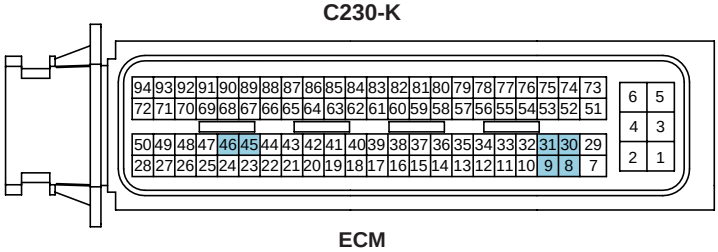

ECM

SCMFL6123L

SIGNAL WAVEFORM AND DATA E4BA1C5F

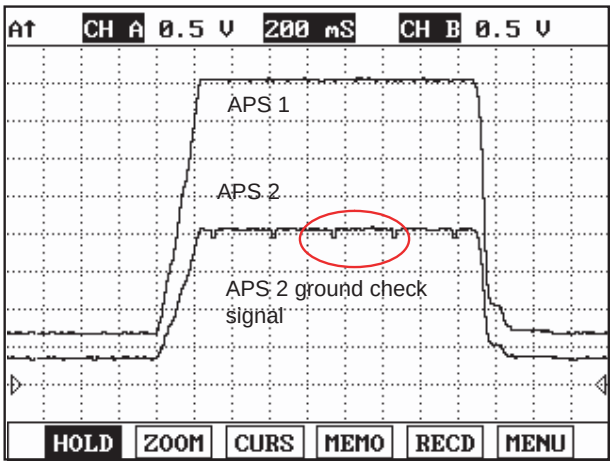

Fig.1

Fig.1) APS 1 and APS 2 signals are measured simultaneously, Check if output value is rising and APS 2 is 1/2 of APS 1 signal.

LFIG541A

NOTE

APS 2 Ground checking signal is for ECM to monitor APS 2. This signal drops APS 2 output voltage to below 200.39mV per 200msec. If APS 2 output voltage does not drop to below 200.39mV, ECM sets DTC as recognizing ground circuit error of APS 2 .

※ The waveform below 200.39mV is not detectable in Ground checking signal waveform of APS 2 signal. Instead, the waveform which drops a little is detected. If APS 2 data of "SERVICE DATA" on the Scantool varies from 350mV to 0mV periodically, it means it works well.

MONITOR SCANTOOL DATA E548F419

1. Connect Scantool to Data Link Connector (DLC).
2. Warm engine up to normal operating temperature.
3. Turn "OFF" electrical devices and A/C.
4. Monitor "Accelerator position sensor", "Accelerator position sensor 1", "Accelerator position sensor 2 " parameter on the scantool.

Specification : at idle(0%) Accelerator position sensor 1 : 600mV~800mV
Accelerator position sensor 2 : 1/2 of Accelerator position sensor 1

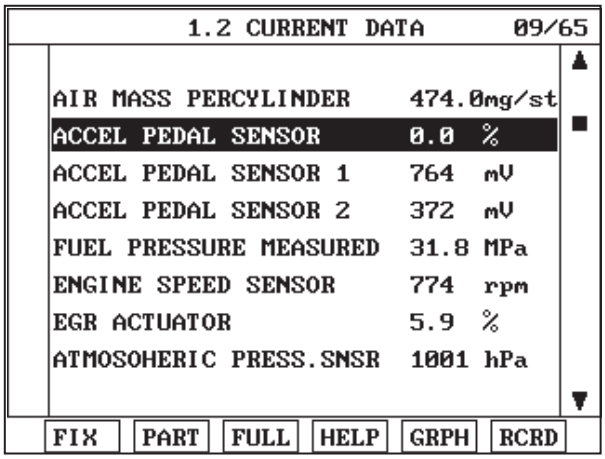

Fig.1

Fig.1) APS output data at warm idle. Check if output value is rising and "Accelerator position sensor 2" is 1/2 of "Accelerator position sensor 1" signal.

SCMFL6371L

TERMINAL AND CONNECTOR INSPECTION E166C946

1. Electrical systems consist of a lot of harness and connectors, poor connection of terminals can cause various problems and damge of component.
2. Perform checking procedure as follows.
   1) Check damage of harness and terminals : Check terminals for contact resistance, corrosion and deformation.
   2) Check connecting condition of ECM and component connector : Check terminal seperation, damage of locking device and connecting condition between terminal and wiring.

NOTE

Disconnect the pin which requires checking at male connector and insert it to the terminal at female connector for checking connecting condition. (after checking, reconnect the pin at correct position.)

3. Is the problem found?

YES

▶ Repair the trouble causing part and go to "Verification of Vehicle Repair".

NO

▶ Go to "Power Circuit Inspection" as follows.

POWER CIRCUIT INSPECTION EF179E48

1. IG KEY "OFF", ENGINE "OFF"
2. Disconnect APS connector.
3. IG KEY "ON"
4. Measure the voltage of terminal 1 and 4 of APS connector.

Specification : 4.8V~5.1V

5. Is the measured voltage within the specification?

YES

▶ Go to "Signal Circuit Inspection".

NO

▶ If the measured voltage is not within the specified value, find and repair trouble causing part in circuits and go to "Verification of Vehicle Repair".
When the measured voltage is higher than the specified value :
Refer to P0643 Circuit Inspection. (APS1)
Refer to P0653 Circuit Inspection.(APS2)
When the measured voltage is lower than the specified value :
Refer to P0642 Circuit Inspection.(APS1)
Refer to P0652 Circuit Inspection.(APS2)

SIGNAL CIRCUIT INSPECTION EC930780

1. Check open in signal circuit

   1) IG KEY "OFF", ENGINE "OFF"

   2) Disconnect APS connector and ECM connector.

   3) Check continuity between APS connector terminal 2 and ECM connector (C230-K) terminal 9. (APS 1)
   Check continuity between APS connector terminal 3 and ECM connector (C230-K) terminal 31. (APS 2)

Specification : Continuity (below 1.0Ω)

---

   4) Is the measured resistance within the specification?

YES

▶ Go to "Check short in signal circuit".

NO

▶ Repair open in signal circuit and go to "Verification of Vehicle Repair".

2. Check short in signal circuit (APS 1)

   1) IG KEY "OFF", ENGINE "OFF"

   2) Disconnect APS connector and ECM connector.

   3) IG KEY "ON"

   4) Check continuity between APS connector terminal 2 and chassis ground. (check short to ground)
   Measure the voltage of terminal 2 of APS connector. (check short to battery)

Specification : Check short to ground : Discontinuity (Infinite Ω)
Check short to battery : 0.0V~0.1V

---

   5) Is APS 1 signal circuit insulated normally?

YES

▶ Go to "3.Signal Circuit Inspection (APS 2)" as follows.

NO

▶ Repair short in circuit and go to "Verification of Vehicle Repair".

3. Signal Circuit Inspection (APS 2)

1) IG KEY "OFF", ENGINE "OFF"

2) Disconnect APS connector and ECM connector.

3) IG KEY "ON"

4) Check continuity between APS connector terminal 3 and chassis ground. (check short to ground)
Measure the voltage of terminal 3 of APS connector. (check short to battery)

Specification : Check short to ground : Discontinuity (Infinite Ω)
Check short to battery : 0.0V~0.1V

5) Is APS 2 signal circuit insulated normally?

YES

▶ Go to "Ground Circuit Inspection".

NO

▶ Repair short in circuit and go to "Verification of Vehicle Repair".

GROUND CIRCUIT INSPECTION E1384424

1. Check ground circuit (APS1)

1) IG KEY "OFF", ENGINE "OFF"

2) Disconnect APS connector.

3) IG KEY "ON"

4) Measure the voltage of APS terminal 4. [TEST "A"]

5) Measure the voltage of APS terminal 4 and terminal 5. [TEST "B"]
(terminal 4: Check + prove , terminal 5 : Check - prove)

Specification : [TEST "A"] Voltage - [TEST "B"] Voltage = below 200mV

6) Is the measured voltage within the specification?

YES

▶ Go to "2. Check ground circuit (APS2)".

NO

▶ When "B" voltage is not detected : Repair open in ground circuit and go to "Verification of Vehicle Repair".
▶ When the voltage difference between "A" and "B" is above 200mV : Eliminate the causes of excessive resistance and go to "Verification of Vehicle Repair".

2. Check ground circuit (APS2)

   1) IG KEY "OFF", ENGINE "OFF"

   2) Disconnect APS connector.

   3) IG KEY "ON"

   4) Measure the voltage of APS terminal 1. [TEST "A"]

   5) Measure the voltage of APS terminal 1 and terminal 6. [TEST "B"]
   (terminal 1 : Check + prove , terminal 6 : Check - prove)

Specification : [TEST "A"] Voltage - [TEST "B"] Voltage = below 200mV

   6) Is the measured voltage within the specification?

YES

▶ Go to "Component Inspection".

NO

▶ When "B" voltage is not detected : Repair open in ground circuit and go to "Verification of Vehicle Repair".
▶ When the voltage difference between "A" and "B" is above 200mV : Eliminate the causes of excessive resistance and go to "Verification of Vehicle Repair".

COMPONENT INSPECTION EA5E101C

1. IG KEY "OFF", ENGINE "OFF".

2. Disconnect APS connector (C256).

3. Check resistance for each terminal refering to Resistance characteristic table.

SPECIFICATION : RESISTANCE CHARACTERISTIC TABLE FOR EACH TERMINAL

	checking point	Resistance(KΩ 20℃)		Characteristic	Component Connector Shape
		Pedal Depressed	Pedal released		
APS 1	4(power)-5(ground)	1.0±0.1KΩ	1.0±0.1KΩ	Unchanged	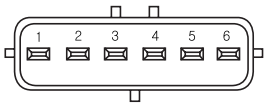 SCMFL6395L
	4(power)-2(signal)	1.8±0.1KΩ	1.1±0.1KΩ	Resistance drops	
	2(signal)-5(ground)	1.1±0.1KΩ	1.8±0.1KΩ	Resistance rises	
APS 2	1(power)-6(ground)	2.0±0.1KΩ	2.0±0.1KΩ	Unchanged	
	1(power)-3(signal)	2.9±0.1KΩ	2.1±0.1KΩ	Resistance drops	
	3(signal)-6(ground)	1.1±0.1KΩ	1.8±0.1KΩ	Resistance rises	

4. Are resistances for each terminal measured correctly?

YES

▶ Go to "Verification of Vehicle Rapair".

NO

▶ Replace APS and go to "Verification of Vehicle Rapair".

VERIFICATION OF VEHICLE REPAIR E7FDC3EA

After a repair, it is essential to verify that the fault is corrected.

1. After connecting Scantool select "DIAGNOSTIC TROUBLE CODES(DTCs)" mode.
2. Clear recorded DTC using Scantool.
3. Drive the vehicle within DTC "Enable conditions" in "General information".
4. After selecting "DIAGNOSTIC TROUBLE CODES(DTCs)" mode and check if DTC is recorded again.
5. Are any DTCs recorded ?

YES

▶ Go to the DTC guide of recorded NO. in Scantool.

NO

▶ System operates within specification.

FUEL DELIVERY SYSTEM-DIESEL

COMPONENT LOCATION E10AFDE9

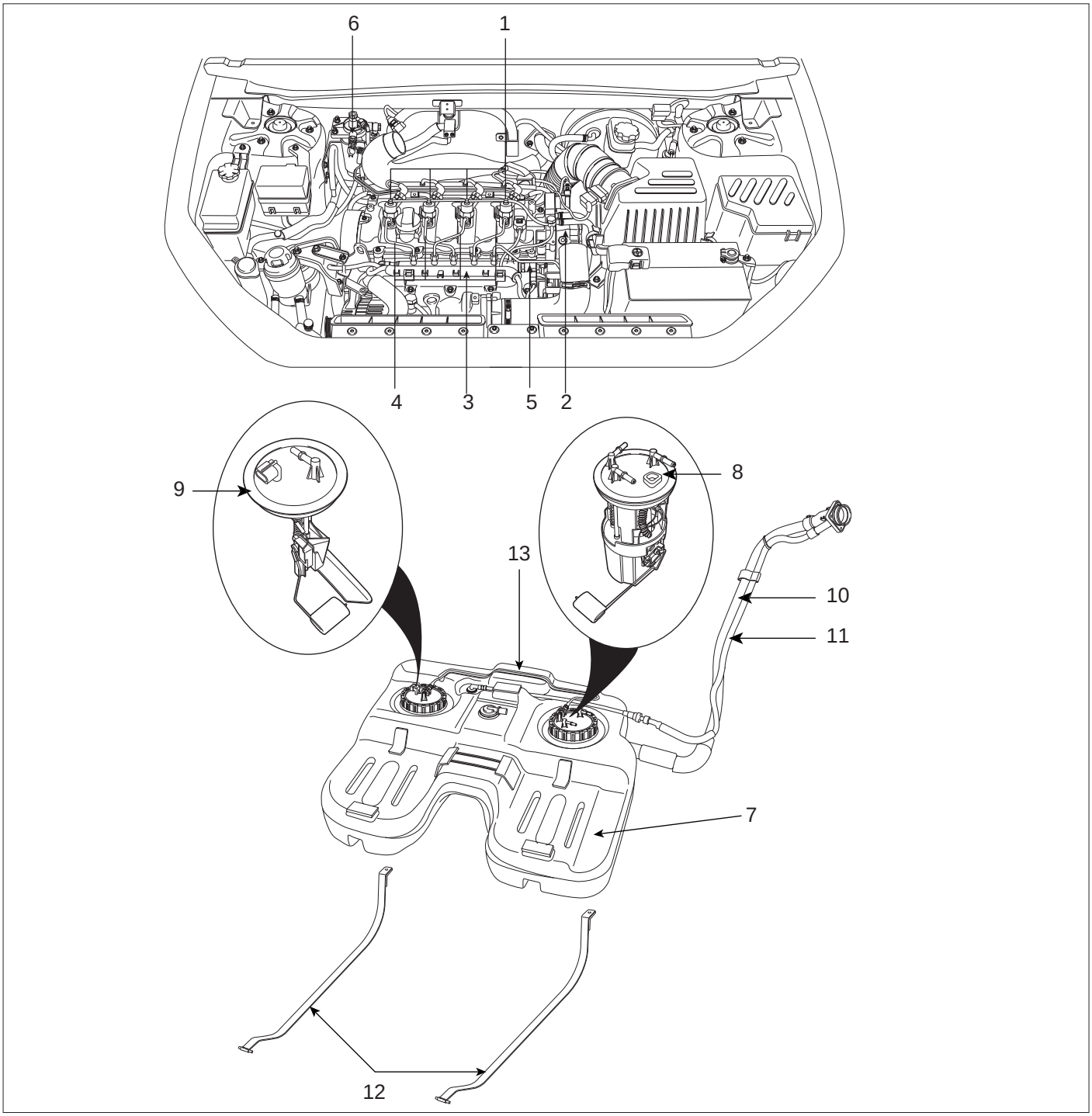

1. Injector
2. High Pressure Fuel Pump
3. Common Rail
4. High Pressure Pipe (Injector → Common Rail)
5. High Pressure Pipe (Common Rail → High Pressure Fuel Pump)
6. Fuel Filter
7. Fuel Tank
8. Fuel Pump (Low Pressure)
9. Sub Fuel Sender
10. Fuel Filler Hose
11. Leveling Hose
12. Fuel Tank Band
13. Suction Tube

SCMFL6137L

CAUTION

- ***Common Rail Fuel Injection System is subject to extremely high pressure (Approximately 1,600 bar)***
- ***Never perform any work on injection system with engine running or within 30 seconds after the engine stops.***
- ***Always pay attention to safety precaution.***
- ***Ensure the absolute cleanliness.***
- ***It is not recommended to remove the injectors without any notice.***

SCHEMATIC DIAGRAM E61F31CB

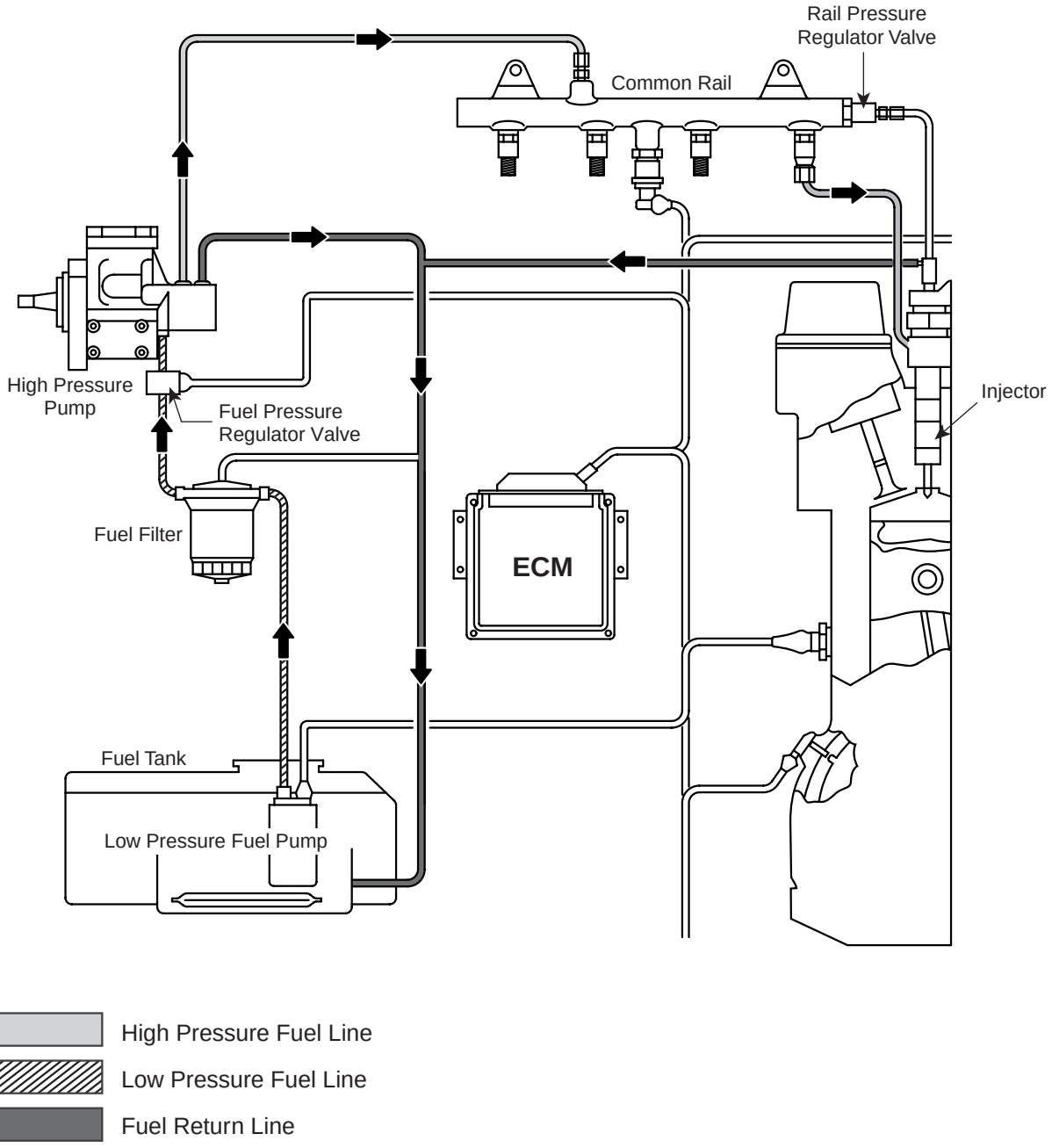

EFQG701A

COMPONENTS

● LOW PRESSURE FUEL SYSTEM COMPONENTS

FUEL PUMP
The fuel pump is either an electric fuel pump with pre-filter, or a gear-type fuel pump. The pump draws the fuel from the fuel tank and continually delivers the required quantity of fuel in the direction of the high-pressure pump.

FUEL FILTER
Inadequate filtering can lead to damage at the pump components, delivery valves, and injector nozzles. The fuel filter cleans the fuel before it reaches the high-pressure pump, and thereby prevents premature wear at the pump's sensitive components.

● HIGH PRESSURE FUEL SYSTEM COMPONENTS

HIGH PRESSURE FUEL PUMP

The high-pressure pump pressurizes the fuel to a system pressure of up to 1,600bar. This pressurized fuel then passes through a high-pressure line and into the tubular common rail.

COMMON RAIL (HIGH PRESSURE ACCUMULATOR)

Even after an injector has taken fuel from the rail in order to inject it, the fuel pressure inside the rail remains practically constant. This is due to the accumulator effect arising from the fuel's inherent elasticity. Fuel pressure is measured by the rail pressure sensor and maintained at the desired level by the pressure-control valve.

INJECTORS

The nozzles of these injectors open when the solenoid valve is triggered and permit the flow of fuel. They inject the fuel directly into the engine's combustion chamber. The excess fuel which was needed for opening the injector nozzles flows back to the tank through a collector line. The return fuel from the fuel pressure control valve and from the low-pressure stage is also led into this collector line together with the fuel used to lubricate the high-pressure pump.

HIGH PRESSURE PIPE

These High Pressure Pipes carry the high-pressure fuel. They must therefore be able to permanently withstand the maximum system pressure and, during the pauses in injection, the sometimes high-frequency pressure fluctuations which occur. They are therefore manufactured from steel tubing.

Normally, they have an outside diameter of about 6.35mm and an internal diameter of about 3.0mm. The injection lines between the common rail and the injectors must all be of the same length. The differences in length between the common rail and the individual injectors are compensated for by using slight or pronounced bends in the individual lengths of tubing. Nevertheless, the injection lines should be kept as short as possible.

FUEL TANK

REMOVAL E0CEE39C

1. Turn ignition switch OFF and disconnet the negative (-) battery cable.
2. Remove the 2nd seat (Refer to group "BD" in this Shop Manual).
3. Open the carpet (A) for the fuel pump and the carpet (B) for the sub fuel sender.

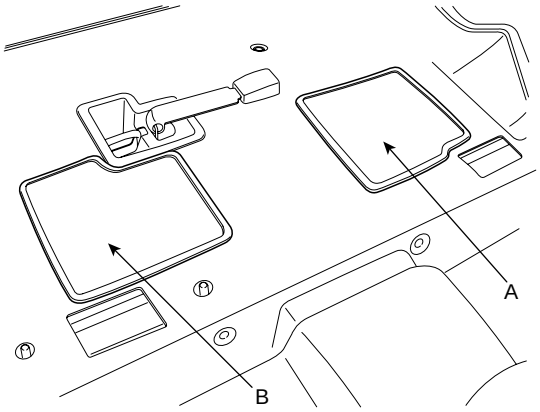

SCMFL6635D

4. Remove the fuel pump service cover (A) and the sub fuel sender service cover (B).

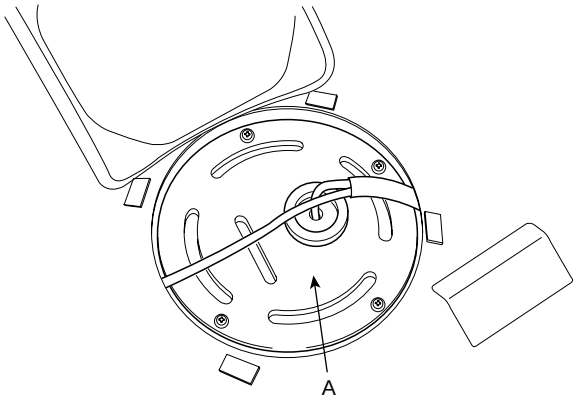

SCMFL6636D

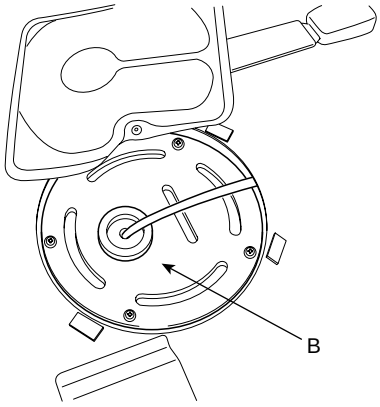

SCMFL6637D

5. Disconnect the fuel pump connector (A), the fuel feed tube quick - connector (B), the fuel return tube quick - connector (C) and the sub fuel sender connector (D).

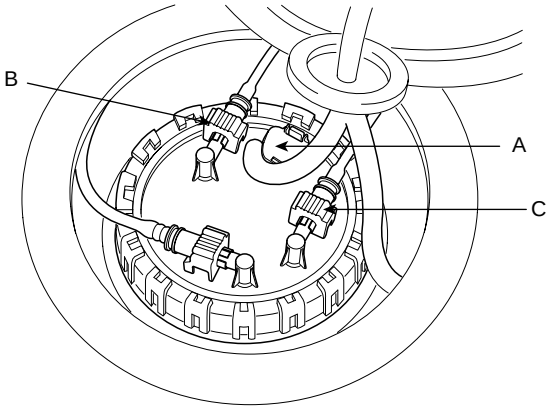

SCMFL6638D

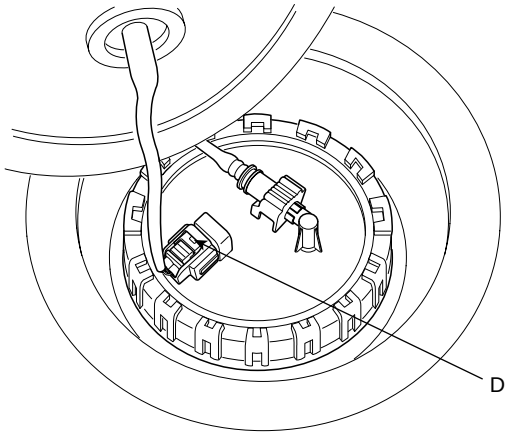

SCMFL6639D

6. Lift the vehicle and support the fuel tank with a jack.
7. Remove the muffler assembly and the propeller shaft (4WD). (Refer to group "EM" and "DS" in this Shop Manual.)
8. Disconnect the fuel filler hose (A).

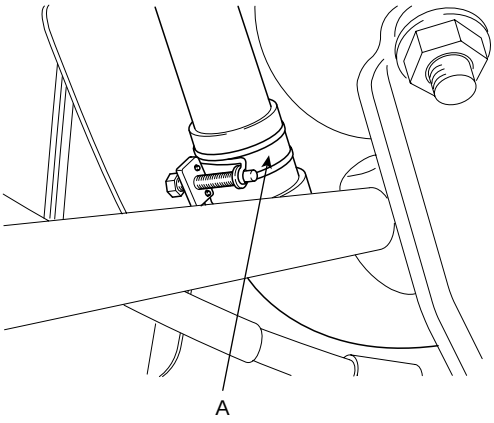

SCMFL6640D

9. Disconnect the leveling tube quick - connector (A).

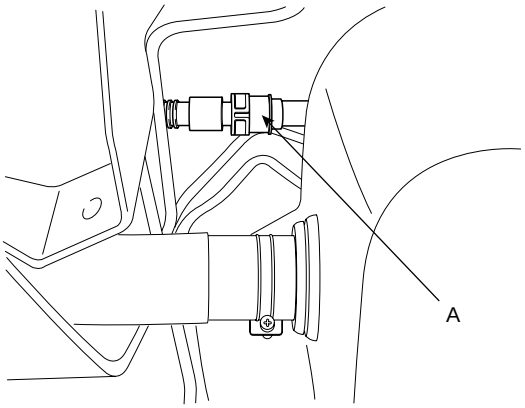

SCMFL6641D

10. Remove the coupling control wiring (A) for 4WD from the fuel tank cover.

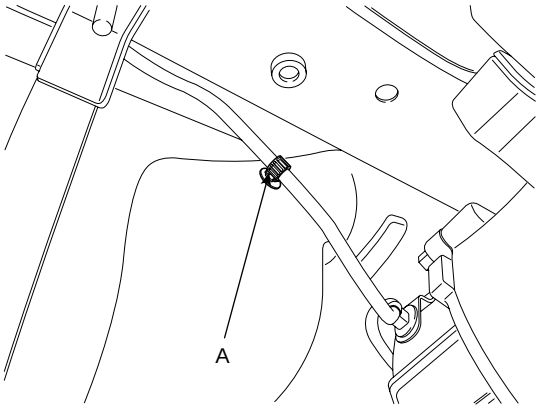

SCMFL6642D

11. Remove the fuel tank from the vehicle after unscrewing the fuel tank band mounting nuts (A).

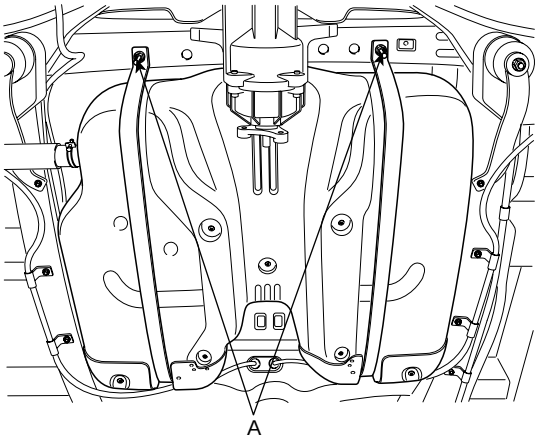

SCMFL6643D

INSTALLATION E1FD378A

1. Install the fuel tank according to the reverse order of "REMOVAL" procedure.

Fuel tank band mounting nuts: 39.2 ~ 53.9 N·m (4.0 ~ 5.5 kgf·m, 28.9 ~ 39.8 lbf·ft)

FUEL PUMP

REMOVAL E39D5211

1. Turn ignition switch OFF and disconnet the negative (-) battery cable.
2. Remove the 2nd seat (Refer to group "BD" in this Shop Manual).
3. Open the carpet (A) for the fuel pump.

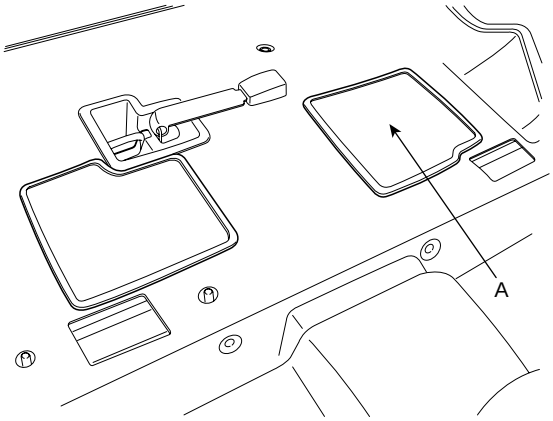

SCMFL6644D

4. Remove the fuel pump service cover (A).

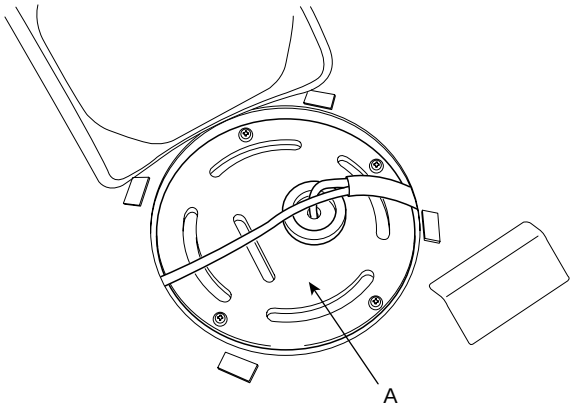

SCMFL6645D

5. Disconnect the fuel pump connector (A), the fuel feed tube quick - connector (B), the fuel return tube quick - connector (C) and the suction tube quick - connector (D).

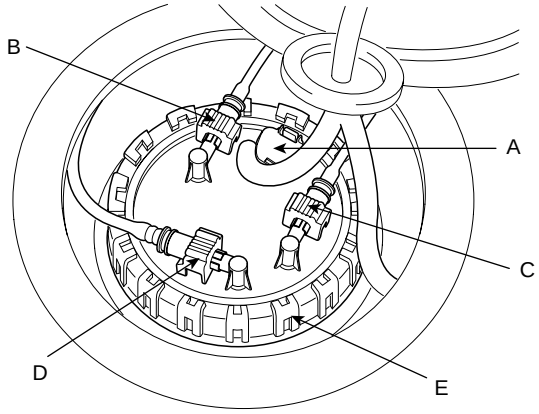

SCMFL6646D

6. Remove the fuel pump after removing the fuel pump plate cover (E) with SST (No.:09310-2B100).

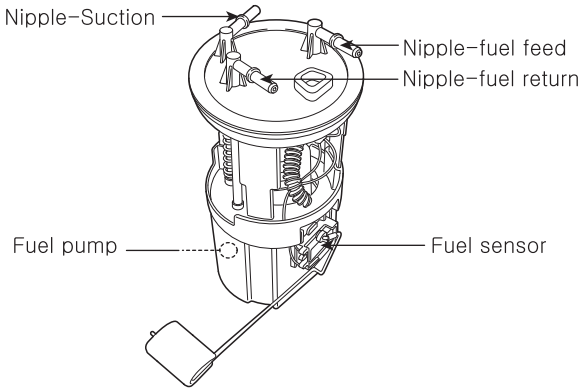

SCMFL6138L

INSTALLATION ECB2D8E5

1. Install the fuel pump according to the reverse order of "REMOVAL" procedure.

Fuel pump plate cover tightening : 5.9 ~ 6.9 N·m (0.6 ~ 0.7 kgf·m, 4.3 ~ 5.1 lbf·ft)

FILLER-NECK ASSEMBLY

REMOVAL ED541232

1. Disconnect the fuel filler hose (A).

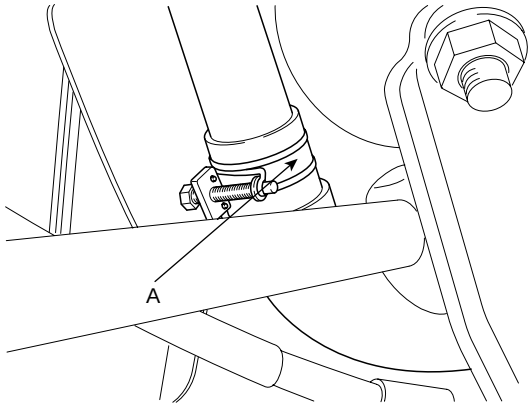

SCMFL6652D

2. Disconnect the leveling tube quick - connnector (A).

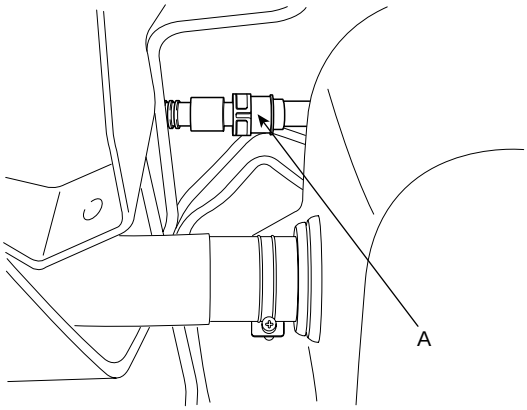

SCMFL6653D

3. Open the fuel filler door, unscrew filler - neck assembly mounting screws (A).

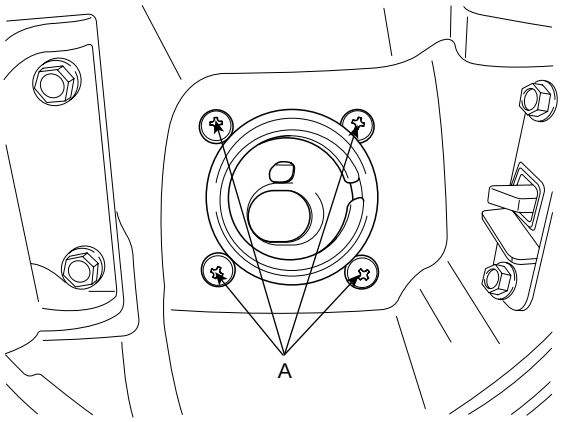

SCMFL6655D

4. Remove the left - rear wheel & tire and the wheel house.
   (Refer to group "DS" in this Shop Manual.)

5. Remove the filler - neck assembly after unscrewing the bracket mounting nuts (A).

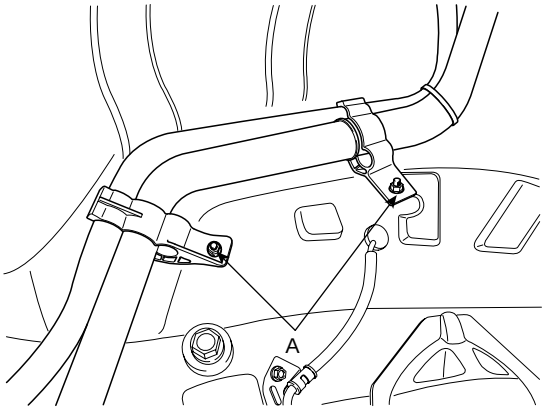

SCMFL6654D

INSTALLATION E58AAF48

1. Install the filler - neck assembly according to the reverse order of "REMOVAL" procedure.

ACCELERATION PEDAL

REMOVAL EDFEF6B5

1. Turn ignition switch OFF and disconnet the negative (-) battery cable.
2. Disconnect the accelerator position sensor connector (A).
3. Remove the accelerator assembly from the vehicle after unscrewing the accelerator mounting bolts (B).

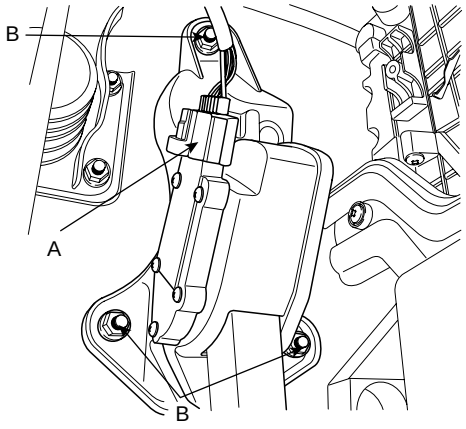

SCMFL6656D

INSTALLATION EBB5B0CD

1. Install the accelerator assembly according to the reverse order of "REMOVAL" procedure.

Accelerator assembly mounting bolt: 16.7 ~ 25.5 N.m (1.7 ~2.6 kgf.m, 12.3 ~ 18.8 lbf.ft)

SUB FUEL SENDER

REMOVAL E9F8FB7C

1. Turn ignition switch OFF and disconnet the negative (-) battery cable.
2. Remove the 2nd seat (Refer to group "BD" in this Shop Manual).
3. Open the carpet (A) for the sub fuel sender.

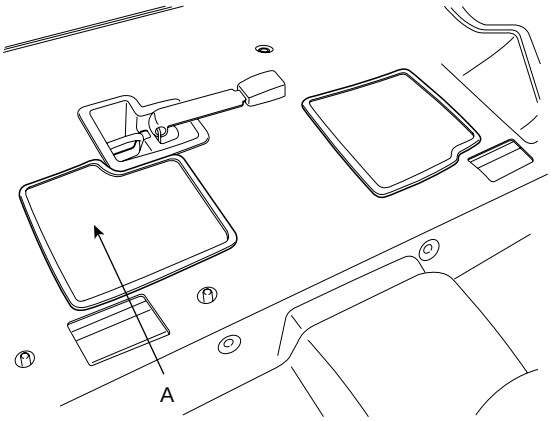

SCMFL6648D

4. Remove the sub fuel sender service cover (A).

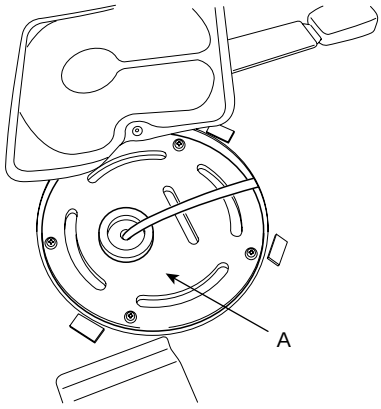

SCMFL6649D

5. Disconnect the sub fuel sender connector (A) and the suction tube quick - connector (B).

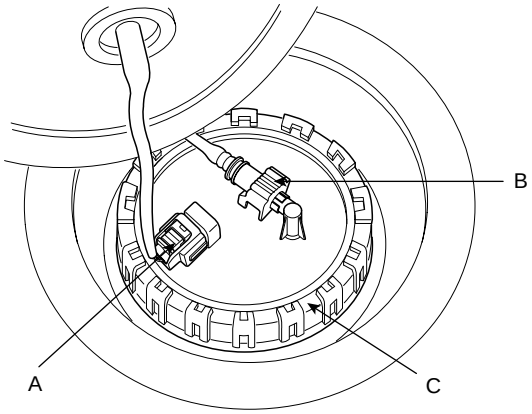

SCMFL6650D

6. Remove the sub fuel sender after removing the fuel pump plate cover (C) with SST (No.:09310-2B100).

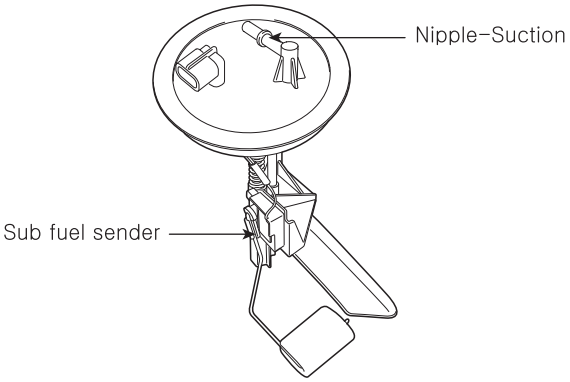

SCMFL6139L

INSTALLATION E8184A8C

1. Install the sub fuel sender according to the reverse order of "REMOVAL" procedure.

Sub fuel sender plate cover tightening : 5.9 ~ 6.9 N·m (0.6 ~ 0.7 kgf·m, 4.3 ~ 5.1 lbf·ft)

FUEL FILTER

COMPONENTS EF4C20BD

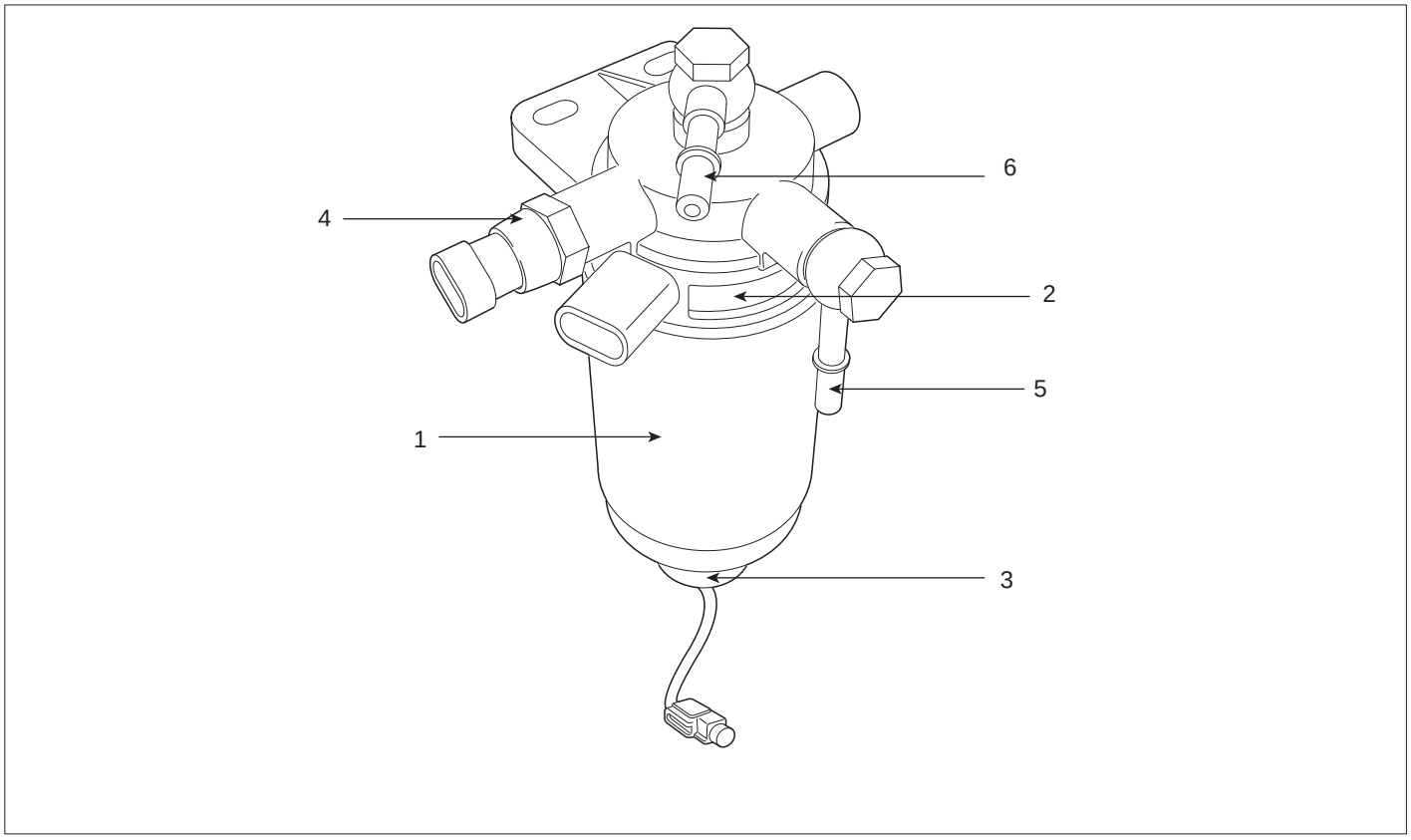

1. Fuel Filter
2. Heater
3. Water Sensor
4. Thermostat
5. Nipple (Fuel input from Fuel Tank)
6. Nipple (Fuel output to High Pressure Pump)

SCMFL6140L

REMOVAL EB3C2386

1. Disconnect the water sensor connector (A), the thermostat connector (B) and the heater connector (C).

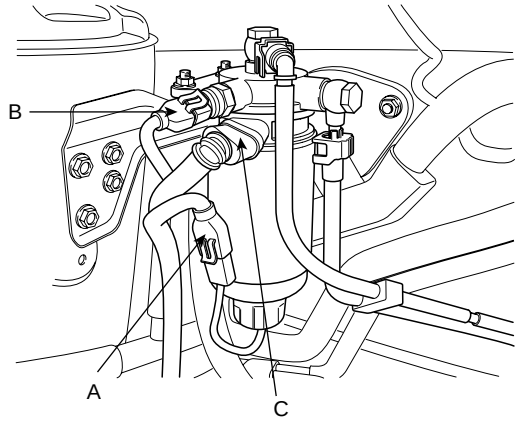

SCMFL6658D

2. Disconnet the fuel input tube quick-connector (A) and the output quick-connector (B).

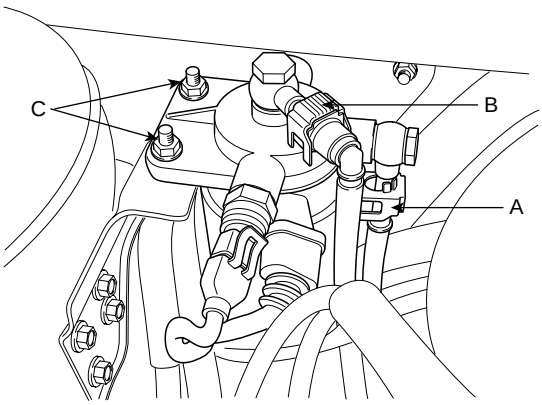

SCMFL6659D

3. Remove the fuel filter after unscrewing the fuel filter bracket mounting bolts (C).

INSTALLATION EB836034

1. Install the fuel filter according to the reverse order of "REMOVAL" procedure.

HIGH PRESSURE FUEL PUMP

DESCRIPTION E1846D0A

The high-pressure pump is the interface between the low pressure fuel system and the high-pressure fuel system. Under all operating conditions, it is responsible for providing adequate high-pressure fuel through out the vehicle's complete service life. This also includes the provision of extra as needed for rapid starting and for rapid build-up of pressure in the rail. The high pressure pump continually generates the system pressure as needed in the high pressure accumulator (common rail). This means therefore, that in contrast to conventional systems, the fuel does not have to be specially compressed for each individual injection process.

REMOVAL E124AF9F

WARNING

- **Common Rail Fuel Injection System is subject to extremely high pressure (Approximately 1,600 bar)**
- **Never perform any work on injection system with engine running or within 30 seconds after the engine stops.**
- **Always pay attention to safety precaution.**
- **Ensure the absolute cleanliness.**
- **It is not recommended to remove the injectors without any notice.**

1. Remove the air cleaner assembly (Refer to group "EM" in this Shop Manual).

2. Disconnect the return hoses (A,B) connected with the injectors and the common rail.

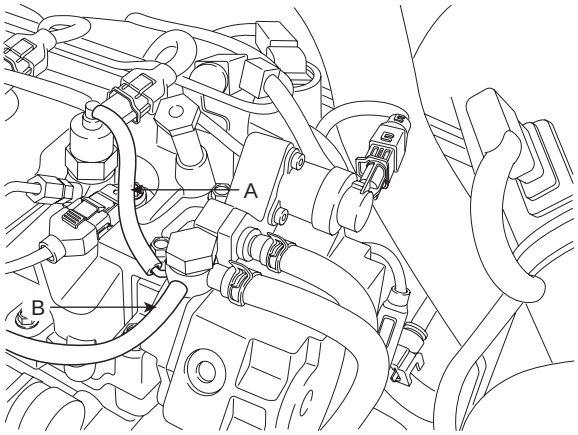

SCMFL6660D

3. Disconnet the fuel feed tube quick-connector (A) and the return tube quick-connector (B).

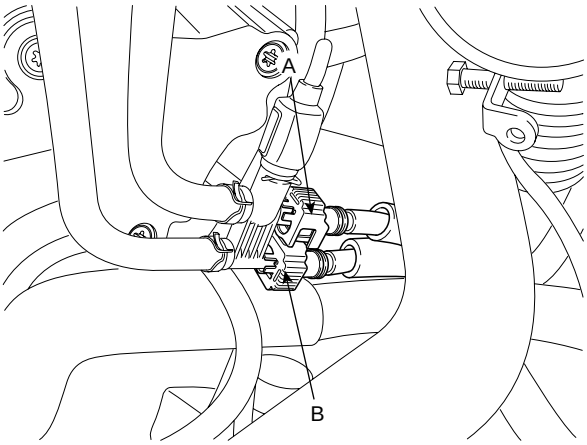

EFQG077A

4. Disconnect the fuel pressure regulator valve connector (A) and the fuel temperature sensor connector (B).

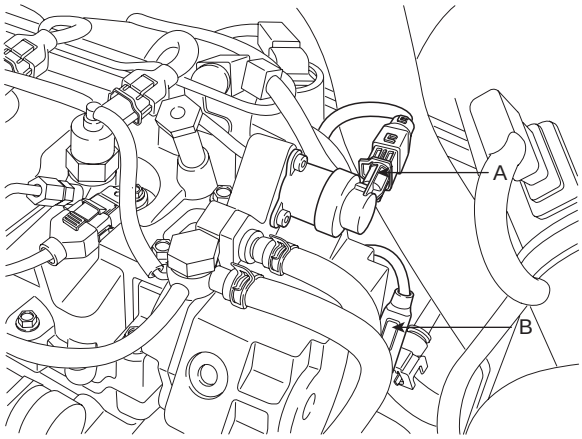

SCMFL6661D

5. Disconenct the high pressure pipe (A) connecting the common rail with the high pressure pump.

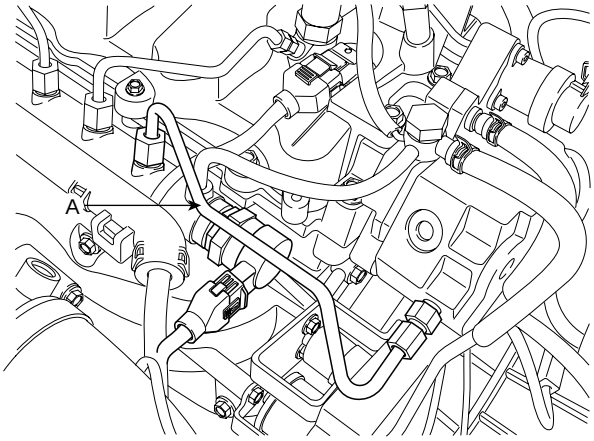

EFQG079A

6. Unscrew the mounting bolts (A) and remove the high pressure pump (B).

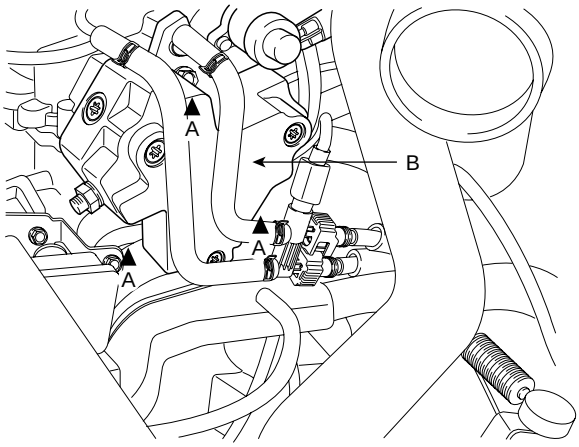

EFQG080A

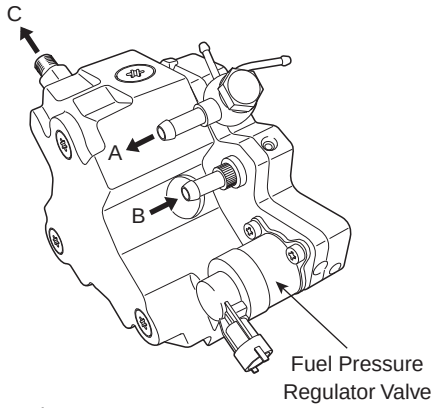

A : To Fuel Tank
(Return Line)
B : From Fuel Tank
C : To Common Rail

SCMFL6141L

INSTALLATION E6B56913

1. Install the high pressure fuel pump according to the reverse order of "REMOVAL" procedure.

NOTE

When installing the high pressure pipe, apply the specified tightening torques to the flange nuts of the high pressure pipe side and the common rail side with SST (Refer to below table).

Item	Dimension	SST No.
Flange Nut (HP Pump Side)	14 mm (0.551 in)	09314-27110
Flange Nut (Common Rail Side)	17 mm (0.669 in)	09314-27120

High pressure fuel pump mounting bolts: 19.6 ~ 26.5 N·m (2.0 ~ 2.7 kgf·m, 14.5 ~ 19.5 lbf·ft)
High pressure pipe flange nuts (Common Rail ↔ HP Pump): 24.5 ~ 28.4 N·m (2.5 ~ 2.9 kgf·m, 18.1 ~ 20.1 lbf·ft)

COMMON RAIL

DESCRIPTION EDCDAA09

The common rail stores the fuel at high pressure. At the same time, the pressure oscillations which are generated due to the high-pressure pump delivery and the injection of fuel are damped by the rail volume. This common rail is common to all cylinders, hence its name "common rail". Even when large quantities of fuel are extracted, the common rail maintains its inner pressure practically constant from the moment the injector opens.

In order to comply with the wide variety of engine installation conditions, the common rail with its flow limiters and the provistions for attaching rail pressure sensor, fuel pressure control valve, and pressure limiter valve is available in a number of different designs.
The available common rail volume is permanently filled with pressurized fuel. The compressibility of the fuel resulting from the high pressure is utilized to achieve the accumulator effect. When fuel leaves the rail for injection, the pressure variations resulting from the pulsating fuel supply from the high-pressure pump are compensated for.

REMOVAL E0F2CC99

WARNING

- **Common Rail Fuel Injection System is subject to extremely high pressure (Approximately 1,600 bar)**
- **Never perform any work on injection system with engine running or within 30 seconds after the engine stops.**
- **Always pay attention to safety precaution.**
- **Ensure the absolute cleanliness.**
- **It is not recommended to remove the injectors without any notice.**

1. Disconnect the rail pressure sensor connector (A) and rail pressure regulator valve connector (B).

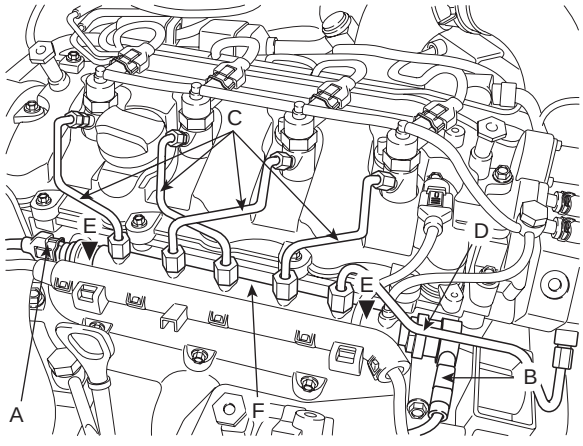

EFQG082A

2. Disconnect the high pressure pipe (C) connecting the injectors with the common rail.
3. Disconnect the high pressure pipe (D) connecting the common rail with the high pressure fuel pump.
4. Unscrew the two mounting bolts (E) and remove the common rail (F).

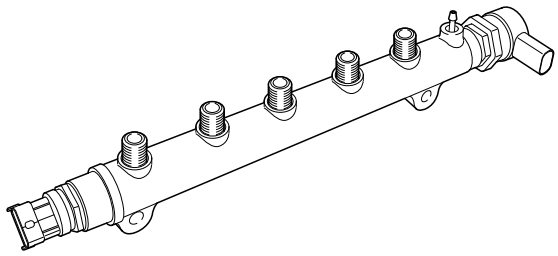

EFQG083A

INSTALLATION EDD55345

1. Install the common rail according to the reverse order of "REMOVAL" procedure.

NOTE

When installing the high pressure pipe, apply the specified tightening torques to the flange nuts of the injectors, the high pressure pipe, and the common rail side with SST (Refer to below table).

Item	Dimension	SST No.
Flange Nut (Injector Side)	14 mm (0.551 in)	09314-27110
Flange Nut (HP Pump Side)		
Flange Nut (Common Rail Side)	17 mm (0.669 in)	09314-27120

· Common rail mounting bolts: 19.6 ~ 26.5 N·m (2.0 ~ 2.7 kgf·m, 14.5 ~ 19.5 lbf·ft)
· High pressure pipe flange nuts (Injectors ↔ Common Rail): 24.5 ~ 28.4 N·m (2.5 ~ 2.9 kgf·m, 18.1 ~ 20.1 lbf·ft)
· High pressure pipe flange nuts (Common Rail ↔ HP Pump): 24.5 ~ 28.4 N·m (2.5 ~ 2.9 kgf·m, 18.1 ~ 20.1 lbf·ft)

INJECTOR

DESCRIPTION EE4DD145

The start of injection and the injected fuel quantity are adjusted by electrically triggered injectors. These injectors supersede the nozzle-and-holder assembly (nozzle and nozzle-holder). Similar to the already existing nozzle-holder assemblies in direct-injection (DI) diesel engines, clamps are preferably used for installing the injectors in the cylinder head. This means that the Common Rail injectors can be installed in already existing DI diesel engines without major modifications to the cylinder head.

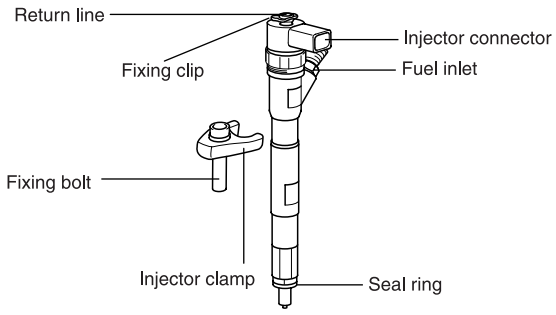

EFQG101A

REMOVAL E99E9BCE

WARNING

- **Common Rail Fuel Injection System is subject to extremely high pressure (Approximately 1,600 bar)**
- **Never perform any work on injection system with engine running or within 30 seconds after the engine stops.**
- **Always pay attention to safety precaution.**
- **Ensure the absolute cleanliness.**
- **It is not recommended to remove the injectors without any notice.**

1. Disconnect the injector connector (A).

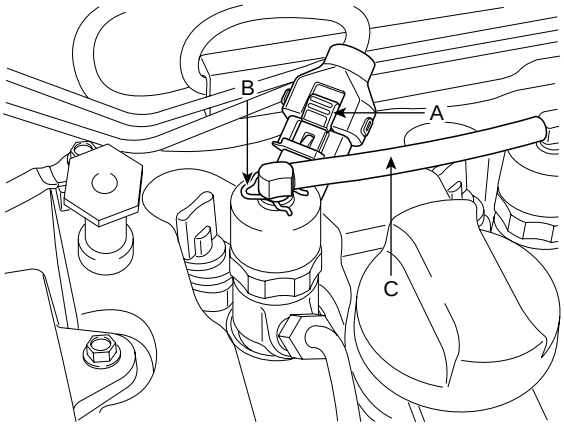

EFQG084A

2. After removing the clip (B), disconnect the retun hose (C) from the injectors

3. Disconnect the high pressure pipe (A) connecting the injectors with the common rail.

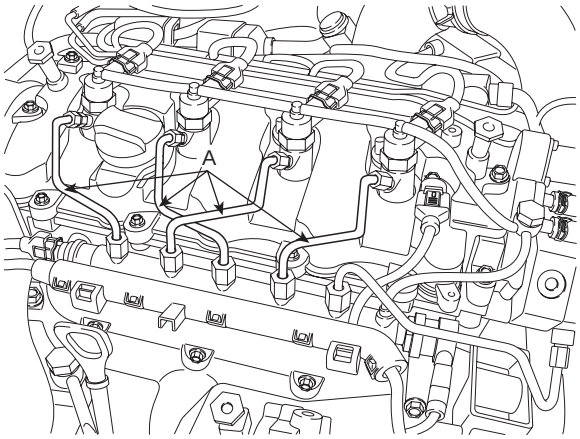

EFQG085A

4. Rotate the lever (A) clockwise and pull it upward.

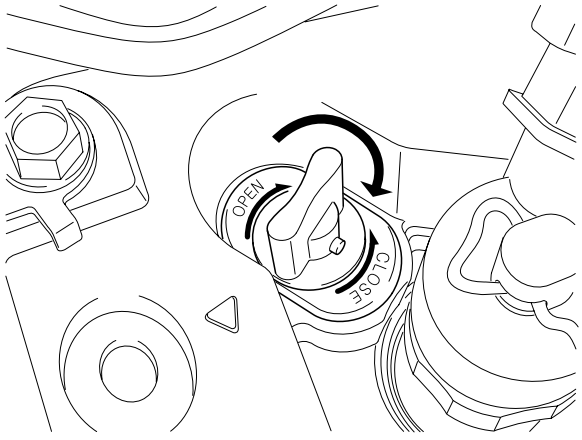

EFQG086A

5. Unscrew the clamp tightening bolt (A) and pull the injector upward with the "Injector Remover" and the "Injector Remover Adapter" (Refer to "SPECIAL SERVICE TOOL" section).

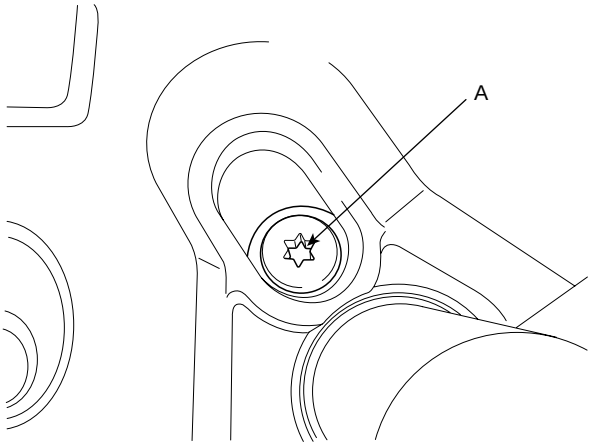

EFQG087A

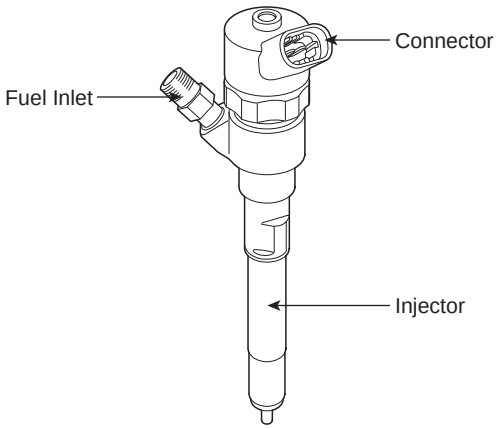

EFQG088A

INSTALLATION E63E0B78

1. Install the injector according to the reverse order of "REMOVAL" procedure.

NOTE

When installing the injector, MUST REPLACE the O-ring (A) and apply a grease to that.

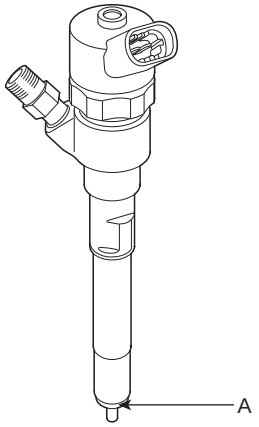

EFQG089A

NOTE

When installing the high pressure pipe, apply the specified tightening torques to the flange nuts of the injectors and the common rail side with SST (Refer to below table).

Item	Dimension	SST No.
Flange Nut (Injector Side)	14 mm (0.551 in)	09314-27110
Flange Nut (Common Rail Side)	17 mm (0.669 in)	09314-27120

· Injector clamp mounting bolts: 24.5 ~ 28.4 N·m (2.5 ~ 2.9 kgf·m, 18.1 ~ 20.1 lbf·ft)
· High pressure pipe flange nuts (Injectors ↔ Common Rail): 24.5 ~ 28.4 N·m (2.5 ~ 2.9 kgf·m, 18.1 ~ 20.1 lbf·ft)

REPLACEMENT E16A29BC

CAUTION

After replacing (an) injector(s), MUST input the injector data (7 digit) into the ECM.

1. Turn ignition switch OFF.
2. Disconnect the negative (-) battery cable.
3. Replace the injector with a new one according to the "REMOVAL" and "INSTALLATION" procedures.
4. Connect a scan tool to Data Link Connector (DLC).
5. Connect the negative (-) battery cable.
6. Turn ignition switch on.
7. Select "ENGINE (DIESEL)".

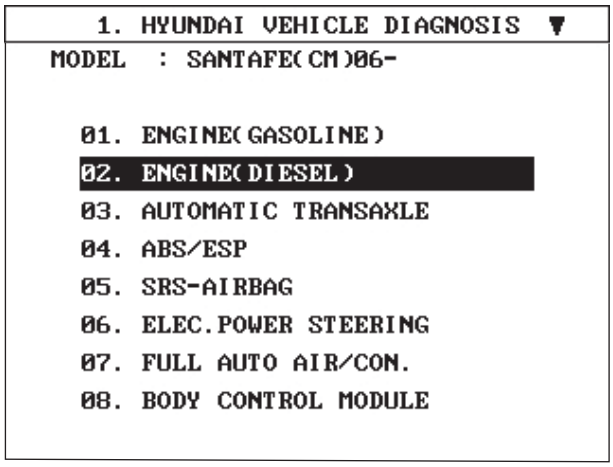

SCMFL6114L

8. Select "INJECTOR SPECIFIC DATA".

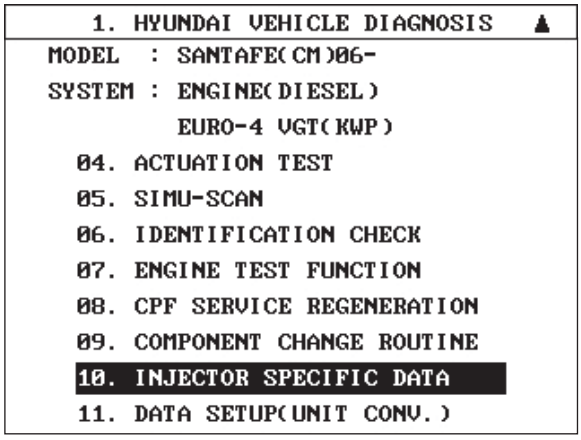

SCMFL6142L

9. Press "ENTER" key.

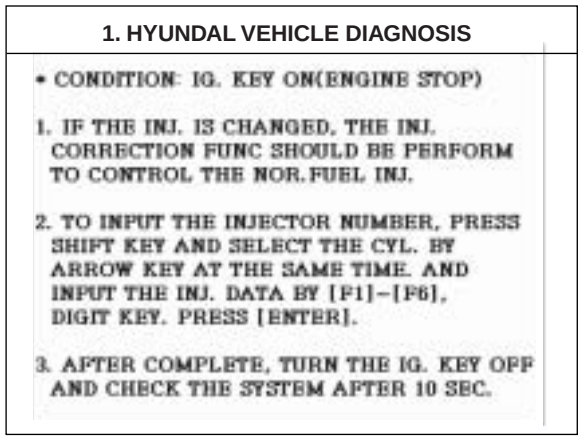

SCMFL6143L

10. Input the injector data (7 digit) written on the top of each injector with function keys ([F1] ~ [F6]) and number keys.

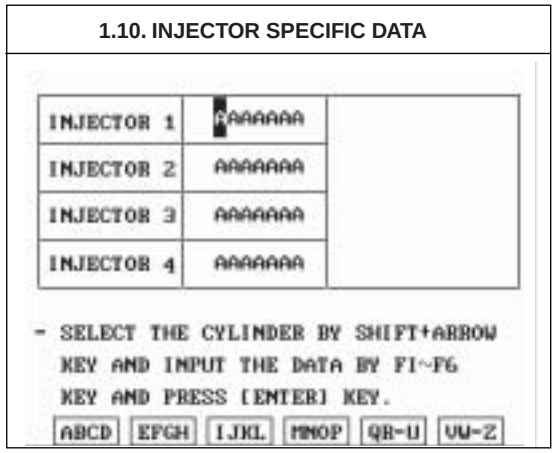

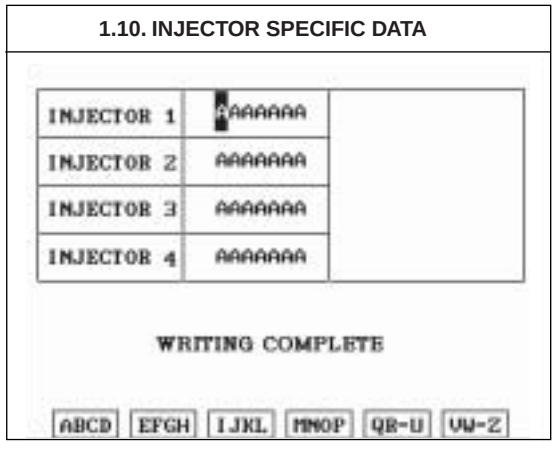

SCMFL6144L

11. Wait 10 seconds after displaying "WRITING COMPLETE", turn ignition switch OFF.

NOTE

When "WRITING FAIL" is displayed on the scan tool, input injector data (7 digits) of each cylinder into a new ECM again starting from 6th step.

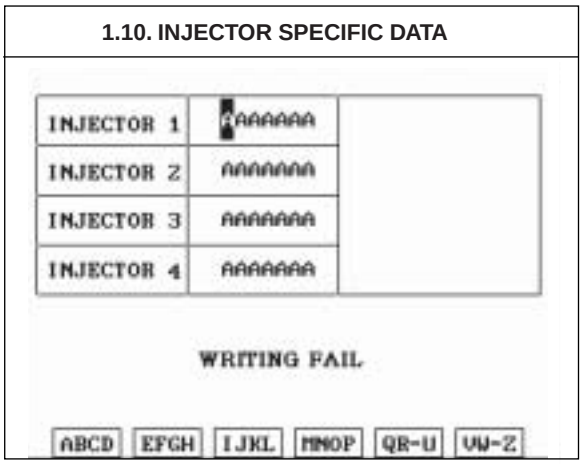

SCMFL6145L

INSPECTION E67C26FA

USING HI-SCAN(PRO)

TEST MODE

- COMPRESSION TEST
- IDLE SPEED COMPARISON
- INJECT QUANTITY COMPARISON

TEST PROCEDURE

1. Connect Scan tool to the DLC and select "Vehicle" and "Engine Test Function".

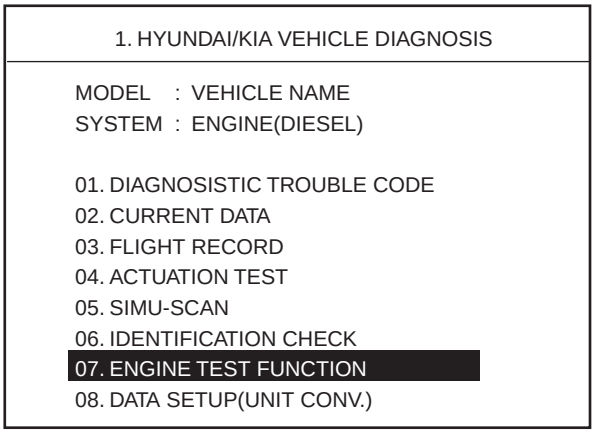

EFQG090A

2. Information for ECM version is displayed as below.

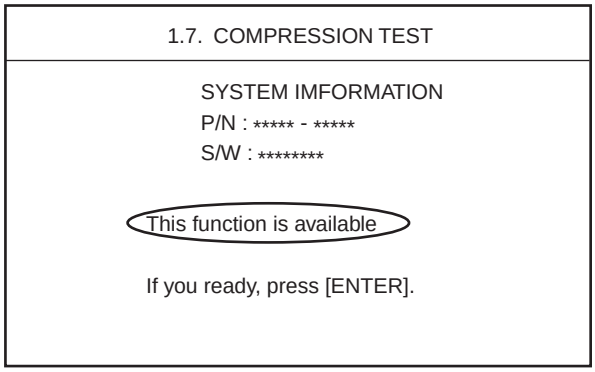

<Available system>

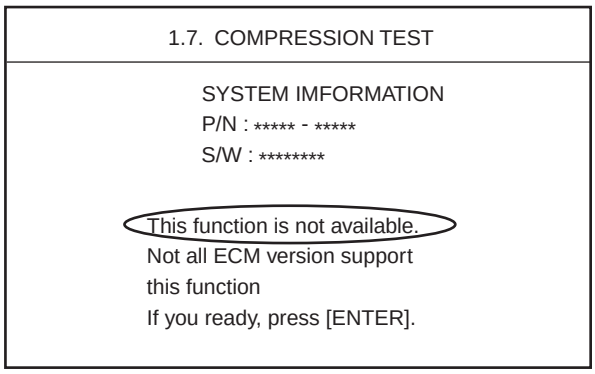

<Not available system>

LFIF660B

3. After pressing "[ENTER]" select "COMPRESSION TEST" mode and press "[ENTER]".

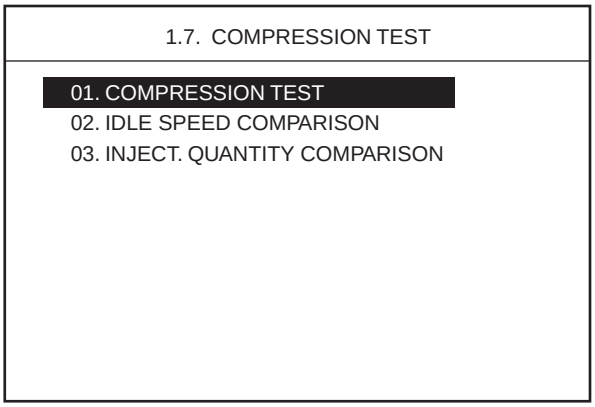

LFIF660D

4. Set the test condition described as below screen and then, crank engine. When engine stop message being appeared, stop cranking.

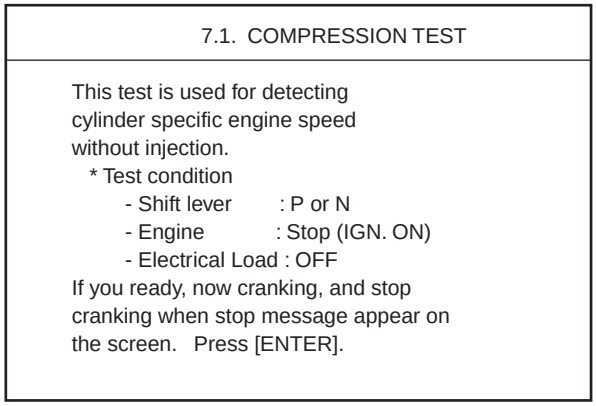

LFIF660E

5. Press "ANAL" and the test result is appeared.

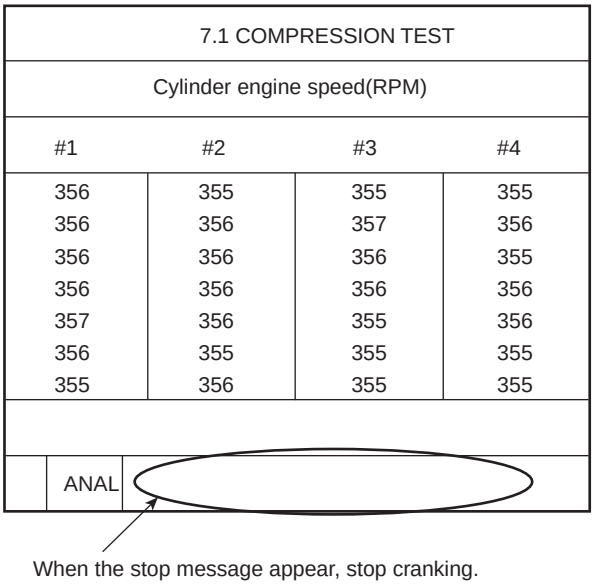

LFIF660F

NOTE

During cranking engine does not start.

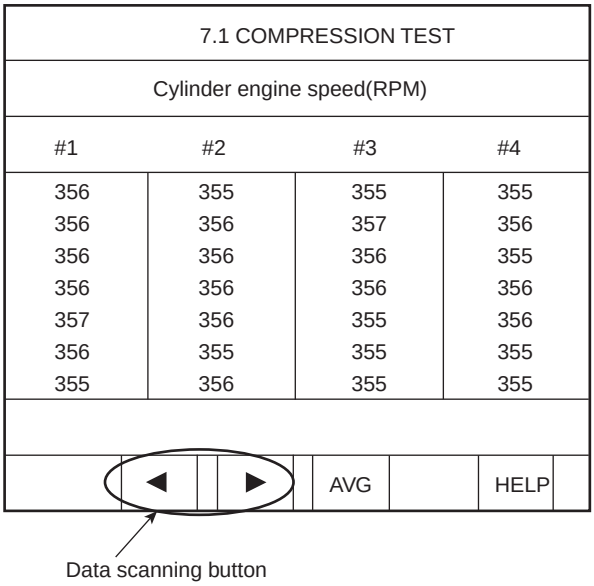

LFIF660G

6. Press "AVG" and the data average of each cylinder is appeared.
   Press "HELP" and description of the data is appeared.

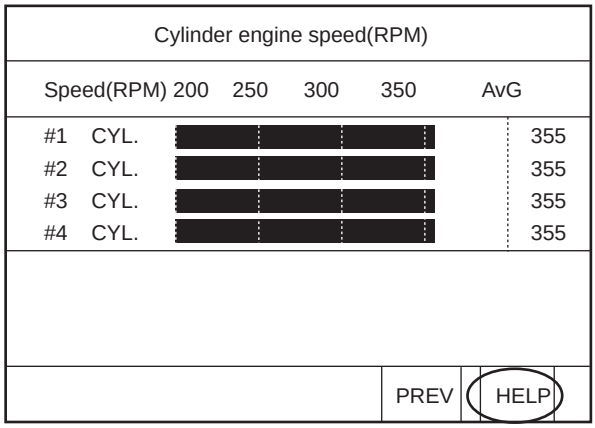

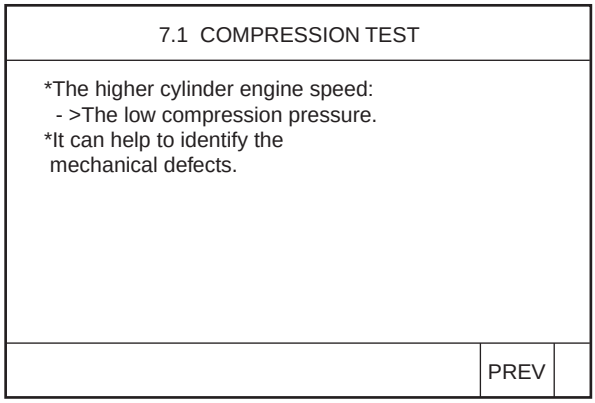

LFIF660H

7. After pressing "ESC", select "IDLE SPEED COMPARISON" and press "[ENTER]".

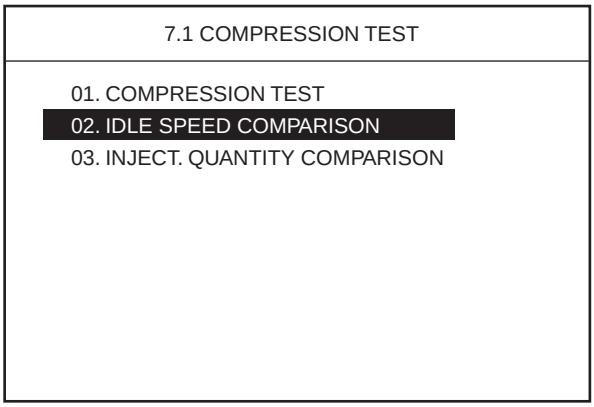

LFIF002A

8. Set the test condition described as below screen and press "[ENTER]".

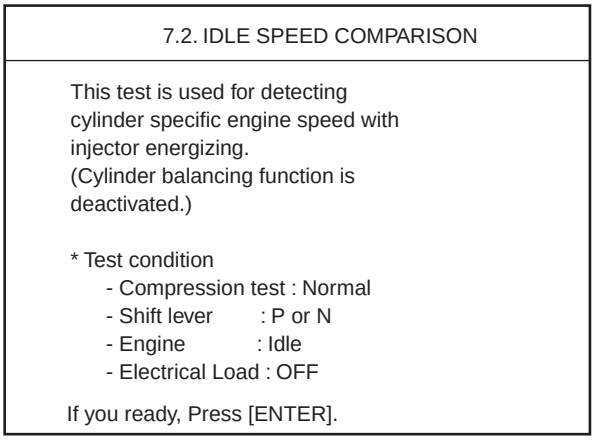

LFIF660J

9. The rpm data of each cylinder is appeared.

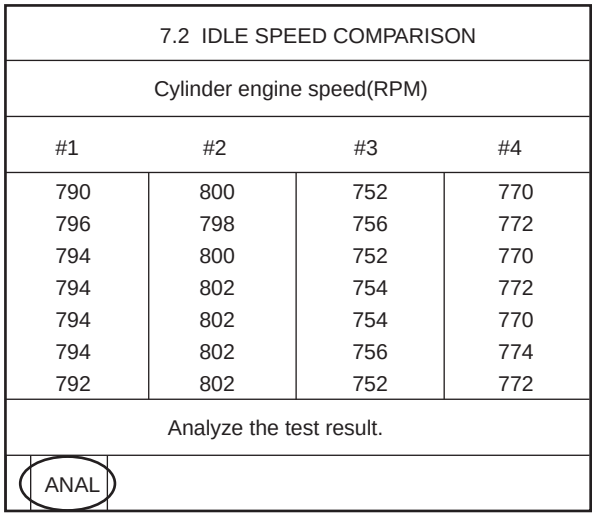

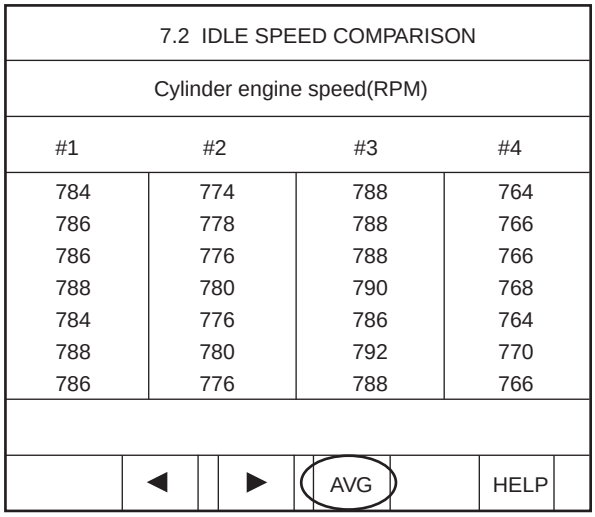

LFIF660K

10. Press "AVG" and teh data average of each cylinder is appeared.

    Press "HELP" and description of the data is appeared.

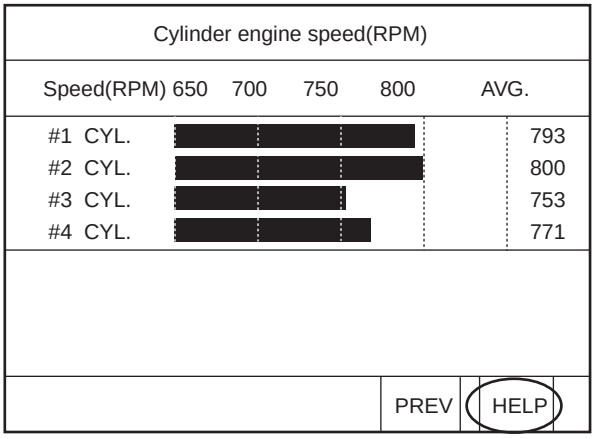

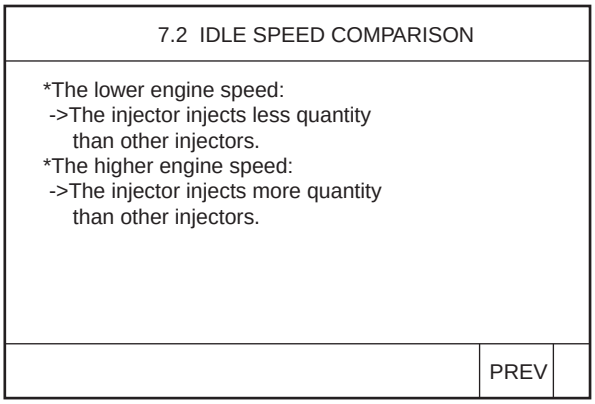

LFIF660M

11. After pressing "ESC", select "INJECT QUANTITY COMPARISON" and press "[ENTER]".

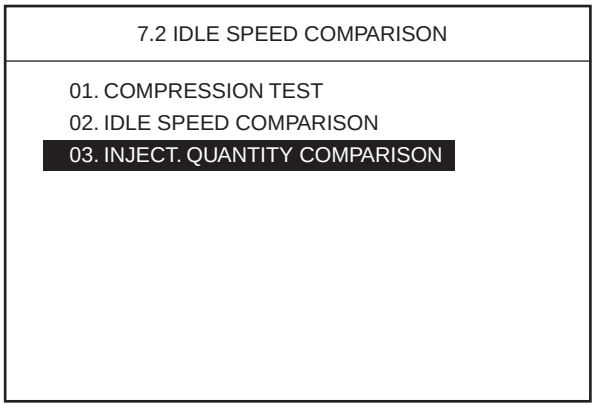

LFIF700A

12. Set the test condition described as below screen and press "[ENTER]".

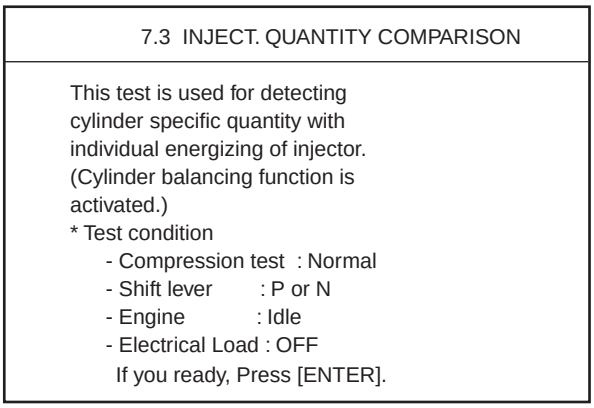

LFIF660O

13. The data of each cylinder about RPM and compensating injection quantity is appeared.

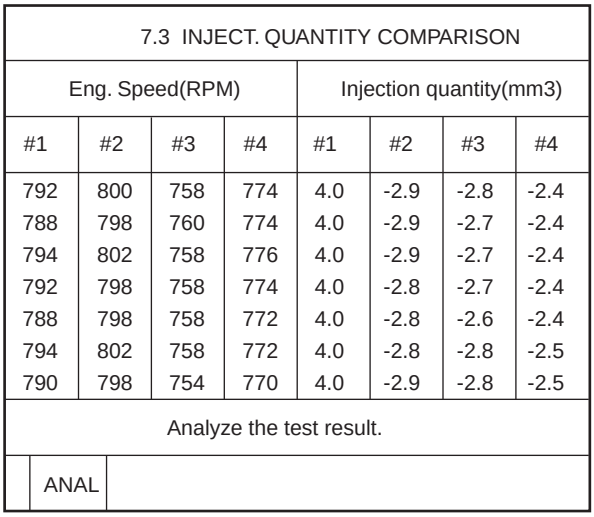

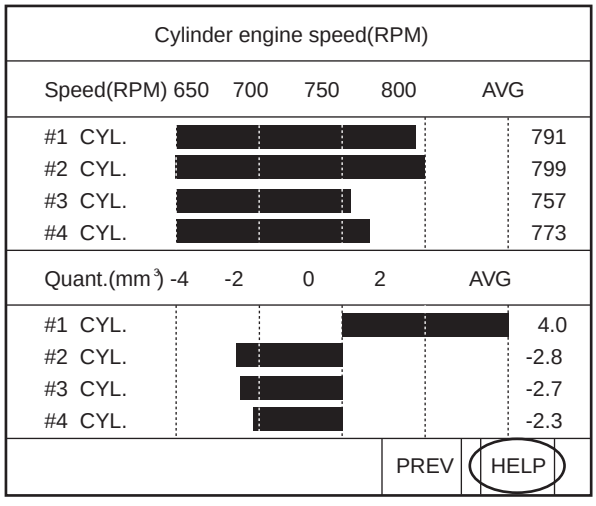

<Abnormal state>

LFIF660P

14. Press "HELP" and description of the data is displayed as below.

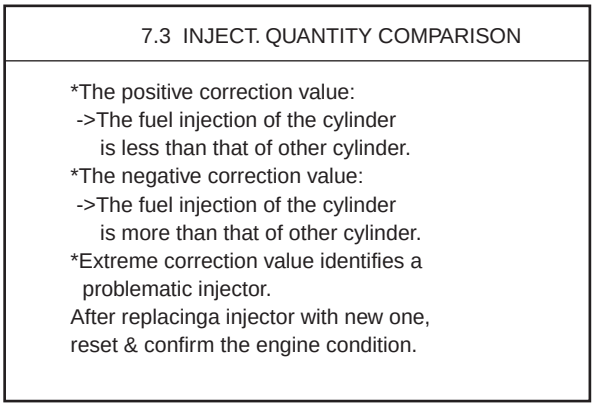

LFIF660R

15. Replace the default injector, and then repeat previous test modes to check if the injector is normal.

Fuel System

GENERAL

GASOLINE ENGINE CONTROL SYSTEM

- ETC (ELECTRONIC THROTTLE CONTROL) SYSTEM
- MASS AIR FLOW SENSOR (MAFS)
- INTAKE AIR TEMPERATURE SENSOR (IATS)
- MANIFOLD ABSOLUTE PRESSURE SENSOR (MAPS)
- ENGINE COOLANT TEMPERATURE SENSOR (ECTS)
- CAMSHAFT POSITION SENSOR (CMPS)
- CRANKSHAFT POSITION SENSOR (CKPS)
- HEATED OXYGEN SENSOR (HO2S)
- KNOCK SENSOR (KS)
- INJECTOR
- CVVT OIL CONTROL VALVE (OCV)
- CVVT OIL TEMPERATURE SENSOR(OTS)
- PURGE CONTROL SOLENOID VALVE (PCSV)
- VARIABLE INTAKE SOLENOID (VIS) VALVE
- ACCELERATOR POSITION SENSOR (APS)
- POWERTRAIN CONTROL MODULE (PCM)

DTC TROUBLESHOOTING PROCEDURES

FUEL DELIVERY SYSTEM

- FUEL PUMP
- SUB FUEL SENDER
- FUEL TANK
- FILLER-NECK ASSEMBLY
- ACCELERATOR PEDAL

GENERAL

SPECIFICATIONS E347D44B

FUEL DELIVERY SYSTEM

Items	Specification	
Fuel Tank	Capacity	75 lit. (16.5 Imp.gal., 19.8 U.S.gal.)
Fuel Filter (built in Fuel Pump assembly)	Type	High pressure type
Fuel Pressure Regulator (built in Fuel Pump assembly)	Regulated Fuel Pressure	375 ~ 385 kPa(3.82 ~ 3.92 kgf/㎠, 54.3 ~ 55.8 psi)
Fuel Pump	Type	Electrical, in-tank type
	Driven by	Electric motor

SENSORS

MASS AIR FLOW SENSOR (MAFS)

▷ Type: Hot-film type
▷ Specification

Air Flow (kg/h)	Frequency (Hz)
12.6 kg/h	2,617Hz
18.0 kg/h	2,958Hz
23.4 kg/h	3,241Hz
32.4 kg/h	3,653Hz
43.2 kg/h	4,024Hz
57.6 kg/h	4,399Hz
72.0 kg/h	4,704Hz
108.0 kg/h	5,329Hz
144.0 kg/h	5,897Hz
198.0 kg/h	6,553Hz
270.0 kg/h	7,240Hz
360.0 kg/h	7,957Hz
486.0 kg/h	8,738Hz
666.0 kg/h	9,644Hz
900.0 kg/h	10,590Hz

INTAKE AIR TEMPERATURE SENSOR (IATS)

▷ Type: Thermistor type
▷ Specification

Temperature		Resistance (kΩ)
℃	°F	
-40	-40	100.87
-20	-4	28.58
0	32	9.40
10	50	5.66
20	68	3.51
40	104	1.47
60	140	0.67
80	176	0.33

MANIFOLD ABSOLUTE PRESSURE SENSOR (MAPS)

▷ Type: Piezo-resistive pressure type
▷ Specification

Pressure (kPa)	Output Voltage (V)
20.0kPa	0.79
46.66kPa	1.84
101.32kPa	4.0

ENGINE COOLANT TEMPERATURE SENSOR (ECTS)

▷ Type: Thermistor type
▷ Specification

Temperature		Resistance (kΩ)
℃	˚F	
-40	-40	48.14
-20	-4	14.13 ~ 16.83
0	32	5.79
20	68	2.31 ~ 2.59
40	104	1.15
60	140	0.59
80	176	0.32

THROTTLE POSITION SENSOR (TPS)

▷ Type: Variable resistor type
▷ Specification (When reference voltage = 5.0V)

Throttle Angle (˚)	Output Voltage(V)	
	TPS1	TPS2
0	0	5.0
10	0.5	4.5
20	0.9	4.1
30	1.4	3.6
40	1.8	3.2
50	2.3	2.7
60	2.7	2.3
70	3.2	1.8
80	3.6	1.4
90	4.1	0.9
100	4.5	0.5
110	5.0	0.0

Item	Sensor Resistance (kΩ)
TPS1	4.0 ~ 6.0 [20℃ (68˚F)]
TPS2	2.7 ~ 4.1 [20℃ (68˚F)]

ACCELERATOR POSITION SENSOR (APS)

▷ Type: Variable resistor type
▷ Specification (When reference voltage = 5.0V)

Accelerator Position	Output Voltage (V)	
	APS1	APS2
C.T	0.70 ~ 0.80	0.29 ~ 0.46
W.O.T	3.85 ~ 4.35	1.93 ~ 2.18

Item	Sensor Resistance (kΩ)
APS1	0.7 ~ 1.3 [20℃ (68˚F)]
APS2	1.4 ~ 2.6 [20℃ (68˚F)]

HEATED OXYGEN SENSOR (HO2S)

▷ Type: Zirconia (ZrO2) type
▷ Specification

A/F Ratio	Output Voltage (V)
RICH	0.80 ~ 0.92
LEAN	0.1

Item	Resistance (Ω)
Sensor Heater	3.0 ~ 4.0 [21℃ (69.8˚F)]

CAMSHAFT POSITION SENSOR (CMPS)

▷ Type: Hall effect type
▷ Specification

Item	Specification
Output Voltage (V)	High: 4.75 ~ 5.25
	Low: 0 ~ 0.7
Air Gap (mm)	0.5 ~ 1.5

CRANKSHAFT POSITION SENSOR (CKPS)

▷ Type: Magnetic field sensitive type
▷ Specification

Item	Specification
Coil Resistance (Ω)	630 ~ 770 [20℃ (68˚F)]
Air Gap (mm)	0.5 ~ 1.5

KNOCK SENSOR (KS)

▷ Type: Piezo-electricity type
▷ Specification

Item	Specification
Capacitance (pF)	950 ~ 1,350pF

CVVT OIL TEMPERATURE SENSOR (OTS)

▷ Type: Thermistor type
▷ Specification

Temperature		Resistance (kΩ)
℃	˚F	
-40	-40	52.0
-20	-4	16.5
0	32	6.0
20	68	2.45
40	104	1.10
60	140	0.544
80	176	0.290
100	212	0.164
120	248	0.099

ACTUATORS

INJECTOR

▷ Number: 6
▷ Specification

Item	Specification
Coil Resistance (Ω)	13.8 ~ 15.2 [20℃ (68˚F)]

PURGE CONTROL SOLENOID VALVE (PCSV)

▷ Specification

Item	Specification
Coil Resistance (Ω)	14.0 ~ 18.0 [20℃ (68˚F)]

VARIABLE INTAKE SOLENOID (VIS) VALVE #1 (SURGE TANK SIDE)

▷ Specification

Item	Specification
Coil Resistance (Ω)	29.0 ~ 35.0 [22℃ (71.6˚F)]

VARIABLE INTAKE SOLENOID (VIS) VALVE #2 (INTAKE MANIFOLD SIDE)

▷ Specification

Item	Specification
Coil Resistance (Ω)	29.0 ~ 35.0 [20℃ (68˚F)]

CVVT OIL CONTROL VALVE (OCV) [BANK 1]

▷ Specification

Item	Specification
Coil Resistance (Ω)	6.7 ~ 7.7 [20℃ (68˚F)]

CVVT OIL CONTROL VALVE (OCV) [BANK 2]

▷ Specification

Item	Specification
Coil Resistance (Ω)	6.7 ~ 7.7 [20℃ (68˚F)]

ETC MOTOR

▷ Specification

Item	Specification
Coil Resistance (Ω)	1.275 ~ 1.725 [20℃ (68˚F)]

IGNITION COIL

▷ Type: Stick type
▷ Specification

Item	Specification
1st Coil Resistance (Ω)	0.62Ω±10% [20℃ (68˚F)]
2nd Coil Resistance (kΩ)	7.0kΩ±15% [20℃ (68˚F)]

SERVICE STANDARD E85141FD

Ignition Timing	BTDC 7˚ ± 10˚		
Idle Speed	A/CON OFF	Neutral,N,P-range	680 ± 100 rpm
		D-range	630 ± 100 rpm
	A/CON ON	Neutral,N,P-range	680 ± 100 rpm
		D-range	630 ± 100 rpm

TIGHTENING TORQUES EAEFEBE8

ENGINE CONTROL SYSTEM

Item	kgf·m	N·m	lbf·ft
PCM installation bolts (on upper bracket)	1.0 ~ 1.2	9.8 ~ 11.8	7.2 ~ 8.7
PCM upper bracket installation bolts (on air cleaner assembly)	1.0 ~ 1.2	9.8 ~ 11.8	7.2 ~ 8.7
Camshaft position sensor [Bank 1] installation bolt	0.7 ~ 1.0	6.9 ~ 9.8	5.1 ~ 7.2
Camshaft position sensor [Bank 2] installation bolt	0.7 ~ 1.0	6.9 ~ 9.8	5.1 ~ 7.2
Crankshaft position sensor installation bolt	0.7 ~ 1.0	6.9 ~ 9.8	5.1 ~ 7.2
CVVT Oil control valve [Bank 1] installation bolt	0.8 ~ 1.0	7.8 ~ 9.8	5.8 ~ 7.2
CVVT Oil control valve [Bank 2] installation bolt	0.8 ~ 1.0	7.8 ~ 9.8	5.8 ~ 7.2
CVVT Oil temperature sensor installation	2.0 ~ 4.0	19.6 ~ 39.2	14.5 ~ 28.9
Engine coolant temperature sensor installation	2.0 ~ 4.0	19.6 ~ 39.2	14.5 ~ 28.9
ETC module installation bolt	0.9 ~ 1.1	8.8 ~ 10.8	6.5 ~ 8.0
Heated oxygen sensor (Bank 1 / Sensor 1) installation	3.5 ~ 4.5	34.3 ~ 44.1	25.3 ~ 32.6
Heated oxygen sensor (Bank 1 / Sensor 2) installation	3.5 ~ 4.5	34.3 ~ 44.1	25.3 ~ 32.6
Heated oxygen sensor (Bank 2 / Sensor 1) installation	3.5 ~ 4.5	34.3 ~ 44.1	25.3 ~ 32.6
Heated oxygen sensor (Bank 2 / Sensor 2) installation	3.5 ~ 4.5	34.3 ~ 44.1	25.3 ~ 32.6
Ignition coil installation bolt	1.0 ~ 1.2	9.8 ~ 11.8	7.2 ~ 8.7
Knock sensor [Bank 1] installation	1.9 ~ 2.4	18.6 ~ 23.5	13.7 ~ 17.4
Knock sensor [Bank 2] installation	1.9 ~ 2.4	18.6 ~ 23.5	13.7 ~ 17.4
Manifold absolute pressure sensor installation bolt	0.8 ~ 1.2	7.8 ~ 11.8	5.8 ~ 8.7

FUEL DELIVERY SYSTEM

Item	kgf·m	N·m	lbf·ft
Fuel tank band mounting nuts	4.0 ~ 5.5	39.2 ~ 54.0	28.9 ~ 39.8
Fuel pump plate cover tightening	6.0 ~ 7.0	58.9 ~ 68.7	43.4 ~ 50.6
Sub fuel sender plate cover tightening	6.0 ~ 7.0	58.9 ~ 68.7	43.4 ~ 50.6
Delivery pipe installation bolts	0.9 ~ 1.4	8.8 ~ 13.7	6.5 ~ 10.1
Accelerator pedal module installation bolts	1.7 ~ 2.6	16.7 ~ 25.5	12.3 ~ 18.8

SPECIAL SERVICE TOOLS E5DDDCC6

Tool (Number and name)	Illustration	Application
09353-24100 Fuel Pressure Gauge	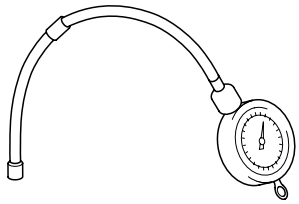 EFDA003A	Measuring the fuel line pressure
09353-38000 Fuel Pressure Gauge Adapter	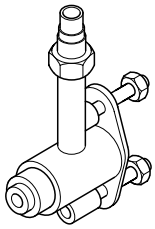 BF1A025D	Connection between the delivery pipe and fuel feed line
09353-24000 Fuel Pressure Gauge Connector	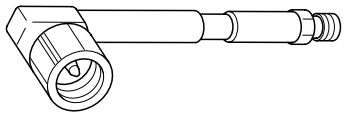 EFDA003C	Connection between Fuel Pressure Gauge (09353-24100) and Fuel Pressure Gauge Adapter (09353-38000)
09310-2B100 Fuel Pump Plate Cover Wrench	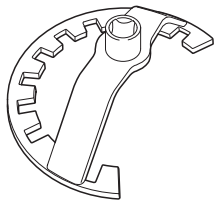 SCMFL6666D	Removal of installation of fuel pump plate cover

REFERENCE SERVICE TOOLS (I) - WIRE HARNESS REPAIR KIT II

Tool Number	Tool Name
TRK00A	Wiring Repair Kit

*For more information of the Wiring Repair Kit, please refer to BE group - "REFERENCE SERVICE TOOLS"

BASIC TROUBLESHOOTING E726FCB8

BASIC TROUBLESHOOTING GUIDE

1	**Bring Vehicle to Workshop**

2	**Analyze Customer's Problem**
	Ask the customer about the conditions and environment relative to the issue (Use CUSTOMER PROBLEM ANALYSIS SHEET).

3	**Verify Symptom, and then Check DTC and Freeze Frame Data**
	Connect Hi-Scan (Pro) to Diagnostic Link Connector (DLC). Record the DTC and freeze frame data. ***NOTE*** *To erase DTC and freeze frame data, refer to Step 5.*

4	**Confirm the Inspection Procedure for the System or Part**
	Using the SYMPTOM TROUBLESHOOTING GUIDE CHART, choose the correct inspection procedure for the system or part to be checked.

5	**Erase the DTC and Freeze Frame Data**
	WARNING **NEVER erase DTC and freeze frame data before completing Step 2 MIL/DTC in "CUSTOMER PROBLEM ANALYSIS SHEET".**

6	**Inspect Vehicle Visually**
	Go to Step 11, if you recognize the problem.

7	**Recreate (Simulate) Symptoms of the DTC**
	Try to recreate or simulate the symptoms and conditions of the malfunction as described by customer. If DTC(s) is/are displayed, simulate the condition according to troubleshooting procedure for the DTC.

8	**Confirm Symptoms of Problem**
	If DTC(s) is/are not displayed, go to Step 9. If DTC(s) is/are displayed, go to Step 11.

9	**Recreate (Simulate) Symptom**
	Try to recreate or simulate the condition of the malfunction as described by the customer.

10	**Check the DTC**
	If DTC(s) does(do) not occur, refer to INTERMITTENT PROBLEM PROCEDURE in BASIC INSPECTION PROCEDURE. If DTC(s) occur(s), go to Step 11.

11	**Perform troubleshooting procedure for DTC**

12	**Adjust or repair the vehicle**

13	**Confirmation test**

14	**END**

CUSTOMER PROBLEM ANALYSIS SHEET

1. VEHICLEINFORMAITON

VIN No.		Transmission	☐ M/T ☐ A/T ☐CVT ☐ etc.
Production date		Driving type	☐ 2WD (FF) ☐ 2WD (FR) ☐ 4WD
Odometer Reading	_____km/mile		

2. SYMPTOMS

☐ Unable to start	☐ Engine does not turn over ☐ Incomplete combustion ☐ Initial combustion does not occur
☐ Difficult to start	☐ Engine turns over slowly ☐ Other_____
☐ Poor idling	☐ Rough idling ☐ Incorrect idling ☐ Unstable idling (High:_____ rpm, Low:_____rpm) ☐ Other
☐ Engine stall	☐ Soon after starting ☐ After accelerator pedal depressed ☐ After accelerator pedal released ☐ During A/C ON ☐ Shifting from N to D-range ☐ Other_____
☐ Others	☐ Poor driving (Surge) ☐ Knocking ☐ Poor fuel economy ☐ Back fire ☐ After fire ☐ Other_____

3. ENVIRONMENT

Problem frequency	☐ Constant ☐ Sometimes (_____) ☐ Once only ☐ Other_____
Weather	☐ Fine ☐ Cloudy ☐ Rainy ☐ Snowy ☐ Other_____
Outdoor temperature	Approx. _____ °C/°F
Place	☐ Highway ☐ Suburbs ☐ Inner City ☐ Uphill ☐ Downhill ☐ Rough road ☐ Other_____
Engine temperature	☐ Cold ☐ Warming up ☐ After warming up ☐ Any temperature
Engine operation	☐ Starting ☐ Just after starting (____min) ☐ Idling ☐ Racing ☐ Driving ☐ Constant speed ☐ Acceleration ☐ Deceleration ☐ A/C switch ON/OFF ☐ Other_____

4. MIL/DTC

MIL (Malfunction Indicator Lamp)		☐ Remains ON ☐ Sometimes lights up ☐ Does not light
DTC	Normal check (Pre-check)	☐ Normal ☐ DTC (_____) ☐ Freeze Frame Data
	Check mode	☐ Normal ☐ DTC (_____) ☐ Freeze Frame Data

5. ECM/PCM INFORMATION

ECM/PCM Part No.	
ROM ID	

SCMFL6150L

BASIC INSPECTION PROCEDURE

MEASURING CONDITION OF ELECTRONIC PARTS' RESISTANCE

The measured resistance at high temperature after vehicle running may be high or low. So all resistance must be measured at ambient temperature (20℃, 68˚F), unless stated otherwise.

NOTE

The measured resistance in except for ambient temperature (20℃, 68˚F) is reference value.

INTERMITTENT PROBLEM INSPECTION PROCEDURE

Sometimes the most difficult case in troubleshooting is when a problem symptom occurs but does not occur again during testing. An example would be if a problem appears only when the vehicle is cold but has not appeared when warm. In this case, the technician should thoroughly make out a "CUSTOMER PROBLEM ANALYSIS SHEET" and recreate (simulate) the environment and condition which occurred when the vehicle was having the issue.

1. Clear Diagnostic Trouble Code (DTC).
2. Inspect connector connection, and check terminal for poor connections, loose wires, bent, broken or corroded pins, and then verify that the connectors are always securely fastened.

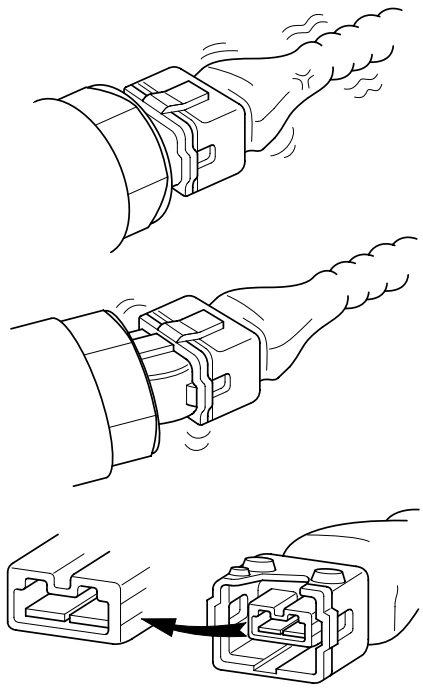

BFGE321A

3. Slightly shake the connector and wiring harness vertically and horizontally.
4. Repair or replace the component that has a problem.
5. Verify that the problem has disappeared with the road test.

● SIMULATING VIBRATION

a. Sensors and Actuators
: Slightly vibrate sensors, actuators or relays with finger.

WARNING

Strong vibration may break sensors, actuators or relays

b. Connectors and Harness
: Lightly shake the connector and wiring harness vertically and then horizontally.

● SIMULATING HEAT

a. Heat components suspected of causing the malfunction with a hair dryer or other heat source.

WARNING

- **DO NOT heat components to the point where they may be damaged.**
- **DO NOT heat the ECM directly.**

● SIMULATING WATER SPRINKLING

a. Sprinkle water onto vehicle to simulate a rainy day or a high humidity condition.

WARNING

DO NOT sprinkle water directly into the engine compartment or electronic components.

● SIMULATING ELECTRICAL LOAD

a. Turn on all electrical systems to simulate excessive electrical loads (Radios, fans, lights, rear window defogger, etc.).

CONNECTOR INSPECTION PROCEDURE

1. Handling of Connector
   a. Never pull on the wiring harness when disconnecting connectors.

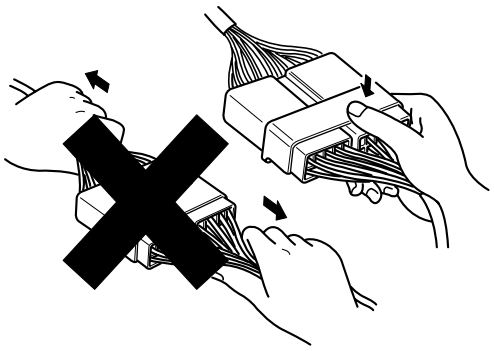

BFGE015F

   b. When removing the connector with a lock, press or pull locking lever.

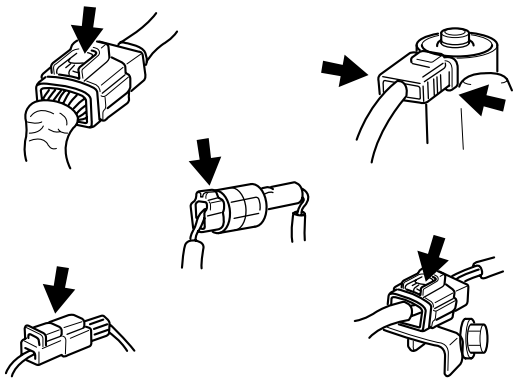

BFGE015G

   c. Listen for a click when locking connectors. This sound indicates that they are securely locked.

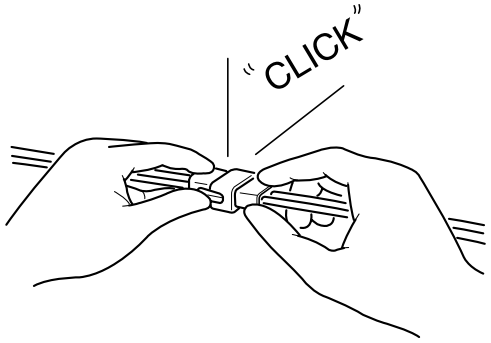

BFGE015H

   d. When a tester is used to check for continuity, or to measure voltage, always insert tester probe from wire harness side.

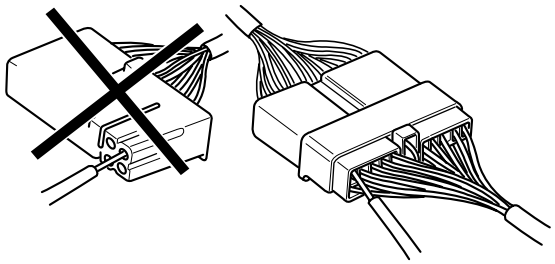

BFGE015I

   e. Check waterproof connector terminals from the connector side. Waterproof connectors cannot be accessed from harness side.

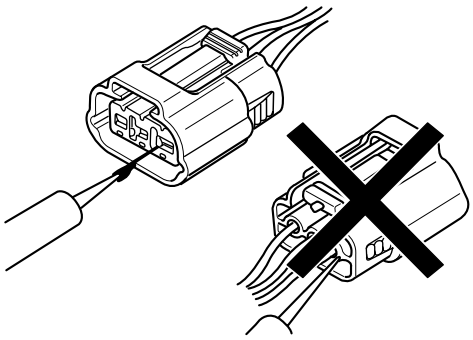

BFGE015J

NOTE

- *Use a fine wire to prevent damage to the terminal.*
- *Do not damage the terminal when inserting the tester lead.*

2. Checking Point for Connector
   a. While the connector is connected:
      Hold the connector, check connecting condition and locking efficiency.
   b. When the connector is disconnected:
      Check missed terminal, crimped terminal or broken core wire by slightly pulling the wire harness. Visually check for rust, contamination, deformation and bend.
   c. Check terminal tightening condition:
      Insert a spare male terminal into a female terminal, and then check terminal tightening conditions.

d. Pull lightly on individual wires to ensure that each wire is secured in the terminal.

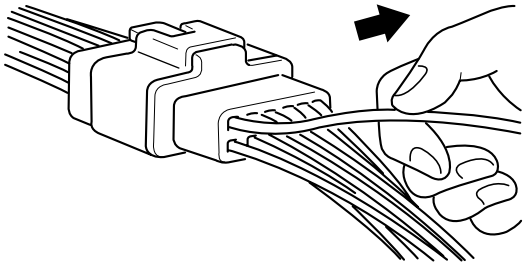

BFGE015K

3. Repair Method of Connector Terminal
   a. Clean the contact points using air gun and/or shop rag.

   NOTE

   Never use sand paper when polishing the contact points, otherwise the contact point may be damaged.

   b. In case of abnormal contact pressure, replace the female terminal.

WIRE HARNESS INSPECTION PROCEDURE

1. Before removing the wire harness, check the wire harness position and crimping in order to restore it correctly.
2. Check whether the wire harness is twisted, pulled or loosened.
3. Check whether the temperature of the wire harness is abnormally high.
4. Check whether the wire harness is rotating, moving or vibrating against the sharp edge of a part.
5. Check the connection between the wire harness and any installed part.
6. If the covering of wire harness is damaged; secure, repair or replace the harness.

ELECTRICAL CIRCUIT INSPECTION PROCEDURE

● **CHECK OPEN CIRCUIT**

1. Procedures for Open Circuit
   - Continuity Check
   - Voltage Check

   If an open circuit occurs (as seen in [FIG. 1]), it can be found by performing Step 2 (Continuity Check Method) or Step 3 (Voltage Check Method) as shown below.

FIG 1

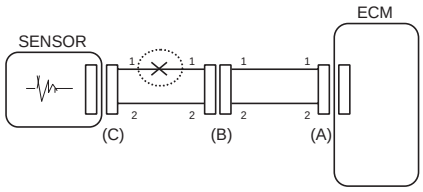

BFGE501A

2. Continuity Check Method

   NOTE

   When measuring for resistance, lightly shake the wire harness above and below or from side to side.

Specification (Resistance)
1Ω or less → Normal Circuit
1MΩ or Higher → Open Circuit

   a. Disconnect connectors (A), (C) and measure resistance between connector (A) and (C) as shown in [FIG. 2].

      In [FIG.2.] the measured resistance of line 1 and 2 is higher than 1MΩ and below 1 Ω respectively. Specifically the open circuit is line 1 (Line 2 is normal). To find exact break point, check sub line of line 1 as described in next step.

FIG 2

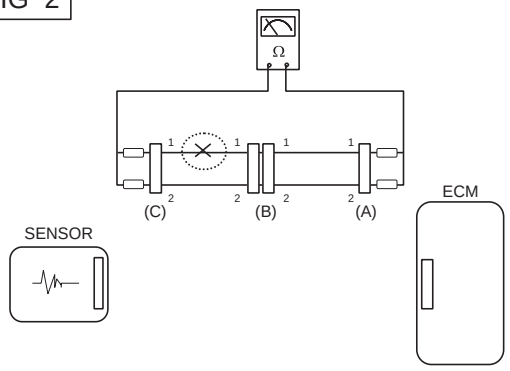

BFGE501B

b. Disconnect connector (B), and measure for resistance between connector (C) and (B1) and between (B2) and (A) as shown in [FIG. 3].

In this case the measured resistance between connector (C) and (B1) is higher than 1MΩ and the open circuit is between terminal 1 of connector (C) and terminal 1 of connector (B1).

FIG 3

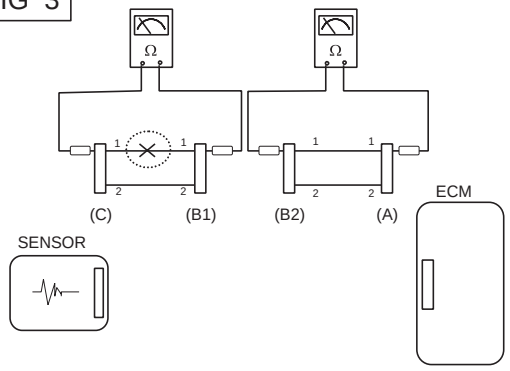

BFGE501C

3. Voltage Check Method
   a. With each connector still connected, measure the voltage between the chassis ground and terminal 1 of each connectors (A), (B) and (C) as shown in [FIG. 4].

   The measured voltage of each connector is 5V, 5V and 0V respectively. So the open circuit is between connector (C) and (B).

FIG 4

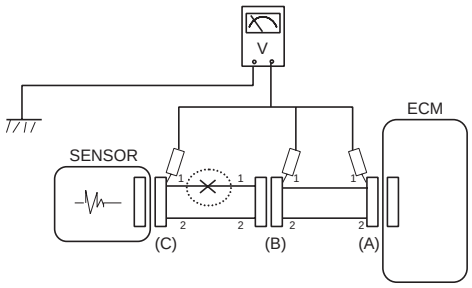

BFGE501D

● CHECK SHORT CIRCUIT

1. Test Method for Short to Ground Circuit
   • Continuity Check with Chassis Ground

   If short to ground circuit occurs as shown in [FIG. 5], the broken point can be found by performing Step 2 (Continuity Check Method with Chassis Ground) as shown below.

FIG 5

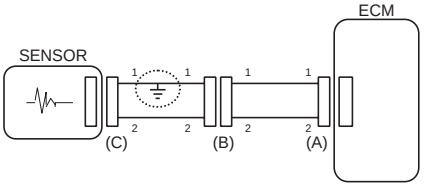

BFGE501E

2. Continuity Check Method (with Chassis Ground)

NOTE

Lightly shake the wire harness above and below, or from side to side when measuring the resistance.

Specification (Resistance)
1Ω or less → Short to Ground Circuit
1MΩ or Higher → Normal Circuit

a. Disconnect connectors (A), (C) and measure for resistance between connector (A) and Chassis Ground as shown in [FIG. 6].

The measured resistance of line 1 and 2 in this example is below 1 Ω and higher than 1MΩ respectively. Specifically the short to ground circuit is line 1 (Line 2 is normal). To find exact broken point, check the sub line of line 1 as described in the following step.

FIG 6

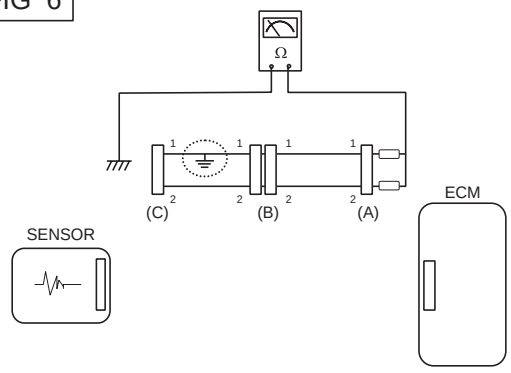

BFGE501F

b. Disconnect connector (B), and measure the resistance between connector (A) and chassis ground, and between (B1) and chassis ground as shown in [FIG. 7].

The measured resistance between connector (B1) and chassis ground is 1Ω or less. The short to ground circuit is between terminal 1 of connector (C) and terminal 1 of connector (B1).

FIG 7

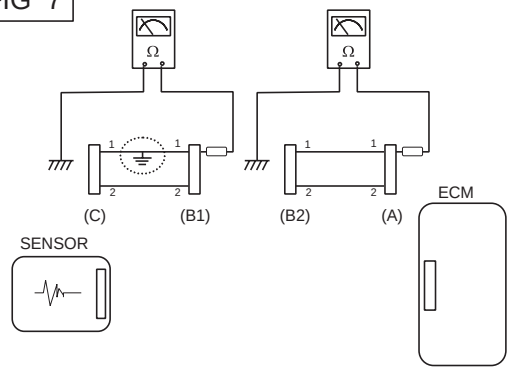

BFGE501G

SYMPTOM TROUBLESHOOTING GUIDE CHART

MAIN SYMPTOM	DIAGNOSTIC PROCEDURE	ALSO CHECK FOR
Unable to start (Engine does not turn over)	1. Test the battery 2. Test the starter 3. Inhibitor switch (A/T) or clutch start switch (M/T)	
Unable to start (Incomplete combustion)	1. Test the battery 2. Check the fuel pressure 3. Check the ignition circuit 4. Troubleshooting the immobilizer system (In case of immobilizer lamp flashing)	• DTC • Low compression • Intake air leaks • Slipped or broken timing belt • Contaminated fuel
Difficult to start	1. Test the battery 2. Check the fuel pressure 3. Check the ECT sensor and circuit (Check DTC) 4. Check the ignition circuit	• DTC • Low compression • Intake air leaks • Contaminated fuel • Weak ignition spark
Poor idling (Rough, unstable or incorrect Idle)	1. Check the fuel pressure 2. Check the Injector 3. Check the long term fuel trim and short term fuel trim (Refer to CUSTOMER DATASTREAM) 4. Check the idle speed control circuit (Check DTC) 5. Inspect and test the Throttle Body 6. Check the ECT sensor and circuit (Check DTC)	• DTC • Low compression • Intake air leaks • Contaminated fuel • Weak ignition spark
Engine stall	1. Test the Battery 2. Check the fuel pressure 3. Check the idle speed control circuit (Check DTC) 4. Check the ignition circuit 5. Check the CKPS Circuit (Check DTC)	• DTC • Intake air leaks • Contaminated fuel • Weak ignition spark
Poor driving (Surge)	1. Check the fuel pressure 2. Inspect and test Throttle Body 3. Check the ignition circuit 4. Check the ECT Sensor and Circuit (Check DTC) 5. Test the exhaust system for a possible restriction 6. Check the long term fuel trim and short term fuel trim (Refer to CUSTOMER DATASTREAM)	• DTC • Low compression • Intake air leaks • Contaminated fuel • Weak ignition spark
Knocking	1. Check the fuel pressure 2. Inspect the engine coolant 3. Inspect the radiator and the electric cooling fan 4. Check the spark plugs	• DTC • Contaminated fuel

MAIN SYMPTOM	DIAGNOSTIC PROCEDURE	ALSO CHECK FOR
Poor fuel economy	1. Check customer's driving habits • Is A/C on full time or the defroster mode on? • Are tires at correct pressure? • Is excessively heavy load being carried? • Is acceleration too much, too often? 2. Check the fuel pressure 3. Check the injector 4. Test the exhaust system for a possible restriction 5. Check the ECT sensor and circuit	• DTC • Low compression • Intake air leaks • Contaminated fuel • Weak ignition spark
Hard to refuel (Overflow during refueling)	1. Test the canister close valve 2. Inspect the fuel filler hose/pipe • Pinched, kinked or blocked? • Filler hose is torn 3. Inspect the fuel tank vapor vent hose between the EVAP. canister and air filter 4. Check the EVAP. canister	• Malfunctioning gas station filling nozzle (If this problem occurs at a specific gas station during refueling)

GASOLINE ENGINE CONTROL SYSTEM

DESCRIPTION E722E9A3

If the Gasoline Engine Control system components (sensors, ECM, injector, etc.) fail, interruption to the fuel supply or failure to supply the proper amount of fuel for various engine operating conditions will result. The following situations may be encountered.

1. Engine is hard to start or does not start at all.
2. Unstable idle.
3. Poor driveability

If any of the above conditions are noted, first perform a routine diagnosis that includes basic engine checks (ignition system malfunction, incorrect engine adjustment, etc.). Then, inspect the Gasoline Engine Control system components with the HI-SCAN (Pro).

NOTE

- *Before removing or installing any part, read the diagnostic trouble codes and then disconnect the battery negative (-) terminal.*
- *Before disconnecting the cable from battery terminal, turn the ignition switch to OFF. Removal or connection of the battery cable during engine operation or while the ignition switch is ON could cause damage to the ECM.*
- *The control harnesses between the ECM and heated oxygen sensor are shielded with the shielded ground wires to the body in order to prevent the influence of ignition noises and radio interference. When the shielded wire is faulty, the control harness must be replaced.*
- *When checking the generator for the charging state, do not disconnect the battery '+' terminal to prevent the ECM from damage due to the voltage.*
- *When charging the battery with the external charger, disconnect the vehicle side battery terminals to prevent damage to the ECM.*

MALFUNCTION INDICATOR LAMP (MIL)

[EOBD]

A malfunction indicator lamp illuminates to notify the driver that there is a problem with the vehicle. However, the MIL will go off automatically after 3 subsequent sequential driving cycles without the same malfunction. Immediately after the ignition switch is turned on (ON position - do not start), the MIL will illuminate continuously to indicate that the MIL operates normally.

Faults with the following items will illuminate the MIL.

- Catalyst
- Fuel system
- Mass Air Flow Sensor (MAFS)
- Intake Air Temperature Sensor (IATS)
- Engine Coolant Temperature Sensor (ECTS)
- Throttle Position Sensor (TPS)
- Upstream Oxygen Sensor
- Upstream Oxygen Sensor Heater
- Downstream Oxygen Sensor
- Downstream Oxygen Sensor Heater
- Injector
- Misfire
- Crankshaft Position Sensor (CKPS)
- Camshaft Position Sensor (CMPS)
- Evaporative Emission Control System
- Vehicle Speed Sensor (VSS)
- Idle Speed Control Actuator (ISCA)
- Power Supply
- ECM/ PCM
- MT/AT Encoding
- Acceleration Sensor
- MIL-on Request Signal
- Power Stage

NOTE

Refer to "INSPECTION CHART FOR DIAGNOSTIC TROUBLE CODES (DTC)" for more information.

[NON-EOBD]

A malfunction indicator lamp illuminates to notify the driver that there is a problem with the vehicle. However, the MIL will go off automatically after 3 subsequent sequential driving cycles without the same malfunction. Immediately after the ignition switch is turned on (ON position - do not start), the MIL will illuminate continuously to indicate that the MIL operates normally.

Faults with the following items will illuminate the MIL

- Heated oxygen sensor (HO2S)
- Mass Air Flow sensor (MAFS)
- Throttle position sensor (TPS)
- Engine coolant temperature sensor (ECTS)
- Idle speed control actuator (ISCA)
- Injectors
- ECM

NOTE

Refer to "INSPECTION CHART FOR DIAGNOSTIC TROUBLE CODES (DTC)" for more information.

[INSPECTION]

1. After turning ON the ignition key, ensure that the light illuminates for about 5 seconds and then goes out.

2. If the light does not illuminate, check for an open circuit in the harness, a blown fuse or a blown bulb.

SELF-DIAGNOSIS

The ECM monitors the input/output signals (some signals at all times and the others under specified conditions). When the ECM detects an irregularity, it records the diagnostic trouble code, and outputs the signal to the Data Link connector. The diagnosis results can be read with the MIL or HI-SCAN (Pro). Diagnostic Trouble Codes (DTC) will remain in the ECM as long as battery power is maintained. The diagnostic trouble codes will, however, be erased when the battery terminal or ECM connector is disconnected, or by the HI-SCAN (Pro).

NOTE

If a sensor connector is disconnected with the ignition switch turned on, the diagnostic trouble code (DTC) is recorded. In this case, disconnect the battery negative terminal (-) for 15 seconds or more, and the diagnosis memory will be erased.

THE RELATION BETWEEN DTC AND DRIVING PATTERN IN EOBD SYSTEM

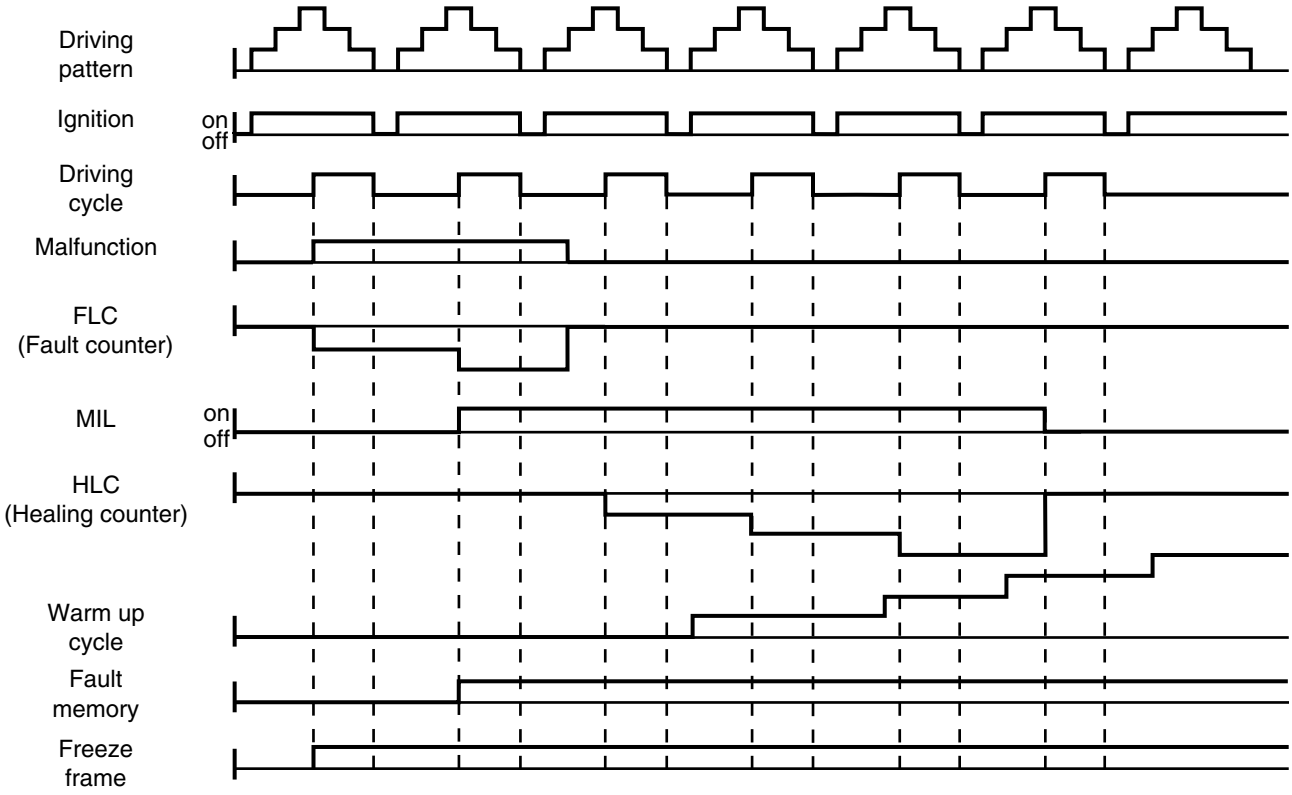

LGIF601Q

1. When the same malfunction is detected and maintained during two sequential driving cycles, the MIL will automatically illuminate.

2. The MIL will go off automatically if no fault is detected after 3 sequential driving cycles.

3. A Diagnostic Trouble Code(DTC) is recorded in ECM memory when a malfunction is detected after two sequential driving cycles. The MIL will illuminate when the malfunction is detected on the second driving cycle.
   If a misfire is detected, a DTC will be recorded, and the MIL will illuminate, immediately after a fault is first detected.

4. A Diagnostic Trouble Code(DTC) will automatically erase from ECM memory if the same malfunction is not detected for 40 driving cycles.

NOTE

- *A "warm-up cycle" means sufficient vehicle operation such that the coolant temperature has risen by at least 40 degrees Fahrenheit from engine starting and reaches a minimum temperature of 160 degress Fahrenheit.*
- *A "driving cycle" consists of engine startup, vehicle operation beyond the beginning of closed loop operation.*

COMPONENT LOCATION E478BABD

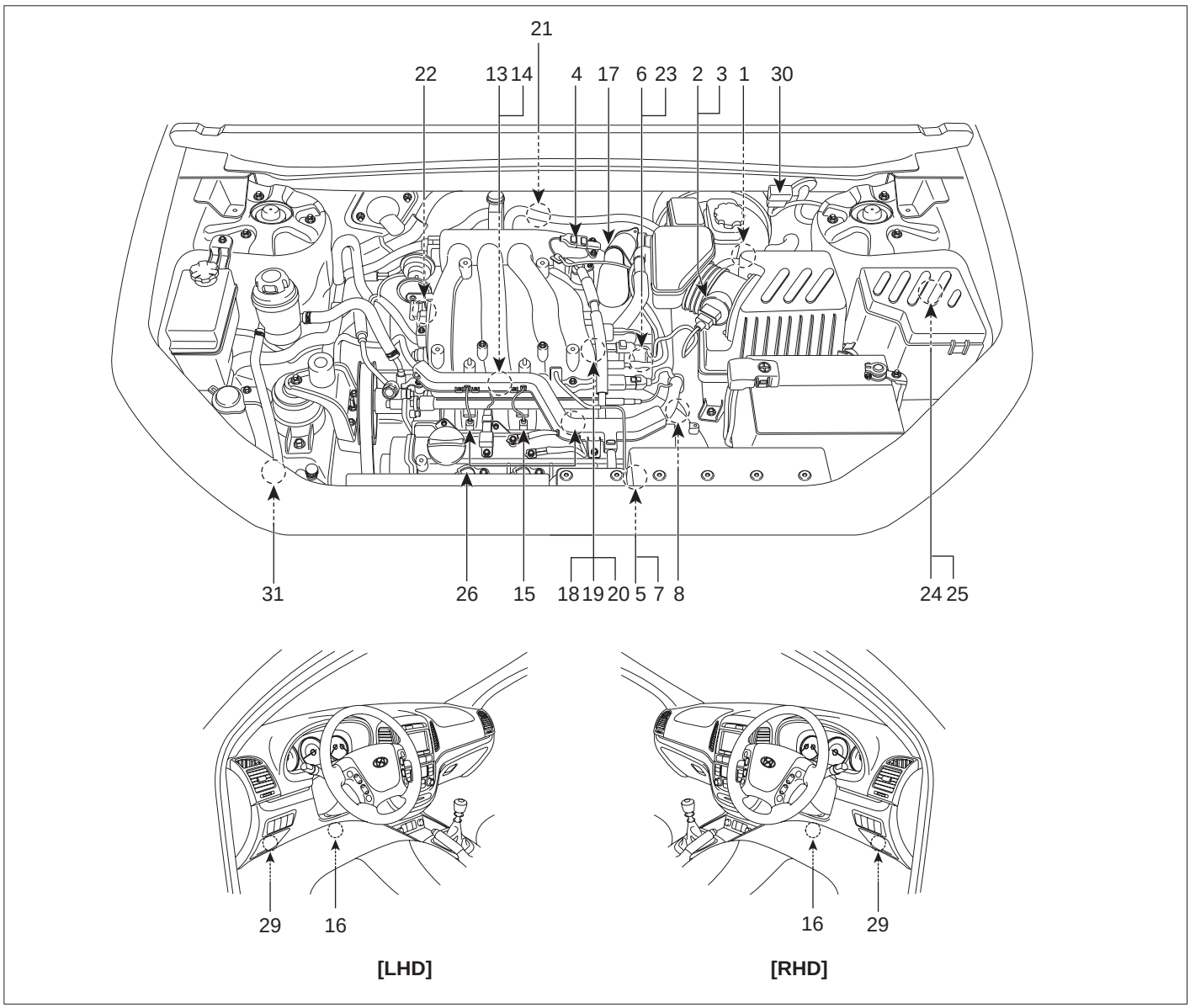

1. PCM (Powertrain Control Module)
2. Mass Air Flow Sensor (MAFS)
3. Intake Air Temperature Sensor (IATS)
4. Manifold Absolute Pressure Sensor (MAPS)
5. Engine Coolant Temperature Sensor (ECTS)
6. Camshaft Position Sensor (CMPS) [Bank 1]
7. Camshaft Position Sensor (CMPS) [Bank 2]
8. Crankshaft Position Sensor (CKPS)
9. Heated Oxygen Sensor (HO2S) [Bank 1 / Sensor 1]
10. Heated Oxygen Sensor (HO2S) [Bank 1 / Sensor 2]
11. Heated Oxygen Sensor (HO2S) [Bank 2 / Sensor 1]
12. Heated Oxygen Sensor (HO2S) [Bank 2 / Sensor 2]
13. Knock Sensor (KS) [Bank 1]
14. Knock Sensor (KS) [Bank 2]
15. Injector
16. Accelerator Position Sensor (APS)
17. ETC Module [Throttle Position Sensor (TPS) + ETC Motor]
18. CVVT Oil Control Valve (OCV) [Bank 1]
19. CVVT Oil Control Valve (OCV) [Bank 2]
20. CVVT Oil Temperature Sensor (OTS)
21. Purge Control Solenoid Valve (PCSV)
22. Variable Intake Solenoid (VIS) Valve #1 (Surge Tank Side)
23. Variable Intake Solenoid (VIS) Valve #2 (Intake Manifold Side)
24. Fuel Pump Relay
25. Main Relay
26. Ignition Coil
27. Wheel Speed Sensor (WSS) [Without ABS/ESP (Euro-Ⅲ/Ⅳ)]
28. Vehicle Speed Sensor (VSS) [Except for Euro-Ⅲ/Ⅳ]
29. Data Link Connector (DLC)
30. Multi-Purpose Connector
31. A/C Pressure Transducer (APT)

SCMF16001L

1. PCM (Powertrain Control Module)

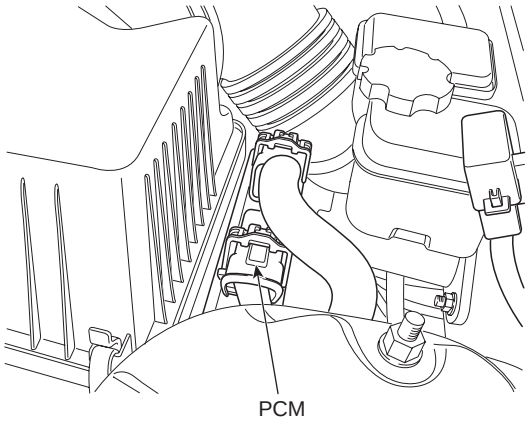

SCMF16003L

2. Mass Air Flow Sensor (MAFS)
3. Intake Air Temperature Sensor (IATS)

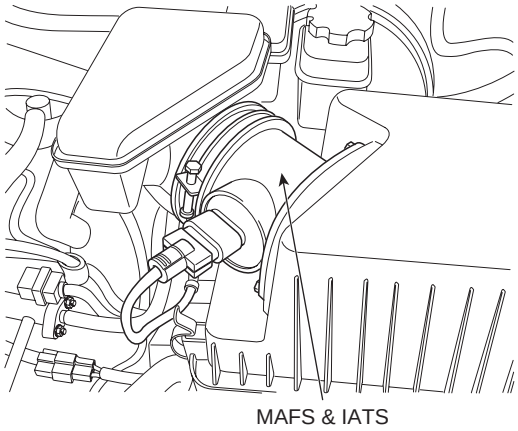

SCMF16002L

4. Manifold Absolute Pressure Sensor (MAPS)
17. ETC Module [Throttle Position Sensor (TPS) + ETC Motor]

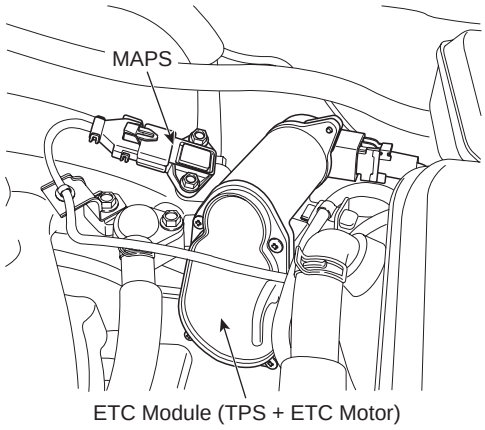

SCMF16005L

5. Engine Coolant Temperature Sensor (ECTS)
7. Camshaft Position Sensor (CMPS) [Bank2]

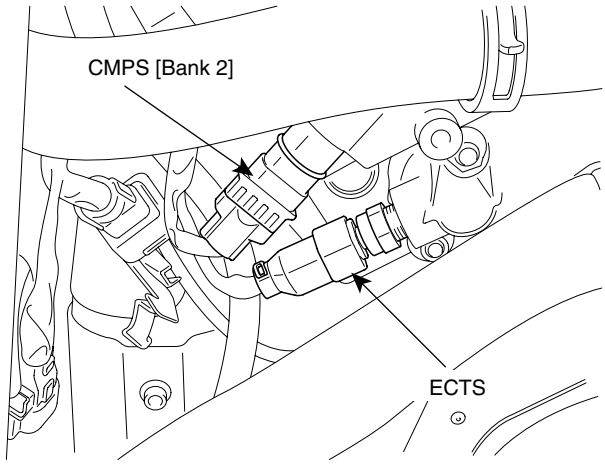

LGLG001R

6. Camshaft Position Sensor (CMPS) [Bank 1]

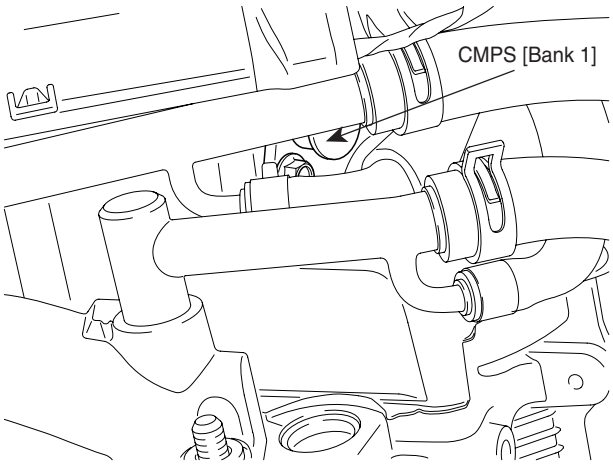

LGLG001S

8. Crankshaft Position Sensor (CKPS)

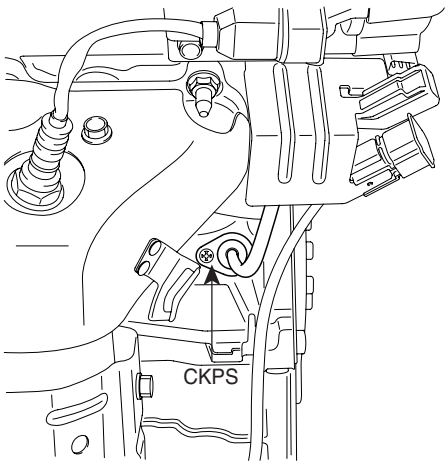

LGLG001T

9. Heated Oxygen Sensor (HO2S) [Bank 1 / Sensor 1]

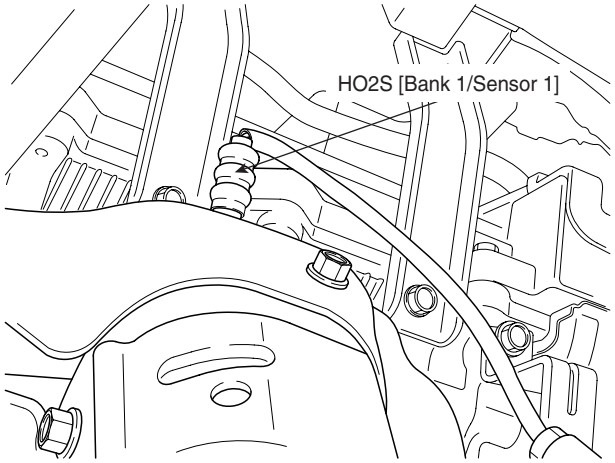

LGLG001U

10. Heated Oxygen Sensor (HO2S) [Bank 1 / Sensor 2]

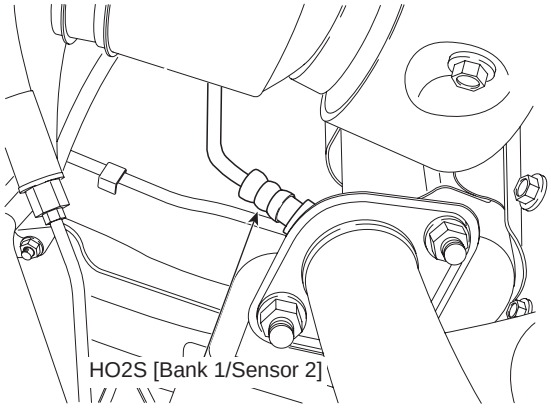

SCMF16006L

11. Heated Oxygen Sensor (HO2S) [Bank 2 / Sensor 1]

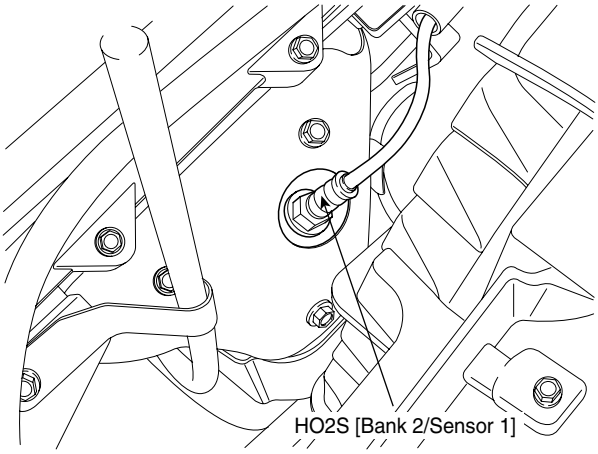

LGLG001G

12. Heated Oxygen Sensor (HO2S) [Bank 2 / Sensor 2]

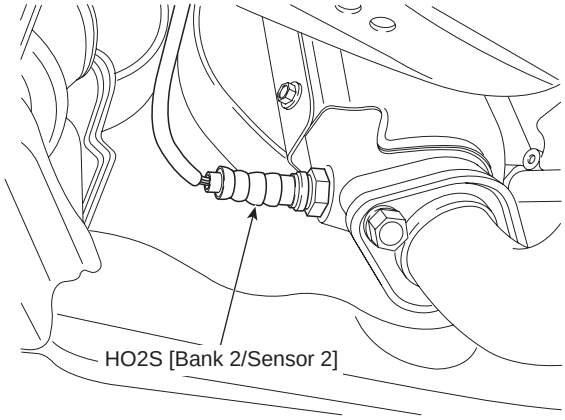

SCMF16007L

13. Knock Sensor (KS) [Bank 1]
14. Knock Sensor (KS) [Bank 2]

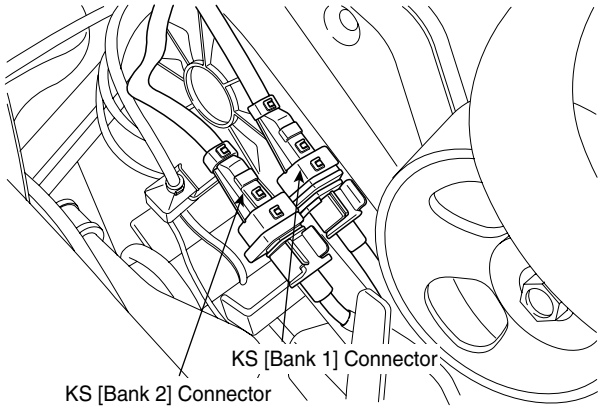

LGLG001J

15. Injector
26. Ignition Coil

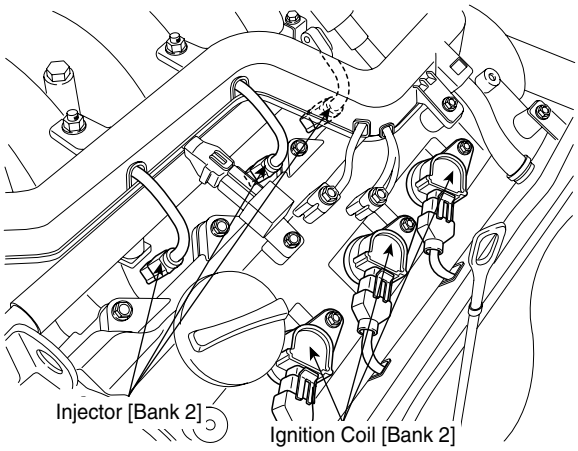

LGLG001I

16. Accelerator Position Sensor (APS)

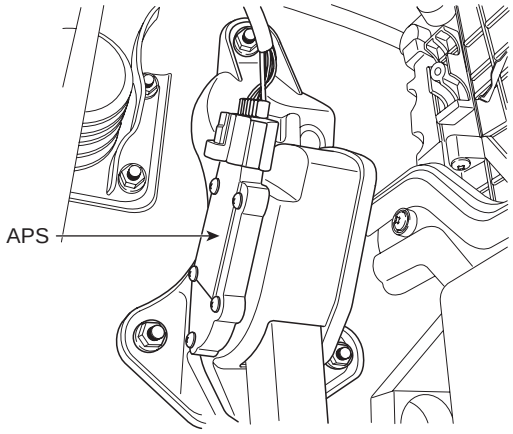

SCMFL6005D

18. CVVT Oil Control Valve (OCV) [Bank 1]
19. CVVT Oil Control Valve (OCV) [Bank 2]
20. CVVT Oil Temperature Sensor (OTS)

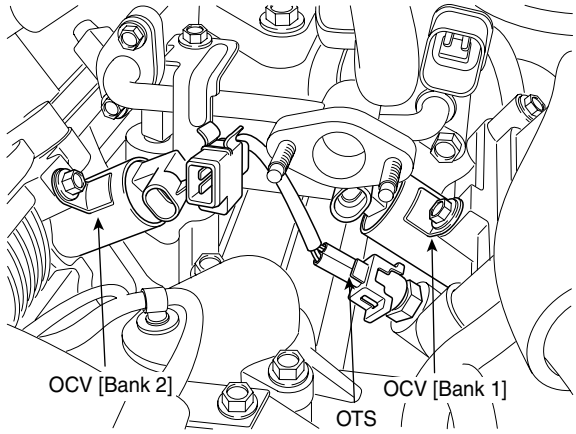

LGLG001K

21. Purge Control Solenoid Valve (PCSV)

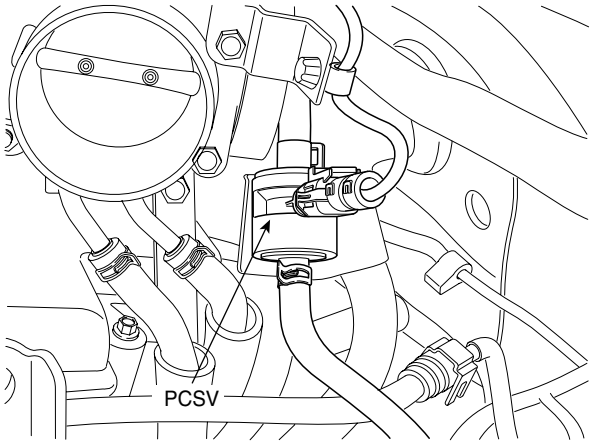

LGLG001L

22. Variable Intake Solenoid (VIS) #1 Valve (Surge Tank Side)

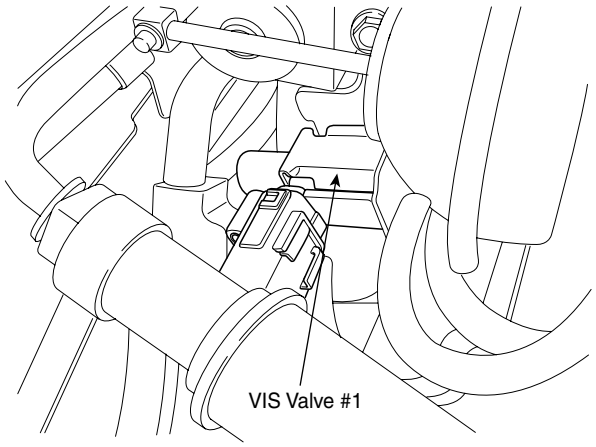

LGLG001N

23. Variable Intake Solenoid (VIS) #2 Valve (Intake Manifold Side)

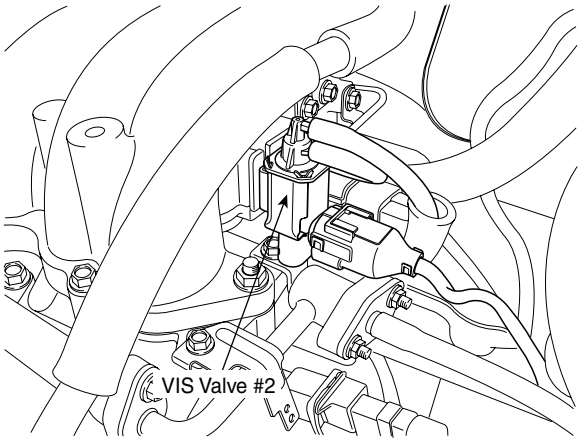

LGLG001O

24. Fuel Pump Relay
25. Main Relay

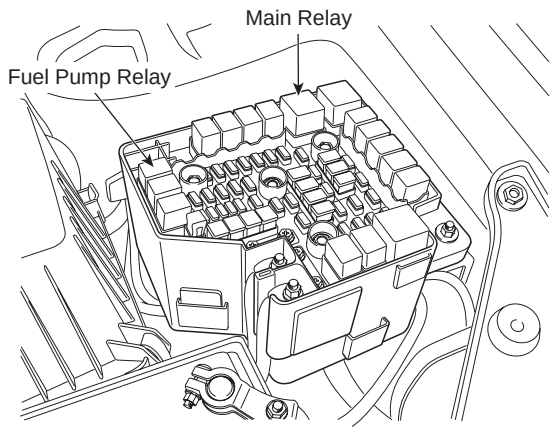

SCMF16014L

27. Wheel Speed Sensor (WSS)	28. Vehicle Speed Sensor (VSS)
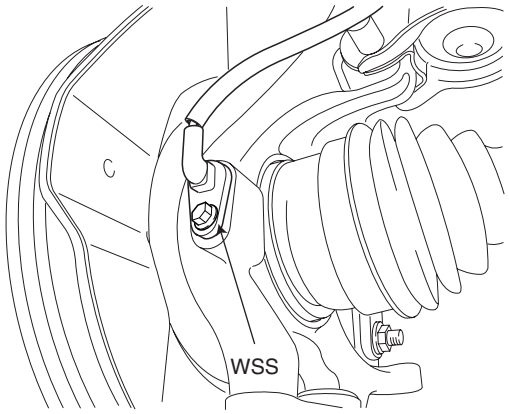 AFLG500C	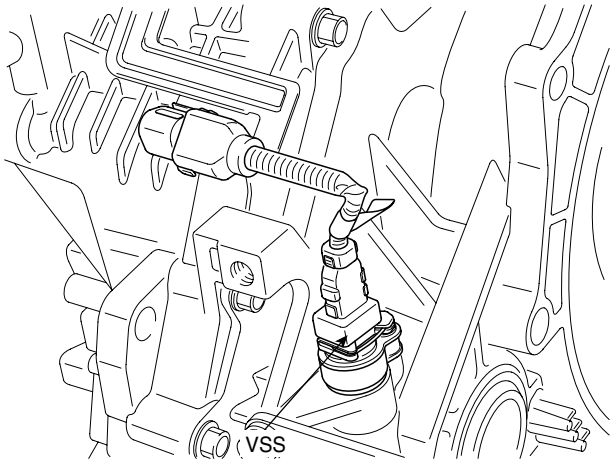 LGLG001V
31. A/C Pressure Transducer (APT)	
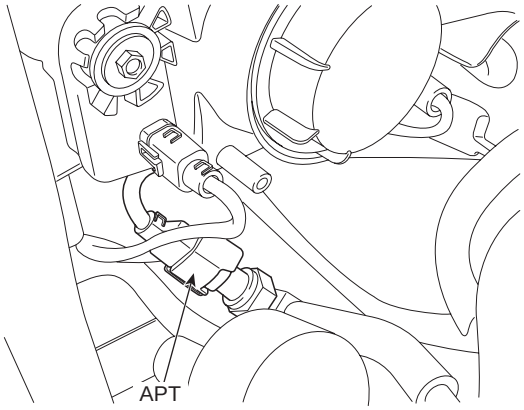 SCMF16008L	

ETC (ELECTRONIC THROTTLE CONTROL) SYSTEM

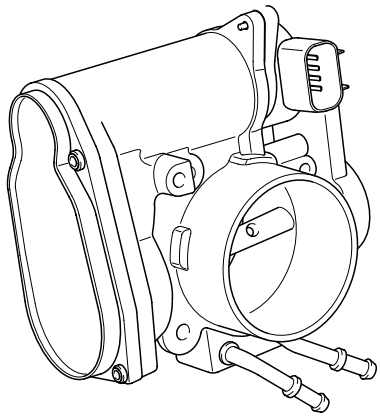

KGBF004U

INSPECTION E4C099A0

FUNCTION AND OPERATION PRICIPLE

ETC (Electronic Throttle Control) system is electronically controlled throttle device which controls the throttle valve. It consists of ETC motor, throttle body and throttle position sensor (TPS). A mechanical throttle control system receives a driver's intention via a wire cable between the accelerator and the throttle valve, while this ETC system uses the signal from the Accelerator Position Sensor (APS) installed on the accelerator pedal. After the PCM receives the APS signal and calculates the throttle opening angle, it activates the throttle valve by using the ETC motor. Additionally, it can handle cruise control function without any special devices.

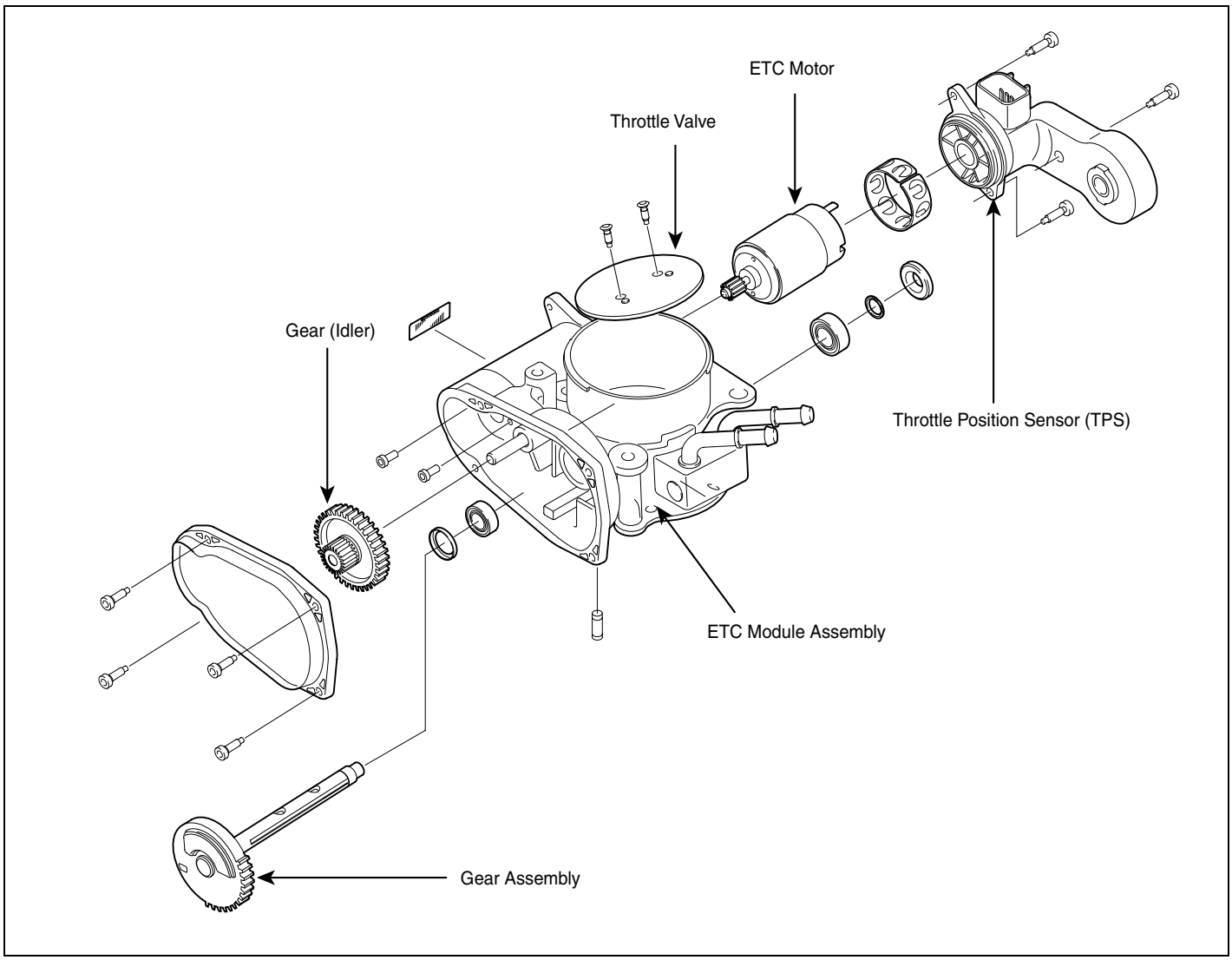

LGLG001W

SHEMATIC DIAGRAM

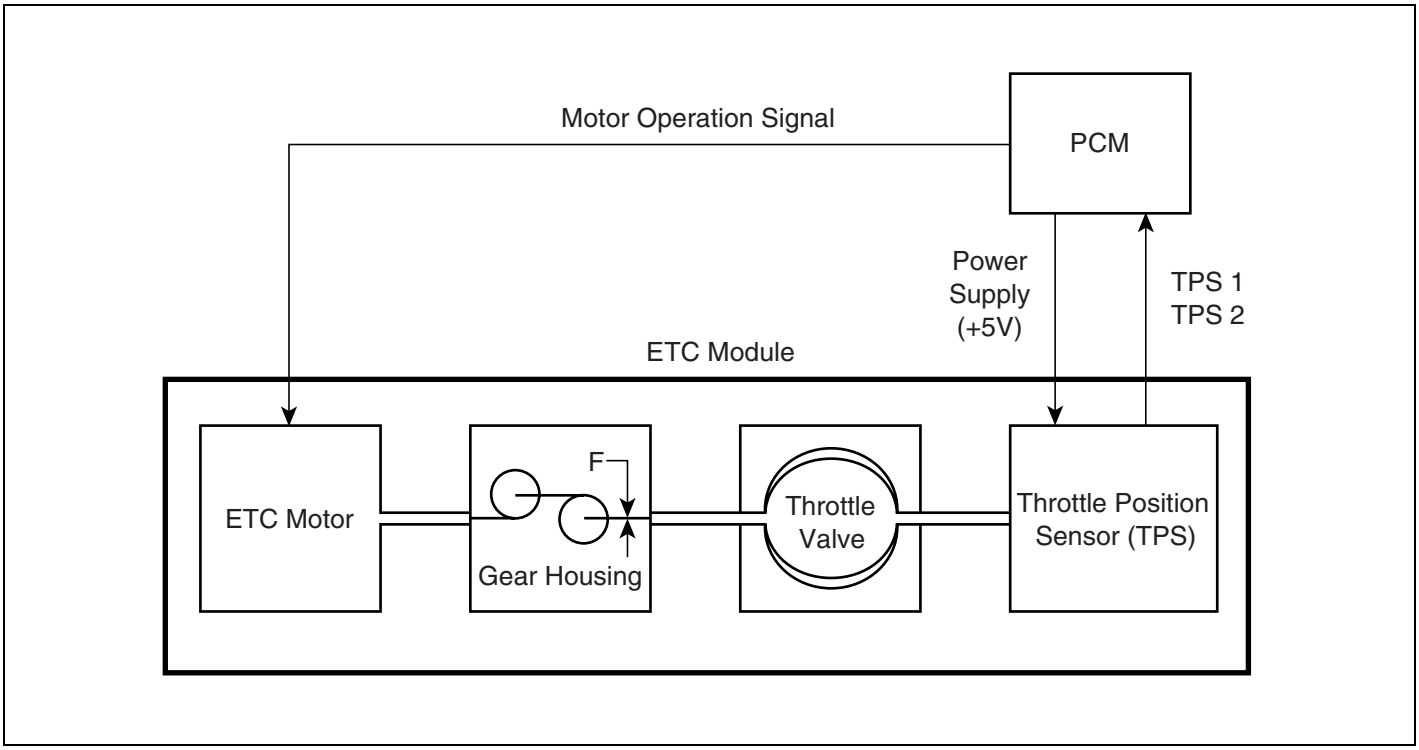

EGRF234A

SPECIFICATION

[THROTTLE POSITION SENSOR]

Throttle Angle(˚)	Output Voltage(V) [Vref = 5.0V]	
	TPS1	TPS2
0˚	0V	5.0V
10˚	0.5V	4.5V
20˚	0.9V	4.1V
30˚	1.4V	3.6V
40˚	1.8V	3.2V
50˚	2.3V	2.7V
60˚	2.7V	2.3V
70˚	3.2V	1.8V
80˚	3.6V	1.4V
90˚	4.1V	0.9V
100˚	4.5V	0.5V
110˚	5.0V	0V

Item	Sensor Resistance
TPS1	4.0 ~ 6.0㏀ at 20℃ (68˚F)
TPS2	2.7 ~ 4.1㏀ at 20℃ (68˚F)

[TPS CHARACTERISTIC GRAPH]

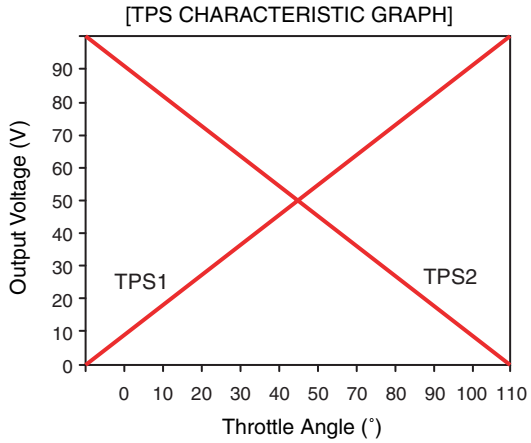

EGRF235A

[ETC MOTOR]

Item	Sensor Resistance
Coil Resistance (Ω)	1.275 ~ 1.725Ω at 20℃ (68˚F)

CIRCUIT DIAGRAM

[CIRCUIT DIAGRAM]

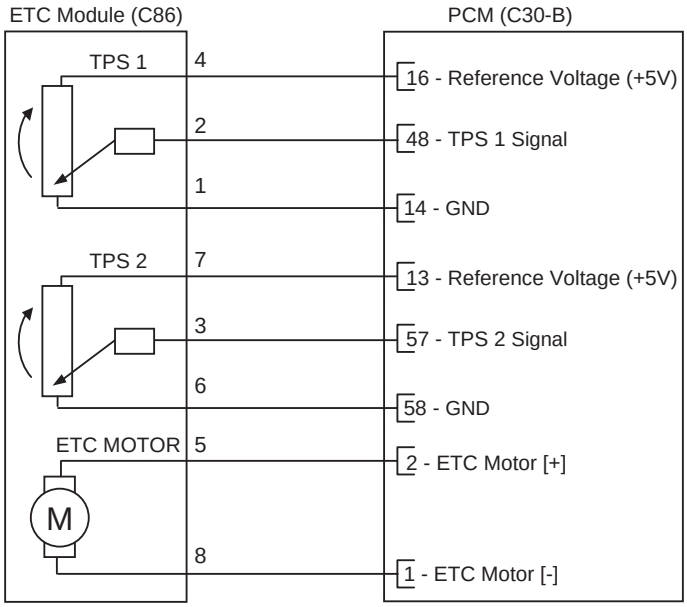

[CONNECTION INFORMATION]

Terminal	Connected to	Function
1	PCM C30-B (14)	TPS 1 Ground
2	PCM C30-B (48)	TPS 1 Signal
3	PCM C30-B (57)	TPS 2 Signal
4	PCM C30-B (16)	TPS 1 Reference Voltage (+5V)
5	PCM C30-B (2)	ETC Motor [+] Control
6	PCM C30-B (58)	TPS 2 Ground
7	PCM C30-B (13)	TPS 2 Reference Voltage (+5V)
8	PCM C30-B (1)	ETC Motor [-] Control

[HARNESS CONNECTORS]

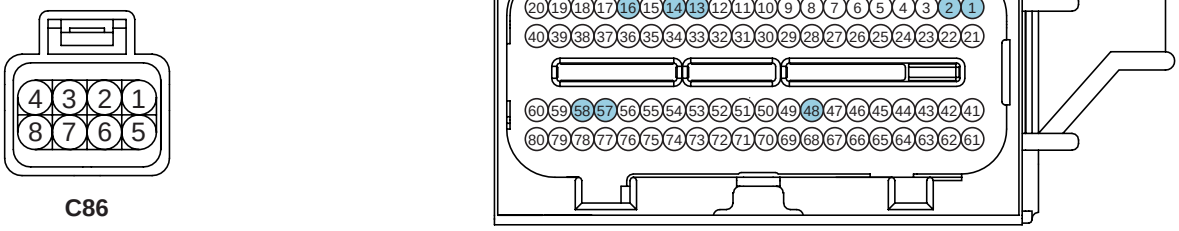

C86

ETC MODULE

C30-B

PCM

SCMF16101L

FAIL-SAFE MODE

Mode	Description	Symptom	Possible Cause
MODE 1	FORCED ENGINE SHUTDOWN	Engine stop	• ETC system can't proceed reliable algorithm procedure - Fatal PCM internal programming error - Faulty intake system or throttle body
MODE 2	FORCED IDLE & POWER MANAGEMENT	Forced idle state controlled by fuel quantity regulation and ignition timing adjustment	• ETC system can't control engine power via throttle device • Disabled throttle control or broken throttle position information
MODE 3	FORCED IDLE	Forced idle state and no response for accelerator activation	• No information about the accelerator position - Malfuctioning APS 1 and 2, faulty A/D converter or internal controller
MODE 4	LIMIT PERFORMANCE & POWER MANAGEMENT	Engine power is determined by accelerator position and idle power requirement (Limited vehicle running)	• ETC system can't securely control engine power
MODE 5	LIMIT PERFORMANCE	1. Engine power varies with accelerator position, but driver perceives lack of engine power. 2. MIL ON (Normal vehicle running)	• Not reliable accelerator position signal or bad maximum power generation - Faulty APS, ignition voltage or internal controller
MODE 6	NORMAL	Normal	

COMPONENT INSPECTION

THROTTLE POSITION SENSOR (TPS)

1. Connect a scantool on Diagnoisis Link Connector (DLC).

2. Start engine and check output voltages of TPS 1 and 2 at C.T and W.O.T.

Condition	Output Voltage (V)	
	TPS 1	TPS 2
C.T	0.25 ~ 0.9V	Min. 4.0V
W.O.T	Min. 4.0V	0.25 ~ 0.9V

3. Turn ignition switch OFF and disconnect the scantool from the DLC.

4. Disconnect ETC module connector and measure resistance between ETC module terminals 4 and 1 (TPS 1).

5. Measure resistance between ETC module terminals 7 and 6 (TPS 2).

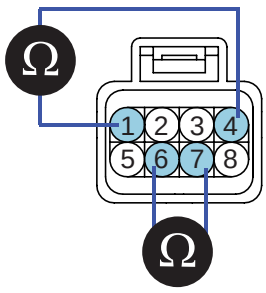

SCMF16102L

Specification: Refer to SPECIFICATION.

ETC MOTOR

1. Disconnect ETC module connector and measure resistance between ETC module terminals 5 and 8.

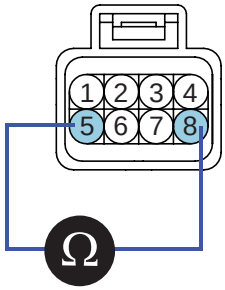

SCMF16103L

Specification: Refer to SPECIFICATION.

ETC SYSTEM INITIALIZATION

1. Erase DTC(s) memorized in PCM with a scan tool.
2. Turn ignition switch off and wait for about 10 seconds.
3. Turn ignition switch on for more then 1 second. (At this time, the PCM records initial position of ETC motor on its EEPROM).

MASS AIR FLOW SENSOR (MAFS)

INSPECTION ECF3BEA5

FUNCTION AND OPERATION PRINCIPLE

Mass Air Flow Sensor (MAFS) is a hot-film type sensor and is located in between the air cleaner and the throttle body. It consists of a tube, a sensor assembly and honeycomb cell and detects intake air quantity flowing into the intake manifold. Air flows from the air cleaner assembly through the honeycomb cell and over the hot film element. At this time, heat transfer is generated by convection and this sensor loses its energy. This sensor detects the mass air flow by using the energy loss and transfers the information to the PCM by frequency. The PCM calculates fuel quantity and ignition timing.

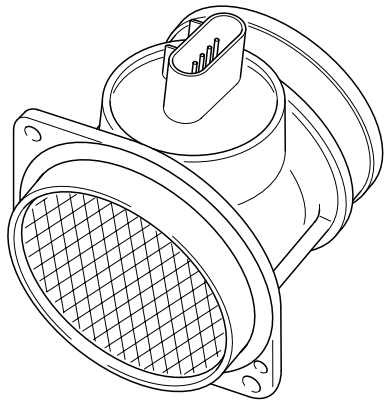

KFCF1021

SPECIFICATION

Air Flow (kg/h)	Output Frequency (Hz)
12.6 kg/h	2,617Hz
18.0 kg/h	2,958Hz
23.4 kg/h	3,241Hz
32.4 kg/h	3,653Hz
43.2 kg/h	4,024Hz
57.6 kg/h	4,399Hz
72.0 kg/h	4,704Hz
108.0 kg/h	5,329Hz
144.0 kg/h	5,897Hz
198.0 kg/h	6,553Hz
270.0 kg/h	7,240Hz
360.0 kg/h	7,957Hz
486.0 kg/h	8,738Hz
666.0 kg/h	9,644Hz
900.0 kg/h	10,590Hz

CIRCUIT DIAGRAM

[CIRCUIT DIAGRAM]

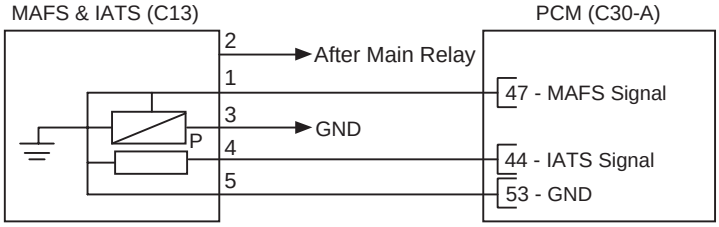

[CONNECTION INFORMATION]

Terminal	Connected to	Function
1	PCM C30-A (47)	MAFS Signal
2	Main Relay	Battery Voltage (B+)
3	Chassis Ground	Ground
4	PCM C30-A (44)	IATS Signal
5	PCM C30-A (53)	Sensor Ground

[HARNESS CONNECTORS]

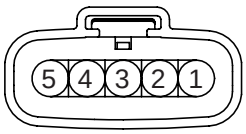

C13

MAFS & IATS

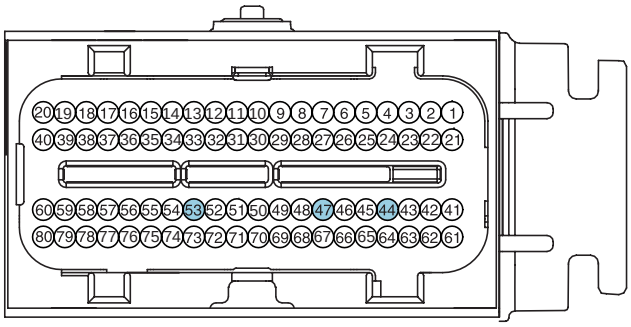

C30-A

PCM

SCMF16104L

COMPONENT INSPECTION

1. Check the MAFS visually.
   - Mounting direction correct.
   - Any contamination, corrosion or damage on connector.
   - Air cleaner's clogging or wet.
   - MAFS cylinder's deforming or blocking by any foreign material.

2. Check any leakage on intake system and intercooler system.

INTAKE AIR TEMPERATURE SENSOR (IATS)

INSPECTION EF56EBCD

FUNCTION AND OPERATION PRICIPLE

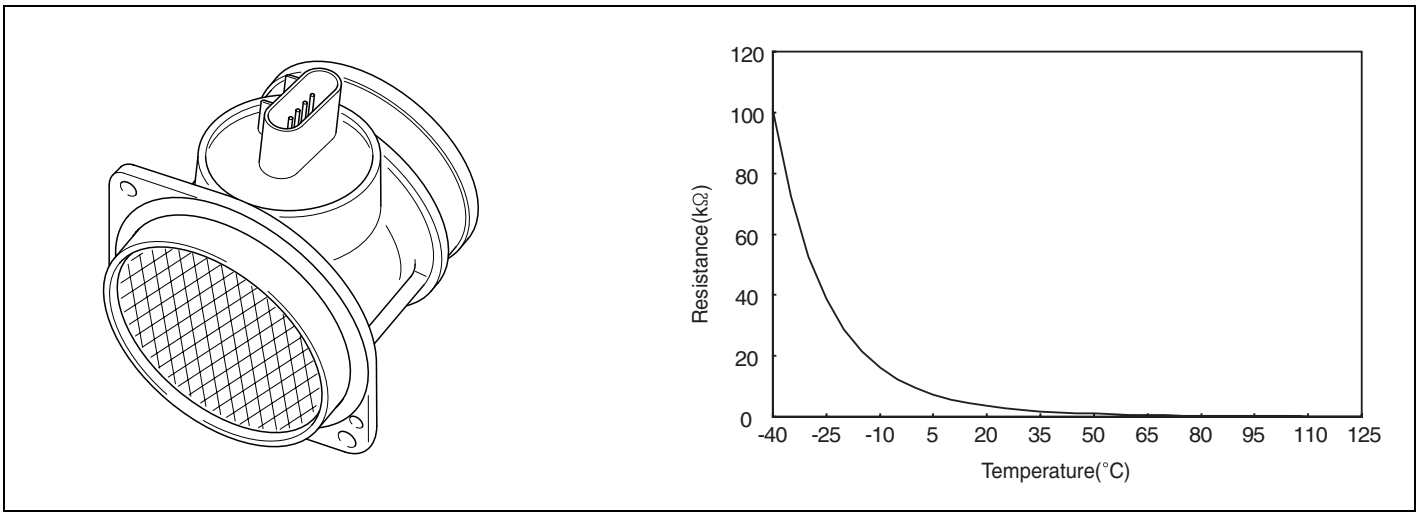

EGRF238A

Intake Air Temperature Sensor (IATS) is installed inside the Mass Air Flow Sensor (MAFS) and detects the intake air temperature. To calculate precise air quantity, correction of the air temperature is needed because air density varies according to the temperature. So the PCM uses not only MAFS signal but also IATS signal. This sensor has a Negative Temperature Coefficient (NTC) and its resistance is in inverse proportion to the temperature.

SPECIFICATION

Temperature		Resistance (kΩ)
℃	˚F	
-40	-40	100.87
-20	-4	28.58
0	32	9.40
10	50	5.66
20	68	3.51
40	104	1.47
60	140	0.67
80	176	0.33

CIRCUIT DIAGRAM

[CIRCUIT DIAGRAM]

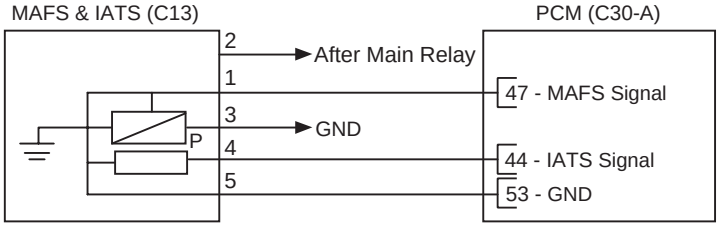

[CONNECTION INFORMATION]

Terminal	Connected to	Function
1	PCM C30-A (47)	MAFS Signal
2	Main Relay	Battery Voltage (B+)
3	Chassis Ground	Ground
4	PCM C30-A (44)	IATS Signal
5	PCM C30-A (53)	Sensor Ground

[HARNESS CONNECTORS]

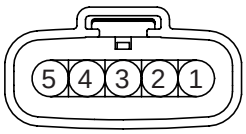

C13

MAFS & IATS

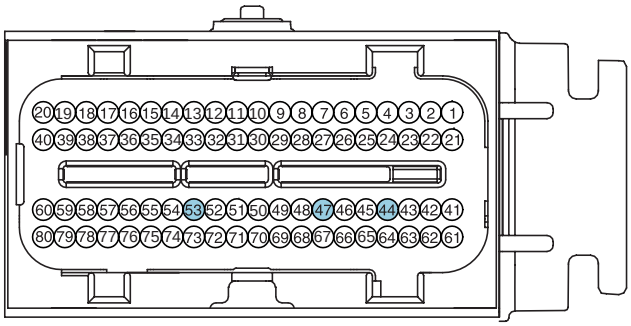

C30-A

PCM

SCMF16104L

COMPONENT INSPECTION

1. Turn ignition switch OFF.
2. Disconnect IATS connector.
3. Measure resistance between IATS terminals 4 and 5.

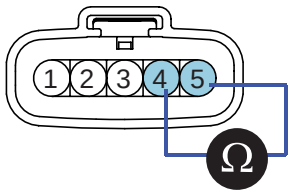

SCMF16146L

4. Check that the resistance is within the specification.

Specification: Refer to SPECIFICATION.

MANIFOLD ABSOLUTE PRESSURE SENSOR (MAPS)

INSPECTION E99BD12F

FUNCTION AND OPERATION PRICIPLE

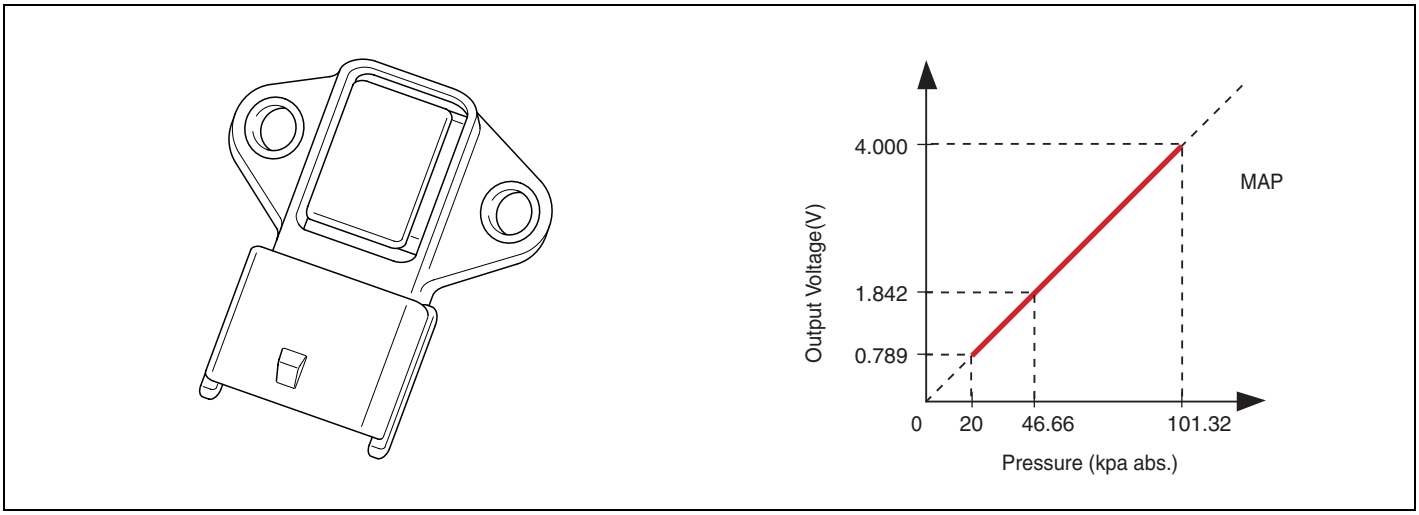

LGLG002A

Manifold Absolute Pressure Sensor (MAPS) is speed-density type sensor and is installed on the surge tank. This MAPS senses absolute pressure in surge tank and transfers this analog signal proportional to the pressure to the PCM. The PCM calculates the intake air quantity and engine speed based on this signal. This MAPS consists of piezo-electric element and hybrid IC that amplifies the element output signal. The element is silicon diaphragm type and adapts pressure sensitive variable resistor effect of semi-conductor. 100% vacuum and the manifold pressure applies to both sides of it respectively. That is, this sensor outputs the silicon variation proportional to pressure change by voltage.

SPECIFICATION

Pressure(kPa)	Output Voltage (V)
20.0	0.79
46.66	1.84
101.32	4.0

CIRCUIT DIAGRAM

[CIRCUIT DIAGRAM]

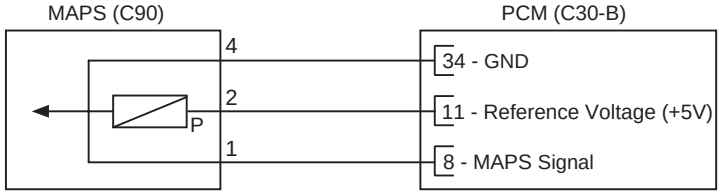

[CONNECTION INFORMATION]

Terminal	Connected to	Function
1	PCM C30-B (8)	MAPS Signal
2	PCM C30-B (11)	Reference Voltage (+5V)
3	-	-
4	PCM C30-B (34)	Sensor ground

[HARNESS CONNECTORS]

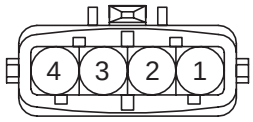

C90

MAPS

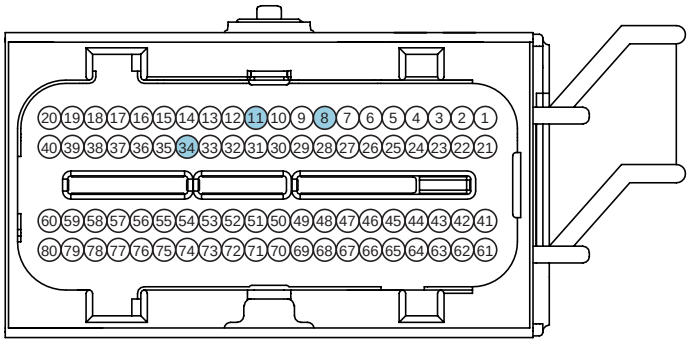

C30-B

PCM

SCMF16105L

COMPONENT INSPECTION

1. Connect a scantool on Diagnisis Link Connector (DLC).

2. Check MAPS output voltage at idle and IG ON.

Condition	Output Voltage (V)
Idle	0.8V ~ 1.6V
IG ON	3.9V ~ 4.1V

ENGINE COOLANT TEMPERATURE SENSOR (ECTS)

INSPECTION E6DCDBAC

FUNCTION AND OPERATION PRICIPLE

Engine Coolant Temperature Sensor (ECTS) is located in the engine coolant passage of the cylinder head for detecting the engine coolant temperature. The ECTS uses a thermistor whose resistance changes with the temperature. The electrical resistance of the ECTS decreases as the temperature increases, and increases as the temperature decreases. The reference 5 V in the PCM is supplied to the ECTS via a resistor in the PCM.That is, the resistor in the PCM and the thermistor in the ECTS are connected in series. When the resistance value of the thermistor in the ECTS changes according to the engine coolant temperature, the output voltage also changes. During cold engine operation the PCM increases the fuel injection duration and controls the ignition timing using the information of engine coolant temperature to avoid engine stalling and improve drivability.

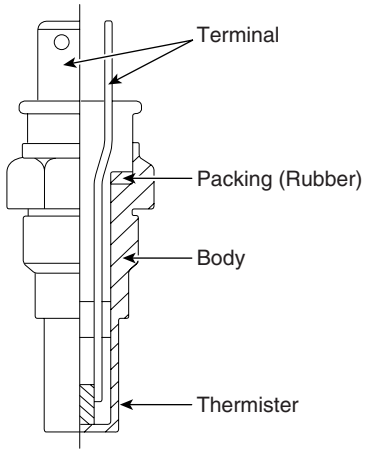

EGRF241A

SPECIFICATION

Temperature		Resistance(kΩ)
℃	˚F	
-40	-40	48.14
-20	-4	14.13 ~ 16.83
0	32	5.79
20	68	2.31 ~ 2.59
40	104	1.15
60	140	0.59
80	176	0.32

CIRCUIT DIAGRAM

[CIRCUIT DIAGRAM]

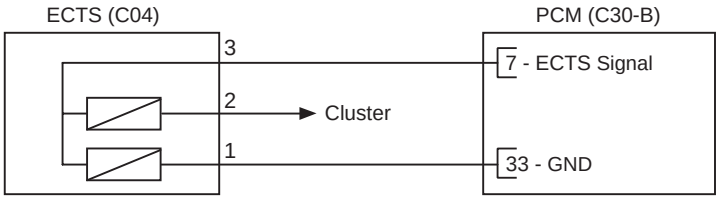

[CONNECTION INFORMATION]

Terminal	Connected to	Function
1	PCM C30-B (33)	Sensor ground
2	Cluster	-
3	PCM C30-B (7)	ECTS Signal

[HARNESS CONNECTORS]

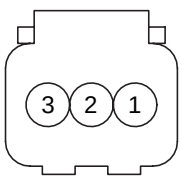

C04

ECTS

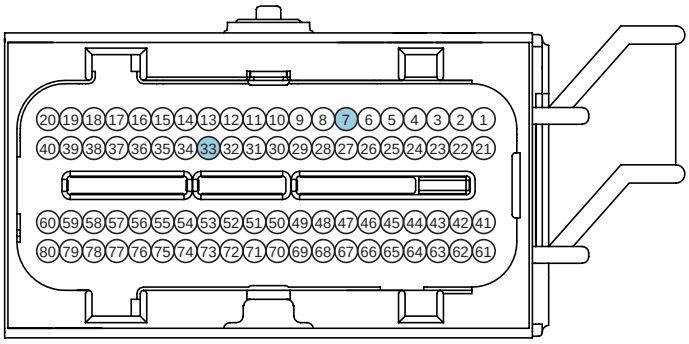

C30-B

PCM

SCMF16106L

COMPONENT INSPECTION

1. Turn ignition switch OFF.
2. Disconnect ECTS connector.
3. Remove the ECTS.
4. After immersing the thermistor of the sensor into engine coolant, measure resistance between ECTS terminals 1 and 3.

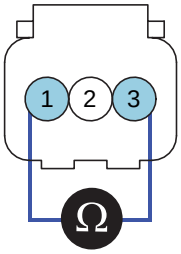

SCMF16107L

5. Check that the resistance is within the specification.

Specification: Refer to SPECIFICATION.

CAMSHAFT POSITION SENSOR (CMPS)

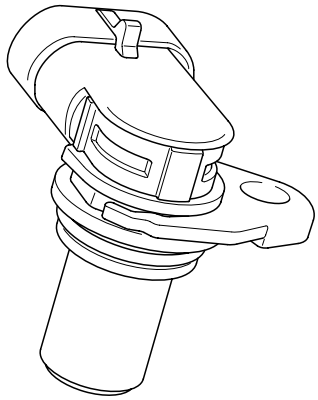

KFCF1022

INSPECTION E2A0AFAD

FUNCTION AND OPERATION PRICIPLE

Camshaft Position Sensor (CMPS) is a hall sensor and detects the camshaft position by using a hall element. It is related with Crankshaft Position Sensor (CKPS) and detects the piston position of each cylinder which the CKPS can't detect. The two CMPS are installed on engine head cover of bank 1 and 2 and uses a target wheel installed on the camshaft. This sensor has a hall-effect IC which output voltage changes when magnetic field is made on the IC with current flow.

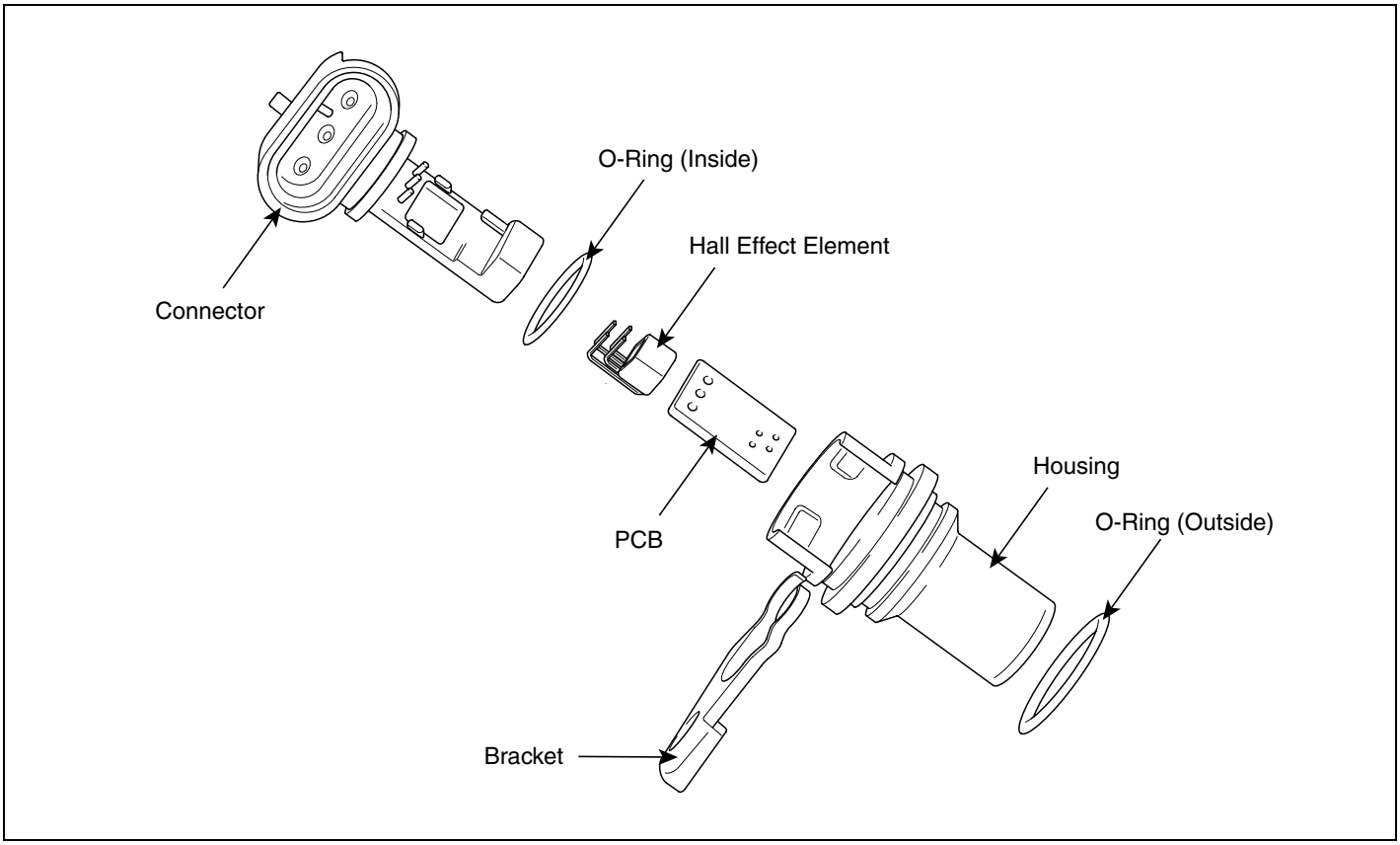

EGRF243A

WAVEFORM

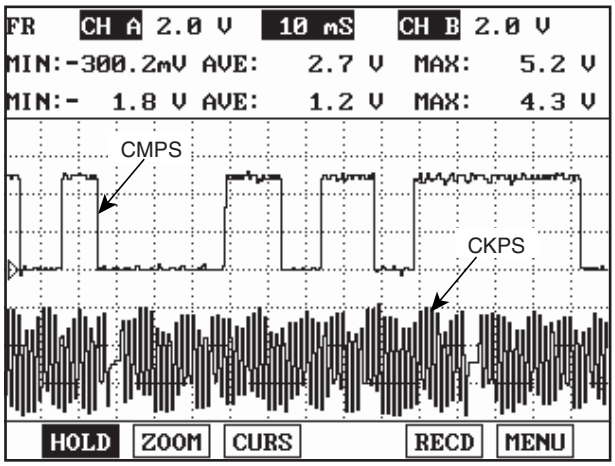

At Idle

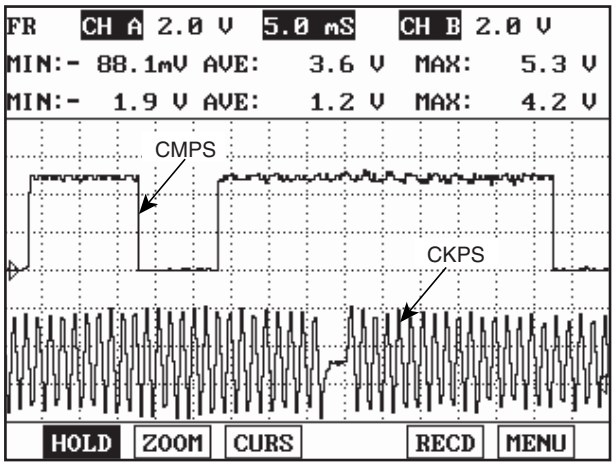

At Idle

LGLG002C

CIRCUIT DIAGRAM

[CIRCUIT DIAGRAM]

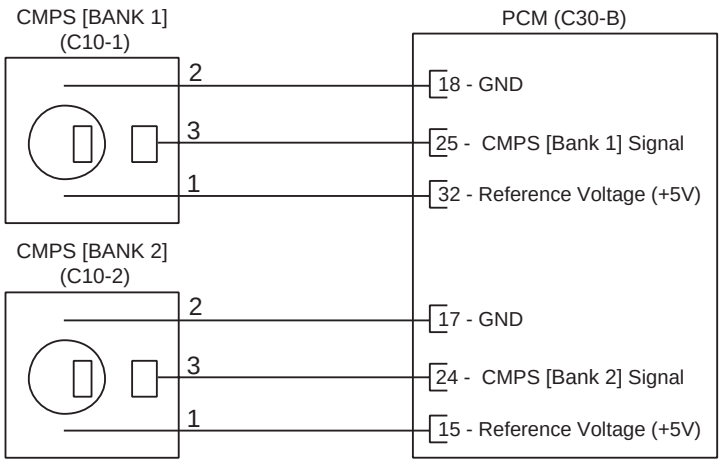

[CONNECTION INFORMATION]

CMPS [BANK 1]

Terminal	Connected to	Function
1	PCM C30-B (32)	Reference Voltage (+5V)
2	PCM C30-B (18)	Sensor ground
3	PCM C30-B (25)	CMPS [Bank 1] signal

CMPS [BANK 2]

Terminal	Connected to	Function
1	PCM C30-B (15)	Reference Voltage (+5V)
2	PCM C30-B (17)	Sensor ground
3	PCM C30-B (24)	CMPS [Bank 2] signal

[HARNESS CONNECTORS]

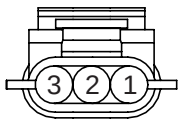

C10-1

CMPS [BANK 1]

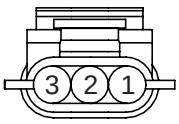

C10-2

CMPS [BANK 2]

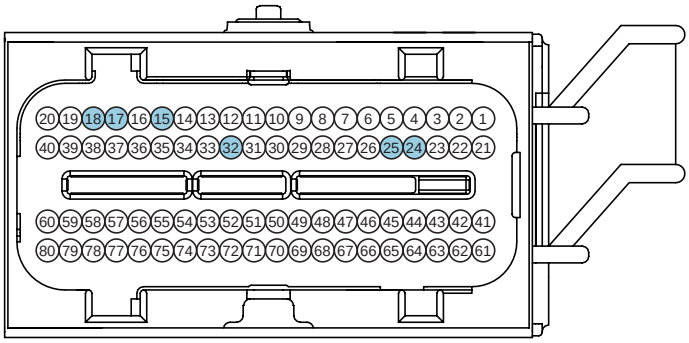

C30-B

PCM

SCMF16108L

COMPONENT INSPECTION

1. Check signal waveform of CMPS and CKPS using a scantool.

Specification : Refer to "WAVE FORM"

CRANKSHAFT POSITION SENSOR (CKPS)

INSPECTION EE4B998F

FUNCTION AND OPERATION PRICIPLE

Crankshaft Position Sensor (CKPS) detects the crankshaft position and is one of the most important sensors of the engine control system. If there is no CKPS signal input, fuel is not supplied and the main relay does not operate. That is, vehicle can't run without CKPS signal. This sensor is installed on transaxle housing and generates alternating current by magnetic flux field which is made by the sensor and the target wheel when engine runs. The target wheel consists of 58 slots and 2 missing slots on 360 CA (Crank Angle).

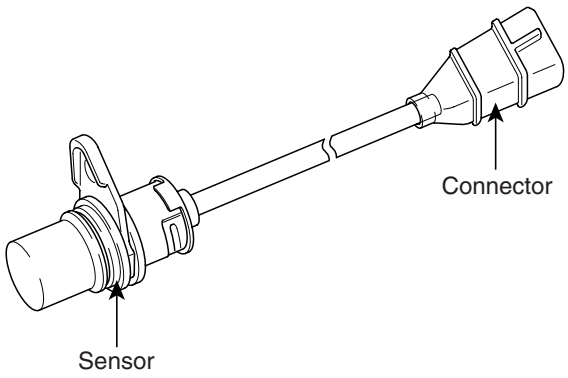

LGLG002D

WAVEFORM

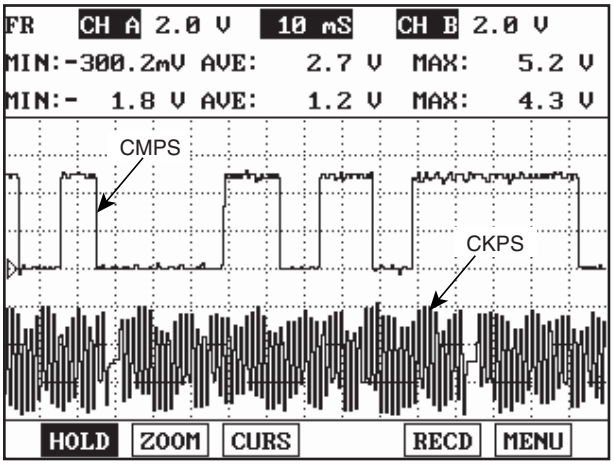

At Idle

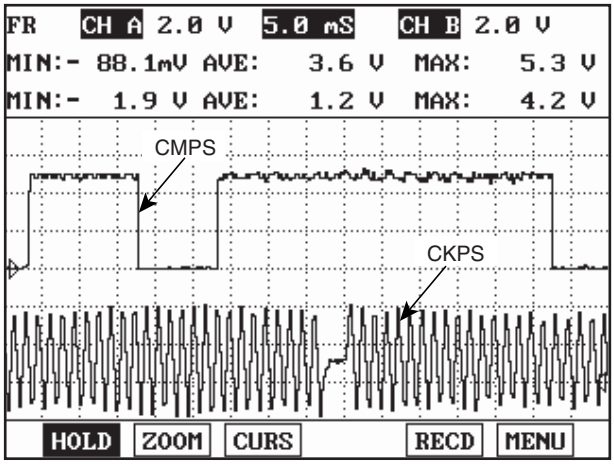

At Idle

LGLG002C

CIRCUIT DIAGRAM

[CIRCUIT DIAGRAM]

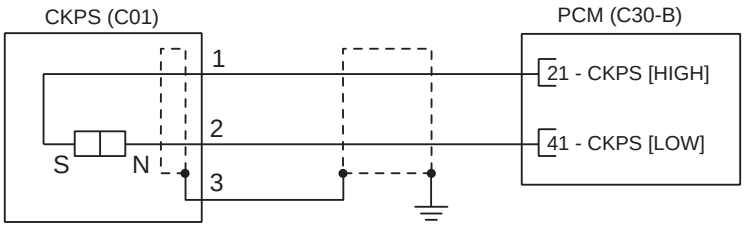

[CONNECTION INFORMATION]

Terminal	Connected to	Function
1	PCM C30-B (21)	CKPS [HIGH] Signal
2	PCM C30-B (41)	CKPS [LOW] Signal
3	Chassis Ground	Sensor Shield

[HARNESS CONNECTORS]

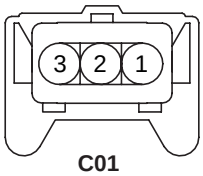

C01

CKPS

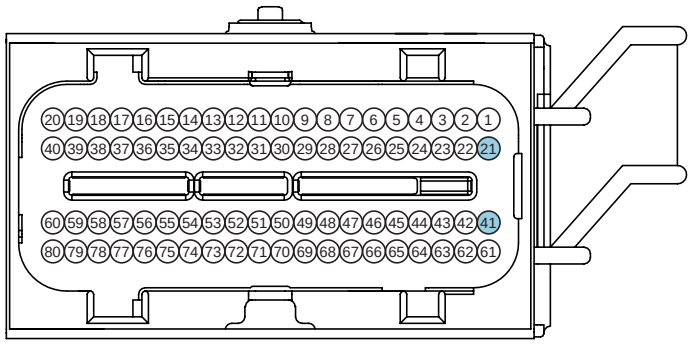

C30-B

PCM

SCMF16109L

COMPONENT INSPECTION

1. Check signal waveform of CKPS and CMPS using a scantool.

Specification : Refer to "WAVE FORM"

HEATED OXYGEN SENSOR (HO2S)

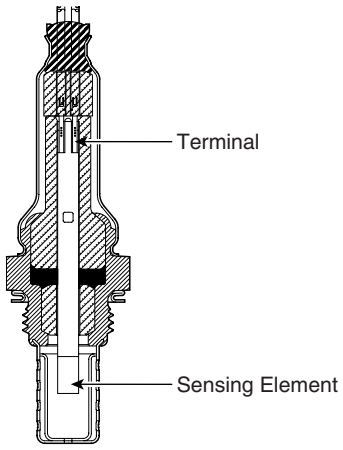

EGRF247A

INSPECTION E1DADE40

FUNCTION AND OPERATION PRICIPLE

Heated Oxygen Sensor (HO2S) consists of zirconium and alumina and is installed on upstream and downstream of the Manifold Catalyst Converter (MCC). After it compares oxygen consistency of the atmosphere with the exhaust gas, it transfers the oxygen consistency of the exhaust gas to the PCM. When A/F ratio is rich or lean, it generates approximately 1V or 0V respectively. In order that this sensor normally operates, the temperature of the sensor tip is higher than 370℃ (698˚F). So it has a heater which is controlled by the PCM duty signal. When the exhaust gas temperature is lower than the specified value, the heater warms the sensor tip.

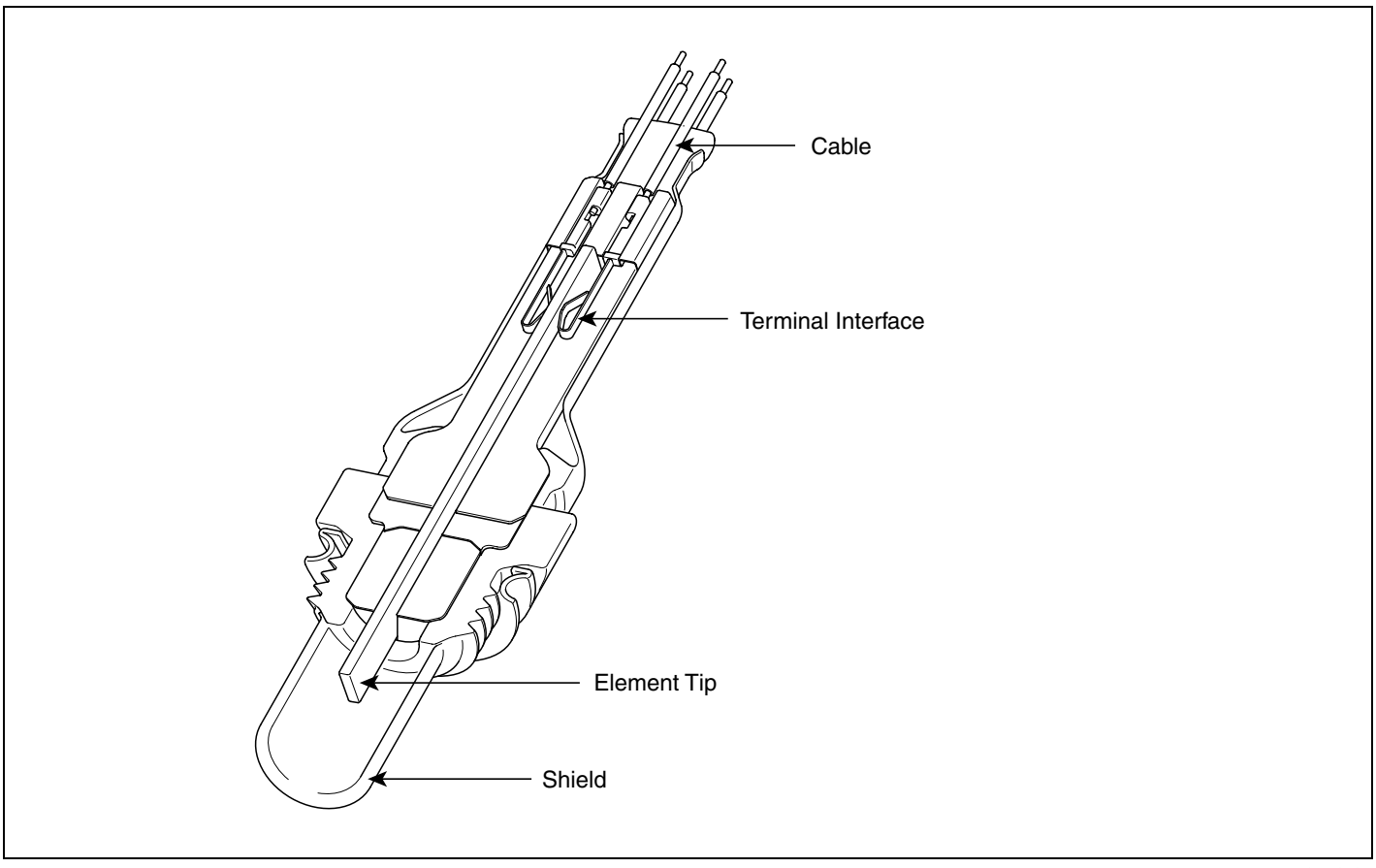

EGRF248A

SPECIFICATION

A/F Ratio	Output Voltage (V)
RICH	0.80 ~ 0.92
LEAN	0.1

Item	Specification
Heater Resistance (Ω)	3.0 ~ 4.0Ω at 21℃ (69.8˚F)

WAVEFORM

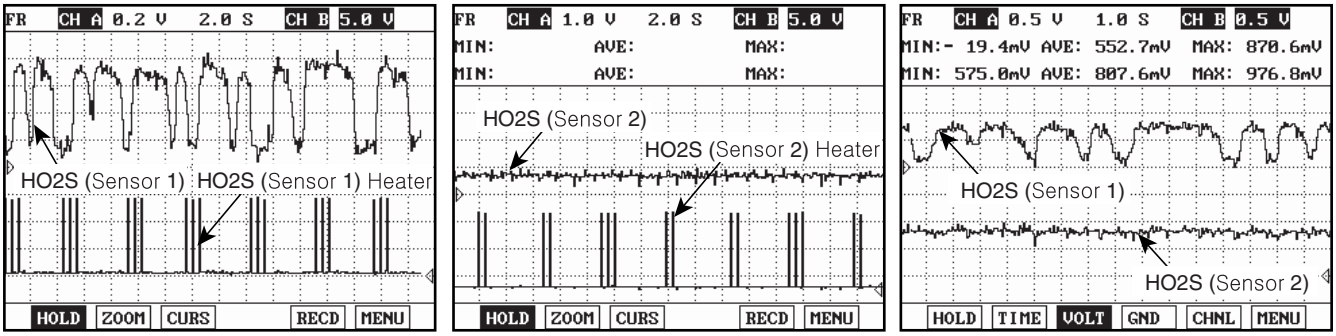

LGLG002E

CIRCUIT DIAGRAM

[CIRCUIT DIAGRAM]

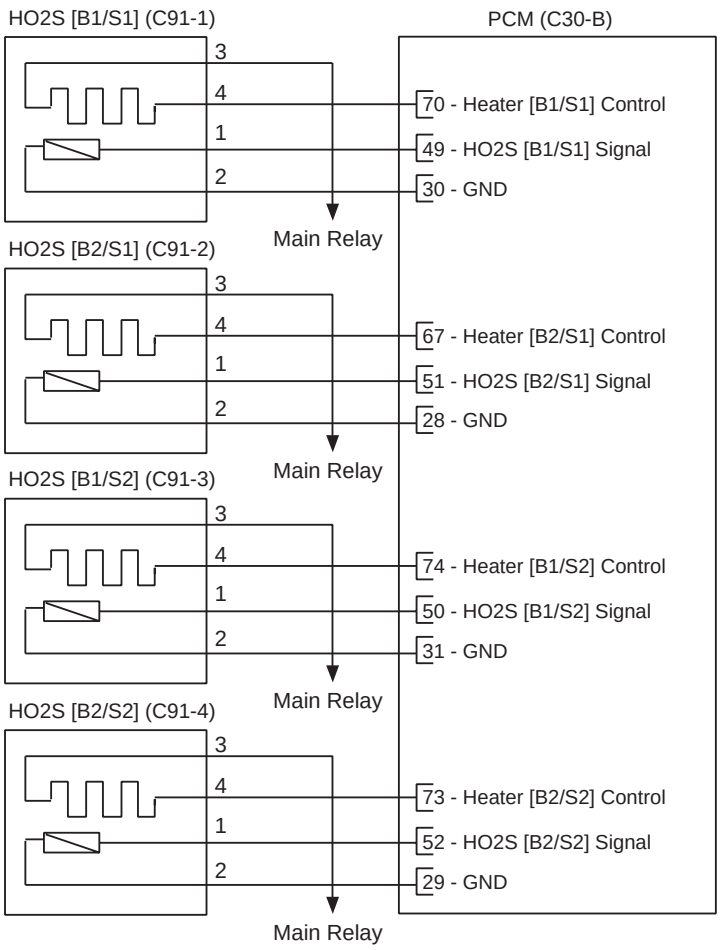

[CONNECTION INFORMATION]

HO2S [B1/S1]

Terminal	Connected to	Function
1	PCM C30-B (49)	HO2S [B1/S1] Signal
2	PCM C30-B (30)	Sensor ground
3	Main Relay	Battery Voltage (B+)
4	PCM C30-B (70)	Heater [B1/S1] Control

HO2S [B2/S1]

Terminal	Connected to	Function
1	PCM C30-B (51)	HO2S [B2/S1] Signal
2	PCM C30-B (28)	Sensor ground
3	Main Relay	Battery Voltage (B+)
4	PCM C30-B (67)	Heater [B2/S1] Control

HO2S [B1/S2]

Terminal	Connected to	Function
1	PCM C30-B (50)	HO2S [B1/S2] Signal
2	PCM C30-B (31)	Sensor ground
3	Main Relay	Battery Voltage (B+)
4	PCM C30-B (74)	Heater [B1/S2] Control

HO2S [B2/S2]

Terminal	Connected to	Function
1	PCM C30-B (52)	HO2S [B2/S2] Signal
2	PCM C30-B (29)	Sensor ground
3	Main Relay	Battery Voltage (B+)
4	PCM C30-B (73)	Heater [B2/S2] Control

[HARNESS CONNECTORS]

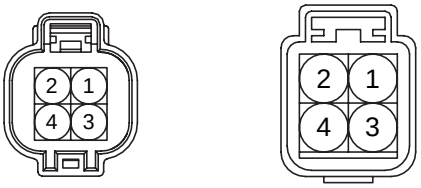

C91-1,2

HO2S [Bank 1/Sensor 1]
HO2S [Bank 2/Sensor 1]

C91-3,4

HO2S [Bank 1/Sensor 2]
HO2S [Bank 2/Sensor 2]

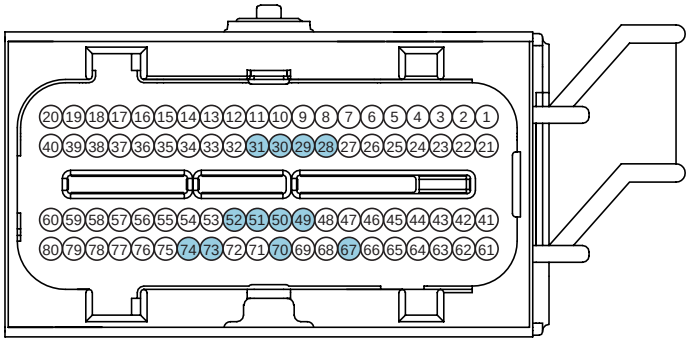

C30-B

PCM

SCMF16110L

COMPONENT INSPECTION

1. Check signal waveform of HO2S using a scantool.

Specification: Refer to "waveform".

2. Disconnet the HO2S connector.
3. Measure resistance between HO2S heater terminals 3 and 4.

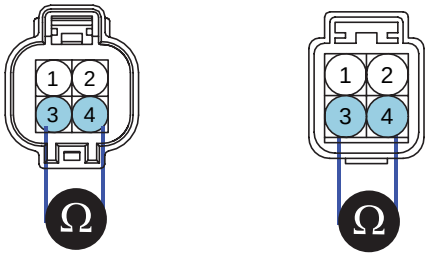

SCMF16111L

4. Check that the resistance is within the specification.

Specification: Refer to SPECIFICATION.

KNOCK SENSOR (KS)

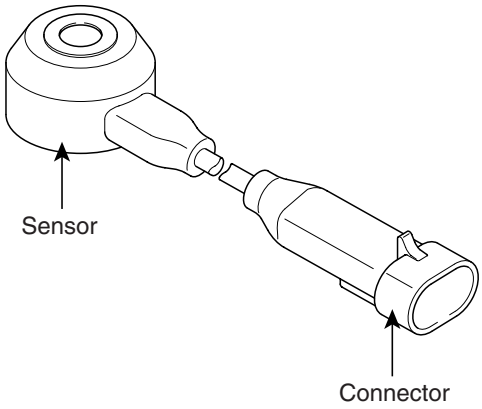

EGRF251A

INSPECTION EC4B1DA6

FUNCTION AND OPERATION PRICIPLE

Knocking is a phenomenon characterized by undesirable vibration and noise and can cause engine damage. Knock Sensor (KS) senses engine knocking and the two sensors are installed inside the V-valley of the cylinder block. When knocking occurs, the vibration from the cylinder block is applied as pressure to the piezoelectric element. At this time, this sensor transfers the voltage signal higher than the specified value to the PCM and the PCM retards the ignition timing. If the knocking disappears after retarding the ignition timing, the PCM will advance the ignition timing. This sequential control can improve engine power, torque and fuel economy.

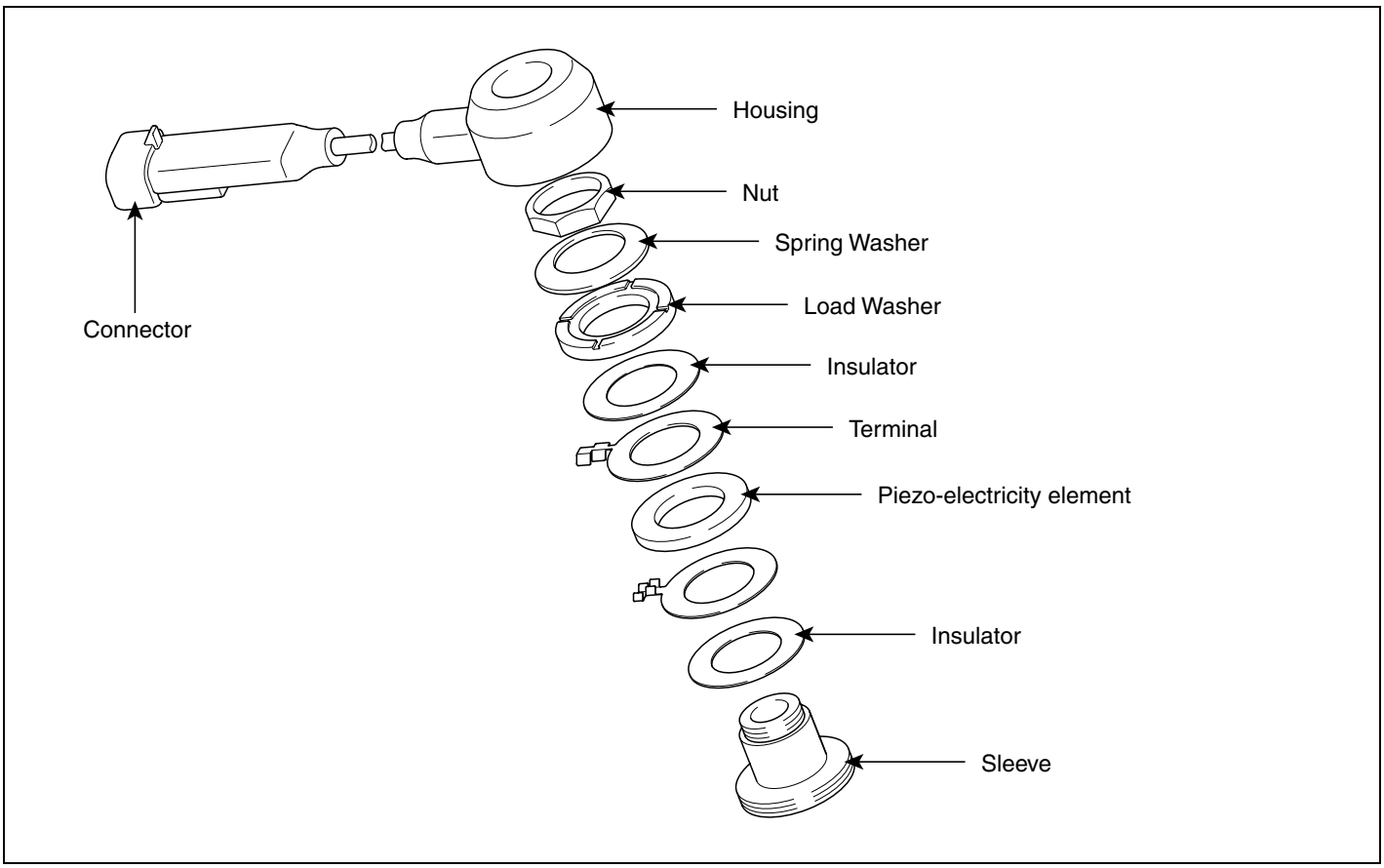

EGRF252A

SPECIFICATION

Item	Specification
Capacitance (pF)	950 ~ 1,350pF

WAVEFORM

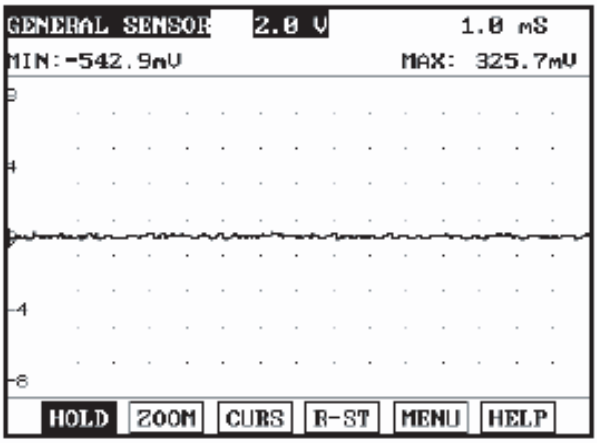

The knock sensor is installed at cycliner block to detect the vibration effectively during engine running.
The above waveform shows the signal waveform of knock sensor when knock dosen't happen. Generally, knock signal has more noise than other sensor.

EGRF610B

CIRCUIT DIAGRAM

[CIRCUIT DIAGRAM]

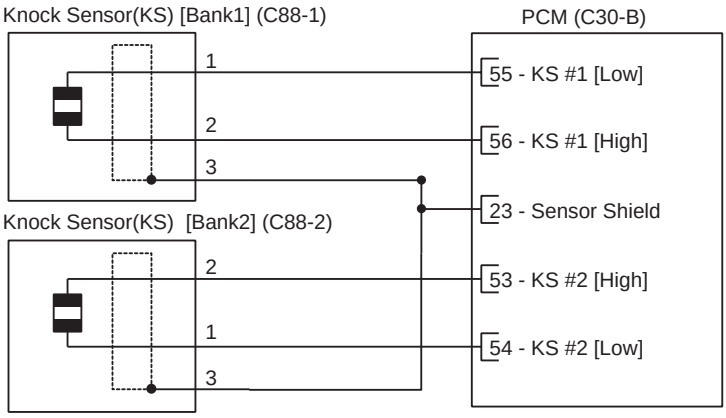

[CONNECTION INFORMATION]

KS [Bank1]

Terminal	Connected to	Function
1	PCM C30-B (55)	KS #1 [Low] signal
2	PCM C30-B (56)	KS #1 [High] signal
3	PCM C30-B (23)	Shield ground

KS [Bank2]

Terminal	Connected to	Function
1	PCM C30-B (54)	KS #2 [Low] signal
2	PCM C30-B (53)	KS #2 [High] signal
3	PCM C30-B (23)	Shield ground

[HARNESS CONNECTORS]

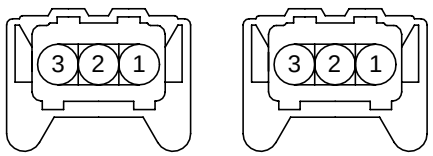

C88-1
KS [Bank1]

C88-2
KS [Bank2]

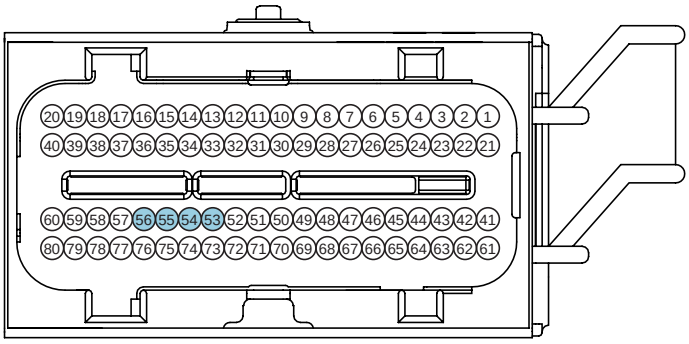

C30-B
PCM

SCMF16112L

INJECTOR

INSPECTION EBCA1EAE

FUNCTION AND OPERATION PRICIPLE

Based on information from various sensors, the PCM measures the fuel injection amount. The fuel injector is a solenoid-operated valve and the fuel injection amount is controlled by length of time that the fuel injector is held open. The PCM controls each injector by grounding the control circuit. When the PCM energizes the injector by grounding the control circuit, the circuit voltage should be low (theoretically 0V) and the fuel is injected. When the PCM de-energizes the injector by opening control circuit, the fuel injector is closed and circuit voltage should momentarily peak.

CAUTION

If an injector connector is disconnected for more than 46 seconds while the engine runs, the PCM will determine that the cylinder is misfiring and cut fuel supply. So be careful not to exceed 46 seconds. But the engine runs normally in 10 seconds after turning the ignition key off.

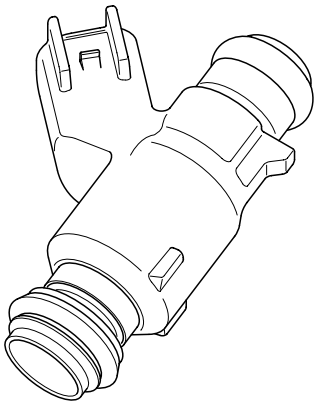

KFCF1026

SPECIFICATION

Item	Specification
Coil Resistance (Ω)	13.8 ~ 15.2Ω at 20℃ (68˚F)

CIRCUIT DIAGRAM

[CIRCUIT DIAGRAM]

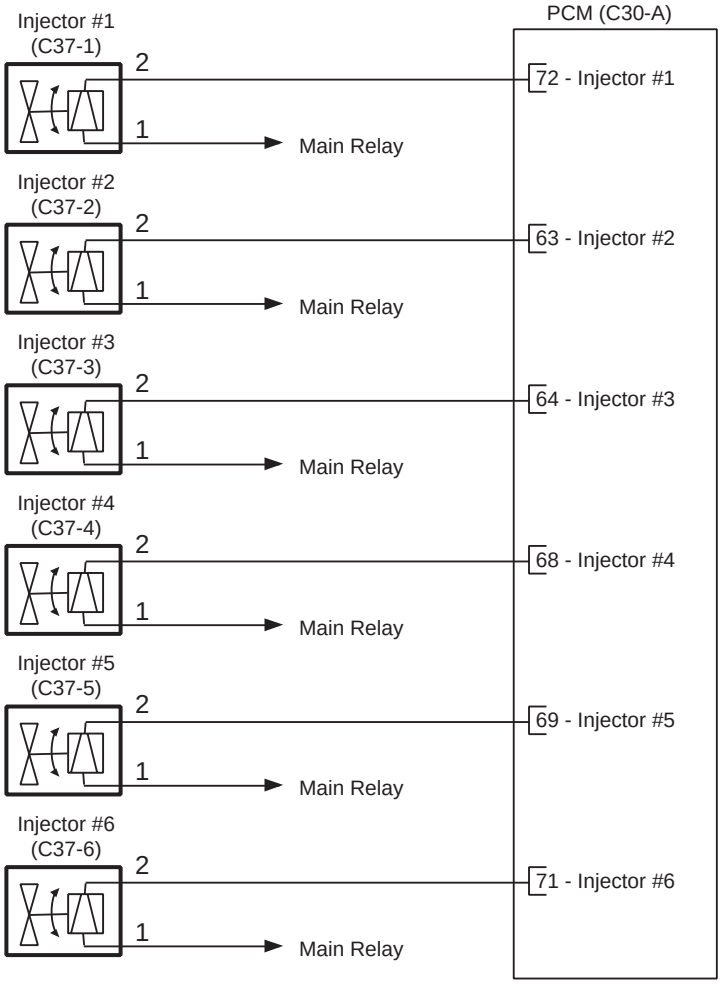

[CONNECTION INFORMATION]

Injector #1

Terminal	Connected to	Function
1	PCM C30-A (72)	Injector #1 control
2	Main Relay	Battery Voltage (B+)

Injector #2

Terminal	Connected to	Function
1	PCM C30-A (63)	Injector #2 control
2	Main Relay	Battery Voltage (B+)

Injector #3

Terminal	Connected to	Function
1	PCM C30-A (64)	Injector #3 control
2	Main Relay	Battery Voltage (B+)

Injector #4

Terminal	Connected to	Function
1	PCM C30-A (68)	Injector #4 control
2	Main Relay	Battery Voltage (B+)

Injector #5

Terminal	Connected to	Function
1	PCM C30-A (69)	Injector #5 control
2	Main Relay	Battery Voltage (B+)

Injector #6

Terminal	Connected to	Function
1	PCM C30-A (71)	Injector #6 control
2	Main Relay	Battery Voltage (B+)

[HARNESS CONNECTORS]

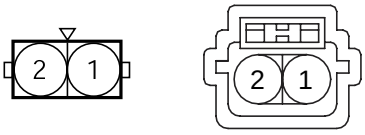

C37-1,3,5
Injector #1,3,5

C37-2,4,6
Injector #2,4,6

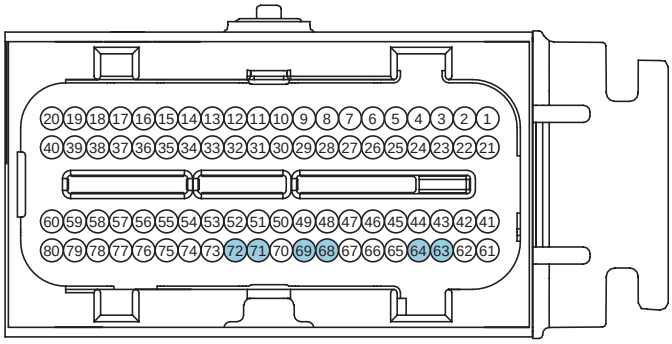

C30-A
PCM

SCMF16113L

COMPONENT INSPECTION

1. Turn ignition switch OFF.
2. Disconnect injector connector.
3. Measure resistance between injector terminals 1 and 2.

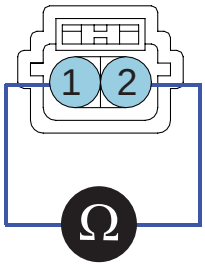

SCMF16114L

4. Check that the resistance is within the specification.

Specification: Refer to SPECIFICATION.

CVVT OIL CONTROL VALVE (OCV)

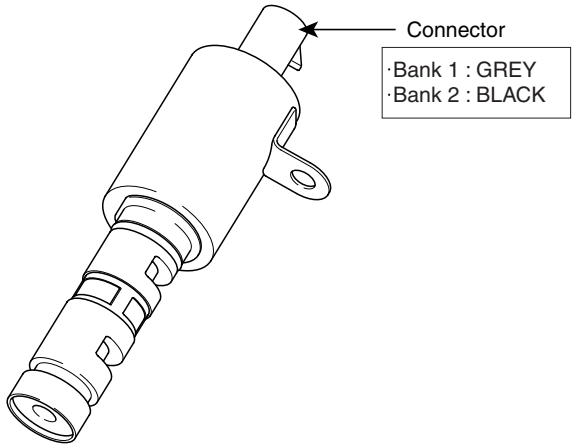

EFBF1027

INSPECTION E4CF7FB9

FUNCTION AND OPERATION PRICIPLE

The Continuously Variable Valve Timing (CVVT) system controls the amount of valve overlap by varying the amount of oil flow into an assembly mounted on each intake camshaft through PCM control of an oil control valve. This system uses two oil control valves, one on each bank. An Oil Temperature Sensor (OTS) is used to allow PCM monitoring of engine oil temperature. As oil is directed into the chambers of the CVVT assembly, the cam phase is changed to suit various performance and emissions requirements..

1. When camshaft rotates engine rotation-wise: Intake-Advance / Exhaust-Retard
2. When camshaft rotates counter engine rotation-wise: Intake- Retard / Exhaust- Advance

SPECIFICATION

Item	Specification
Coil Resistance (Ω)	6.7 ~ 7.7Ω at 20℃ (68˚F)

CIRCUIT DIAGRAM

[CIRCUIT DIAGRAM]

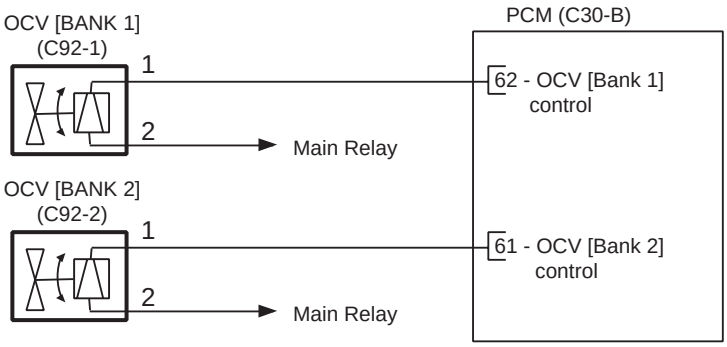

[CONNECTION INFORMATION]

OCV [BANK 1]

Terminal	Connected to	Function
1	PCM C30-B (62)	OCV [Bank 1] control
2	Main Relay	Battery Voltage (B+)

OCV [BANK 2]

Terminal	Connected to	Function
1	PCM C30-B (61)	OCV [Bank 2] control
2	Main Relay	Battery Voltage (B+)

[HARNESS CONNECTORS]

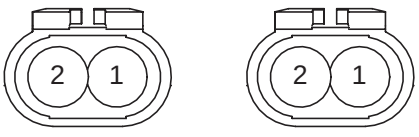

C92-1

OCV [Bank 1]

C92-2

OCV [Bank 2]

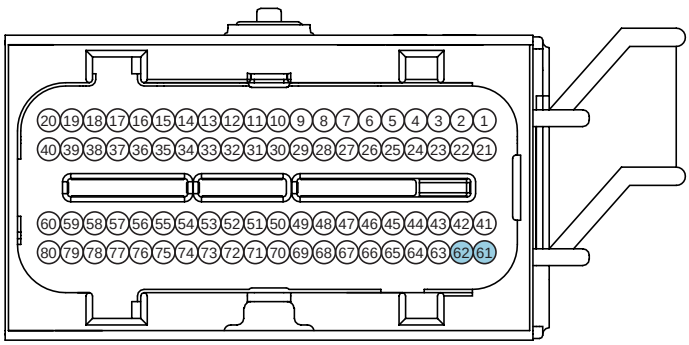

C30-B

PCM

SCMF16115L

COMPONENT INSPECTION

1. Turn ignition switch OFF.
2. Disconnect OCV connector.
3. Measure resistance between OCV terminals 1 and 2.

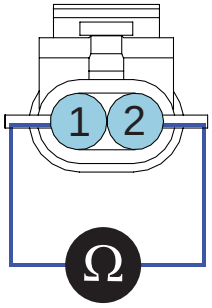

SCMF16116L

Specification: Refer to SPECIFICATION.

INSTALLATION E4DB08BD

CAUTION

If the OCVs are installed incorrectly, the vehicle may be damaged.
So when installing them, ensure the OCV and harness connector colors match(Components and harness side).

4. Check that the resistance is within the specification.

[BANK AND ITS COLOR]

Bank	Component side	Harness side
Bank 1 (RH)	Grey	Grey
Bank 2 (LH)	Black	Black

CVVT OIL TEMPERATURE SENSOR(OTS)

INSPECTION E046CB17

FUNCTION AND OPERATION PRICIPLE

The CVVT Oil Temperature Sensor (OTS) is a negative coefficient thermistor used by the PCM tl measure engine oil temperature for the purpose of adjusting CVVT calculations.

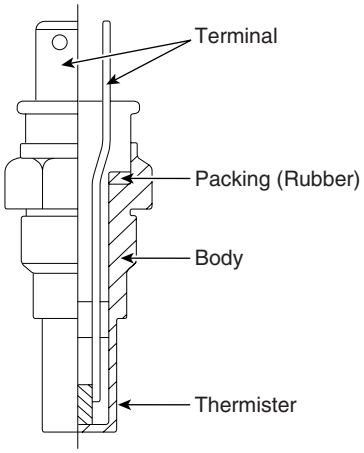

EGRF241A

SPECIFICATION

Temperature		Resistance (kΩ)
℃	°F	
-40	-40	52.0
-20	-4	16.5
0	32	6.0
20	68	2.45
40	104	1.10
60	140	0.544
80	176	0.290
100	212	0.164
120	248	0.099

CIRCUIT DIAGRAM

[CIRCUIT DIAGRAM]

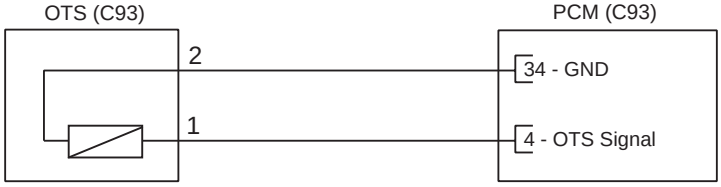

[CONNECTION INFORMATION]

Terminal	Connected to	Function
1	PCM C30-B (4)	OTS Signal
2	PCM C30-B (34)	Sensor ground

[HARNESS CONNECTORS]

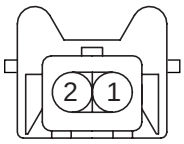

C93

OTS

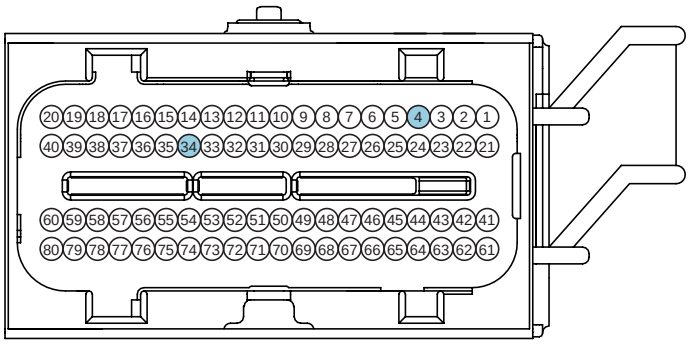

C30-B

PCM

SCMF16117L

COMPONENT INSPECTION

1. Turn ignition switch OFF.
2. Disconnect OTS connector.
3. Remove the OTS.
4. After immersing the thermistor of the sensor into water (or engine coolant), measure resistance between OTS terminals 1 and 2.

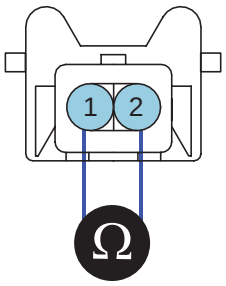

SCMF16118L

5. Check that the resistance is within the specification.

Specification: Refer to SPECIFICATION.

PURGE CONTROL SOLENOID VALVE (PCSV)

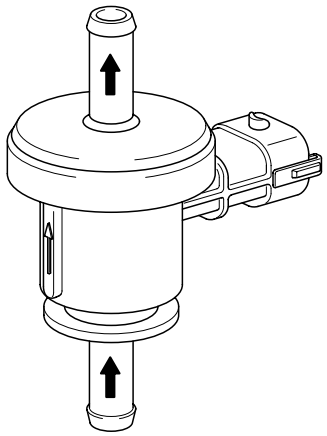

KGBF004W

INSPECTION EDCE4B32

FUNCTION AND OPERATION PRICIPLE

Purge Control Solenoid Valve (PCSV) is installed on the surge tank and controls the passage between the canister and the intake manifold. It is a solenoid valve and is open when the PCM grounds the valve control line. When the passage is open (PCSV ON), fuel vapors stored in the canister is transferred to the intake manifold.

SPECIFICATION

Item	Specification
Coil Resistance (Ω)	14.0 ~ 18.0Ω at 20℃ (68˚F)

CIRCUIT DIAGRAM

[CIRCUIT DIAGRAM]

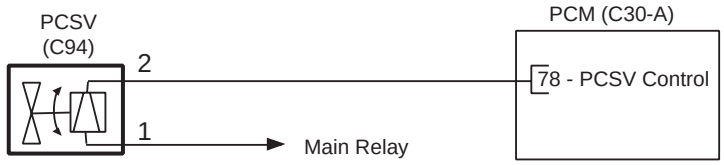

[CONNECTION INFORMATION]

Terminal	Connected to	Function
1	Main Relay	Battery Voltage (B+)
2	PCM C30-A (78)	PCSV Control

[HARNESS CONNECTORS]

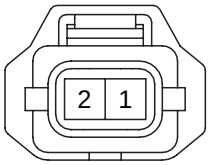

C94

PCSV

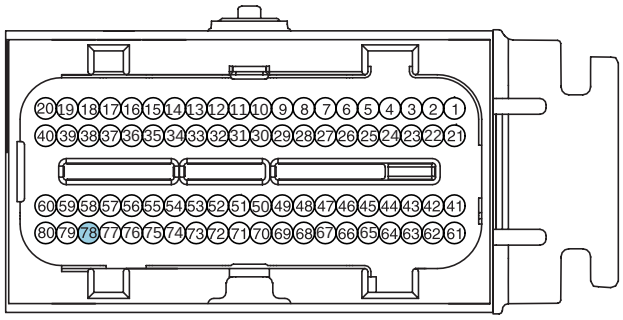

C30-A

PCM

SCMF16119L

COMPONENT INSPECTION

1. Turn ignition switch OFF.
2. Disconnect PCSV connector.
3. Measure resistance between PCSV terminals 1 and 2.

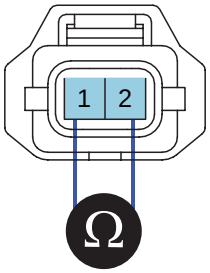

SCMF16120L

4. Check that the resistance is within the specification.

Specification: Refer to SPECIFICATION.

VARIABLE INTAKE SOLENOID (VIS) VALVE

INSPECTION E7DF6662

FUNCTION AND OPERATION PRICIPLE

Variable Intake manifold Solenoid (VIS) valves are installed on surge tank (VIS Valve #1) and intake manifold (VIS Valve #2). These VIS valve #1 and #2 control vacuum modulators which activate valves in surge tank and intake manifold. These valves are opened or closed by PCM according to engine condition (Refer to below table).

Engine Condition	VIS Valve #1 (Surge Tank)	VIS Valve #2 (In-manifold)	Operation
Low Speed	Closed	Closed	Increasing engine performance in low engine speed by reducing intake interference among cylinders
Medium Speed	Open	Open or closed	Increasing intake efficiency
High Speed	Open	Open	Minimizing intake resistance by shortening intake manifold length and increasing area of air entrance

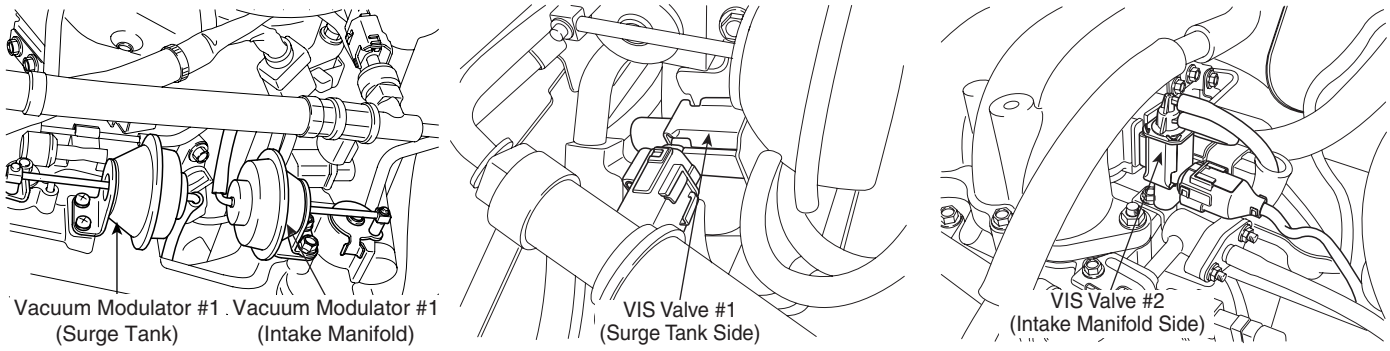

LGLG002K

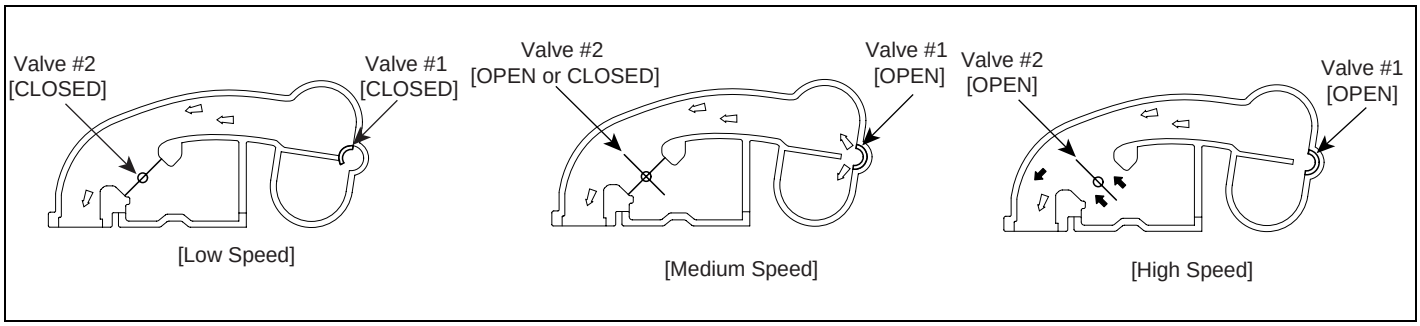

SCMF16004L

SPECIFICATION

Item	Specification
Coil Resistance (Ω)	29.0 ~ 35.0 Ω at 20℃ (68˚F)

CIRCUIT DIAGRAM

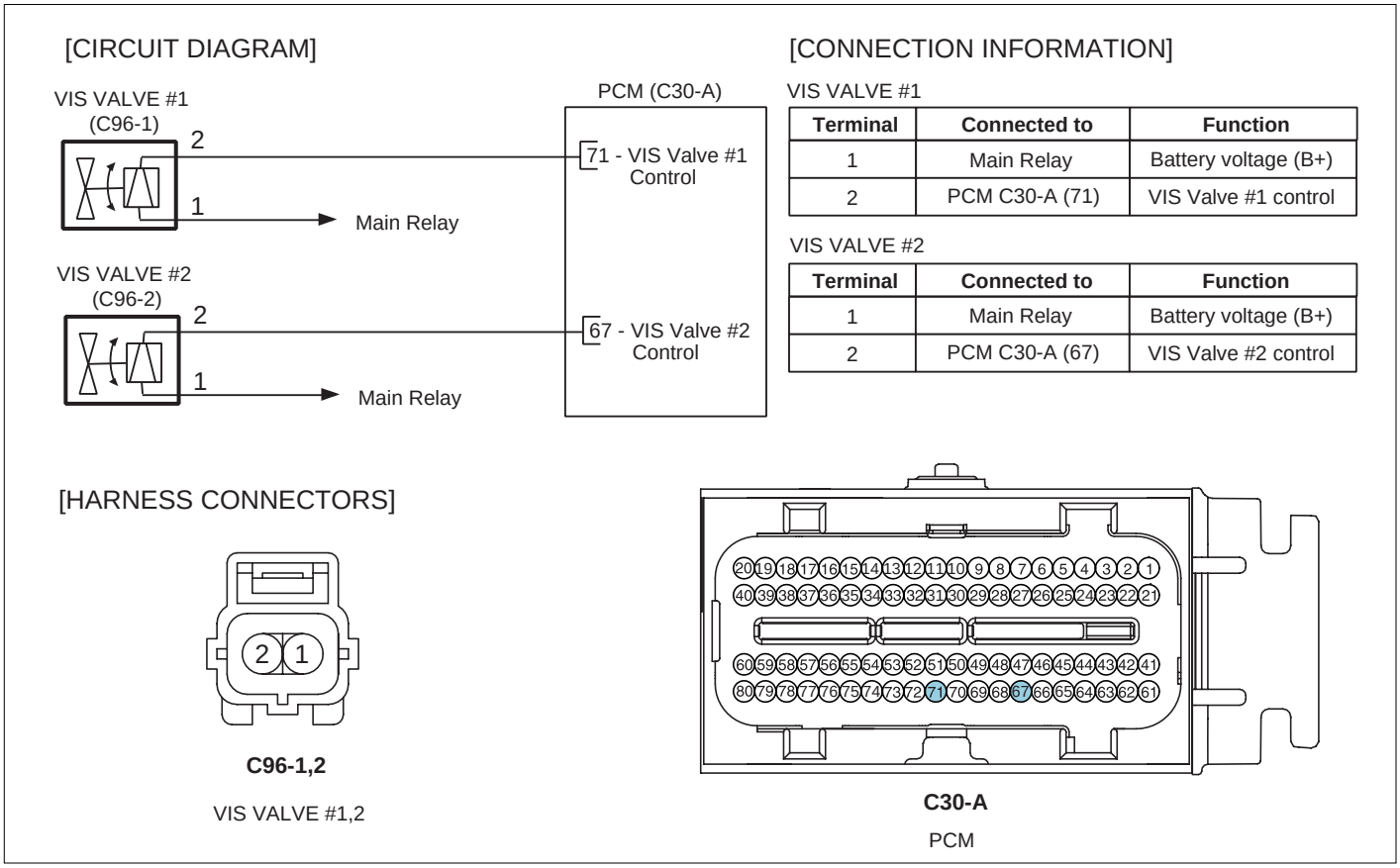

SCMF16121L

COMPONENT INSPECTION

1. Turn ignition switch OFF.
2. Disconnect VIS Valve connector.
3. Measure resistance between VIS Valve #1,2 terminals 1 and 2.

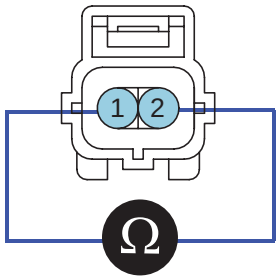

SCMF16122L

4. Check that the resistance is within the specification.

Specification: Refer to SPECIFICATION.

ACCELERATOR POSITION SENSOR (APS)

INSPECTION EFDE8560

FUNCTION AND OPERATION PRICIPLE

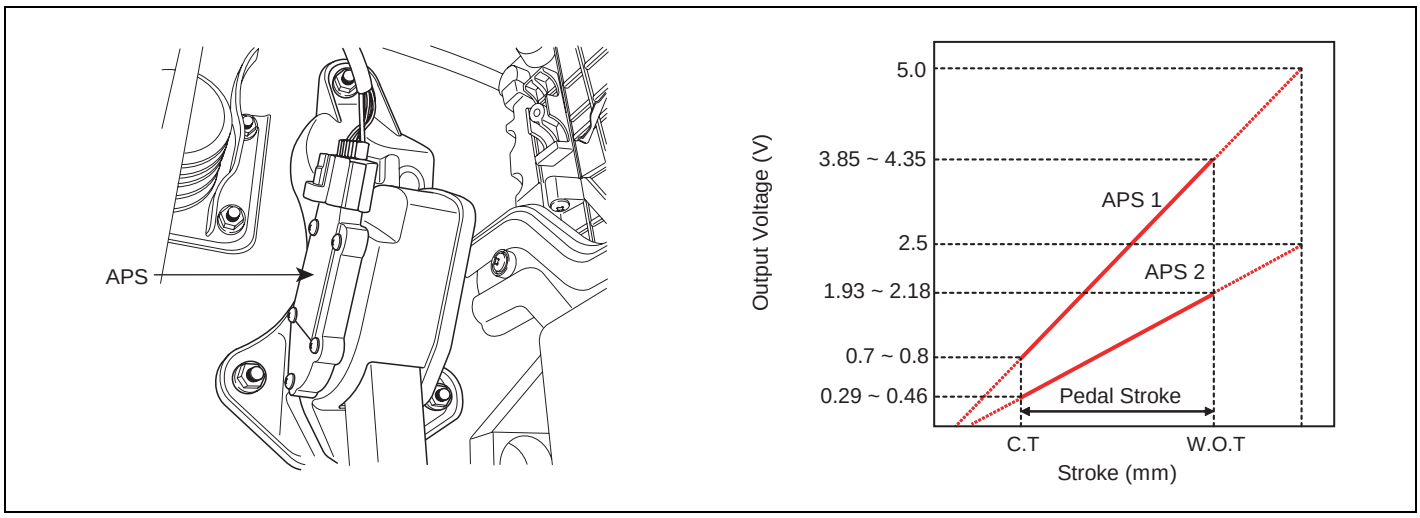

SCMF16123L

Accelerator Position Sensor (APS) is installed on the accelerator pedal module and detects the rotation angle of the accelerator pedal. The APS is one of the most important sensors in engine control system, so it consists of the two sensors which adapt individual sensor power and ground line. The second sensor monitors the first sensor and its output voltage is half of the first one. If the ratio of the sensor 1 and 2 is out of the range (approximately 1/2), the diagnostic system judges that a malfunction has occurred.

SPECIFICATION

Pedal Position	Output Voltage (V) [Vref = 5.0V]	
	APS1	APS2
C.T	0.7 ~ 0.8V	0.29 ~ 0.46V
W.O.T	3.85 ~ 4.35V	1.93 ~ 2.18V

Item	Sensor Resistance
APS1	0.7 ~ 1.3kΩ at 20℃ (68°F)
APS2	1.4 ~ 2.6kΩ at 20℃ (68°F)

CIRCUIT DIAGRAM

[CIRCUIT DIAGRAM]

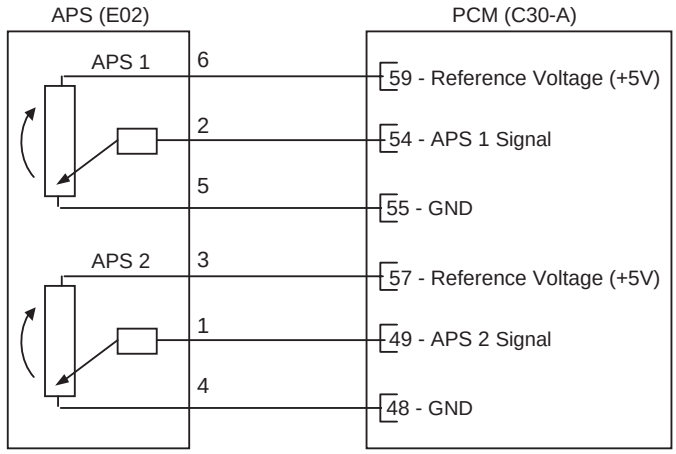

[CONNECTION INFORMATION]

Terminal	Connected to	Function
1	PCM C30-A (49)	APS 2 Signal
2	PCM C30-A (54)	APS 1 Signal
3	PCM C30-A (57)	APS 2 Reference Voltage (+5V)
4	PCM C30-A (48)	APS 2 Ground
5	PCM C30-A (55)	APS 1 Ground
6	PCM C30-A (59)	APS 1 Reference Voltage (+5V)

[HARNESS CONNECTORS]

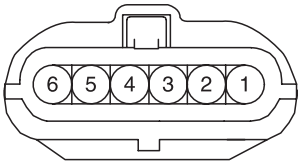

E02

APS

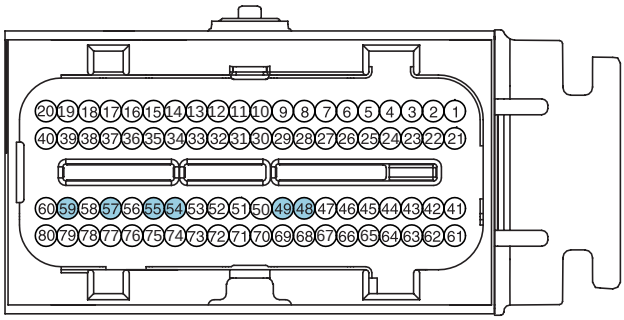

C30-A

PCM

SCMF16124L

COMPONENT INSPECTION

1. Connect a scantool on Diagnoisis Link Connector (DLC).
2. Start engine and check output voltages of APS 1 and 2 at C.T and W.O.T.

SPECIFICATION

Condition	Output Voltage (V)	
	APS1	APS2
C.T	0.70 ~ 0.80	0.29 ~ 0.46
W.O.T	3.85 ~ 4.35	1.93 ~ 2.18

3. Turn ignition switch OFF and disconnect the scantool from the DLC.
4. Disconnect APS connector and measure resistance between APS terminals 5 and 6 (APS 1).

Specification: Refer to SPECIFICATION.

5. Disconnect APS connector and measure resistance between APS terminals 3 and 4 (APS 2).

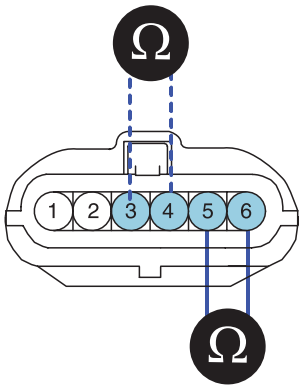

SCMF16125L

Specification: Refer to SPECIFICATION.

POWERTRAIN CONTROL MODULE (PCM)

POWERTRAIN CONTROL MODULE (PCM) E75F1EFA

1. HARNESS CONNECTOR

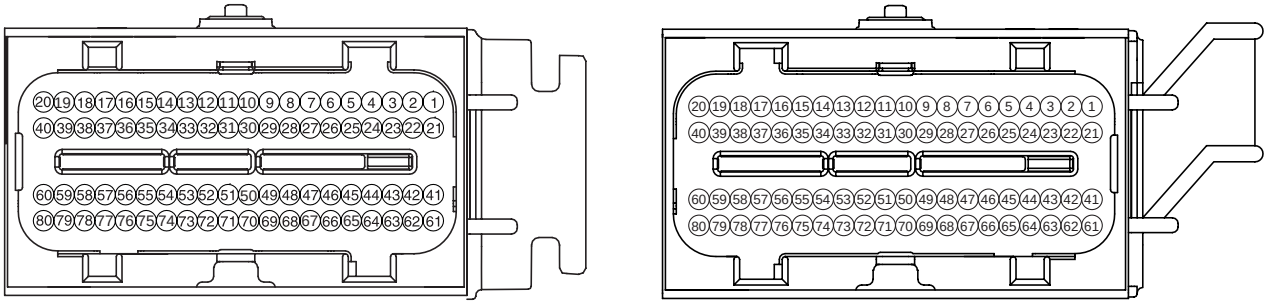

SCMF16126L

2. TERMINAL FUNCTION

CONNECTOR [C30-A]

Pin No.	Description	Connected to
1	2nd CAN [High]	Multi-Purpose Check Connector
2	2nd CAN [Low]	Multi-Purpose Check Connector
3	-	
4	-	
5	-	
6	-	
7	-	
8	-	
9	-	
10	Power Steering Switch signal input	Power Steering Switch
11	-	
12	-	
13	Clutch Switch signal input	Clutch Switch
14	-	
15	Alternator load signal input	Alternator
16	Cruise Switch ground	Cruise Switch
17	-	
18	A/C switch "ON" signal input	A/C Switch
19	-	
20	-	

Pin No.	Description	Connected to
21	Brake switch signal input	Brake Switch
22	-	
23	Brake lamp signal input	Brake Switch
24	-	
25	Cruise Switch signal input	Cruise Switch
26	A/C thermal switch signal input	A/C Thermal Switch
27	Diagnostic Data Line (K-Line)	Data Link Connector (DLC)
28	-	
29	-	
30	-	
31	-	
32	A/C Pressure Transducer signal input	A/C Pressure Transducer (APT)
33	Sensor ground	A/C Pressure Transducer (APT)
34	-	
35	-	
36	-	
37	-	
38	Battery voltage supply after main relay	Main Relay
39	Battery voltage supply after main relay	Main Relay
40	Battery voltage supply after main relay	Main Relay
41	CAN [High]	ABS/ESP Control Module, 4WD ECM, etc.
42	CAN [Low]	ABS/ESP Control Module
43	Main Relay control output	Main Relay
44	Intake Air Temperature Sensor signal input	Intake Air Temperature Sensor (IATS)
45	Immobilizer communication line	Immobilizer control module
46	-	
47	Mass Air Flow Sensor signal input	Mass Air Flow Sensor (MAFS)
48	Sensor ground	Accelerator Position Sensor (APS) #2
49	Accelerator Position Sensor #2 signal input	Accelerator Position Sensor (APS) #2
50	-	
51	Cruise "SET" lamp control output	Cruise "SET" Lamp
52	Vehicle speed signal input	ABS/ESP Control Module (With ABS/ESP [Euro-Ⅲ/Ⅳ])
		Vehicle Speed Sensor (VSS) (Except Euro-Ⅲ/Ⅳ)
53	Sensor ground	Intake Air Temperature Sensor (IATS)
54	Accelerator Position Sensor #1 signal input	Accelerator Position Sensor (APS) #1
55	Sensor ground	Accelerator Position Sensor (APS) #1
56	-	

Pin No.	Description	Connected to
57	Reference voltage (+5V)	Accelerator Position Sensor (APS) #2
58	Reference voltage (+5V)	A/C Pressure Transducer (APT)
59	Reference voltage (+5V)	Accelerator Position Sensor (APS) #1
60	-	
61	Engine speed signal output	Cluster (Tachometer)
		4WD ECM
62	Fuel consumption signal output	Trip Computer
63	Malfunction Indicator Lamp (MIL) control output	Cluster (Malfunction Indicator Lamp)
64	A/C Compressor Relay control output	A/C Compressor Relay
65	Cooling Fan [Low] control output	Cooling Fan Relay [Low]
66	Cooling Fan [High] control output	Cooling Fan Relay [High]
67	Variable Intake Solenoid Valve #2 control output	Variable Intake Solenoid (VIS) Valve #2 [Intake Manifold Side]
68	Throttle Position Sensor signal (PWM) output	ABS/ESP Control Module
69	Cruise "MAIN" lamp control output	Cruise "MAIN" Lamp
70	Fuel Pump Relay control output	Fuel Pump Relay
71	Variable Intake Solenoid Valve #1 control output	Variable Intake Solenoid (VIS) Valve #1 Surge Tank Side]
72	Immobilizer lamp control output	Immobilizer Lamp
73	-	
74	-	
75	-	
76	-	
77	-	
78	Purge Control Solenoid Valve control output	Purge Control Solenoid Valve (PCSV)
79	Wheel Speed Sensor [Low] signal input	Wheel Speed Sensor (WSS)(Without ABS/ESP [Euro-Ⅲ/Ⅳ])
80	Wheel Speed Sensor [High] signal input	Wheel Speed Sensor (WSS)(Without ABS/ESP [Euro-Ⅲ/Ⅳ])

CONNECTOR [C30-B]

Pin No.	Description	Connected to
1	ETC Motor [-] control output	ETC Motor (in ETC Module)
2	ETC Motor [+] control output	ETC Motor (in ETC Module)
3	-	
4	CVVT Oil Temperature Sensor signal input	CVVT Oil Temperature Sensor (OTS)
5	-	
6	-	
7	Engine Coolant Temperature Sensor signal input	Engine Coolant Temperature Sensor (ECTS)

Pin No.	Description	Connected to
8	Manifold Absolute Pressure Sensor signal input	Manifold Absolute Pressure Sensor (MAPS)
9	-	
10	-	
11	Reference voltage (+5V)	Manifold Absolute Pressure Sensor (MAPS)
12	Battery voltage supply after ignition switch	Ignition Switch
13	Reference voltage (+5V)	Throttle Position Sensor (TPS) #2
14	Sensor ground	Throttle Position Sensor (TPS) #1
15	Reference voltage (+5V)	Camshaft Position Sensor (CMPS) [Bank 2]
16	Reference voltage (+5V)	Throttle Position Sensor (TPS) #1
17	Sensor ground	Camshaft Position Sensor (CMPS) [Bank 2]
18	Sensor ground	Camshaft Position Sensor (CMPS) [Bank 1]
19	Ignition Coil (Cylinder #6) control output	Ignition Coil (Cylinder #6)
20	-	
21	Crankshaft Position Sensor [High] signal input	Crankshaft Position Sensor (CKPS)
22	-	
23	Sensor Shield	Knock Sensor (KS) [Bank 1], Knock Sensor (KS) [Bank 2]
24	Camshaft Position Sensor [Bank 2] signal input	Camshaft Position Sensor (CMPS) [Bank 2]
25	Camshaft Position Sensor [Bank 1] signal input	Camshaft Position Sensor (CMPS) [Bank 1]
26	-	
27	-	
28	Sensor ground	HO2S [B2 / S1] [Except for LEADED]
29	Sensor ground	HO2S [B2 / S2] [Euro-Ⅲ/Ⅳ]
30	Sensor ground	HO2S [B1 / S1] [Except for LEADED]
31	Sensor ground	HO2S [B1 / S2] [Euro-Ⅲ/Ⅳ]
32	Reference voltage (+5V)	Camshaft Position Sensor (CMPS) [Bank 1]
33	Sensor ground	Engine Coolant Temperature Sensor (ECTS)
34	Sensor ground	Manifold Absolute Pressure Sensor (MAPS), CVVT Oil Temperature Sensor (OTS)
35	Power ground	Chassis Ground
36	Power ground	Chassis Ground
37	Power ground	Chassis Ground
38	Power ground	Chassis Ground
39	Power ground	Chassis Ground
40	Ignition Coil (Cylinder #4) control output	Ignition Coil (Cylinder #4)
41	Crankshaft Position Sensor [Low] signal input	Crankshaft Position Sensor (CKPS)
42	-	
43	-	

Pin No.	Description	Connected to
44	-	
45	-	
46	-	
47	-	
48	Throttle Position Sensor #1 signal input	Throttle Position Sensor (TPS) #1
49	Heated Oxygen Sensor [Bank 1 / Sensor 1] signal input	HO2S (B1/S1) [Except for LEADED]
50	Heated Oxygen Sensor [Bank 1 / Sensor 2] signal input	HO2S (B1/S2) [Euro-Ⅲ/Ⅳ]
51	Heated Oxygen Sensor [Bank 2 / Sensor 1] signal input	HO2S (B2/S1) [Except for LEADED]
52	Heated Oxygen Sensor [Bank 2 / Sensor 2] signal input	HO2S (B2/S2) [Euro-Ⅲ/Ⅳ]
53	Knock Sensor (KS) [Bank 2] [High] signal input	Knock Sensor (KS) [Bank 2]
54	Knock Sensor (KS) [Bank 2] [Low] signal input	Knock Sensor (KS) [Bank 2]
55	Knock Sensor (KS) [Bank 1] [Low] signal input	Knock Sensor (KS) [Bank 1]
56	Knock Sensor (KS) [Bank 1] [High] signal input	Knock Sensor (KS) [Bank 1]
57	Throttle Position Sensor #2 signal input	Throttle Position Sensor (TPS) #2
58	Sensor ground	Throttle Position Sensor (TPS) #2
59	-	
60	Ignition Coil (Cylinder #2) control output	Ignition Coil (Cylinder #2)
61	CVVT Oil Control Valve [Bank 2] control output	CVVT Oil Control Valve (OCV) [Bank 2]
62	CVVT Oil Control Valve [Bank 1] control output	CVVT Oil Control Valve (OCV) [Bank 1]
63	Injector (Cylinder #2) control output	Injector (Cylinder #2)
64	Injector (Cylinder #3) control output	Injector (Cylinder #3)
65	-	
66	-	
67	Heated Oxygen Sensor [Bank 2 / Sensor 1] Heater control output	HO2S [B2 / S1] [Except for LEADED]
68	Injector (Cylinder #4) control output	Injector (Cylinder #4)
69	Injector (Cylinder #5) control output	Injector (Cylinder #5)
70	Heated Oxygen Sensor [Bank 1 / Sensor 1] Heater control output	HO2S [B1 / S1] [Except for LEADED]
71	Injector (Cylinder #6) control output	Injector (Cylinder #6)
72	Injector (Cylinder #1) control output	Injector (Cylinder #1)
73	Heated Oxygen Sensor [Bank 2 / Sensor 2] Heater control output	HO2S [B2 / S2] [Euro-Ⅲ/Ⅳ]
74	Heated Oxygen Sensor [Bank 1 / Sensor 2] Heater control output	HO2S [B1 / S2] [Euro-Ⅲ/Ⅳ]
75	-	
76	Battery Power	Battery

Pin No.	Description	Connected to
77	Ignition Coil (Cylinder #3) control output	Ignition Coil (Cylinder #3)
78	Ignition Coil (Cylinder #5) control output	Ignition Coil (Cylinder #5)
79	Ignition Coil (Cylinder #1) control output	Ignition Coil (Cylinder #1)
80	-	

3. TERMINAL INPUT/OUTPUT SIGNAL

CONNECTOR [C30-A]

Pin No.	Description	Condition	Type	Level	Test Result
1	2nd CAN [High]	Idle	DC	2.0 ~ 3.0V	2.5V
2	2nd CAN [Low]	Idle	DC	2.0 ~ 3.0V	2.5V
3	-				
4	-				
5	-				
6	-				
7	-				
8	-				
9	-				
10	Power Steering Switch signal input	S/W ON	DC	Max. 0.5V	-0.125V
		S/W OFF		Battery Voltage	13.47V
11	-				
12	-				
13	Clutch Switch signal input				
14	-				
15	Alternator load signal input	Idle	Pulse	Hi: Battery Voltage	13.67V
				Lo: Max 1.5 V	-0.125mV
16	Cruise Switch ground	Idle	DC	Max. 50 mV	22.44mV
17	-				
18	A/C switch "ON" signal input	A/C Relay OFF	DC	Battery Voltage	12.37V
		A/C Relay ON		Max. 1.0V	-25mV
19	-				
20	-				
21	Brake switch signal input	Pedal Release	DC	Battery Voltage	13.97V
		Pedal Push		Max. 0.5V	-25mV
22	-				
23	Brake lamp signal input	Pedal Release	DC	Max. 0.5V	-225mV
		Pedal Push		Battery Voltage	12.97V
24	-				
25	Cruise Switch signal input	All Release	DC	4.3 ~ 4.7V	4.39V
		Main SW		Battery Voltage	13.37V
		Set SW		1.3 ~ 1.7V	1.38V
		Resume SW		2.8 ~ 3.2V	2.82V
		Cancel SW		-0.2 ~ 0.2V	-37.54mV
26	A/C thermal switch signal input	A/C OFF	DC	Max. 1.0V	-25mV
		A/C ON		Battery Voltage	12.57V

Pin No.	Description	Condition	Type	Level	Test Result
27	Diagnostic Data Line (K-Line)	When transmitting	Pulse	Hi: Min. Vbatt × 80%	11.57V
				Lo: Max. Vbatt × 20%	175mV
		When receiving		Hi: Min. Vbatt × 70%	
				Lo: Max. Vbatt × 30%	
28	-				
29	-				
30	-				
31	-				
32	A/C Pressure Transducer signal input	A/C OFF	DC	0 ~ 5V	1.36V
		A/C ON			1.83V
33	Sensor ground	Idle	DC	Max. 50 mV	22.66mV
34	-				
35	-				
36	-				
37	-				
38	Battery voltage supply after main relay	IG OFF	DC	Max. 1.0 V	-25mV
		IG ON		Battery Voltage	12.77V
39	Battery voltage supply after main relay	IG OFF	DC	Max. 1.0 V	-25mV
		IG ON		Battery Voltage	12.77V
40	Battery voltage supply after main relay	IG OFF	DC	Max. 1.0 V	-25mV
		IG ON		Battery Voltage	12.37V
41	CAN [High]	Recessive	Pulse	2.0 ~ 3.0 V	2.4V
		Dominant		2.75～4.5 V	3.56V
42	CAN [Low]	Recessive	Pulse	2.0 ~ 3.0 V	2.42V
		Dominant		0.5～2.25 V	1.62V
43	Main Relay control output	Relay ON	DC	Battery Voltage	0.875V
		Relay OFF		Max. 1.0V	12.47V
44	Intake Air Temperature Sensor signal input	Idle	Analog	0 ~ 5V	2.05V
45	Immobilizer communication line	When communicating after IG ON	Pulse	Hi: Min. 8.5V	11.87V
				Lo: Max. 3.5V	875mV
46	-				
47	Mass Air Flow Sensor signal input	Idle	Pulse	Hi: Vcc	4.97V
				Lo: Max. 0.5V	70mV
48	Sensor ground	Idle	DC	Max. 50 mV	22.52mV

Pin No.	Description	Condition	Type	Level	Test Result
49	Accelerator Position Sensor #2 signal input	C.T	Analog	0.3 ~ 0.9V	0.38V
		W.O.T		1.5 ~ 3.0V	2V
50	-				
51	Cruise "SET" lamp control output	Cruise OFF	DC	Battery Voltage	12.57V
		Cruise ON		Max. 1.0V	-25mV
52	Vehicle speed signal input	Vehicle Run	Pulse	Hi: Min. 5.0V	11.07V
				Lo: Max. 1.0V	-125mV
53	Sensor ground	Idle	DC	Max. 50 mV	22.37mV
54	Accelerator Position Sensor #1 signal input	C.T	Analog	0.3 ~ 0.9V	819mV
		W.O.T		4.0 ~ 4.8V	4.01V
55	Sensor ground	Idle	DC	Max. 50mV	22.6mV
56	-				
57	Reference voltage (+5V)	IG OFF	DC	Max. 0.5V	4.95V
		IG ON		4.9 ~ 5.1V	-10mV
58	Reference voltage (+5V)	IG OFF	DC	Max. 0.5V	4.95V
		IG ON		4.9 ~ 5.1V	-10mV
59	Reference voltage (+5V)	IG OFF	DC	Max. 0.5V	4.95V
		IG ON		4.9 ~ 5.1V	-10mV
60	-				
61	Engine speed signal output	Idle	Pulse	Hi: Battery Voltage	13.57V
				Lo: Max. 0.5V	-25mV
				20 ~ 26Hz	
62	Fuel consumption signal output	Idle	Pulse	Hi: Battery Voltage	13.57V
				Lo: Max. 0.5V	-25mV
63	Malfunction Indicator Lamp (MIL) control output	Lamp OFF	DC	Hi: Battery Voltage	13.37V
		Lamp ON		Lo: Max. 2.0V	-25mV
64	A/C Compressor Relay control output	A/C OFF	DC	Battery Voltage	13.97V
		A/C ON		Max. 1.0V	175mV
65	Cooling Fan [Low] control output	Fan OFF	DC	Battery Voltage	13.77V
		Fan ON		Max. 1.0V	175mV
66	Cooling Fan [High] control output	Fan OFF	DC	Battery Voltage	13.57V
		Fan ON		Max. 1.0V	-25mV
67	Variable Intake Solenoid Valve #2 control output	Active	DC	Max. 1.0 V	13.77
		Inactive		Battery Voltage	-25mV
68	Throttle Position Sensor signal (PWM) output	Idle	Pulse	Hi: Battery Voltage	13.37V
				Lo: 0 ~ 0.5 V	-25mV
69	Cruise "MAIN" lamp control output	Cruise OFF	DC	Battery Voltage	12.37V
		Cruise ON		Max. 1.0V	-25mV

Pin No.	Description	Condition	Type	Level	Test Result
70	Fuel Pump Relay control output	Relay OFF	DC	Battery Voltage	12.57V
		Relay ON		Max. 1.0V	-25mV
71	Variable Intake Solenoid Valve #1 control output	Active	DC	Max. 1.0 V	175mV
		Inactive		Battery Voltage	13.77V
72	Immobilizer lamp control output	Lamp OFF	DC	Battery Voltage	12.77V
		Lamp ON		Max. 1.0V	-25mV
73	-				
74	-				
75	-				
76	-				
77	-				
78	Purge Control Solenoid Valve control output	Inactive	Pulse	Hi: Battery Voltage	13.83V
		Active		Lo: Max. 1.0V	31.54mV
79	Wheel Speed Sensor [Low] signal input				
80	Wheel Speed Sensor [High] signal input				

CONNECTOR [C30-B]

Pin No.	Description	Condition	Type	Level	Test Result
1	ETC Motor [-] control output	Idle	Pulse	Hi: Battery Voltage	14.07V
				Lo: Max . 1.0V	-125mV
2	ETC Motor [+] control output	Idle	Pulse	Hi: Battery Voltage	14.07V
				Lo: Max . 1.0V	-325mV
3	-				
4	CVVT Oil Temperature Sensor signal input	Idle	Analog	0 ~ 5.0V	282mV at 96℃
5	-				
6	-				
7	Engine Coolant Temperature Sensor signal input	Idle	Analog	0 ~ 5.0V	1.88V
8	Manifold Absolute Pressure Sensor signal input	IG ON	Analog	3.9 ~ 4.1V	3.96V
		Idle		0.8 ~ 1.6V	1.31V
9	-				
10	-				
11	Reference voltage (+5V)	IG OFF	DC	Max. 0.5V	4.91V
		IG ON		4.9 ~ 5.1V	-50mV
12	Battery voltage supply after ignition switch	IG OFF	DC	Max. 0.5 V	13.87V
		IG ON		Battery Voltage	-125mV

Pin No.	Description	Condition	Type	Level	Test Result
13	Reference voltage (+5V)	IG OFF	DC	Max. 0.5V	4.89V
		IG ON		4.9 ~ 5.1V	-70mV
14	Sensor ground	Idle	DC	Max. 50 mV	19.77mV
15	Reference voltage (+5V)	IG OFF	DC	Max. 0.5V	4.91V
		IG ON		4.9 ~ 5.1V	-50mV
16	Reference voltage (+5V)	IG OFF	DC	Max. 0.5V	4.91V
		IG ON		4.9 ~ 5.1V	-50mV
17	Sensor ground	Idle	DC	Max. 50 mV	21.1mV
18	Sensor ground	Idle	DC	Max. 50 mV	20.87mV
19	Ignition Coil (Cylinder #6) control output	Idle	Pulse	1st Voltage: 200~400V	278V
				ON Voltage: Max. 2V	1.97V
20	-				
21	Crankshaft Position Sensor [High] signal input	Idle	SINE WAVE	Vp_p : Min.1.0V	41.6V
22	-				
23	Sensor Shield	Idle	DC	Max. 50 mV	21.41mV
24	Camshaft Position Sensor [Bank 2] signal input	Idle	Pulse	Hi: Vcc	4.95V
				Lo: Max . 0.5V	-10mV
25	Camshaft Position Sensor [Bank 1] signal input	Idle	Pulse	Hi: Vcc	4.95V
				Lo: Max . 0.5V	-10mV
26	-				
27	-				
28	Sensor ground	Idle	DC	Max. 50 mV	20.73mV
29	Sensor ground	Idle	DC	Max. 50 mV	21.9mV
30	Sensor ground	Idle	DC	Max. 50 mV	20.16mV
31	Sensor ground	Idle	DC	Max. 50 mV	20.63mV
32	Reference voltage (+5V)	IG OFF	DC	Max. 0.5V	4.91V
		IG ON		4.9 ~ 5.1V	-50mV
33	Sensor ground	Idle	DC	Max. 50 mV	22.52mV
34	Sensor ground	Idle	DC	Max. 50 mV	20.99mV
35	Power ground	Idle	DC	Max. 50 mV	
36	Power ground	Idle	DC	Max. 50 mV	
37	Power ground	Idle	DC	Max. 50 mV	
38	Power ground	Idle	DC	Max. 50 mV	
39	Power ground	Idle	DC	Max. 50 mV	
40	Ignition Coil (Cylinder #4) control output	Idle	Pulse	1st Voltage: 2300~400V	294V
				ON Voltage: Max. 2V	1.93V

Pin No.	Description	Condition	Type	Level	Test Result
41	Crankshaft Position Sensor [Low] signal input	Idle	SINE WAVE	Vp_p: Min.1.0V	8.24V
42	-				
43	-				
44	-				
45	-				
46	-				
47	-				
48	Throttle Position Sensor #1 signal input	C.T	Analog	0.25 ~ 0.9V	0.68V
		W.O.T		Min. 4.0V	4.27V
49	Heated Oxygen Sensor [Bank 1 / Sensor 1] signal input	Racing	DC	Rich: 0.6 ~ 1.0V	774mV
				Lean: 0 ~ 0.4V	137mV
50	Heated Oxygen Sensor [Bank 1 / Sensor 2] signal input	Racing	DC	Rich: 0.6 ~ 1.0V	
				Lean: 0 ~ 0.4V	
51	Heated Oxygen Sensor [Bank 2 / Sensor 1] signal input	Racing	DC	Rich: 0.6 ~ 1.0V	705.2mV
				Lean: 0 ~ 0.4V	82mV
52	Heated Oxygen Sensor [Bank 2 / Sensor 2] signal input	Racing	DC	Rich: 0.6 ~ 1.0V	
				Lean: 0 ~ 0.4V	
53	Knock Sensor (KS) [Bank 2] [High] signal input	Knocking	Variable Frequency	-0.3 ~ 0.3 V	
		Normal		0 V	
54	Knock Sensor (KS) [Bank 2] [Low] signal input	Knocking	Variable Frequency	-0.3 ~ 0.3 V	
		Normal		0 V	
55	Knock Sensor (KS) [Bank 1] [Low] signal input	Knocking	Variable Frequency	-0.3 ~ 0.3 V	
		Normal		0 V	
56	Knock Sensor (KS) [Bank 1] [High] signal input	Knocking	Variable Frequency	-0.3 ~ 0.3 V	
		Normal		0 V	
57	Throttle Position Sensor #2 signal input	C.T	Analog	Min. 4.0V	4.23V
		W.O.T		0.25 ~ 0.9V	703mV
58	Sensor ground	Idle	DC	Max. 50 mV	21.64mV
59	-				
60	Ignition Coil (Cylinder #2) control output	Idle	Pulse	1st Voltage: 200~400V	305V
				ON Voltage: Max. 2V	1.85V

Pin No.	Description	Condition	Type	Level	Test Result
61	CVVT Oil Control Valve [Bank 2] control output	Idle	Pulse	Battery Voltage	14.45V
				Max. 1.0V	50mV
62	CVVT Oil Control Valve [Bank 1] control output	Idle	Pulse	Battery Voltage	14.47V
				Max. 1.0V	75mV
63	Injector (Cylinder #2) control output	Idle	Pulse	Battery Voltage	14.06V
				Max. 1.0V	44.2mV
64	Injector (Cylinder #3) control output	Idle	Pulse	Battery Voltage	14V
				Max. 1.0V	38.31mV
65	-				
66	-				
67	Heated Oxygen Sensor [Bank 2 / Sensor 1] Heater control output	Engine Run	Pulse	Hi: Battery Voltage	14.07V
				Lo: Max. 1.0V	275mV
68	Injector (Cylinder #4) control output	Idle	Pulse	Hi: Battery Voltage	13.96V
				Lo: Max. 1.0V	55.71mV
69	Injector (Cylinder #5) control output	Idle	Pulse	Hi: Battery Voltage	14V
				Lo: Max. 1.0V	40.82mV
70	Heated Oxygen Sensor [Bank 1 / Sensor 1] Heater control output	Engine Run	Pulse	Hi: Battery Voltage	14.07V
				Lo: Max. 1.0V	275mV
71	Injector (Cylinder #6) control output	Idle	Pulse	Hi: Battery Voltage	13.95mV
				Lo: Max. 1.0V	55.77mV
72	Injector (Cylinder #1) control output	Idle	Pulse	Hi: Battery Voltage	14.07V
				Lo: Max. 1.0V	56.7mV
73	Heated Oxygen Sensor [Bank 2 / Sensor 2] Heater control output	Engine Run	Pulse	Hi: Battery Voltage	13.87V
				Lo: Max. 1.0V	275mV
74	Heated Oxygen Sensor [Bank 1 / Sensor 2] Heater control output	Engine Run	Pulse	Hi: Battery Voltage	14.07V
				Lo: Max. 1.0V	275mV
75	-				
76	Battery Power	Always	DC	Battery Voltage	12.39V
				1.0 mA or below 1.5 mA	0.34mA
77	Ignition Coil (Cylinder #3) control output	Idle	Pulse	1st Voltage: 200~400V	289V
				ON Voltage: Max. 2V	1.87V
78	Ignition Coil (Cylinder #5) control output	Idle	Pulse	1st Voltage: 200~400V	279V
				ON Voltage: Max. 2V	1.93V

Pin No.	Description	Condition	Type	Level	Test Result
79	Ignition Coil (Cylinder #1) control output	Idle	Pulse	1st Voltage: 200~400V	269V
				ON Voltage: Max. 2V	1.91V
80	-				

CIRCUIT DIAGRAM E5D4988C

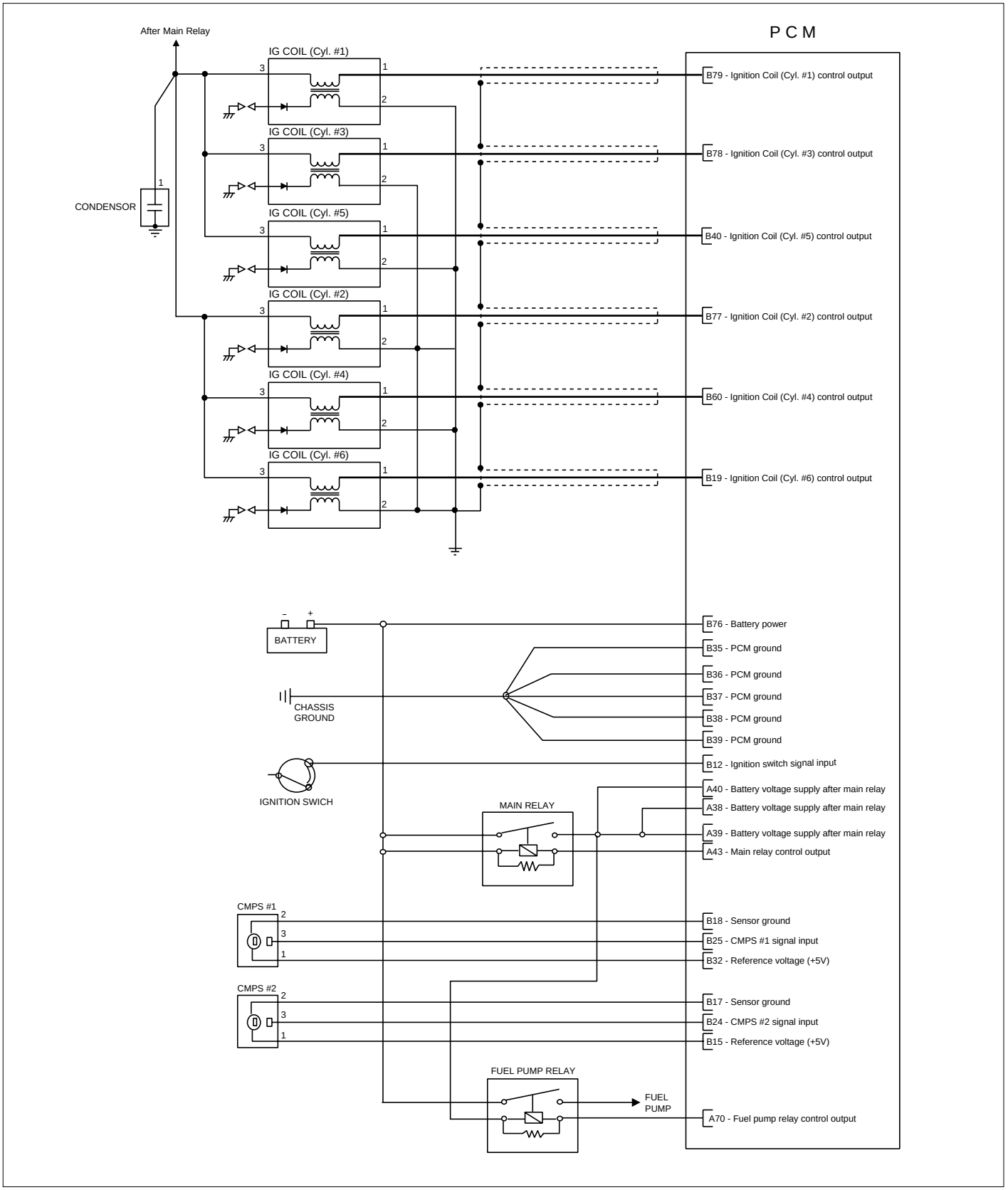

SCMF16127L

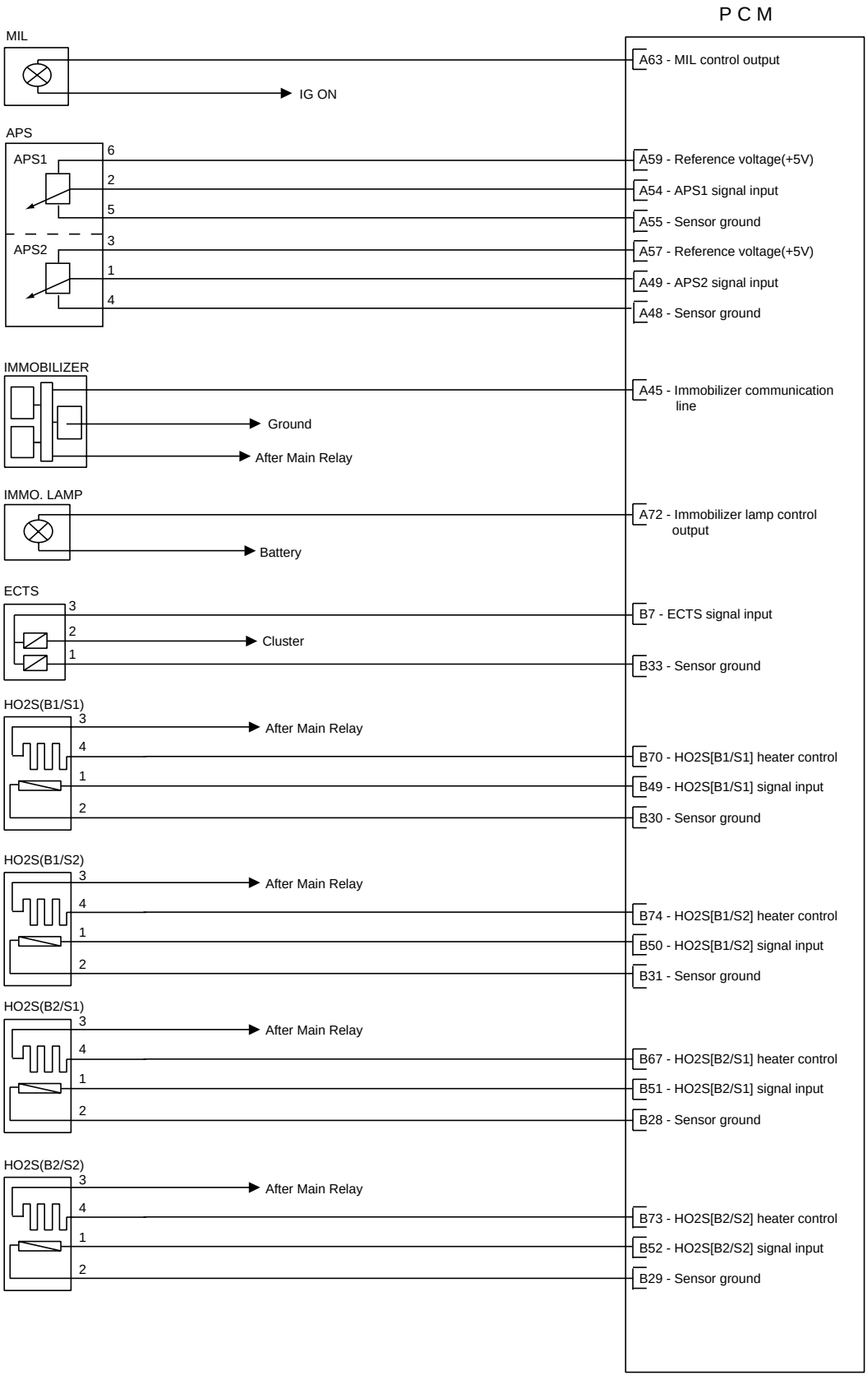
P C M
MIL
IG ON
A63 - MIL control output
APS
APS1
APS2
6
2
5
3
1
4
A59 - Reference voltage(+5V)
A54 - APS1 signal input
A55 - Sensor ground
A57 - Reference voltage(+5V)
A49 - APS2 signal input
A48 - Sensor ground
IMMOBILIZER
Ground
After Main Relay
A45 - Immobilizer communication line
IMMO. LAMP
Battery
A72 - Immobilizer lamp control output
ECTS
3
2
1
Cluster
B7 - ECTS signal input
B33 - Sensor ground
HO2S(B1/S1)
After Main Relay
B70 - HO2S[B1/S1] heater control
B49 - HO2S[B1/S1] signal input
B30 - Sensor ground
HO2S(B1/S2)
After Main Relay
B74 - HO2S[B1/S2] heater control
B50 - HO2S[B1/S2] signal input
B31 - Sensor ground
HO2S(B2/S1)
After Main Relay
B67 - HO2S[B2/S1] heater control
B51 - HO2S[B2/S1] signal input
B28 - Sensor ground
HO2S(B2/S2)
After Main Relay
B73 - HO2S[B2/S2] heater control
B52 - HO2S[B2/S2] signal input
B29 - Sensor ground

SCMF16128L

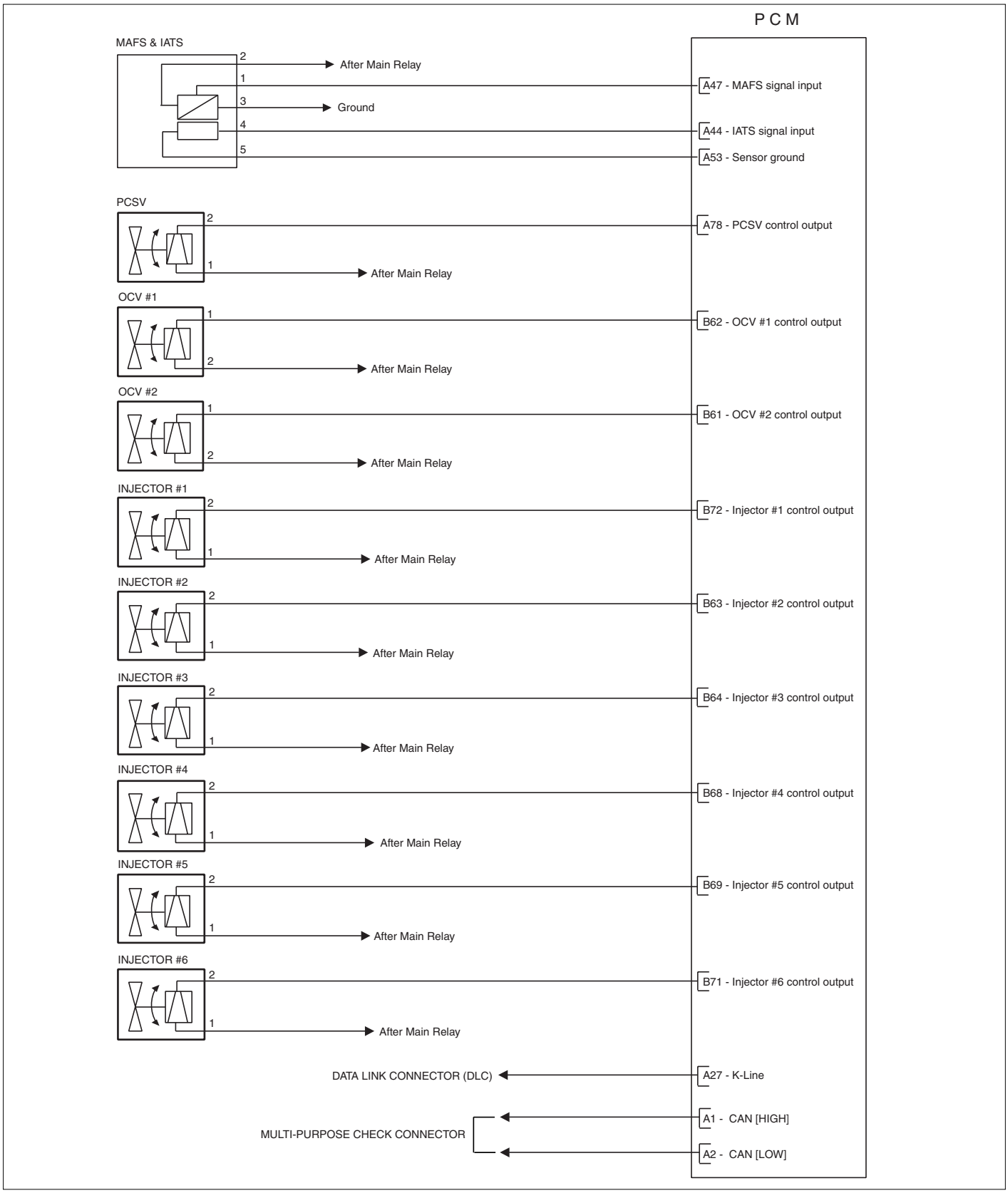
P C M
MAFS & IATS
2
After Main Relay
1
A47 - MAFS signal input
3
Ground
4
A44 - IATS signal input
5
A53 - Sensor ground
PCSV
2
A78 - PCSV control output
1
After Main Relay
OCV #1
1
B62 - OCV #1 control output
2
After Main Relay
OCV #2
1
B61 - OCV #2 control output
2
After Main Relay
INJECTOR #1
2
B72 - Injector #1 control output
1
After Main Relay
INJECTOR #2
2
B63 - Injector #2 control output
1
After Main Relay
INJECTOR #3
2
B64 - Injector #3 control output
1
After Main Relay
INJECTOR #4
2
B68 - Injector #4 control output
1
After Main Relay
INJECTOR #5
2
B69 - Injector #5 control output
1
After Main Relay
INJECTOR #6
2
B71 - Injector #6 control output
1
After Main Relay
DATA LINK CONNECTOR (DLC)
A27 - K-Line
A1 - CAN [HIGH]
MULTI-PURPOSE CHECK CONNECTOR
A2 - CAN [LOW]

LGLG002V

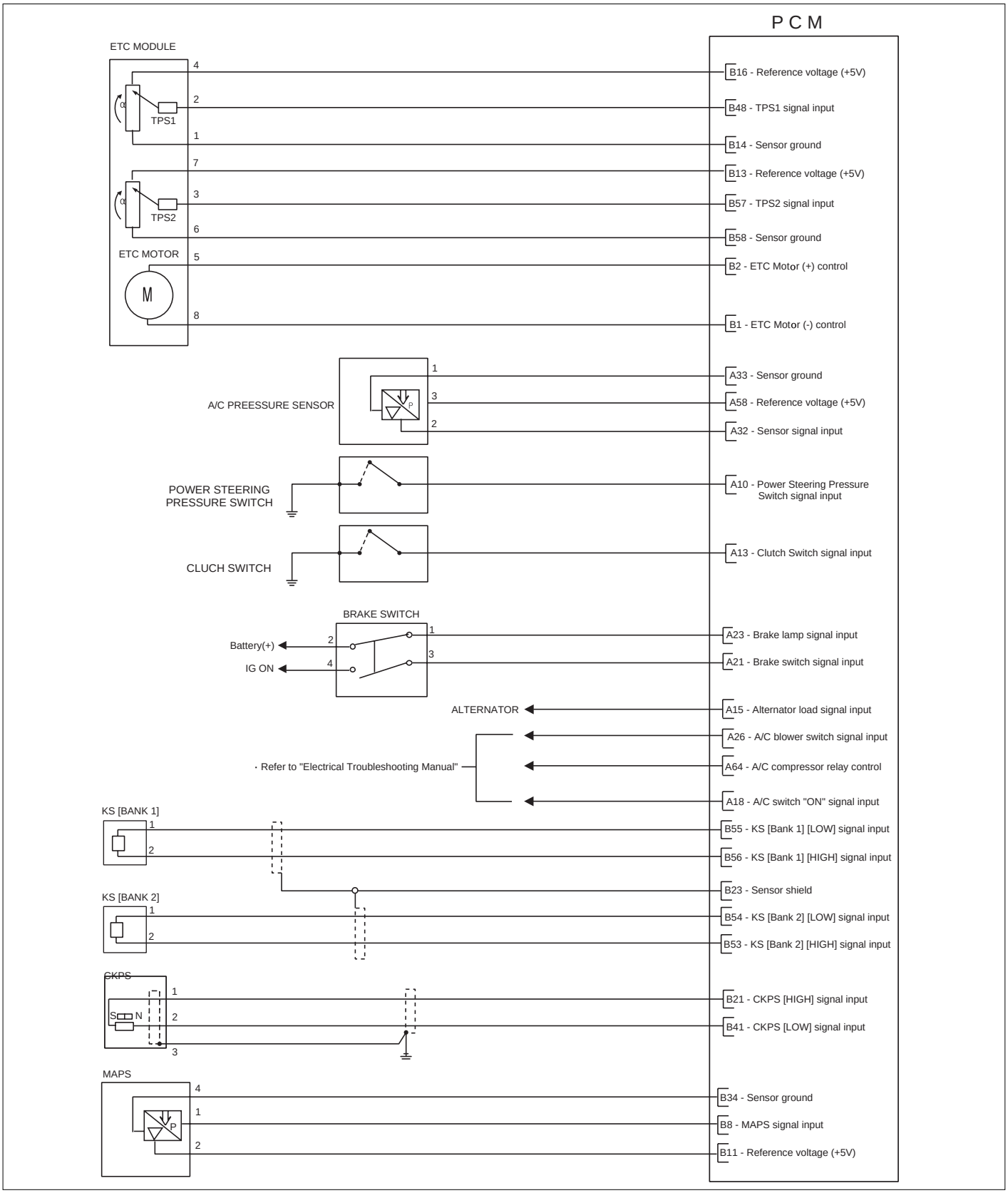
P C M
ETC MODULE
TPS1
TPS2
ETC MOTOR
M
4
2
1
7
3
6
5
8
B16 - Reference voltage (+5V)
B48 - TPS1 signal input
B14 - Sensor ground
B13 - Reference voltage (+5V)
B57 - TPS2 signal input
B58 - Sensor ground
B2 - ETC Motor (+) control
B1 - ETC Motor (-) control
A/C PREESSURE SENSOR
1
3
2
A33 - Sensor ground
A58 - Reference voltage (+5V)
A32 - Sensor signal input
POWER STEERING PRESSURE SWITCH
A10 - Power Steering Pressure Switch signal input
CLUCH SWITCH
A13 - Clutch Switch signal input
BRAKE SWITCH
Battery(+)
IG ON
2
4
1
3
A23 - Brake lamp signal input
A21 - Brake switch signal input
ALTERNATOR
A15 - Alternator load signal input
A26 - A/C blower switch signal input
· Refer to "Electrical Troubleshooting Manual"
A64 - A/C compressor relay control
A18 - A/C switch "ON" signal input
KS [BANK 1]
1
2
B55 - KS [Bank 1] [LOW] signal input
B56 - KS [Bank 1] [HIGH] signal input
B23 - Sensor shield
KS [BANK 2]
1
2
B54 - KS [Bank 2] [LOW] signal input
B53 - KS [Bank 2] [HIGH] signal input
CKPS
S
N
1
2
3
B21 - CKPS [HIGH] signal input
B41 - CKPS [LOW] signal input
MAPS
4
1
2
B34 - Sensor ground
B8 - MAPS signal input
B11 - Reference voltage (+5V)

SCMF16129L

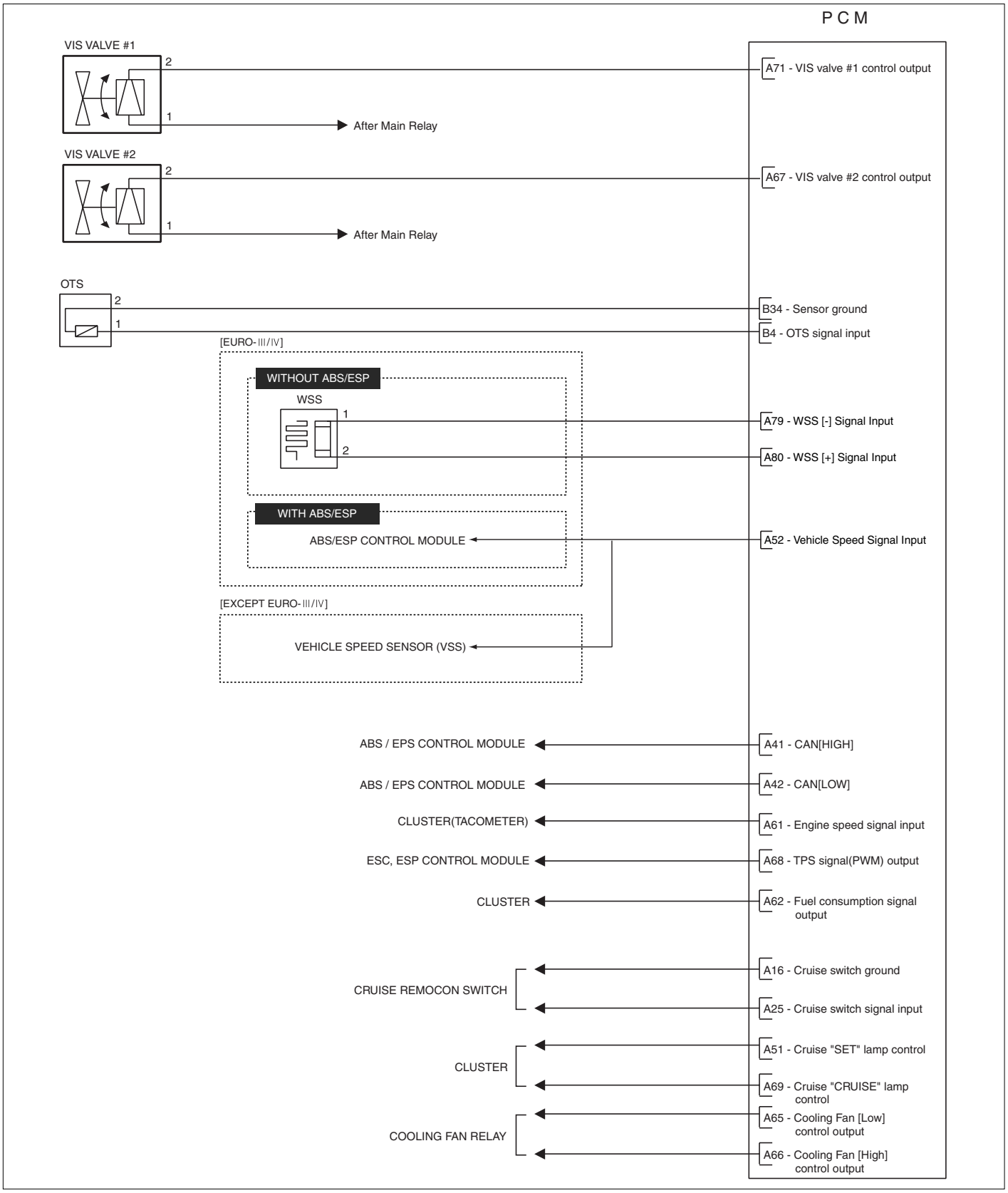
P C M
VIS VALVE #1
2
1
After Main Relay
A71 - VIS valve #1 control output
VIS VALVE #2
2
1
After Main Relay
A67 - VIS valve #2 control output
OTS
2
1
B34 - Sensor ground
B4 - OTS signal input
[EURO-III/IV]
WITHOUT ABS/ESP
WSS
1
2
A79 - WSS [-] Signal Input
A80 - WSS [+] Signal Input
WITH ABS/ESP
ABS/ESP CONTROL MODULE
A52 - Vehicle Speed Signal Input
[EXCEPT EURO-III/IV]
VEHICLE SPEED SENSOR (VSS)
ABS / EPS CONTROL MODULE
A41 - CAN[HIGH]
ABS / EPS CONTROL MODULE
A42 - CAN[LOW]
CLUSTER(TACOMETER)
A61 - Engine speed signal input
ESC, ESP CONTROL MODULE
A68 - TPS signal(PWM) output
CLUSTER
A62 - Fuel consumption signal output
CRUISE REMOCON SWITCH
A16 - Cruise switch ground
A25 - Cruise switch signal input
CLUSTER
A51 - Cruise "SET" lamp control
A69 - Cruise "CRUISE" lamp control
COOLING FAN RELAY
A65 - Cooling Fan [Low] control output
A66 - Cooling Fan [High] control output

LGLG002X

PCM PROBLEM INSPECTION PROCEDURE E8D133BD

1. TEST PCM GROUND CIRCUIT: Measure resistance between PCM and chassis ground using the backside of PCM harness connector as PCM side check point. If the problem is found, repair it.

Specification (Resistance): 1Ω or less

2. TEST PCM CONNECTOR: Disconnect the PCM connector and visually check the ground terminals on PCM side and harness side for bent pins or poor contact pressure. If the problem is found, repair it.

3. If problem is not found in Step 1 and 2, the PCM could be faulty. If so, replace the PCM with a new one, and then check the vehicle again. If the vehicle operates normally then the problem was likely with the PCM.

4. RE-TEST THE ORIGINAL PCM : Install the original PCM (may be broken) into a known-good vehicle and check the vehicle. If the problem occurs again, replace the original PCM with a new one. If problem does not occur, this is intermittent problem (Refer to INTERMITTENT PROBLEM PROCEDURE in BASIC INSPECTION PROCEDURE).

REPLACEMENT E46FE7BF

1. Turn ignition switch off.
2. Disconnect the battery (-) cable from the battery.
3. Disconnect the PCM connectors (A).

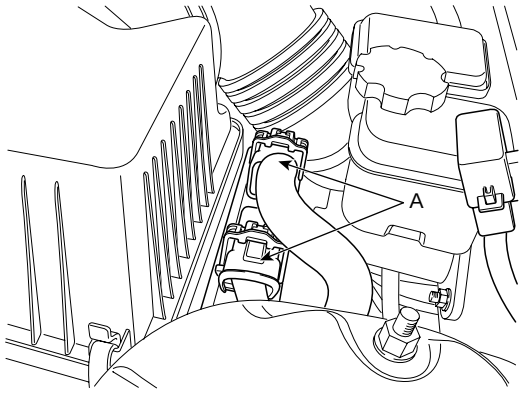

SCMF16130L

4. Unscrew the PCM mounting bolts (B) and remove the PCM from the air cleaner assembly.

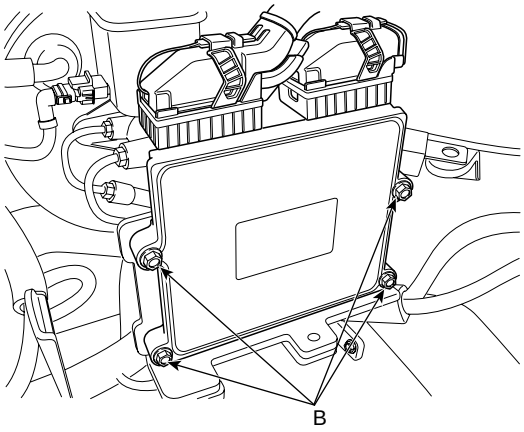

SCMF16131L

5. Install a new PCM.

PCM mounting bolts: 9.8 ~ 11.8 N·m (1.0 ~ 1.2 kgf·m, 7.2 ~ 8.7 lbf·ft)

DTC TROUBLESHOOTING PROCEDURES

INSPECTION CHART FOR DIAGNOSTIC TROUBLE CODES (DTC) EDC4C348

DTC	Description	MIL			Page
		Euro-III/IV	Euro-II	Leaded	
P0012	"A" Camshaft Position-Timing Over-Retarded (Bank 1)	●	▲	▲	FLA-87
P0016	Crankshaft Position-Camshaft Position Correlation (Bank 1 Sensor A)	●	▲	▲	FLA-92
P0018	Crankshaft Position-Camshaft Position Correlation (Bank 2 Sensor A)	●	▲	▲	FLA-99
P0022	"A" Camshaft Position-Timing Over-Retarded (Bank 2)	●	▲	▲	FLA-87
P0026	Intake Valve Control Solenoid Circuit Range/Performance (Bank 1)	●	▲	▲	FLA-103
P0028	Intake Valve Control Solenoid Circuit Range/Performance (Bank 2)	●	▲	▲	FLA-103
P0030	HO2S Heater Control Circuit (Bank 1 / Sensor 1)	●			FLA-110
P0031	HO2S Heater Circuit Low (Bank 1 / Sensor 1)	●	▲		FLA-115
P0032	HO2S Heater Circuit High (Bank 1 / Sensor 1)	●	▲		FLA-118
P0036	HO2S Heater Control Circuit (Bank 1 / Sensor 2)	●			FLA-121
P0037	HO2S Heater Circuit Low (Bank 1 / Sensor 2)	●			FLA-126
P0038	HO2S Heater Circuit High (Bank 1 / Sensor 2)	●			FLA-129
P0050	HO2S Heater Control Circuit (Bank 2 / Sensor 1)	●			FLA-132
P0051	HO2S Heater Circuit Low (Bank 2 / Sensor 1)	●	▲		FLA-137
P0052	HO2S Heater Circuit High (Bank 2 / Sensor 1)	●	▲		FLA-140
P0056	HO2S Heater Control Circuit (Bank 2 / Sensor 2)	●			FLA-143
P0057	HO2S Heater Circuit Low (Bank 2 / Sensor 2)	●			FLA-148
P0058	HO2S Heater Circuit High (Bank 2 / Sensor 2)	●			FLA-151
P0076	Intake Valve Control Solenoid Circuit Low (Bank 1)	●	▲	▲	FLA-154
P0077	Intake Valve Control Solenoid Circuit High (Bank 1)	●	▲	▲	FLA-160
P0082	Intake Valve Control Solenoid Circuit Low (Bank 2)	●	▲	▲	FLA-154
P0083	Intake Valve Control Solenoid Circuit High (Bank 2)	●	▲	▲	FLA-160
P0101	Mass or Volume Air Flow Circuit Range/Performance	●	▲	▲	FLA-163
P0102	Mass or Volume Air Flow Circuit Low Input	●	●	●	FLA-170
P0103	Mass or Volume Air Flow Circuit High Input	●	●	●	FLA-175

DTC	Description	MIL			Page
		Euro-III/IV	Euro-II	Leaded	
P0106	Manifold Absolute Pressure/Barometric Pressure Circuit Range/Performance	▲			FLA-178
P0107	Manifold Absolute Pressure/Barometric Pressure Circuit Low Input	●	●	●	FLA-186
P0108	Manifold Absolute Pressure/Barometric Pressure Circuit High Input	●	●	●	FLA-190
P0110	Intake Air Temperature Sensor1 Circuit	▲			FLA-194
P0111	Intake Air Temperature Sensor1 Circuit Range/Performance	▲			FLA-201
P0112	Intake Air Temperature Sensor 1 Circuit Low Input	●	▲	▲	FLA-205
P0113	Intake Air Temperature Sensor 1 Circuit High Input	●	▲	▲	FLA-209
P0115	Engine Coolant Temperature Circuit	▲			FLA-214
P0117	Engine Coolant Temperature Circuit Low Input	●	●	●	FLA-220
P0118	Engine Coolant Temperature Circuit High Input	●	●	●	FLA-224
P0122	Throttle/Pedal Position Sensor/Switch "A" Circuit Low Input	●	●	●	FLA-228
P0123	Throttle/Pedal Position Sensor/Switch "A" Circuit High Input	●	●	●	FLA-234
P0131	HO2S Circuit Low Voltage (Bank 1 / Sensor 1)	●	▲		FLA-238
P0132	HO2S Circuit High Voltage (Bank 1 / Sensor 1)	●	▲		FLA-245
P0133	HO2S Circuit SlowResponse (Bank 1 / Sensor 1)	●			FLA-248
P0134	HO2S Circuit No Activity Detected (Bank 1 / Sensor 1)	●	▲		FLA-250
P0137	HO2S Circuit Low Voltage (Bank 1 / Sensor 2)	●			FLA-253
P0138	HO2S Circuit High Voltage (Bank 1 / Sensor 2)	●			FLA-260
P0140	HO2S Circuit No Activity Detected (Bank 1 / Sensor 2)	●			FLA-263
P0151	HO2S Circuit Low Voltage (Bank 2 / Sensor 1)	●	▲		FLA-267
P0152	HO2S Circuit High Voltage (Bank 2 / Sensor 1)	●	▲		FLA-274
P0153	HO2S Circuit SlowResponse (Bank 2 / Sensor 1)	●			FLA-277
P0154	HO2S Circuit No Activity Detected (Bank 2 / Sensor 1)	●	▲		FLA-279
P0157	HO2S Circuit Low Voltage (Bank 2 / Sensor 2)	●			FLA-282
P0158	HO2S Circuit High Voltage (Bank 2 / Sensor 2)	●			FLA-289
P0160	HO2S Circuit No Activity Detected (Bank 2 / Sensor 2)	●			FLA-292
P0171	System Too Lean (Bank 1)	●	▲		FLA-295
P0172	System Too Rich (Bank 1)	●	▲		FLA-301
P0174	System Too Lean (Bank 2)	●	▲		FLA-295
P0175	System Too Rich (Bank 2)	●	▲		FLA-301
P0196	Engine Oil Temp. Sensor Range / Performance	▲			FLA-305

DTC	Description	MIL			Page
		Euro-III/IV	Euro-II	Leaded	
P0197	Engine Oil Temp. Sensor Low Input	●	▲	▲	FLA-311
P0198	Engine Oil Temp. Sensor High Input	●	▲	▲	FLA-314
P0217	Engine Coolant Over Temperature Condition	▲			FLA-318
P0222	Throttle/Pedal Position Sensor/Switch "B" Circuit Low Input	●	●	●	FLA-325
P0223	Throttle/Pedal Position Sensor/Switch "B" Circuit High Input	●	●	●	FLA-332
P0230	Fuel Pump Primary Circuit	▲	▲	▲	FLA-336
P0261	Cylinder 1-Injector Circuit Low	●	●	●	FLA-341
P0262	Cylinder 1-Injector Circuit High	●	●	●	FLA-347
P0264	Cylinder 2-Injector Circuit Low	●	●	●	FLA-341
P0265	Cylinder 2-Injector Circuit High	●	●	●	FLA-347
P0267	Cylinder 3-Injector Circuit Low	●	●	●	FLA-341
P0268	Cylinder 3-Injector Circuit High	●	●	●	FLA-347
P0270	Cylinder 4-Injector Circuit Low	●	●	●	FLA-341
P0271	Cylinder 4-Injector Circuit High	●	●	●	FLA-347
P0273	Cylinder 5-Injector Circuit Low	●	●	●	FLA-341
P0274	Cylinder 5-Injector Circuit High	●	●	●	FLA-347
P0276	Cylinder 6-Injector Circuit Low	●	●	●	FLA-341
P0277	Cylinder 6-Injector Circuit High	●	●	●	FLA-347
P0300	Random/Multiple Cylinder Misfire Detected	●			FLA-350
P0301	Cylinder 1-Misfire detected	●			FLA-350
P0302	Cylinder 2-Misfire detected	●			FLA-350
P0303	Cylinder 3-Misfire detected	●			FLA-350
P0304	Cylinder 4-Misfire detected	●			FLA-350
P0305	Cylinder 5-Misfire detected	●			FLA-350
P0306	Cylinder 6-Misfire detected	●			FLA-350
P0315	Segment Time Acquisition Incorrect	▲			FLA-357
P0325	Knock Sensor 1 Circuit	▲	▲	▲	FLA-359
P0326	Knock Sensor 1 Circuit Range/Performance (Bank 1)	▲	▲	▲	FLA-363
P0330	Knock Sensor 2 Circuit	▲	▲	▲	FLA-359
P0331	Knock Sensor 2 Circuit Range/Performance (Bank 2)	▲	▲	▲	FLA-363
P0335	Crankshaft Position Sensor A Circuit	●	▲	▲	FLA-365
P0336	Crankshaft Position Sensor A Circuit Range/Performance	●	▲	▲	FLA-371

DTC	Description	MIL			Page
		Euro-III/IV	Euro-II	Leaded	
P0340	Camshaft Position Sensor A Circuit Malfunction (Bank 1 or Single Sensor)	●	▲	▲	FLA-375
P0341	Camshaft Position Sensor A Circuit Range/Performance (Bank 1 or Single Sensor)	●	▲	▲	FLA-381
P0346	Camshaft Position Sensor "A" Circuit Range/Performance (Bank 2)	●	▲	▲	FLA-384
P0351	Ignition Coil 'A' Primary / Secondary Circuit	●	▲	▲	FLA-391
P0352	Ignition Coil 'B' Primary / Secondary Circuit	●	▲	▲	FLA-391
P0353	Ignition Coil 'C' Primary / Secondary Circuit	●	▲	▲	FLA-391
P0354	Ignition Coil 'D' Primary / Secondary Circuit	●	▲	▲	FLA-391
P0355	Ignition Coil 'E' Primary / Secondary Circuit	●	▲	▲	FLA-391
P0356	Ignition Coil 'F' Primary / Secondary Circuit	●	▲	▲	FLA-391
P0420	Catalyst System Efficiency below Thershold (Bank 1)	●			FLA-398
P0430	Catalyst System Efficiency below Thershold (Bank 2)	●			FLA-398
P0444	Evap. Emission System-Purge Ctrl. Valve Circuit Open	●			FLA-401
P0445	Evap. Emission System-Purge Ctrl. Valve Circuit Shorted	●			FLA-407
P0501	Vehicle Speed Sensor A Range/Performance	●	●	●	FLA-410
P0504	Brake pedal position A/B correaltion	●	▲	▲	FLA-421
P0506	Idle Air Control System-RPM lower than expected	●			FLA-426
P0507	Idle Air Control System-RPM Higher than expected	●			FLA-430
P0532	A/C Refrigerant Pressure Sensor "A" Circuit Low Input	▲	▲	▲	FLA-433
P0533	A/C Refrigerant Pressure Sensor "A" Circuit High Input	▲	▲	▲	FLA-439
P0562	System Voltage Low	●	▲	▲	FLA-443
P0563	System Voltage High	●	▲	▲	FLA-451
P0571	Brake Switch "A" Circuit	●	▲	▲	FLA-456
P0601	EEPROM-Check sum Error	●	▲	▲	FLA-461
P0602	EEPROM-Programing Error	●	▲	▲	FLA-464
P0604	Internal Control Module Random Access Memory (RAM) Error	●	▲	▲	FLA-465
P0606	ECM/PCM Processor(ECM-SELF TEST Failed)	●	▲	▲	FLA-466
P0638	Throttle Actuator Control Range/Performance	●	▲	▲	FLA-467
P0641	Sensor Reference Voltage "A" Circuit Open	●	▲	▲	FLA-475
P0646	A/C Clutch Relay Control Circuit Low	▲	▲	▲	FLA-480
P0647	A/C Clutch Relay Control Circuit High	▲	▲	▲	FLA-486
P0650	Malfunction Indicator Lamp(MIL) Control Circuit	▲			FLA-489

DTC	Description	MIL			Page
		Euro-III/IV	Euro-II	Leaded	
P0651	Sensor Reference Voltage "B" Circuit Open	●	▲	▲	FLA-494
P0660	Intake Manifold Tuning Valve Control Circuit/Open (Bank 1)	●	▲	▲	FLA-499
P0663	Intake Manifold Tuning Valve Control Circuit/Open (Bank 2)	●	▲	▲	FLA-505
P0685	ECM/PCM Power Relay Control Circuit /Open	▲	▲	▲	FLA-509
P1106	Manifold Absolute Pressure Sensor Circuit Short - Intermittent High Input	▲	▲	▲	FLA-515
P1107	Manifold Absolute Pressure Sensor Circuit Short - Intermittent Low Input	▲	▲	▲	FLA-522
P1111	Intake Air Temperature Sensor Circuit Short - Intermittent High Input	▲	▲	▲	FLA-526
P1112	Intake Air Temperature Sensor Circuit Short - Intermittent Low Input	▲	▲	▲	FLA-534
P1114	Engine Coolant Temperature Sensor Circuit - Intermittent Low Input	▲	▲	▲	FLA-538
P1115	Engine Coolant Temperature Sensor Circuit - Intermittent High Input	▲	▲	▲	FLA-544
P1295	ETC (Electronic Throttle Control) System Malfunction - Power Management	●	●	●	FLA-548
P1523	ETC (Electronic Throttle Control) System Malfunction - Throttle Valve Stuck	▲	▲	▲	FLA-551
P2104	ETC (Electronic Throttle Control) System Malfunction - Forced Idle	●	●	●	FLA-556
P2105	ETC (Electronic Throttle Control) System Malfunction - Forced Engine Shutdown	●	●	●	FLA-559
P2106	ETC (Electronic Throttle Control) System Malfunction - Forced Limited Power	●	●	●	FLA-561
P2122	Throttle/Pedal Position Sensor/Switch "D" Circuit Low Input	●	▲	▲	FLA-563
P2123	Throttle/Pedal Position Sensor/Switch "D" Circuit High Input	●	▲	▲	FLA-569
P2127	Throttle/Pedal Position Sensor/Switch "E" Circuit Low Input	●	▲	▲	FLA-572
P2128	Throttle/Pedal Position Sensor/Switch "E" Circuit High Input	●	▲	▲	FLA-578
P2135	Throttle/Pedal Position Sensor/Switch "A" / "B" Voltage Correlation	●	▲	▲	FLA-581
P2138	Throttle/Pedal Position Sensor/Switch "D" / "E" Voltage Correlation	●	▲	▲	FLA-587
P2173	ETC (Electronic Throttle Control) System Malfunction - High Air flow Detected	●	▲	▲	FLA-593
P2187	System Too Lean at Idle (←Additive) (Bank 1)	●	▲		FLA-599
P2188	System Too Rich at Idle (Bank 1)	●	▲		FLA-605
P2189	System Too Lean at Idle (←Additive) (Bank 2)	●	▲		FLA-599
P2190	System Too Rich at Idle (Bank 2)	●	▲		FLA-605

DTC	Description	MIL			Page
		Euro-III/IV	Euro-II	Leaded	
P2195	HO2S Signal Stuck Lean (Bank 1 / Sensor 1)	●	▲		FLA-609
P2196	HO2S Signal Stuck Rich (Bank 1 / Sensor 1)	●	▲		FLA-615
P2197	HO2S Signal Stuck Lean (Bank 2 / Sensor 1)	●	▲		FLA-617
P2198	HO2S Signal Stuck Rich (Bank 2 / Sensor 1)	●	▲		FLA-623
P2270	HO2S Signal Stuck Lean (Bank 1 / Sensor 1)	●			FLA-625
P2271	HO2S Signal Stuck Rich (Bank 1 / Sensor 1)	●			FLA-631
P2272	HO2S Signal Stuck Lean (Bank 2 / Sensor 2)	●			FLA-633
P2273	HO2S Signal Stuck Rich (Bank 2 / Sensor 2)	●			FLA-639
P2610	ECM/PCM Internal Engine Off Timer Performance	●	▲	▲	FLA-641
U0001	CAN Communication Malfunction	●	▲	▲	FLA-644

NOTE

●*: MIL ON & MEMORY*
▲*: MIL OFF & MEMORY*

DTC P0012 "A" CAMSHAFT POSITION-TIMING OVER-RETARDED (BANK 1)
DTC P0022 "A" CAMSHAFT POSITION-TIMING OVER-RETARDED (BANK 2)

COMPONENT LOCATION EB1C8851

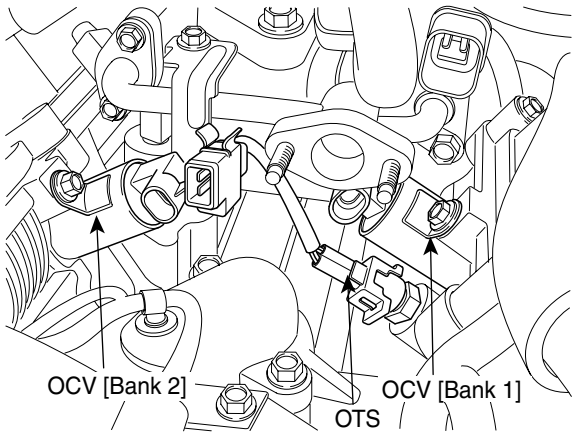

LGLG500A

GENERAL DESCRIPTION E79D28F8

The CVVT (Continuously Variable Valve Timing) system is installed to the chain sprocket of the intake camshaft. This system controls the intake camshaft to provide the optimal valve timing for every driving condition. The ECM controls the Oil Control Valve(OCV), based on the signals output from mass air flow, throttle position and engine coolant temperature. The CVVT controller regulates the intake camshaft angle using oil pressure through the OCV. As result, the relative position between the camshaft and the crankshaft becomes optimal, and the engine torque improves, fuel economy improves, exhaust emissions decrease under overall driving conditions.

DTC DESCRIPTION E2078BC1

Figure1. illustrates the method for detecting unresolved phasing steady-state error.
The figure shows two cases, case 1 to the left of the dashed line, and case 2 to the right of the dashed line. In case 1,the duty cycle command is considered high, or above a calibration threshold memorized in PCM. This should cause the cam phaser to move toward the maximum position, but the position remains at a medium level. The range of positions considered ' medium' is defined by calibrations.
In case 2, the duty cycle command is considered low, or below a calibration threshold memorized in PCM. This should cause the cam phaser to move toward the minimum position, but the position remains at a medium level.
Each of these cases is a phaser position error failure. Each case is also considered to be due to a phaser seizure. When either case is detected, a timing counter begins to increment. If the counter exceeds a calibration threshold memorized in PCM, the failure criteria is TRUE.
Another similar diagnostic test is performed to check steady-state error. In this test, no consideration is given to the duty cycle command versus phaser position. This test is only a check of the phasing position error. In the test, if the phaser error is greater than a calibration threshold memorized in PCM,a timing counter increments. If the counter exceeds the calibration threshold memorized in PCM,the failure criteria is TRUE.

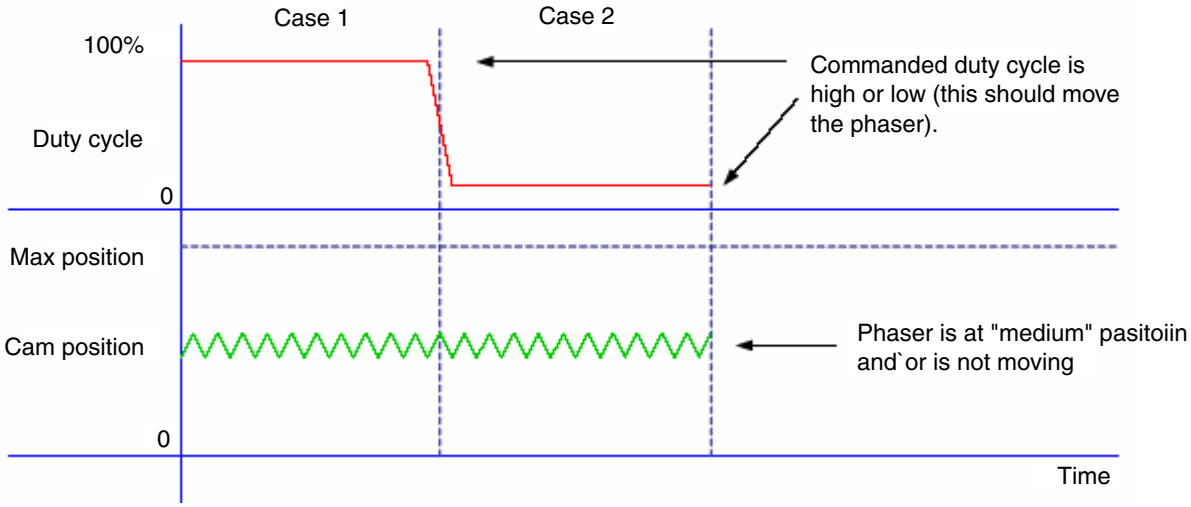

Fig. 1

LGLG100A

PCM monitors CAM phaser error while both cam offset is available and cam velocity is below 15CAD/s .If the CAM phaser does not move although PCM commands OCV duty cycle, PCM determines that a fault exists and a DTC is stored.

DTC DETECTING CONDITION E2DF22AE

Item		Detecting Condition	Possible cause
DTC Strategy		• Determines if the phaser is stuck or has steady-state error	• Engine Oil • OCV • CVVT stuck • PCM
Enable Conditions		• Offsets available • Cam velocity below threshold 〈 15 CAD/s	
Thresh old value	Case 1	• 5 CAD 〈 Cam position 〈 50 CAD • Duty Cycle 〉 90% • Duty Cycle 〈 10% • Timing Counter 〉 80	
	Case 2	• Cam Position error 〉 15 CAD • Timing Counter 〉 80	
Diagnosis Time		• Continuous (More than 0.75sec. Test failure for every 90sec tests)	
MIL On Condition		• 2 Driving Cycles	

SCHEMATIC DIAGRAM E6FF558E

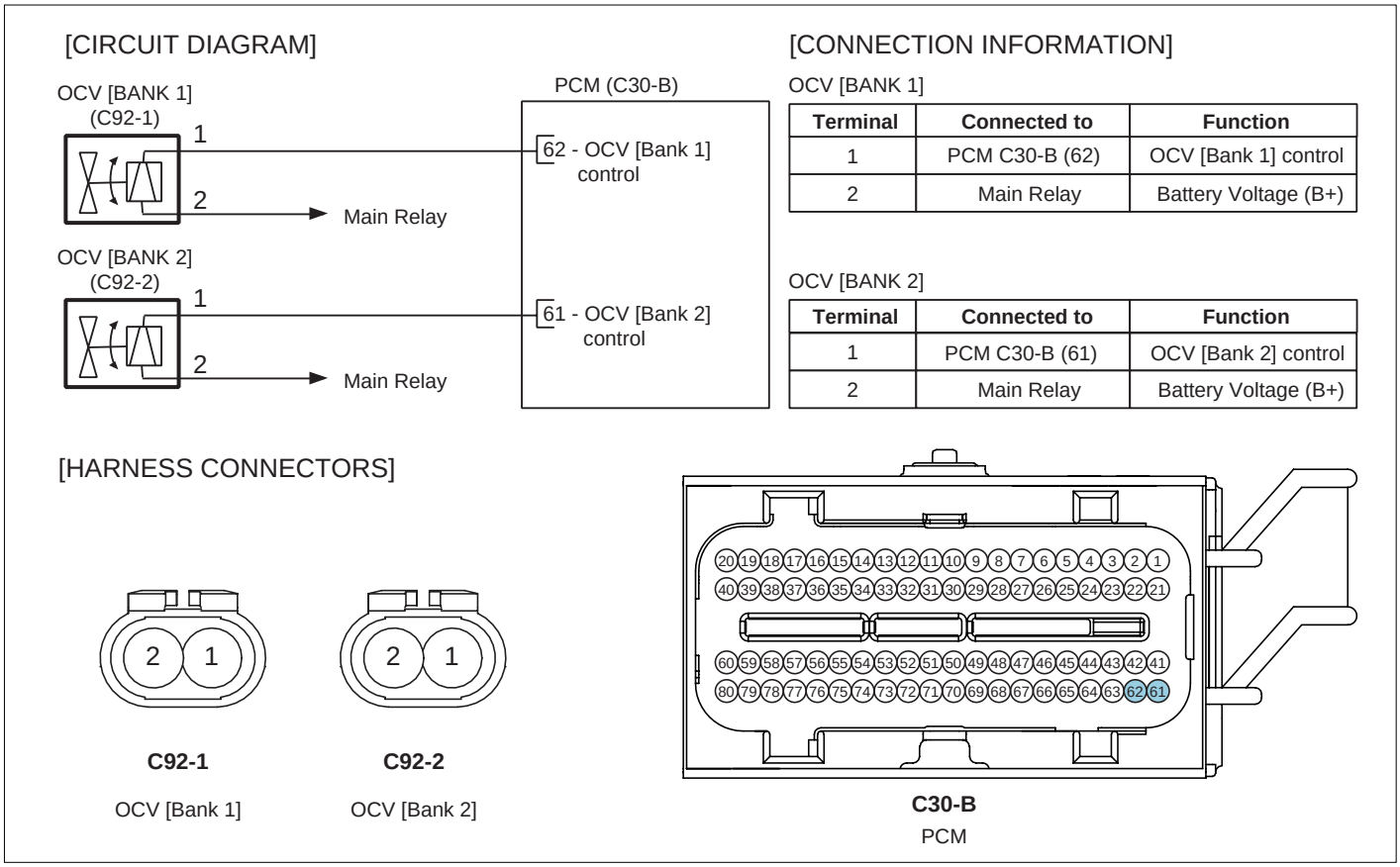

SCMF16115L

SIGNAL WAVEFORM AND DATA ED93FF6C

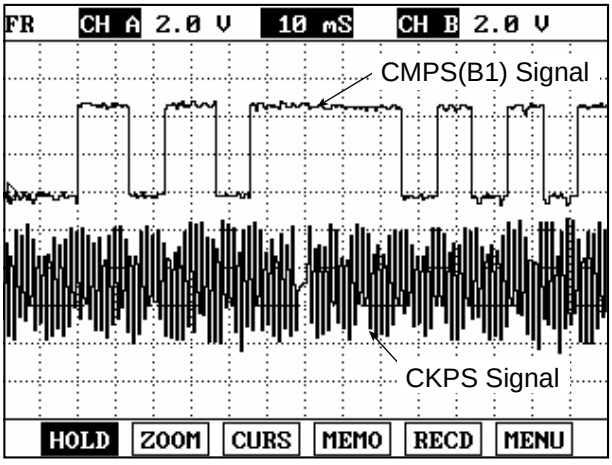

This example shows a typical Crankshaft Position Sensor(CKPS) and Camshaft Position Sensor(CMPS) waveform at idle. If the Cam Phasing is generated by PCM, the offset of cam target wheel tooth varies against 58X reference tooth of CKPS. Cam phasing can be detected from offset variation.

EFBF600B

MONITOR DTC STATUS E962DDB8

1. Check DTC Status
   1) Connect scantool to Data Link Connector(DLC).
   2) IG "ON".

3) Select "Diagnostic Trouble Codes(DTCs)" mode, and then Press F4(DTAL) to check DTC's information from the DTCs menu

4) Read "DTC Status" parameter.

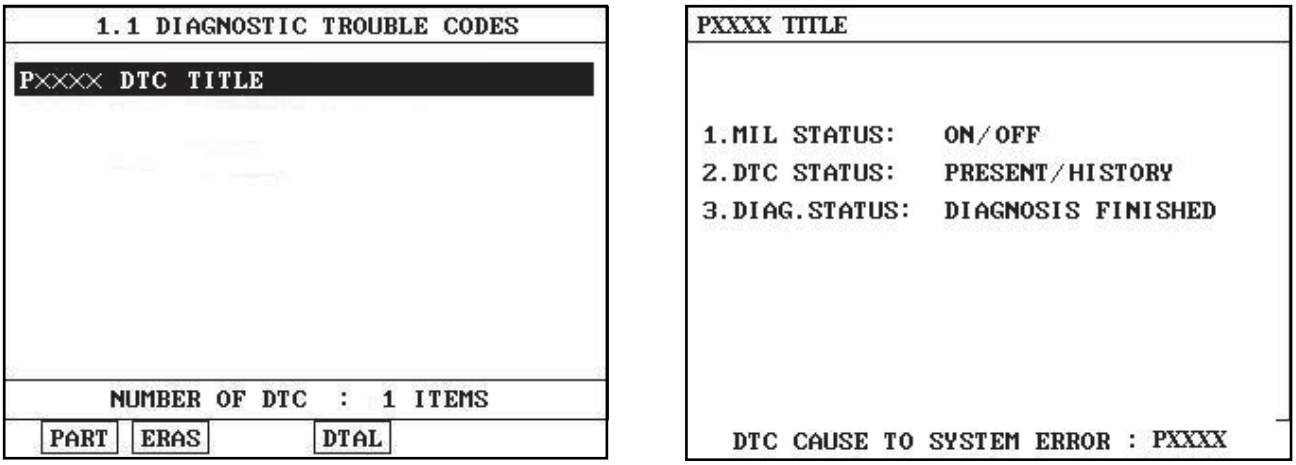

SCMF16159L

5) Is parameter displayed "Present fault"?

YES

▶ Go to "System Inspection" procedure.

NO

▶ Fault is intermittent caused by poor contact in the sensor's and/or PCM's connector or was repaired and PCM memory was not cleared. Thoroughly check connectors for looseness, poor connection, ending, corrosion, contamination, deterioration, or damage. Repair or replace as necessary and go to "Verification of Vehicle Repair" procedure.

SYSTEM INSPECTION E77A6F95

1. Visual Inspection

1) Check oil level is O.K.

2) Check oil is contaminated.

3) Has a problem been found ?

YES

▶ Repair or replace as necessary and then, go to " Verification of Vehicle Repair" procedure.

NO

▶ Go to "Component Inspection" procedure.

COMPONENT INSPECTION E696E30F

1. Check OCV

1) Connect scantool and IG "ON"

2) Select "OCV" on the Actuation Test

3) Activate "OCV" by pressing "STRT(F1)" key
(should hear a faint click from Oil Control solenoid Valve)

4) Repeat this procedure 4 or 5 times to ensure reliability

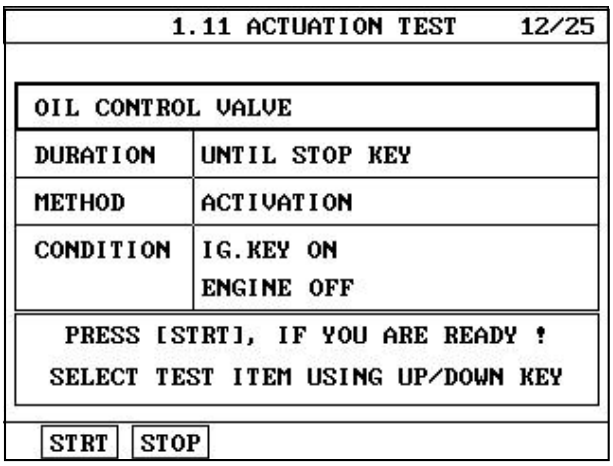

EGRF600H

5) Has a problem been found ?

YES

▶ Substitute with a known - good OCV and check for proper operation. If the problem is corrected, replace OCV and go to "Verification of Vehicle Repair" procedure.

NO

▶ Substitute with a known - good CVVT and check for proper operation. If the problem is corrected, replace CVVT and go to "Verification of Vehicle Repair" procedure.

VERIFICATION OF VEHICLE REPAIR ED5C3394

After a repair, it is essential to verify that the fault has been corrected.

1. Monitor and record the Freeze Frame Data for the Diagnostic Trouble Code(DTC) which has been diagnosed.
2. Using a Scantool, Clear the DTCs
3. Operate the vehicle within conditions noted in the freeze frame data or enable conditions
4. Monitor that all rediness test have been verified as " Complete "
5. Are any DTCs present ?

YES

▶ Go to the applicable troubleshoooting procedure.

NO

▶ System is performing to specification at this time.

DTC P0016 CRANKSHAFT POSITION-CAMSHAFT POSITION CORRELATION (BANK 1 SENSOR A)

COMPONENT LOCATION EAA97372

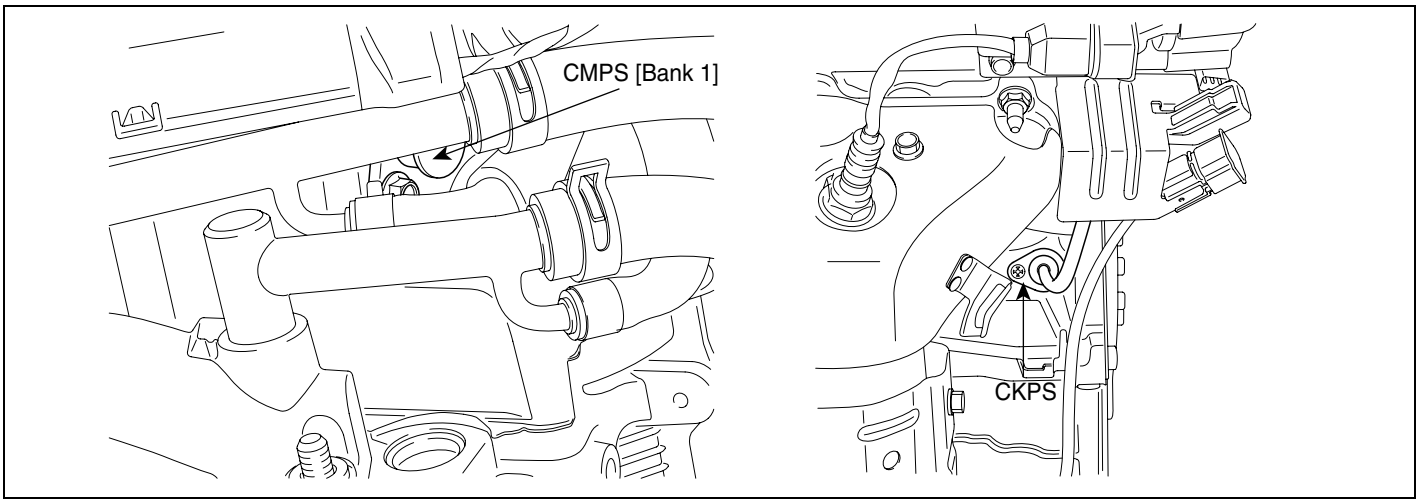

LGLG501A

GENERAL DESCRIPTION E10B26F9

The CVVT (Continuously Variable Valve Timing) system is installed to the chain sprocket of the intake camshaft. This system controls the intake camshaft to provide the optimal valve timing for every driving condition. The ECM controls the Oil Control Valve(OCV), based on the signals output from mass air flow, throttle position and engine coolant temperature. The CVVT controller regulates the intake camshaft angle using oil pressure through the OCV. As result, the relative position between the camshaft and the crankshaft becomes optimal, and the engine torque improves, fuel economy improves, exhaust emissions decrease under overall driving conditions.

DTC DESCRIPTION EAEA7CB5

Tooth offsets are learned, updated, stored and initialized. For a given cam target wheel and systemcalibration, the tooth offsets should maintain relatively steady values. If the values of tooth offsets are observed to drift outside of an established range, then a failure is present for measuring cam phasing.
This diagnosis is to verify that learned tooth offsets are within an acceptable range.
PCM monitors tooth offset while no active faults is present.If the tooth offsets is out of threshold during more than 6 offset learning for 36 offset learning, PCM determines that a fault exists and a DTC is stored.

DTC DETECTING CONDITION EB7F927C

Item		Detecting Condition	Possible cause
DTC Strategy		• Determines if CAM target is aligned correctly to crank	• CKPS, CMPS • CVVT • Timing Misalignment • PCM
Enable Conditions		• No active faults	
Thresh old value	Case 1	• Real Offset Value 〈 Min. Cam Offset programmed in PCM	
	Case 2	• Real Offset Value 〉 Max. Cam Offset programmed in PCM	
Diagnosis Time		• Continuous (More than 6 offset learning failure for 36 offset learning)	
MIL On Condition		• 2 driving Cycles	

SCHEMATIC DIAGRAM E40CE2FC

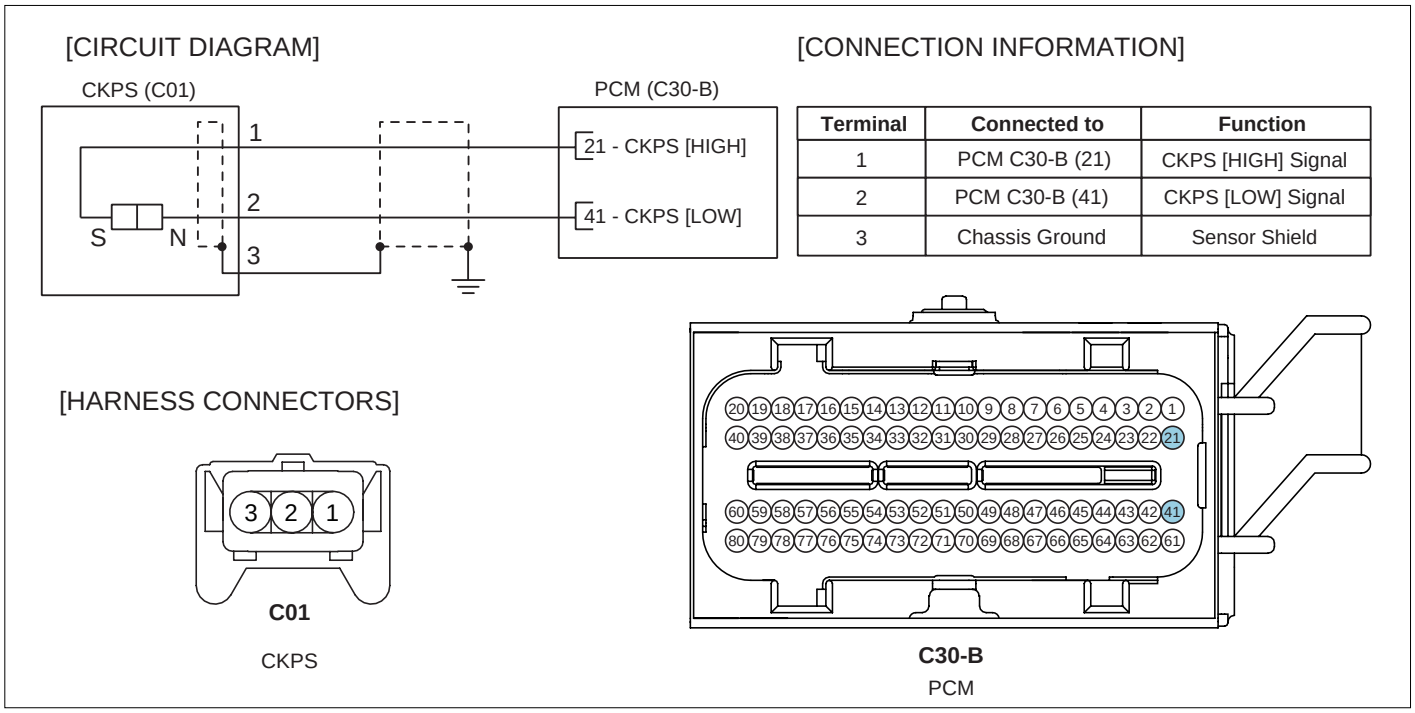

SCMF16109L

[CIRCUIT DIAGRAM]

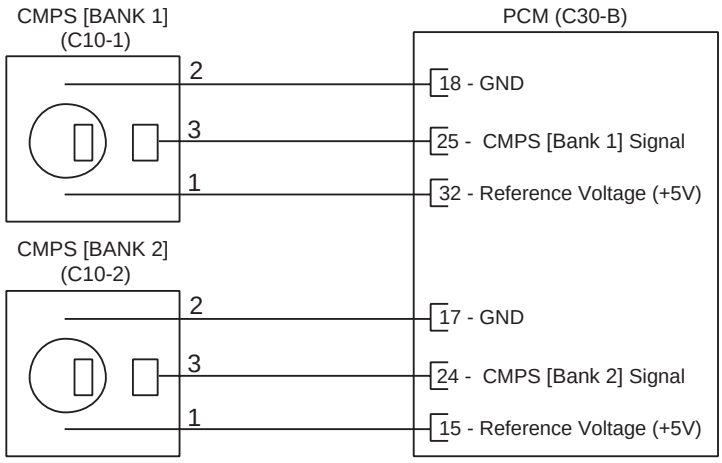

[CONNECTION INFORMATION]

CMPS [BANK 1]

Terminal	Connected to	Function
1	PCM C30-B (32)	Reference Voltage (+5V)
2	PCM C30-B (18)	Sensor ground
3	PCM C30-B (25)	CMPS [Bank 1] signal

CMPS [BANK 2]

Terminal	Connected to	Function
1	PCM C30-B (15)	Reference Voltage (+5V)
2	PCM C30-B (17)	Sensor ground
3	PCM C30-B (24)	CMPS [Bank 2] signal

[HARNESS CONNECTORS]

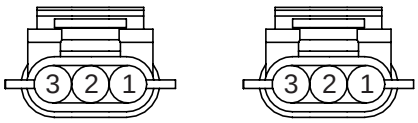

C10-1

CMPS [BANK 1]

C10-2

CMPS [BANK 2]

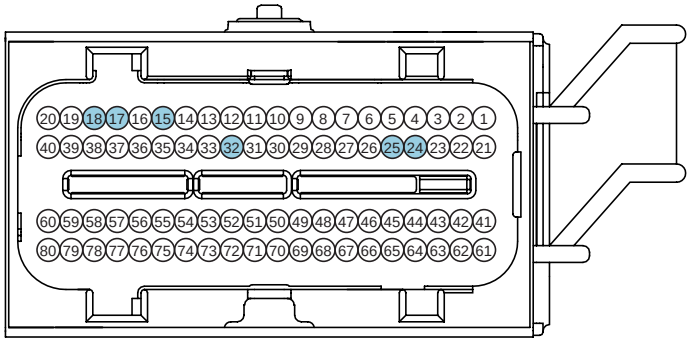

C30-B

PCM

SCMF16108L

SIGNAL WAVEFORM AND DATA E9F99F59

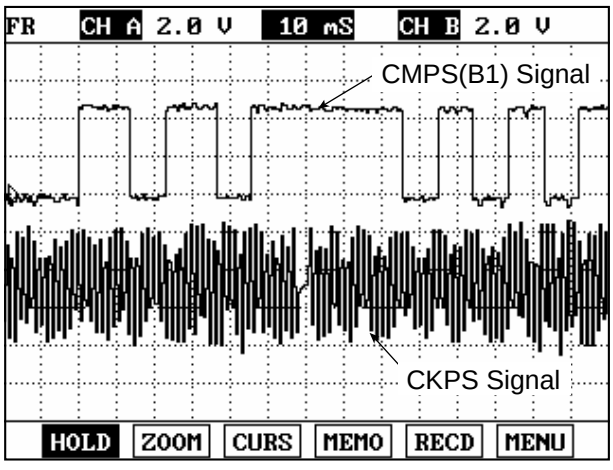

This example shows a typical Crankshaft Position Sensor(CKPS) and Camshaft Position Sensor(CMPS) waveform at idle. If the Cam Phasing is generated by PCM, the offset of cam target wheel tooth varies against 58X reference tooth of CKPS. Cam phasing can be detected from offset variation.

EFBF600B

MONITOR DTC STATUS E1D9C4AB

1. Check DTC Status

   1) Connect scantool to Data Link Connector(DLC).

   2) IG "ON".

3) Select "Diagnostic Trouble Codes(DTCs)" mode, and then Press F4(DTAL) to check DTC's information from the DTCs menu

4) Read "DTC Status" parameter.

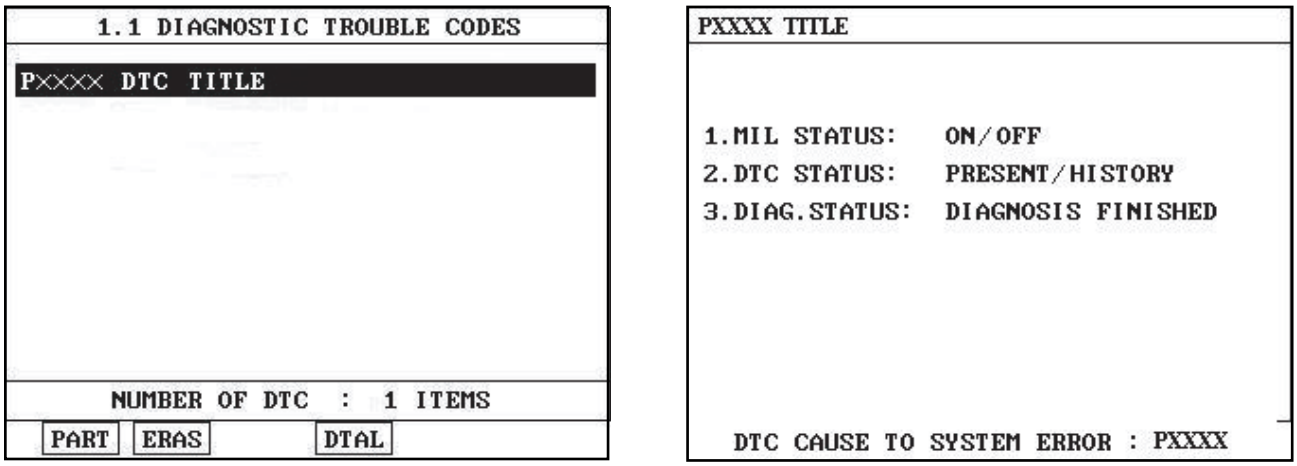

SCMF16159L

5) Is parameter displayed "Present fault"?

YES

▶ Go to "Terminal and connector inspection" procedure.

NO

▶ Fault is intermittent caused by poor contact in the sensor's and/or PCM's connector or was repaired and PCM memory was not cleared. Thoroughly check connectors for looseness, poor connection, ending, corrosion, contamination, deterioration, or damage. Repair or replace as necessary and go to "Verification of Vehicle Repair" procedure.

TERMINAL AND CONNECTOR INSPECTION EB913DDC

1. Many malfunctions in the electrical system are caused by poor harness and terminals. Faults can also be caused by interference from other electrical systems, and mechanical or chemical damage.

2. Thoroughly check connectors for looseness, poor connection, bending, corrosion, contamination, deterioration, or damage.

3. Has a problem been found?

YES

▶ Fault is intermittent caused by poor contact in the sensor's and/or PCM's connector or was repaired and PCM memory was not cleared. Thoroughly check connectors for looseness, poor connection, bending, corrosion, contamination, deterioration, or damage. Repair or replace as necessary and go to "Verification of Vehicle Repair" procedure.

NO

▶ Go to "System inspection" procedure.

SYSTEM INSPECTION EA5E9A5E

1. Check CMPS

   1) IG "OFF" & Disconnect CMPS connector.

   2) IG "ON" & Measure voltage between terminal 1,2 & 3 of CMPS(B1) harness connector and chassis ground.

Specification :
Terminal 1. approx. 5V
Terminal 2. approx. below 1V
Terminal 3. approx. 5V

   3) Is the measured voltage within specification ?

   YES

   ▶ Go to Check "CKPS" as follow.

   NO

   ▶ Repair or replace as necessary and then go to " Verification of Vehicle Repair" procedure.

2. Check CKPS

   1) IG "OFF" and disconnect CKPS connector.

   2) IG "ON" & Measure voltage between terminal 1 & 2 of CKPS harness connecotor and chassis ground.

Specification : Approximately 1.4V

   3) Is the measured voltage within specification ?

   YES

   ▶ Go to "component Inspection" procedure.

   NO

   ▶ Repair or replace as necessary and then go to "Verification of Vehicle Repair" procedure.

COMPONENT INSPECTION E593726E

1. CMPS, CKPS Inspection

   1) IG "OFF" and connect scantool.

   2) ENG "ON" and Measure signal waveform at terminal 3 of CMPS.

   3) Measure signal waveform at terminal 1 or 2 of CKPS.

SPECIFICATION :

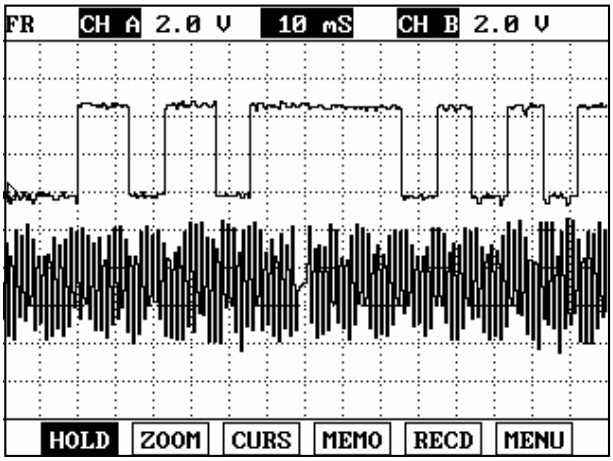

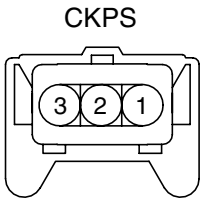

1. CKPS Signal HIGH
2. CKPS Signal LOW
3. Shield ground

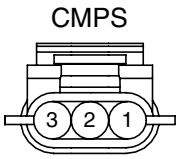

1. Sensor Power
2. Sensor Ground
3. CMPS Signal

LGLG106A

4) Is the measured signal waveform O.K ?

YES

▶ Substitute with a known - good PCM and check for proper operation. If the problem is corrected, replace PCM and go to "Verification of Vehicle Repair" procedure.

NOTE

There is a memory reset function on scantool that can erase optional parts automatically detected and memorized by PCM.
Before or after testing PCM on the vehicle, use this function to reuse the PCM on the others.

NO

▶ Go to "Timing Mark Inspection" procedure as follow.

2. Timing Mark Inspection.

1) IG "OFF" and check the timing mark is correctly aligned.

REFERENCE :

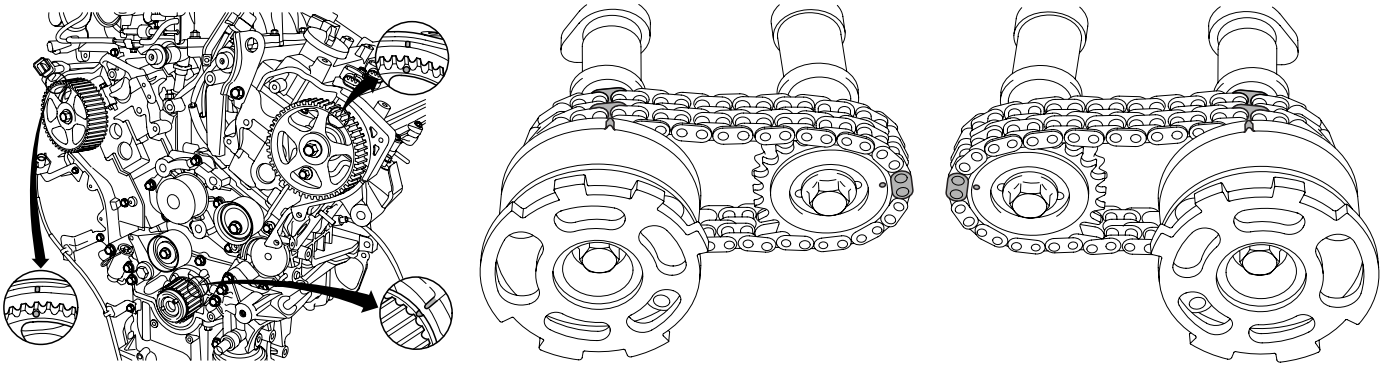

[Timing Belt] [Cam (Bank 1)] [Cam (Bank 2)]

LGLG502A

2) Is the timing mark correctly aligned ?

YES

▶ Substitute with a known - good CVVT and check for proper operation. If the problem is corrected, replace CVVT and go to "Verification of Vehicle Repair" procedure.

NO

▶ Repair or replace as necessary and then, go to "Verification of Vehicle Repair" procedure.

VERIFICATION OF VEHICLE REPAIR ED8E6F21

After a repair, it is essential to verify that the fault has been corrected.

1. Monitor and record the Freeze Frame Data for the Diagnostic Trouble Code(DTC) which has been diagnosed.
2. Using a Scantool, Clear the DTCs
3. Operate the vehicle within conditions noted in the freeze frame data or enable conditions
4. Monitor that all rediness test have been verified as " Complete "
5. Are any DTCs present ?

YES

▶ Go to the applicable troubleshoooting procedure.

NO

▶ System is performing to specification at this time.

DTC P0018 CRANKSHAFT POSITION-CAMSHAFT POSITION CORRELATION (BANK 2 SENSOR A)

COMPONENT LOCATION E9A57234

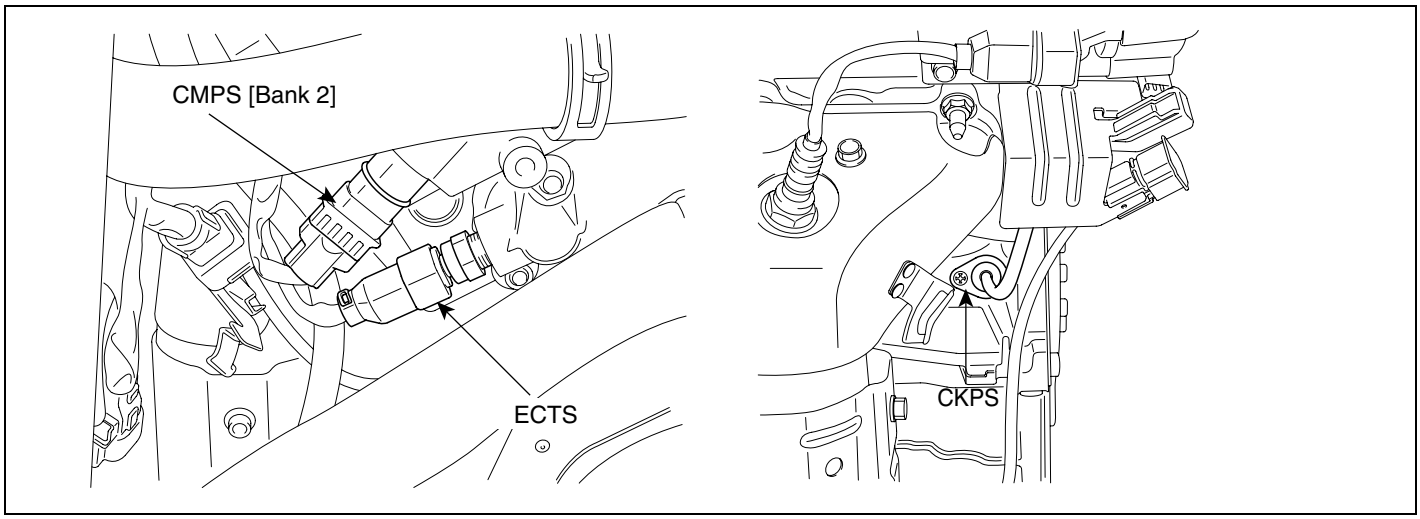

LGLG503A

GENERAL DESCRIPTION E89D6CDB

Refer to DTC P0016.

DTC DESCRIPTION EC70DF23

Tooth offsets are learned, updated, stored and initialized. For a given cam target wheel and systemcalibration, the tooth offsets should maintain relatively steady values. If the values of tooth offsets are observed to drift outside of an established range, then a failure is present for measuring cam phasing.
This diagnosis is to verify that learned tooth offsets are within an acceptable range.
PCM monitors tooth offset while no active faults is present. If the tooth offsets is out of threshold during more than 6 offset learning for 36 offset learning, PCM determines that a fault exists and a DTC is stored.

DTC DETECTING CONDITION E48B7379

Item		Detecting Condition	Possible cause
DTC Strategy		• Determines if CAM(B2) target is aligned correctly to crank	• CKPS, CMPS(B2) • CVVT • Timing Misalignment • PCM
Enable Conditions		• No active faults	
Thresh old value	Case 1	• Real Offset Value 〈 Min. Cam Offset programmed in PCM	
	Case 2	• Real Offset Value 〉 Max. Cam Offset programmed in PCM	
Diagnosis Time		• Continuous (More than 6 offset learning failure for 36 offset learning)	
MIL On Condition		• 2 driving Cycles	

SCHEMATIC DIAGRAM EE238604

Refer to DTC P0016.

SIGNAL WAVEFORM AND DATA E3BBA697

Refer to DTC P0016.

MONITOR DTC STATUS EF8C30BD

Refer to DTC P0016.

TERMINAL AND CONNECTOR INSPECTION E227E5BF

Refer to DTC P0016.

SYSTEM INSPECTION EBF927C6

1. Check CMPS

   1) IG "OFF" & Disconnect CMPS connector.

   2) IG "ON" & Measure voltage between terminal 1,2 & 3 of CMPS(B2) harness connector and chassis ground.

Specification :
Terminal 1. approx. 5V
Terminal 2. approx. below 1V
Terminal 3. approx. 5V

   3) Is the measured voltage within specification ?

   YES

   ▶ Go to Check "CKPS" as follow.

   NO

   ▶ Repair or replace as necessary and then go to " Verification of Vehicle Repair" procedure.

2. Check CKPS

   1) IG "OFF" and disconnect CKPS connector.

   2) IG "ON" & Measure voltage between terminal 1 & 2 of CKPS harness connecotor and chassis ground.

Specification : Approximately 1.4V

   3) Is the measured voltage within specification ?

   YES

   ▶Go to "component Inspection" procedure.

   NO

   ▶Repair or replace as necessary and then go to "Verification of Vehicle Repair" procedure.

COMPONENT INSPECTION E5A686E6

1. CMPS, CKPS Inspection

   1) IG "OFF" and connect scantool.

   2) ENG "ON" and Measure signal waveform at terminal 3 of CMPS.

   3) Measure signal waveform at terminal 1 or 2 of CKPS.

SPECIFICATION :

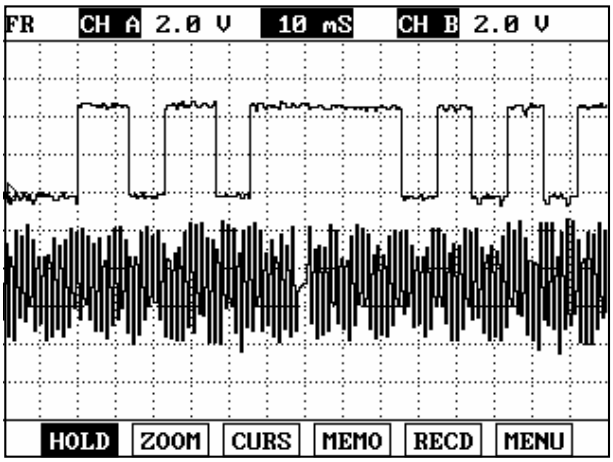

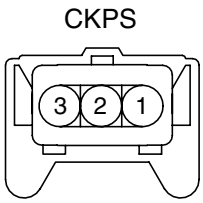

1. CKPS Signal HIGH
2. CKPS Signal LOW
3. Shield ground

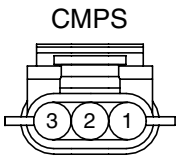

1. Sensor Power
2. Sensor Ground
3. CMPS Signal

LGLG106A

   4) Is the measured signal waveform O.K ?

YES

▶ Substitute with a known - good PCM and check for proper operation. If the problem is corrected, replace PCM and go to "Verification of Vehicle Repair" procedure.

NOTE

There is a memory reset function on scantool that can erase optional parts automatically detected and memorized by PCM.
Before or after testing PCM on the vehicle, use this function to reuse the PCM on the others

NO

▶ Go to "Timing Mark Inspection" procedure as follow.

2. Timing Mark Inspection

   1) IG "OFF" and check the timing mark is correctly aligned.

REFERNCE :

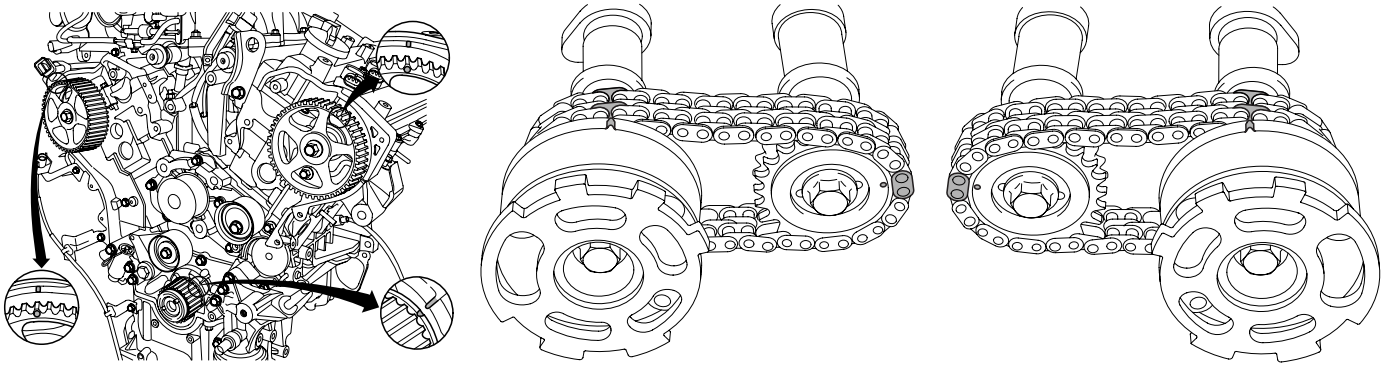

[Timing Belt] [Cam (Bank 1)] [Cam (Bank 2)]

LGLG502A

2) Is the timing mark correctly aligned ?

YES

▶ Substitute with a known - good CVVT and check for proper operation. If the problem is corrected, replace CVVT and go to "Verification of Vehicle Repair" procedure.

NO

▶ Repair or replace as necessary and then, go to "Verification of Vehicle Repair" procedure.

VERIFICATION OF VEHICLE REPAIR E4E5B1F3

Refer to DTC P0016.

DTC P0026 INTAKE VALVE CONTROL SOLENOID CIRCUIT RANGE/PERFORMANCE (BANK 1) DTC P0028 INTAKE VALVE CONTROL SOLENOID CIRCUIT RANGE/PERFORMANCE (BANK 2)

COMPONENT LOCATION EDDDD8B9

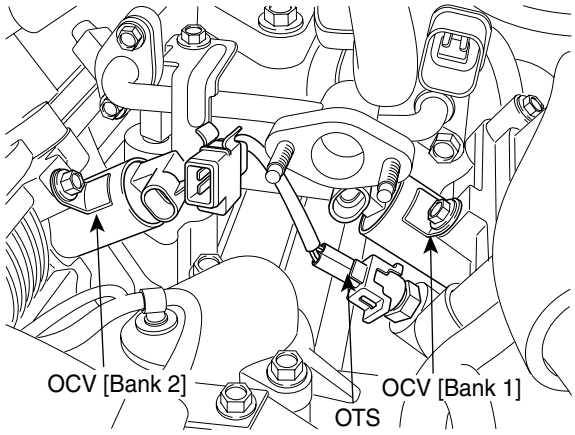

LGLG500A

GENERAL DESCRIPTION E58BBD36

The CVVT (Continuously Variable Valve Timing) system is installed to the chain sprocket of the intake camshaft. This system controls the intake camshaft to provide the optimal valve timing for every driving condition. The ECM controls the Oil Control Valve(OCV), based on the signals output from mass air flow, throttle position and engine coolant temperature. The CVVT controller regulates the intake camshaft angle using oil pressure through the OCV. As result, the relative position between the camshaft and the crankshaft becomes optimal, and the engine torque improves, fuel economy improves, exhaust emissions decrease under overall driving conditions.

DTC DESCRIPTION EB3171E9

Small particles in the engine oil may cause the oil control valve to bind or otherwise get stuck at certain spool positions. A test is used in this diagnostic to detect a stuck valve spool. A cleaning function is then used to try and free the spool. If unsuccessful, the diagnostic test is failed.
Figure 1. illustrates the principle of the valve stuck diagnostic test. As in the phaser error diagnostic illustration, there are two cases shown in the figure. The case on the left shows a case where the dutycycle is above a calibration threshold, yet the phaser position is near the minimum position. Under normal operation, such a duty cycle command would move the phaser toward its maximum position.The case on the right shows the opposite situation. The duty cycle command is below a threshold, yet the phaser position is near its maximum.

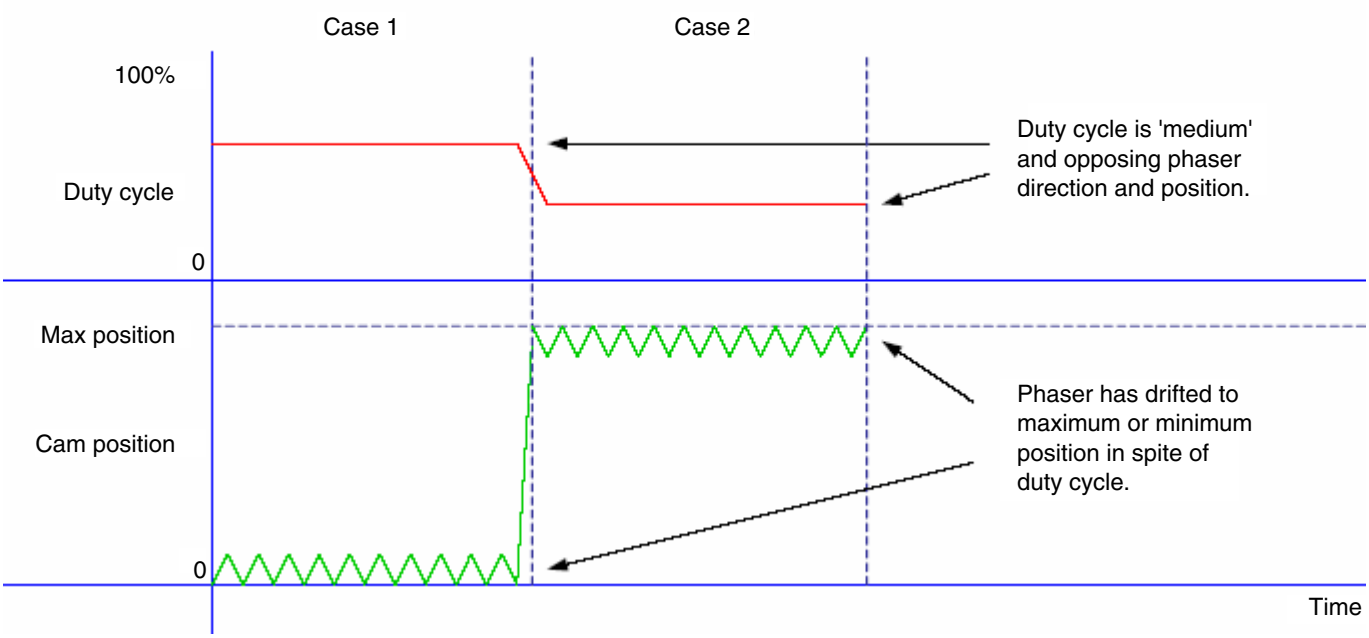

LGLG107A

PCM monitors OCV stuck while cam offset is available and Valve cleaning is not in progress .If the PCM detects that CAM position angle is over 20 CAD(Crank Angle Degree) than expected cam positionthat PCM controls the OCV while cam position is in designated crank angle degree, PCM determines that a faultexists and a DTC is stored.

DTC DETECTING CONDITION E737CEC5

Item		Detecting Condition	Possible cause
DTC Strategy		• Determines if oil control valve is stuck	• Oil Pressure Loss • OCV seizure • PCM
Enable Conditions		• Valve cleaning not in progress • Offsets available	
Thresh old value	Case 1	• Cam position 〉 50 CAD • Cam position Error 〉 20 CAD • Timing counter 〉 56 count	
	Case 2	• Cam position 〈 5 CAD • Cam position Error 〉 20 CAD • Timing counter 〉 56 count	
Diagnosis Time		• Continuous (More than 0.75sec failure for every 56.25 sec. tests)	
MIL On Condition		• 2 driving Cycle	

SPECIFICATION E8D9F224

Resistance (Ω)	6.7 ~ 7.7Ω [20℃(68˚F)]

SCHEMATIC DIAGRAM E83D0BA2

[CIRCUIT DIAGRAM]

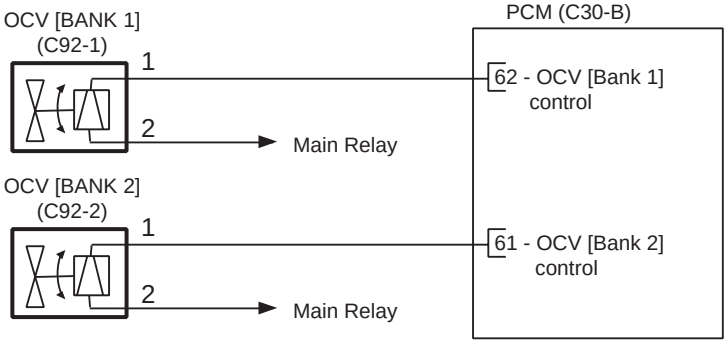

[CONNECTION INFORMATION]

OCV [BANK 1]

Terminal	Connected to	Function
1	PCM C30-B (62)	OCV [Bank 1] control
2	Main Relay	Battery Voltage (B+)

OCV [BANK 2]

Terminal	Connected to	Function
1	PCM C30-B (61)	OCV [Bank 2] control
2	Main Relay	Battery Voltage (B+)

[HARNESS CONNECTORS]

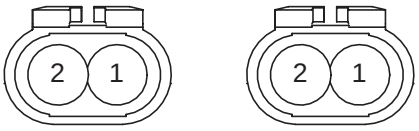

C92-1

OCV [Bank 1]

C92-2

OCV [Bank 2]

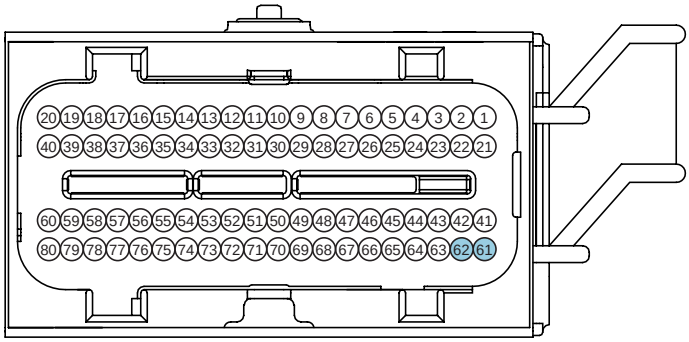

C30-B

PCM

SCMF16115L

SIGNAL WAVEFORM AND DATA E6E35DB1

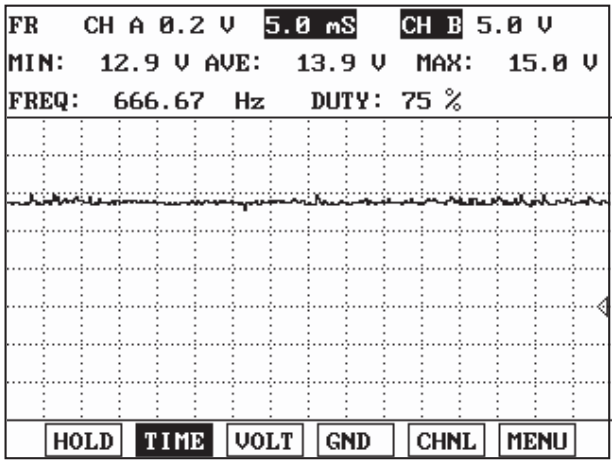

Fig. 1

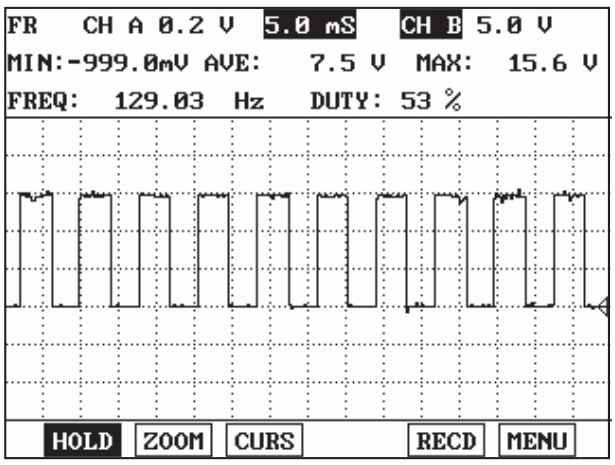

Fig. 2

Fig. 1 : Idle - normal Condition
Fig. 2 : Acceleration

EGRF600T

MONITOR DTC STATUS EAADDE1F

1. Check DTC Status

   1) Connect scantool to Data Link Connector(DLC).

   2) IG "ON".

   3) Select "Diagnostic Trouble Codes(DTCs)" mode, and then Press F4(DTAL) to check DTC's information from the DTCs menu

   4) Read "DTC Status" parameter.

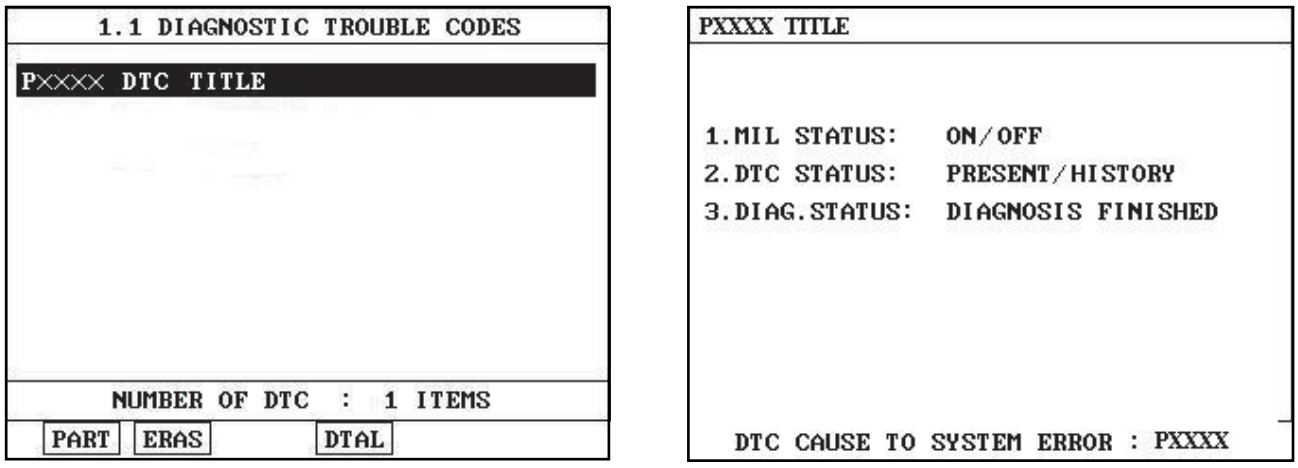

SCMF16159L

   5) Is parameter displayed "Present fault"?

YES

▶ Go to "Terminal and connector inspection" procedure.

NO

▶ Fault is intermittent caused by poor contact in the sensor's and/or PCM's connector or was repaired and PCM memory was not cleared. Thoroughly check connectors for looseness, poor connection, ending, corrosion, contamination, deterioration, or damage. Repair or replace as necessary and go to "Verification of Vehicle Repair" procedure.

TERMINAL AND CONNECTOR INSPECTION E5C05A43

1. Many malfunctions in the electrical system are caused by poor harness and terminals. Faults can also be caused by interference from other electrical systems, and mechanical or chemical damage.

2. Thoroughly check connectors for looseness, poor connection, bending, corrosion, contamination, deterioration, or damage.

3. Has a problem been found?

YES

▶ Repair as necessary and go to "Verification of Vehicle Repair" procedure

NO

▶ Go to " Power Circuit Inspection " as follow

POWER CIRCUIT INSPECTION EEA8DFAC

1. IG "OFF" and disconnect OCV connector.
2. IG "ON" & ENG "OFF".
3. Measure voltage between terminal 2 of OCV harness connector and chassis ground.

Specification : B+

4. Is the measured voltage within specification ?

YES

▶ Go to " Control Circuit Inspection " procedure.

NO

▶ Check that Fuse between Main Relay and OCV is open.
▶ Check open between main relay and OCV.
▶ Check short to ground between Main Relay and OCV.
▶ Repair or replace as necessay go to "Verification of Vehicle Repair " procedure.

CONTROL CIRCUIT INSPECTION E28BCFE0

1. IG "OFF" and disconnect OCV connector.
2. IG "ON" & ENG "OFF".
3. Measure voltage between terminal 1 of OCV harness connector and chassis ground.

Specification : Approx. below 1V

4. Is the measured voltage within specification ?

YES

▶ Go to "System Inspection" procedure.

NO

▶ Repair or replace as necessary and then go to "Verification of Vehicle Repair" procedure.

SYSTEM INSPECTION E4EDBFFC

1. Visual Inspection
   1) Check oil level is O.K.
   2) Check oil is contaminated.
   3) Check that any oil leakage is occurred around CVVT system.
   4) Has a problem been found ?

YES

▶ Repair or replace as necessary and then, go to " Verification of Vehicle Repair" procedure.

NO

▶ Go to "Component Inspection" procedure

COMPONENT INSPECTION E3F590A1

1. OCV Inspection

   1) IG "OFF" & Disconnect OCV connector.

   2) Measure resistance between terminal 1 and 2 of OCV connector (Component Side)

SPECIFICATION :

Resistance (Ω)	6.7 ~ 7.7Ω [20℃(68°F)]

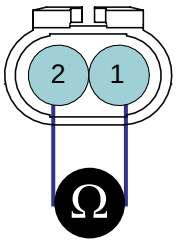

1. OCV control
2. OCV power

SCMF16999L

   3) Is the measured resistance within specification?

YES

▶ Go to "Actuation Test" as follow.

NO

▶ Substitute with a known - good OCV and check for proper operation. If the problem is corrected, replace OCV and go to "Verification of Vehicle Repair" procedure.

2. Actuation Test

   1) IG "OFF" and connect OCV connector

   2) IG "ON" & ENG "OFF"

   3) Check that click sound can be heard when actuation operates with scantool.

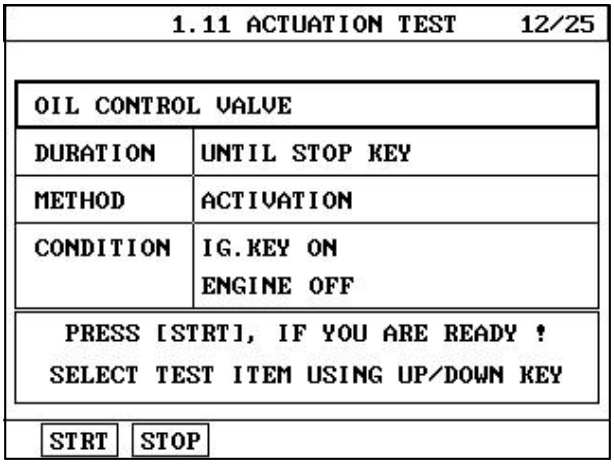

EGRF600Y

4) Does the OCV operate corectly when actuation operates ?

YES

▶ Substitute with a known - good PCM and check for proper operation. If the problem is corrected, replace PCM and go to "Verification of Vehicle Repair" procedure.

NOTE

There is a memory reset function on scantool that can erase optional parts automatically detected and memorized by PCM.
Before or after testing PCM on the vehicle, use this function to reuse the PCM on the others.

NO

▶ Substitute with a known - good OCV and check for proper operation. If the problem is corrected, replace OCV and go to "Verification of Vehicle Repair" procedure.

VERIFICATION OF VEHICLE REPAIR E0050497

After a repair, it is essential to verify that the fault has been corrected.

1. Monitor and record the Freeze Frame Data for the Diagnostic Trouble Code(DTC) which has been diagnosed.
2. Using a Scantool, Clear the DTCs
3. Operate the vehicle within conditions noted in the freeze frame data or enable conditions
4. Monitor that all rediness test have been verified as " Complete "
5. Are any DTCs present ?

YES

▶ Go to the applicable troubleshoooting procedure.

NO

▶ System is performing to specification at this time.

DTC P0030 HO2S HEATER CONTROL CIRCUIT (BANK 1 / SENSOR 1)

COMPONENT LOCATION ECC4F0DF

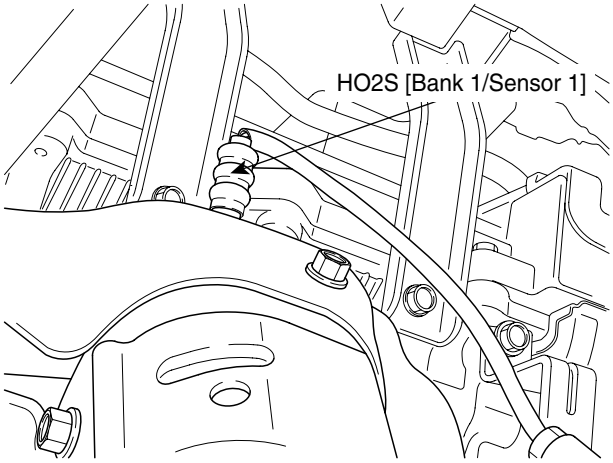

LGLG504A

GENERAL DESCRIPTION E7D9053E

The normal operating temperature of the HO2S(Heated Oxygen Sensor) ranges from 350 to 850°C(662 to 1562°F). The HO2S heater greatly decreases the amount of time required for fuel control to become active. The ECM provides a pulse width modulated control circuit to adjust current through the heater. When the HO2S is cold, the value of the resistance is low and the current in the circuit is high. On the contrary, if the temperature in the resistor of the sensor rises, the current drops gradually.

DTC DESCRIPTION E55501AD

Checking current from HO2S under detecting condition,if the heater current is below a certain threshold for more than predeterminate time, PCM sets P0030. MIL(Malfunction Indication Lamp) turns on when the malfunction lasts till consecutive 2 driving cycle.

DTC DETECTING CONDITION E1805512

Item	Detecting Condition	Possible cause
DTC Strategy	• Monitor the current through the heater	• Poor Connection • Contact Resistance • HO2S(B1/S1) • PCM
Enable Conditions	• Engine Running > 60 sec. • Heater Duty Cycle > 40% • Max. Duty Cycle - Min. Duty Cycle < 5%	
Threshold value	• Filtered Heater Current < threshold value	
Diagnosis Time	• Continuous (More than 2.5 second failure for every 5 second test)	
MIL On Condition	• 2 Driving Cycles	

SPECIFICATION E50E2A42

(REFERENCE ONLY)

Condition	Current(A)
Heater Current at 13.5V, 450℃(842°F) Exhaust	0.52 ± 0.1

SCHEMATIC DIAGRAM ECB89579

[CIRCUIT DIAGRAM]

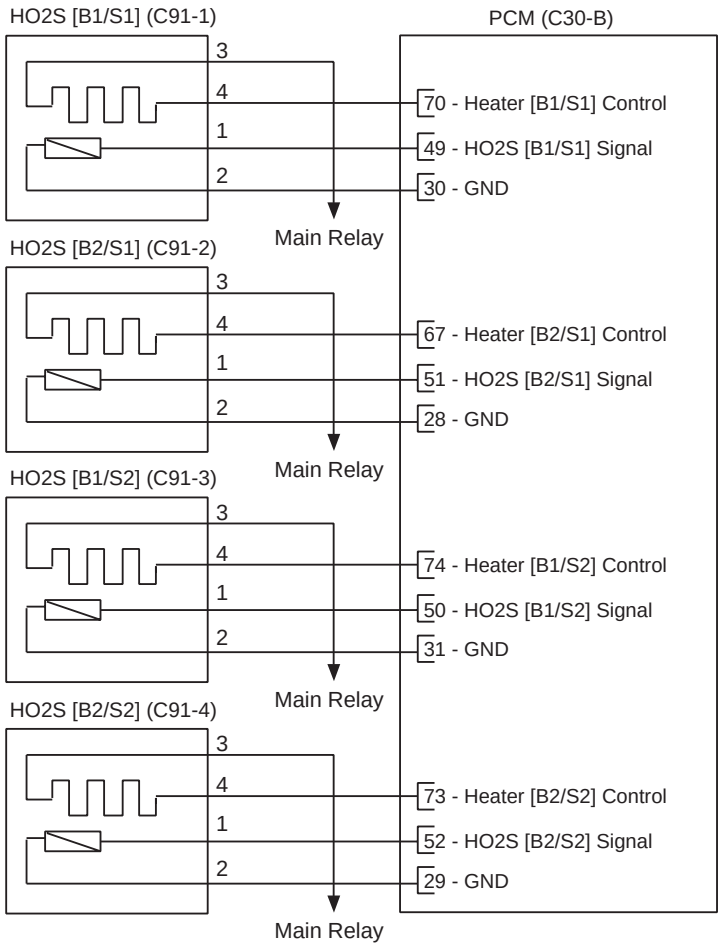

[CONNECTION INFORMATION]

HO2S [B1/S1]

Terminal	Connected to	Function
1	PCM C30-B (49)	HO2S [B1/S1] Signal
2	PCM C30-B (30)	Sensor ground
3	Main Relay	Battery Voltage (B+)
4	PCM C30-B (70)	Heater [B1/S1] Control

HO2S [B2/S1]

Terminal	Connected to	Function
1	PCM C30-B (51)	HO2S [B2/S1] Signal
2	PCM C30-B (28)	Sensor ground
3	Main Relay	Battery Voltage (B+)
4	PCM C30-B (67)	Heater [B2/S1] Control

HO2S [B1/S2]

Terminal	Connected to	Function
1	PCM C30-B (50)	HO2S [B1/S2] Signal
2	PCM C30-B (31)	Sensor ground
3	Main Relay	Battery Voltage (B+)
4	PCM C30-B (74)	Heater [B1/S2] Control

HO2S [B2/S2]

Terminal	Connected to	Function
1	PCM C30-B (52)	HO2S [B2/S2] Signal
2	PCM C30-B (29)	Sensor ground
3	Main Relay	Battery Voltage (B+)
4	PCM C30-B (73)	Heater [B2/S2] Control

[HARNESS CONNECTORS]



C91-1,2

HO2S [Bank 1/Sensor 1]
HO2S [Bank 2/Sensor 1]

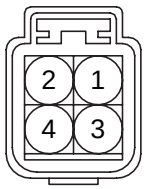

C91-3,4

HO2S [Bank 1/Sensor 2]
HO2S [Bank 2/Sensor 2]

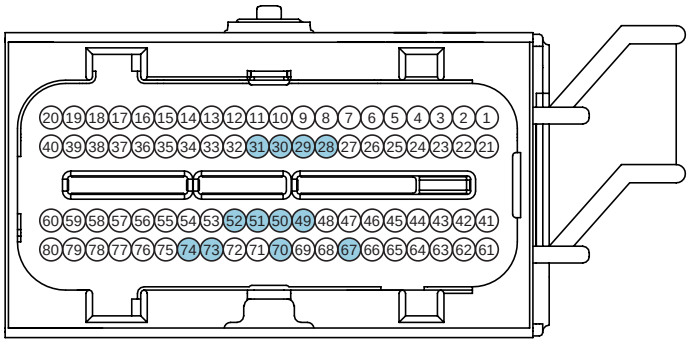

C30-B

PCM

SCMF16110L

SIGNAL WAVEFORM AND DATA E80309D1

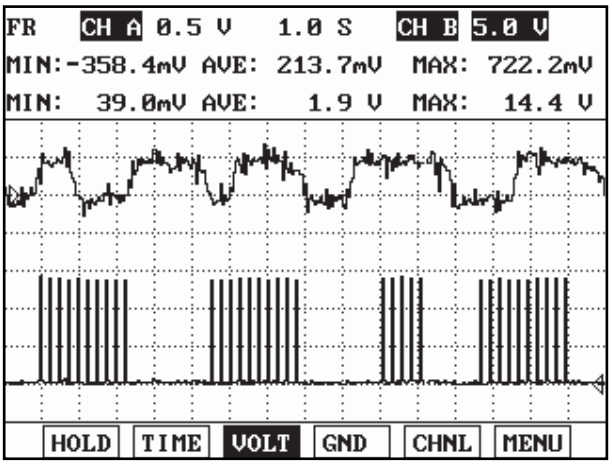

Fig. 1

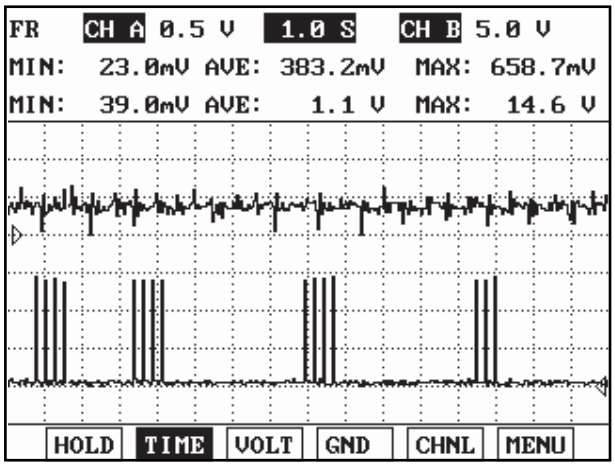

Fig. 2

Fig1) The signal waveforms of front HO2S(the upper) and heater(the lower) at idle
Fig2) The signal waveforms of rear HO2S(the upper) and heater(the lower) at idle

SCMF16158L

The HO2S requires a minimum temperature to provide a closed loop fuel control system. So the HO2S contains a heater element to reduce its warm-up time and ensure its performance during all driving conditions. The PCM controls this heater element by duty cycle. The main relay supplies voltage to the heater and the PCM provides a ground circuit for activating the heater.

MONITOR DTC STATUS EF54E3EB

1. Check DTC Status

   1) Connect scantool to Data Link Connector(DLC).

   2) IG "ON".

   3) Select "Diagnostic Trouble Codes(DTCs)" mode, and then Press F4(DTAL) to check DTC's information from the DTCs menu

   4) Read "DTC Status" parameter.

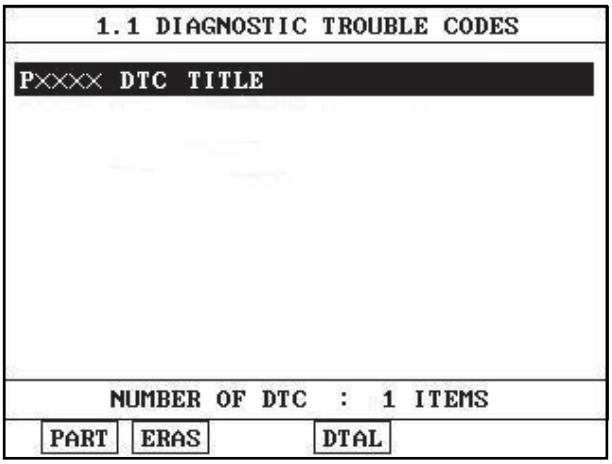

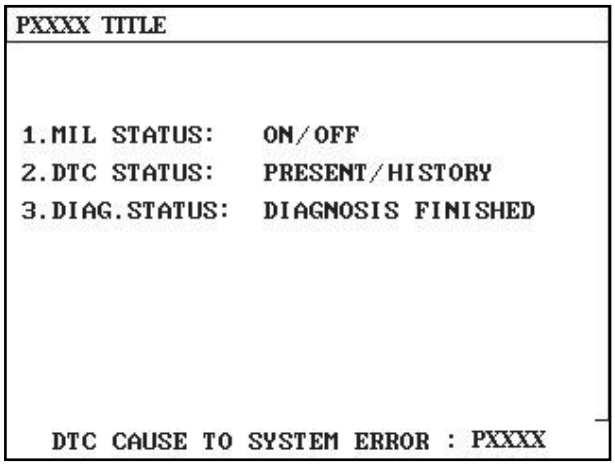

SCMF16159L

5) Is parameter displayed "Present fault"?

YES

▶ Go to "Terminal and connector inspection" procedure.

NO

▶ Fault is intermittent caused by poor contact in the sensor's and/or PCM's connector or was repaired and PCM memory was not cleared. Thoroughly check connectors for looseness, poor connection, ending, corrosion, contamination, deterioration, or damage. Repair or replace as necessary and go to "Verification of Vehicle Repair" procedure.

TERMINAL AND CONNECTOR INSPECTION EB00C1F9

1. Many malfunctions in the electrical system are caused by poor harness and terminals. Faults can also be caused by interference from other electrical systems, and mechanical or chemical damage.
2. Thoroughly check connectors for looseness, poor connection, bending, corrosion, contamination, deterioration, or damage.
3. Has a problem been found?

YES

▶ Repair as necessary and go to "Verification of Vehicle Repair" procedure

NO

▶ Go to " Component Inspection " procedure.

COMPONENT INSPECTION E55A281F

1. Check HO2S(B1/S1) Heater resistance

1) IG "OFF" and disconnect HO2S(B1/S1) connector

2) Measure resistance between terminal 3 and 4 of HO2S(B1/S1)(Component Side)

Specification : 3.0 ~ 4.0Ω [21℃(69.8°F)]

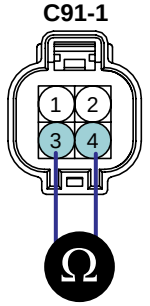

1. HO2S(B1/S1) Signal
2. Sensor Ground
3. **HO2S(B1/S1) Heater Power**
4. **HO2S(B1/S1) Heater Control**

SCMF16227L

3) Is the measured resistance within specification ?

YES

▶ Substitute with a known - good PCM and check for proper operation.
If the problem is corrected, go to "Verification of Vehicle Repair" procedure.

NOTE

There is a memory reset function on scantool that can erase optional parts automatically detected and memorized by PCM. Before or after testing PCM on the vehicle, use this function to reuse the PCM on the others.

NO

▶ Substitute with a known - good HO2S(B1/S1) and check for proper operation.
If the problem is corrected, go to "Verification of Vehicle Repair" procedure.

VERIFICATION OF VEHICLE REPAIR E96ADDF1

After a repair, it is essential to verify that the fault has been corrected.

1. Monitor and record the Freeze Frame Data for the Diagnostic Trouble Code(DTC) which has been diagnosed.
2. Using a Scantool, Clear the DTCs
3. Operate the vehicle within conditions noted in the freeze frame data or enable conditions
4. Monitor that all rediness test have been verified as " Complete "
5. Are any DTCs present ?

YES

▶ Go to the applicable troubleshoooting procedure.

NO

▶ System is performing to specification at this time.

DTC P0031 HO2S HEATER CIRCUIT LOW (BANK 1 / SENSOR 1)

COMPONENT LOCATION E5C4139A

Refer to DTC P0030.

GENERAL DESCRIPTION EE8AA40E

Refer to DTC P0030.

DTC DESCRIPTION ECB1D247

If the PCM detects short to ground or open in heater under detecting conditions, PCM sets P0031. MIL(Malfunction Indication Lamp) turns on when the malfunction lasts till consecutive 2 driving cycle.

DTC DETECTING CONDITION E809EBA1

Item	Detecting Condition	Possible cause
DTC Strategy	• Detects a short to ground or open	• Poor Connection • Open in Power Circuit • Open or short to ground in control circuit • HO2S(B1/S1) • PCM
Enable Conditions	• No disabling Faults • Engine Running • 11V ≤ Battery Voltage ≤ 16V	
Threshold value	• Short to ground or open circuit	
Diagnosis Time	• Continuous (More than 5 seconds failure for every 10 seconds test)	
MIL On Condition	• 2 Driving Cycles	

SPECIFICATION E96D15EC

Heater	
Resistance (Ω)	3.0 ~ 4.0Ω [21℃(69.8°F)]

SCHEMATIC DIAGRAM E2CB83CC

Refer to DTC P0030.

SIGNAL WAVEFORM AND DATA E16B27DA

Refer to DTC P0030.

MONITOR DTC STATUS E1583243

Refer to DTC P0030.

TERMINAL AND CONNECTOR INSPECTION E56AA16C

Refer to DTC P0030.

POWER CIRCUIT INSPECTION E647A962

1. IG "OFF" & Disconnect HO2S(B1/S1) connector.
2. IG "ON" & ENG "OFF".
3. Measure voltage between terminal 3 of HO2S(B1/S1) harness connector and chassis ground.

Specification : B+

4. Is the measured voltage within specification ?

YES

▶ Go to "Control Circuit Inspection" procedure.

NO

▶ Repair open or short to ground in HO2S(B1/S1) Heater power circuit then, go to "Verification of Vehicle Repair" procedure.

CONTROL CIRCUIT INSPECTION EC89450E

1. Check short to ground in harness.
   1) IG "OFF" and disconnect HO2S(B1/S1) connector.
   2) Measure resistance between terminal 4 of HO2S(B1/S1) harness connector and chassis ground.

Specification : Infinite

   3) Is the measured resistance within specification ?

YES

▶ Go to "Check Open in harness" as follows.

NO

▶ Repair short to ground in HO2S (B1/S1) heater control circuit and go to "Verification of Vehicle Repair" procedure.

2. Check open in harness
   1) IG "OFF" and disconnect HO2S(B1/S1) and PCM connector.
   2) Measure resistance between terminal 4 of HO2S(B1/S1) harness connector and terminal C30-B (70) of PCM harness connector.

Specification : Approx. below 1Ω

   3) Is the measured resistance within specification ?

YES

▶ Go to "Component Inspection" procedure.

NO

▶ Repair open in HO2S(B1/S1) heater control circuit and go to "Verifiction of Vehicle Repair" procedure.

COMPONENT INSPECTION EBB5CE11

1. Check HO2S(B1/S1) Heater resistance.

   1) IG "OFF" and disconnect HO2S(B1/S1) connector.

   2) Measure resistance between terminal 3 and 4 of HO2S(B1/S1)connector (Component Side)

SPECIFICATION :

Heater	
Resistance (Ω)	3.0 ~ 4.0Ω [21℃(69.8°F)]

C91-1

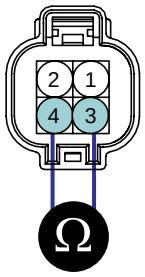

1. HO2S(B1/S1) Signal
2. Sensor Ground
3. **HO2S(B1/S1) Heater Power**
4. **HO2S(B1/S1) Heater Control**

SCMF16163L

   3) Is the measured resistance within specification ?

YES

▶ Substitute with a known - good PCM and check for proper operation.
If the problem is corrected, replace PCM and go to "Verification of Vehicle Repair" procedure.

NOTE

There is a memory reset function on scantool that can erase optional parts automatically detected and memorized by PCM.
Before or after testing PCM on the vehicle, use this function to reuse the PCM on the others.

NO

▶ Substitute with a known - good HO2S(B1/S1) and check for proper operation.
If the problem is corrected, replace HO2S(B1/S1) and go to "Verification of Vehicle Repair" procedure.

VERIFICATION OF VEHICLE REPAIR EBD805B8

Refer to DTC P0030.

DTC P0032 HO2S HEATER CIRCUIT HIGH (BANK 1 / SENSOR 1)

COMPONENT LOCATION EFE79781

Refer to DTC P0030.

GENERAL DESCRIPTION E79B51DC

Refer to DTC P0030.

DTC DESCRIPTION E1669157

If the PCM detects short to battery in heater under detecting conditions, PCM sets P0032. MIL(Malfunction Indication Lamp) turns on when the malfunction lasts till consecutive 2 driving cycle.

DTC DETECTING CONDITION EE656AA3

Item	Detecting Condition	Possible cause
DTC Strategy	• Detects a short to battery	• Poor Connection • short to battery in control circuit • HO2S(B1/S1) • PCM
Enable Conditions	• No disabling Faults Present • Engine Running • 11V ≤ Battery Voltage ≤ 16V	
Threshold value	• short to battery	
Diagnosis Time	• Continuous (More than 5 seconds failure for every 10 seconds test)	
MIL On Condition	• 2 Driving Cycles	

SPECIFICATION EB8FE3AB

Heater	
Resistance (Ω)	3.0 ~ 4.0Ω [21℃(69.8℉)]

SCHEMATIC DIAGRAM E08966A6

Refer to DTC P0030.

SIGNAL WAVEFORM AND DATA E4237B7E

Refer to DTC P0030.

MONITOR DTC STATUS E420D820

Refer to DTC P0030.

TERMINAL AND CONNECTOR INSPECTION E80CA6DA

Refer to DTC P0030.

CONTROL CIRCUIT INSPECTION E2F69A02

1. IG "OFF" & disconnect HO2S(B1/S1) connector.
2. IG "ON" & ENG "OFF".
3. Measure voltage between terminal 4 of HO2S(B1/S1) harness connector and chassis ground.

Specification : Approx. 0 V

4. Is the measured voltage within specification ?

YES

▶ Go to "Component Inspection" procedure.

NO

▶ Repair short to battery in HO2S(B1/S1) Heater control circuit and go to "Verification of Vhicle Repair" procedure.

COMPONENT INSPECTION E2CB890D

1. Check HO2S(B1/S1) Heater resistance.
   1) IG "OFF" and disconnect HO2S(B1/S1) connector.
   2) Measure resistance between terminal 4 and 3 of HO2S(B1/S1)connector (Component Side)

SPECIFICATION :

Heater	
Resistance (Ω)	3.0 ~ 4.0Ω [21℃(69.8℉)]

C91-1

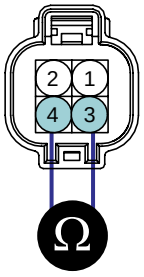

1. HO2S(B1/S1) Signal
2. Sensor Ground
3. **HO2S(B1/S1) Heater Power**
4. **HO2S(B1/S1) Heater Control**

SCMF16163L

   3) Is the measured resistance within specification ?

YES

▶ Substitute with a known - good PCM and check for proper operation.
If the problem is corrected, go to "Verification of Vehicle Repair" procedure.

NOTE

There is a memory reset function on scantool that can erase optional parts automatically detected and memorized by PCM.

Before or after testing PCM on the vehicle, use this function to reuse the PCM on the others.

NO

▶ Substitute with a known - good HO2S(B1/S1) and check for proper operation.
If the problem is corrected, go to "Verification of Vehicle Repair" procedure.

VERIFICATION OF VEHICLE REPAIR E1B49251

Refer to DTC P0030.

DTC P0036 HO2S HEATER CONTROL CIRCUIT (BANK 1 / SENSOR 2)

COMPONENT LOCATION EA389A6C

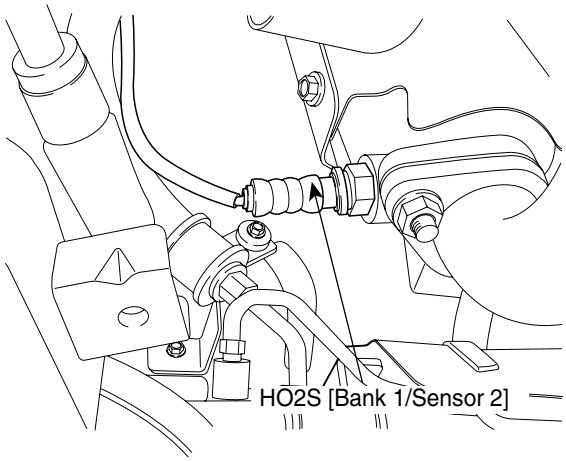

LGLG505A

GENERAL DESCRIPTION E910D173

The normal operating temperature of the HO2S(Heated Oxygen Sensor) ranges from 350 to 850°C(662 to 1562°F). The HO2S heater greatly decreases the amount of time required for fuel control to become active. The ECM provides a pulse width modulated control circuit to adjust current through the heater. When the HO2S is cold, the value of the resistance is low and the current in the circuit is high. On the contrary, if the temperature in the resistor of the sensor rises, the current drops gradually.

DTC DESCRIPTION EC6D53A3

Checking current from HO2S under detecting condition,if the heater current is below a certain threshold for more than predeterminate time, PCM sets P0036. MIL(Malfunction Indication Lamp) turns on when the malfunction lasts till consecutive 2 driving cycle.

DTC DETECTING CONDITION EA44BBFC

Item	Detecting Condition	Possible cause
DTC Strategy	• Monitor the current through the heater	• Poor Connection • HO2S(B1/S2) • PCM
Enable Conditions	• Engine Running > 60 sec. • Heater Duty Cycle > 18% • Max. Duty Cycle - Min. Duty Cycle < 5%.	
Threshold value	• Filtered Heater Current < threshold value	
Diagnosis Time	• Continuous (More than 2.5 second failure for every 5 second test)	
MIL On Condition	• 2 Driving Cycles	

SPECIFICATION E337F0B9

(REFERENCE ONLY)

Condition	Current(A)
Heater Current at 13.5V, 450℃(842°F) Exhaust	0.52 ± 0.1

SCHEMATIC DIAGRAM EEE0FE0F

[CIRCUIT DIAGRAM]

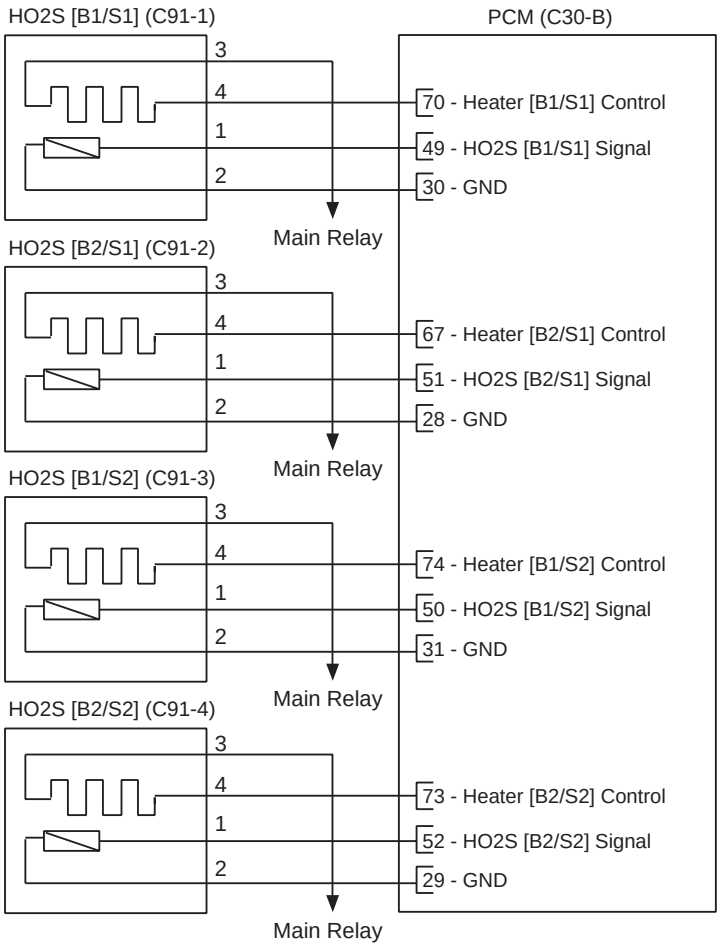

[CONNECTION INFORMATION]

HO2S [B1/S1]

Terminal	Connected to	Function
1	PCM C30-B (49)	HO2S [B1/S1] Signal
2	PCM C30-B (30)	Sensor ground
3	Main Relay	Battery Voltage (B+)
4	PCM C30-B (70)	Heater [B1/S1] Control

HO2S [B2/S1]

Terminal	Connected to	Function
1	PCM C30-B (51)	HO2S [B2/S1] Signal
2	PCM C30-B (28)	Sensor ground
3	Main Relay	Battery Voltage (B+)
4	PCM C30-B (67)	Heater [B2/S1] Control

HO2S [B1/S2]

Terminal	Connected to	Function
1	PCM C30-B (50)	HO2S [B1/S2] Signal
2	PCM C30-B (31)	Sensor ground
3	Main Relay	Battery Voltage (B+)
4	PCM C30-B (74)	Heater [B1/S2] Control

HO2S [B2/S2]

Terminal	Connected to	Function
1	PCM C30-B (52)	HO2S [B2/S2] Signal
2	PCM C30-B (29)	Sensor ground
3	Main Relay	Battery Voltage (B+)
4	PCM C30-B (73)	Heater [B2/S2] Control

[HARNESS CONNECTORS]



C91-1,2

HO2S [Bank 1/Sensor 1]
HO2S [Bank 2/Sensor 1]

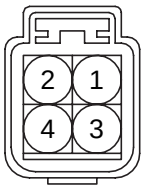

C91-3,4

HO2S [Bank 1/Sensor 2]
HO2S [Bank 2/Sensor 2]

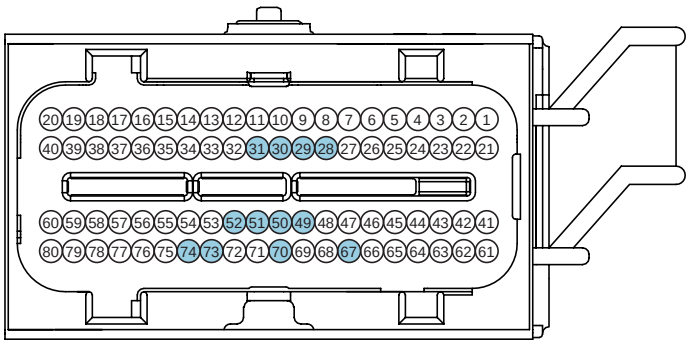

C30-B

PCM

SCMF16110L

SIGNAL WAVEFORM AND DATA EF4B0BDB

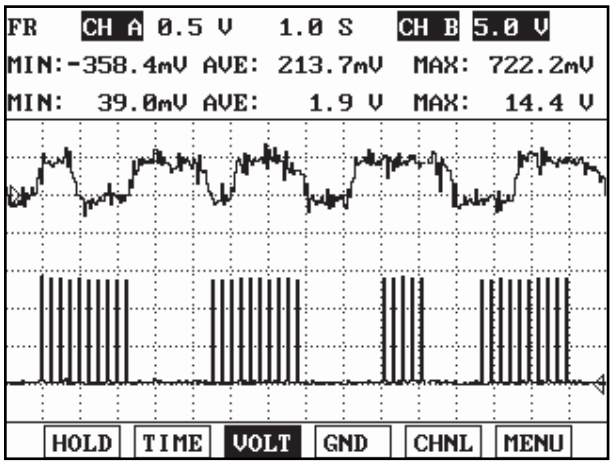

Fig. 1

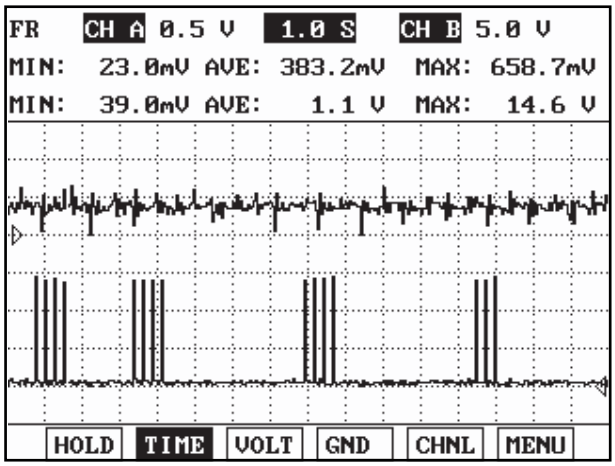

Fig. 2

Fig1) The signal waveforms of front HO2S(the upper) and heater(the lower) at idle
Fig2) The signal waveforms of rear HO2S(the upper) and heater(the lower) at idle

SCMF16158L

The HO2S requires a minimum temperature to provide a closed loop fuel control system. So the HO2S contains a heater element to reduce its warm-up time and ensure its performance during all driving conditions. The PCM controls this heater element by duty cycle. The main relay supplies voltage to the heater and the PCM provides a ground circuit for activating the heater.

MONITOR DTC STATUS E34A309F

1. Check DTC Status

   1) Connect scantool to Data Link Connector(DLC).

   2) IG "ON".

   3) Select "Diagnostic Trouble Codes(DTCs)" mode, and then Press F4(DTAL) to check DTC's information from the DTCs menu

   4) Read "DTC Status" parameter.

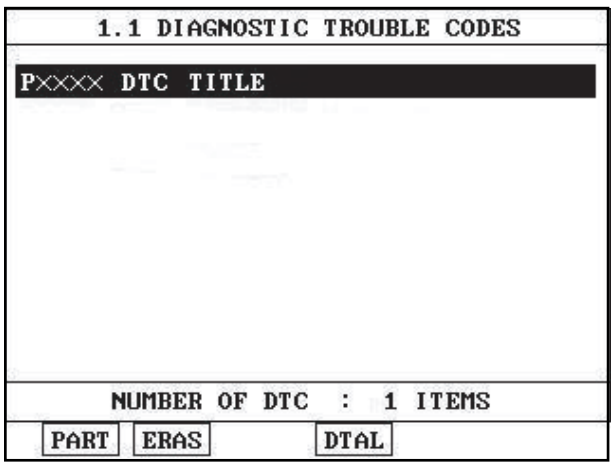

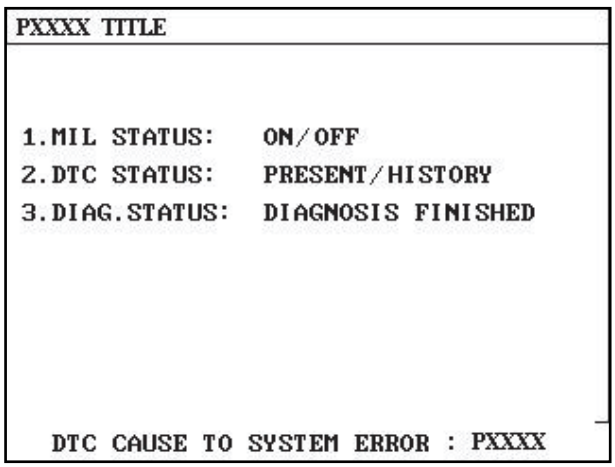

SCMF16159L

5) Is parameter displayed "Present fault"?

YES

▶ Go to "Terminal and connector inspection" procedure.

NO

▶ Fault is intermittent caused by poor contact in the sensor's and/or PCM's connector or was repaired and PCM memory was not cleared. Thoroughly check connectors for looseness, poor connection, ending, corrosion, contamination, deterioration, or damage. Repair or replace as necessary and go to "Verification of Vehicle Repair" procedure.

TERMINAL AND CONNECTOR INSPECTION E1293BD8

1. Many malfunctions in the electrical system are caused by poor harness and terminals. Faults can also be caused by interference from other electrical systems, and mechanical or chemical damage.
2. Thoroughly check connectors for looseness, poor connection, bending, corrosion, contamination, deterioration, or damage.
3. Has a problem been found?

YES

▶ Repair as necessary and go to "Verification of Vehicle Repair" procedure

NO

▶ Go to " Component Inspection " procedure.

COMPONENT INSPECTION EA730770

1. Check HO2S(B1/S2) Heater resistance

1) IG "OFF" and disconnect HO2S(B1/S2) connector

2) Measure resistance between terminal 3 and 4 of HO2S(B1/S2)(Component Side)

Specification : 3.0 ~ 4.0Ω [21℃(69.8˚F)]

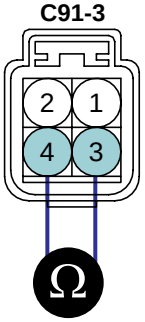

1. HO2S(B1/S2) Signal
2. Sensor Ground
3. **HO2S(B1/S2) Heater Power**
4. **HO2S(B1/S2) Heater Control**

SCMF16232L

3) Is the measured resistance within specification ?

YES

▶ Substitute with a known - good PCM and check for proper operation.
If the problem is corrected, go to "Verification of Vehicle Repair" procedure.

NOTE

There is a memory reset function on scantool that can erase optional parts automatically detected and memorized by PCM. Before or after testing PCM on the vehicle, use this function to reuse the PCM on the others

NO

▶ Substitute with a known - good HO2S(B1/S2) and check for proper operation.
If the problem is corrected, go to "Verification of Vehicle Repair" procedure.

VERIFICATION OF VEHICLE REPAIR E6E28F0E

After a repair, it is essential to verify that the fault has been corrected.

1. Monitor and record the Freeze Frame Data for the Diagnostic Trouble Code(DTC) which has been diagnosed.
2. Using a Scantool, Clear the DTCs
3. Operate the vehicle within conditions noted in the freeze frame data or enable conditions
4. Monitor that all rediness test have been verified as " Complete "
5. Are any DTCs present ?

YES

▶ Go to the applicable troubleshoooting procedure.

NO

▶ System is performing to specification at this time.

DTC P0037 HO2S HEATER CIRCUIT LOW (BANK 1 / SENSOR 2)

COMPONENT LOCATION ED71BF6C

Refer to DTC P0036.

GENERAL DESCRIPTION E90D395B

Refer to DTC P0036.

DTC DESCRIPTION EC23A286

If the PCM detects short to ground or open in heater under detecting conditions, PCM sets P0037. MIL(Malfunction Indication Lamp) turns on when the malfunction lasts till consecutive 2 driving cycle.

DTC DETECTING CONDITION E382D1D3

Item	Detecting Condition	Possible cause
DTC Strategy	• Detects a short to ground or open	• Poor Connection • Open in Power Circuit • Open or short to ground in control circuit • HO2S(B1/S2) • PCM
Enable Conditions	• No disabling Faults Present • Engine Running • 11V ≤ Battery Voltage ≤ 16V	
Threshold value	• short to ground or open circuit	
Diagnosis Time	• Continuous (More than 5 seconds failure for every 10 seconds test)	
MIL On Condition	• 2 Driving Cycles	

SPECIFICATION EE1EF805

Heater	
Resistance (Ω)	3.0 ~ 4.0Ω [21℃(69.8°F)]

SCHEMATIC DIAGRAM E78EA1CB

Refer to DTC P0036.

SIGNAL WAVEFORM AND DATA E3963534

Refer to DTC P0036.

MONITOR DTC STATUS E92EBECC

1. Refer to DTC P0036.

TERMINAL AND CONNECTOR INSPECTION E7779CB6

Refer to DTC P0036.

POWER CIRCUIT INSPECTION E4F406C9

1. IG "OFF" & Disconnect HO2S(B1/S2) connector.
2. IG "ON" & ENG "OFF".
3. Measure voltage between terminal 3 of HO2S(B1/S2) harness connector and chassis ground.

Specification : B+

4. Is the measured voltage within specification ?

YES

▶ Go to "Control Circuit Inspection" procedure.

NO

▶ Repair open or short to ground in HO2S(B1/S2) Heater power circuit then, go to "Verification of Vehicle Repair" procedure.

CONTROL CIRCUIT INSPECTION EF0AC0A7

1. Check short to ground in harness.
   1) IG "OFF" and disconnect HO2S(B1/S2) connector.
   2) Measure resistance between terminal 4 of HO2S(B1/S2) harness connector and chassis ground.

Specification : Infinite

   3) Is the measured resistance within specification ?

YES

▶ Go to "Check Open in harness" as follows.

NO

▶ Repair short to ground in HO2S (B1/S2) heater control circuit and go to "Verification of Vehicle Repair" procedure.

2. Check open in harness
   1) IG "OFF" and disconnect HO2S(B1/S2) and PCM connector.
   2) Measure resistance between terminal 4 of HO2S(B1/S2) harness connector and terminal C30-B (74) of PCM harness connector.

Specification : Approx. below 1Ω

   3) Is the measured resistance within specification ?

YES

▶ Go to "Component Inspection" procedure.

NO

▶ Repair open in HO2S(B1/S2) heater control circuit and go to "Verifiction of Vehicle Repair" procedure.

COMPONENT INSPECTION E3364B45

1. Check HO2S(B1/S2) Heater resistance

   1) IG "OFF" and disconnect HO2S(B1/S2) connector

   2) Measure resistance between terminal 3 and 4 of HO2S(B1/S2)(Component Side)

SPECIFICATION :

Heater	
Resistance (Ω)	3.0 ~ 4.0Ω [21℃(69.8°F)]

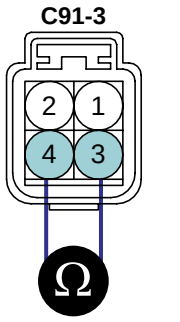

1. HO2S(B1/S2) Signal
2. Sensor Ground
3. **HO2S(B1/S2) Heater Power**
4. **HO2S(B1/S2) Heater Control**

SCMF16169L

   3) Is the measured resistance within specification ?

YES

▶ Substitute with a known - good PCM and check for proper operation.
If the problem is corrected, go to "Verification of Vehicle Repair" procedure.

NOTE

There is a memory reset function on scantool that can erase optional parts automatically detected and memorized by PCM.
Before or after testing PCM on the vehicle, use this function to reuse the PCM on the others.

NO

▶ Substitute with a known - good HO2S(B1/S2) and check for proper operation.
If the problem is corrected, go to "Verification of Vehicle Repair" procedure.

VERIFICATION OF VEHICLE REPAIR E112D008

Refer to DTC P0036.

DTC P0038 HO2S HEATER CIRCUIT HIGH (BANK 1 / SENSOR 2)

COMPONENT LOCATION EB6C74B6

Refer to DTC P0036.

GENERAL DESCRIPTION EB7DD26F

Refer to DTC P0036.

DTC DESCRIPTION ECA58DC4

If the PCM detects short to battery in heater under detecting conditions, PCM sets P0038. MIL(Malfunction Indication Lamp) turns on when the malfunction lasts till consecutive 2 driving cycle.

DTC DETECTING CONDITION EB9C76A0

Item	Detecting Condition	Possible cause
DTC Strategy	• Detects a short to battery	• Poor Connection • short to battery in control circuit • HO2S(B1/S2) • PCM
Enable Conditions	• No disabling Faults Present • Engine Running • 11V ≤ Battery Voltage ≤ 16V	
Threshold value	• short to battery	
Diagnosis Time	• Continuous (More than 5 seconds failure for every 10 seconds test)	
MIL On Condition	• 2 Driving Cycles	

SPECIFICATION EEFFC06F

Heater	
Resistance (Ω)	3.0 ~ 4.0Ω [21℃(69.8˚F)]

SCHEMATIC DIAGRAM EE3BACB2

Refer to DTC P0036.

SIGNAL WAVEFORM AND DATA EF09793A

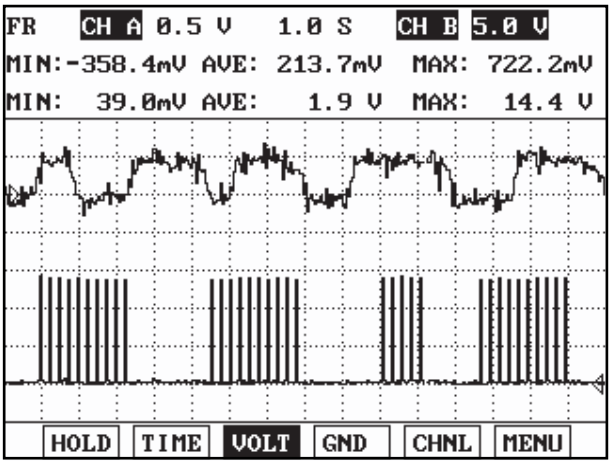

Fig. 1

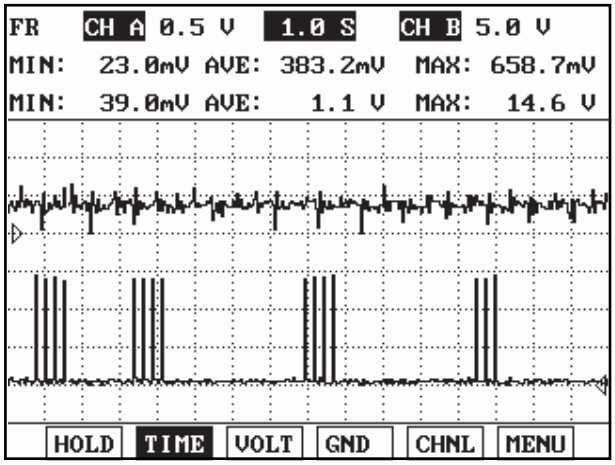

Fig. 2

Fig1) The signal waveforms of front HO2S(the upper) and heater(the lower) at idle
Fig2) The signal waveforms of rear HO2S(the upper) and heater(the lower) at idle

SCMF16158L

The HO2S requires a minimum temperature to provide a closed loop fuel control system. So the HO2S contains a heater element to reduce its warm-up time and ensure its performance during all driving conditions. The PCM controls this heater element by duty cycle. The main relay supplies voltage to the heater and the PCM provides a ground circuit for activating the heater.

MONITOR DTC STATUS E7B82B16

Refer to DTC P0036.

TERMINAL AND CONNECTOR INSPECTION E15C4596

Refer to DTC P0036.

CONTROL CIRCUIT INSPECTION E24CC29E

1. IG "OFF" & disconnect HO2S(B1/S2) connector.
2. IG "ON" & ENG "OFF".
3. Measure voltage between terminal 4 of HO2S(B1/S2) harness connector and chassis ground.

Specification : Approx. 0 V

4. Is the measured voltage within specification ?

YES

▶ Go to HO2S(B1/S2) "Component Inspection" procedure.

NO

▶ Repair short to battery in HO2S (B1/S2) heater control circuit and go to "Verification of Vehicle Repair" procedure.

COMPONENT INSPECTION E0BA325D

1. Check HO2S(B1/S2) Heater resistance

   1) IG "OFF" and disconnect HO2S(B1/S2) connector

   2) Measure resistance between terminal 3 and 4 of HO2S(B1/S2)(Component Side)

SPECIFICATION :

Heater	
Resistance (Ω)	3.0 ~ 4.0Ω [21℃(69.8℉)]

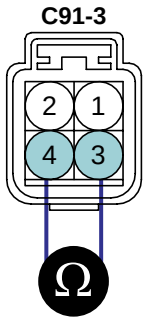

1. HO2S(B1/S2) Signal
2. Sensor Ground
3. **HO2S(B1/S2) Heater Power**
4. **HO2S(B1/S2) Heater Control**

SCMF16169L

   3) Is the measured resistance within specification ?

YES

▶ Substitute with a known - good PCM and check for proper operation.
If the problem is corrected, go to "Verification of Vehicle Repair" procedure.

NOTE

There is a memory reset function on scantool that can erase optional parts automatically detected and memorized by PCM.
Before or after testing PCM on the vehicle, use this function to reuse the PCM on the others.

NO

▶ Substitute with a known - good HO2S(B1/S2) and check for proper operation.
If the problem is corrected, go to "Verification of Vehicle Repair" procedure.

VERIFICATION OF VEHICLE REPAIR E8682525

Refer to DTC P0036.

DTC P0050 HO2S HEATER CONTROL CIRCUIT (BANK 2 / SENSOR 1)

COMPONENT LOCATION EFDFCD54

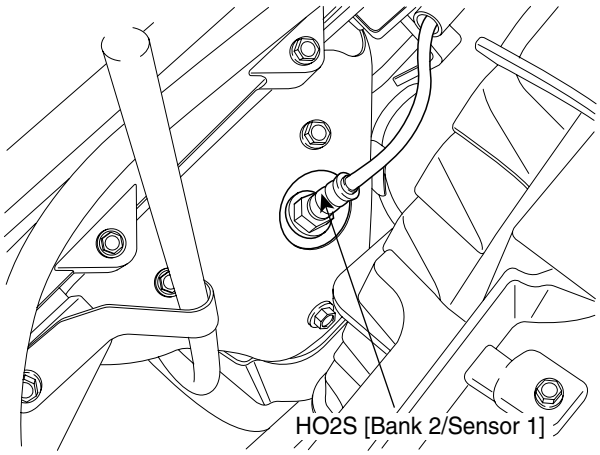

LGLG506A

GENERAL DESCRIPTION E396D5EE

The normal operating temperature of the HO2S(Heated Oxygen Sensor) ranges from 350 to 850°C(662 to 1562°F). The HO2S heater greatly decreases the amount of time required for fuel control to become active. The ECM provides a pulse width modulated control circuit to adjust current through the heater. When the HO2S is cold, the value of the resistance is low and the current in the circuit is high. On the contrary, if the temperature in the resistor of the sensor rises, the current drops gradually.

DTC DESCRIPTION EC4910CB

Checking current from HO2S under detecting condition,if the heater current is below a certain threshold for more than predeterminate time, PCM sets P0050. MIL(Malfunction Indication Lamp) turns on when the malfunction lasts till consecutive 2 driving cycle.

DTC DETECTING CONDITION E470B0D8

Item	Detecting Condition	Possible cause
DTC Strategy	• Monitor the current through the heater	• Poor Connection • HO2S(B2/S1) • PCM
Enable Conditions	• Engine Running > 60 sec. • Heater Duty Cycle > 40% • Max. Duty Cycle - Min. Duty Cycle < 5%	
Threshold value	• Filtered O2 Heater Current < threshold value	
Diagnosis Time	• Continuous (More than 2.5 second failure for every 5 second test)	
MIL On Condition	• 2 Driving Cycles	

SPECIFICATION E323CB65

(REFERENCE ONLY)

Condition	Current(A)
Heater Current at 13.5V, 450℃(842°F) Exhaust	0.25 ± 0.1

SCHEMATIC DIAGRAM E698EE52

[CIRCUIT DIAGRAM]

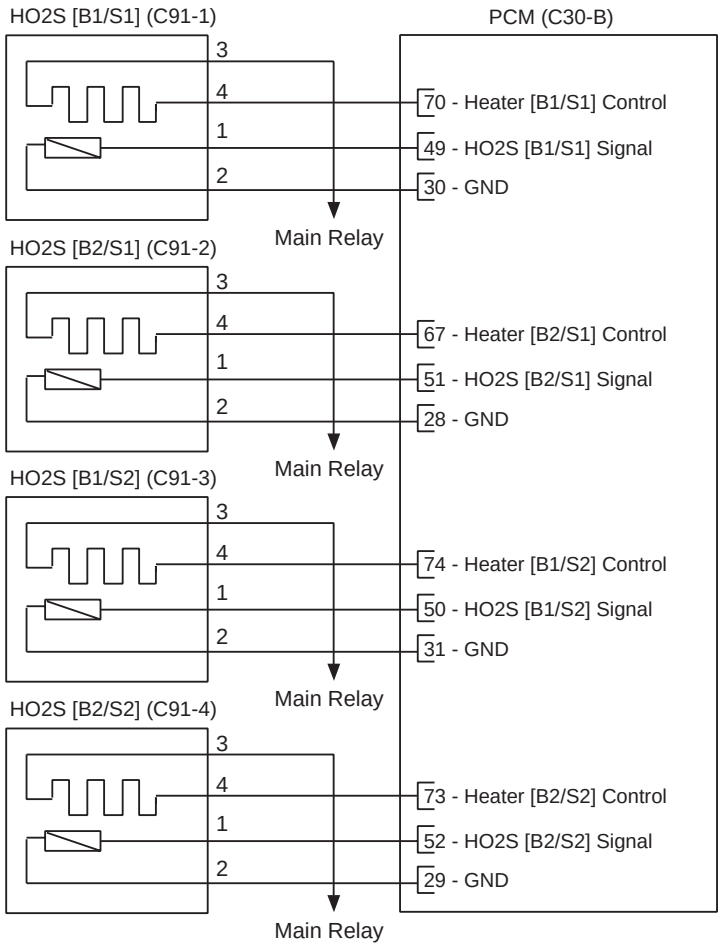

[CONNECTION INFORMATION]

HO2S [B1/S1]

Terminal	Connected to	Function
1	PCM C30-B (49)	HO2S [B1/S1] Signal
2	PCM C30-B (30)	Sensor ground
3	Main Relay	Battery Voltage (B+)
4	PCM C30-B (70)	Heater [B1/S1] Control

HO2S [B2/S1]

Terminal	Connected to	Function
1	PCM C30-B (51)	HO2S [B2/S1] Signal
2	PCM C30-B (28)	Sensor ground
3	Main Relay	Battery Voltage (B+)
4	PCM C30-B (67)	Heater [B2/S1] Control

HO2S [B1/S2]

Terminal	Connected to	Function
1	PCM C30-B (50)	HO2S [B1/S2] Signal
2	PCM C30-B (31)	Sensor ground
3	Main Relay	Battery Voltage (B+)
4	PCM C30-B (74)	Heater [B1/S2] Control

HO2S [B2/S2]

Terminal	Connected to	Function
1	PCM C30-B (52)	HO2S [B2/S2] Signal
2	PCM C30-B (29)	Sensor ground
3	Main Relay	Battery Voltage (B+)
4	PCM C30-B (73)	Heater [B2/S2] Control

[HARNESS CONNECTORS]



C91-1,2

HO2S [Bank 1/Sensor 1]
HO2S [Bank 2/Sensor 1]

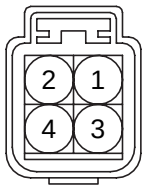

C91-3,4

HO2S [Bank 1/Sensor 2]
HO2S [Bank 2/Sensor 2]

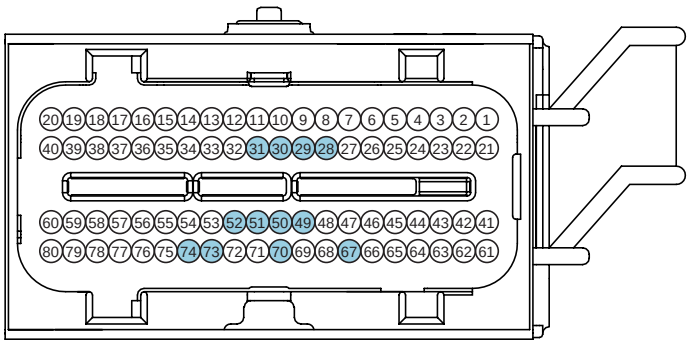

C30-B

PCM

SCMF16110L

SIGNAL WAVEFORM AND DATA E8CA1A5D

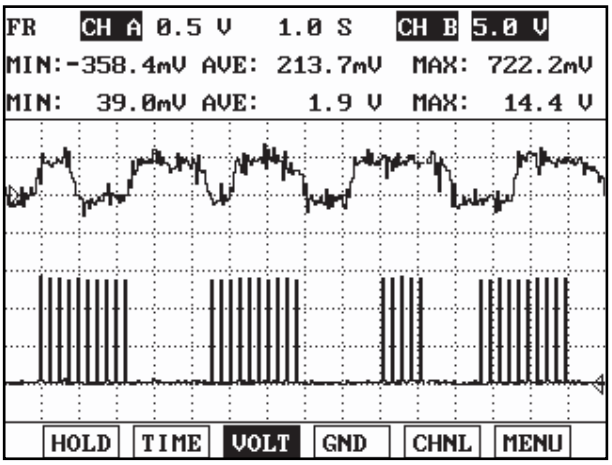

Fig. 1

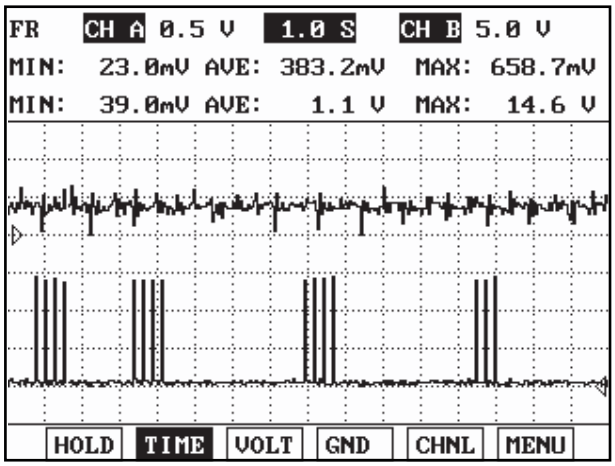

Fig. 2

Fig1) The signal waveforms of front HO2S(the upper) and heater(the lower) at idle
Fig2) The signal waveforms of rear HO2S(the upper) and heater(the lower) at idle

SCMF16158L

The HO2S requires a minimum temperature to provide a closed loop fuel control system. So the HO2S contains a heater element to reduce its warm-up time and ensure its performance during all driving conditions. The PCM controls this heater element by duty cycle. The main relay supplies voltage to the heater and the PCM provides a ground circuit for activating the heater.

MONITOR DTC STATUS EA87FFAE

1. Check DTC Status

   1) Connect scantool to Data Link Connector(DLC).

   2) IG "ON".

   3) Select "Diagnostic Trouble Codes(DTCs)" mode, and then Press F4(DTAL) to check DTC's information from the DTCs menu

   4) Read "DTC Status" parameter.

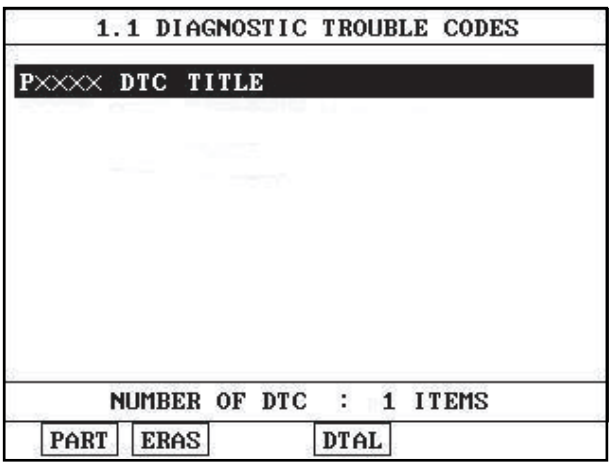

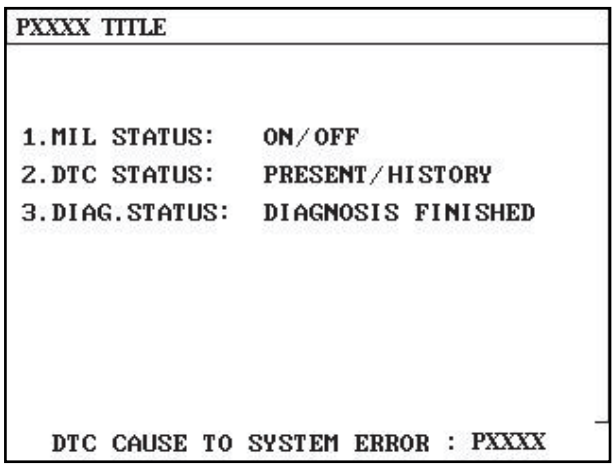

SCMF16159L

5) Is parameter displayed "Present fault"?

YES

▶ Go to "Terminal and connector inspection" procedure.

NO

▶ Fault is intermittent caused by poor contact in the sensor's and/or PCM's connector or was repaired and PCM memory was not cleared. Thoroughly check connectors for looseness, poor connection, ending, corrosion, contamination, deterioration, or damage. Repair or replace as necessary and go to "Verification of Vehicle Repair" procedure.

TERMINAL AND CONNECTOR INSPECTION E039415D

1. Many malfunctions in the electrical system are caused by poor harness and terminals. Faults can also be caused by interference from other electrical systems, and mechanical or chemical damage.
2. Thoroughly check connectors for looseness, poor connection, bending, corrosion, contamination, deterioration, or damage.
3. Has a problem been found?

YES

▶ Repair as necessary and go to "Verification of Vehicle Repair" procedure

NO

▶ Go to "Component Inspection" procedure.

COMPONENT INSPECTION ECD12C61

1. Check HO2S(B2/S1) Heater resistance

1) IG "OFF" and disconnect HO2S(B2/S1) connector

2) Measure resistance between terminal 1 and 2 of HO2S(B2/S1)(Component Side)

Specification : 3.0 ~ 4.0Ω [21℃(69.8°F)]

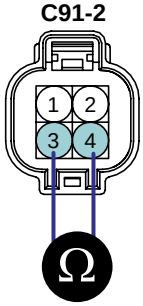

1. HO2S(B2/S1) Signal
2. Sensor Ground
3. **HO2S(B2/S1) Heater Power**
4. **HO2S(B2/S1) Heater Control**

SCMF16233L

3) Is the measured resistance within specification ?

YES

▶ Substitute with a known - good PCM and check for proper operation.
If the problem is corrected, go to "Verification of Vehicle Repair" procedure.

NOTE

There is a memory reset function on scantool that can erase optional parts automatically detected and memorized by PCM. Before or after testing PCM on the vehicle, use this function to reuse the PCM on the others

NO

▶ Substitute with a known - good HO2S(B2/S1) and check for proper operation.
If the problem is corrected, go to "Verification of Vehicle Repair" procedure.

VERIFICATION OF VEHICLE REPAIR E726D4B8

After a repair, it is essential to verify that the fault has been corrected.

1. Monitor and record the Freeze Frame Data for the Diagnostic Trouble Code(DTC) which has been diagnosed.
2. Using a Scantool, Clear the DTCs
3. Operate the vehicle within conditions noted in the freeze frame data or enable conditions
4. Monitor that all rediness test have been verified as " Complete "
5. Are any DTCs present ?

YES

▶ Go to the applicable troubleshoooting procedure.

NO

▶ System is performing to specification at this time.

DTC P0051 HO2S HEATER CIRCUIT LOW (BANK 2 / SENSOR 1)

COMPONENT LOCATION E4992107

Refer to DTC P0050.

GENERAL DESCRIPTION E535D4BE

Refer to DTC P0050.

DTC DESCRIPTION E6923814

If the PCM detects short to ground or open in heater under detecting conditions, PCM sets P0051. MIL(Malfunction Indication Lamp) turns on when the malfunction lasts till consecutive 2 driving cycle.

DTC DETECTING CONDITION E394EBCE

Item	Detecting Condition	Possible cause
DTC Strategy	• Detects a short to ground or open	• Poor Connection • Open in Power Circuit • Open or short to ground in control circuit • HO2S(B2/S1) • PCM
Enable Conditions	• No disabling Faults • Engine Running • 11V ≤ Battery Voltage ≤ 16V	
Threshold value	• short to ground or open circuit	
Diagnosis Time	• Continuous (More than 5 seconds failure for every 10 seconds test)	
MIL On Condition	• 2 Driving Cycles	

SPECIFICATION E6E87FC9

Heater	
Resistance (Ω)	3.0 ~ 4.0Ω [21℃(69.8°F)]

SCHEMATIC DIAGRAM E501720E

Refer to DTC P0050.

SIGNAL WAVEFORM AND DATA ECAD7DFA

Refer to DTC P0050.

MONITOR DTC STATUS EFF5CF05

1. Refer to DTC P0050.

TERMINAL AND CONNECTOR INSPECTION EF2EFE36

Refer to DTC P0050.

POWER CIRCUIT INSPECTION E9385DF1

1. IG "OFF" & Disconnect HO2S(B2/S1) connector.
2. IG "ON" & ENG "OFF".
3. Measure voltage between terminal 3 of HO2S(B2/S1) harness connector and chassis ground.

Specification : B+

4. Is the measured voltage within specification ?

YES

▶ Go to "Control Circuit Inspection" procedure.

NO

▶ Repair open or short to ground in HO2S(B2/S1) Heater power circuit then, go to "Verification of Vehicle Repair" procedure.

CONTROL CIRCUIT INSPECTION EBFE5349

1. Check short to ground in harness.
   1) IG "OFF" and disconnect HO2S(B2/S1) connector.
   2) Measure resistance between terminal 4 of HO2S(B2/S1) harness connector and chassis ground.

Specification : Infinite

   3) Is the measured resistance within specification ?

YES

▶ Go to "Check Open in harness" as follows.

NO

▶ Repair short to ground in HO2S (B2/S1) heater control circuit and go to "Verification of Vehicle Repair" procedure.

2. Check open in harness
   1) IG "OFF" and disconnect HO2S(B2/S1) and PCM connector.
   2) Measure resistance between terminal 4 of HO2S(B2/S1) harness connector and terminal C30-B (67) of PCM harness connector.

Specification : Approx. below 1Ω

   3) Is the measured resistance within specification ?

YES

▶ Go to "Component Inspection" procedure.

NO

▶ Repair open in HO2S(B2/S1) heater control circuit and go to "Verifiction of Vehicle Repair" procedure.

COMPONENT INSPECTION E3ED50EA

1. Check HO2S(B2/S1) Heater resistance

   1) IG "OFF" and disconnect HO2S(B2/S1) connector

   2) Measure resistance between terminal 1 and 2 of HO2S(B2/S1)(Component Side)

SPECIFICATION :

Heater	
Resistance (Ω)	3.0 ~ 4.0Ω [21℃(69.8°F)]

C91-2

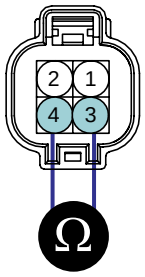

1. HO2S(B2/S1) Signal
2. Sensor Ground
3. **HO2S(B2/S1) Heater Power**
4. **HO2S(B2/S1) Heater Control**

SCMF16174L

   3) Is the measured resistance within specification ?

YES

▶ Substitute with a known - good PCM and check for proper operation.
If the problem is corrected, go to "Verification of Vehicle Repair" procedure.

NOTE

There is a memory reset function on scantool that can erase optional parts automatically detected and memorized by PCM.
Before or after testing PCM on the vehicle, use this function to reuse the PCM on the others.

NO

▶ Substitute with a known - good HO2S(B2/S1) and check for proper operation.
If the problem is corrected, go to "Verification of Vehicle Repair" procedure.

VERIFICATION OF VEHICLE REPAIR E0F55148

Refer to DTC P0050.

DTC P0052 HO2S HEATER CIRCUIT HIGH (BANK 2 / SENSOR 1)

COMPONENT LOCATION E91F4CFC

Refer to DTC P0050.

GENERAL DESCRIPTION E2AC4FB7

Refer to DTC P0050.

DTC DESCRIPTION EE86C43C

If the PCM detects short to battery in heater under detecting conditions, PCM sets P0052. MIL(Malfunction Indication Lamp) turns on when the malfunction lasts till consecutive 2 driving cycle.

DTC DETECTING CONDITION EF44CFAB

Item	Detecting Condition	Possible cause
DTC Strategy	• Detects a short to battery	• Poor Connection • Short to battery in control circuit • HO2S(B2/S1) • PCM
Enable Conditions	• No disabling Faults • Engine Running • 11V ≤ Battery Voltage ≤ 16V	
Threshold value	• Short to battery	
Diagnosis Time	• Continuous (More than 5 seconds failure for every 10 seconds test)	
MIL On Condition	• 2 Driving Cycles	

SPECIFICATION E9CF71E6

Heater	
Resistance (Ω)	3.0 ~ 4.0Ω [21℃(69.8℉)]

SCHEMATIC DIAGRAM E7A3435D

Refer to DTC P0050.

SIGNAL WAVEFORM AND DATA E6595DDC

Refer to DTC P0050.

MONITOR DTC STATUS E73C5F88

Refer to DTC P0050.

TERMINAL AND CONNECTOR INSPECTION E4364E96

Refer to DTC P0050.

CONTROL CIRCUIT INSPECTION EA6A8A29

1. IG "OFF" & disconnect HO2S(B2/S1) connector.
2. IG "ON" & ENG "OFF".
3. Measure voltage between terminal 4 of HO2S(B2/S1) harness connector and chassis ground.

Specification : Approx. 0 V

4. Is the measured voltage within specification ?

YES

▶ Go to "Component Inspection" procedure.

NO

▶ Repair short to battery in HO2S(B2/S1) Heater control circuit and go to "Verification of Vhicle Repair" procedure.

COMPONENT INSPECTION E7B3B30E

1. Check HO2S(B2/S1) Heater resistance
   1) IG "OFF" and disconnect HO2S(B2/S1) connector
   2) Measure resistance between terminal 3 and 4 of HO2S(B2/S1)(Component Side)

SPECIFICATION :

Heater	
Resistance (Ω)	3.0 ~ 4.0Ω [21℃(69.8℉)]

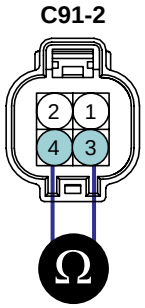

1. HO2S(B2/S1) Signal
2. Sensor Ground
3. **HO2S(B2/S1) Heater Power**
4. **HO2S(B2/S1) Heater Control**

SCMF16174L

   3) Is the measured resistance within specification ?

YES

▶ Substitute with a known - good PCM and check for proper operation.
If the problem is corrected, go to "Verification of Vehicle Repair" procedure.

NOTE

There is a memory reset function on scantool that can erase optional parts automatically detected and memorized by PCM.

Before or after testing PCM on the vehicle, use this function to reuse the PCM on the others.

NO

▶ Substitute with a known - good HO2S(B2/S1) and check for proper operation.
If the problem is corrected, go to "Verification of Vehicle Repair" procedure.

VERIFICATION OF VEHICLE REPAIR EBC231F8

Refer to DTC P0050.

DTC P0056 HO2S HEATER CONTROL CIRCUIT (BANK 2 / SENSOR 2)

COMPONENT LOCATION E817128B

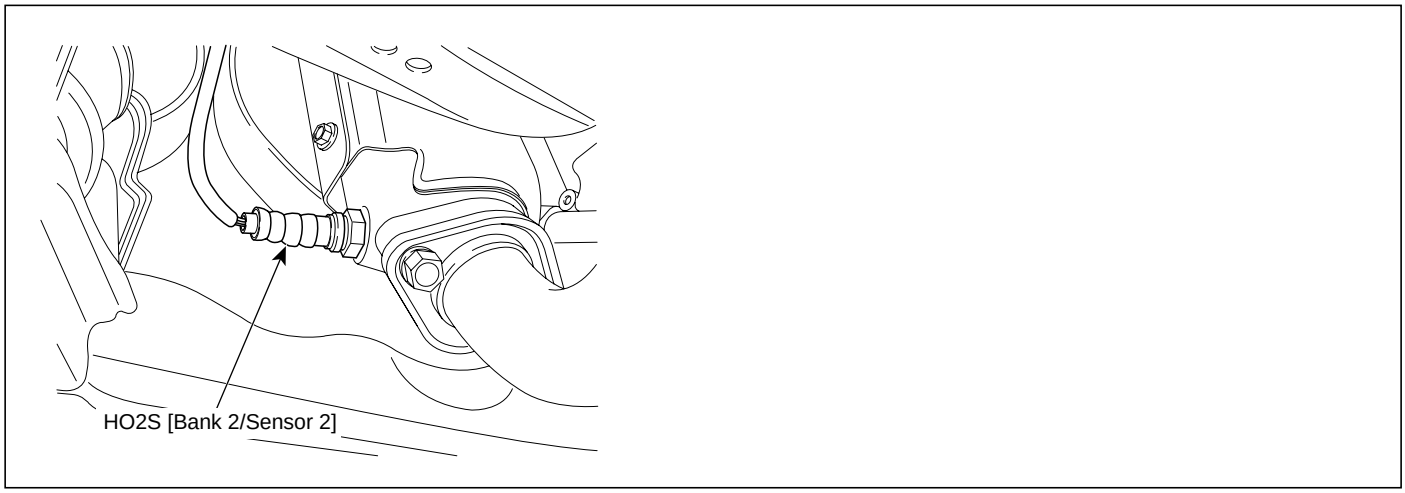

SCMF16176L

GENERAL DESCRIPTION EE20DCF2

The normal operating temperature of the HO2S(Heated Oxygen Sensor) ranges from 350 to 850°C(662 to 1562°F). The HO2S heater greatly decreases the amount of time required for fuel control to become active. The ECM provides a pulse width modulated control circuit to adjust current through the heater. When the HO2S is cold, the value of the resistance is low and the current in the circuit is high. On the contrary, if the temperature in the resistor of the sensor rises, the current drops gradually.

DTC DESCRIPTION E95D0768

Checking current from HO2S under detecting condition,if the heater current is below a certain threshold for more than predeterminate time, PCM sets P0056. MIL(Malfunction Indication Lamp) turns on when the malfunction lasts till consecutive 2 driving cycle.

DTC DETECTING CONDITION E8E45268

Item	Detecting Condition	Possible cause
DTC Strategy	• Monitor the current through the heater	• Poor connection • HO2S(B2/S2) • PCM
Enable Conditions	• Engine Running > 60 sec. • Heater Duty Cycle > 18% • Max. Duty Cycle - Min. Duty Cycle < 5%	
Threshold value	• Filtered Heater Current < threshold value	
Diagnosis Time	• Continuous (More than 2.5 second failure for every 5 second test)	
MIL On Condition	• 2 Driving Cycles	

SPECIFICATION E28FDF13

(REFERENCE ONLY)

Condition	Current(A)
Heater Current at 13.5V, 450℃(842°F) Exhaust	0.52 ± 0.1

SCHEMATIC DIAGRAM E14CB6D5

[CIRCUIT DIAGRAM]

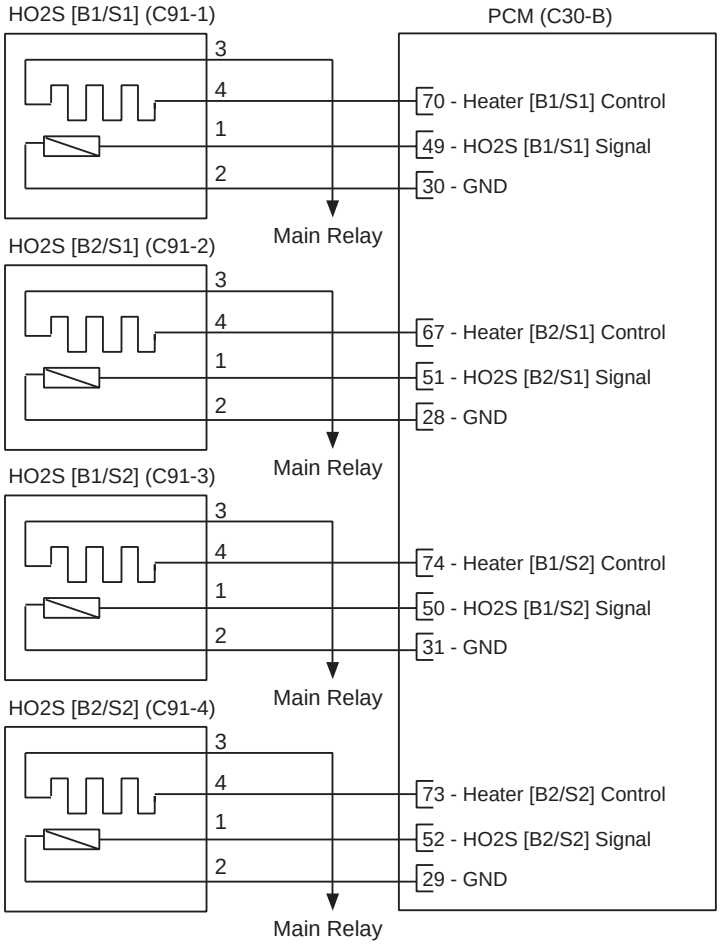

[CONNECTION INFORMATION]

HO2S [B1/S1]

Terminal	Connected to	Function
1	PCM C30-B (49)	HO2S [B1/S1] Signal
2	PCM C30-B (30)	Sensor ground
3	Main Relay	Battery Voltage (B+)
4	PCM C30-B (70)	Heater [B1/S1] Control

HO2S [B2/S1]

Terminal	Connected to	Function
1	PCM C30-B (51)	HO2S [B2/S1] Signal
2	PCM C30-B (28)	Sensor ground
3	Main Relay	Battery Voltage (B+)
4	PCM C30-B (67)	Heater [B2/S1] Control

HO2S [B1/S2]

Terminal	Connected to	Function
1	PCM C30-B (50)	HO2S [B1/S2] Signal
2	PCM C30-B (31)	Sensor ground
3	Main Relay	Battery Voltage (B+)
4	PCM C30-B (74)	Heater [B1/S2] Control

HO2S [B2/S2]

Terminal	Connected to	Function
1	PCM C30-B (52)	HO2S [B2/S2] Signal
2	PCM C30-B (29)	Sensor ground
3	Main Relay	Battery Voltage (B+)
4	PCM C30-B (73)	Heater [B2/S2] Control

[HARNESS CONNECTORS]



C91-1,2

HO2S [Bank 1/Sensor 1]
HO2S [Bank 2/Sensor 1]

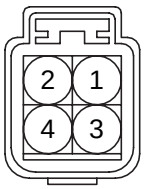

C91-3,4

HO2S [Bank 1/Sensor 2]
HO2S [Bank 2/Sensor 2]

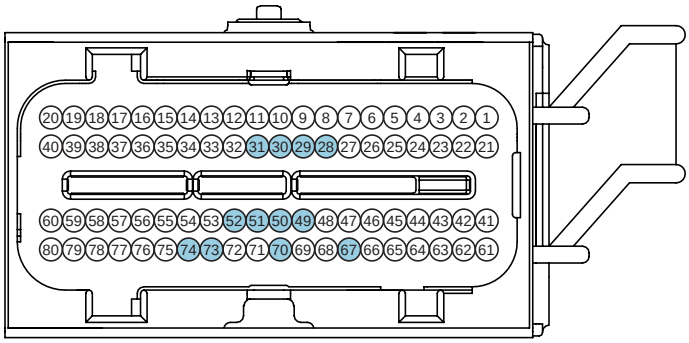

C30-B

PCM

SCMF16110L

SIGNAL WAVEFORM AND DATA E0BCDEF2

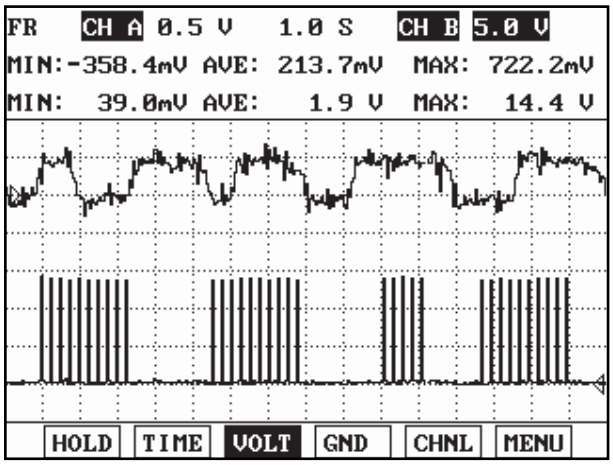

Fig. 1

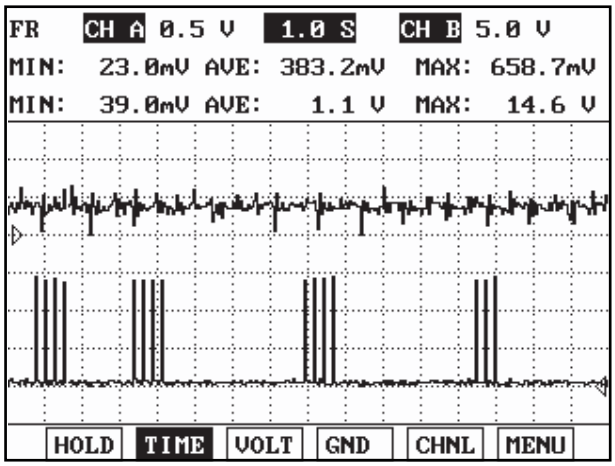

Fig. 2

Fig1) The signal waveforms of front HO2S(the upper) and heater(the lower) at idle
Fig2) The signal waveforms of rear HO2S(the upper) and heater(the lower) at idle

SCMF16158L

The HO2S requires a minimum temperature to provide a closed loop fuel control system. So the HO2S contains a heater element to reduce its warm-up time and ensure its performance during all driving conditions. The PCM controls this heater element by duty cycle. The main relay supplies voltage to the heater and the PCM provides a ground circuit for activating the heater.

MONITOR DTC STATUS E22844FA

1. Check DTC Status

   1) Connect scantool to Data Link Connector(DLC).

   2) IG "ON".

   3) Select "Diagnostic Trouble Codes(DTCs)" mode, and then Press F4(DTAL) to check DTC's information from the DTCs menu

   4) Read "DTC Status" parameter.

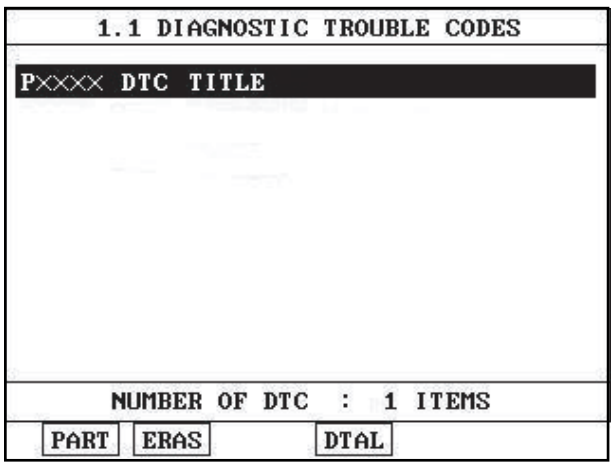

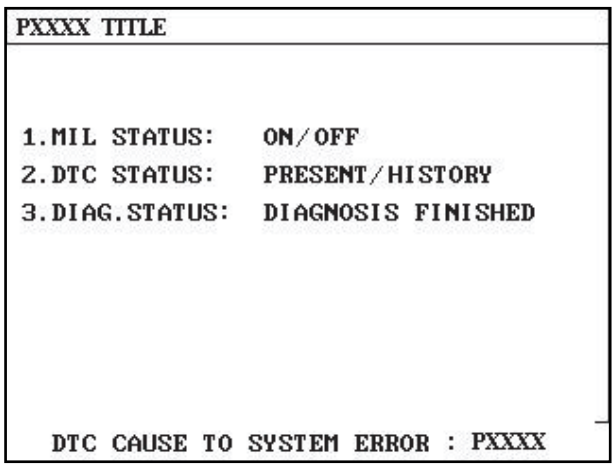

SCMF16159L

5) Is parameter displayed "Present fault"?

YES

▶ Go to "Terminal and connector inspection" procedure.

NO

▶ Fault is intermittent caused by poor contact in the sensor's and/or PCM's connector or was repaired and PCM memory was not cleared. Thoroughly check connectors for looseness, poor connection, ending, corrosion, contamination, deterioration, or damage. Repair or replace as necessary and go to "Verification of Vehicle Repair" procedure.

TERMINAL AND CONNECTOR INSPECTION ED0B2600

1. Many malfunctions in the electrical system are caused by poor harness and terminals. Faults can also be caused by interference from other electrical systems, and mechanical or chemical damage.
2. Thoroughly check connectors for looseness, poor connection, bending, corrosion, contamination, deterioration, or damage.
3. Has a problem been found?

YES

▶ Repair as necessary and go to "Verification of Vehicle Repair" procedure

NO

▶ Go to " Component Inspection " procedure.

COMPONENT INSPECTION E806FF18

1. Check HO2S(B2/S2) Heater resistance

   1) IG "OFF" and disconnect HO2S(B2/S2) connector

   2) Measure resistance between terminal 3 and 4 of HO2S(B2/S2)(Component Side)

Specification : 3.0 ~ 4.0Ω [21℃(69.8˚F)]

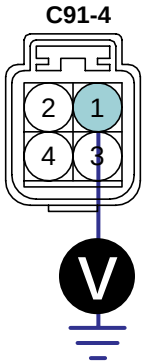

1. HO2S(B2/S2) Signal
2. Sensor Ground
3. HO2S(B2/S2) Heater Power
4. HO2S(B2/S2) Heater Control

SCMF16234L

2. Is the measured resistance within specification ?

YES

▶ Substitute with a known - good PCM and check for proper operation.
If the problem is corrected, go to "Verification of Vehicle Repair" procedure.

NOTE

There is a memory reset function on scantool that can erase optional parts automatically detected and memorized by PCM. Before or after testing PCM on the vehicle, use this function to reuse the PCM on the others

NO

▶ Substitute with a known - good HO2S(B2/S2) and check for proper operation.
If the problem is corrected, go to "Verification of Vehicle Repair" procedure.

VERIFICATION OF VEHICLE REPAIR E63568BB

After a repair, it is essential to verify that the fault has been corrected.

1. Monitor and record the Freeze Frame Data for the Diagnostic Trouble Code(DTC) which has been diagnosed.
2. Using a Scantool, Clear the DTCs
3. Operate the vehicle within conditions noted in the freeze frame data or enable conditions
4. Monitor that all rediness test have been verified as " Complete "
5. Are any DTCs present ?

YES

▶ Go to the applicable troubleshoooting procedure.

NO

▶ System is performing to specification at this time.

DTC P0057 HO2S HEATER CIRCUIT LOW (BANK 2 / SENSOR 2)

COMPONENT LOCATION ED7330BE

Refer to DTC P0056.

GENERAL DESCRIPTION EFE22A4A

Refer to DTC P0056.

DTC DESCRIPTION E9551803

If the PCM detects short to ground or open in heater under detecting conditions, PCM sets P0057. MIL(Malfunction Indication Lamp) turns on when the malfunction lasts till consecutive 2 driving cycle.

DTC DETECTING CONDITION EE2A5032

Item	Detecting Condition	Possible cause
DTC Strategy	• Detects a short to ground or open	• Poor Connection • Open in Power Circuit • Open or short to ground in control circuit • HO2S(B2/S2) • PCM
Enable Conditions	• No disabling Faults • Engine Running • 11V ≤ Battery Voltage ≤ 16V	
Threshold value	• short to ground or open circuit	
Diagnosis Time	• Continuous (More than 5 seconds failure for every 10 seconds test)	
MIL On Condition	• 2 Driving Cycles	

SPECIFICATION ED43F551

Heater	
Resistance (Ω)	3.0 ~ 4.0Ω [21℃(69.8°F)]

SCHEMATIC DIAGRAM E7BE250F

Refer to DTC P0056.

SIGNAL WAVEFORM AND DATA E27F14FA

Refer to DTC P0056.

MONITOR DTC STATUS E63177D2

Refer to DTC P0056.

TERMINAL AND CONNECTOR INSPECTION ED10E4DC

Refer to DTC P0056.

POWER CIRCUIT INSPECTION EC78498B

1. IG "OFF" & Disconnect HO2S(B2/S2) connector.
2. IG "ON" & ENG "OFF".
3. Measure voltage between terminal 3 of HO2S(B2/S2) harness connector and chassis ground.

Specification : B+

4. Is the measured voltage within specification ?

YES

▶ Go to "Control Circuit Inspection" procedure.

NO

▶ Repair open or short to ground in HO2S(B2/S2) Heater power circuit then, go to "Verification of Vehicle Repair" procedure.

CONTROL CIRCUIT INSPECTION EA808408

1. Check short to ground in harness.
   1) IG "OFF" and disconnect HO2S(B2/S2) connector.
   2) Measure resistance between terminal 4 of HO2S(B2/S2) harness connector and chassis ground.

Specification : Infinite

   3) Is the measured resistance within specification ?

YES

▶ Go to "Check Open in harness" as follows.

NO

▶ Repair short to ground in HO2S (B2/S2) heater control circuit and go to "Verification of Vehicle Repair" procedure.

2. Check open in harness
   1) IG "OFF" and disconnect HO2S(B2/S2) and PCM connector.
   2) Measure resistance between terminal 4 of HO2S(B2/S2) harness connector and terminal C30-B (73) of PCM harness connector.

Specification : Approx. below 1Ω

   3) Is the measured resistance within specification ?

YES

▶ Go to "Component Inspection" procedure.

NO

▶ Repair open in HO2S(B2/S2) heater control circuit and go to "Verifiction of Vehicle Repair" procedure.

COMPONENT INSPECTION E31E12EC

1. Check HO2S(B2/S2) Heater resistance

   1) IG "OFF" and disconnect HO2S(B2/S2) connector

   2) Measure resistance between terminal 3 and 4 of HO2S(B2/S2)(Component Side)

SPECIFICATION :

Heater	
Resistance (Ω)	3.0 ~ 4.0Ω [21℃(69.8°F)]

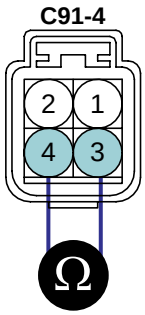

1. HO2S(B2/S2) Signal
2. Sensor Ground
3. **HO2S(B2/S2) Heater Power**
4. **HO2S(B2/S2) Heater Control**

SCMF16180L

   3) Is the measured resistance within specification ?

YES

▶ Substitute with a known - good PCM and check for proper operation.
If the problem is corrected, go to "Verification of Vehicle Repair" procedure.

NOTE

There is a memory reset function on scantool that can erase optional parts automatically detected and memorized by PCM.
Before or after testing PCM on the vehicle, use this function to reuse the PCM on the others.

NO

▶ Substitute with a known - good HO2S(B2/S2) and check for proper operation.
If the problem is corrected, go to "Verification of Vehicle Repair" procedure.

VERIFICATION OF VEHICLE REPAIR ED007C94

Refer to DTC P0056.

DTC P0058 HO2S HEATER CIRCUIT HIGH (BANK 2 / SENSOR 2)

COMPONENT LOCATION E8EECFBE

Refer to DTC P0056.

GENERAL DESCRIPTION EBFDC1AC

Refer to DTC P0056.

DTC DESCRIPTION E1B31BA2

If the PCM detects short to battery in heater under detecting conditions, PCM sets P0058. MIL(Malfunction Indication Lamp) turns on when the malfunction lasts till consecutive 2 driving cycle.

DTC DETECTING CONDITION E95AA488

Item	Detecting Condition	Possible cause
DTC Strategy	• Detects a short to battery	• Poor Connection • Short to battery in control circuit • HO2S(B2/S2) • PCM
Enable Conditions	• No disabling Faults • Engine Running • 11V ≤ Battery Voltage ≤ 16V	
Threshold value	• Short to battery	
Diagnosis Time	• Continuous (More than 5 seconds failure for every 10 seconds test)	
MIL On Condition	• 2 Driving Cycles	

SPECIFICATION E72F6E7E

Heater	
Resistance (Ω)	3.0 ~ 4.0Ω [21℃(69.8℉)]

SCHEMATIC DIAGRAM EDAC9D24

Refer to DTC P0056.

SIGNAL WAVEFORM AND DATA EA7786A6

Refer to DTC P0056.

MONITOR DTC STATUS E0E1DEC1

Refer to DTC P0056.

TERMINAL AND CONNECTOR INSPECTION EBFA41CB

Refer to DTC P0056.

CONTROL CIRCUIT INSPECTION EBF34ABE

1. IG "OFF" & disconnect HO2S(B2/S2) connector.
2. IG "ON" & ENG "OFF".
3. Measure voltage between terminal 4 of HO2S(B2/S2) harness connector and chassis ground.

Specification : Approx. 0 V

4. Is the measured voltage within specification ?

YES

▶ Go to "Component Inspection" procedure.

NO

▶ Repair short to battery in HO2S (B2/S2) heater control circuit and go to "Verification of Vehicle Repair" procedure.

COMPONENT INSPECTION E516F026

1. Check HO2S(B2/S2) Heater resistance

   1) IG "OFF" and disconnect HO2S(B2/S2) connector

   2) Measure resistance between terminal 1 and 2 of HO2S(B2/S2)(Component Side)

SPECIFICATION :

Heater	
Resistance (Ω)	3.0 ~ 4.0Ω [21℃(69.8°F)]

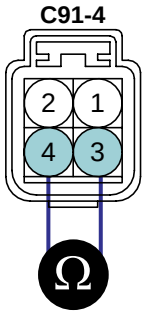

1. HO2S(B2/S2) Signal
2. Sensor Ground
3. **HO2S(B2/S2) Heater Power**
4. **HO2S(B2/S2) Heater Control**

SCMF16180L

   3) Is the measured resistance within specification ?

YES

▶ Substitute with a known - good PCM and check for proper operation.
If the problem is corrected, go to "Verification of Vehicle Repair" procedure.

NOTE

There is a memory reset function on scantool that can erase optional parts automatically detected and memorized by PCM.

Before or after testing PCM on the vehicle, use this function to reuse the PCM on the others.

NO

▶ Substitute with a known - good HO2S(B2/S2) and check for proper operation.
If the problem is corrected, go to "Verification of Vehicle Repair" procedure.

VERIFICATION OF VEHICLE REPAIR E3725F3E

Refer to DTC P0056.

DTC P0076 INTAKE VALVE CONTROL SOLENOID CIRCUIT LOW (BANK 1)
DTC P0082 INTAKE VALVE CONTROL SOLENOID CIRCUIT LOW (BANK 2)

COMPONENT LOCATION EC804154

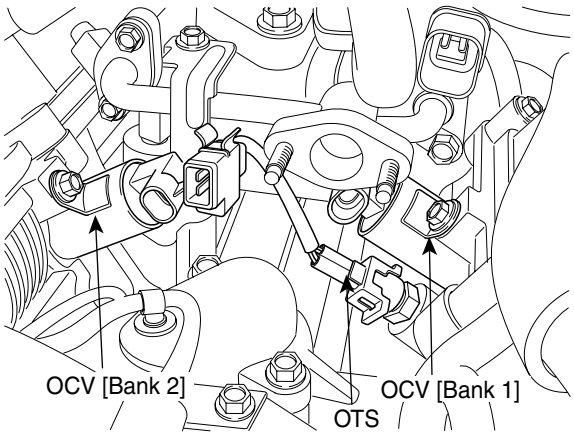

LGLG500A

GENERAL DESCRIPTION EC183A40

The CVVT (Continuously Variable Valve Timing) system is installed to the chain sprocket of the intake camshaft. This system controls the intake camshaft to provide the optimal valve timing for every driving condition. The ECM controls the Oil Control Valve(OCV), based on the signals output from mass air flow, throttle position and engine coolant temperature. The CVVT controller regulates the intake camshaft angle using oil pressure through the OCV. As result, the relative position between the camshaft and the crankshaft becomes optimal, and the engine torque improves, fuel economy improves, exhaust emissions decrease under overall driving conditions.

DTC DESCRIPTION E095E210

When the enable condition is satisfied, the PCM checks that OCV outputs (Voltage level) are observed when OCVs are commanded. When a OCV output failure is detected, the appropriate fail counter is incremented.
If the failure threshold is exceeded 5 seconds during one diagnostic test(10second), the test is failed and DTC is stored. MIL(Malfunction Indicatin Lamp) turns on when the malfunction lasts till consecutive 2 driving cycle.

DTC DETECTING CONDITION E0F366C7

Item	Detecting Condition	Possible cause
DTC Strategy	• Detects a short to ground or open circuit of OCV circuit	• Poor Connection • Open in Power Circuit • Open or short to ground in control circuit • OCV • PCM
Enable Conditions	• No disabling Faults Present • Engine Running • 11V ≤ Ignition Voltage ≤ 16V • Enable Time delay ≥ 0.5sec	
Threshold value	• Short to ground or open circuit	
Diagnosis Time	• Continuous (More than 5 seconds failure for every 10 seconds test)	
MIL On Condition	• 2 Driving Cycles	

SPECIFICATION EF9008C7

Resistance (Ω)	6.7 ~ 7.7Ω [20℃(68˚F)]

SCHEMATIC DIAGRAM E6F09AA7

[CIRCUIT DIAGRAM]

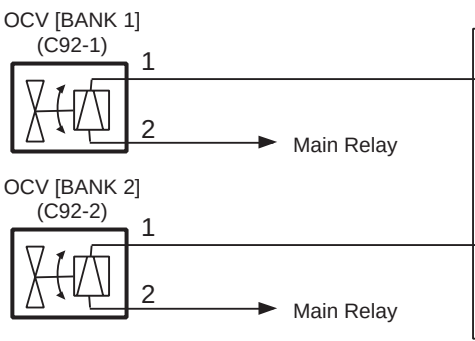

[CONNECTION INFORMATION]

OCV [BANK 1]

Terminal	Connected to	Function
1	PCM C30-B (62)	OCV [Bank 1] control
2	Main Relay	Battery Voltage (B+)

OCV [BANK 2]

Terminal	Connected to	Function
1	PCM C30-B (61)	OCV [Bank 2] control
2	Main Relay	Battery Voltage (B+)

[HARNESS CONNECTORS]

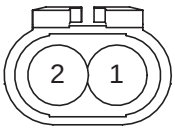

C92-1

OCV [Bank 1]

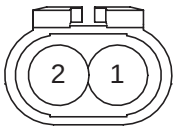

C92-2

OCV [Bank 2]

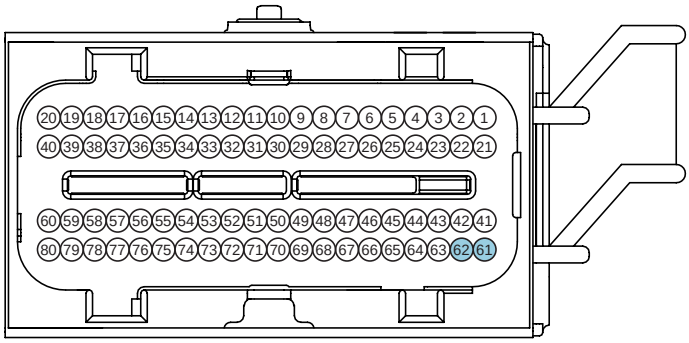

C30-B

PCM

SCMF16115L

SIGNAL WAVEFORM AND DATA E64712E4

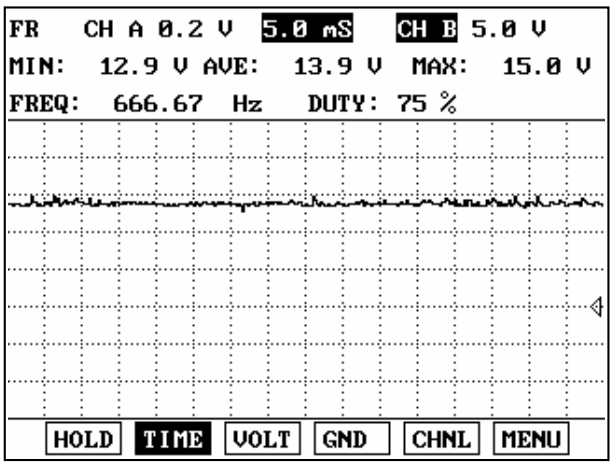

Fig. 1

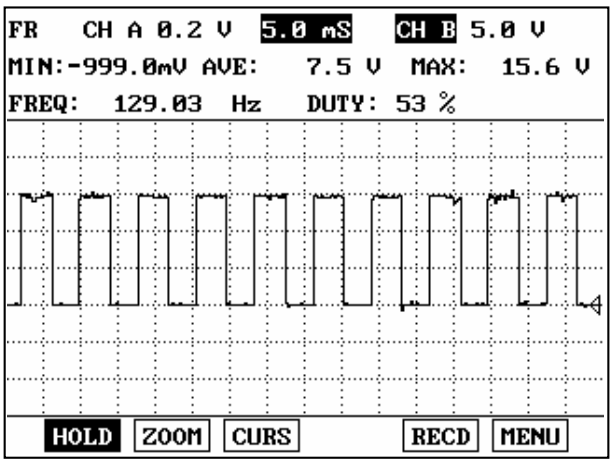

Fig. 2

Fig. 1 : Idle
Fig. 2 : Accelleration

EGRF602G

The oil control valve is commanded by a pulse-width-modulated signal from the engine control unit. A duty cycle of zero commands the cam phaser to its default position. A duty cycle of 100% commands the phaser to its maximum phased position. When the phaser must be controlled to an intermediate position, the duty cycle is maintained in the region of the 'hold position'. This is a medium duty cycle, usually between 35% and 65%, depending on temperature and voltage conditions.

MONITOR DTC STATUS E3EDACBF

1. Check DTC Status

   1) Connect scantool to Data Link Connector(DLC).

   2) IG "ON".

   3) Select "Diagnostic Trouble Codes(DTCs)" mode, and then Press F4(DTAL) to check DTC's information from the DTCs menu

   4) Read "DTC Status" parameter.

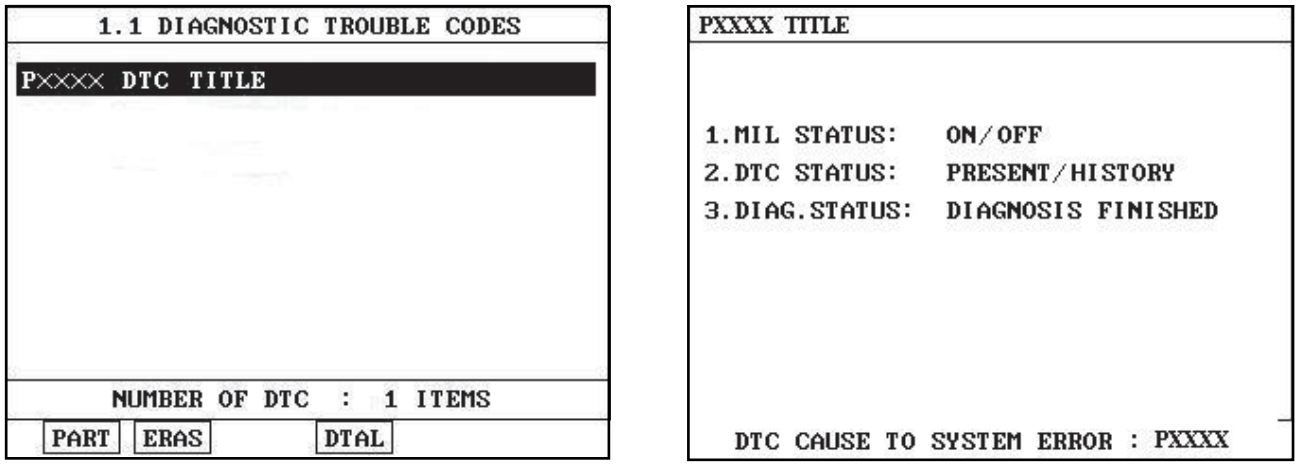

SCMF16159L

   5) Is parameter displayed "Present fault"?

YES

▶ Go to "Terminal and connector inspection" procedure.

NO

▶ Fault is intermittent caused by poor contact in the sensor's and/or PCM's connector or was repaired and PCM memory was not cleared. Thoroughly check connectors for looseness, poor connection, ending, corrosion, contamination, deterioration, or damage. Repair or replace as necessary and go to "Verification of Vehicle Repair" procedure.

TERMINAL AND CONNECTOR INSPECTION E701FE1C

1. Many malfunctions in the electrical system are caused by poor harness and terminals.
   Faults can also be caused by interference from other electrical systems, and mechanical or chemical damage.

2. Thoroughly check connectors for looseness, poor connection, bending, corrosion, contamination, deterioration, or damage.

3. Has a problem been found?

YES

▶ Repair as necessary and go to "Verification of Vehicle Repair" procedure

NO

▶ Go to " Power Circuit Inspection " procedure

POWER CIRCUIT INSPECTION EB17C5EC

1. IG "OFF" & Disconnect OCV(B1) connector.
2. IG "ON" & ENG "OFF".
3. Measure voltage between terminal 2 of OCV(B1) harness connector and chassis ground.

Specification : B+

4. Is the measured voltage within specification ?

YES

▶ Go to "Control Circuit Inspection" procedure.

NO

▶ Check fuse between Main Relay and OCV is open or not installed.
▶ Check open in power circuit between Main Relay and OCV power circuit.
▶ Repair or repalce as necessary and then go to "Verification of Vehicle Repair" procedure.

CONTROL CIRCUIT INSPECTION E49A77A9

1. Check short to ground in harness.
   1) IG "OFF" and disconnect OCV connector.
   2) IG "ON" & ENG "OFF".
   3) Measure resistance between terminal 1 of OCV harness connector and chassis ground.

Specification : Infinite

   4) Is the measured resistance within specification ?

YES

▶ Go to "Check open in harness" as follows

NO

▶ Repair or replace as necessary and go to "Verification of Vehicle Repair" procedure.

2. Check open in harness
   1) IG "OFF" and disconnect OCV and PCM connector.

2) [P0076] Measure resistance between terminal 1 of OCV harness connector and terminal C30-B (62) of PCM harness connector.
[P0082] Measure resistance between terminal 1 of OCV harness connector and terminal C30-B (61) of PCM harness connector.

Specification : Approx. below 1Ω

3) Is the measured resistance within specification ?

YES

▶ Go to "Component Inspection" procedure.

NO

4) ▶ Repair or replace as necessary and go to "Verification of Vehicle Repair" procedure.

COMPONENT INSPECTION EEFE7202

1. Check OCV

1) IG "OFF" and disconnect OCV connector.

2) Measure resistance between terminal 1 and 2 of OCV. (Component Side)

SPECIFICATION :

Resistance (Ω)	6.7 ~ 7.7Ω [20℃(68˚F)]

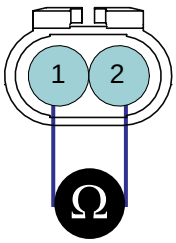

1. OCV control
2. OCV power

SCMF16998L

3) Is the measured resistance within specification ?

YES

▶ Go to "OCV Actuation Test" as follows.

NO

▶ Substitute with a known - good OCV and check for proper operation. If the problem is corrected, replace OCV and go to "Verification of Vehicle Repair" procedure.

2. OCV Actuation Test

1) Connect scantool and IG "ON".

2) Select "OCV" on the Actuation Test.

3) Activate "OCV" by pressing "STRT(F1)" key.

(should hear a faint click from Oil Control solenoid Valve)

4) Repeat this procedure 4 or 5 times to ensure reliability

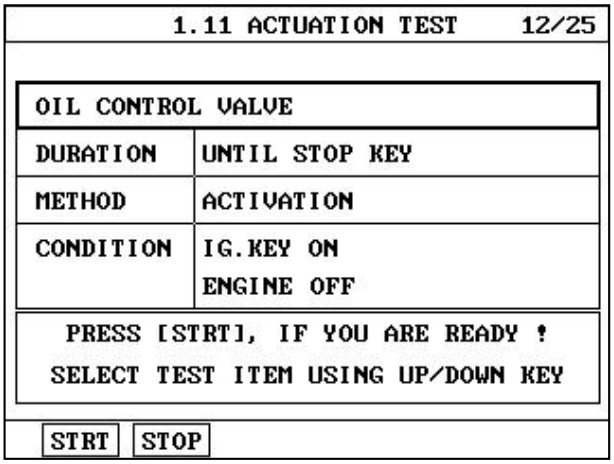

EGRF602M

5) Does OCV generate click sound during acutation test ?

YES

▶ Substitute with a known - good PCM and check for proper operation. If the problem is corrected, replace PCM and go to "Verification of Vehicle Repair" procedure.

NOTE

There is a memory reset function on scantool that can erase optional parts automatically detected and memorized by PCM.
Before or after testing PCM on the vehicle, use this function to reuse the PCM on the others

NO

▶ Substitute with a known - good OCV and check for proper operation. If the problem is corrected, replace OCV and go to "Verification of Vehicle Repair" procedure.

VERIFICATION OF VEHICLE REPAIR E68A0D99

After a repair, it is essential to verify that the fault has been corrected.

1. Monitor and record the Freeze Frame Data for the Diagnostic Trouble Code(DTC) which has been diagnosed.
2. Using a Scantool, Clear the DTCs
3. Operate the vehicle within conditions noted in the freeze frame data or enable conditions
4. Monitor that all rediness test have been verified as " Complete "
5. Are any DTCs present ?

YES

▶ Go to the applicable troubleshoooting procedure.

NO

▶ System is performing to specification at this time.

DTC P0077 INTAKE VALVE CONTROL SOLENOID CIRCUIT HIGH (BANK 1)
DTC P0083 INTAKE VALVE CONTROL SOLENOID CIRCUIT HIGH (BANK 2)

COMPONENT LOCATION EBE4B7B4

Refer to DTC P0076.

GENERAL DESCRIPTION E3EE6112

Refer to DTC P0076.

DTC DESCRIPTION E6C94604

When the enable condition is satisfied, the PCM checks that OCV outputs (Voltage level) are observed when OCVs are commanded. When a OCV output failure is detected, the appropriate fail counter is incremented.
If the failure threshold is exceeded 5 seconds during one diagnostic test(10second),the test is failed and DTC is stored.
MIL(Malfunction Indication Lamp) turns on when the malfunction lasts till consecutive 2 driving cycle.

DTC DETECTING CONDITION E5241C91

Item	Detecting Condition	Possible cause
DTC Strategy	• Detects a short to battery of OVC circuit	• Poor Connection • Short to battery in Control Circuit • OCV • PCM
Enable Conditions	• No disabling Faults Present • Engine Running • 11V ≤ Ignition Voltage ≤ 16V • Enable Time delay ≥ 0.5sec	
Threshold value	• Short to battery	
Diagnosis Time	• Continuous (More than 5 seconds failure for every 10 seconds test)	
MIL On Condition	• 2 Driving Cycles	

SPECIFICATION EBE87B33

Refer to DTC P0076.

SCHEMATIC DIAGRAM ED688252

Refer to DTC P0076.

SIGNAL WAVEFORM AND DATA E2078BE7

Refer to DTC P0076.

MONITOR DTC STATUS E5EBE25E

Refer to DTC P0076.

TERMINAL AND CONNECTOR INSPECTION E57DBE3C

Refer to DTC P0076.

CONTROL CIRCUIT INSPECTION E6D7EE7A

1. IG "OFF" and Disconnect OCV connector.
2. Measure resistance between terminal 1 and 2 of OCV harness connector.

Specification : Infinite

3. Is the measured resistance within specification ?

YES

▶ Go to "Component Inspection" procedure.

NO

▶ Repair or replace as necessary and go to "Verification of Vehicle Repair" procedure.

COMPONENT INSPECTION EFD05898

1. Check OCV
   1) IG "OFF" and disconnect OCV connector.
   2) Measure resistance between terminal 1 and 2 of OCV. (Component Side)

SPECIFICATION :

Resistance (Ω)	6.7 ~ 7.7Ω [20℃(68˚F)]

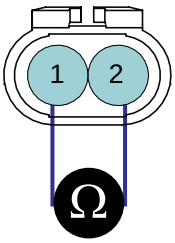

1. OCV control
2. OCV power

SCMF16998L

   3) Is the measured resistance within specification ?

YES

▶ Go to "OCV Actuation Test" as follows.

NO

▶ Substitute with a known - good OCV and check for proper operation. If the problem is corrected, replace OCV and go to "Verification of Vehicle Repair" procedure.

2. OCV Actuation Test

1) Connect scantool and IG "ON".

2) Select "OCV" on the Actuation Test.

3) Activate "OCV" by pressing "STRT(F1)" key.
(should hear a faint click from Oil Control solenoid Valve)

4) Repeat this procedure 4 or 5 times to ensure reliability

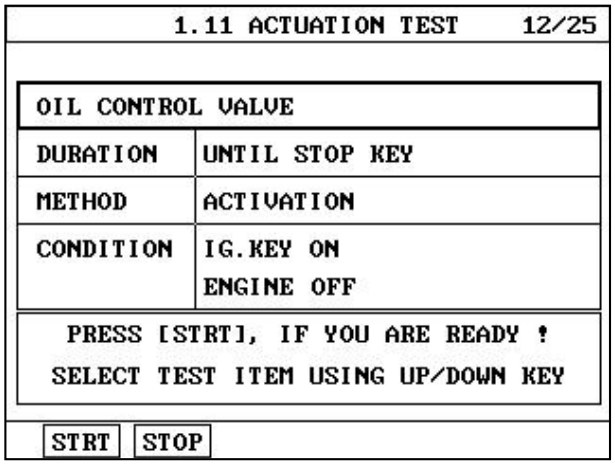

EGRF602M

5) Does OCV generate click sound during acutation test ?

YES

▶ Substitute with a known - good PCM and check for proper operation. If the problem is corrected, replace PCM and go to "Verification of Vehicle Repair" procedure.

NOTE

There is a memory reset function on scantool that can erase optional parts automatically detected and memorized by PCM.
Before or after testing PCM on the vehicle, use this function to reuse the PCM on the others

NO

▶ Substitute with a known - good OCV and check for proper operation. If the problem is corrected, replace OCV and go to "Verification of Vehicle Repair" procedure.

VERIFICATION OF VEHICLE REPAIR E240091F

Refer to DTC P0076.

DTC P0101 MASS OR VOLUME AIR FLOW CIRCUIT RANGE/PERFORMANCE

COMPONENT LOCATION E45377FC

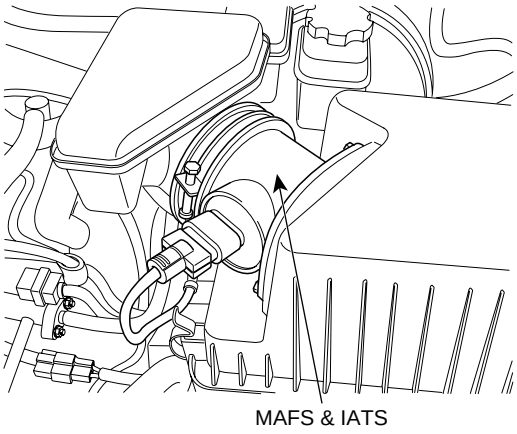

SCMF16185L

GENERAL DESCRIPTION E1F15262

The Mass Air Flow Sensor (MAFS) is located between the air cleaner assembly and the throttle body. The MAFS uses a hot film type sensing element to measure the mass of intake air entering the engine. This hot film type air flow sensor consists of a hot film sensor, housing and metering ducts. Mass air flow rate is measured by detection of heat transfer from a hot film probe. The change in air flow rate causes change in the amount of heat being transferred from the hot film probe surface to the air. A large amount of intake air represents acceleration or high load conditions while a small amount of intake air represents deceleration or idle. The mass of intake air should increase at acceleration and be stable during constant engine speed. The ECM uses this information to determine the injection duration and ignition timing for the desired air/fuel ratio.

DTC DESCRIPTION E06B8990

The difference between values coming from the MAF Sensor and those are calculated is analyzed. This difference, or error, is then compared to high and low limit calibration values, which are functions of engine speed. PCM compares MAFS output to calculated flow rate value while enable condition is met.
If the actual air flow is higher than Maximum threshold, or lower than Minimum threshold for more than 75 seconds failure for every 125 seconds test. PCM determines that a fault exists and a DTC is stored.

DTC DETECTING CONDITION E930E251

Item	Detecting Condition	Possible cause
DTC Strategy	• Compares the difference between MAF Sensor output and calculated flow rate value to a calibration value	• Poor connection • Open or short in harness • Clogged air cleaner • MAFS • PCM
Enable Conditions	• Barometric Pressure enable conditions criteria met • Engine Coolant Temperature ≥ 60℃ • 600rpm 〈 Engine Speed 〈 3000rpm • Air Conditioning Clutch not transitioning • Torque Control is not Active • Traction Control is not Active • Brake switch is not active • Current Transmission Torque Converter Clutch State same as previous • Power Steering is not Cramped • Engine Speed difference ≤ 300rpm • TPS value difference ≤ 5% • MAP value difference ≤ 7 kPa • Idle Airflow difference ≤ 10% • Cam phasing control changes ≤ 10% • MAP/TPS Rationality High Power Condition Fail Criteria Not Met • MAP/TPS Rationality Low Power Condition Fail Criteria Not Met • MAP/TPS Rationality Decel. Condition Fail Criteria Not Met • BARO Update Enable Criteria Met • Enable Timer ≥ 1.5s	
Thresh old value	• Comparision result value is out of calibration value	
Diagnosis Time	• Continuous (More than 75 seconds failure for every 125 seconds test)	
MIL On Condition	• 2 driving cycles	

SPECIFICATION EFBE022F

Air Flow (kg/h)	Frequency (Hz)
12.6 kg/h	2,617Hz
18.0 kg/h	2,958Hz
23.4 kg/h	3,241Hz
32.4 kg/h	3,653Hz
43.2 kg/h	4,024Hz
57.6 kg/h	4,399Hz
72.0 kg/h	4,704Hz
108.0 kg/h	5,329Hz
144.0 kg/h	5,897Hz
198.0 kg/h	6,553Hz
270.0 kg/h	7,240Hz
360.0 kg/h	7,957Hz

486.0 kg/h	8,738Hz
666.0 kg/h	9,644Hz
900.0 kg/h	10,590Hz

SCHEMATIC DIAGRAM E99FB490

[CIRCUIT DIAGRAM]

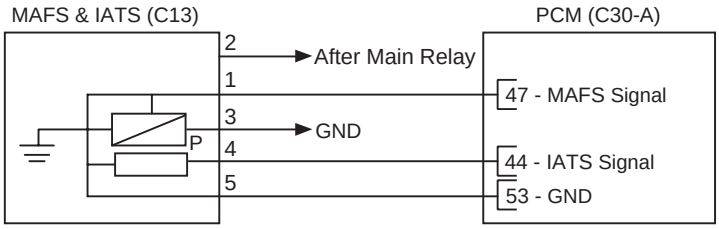

[CONNECTION INFORMATION]

Terminal	Connected to	Function
1	PCM C30-A (47)	MAFS Signal
2	Main Relay	Battery Voltage (B+)
3	Chassis Ground	Ground
4	PCM C30-A (44)	IATS Signal
5	PCM C30-A (53)	Sensor Ground

[HARNESS CONNECTORS]

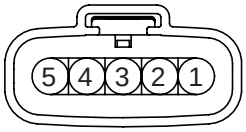

C13

MAFS & IATS

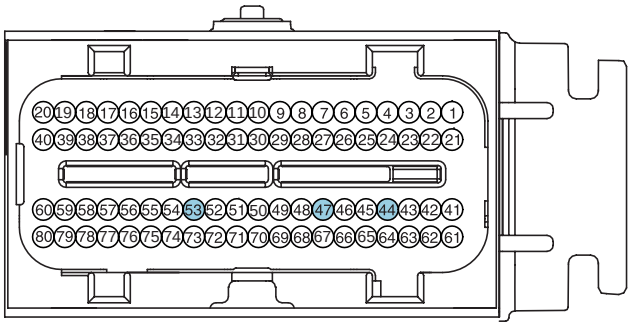

C30-A

PCM

SCMF16104L

MONITOR DTC STATUS EBC98EAC

1. Check DTC Status

   1) Connect scantool to Data Link Connector(DLC).

   2) IG "ON".

   3) Select "Diagnostic Trouble Codes(DTCs)" mode, and then Press F4(DTAL) to check DTC's information from the DTCs menu

   4) Read "DTC Status" parameter.

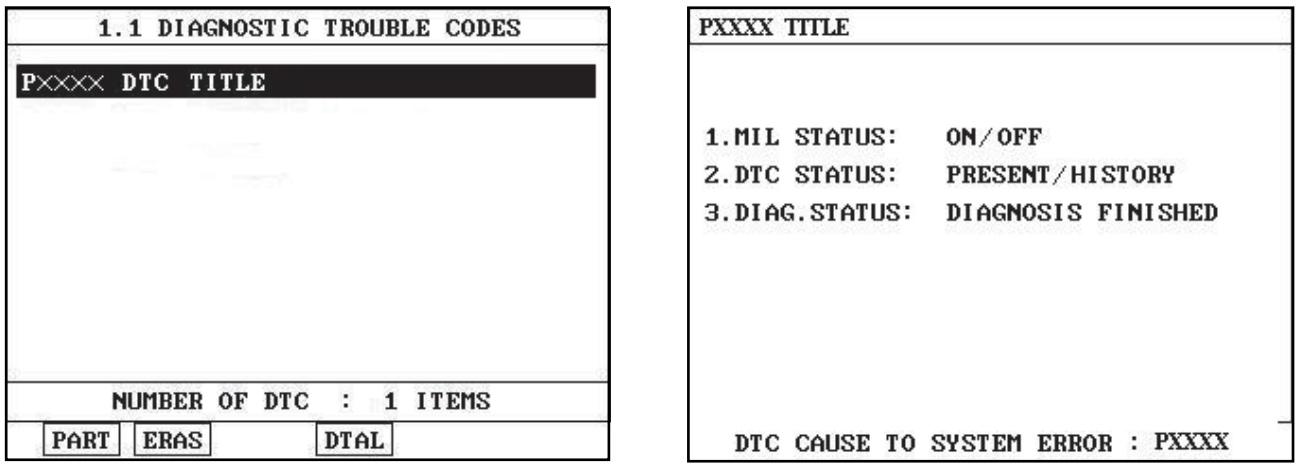

SCMF16159L

5) Is parameter displayed "Present fault"?

YES

▶ Go to "Terminal and connector inspection" procedure.

NO

▶ Fault is intermittent caused by poor contact in the sensor's and/or PCM's connector or was repaired and PCM memory was not cleared. Thoroughly check connectors for looseness, poor connection, ending, corrosion, contamination, deterioration, or damage. Repair or replace as necessary and go to "Verification of Vehicle Repair" procedure.

TERMINAL AND CONNECTOR INSPECTION EFBEBE2F

1. Many malfunctions in the electrical system are caused by poor harness and terminals. Faults can also be caused by interference from other electrical systems, and mechanical or chemical damage.
2. Thoroughly check connectors for looseness, poor connection, bending, corrosion, contamination, deterioration, or damage.
3. Has a problem been found?

YES

▶ Repair as necessary and go to "Verification of Vehicle Repair" procedure

NO

▶ Go to " Power Circuit Inspection " procedure.

POWER CIRCUIT INSPECTION EC357CC1

1. IG "OFF" and Disconnect MAFS connector.
2. IG "ON" & ENG "OFF"
3. Measure voltage between terminal 2 of MAFS harness connector and chassis ground

Specification : B+

4. Is the measured voltage within specification ?

YES

▶ Go to "Ground Circuit Inspection" proceudure.

NO

▶ Check that fuse between MAFS and Main Relay is open or not installed.
▶ Check open in power circuit between MAFS and Main Relay.
▶ Go to "Verification of Vehicle Repair" procedure.

GROUND CIRCUIT INSPECTION E716B66B

1. IG "OFF" and disconnect MAFS connector.
2. Measure voltage between terminal 1 of MAFS harness connector and chassis ground.
3. Measure voltage between terminal 1 and 3 of MAFS harness connector.

Specification : Voltage difference between Measurement "A" and "B" is below 200mV.

4. Is the measured voltage within specification ?

YES

▶ Go to "Signal Circuit Inspection" procedure.

NO

▶ Repair contact resistance or open in harnesss and then go to "Verification of Vehicle Repair" procedure.

SIGNAL CIRCUIT INSPECTION E88E4F5E

1. IG "OFF" and disconnect MAFS connector.
2. IG "ON' & ENG "OFF".
3. Measure voltage between terminal 1 of MAFS harness connector and chassis ground.

Specification : Approx. 5V

4. Is the measured voltage within specification ?

YES

▶ Go to "Component Inspection" procedure.

NO

▶ Repair or replace as necessary and then go to "Verification of Vehicle Repair" procedure.

COMPONENT INSPECTION E6A7DABE

1. Visual Inspection

   1) Check that MAFS is damaged, contaminated or deformed.

   2) Check tha air cleaner is clogged.

   3) Has a problem been found ?

   YES

   ▶ Repair or replace as necessary and then go to "Verification of Vehicle Repair" procedure.

   NO

   ▶ Go to "Check MAFS" as follows

2. Check MAFS

   1) IG "OFF" and install a scantool

   2) ENG "ON" and monitor "MAFS" data on the service data.

   3) Monitor signal waveform at terminal 1 of MAFS with scantool.

Specification :Signal waveform will be displayed as follows. (Be aware that the signal of MAFS is not voltage display but frequency display.)

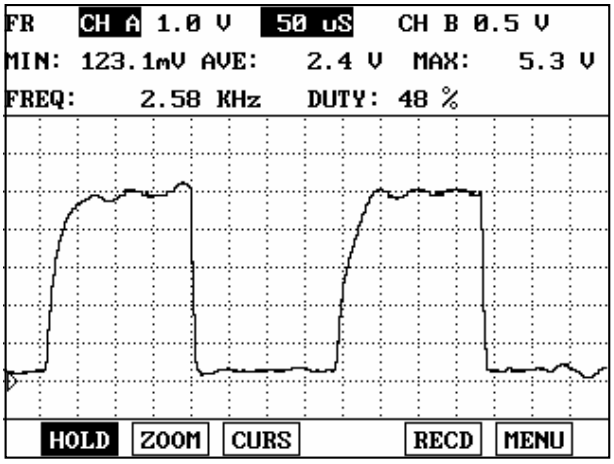

Fig. 1

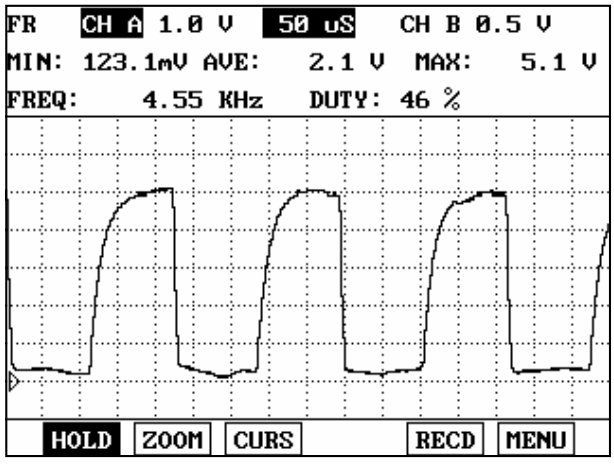

Fig. 2

Fig. 1 : Idle
Fig. 2 : Acceleration

EGRF603D

4) Are both service data and signalwave form dispayed correctly ?

YES

▶ Substitute with a known - good PCM and check for proper operation. If the problem is corrected, replace PCM and go to "Verification of Vehicle Repair" procedure.

NOTE

There is a memory reset function on scantool that can erase optional parts automatically detected and memorized by PCM.
Before or after testing PCM on the vehicle, use this function to reuse the PCM on the others

NO

▶ Substitute with a known - good MAFS and check for proper operation. If the problem is corrected, replace MAFS and go to "Verification of Vehicle Repair" procedure.

VERIFICATION OF VEHICLE REPAIR E1B5FE68

After a repair, it is essential to verify that the fault has been corrected.

1. Monitor and record the Freeze Frame Data for the Diagnostic Trouble Code(DTC) which has been diagnosed.
2. Using a Scantool, Clear the DTCs
3. Operate the vehicle within conditions noted in the freeze frame data or enable conditions
4. Monitor that all rediness test have been verified as " Complete "
5. Are any DTCs present ?

YES

▶ Go to the applicable troubleshoooting procedure.

NO

▶ System is performing to specification at this time.

DTC P0102 MASS OR VOLUME AIR FLOW CIRCUIT LOW INPUT

COMPONENT LOCATION EA92D299

Refer to DTC P0101.

GENERAL DESCRIPTION ECAA2EB9

Refer to DTC P0101.

DTC DESCRIPTION E4654CDA

The PCM compares the airmeter input frequency to low and high limits. When the frequency is outside the allowable limits, the circuit is determined to be failed.
If PCM detects that frequency signal of MAFS is lower than 1000Hz for more than 75 second failure during one dignostic test(125 second) while enable condition is met, PCM determines that a fault exists and a DTC is stored.MIL(Malfunction Indication Lamp) turns on when the malfunction lasts till consecutive 2 driving cycle.

DTC DETECTING CONDITION EF0585E2

Item	Detecting Condition	Possible cause
DTC Strategy	• Compares the airmeter input frequency to a low limit	• Poor Connection • Open or short in harness • MAFS • PCM
Enable Conditions	• Engine Speed ≥ 500 rpm • Engine Running Time ≥ 5 second • Ignition Voltage ≥ 11V • Conditions met delay time ≥ 1 second	
Threshold value	• MAF frequency signal 〈 1000Hz	
Diagnosis Time	• Continuous (More than 75 second failure for every 125 second tests)	
MIL On Condition	• 2 Driving Cycles	

SPECIFICATION E68C1575

Refer to DTC P0101.

SCHEMATIC DIAGRAM EA1D4DF0

Refer to DTC P0101.

MONITOR DTC STATUS E9A71DE1

Refer to DTC P0101.

TERMINAL AND CONNECTOR INSPECTION E72B5CFD

Refer to DTC P0101.

POWER CIRCUIT INSPECTION E01EFF96

1. IG "OFF" and Disconnect MAFS connector.
2. IG "ON" & ENG "OFF"
3. Measure voltage between terminal 2 of MAFS harness connector and chassis ground

Specification : B+

4. Is the measured voltage within specification ?

YES

▶ Go to "Signal Circuit Inspection" Procedure.

NO

▶ Check fuse between MAFS and main relay is open or not installed.
▶ Repair open in power harness between MAFS and main relay and go to "Verification of Vehicle Repair" procedure.

SIGNAL CIRCUIT INSPECTION EDB71EDC

1. Check voltage
   1) IG "OFF" and disconnect MAFS connector.
   2) IG "ON' & ENG "OFF".
   3) Measure voltage between terminal 1 of MAFS harness connector and chassis ground.

Specification : Approx. 5V

   4) Is the measured voltage within specification ?

YES

▶ Go to "Ground circuit inspection" procedure.

NO

▶ If the measured voltage is "0", go to "Check open in harness" as follows. If the measured voltage is over "5V", go to " Check short to battery in harness" as follows.

2. Check short to battery in harness
   1) IG "OFF" and disconnect MAFS and PCM connector.
   2) Measure resistance between terminal 1 and 2 of MAFS harness connector.
   3) Measure resistance between terminal 1 and 4 of MAFS harness connector.

Specification : Infinite

   4) Is the measured resistance within specification ?

YES

▶ Go to "Check short to ground in harness" as follows.

NO

▶ Repair short to battery in harness and go to "Verification of Vehicle Repair" procedure.

3. Check short to ground in harness

   1) IG "OFF" and disconnect MAFS and PCM connector.

   2) Measure resistance between terminal 1 of MAFS harness connector and chassis ground.

Specification : Infinite

   3) Is the measured resistance within specification ?

YES

▶ Go to "Check open in harness" as follows.

NO

▶ Repair short to ground in harness and go to "Verification of Vehicle Repair" procedure.

4. Check open in harness

   1) IG "OFF" and disconnect MAFS and PCM connector.

   2) Measure resistance between terminal 1 of MAFS harness connector and terminal C30-A (47) of PCM harness connector.

Specification : Approx. below 1Ω .

   3) Is the measured resistance within specification ?

YES

▶ Go to "Ground circuit Inspection" procedure.

NO

▶ Repair open in harness and go to "Verification of Vehicle Repair" procedure.

GROUND CIRCUIT INSPECTION E0C934B8

1. IG "OFF" and disconnect MAFS connector.
2. Measure voltage between terminal 1 of MAFS harness connector and chassis ground.
3. Measure voltage between terminal 1 and 3 of MAFS harness connector.

Specification : Voltage difference between Measurement "A" and "B" is below 200mV.

4. Is the measured voltage within specification ?

YES

▶ Go to "Component Inspection" procedure.

NO

▶ Repair contact resistance or open in harnesss and then go to "Verification of Vehicle Repair" procedure.

COMPONENT INSPECTION EB5DFEB3

1. Visual Inspection

   1) Check that MAFS is damaged, contaminated or deformed.

   2) Has a problem been found ?

      YES

      ▶ Repair or replace as necessary and then go to "Verification of Vehicle Repair" procedure.

      NO

      ▶ Go to "Check MAFS" as follows

2. Check MAFS

   1) IG "OFF" and install a scantool

   2) ENG "ON" and monitor "MAFS" data on the service data.

   3) Monitor signal waveform at terminal 1 of MAFS with scantool.

Specification :Signal waveform will be displayed as follows. (Be aware that the signal of MAFS is not voltage display but frequency display.)

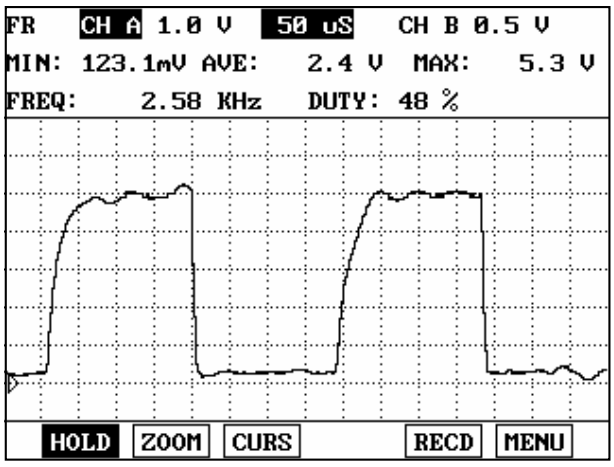

Fig. 1

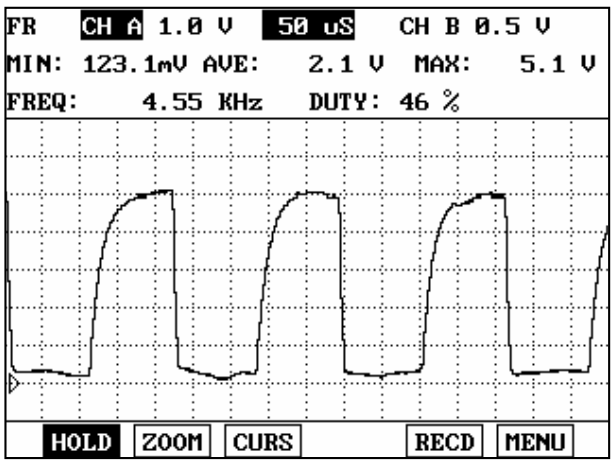

Fig. 2

Fig. 1 : Idle
Fig. 2 : Acceleration

EGRF603D

   4) Are both service data and signalwave form dispayed correctly ?

      YES

▶ Substitute with a known - good PCM and check for proper operation. If the problem is corrected, replace PCM and go to "Verification of Vehicle Repair" procedure.

NOTE

There is a memory reset function on scantool that can erase optional parts automatically detected and memorized by PCM.
Before or after testing PCM on the vehicle, use this function to reuse the PCM on the others

NO

▶ Substitute with a known - good MAFS and check for proper operation. If the problem is corrected, replace MAFS and go to "Verification of Vehicle Repair" procedure.

VERIFICATION OF VEHICLE REPAIR EBBF5268

Refer to DTC P0101.

DTC P0103 MASS OR VOLUME AIR FLOW CIRCUIT HIGH INPUT

COMPONENT LOCATION E9D056EB

Refer to DTC P0101.

GENERAL DESCRIPTION EC05A3D3

Refer to DTC P0101.

DTC DESCRIPTION E9038980

The PCM compares the airmeter input frequency to low and high limits.
If PCM detects that frequency signal of MAFS is higher than 11900Hz for more than 75 second failure during 125 second dignostic test while enable condition is met, PCM determines that a fault exists and a DTC is stored.MIL(Malfunction Indicatin Lamp) turns on when the malfunction lasts till consecutive 2 driving cycle.

DTC DETECTING CONDITION E7DFA25A

Item	Detecting Condition	Possible cause
DTC Strategy	• Compares the airmeter input frequency to a high limit	• Noise • MAFS • PCM
Enable Conditions	• Engine Speed ≥ 500 rpm • Engine Running Time ≥ 5 second • Ignition Voltage ≥ 11V • Conditions met delay time ≥ 1 second	
Threshold value	• MAF frequency signal 〉 11900Hz	
Diagnosis Time	• Continuous (More than 75 second failure for every 125 second tests)	
MIL On Condition	• 2 Driving Cycles	

SPECIFICATION E751A027

Refer to DTC P0101.

SCHEMATIC DIAGRAM E2026F7A

Refer to DTC P0101.

MONITOR DTC STATUS EBFDBB23

Refer to DTC P0101.

TERMINAL AND CONNECTOR INSPECTION EEE097C3

Refer to DTC P0101.

GROUND CIRCUIT INSPECTION E04A4C53

1. IG "OFF"

2. Disconnector MAFS connector.
3. Measure the voltage between terminal 1 of MAFS harness connector.
4. Measure the voltage between terminal 1 and 3 of MAFS harness connector.

Specification : Voltage difference and "A" and B" is below 200mV

5. Is the measured voltage within the specification?

YES

▶ Go to "Component Inspection".

NO

▶ After repairing or replacing contact resistance in ground circuit and open in the MAFS circuit, go to "Verification and Vehicle Repair".

COMPONENT INSPECTION E6DE5338

1. Visual Inspection
   1) Check that MAFS is damaged, contaminated or deformed.
   2) Has a problem been found ?

YES

▶ Repair or replace as necessary and then go to "Verification of Vehicle Repair" procedure.

NO

▶ Go to "Check MAFS" as follows

2. Check MAFS
   1) IG "OFF" and install a scantool
   2) ENG "ON" and monitor "MAFS" data on the service data.
   3) Monitor signal waveform at terminal 1 of MAFS with scantool.

Specification :Signal waveform will be displayed as follows. (Be aware that the signal of MAFS is not voltage display but frequency display.)

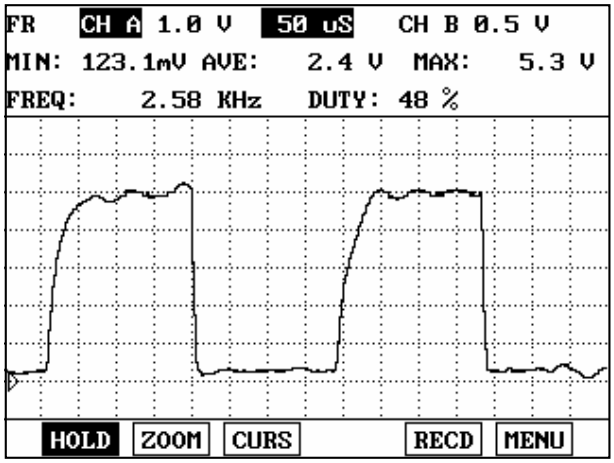

Fig. 1

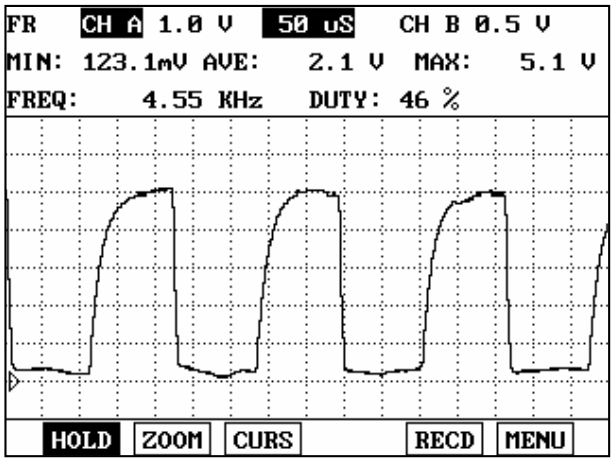

Fig. 2

Fig. 1 : Idle
Fig. 2 : Acceleration

EGRF603D

4) Are both service data and signalwave form dispayed correctly ?

YES

▶ Substitute with a known - good PCM and check for proper operation. If the problem is corrected, replace PCM and go to "Verification of Vehicle Repair" procedure.

NOTE

There is a memory reset function on scantool that can erase optional parts automatically detected and memorized by PCM.
Before or after testing PCM on the vehicle, use this function to reuse the PCM on the others

NO

▶ Substitute with a known - good MAFS and check for proper operation. If the problem is corrected, replace MAFS and go to "Verification of Vehicle Repair" procedure.

VERIFICATION OF VEHICLE REPAIR ECC266EC

Refer to DTC P0101.

DTC P0106 MANIFOLD ABSOLUTE PRESSURE/BAROMETRIC PRESSURE CIRCUIT RANGE/PERFORMANCE

COMPONENT LOCATION ED009E33

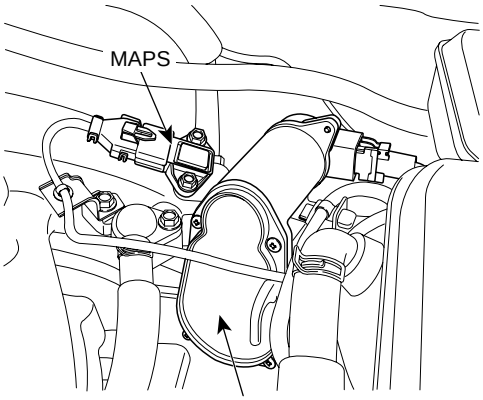

SCMF16192L

GENERAL DESCRIPTION EFA5C66C

The amount of intake air flow must be inputted to PCM in order to determine the fuel injection quantity. MAPS(Manifold Absolute Pressure) calculates the amount of air indirectly as measuring the pressure inside of intake manifold. This mechanism is also called Speed-Density Type.
MAPS transfers analog output signal which is proportional to the change of intake manifold pressure, then, with this signal and RPM, PCM calculates the amount of intake air flow.
MAPS is mounted on surge tank to measure the pressure inside of intake manifold, and it consists of a piezo electric element and hybrid IC which amplifies output signal from the element. A piezo electric element is a sort of a diaphragm using piezo electric effect. One side of the diaphragm is surrounded with vacuum chamber while intake pressure is applied to the other side. Thus, signals are outputted by the transformation of diagphragm according to the change of pressure inside of intake manifold.

DTC DESCRIPTION E377698C

PCM compares the MAPS output and calculated MAPS value while enable condition ismet. If the acutal MAP value is higher than Maximum threshold or lower than Minimum threshold for 15 secondfailure during one diagnostic test(32 second),PCM determines that a fault exists and a DTC is stored.

DTC DETECTING CONDITION E0A4A66A

Item		Detecting Condition	Possible cause
DTC Strategy		• The MAP reading is compared to expected MAP high and low limits based on engine speed & Throttle Position	• Poor connection • Open or short in harness • MAPS • PCM
Enable	Case 1	**Power conditions** • Engine running • Disabling faults present • Power stable conditions present • 1300rpm ≤ Engine speed ≤ 4000rpm • The minimum consecutive time 〉 1.5 s	
	Case 2	**Deceleration conditions** • Engine running • Disabling faults present • Transmission torque convert clutch condition stable • Decel stable conditions present • 1200rpm ≤ Engine speed ≤ 4500rpm • Trottle position 〈 7.9% • Vehicle speed ≥ 30kph • The minimum consecutive time 〉 1.5 s	
Thresh-old	Case 1	**Power Test** • Altitude compensated MAP 〈 Memorized min. MAP data • Altitude compensated MAP 〉 Memorized max. MAP data	
	Case 2	**Deceleration Test** • Altitude compensated MAP 〈 Memorized MAP data	
Diagnosis Time		• Continuous (More than 15 seconds failure for every 32 seconds test)	
MIL On Condition		• No MIL ON (DTC only)	

SPECIFICATION EFAF42F3

Pressure (kPa)	20	35	60	95	101.32
Voltage (V)	0.789	1.382	2.369	3.75	4
Tolerance (V)	± 0.045				

SCHEMATIC DIAGRAM E596AE25

[CIRCUIT DIAGRAM]

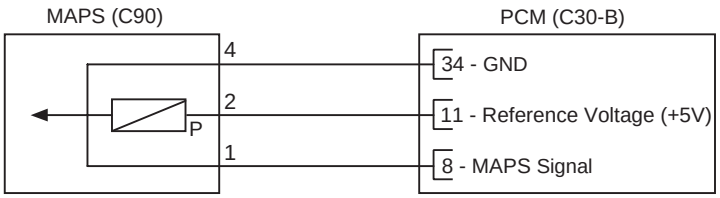

[CONNECTION INFORMATION]

Terminal	Connected to	Function
1	PCM C30-B (8)	MAPS Signal
2	PCM C30-B (11)	Reference Voltage (+5V)
3	-	-
4	PCM C30-B (34)	Sensor ground

[HARNESS CONNECTORS]

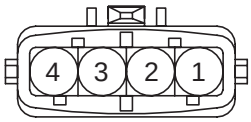

C90

MAPS

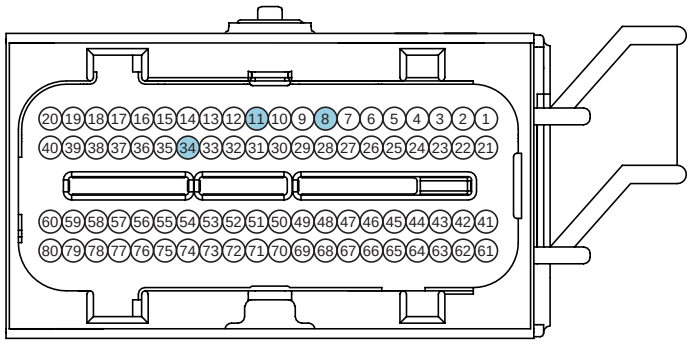

C30-B

PCM

SCMF16105L

SIGNAL WAVEFORM AND DATA E8C9C339

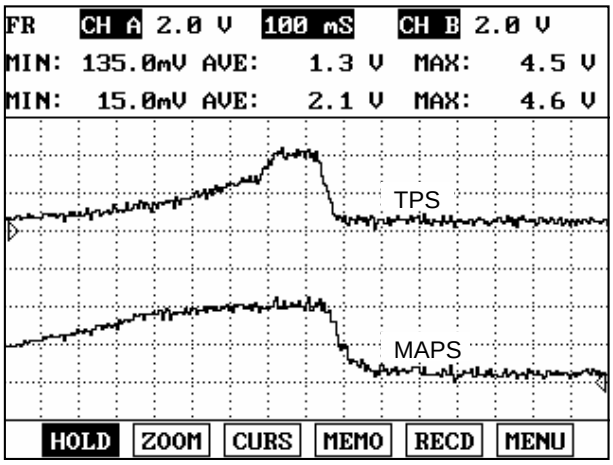

EGRF603O

It is necessary that MAPS should be checked along with TPS. Because The MAP/TPS Rationality Diagnostic is comprised of two tests. A deceleration test is performed to provide a robust method for detection of an altitude compensated MAP value that is too high for the deceleration condition. The second test compares the altitude compensated MAP value to both high and low limits, dependent upon throttle position and engine speed. When the MAP value is out of the threshold range, the MAP/TPS system is determined to be failed.

MONITOR DTC STATUS EEBDFC81

1. Check DTC Status
   1) Connect scantool to Data Link Connector(DLC).
   2) IG "ON".

3) Select "Diagnostic Trouble Codes(DTCs)" mode, and then Press F4(DTAL) to check DTC's information from the DTCs menu

4) Read "DTC Status" parameter.

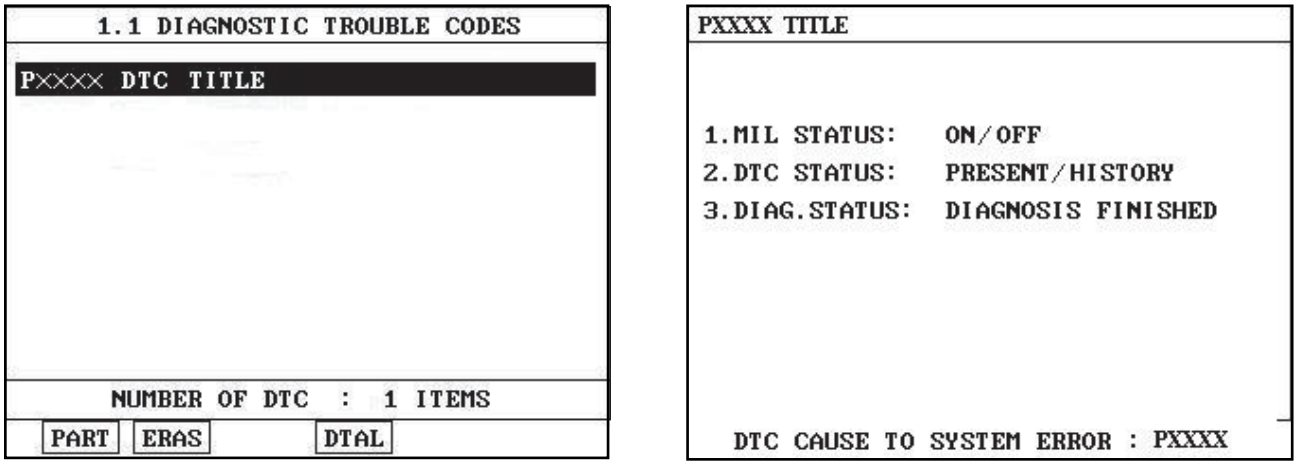

SCMF16159L

5) Is parameter displayed "Present fault"?

YES

▶ Go to "Terminal and connector inspection" procedure.

NO

▶ Fault is intermittent caused by poor contact in the sensor's and/or PCM's connector or was repaired and PCM memory was not cleared. Thoroughly check connectors for looseness, poor connection, ending, corrosion, contamination, deterioration, or damage. Repair or replace as necessary and go to "Verification of Vehicle Repair" procedure.

TERMINAL AND CONNECTOR INSPECTION EC4BF9BB

1. Many malfunctions in the electrical system are caused by poor harness and terminals. Faults can also be caused by interference from other electrical systems, and mechanical or chemical damage.
2. Thoroughly check connectors for looseness, poor connection, bending, corrosion, contamination, deterioration, or damage.
3. Has a problem been found?

YES

▶ Repair as necessary and go to "Verification of Vehicle Repair" procedure

NO

▶ Go to " Power Circuit Inspection " procedure.

POWER CIRCUIT INSPECTION E00C3490

1. IG "OFF" and disconnect MAPS connector.

2. IG "ON" & ENG "OFF"
3. Measure voltage between terminal 2 of MAPS harness connector and chassis ground.

Specification : Approx. 5V

4. Is the measured voltage within specification ?

YES

▶ Go to "Ground circuit inspection" procedure.

NO

▶ Repair open or short to ground in harness and go to "Verification of Vehicle Repair" procedure.

GROUND CIRCUIT INSPECTION E0B574AA

1. IG "OFF" and disconnect MAPS connector.
2. Measure voltage between terminal 2 of MAPS harness connector and chassis ground.
3. Measure voltage between terminal 2 and 4 of MAPS harness connector.

Specification : Voltage difference between Measurement "A" and "B" is below 200mV.

4. Is the measured voltage within specification ?

YES

▶ Go to "Signal Circuit Inspection" procedure.

NO

▶ Repair contact reistance or open in harness and then go to "Verification of Vehicle Repair" procedure.

SIGNAL CIRCUIT INSPECTION E4B8CBED

1. Check voltage
   1) IG "OFF" and disconnect MAPS connector.
   2) IG "ON" & ENG "OFF"
   3) Measure voltage between terminal 1 of MAPS harness connector and chassis ground.

Specification : Approx. 0V

   4) Is the measured voltage within specification ?

YES

▶ Go to "Check open in harness" as follows.

NO

▶ Repair short to battery in harness and go to "Verification of Vehicle Repair" procedure.

2. Check open in harness

1) IG "OFF" and disconnet MAPS and PCM connector.

2) Measure resistance between terminal 1 of MAPS harness connector and terminal C201-2 (8) of PCM harness connector.

Specification : Approx. Below 1 Ω

3) Is the measured resistance within specification ?

YES

▶ Go to "Component Inspection" procedure.

NO

▶ Repair open in harness and go to "Verification of Vehicle Repair" procedure.

COMPONENT INSPECTION EADD83A9

1. Check MAPS Performance

1) IG "OFF" and install scatool.

2) Connect probe to MAPS and TPS to check signal waveform by using oscilloscope function.

3) ENG "ON" and monitor signal waveform during accelleration and decelleration.

SPECIFICATON :

Pressure (kPa)	20	35	60	95	101.32
Voltage (V)	0.789	1.382	2.369	3.75	4
Tolerance (V)	± 0.045				

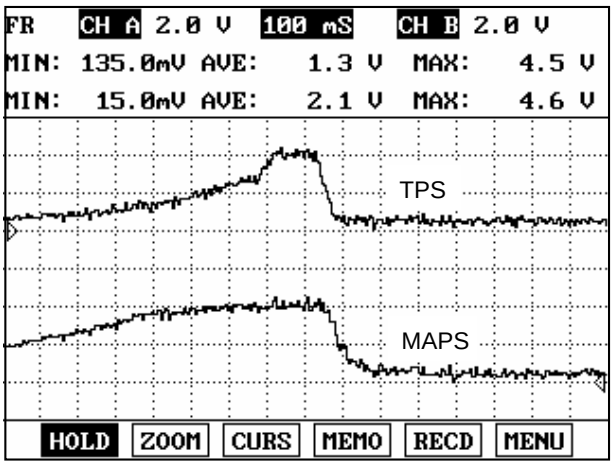

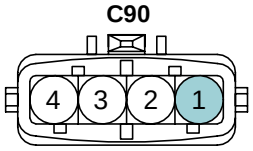

1. MAPS Signal
2. MAPS Power
3. -
4. MAPS Ground

SCMF16197L

4) Is the measured signal waveform(MAP/TPS Rationality) O.K ?

YES

▶ Go to "Check PCM" as follows.

NO

▶ Substitute with a known - good MAPS and check for proper operation. If the problem is corrected, replace MAPS and go to "Verification of Vehicle Repair" procedure.

2. Check PCM

1) IG "OFF" disconnect MAPS connector

2) Connect Scantool and IG "ON" & ENG "OFF"

3) Select simulation function on scantool.

4) Simulate voltage at terminal 1 of MAPS harness connector.

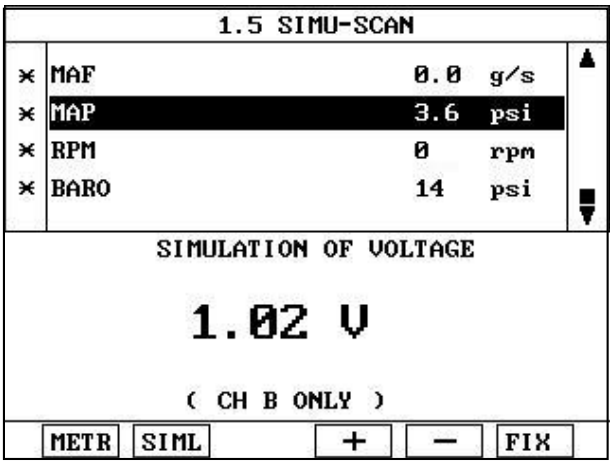

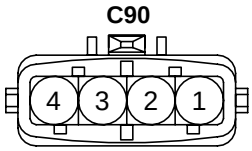

1. MAPS Signal
2. MAPS Power
3. -
4. MAPS Ground

SCMF16198L

5) Does the signal value of MAP sensor change according to simulation voltage ?

YES

▶ Thoroughly check connectors for looseness, poor connection, bending, corrosion, contamination, deterioration, or damage. Repair or replace as necessary and go to "Verification of Vehicle Repair" procedure.

NO

▶ Substitute with a known - good PCM and check for proper operation. If the problem is corrected, replace PCM and go to "Verification of Vehicle Repair" procedure.

NOTE

There is a memory reset function on scantool that can erase optional parts automatically detected and memorized by PCM. Before or after testing PCM on the vehicle, use this function to reuse the PCM on the others

VERIFICATION OF VEHICLE REPAIR E72837AD

After a repair, it is essential to verify that the fault has been corrected.

1. Monitor and record the Freeze Frame Data for the Diagnostic Trouble Code(DTC) which has been diagnosed.
2. Using a Scantool, Clear the DTCs
3. Operate the vehicle within conditions noted in the freeze frame data or enable conditions

4. Monitor that all rediness test have been verified as " Complete "

5. Are any DTCs present ?

YES

▶ Go to the applicable troubleshoooting procedure.

NO

▶ System is performing to specification at this time.

DTC P0107 MANIFOLD ABSOLUTE PRESSURE/BAROMETRIC PRESSURE CIRCUIT LOW INPUT

COMPONENT LOCATION E6BC03D5

Refer to DTC P0106.

GENERAL DESCRIPTION E98C4468

Refer to DTC P0106.

DTC DESCRIPTION EE077925

Checking output signals of MAPS every 5 sec. under detecting condition, if an output signal is below 0.25V for more than 2.5 sec., PCM sets P0107. MIL(Malfuction Indication Lamp) turns on when the malfunction lasts till continuous 2 driving cycle.

DTC DETECTING CONDITION EC82B062

Item		Detecting Condition	Possible cause
DTC Strategy		• This code detects a continuous short to low or open in either the signal circuit or the MAP	• Connecting condition • Open or short to ground in power circuit • Open or short to ground in signal circuit • MAPS • PCM
Enable Condi-tions	Case 1	• No TPS Active Fault Present • Ignition Voltage ≥ 11V • Engine Speed ≤ 1000rpm • Throttle Position ≥ 0%	
	Case 2	• No TPS Active Fault Present • Ignition Voltage ≥ 11V • Engine Speed 〉 1000rpm • Throttle Position ≥ 30%	
Threshold value		• MAP Signal 〈 0.25V	
Diagnosis Time		• Continuous (More than 2.5 seconds failure for every 5 seconds test)	
MIL On Condition		• 2 Driving Cycle	

SPECIFICATION ED30BA2C

Refer to DTC P0106.

SCHEMATIC DIAGRAM E4E6E1E6

Refer to DTC P0106.

SIGNAL WAVEFORM AND DATA EB4EC3FE

Refer to DTC P0106.

MONITOR DTC STATUS E4465B0E

Refer to DTC P0106.

TERMINAL AND CONNECTOR INSPECTION E7BD305E

Refer to DTC P0106.

POWER CIRCUIT INSPECTION E6A16B22

1. IG "OFF"
2. Disconnect MAPS connector.
3. IG "ON"
4. Measure the voltage between terminal 2 of MAPS harness connector and ground.

Specification : Approx. 5V

5. Is the measured voltage within specification ?

YES

▶ Go to "Signal Circuit Inspection" of MAPS.

NO

▶ After repairing open or short to ground in circuits and go to "Verification of Vehicle Repair"

SIGNAL CIRCUIT INSPECTION E3918D36

1. Check short to ground in harness.
   1) IG "OFF"
   2) Disconnect MAPS and PCM connector.
   3) Measure the resistance between terminal 1 of MAPS harness connector and ground.

Specification : Infinite

   4) Is the measured resistance within the specification?

YES

▶ Go to "Check open in the harness" procedure.

NO

▶ After repairing short to ground in harness and go to "Verification of Vehicle Repair"

2. Check open in the harness
   1) IG "OFF"
   2) Disconnect MAPS and PCM connector.

3) Measure the resistance between terminal 1 of MAPS harness connector and terminal C30-B (8) of PCM harness connector

Specification : Approx. below 1 Ω

4) Is the measured resistance within the specification?

YES

▶ Go to "Component Inspection" procedure.

NO

▶ Repair open in the harness and go to "Verification of Vehicle Repair".

COMPONENT INSPECTION E8D15C53

1. MAPS performance test

1) IG "OFF"

2) Connect scantool to Data Link Connector(DLC) and selest "Oscilloscope" then, connect probes to output signal lines of MAPS and TPS.Turn engine "ON" and monitor the waveforms accelerating or decelerating

3) ENG "ON" and monitor signal waveform during accelleration and decelleration.

SPECIFICATON :

Pressure (kPa)	20	35	60	95	101.32
Voltage (V)	0.789	1.382	2.369	3.75	4
Tolerance (V)	± 0.045				

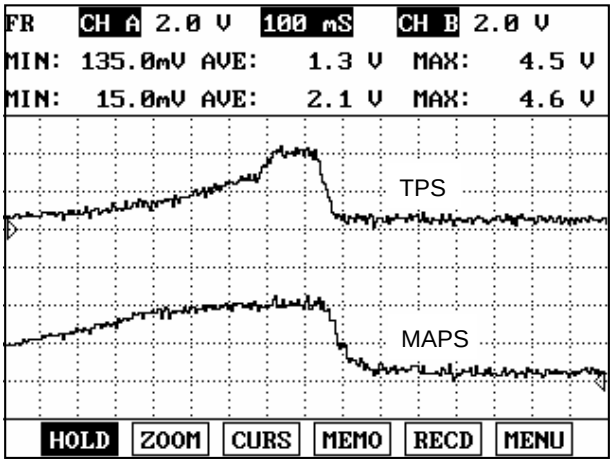

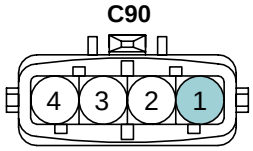

1. MAPS Signal
2. MAPS Power
3. -
4. MAPS Ground

SCMF16197L

4) Is the waveform displayed correctly?(Compare the response time of TPS and MAPS)

YES

▶ Go to "Check PCM".

NO

▶ After replacing MAPS with new one, if it operates normally, replace MAPS and go to "Verification of Vehicle Repair".

2. Check PCM

1) IG "OFF" disconnect MAPS connector

2) Connect Scantool and IG "ON" & ENG "OFF"

3) Select simulation function on scantool.

4) Simulate voltage at terminal 1 of MAPS harness connector.

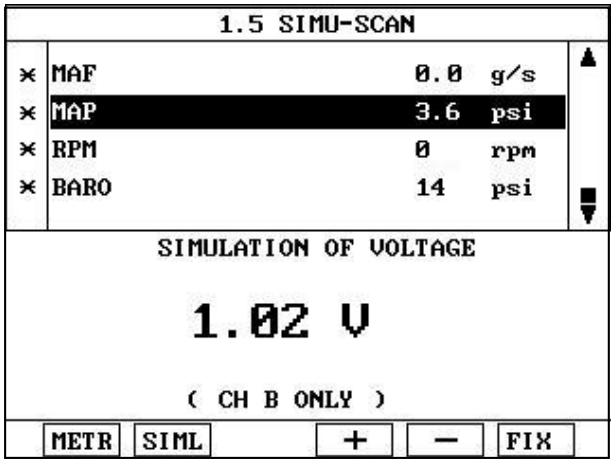

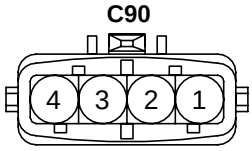

1. MAPS Signal
2. MAPS Power
3. -
4. MAPS Ground

SCMF16198L

5) Does the output voltage response to the change of signal by simulation?

YES

▶ Thoroughly check connectors for looseness, poor connection, bending, corrosion, contamination, deterioration, or damage. Repair or replace if necessary and go to "Verification of Vehicle Repair" procedure

NO

▶ Substitute with a known - good PCM and check for proper operation. If the problem is corrected, replace PCM and go to "Verification of Vehicle Repair" procedure.

NOTE

There is a memory reset function on scantool that can erase optional parts automatically detected and memorized by PCM.Before or after testing PCM on the vehicle, use this function to reuse the PCM on the others

VERIFICATION OF VEHICLE REPAIR E9C5B29D

Refer to DTC P0106.

DTC P0108 MANIFOLD ABSOLUTE PRESSURE/BAROMETRIC PRESSURE CIRCUIT HIGH INPUT

COMPONENT LOCATION E6C6809E

Refer to DTC P0106.

GENERAL DESCRIPTION EC7E4A76

Refer to DTC P0106.

DTC DESCRIPTION E7F708B4

Checking output signals of MAPS every 5 sec. under detecting condition, if an output signal is above 4.5V for more than 2.5 sec., PCM sets P0108. MIL(Malfunction Indication Lamp) turns on when the malfunction lasts till consecutive 2 driving cycle.

DTC DETECTING CONDITION E4CDE73D

Item		Detecting Condition	Possible cause
DTC Strategy		• This code detects a continuous short to high in either the signal circuit or the MAP sensor	• Connecting condition • Short to battery in Signal Circuit • Open in Ground Circuit • Faulty MAPS • Faulty PCM
Enable Condi-tions	Case 1	• No TPS Active Fault Present • Engine Running Time 〉 10sec. • Engine Speed ≤ 2500rpm • Throttle Position ≤ 30%	
	Case 2	• No TPS Active Fault Present • Engine Running Time 〉 10sec. • Engine Speed 〉 2500rpm • Throttle Position ≤ 40%	
Threshold value		• MAP Signal 〉 4.5V	
Diagnosis Time		• Continuous (More than 2.5 seconds failure for every 5 seconds test)	
MIL On Condition		• 2 Driving Cycle	

SPECIFICATION EA6ABE01

Refer to DTC P0106.

SCHEMATIC DIAGRAM EC026FEC

Refer to DTC P0106.

SIGNAL WAVEFORM AND DATA E311481A

Refer to DTC P0106.

MONITOR DTC STATUS EEDDA889

Refer to DTC P0106.

TERMINAL AND CONNECTOR INSPECTION E6706E2D

Refer to DTC P0106.

POWER CIRCUIT INSPECTION EFB51A55

1. IG "OFF"
2. Disconnect MAPS connector
3. IG "ON"
4. Measure the voltage between terminal 2 of MAPS harness connector and ground.

Specification : Approx. 5V

5. Is the measured voltage within specification ?

YES

▶ Go to "Ground Circuit Inspection" procedure.

NO

▶ If the voltage is over 5.1V, check short to battery in harness.
▶ Repair or replace as necessary and then, go to "Verification of Vehicle Repair" procedure.

GROUND CIRCUIT INSPECTION E66AA21D

1. IG "OFF".
2. Disconnect MAPS connector.
3. IG "ON" & ENG "OFF"
4. Measure the voltage between terminal 2 of MAPS harness connector and chassis ground.
5. Measure the voltage between terminal 2 and 4 of MAPS harness connector.

Specification : "A" - "B" = : Approx. below 200mV

6. Is the measured voltage within specification ?

YES

▶ Go to "Signal Circuit Inspection" procedure.

NO

▶ Repair contact reistance or open in harness and then go to "Verification of Vehicle Repair" procedure.

SIGNAL CIRCUIT INSPECTION E772F55B

1. IG "OFF"
2. Disconnect MAPS and PCM connector.
3. Measure resistance between terminal 1 and 2 of MAPS harness connector.

Specification : Infinite

4. Is the measured resistance within specification ?

YES

▶ Go to "Component Inspection" procedure.

NO

▶ Repair short to battery in harness and then go to "Verification of Vehicle Repair" procedure.

COMPONENT INSPECTION E7F6EABB

1. MAPS performance test

   1) IG "OFF"

   2) Connect scantool to Data Link Connector(DLC) and select "Oscilloscope" then, connect probes to output signal lines of MAPS and TPS.Turn engine "ON" and monitor the waveforms accelerating or decelerating

   3) ENG "ON" and monitor signal waveform during accelleration and decelleration.

SPECIFICATON :

Pressure (kPa)	20	35	60	95	101.32
Voltage (V)	0.789	1.382	2.369	3.75	4
Tolerance (V)	± 0.045				

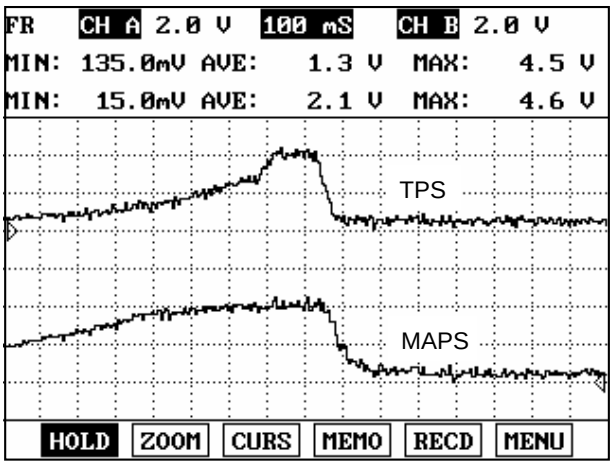

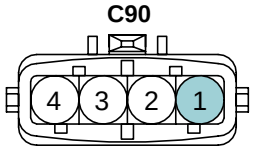

1. MAPS Signal
2. MAPS Power
3. -
4. MAPS Ground

SCMF16197L

   4) Is the waveform displayed correctly?(Compare the response time of TPS and MAPS)

YES

▶ Go to "Check PCM".

NO

▶ After replacing MAPS with new one, if it operates normally, replace MAPS and go to "Verification of Vehicle Repair".

2. Check PCM

1) IG "OFF" disconnect MAPS connector

2) Connect Scantool and IG "ON" & ENG "OFF"

3) Select simulation function on scantool.

4) Simulate voltage at terminal 1 of MAPS harness connector.

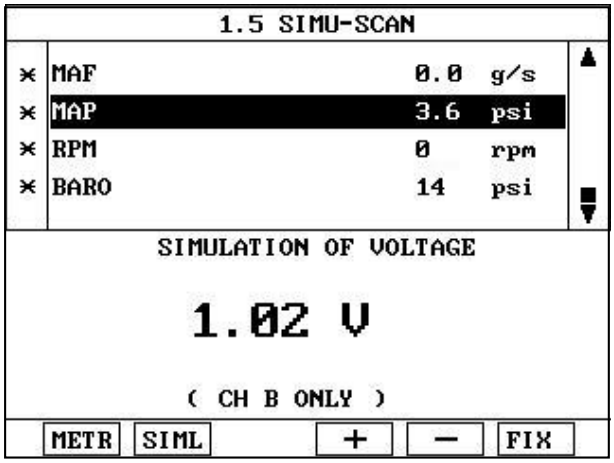

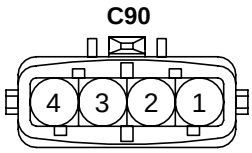

1. MAPS Signal
2. MAPS Power
3. -
4. MAPS Ground

SCMF16198L

5) Does the output voltage response to the change of signal by simulation?

YES

▶ Thoroughly check connectors for looseness, poor connection, bending, corrosion, contamination, deterioration, or damage. Repair or replace if necessary and go to "Verification of Vehicle Repair" procedure

NO

▶ Substitute with a known - good PCM and check for proper operation. If the problem is corrected, replace PCM and go to "Verification of Vehicle Repair" procedure.

NOTE

There is a memory reset function on scantool that can erase optional parts automatically detected and memorized by PCM.Before or after testing PCM on the vehicle, use this function to reuse the PCM on the others

VERIFICATION OF VEHICLE REPAIR E359DA4A

Refer to DTC P0106.

DTC P0110 INTAKE AIR TEMPERATURE SENSOR1 CIRCUIT

COMPONENT LOCATION E2939C87

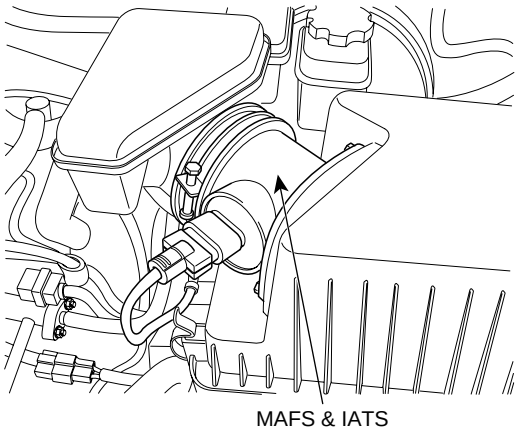

SCMF16185L

GENERAL DESCRIPTION E9DAB32E

The Intake Air Temperature Sensor (IATS) is installed into the Mass Air Flow Sensor (MAFS). The IATS uses a thermistor whose resistance changes with the temperature. The electrical resistance of the IATS decreases as the temperature increases, and increases as the temperature decreases. The 5 V power source in the ECM is supplied to the IATS via a resistor in the ECM. That is, the resistor in the ECM and the thermistor in the IATS are connected in series. When the resistance value of the thermistor in IATS changes according to the intake air temperature, the signal voltage also changes. Using this signal, the information of the intake air temperature, the ECM corrects basic fuel injection duration and ignition timing.

DTC DESCRIPTION EACF4291

PCM monitors difference between MAX. and MIN IATS in order to detect movement in IATS therough Start Test and Drive Test while enable condition is met. If PCM detects intake air temperature does not change, PCM determines that a fault exists and a DTC is stored.

DTC DETECTING CONDITION E7D8BB2A

Item		Detecting Condition	Possible cause
DTC Strategy	Case 1	• Start Test: Monitors the difference between max and min IAT in order to detect movement in IAT for a certain time.	• Poor connection • Open or short in harness • IATS • PCM
	Case 2	• Drive test: Performs the max and min delta check while driving under load for a length of time followed by an idle for a certain time.	
Enable Conditions		• Engine soaked time 〉 360min • Engine Running State • No disabling fault present • IAT stored previous trip • No IAT Tests pending	
Thresh old value	Case 1	• Max IAT - Min IAT ≤ 3℃ • Start Test Counter ≥ 120	
	Case 2	• Max IAT - Min IAT ≤ 3℃ • Idle Test Counter ≥ 120	
MIL On Condition		• No MIL ON (DTC only)	

SPECIFICATION E11F4E69

Temp. (℃/℉)	Resistance (kΩ)	Temp. (℃/℉)	Resistance (kΩ)
-40(-40)	95.95 ~ 105.78	20(68)	3.42 ~ 3.61
-20(-4)	27.4 ~ 29.77	40(104)	1.43 ~ 1.5
0(32)	9.08 ~ 9.72	60(140)	0.66 ~ 0.69
10(50)	5.49 ~ 5.83	80(176)	0.33 ~ 0.34

SCHEMATIC DIAGRAM E383B48B

[CIRCUIT DIAGRAM]

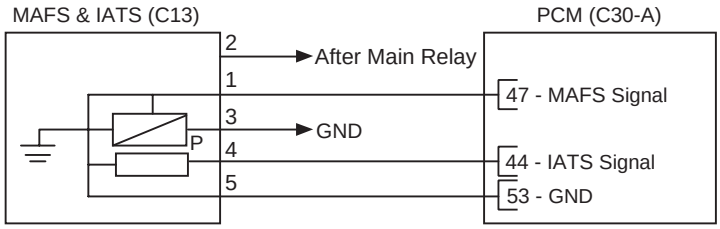

[CONNECTION INFORMATION]

Terminal	Connected to	Function
1	PCM C30-A (47)	MAFS Signal
2	Main Relay	Battery Voltage (B+)
3	Chassis Ground	Ground
4	PCM C30-A (44)	IATS Signal
5	PCM C30-A (53)	Sensor Ground

[HARNESS CONNECTORS]

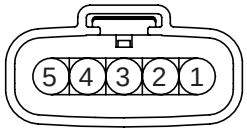

C13

MAFS & IATS

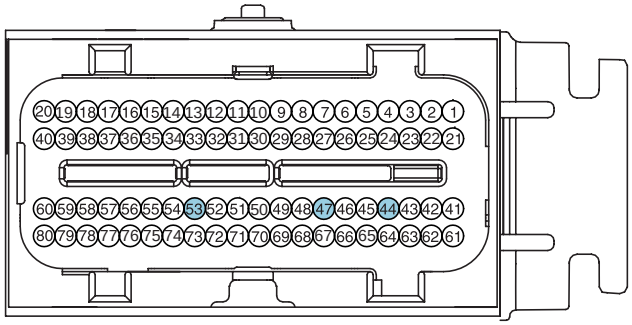

C30-A

PCM

SCMF16104L

SIGNAL WAVEFORM AND DATA E74A022E

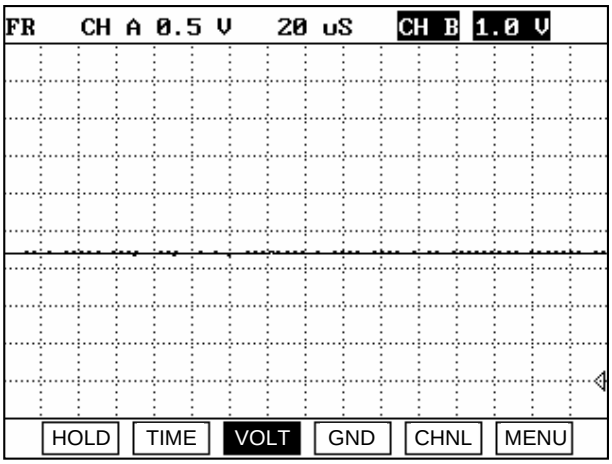

EGRF604E

The output signals of IATS & ECTS change smoothly without any rapid changes. Those have almost same characteristic signal during the early period after start. It means that the temperatures of intake air and engine coolant are depended on the temperature of atmosphere. Meanwhile, during the warming up, the output signal of ECTS is going up increasingly. but, the output signal of IATS changes a little bit. even it may not change almost. It means that the heat of engine does not affect on the temperature of intake air.

MONITOR DTC STATUS EAE59C54

1. Check DTC Status

    1) Connect scantool to Data Link Connector(DLC).

2) IG "ON".

3) Select "Diagnostic Trouble Codes(DTCs)" mode, and then Press F4(DTAL) to check DTC's information from the DTCs menu

4) Read "DTC Status" parameter.

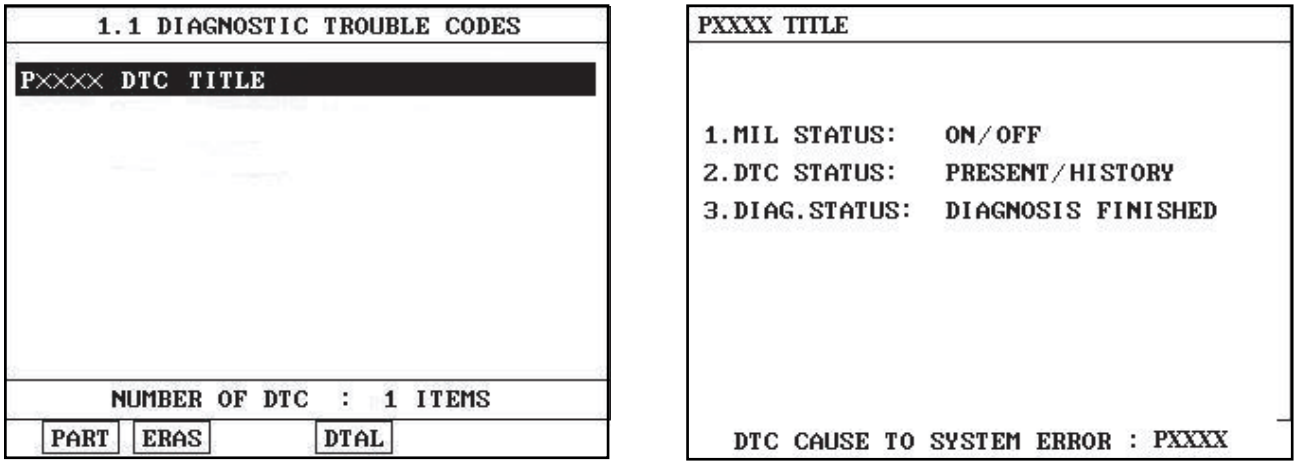

SCMF16159L

5) Is parameter displayed "Present fault"?

YES

▶ Go to "Terminal and connector inspection" procedure.

NO

▶ Fault is intermittent caused by poor contact in the sensor's and/or PCM's connector or was repaired and PCM memory was not cleared. Thoroughly check connectors for looseness, poor connection, ending, corrosion, contamination, deterioration, or damage. Repair or replace as necessary and go to "Verification of Vehicle Repair" procedure.

TERMINAL AND CONNECTOR INSPECTION EDAB98BB

1. Many malfunctions in the electrical system are caused by poor harness and terminals. Faults can also be caused by interference from other electrical systems, and mechanical or chemical damage.

2. Thoroughly check connectors for looseness, poor connection, bending, corrosion, contamination, deterioration, or damage.

3. Has a problem been found ?

YES

▶ Repair as necessary and go to "Verification of Vehicle Repair" procedure.

NO

▶ Go to " Signal Circuit Inspection " procedure.

SIGNAL CIRCUIT INSPECTION EEB2E54B

1. IG "OFF" and disconnect IATS connector.
2. IG "ON" and ENG "OFF"
3. Measure voltage between terminal 4 of IATS harness connector and chassis ground.

Specification : Approx. 5V

4. Is the measured voltage within specification ?

YES

▶ Go to "Ground Circuit Inspection" procedure.

NO

▶ Repair open or short to ground in harness and go to "Verification of Vehicle Repair" procedure.

GROUND CIRCUIT INSPECTION EFF73DC7

1. IG "OFF" and disconnect IATS connector.
2. Measure voltage terminal 4 of IATS harness connector and chassis ground.
3. Measure voltage terminal 4 and 5 of IATS harness connector.

Specification : Voltage difference between measurement "A" and "B" is below 200mV.

4. Is the measured voltage within specification ?

YES

▶ Go to "Component Inspection" procedure.

NO

▶ Repair contact resistance or open in harness and go to "Verification of Vehicle Repair" procedure.

COMPONENT INSPECTION EF987E04

1. Check resistance of IATS
   1) IG "OFF" and disconnect IATS connector.
   2) Measure resistance between terminal 4 and 5 of IATS connector.(Component Side)

SPECIFICATON :

Temp. (℃/℉)	Resistance (kΩ)	Temp. (℃/℉)	Resistance (kΩ)
-40(-40)	95.95 ~ 105.78	20(68)	3.42 ~ 3.61
-20(-4)	27.4 ~ 29.77	40(104)	1.43 ~ 1.5
0(32)	9.08 ~ 9.72	60(140)	0.66 ~ 0.69
10(50)	5.49 ~ 5.83	80(176)	0.33 ~ 0.34

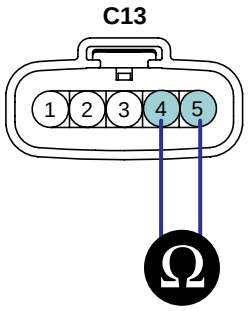

1. MAFS Signal
2. MAFS Power
3. MAFS Ground
4. IATS Signal
5. IATS Ground

SCMF16204L

3) Is the measured resistance within specification ?

YES

▶ Go to "Check PCM" as follows.

NO

▶ Substitute with a known - good IATS and check for proper operation. If the problem is corrected, replace IATS and go to "Verification of Vehicle Repair" procedure.

2. Check PCM

1) IG "OFF" and connect scantool.

2) Disconnect IATS connector and connect probe to terminal 4 of IATS harness connector.

3) IG "ON" and ENG "OFF" and simulation Function on scantool.

4) Simulate voltage at terminal 4 of IATS harness connector.

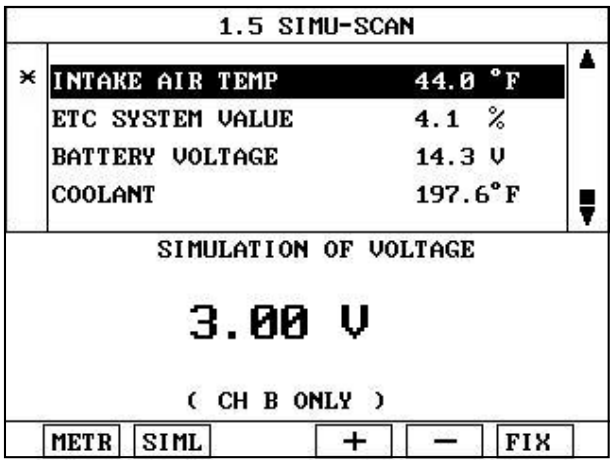

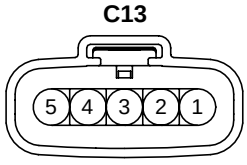

1. MAFS Signal
2. MAFS Power
3. MAFS Ground
4. IATS Signal
5. IATS Ground

SCMF16205L

5) Does the signal value of IAT sensor change according to simulation voltage ?

YES

▶ Thoroughly check connectors for looseness, poor connection, bending, corrosion, contamination, deterioration, or damage. Repair or replace as necessary and go to "Verification of Vehicle Repair" procedure.

NO

▶ Substitute with a known - good PCM and check for proper operation. If the problem is corrected, replace PCM and go to "Verification of Vehicle Repair" procedure.

NOTE

There is a memory reset function on scantool that can erase optional parts automatically detected and memorized by PCM. Before or after testing PCM on the vehicle, use this function to reuse the PCM on the others.

VERIFICATION OF VEHICLE REPAIR EA2B60BB

After a repair, it is essential to verify that the fault has been corrected.

1. Monitor and record the Freeze Frame Data for the Diagnostic Trouble Code(DTC) which has been diagnosed.
2. Using a Scantool, Clear the DTCs
3. Operate the vehicle within conditions noted in the freeze frame data or enable conditions
4. Monitor that all rediness test have been verified as " Complete "
5. Are any DTCs present ?

YES

▶ Go to the applicable troubleshoooting procedure.

NO

▶ System is performing to specification at this time.

DTC P0111 INTAKE AIR TEMPERATURE SENSOR1 CIRCUIT RANGE/PERFORMANCE

COMPONENT LOCATION EE5B6B5D

Refer to DTC P0110.

GENERAL DESCRIPTION E2159E6C

Refer to DTC P0110.

DTC DESCRIPTION EEA95955

PCM monitors difference between the startup coolant and IAT values. If the difference between the startup coolant and startup IAT exceeds a maximum allowed value, PCM determines that a fault exists and a DTC is stored.

DTC DETECTING CONDITION E88201A7

Item		Detection condition	Possible cause
DTC Strategy	Case 1	• Skew Low Test: Monitors the difference between the startup coolant and IAT values	• Poor Connection • Open or short in harness • IATS • PCM
	Case 2	• Skew High Test: Monitors the difference between the startup IAT and coolant values	
Enable-Condi-tions	Case 1	• Engine soaked time ≥ 360min • Engine running state • No disabling faults present • IAT stored previous trip • IAT Skewed Test Not Complete • Startup Coolant Temperature 〉 -20°C • Airflow 〉 15 g/s • Vehicle speed 〉 40kph	
	Case 2	• Engine soaked time ≥ 360min • Engine running state • No disabling faults present • IAT stored previous trip • IAT Skewed Test Not Complete • Airflow 〉 15 g/s • Vehicle speed 〉 40kph	
Thresh old value	Case 1	• Startup Coolant - Startup IAT ≥ 30°C	
	Case 2	• Startup IAT - Startup Coolant ≥ 20°C	
Diagnosis Time		• Continuous (More than 1.25 second failure)	
MIL On Condition		• No MIL ON (DTC only)	

SPECIFICATION E59D6FB6

Refer to DTC P0110.

SCHEMATIC DIAGRAM E0C08B0E

Refer to DTC P0110.

SIGNAL WAVEFORM AND DATA EEB56960

Refer to DTC P0110.

MONITOR DTC STATUS EBDF8E0D

Refer to DTC P0110.

TERMINAL AND CONNECTOR INSPECTION E978E804

Refer to DTC P0110.

SIGNAL CIRCUIT INSPECTION E7CB410B

1. IG "OFF" and disconnect IATS connector.
2. IG "ON" and ENG "OFF"
3. Measure voltage between terminal 4 of IATS harness connector and chassis ground.

Specification : Approx. 5V

4. Is the measured voltage within specification ?

YES

- ▶ Check short to battery in harness.
- ▶ If O.K, go to "Ground Circuit Inspection" procedure.
- ▶ If N.G, repair or replace as necessary and then go to "Verification of Vehicle Repair" procedure.

NO

- ▶ Repair open or short to ground in harness and go to "Verification of Vehicle Repair" procedure.

GROUND CIRCUIT INSPECTION ED483916

1. IG "OFF" and disconnect IATS connector.
2. Measure voltage terminal 4 of IATS harness connector and chassis ground.
3. Measure voltage terminal 4 and 5 of IATS harness connector.

Specification : Voltage difference between measurement "A" and "B" is below 200mV.

4. Is the measured voltage within specification ?

YES

- ▶ Go to "Component Inspection" procedure.

NO

▶ Repair contact resistance or open in harness and go to "Verification of Vehicle Repair" procedure.

COMPONENT INSPECTION E44DDF98

1. Check resistance of IATS

   1) IG "OFF" and disconnect IATS connector.

   2) Measure resistance between terminal 4 and 5 of IATS connector.(Component Side)

SPECIFICATON :

Temp. (℃/℉)	Resistance (kΩ)	Temp. (℃/℉)	Resistance (kΩ)
-40(-40)	95.95 ~ 105.78	20(68)	3.42 ~ 3.61
-20(-4)	27.4 ~ 29.77	40(104)	1.43 ~ 1.5
0(32)	9.08 ~ 9.72	60(140)	0.66 ~ 0.69
10(50)	5.49 ~ 5.83	80(176)	0.33 ~ 0.34

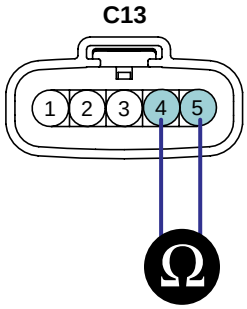

1. MAFS Signal
2. MAFS Power
3. MAFS Ground
4. IATS Signal
5. IATS Ground

SCMF16204L

   3) Is the measured resistance within specification ?

YES

▶ Go to "Check PCM" as follows.

NO

▶ Substitute with a known - good IATS and check for proper operation. If the problem is corrected, replace IATS and go to "Verification of Vehicle Repair" procedure.

2. Check PCM

   1) IG "OFF" and connect scantool.

   2) Disconnect IATS connector and connect probe to terminal 4 of IATS harness connector.

   3) IG "ON" and ENG "OFF" and simulation Function on scantool.

   4) Simulate voltage at terminal 4 of IATS harness connector.

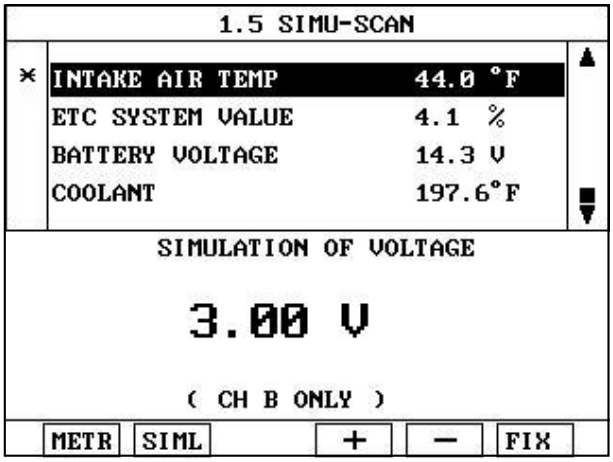

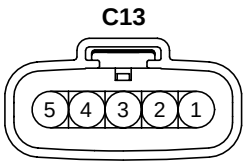

1. MAFS Signal
2. MAFS Power
3. MAFS Ground
4. IATS Signal
5. IATS Ground

SCMF16205L

5) Does the signal value of IAT sensor change according to simulation voltage ?

YES

▶ Thoroughly check connectors for looseness, poor connection, bending, corrosion, contamination, deterioration, or damage. Repair or replace as necessary and go to "Verification of Vehicle Repair" procedure.

NO

▶ Substitute with a known - good PCM and check for proper operation. If the problem is corrected, replace PCM and go to "Verification of Vehicle Repair" procedure.

NOTE

There is a memory reset function on scantool that can erase optional parts automatically detected and memorized by PCM. Before or after testing PCM on the vehicle, use this function to reuse the PCM on the others.

VERIFICATION OF VEHICLE REPAIR EFA6A207

Refer to DTC P0110.

DTC P0112 INTAKE AIR TEMPERATURE SENSOR1 CIRCUIT LOW INPUT

COMPONENT LOCATION EC387A43

Refer to DTC P0110.

GENERAL DESCRIPTION EA0589DC

Refer to DTC P0110.

DTC DESCRIPTION E3FD8660

Checking output signals of IATS every 20 sec. under detecting condition, if an ouput signal is below 0.1V for more than 10 sec., PCM sets P0112. MIL(Malfunction Indication Lamp) turns on when the malfunction lasts till consecutive 2 driving cycle.

DTC DETECTING CONDITION E698C5D0

Item		Detecting Condition	Possible Cause
DTC Strategy		• This code detects a continuous short to ground in either the signal circuit or the sensor	• Poor connection • Short to ground in harness • IATS • PCM
Enable-Condi-tions	Case 1	• Engine running state • No Vehicle speed sensor fault • Vehicle speed 〉 50kph(30mph)	
	Case 2	• Engine running time 〉 120 sec. or Time from IG "OFF" to IG "ON" 〉 360 min.	
Threshold value		• Intake air temperature sensor's voltage 〈 0.1V	
Diagnosis Time		• Continuous (More than 10 seconds failure for every 20 seconds test)	
MIL On Condition		• 2 Driving Cycles	

SPECIFICATION EAFF2A60

Refer to DTC P0110.

SCHEMATIC DIAGRAM E2EA293C

Refer to DTC P0110.

SIGNAL WAVEFORM AND DATA E05C8192

Refer to DTC P0110.

MONITOR DTC STATUS E72AC1B9

Refer to DTC P0110.

TERMINAL AND CONNECTOR INSPECTION E056E9B4

Refer to DTC P0110.

SIGNAL CIRCUIT INSPECTION E66614F6

1. Check voltage

   1) IG "OFF" and disconnect IATS connector.

   2) IG "ON" and ENG "OFF"

   3) Measure voltage between terminal 4 of IATS harness connector and chassis ground.

Specification : Approx. 5V

   4) Is the measured voltage within specification ?

   YES

   ▶ Go to "Component Inspection" procedure.

   NO

   ▶ Go to " Check short to ground in harness" procedure.

2. Check short to ground in harness

   1) IG "OFF" and disconnect IATS connector and PCM connector.

   2) Measure resistance between terminal 4 of IATS harness connector and chassis ground.

   3) Measure resistance between terminals 4 and 5 of IATS harness connector.

   4) Measure resistance between terminals 4 and 3 of IATS harness connector.

Specification : Infinite

   5) Is the measured resistance within specification?

   YES

   ▶ Go to "Component inspection" procedure.

   NO

   ▶ Repair short to ground in harness and go to "Verification of Vehicle Repair" procedure.

COMPONENT INSPECTION E421DC2E

1. Check IATS

   1) IG "OFF" and disconnect IATS connector.

   2) Measure resistance between teminals 4 and 5 of IATS connector.(Component side)

SPECIFICATON :

Temp. (℃/℉)	Resistance (kΩ)	Temp. (℃/℉)	Resistance (kΩ)
-40(-40)	95.95 ~ 105.78	20(68)	3.42 ~ 3.61
-20(-4)	27.4 ~ 29.77	40(104)	1.43 ~ 1.5
0(32)	9.08 ~ 9.72	60(140)	0.66 ~ 0.69
10(50)	5.49 ~ 5.83	80(176)	0.33 ~ 0.34

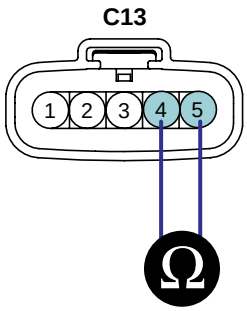

1. MAFS Signal
2. MAFS Power
3. MAFS Ground
4. IATS Signal
5. IATS Ground

SCMF16204L

3) Is the measured resistance within specification ?

YES

▶ Go to "Check PCM" as follows.

NO

▶ Substitute with a known - good IATS and check for proper operation. If the problem is corrected, replace IATS and go to "Verification of Vehicle Repair" procedure.

2. Check PCM

1) IG "OFF" and connect scantool.

2) Disconnect IATS connector and connect probe to terminal 4 of IATS harness connector.

3) IG "ON" and ENG "OFF" and simulation Function on scantool.

4) Simulate voltage at terminal 4 of IATS harness connector.

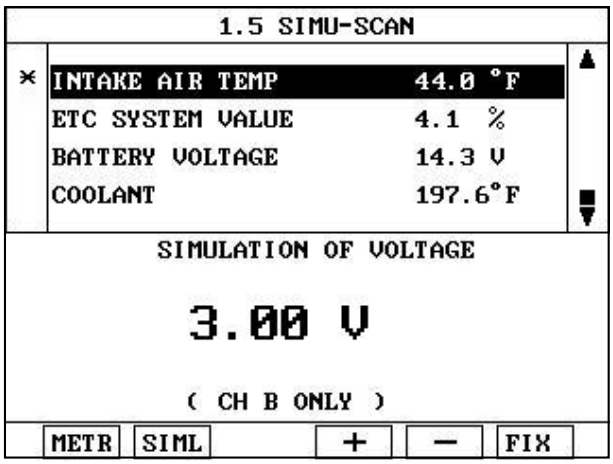

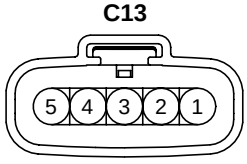

1. MAFS Signal
2. MAFS Power
3. MAFS Ground
4. IATS Signal
5. IATS Ground

SCMF16205L

5) Does the signal value of IAT sensor change according to simulation voltage ?

YES

▶ Thoroughly check connectors for looseness, poor connection, bending, corrosion, contamination, deterioration, or damage. Repair or replace as necessary and go to "Verification of Vehicle Repair" procedure.

NO

▶ Substitute with a known - good PCM and check for proper operation. If the problem is corrected, replace PCM and go to "Verification of Vehicle Repair" procedure.

NOTE

There is a memory reset function on scantool that can erase optional parts automatically detected and memorized by PCM. Before or after testing PCM on the vehicle, use this function to reuse the PCM on the others.

VERIFICATION OF VEHICLE REPAIR E876B71E

Refer to DTC P0110.

DTC P0113 INTAKE AIR TEMPERATURE SENSOR1 CIRCUIT HIGH INPUT

COMPONENT LOCATION E3BEBEF2

Refer to DTC P0110.

GENERAL DESCRIPTION E577857C

Refer to DTC P0110.

DTC DESCRIPTION ECA49F73

Checking output signals of IATS every 20 sec. under detecting condition, if an ouput signal is over 4.9V for more than 10 sec., PCM sets P0113. MIL(Malfunction Indication Lamp) turns on when the malfunction lasts till consecutive 2 driving cycle.

DTC DETECTING CONDITION E3A9AE8F

Item	Detecting Condition	Possible cause
DTC Strategy	• This code detects a continuous short to high in either the signal circuit or the sensor	• Poor connection • Open or short to battery in harness • Open in ground harness • IATS • PCM
Enable Conditions	• No vehicle speed sensor fault • No ECTS fault • No MAFS fault • Vehicle speed 〈 25 kph (9.3 mph) • Intake airflow 〈 15 g/s • 50°C (122°F) and Engine running time 〉 120 s or Time from IG "OFF" to IG "ON" 〉 360 min and ECT 〉 -10°C (14°F) • Engine running state	
Threshold value	• Intake air temperature sensor's voltage 〉 4.9V	
Diagnosis Time	• Continuous (More than 10 seconds failure for every 20 seconds test)	
MIL On Condition	• 2 Driving Cycles	

SPECIFICATION EDD6F718

Refer to DTC P0110.

SCHEMATIC DIAGRAM E41DAC06

Refer to DTC P0110.

SIGNAL WAVEFORM AND DATA E83E665B

Refer to DTC P0110.

MONITOR DTC STATUS EFCD2818

Refer to DTC P0110.

TERMINAL AND CONNECTOR INSPECTION E570B72D

Refer to DTC P0110.

SIGNAL CIRCUIT INSPECTION E1D80CD4

1. Check voltage

   1) IG "OFF" and disconnect IATS connector.

   2) IG "ON" and ENG "OFF"

   3) Measure voltage between terminal 4 of IATS harness connector and chassis ground.

Specification : Approx. 5V

   4) Is the measured voltage within specification ?

   YES

   ▶ Go to "Ground Circuit Inspection" procedure.

   NO

   ▶ If the voltage is 0V, go to "Check open in harness" as follows. If the voltage is more than 5.1V, go to "Check short to battery in harness" as follows.

2. Check short to battery in harness

   1) IG "OFF" and disconnect IATS connector and PCM connector.

   2) Measure resistance between terminals 2 and 4 of IATS harness connector.

   3) Measure resistance between terminals 1 and 4 of IATS harness connector.

Specification : Infinite

   4) Is the measured resistance within specification?

   YES

   ▶ Go to "Component Inspection" procedure.

   NO

   ▶ Repair short to battery in harness and go to "Verification of Vehicle Repair" procedure.

3. Check open in harness

   1) IG "OFF" and disconnect IATS connector and PCM connctor.

   2) Measure resistance between terminal 4 of IATS harness connector and C30-A (44) of PCM harness connector.

Specification : below 1Ω

   3) Is the measured resistance within specification?

YES

▶ Go to "Ground Circuit Inspection" procedure.

NO

▶ Repair open in harness and go to "Verification of Vehicle Repair" procedure.

GROUND CIRCUIT INSPECTION E9C2613F

1. IG "OFF" and disconnect IATS connector.
2. Measure voltage between terminal 4 of IATS harness connector and chassis ground.
3. Measure voltage between terminals 4 and 5 of IATS harness connector.

Specification : Voltage difference between measurement "A" and "B" is below 200mV.

4. Is the measured voltage within specification ?

YES

▶ Go to "Component Inspection" procedure.

NO

▶ Repair contact resistance or open in harness and go to "Verification of Vehicle Repair" procedure.

COMPONENT INSPECTION E544C3E7

1. Check IATS
   1) IG "OFF" and disconnect IATS connector.
   2) Measure resistance between teminals 4 and 5 of IATS connector.(Component side)

SPECIFICATON :

Temp. (℃/℉)	Resistance (kΩ)	Temp. (℃/℉)	Resistance (kΩ)
-40(-40)	95.95 ~ 105.78	20(68)	3.42 ~ 3.61
-20(-4)	27.4 ~ 29.77	40(104)	1.43 ~ 1.5
0(32)	9.08 ~ 9.72	60(140)	0.66 ~ 0.69
10(50)	5.49 ~ 5.83	80(176)	0.33 ~ 0.34

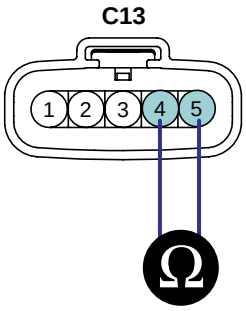

1. MAFS Signal
2. MAFS Power
3. MAFS Ground
4. IATS Signal
5. IATS Ground

SCMF16204L

3) Is the measured resistance within specification ?

YES

▶ Go to "Check PCM" as follows.

NO

▶ Substitute with a known - good IATS and check for proper operation. If the problem is corrected, replace IATS and go to "Verification of Vehicle Repair" procedure.

2. Check PCM

1) IG "OFF" and connect scantool.

2) Disconnect IATS connector and connect probe to terminal 4 of IATS harness connector.

3) IG "ON" and ENG "OFF" and simulation Function on scantool.

4) Simulate voltage at terminal 4 of IATS harness connector.

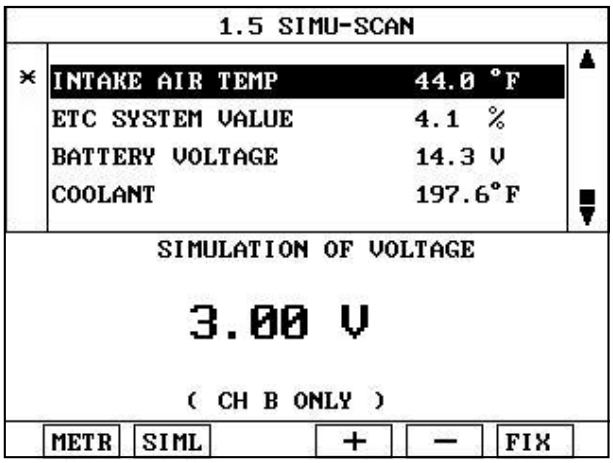

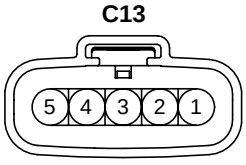

1. MAFS Signal
2. MAFS Power
3. MAFS Ground
4. IATS Signal
5. IATS Ground

SCMF16205L

5) Does the signal value of IAT sensor change according to simulation voltage ?

YES

▶ Thoroughly check connectors for looseness, poor connection, bending, corrosion, contamination, deterioration, or damage. Repair or replace as necessary and go to "Verification of Vehicle Repair" procedure.

NO

▶ Substitute with a known - good PCM and check for proper operation. If the problem is corrected, replace PCM and go to "Verification of Vehicle Repair" procedure.

NOTE

There is a memory reset function on scantool that can erase optional parts automatically detected and memorized by PCM. Before or after testing PCM on the vehicle, use this function to reuse the PCM on the others.

VERIFICATION OF VEHICLE REPAIR E1AFF304

Refer to DTC P0110.

DTC P0115 ENGINE COOLANT TEMPERATURE CIRCUIT

COMPONENT LOCATION ED5B7286

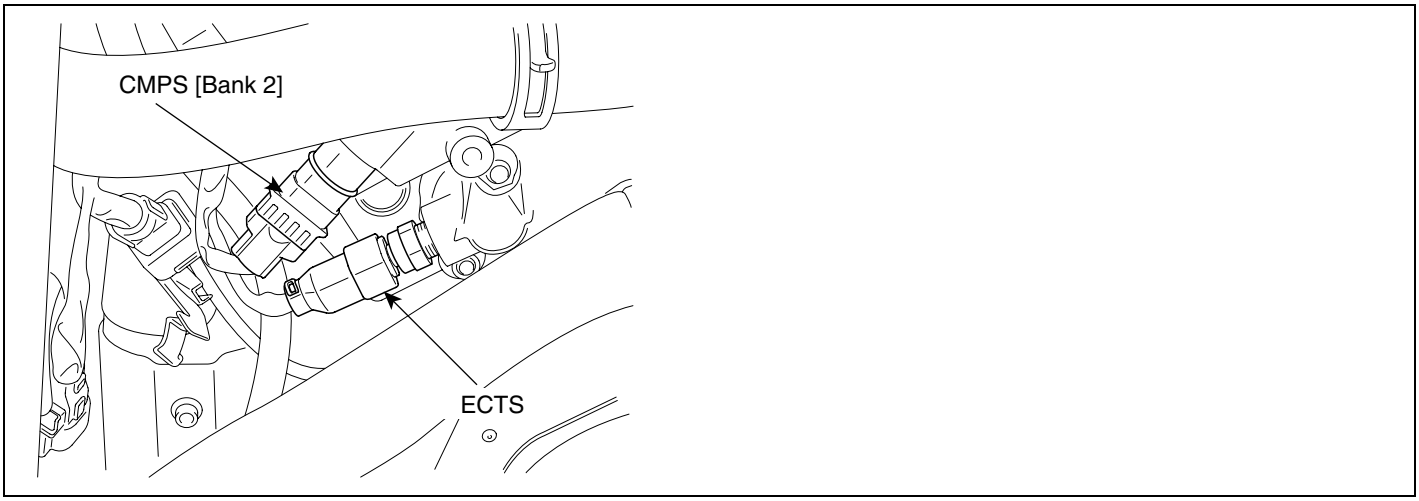

LGLG510A

GENERAL DESCRIPTION ECEA26F1

The Engine Coolant Temperature Sensor (ECTS) is located in the engine coolant passage of the cylinder head for detecting the engine coolant temperature. The ECTS uses a thermistor whose resistance changes with the temperature. The electrical resistance of the ECTS decreases as the temperature increases, and increases as the temperature decreases. The reference 5 V in the ECM is supplied to the ECTS via a resistor in the ECM. That is, the resistor in the ECM and the thermistor in the ECTS are connected in series. When the resistance value of the thermistor in the ECTS changes according to the engine coolant temperature, the output voltage also changes. During cold engine operation the ECM increases the fuel injection duration and controls the ignition timing using the information of engine coolant temperature to avoid engine stalling and improve drivability.

DTC DESCRIPTION E0246E52

PCM calculates the difference between the starup and current coolant temperatures and compares against the threshold. So if the difference is less than 3°C over certain period of time. PCM determines that a fault exists and a DTC is stored.

DTC DETECTING CONDITION EA636012

Item	Detecting Condition	Possible cause
DTC Strategy	• Rationality check	• Poor connection • Low level of Engine Coolant • Improperly installed ECTS • Open or short in circuit • ECTS • PCM
Enable Conditions	• Engine Run state • Time from IG "OFF" to IG "ON" 〉 360min • No Disabling Faults Present	
Threshold value	• Difference between startup and current ECT 〈 3 ℃(5.4˚F)	
Diagnosis Time	• Continuous (More than 120 seconds failure within 150 second test)	
MIL On Condition	• No MIL ON (DTC only)	

SPECIFICATION EB62D6F7

Temp. (℃/℉)	Resistance (kΩ)	Temp. (℃/℉)	Resistance (kΩ)
-40(-40)	48.14	40(104)	1.15
-20(-4)	14.13 ~ 16.83	60(140)	0.59
0(32)	5.79	80(176)	0.32
20(68)	2.31 ~ 2.59		

SCHEMATIC DIAGRAM EDD92ADB

[CIRCUIT DIAGRAM]

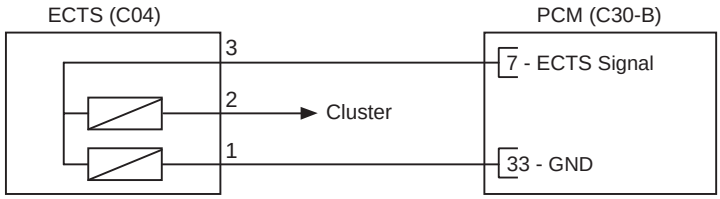

[CONNECTION INFORMATION]

Terminal	Connected to	Function
1	PCM C30-B (33)	Sensor ground
2	Cluster	-
3	PCM C30-B (7)	ECTS Signal

[HARNESS CONNECTORS]

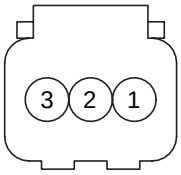

C04

ECTS

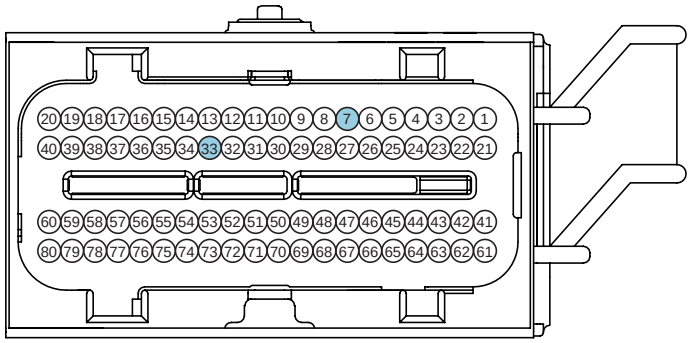

C30-B

PCM

SCMF16106L

SIGNAL WAVEFORM AND DATA EFF63D09

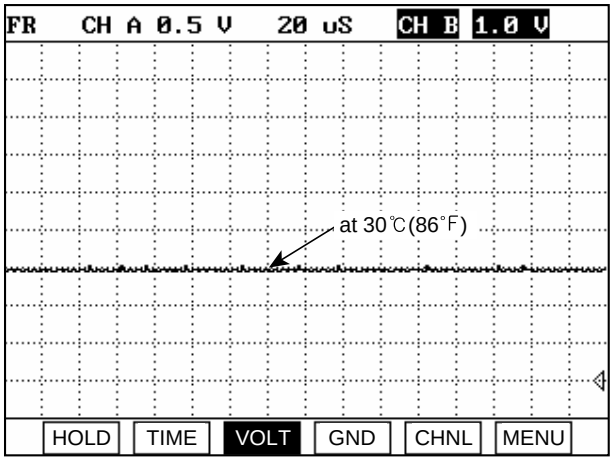

EGRF604P

The output signals of IATS & ECTS change smoothly without any rapid changes. Those have almost same characteristic signal during the early period after start. It means that the temperatures of intake air and engine coolant are depended on

the temperature of atmosphere. Meanwhile, during the warming up, the output signal of ECTS is going up increasingly. but, the output signal of IATS changes a little bit. even it may not change almost. It means that the heat of engine does not affect on the temperature of intake air.

MONITOR DTC STATUS EB4DAF51

1. Check DTC Status

   1) Connect scantool to Data Link Connector(DLC).

   2) IG "ON".

   3) Select "Diagnostic Trouble Codes(DTCs)" mode, and then Press F4(DTAL) to check DTC's information from the DTCs menu

   4) Read "DTC Status" parameter.

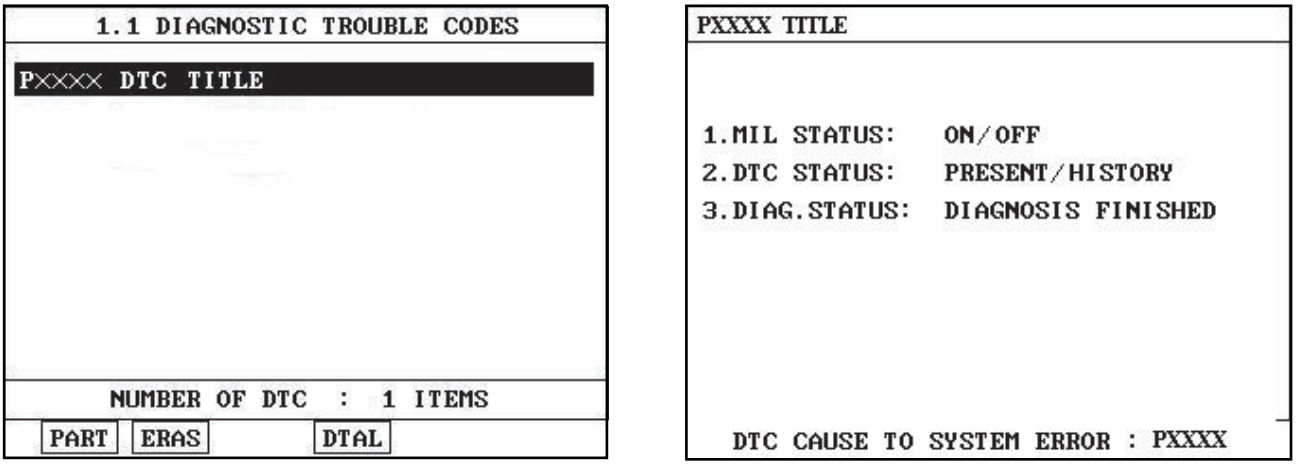

SCMF16159L

   5) Is parameter displayed "Present fault"?

YES

▶ Go to "Terminal and connector inspection" procedure.

NO

▶ Fault is intermittent caused by poor contact in the sensor's and/or PCM's connector or was repaired and PCM memory was not cleared. Thoroughly check connectors for looseness, poor connection, ending, corrosion, contamination, deterioration, or damage. Repair or replace as necessary and go to "Verification of Vehicle Repair" procedure.

TERMINAL AND CONNECTOR INSPECTION E64601E0

1. Many malfunctions in the electrical system are caused by poor harness and terminals. Faults can also be caused by interference from other electrical systems, and mechanical or chemical damage.

2. Thoroughly check connectors for looseness, poor connection, bending, corrosion, contamination, deterioration, or damage.

3. Has a problem been found?

YES

▶ Repair as necessary and go to "Verification of Vehicle Repair" procedure

NO

▶ Go to "Signal Circuit Inspection" procedure.

SIGNAL CIRCUIT INSPECTION E7A4FDA8

1. IG "OFF" and disconnect ECTS connector.
2. IG "ON" & ENG "OFF"
3. Measure voltage between terminal 3 of ECTS harness connector and chassis ground.

Specification : Approx. 5V

4. Is the measured voltage within specification ?

YES

▶ Go to "Ground Circuit Inspection" procedure.

NO

▶ Repair or replace as necessary and then go to "Verification of Vehicle Repair" procedure.

GROUND CIRCUIT INSPECTION E3E0634A

1. IG "OFF" and disconnect ECTS connector.
2. Measure voltage between terminal 3 of ECTS harness connector and chassis ground.
3. Measure voltage between terminal 1 and 3 of ECTS harness connector.

Specification : Voltage difference between measurement "A" and "B" is below 200mV.

4. Is the measured voltage within specification ?

YES

▶ Go to "System Inspection" procedure.

NO

▶ Repair contact resistance and open in harness and go to "Verification of Vehicle Repair" procedure.

SYSTEM INSPECTION EBD7264B

1. Check Engine coolant level is O.K
2. Check that ECTS is correctly installed.
3. Has a problem been found ?

YES

▶ Repair or replace as necessary and then go to "Verification of Vehicle Repair"procedure.

NO

▶ Go to "Component Inspection" procedure.

COMPONENT INSPECTION ED73FDED

1. Check resistance of ECTS

   1) IG "OFF" and disconnect ECTS connector.

   2) Measure resistance between terminal 1 and 3 of ECTS connector. (Component Side)

SPECIFICATON :

Temp. (℃/℉)	Resistance (kΩ)	Temp. (℃/℉)	Resistance (kΩ)
-40(-40)	48.14	40(104)	1.15
-20(-4)	14.13 ~ 16.83	60(140)	0.59
0(32)	5.79	80(176)	0.32
20(68)	2.31 ~ 2.59		

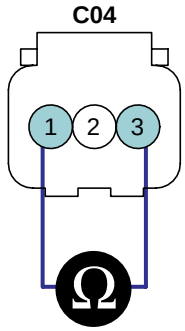

1. ECTS Ground
2. To Gauge
3. ECTS Signal

SCMF16211L

   3) Is the measured resistance within specification ?

YES

▶ Go to "Check PCM" as follows.

NO

▶ Substitute with a known - good ECTS and check for proper operation. If the problem is corrected, replace ECTS and go to "Verification of Vehicle Repair" procedure.

2. Check PCM

   1) IG "OFF" and connect scantool.

   2) Connect probe to terminal 3 of ECTS harness connector.

   3) IG "ON" and ENG "OFF" and simulation Function on scantool.

   4) Simulate voltage at terminal 3 of ECTS harness connector.

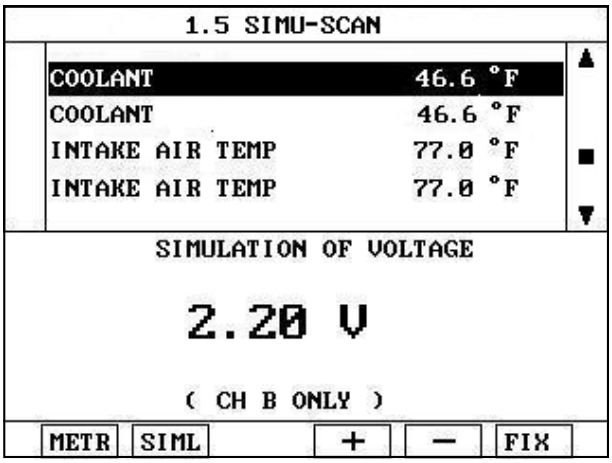

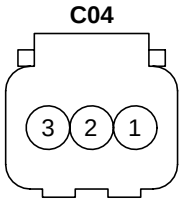

1. ECTS Ground
2. To Gauge
3. ECTS Signal

SCMF16212L

5) Does the signal value of ECT sensor change according to simulation voltage ?

YES

▶ Thoroughly check connectors for looseness, poor connection, bending, corrosion, contamination, deterioration, or damage. Repair or replace as necessary and go to "Verification of Vehicle Repair" procedure.

NO

▶ Substitute with a known - good PCM and check for proper operation. If the problem is corrected, replace PCM and go to "Verification of Vehicle Repair" procedure.

NOTE

There is a memory reset function on scantool that can erase optional parts automatically detected and memorized by PCM. Before or after testing PCM on the vehicle, use this function to reuse the PCM on the others.

VERIFICATION OF VEHICLE REPAIR EDB33B7C

After a repair, it is essential to verify that the fault has been corrected.

1. Monitor and record the Freeze Frame Data for the Diagnostic Trouble Code(DTC) which has been diagnosed.
2. Using a Scantool, Clear the DTCs
3. Operate the vehicle within conditions noted in the freeze frame data or enable conditions
4. Monitor that all rediness test have been verified as " Complete "
5. Are any DTCs present ?

YES

▶ Go to the applicable troubleshoooting procedure.

NO

▶ System is performing to specification at this time.

DTC P0117 ENGINE COOLANT TEMPERATURE CIRCUIT LOW INPUT

COMPONENT LOCATION E8BA96C1

Refer to DTC P0115.

GENERAL DESCRIPTION EE2E48C5

Refer to DTC P0115.

DTC DESCRIPTION EAAEF50E

Checking output signals from ECTS every 80 sec. under detecting condition, if an output signal is below 0.1V for more than 40 sec., PCM sets P0117. MIL(Malfunction Indication Lamp) turns on when the malfunction lasts till consecutive 2 driving cycle.

DTC DETECTING CONDITION E268CE7B

Item		Detecting Condition	Possible cause
DTC Strategy		• Signal low	• Poor connection • Short to ground in harness • ECTS • PCM
Enable Condi-tions	Case 1	• Time after start-up 〉 120 sec.	
	Case 2	• Time from IG "OFF" to IG "ON" 〉 360 min. • Engine running state	
Threshold value		• Engine coolant temperature sensor's voltage 〈 0.1V	
Diagnosis Time		• Continuous (More than 40 seconds failure for every 80 second test)	
MIL On Condition		• 2 Driving Cycle	

SPECIFICATION E073B461

Refer to DTC P0115.

SCHEMATIC DIAGRAM EE348B41

Refer to DTC P0115.

SIGNAL WAVEFORM AND DATA EBAD21D7

Refer to DTC P0115.

MONITOR DTC STATUS EBEC7FB1

Refer to DTC P0115.

TERMINAL AND CONNECTOR INSPECTION E7DD93A9

Refer to DTC P0115.

SIGNAL CIRCUIT INSPECTION E7A87D49

1. Check voltage

   1) IG "OFF" and disconnect ECTS connector.

   2) IG "ON" and ENG "OFF"

   3) Measure voltage between terminal 3 of ECTS harness connector and chassis ground.

Specification : Approx. 5V

   4) Is the measured voltage within specification ?

YES

▶ Go to "Component Inspection" procedure.

NO

▶ Go to "Check short to ground in harness" as follows.

2. Check short to ground in harness

   1) IG "OFF" and disconnect ECTS connector and PCM connector.

   2) Measure resistance between terminal 3 of ECTS harness connector and chassis ground.

   3) Measure resistance between terminals 1 and 3 of ECTS harness connector.

Specification : Infinite

   4) Is the measured resistance within specification?

YES

▶ Go to "Component Inspection" procedure.

NO

▶ Repair short to ground in harness, and go to "Verification of Vehicle Repair" procedure.

COMPONENT INSPECTION E5A14E1D

1. Check ECTS

   1) IG "OFF" and disconnect ECTS connector.

   2) Measure resistance between terminals 1 and 3 of ECTS connector.(Component side)

SPECIFICATON :

Temp. (℃/℉)	Resistance (kΩ)	Temp. (℃/℉)	Resistance (kΩ)
-40(-40)	48.14	40(104)	1.15
-20(-4)	14.13 ~ 16.83	60(140)	0.59

0(32)	5.79	80(176)	0.32
20(68)	2.31 ~ 2.59		

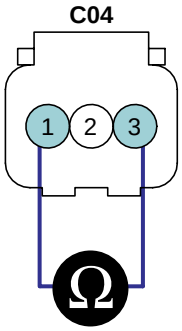

1. ECTS Ground
2. To Gauge
3. ECTS Signal

SCMF16211L

3) Is the measured resistance within specification?

YES

▶ Go to "Check PCM" as follows.

NO

▶ Substitute with a known - good ECTS and check for proper operation. If the problem is corrected, replace ECTS and go to "Verification of Vehicle Repair" procedure.

2. Check PCM

1) IG "OFF" and connect scantool.

2) Connect probe to terminal 3 of ECTS harness connector.

3) IG "ON" and ENG "OFF" and simulation Function on scantool.

4) Simulate voltage at terminal 3 of ECTS harness connector.

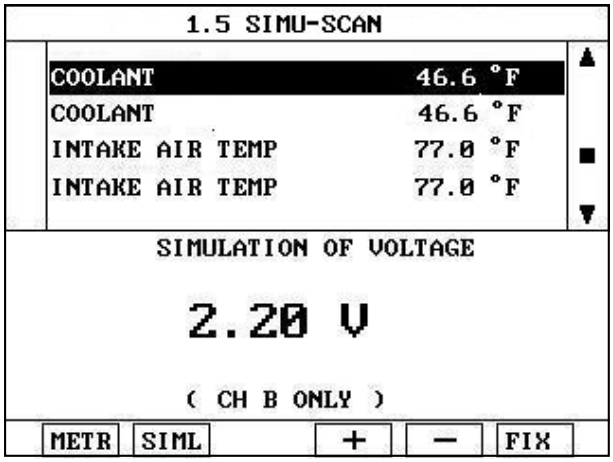

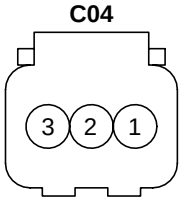

1. ECTS Ground
2. To Gauge
3. ECTS Signal

SCMF16212L

5) Does the signal value of ECT sensor change according to simulation voltage ?

YES

▶ Thoroughly check connectors for looseness, poor connection, bending, corrosion, contamination, deterioration, or damage. Repair or replace as necessary and go to "Verification of Vehicle Repair" procedure.

NO

▶ Substitute with a known - good PCM and check for proper operation. If the problem is corrected, replace PCM and go to "Verification of Vehicle Repair" procedure.

NOTE

There is a memory reset function on scantool that can erase optional parts automatically detected and memorized by PCM. Before or after testing PCM on the vehicle, use this function to reuse the PCM on the others.

VERIFICATION OF VEHICLE REPAIR E1A96D6E

Refer to DTC P0115.

DTC P0118 ENGINE COOLANT TEMPERATURE CIRCUIT HIGH INPUT

COMPONENT LOCATION E39FB981

Refer to DTC P0115.

GENERAL DESCRIPTION E69DC80F

Refer to DTC P0115.

DTC DESCRIPTION EBA41CAA

Checking output signals from ECTS every 80 sec. under detecting condition, if an output signal is above 4.9V for more than 40 sec., PCM sets P0118. MIL(Malfunction Indication Lamp) turns on when the malfunction lasts till consecutive 2 driving cycle.

DTC DETECTING CONDITION E3D5A198

Item		Detecting Condition	Possible cause
DTC Strategy		• Open, Signal high	• Poor connection • Open or short to battery in signal harness • Open in ground harness • ECTS • PCM
Enable Condi-tions	Case 1	• Time after start-up 〉 120 sec.	
	Case 2	• Time from IG "OFF" to IG "ON" 〉 360 min. • Intake air temperature ≥ -10℃(14˚F) • Engine running state	
Threshold value		• Engine coolant temperature sensor's voltage 〉 4.9V	
Diagnosis Time		• Continuous (More than 40 sec. failure for every 80 sec. test)	
MIL On Condition		• 2 Driving Cycle	

SPECIFICATION E813F79D

Refer to DTC P0115.

SCHEMATIC DIAGRAM ED53CE9E

Refer to DTC P0115.

SIGNAL WAVEFORM AND DATA E36568DB

Refer to DTC P0115.

MONITOR DTC STATUS EB1CC283

Refer to DTC P0115.

TERMINAL AND CONNECTOR INSPECTION E42A0DDA

Refer to DTC P0115.

SIGNAL CIRCUIT INSPECTION EF57F5F5

1. Check voltage

   1) IG "OFF" and disconnect ECTS connector.

   2) IG "ON" and ENG "OFF"

   3) Measure voltage between terminal 3 of ECTS harness connector and chassis ground.

Specification : Approx. 5V

   4) Is the measured voltage within specification ?

   YES

   ▶ Go to "Ground Circuit Inspection" procedure.

   NO

   ▶ If voltage is 0V, go to "Check open in harness" as follows. If it is more than 5.1V, go to "Check short to battery in harness" as follows

2. Check short to battery in harness

   1) IG "OFF" and disconnect ECTS connector and PCM connector.

   2) Measure resistance between terminals 2 and 3 of ECTS harness connector.

Specification : Infinite

   3) Is the measured resistance within specification?

   YES

   ▶ Go to "Component Inspection" procedure.

   NO

   ▶ Repair short to battery in harness, and go to "Verification of Vehicle Repair" procedure.

3. Check open in harness

   1) IG "OFF" and disconnect ECTS connector and PCM connector.

   2) Measure resistance between terminal 3 of ECTS harness connector and terminal C30-B (7) of PCM harness connector.

Specification : Below 1Ω

   3) Is the measured resistance within specification?

   YES

   ▶ Go to "Ground Circuit Inspection" procedure.

   NO

▶ Repair open in harness, and go to "Verification of Vehicle Repair" procedure.

GROUND CIRCUIT INSPECTION ED915B6F

1. IG "OFF" and disconnect ECTS connector.
2. Measure voltage between terminal 3 of ECTS harness connector and chassis ground.
3. Measure voltage between terminals 1 and 3 of ECTS harness connector.

Specification : Voltage difference between measurement "A" and "B" is below 200mV.

4. Is the measured voltage within specification?

YES

▶ Go to "Component Inspection" procedure.

NO

▶ Repair open or contact resistance in harness, and go to "Verification of Vehicle Repair" procedure.

COMPONENT INSPECTION E86B0A34

1. Check ECTS
   1) IG "OFF" and disconnect ECTS connector.
   2) Measure resistance between terminals 1 and 3 of ECTS connector.(Component side)

SPECIFICATON :

Temp. (℃/℉)	Resistance (kΩ)	Temp. (℃/℉)	Resistance (kΩ)
-40(-40)	48.14	40(104)	1.15
-20(-4)	14.13 ~ 16.83	60(140)	0.59
0(32)	5.79	80(176)	0.32
20(68)	2.31 ~ 2.59		

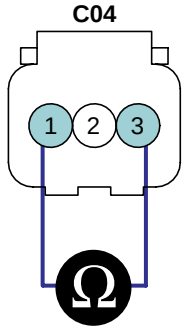

1. ECTS Ground
2. To Gauge
3. ECTS Signal

SCMF16211L

   3) Is the measured resistance within specification?

YES

▶ Go to "Check PCM" as follows.

NO

▶ Substitute with a known - good ECTS and check for proper operation. If the problem is corrected, replace ECTS and go to "Verification of Vehicle Repair" procedure.

2. Check PCM

1) IG "OFF" and connect scantool.

2) Connect probe to terminal 3 of ECTS harness connector.

3) IG "ON" and ENG "OFF" and simulation Function on scantool.

4) Simulate voltage at terminal 3 of ECTS harness connector.

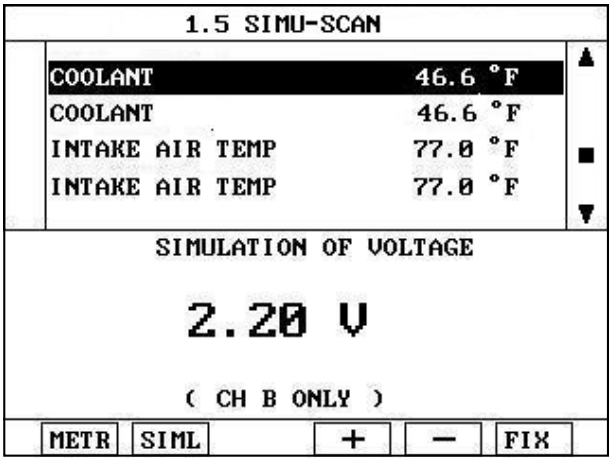

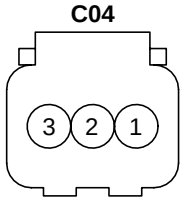

1. ECTS Ground
2. To Gauge
3. ECTS Signal

SCMF16212L

5) Does the signal value of ECT sensor change according to simulation voltage ?

YES

▶ Thoroughly check connectors for looseness, poor connection, bending, corrosion, contamination, deterioration, or damage. Repair or replace as necessary and go to "Verification of Vehicle Repair" procedure.

NO

▶ Substitute with a known - good PCM and check for proper operation. If the problem is corrected, replace PCM and go to "Verification of Vehicle Repair" procedure.

NOTE

There is a memory reset function on scantool that can erase optional parts automatically detected and memorized by PCM. Before or after testing PCM on the vehicle, use this function to reuse the PCM on the others.

VERIFICATION OF VEHICLE REPAIR E39E2BF2

Refer to DTC P0115.

DTC P0122 THROTTLE/PEDAL POSITION SENSOR/SWITCH "A" CIRCUIT LOW INPUT

COMPONENT LOCATION E99DDCBA

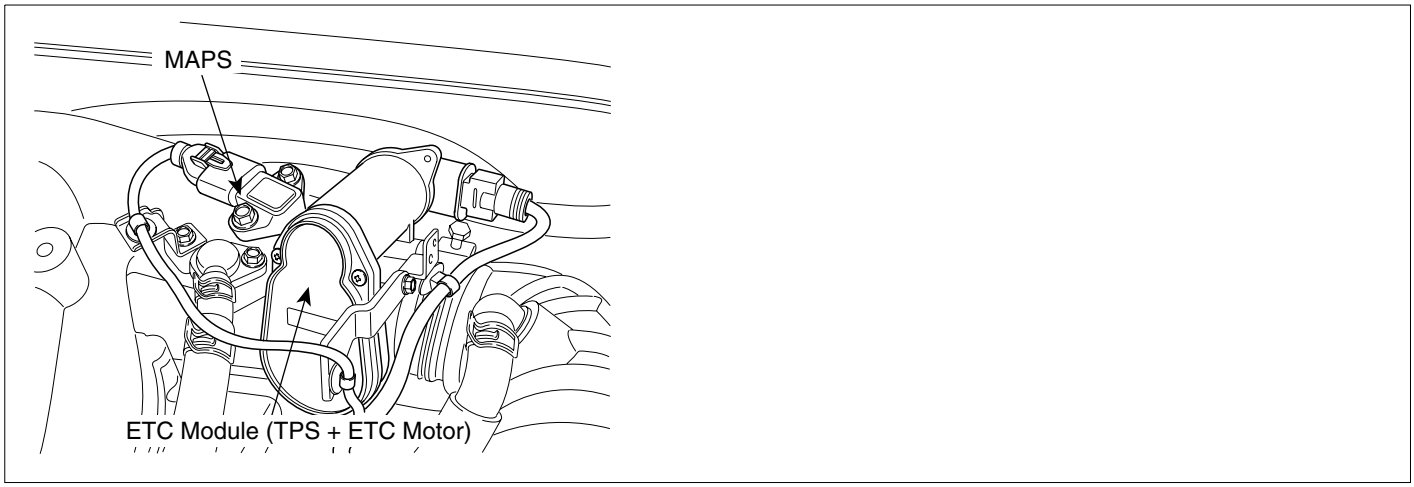

LGLG509A

GENERAL DESCRIPTION EA17E0B5

The Electronic Throttle Control(ETC) system is made of the components throttle body, Throttle Position Sensor(TPS)1&2 and Accelerator Position Sensor(APS) 1&2. TPS1&2 are sharing the same source voltage and ground.The throttle valve opening is control by throttle motor which is controlled by Engine Control Module(ECM).The opposite position indicator shows inverted signal characteristics.TPS1 output voltage increases smoothly in proportion with the throttle valve opening angle after starting. TPS2 output voltage decreases in inverse proportion with the throttle valve opening angle after starting. TPS provides feedback to the ECM to control the throttle motor in order to control the throttle valve opening angle properly in response to the driving condition.

DTC DESCRIPTION ECD19B0F

Checking output signals from TPS1 every 8.5 sec. under detecting condition, if an output signal is below 0.25V for more than 0.1 sec., PCM sets P0122. MIL(Malfunction Indication Lamp) turns on when the malfunction lasts till consecutive 2 driving cycle.

DTC DETECTING CONDITION E9D5EB68

Item	Detecting Condition	Possible Cause
DTC Strategy	• signal low	• Poor connection • Open or short to ground in power harness • Short to ground in signal harness • TPS • PCM
Enable condition	• IG "ON	
threshold value	• The voltage of TPS 〈 0.25V	
diagnosis time	• Continuous (more than 0.1 sec. failure for every 8.5 sec.test)	
MIL ON condition	• 2 driving cycles	

SPECIFICATION EB32305D

Throttle opening (°)	Output voltage(V) [Vref=5.0]	
	TPS1	TPS2
0°	0.0V	5.0V
10°	0.5V	4.5V
20°	0.9V	4.1V
30°	1.4V	3.6V
40°	1.8V	3.2V
50°	2.3V	2.7V
60°	2.7V	2.3V
70°	3.2V	1.8V
80°	3.6V	1.4V
90°	4.1V	0.9V
100°	4.5V	0.5V
110°	5.0V	0.0V

SCHEMATIC DIAGRAM EB8A3F43

[CIRCUIT DIAGRAM]

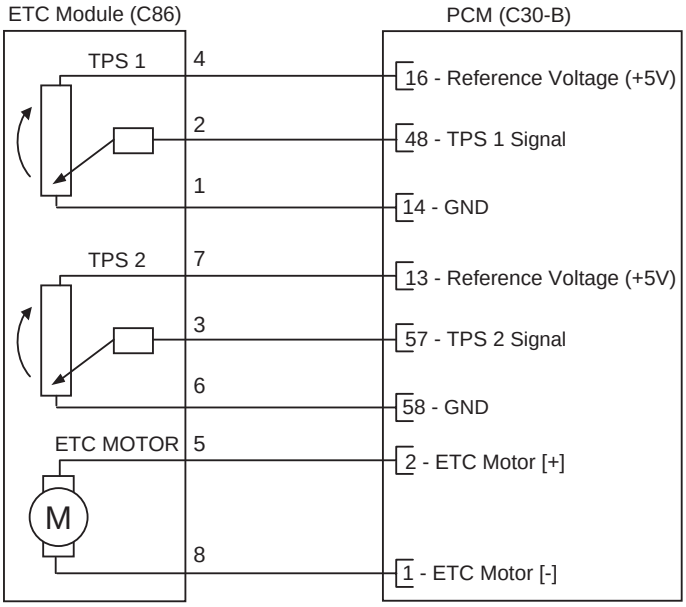

[CONNECTION INFORMATION]

Terminal	Connected to	Function
1	PCM C30-B (14)	TPS 1 Ground
2	PCM C30-B (48)	TPS 1 Signal
3	PCM C30-B (57)	TPS 2 Signal
4	PCM C30-B (16)	TPS 1 Reference Voltage (+5V)
5	PCM C30-B (2)	ETC Motor [+] Control
6	PCM C30-B (58)	TPS 2 Ground
7	PCM C30-B (13)	TPS 2 Reference Voltage (+5V)
8	PCM C30-B (1)	ETC Motor [-] Control

[HARNESS CONNECTORS]

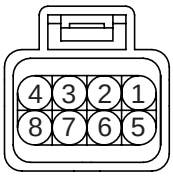

C86

ETC MODULE

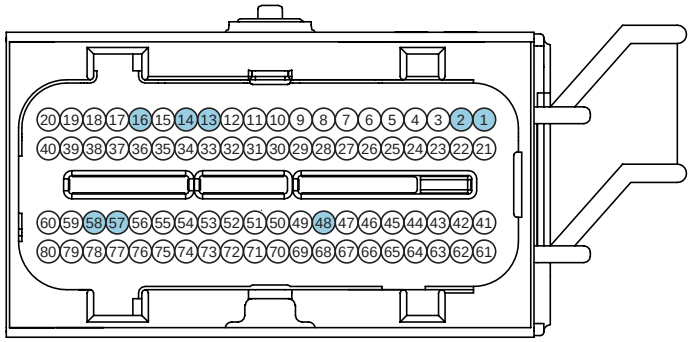

C30-B

PCM

SCMF16101L

SIGNAL WAVEFORM AND DATA EA4AD1D5

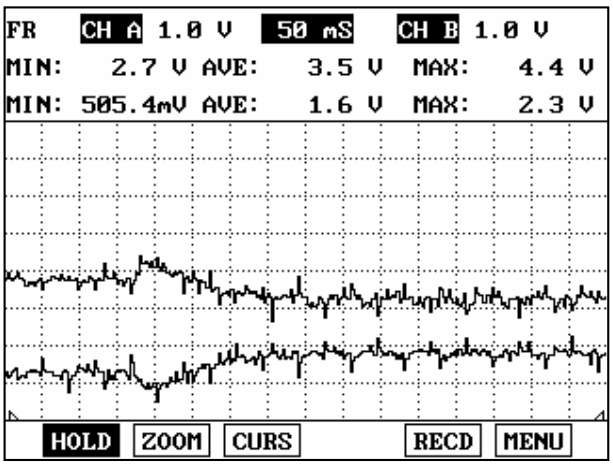

Hit the accelerator at IG ON

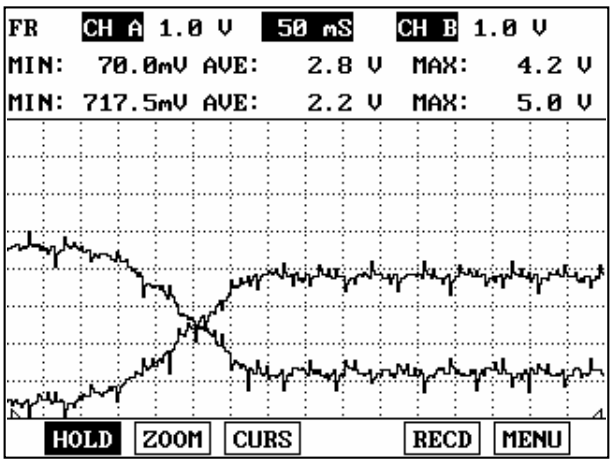

Open the throttle valve by force at IG ON

EGRF604Z

MONITOR DTC STATUS E531A752

1. Check DTC Status

   1) Connect scantool to Data Link Connector(DLC).

   2) IG "ON".

   3) Select "Diagnostic Trouble Codes(DTCs)" mode, and then Press F4(DTAL) to check DTC's information from the DTCs menu

   4) Read "DTC Status" parameter.

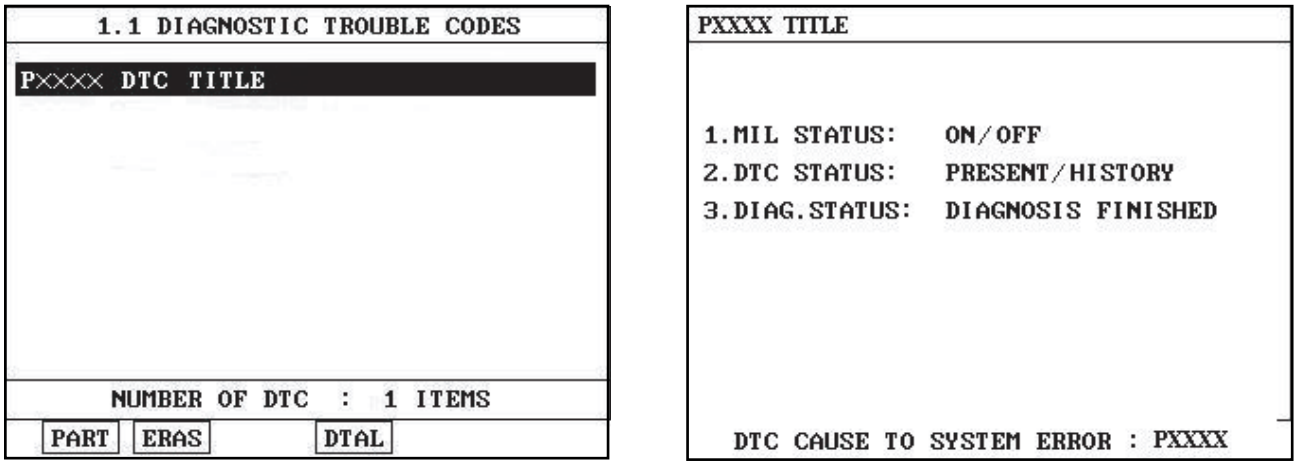

SCMF16159L

   5) Is parameter displayed "Present fault"?

YES

▶ Go to "Terminal and connector inspection" procedure.

NO

▶ Fault is intermittent caused by poor contact in the sensor's and/or PCM's connector or was repaired and PCM memory was not cleared. Thoroughly check connectors for looseness, poor connection, ending, corrosion, contamination, deterioration, or damage. Repair or replace as necessary and go to "Verification of Vehicle Repair" procedure.

TERMINAL AND CONNECTOR INSPECTION ED208D6D

1. Many malfunctions in the electrical system are caused by poor harness and terminals. Faults can also be caused by interference from other electrical systems, and mechanical or chemical damage.

2. Thoroughly check connectors for looseness, poor connection, bending, corrosion, contamination, deterioration, or damage.

3. Has a problem been found?

YES

▶ Repair as necessary and go to "Verification of Vehicle Repair" procedure

NO

▶ Go to "Power Circuit Inspection" procedure.

POWER CIRCUIT INSPECTION EFEBCB7E

1. IG "OFF" and disconnect TPS connector.
2. IG "ON" and ENG "OFF"
3. Measure voltage between terminal 4 of TPS harness connector and chassis ground.

Specification : Approx. 5V

4. Is the measured voltage within specification ?

YES

▶ Go to "Signal circuit inspection" procedure.

NO

▶ Repair open or short to ground in power harness, and go to "Verification of Vehicle Repair" procedure.

SIGNAL CIRCUIT INSPECTION EE62AB39

1. Check short to ground in harness
   1) IG "OFF" and disconnect TPS connector and PCM connector.
   2) Measure resistance between terminal 2 of TPS harness connector and chassis ground.
   3) Measure resistance between terminals 2 and 6(1) of TPS harness connector.

Specification : Infinite

   4) Is the measured resistance within specification?

YES

▶ Go to "Component Inspection" procedure.

NO

▶ Repair short to ground in harness, and go to "Verification of Vehicle Repair" procedure.

COMPONENT INSPECTION EA894B1C

1. Check TPS
   1) IG "OFF" and disconnect TPS connector.
   2) Measure resistance between terminals 4 and 6 of TPS connector.(component side)

Specificaton : 4 ~ 6kΩ

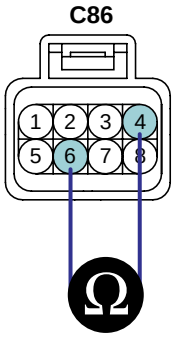

1. TPS1 ground
2. TPS1 signal
3. TPS2 signal
4. **TPS1 supply**
5. ETS motor control(+)
6. **TPS2 ground**
7. TPS2 supply
8. ETS motor control(-)

SCMF16218L

3) Is the measured resistance within specification?

YES

▶ Substitute with a known - good PCM and check for proper operation. If the problem is corrected, replace PCM and go to "Verification of Vehicle Repair" procedure.

NO

▶ Substitute with a known - good ECT motor & TPS and check for proper operation. If the problem is corrected, replace ECT motor & TPS and go to "Verification of Vehicle Repair" procedure.

CAUTION

Procedure of ETS Initialization

1. ***Erase the trouble codes on PCM***
2. ***Turn the ignition key off and keep this condition until the main relay is turned off.(It will takes 10sec.)***
3. ***Turn ignition key on more than 1second to record the throttle motor position on the EEPROM***

VERIFICATION OF VEHICLE REPAIR EE0ABC4F

After a repair, it is essential to verify that the fault has been corrected.

1. Monitor and record the Freeze Frame Data for the Diagnostic Trouble Code(DTC) which has been diagnosed.
2. Using a Scantool, Clear the DTCs
3. Operate the vehicle within conditions noted in the freeze frame data or enable conditions
4. Monitor that all rediness test have been verified as " Complete "
5. Are any DTCs present ?

YES

▶ Go to the applicable troubleshoooting procedure.

NO

▶ System is performing to specification at this time.

DTC P0123 THROTTLE/PEDAL POSITION SENSOR/SWITCH "A" CIRCUIT HIGH INPUT

COMPONENT LOCATION E34BDD3C

Refer to DTC P0122.

GENERAL DESCRIPTION EC220AC2

Refer to DTC P0122.

DTC DESCRIPTION ED5835FD

Checking output signals from TPS1 every 8.5 sec. under detecting condition, if an output signal is above 4.75V for more than 0.1 sec., PCM sets P0123. MIL(Malfunction Indication Lamp) turns on when the malfunction lasts till consecutive 2 driving cycle.

DTC DETECTING CONDITION E4B633B0

Item	Detecting Condition	Possible Cause
DTC Strategy	• signal high	• Poor connection • Open or short to battery in signal harness • Open in ground harness • TPS • PCM
Enable condition	• IG "ON
threshold value	• The voltage of TPS 〉 4.75V
diagnosis time	• Continuous (more than 0.1 sec. failure for every 8.5 sec.test)
MIL ON condition	• 2 driving cycles

SPECIFICATION E8877DEC

Refer to DTC P0122.

SCHEMATIC DIAGRAM EAE92A53

Refer to DTC P0122.

SIGNAL WAVEFORM AND DATA E4E9A992

Refer to DTC P0122.

MONITOR DTC STATUS E50CACAF

Refer to DTC P0122.

TERMINAL AND CONNECTOR INSPECTION EC2C6DE2

Refer to DTC P0122.

SIGNAL CIRCUIT INSPECTION E3E9DEDF

1. Check voltgae

   1) IG "OFF" and disconnect TPS connector.

   2) IG "ON" and ENG "OFF"

   3) Measure voltage between terminal 2 of TPS harness connector and chassis ground.

Specification : Approx. 5V

   4) Is the measured voltage within specification?

   YES

   ▶ Go to "Check short to battery in harness" as follows.

   NO

   ▶ Go to "Check open in harness" as follows.

2. Check open in harness

   1) IG "OFF" and disconnect TPS connector and PCM connector.

   2) Measure resistance between terminal 2 of TPS harness connector and terminal C30-B (48) of PCM harness connector.

Specification : Below 1Ω

   3) Is the measured resistance within specification?

   YES

   ▶ Go to "Ground Circuit Inspection" procedure.

   NO

   ▶ Repair open in harness, and go to "Verification of Vehicle Repair" procedure.

3. Check short to battery in harness

   1) IG "OFF" and disconnect TPS connector and PCM connector.

   2) Measure resistance between terminals 4 and 2 of TPS harness connector.

   3) Measure resistance between terminals 7 and 2 of TPS harness connector.

   4) Measure resistance between terminals 5 and 2 of TPS harness connector.

   5) Measure resistance between terminals 8 and 2 of TPS harness connector.

Specification : Infinite

   6) Is the measured resistance within specification?

   YES

▶ Go to "Ground circuit inspection " procedure.

NO

▶ Repair short to battery in harness, and go to "Verification of Vehicle Repair" procedure.

GROUND CIRCUIT INSPECTION E0E47490

1. IG "OFF" and disconnect TPS connector.
2. IG "ON" and ENG "OFF"
3. Measure voltage between terminal 4 of TPS harness connector and chassis ground.
4. Measure voltage between terminals 4 and 1 of TPS harness connector.

Specification : Voltage difference between measurement "A" and "B" is below 200mV.

5. Is the measured voltage within specification?

YES

▶ Go to "Component inspection" procedure.

NO

▶ Repair open or contact resistance in harness, and go to "Verification of Vehicle Repair" procedure.

COMPONENT INSPECTION EE1B17BA

1. Check TPS
   1) IG "OFF" and disconnect TPS connector.
   2) Measure resistance between terminals 4 and 6 of TPS connector.(component side)

Specificaton : 4 ~ 6kΩ

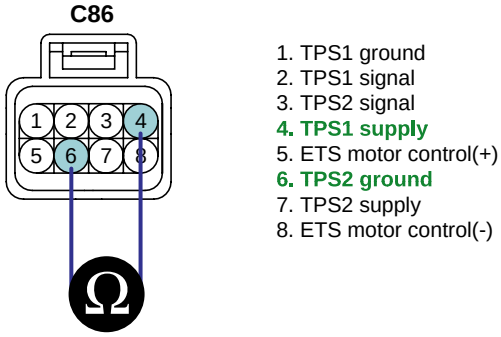

1. TPS1 ground
2. TPS1 signal
3. TPS2 signal
4. **TPS1 supply**
5. ETS motor control(+)
6. **TPS2 ground**
7. TPS2 supply
8. ETS motor control(-)

SCMF16218L

   3) Is the measured resistance within specification?

YES

▶ Substitute with a known - good PCM and check for proper operation. If the problem is corrected, replace PCM and go to "Verification of Vehicle Repair" procedure.

NO

▶ Substitute with a known - good ECT motor & TPS and check for proper operation. If the problem is corrected, replace ECT motor & TPS and go to "Verification of Vehicle Repair" procedure.

CAUTION

Procedure of ETS Initialization

1. ***Erase the trouble codes on PCM***
2. ***Turn the ignition key off and keep this condition until the main relay is turned off.(It will takes 10sec.)***
3. ***Turn ignition key on more than 1second to record the throttle motor position on the EEPROM***

VERIFICATION OF VEHICLE REPAIR E2A3F96D

Refer to DTC P0122.

DTC P0131 HO2S CIRCUIT LOW VOLTAGE (BANK 1 / SENSOR 1)

COMPONENT LOCATION E5E16663

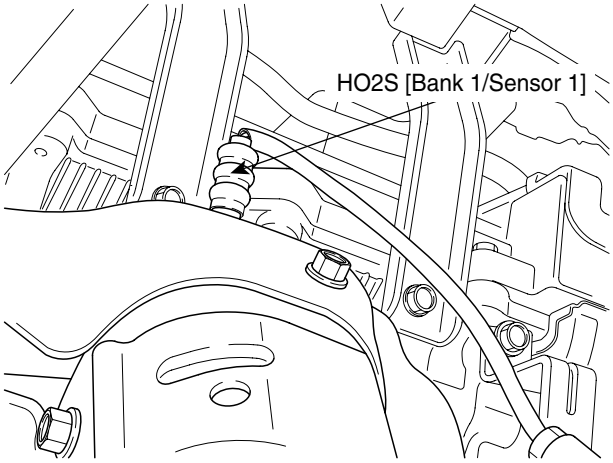

LGLG504A

GENERAL DESCRIPTION E9CECC3F

In order to control emissions of the CO, HC and NOx components of the exhaust gas, heated oxygen sensor (HO2S), mounted on the front side and rear side of catalytic converter, detects the oxygen content in the exhaust gas. The front HO2S signal is used to control air/fuel ratio (closed loop fuel control) and the rear HO2S signal is used to monitor front HO2S and catalyst for proper operation. The HO2S requires a minimum temperature to operate properly and provide a closed loop fuel control system. The HO2S contains the heater element to reduce its warming-up time and ensure its performance during all driving conditions. The oxygen sensor generates a voltage that indicates the difference between the oxygen content of the exhaust stream and the oxygen content of ambient air. When the exhaust stream is " rich," there is more oxygen in the ambient air than in the exhaust stream, so the voltage will be higher.

DTC DESCRIPTION E8D2EB10

Checking output signals from HO2S under detecting condition, if an output signal is below 0.04V for more than predeterminate time, PCM sets P0131. MIL(Malfunction Indication Lamp) turns on when the malfunction lasts till consecutive 2 driving cycle.

DTC DETECTING CONDITION E2DEFF6E

Item	Detecting Condition	Possible cause
DTC Strategy	• Monitor signal voltage	• Poor Connection • Short to ground in harness • HO2S(B1/S1) • PCM
Enable Conditions	• Battery voltage ≥ 10V • Engine running ≥ 60 sec. • Engine warm-up state	
Threshold value	• The voltage of HO2S(B1/S1) < 0.04V	
Diagnosis Time	• Continuous (more than 12.5 sec. failure for every 15 sec.test)	
MIL On Condition	• 2 Driving Cycles	

SPECIFICATION EB86DDBC

(REFERENCE ONLY)

Test Condition	HO2S Voltage(Sensor1)	HO2S Voltage(Sensor2)
HO2S Signal at idle after warm-up	Signal is commonly switching from rich to lean more than 3 times in 10 sec.	Signal is commonly above 0.6V.
HO2S signal at open circuit (Pumping current OFF)	Approx. 0.45V	
HO2S signal at open circuit (Pumping current ON)	Approx. 3.5V	

SCHEMATIC DIAGRAM E57946F9

[CIRCUIT DIAGRAM]

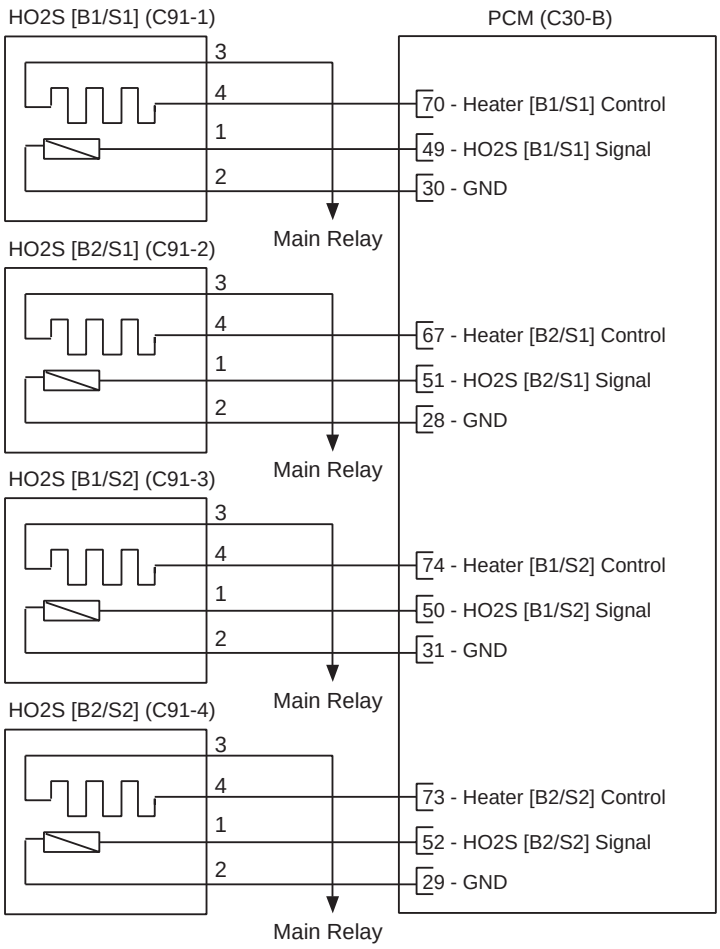

[CONNECTION INFORMATION]

HO2S [B1/S1]

Terminal	Connected to	Function
1	PCM C30-B (49)	HO2S [B1/S1] Signal
2	PCM C30-B (30)	Sensor ground
3	Main Relay	Battery Voltage (B+)
4	PCM C30-B (70)	Heater [B1/S1] Control

HO2S [B2/S1]

Terminal	Connected to	Function
1	PCM C30-B (51)	HO2S [B2/S1] Signal
2	PCM C30-B (28)	Sensor ground
3	Main Relay	Battery Voltage (B+)
4	PCM C30-B (67)	Heater [B2/S1] Control

HO2S [B1/S2]

Terminal	Connected to	Function
1	PCM C30-B (50)	HO2S [B1/S2] Signal
2	PCM C30-B (31)	Sensor ground
3	Main Relay	Battery Voltage (B+)
4	PCM C30-B (74)	Heater [B1/S2] Control

HO2S [B2/S2]

Terminal	Connected to	Function
1	PCM C30-B (52)	HO2S [B2/S2] Signal
2	PCM C30-B (29)	Sensor ground
3	Main Relay	Battery Voltage (B+)
4	PCM C30-B (73)	Heater [B2/S2] Control

[HARNESS CONNECTORS]

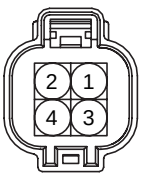

C91-1,2

HO2S [Bank 1/Sensor 1]
HO2S [Bank 2/Sensor 1]

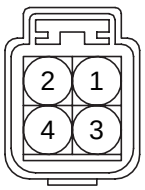

C91-3,4

HO2S [Bank 1/Sensor 2]
HO2S [Bank 2/Sensor 2]

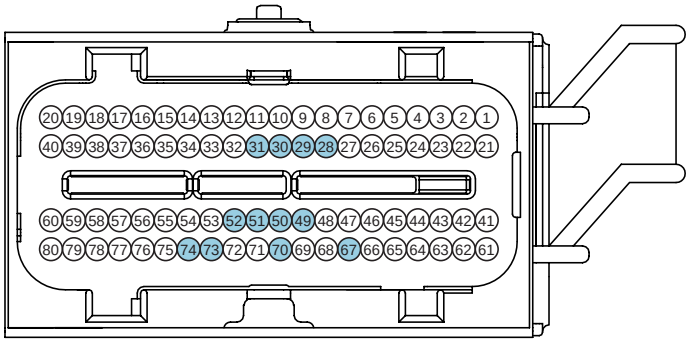

C30-B

PCM

SCMF16110L

SIGNAL WAVEFORM AND DATA E59FF425

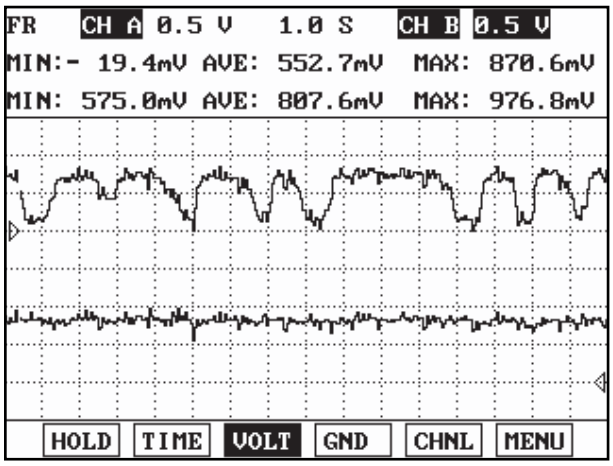

Fig) Signal waveforms of front HO2S(the upper) and rear HO2S(the lower)

SCMF16223L

After warming-up, if accelerator pedal is released suddenly around 4000rpm, the HO2S signal reading will be lower than 200mV resulting from Fuel cut-off for the moment. Conversely, if suddenly accelerator pedal is depressed, HO2S signal reading will be around 0.6V ~1.0V. At idle, Normally HO2S signal will switch from lean to rich with 3 Hz. And as racing, Its frequency rises.

MONITOR DTC STATUS EFA6B287

1. Check DTC Status

   1) Connect scantool to Data Link Connector(DLC).

   2) IG "ON".

   3) Select "Diagnostic Trouble Codes(DTCs)" mode, and then Press F4(DTAL) to check DTC's information from the DTCs menu

   4) Read "DTC Status" parameter.

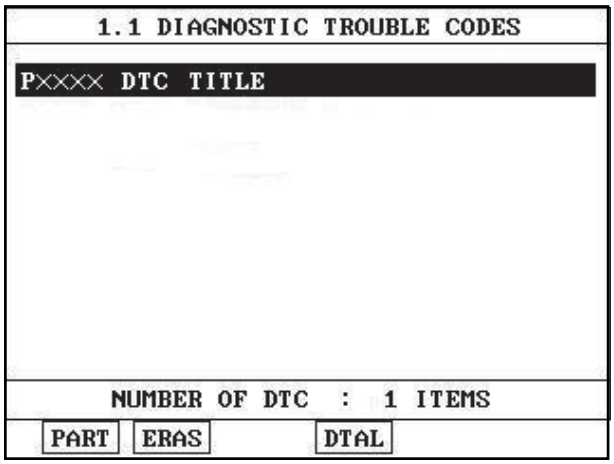

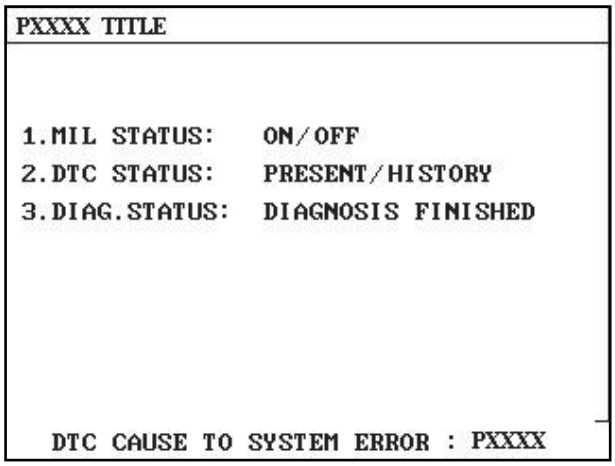

SCMF16159L

   5) Is parameter displayed "Present fault"?

YES

▶ Go to "Terminal and connector inspection" procedure.

NO

▶ Fault is intermittent caused by poor contact in the sensor's and/or PCM's connector or was repaired and PCM memory was not cleared. Thoroughly check connectors for looseness, poor connection, ending, corrosion, contamination, deterioration, or damage. Repair or replace as necessary and go to "Verification of Vehicle Repair" procedure.

TERMINAL AND CONNECTOR INSPECTION E95CE0B0

1. Many malfunctions in the electrical system are caused by poor harness and terminals. Faults can also be caused by interference from other electrical systems, and mechanical or chemical damage.
2. Thoroughly check connectors for looseness, poor connection, bending, corrosion, contamination, deterioration, or damage.
3. Has a problem been found?

YES

▶ Repair as necessary and go to "Verification of Vehicle Repair" procedure

NO

▶ Go to "Signal Circuit Inspection" procedure.

SIGNAL CIRCUIT INSPECTION ECA7A130

1. IG "OFF" and disconnect HO2S(B1/S1) connector.
2. IG "ON" and ENG "OFF"
3. Measure voltage between terminal 1 of HO2S(B1/S1) harness connector and chassis ground.

Specification : Approx. 3.5V - when pumping current is ON Approx. 0.45V - when pumping current is OFF

4. Is the measured voltage within specification?

YES

▶ Go to "Component Inspection" procedure.

NO

▶ Repair short to ground in harness, and go to "Verification of Vehicle Repair" procedure.

COMPONENT INSPECTION EA7C37B2

1. Check the Signal waveform of HO2S
   1) IG "OFF" and connect HO2S connector.
   2) Engine start.

3) After warming-up, monitor signal waveform of HO2S with scantool.?

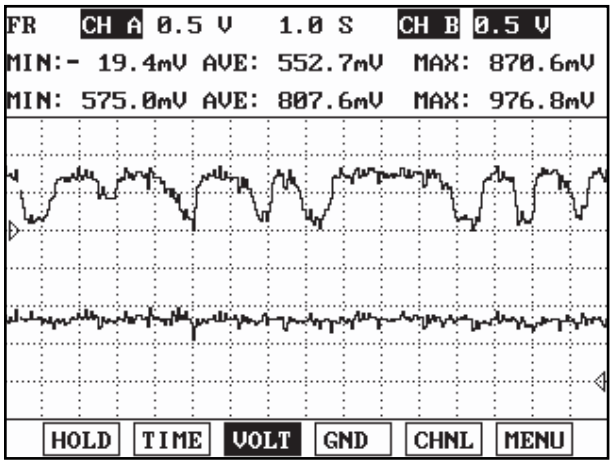

Fig) Signal waveform of front(the upper) and rear(the lower) HO2S at idle

SCMF16225L

4) Is the sensor switching properly?

YES

▶ Go to "Check HO2S" as below.

NO

▶ Substitute with a known - good HO2S and check for proper operation.
If the problem is corrected, go to "Verification of Vehicle Repair" procedure.

2. Check HO2S

1) IG "OFF" and disconnect HO2S connector.

2) Check that the HO2S is securely installed.

3) Check the HO2S for contamination or damage

4) Is the sensor normal?

YES

▶ Substitute with a known - good PCM and check for proper operation.
If the problem is corrected, go to "Verification of Vehicle Repair" procedure.

NO

▶ Substitute with a known - good HO2S and check for proper operation.
If the problem is corrected, go to "Verification of Vehicle Repair" procedure.

NOTE

There is a memory reset function on scantool that can erase optional parts automatically detected and memorized by PCM. Before or after testing PCM on the vehicle, use this function to reuse the PCM on the others.

VERIFICATION OF VEHICLE REPAIR EC73FB01

After a repair, it is essential to verify that the fault has been corrected.

1. Monitor and record the Freeze Frame Data for the Diagnostic Trouble Code(DTC) which has been diagnosed.
2. Using a Scantool, Clear the DTCs
3. Operate the vehicle within conditions noted in the freeze frame data or enable conditions
4. Monitor that all rediness test have been verified as " Complete "
5. Are any DTCs present ?

YES

▶ Go to the applicable troubleshoooting procedure.

NO

▶ System is performing to specification at this time.

DTC P0132 HO2S CIRCUIT HIGH VOLTAGE (BANK 1 / SENSOR 1)

COMPONENT LOCATION E34D7E43

Refer to DTC P0131.

GENERAL DESCRIPTION E8459360

Refer to DTC P0131.

DTC DESCRIPTION E74110AE

Checking output signals from HO2S under detecting condition, if an output signal is above 1.3V for more than predeterminate time, PCM sets P0132. MIL(Malfunction Indication Lamp) turns on when the malfunction lasts till consecutive 2 driving cycle.

DTC DETECTING CONDITION E0C6706A

Item	Detecting Condition	Possible cause
DTC Strategy	• Monitor signal voltage	• Poor Connection • Short to battery in harness • HO2S(B1/S1) • PCM
Enable Conditions	• Battery voltage ≥ 10V • Engine running ≥ 60 sec. • Engine warm-up state	
Threshold value	• The voltage of HO2S(B1/S1) > 1.3V	
Diagnosis Time	• Continuous (more than 12.5 sec.failure for every 15 sec.test)	
MIL On Condition	• 2 Driving Cycles	

SPECIFICATION E8E22996

Refer to DTC P0131.

SCHEMATIC DIAGRAM E2838EC3

Refer to DTC P0131.

SIGNAL WAVEFORM AND DATA EC655E30

Refer to DTC P0131.

MONITOR DTC STATUS EB5D5CFA

Refer to DTC P0131.

TERMINAL AND CONNECTOR INSPECTION E340BB9F

Refer to DTC P0131.

SIGNAL CIRCUIT INSPECTION E702180A

1. IG "OFF" and disconnect HO2S(B1/S1) connector.
2. IG "ON" and ENG "OFF"
3. Measure voltage between terminal 1 of HO2S(B1/S1) harness connector and chassis ground.

Specification : Approx. 3.5V - when pumping current is ON Approx. 0.45V - when pumping current is OFF

4. Is the measured voltage within specification?

YES

▶ Go to "Component Inspection" procedure.

NO

▶ Repair short to battery in harness, and go to "Verification of Vehicle Repair" procedure.

COMPONENT INSPECTION EBFB56A3

1. Check the Signal waveform of HO2S
   1) IG "OFF" and connect HO2S connector.
   2) Engine start.
   3) After warming-up, monitor signal waveform of HO2S with scantool.?

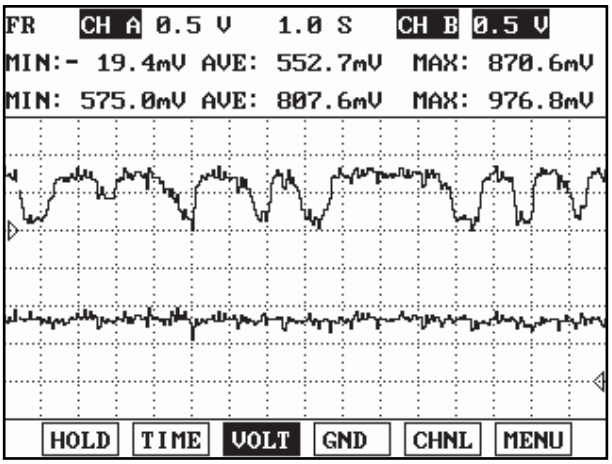

Fig) Signal waveform of front(the upper) and rear(the lower) HO2S at idle

SCMF16225L

   4) Is the sensor switching properly?

YES

▶ Go to "Check HO2S" as below.

NO

▶ Substitute with a known - good HO2S and check for proper operation.
If the problem is corrected, go to "Verification of Vehicle Repair" procedure.

2. Check HO2S

1) IG "OFF" and disconnect HO2S connector.

2) Check that the HO2S is securely installed.

3) Check the HO2S for contamination or damage

4) Is the sensor normal?

YES

▶ Substitute with a known - good PCM and check for proper operation.
If the problem is corrected, go to "Verification of Vehicle Repair" procedure.

NO

▶ Substitute with a known - good HO2S and check for proper operation.
If the problem is corrected, go to "Verification of Vehicle Repair" procedure.

NOTE

There is a memory reset function on scantool that can erase optional parts automatically detected and memorized by PCM. Before or after testing PCM on the vehicle, use this function to reuse the PCM on the others.

VERIFICATION OF VEHICLE REPAIR E57C1154

Refer to DTC P0131.

DTC P0133 HO2S CIRCUIT SLOW RESPONSE (BANK 1 / SENSOR 1)

COMPONENT LOCATION E7CE00FE

Refer to DTC P0131.

GENERAL DESCRIPTION E2028FB5

Refer to DTC P0131.

DTC DESCRIPTION E6CF7AD6

Checking output signals from HO2S under detecting condition, if PCM judges it's signals too slow, PCM sets P0133. MIL(Malfunction Indication Lamp) turns on when the malfunction lasts till consecutive 2 driving cycle.

DTC DETECTING CONDITION EB2A1D25

Item	Detecting Condition	Possible cause
DTC Strategy	• Monitor HO2S's response rate	• Poor connection • Faulty HO2S • Faulty PCM
Enable Conditions	• Engine warm-up sufficiently • Engine run time > 60sec • Drive at a steady speed between 45-55 mph(72-88 km/h) • Engine Coolant > 70℃(158 °F) • No disabling faults	
Threshold value	• The calculated response rate is too slow (out of threshold in PCM)	
Diagnosis Time	• Continuous	
MIL On Condition	• 2 Driving Cycles	

SPECIFICATION EE815218

Refer to DTC P0131.

SCHEMATIC DIAGRAM E191554F

Refer to DTC P0131.

SIGNAL WAVEFORM AND DATA EC985B21

Refer to DTC P0131.

MONITOR DTC STATUS E9343755

Refer to DTC P0131.

COMPONENT INSPECTION E419B061

1. Replace the HO2S.

2. Clear DTC with scantool.
3. Start the engine and warm it up until the radiator fan comes on(more than at least 10 minutes).
4. Drive at a steady speed between 45-55 mph(72-88 km/h) for 120 sec.
5. Stop and then maintain idle state.
6. Check if O2 sensor monitoring readiness is complete.
7. Does the scan tool show DTC P0133?

YES

▶ Substitute with a known - good PCM and check for proper operation.
If the problem is corrected, go to "Verification of Vehicle Repair" procedure.

NO

▶ Troubleshooting is finished.

VERIFICATION OF VEHICLE REPAIR EC3749F2

Refer to DTC P0131.

DTC P0134 HO2S CIRCUIT NO ACTIVITY DETECTED (BANK 1 / SENSOR 1)

COMPONENT LOCATION EC04207D

Refer to DTC P0131.

GENERAL DESCRIPTION E000B34D

Refer to DTC P0131.

DTC DESCRIPTION EBB9E980

Checking output signals from HO2S under detecting condition, if an output voltage is approx.0.45V or 3.5V for more than predeterminate time, PCM sets P0134. MIL(Malfunction Indication Lamp) turns on when the malfunction lasts till consecutive 2 driving cycle.

DTC DETECTING CONDITION E768B6A1

Item		Detecting Condition	Possible cause
DTC Strategy		• Monitor signal voltage	• Poor connection • Open in harness • HO2S(B1/S1) • PCM
Enable Conditions		• Battery voltage ≥ 10V • Engine running ≥ 60 sec. • Engine warm-up state • No disable faults	
Thresh old value	Case 1	• 1.2V ≤ Voltage of HO2S ≤ 3.9V (at pumping current ON)	
	Case 2	• 0.415V ≤ Voltage of HO2S ≤ 0.515V (at pumping current OFF)	
Diagnosis Time		• Continuous (more than 76.5 sec.failure for every 90 sec.test)	
MIL On Condition		• 2 Driving Cycles	

SPECIFICATION E61464A0

Refer to DTC P0131.

SCHEMATIC DIAGRAM E4E20A98

Refer to DTC P0131.

SIGNAL WAVEFORM AND DATA E4D090D2

Refer to DTC P0131.

MONITOR DTC STATUS EDFACD48

Refer to DTC P0131.

TERMINAL AND CONNECTOR INSPECTION E0773217

Refer to DTC P0131.

SIGNAL CIRCUIT INSPECTION EB3A1908

1. IG "OFF" and disconnect HO2S(B1/S1) connector.
2. IG "ON" and ENG "OFF"
3. Measure voltage between terminal 1 of HO2S(B1/S1) harness connector and chassis ground.

Specification : Approx. 3.5V - when pumping current is ON
Approx. 0.45V - when pumping current is OFF

4. Is the measured voltage within specification?

YES

▶ Go to "Ground circuit inspection" procedure.

NO

▶ Repair open in harness, and go to "Verification of Vehicle Repair" prcedure.

GROUND CIRCUIT INSPECTION E9B8BED9

1. IG "ON" and disconnect HO2S(B1/S1) connector.
2. Measure voltage between terminal 1 of HO2S(B1/S1) harness connector and chassis ground.
3. Measure voltage between terminals 1 and 2 of HO2S(B1/S1) harness connector.

Specification : Voltage difference between measurement "A" and "B" is below 200mV.

4. Is the measured voltage within specification?

YES

▶ Go to "Component inspection" procedure.

NO

▶ Repair open or contact resistance in harness, and go to "Verification of Vehicle Repair" prcedure.

COMPONENT INSPECTION EA53DB05

1. Check the Signal waveform of HO2S
   1) IG "OFF" and connect HO2S connector.
   2) Engine start.
   3) After warming-up, monitor signal waveform of HO2S with scantool.?

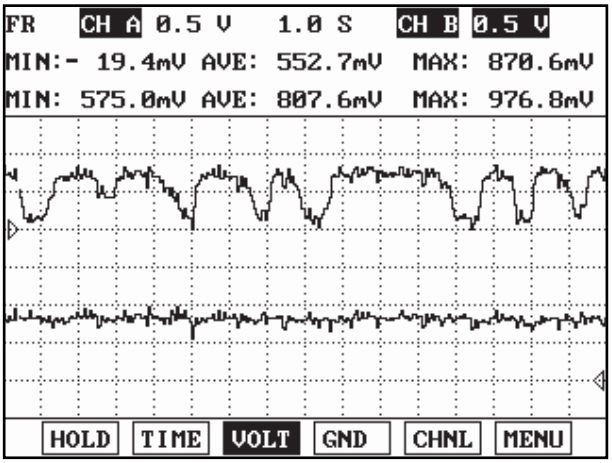

Fig) Signal waveform of front(the upper) and rear(the lower) HO2S at idle

SCMF16225L

4) Is the sensor switching properly?

YES

▶ Go to "Check HO2S" as below.

NO

▶ Substitute with a known - good HO2S and check for proper operation.
If the problem is corrected, go to "Verification of Vehicle Repair" procedure.

2. Check HO2S

1) IG "OFF" and disconnect HO2S connector.

2) Check that the HO2S is securely installed.

3) Check the HO2S for contamination or damage

4) Is the sensor normal?

YES

▶ Substitute with a known - good PCM and check for proper operation.
If the problem is corrected, go to "Verification of Vehicle Repair" procedure.

NO

▶ Substitute with a known - good HO2S and check for proper operation.
If the problem is corrected, go to "Verification of Vehicle Repair" procedure.

NOTE

There is a memory reset function on scantool that can erase optional parts automatically detected and memorized by PCM. Before or after testing PCM on the vehicle, use this function to reuse the PCM on the others.

VERIFICATION OF VEHICLE REPAIR E39CB705

Refer to DTC P0131.

DTC P0137 HO2S CIRCUIT LOW VOLTAGE (BANK 1 / SENSOR 2)

COMPONENT LOCATION EA538A1A

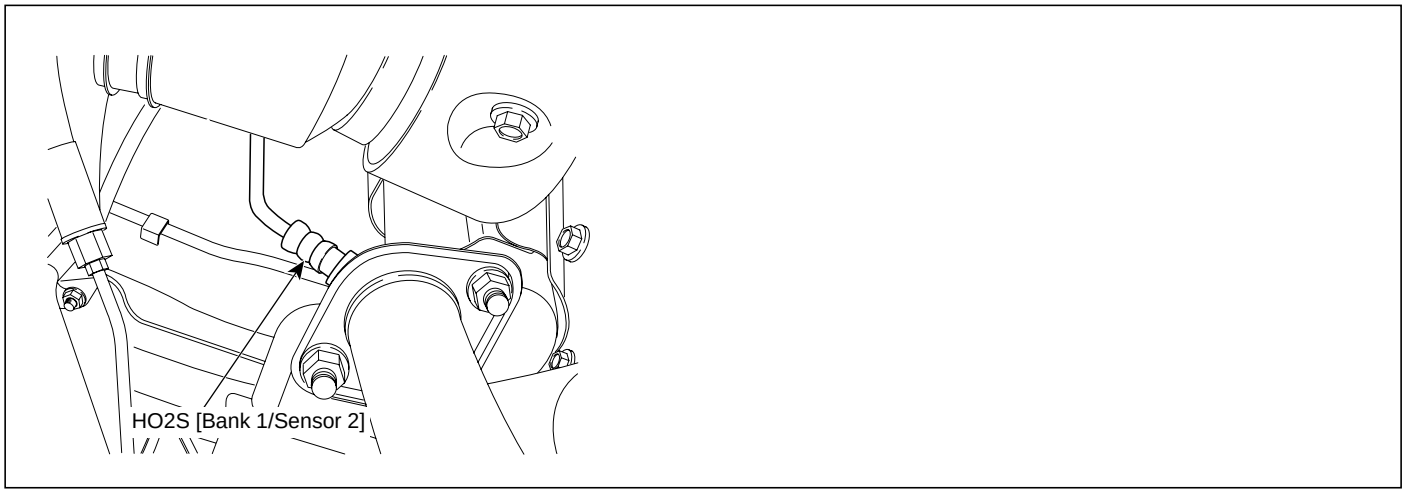

SCMF16165L

GENERAL DESCRIPTION E8446B63

The rear heated oxygen sensor is mounted on the rear side of the Catalytic Converter (warm-up catalytic converter) or in the rear exhaust pipe, which is able to detect catalyst efficiency. The rear heated oxygen sensor (HO2S) produces a voltage between 0V and 1V. This rear heated oxygen sensor is used to estimate the oxygen storage capability. If a catalyst has good conversion properties, the oxygen fluctuations are smoothed by the oxygen storage capacity of the catalyst. If the conversion provided by the catalyst is low due to aging, poisoning or misfiring, then the oxygen fluctuations are similar to signals from the front oxygen sensor.

DTC DESCRIPTION E79D0981

Checking output signals from HO2S under detecting condition, if an output signal is below 0.04V for more than predeterminate time, PCM sets P0137. MIL(Malfunction Indication Lamp) turns on when the malfunction lasts till consecutive 2 driving cycle.

DTC DETECTING CONDITION EE412DD5

Item	Detecting Condition	Possible cause
DTC Strategy	• Monitor signal voltage	• Poor Connection • Short to ground in harness • HO2S(B1/S2) • PCM
Enable Conditions	• Battery voltage ≥ 10V • Engine running ≥ 60 sec. • Engine warm-up state	
Threshold value	• The voltage of HO2S(B1/S2) < 0.04V	
Diagnosis Time	• Continuous (more than 12.5 sec. failure for every 15 sec.test)	
MIL On Condition	• 2 Driving Cycles	

SPECIFICATION EFA42C60

(REFERENCE ONLY)

Test Condition	HO2S Voltage(Sensor1)	HO2S Voltage(Sensor2)
HO2S Signal at idle after warm-up	Signal is commonly switching from rich to lean more than 3 times in 10 sec.	Signal is commonly above 0.6V.
HO2S signal at open circuit (Pumping current OFF)	Approx. 0.45V	
HO2S signal at open circuit (Pumping current ON)	Approx. 3.5V	

SCHEMATIC DIAGRAM EDFB2BD8

[CIRCUIT DIAGRAM]

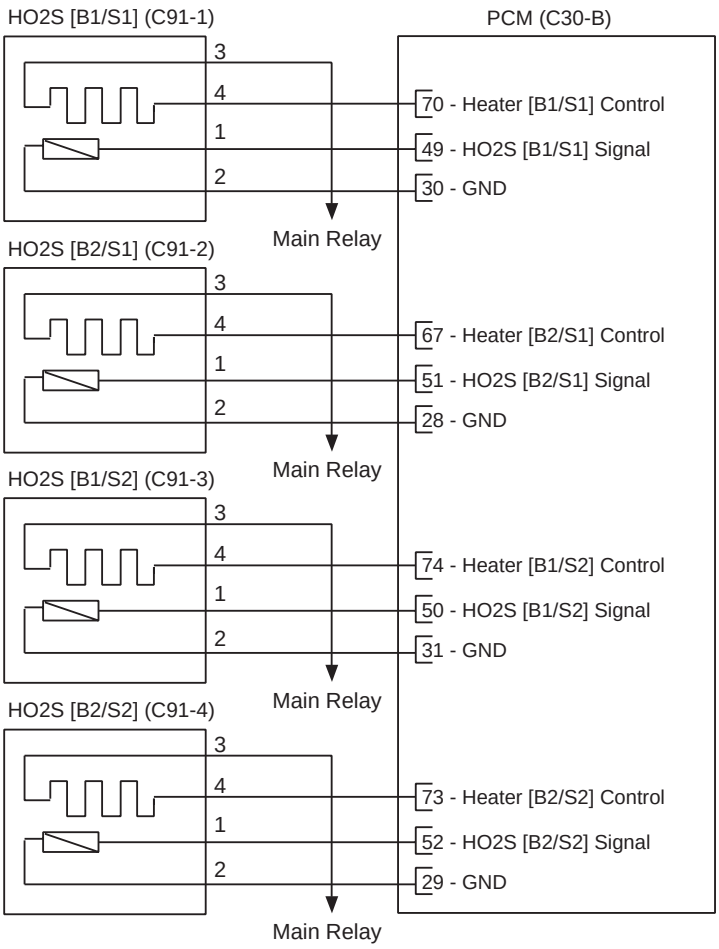

[CONNECTION INFORMATION]

HO2S [B1/S1]

Terminal	Connected to	Function
1	PCM C30-B (49)	HO2S [B1/S1] Signal
2	PCM C30-B (30)	Sensor ground
3	Main Relay	Battery Voltage (B+)
4	PCM C30-B (70)	Heater [B1/S1] Control

HO2S [B2/S1]

Terminal	Connected to	Function
1	PCM C30-B (51)	HO2S [B2/S1] Signal
2	PCM C30-B (28)	Sensor ground
3	Main Relay	Battery Voltage (B+)
4	PCM C30-B (67)	Heater [B2/S1] Control

HO2S [B1/S2]

Terminal	Connected to	Function
1	PCM C30-B (50)	HO2S [B1/S2] Signal
2	PCM C30-B (31)	Sensor ground
3	Main Relay	Battery Voltage (B+)
4	PCM C30-B (74)	Heater [B1/S2] Control

HO2S [B2/S2]

Terminal	Connected to	Function
1	PCM C30-B (52)	HO2S [B2/S2] Signal
2	PCM C30-B (29)	Sensor ground
3	Main Relay	Battery Voltage (B+)
4	PCM C30-B (73)	Heater [B2/S2] Control

[HARNESS CONNECTORS]



C91-1,2

HO2S [Bank 1/Sensor 1]
HO2S [Bank 2/Sensor 1]

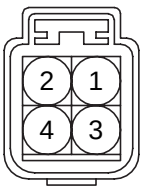

C91-3,4

HO2S [Bank 1/Sensor 2]
HO2S [Bank 2/Sensor 2]

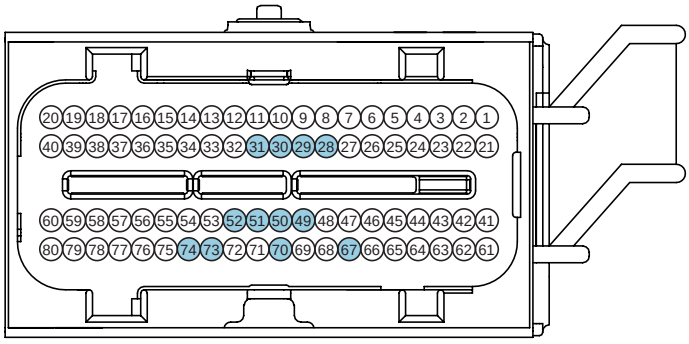

C30-B

PCM

SCMF16110L

SIGNAL WAVEFORM AND DATA E00C0EDC

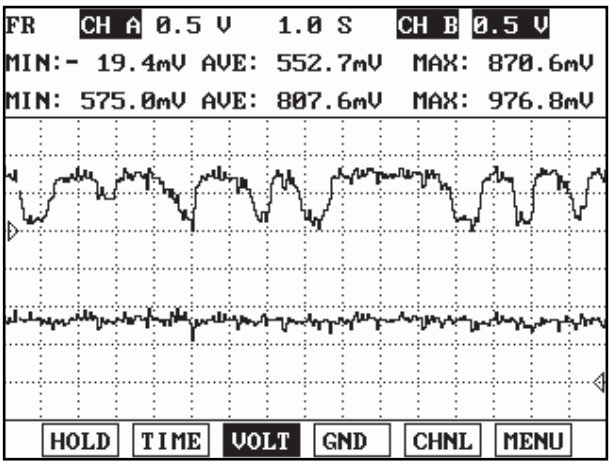

Fig) Signal waveforms of front HO2S(the upper) and rear HO2S(the lower)

SCMF16223L

After warming-up, if accelerator pedal is released suddenly around 4000rpm, the HO2S signal reading will be lower than 200mV resulting from Fuel cut-off for the moment. Conversely, if suddenly accelerator pedal is depressed, HO2S signal reading will be around 0.6V ~1.0V. At idle, Normally HO2S signal will switch from lean to rich with 3 Hz. And as racing, Its frequency rises.

MONITOR DTC STATUS E0480FCB

1. Check DTC Status

   1) Connect scantool to Data Link Connector(DLC).

   2) IG "ON".

   3) Select "Diagnostic Trouble Codes(DTCs)" mode, and then Press F4(DTAL) to check DTC's information from the DTCs menu

   4) Read "DTC Status" parameter.

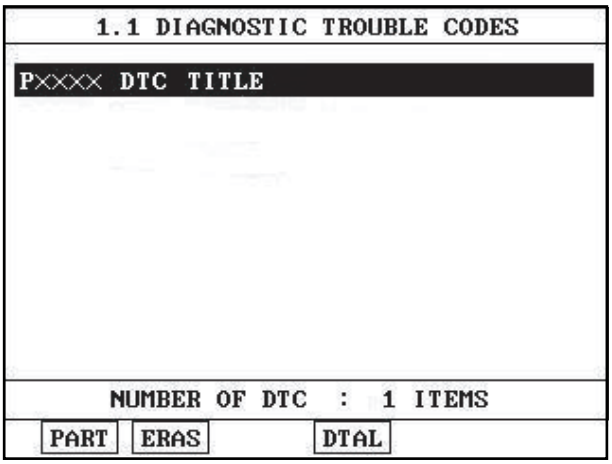

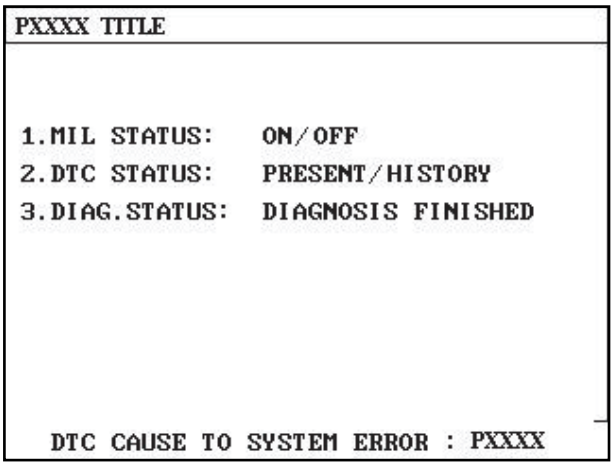

SCMF16159L

   5) Is parameter displayed "Present fault"?

YES

▶ Go to "Terminal and connector inspection" procedure.

NO

▶ Fault is intermittent caused by poor contact in the sensor's and/or PCM's connector or was repaired and PCM memory was not cleared. Thoroughly check connectors for looseness, poor connection, ending, corrosion, contamination, deterioration, or damage. Repair or replace as necessary and go to "Verification of Vehicle Repair" procedure.

TERMINAL AND CONNECTOR INSPECTION E4CC3E07

1. Many malfunctions in the electrical system are caused by poor harness and terminals. Faults can also be caused by interference from other electrical systems, and mechanical or chemical damage.
2. Thoroughly check connectors for looseness, poor connection, bending, corrosion, contamination, deterioration, or damage.
3. Has a problem been found?

YES

▶ Repair as necessary and go to "Verification of Vehicle Repair" procedure

NO

▶ Go to " Signal Circuit Inspection " procedure.

SIGNAL CIRCUIT INSPECTION E46755BD

1. IG "OFF" and disconnect HO2S(B1/S2)
2. IG "ON"
3. Measure voltage between terminal 1 of HO2S(B1/S2) harness connector and chassis ground.

Specification : Approx. 3.5V - when pumping current is ON Approx. 0.45V - when pumping current is OFF

4. Is the measured voltage within specification?

YES

▶ Go to "Component Inspection" procedure.

NO

▶ Repair short to ground in harness, and go to "Verification of Vehicle Repair" procedure.

COMPONENT INSPECTION E9A07236

1. Check the Signal waveform of HO2S
   1) IG "OFF" and connect HO2S connector.
   2) Engine start.

3) After warming-up, monitor signal waveform of HO2S with scantool.?

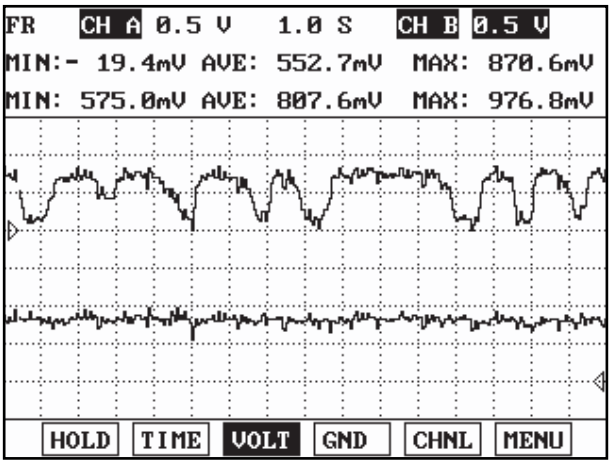

Fig) Signal waveform of front(the upper) and rear(the lower) HO2S at idle

SCMF16225L

4) Is the sensor switching properly?

YES

▶ Go to "Check HO2S" as below.

NO

▶ Substitute with a known - good HO2S and check for proper operation.
If the problem is corrected, go to "Verification of Vehicle Repair" procedure.

2. Check HO2S

1) IG "OFF" and disconnect HO2S connector.

2) Check that the HO2S is securely installed.

3) Check the HO2S for contamination or damage

4) Is the sensor normal?

YES

▶ Substitute with a known - good PCM and check for proper operation.
If the problem is corrected, go to "Verification of Vehicle Repair" procedure.

NO

▶ Substitute with a known - good HO2S and check for proper operation.
If the problem is corrected, go to "Verification of Vehicle Repair" procedure.

NOTE

There is a memory reset function on scantool that can erase optional parts automatically detected and memorized by PCM. Before or after testing PCM on the vehicle, use this function to reuse the PCM on the others.

VERIFICATION OF VEHICLE REPAIR E8544C8A

After a repair, it is essential to verify that the fault has been corrected.

1. Monitor and record the Freeze Frame Data for the Diagnostic Trouble Code(DTC) which has been diagnosed.
2. Using a Scantool, Clear the DTCs
3. Operate the vehicle within conditions noted in the freeze frame data or enable conditions
4. Monitor that all rediness test have been verified as " Complete "
5. Are any DTCs present ?

YES

▶ Go to the applicable troubleshoooting procedure.

NO

▶ System is performing to specification at this time.

DTC P0138 HO2S CIRCUIT HIGH VOLTAGE (BANK 1 / SENSOR 2)

COMPONENT LOCATION E47EE366

Refer to DTC P0137.

GENERAL DESCRIPTION EDFEEB95

Refer to DTC P0137.

DTC DESCRIPTION E1CC9CD2

Checking output signals from HO2S under detecting condition, if an output signal is above 1.3V for more than predeterminate time, PCM sets P0138. MIL(Malfunction Indication Lamp) turns on when the malfunction lasts till consecutive 2 driving cycle.

DTC DETECTING CONDITION E5E6FDFA

Item	Detecting Condition	Possible cause
DTC Strategy	• Monitor signal voltage	• Poor connection • Short to battery in harness • HO2S(B1/S2) • PCM
Enable Conditions	• Battery voltage ≥ 10V • Engine running ≥ 60 sec • Engine warm-up state	
Threshold value	• The voltage of HO2S(B1/S2) > 1.3V	
Diagnosis Time	• Continuous (more than 12.5 sec.failure for every 15 sec.test)	
MIL On Condition	• 2 Driving Cycles	

SPECIFICATION E5165F35

Refer to DTC P0137.

SCHEMATIC DIAGRAM E0F689E6

Refer to DTC P0137.

SIGNAL WAVEFORM AND DATA E3809D65

Refer to DTC P0137.

MONITOR DTC STATUS EB4B82C9

Refer to DTC P0137.

TERMINAL AND CONNECTOR INSPECTION EF5D7B77

Refer to DTC P0137.

SIGNAL CIRCUIT INSPECTION E63979A1

1. IG "OFF" and disconnect HO2S(B1/S2) connector.
2. IG "ON" and ENG "OFF"
3. Measure voltage between terminal 1 of HO2S(B1/S2) harness connector and chassis ground.

Specification : Approx. 3.5V - when pumping current is ON Approx. 0.45V - when pumping current is OFF

4. Is the measured voltage within specification?

YES

▶ Go to "Component Inspection" procedure.

NO

▶ Repair short to battery in harness, and go to "Verification of Vehicle Repair" procedure.

COMPONENT INSPECTION E7837436

1. Check the Signal waveform of HO2S
   1) IG "OFF" and connect HO2S connector.
   2) Engine start.
   3) After warming-up, monitor signal waveform of HO2S with scantool.?

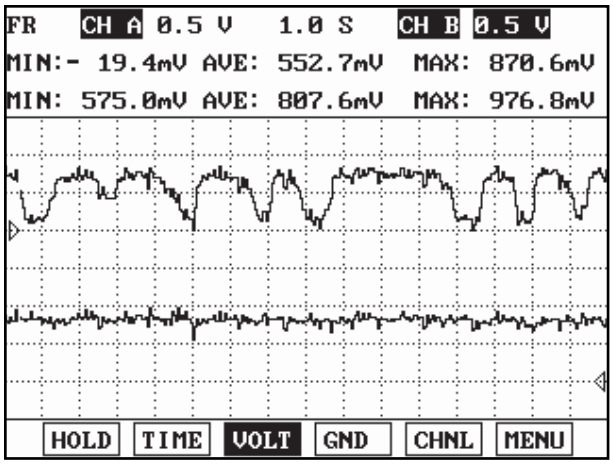

Fig) Signal waveform of front(the upper) and rear(the lower) HO2S at idle

SCMF16225L

   4) Is the sensor switching properly?

YES

▶ Go to "Check HO2S" as below.

NO

▶ Substitute with a known - good HO2S and check for proper operation.
If the problem is corrected, go to "Verification of Vehicle Repair" procedure.

2. Check HO2S

1) IG "OFF" and disconnect HO2S connector.

2) Check that the HO2S is securely installed.

3) Check the HO2S for contamination or damage

4) Is the sensor normal?

YES

▶ Substitute with a known - good PCM and check for proper operation.
If the problem is corrected, go to "Verification of Vehicle Repair" procedure.

NO

▶ Substitute with a known - good HO2S and check for proper operation.
If the problem is corrected, go to "Verification of Vehicle Repair" procedure.

NOTE

There is a memory reset function on scantool that can erase optional parts automatically detected and memorized by PCM. Before or after testing PCM on the vehicle, use this function to reuse the PCM on the others.

VERIFICATION OF VEHICLE REPAIR EC5462E1

Refer to DTC P0137.

DTC P0140 HO2S CIRCUIT NO ACTIVITY DETECTED (BANK 1 / SENSOR 2)

COMPONENT LOCATION EEBC2F3C

Refer to DTC P0137.

GENERAL DESCRIPTION ECB75069

Refer to DTC P0137.

DTC DESCRIPTION EF2F1633

Checking output signals from HO2S under detecting condition, if an output voltage is approx.0.45V or 3.5V for more than predeterminate time, PCM sets P0140. MIL(Malfunction Indication Lamp) turns on when the malfunction lasts till consecutive 2 driving cycle.

DTC DETECTING CONDITION EFF97065

Item		Detecting Condition	Possible cause
DTC Strategy		• Monitor signal voltage	• Poor Connection • Open in harness • HO2S(B1/S2) • PCM
Enable Conditions		• Battery voltage ≥ 10V • Engine running ≥ 60 sec. • Engine warm-up state • No disable faults	
Thresh-old value	Case 1	• 1.2V ≤ Voltage of HO2S ≤ 3.9V (at pumping current ON)	
	Case 2	• 0.415V ≤ Voltage of HO2S ≤ 0.515V (at pumping current OFF)	
Diagnosis Time		• Continuous (more than 76.5 sec.failure for every 90 sec.test)	
MIL On Condition		• 2 driving cycles	

SPECIFICATION E0BF53DA

Refer to DTC P0137.

SCHEMATIC DIAGRAM E35BC6DB

Refer to DTC P0137.

SIGNAL WAVEFORM AND DATA E4AE5538

Refer to DTC P0137.

MONITOR DTC STATUS EB63EA5F

Refer to DTC P0137.

TERMINAL AND CONNECTOR INSPECTION E6400FE2

Refer to DTC P0137.

SIGNAL CIRCUIT INSPECTION E7FA65CA

1. IG "OFF" and disconnect HO2S(B1/S2) connector.
2. IG "ON" and ENG "OFF"
3. Measure voltage between terminal 1 of HO2S(B1/S2) harness connector and chassis ground.

Specification : Approx. 3.5V - when pumping current is ON
Approx. 0.45V - when pumping current is OFF

4. Is the measured voltage within specification?

YES

▶ Go to "Ground Circuit Inspection" procedure.

NO

▶ Repair open in harness, and go to "Verification of Vehicle Repair" procedure.

GROUND CIRCUIT INSPECTION E909D35D

1. IG "ON" and disconnect HO2S(B1/S2) connector.
2. Measure voltage between terminal 1 of HO2S(B1/S2) harness connector and chassis ground.
3. Measure voltage between terminals 1 and 2 of HO2S(B1/S2) harness connector.

Specification : Voltage difference between measurement "A" and "B" is below 200mV.

4. Is the measured voltage within specification?

YES

▶ Go to "Component inspection" procedure.

NO

▶ Repair open or contact resistance in harness, and go to "Verification of Vehicle Repair" prcedure.

COMPONENT INSPECTION EE664101

1. Check the Signal waveform of HO2S

   1) IG "OFF" and connect HO2S connector.

   2) Engine start.

   3) After warming-up, monitor signal waveform of HO2S with scantool.?

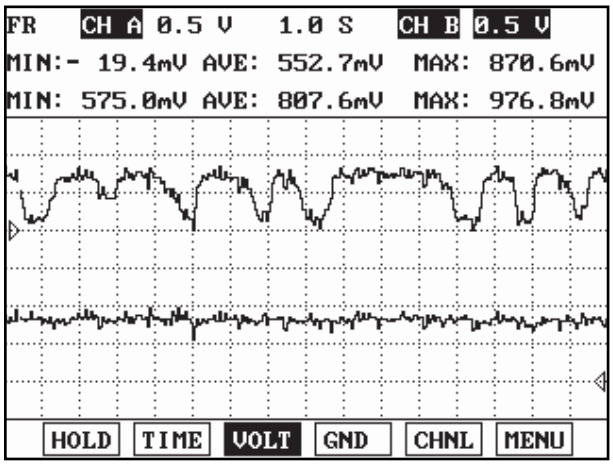

Fig) Signal waveform of front(the upper) and rear(the lower) HO2S at idle

SCMF16225L

   4) Is the sensor switching properly?

   YES

   ▶ Go to "Check HO2S" as below.

   NO

   ▶ Substitute with a known - good HO2S and check for proper operation.
   If the problem is corrected, go to "Verification of Vehicle Repair" procedure.

2. Check HO2S

   1) IG "OFF" and disconnect HO2S connector.

   2) Check that the HO2S is securely installed.

   3) Check the HO2S for contamination or damage

   4) Is the sensor normal?

   YES

   ▶ Substitute with a known - good PCM and check for proper operation.
   If the problem is corrected, go to "Verification of Vehicle Repair" procedure.

   NO

   ▶ Substitute with a known - good HO2S and check for proper operation.
   If the problem is corrected, go to "Verification of Vehicle Repair" procedure.

NOTE

There is a memory reset function on scantool that can erase optional parts automatically detected and memorized by PCM. Before or after testing PCM on the vehicle, use this function to reuse the PCM on the others.

VERIFICATION OF VEHICLE REPAIR EF632C17

Refer to DTC P0137.

DTC P0151 HO2S CIRCUIT LOW VOLTAGE (BANK 2 / SENSOR 1)

COMPONENT LOCATION ED40F14F

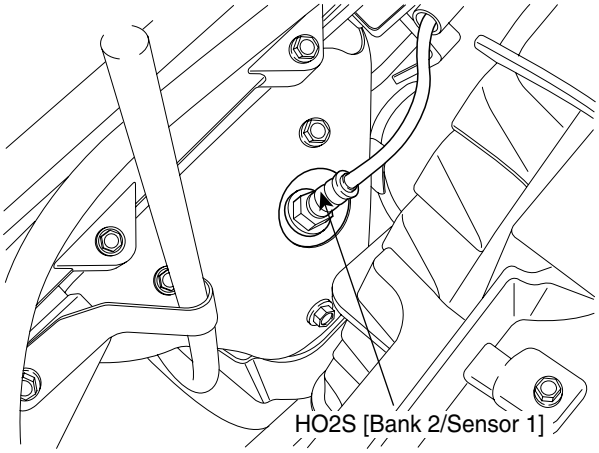

LGLG506A

GENERAL DESCRIPTION E6FB2D8C

In order to control emissions of the CO, HC and NOx components of the exhaust gas, heated oxygen sensor (HO2S), mounted on the front side and rear side of catalytic converter, detects the oxygen content in the exhaust gas. The front HO2S signal is used to control air/fuel ratio (closed loop fuel control) and the rear HO2S signal is used to monitor front HO2S and catalyst for proper operation. The HO2S requires a minimum temperature to operate properly and provide a closed loop fuel control system. The HO2S contains the heater element to reduce its warming-up time and ensure its performance during all driving conditions. The oxygen sensor generates a voltage that indicates the difference between the oxygen content of the exhaust stream and the oxygen content of ambient air. When the exhaust stream is " rich," there is more oxygen in the ambient air than in the exhaust stream, so the voltage will be higher.

DTC DESCRIPTION E2B9F456

Checking output signals from HO2S under detecting condition, if an output signal is below 0.04V for more than predeterminate time, PCM sets P0151. MIL(Malfunction Indication Lamp) turns on when the malfunction lasts till consecutive 2 driving cycle.

DTC DETECTING CONDITION E2E6D8F9

Item	Detecting Condition	Possible cause
DTC Strategy	• Monitor signal voltage	• Poor connection • Short to ground in harness • HO2S(B2/S1) • PCM
Enable Conditions	• Battery voltage ≥ 10V • Engine running ≥ 60 sec. • Engine warm-up state	
Threshold value	• The voltage of HO2S(B2/S1) < 0.04V	
Diagnosis Time	• Continuous (more than 12.5 sec. failure for every 15 sec.test)	
MIL On Condition	• 2 Driving Cycles	

SPECIFICATION EFE431CF

(REFERENCE ONLY)

Test Condition	HO2S Voltage(Sensor1)	HO2S Voltage(Sensor2)
HO2S Signal at idle after warm-up	Signal is commonly switching from rich to lean more than 3 times in 10 sec.	Signal is commonly above 0.6V.
HO2S signal at open circuit (Pumping current OFF)	Approx. 0.45V	
HO2S signal at open circuit (Pumping current ON)	Approx. 3.5V	

SCHEMATIC DIAGRAM E719BBFC

[CIRCUIT DIAGRAM]

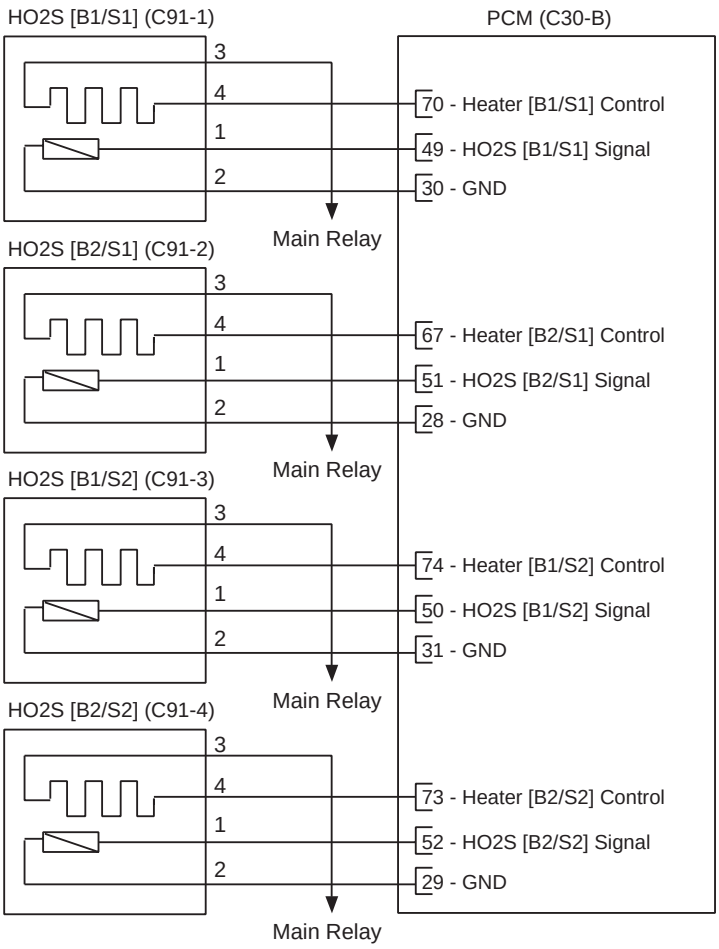

[CONNECTION INFORMATION]

HO2S [B1/S1]

Terminal	Connected to	Function
1	PCM C30-B (49)	HO2S [B1/S1] Signal
2	PCM C30-B (30)	Sensor ground
3	Main Relay	Battery Voltage (B+)
4	PCM C30-B (70)	Heater [B1/S1] Control

HO2S [B2/S1]

Terminal	Connected to	Function
1	PCM C30-B (51)	HO2S [B2/S1] Signal
2	PCM C30-B (28)	Sensor ground
3	Main Relay	Battery Voltage (B+)
4	PCM C30-B (67)	Heater [B2/S1] Control

HO2S [B1/S2]

Terminal	Connected to	Function
1	PCM C30-B (50)	HO2S [B1/S2] Signal
2	PCM C30-B (31)	Sensor ground
3	Main Relay	Battery Voltage (B+)
4	PCM C30-B (74)	Heater [B1/S2] Control

HO2S [B2/S2]

Terminal	Connected to	Function
1	PCM C30-B (52)	HO2S [B2/S2] Signal
2	PCM C30-B (29)	Sensor ground
3	Main Relay	Battery Voltage (B+)
4	PCM C30-B (73)	Heater [B2/S2] Control

[HARNESS CONNECTORS]



C91-1,2

HO2S [Bank 1/Sensor 1]
HO2S [Bank 2/Sensor 1]

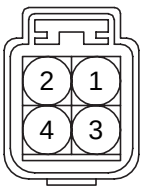

C91-3,4

HO2S [Bank 1/Sensor 2]
HO2S [Bank 2/Sensor 2]

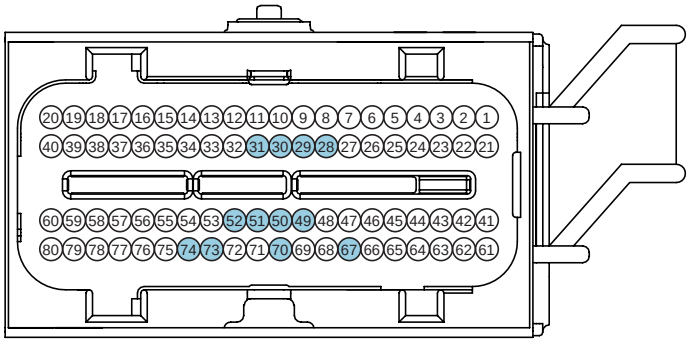

C30-B

PCM

SCMF16110L

SIGNAL WAVEFORM AND DATA EAF4A1D8

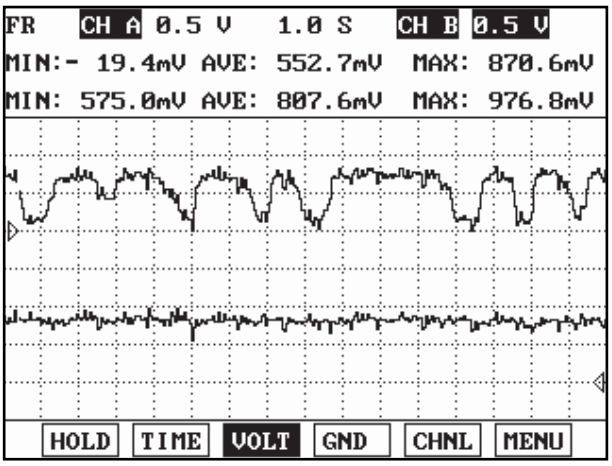

Fig) Signal waveforms of front HO2S(the upper) and rear HO2S(the lower)

SCMF16223L

After warming-up, if accelerator pedal is released suddenly around 4000rpm, the HO2S signal reading will be lower than 200mV resulting from Fuel cut-off for the moment. Conversely, if suddenly accelerator pedal is depressed, HO2S signal reading will be around 0.6V ~1.0V. At idle, Normally HO2S signal will switch from lean to rich with 3 Hz. And as racing, Its frequency rises.

MONITOR DTC STATUS ECF25ABB

1. Check DTC Status

   1) Connect scantool to Data Link Connector(DLC).

   2) IG "ON".

   3) Select "Diagnostic Trouble Codes(DTCs)" mode, and then Press F4(DTAL) to check DTC's information from the DTCs menu

   4) Read "DTC Status" parameter.

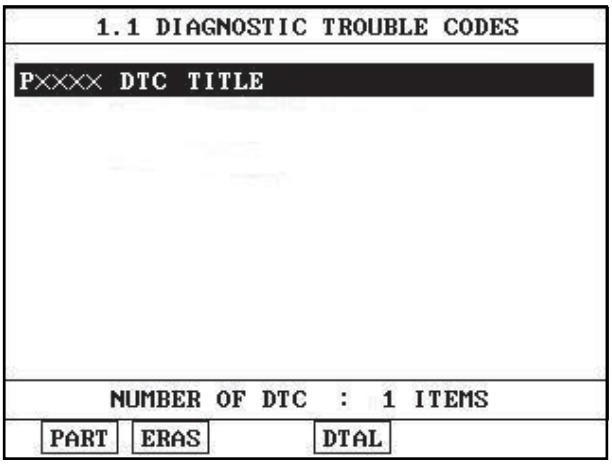

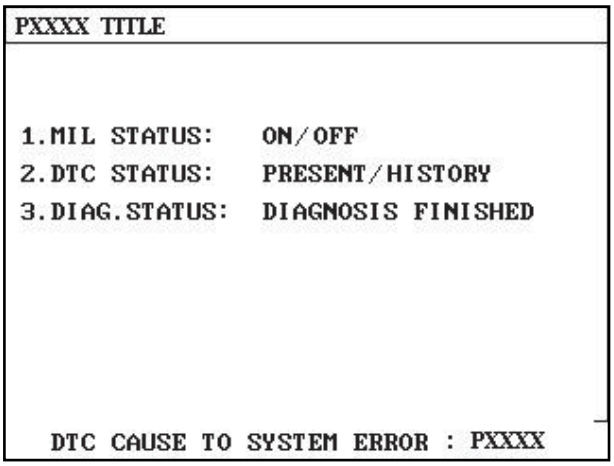

SCMF16159L

   5) Is parameter displayed "Present fault"?

YES

▶ Go to "Terminal and connector inspection" procedure.

NO

▶ Fault is intermittent caused by poor contact in the sensor's and/or PCM's connector or was repaired and PCM memory was not cleared. Thoroughly check connectors for looseness, poor connection, ending, corrosion, contamination, deterioration, or damage. Repair or replace as necessary and go to "Verification of Vehicle Repair" procedure.

TERMINAL AND CONNECTOR INSPECTION E8A43B9B

1. Many malfunctions in the electrical system are caused by poor harness and terminals. Faults can also be caused by interference from other electrical systems, and mechanical or chemical damage.
2. Thoroughly check connectors for looseness, poor connection, bending, corrosion, contamination, deterioration, or damage.
3. Has a problem been found ?

YES

▶ Repair as necessary and go to "Verification of Vehicle Repair" procedure

NO

▶ Go to "Signal Circuit Inspection" procedure.

SIGNAL CIRCUIT INSPECTION E785105E

1. IG "OFF" and disconnect HO2S(B2/S1) connector.
2. IG "ON" and ENG "OFF"
3. Measure voltage between terminal 1 of HO2S(B2/S1) harness connector and chassis ground.

Specification :
Approx. 3.5V - when pumping current is ON
Approx. 0.45V - when pumping current is OFF

4. Is the measured voltage within specification?

YES

▶ Go to "Component Inspection" procedure.

NO

▶ Repair short to ground in harness, and go to "Verification of Vehicle Repair" procedure.

COMPONENT INSPECTION E6F6E618

1. Check the Signal waveform of HO2S
   1) IG "OFF" and connect HO2S connector.

2) Engine start.

3) After warming-up, monitor signal waveform of HO2S with scantool.?

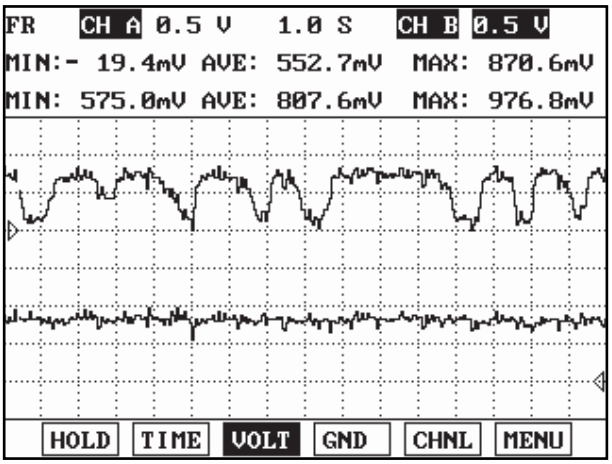

Fig) Signal waveform of front(the upper) and rear(the lower) HO2S at idle

SCMF16225L

4) Is the sensor switching properly?

YES

▶ Go to "Check HO2S" as below.

NO

▶ Substitute with a known - good HO2S and check for proper operation.
If the problem is corrected, go to "Verification of Vehicle Repair" procedure.

2. Check HO2S

1) IG "OFF" and disconnect HO2S connector.

2) Check that the HO2S is securely installed.

3) Check the HO2S for contamination or damage

4) Is the sensor normal?

YES

▶ Substitute with a known - good PCM and check for proper operation.
If the problem is corrected, go to "Verification of Vehicle Repair" procedure.

NO

▶ Substitute with a known - good HO2S and check for proper operation.
If the problem is corrected, go to "Verification of Vehicle Repair" procedure.

NOTE

There is a memory reset function on scantool that can erase optional parts automatically detected and memorized by PCM. Before or after testing PCM on the vehicle, use this function to reuse the PCM on the others.

VERIFICATION OF VEHICLE REPAIR EF0DAD4D

After a repair, it is essential to verify that the fault has been corrected.

1. Monitor and record the Freeze Frame Data for the Diagnostic Trouble Code(DTC) which has been diagnosed.
2. Using a Scantool, Clear the DTCs
3. Operate the vehicle within conditions noted in the freeze frame data or enable conditions
4. Monitor that all rediness test have been verified as " Complete "
5. Are any DTCs present ?

YES

▶ Go to the applicable troubleshoooting procedure.

NO

▶ System is performing to specification at this time.

DTC P0152 HO2S CIRCUIT HIGH VOLTAGE (BANK 2 / SENSOR 1)

COMPONENT LOCATION E73AFB1C

Refer to DTC P0151.

GENERAL DESCRIPTION EFF8EE63

Refer to DTC P0151.

DTC DESCRIPTION E92FC465

Checking output signals from HO2S under detecting condition, if an output signal is above 1.3V for more than predeterminate time, PCM sets P0152. MIL(Malfunction Indication Lamp) turns on when the malfunction lasts till consecutive 2 driving cycle.

DTC DETECTING CONDITION E504302B

Item	Detecting Condition	Possible cause
DTC Strategy	• Monitor signal voltage	• Poor connection • Short to battery in harness • HO2S(B2/S1) • PCM
Enable Conditions	• attery voltage ≥ 10V • Engine running ≥ 60 sec. • Engine warm-up state	
Threshold value	• The voltage of HO2S(B2/S1) > 1.3V	
Diagnosis Time	• Continuous (more than 12.5 sec.failure for every 15 sec.test)	
MIL On Condition	• 2 Driving Cycles	

SPECIFICATION E64EEB11

Refer to DTC P0151.

SCHEMATIC DIAGRAM EC852741

Refer to DTC P0151.

SIGNAL WAVEFORM AND DATA E7BF889E

Refer to DTC P0151.

MONITOR DTC STATUS E632FE80

Refer to DTC P0151.

TERMINAL AND CONNECTOR INSPECTION EDA7B9B8

Refer to DTC P0151.

SIGNAL CIRCUIT INSPECTION E724643F

1. IG "OFF" and disconnect HO2S(B2/S1) connector.
2. IG "ON" and ENG "OFF"
3. Measure voltage between terminal 1 of HO2S(B2/S1) harness connector and chassis ground.

Specification :
Approx. 3.5V - when pumping current is ON
Approx. 0.45V - when pumping current is OFF

4. Is the measured voltage within specification?

YES

▶ Go to "Component Inspection" procedure.

NO

▶ Repair short to battery in harness, and go to "Verification of Vehicle Repair" procedure.

COMPONENT INSPECTION EFE36D91

1. Check the Signal waveform of HO2S
   1) IG "OFF" and connect HO2S connector.
   2) Engine start.
   3) After warming-up, monitor signal waveform of HO2S with scantool.?

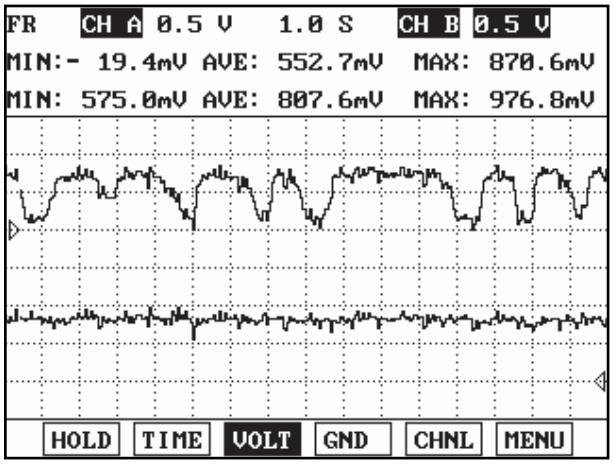

Fig) Signal waveform of front(the upper) and rear(the lower) HO2S at idle

SCMF16225L

   4) Is the sensor switching properly?

YES

▶ Go to "Check HO2S" as below.

NO

▶ Substitute with a known - good HO2S and check for proper operation.
If the problem is corrected, go to "Verification of Vehicle Repair" procedure.

2. Check HO2S

1) IG "OFF" and disconnect HO2S connector.

2) Check that the HO2S is securely installed.

3) Check the HO2S for contamination or damage

4) Is the sensor normal?

YES

▶ Substitute with a known - good PCM and check for proper operation.
If the problem is corrected, go to "Verification of Vehicle Repair" procedure.

NO

▶ Substitute with a known - good HO2S and check for proper operation.
If the problem is corrected, go to "Verification of Vehicle Repair" procedure.

NOTE

There is a memory reset function on scantool that can erase optional parts automatically detected and memorized by PCM. Before or after testing PCM on the vehicle, use this function to reuse the PCM on the others.

VERIFICATION OF VEHICLE REPAIR EF53775E

Refer to DTC P0151.

DTC P0153 HO2S CIRCUIT SLOW RESPONSE (BANK 2 / SENSOR 1)

COMPONENT LOCATION E5394BE4

Refer to DTC P0151.

GENERAL DESCRIPTION E352B807

Refer to DTC P0151.

DTC DESCRIPTION EAD91003

Checking output signals from HO2S under detecting condition, if PCM judges it's signals too slow, PCM sets P0153. MIL(Malfunction Indication Lamp) turns on when the malfunction lasts till consecutive 2 driving cycle.

DTC DETECTING CONDITION EC1F151B

Item	Detecting Condition	Possible cause
DTC Strategy	• Monitor HO2S's response rate	• Poor connection • Faulty HO2S • Faulty PCM
Enable Conditions	• Engine warm-up sufficiently • Engine run time > 60sec • Drive at a steady speed between 45-55 mph(72-88 km/h) • Engine Coolant > 70℃(158 °F) • No disabling faults	
Threshold value	• The calculated response rate is too slow (out of threshold in PCM)	
Diagnosis Time	• Continuous	
MIL On Condition	• 2 Driving Cycles	

SPECIFICATION E40CCCA6

Refer to DTC P0151.

SCHEMATIC DIAGRAM E00FE44D

Refer to DTC P0151.

SIGNAL WAVEFORM AND DATA E30C4E04

Refer to DTC P0151.

MONITOR DTC STATUS E7045E97

Refer to DTC P0151.

COMPONENT INSPECTION EEA2F864

1. Replace the HO2S.

2. Clear DTC with scantool.
3. Start the engine and warm it up until the radiator fan comes on(more than at least 10 minutes).
4. Drive at a steady speed between 45-55 mph(72-88 km/h) for 120 sec.
5. Stop and then maintain idle state.
6. Check if O2 sensor monitoring readiness is complete.
7. Does the scan tool show DTC P0153?

YES

▶ Substitute with a known - good PCM and check for proper operation.
If the problem is corrected, go to "Verification of Vehicle Repair" procedure.

NO

▶ Troubleshooting is finished.

VERIFICATION OF VEHICLE REPAIR EC659C03

Refer to DTC P0151.

DTC P0154 HO2S CIRCUIT NO ACTIVITY DETECTED (BANK 2 / SENSOR 1)

COMPONENT LOCATION E927328A

Refer to DTC P0151.

GENERAL DESCRIPTION E6703041

Refer to DTC P0151.

DTC DESCRIPTION E6CCAEA2

Checking output signals from HO2S under detecting condition, if an output voltage is approx.0.45V or 3.5V for more than predeterminate time, PCM sets P0154. MIL(Malfunction Indication Lamp) turns on when the malfunction lasts till consecutive 2 driving cycle.

DTC DETECTING CONDITION EEBE7B45

Item		Detecting Condition	Possible cause
DTC Strategy		• Monitor signal voltage	• Poor connection • Open in harness • HO2S(B2/S1) • PCM
Enable Conditions		• Battery voltage ≥ 10V • Engine running ≥ 60 sec. • Engine warm-up state • No disable faults	
Thresh-old value	Case 1	• 1.2V ≤ Voltage of HO2S ≤ 3.9V (at pumping current ON)	
	Case 2	• 0.415V ≤ Voltage of HO2S ≤ 0.515V (at pumping current OFF)	
Diagnosis Time		• Continuous (more than 76.5 sec.failure for every 90 sec.test)	
MIL On Condition		• 2 driving cycles	

SPECIFICATION E3400454

Refer to DTC P0151.

SCHEMATIC DIAGRAM E529691E

Refer to DTC P0151.

SIGNAL WAVEFORM AND DATA E3453427

Refer to DTC P0151.

MONITOR DTC STATUS E5E864C4

Refer to DTC P0151.

TERMINAL AND CONNECTOR INSPECTION EEA2C5E9

Refer to DTC P0151.

SIGNAL CIRCUIT INSPECTION E2E9407E

1. IG "OFF" and disconnect HO2S(B2/S1) connector.
2. IG "ON" and ENG "OFF"
3. Measure voltage between termianl 1 of HO2S(B2/S1) harness connector and chassis ground.

Specification :
Approx. 3.5V - when pumping current is ON
Approx. 0.45V - when pumping current is OFF

4. Is the measured voltage within specification?

YES

▶ Go to "Ground circuit inspection" procedure.

NO

▶ Repair open in harness, and go to "Verification of Vehicle Repair" prcedure.

GROUND CIRCUIT INSPECTION ED75DEA6

1. IG "ON" and disconnect HO2S(B2/S1) connector.
2. Measure voltage between terminal 1 of HO2S(B2/S1) harness connector and chassis ground.
3. Measure voltage between terminals 1 and 2 of HO2S(B2/S1) harness connector.

Specification : Voltage difference between measurement "A" and "B" is below 200mV.

4. Is the measured voltage within specification?

YES

▶ Go to "Component inspection" procedure.

NO

▶ Repair open or contact resistance in harness, and go to "Verification of Vehicle Repair" prcedure.

COMPONENT INSPECTION EFACB6A1

1. Check the Signal waveform of HO2S
   1) IG "OFF" and connect HO2S connector.
   2) Engine start.
   3) After warming-up, monitor signal waveform of HO2S with scantool.?

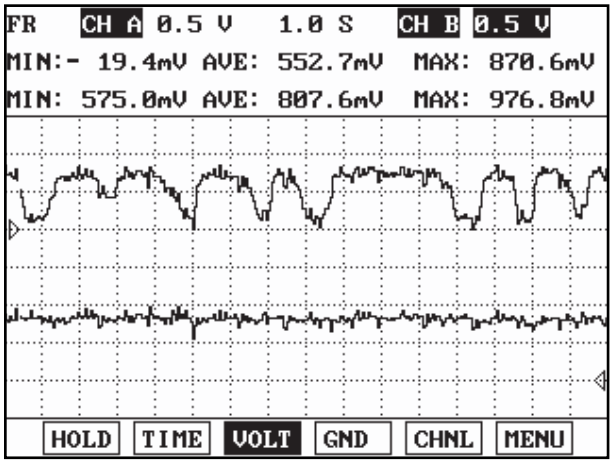

Fig) Signal waveform of front(the upper) and rear(the lower) HO2S at idle

SCMF16225L

4) Is the sensor switching properly?

YES

▶ Go to "Check HO2S" as below.

NO

▶ Substitute with a known - good HO2S and check for proper operation.
If the problem is corrected, go to "Verification of Vehicle Repair" procedure.

2. Check HO2S

1) IG "OFF" and disconnect HO2S connector.

2) Check that the HO2S is securely installed.

3) Check the HO2S for contamination or damage

4) Is the sensor normal?

YES

▶ Substitute with a known - good PCM and check for proper operation.
If the problem is corrected, go to "Verification of Vehicle Repair" procedure.

NO

▶ Substitute with a known - good HO2S and check for proper operation.
If the problem is corrected, go to "Verification of Vehicle Repair" procedure.

NOTE

There is a memory reset function on scantool that can erase optional parts automatically detected and memorized by PCM. Before or after testing PCM on the vehicle, use this function to reuse the PCM on the others.

VERIFICATION OF VEHICLE REPAIR EEA84363

Refer to DTC P0151.

DTC P0157 HO2S CIRCUIT LOW VOLTAGE (BANK 2 / SENSOR 2)

COMPONENT LOCATION EC466B58

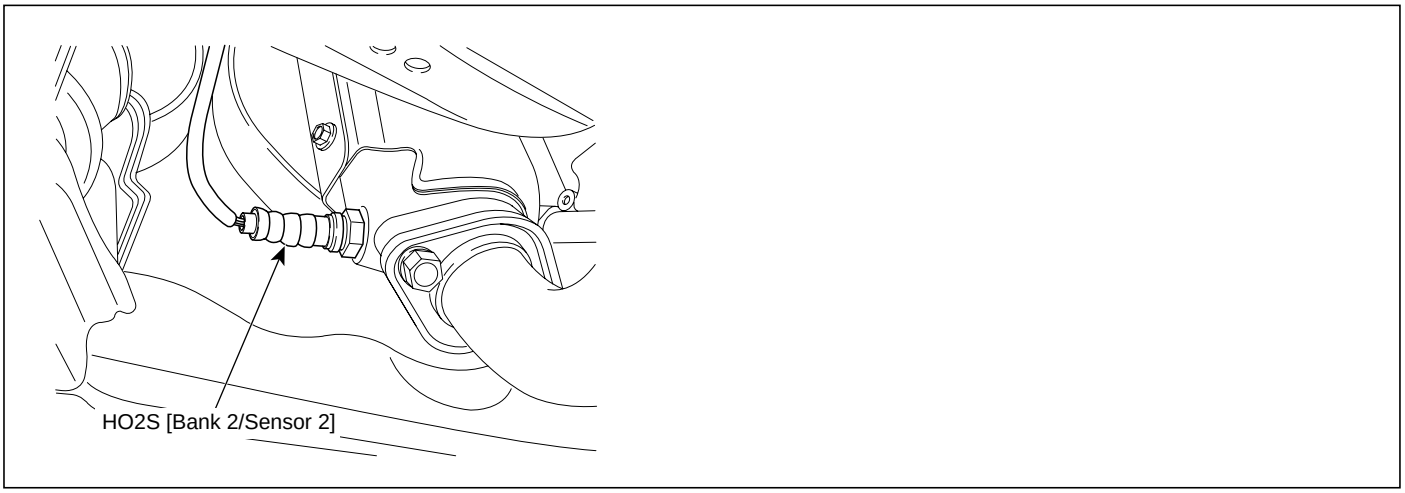

SCMF16176L

GENERAL DESCRIPTION E68CCF51

The rear heated oxygen sensor is mounted on the rear side of the Catalytic Converter (warm-up catalytic converter) or in the rear exhaust pipe, which is able to detect catalyst efficiency. The rear heated oxygen sensor (HO2S) produces a voltage between 0V and 1V. This rear heated oxygen sensor is used to estimate the oxygen storage capability. If a catalyst has good conversion properties, the oxygen fluctuations are smoothed by the oxygen storage capacity of the catalyst. If the conversion provided by the catalyst is low due to aging, poisoning or misfiring, then the oxygen fluctuations are similar to signals from the front oxygen sensor.

DTC DESCRIPTION EE482644

Checking output signals from HO2S under detecting condition, if an output signal is below 0.04V for more than predeterminate time, PCM sets P0157. MIL(Malfunction Indication Lamp) turns on when the malfunction lasts till consecutive 2 driving cycle.

DTC DETECTING CONDITION E814A11A

Item	Detecting Condition	Possible cause
DTC Strategy	• Monitor signal voltage	• Poor connection • Short to ground in harness • HO2S(B2/S2) • PCM
Enable Conditions	• Battery voltage ≥ 10V • Engine running ≥ 60 sec. • Engine warm-up state	
Threshold value	• The voltage of HO2S(B2/S2) < 0.04V	
Diagnosis Time	• Continuous (more than 12.5 sec. failure for every 15 sec.test)	
MIL On Condition	• 2 Driving Cycles	

SPECIFICATION ECAFA1F6

(REFERENCE ONLY)

Test Condition	HO2S Voltage(Sensor1)	HO2S Voltage(Sensor2)
HO2S Signal at idle after warm-up	Signal is commonly switching from rich to lean more than 3 times in 10 sec.	Signal is commonly above 0.6V.
HO2S signal at open circuit (Pumping current OFF)	Approx. 0.45V	
HO2S signal at open circuit (Pumping current ON)	Approx. 3.5V	

SCHEMATIC DIAGRAM E9EEF01F

[CIRCUIT DIAGRAM]

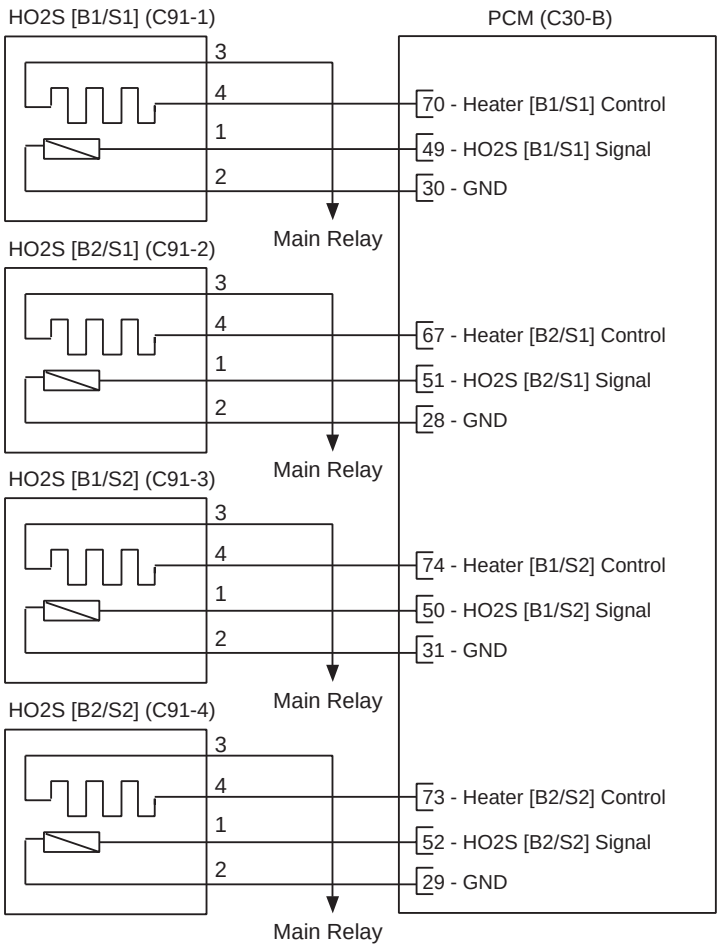

[CONNECTION INFORMATION]

HO2S [B1/S1]

Terminal	Connected to	Function
1	PCM C30-B (49)	HO2S [B1/S1] Signal
2	PCM C30-B (30)	Sensor ground
3	Main Relay	Battery Voltage (B+)
4	PCM C30-B (70)	Heater [B1/S1] Control

HO2S [B2/S1]

Terminal	Connected to	Function
1	PCM C30-B (51)	HO2S [B2/S1] Signal
2	PCM C30-B (28)	Sensor ground
3	Main Relay	Battery Voltage (B+)
4	PCM C30-B (67)	Heater [B2/S1] Control

HO2S [B1/S2]

Terminal	Connected to	Function
1	PCM C30-B (50)	HO2S [B1/S2] Signal
2	PCM C30-B (31)	Sensor ground
3	Main Relay	Battery Voltage (B+)
4	PCM C30-B (74)	Heater [B1/S2] Control

HO2S [B2/S2]

Terminal	Connected to	Function
1	PCM C30-B (52)	HO2S [B2/S2] Signal
2	PCM C30-B (29)	Sensor ground
3	Main Relay	Battery Voltage (B+)
4	PCM C30-B (73)	Heater [B2/S2] Control

[HARNESS CONNECTORS]

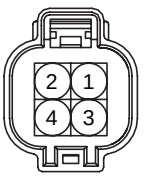

C91-1,2

HO2S [Bank 1/Sensor 1]
HO2S [Bank 2/Sensor 1]

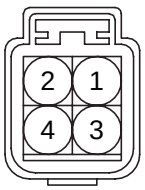

C91-3,4

HO2S [Bank 1/Sensor 2]
HO2S [Bank 2/Sensor 2]

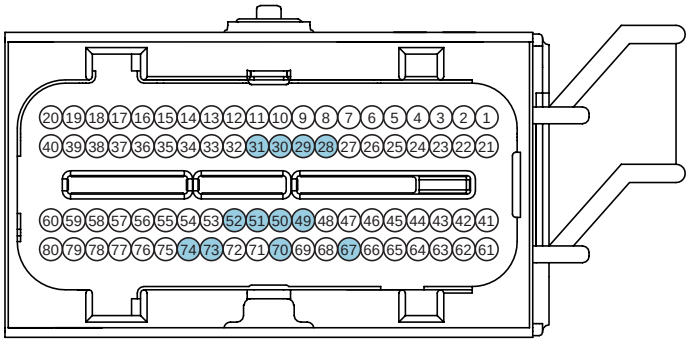

C30-B

PCM

SCMF16110L

SIGNAL WAVEFORM AND DATA EBC8409A

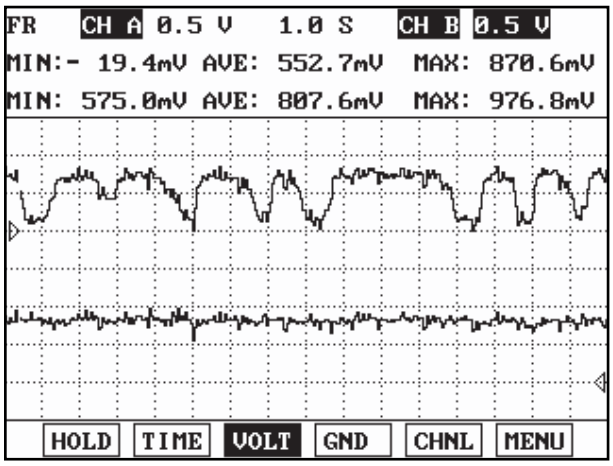

Fig) Signal waveforms of front HO2S(the upper) and rear HO2S(the lower)

SCMF16223L

After warming-up, if accelerator pedal is released suddenly around 4000rpm, the HO2S signal reading will be lower than 200mV resulting from Fuel cut-off for the moment. Conversely, if suddenly accelerator pedal is depressed, HO2S signal reading will be around 0.6V ~1.0V. At idle, Normally HO2S signal will switch from lean to rich with 3 Hz. And as racing, Its frequency rises.

MONITOR DTC STATUS EC7B4E32

1. Check DTC Status

   1) Connect scantool to Data Link Connector(DLC).

   2) IG "ON".

   3) Select "Diagnostic Trouble Codes(DTCs)" mode, and then Press F4(DTAL) to check DTC's information from the DTCs menu

   4) Read "DTC Status" parameter.

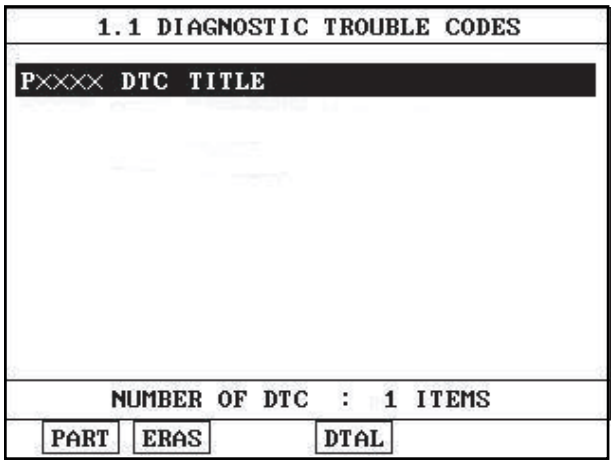

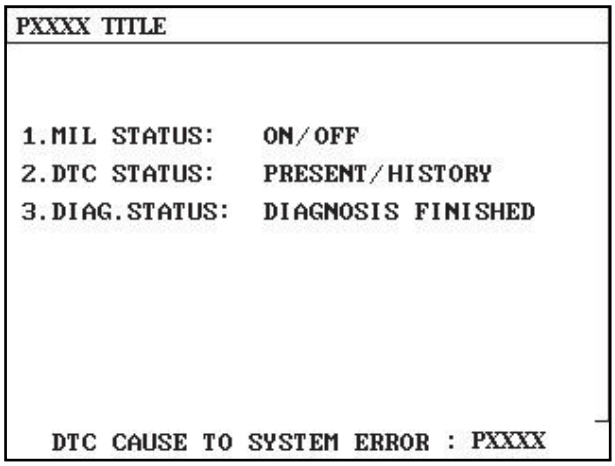

SCMF16159L

   5) Is parameter displayed "Present fault"?

YES

▶ Go to "Terminal and connector inspection" procedure.

NO

▶ Fault is intermittent caused by poor contact in the sensor's and/or PCM's connector or was repaired and PCM memory was not cleared. Thoroughly check connectors for looseness, poor connection, ending, corrosion, contamination, deterioration, or damage. Repair or replace as necessary and go to "Verification of Vehicle Repair" procedure.

TERMINAL AND CONNECTOR INSPECTION EE7F7D7E

1. Many malfunctions in the electrical system are caused by poor harness and terminals. Faults can also be caused by interference from other electrical systems, and mechanical or chemical damage.
2. Thoroughly check connectors for looseness, poor connection, bending, corrosion, contamination, deterioration, or damage.
3. Has a problem been found?

YES

▶ Repair as necessary and go to "Verification of Vehicle Repair" procedure

NO

▶ Go to " Signal Circuit Inspection " procedure.

SIGNAL CIRCUIT INSPECTION E9A8FDF3

1. IG "OFF" and disconnect HO2S(B2/S2)
2. IG "ON"
3. Measure voltage between terminal 1 of HO2S(B2/S2) harness connector and chassis ground.

Specification : Approx. 3.5V - when pumping current is ON Approx. 0.45V - when pumping current is OFF

4. Is the measured voltage within specification?

YES

▶ Go to "Component Inspection" procedure.

NO

▶ Repair short to ground in harness, and go to "Verification of Vehicle Repair" procedure.

COMPONENT INSPECTION E45EBFF8

1. Check the Signal waveform of HO2S
   1) IG "OFF" and connect HO2S connector.
   2) Engine start.

3) After warming-up, monitor signal waveform of HO2S with scantool.?

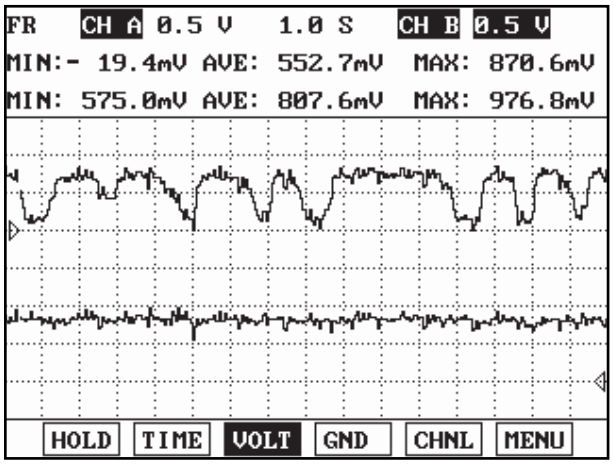

Fig) Signal waveform of front(the upper) and rear(the lower) HO2S at idle

SCMF16225L

4) Is the sensor switching properly?

YES

▶ Go to "Check HO2S" as below.

NO

▶ Substitute with a known - good HO2S and check for proper operation.
If the problem is corrected, go to "Verification of Vehicle Repair" procedure.

2. Check HO2S

1) IG "OFF" and disconnect HO2S connector.

2) Check that the HO2S is securely installed.

3) Check the HO2S for contamination or damage

4) Is the sensor normal?

YES

▶ Substitute with a known - good PCM and check for proper operation.
If the problem is corrected, go to "Verification of Vehicle Repair" procedure.

NO

▶ Substitute with a known - good HO2S and check for proper operation.
If the problem is corrected, go to "Verification of Vehicle Repair" procedure.

NOTE

There is a memory reset function on scantool that can erase optional parts automatically detected and memorized by PCM. Before or after testing PCM on the vehicle, use this function to reuse the PCM on the others.

VERIFICATION OF VEHICLE REPAIR E16A8B88

After a repair, it is essential to verify that the fault has been corrected.

1. Monitor and record the Freeze Frame Data for the Diagnostic Trouble Code(DTC) which has been diagnosed.
2. Using a Scantool, Clear the DTCs
3. Operate the vehicle within conditions noted in the freeze frame data or enable conditions
4. Monitor that all rediness test have been verified as " Complete "
5. Are any DTCs present ?

YES

▶ Go to the applicable troubleshoooting procedure.

NO

▶ System is performing to specification at this time.

DTC P0158 HO2S CIRCUIT HIGH VOLTAGE (BANK 2 / SENSOR 2)

COMPONENT LOCATION ED02A084

Refer to DTC P0157.

GENERAL DESCRIPTION E80B453F

Refer to DTC P0157.

DTC DESCRIPTION E20AA58E

Checking output signals from HO2S under detecting condition, if an output signal is above 1.3V for more than predeterminate time, PCM sets P0158. MIL(Malfunction Indication Lamp) turns on when the malfunction lasts till consecutive 2 driving cycle.

DTC DETECTING CONDITION E08BFD99

Item	Detecting Condition	Possible cause
DTC Strategy	• Monitor signal voltage	• Poor connection • Short to ground in harness • HO2S(B2/S2) • PCM
Enable Conditions	• Battery voltage ≥ 10V • Engine running ≥ 60 sec. • Engine warm-up state	
Threshold value	• The voltage of HO2S(B2/S2) > 1.3V	
Diagnosis Time	• Continuous (more than 12.5 sec. failure for every 15 sec.test)	
MIL On Condition	• 2 Driving Cycles	

SPECIFICATION EC808963

Refer to DTC P0157.

SCHEMATIC DIAGRAM E358095F

Refer to DTC P0157.

SIGNAL WAVEFORM AND DATA EBB7BB8A

Refer to DTC P0157.

MONITOR DTC STATUS E7193974

Refer to DTC P0157.

TERMINAL AND CONNECTOR INSPECTION EE41B826

Refer to DTC P0157.

SIGNAL CIRCUIT INSPECTION E9F3F25A

1. IG "OFF" and disconnect HO2S(B2/S2) connector.
2. IG "ON" and ENG "OFF"
3. Measure voltage between terminal 1 of HO2S(B2/S2) harness connector and chassis ground.

Specification :
Approx. 3.5V - when pumping current is ON
Approx. 0.45V - when pumping current is OFF

4. Is the measured voltage within specification?

YES

▶ Go to "Component Inspection" procedure.

NO

▶ Repair short to battery in harness, and go to "Verification of Vehicle Repair" procedure.

COMPONENT INSPECTION E67626BE

1. Check the Signal waveform of HO2S
   1) IG "OFF" and connect HO2S connector.
   2) Engine start.
   3) After warming-up, monitor signal waveform of HO2S with scantool.?

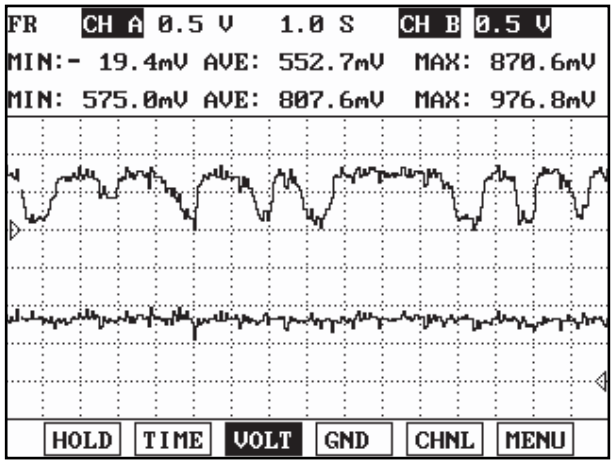

Fig) Signal waveform of front(the upper) and rear(the lower) HO2S at idle

SCMF16225L

   4) Is the sensor switching properly?

YES

▶ Go to "Check HO2S" as below.

NO

▶ Substitute with a known - good HO2S and check for proper operation.
If the problem is corrected, go to "Verification of Vehicle Repair" procedure.

2. Check HO2S

1) IG "OFF" and disconnect HO2S connector.

2) Check that the HO2S is securely installed.

3) Check the HO2S for contamination or damage

4) Is the sensor normal?

YES

▶ Substitute with a known - good PCM and check for proper operation.
If the problem is corrected, go to "Verification of Vehicle Repair" procedure.

NO

▶ Substitute with a known - good HO2S and check for proper operation.
If the problem is corrected, go to "Verification of Vehicle Repair" procedure.

NOTE

There is a memory reset function on scantool that can erase optional parts automatically detected and memorized by PCM. Before or after testing PCM on the vehicle, use this function to reuse the PCM on the others.

VERIFICATION OF VEHICLE REPAIR E1B0F3D0

Refer to DTC P0157.

DTC P0160 HO2S CIRCUIT NO ACTIVITY DETECTED (BANK 2 / SENSOR 2)

COMPONENT LOCATION E7ECD0FE

Refer to DTC P0157.

GENERAL DESCRIPTION E40C3747

Refer to DTC P0157.

DTC DESCRIPTION EA1246BA

Checking output signals from HO2S under detecting condition, if an output voltage is approx.0.45V or 3.5V for more than predeterminate time, PCM sets P0160. MIL(Malfunction Indication Lamp) turns on when the malfunction lasts till consecutive 2 driving cycle.

DTC DETECTING CONDITION E60838DA

Item		Detecting Condition	Possible cause
DTC Strategy		• Monitor signal voltage	• Poor connection • Open in harness • HO2S(B2/S2) • PCM
Enable Conditions		• Battery voltage ≥ 10V • Engine running ≥ 60 sec. • Engine warm-up state • No disable faults	
Thresh-old value	Case 1	• 1.2V ≤ Voltage of HO2S ≤ 3.9V (at pumping current ON)	
	Case 2	• 0.415V ≤ Voltage of HO2S ≤ 0.515V (at pumping current OFF)	
Diagnosis Time		• Continuous (more than 76.5 sec.failure for every 90 sec.test)	
MIL On Condition		• 2 Driving Cycles	

SPECIFICATION EF953B16

Refer to DTC P0157.

SCHEMATIC DIAGRAM E08EF8CF

Refer to DTC P0157.

SIGNAL WAVEFORM AND DATA EC950F42

Refer to DTC P0157.

MONITOR DTC STATUS E38A5341

Refer to DTC P0157.

TERMINAL AND CONNECTOR INSPECTION EA9C0DA4

Refer to DTC P0157.

SIGNAL CIRCUIT INSPECTION E4F75E95

1. IG "OFF" and disconnect HO2S(B2/S2) connector.
2. IG "ON" and ENG "OFF"
3. Measure voltage between terminal 1 of HO2S(B2/S2) harness connector and chassis ground.

Specification :
Approx. 3.5V - when pumping current is ON
Approx. 0.45V - when pumping current is OFF

4. Is the measured voltage within specification?

YES

▶ Go to "Ground Circuit Inspection" procedure.

NO

▶ Repair open in harness, and go to "Verification of Vehicle Repair" procedure.

GROUND CIRCUIT INSPECTION E77D1325

1. IG "ON" and disconnect HO2S(B2/S2) connector.
2. Measure voltage between terminal 1 of HO2S(B2/S2) harness connector and chassis ground.
3. Measure voltage between terminals 1 and 2 of HO2S(B2/S2) harness connector.

Specification : Voltage difference between measurement "A" and "B" is below 200mV.

4. Is the measured voltage within specification?

YES

▶ Go to "Component Inspection" procedure.

NO

▶ Repair open in harness, and go to "Verification of Vehicle Repair" procedure.

COMPONENT INSPECTION E279C52A

1. Check the Signal waveform of HO2S
   1) IG "OFF" and connect HO2S connector.
   2) Engine start.
   3) After warming-up, monitor signal waveform of HO2S with scantool.?

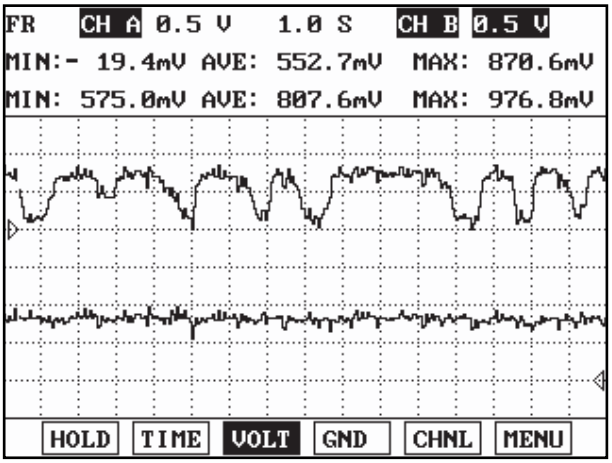

Fig) Signal waveform of front(the upper) and rear(the lower) HO2S at idle

SCMF16225L

4) Is the sensor switching properly?

YES

▶ Go to "Check HO2S" as below.

NO

▶ Substitute with a known - good HO2S and check for proper operation.
If the problem is corrected, go to "Verification of Vehicle Repair" procedure.

2. Check HO2S

1) IG "OFF" and disconnect HO2S connector.

2) Check that the HO2S is securely installed.

3) Check the HO2S for contamination or damage

4) Is the sensor normal?

YES

▶ Substitute with a known - good PCM and check for proper operation.
If the problem is corrected, go to "Verification of Vehicle Repair" procedure.

NO

▶ Substitute with a known - good HO2S and check for proper operation.
If the problem is corrected, go to "Verification of Vehicle Repair" procedure.

NOTE

There is a memory reset function on scantool that can erase optional parts automatically detected and memorized by PCM. Before or after testing PCM on the vehicle, use this function to reuse the PCM on the others.

VERIFICATION OF VEHICLE REPAIR EB601912

Refer to DTC P0157.

DTC P0171 SYSTEM TOO LEAN (BANK 1)
DTC P0174 SYSTEM TOO LEAN (BANK 2)

GENERAL DESCRIPTION E0E9D636

In order to provide the best possible combination of drivability, fuel economy and emission control, the ECM uses a closed loop air/fuel metering system. The ECM monitors the HO2S signal voltage and adjusts fuel delivery based it in closed loop fuel control. Changes in fuel delivery will be indicated by the long-term and the short-term fuel trim values. The ideal fuel trim value is around 0%. The ECM will add fuel when the HO2S signal is indicating a lean condition. Additional fuel is indicated by fuel trim values that are above 0%. The ECM will reduce fuel when the HO2S signal is indicating a rich condition. Reduction in fuel is indicated by fuel trim values that are below 0%. The DTC relevant to fuel trim will be set when the amount reaches excessive levels because of a lean or rich condition.

DTC DESCRIPTION EB85DC59

Checking air-fuel ratio correction value every 0.75 sec. under detecting condition, if an value is within detecting condition for more than 0.3 sec., PCM sets P0171/P0174. MIL(Malfunction Indication Lamp) turns on when the malfunction lasts till consecutive 2 driving cycle.

DTC DETECTING CONDITION E461125D

Item	Detecting Condition	Possible cause
DTC Strategy	• Fuel Trim Limits Exceeded	• Poor connection • Relevant sensor/actuator • Air leakage • PCM
Enable Conditions	• 550rpm ≤ Engine speed ≤ 4000rpm • 60℃(140˚F) ≤ Engine coolant temperature ≤ 115℃(239˚F) • -10℃(14˚F) ≤ Intake air temperature ≤ 60℃(140˚F) • 0° ≤ Throttle position ≤ 80° • 25kPa ≤ Engine load ≤ 90kPa • 1.5g/s ≤ Intake air flow ≤ 80g/s • Barometric pressure ≥ 72kPa • Vehicle speed ≤ 130km/h • System voltage ≥ 11V • Feed-back control state • No other diagnostic fault	
Threshold value	• Average of short term fuel trim 〉 1.2 • Average of long term fuel trim 〉 0.8	
Diagnosis Time	• Continuous (More than 0.3 second failure for every 0.75 second test)	
MIL On Condition	• 2 Driving Cycles	

MONITOR DTC STATUS EA2D7ED9

1. Check DTC Status

   1) Connect scantool to Data Link Connector(DLC).

   2) IG "ON".

   3) Select "Diagnostic Trouble Codes(DTCs)" mode, and then Press F4(DTAL) to check DTC's information from the DTCs menu

4) Read "DTC Status" parameter.

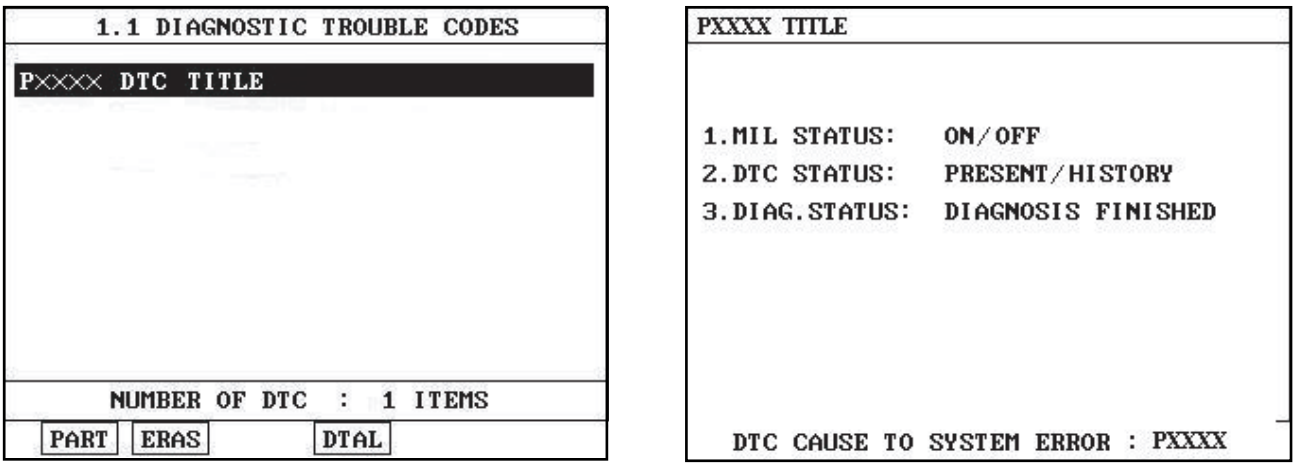

SCMF16159L

5) Is parameter displayed "Present fault"?

YES

▶ Go to "Terminal and connector inspection" procedure.

NO

▶ Fault is intermittent caused by poor contact in the sensor's and/or PCM's connector or was repaired and PCM memory was not cleared. Thoroughly check connectors for looseness, poor connection, ending, corrosion, contamination, deterioration, or damage. Repair or replace as necessary and go to "Verification of Vehicle Repair" procedure.

TERMINAL AND CONNECTOR INSPECTION E791F73B

1. Many malfunctions in the electrical system are caused by poor harness and terminals. Faults can also be caused by interference from other electrical systems, and mechanical or chemical damage.
2. Thoroughly check connectors for looseness, poor connection, bending, corrosion, contamination, deterioration, or damage.
3. Has a problem been found ?

YES

▶ Repair as necessary and go to "Verification of Vehicle Repair" procedure

NO

▶ Go to " System Inspection " procedure.

SYSTEM INSPECTION E77E6B06

1. Check air leakage

1) Visually/physically inspect the air leakage in intake/exhaust system for following items
▶ Vacuum hoses for splits, kinks and improper connections.
▶ Throttle body gasket

- ▶ Gasket between intake manifold and cylinder head
- ▶ Seals between intake manifold and fuel injectors
- ▶ Exhaust system between HO2S and three way catalyst for air leakage

2) Has a problem found in this procedure?

YES

▶ Repair or replace it which has a problem, and go to "Verification of Vehicle Repair" procedure.

NO

▶ Go to "Check the fuel line" as follows

2. Check the fuel line

1) Check the fuel line for following items
- ▶ Connector connection state
- ▶ Damage/ connection state for vacuum hoses connected to fuel line
- ▶ Bent/ pressed/ twisted fuel line or fuel leakage

2) Has a problem found in this procedure?

YES

▶ Repair or replace it which has a problem, and go to " Verification of Vehicle Repair" procedure.

NO

▶ Go to "Check fuel pressure" as follows

3. Check fuel pressure

NOTE

- *Be cautious that Fuel is explosive and an empty fuel tank can still contain explosive gases.When working on fuel system make sure to supply adequate ventilation to the work area. Do not smoke, and keep sparks and open flames away.*
- *The fuel system remains under pressure when the engine is not running. Release fuel system pressure before disconnecting any fuel line to reduce the chance of presonal injury or fire damage to vehicle components.*

1) Start the engine and disconnect the fuel pump relay.

2) Wait until fuel in fuel line is exhausted and the engine stalls.

3) Turn the ignition switch OFF position.

4) Install the special service tool for measuring the fuel pressure between the delivery pipe and the fuel feed hose.

5) Connect the fuel pump relay.

6) With fuel pressure applied, check the three is no fuel leakage from the fuel pressure gauge or connection part.

7) Start the engine and measure the fuel pressure at idle.

Specification : 374 ~ 384 kpa (3.82 ~ 3.92 kg/㎠, 54.3 ~ 55.8psi)

8) Stop the engine and check for a change in the fuel pressure gauge reading.

Specification : After engine stops, the gauge reading should hold for about 5 minutes.

9) Is the measured fuel pressure within specification?

YES

▶ Go to "Component inspection" procedure.

NO

▶ Repair or replace according to the table below.
▶ And then, go to " Verification of Vehicle Repair" procedure.

Condition	Possible Cause	Suspected area
Fuel pressure too low	Clogged filter	Fuel filter
	Fuel leak on the fuel-pressure regulator that is assembled on fuel pump because of poor seating of the fuel-pressure regulator	Fuel pressure regulator
Fuel pressure too high	Sticking fuel pressure regulator	Fuel pressure regulator
Fuel pressure drops slowly after engine is stopped	Injector leak	Injector
Fuel pressure drops immediately after engine is stopped	The check valve within the fuel pump is open	Fuel pump

COMPONENT INSPECTION E8FB3042

1. Check PCV

1) IG "OFF" and remove PCV valve from cylinder head

2) With engine idling, block PCV valve and confirm that vacuum is felt.

3) Insert thin stick into the screwed PCV valve and verify that the plunger is moving.

4) Is the PCV valve normally moving?

YES

▶ Go to "Check PCSV as follows.

NO

▶ Replace it, and go to "Verification of Vehicle Repair" procedure.

2. Check PCSV

1) IG "OFF" and disconnect PCSV and vacuum hose.

2) Connect hand-vacuum gage with PCSV and supply vacuum to it.

3) Is the vacuum maintained ?

YES

▶ Go to " Check injector" as follows.

NO

▶ Repair or replace it, and go to " Verification of Vehicle Repair" procedure.

3. Check injector

   1) IG "OFF" and disconnect injector.

   2) Check it for blocking caused by any foreign substance.

   3) Measure resistance between terminals 1 and 2 of Injector connector.(Component side)

SPECIFICATION :

Temp	Coil's resistance
20℃(68°F)	13.8 ~ 15.2 Ω

   4) Is the measured resistance within specification?

YES

▶ Go to "Check sensor/actuator related to fuel system" as follows

NO

▶ Repair or replace it, and go to "Verification of Vehicle Repair" procedure.

4. Check sensor/actuator related to fuel system

   1) Check the signal of sensor/actuator related to fuel system(HO2S, MAFS,MAPS, TPS, ECTS, PCSV, Injector and so on) (Refer to each DTC diagnostic procedure)

   2) Are all of these items normal ?

YES

▶ Substitute with a known - good PCM and check for proper operation. If the problem is corrected, replace PCM and go to "Verification of Vehicle Repair" procedure.

NO

▶ Repair it, and go to "Verification of Vehicle Repair" procedure.

VERIFICATION OF VEHICLE REPAIR ECCEB299

After a repair, it is essential to verify that the fault has been corrected.

1. Monitor and record the Freeze Frame Data for the Diagnostic Trouble Code(DTC) which has been diagnosed.
2. Using a Scantool, Clear the DTCs
3. Operate the vehicle within conditions noted in the freeze frame data or enable conditions
4. Monitor that all rediness test have been verified as " Complete "
5. Are any DTCs present ?

YES

▶ Go to the applicable troubleshoooting procedure.

NO

▶ System is performing to specification at this time.

DTC P0172 SYSTEM TOO RICH (BANK 1)
DTC P0175 SYSTEM TOO RICH (BANK 2)

GENERAL DESCRIPTION EE18D8D2

Refer to DTC P0171.

DTC DESCRIPTION E62A3E5F

Checking air-fuel ratio correction value every 0.75 sec. under detecting condition, if an value is within detecting condition for more than 0.3 sec., PCM sets P0172/P0175. MIL(Malfunction Indication Lamp) turns on when the malfunction lasts till consecutive 2 driving cycle.

DTC DETECTING CONDITION E8FF59ED

Item	Detecting Condition	Possible cause
DTC Strategy	• Fuel Trim Limits Exceeded	• Poor connection • Relevant sensor/actuator • Blocking of Intake system • Fuel leakage in injector • Improper fuel line pressure • PCM
Enable Conditions	• 550rpm ≤ Engine speed ≤ 4000rpm • 60℃(140˚F) ≤ Engine coolant temperature ≤ 115℃(239˚F) • -10℃(14˚F) ≤ Intake air temperature ≤ 60℃(140˚F) • 0° ≤ Throttle position ≤ 80° • 25kPa ≤ Engine load ≤ 90kPa • 1.5g/s ≤ Intake air flow ≤ 80g/s • Barometric pressure ≥ 72kPa • Vehicle speed ≤ 130km/h • System voltage ≥ 11V • Feed-back control state • No other diagnostic fault	
Threshold value	• Average of short term fuel trim 〈 0.8 • Average of long term fuel trim 〈 1.23	
Diagnosis Time	• Continuous (More than 0.3 second failure for every 0.75 second test)	
MIL On Condition	• 2 Driving Cycles	

MONITOR DTC STATUS EFA8AB09

Refer to DTC P0171.

TERMINAL AND CONNECTOR INSPECTION E192A2EE

Refer to DTC P0171.

SYSTEM INSPECTION EF26692D

1. Check blocking of intake system

   1) Visually/physically inspect the blocking in intake system for following items
      ▶ Throttle body gasket and damage
      ▶ Clogging of Air cleaner

▶ Blocking in intake manifold and injector caused by any foreign substance

2) Has a problem found?

YES

▶ Repair or replace it, and go to "Verification of Vehicle Repair" procedure.

NO

▶ Go to " Check fuel pressure" as follows.

2. Check fuel pressure

NOTE

- *Be cautious that Fuel is explosive and an empty fuel tank can still contain explosive gases.When working on fuel system make sure to supply adequate ventilation to the work area. Do not smoke, and keep sparks and open flames away.*
- *The fuel system remains under pressure when the engine is not running. Release fuel systempressure before disconnecting any fuel line to reduce the chance of presonal injury orfire damage to vehicle components.*

1) Start the engine and disconnect the fuel pump relay.

2) Wait until fuel in fuel line is exhausted and the engine stalls.

3) Turn the ignition switch OFF position.

4) Install the special service tool for measuring the fuel pressure between the delivery pipe and the fuel feed hose.

5) Connect the fuel pump relay.

6) With fuel pressure applied, check the three is no fuel leakage from the fuel pressure gauge or connection part.

7) Start the engine and measure the fuel pressure at idle.

Specification : 374 ~ 384 kpa (3.82 ~ 3.92 kg/㎠, 54.3 ~ 55.8psi)

8) Stop the engine and check for a change in the fuel pressure gauge reading.

Specification : After engine stops, the gauge reading should hold for about 5 minutes.

9) Is the measured fuel pressure within specification?

YES

▶ Go to "Check fuel leakage in injector" procedure.

NO

▶ Repair or replace according to the table below.
▶ And then, go to " Verification of Vehicle Repair" procedure.

Condition	Possible Cause	Suspected area
Fuel pressure too low	Clogged filter	Fuel filter
	Fuel leak on the fuel-pressure regulator that is assembled on fuel pump because of poor seating of the fuel-pressure regulator	Fuel pressure regulator
Fuel pressure too high	Sticking fuel pressure regulator	Fuel pressure regulator
Fuel pressure drops slowly after engine is stopped	Injector leak	Injector
Fuel pressure drops immediately after engine is stopped	The check valve within the fuel pump is open	Fuel pump

3. Check fuel leakage in injector

   1) IG "OFF" after checking the fuel pressure test.

   2) Stop engine and check for a change in the fuel pressure gauge reading for 5 minutes.

Specification : After engine stops, fuel gauge reading is maintained for 5 minutes.

   3) Is the fuel gauge reading within specification?

YES

▶ Go to "Component Inspection" procedure.

NO

▶ There is a fuel leakage in injector. Repair or replace it, and go to " Verification of Vehicle Repair" procedure.

COMPONENT INSPECTION E5B498B0

1. Check PCV

   1) IG "OFF" and remove PCV valve from cylinder head

   2) With engine idling, block PCV valve and confirm that vacuum is felt.

   3) Insert thin stick into the screwed PCV valve and verify that the plunger is moving.

   4) Is the PCV valve normally moving?

YES

▶ Go to "Check PCSV as follows.

NO

▶ Replace it, and go to "Verification of Vehicle Repair" procedure.

2. Check PCSV

   1) IG "OFF" and disconnect PCSV and vacuum hose.

   2) Connect hand-vacuum gage with PCSV and supply vacuum to it.

3) Is the vacuum maintained ?

YES

▶ Go to " Check injector" as follows.

NO

▶ Repair or replace it, and go to " Verification of Vehicle Repair" procedure.

3. Check injector

1) IG "OFF" and disconnect injector.

2) Check it for blocking caused by any foreign substance.

3) Measure resistance between terminals 1 and 2 of Injector connector.(Component side)

SPECIFICATION :

Temp	Coil's resistance
20℃(68°F)	13.8 ~ 15.2 Ω

4) Is the measured resistance within specification?

YES

▶ Go to "Check sensor/actuator related to fuel system" as follows

NO

▶ Repair or replace it, and go to "Verification of Vehicle Repair" procedure.

4. Check sensor/actuator related to fuel system

1) Check the signal of sensor/actuator related to fuel system(HO2S, MAFS,MAPS, TPS, ECTS, PCSV, Injector and so on) (Refer to each DTC diagnostic procedure)

2) Are all of these items normal ?

YES

▶ Substitute with a known - good PCM and check for proper operation. If the problem is corrected, replace PCM and go to "Verification of Vehicle Repair" procedure.

NO

▶ Repair it, and go to "Verification of Vehicle Repair" procedure.

VERIFICATION OF VEHICLE REPAIR E3C739E0

Refer to DTC P0171.

DTC P0196 ENGINE OIL TEMP. SENSOR RANGE / PERFORMANCE

COMPONENT LOCATION E2609C65

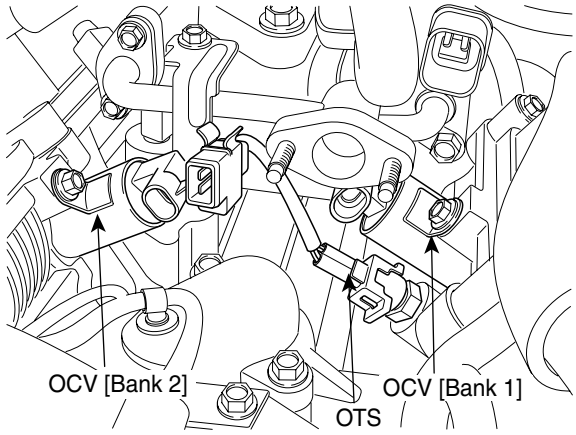

LGLG500A

GENERAL DESCRIPTION E4B4433D

The fluid of the CVVT is the engine oil and its density changes according to the engine oil temperature. At this time the Oil Temperature Sensor (OTS) helps compensation against the temperature differences. The Oil Temperature Sensor measures the engine oil temperature before the engine oil comes into the Oil-flow Control Valve (OCV).
According to the measured temperature, the Engine Control Module (ECM) compensates the oil-flow control valve operation time.

DTC DESCRIPTION E70307F1

Checking the oil temperture , coolant temperature and intake air temperature every 25 sec. under detecting condition, if the difference in temperature at start-up exceeds threshold value, PCM sets P0196.

DTC DETECTING CONDITION E86D378A

Item	Detecting Condition	Possible cause
DTC Strategy	• Determines if the oil temperature value is rational, compared to coolant and intake air temperature.	• Poor connection • Open or short in harness • Faulty OTS • PCM
Enable Conditions	• Engine run time after startup 〈 30 sec • Minimum soak period required 〉 270 min	
Threshold value	• The difference in temperature between oil and coolant temperatures at startup. 〉 35℃(63°F) • The difference in temperature between oil temperature and intake air temperature at startup 〉 35℃(63°F)	
Diagnosis Time	• Continuous (More than 12.5 sec.failure for every 25 sec.test)	
MIL On Condition	• No MIL ON (DTC only)	

SPECIFICATION ED3ED1AA

Temperature(℃/˚F)	Resistance(kΩ)
-20℃/ -4˚F	16.52kΩ
20℃/ 68˚F	2.45kΩ
80℃/ 176˚F	0.29kΩ

SCHEMATIC DIAGRAM ED41B1F3

[CIRCUIT DIAGRAM]

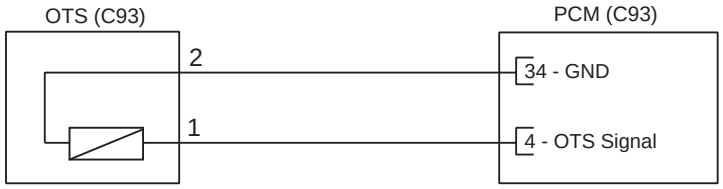

[CONNECTION INFORMATION]

Terminal	Connected to	Function
1	PCM C30-B (4)	OTS Signal
2	PCM C30-B (34)	Sensor ground

[HARNESS CONNECTORS]

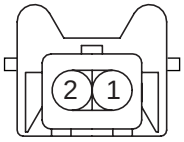

C93

OTS

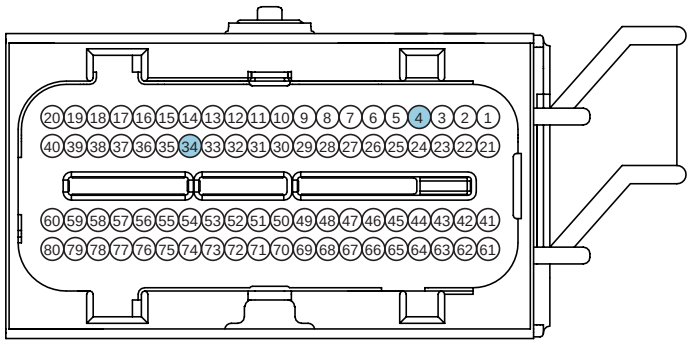

C30-B

PCM

SCMF16117L

MONITOR DTC STATUS EC77D6B7

1. Check DTC Status

   1) Connect scantool to Data Link Connector(DLC).

   2) IG "ON".

   3) Select "Diagnostic Trouble Codes(DTCs)" mode, and then Press F4(DTAL) to check DTC’s information from the DTCs menu

   4) Read "DTC Status" parameter.

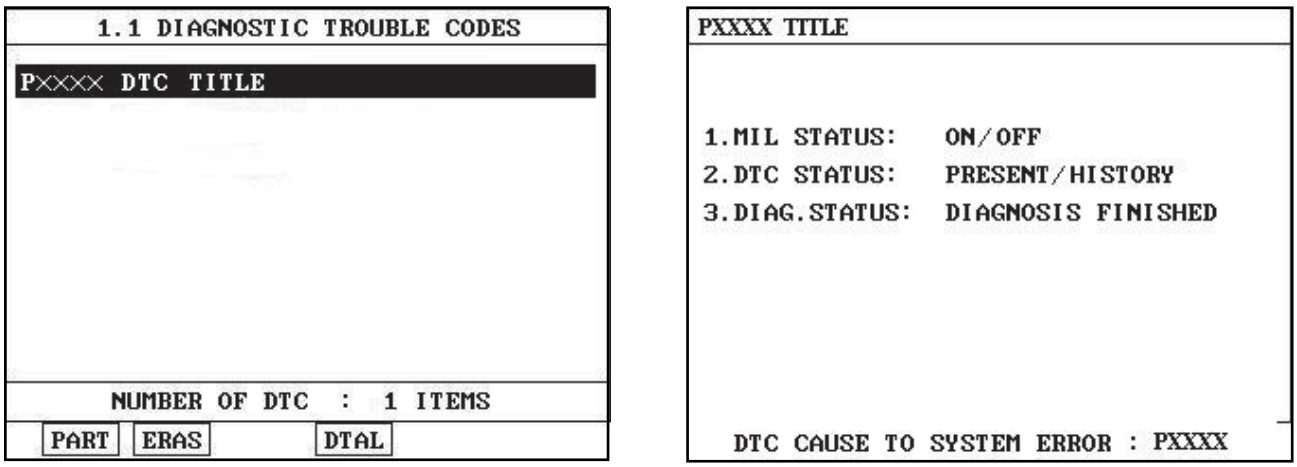

SCMF16159L

5) Is parameter displayed "Present fault"?

YES

▶ Go to "Terminal and connector inspection" procedure.

NO

▶ Fault is intermittent caused by poor contact in the sensor's and/or PCM's connector or was repaired and PCM memory was not cleared. Thoroughly check connectors for looseness, poor connection, ending, corrosion, contamination, deterioration, or damage. Repair or replace as necessary and go to "Verification of Vehicle Repair" procedure.

TERMINAL AND CONNECTOR INSPECTION E779F4E1

1. Many malfunctions in the electrical system are caused by poor harness and terminals. Faults can also be caused by interference from other electrical systems, and mechanical or chemical damage.
2. Thoroughly check connectors for looseness, poor connection, bending, corrosion, contamination, deterioration, or damage.
3. Has a problem been found?

YES

▶ Repair or replace if necessary and go to "Verification of Vehicle Repair" procedure

NO

▶ Go to "signal Circuit Inspection" procedure.

SIGNAL CIRCUIT INSPECTION E257DE74

1. Check Voltage
   1) IG "OFF" & ENG "OFF"
   2) Disconnect OTS connector
   3) IG "ON" & ENG "OFF"

4) Measure voltage between harness terminal 1 of OTS and chassis ground.

Specification : Approx. 5V

5) Is the measured voltage within specification ?

YES

▶ Go to "Ground Circuit Inspection" procedure.

NO

▶ Go to "Check open in harness" as follow.

2. Check open in harness

1) IG "OFF" & ENG "OFF"

2) Disconnect OTS and PCM connector.

3) Measure resistance between terminal 1 of OTS harness connector and terminal C30-B (4) of PCM harness connector.

Specification : Approx. below 1Ω

4) Is the measured resistance within specification ?

YES

▶ Go to "Ground Circuit Inspection" procedure.

NO

▶ Repair or replace as necessary and then, go to "Verification of Vehicle Repair" procedure.

GROUND CIRCUIT INSPECTION E76FA851

1. IG "OFF" & ENG "OFF"
2. Disconnect OTS connector
3. Measure voltage between terminal 1 of OTS harness connector and chassis ground.
4. Measure voltage between terminals 1 and 2 of OTS harness connector.

Specification : Measurement "A" - Measurement 'B' = Approx. below 200mV

5. Is the measured voltage within specification ?

YES

▶ Go to "Component Inspection" procedure

NO

▶ Repair or replace contact resistance or open in harness and then, go to "Verification of Vehicle Repair" procedure.

COMPONENT INSPECTION E28EB9B6

1. Check resistance of OTS

   1) IG "ON" & ENG "OFF"

   2) Monitor Oil Temperature parameter on the scantool

   3) IG "OFF" & ENG "OFF"

   4) Disconnect OTS connector.

   5) Measure resistance between terminal 1 and 2 of OTS connector(Component Side)

SPECIFICATION :

Temperature(℃/℉)	Resistance(kΩ)
-20℃/ -4℉	16.52kΩ
20℃/ 68℉	2.45kΩ
80℃/ 176℉	0.29kΩ

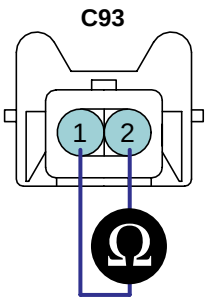

1. OTS Signal
2. OTS Ground

SCMF16241L

   6) Is the measured resistance within specification ?

   YES

   ▶ Go to "Check PCM" as follows.

   NO

   ▶ Substitute with a known - good OTS and check for proper operation. If the problem is corrected, replace OTS and go to "Verification of Vehicle Repair" procedure.

2. Check PCM

   1) Ignition "OFF" and Connect Scantool

   2) Ignition"ON " & Engine "OFF"

   3) Select simulation function on scantool.

   4) Simulate voltage at terminal "1" of OTS signal harness connector.

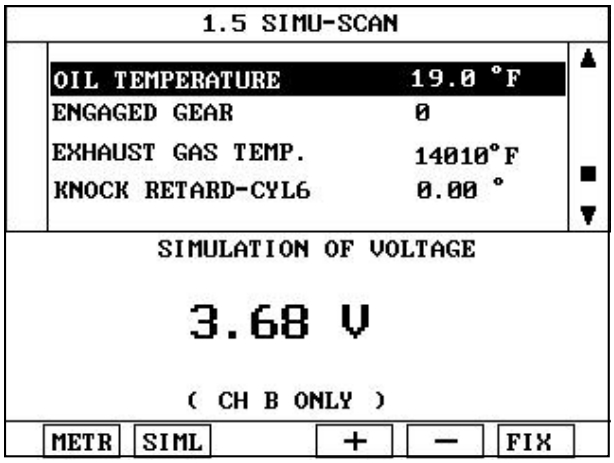

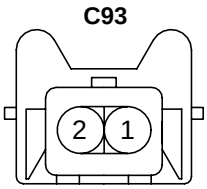

1. OTS Signal
2. OTS Ground

SCMF16242L

5) Does the OTS signal value changes according to simulation voltage ?

YES

▶ Thoroughly check connectors for looseness, poor connection, bending, corrosion, contamination, deterioration, or damage. Repair or replace if necessary and go to "Verification of Vehicle Repair" procedure

NO

▶ Substitute with a known - good PCM and check for proper operation. If the problem is corrected, replace PCM and go to "Verification of Vehicle Repair" procedure.

NOTE

There is a memory reset function on scantool that can erase optional parts automatically detected and memorized by PCM. After testing PCM on the vehicle, use this function to reuse the PCM on the others

VERIFICATION OF VEHICLE REPAIR E8F9366F

After a repair, it is essential to verify that the fault has been corrected.

1. Monitor and record the Freeze Frame Data for the Diagnostic Trouble Code(DTC) which has been diagnosed.
2. Using a Scantool, Clear the DTCs
3. Operate the vehicle within conditions noted in the freeze frame data or enable conditions
4. Monitor that all rediness test have been verified as " Complete "
5. Are any DTCs present ?

YES

▶ Go to the applicable troubleshoooting procedure.

NO

▶ System is performing to specification at this time.

DTC P0197 ENGINE OIL TEMP. SENSOR LOW INPUT

COMPONENT LOCATION E8C526BB

Refer to DTC P0196.

GENERAL DESCRIPTION E2BA831A

Refer to DTC P0196.

DTC DESCRIPTION EF5561C5

Checking output signals from oil temperture sensor every 15 sec. under detecting condition, if an signal is low for more than 12.5 sec., PCM sets P0197. MIL(Malfunction Indication Lamp) turns on when the malfunction lasts till consecutive 2 driving cycle.

DTC DETECTING CONDITION E7D73AB2

Item		Detecting Condition	Possible cause
DTC Strategy		• Signal low	• Poor connection • Short to ground in harness • Oil temp.sensor • PCM
Enable Condi-tions	Case 1	• Engine running state 〉 60 sec • Coolant temperature 〈 110 ℃(230˚F)	
	Case 2	• Engine running state 〉 90 sec.	
Thresh old value		• Oil temperature sensor's signal 〈 0.1V	
Diagnosis Time		• Continuous (More than 12.5 sec.failure for every 15 sec.test)	
MIL On Condition		• 2 Driving Cycles	

SPECIFICATION E3F3FD1B

Refer to DTC P0196.

SCHEMATIC DIAGRAM EA8CF7F5

Refer to DTC P0196.

MONITOR DTC STATUS E2E8A6EC

Refer to DTC P0196.

TERMINAL AND CONNECTOR INSPECTION EE8567D3

Refer to DTC P0196.

SIGNAL CIRCUIT INSPECTION E24C1B27

1. Check Voltage

    1) IG "OFF" & ENG "OFF"

2) Disconnect OTS connector

3) IG "ON" & ENG "OFF"

4) Measure voltage between harness terminal 1 of OTS and chassis ground.

Specification : Approx. 5V

5) Is the measured voltage within specification ?

YES

▶ Go to " Component Inspection" procedure.

NO

▶ Repair short to ground in harness, and go to "Verification of Vehicle Repair" procedure.

COMPONENT INSPECTION E0E32B66

1. Check resistance of OTS

1) IG "ON" & ENG "OFF"

2) Monitor Oil Temperature parameter on the scantool

3) IG "OFF" & ENG "OFF"

4) Disconnect OTS connector.

5) Measure resistance between terminal 1 and 2 of OTS connector(Component Side)

SPECIFICATION :

Temperature(℃/℉)	Resistance(kΩ)
-20℃/ -4℉	16.52kΩ
20℃/ 68℉	2.45kΩ
80℃/ 176℉	0.29kΩ

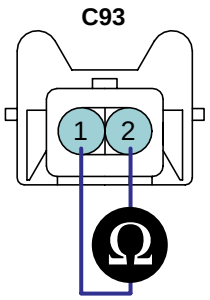

1. OTS Signal
2. OTS Ground

SCMF16241L

6) Is the measured resistance within specification ?

YES

▶ Go to "Check PCM" as follows.

NO

▶ Substitute with a known - good OTS and check for proper operation. If the problem is corrected, replace OTS and go to "Verification of Vehicle Repair" procedure.

2. Check PCM

1) Ignition "OFF" and Connect Scantool

2) Ignition"ON " & Engine "OFF"

3) Select simulation function on scantool.

4) Simulate voltage at terminal "1" of OTS signal harness connector.

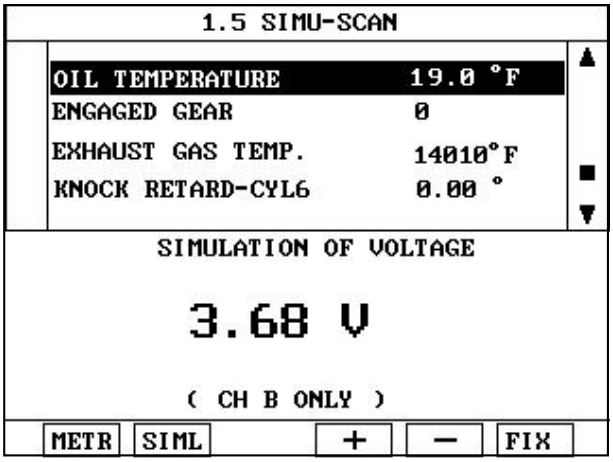

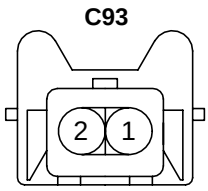

1. OTS Signal
2. OTS Ground

SCMF16242L

5) Does the OTS signal value changes according to simulation voltage ?

YES

▶ Thoroughly check connectors for looseness, poor connection, bending, corrosion, contamination, deterioration, or damage. Repair or replace if necessary and go to "Verification of Vehicle Repair" procedure

NO

▶ Substitute with a known - good PCM and check for proper operation. If the problem is corrected, replace PCM and go to "Verification of Vehicle Repair" procedure.

NOTE

There is a memory reset function on scantool that can erase optional parts automatically detected and memorized by PCM. After testing PCM on the vehicle, use this function to reuse the PCM on the others

VERIFICATION OF VEHICLE REPAIR EE96ADAA

Refer to DTC P0196.

DTC P0198 ENGINE OIL TEMP. SENSOR HIGH INPUT

COMPONENT LOCATION E42E33E2

Refer to DTC P0196.

GENERAL DESCRIPTION E64334B1

Refer to DTC P0196.

DTC DESCRIPTION E4558250

Checking output signals from oil temperture sensor every 15 sec. under detecting condition, if an signal is high for more than 12.5 sec., PCM sets P0198. MIL(Malfunction Indication Lamp) turns on when the malfunction lasts till consecutive 2 driving cycle.

DTC DETECTING CONDITION EE0B5425

Item		Detecting Condition	Possible cause
DTC Strategy		• Signal low	• Poor connection • Open or short to battery in signal harness • Open in ground harness • Oil temp.sensor • PCM
Enable Condi-tions	Case 1	• Engine running state 〉 60 sec • Coolant temperature 〈 110 ℃(230˚F)	
	Case 2	• Engine running state 〉 90 sec.	
Thresh old value		• Oil temperature sensor's signal 〉 4.9V	
Diagnosis Time		• Continuous (More than 12.5 sec.failure for every 15 sec.test)	
MIL On Condition		• 2 Driving Cycles	

SPECIFICATION E8CC49CD

Refer to DTC P0196.

SCHEMATIC DIAGRAM EAD51BEB

Refer to DTC P0196.

MONITOR DTC STATUS E6142301

Refer to DTC P0196.

TERMINAL AND CONNECTOR INSPECTION E23DAE00

Refer to DTC P0196.

SIGNAL CIRCUIT INSPECTION E3ECF421

1. Check Voltage

   1) IG "OFF" & ENG "OFF"

2) Disconnect OTS connector

3) IG "ON" & ENG "OFF"

4) Measure voltage between harness terminal 1 of OTS and chassis ground.

Specification : Approx. 5V

5) Is the measured voltage within specification ?

YES

▶ Go to "Ground Circuit Inspection" procedure.

NO

▶ Go to "Check open in harness" as follow.

2. Check open in harness

1) IG "OFF" & ENG "OFF"

2) Disconnect OTS and PCM connector.

3) Measure resistance between terminal 1 of OTS harness connector and terminal C30-B (4) of PCM harness connector.

Specification : Approx. below 1Ω

4) Is the measured resistance within specification ?

YES

▶ Go to "Ground Circuit Inspection" procedure.

NO

▶ Repair or replace open in harness, and then go to "Verification of Vehicle Repair" procedure.

GROUND CIRCUIT INSPECTION E9529310

1. IG "OFF" & ENG "OFF"
2. Disconnect OTS connector
3. Measure voltage between terminal 1 of OTS harness connector and chassis ground.
4. Measure voltage between terminals 1 and 2 of OTS harness connector.

Specification : Measurement "A" - Measurement 'B' = Approx. below 200mV

5. Is the measured voltage within specification ?

YES

▶ Go to "Component Inspection" procedure

NO

▶ Repair or replace contact resistance or open in harness and then, go to "Verification of Vehicle Repair" procedure.

COMPONENT INSPECTION E406B793

1. Check resistance of OTS

   1) IG "ON" & ENG "OFF"

   2) Monitor Oil Temperature parameter on the scantool

   3) IG "OFF" & ENG "OFF"

   4) Disconnect OTS connector.

   5) Measure resistance between terminal 1 and 2 of OTS connector(Component Side)

SPECIFICATION :

Temperature(℃/℉)	Resistance(kΩ)
-20℃/ -4℉	16.52kΩ
20℃/ 68℉	2.45kΩ
80℃/ 176℉	0.29kΩ

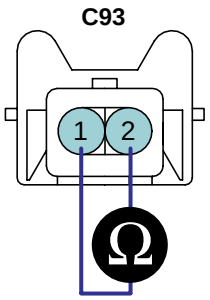

1. OTS Signal
2. OTS Ground

SCMF16241L

   6) Is the measured resistance within specification ?

YES

▶ Go to "Check PCM" as follows.

NO

▶ Substitute with a known - good OTS and check for proper operation. If the problem is corrected, replace OTS and go to "Verification of Vehicle Repair" procedure.

2. Check PCM

   1) Ignition "OFF" and Connect Scantool

   2) Ignition"ON " & Engine "OFF"

   3) Select simulation function on scantool.

4) Simulate voltage at terminal "1" of OTS signal harness connector.

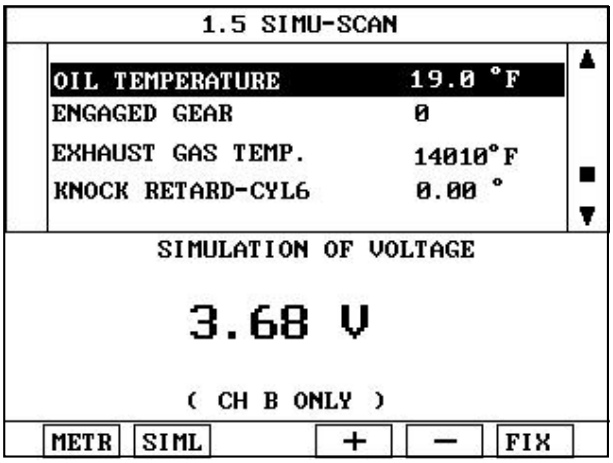

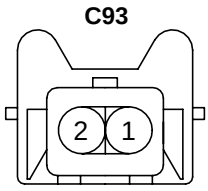

1. OTS Signal
2. OTS Ground

SCMF16242L

5) Does the OTS signal value changes according to simulation voltage ?

YES

▶ Thoroughly check connectors for looseness, poor connection, bending, corrosion, contamination, deterioration, or damage. Repair or replace if necessary and go to "Verification of Vehicle Repair" procedure

NO

▶ Substitute with a known - good PCM and check for proper operation. If the problem is corrected, replace PCM and go to "Verification of Vehicle Repair" procedure.

NOTE

There is a memory reset function on scantool that can erase optional parts automatically detected and memorized by PCM. After testing PCM on the vehicle, use this function to reuse the PCM on the others

VERIFICATION OF VEHICLE REPAIR E344162C

Refer to DTC P0196.

DTC P0217 ENGINE COOLANT OVER TEMPERATURE CONDITION

COMPONENT LOCATION E72AF219

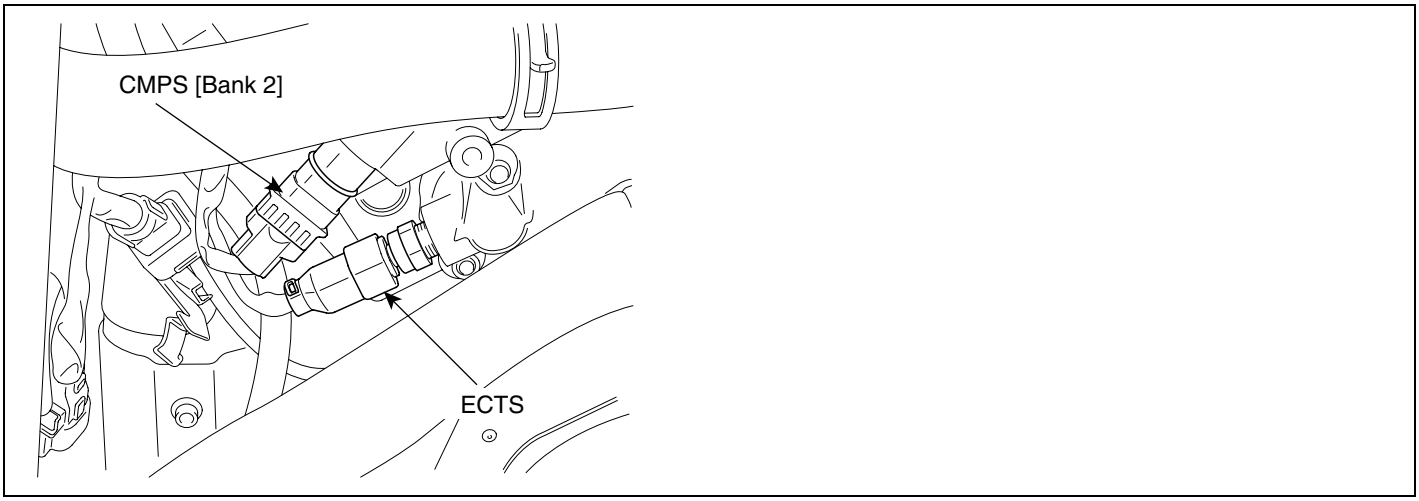

LGLG510A

GENERAL DESCRIPTION E8DE49EF

The Engine Coolant Temperature Sensor (ECTS) is located in the engine coolant passage of the cylinder head for detecting the engine coolant temperature. The ECTS uses a thermistor whose resistance changes with the temperature. The electrical resistance of the ECTS decreases as the temperature increases, and increases as the temperature decreases. The reference 5 V in the ECM is supplied to the ECTS via a resistor in the ECM. That is, the resistor in the ECM and the thermistor in the ECTS are connected in series. When the resistance value of the thermistor in the ECTS changes according to the engine coolant temperature, the output voltage also changes. During cold engine operation the ECM increases the fuel injection duration and controls the ignition timing using the information of engine coolant temperature to avoid engine stalling and improve drivability.

DTC DESCRIPTION E351C025

The Engine Coolant Temperature High Rationality Diagnostic checks for unusually high engine coolant temperatures under normal operating loads.
PCM monitors difference between the startup and current coolant temperature and compares agaist the threshold while enable condition is met. If the PCM detects that the coolant temperature exceeds the limit under normal operating condition, PCM determines that a fault exists and a DTC is stored.

DTC DETECTING CONDITION EF2AA66C

Item	Detecting Condition	Possible cause
DTC Strategy	• This diagnostic introduces a calibratable delay and simultaneously looks out for excessive engine loads. Once the delay period passes and excessive loads have not been experienced, the diagnostic checks whether the undefaulted coolant temperature has exceeded a maximum threshold in order to make a PASS/FAIL determination.	• Poor connection • Lack of engine coolant • Water pump • ECTS • PCM
Enable Conditions	• Engine Running status • No disabling faults present • Coolant Sensor within range • Undefaulted Coolant Temp ≥ 50℃(122 °F) • Undefaulted IAT ≥ 35℃(95 °F) • Soak time ≥ 360min or Undefaulted Coolant temp ≤ 45℃(113 °F)	
Thresh old value	• Coolant temperature ≥ 110℃ (230 °F) • Average airflow 〈 30 g/s and filtered airflow 〈 50 g/s.	
Diagnosis Time	• Continuous (More than 12.5 sec.failure for every 15 sec.test)	
MIL On Condition	• No MIL ON (DTC only)	

SPECIFICATION E32110CD

Temp. (℃/°F)	Resistance (kΩ)	Temp. (℃/°F)	Resistance (kΩ)
-40(-40)	48.14	40(104)	1.15
-20(-4)	14.13 ~ 16.83	60(140)	0.59
0(32)	5.79	80(176)	0.32
20(68)	2.31 ~ 2.59		

SCHEMATIC DIAGRAM E2AF1CCA

[CIRCUIT DIAGRAM]

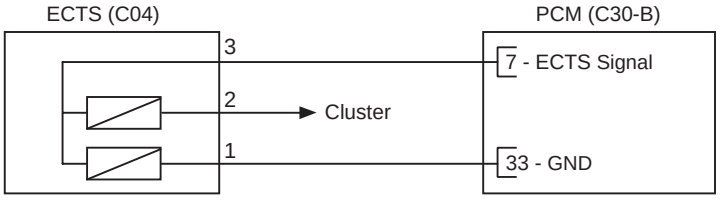

[CONNECTION INFORMATION]

Terminal	Connected to	Function
1	PCM C30-B (33)	Sensor ground
2	Cluster	-
3	PCM C30-B (7)	ECTS Signal

[HARNESS CONNECTORS]

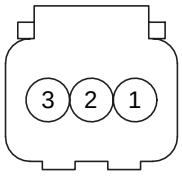

C04

ECTS

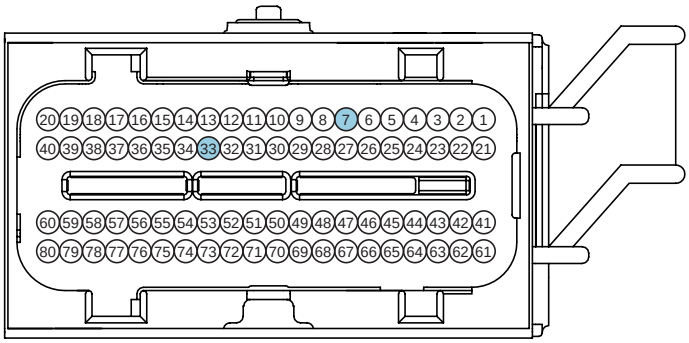

C30-B

PCM

SCMF16106L

SIGNAL WAVEFORM AND DATA EBCA080D

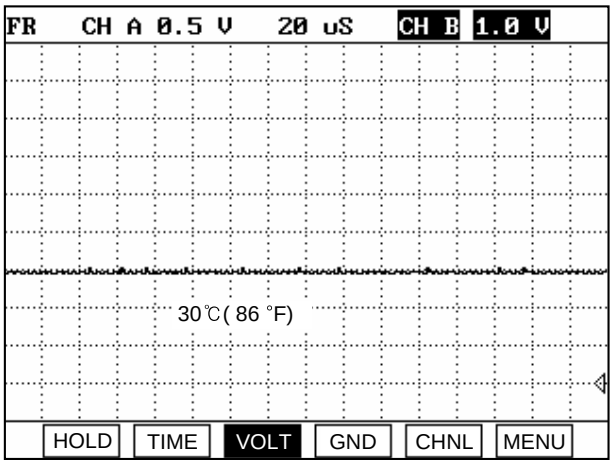

EGRF700B

The output signals of IATS & ECTS change smoothly without any rapid changes. Those have almost same characteristic signal during the early period after start. It means that the temperatures of intake air and engine coolant are depended on the temperature of atmosphere. Meanwhile, during the warming up, the output signal of ECTS is going up increasingly. but, the output signal of IATS changes a little bit. even it may not change almost. It means that the heat of engine does not affect on the temperature of intake air.

MONITOR DTC STATUS E7EB0ABB

1. Check DTC Status

   1) Connect scantool to Data Link Connector(DLC).

   2) IG "ON".

3) Select "Diagnostic Trouble Codes(DTCs)" mode, and then Press F4(DTAL) to check DTC's information from the DTCs menu

4) Read "DTC Status" parameter.

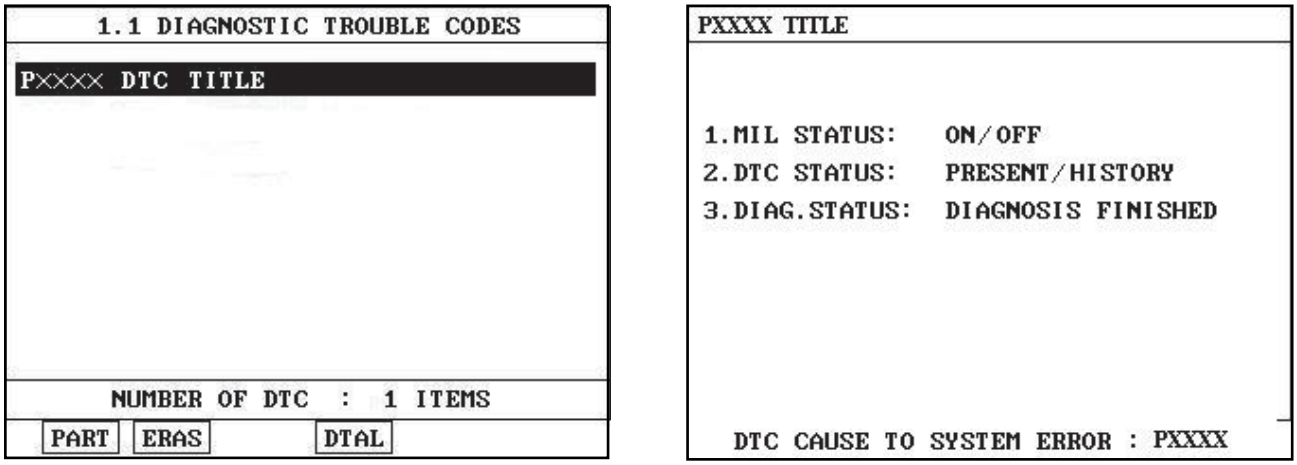

SCMF16159L

5) Is parameter displayed "Present fault"?

YES

▶ Go to "Terminal and connector inspection" procedure.

NO

▶ Fault is intermittent caused by poor contact in the sensor's and/or PCM's connector or was repaired and PCM memory was not cleared. Thoroughly check connectors for looseness, poor connection, ending, corrosion, contamination, deterioration, or damage. Repair or replace as necessary and go to "Verification of Vehicle Repair" procedure.

TERMINAL AND CONNECTOR INSPECTION E7B88213

1. Many malfunctions in the electrical system are caused by poor harness and terminals. Faults can also be caused by interference from other electrical systems, and mechanical or chemical damage.
2. Thoroughly check connectors for looseness, poor connection, bending, corrosion, contamination, deterioration, or damage.
3. Has a problem been found?

YES

▶ Repair as necessary and go to "Verification of Vehicle Repair" procedure

NO

▶ Go to "Signal Circuit Inspection" procedure.

SIGNAL CIRCUIT INSPECTION E2D431E4

1. IG "OFF" and disconnect ECTS connector.

2. IG "ON" & ENG "OFF"
3. Measure voltage between terminal 3 of ECTS harness connector and chassis ground.

Specification : Approx. 5V

4. Is the measured voltage within specification ?

YES

▶ Go to "System Inspection" procedure.

NO

▶ Go to "Check short to ground in harness" as follows.

5. Check short to ground in harness
   1) IG "OFF" and disconnect ECTS connector and PCM connector.
   2) Measure resistance between terminal 3 of ECTS harness connector and chassis ground.
   3) Measure resistance between terminals 1 and 3 of ECTS harness connector.

Specification : Infinite

   4) Is the measured resistance within specification?

YES

▶ Go to "System Inspection" procedure.

NO

▶ Repair short to ground in harness, and go to "Verification of Vehicle Repair" procedure.

SYSTEM INSPECTION EB9F1FF7

1. Check if Engine coolant level is O.K
2. Check if that water pump is operating correctly.
3. Has a problem been found ?

YES

▶ Repair or replace as necessary and then go to "Verification of Vehicle Repair"procedure.

NO

▶ Go to "Component Inspection" procedure.

COMPONENT INSPECTION EB452CFD

1. Check resistance of ECTS
   1) IG "OFF" and disconnect ECTS connector.

2) Measure resistance between terminal 1 and 3 of ECTS connector. (Component Side)

SPECIFICATION :

Temp. (℃/℉)	Resistance (kΩ)	Temp. (℃/℉)	Resistance (kΩ)
-40(-40)	48.14	40(104)	1.15
-20(-4)	14.13 ~ 16.83	60(140)	0.59
0(32)	5.79	80(176)	0.32
20(68)	2.31 ~ 2.59		

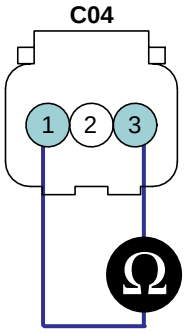

1. ECTS Ground
2. To Gauge
3. ECTS Signal

SCMF16245L

3) Is the measured resistance within specification ?

YES

▶ Go to "Check PCM" procedure.

NO

▶ Substitute with a known - good ECTS and check for proper operation. If the problem is corrected, replace ECTS and go to "Verification of Vehicle Repair" procedure.

2. Check PCM

1) IG "OFF" and connect scantool.

2) Connect probe to terminal 3 of ECTS harness connector.

3) IG "ON" and ENG "OFF" and simulation Function on scantool.

4) Simulate voltage at terminal 3 of ECTS harness connector.

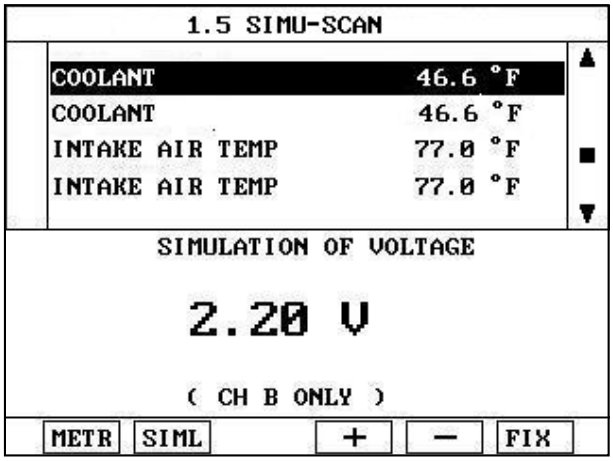

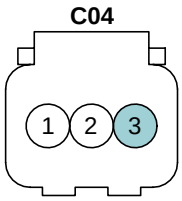

1. ECTS Ground
2. To Gauge
3. ECTS Signal

SCMF16246L

5) Does the signal value of ECT sensor change according to simulation voltage ?

YES

▶ Thoroughly check connectors for looseness, poor connection, bending, corrosion, contamination, deterioration, or damage. Repair or replace as necessary and go to "Verification of Vehicle Repair" procedure.

NO

▶ Substitute with a known - good PCM and check for proper operation. If the problem is corrected, replace PCM and go to "Verification of Vehicle Repair" procedure.

NOTE

There is a memory reset function on scantool that can erase optional parts automatically detected and memorized by PCM. After testing PCM on the vehicle, use this function to reuse the PCM on the others

VERIFICATION OF VEHICLE REPAIR E61CE6CB

After a repair, it is essential to verify that the fault has been corrected.

1. Monitor and record the Freeze Frame Data for the Diagnostic Trouble Code(DTC) which has been diagnosed.
2. Using a Scantool, Clear the DTCs
3. Operate the vehicle within conditions noted in the freeze frame data or enable conditions
4. Monitor that all rediness test have been verified as " Complete "
5. Are any DTCs present ?

YES

▶ Go to the applicable troubleshoooting procedure.

NO

▶ System is performing to specification at this time.

DTC P0222 THROTTLE/PEDAL POSITION SENSOR/SWITCH "B" CIRCUIT LOW INPUT

COMPONENT LOCATION E6D96587

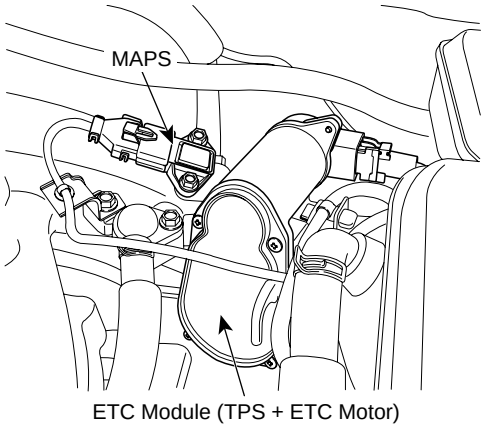

SCMF16192L

GENERAL DESCRIPTION E89080A0

The Electronic Throttle Control(ETC) system is made of the components throttle body, Throttle Position Sensor(TPS)1&2 and Accelerator Position Sensor(APS) 1&2. TPS1&2 are sharing the same source voltage and ground.The throttle valve opening is control by throttle motor which is controlled by Engine Control Module(ECM).The opposite position indicator shows inverted signal characteristics.TPS1 output voltage increases smoothly in proportion with the throttle valve opening angle after starting. TPS2 output voltage decreases in inverse proportion with the throttle valve opening angle after starting. TPS provides feedback to the ECM to control the throttle motor in order to control the throttle valve opening angle properly in response to the driving condition.

DTC DESCRIPTION EC64320B

Checking output signals from TPS2 every 8.5 sec. under detecting condition, if an output signal is below 0.25V for more than 0.1 sec, PCM sets P0222. MIL(Malfunction Indication Lamp) turns on when the malfunction lasts till consecutive 2 driving cycle.

DTC DETECTING CONDITION E1FB6E8A

Item	Detecting Condition	Possible Cause
DTC Strategy	• signal low	• Poor connection • Open or short to ground in power harness • Open or short to ground in signal harness • TPS • PCM
Enable condition	• IG "ON"	
threshold value	• The signal voltage of TPS 〈 0.25V	
diagnosis time	• Continuous (more than 0.1 sec. failure for every 8.5 sec.test)	
MIL ON condition	• 2 driving cycles	

SPECIFICATION E70D3209

Throttle opening (°)	Output voltage(V) [Vref=5.0]	
	TPS1	TPS2
0°	0.0V	5.0V
10°	0.5V	4.5V
20°	0.9V	4.1V
30°	1.4V	3.6V
40°	1.8V	3.2V
50°	2.3V	2.7V
60°	2.7V	2.3V
70°	3.2V	1.8V
80°	3.6V	1.4V
90°	4.1V	0.9V
100°	4.5V	0.5V
110°	5.0V	0.0V

SCHEMATIC DIAGRAM EF39B8B3

[CIRCUIT DIAGRAM]

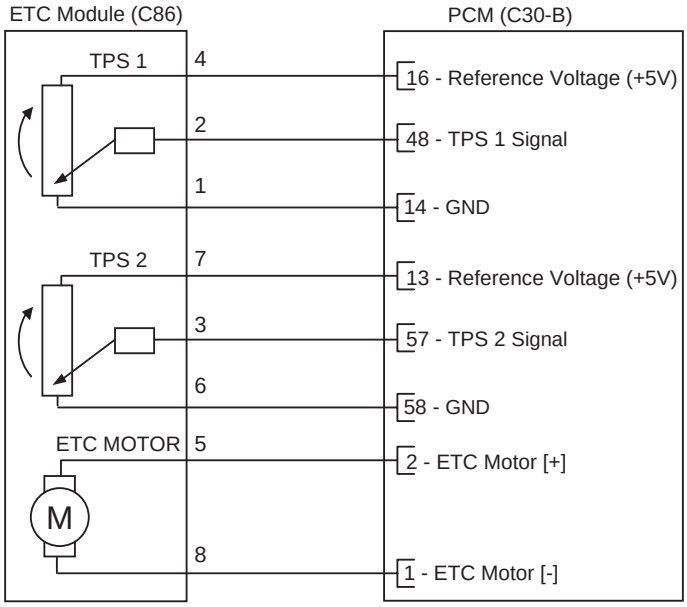

[CONNECTION INFORMATION]

Terminal	Connected to	Function
1	PCM C30-B (14)	TPS 1 Ground
2	PCM C30-B (48)	TPS 1 Signal
3	PCM C30-B (57)	TPS 2 Signal
4	PCM C30-B (16)	TPS 1 Reference Voltage (+5V)
5	PCM C30-B (2)	ETC Motor [+] Control
6	PCM C30-B (58)	TPS 2 Ground
7	PCM C30-B (13)	TPS 2 Reference Voltage (+5V)
8	PCM C30-B (1)	ETC Motor [-] Control

[HARNESS CONNECTORS]

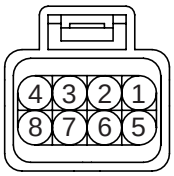

C86

ETC MODULE

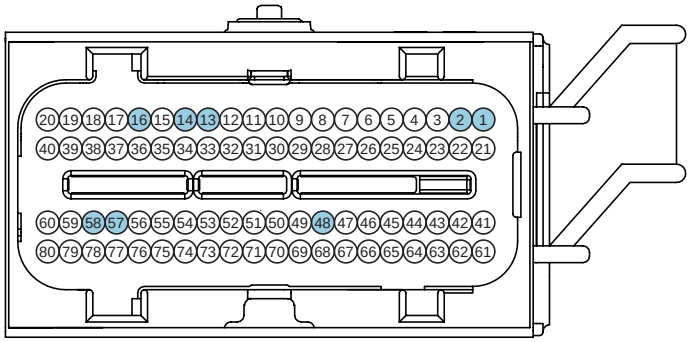

C30-B

PCM

SCMF16101L

SIGNAL WAVEFORM AND DATA E24A5BA6

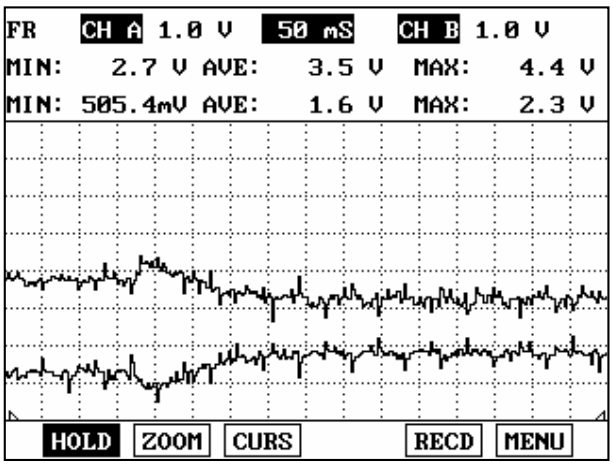

Hit the accelerator at IG ON

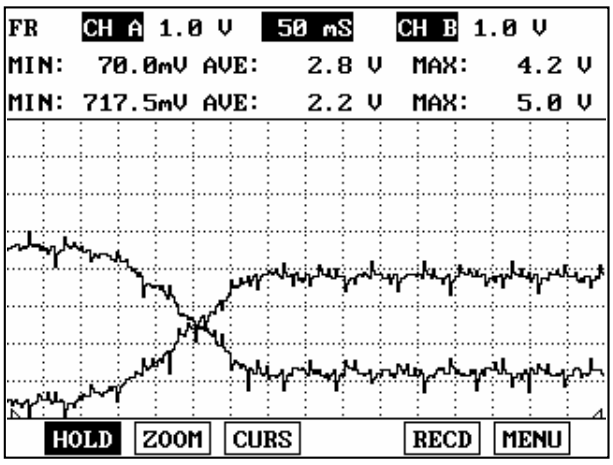

Open the throttle valve by force at IG ON

EGRF604Z

MONITOR DTC STATUS E7C113D0

1. Check DTC Status

   1) Connect scantool to Data Link Connector(DLC).

   2) IG "ON".

   3) Select "Diagnostic Trouble Codes(DTCs)" mode, and then Press F4(DTAL) to check DTC's information from the DTCs menu

   4) Read "DTC Status" parameter.

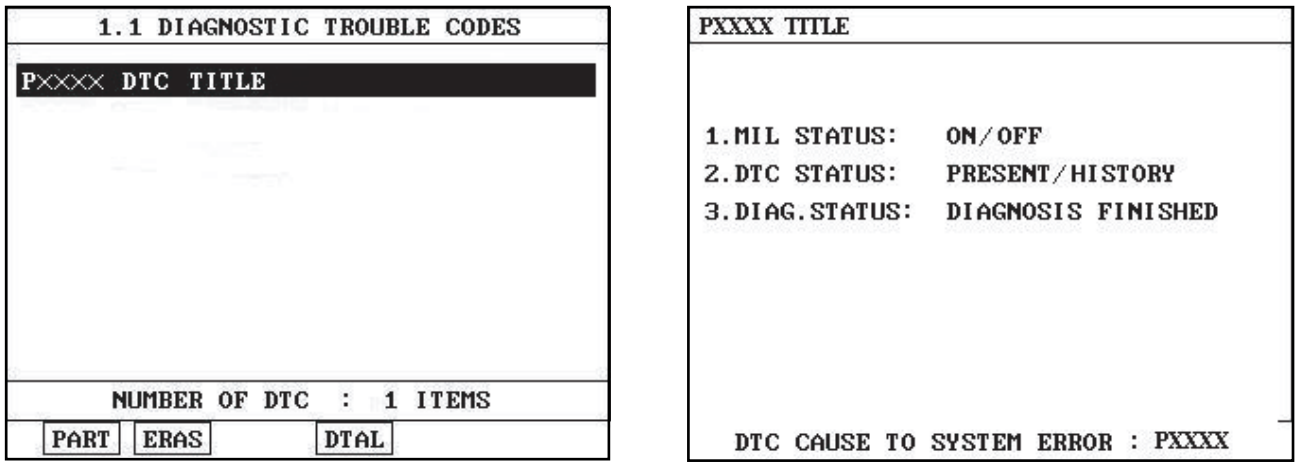

SCMF16159L

   5) Is parameter displayed "Present fault"?

   YES

   ▶ Go to "Terminal and connector inspection" procedure.

   NO

   ▶ Fault is intermittent caused by poor contact in the sensor's and/or PCM's connector or was repaired and PCM memory was not cleared. Thoroughly check connectors for looseness, poor connection, ending, corrosion, contamination, deterioration, or damage. Repair or replace as necessary and go to "Verification of Vehicle Repair" procedure.

TERMINAL AND CONNECTOR INSPECTION EBF4C90A

1. Many malfunctions in the electrical system are caused by poor harness and terminals. Faults can also be caused by interference from other electrical systems, and mechanical or chemical damage.

2. Thoroughly check connectors for looseness, poor connection, bending, corrosion, contamination, deterioration, or damage.

3. Has a problem been found?

   YES

   ▶ Repair as necessary and go to "Verification of Vehicle Repair" procedure

   NO

▶ Go to "Power Circuit Inspection" procedure.

POWER CIRCUIT INSPECTION E9ED0C51

1. IG "OFF" and disconnect TPS connector.
2. IG "ON" and ENG "OFF"
3. Measure voltage between terminal 7 of TPS harness connector and chassis ground.

Specification : Approx. 5V

4. Is the measured voltage within specification ?

YES

▶ Go to "Signal circuit inspection" procedure.

NO

▶ Repair open or short to ground in power harness, and go to "Verification of Vehicle Repair" procedure.

SIGNAL CIRCUIT INSPECTION E2A4F904

1. Check short to ground in harness
   1) IG "OFF" and disconnect TPS connector and PCM connector.
   2) Measure resistance between terminal 3 of TPS harness connector and chassis ground.
   3) Measure resistance between terminals 3 and 6(1) of TPS harness connector.

Specification : Infinite

   4) Is the measured resistance within specification?

YES

▶ Go to "Check open in harness" as follows

NO

▶ Repair short to ground in harness, and go to "Verification of Vehicle Repair" procedure.

2. Check open in harness
   1) IG "OFF" and disconnect TPS connector and PCM connector.
   2) Measure resistance between terminal 3 of TPS harness connector and terminal C30-B (57) of PCM harness connector.

Specification : Below 1Ω

   3) Is the measured resistance within specification?

YES

▶ Go to " Component Inspection" procedure.

NO

▶ Repair open in harness, and go to "Verification of Repair" procedure.

COMPONENT INSPECTION EADB26DA

1. Check TPS

   1) IG "OFF" and disconnect TPS connector.

   2) Measure resistance between terminals 7 and 6 of TPS connector.(Component side)

Specification : 2.7 ~ 4.1kΩ

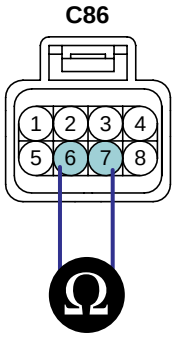

1. TPS1 ground
2. TPS1 signal
3. TPS2 signal
4. TPS 1 Reference Voltage (+5V)
5. ETC motor[+] Control
6. **TPS2 ground**
7. **TPS 2 Reference Voltage (+5V)**
8. ETC motor[-] Control

SCMF16250L

   3) Is the measured resistance within specification?

YES

▶ Substitute with a known - good PCM and check for proper operation. If the problem is corrected, replace PCM and go to "Verification of Vehicle Repair" procedure.

NO

▶ Substitute with a known - good TPS and check for proper operation. If the problem is corrected, replace TPS and go to "Verification of Vehicle Repair" procedure.

NOTE

There is a memory reset function on scantool that can erase optional parts automatically detected and memorized by PCM. After testing PCM on the vehicle, use this function to reuse the PCM on the others

CAUTION

Procedure of ETS Initialization

1. ***Erase the trouble codes on PCM***
2. ***Turn the ignition key off and keep this condition until the main relay is turned off.(It will takes 10sec.)***
3. ***Turn ignition key on more than 1second to record the throttle motor position on the EEPROM***

VERIFICATION OF VEHICLE REPAIR ECE0E273

After a repair, it is essential to verify that the fault has been corrected.

1. Monitor and record the Freeze Frame Data for the Diagnostic Trouble Code(DTC) which has been diagnosed.

2. Using a Scantool, Clear the DTCs
3. Operate the vehicle within conditions noted in the freeze frame data or enable conditions
4. Monitor that all rediness test have been verified as " Complete "
5. Are any DTCs present ?

YES

▶ Go to the applicable troubleshoooting procedure.

NO

▶ System is performing to specification at this time.

DTC P0223 THROTTLE/PEDAL POSITION SENSOR/SWITCH "B" CIRCUIT HIGH INPUT

COMPONENT LOCATION E2DDF6EC

Refer to DTC P0222.

GENERAL DESCRIPTION E1F46B90

Refer to DTC P0222.

DTC DESCRIPTION E99F7095

Checking output signals from TPS2 every 8.5 sec. under detecting condition, if an output signal is above 4.75V for more than 0.1 sec., PCM sets P0223. MIL(Malfunction Indication Lamp) turns on when the malfunction lasts till consecutive 2 driving cycle.

DTC DETECTING CONDITION E0998B07

Item	Detecting Condition	Possible Cause
DTC Strategy	• Signal High	• Poor connection • Short to battery in signal harness • Open in ground harness • TPS • PCM
Enable condition	• IG "ON"	
threshold value	• The signal voltage of TPS 〉 4.75V	
diagnosis time	• Continuous (more than 0.1 sec. failure for every 8.5 sec.test)	
MIL ON condition	• 2 driving cycles	

SPECIFICATION EF1158C6

Refer to DTC P0222.

SCHEMATIC DIAGRAM EB52B2D8

Refer to DTC P0222.

SIGNAL WAVEFORM AND DATA EDE87B15

Refer to DTC P0222.

MONITOR DTC STATUS EFDFE57A

Refer to DTC P0222.

TERMINAL AND CONNECTOR INSPECTION ED7A94AD

Refer to DTC P0222.

SIGNAL CIRCUIT INSPECTION E2452337

1. Check voltage

   1) IG "OFF" and disconnect TPS connector.

   2) IG "ON and ENG "OFF"

   3) Measure voltage between terminal 3 of TPS harness connector and chassis ground.

Specification : Approx. 0V

   4) Is the measured voltage within specification?

   YES

   ▶ Go to "Ground Circuit Inspection" procedure.

   NO

   ▶ Go to "Check short to battery in harness" as follows.

2. Check short to battery in harness

   1) IG "OFF" and disconnect TPS connector and PCM connector.

   2) Measure resistance between terminals 7 and 3 of TPS harness connector.

   3) Measure resistance between terminals 4 and 3 of TPS harness connector.

   4) Measure resistance between terminals 5 and 3 of TPS harness connector.

   5) Measure resistance between terminals 8 and 3 of TPS harness connector.

Specification : Infinite

   6) Is the measured resistance within specification?

   YES

   ▶ Go to " Ground Circuit Inspection" procedure.

   NO

   ▶ Repair short to battery in harness, and go to "Verification of Vehicle Repair" procedure.

GROUND CIRCUIT INSPECTION E060618D

1. IG "OFF" and disconnect TPS connector.

2. IG "ON" and ENG "OFF"

3. Measure voltage between terminal 8 of TPS harness connector and chassis ground.

4. Measure voltage between terminals 8 and 6 of TPS harness connector.

Specification : Measurement "A" - Measurement ’B’ = Approx. below 200mV

5. Is the measured voltage within specification?

YES

▶ Go to "Component Inspection" procedure.

NO

▶ Repair open or contact resistance inharness, and go to "Verification of Vehicle Repair: procedure.

COMPONENT INSPECTION E2BE8CB7

1. Check TPS

   1) IG "OFF" and disconnect TPS connector.

   2) Measure resistance between terminals 7 and 6 of TPS connector.(Component side)

Specification : 2.7 ~ 4.1kΩ

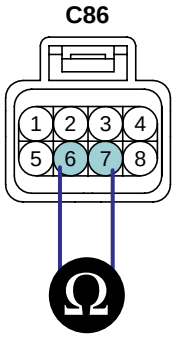

1. TPS1 ground
2. TPS1 signal
3. TPS2 signal
4. TPS 1 Reference Voltage (+5V)
5. ETC motor[+] Control
6. **TPS2 ground**
7. **TPS 2 Reference Voltage (+5V)**
8. ETC motor[-] Control

SCMF16250L

   3) Is the measured resistance within specification?

YES

▶ Substitute with a known - good PCM and check for proper operation. If the problem is corrected, replace PCM and go to "Verification of Vehicle Repair" procedure.

NO

▶ Substitute with a known - good TPS and check for proper operation. If the problem is corrected, replace TPS and go to "Verification of Vehicle Repair" procedure.

NOTE

There is a memory reset function on scantool that can erase optional parts automatically detected and memorized by PCM. After testing PCM on the vehicle, use this function to reuse the PCM on the others

CAUTION

Procedure of ETS Initialization

1. ***Erase the trouble codes on PCM***
2. ***Turn the ignition key off and keep this condition until the main relay is turned off.(It will takes 10sec.)***
3. ***Turn ignition key on more than 1second to record the throttle motor position on the EEPROM***

VERIFICATION OF VEHICLE REPAIR E2F56A35

Refer to DTC P0222.

DTC P0230 FUEL PUMP PRIMARY CIRCUIT

COMPONENT LOCATION ECC8A902

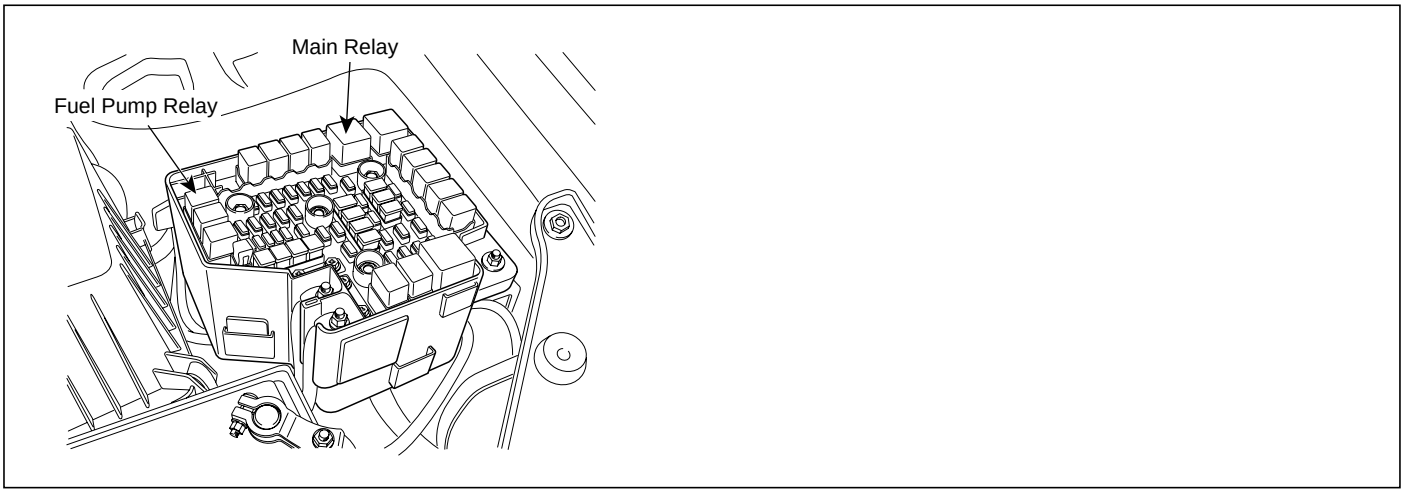

SCMF16254L

GENERAL DESCRIPTION E6E9EF13

The ECM provides ground to one side of the coil in the fuel pump relay to control the fuel pump relay. The other side of the fuel pump relay coil is connected to fuel pump relay, which activates when the ignition switch is ON. The ECM monitors the control circuit between the fuel pump relay and the ECM. When the ignition switch is turned ON, the ECM energizes the fuel pump relay, which sends power to the fuel pump.

DTC DESCRIPTION E614D1F8

Checking fuel pump relay circuit continuously under detecting condition, if open or short in the circuit is detected, PCM sets P0230.In addition, Take note that open circuit in Main Relay may cause this P0230 code.
※ In addition, Take note that open circuit in Main Relay may cause this P0230 code.

DTC DETECTING CONDITION EBBFCDBE

Item	Detecting Condition	Possible Cause
DTC Strategy	• Signal Low or High	• Poor connection • Open or short in fuel pump relay circuit • Open in Main Relay circuit • Fuel Pump Relay • PCM
Enable condition	• 11V ≤ Battery Voltage ≤ 16V	
threshold value	• Open or short	
diagnosis time	• Continuous	
MIL ON condition	• NO MIL ON(DTC only)	

SCHEMATIC DIAGRAM E60A2C29

[CIRCUIT DIAGRAM]

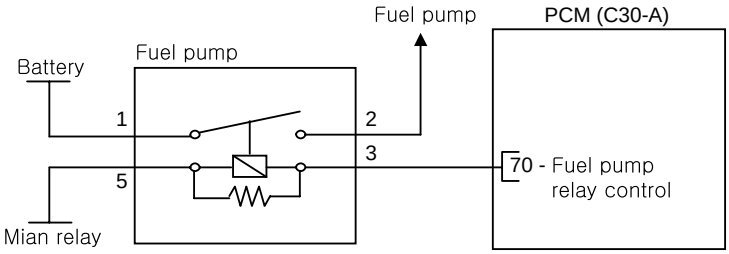

[CONNECTION INFORMATION]

Terminal	Connected to	Function
1	Battery	Battery power (B+)
2	Fuel pump	Power Supply to fuel pump (B+)
3	PCM C30-A (70)	Relay control
5	Mian relay	Battery power (B+)

[HARNESS CONNECTOR]

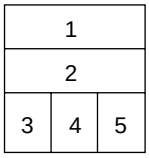

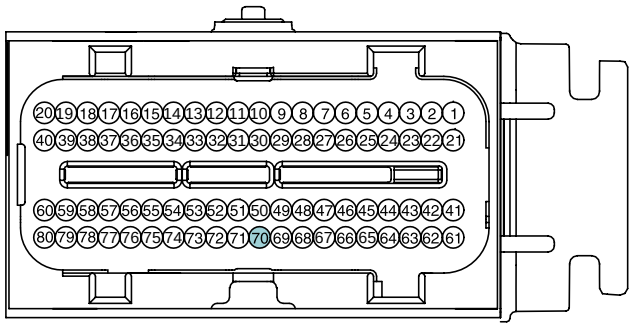

C30-A

PCM

SCMF16255L

MONITOR DTC STATUS EE0FF7EC

1. Check DTC Status

   1) Connect scantool to Data Link Connector(DLC).

   2) IG "ON".

   3) Select "Diagnostic Trouble Codes(DTCs)" mode, and then Press F4(DTAL) to check DTC's information from the DTCs menu

   4) Read "DTC Status" parameter.

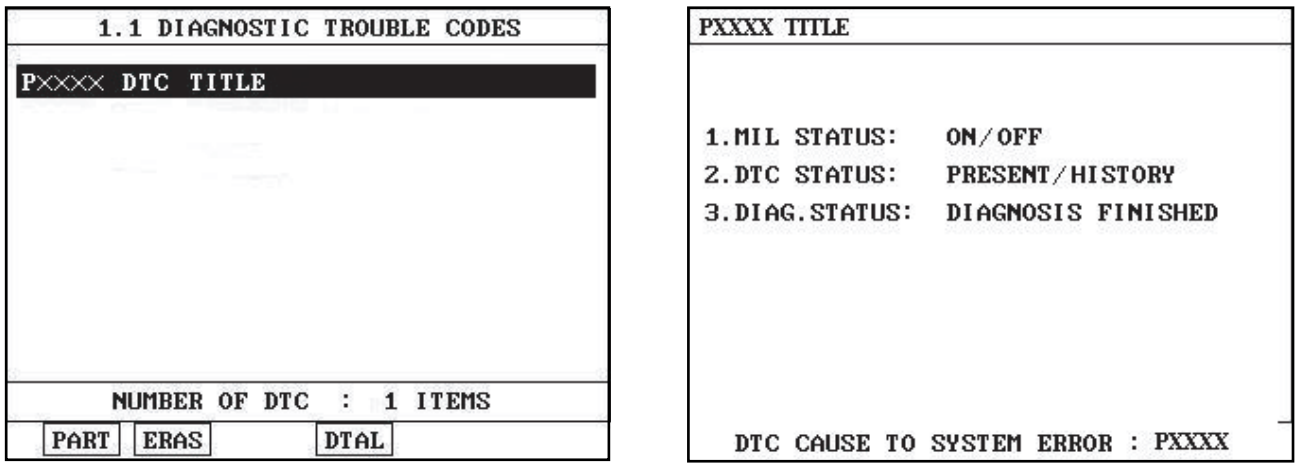

SCMF16159L

5) Is parameter displayed "Present fault"?

YES

▶ Go to "Terminal and connector inspection" procedure.

NO

▶ Fault is intermittent caused by poor contact in the sensor's and/or PCM's connector or was repaired and PCM memory was not cleared. Thoroughly check connectors for looseness, poor connection, ending, corrosion, contamination, deterioration, or damage. Repair or replace as necessary and go to "Verification of Vehicle Repair" procedure.

TERMINAL AND CONNECTOR INSPECTION E4D51B0A

1. Many malfunctions in the electrical system are caused by poor harness and terminals. Faults can also be caused by interference from other electrical systems, and mechanical or chemical damage.
2. Thoroughly check connectors for looseness, poor connection, bending, corrosion, contamination, deterioration, or damage.
3. Has a problem been found?

YES

▶ Repair or replace if necessary and go to "Verification of Vehicle Repair" procedure

NO

▶ Go to "Power Circuit Inspection" procedure.

POWER CIRCUIT INSPECTION EB120C99

1. IG "OFF" & ENG "OFF"
2. Disconnect fuel pump relay.
3. IG "ON" & ENG "OFF"
4. Measure voltage between harness terminal 1(5) of chassis ground.

Specification : B+

5. Is the measured voltage within specification ?

YES

▶ Go to "Control Circuit Inspection" procedure.

NO

▶ Check "Fuse" between fuel pump relay and main relay is not installed or blown off
▶ Check "Fuse" between fuel pump relay and battery is not installed or blown off
▶ Especially, if battery voltage at terminal 5 is not detected, replace the Main Relay.
▶ Repair or replace as necessary and then, go to "Verification of Vehicle Repair" procedure.

CONTROL CIRCUIT INSPECTION E800A71E

1. IG "OFF"
2. Disconnect fuel pump relay.
3. IG "ON" & ENG "OFF"
4. Measure voltage between harness terminal 3 and chassis ground.

Specification : Approx. 2.5V

5. Is the measured voltage within specification ?

YES

▶ Go to "Component Inspection" procedure.

NO

▶ Repair or repalce as necessary and then, go to "Verification of Vehicle Repair" procedure.

COMPONENT INSPECTION E6D72E04

1. Check fuel pump relay
   1) IG "OFF"
   2) Disconnect Fuel Pump Relay
   3) Measure resistance between terminal 1 and 2 of Fuel Pump Relay
   4) Measure resistance between terminal 3 and 5 of Fuel Pump Relay

SPECIFICATION :

Terminal	continuity
1~2	NO
3~5	YES (Approx. 70Ω ~ 120Ω)

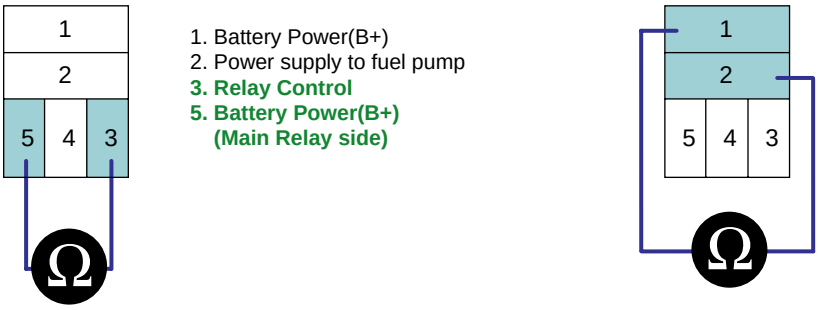

EFBF607R

5) Is the measured resistance within specification ?

YES

▶ Substitute with a known - good PCM and check for proper operation. If the problem is corrected, replace PCM and go to "Verification of Vehicle Repair" procedure.

NOTE

There is a memory reset function on scantool that can erase optional parts automatically detected and memorized by PCM. After testing PCM on the vehicle, use this function to reuse the PCM on the others

NO

▶ Substitute with a known - good Fuel Pump Relay and check for proper operation.If the problem is corrected, replace Fuel Pump Relay and go to "Verification of Vehicle Repair" procedure.

VERIFICATION OF VEHICLE REPAIR EE7C6F22

After a repair, it is essential to verify that the fault has been corrected.

1. Monitor and record the Freeze Frame Data for the Diagnostic Trouble Code(DTC) which has been diagnosed.
2. Using a Scantool, Clear the DTCs
3. Operate the vehicle within conditions noted in the freeze frame data or enable conditions
4. Monitor that all rediness test have been verified as " Complete "
5. Are any DTCs present ?

YES

▶ Go to the applicable troubleshoooting procedure.

NO

▶ System is performing to specification at this time.

DTC P0261 CYLINDER 1-INJECTOR CIRCUIT LOW
DTC P0264 CYLINDER 2-INJECTOR CIRCUIT LOW
DTC P0267 CYLINDER 3-INJECTOR CIRCUIT LOW
DTC P0270 CYLINDER 4-INJECTOR CIRCUIT LOW
DTC P0273 CYLINDER 5-INJECTOR CIRCUIT LOW
DTC P0276 CYLINDER 6-INJECTOR CIRCUIT LOW

COMPONENT LOCATION EA07F81A

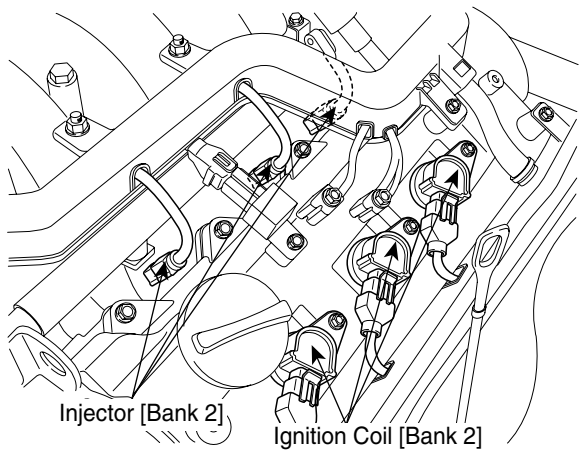

LGLG512A

GENERAL DESCRIPTION EBE9969F

Based on information from various sensors, the ECM measures the fuel injection amount. The fuel injector is a solenoid-operated valve and the fuel injection amount is controlled by length of time the fuel injector is held open. The ECM controls each injector by grounding the control circuit. When the ECM energizes the injector by grounding the control circuit, the circuit voltage should be low (theoretically 0V) and the fuel is injected. When the ECM de-energizes the injector by opening the control circuit, the fuel injector is closed and circuit voltage should momentarily peak.

DTC DESCRIPTION E0829D7F

Checking output signals from injectors. Under detecting condition, if an output signal is low, PCM sets P0261/P0264/P0267/P0270/P0273/P0276. MIL(Malfunction Indication Lamp) turns on when the malfunction lasts till consecutive 2 driving cycle.

DTC DETECTING CONDITION EFE811AE

Item	Detecting Condition	Possible Cause
DTC Strategy	• Signal Low	• Poor connection • Open or short to ground in power harness • Open or short to ground in control harness • Injector • PCM
Enable condition	• Engine running state • 11V ≤ Battery voltage ≤ 16V • Above conditions are met 〉 0.5sec. • No disabling faults present	
threshold value	• Open or short to ground	
diagnosis time	• Continuous	
MIL ON condition	• 2 driving cycles	

SPECIFICATION ECC7150B

Item	Coil resistance(Ω)
Injector	13.8 ~ 15.2Ω [20℃(68°F)]

SCHEMATIC DIAGRAM E6B67638

[CIRCUIT DIAGRAM]

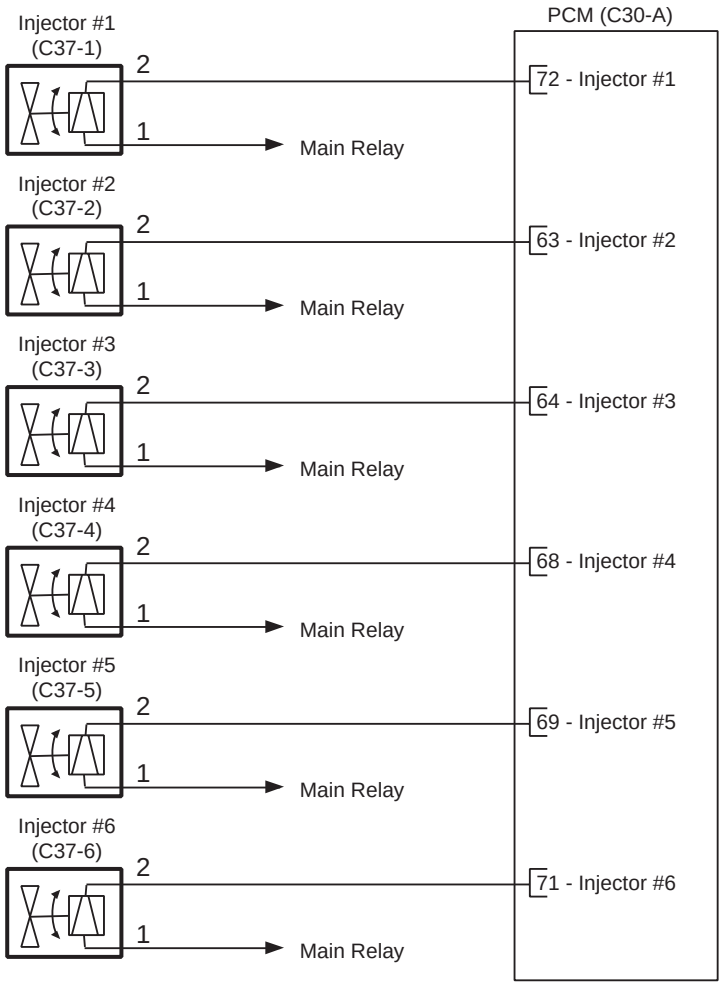

[CONNECTION INFORMATION]

Injector #1

Terminal	Connected to	Function
1	PCM C30-A (72)	Injector #1 control
2	Main Relay	Battery Voltage (B+)

Injector #2

Terminal	Connected to	Function
1	PCM C30-A (63)	Injector #2 control
2	Main Relay	Battery Voltage (B+)

Injector #3

Terminal	Connected to	Function
1	PCM C30-A (64)	Injector #3 control
2	Main Relay	Battery Voltage (B+)

Injector #4

Terminal	Connected to	Function
1	PCM C30-A (68)	Injector #4 control
2	Main Relay	Battery Voltage (B+)

Injector #5

Terminal	Connected to	Function
1	PCM C30-A (69)	Injector #5 control
2	Main Relay	Battery Voltage (B+)

Injector #6

Terminal	Connected to	Function
1	PCM C30-A (71)	Injector #6 control
2	Main Relay	Battery Voltage (B+)

[HARNESS CONNECTORS]

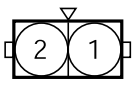

C37-1,3,5

Injector #1,3,5



C37-2,4,6

Injector #2,4,6

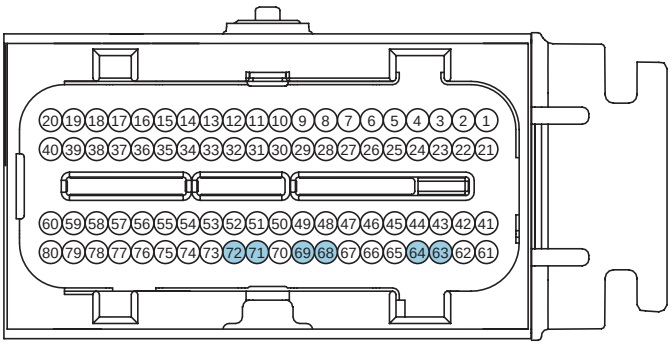

C30-A

PCM

SCMF16113L

SIGNAL WAVEFROM AND DATE E16CB445

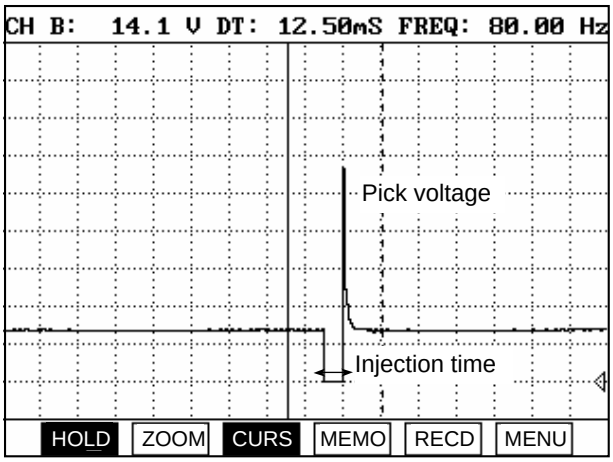

EGRF607S

When the PCM energizes the injector by grounding control circuit, the circuit voltage should be low (theoretically 0V) and the fuel is injected. When the PCM de-energizes the injector by opening control circuit, the fuel injector is closed and circuit voltage should be peak at a moment.

MONITOR DTC STATUS E4BF54AA

1. Check DTC Status

   1) Connect scantool to Data Link Connector(DLC).

   2) IG "ON".

   3) Select "Diagnostic Trouble Codes(DTCs)" mode, and then Press F4(DTAL) to check DTC's information from the DTCs menu

   4) Read "DTC Status" parameter.

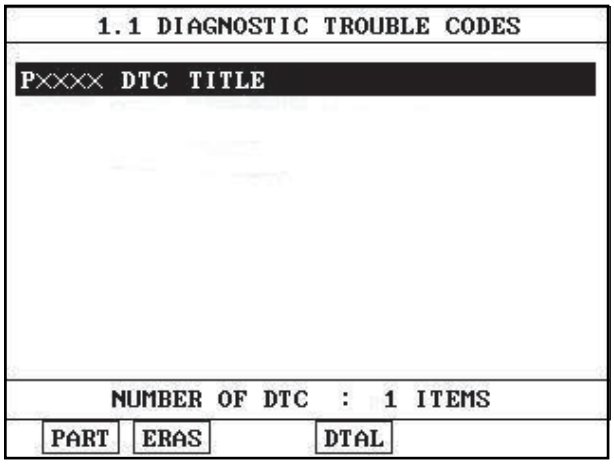

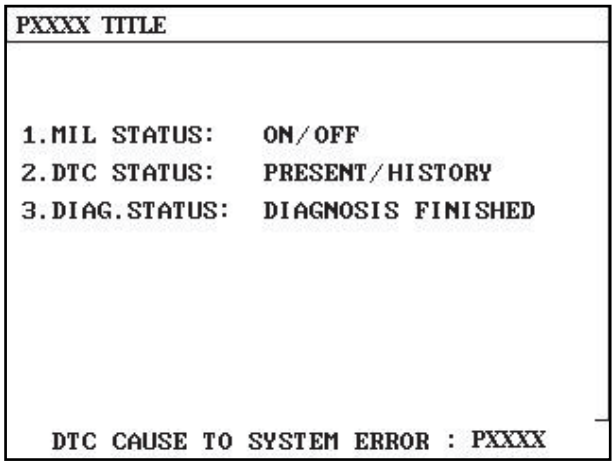

SCMF16159L

   5) Is parameter displayed "Present fault"?

   YES

   ▶ Go to "Terminal and connector inspection" procedure.

NO

▶ Fault is intermittent caused by poor contact in the sensor's and/or PCM's connector or was repaired and PCM memory was not cleared. Thoroughly check connectors for looseness, poor connection, ending, corrosion, contamination, deterioration, or damage. Repair or replace as necessary and go to "Verification of Vehicle Repair" procedure.

TERMINAL AND CONNECTOR INSPECTION ECB23331

1. Many malfunctions in the electrical system are caused by poor harness and terminals. Faults can also be caused by interference from other electrical systems, and mechanical or chemical damage.
2. Thoroughly check connectors for looseness, poor connection, bending, corrosion, contamination, deterioration, or damage.
3. Has a problem been found?

YES

▶ Repair as necessary and go to "Verification of Vehicle Repair" procedure

NO

▶ Go to "Power Circuit Inspection" procedure.

POWER CIRCUIT INSPECTION E37F10FF

1. IG "ON" and disconnect injector connector.
2. IG "ON" and ENG "OFF"
3. Measure voltage between terminal 1 of injector harness connector and chassis ground.

Specification : B+

4. Is the measured voltage within specification?

YES

▶ Go to "Control Circuit Inspection" procedure.

NO

▶ Check open or connection of the fuse connected to injector power supply.
▶ Repair open or short to ground in harness, and go to "Verification of Vehicle Repair' procedure.

CONTROL CIRCUIT INSPECTION EDC281C2

1. Check short to ground in harness
   1) IG "OFF" and disconnect injector connector and PCM connector.
   2) Measure resistance between terminal 2 of injector harness connector and chassis ground.

Specification : Infinite

3) Is the measured resistance within specification?

YES

▶ Go to "Check open in harness" as follows.

NO

▶ Repair short to ground in harness, and go to "Verification of Vehicle Repair" procedure.

2. Check open in harness

1) IG "OFF" and disconnect injector connector and PCM connector.

2) [P0261] Measure resistance between terminal 2 of injector harness connector and C30-B (72) of PCM harness connector.
[P0264] Measure resistance between terminal 2 of injector harness connector and C30-B (63) of PCM harness connector.
[P0267] Measure resistance between terminal 2 of injector harness connector and C30-B (64) of PCM harness connector.
[P0270] Measure resistance between terminal 2 of injector harness connector and C30-B (68) of PCM harness connector.
[P0273] Measure resistance between terminal 2 of injector harness connector and C30-B (69) of PCM harness connector.
[P0276] Measure resistance between terminal 2 of injector harness connector and C30-B (71) of PCM harness connector.

Specification : Below 1Ω

3) Is the measured resistance within specification?

YES

▶ Go to "Component Inspection" procedure.

NO

▶ Repair open in harness, and go to "Verification of Vehicle Repair" procedure.

COMPONENT INSPECTION E36E5AB0

1. Check injector

1) IG "OFF" and disconnect injector connector.

2) Measure resistance between terminals 1 and 2 of injector connector.(Component side)

SPECIFICATION :

Item	Coil resistance(Ω)
Injector	13.8 ~ 15.2Ω [20℃(68˚F)]

3) Is the measured resistance within specification?

YES

▶ Substitute with a known - good PCM and check for proper operation. If the problem is corrected, replace PCM and go to "Verification of Vehicle Repair" procedure.

NO

▶ Substitute with a known - good injector and check for proper operation. If the problem is corrected, replace injector and go to "Verification of Vehicle Repair" procedure.

NOTE

There is a memory reset function on scantool that can erase optional parts automatically detected and memorized by PCM. After testing PCM on the vehicle, use this function to reuse the PCM on the others

VERIFICATION OF VEHICLE REPAIR EEE753BC

After a repair, it is essential to verify that the fault has been corrected.

1. Monitor and record the Freeze Frame Data for the Diagnostic Trouble Code(DTC) which has been diagnosed.
2. Using a Scantool, Clear the DTCs
3. Operate the vehicle within conditions noted in the freeze frame data or enable conditions
4. Monitor that all rediness test have been verified as " Complete "
5. Are any DTCs present ?

YES

▶ Go to the applicable troubleshoooting procedure.

NO

▶ System is performing to specification at this time.

DTC P0262 CYLINDER 1-INJECTOR CIRCUIT HIGH
DTC P0265 CYLINDER 2-INJECTOR CIRCUIT HIGH
DTC P0268 CYLINDER 3-INJECTOR CIRCUIT HIGH
DTC P0271 CYLINDER 4-INJECTOR CIRCUIT HIGH
DTC P0274 CYLINDER 5-INJECTOR CIRCUIT HIGH
DTC P0277 CYLINDER 6-INJECTOR CIRCUIT HIGH

COMPONENT LOCATION E150E0E6

Refer to DTC P0261.

GENERAL DESCRIPTION EEF3FBEA

Refer to DTC P0261.

DTC DESCRIPTION E8A8A39D

Checking output signals from injectors. Under detecting condition, if an output signal is high, PCM sets P0262/P0265/P0268/P0271/P0274/P0277. MIL(Malfunction Indicatin Lamp) turns on when the malfunction lasts till consecutive 2 driving cycle.

DTC DETECTING CONDITION E1EF623E

Item	Detecting Condition	Possible Cause
DTC Strategy	• Signal High	• Poor connection • Short to battery in harness • Injector • PCM
Enable condition	• Engine running state • 11V ≤ Battery voltage ≤ 16V • Above conditions are met 〉 0.5sec. • No disabling faults present	
threshold value	• Short to battery	
diagnosis time	• Continuous	
MIL ON condition	• 2 driving cycles	

SPECIFICATION E7E796A6

Refer to DTC P0261.

SCHEMATIC DIAGRAM ECE17432

Refer to DTC P0261.

SIGNAL WAVEFROM AND DATA E1FF3458

Refer to DTC P0261.

MONITOR DTC STATUS E59DA212

Refer to DTC P0261.

TERMINAL AND CONNECTOR INSPECTION EA245884

Refer to DTC P0261.

CONTROL CIRCUIT INSPECTION E76F012F

1. Check voltage

   1) IG "OFF" and disconnect injector connector.

   2) IG "ON" and ENG "OFF"

   3) Measure voltage between terminal 2 of injector harness connector and chassis ground.

Specification : Approx. 0V

   4) Is the measured voltage within specification?

YES

▶ Go to "Component Inspection" procedure.

NO

▶ Go to "Check short to battery in harness" as follows.

2. Check short to battery in harness

   1) IG "OFF" and disconnect injector connector and PCM connector.

   2) Measure resistance between terminals 1 and 2 of injector harness connector.

Specification : Infinite

   3) Is the measured resistance within specification?

YES

▶ Go to "Component Inspection" procedure.

NO

▶ Repair short to battery in harness, and go to "Verification of Vehicle Repair" procedure.

COMPONENT INSPECTION E2DB98CB

1. Check injector

   1) IG "OFF" and disconnect injector connector.

   2) Measure resistance between terminals 1 and 2 of injector connector.(Component side)

SPECIFICATION :

Item	Coil resistance(Ω)
Injector	

3) Is the measured resistance within specification?

YES

▶ Substitute with a known - good PCM and check for proper operation. If the problem is corrected, replace PCM and go to "Verification of Vehicle Repair" procedure.

NO

▶ Substitute with a known - good injector and check for proper operation. If the problem is corrected, replace injector and go to "Verification of Vehicle Repair" procedure.

NOTE

There is a memory reset function on scantool that can erase optional parts automatically detected and memorized by PCM. After testing PCM on the vehicle, use this function to reuse the PCM on the others

VERIFICATION OF VEHICLE REPAIR E12658ED

Refer to DTC P0261.

DTC P0300 RANDOM/MULTIPLE CYLINDER MISFIRE DETECTED
DTC P0301 CYLINDER 1-MISFIRE DETECTED
DTC P0302 CYLINDER 2-MISFIRE DETECTED
DTC P0303 CYLINDER 3-MISFIRE DETECTED
DTC P0304 CYLINDER 4-MISFIRE DETECTED
DTC P0305 CYLINDER 5-MISFIRE DETECTED
DTC P0306 CYLINDER 6-MISFIRE DETECTED

COMPONENT LOCATION E595915F

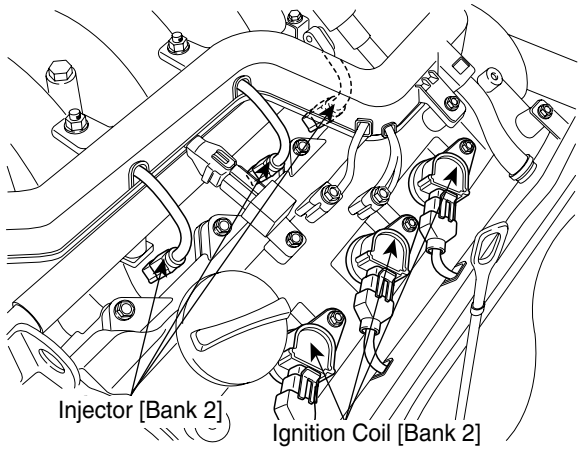

LGLG512A

GENERAL DESCRIPTION E8981F68

The Misfire monitor diagnostic is based on crankshaft rotation velocity variation. The ECM determines crankshaft rotational velocity using the crankshaft position sensor and camshaft position sensor. When a cylinder misfires the crankshaft slows down momentarily. By monitoring the crankshaft and camshaft position sensor signals, the ECM can calculate when a misfire occurs. For a non-catalyst damaging misfire, the diagnostic will be required to report a misfire present within 1000-3200 engine revolutions. For catalyst damaging misfire, the diagnostic will respond to monitor 200 engine revolutions. Rough roads may cause false misfire detection. The rough road(acceleration)sensor consists of a piezoelectric vibration pick up which detects vertical acceleration of the vehicle. The sensor signal is used by the ECM to determine the degree of vertical movement of the car, for example, on a bumpy road. Since this may also cause uneven engine running, the ECM uses the signal to distinguish the phenomenon from actual misfiring.

DTC DESCRIPTION E8D0ED27

The PCM measures reference event times and calculates the positive and negative acceleration of the crank wheel to detrmine whether a misfire has occurred.
When the rate of misfire exceeds a threshold where the catalyst reaches a temperature where permanent damage can ocur. PCM sets this DTC. In case that misfire affects Catalyst damage, MIL(Malfunction Indication Lamp) will be illuminating and blinking at 1HZ frequency. However, In case of Indivisual and Emission damaging misfire, MIL will be turned on when the malfunction is detected.
Especially, if injector connector is disconnected for more than 46 sec., PCM sets DTC relating to misfire and conducts the fuel-cut to protect the catalyst.

DTC DETECTING CONDITION E554E741

Item		Detecting Condition	Possible Cause
DTC Strategy		• Determine if a multiple cylinder misfire or a cylinder specific misfire is occurring by monitoring crankshaft acceleration.	• Faulty Spark plugs • Faulty Spark plug cables • Air Leakage • Belt deflection and Air gap of CKPS • Incorrect timing • Faulty injector • Improper fuel pressure • Improper engine compression • Faulty PCM
Enable condition		• No sudden change in throttle opening • Torque management control is not functioning • Not deceleration fuel cut off • Not fuel cut off during high speed operation • Not negative torque driving conditions • Not fuel level low • TEC is learned • Coolant temperature is outside the window • 500 〈 Engine speed 〈 6600 • 11 〈 Battery vlotage 〈 16 • TPS/MAP sensor/CAMS/CKPS/ECT sensor are normal	
Thresh old value	Case 1	• Individual event misfire detection 〉 Threshold	
	Case 2	• Emissions damaging 〉 Threshold	
	Case 3	• Catalyst damaging 〉 Threshold	
Diagnosis time		• Continuous	
MIL ON condition		• 2 driving cycles	

MONITOR DTC STATUS EAAAD21E

1. Check DTC Status

   1) Connect scantool to Data Link Connector(DLC).

   2) IG "ON".

   3) Select "Diagnostic Trouble Codes(DTCs)" mode, and then Press F4(DTAL) to check DTC's information from the DTCs menu

   4) Read "DTC Status" parameter.

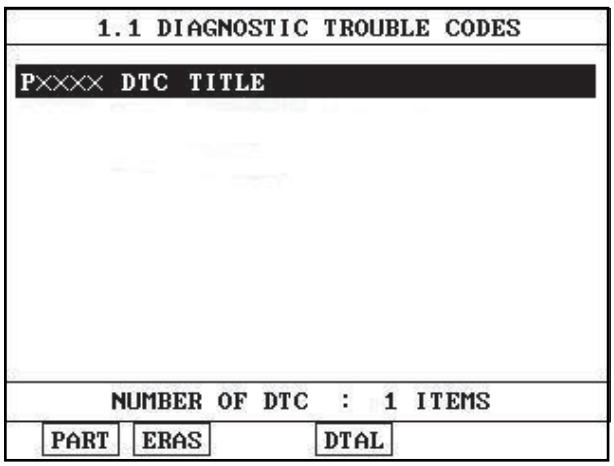

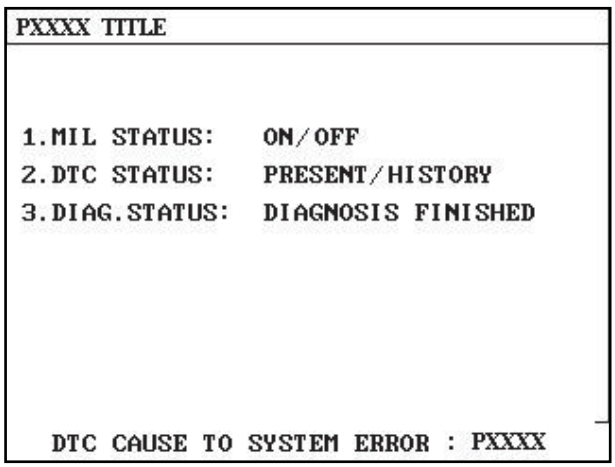

SCMF16159L

5) Is parameter displayed "Present fault"?

YES

▶ Go to "System Inspection" procedure.

NO

▶ Fault is intermittent caused by poor contact in the sensor's and/or PCM's connector or was repaired and PCM memory was not cleared. Thoroughly check connectors for looseness, poor connection, ending, corrosion, contamination, deterioration, or damage. Repair or replace as necessary and go to "Verification of Vehicle Repair" procedure.

SYSTEM INSPECTION EB1FBE92

1. Check Spark Pulg

   1) Remove cylinder's spark plugs

   2) Visually/physically inspect the following items:
   - Damaged insulation, Worn electrodes, Oil or fuel fouled, Loose terminals and cracks
   - Check for plug gap : 1.0 - 1.1 mm (0.039 - 0.043 in.)
   - Check if the spark plug for the relevant cylinder is lighter in color than the other plugs.

   3) Has a problem been found in any of the above areas?

   YES

   ▶ Repair or replace as necessary and go to "Verification of Vehicle Repair" procedure

   NO

   ▶ Go to "Check Air Leakage " as below

2. Check Air Leakage

   1) Visually/physically inspect the air leakage in intake/exhaust system as following items,
   - Vacuum hoses for splits, kinks and improper connections.
   - Throttle body gasket
   - Gasket between intake manifold and cylinder head
   - Seals between intake manifold and fuel injectors
   - Exhaust system between HO2S and Three way catalyst for air leakage

   2) Has a problem been found in any of the above areas?

   YES

   ▶ Repair or replace as necessary and go to "Verification of Vehicle Repair" procedure

   NO

   ▶ Go to "Check for air leakage in Positive Crankcase Ventilation Valve(PCV)

3. Check for air leakage in Positive Crankcase Ventilation Valve(PCV)

   1) Remove PCV valve from cylinder head cover by puling ventilation hose

   2) With engine idling block PCV valve opening

3) Verify that vacuum is felt

4) Remove PCV valve

5) Blow through valve from prot "A" and verify that air comes out of prot "B"

6) Blow through valve from prot "B" and verifty that no air comes out of port "A"

7) Has a problem been found ?

YES

▶ Repair or replace as necessary and go to "Verification of Vehicle Repair" procedure

NO

▶ Go to "Check Compression pressure" as below

4. Check Compression pressure

1) Warm up the engine to normal operating temperature

2) Disconnect the spark plug cables and remove the spark plugs.

3) Crank the engine to remove any foreign material in the cylinders.

4) Put compression pressure gauge into spark pulg hole

5) Crank the engine with widely opend throttle valve and check compression pressure at each cylinder

6) Is compression pressure for each cylinder displayed within specifications ?

Specification : 1323kPa(13.5 kg/cm^2,192 psi)

YES

▶ Go to "Check Timing " as below

NO

▶ Add a small amount of oil through the spark plug hole, and repeat above steps. If the addition of oil causes the compression to rise, the cause is a worn or damaged piston ring or cylinder inner surface.
▶ If the compression remains the same, the cause is a burnt or defective valve seat, or pressure is leaking from the gasket. Repair as necessary and go to "Verification of Vehicle Repair" procedure

5. Check Timing

1) Ignition "OFF"

2) Check that Cam, Crank and Oil pump sprocket timing marks are correctly in alignment

3) Monitor these signal waveforms from CMPS and CKPS position Sensor are correctly in alignment

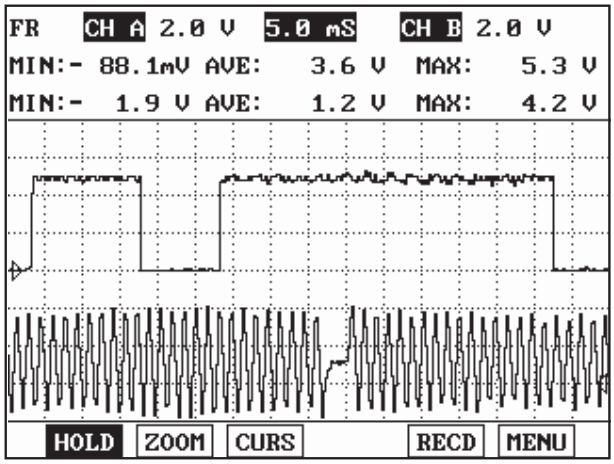

LGLG513A

4) Are all timing marks alligned correctly ?

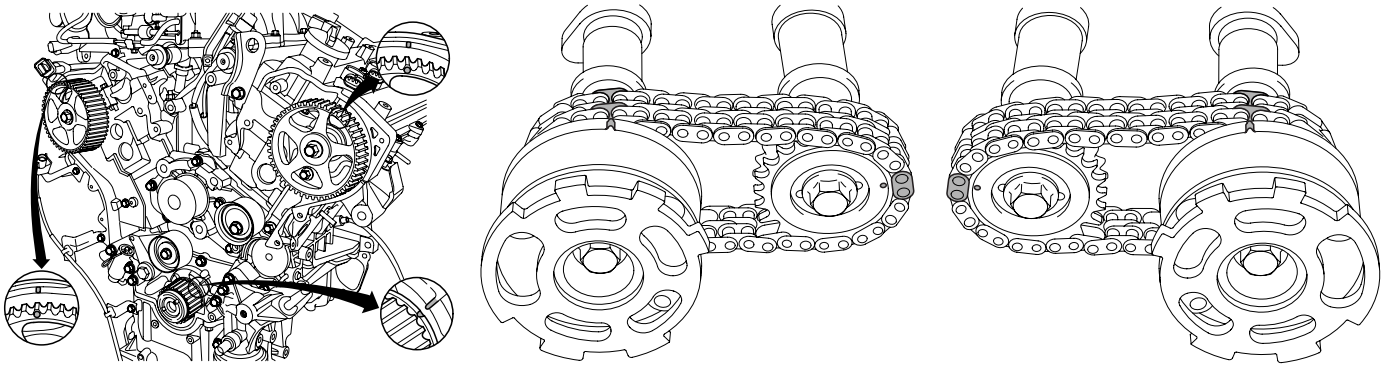

[Timing Belt] [Cam (Bank 1)] [Cam (Bank 2)]

LGLG502A

YES

▶ Go to "Check Fuel Pressure Test" as below

NO

▶ Repair or readjust as necessary and go to "Verification of Vehicle Repair" procedure

6. Check Fuel Pressure Test

NOTE

- *Be cautious that Fuel is explosive and an empty fuel tank can still contain explosive gases.When working on fuel system make sure to supply adequate ventilation to the work area. Do not smoke, and keep sparks and open flames away.*
- *The fuel system remains under pressure when the engine is not running. Release fuel system pressure before disconnecting any fuel line to reduce the chance of presonal injury or fire damage to vehicle components.*

1) Start the engine and disconnect the fuel pump relay.

2) Wait until fuel in fuel line is exhausted and the engine stalls.

3) Turn the ignition switch OFF position.

4) Install the special service tool for measuring the fuel pressure between the delivery pipe and the fuel feed hose.

5) Connect the fuel pump relay.

6) With fuel pressure applied, check the three is no fuel leakage from the fuel pressure gauge or connection part.

7) Start the engine and measure the fuel pressure at idle.

Specification : 374 ~ 384 kpa (3.82 ~ 3.92 kg/㎠, 54.3 ~ 55.8psi)

8) Stop the engine and check for a change in the fuel pressure gauge reading.

Specification : After engine stops, the gauge reading should hold for about 5 minutes.

9) Is the measured fuel pressure within specification?

YES

▶ Substitute with a known - good PCM and check for proper operation. If the problem is corrected, replace PCM and go to "Verification of Vehicle Repair" procedure.

NOTE

There is a memory reset function on scantool that can erase optional parts automatically detected and memorized by PCM. After testing PCM on the vehicle, use this function to reuse the PCM on the others

NO

▶ Repair or replace according to the table below.
▶ And then, go to " Verification of Vehicle Repair" procedure.

Condition	Possible Cause	Suspected area
Fuel pressure too low	Clogged filter	Fuel filter
	Fuel leak on the fuel-pressure regulator that is assembled on fuel pump because of poor seating of the fuel-pressure regulator	Fuel pressure regulator
Fuel pressure too high	Sticking fuel pressure regulator	Fuel pressure regulator
Fuel pressure drops slowly after engine is stopped	Injector leak	Injector
Fuel pressure drops immediately after engine is stopped	The check valve within the fuel pump is open	Fuel pump

VERIFICATION OF VEHICLE REPAIR E8FA8100

After a repair, it is essential to verify that the fault has been corrected.

1. Monitor and record the Freeze Frame Data for the Diagnostic Trouble Code(DTC) which has been diagnosed.
2. Using a Scantool, Clear the DTCs
3. Operate the vehicle within conditions noted in the freeze frame data or enable conditions
4. Monitor that all rediness test have been verified as " Complete "

5. Are any DTCs present ?

YES

▶ Go to the applicable troubleshoooting procedure.

NO

▶ System is performing to specification at this time.

DTC P0315 SEGMENT TIME ACQUISITION INCORRECT

GENERAL DESCRIPTION E6DFE6D5

The Crankshaft Position Sensor (CKPS) is a magnetic field sensitive type sensor that generates voltage using a sensor and a target wheel mounted on the crankshaft; there are 58 slots in the target wheel where one is longer than the others. During one crankshaft rotation there are 58 rectangular signals and one longer signal. The ECM calculates engine RPM by using the sensor's signal and controls the injection duration and the ignition timing. Using the signal differences caused by the longer slot, the ECM identifies which cylinder is at top dead center.

DTC DESCRIPTION E90F99E4

Checking tooth error correction under detecting condition, if the TEC is out of Threshold value, PCM sets P0315.

DTC DETECTING CONDITION E1D3BE8C

Item	Detecting Condition	Possible cause
DTC Strategy	• This DTC indicates that crankwheel tooth error has not been learned.	• CKPS • Target wheel • PCM
Enable Conditions	• 12 ≤ Ignition Voltage ≤ 16 (V) • 10 ≤ Engine load 〈 90 (%) • 1500 ≤ engine speed ≤ 4000 (rpm) • Vehicle speed 〈 5kph(3.106856 mph) • Tec RPM stability timer 〉 10sec • 0℃(32°F) 〈 coolant temp 〈 110℃(230°F) • Not active disabling faults • Not key on disabling faults	
Threshold value	• Distance driven without learning tooth error ≥ 4000km(2485.484769 mile) or • Maximum allowed number of tooth error correction samples taken in the On The Road(OTR)learning mode 〈 250 or • Sum of tooth error factors variation outside calibratable range ≥ 250	
Diagnosis Time	• Continuous	
MIL On Condition	• 1 driving cycles	

COMPONENT INSPECTION E28BECE8

1. Visually check CKPS and target wheel

   1) IG "OFF"

   2) Check CKPS and target wheel for deformation or damage visually

   3) Is the above items normal ?

   YES

   ▶ Go to "Verification of Vehicle Repair" procedure.

   NO

▶ Substitute with a known - good PCM and check for proper operation. If the problem is corrected, replace PCM and go to "Verification of Vehicle Repair" procedure.

NOTE

There is a memory reset function on scantool that can erase optional parts automatically detected and memorized by PCM. Before or after testing PCM on the vehicle, use this function to reuse the PCM on the others

VERIFICATION OF VEHICLE REPAIR E588DEEC

After a repair, it is essential to verify that the fault has been corrected.

1. Monitor and record the Freeze Frame Data for the Diagnostic Trouble Code(DTC) which has been diagnosed.
2. Using a Scantool, Clear the DTCs
3. Operate the vehicle within conditions noted in the freeze frame data or enable conditions
4. Monitor that all rediness test have been verified as " Complete "
5. Are any DTCs present ?

YES

▶ Go to the applicable troubleshoooting procedure.

NO

▶ System is performing to specification at this time.

DTC P0325 KNOCK SENSOR 1 CIRCUIT
DTC P0330 KNOCK SENSOR 2 CIRCUIT

COMPONENT LOCATION E3047497

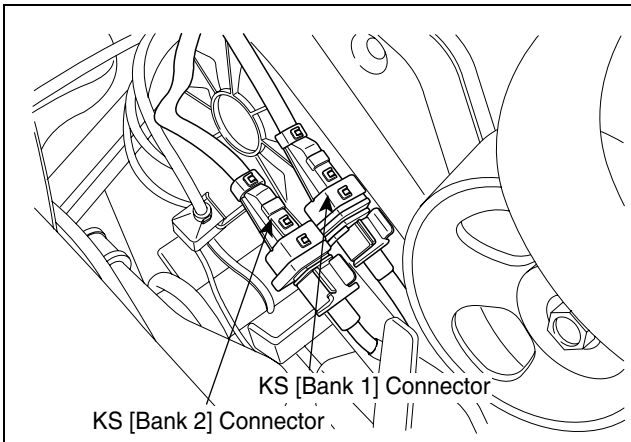

LGLG514A

GENERAL DESCRIPTION EDCF3B21

The knock sensor is attached to the cylinder block and senses engine knocking. The sensor contains a piezoelectric element that converts vibration (or noise) into voltage signal and sends this signal to ECM. With input signals from camshaft position and crankshaft position sensor, ECM can identify which cylinder is knocking. ECM filters vibrations and determines if the vibrations are knocking signal. The Engine Control Module (ECM) uses this signal to suppress knocking by retarding ignition timing. The ECM will set a code (Malfunction Indicator Lamp will Not turn on) if during two driving cycles the Knock sensor's output voltage falls below minimum threshold. This code indicates an unexpected vibration is being read by the Knock sensor or ECM under normal engine operation.

DTC DESCRIPTION E72F24F7

Checking the range of input signal with a knock sensor under detecting condition, PCM senses open in knock sensor circuit or malfunction of sensor. If a knock signal or noise level is inputted without the specified value during standard duration, PCM sets P0325/P0330.

DTC DETECTING CONDITION EF01E762

Item	Detecting Condition	Possible cause
DTC Strategy	• Signal open	• Poor connection • Open in harness • Knock sensor • PCM
Enable Conditions	• Pressure in intake manifold is normal. • Engine speed ≥ 2200 rpm	
Threshold value	• Filter coefficient 〈 1.0	
Diagnosis Time	• Continuous	
MIL On Condition	• No MIL ON (DTC only)	

SCHEMATIC DIAGRAM EAFA3B05

[CIRCUIT DIAGRAM]

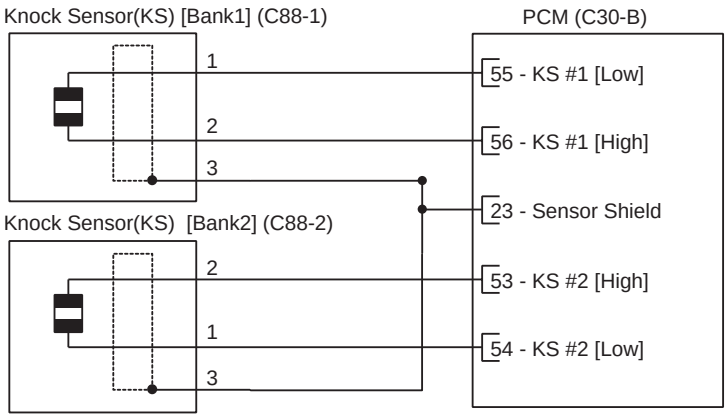

[CONNECTION INFORMATION]

KS [Bank1]

Terminal	Connected to	Function
1	PCM C30-B (55)	KS #1 [Low] signal
2	PCM C30-B (56)	KS #1 [High] signal
3	PCM C30-B (23)	Shield ground

KS [Bank2]

Terminal	Connected to	Function
1	PCM C30-B (54)	KS #2 [Low] signal
2	PCM C30-B (53)	KS #2 [High] signal
3	PCM C30-B (23)	Shield ground

[HARNESS CONNECTORS]

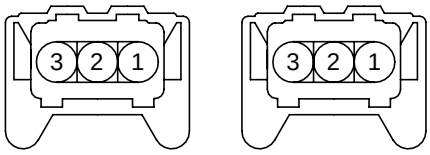

C88-1

KS [Bank1]

C88-2

KS [Bank2]

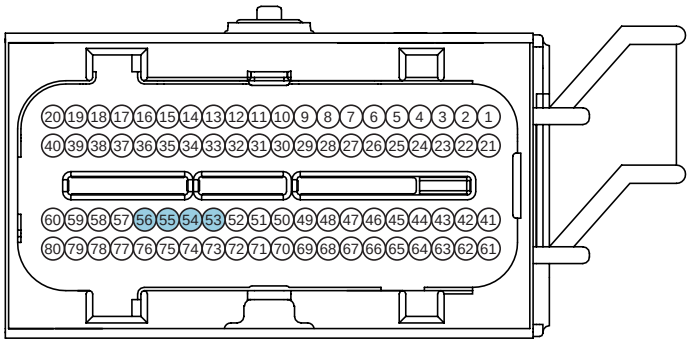

C30-B

PCM

SCMF16112L

SIGNAL WAVEFROM AND DATE E358942B

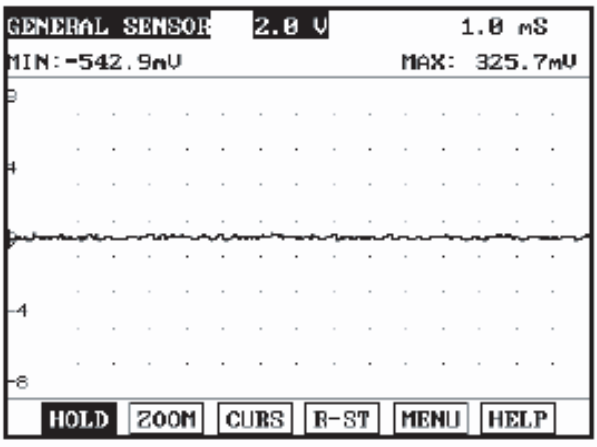

The knock sensor is installed at cycliner block to detect the vibration effectively during engine running.
The above waveform shows the signal waveform of knock sensor when knock dosen't happen. Generally, knock signal has more noise than other sensor.

EGRF610B

MONITOR DTC STATUS EFC32C61

1. Check DTC Status

   1) Connect scantool to Data Link Connector(DLC).

   2) IG "ON".

   3) Select "Diagnostic Trouble Codes(DTCs)" mode, and then Press F4(DTAL) to check DTC's information from the DTCs menu

   4) Read "DTC Status" parameter.

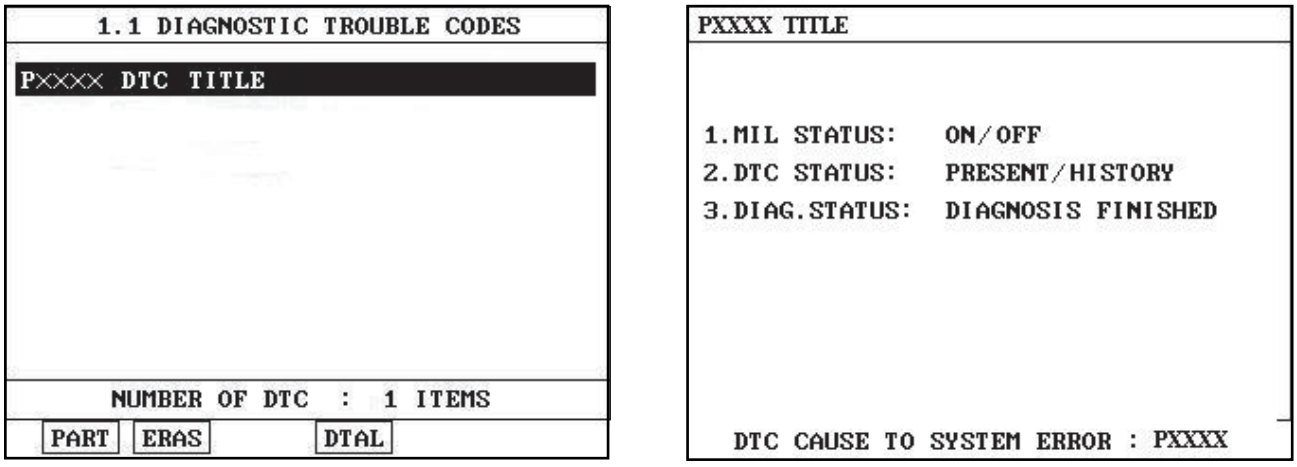

SCMF16159L

   5) Is parameter displayed "Present fault"?

   YES

   ▶ Go to "Terminal and connector inspection" procedure.

   NO

   ▶ Fault is intermittent caused by poor contact in the sensor's and/or PCM's connector or was repaired and PCM memory was not cleared. Thoroughly check connectors for looseness, poor connection, ending, corrosion, contamination, deterioration, or damage. Repair or replace as necessary and go to "Verification of Vehicle Repair" procedure.

TERMINAL AND CONNECTOR INSPECTION ED11003D

1. Many malfunctions in the electrical system are caused by poor harness and terminals. Faults can also be caused by interference from other electrical systems, and mechanical or chemical damage.

2. Thoroughly check connectors for looseness, poor connection, bending, corrosion, contamination, deterioration, or damage.

3. Has a problem been found?

   YES

   ▶ Repair as necessary and go to "Verification of Vehicle Repair" procedure

   NO

▶ Go to "Signal Circuit Inspection" procedure.

SIGNAL CIRCUIT INSPECTION E115CF36

1. Check open in harness

   1) IG "OFF" and disconnect knock sensor connector and PCM connector.

   2) [P0325] Measure resistance between terminal 1 of knock sensor harness connector and terminal C30-B (55) of PCM harness connector.
   [P0330] Measure resistance between terminal 1 of knock sensor harness connector and terminal C30-B (54) of PCM harness connector.

   3) [P0325] Measure resistance between terminal 2 of knock sensor harness connector and terminal C30-B (56) of PCM harness connector.
   [P0330] Measure resistance between terminal 2 of knock sensor harness connector and terminal C30-B (53) of PCM harness connector.

Specification : Below 1Ω

   4) Is the measured resistance within specification?

   YES

   ▶ If the problem is corrected after substituting with a known - good knock sensor, replace it. If the problem is pending, check for proper operating after substituting with a known - good PCM. and then if the problem is corrected, replace PCM and go to "Verification of Vehicle Repair" procedure.

   NO

   ▶ Repair open in harness, and go to "Verification of Vehicle Repair" procedure.

NOTE

There is a memory reset function on scantool that can erase optional parts automatically detected and memorized by PCM. After testing PCM on the vehicle, use this function to reuse the PCM on the others

VERIFICATION OF VEHICLE REPAIR E280243E

After a repair, it is essential to verify that the fault has been corrected.

1. Monitor and record the Freeze Frame Data for the Diagnostic Trouble Code(DTC) which has been diagnosed.
2. Using a Scantool, Clear the DTCs
3. Operate the vehicle within conditions noted in the freeze frame data or enable conditions
4. Monitor that all rediness test have been verified as " Complete "
5. Are any DTCs present ?

   YES

   ▶ Go to the applicable troubleshoooting procedure.

   NO

   ▶ System is performing to specification at this time.

DTC P0326 KNOCK SENSOR 1 CIRCUIT RANGE/PERFORMANCE (BANK 1)
DTC P0331 KNOCK SENSOR 2 CIRCUIT RANGE/PERFORMANCE (BANK 2)

COMPONENT LOCATION E2355273

Refer to DTC P0325.

GENERAL DESCRIPTION E2072671

Refer to DTC P0325.

DTC DESCRIPTION EDCE93A8

Checking the range of input signal with a knock sensor under detecting condition, PCM senses short in knock sensor circuit or malfunction of sensor. If the average value of the knok signals is out of the threshold value during standard duration, PCM sets P0326/P0331.

DTC DETECTING CONDITION E259A1C9

Item	Detecting Condition	Possible cause
DTC Strategy	• Signal short	• Poor connection • Short in harness • Knock sensor • PCM
Enable Conditions	• Pressure in intake manifold is normal. • Engine speed ≥ 2000 rpm	
Threshold value	• Knock Filtered Value 〈 5 or 〉 65	
Diagnosis Time	• Continuous	
MIL On Condition	• No MIL ON (DTC only)	

SCHEMATIC DIAGRAM E21E4991

Refer to DTC P0325.

SIGNAL WAVEFROM AND DATE EA0EA640

Refer to DTC P0325.

MONITOR DTC STATUS E5BA4F02

Refer to DTC P0325.

TERMINAL AND CONNECTOR INSPECTION EC85DE4C

Refer to DTC P0325.

SIGNAL CIRCUIT INSPECTION E61F4E74

1. Check short to battery in harness

    1) IG "OFF" and disconnect knock sensor connector.

    2) IG "ON" and ENG "OFF"

3) Measure voltage between terminal 1 of knock sensor harness connector and chassis ground.

4) Measure voltage between terminal 2 of knock sensor harness connector and chassis ground.

Specification : Approx. 1.5V

5) Is the measured voltage within specification?

YES

▶ Go to "Check short to ground in harness" as follows.

NO

▶ Repair short to battery in harness, and go to "Verification of Vehicle Repair" procedure.

2. Check short to ground in harness

1) IG "OFF" and disconnect knock sensor connector and PCM connector.

2) Measure resistance between terminal 1 of knock sensor harness connector and chassis ground.

3) Measure resistance between terminal 2 of knock sensor harness connector and chassis ground.

4) Measure resistance between terminal 1 and 3 of knock sensor harness connector.

5) Measure resistance between terminal 2 and 3 of knock sensor harness connector.

Specification : Infinite

6) Is the measured resistance within specification ?

YES

▶ If the problem is corrected after substituting with a known - good knock sensor, replace it. If the problem is pending, check for proper operating after substituting with a known - good PCM. and then if the problem is corrected, replace PCM and go to "Verification of Vehicle Repair" procedure.

NO

▶ Repair short to ground in harness, and go to "Verification of Vehicle Repair" procedure.

NOTE

There is a memory reset function on scantool that can erase optional parts automatically detected and memorized by PCM. After testing PCM on the vehicle, use this function to reuse the PCM on the others

VERIFICATION OF VEHICLE REPAIR E8B2B29F

Refer to DTC P0325.

DTC P0335 CRANKSHAFT POSITION SENSOR A CIRCUIT

COMPONENT LOCATION EF1D1FC6

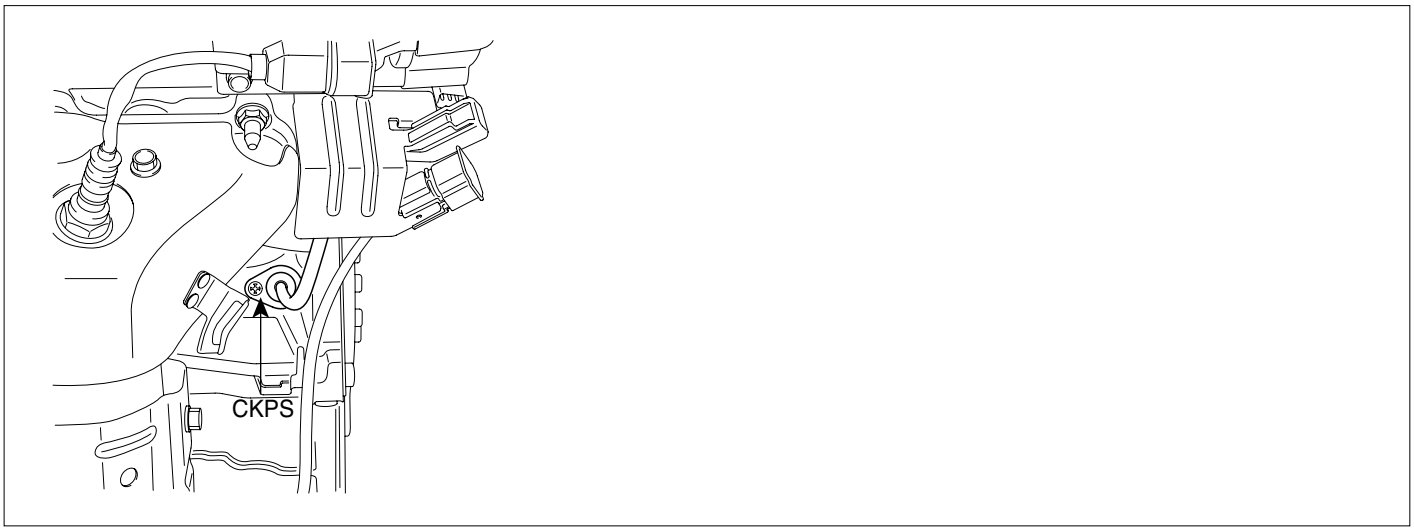

LGLG515A

GENERAL DESCRIPTION ECF67ABB

The Crankshaft Position Sensor (CKPS) is a magnetic field sensitive type sensor that generates voltage using a sensor and a target wheel mounted on the crankshaft; there are 58 slots in the target wheel where one is longer than the others. During one crankshaft rotation there are 58 rectangular signals and one longer signal. The ECM calculates engine RPM by using the sensor's signal and controls the injection duration and the ignition timing. Using the signal differences caused by the longer slot, the ECM identifies which cylinder is at top dead center.

DTC DESCRIPTION E2BEDA83

Checking reference signals from CKPS under detecting condition, if any signal is not detected for more than 0.15 sec., PCM sets P0335. MIL(Malfunction Indication Lamp) turns on when the malfunction lasts till consecutive 2 driving cycle.

DTC DETECTING CONDITION E8F43B64

Item	Detecting Condition	Possible cause
DTC Strategy	• Check reference wave during cranking	• Poor connection • Open in harness • CKP sensor • PCM
Enable Conditions	• IG "ON", Cranking or engine-off during driving • No DTC related to CAM • Camshaft position sensor state change	
Threshold value	• No reference signal over 0.15 sec.	
Diagnosis Time	• 0.15 sec.	
MIL On Condition	• 2 driving cycles	

SPECIFICATION E0F9ABBE

Resistance	825 ± 100Ω

SCHEMATIC DIAGRAM E5041BCF

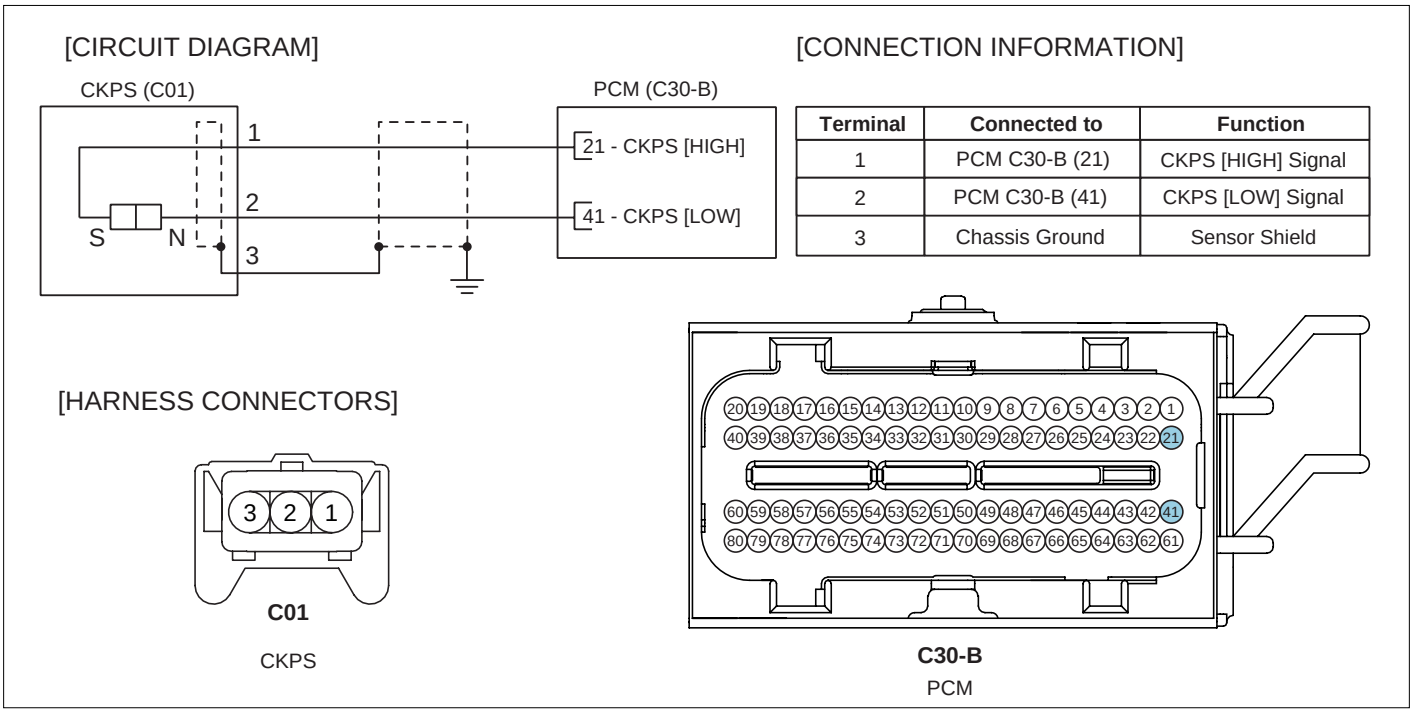

Terminal	Connected to	Function
1	PCM C30-B (21)	CKPS [HIGH] Signal
2	PCM C30-B (41)	CKPS [LOW] Signal
3	Chassis Ground	Sensor Shield

SCMF16109L

SIGNAL WAVEFROM AND DATE EB93BDD5

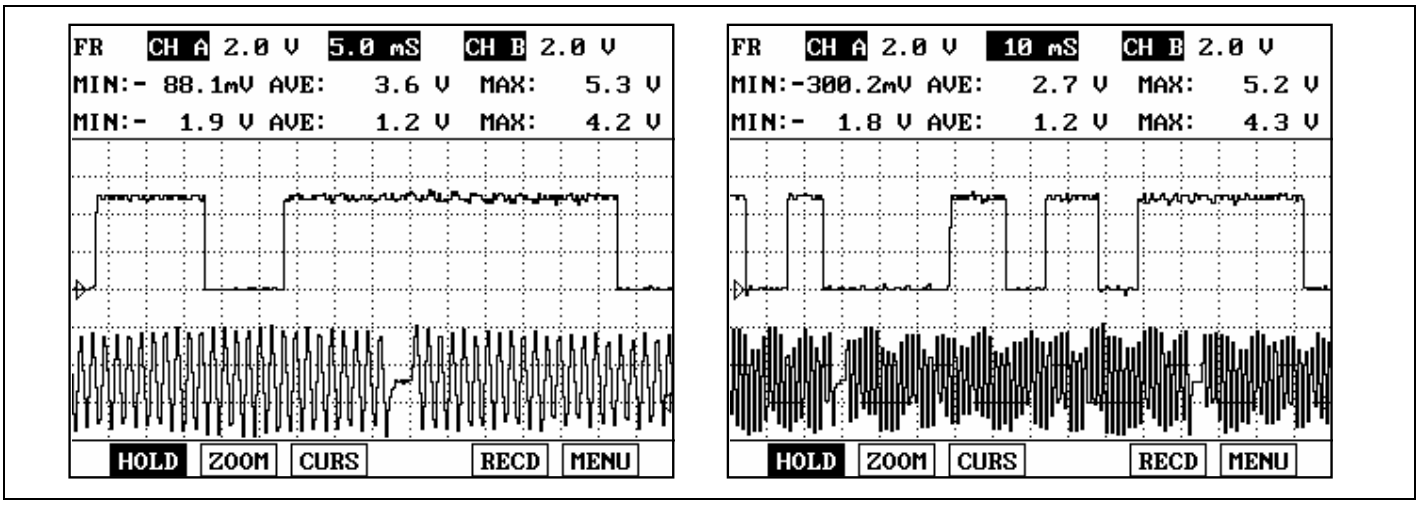

EGRF610K

MONITOR DTC STATUS E152D6C1

1. Check DTC Status

   1) Connect scantool to Data Link Connector(DLC).

   2) IG "ON".

   3) Select "Diagnostic Trouble Codes(DTCs)" mode, and then Press F4(DTAL) to check DTC's information from the DTCs menu

   4) Read "DTC Status" parameter.

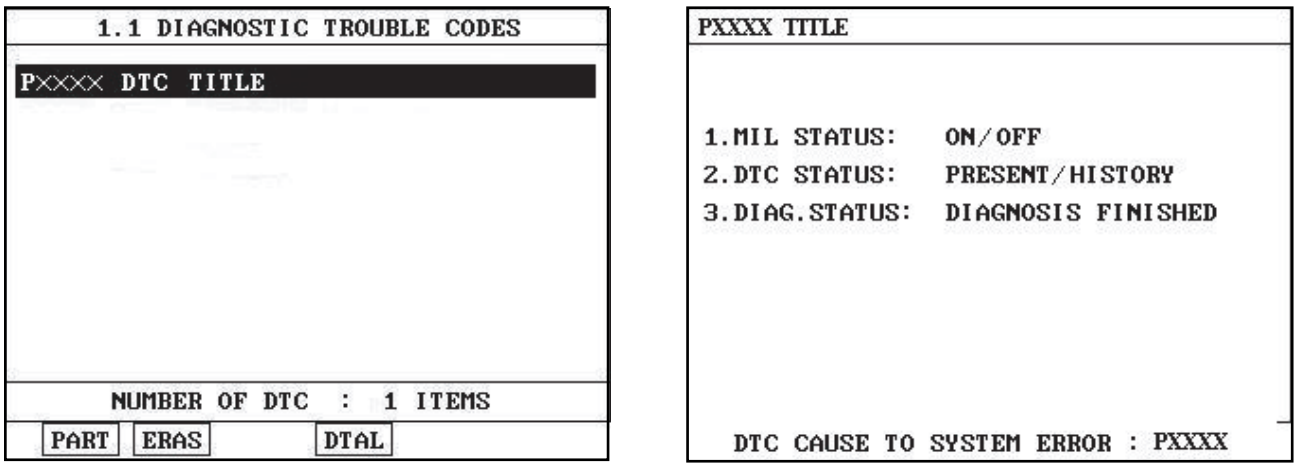

SCMF16159L

5) Is parameter displayed "Present fault"?

YES

▶ Go to "Terminal and connector inspection" procedure.

NO

▶ Fault is intermittent caused by poor contact in the sensor's and/or PCM's connector or was repaired and PCM memory was not cleared. Thoroughly check connectors for looseness, poor connection, ending, corrosion, contamination, deterioration, or damage. Repair or replace as necessary and go to "Verification of Vehicle Repair" procedure.

TERMINAL AND CONNECTOR INSPECTION EB412486

1. Many malfunctions in the electrical system are caused by poor harness and terminals. Faults can also be caused by interference from other electrical systems, and mechanical or chemical damage.
2. Thoroughly check connectors for looseness, poor connection, bending, corrosion, contamination, deterioration, or damage.
3. Has a problem been found?

YES

▶ Repair as necessary and go to "Verification of Vehicle Repair" procedure

NO

▶ Go to "Signal Circuit Inspection" procedure.

SIGNAL CIRCUIT INSPECTION ECDD9E7E

1. Check voltage
   1) IG "OFF" and disconnect CKPS connector.
   2) IG "ON" and ENG "OFF"
   3) Measure voltage between terminal 1 of CKPS harness connector and chassis ground.

4) Measure voltage between terminal 2 of CKPS harness connector and chassis ground.

Specification : Approx. 1.4V

5) Is the measured voltage within specification?

YES

▶ Go to "Component Inspection" procedure.

NO

▶ Go to "Check open in harness" as follows.

2. Check open in harness

1) IG "OFF" and disconnect CKPS connector and PCM connector.

2) Measure resistance between terminal 1 of CKPS harness connector and terminal C30-B (41) of PCM harness connector.

3) Measure resistance between terminal 2 of CKPS harness connector and terminal C30-B (21) of PCM harness connector.

Specification : Below 1Ω

4) Is the measured resistance within specification?

YES

▶ Go to "Component Inspection" procedure.

NO

▶ Repair open in harness, and go to "Verification of Vehicle Repair" procedure.

COMPONENT INSPECTION E67111F8

1. Check CKPS

1) IG "OFF" and disconnect CKPS connector.

2) Measure resistance between terminals 1 and 2 of CKPS connector.(Component side)

SPECIFIATION :

Resistance	825 ± 100Ω

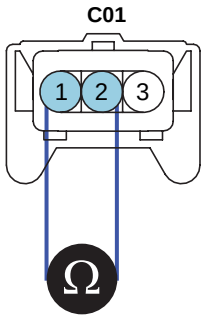

1. CKPS [LOW] Signal
2. CKPS [HIGH] Signal
3. Shield ground

SCMF16304L

3) Is the measured resistance within specification?

YES

▶ Go to "Check signal waveform of CKPS" as follows.

NO

▶ Substitute with a known - good CKPS and check for proper operation. If the problem is corrected, replace CKPS and go to "Verification of Vehicle Repair" procedure.

2. Check signal waveform of CKPS

1) IG "OFF" and connect scantool.

2) ENG "ON" and Measure signal waveform at terminal 1 or 2 of CKPS.

REFERENCE SIGNAL WAVEFORM :

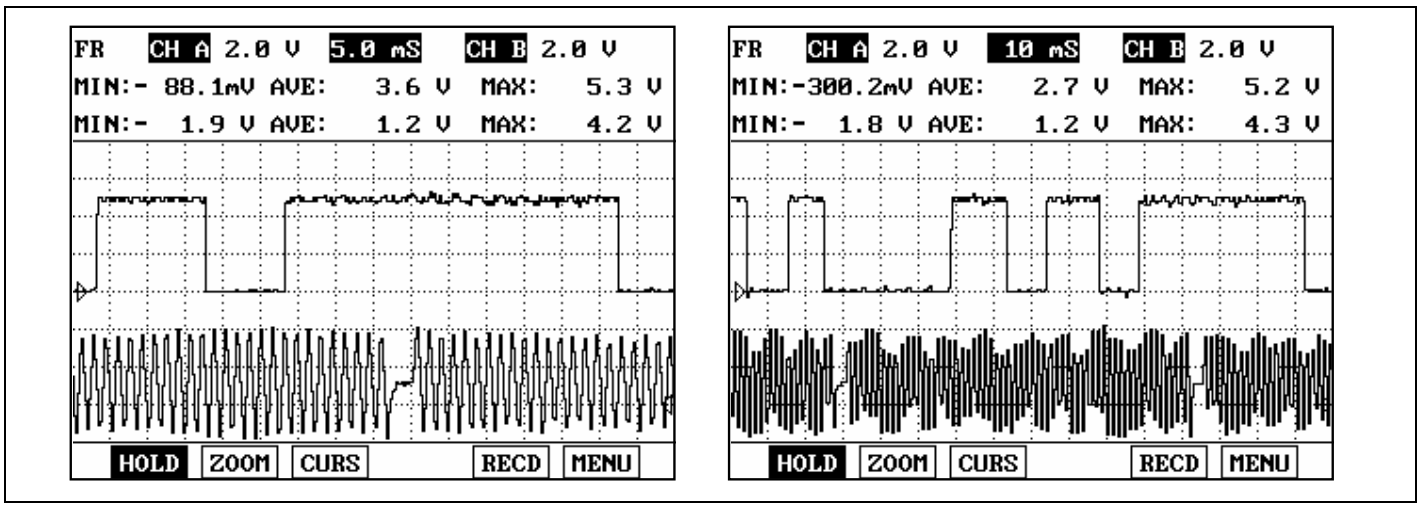

EGRF610K

3) Is the measured siganl waveform normal?

YES

▶ Thoroughly check connectors for looseness, poor connection, bending, corrosion, contamination, deterioration, or damage. Repair or replace as necessary, and go to "Verification of Vehicle Repair" procedure.

NO

▶ Substitute with a known - good PCM and check for proper operation. If the problem is corrected, replace PCM and go to "Verification of Vehicle Repair" procedure.

NOTE

There is a memory reset function on scantool that can erase optional parts automatically detected and memorized by PCM. After testing PCM on the vehicle, use this function to reuse the PCM on the others

VERIFICATION OF VEHICLE REPAIR E6F57B93

After a repair, it is essential to verify that the fault has been corrected.

1. Monitor and record the Freeze Frame Data for the Diagnostic Trouble Code(DTC) which has been diagnosed.
2. Using a Scantool, Clear the DTCs
3. Operate the vehicle within conditions noted in the freeze frame data or enable conditions
4. Monitor that all rediness test have been verified as " Complete "
5. Are any DTCs present ?

YES

▶ Go to the applicable troubleshoooting procedure.

NO

▶ System is performing to specification at this time.

DTC P0336 CRANKSHAFT POSITION SENSOR A CIRCUIT RANGE/PERFORMANCE

COMPONENT LOCATION E841DF15

Refer to DTC P0335.

GENERAL DESCRIPTION EBDF7934

Refer to DTC P0335.

DTC DESCRIPTION ED49DB3E

Checking output signals from CKPS every 7.8 sec. under detecting condition, if an output signal is missing or redundant for more than 1.56 sec., PCM sets P0336. MIL(Malfunction Indication Lamp) turns on when the malfunction lasts till consecutive 2 driving cycle.

DTC DETECTING CONDITION EA703496

Item	Detecting Condition	Possible cause
DTC Strategy	• Detecting extra/missing pulses between consecutive 58X reference pulses	• Poor connection • Noise • Short in harness • Target wheel • PCM
Enable Conditions	• Engine running state	
Threshold value	• Extra/ missing pulses 〉 2 pulse	
Diagnosis Time	• Continuous (More than 1.56 sec.failure for every 7.8 sec.test)	
MIL On Condition	• 2 driving cycles	

SPECIFICATION E2C1013E

Refer to DTC P0335.

SCHEMATIC DIAGRAM E0DE8501

Refer to DTC P0335.

SIGNAL WAVEFROM AND DATA E6425136

Refer to DTC P0335.

MONITOR DTC STATUS EDF2DA1D

Refer to DTC P0335.

TERMINAL AND CONNECTOR INSPECTION E825C7C2

Refer to DTC P0335.

SIGNAL CIRCUIT INSPECTION EAFA6CC0

1. Check voltage
   1) IG "OFF" and disconnect CKPS connector.
   2) IG "ON" and ENG "OFF"
   3) Measure voltage between terminal 1 of CKPS harness connector and chassis ground.
   4) Measure voltage between terminal 2 of CKPS harness connector and chassis ground.

Specification : Approx. 1.4V

   5) Is the measured voltage within specification?

YES

▶ Go to "Component Inspection" procedure.

NO

▶ Go to "Check short in harness" as follows.

2. Check short in harness
   1) IG "OFF" and disconnect CKPS connector and PCM connector.
   2) Measure resistance between terminal 1(2) of CKPS harness connector and chassis ground.
   3) Measure resistance between terminals 1 and 2 of CKPS harness connector.
   4) Measure resistance between terminals 1(2) and 3 of CKPS harness connector.

Specification : Infinite

   5) Is the measured resistance within specification?

YES

▶ Go to "Component Inspection" procedure.

NO

▶ Repair short in harness, and go to "Verification of Vehicle Repair" procedure.

COMPONENT INSPECTION E7D8DBBA

1. Visually check CKPS and Target wheel
   1) IG "OFF"
   2) Check CKPS and target wheel for deformation or damage visually
   3) Is the above items normal ?

YES

▶ Go to "Check CKPS resistance" as follows.

NO

▶ Repair or replace it, and go to "Verification of Vehicle Repair" procedure.

2. Check CKPS resistance

1) IG "OFF" and disconnect CKPS connector.

2) Measure resistance between terminals 1 and 2 of CKPS connector. (Component side)

SPECIFIATION :

Resistance	825 ± 100Ω

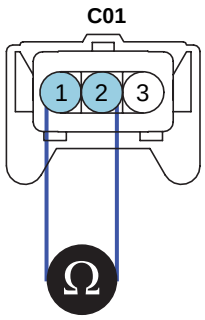

1. CKPS [LOW] Signal
2. CKPS [HIGH] Signal
3. Shield ground

SCMF16304L

3) Is the measured resistance within specification?

YES

▶ Go to "Check signal waveform of CKPS" as follows.

NO

▶ Substitute with a known - good CKPS and check for proper operation. If the problem is corrected, replace CKPS and go to "Verification of Vehicle Repair" procedure.

3. Check signal waveform of CKPS

1) IG "OFF" and connect scantool.

2) ENG "ON" and Measure signal waveform at terminal 1 or 2 of CKPS.

REFERENCE SIGNAL WAVEFORM :

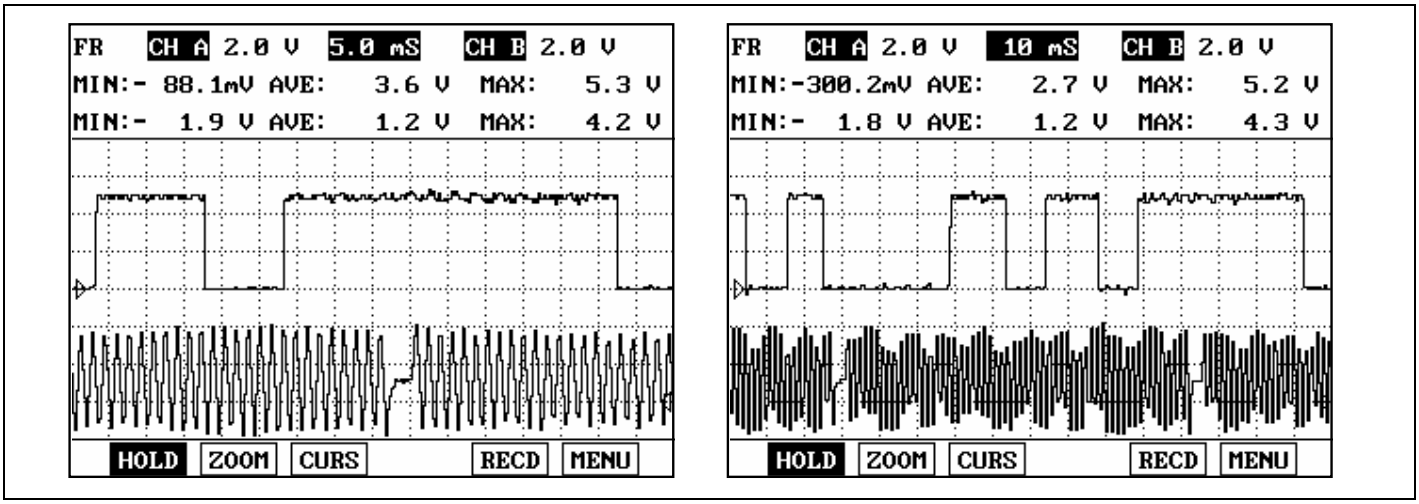

EGRF610K

3) Is the measured siganl waveform normal?

YES

▶ Thoroughly check connectors for looseness, poor connection, bending, corrosion, contamination, deterioration, or damage. Repair or replace as necessary, and go to "Verification of Vehicle Repair" procedure.

NO

▶ Substitute with a known - good PCM and check for proper operation. If the problem is corrected, replace PCM and go to "Verification of Vehicle Repair" procedure.

NOTE

There is a memory reset function on scantool that can erase optional parts automatically detected and memorized by PCM. After testing PCM on the vehicle, use this function to reuse the PCM on the others

VERIFICATION OF VEHICLE REPAIR EF39C360

Refer to DTC P0335.

DTC P0340 CAMSHAFT POSITION SENSOR A CIRCUIT MALFUNCTION (BANK 1 OR SINGLE SENSOR)

COMPONENT LOCATION EB1D0C8C

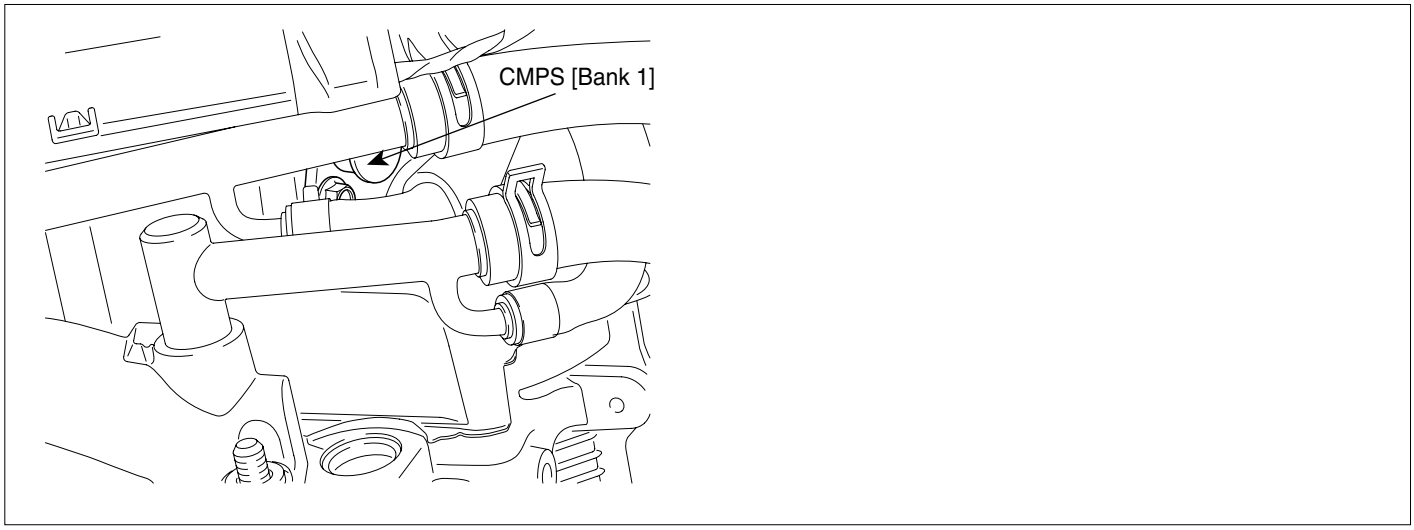

LGLG516A

GENERAL DESCRIPTION E64D42CB

The Camshaft Position Sensor (CMPS) is a sensor that detects the compression TDC of the NO. 1 cylinder. The CMPS consists of a hall type sensor and a target on the end of the intake camshaft. When the target triggers the sensor, the sensor voltage is 5V. If not, the sensor voltage is 0V. These CMPS signal is sent to the ECM and the ECM uses the CMPS signal for synchronizing the firing of sequential fuel injectors.

DTC DESCRIPTION EA360937

If PCM detects that cam event signal count is over 3 under detecting condition, PCM sets P0340. MIL(Malfunction Indication Lamp) turns on when the malfunction lasts till consecutive 2 driving cycle.

DTC DETECTING CONDITION E7BF5DA1

Item	Detecting Condition	Possible cause
DTC Strategy	• Check if CAM sensor is synchronized correctly	• Poor connection • Open in harness • CMPS(Bank 1) • PCM
Enable Conditions	• Engine running state	
Threshold value	• Cam event signal count ≥ 3	
Diagnosis Time	• Continuous	
MIL On Condition	• 1 driving cycles	

SCHEMATIC DIAGRAM EB501374

[CIRCUIT DIAGRAM]

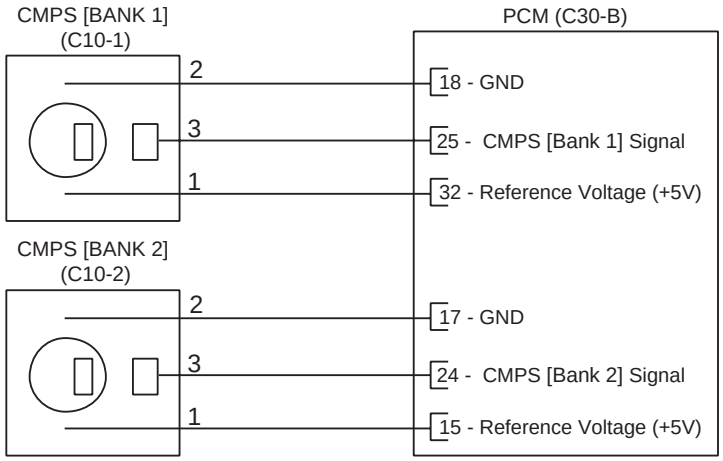

[CONNECTION INFORMATION]

CMPS [BANK 1]

Terminal	Connected to	Function
1	PCM C30-B (32)	Reference Voltage (+5V)
2	PCM C30-B (18)	Sensor ground
3	PCM C30-B (25)	CMPS [Bank 1] signal

CMPS [BANK 2]

Terminal	Connected to	Function
1	PCM C30-B (15)	Reference Voltage (+5V)
2	PCM C30-B (17)	Sensor ground
3	PCM C30-B (24)	CMPS [Bank 2] signal

[HARNESS CONNECTORS]

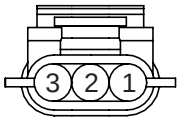

C10-1

CMPS [BANK 1]

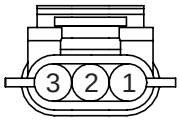

C10-2

CMPS [BANK 2]

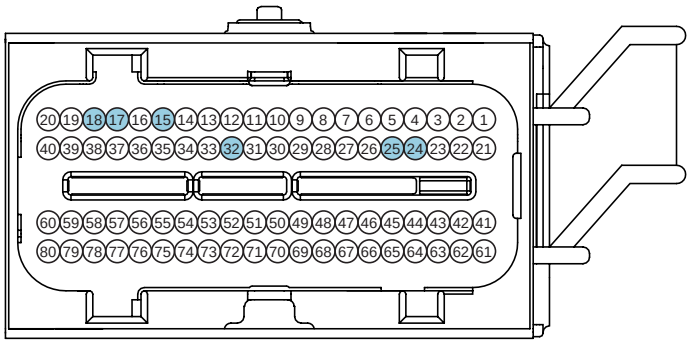

C30-B

PCM

SCMF16108L

SIGNAL WAVEFROM AND DATE E3522305

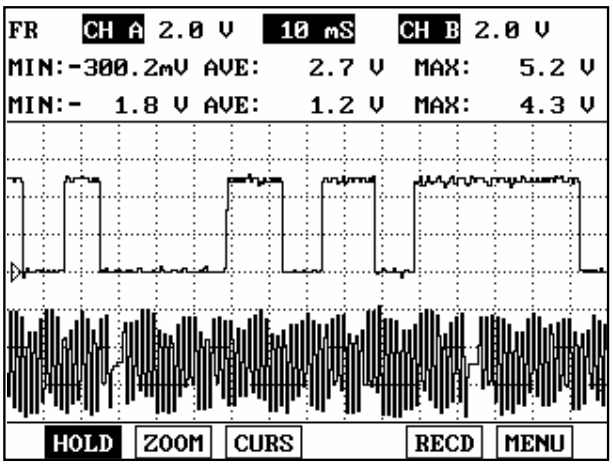

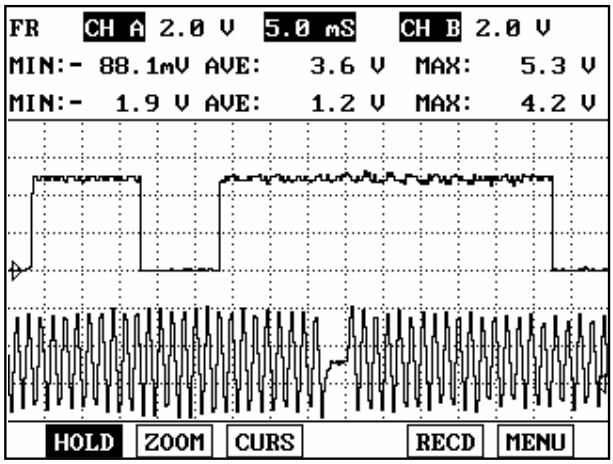

This example shows a typical Crankshaft Position Sensor(CKPS) and Camshaft Position Sensor(CMPS) waveform at idle. The PCM controls the injection and ignition timing by using these signals. Generally CKPS signal is used to detect the piston's position and CMPS signal is used to detect the Top Dead Center of each cylinder.

EGRF610R

MONITOR DTC STATUS E94F1D1C

1. Check DTC Status

   1) Connect scantool to Data Link Connector(DLC).

   2) IG "ON".

   3) Select "Diagnostic Trouble Codes(DTCs)" mode, and then Press F4(DTAL) to check DTC's information from the DTCs menu

   4) Read "DTC Status" parameter.

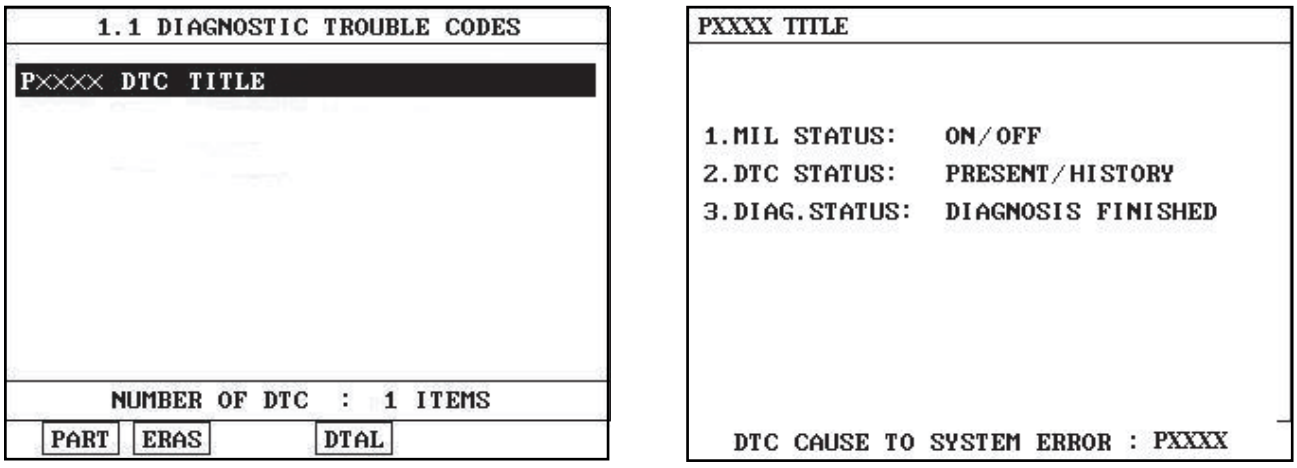

SCMF16159L

   5) Is parameter displayed "Present fault"?

   YES

   ▶ Go to "Terminal and connector inspection" procedure.

   NO

   ▶ Fault is intermittent caused by poor contact in the sensor's and/or PCM's connector or was repaired and PCM memory was not cleared. Thoroughly check connectors for looseness, poor connection, ending, corrosion, contamination, deterioration, or damage. Repair or replace as necessary and go to "Verification of Vehicle Repair" procedure.

TERMINAL AND CONNECTOR INSPECTION E84D9A8F

1. Many malfunctions in the electrical system are caused by poor harness and terminals. Faults can also be caused by interference from other electrical systems, and mechanical or chemical damage.

2. Thoroughly check connectors for looseness, poor connection, bending, corrosion, contamination, deterioration, or damage.

3. Has a problem been found?

   YES

   ▶ Repair as necessary and go to "Verification of Vehicle Repair" procedure

   NO

▶ Go to "Power Circuit Inspection" procedure.

POWER CIRCUIT INSPECTION E889698F

1. IG "OFF" and disconnect CMPS connector.
2. IG "ON" and ENG "OFF"
3. Measure voltage between terminal 1 of CMPS(B1) harness connector and chassis ground.

Specification : Approx. 5V

4. Is the measured voltage within specification?

YES

▶ Go to "Signal Circuit Inspection" procedure.

NO

▶ Repair open or short to ground in harness, and go to "Verification of Vehicle Repair" procedure.

SIGNAL CIRCUIT INSPECTION E6AE2417

1. Check voltage
   1) IG "OFF" and disconnect CMPS connector.
   2) IG "ON" and ENG "OFF"
   3) Measure voltage between terminal 3 of CMPS(B1) harness connector and chassis ground.

Specification : Approx. 5V

   4) Is the measured voltage within specification?

YES

▶ Go to "Component Inspection" as follows.

NO

▶ Go to "Check open in harness' as follows.

2. Check open in harness
   1) IG "OFF" and disconnect CMPS connector and PCM connector.
   2) Measure resistance between terminal 3 of CMPS harness connector and terminal C30-B (25) of PCM harness connector.

Specification : Below 1Ω

   3) Is the measured resistance within specification?

YES

▶ Go to "Ground Circuit Inspection" procedure.

NO

▶ Repair open in harness, and go to "Verification of Vehicle Repair" procedure.

GROUND CIRCUIT INSPECTION EA1D6745

1. IG "OFF" and disconnect CMPS connector.
2. Measure voltage between terminal 3 of CMPS harness connector and chassis ground.
3. Measure voltage between terminals 2 and 3 of CMPS harness connector.

Specification : Measurement "A" - Measurement 'B' = Approx. below 200mV

4. Is the measured voltage within specification?

YES

▶ Go to "Component Inspection" procedure.

NO

▶ Repair open or contact resistance in harness, and go to "Verification of Vehicle Repair" procedure.

COMPONENT INSPECTION E94AD601

1. Check CMPS
   1) IG "OFF" and connect scantool.
   2) ENG "ON" and Measure signal waveform at terminal 3 of CMPS.

REFERENCE SIGNAL WAVEFORM :

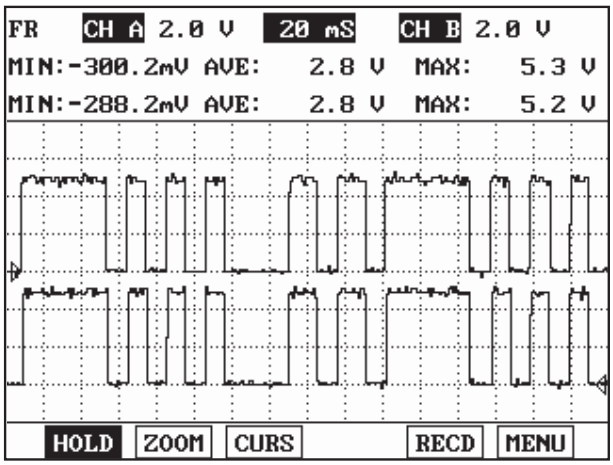

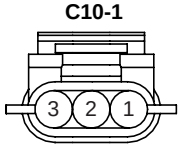

1. Reference Voltage (+5V)
2. Sensor ground
3. CMPS [Bank 1] signal

SCMF16310L

   3) Is the measured siganl waveform normal?

YES

▶ Substitute with a known - good PCM and check for proper operation. If the problem is corrected, replace PCM and go to "Verification of Vehicle Repair" procedure.

NO

▶ Substitute with a known - good CMPS and check for proper operation. If the problem is corrected, replace CMPS and go to "Verification of Vehicle Repair" procedure.

NOTE

There is a memory reset function on scantool that can erase optional parts automatically detected and memorized by PCM. After testing PCM on the vehicle, use this function to reuse the PCM on the others

VERIFICATION OF VEHICLE REPAIR E54AD5D6

After a repair, it is essential to verify that the fault has been corrected.

1. Monitor and record the Freeze Frame Data for the Diagnostic Trouble Code(DTC) which has been diagnosed.
2. Using a Scantool, Clear the DTCs
3. Operate the vehicle within conditions noted in the freeze frame data or enable conditions
4. Monitor that all rediness test have been verified as " Complete "
5. Are any DTCs present ?

YES

▶ Go to the applicable troubleshoooting procedure.

NO

▶ System is performing to specification at this time.

DTC P0341 CAMSHAFT POSITION SENSOR A CIRCUIT RANGE/PERFORMANCE (BANK 1 OR SINGLE SENSOR)

COMPONENT LOCATION E0B45A3C

Refer to DTC P0340.

GENERAL DESCRIPTION E840146B

Refer to DTC P0340.

DTC DESCRIPTION E0819699

Checking oputput signals from CMP during engine running, if the expected number of cam tooth count is not observed. PCM sets P0341. MIL(Malfunction Indication Lamp) turns on when the malfunction lasts till consecutive 2 driving cycle.

DTC DETECTING CONDITION EACE8905

Item	Detecting Condition	Possible cause
DTC Strategy	• Check if CAM sensor is synchronized correctly	• Poor connection • Short in harness • electrical noise • Target wheel • CMPS • PCM
Enable Conditions	• Engine running state	
Threshold value	• Cam tooth count ≠ 6	
Diagnosis Time	• Continuous	
MIL On Condition	• 2 driving cycles	

SCHEMATIC DIAGRAM E2AE546B

Refer to DTC P0340.

SIGNAL WAVEFROM AND DATA E32A4B2F

Refer to DTC P0340.

MONITOR DTC STATUS E6D69B5E

Refer to DTC P0340.

TERMINAL AND CONNECTOR INSPECTION E176A700

Refer to DTC P0340.

POWER CIRCUIT INSPECTION E099D74C

1. IG "OFF" and disconnect CMPS connector.
2. IG "ON" and ENG "OFF"
3. Measure voltage between terminal 1 of CMPS(B1) harness connector and chassis ground.

Specification : Approx. 5V

4. Is the measured voltage within specification?

YES

▶ Go to "Signal Circuit Inspection" procedure.

NO

▶ Repair open or short to ground in harness, and go to "Verification of Vehicle Repair" procedure.

SIGNAL CIRCUIT INSPECTION E1FE1902

1. Check short in harness

   1) IG "OFF" and disconnect CMPS connector.

   2) Measure resistance between terminals 1 and 3 of CMPS(B1) harness connector.

Specification : Infinite

   3) Is the measured resistance within specification?

YES

▶ Go to "Check short to ground in harness' as follows.

NO

▶ Repair short in harness, and go to "Verification of Vehicle Repair" procedure.

2. Check short to ground in harness

   1) IG "OFF" and disconnect CMPS connector and PCM connector.

   2) Measure resistance between terminal 3 of CMPS(B1) harness connector and chassis ground.

Specification : Infinite

   3) Is the measured resistance within specification?

YES

▶ Go to "Component Inspection" procedure.

NO

▶ Repair short to ground in harness, and go to "Verification of Vehicle Repair" procedure.

COMPONENT INSPECTION E544CFDB

1. Check CMPS

   1) IG "OFF" and connect scantool.

   2) ENG "ON" and Measure signal waveform at terminal 3 of CMPS.

REFERENCE SIGNAL WAVEFORM :

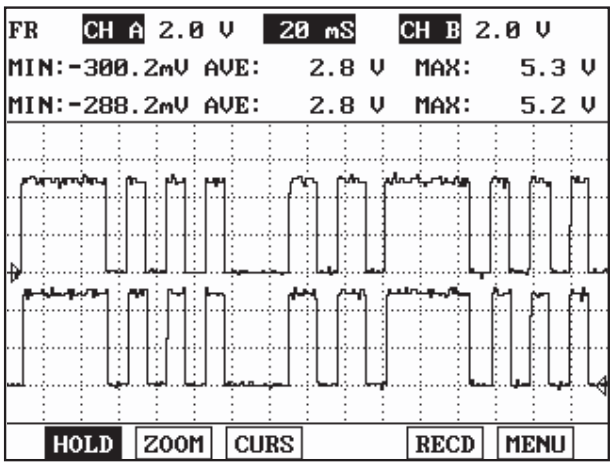

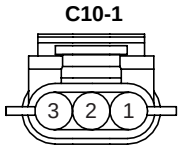

1. Reference Voltage (+5V)
2. Sensor ground
3. CMPS [Bank 1] signal

SCMF16310L

3) Is the measured siganl waveform normal?

YES

▶ Substitute with a known - good PCM and check for proper operation. If the problem is corrected, replace PCM and go to "Verification of Vehicle Repair" procedure.

NO

▶ Substitute with a known - good CMPS and check for proper operation. If the problem is corrected, replace CMPS and go to "Verification of Vehicle Repair" procedure.

NOTE

There is a memory reset function on scantool that can erase optional parts automatically detected and memorized by PCM. After testing PCM on the vehicle, use this function to reuse the PCM on the others

VERIFICATION OF VEHICLE REPAIR EFE1E6C7

Refer to DTC P0340.

DTC P0346 CAMSHAFT POSITION SENSOR "A" CIRCUIT RANGE/PERFORMANCE (BANK 2)

COMPONENT LOCATION EE329BAD

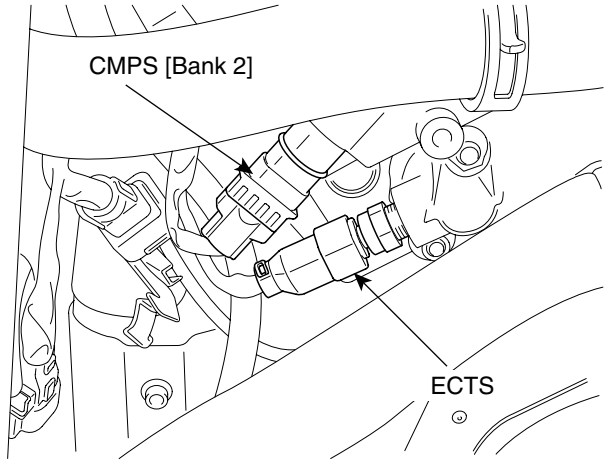

LGLG510A

GENERAL DESCRIPTION ECCCBCC7

The Camshaft Position Sensor (CMPS) is a sensor that detects the compression TDC of the NO. 1 cylinder. The CMPS consists of a hall type sensor and a target on the end of the intake camshaft. When the target triggers the sensor, the sensor voltage is 5V. If not, the sensor voltage is 0V. These CMPS signal is sent to the ECM and the ECM uses the CMPS signal for synchronizing the firing of sequential fuel injectors.

DTC DESCRIPTION E7C4F9E2

Checking oputput signals from CMP during engine running, if the expected number of cam tooth count is not observer. PCM sets P0346. MIL(Malfunction Indication Lamp) turns on when the malfunction lasts till consecutive 2 driving cycle.

DTC DETECTING CONDITION E6BFC1A6

Item	Detecting Condition	Possible cause
DTC Strategy	• Check if CAM sensor is synchronized correctly	• Poor connection • Open or short in harness • electrical noise • Target wheel • CMPS • PCM
Enable Conditions	• Engine running state	
Threshold value	• Cam tooth count ≠ 6	
Diagnosis Time	• Continuous	
MIL On Condition	• 2 driving cycles	

SCHEMATIC DIAGRAM E43C80D5

[CIRCUIT DIAGRAM]

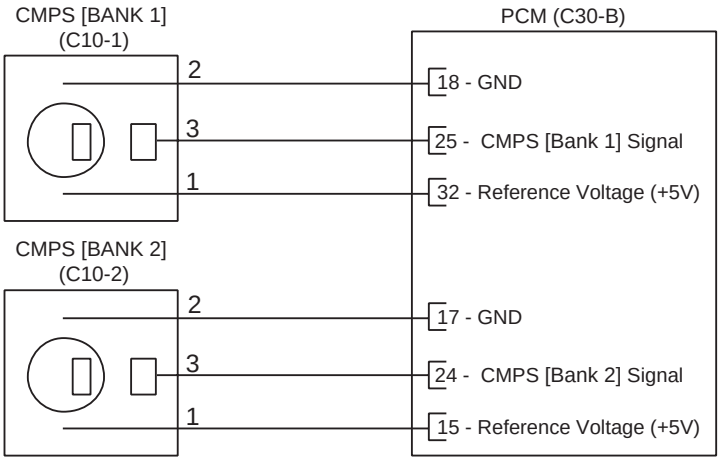

[CONNECTION INFORMATION]

CMPS [BANK 1]

Terminal	Connected to	Function
1	PCM C30-B (32)	Reference Voltage (+5V)
2	PCM C30-B (18)	Sensor ground
3	PCM C30-B (25)	CMPS [Bank 1] signal

CMPS [BANK 2]

Terminal	Connected to	Function
1	PCM C30-B (15)	Reference Voltage (+5V)
2	PCM C30-B (17)	Sensor ground
3	PCM C30-B (24)	CMPS [Bank 2] signal

[HARNESS CONNECTORS]

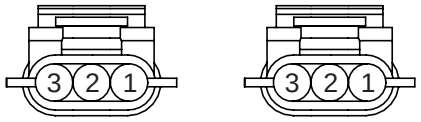

C10-1

CMPS [BANK 1]

C10-2

CMPS [BANK 2]

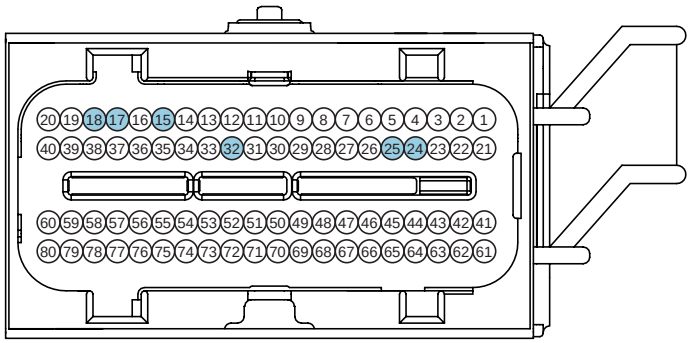

C30-B

PCM

SCMF16108L

SIGNAL WAVEFROM AND DATA E536A47E

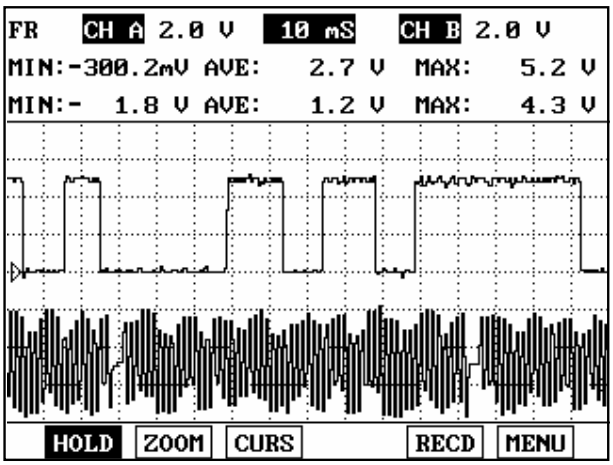

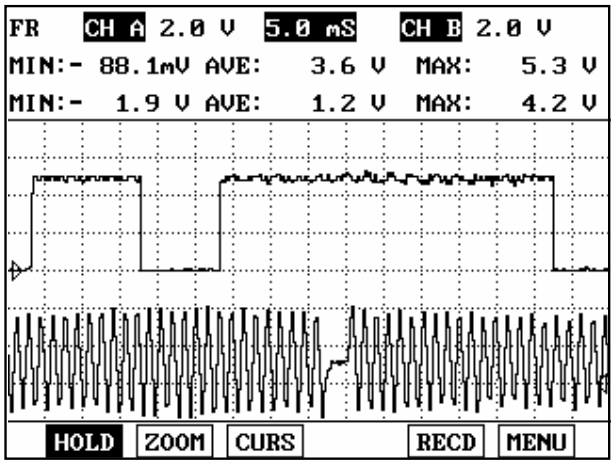

This example shows a typical Crankshaft Position Sensor(CKPS) and Camshaft Position Sensor(CMPS) waveform at idle. The PCM controls the injection and ignition timing by using these signals. Generally CKPS signal is used to detect the piston's position and CMPS signal is used to detect the Top Dead Center of each cylinder.

EGRF610R

MONITOR DTC STATUS EAA40E85

1. Check DTC Status

   1) Connect scantool to Data Link Connector(DLC).

   2) IG "ON".

   3) Select "Diagnostic Trouble Codes(DTCs)" mode, and then Press F4(DTAL) to check DTC's information from the DTCs menu

   4) Read "DTC Status" parameter.

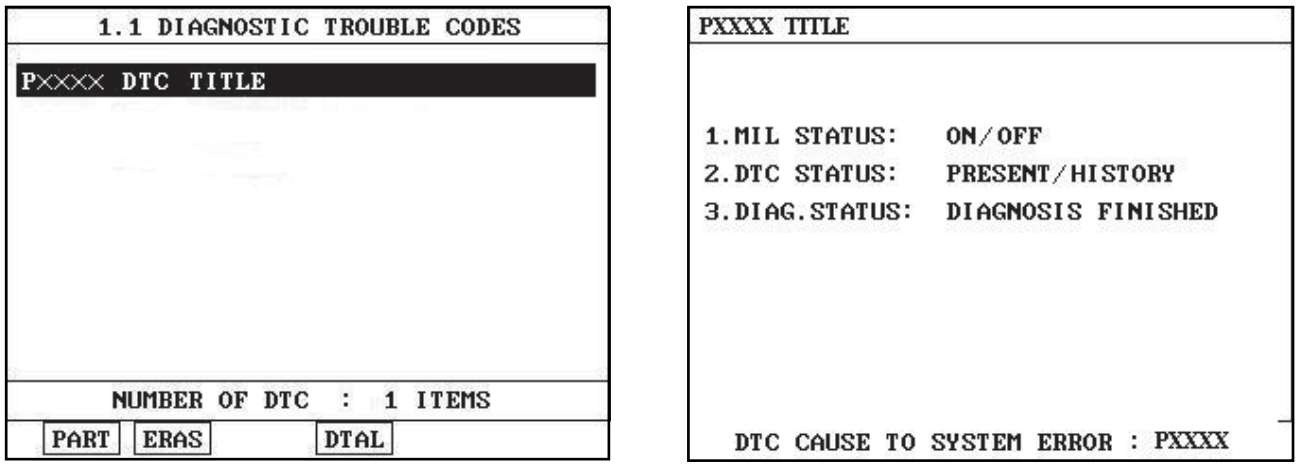

SCMF16159L

   5) Is parameter displayed "Present fault"?

   YES

   ▶ Go to "Terminal and connector inspection" procedure.

   NO

   ▶ Fault is intermittent caused by poor contact in the sensor's and/or PCM's connector or was repaired and PCM memory was not cleared. Thoroughly check connectors for looseness, poor connection, ending, corrosion, contamination, deterioration, or damage. Repair or replace as necessary and go to "Verification of Vehicle Repair" procedure.

TERMINAL AND CONNECTOR INSPECTION ECCDDFC8

1. Many malfunctions in the electrical system are caused by poor harness and terminals. Faults can also be caused by interference from other electrical systems, and mechanical or chemical damage.

2. Thoroughly check connectors for looseness, poor connection, bending, corrosion, contamination, deterioration, or damage.

3. Has a problem been found?

   YES

   ▶ Repair as necessary and go to "Verification of Vehicle Repair" procedure

   NO

▶ Go to "Power Circuit Inspection" procedure.

POWER CIRCUIT INSPECTION E53D0B80

1. IG "OFF" and disconnect CMPS connector.
2. IG "ON" and ENG "OFF"
3. Measure voltage between terminal 1 of CMPS(B2) harness connector and chassis ground.

Specification : Approx. 5V

4. Is the measured voltage within specification?

YES

▶ Go to "Signal Circuit Inspection" procedure.

NO

▶ Repair open or short to ground in harness, and go to "Verification of Vehicle Repair" procedure.

SIGNAL CIRCUIT INSPECTION E3ED19ED

1. Check voltage
   1) IG "OFF" and disconnect CMPS connector.
   2) IG "ON" and ENG "OFF"
   3) Measure voltage between terminal 3 of CMPS(B2) harness connector and chassis ground.

Specification : Approx. 5V

   4) Is the measured voltage within specification?

YES

▶ Go to "Check short in harness" as follows.

NO

▶ Go to "Check open in harness" as follows.

2. Check short in harness
   1) IG "OFF" and disconnect CMPS connector.
   2) Measure resistance between terminals 1 and 3 of CMPS(B2) harness connector.

Specification : Infinite

   3) Is the measured resistance within specification?

YES

▶ Go to "Check short to ground in harness" as follows.

NO

▶ Repair short in harness, and go to "Verification of Vehicle Repair" procedure.

3. Check short to ground in harness

   1) IG "OFF" and disconnect CMPS connector and PCM connector.

   2) Measure resistance between terminal 3 of CMPS(B2) harness connector and chassis ground.

Specification : Infinite

   3) Is the measured resistance within specification?

YES

▶ Go to "Ground Circuit Inspection" procedure.

NO

▶ Repair short to ground in harness, and go to "Verification of Vehicle Repair" procedure.

4. Check open in harness

   1) IG "OFF" and disconnect CMPS connector and PCM connector.

   2) Measure resistance between terminal 3 of CMPS harness connector and terminal C30-B (24) of PCM harness connector.

Specification : Below 1Ω

   3) Is the measured resistance within specification?

YES

▶ Go to "Ground Circuit Inspection" procedure.

NO

▶ Repair open in harness, and go to "Verification of Vehicle Repair" procedure.

GROUND CIRCUIT INSPECTION E8222698

1. IG "OFF" and disconnect CMPS connector.
2. Measure voltage between terminal 3 of CMPS harness connector and chassis ground.
3. Measure voltage between terminals 2 and 3 of CMPS harness connector.

Specification : Measurement "A" - Measurement 'B' = Approx. below 200mV

4. Is the measured voltage within specification?

YES

▶ Go to "Component Inspection" procedure.

NO

▶ Repair open or contact resistance in harness, and go to "Verification of Vehicle Repair" procedure.

COMPONENT INSPECTION EEDE8846

1. Check CMPS

   1) IG "OFF" and connect scantool.

   2) ENG "ON" and Measure signal waveform at terminal 3 of CMPS.

REFERENCE SIGNAL WAVEFORM :

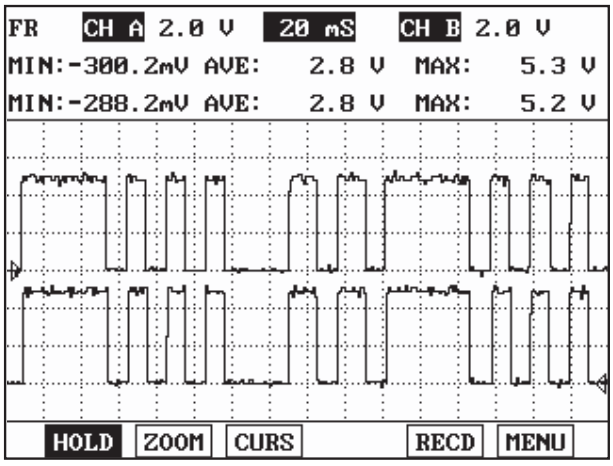

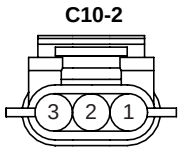

1. Reference Voltage (+5V)
2. Sensor ground
3. CMPS [Bank 2] signal

SCMF16319L

   3) Is the measured siganl waveform normal?

YES

▶ Substitute with a known - good PCM and check for proper operation. If the problem is corrected, replace PCM and go to "Verification of Vehicle Repair" procedure.

NO

▶ Check the electrical noise of siganl waveform, and go to "Check target wheel of CAM shaft" as follows.

NOTE

There is a memory reset function on scantool that can erase optional parts automatically detected and memorized by PCM. After testing PCM on the vehicle, use this function to reuse the PCM on the others

2. Check target wheel of CAM shaft

   1) IG "OFF"

   2) Remove the cover of cylinder head and check target wheel state of bank 2.

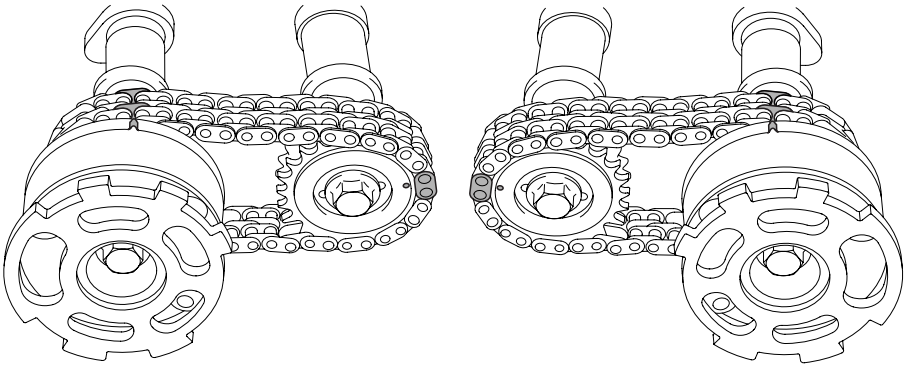

[Bank 1] [Bank 2]

LGLG517A

3) Is the target wheel state normal?

YES

▶ Substitute with a known - good CMPS and check for proper operation. If the problem is corrected, replace CMPS and go to "Verification of Vehicle Repair" procedure.

NO

▶ Repair or replace it, and go to "Verification of Vehicle Repair" procedure.

VERIFICATION OF VEHICLE REPAIR E6B12409

After a repair, it is essential to verify that the fault has been corrected.

1. Monitor and record the Freeze Frame Data for the Diagnostic Trouble Code(DTC) which has been diagnosed.
2. Using a Scantool, Clear the DTCs
3. Operate the vehicle within conditions noted in the freeze frame data or enable conditions
4. Monitor that all rediness test have been verified as " Complete "
5. Are any DTCs present ?

YES

▶ Go to the applicable troubleshoooting procedure.

NO

▶ System is performing to specification at this time.

DTC P0351 IGNITION COIL "A" PRIMARY / SECONDARY CIRCUIT
DTC P0352 IGNITION COIL "B" PRIMARY / SECONDARY CIRCUIT
DTC P0353 IGNITION COIL "C" PRIMARY / SECONDARY CIRCUIT
DTC P0354 IGNITION COIL "D" PRIMARY / SECONDARY CIRCUIT
DTC P0355 IGNITION COIL "E" PRIMARY / SECONDARY CIRCUIT
DTC P0356 IGNITION COIL "F" PRIMARY / SECONDARY CIRCUIT

COMPONENT LOCATION E166C0D7

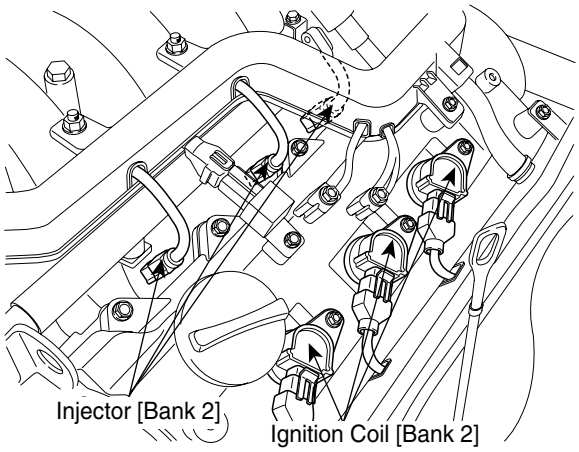

LGLG512A

GENERAL DESCRIPTION EB407262

With the ignition switch in the ON or START position, voltage is applied to the ignition coil. Each ignition coil consists of two coils. High tension leads go to each cylinder from the ignition coils. The ignition coils fire two spark plugs on every power stroke (the cylinder under compression and the cylinder on the exhaust stroke). The Engine Control Module (ECM) provides a switching circuit to ground for energizing the primary ignition coils. The ECM uses the crankshaft position sensor and camshaft position sensor signal to time the energizing of the coil. When a primary ignition coil is energized and de-energized, the secondary coil produces a high voltage spike to the attached spark plugs.

DTC DESCRIPTION EF4C2929

Checking output signals from ignition coils every 10 sec. under detecting condition, if signals indicating open of short in the circuit are detected for more than 5 sec., PCM sets P0351/P0352/P0353/P0354/P0355/P0356. MIL(Malfunction Indication Lamp) turns on when the malfunction lasts till consecutive 2 driving cycle.

DTC DETECTING CONDITION ED68F9E2

Item	Detecting Condition	Possible cause
DTC Strategy	• Detects a short to ground, to battery or open circuit	• Poor connection • Open or short in harness • Ignition Coil • PCM
EnableConditions	• NO DTC related to this item • Engine running state • 11V ≤ Battery voltage ≤ 16V • The above conditions are met > 0.5 sec.	
Threshold value	• Open or short	
DiagnosisTime	• Continuous (More than 5 sec.failure for every 10 sec.test)	
MIL On Condition	• 2 driving cycles	

SPECIFICATION E33EDA43

	Primary Coil	Secondary Coil
Resistance	0.62Ω ± 10% [20℃(68°F)]	7.0kΩ ± 15% [20℃(68°F)]

SCHEMATIC DIAGRAM EC3E9EC0

[CIRCUIT DIAGRAM]

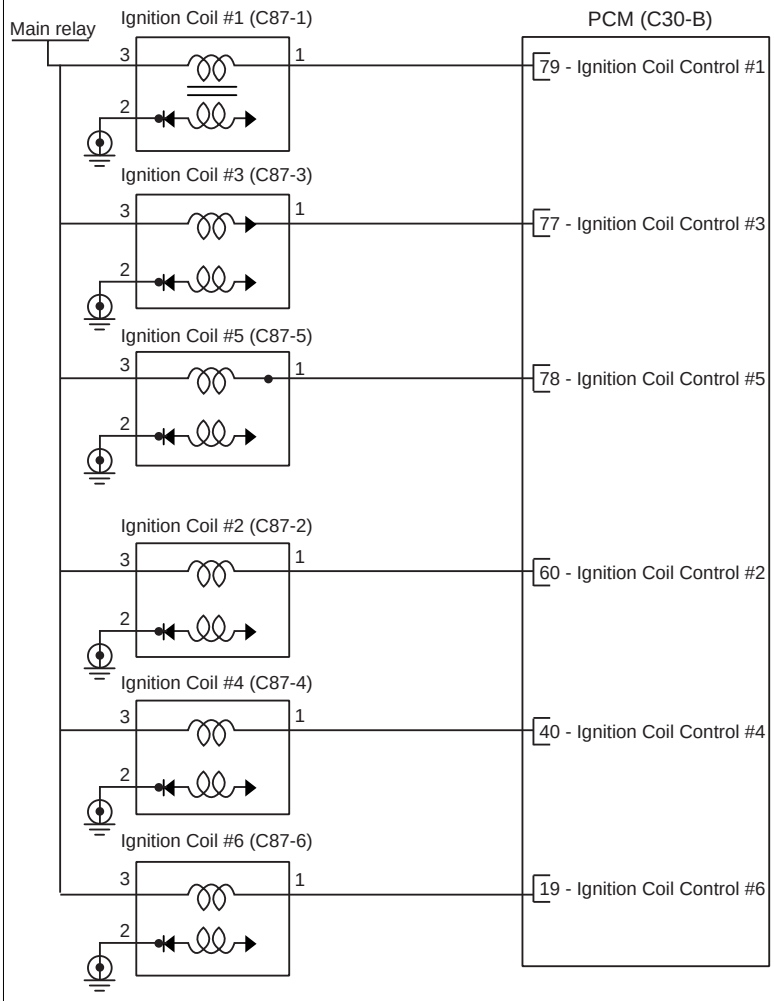

[CONNECTION INFORMATION]

Ignition Coil #1

Terminal	Connected to	Funtion
1	PCM C30-B (79)	Ignition Coil #1 control
2	Chassis ground	Ground
3	Main Relay	Battery (B+)

Ignition Coil #3

Terminal	Connected to	Funtion
1	PCM C30-B (77)	Ignition Coil #3 control
2	Chassis ground	Ground
3	Main Relay	Battery (B+)

Ignition Coil #5

Terminal	Connected to	Funtion
1	PCM C30-B (78)	Ignition Coil #5 control
2	Chassis ground	Ground
3	Main Relay	Battery (B+)

Ignition Coil #2

Terminal	Connected to	Funtion
1	PCM C30-B (60)	Ignition Coil #2 control
2	Chassis ground	Ground
3	Main Relay	Battery (B+)

Ignition Coil #4

Terminal	Connected to	Funtion
1	PCM C30-B (40)	Ignition Coil #4 control
2	Chassis ground	Ground
3	Main Relay	Battery (B+)

Ignition Coil #6

Terminal	Connected to	Funtion
1	PCM C30-B (19)	Ignition Coil #6 control
2	Chassis ground	Sensor ground
3	Main Relay	Battery (B+)

[HARNESS CONNECTORS]

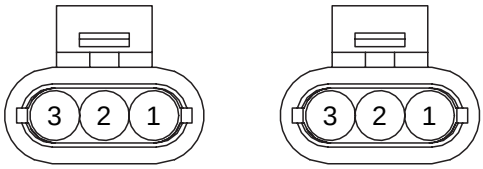

C87-1,3,5
Ignition Coil #1,3,5

C87-2,4,6
Ignition Coil #2,4,6

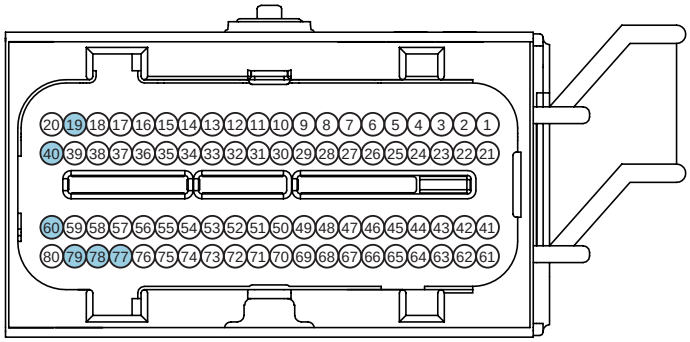

C30-B
PCM

SCMF16320L

MONITOR DTC STATUS E8EA5E1F

1. Check DTC Status

1) Connect scantool to Data Link Connector(DLC).

2) IG "ON".

3) Select "Diagnostic Trouble Codes(DTCs)" mode, and then Press F4(DTAL) to check DTC's information from the DTCs menu

4) Read "DTC Status" parameter.

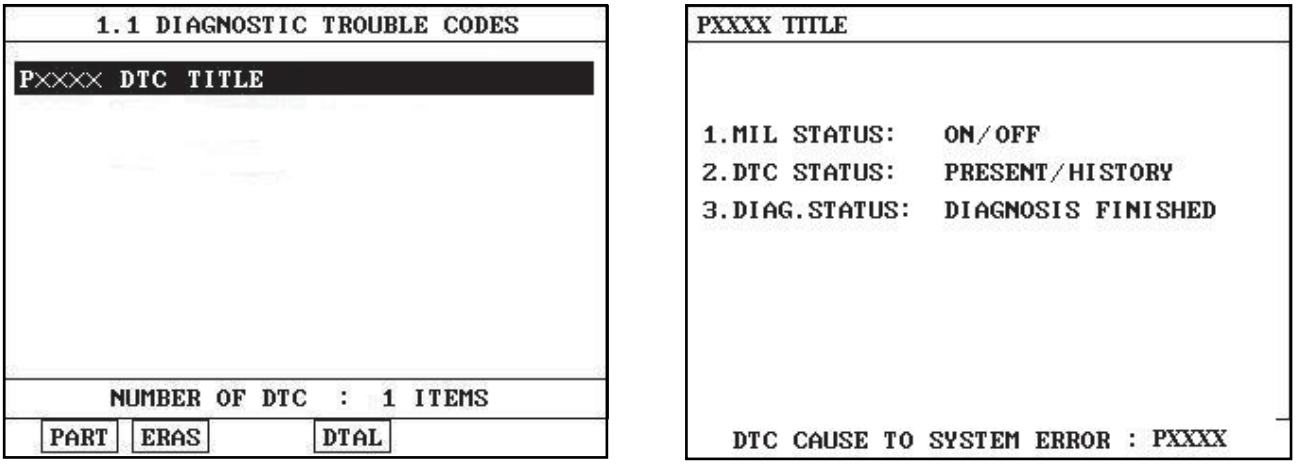

SCMF16159L

5) Is parameter displayed "Present fault"?

YES

▶ Go to "Terminal and connector inspection" procedure.

NO

▶ Fault is intermittent caused by poor contact in the sensor's and/or PCM's connector or was repaired and PCM memory was not cleared. Thoroughly check connectors for looseness, poor connection, ending, corrosion, contamination, deterioration, or damage. Repair or replace as necessary and go to "Verification of Vehicle Repair" procedure.

TERMINAL AND CONNECTOR INSPECTION EB4A8784

1. Many malfunctions in the electrical system are caused by poor harness and terminals. Faults can also be caused by interference from other electrical systems, and mechanical or chemical damage.

2. Thoroughly check connectors for looseness, poor connection, bending, corrosion, contamination, deterioration, or damage.

3. Has a problem been found?

YES

▶ Repair as necessary and go to "Verification of Vehicle Repair" procedure

NO

▶ Go to " Power Circuit Inspection " procedure.

POWER CIRCUIT INSEPCTION E79BA4AA

1. Check voltage

   1) IG "OFF" and disconnect Ignition Coil connector.

   2) IG "ON" and ENG "OFF"

   3) Measure voltage between terminal 3 of ignition coil harness connector and chassis ground.

Specification : Approx. B+

   4) Is the measured voltage within specification ?

YES

▶ Go to "Control Circuit Inspection" procedure.

NO

▶ Check fuse connected to ignition coil for open.
▶ Repair open in harness, and go to "Verification of Vehicle Repair" procedure.

CONTROL CIRCUIT INSPECTION EF5F3B09

1. Check short to battery in harness.

   1) IG "OFF" and disconnect ignitioncoil connector and PCM connector.

   2) Measure resistance between terminals 1 and 3 of ignition coil harness connector.

Specification : Infinite

   3) Is the measured resistance within specification?

YES

▶ Go to "Check short to ground in harness" as follows.

NO

▶ Repair short to battery in harness, and go to "Verification of Vehicle Repair" procedure.

2. Check short to ground in harness

   1) IG "OFF" and disconnect ignition coil connector and PCM connector.

   2) Measure resistance between terminal 1 of ignition coil harness connector and chassis ground.

Specification : Infinite

   3) Is the measured resistance within specification?

YES

▶ Go to "Check open in harness" as follows.

NO

▶ Repair short to ground in harness, and go to "Verification of Vehicle Repair" procedure.

3. Check open in harness

1) IG "OFF" and disconnect Ignition Coil connector and PCM connector.

2) [P0351] Measure resistance between terminal 1 of Ignition Coil harness connector and terminal C30-B (79) of PCM harness connector.
[P0352] Measure resistance between terminal 1 of Ignition Coil harness connector and terminal C30-B (60) of PCM harness connector.
[P0353] Measure resistance between terminal 1 of Ignition Coil harness connector and terminal C30-B (77) of PCM harness connector.
[P0354] Measure resistance between terminal 1 of Ignition Coil harness connector and terminal C30-B (40) of PCM harness connector.
[P0355] Measure resistance between terminal 1 of Ignition Coil harness connector and terminal C30-B (78) of PCM harness connector.
[P0356] Measure resistance between terminal 1 of Ignition Coil harness connector and terminal C30-B (19) of PCM harness connector.

Specification : Below 1Ω

3) Is the measured resistance within specification?

YES

▶ Go to "Component Inspection" procedure.

NO

▶ Repair open in harness, and go to "Verification of Vehicle Repair" procedure.

COMPONENT INSPECTION E401C34A

1. Check Ignition Coil

1) IG "OFF" and disconnect ignition coil connector.

2) Measure resistance between terminals 3 and 1 of ignition coil connector.(Component side)

3) Measure resistance between terminal 2 of ignition coil connector and out terminal of secondary ignition coil.

SPECIFICATION :

	Primary Coil	Secondary Coil
Resistance	0.62Ω ± 10% [20℃(68°F)]	7.0kΩ ± 15% [20℃(68°F)]

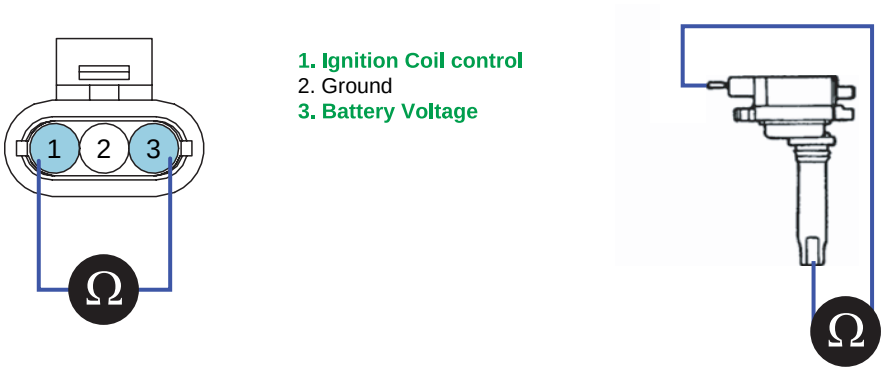

1. Ignition Coil control
2. Ground
3. Battery Voltage

SCMF16997L

4) Is the measured resistance within specification?

YES

- ▶ Substitute with a known - good PCM and check for proper operation
- ▶ If the problem is corrected, replace PCM and go to "Verification of Vehicle Repair" procedure.

NO

- ▶ Substitute with a known - good Ignition Coil and check for proper operation.
- ▶ If the problem is corrected, replace Ignition Coil and go to "Verification of Vehicle Repair" procedure.

NOTE

There is a memory reset function on scantool that can erase optional parts automatically detected and memorized by PCM. After testing PCM on the vehicle, use this function to reuse the PCM on the others

VERIFICATION OF VEHICLE REPAIR ECD7629D

After a repair, it is essential to verify that the fault has been corrected.

1. Monitor and record the Freeze Frame Data for the Diagnostic Trouble Code(DTC) which has been diagnosed.
2. Using a Scantool, Clear the DTCs
3. Operate the vehicle within conditions noted in the freeze frame data or enable conditions
4. Monitor that all rediness test have been verified as " Complete "
5. Are any DTCs present ?

YES

- ▶ Go to the applicable troubleshoooting procedure.

NO

- ▶ System is performing to specification at this time.

DTC P0420 CATALYST SYSTEM EFFICIENCY BELOW THRESHOLD (BANK 1) DTC P0430 CATALYST SYSTEM EFFICIENCY BELOW THRESHOLD (BANK 2)

GENERAL DESCRIPTION EBD941FC

The ECM uses dual oxygen sensors to monitor the efficiency of the manifold catalytic converter (warm-up catalytic converter). By monitoring the oxygen storage capacity of a catalyst, its efficiency can be indirectly calculated. The upstream (front) HO2S is used to detect the amount of oxygen in the exhaust gas before it enters the catalytic converter. A low voltage indicates high oxygen contents (lean air mixture). A high voltage indicates low oxygen contents (rich air mixture). When the catalyst efficiency drops, no chemical reaction takes place. This means the concentration of oxygen will be the same at the rear as it is at the front.

DTC DESCRIPTION ED6771A8

If the oxygen storage time for Bank 1 is lower than threshold , the PCM determines that a fault exists and a DTC is stored and MIL(Malfunction Indication Lamp) turns on.

DTC DETECTING CONDITION E28777BF

Item	Detecting Condition	Possible cause
DTC Strategy	• Manipulates Airfuel and stores the times it takes for the pre and post converter oxygen sensors to switch.	• Catalyst Converter
EnableConditions	• Engine Runtime ≥ 580 sec. • Purge Concentration Learned • 3 g/s ≤ Airflow ≤ 10 g/s • Throttle closed ≤ 1.5% • 70℃(158 °F) ≤ Coolant Temp. ≤ 120℃(248 °F) • -7℃(19.4 °F) ≤ Ambient Temp. ≤ 105℃(221 °F) • Barometer ≥ 72 kPa • Max number of test attempts ≤ 12 • Closed Loop • 250℃(482 °F) ≤ Catalyst Temp. ≤ 950℃(1742 °F) • Fuel learning completed • Vehicle speed ≤ 3 kph(1.8 mph) • Not airfuel ramping • Max idle time(about 60 sec.) not exceeded • No disabling faults present • No instrumentation slews active	
Threshold value	• Oxygen Storage Time < 3.25 sec.	
DiagnosisTime	• 15 sec.	
MIL On Condition	• 1 Driving cycle	

MONITOR SCANTOOL DATA E2E931EC

1. Check DTC Status

   1) Connect scantool to Data Link Connector(DLC).

   2) IG "ON".

3) Select "Diagnostic Trouble Codes(DTCs)" mode, and then Press F4(DTAL) to check DTC's information from the DTCs menu

4) Read "DTC Status" parameter.

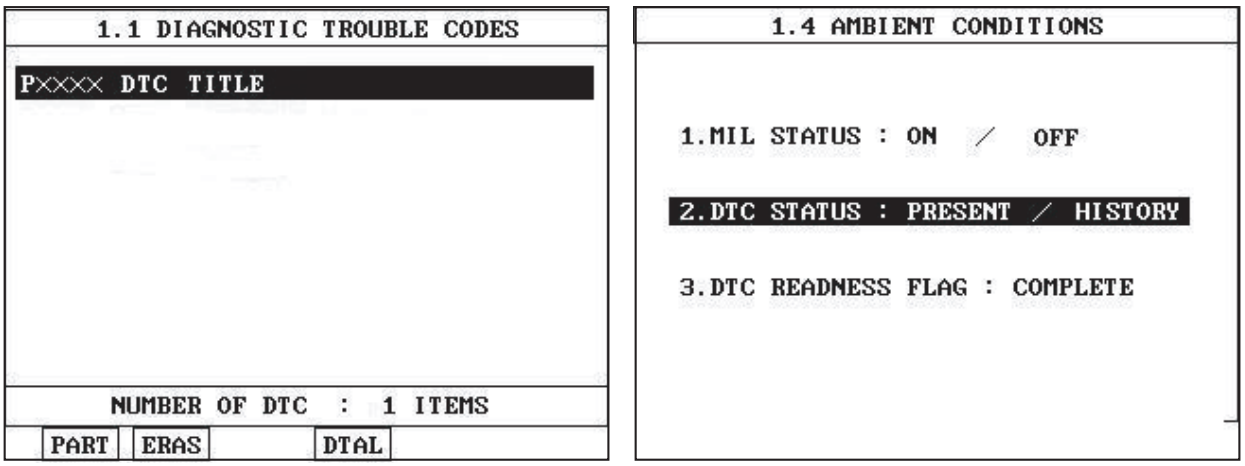

LGLG311A

5) Is parameter displayed "Present fault"?

YES

▶ Substitute with a known - good Catalyst Converter and check for proper operation. If the problem is corrected, Go to "Verification of Vehicle Repair" procedure.

NO

▶ Go to "Component Inspection" procedure.

COMPONENT INSPECTION EC580A1F

1. Monitor the Catalyst Converter

1) IG "OFF" and then reset the PCM.

2) Start the engine and warm it up until the radiator fan comes on(more than at least 10 minutes).

3) Drive at a steady speed between 45-55 mph(72-88 km/h) for 30 seconds.

4) Stop and then maintain idle state for 30 seconds in D-position.

5) Repeat step 3 once again.

6) Stop and then keep it in idle state(D-positon) for 30 seconds.

7) IG "OFF"

8) Repeat steps 3 through 7 three times.

9) Check if catalyst monitoring readiness is complete. so, if the readiness is incomplete, repeat steps 2 through 8.

10) Does the scan tool show DTC P0420?

YES

▶ Substitute with a known - good Catalyst Converter and check the signal waveform of HO2S for proper operation. If the problem is corrected, Go to "Verification of Vehicle Repair" procedure.

NO

▶ It was intermittent failure.

VERIFICATION OF VEHICLE REPAIR E504AFAE

After a repair, it is essential to verify that the fault has been corrected.

1. Monitor and record the Freeze Frame Data for the Diagnostic Trouble Code(DTC) which has been diagnosed.
2. Using a Scantool, Clear the DTCs
3. Operate the vehicle within conditions noted in the freeze frame data or enable conditions
4. Monitor that all rediness test have been verified as " Complete "
5. Are any DTCs present ?

YES

▶ Go to the applicable troubleshoooting procedure.

NO

▶ System is performing to specification at this time.

DTC P0444 EVAP. EMISSION SYSTEM-PURGE CTRL. VALVE CIRCUIT OPEN

COMPONENT LOCATION E330C105

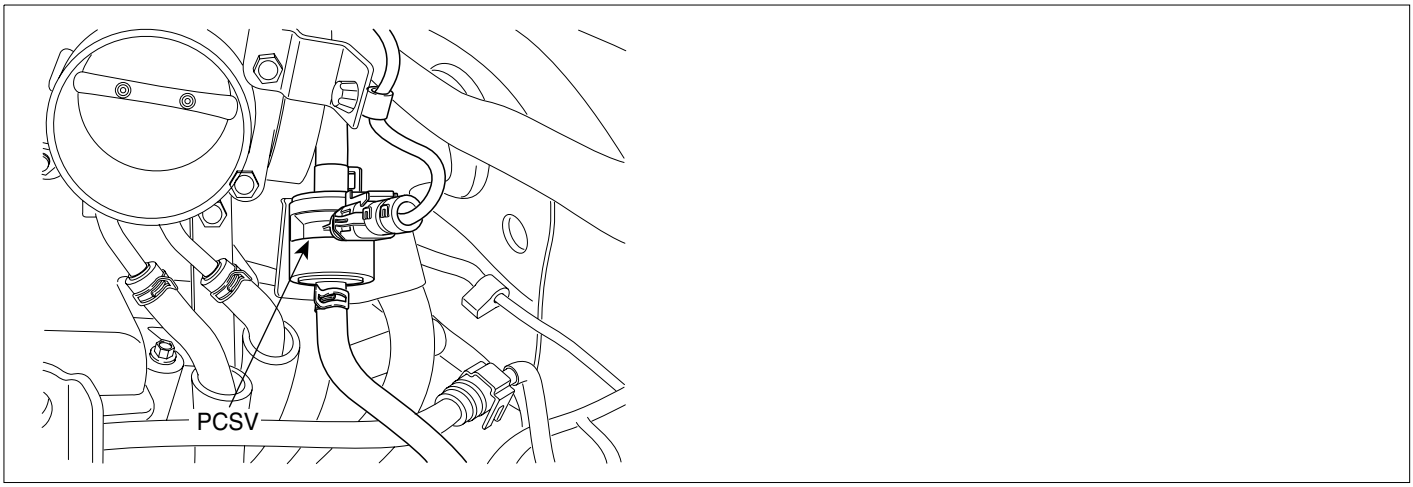

LGLG518A

GENERAL DESCRIPTION E9E8ED36

The evaporative emission control system prevents hydrocarbon (HC) vapors from the fuel tank from escaping into the atmosphere where they could form photochemical smog. Gasoline vapors are collected in the charcoal canister. The ECM controls the Purge Control Solenoid Valve (PCSV) to purge any collected vapors from the canister back to the engine for combustion. This valve is actuated by the purge control signal from the ECM and controls fuel vapor from the canister to the intake manifold.

DTC DESCRIPTION E1673907

Checking output signals from PCSV every 10 sec. under detecting condition, if signals indicating open or short to ground in the circuit are detected for more than 5 sec., PCM sets P0444. MIL(Malfunction Indication Lamp) turns on when the malfunction lasts till consecutive 2 driving cycle.

DTC DETECTING CONDITION E6795A6C

Item	Detecting Condition	Possible cause
DTC Strategy	• Open, short to ground	• Poor connection • Open or short to ground in harness • PCSV • PCM
EnableConditions	• Engine running state • 11V ≤ Battery voltage ≤ 16V • Above enable conditions are met > 0.5 sec.	
Threshold value	• Open or short to ground	
DiagnosisTime	• Continuous (More than 5 sec.failure for every 10 sec.test)	
MIL On Condition	• 2 driving cycles	

SPECIFICATION E8F8828A

Item	Coil resistance(Ω)
PCSV	14.0 ~ 18.0Ω [20℃ (68°F)]

SCHEMATIC DIAGRAM E4472935

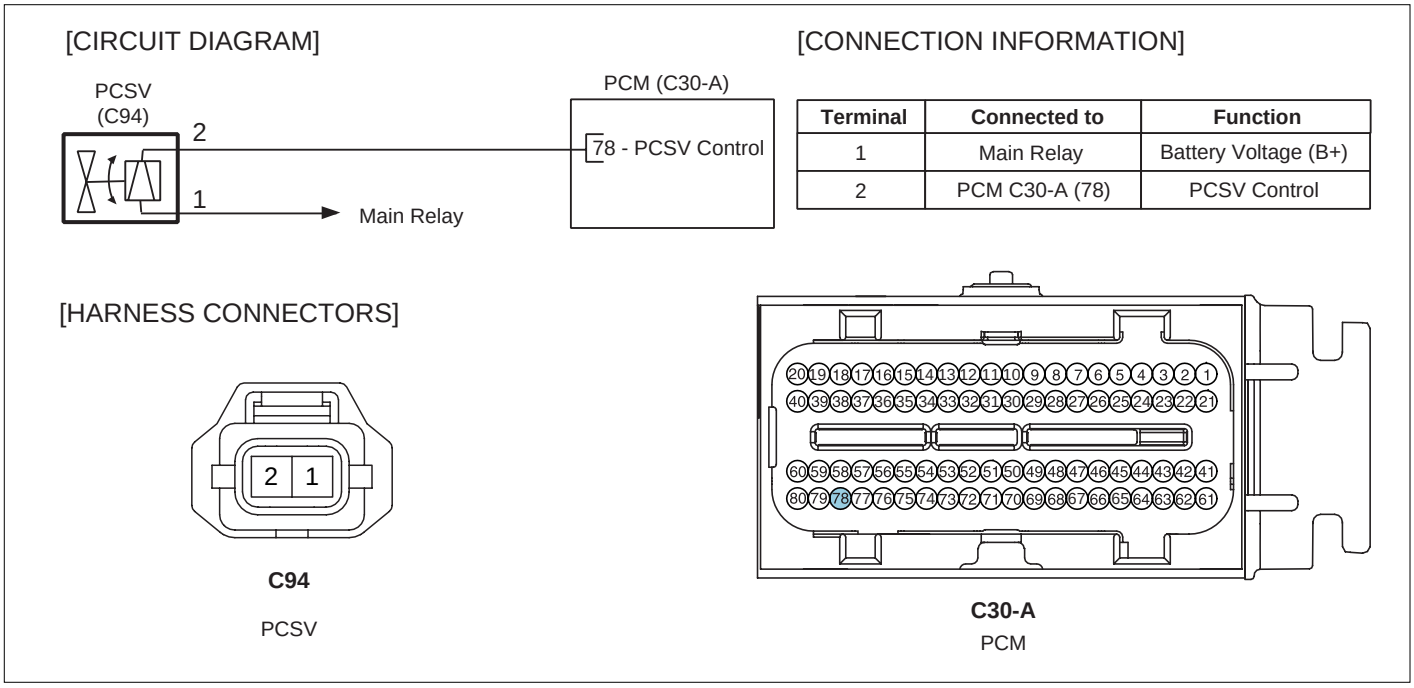

SCMF16119L

SIGNAL WAVEFORM EF5B67EC

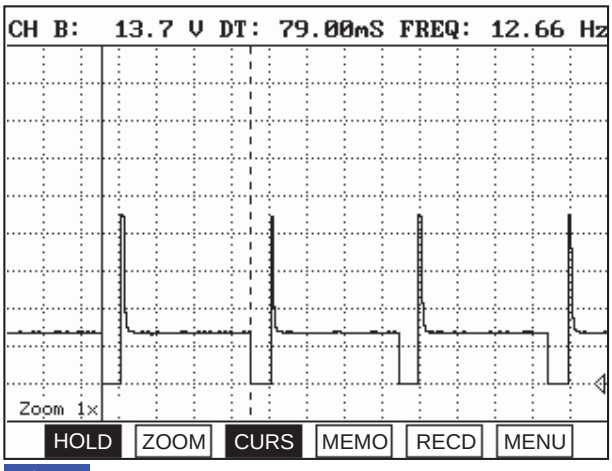

Fig. 1

The Purge Control Solenoid Valve(PCSV) is open or closed by PCM and vacuum of intake manifold.
At opening, fuel vapor from canister enters into intake manifold. To prevent vacuum from forming inside canister, PCM controls to open it. This photo shows the signal waveform of PCSV operating normally.

EGRF848A

MONITOR DTC STATUS EB7ED820

1. Check DTC Status

   1) Connect scantool to Data Link Connector(DLC).

   2) IG "ON".

   3) Select "Diagnostic Trouble Codes(DTCs)" mode, and then Press F4(DTAL) to check DTC's information from the DTCs menu

   4) Read "DTC Status" parameter.

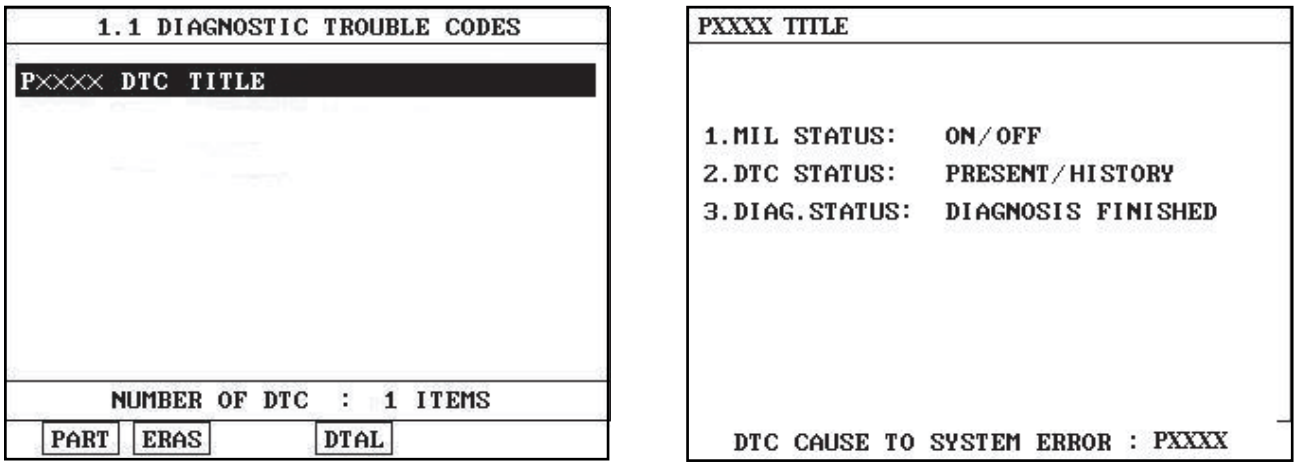

SCMF16159L

   5) Is parameter displayed "Present fault"?

YES

▶ Go to "Terminal and connector inspection" procedure.

NO

▶ Fault is intermittent caused by poor contact in the sensor's and/or PCM's connector or was repaired and PCM memory was not cleared. Thoroughly check connectors for looseness, poor connection, ending, corrosion, contamination, deterioration, or damage. Repair or replace as necessary and go to "Verification of Vehicle Repair" procedure.

TERMINAL AND CONNECTOR INSPECTION E7A93020

1. Many malfunctions in the electrical system are caused by poor harness and terminals. Faults can also be caused by interference from other electrical systems, and mechanical or chemical damage.

2. Thoroughly check connectors for looseness, poor connection, bending, corrosion, contamination, deterioration, or damage.

3. Has a problem been found?

YES

▶ Repair as necessary and go to "Verification of Vehicle Repair" procedure

NO

▶ Go to " Power Circuit Inspection " procedure.

POWER CIRCUIT INSEPCTION E823F06B

1. IG "OFF" and disconnect PCSV connector.
2. IG "ON" and ENG "OFF"
3. Measure voltage between terminal 1 of PCSV harness connector and chassis ground.

Specification : B+

4. Is the measured voltage within specification?

YES

▶ Go to "Control Circuit Inspection" procedure.

NO

▶ Repair open or short to ground in harness, and go to " Verification of Vehicle Repair" procedure.

CONTROL CIRCUIT INSPECTION EF47BBB0

1. Check short to ground in harness.
   1) IG "OFF" and disconnect PCSV connector.
   2) IG "ON"
   3) Measure voltage between terminal 2 of PCSV harness connector and chassis ground.

Specification : Approx. 0.5V

   4) Is the measured voltage within specification?

YES

▶ Go to "Check open in harness" as follows.

NO

▶ Repair short to ground in harness, and go to " Verification of Vehicle Repair" procedure.

2. Check open in harness.
   1) IG "OFF" and disconnect PCSV connector and PCM connector.
   2) Measure resistance between terminal 2 of PCSV harness connector and terminal C30-A (78) of PCM harness connector.

Specification : Below 1Ω

   3) Is the measured resistance within specification?

YES

▶ Go to " Component Inspection" procedure.

NO

▶ Repair open in harness, and go to "Verification of Vehicle Repair" procedure.

COMPONENT INSPECTION E3AE3F51

1. Check PCSV

   1) IG "OFF" and disconnect PCSV connector.

   2) Measure resistance between terminals 1 and 2 of PCSV connector.(Component side)

SPECIFICATION :

Item	Coil resistance(Ω)
PCSV	14.0 ~ 18.0Ω [20℃ (68°F)]

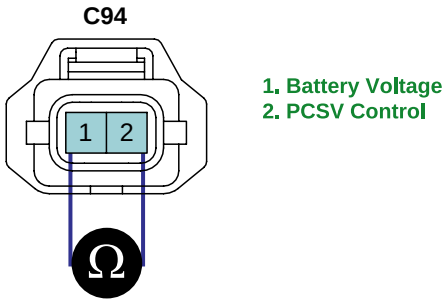

SCMF16356L

   3) Is the measured resistance within specification?

YES

▶ Substitute with a known - good PCM and check for proper operation.
▶ If the problem is corrected, replace PCM and go to "Verification of Vehicle Repair" procedure.

NO

▶ Substitute with a known - good PCSV and check for proper operation.
▶ If the problem is corrected, replace PCSV and go to "Verification of Vehicle Repair" procedure.

NOTE

There is a memory reset function on scantool that can erase optional parts automatically detected and memorized by PCM. After testing PCM on the vehicle, use this function to reuse the PCM on the others

VERIFICATION OF VEHICLE REPAIR EEA6BD74

After a repair, it is essential to verify that the fault has been corrected.

1. Monitor and record the Freeze Frame Data for the Diagnostic Trouble Code(DTC) which has been diagnosed.
2. Using a Scantool, Clear the DTCs
3. Operate the vehicle within conditions noted in the freeze frame data or enable conditions

4. Monitor that all rediness test have been verified as " Complete "
5. Are any DTCs present ?

YES

▶ Go to the applicable troubleshoooting procedure.

NO

▶ System is performing to specification at this time.

DTC P0445 EVAP. EMISSION SYSTEM-PURGE CTRL. VALVE CIRCUIT SHORTED

COMPONENT LOCATION EA49A992

Refer to DTC P0444.

GENERAL DESCRIPTION E67CE4F2

Refer to DTC P0444.

DTC DESCRIPTION E00E371F

Checking output signals from PCSV every 10 sec. under detecting condition, if signals indicating short to battery in the circuit are detected for more than 5 sec., PCM sets P0445. MIL(Malfunction Indication Lamp) turns on when the malfunction lasts till consecutive 2 driving cycle.

DTC DETECTING CONDITION E9146E29

Item	Detecting Condition	Possible cause
DTC Strategy	• Short to battery	• Poor connection • Short to battery in harness • PCSV • PCM
EnableConditions	• Engine running state • 11V ≤ Battery voltage ≤ 16V • Above enable conditions are met > 0.5 sec.	
Threshold value	• Short to battery	
DiagnosisTime	• Continuous (More than 5 sec.failure for every 10 sec.test)	
MIL On Condition	• 2 driving cycles	

SPECIFICATION EF7575BD

Refer to DTC P0444.

SCHEMATIC DIAGRAM E71171CC

Refer to DTC P0444.

SIGNAL WAVEFORM E219B974

Refer to DTC P0444.

MONITOR DTC STATUS ED8A58B2

Refer to DTC P0444.

TERMINAL AND CONNECTOR INSPECTION EF9207D3

Refer to DTC P0444.

CONTROL CIRCUIT INSPECTION E96A7FBB

1. IG "OFF" and disconnect PCSV connector.
2. IG "ON" and ENG "OFF"
3. Measure voltage between terminal 2 of PCSV harness connector and chassis ground.

Specification : Approx. 0.5V

4. Is the measured voltage within specification?

YES

▶ Go to "Component Insepction" procedure.

NO

▶ Repair short to battery in harness, and go to " Verification of Vehicle Repair" procedure.

COMPONENT INSPECTION E5DDBC8E

1. Check PCSV
   1) IG "OFF" and disconnect PCSV connector.
   2) Measure resistance between terminals 1 and 2 of PCSV connector.(Component side)

SPECIFICATION :

Item	Coil resistance(Ω)
PCSV	14.0 ~ 18.0Ω [20℃(68°F)]

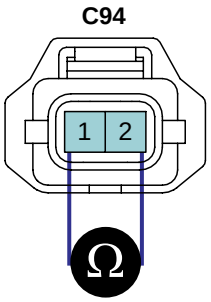

1. Battery Voltage
2. PCSV Control

SCMF16356L

   3) Is the measured resistance within specification?

YES

▶ Substitute with a known - good PCM and check for proper operation.
▶ If the problem is corrected, replace PCM and go to "Verification of Vehicle Repair" procedure.

NO

▶ Substitute with a known - good PCSV and check for proper operation.
▶ If the problem is corrected, replace PCSV and go to "Verification of Vehicle Repair" procedure.

NOTE

There is a memory reset function on scantool that can erase optional parts automatically detected and memorized by PCM. After testing PCM on the vehicle, use this function to reuse the PCM on the others

VERIFICATION OF VEHICLE REPAIR E86F6EB7

Refer to DTC P0444.

DTC P0501 VEHICLE SPEED SENSOR A RANGE/PERFORMANCE

COMPONENT LOCATION EBF7FFDF

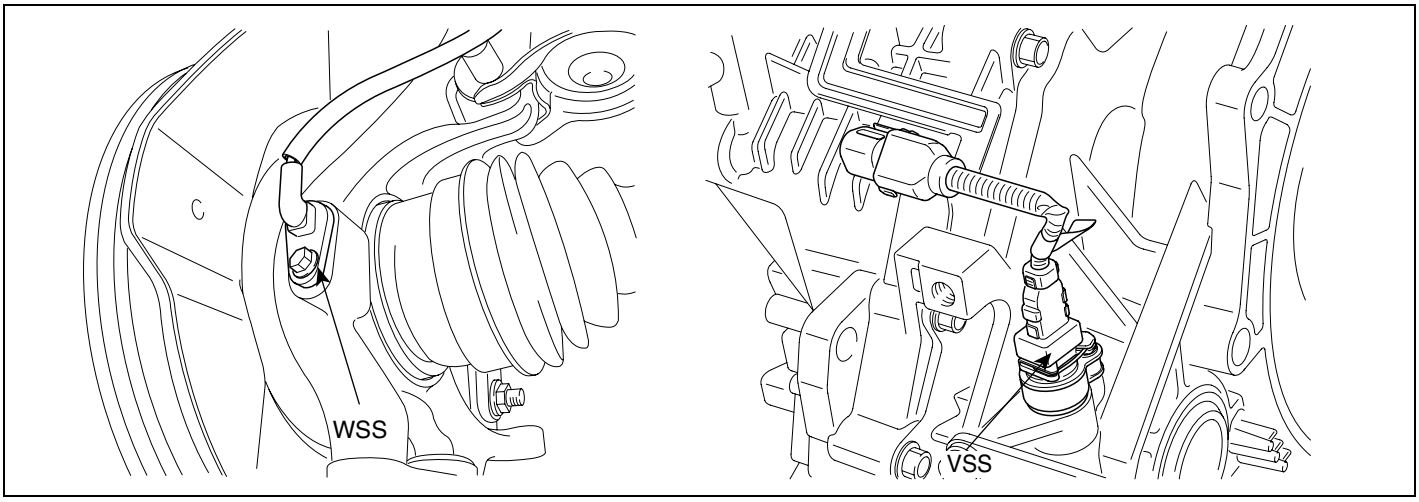

LGLG519A

GENERAL DESCRIPTION E30F80CC

The Wheel Speed Sensor (WSS) generates a waveform with a frequency proportional to the speed of the vehicle. The signal generated by the WSS informs the ECM not only if the vehicle speed is low or high but also if the vehicle is or is not moving. The ECM uses this signal to control the fuel injection, ignition timing, transaxle shift scheduling and torque converter clutch scheduling. The WSS signal is also used to detect rough road conditions.

DTC DESCRIPTION E24AFA68

Checking output signals from wheel speed sensor or ABS control unit or VSS every 30 sec. under detecting condition, if an signal is in the detecting condition for more than 20 sec., PCM sets P0501. MIL(Malfunction Indication Lamp) turns on when the malfunction lasts till cosecutive 2 driving cycle.

DTC DETECTING CONDITION E2265246

Item		Detecting Condition	Possible cause
DTC Strategy		• Detects the lack of vehicle speed signal	• Poor connection • Open or short in harness • Wheel speed sensor(FR) • Vehicle speed sensor • ABS or ESP control unit • PCM
Enable Condi-tions	Case 1(Power)	• Engine Running • No VSS disabling malfunction present • No TPS fault present • No MAP fault present • 11V 〈 Ignition Voltage 〈 16V • Engine Coolant Temperature 〉 60℃ (140˚F) • MAP 〉 55kPa • 25% ≤ TPS ≤ 60% • 1200rpm ≤ Engine Speed ≤ 4000rpm • Vehicle Speed derived from transmission ≥ 10 kph (6.2 mph)	
	Case 2(Decel)	• Engine Running • No VSS disabling malfunction present • No TPS fault present • No MAP fault present • 11V 〈 Ignition Voltage 〈 16V • Engine Coolant Temperature 〉 60℃ (140˚F) • MAP 〈 32kPa • TPS 〈 1% • 1800rpm ≤ Engine Speed ≤ 6000rpm • Transmission in gear	
Thresh old value	Case 1(Power)	• VSS Fault Vehicle Speed ≤ 10kph	
	Case 2(Decel)	• Vehicle Speed 〈 5kph • Delta Engine Speed ≥ 100rpm	
Diagnosis Time		• Continuous (More than 20 seconds failure for every 30 seconds test)	
MIL On Condition		• 2 driving cycles	

SCHEMATIC DIAGRAM EB698BAE

[EXCEPT EURO-Ⅲ/Ⅳ]

[CIRCUIT DIAGRAM]

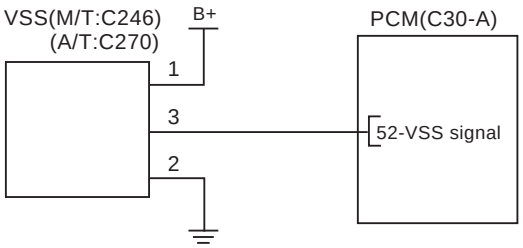

[CONNECTION INFORMATION]

Terminal	Connected to	Function
1	Engine compartment juntion block	Battery voltage(B+)
2	Chassis ground	Sensor ground
3	PCM C30-A (52)	VSS signal

[HARNESS CONNECTOR]

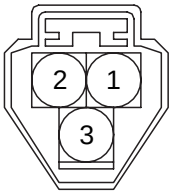

M/T:C246
A/T:C270
VSS

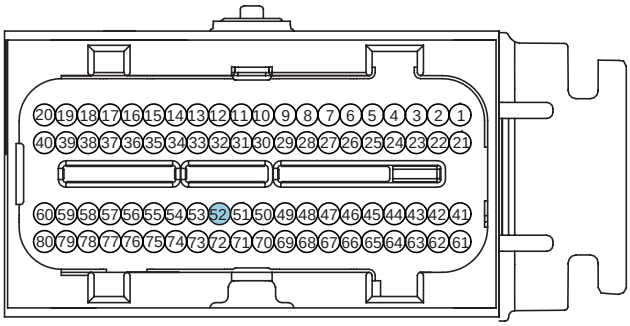

C30-A
PCM

SCMF16357L

[EURO-Ⅲ/Ⅳ WITH ABS (OR ESP)]

[CIRCUIT DIAGRAM]

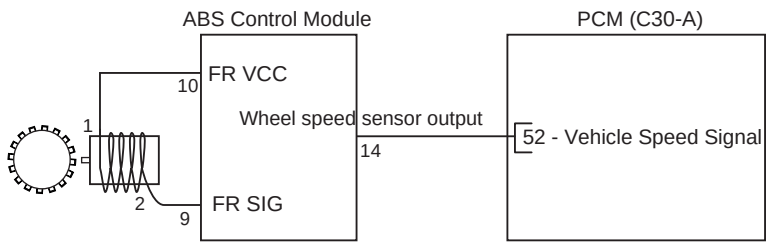

[CONNECTION INFORMATION]

Terminal	Connected to	Function
3	PCM C30-A (52)	Vehicle Speed Signal

[HARNESS CONNECTOR]

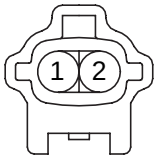

C274

Right Front Wheel Sensor

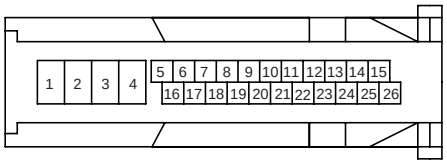

C280 (GSL)

ABS CONTROL MODULE

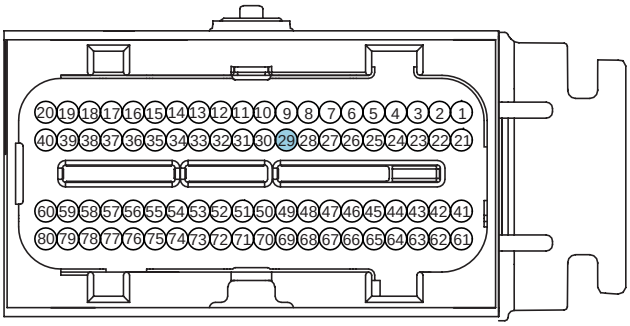

C30-A

PCM

SCMF16358L

SIGNAL WAVEFROM AND DATA E66D7EAA

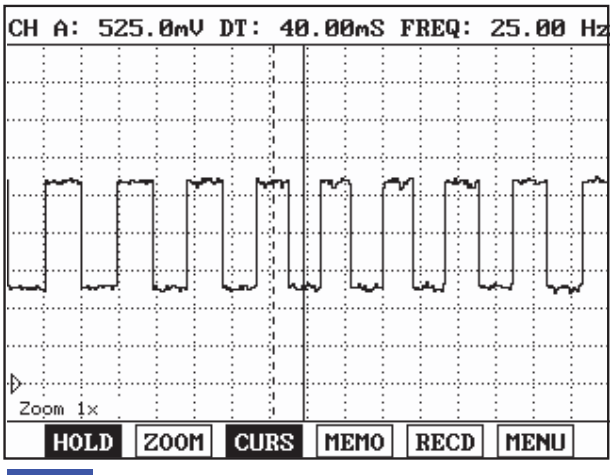

Fig. 1

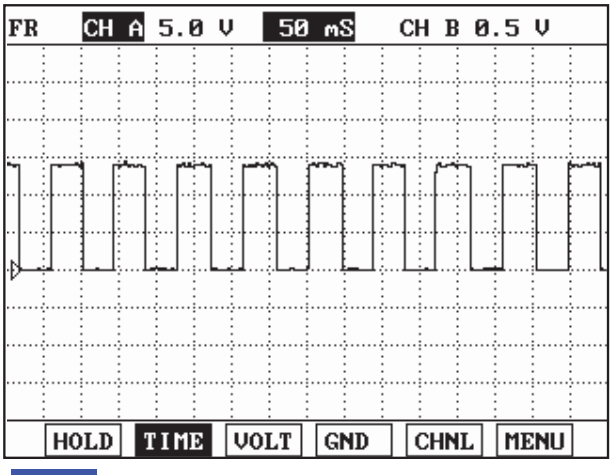

Fig. 2

Fig.1 : Signal waveform [EURO-Ⅲ/Ⅳ]
Fig.2 : Signal waveform [Except EURO-Ⅲ/Ⅳ]

LGLG437A

MONITOR DTC STATUS E7EC0FD2

1. Check DTC Status

1) Connect scantool to Data Link Connector(DLC).

2) IG "ON".

3) Select "Diagnostic Trouble Codes(DTCs)" mode, and then Press F4(DTAL) to check DTC's information from the DTCs menu

4) Read "DTC Status" parameter.

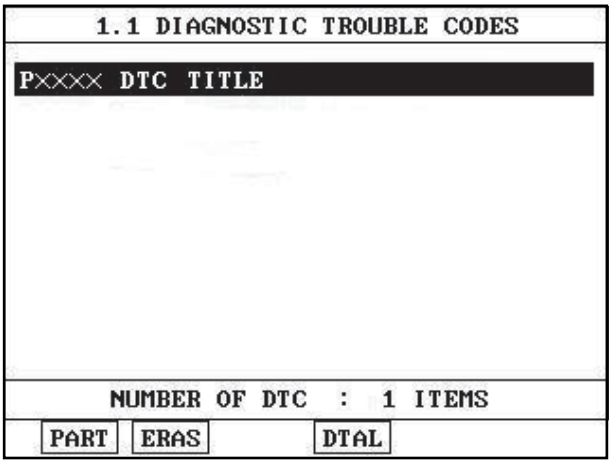

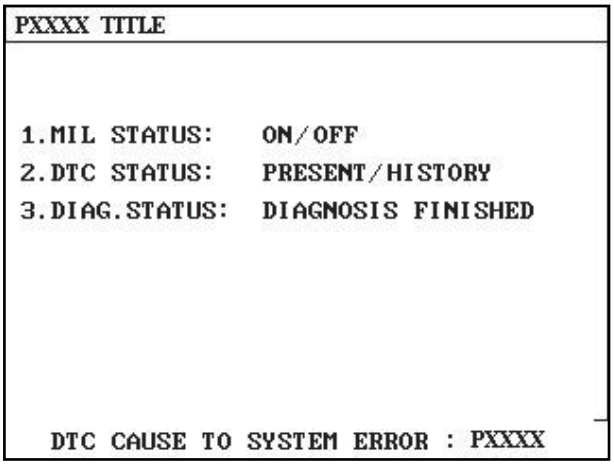

SCMF16159L

5) Is parameter displayed "Present fault"?

YES

▶ Go to "Terminal and connector inspection" procedure.

NO

▶ Fault is intermittent caused by poor contact in the sensor's and/or PCM's connector or was repaired and PCM memory was not cleared. Thoroughly check connectors for looseness, poor connection, ending, corrosion, contamination, deterioration, or damage. Repair or replace as necessary and go to "Verification of Vehicle Repair" procedure.

[EURO-Ⅲ/Ⅳ] E91E55BF

TERMINAL AND CONNECTOR INSPECTION

1. Many malfunctions in the electrical system are caused by poor harness and terminals. Faults can also be caused by interference from other electrical systems, and mechanical or chemical damage.

2. Thoroughly check connectors for looseness, poor connection, bending, corrosion, contamination, deterioration, or damage.

3. Has a problem been found?

YES

▶ Repair as necessary and go to "Verification of Vehicle Repair" procedure

NO

▶ Go to " Signal Circuit Inspection " procedure.

SIGNAL CIRCUIT INSPECTION EA61C2F8

WARNING

This procedure is applied to vehicle with ABS (or ESP). In case of no ABS(or ESP), refer to "C1203 Wheel speed sensor front-RH open/short".

1. Check short to ground in harness

   1) IG "OFF"

   2) Disconnect PCM connector and ABS or ESP control module connector.

   3) Measure resistance between terminal C30-A (52) of PCM harness connector and chassis ground.

52. Wheel speed sensor output(FR)

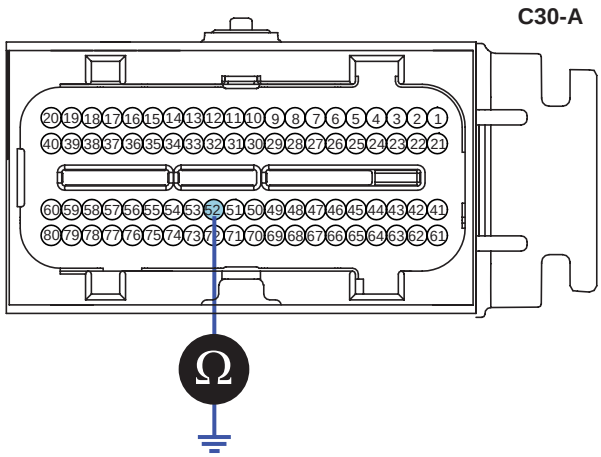

SCMF16359L

Specification : Infinite

   4) Is the measured resistance within specifications?

YES

▶ Go to "Check open in harness" as follows.

NO

▶ Repair short to ground in harness, and go to "Verification of Vehicle Repair" procedure.

2. Check for open in harness

   1) Ignition "OFF"

   2) Disconnect PCM connector and ABS or ESP control module connector.

   3) Measure resistance between terminal C30-A (52) of PCM harness connector and terminal "3(With ESP: terminal 6)" of ABS control module harness connector.

Specification : Approx. below 1Ω

52. Wheel speed sensor output(FR)

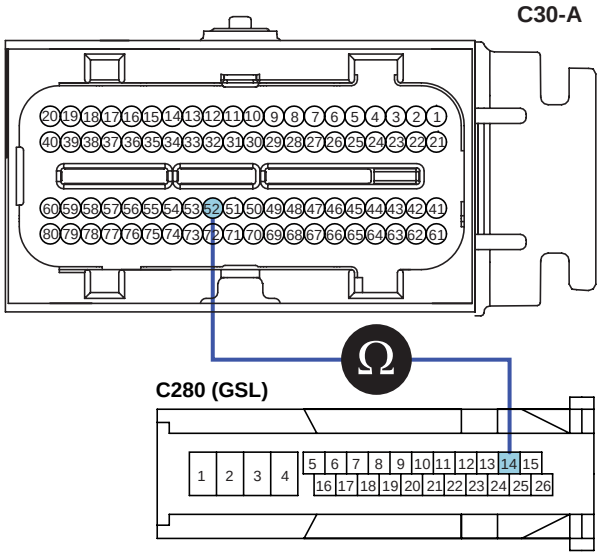

SCMF16360L

NOTE

Note: This picture is only applied to vehicle with ABS

4) Is the measured resistance within specifications?

YES

▶ Go to " Check wheel speed sensor " procedure.

NO

▶ Check open in harenss.
▶ Repair or replace as necessary and then, go to " Verification of Vehicle Repair" procedure.

3. Check wheel speed sensor

1) IG "OFF"

2) Check open or short in wheel speed sensor (Refer to "C1203 Wheel speed sensor front-RH open/short")

3) Is the wheel speed sensor normal?

YES

▶ Substitute with a known - good PCM/ ABS or ESP control unit and check for proper operation. If the problem is corrected, replace PCM/ ABS or ESP control unit and go to "Verification of Vehicle Repair" procedure.

NO

▶ Repair or replace it as necessary.
▶ And then go to " Verification of Vehicle Repair" procedure.

NOTE

There is a memory reset function on scantool that can erase optional parts automatically detected and memorized by PCM. After testing PCM on the vehicle, use this function to reuse the PCM on the others

[EXCEPT EURO-Ⅲ/Ⅳ]

TERMINAL AND CONNECTOR INSPECTION

1. Many malfunctions in the electrical system are caused by poor harness and terminals. Faults can also be caused by interference from other electrical systems, and mechanical or chemical damage.
2. Thoroughly check connectors for looseness, poor connection, bending, corrosion, contamination, deterioration, or damage.
3. Has a problem been found?

YES

▶ Repair as necessary and go to "Verification of Vehicle Repair" procedure

NO

▶ Go to " Power Circuit Inspection " procedure.

POWER CIRCUIT INSPECTION

1. Check voltage
   1) IG "OFF"
   2) Disconnect vehicle speed sensor connector.
   3) IG "ON" and ENG "OFF"
   4) Measure voltage between terminal 1 of vehicle speed sensor harness connector and chassis ground.

Specification : Approx. 11.5 ~ 13V

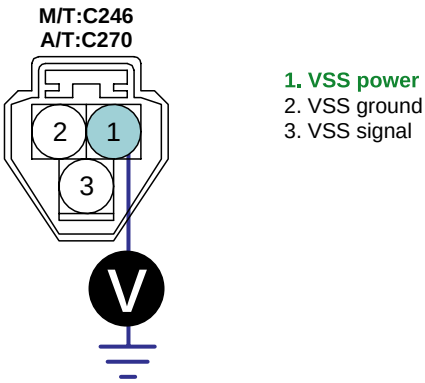

1. VSS power
2. VSS ground
3. VSS signal

SCMF16361L

   5) Is the measured voltage within specifications?

YES

▶ Go to "Signal circuit inspection" procedure.

NO

▶ Repair open or short to ground in harness, and go to "Verification of Vehicle Repair" procedure.
Especially Check the fuse related to Power for blown-off.

SIGNAL CIRCUIT INSPECTION

1. Check voltage from sensor side

   1) IG "OFF"

   2) Disconnect vehicle speed sensor connector.

   3) IG "ON" and ENG "OFF"

   4) Measure voltage between terminal 3 of vehicle speed sensor harness connector and chassis ground.

Specification : Approx. 8 ~ 11.5V

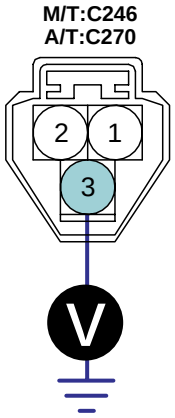

1. VSS power
2. VSS ground
3. **VSS signal**

SCMF16362L

   5) Is the measured voltage within specifications?

   YES

   ▶ Go to "Check voltage from PCM side" as follows.

   NO

   ▶ Repair open or short to ground in harness, and go to "Verification of Vehicle Repair" procedure.

2. Check voltage from PCM side

   1) IG "OFF"

   2) Disconnect PCM connector and vehicle speed sensor connector.

   3) IG "ON" and ENG "OFF"

   4) Measure voltage between terminal C30-A (52) of PCM harness connector and chassis ground.

Specification : Approx. 8 ~ 11.5V

52. Wheel speed sensor output(FR)

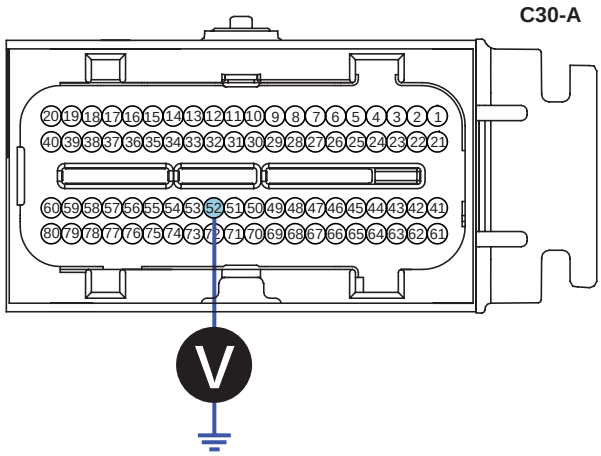

SCMF16363L

5) Is the measured voltage within specifications?

YES

▶ Go to " Ground circuit inspection " procedure.

NO

▶ Check open in harenss.
▶ Repair or replace as necessary and then, go to " Verification of Vehicle Repair" procedure.

GROUND CIRCUIT INSPECTION

1. IG "OFF"
2. Disconnect vehicle speed sensor connector.
3. IG "ON" and ENG "OFF"
4. Measure voltage between terminal 1 of vehicle speed sensor harness connector and chassis ground.(Fig.A)
5. Measure voltage between terminals 1 and 2 of vehicle speed sensor harness connector.(Fig.B)

Specification : Measurement "A" - Measurement 'B' = Approx. below 200mV

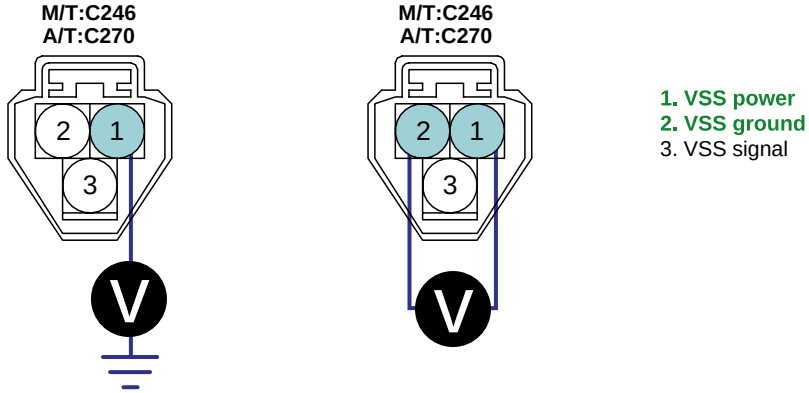

1. VSS power
2. VSS ground
3. VSS signal

SCMF16364L

6. Is the measured voltage within specifications?

YES

▶ Substitute with a known - good vehicle speed sensor and check for proper operation. If the problem is not correctd, substitute with a known - good PCM and check for proper operation. And go to "Verification of Vehicle Repair" procedure.

NO

▶ Repair open or contact resistance in harness, and go to "Verification of Vehicle Repair" procedure.

NOTE

There is a memory reset function on scantool that can erase optional parts automatically detected and memorized by PCM. After testing PCM on the vehicle, use this function to reuse the PCM on the others

VERIFICATION OF VEHICLE REPAIR EEFA2461

After a repair, it is essential to verify that the fault has been corrected.

1. Monitor and record the Freeze Frame Data for the Diagnostic Trouble Code(DTC) which has been diagnosed.
2. Using a Scantool, Clear the DTCs
3. Operate the vehicle within conditions noted in the freeze frame data or enable conditions
4. Monitor that all rediness test have been verified as " Complete "
5. Are any DTCs present ?

YES

▶ Go to the applicable troubleshoooting procedure.

NO

▶ System is performing to specification at this time.

DTC P0504 BRAKE SWITCH "A"/"B" CORRELATION

GENERAL DESCRIPTION EB611534

The Stop lamp switch is used to judge whether the acceleration system is abnormal or not. The stop lamp switch has a duplex system(signals brake test or brake light) to memorize the abnormality when the signals of depressing and releasing the brake pedal are detected simultaneously.

DTC DESCRIPTION E8706E64

Checking output signals from both brake switch. when all of them are On or OFF simultaneously, if abnormal signal is detected for more than 0.5 sec., an error is recognized. And if this condition lasts for certain period, PCM sets P0504. MIL(Malfunction Indication Lamp) turns on when the malfunction lasts till cosecutive 2 driving cycle.

DTC DETECTING CONDITION E1833C1F

Item		Detecting Condition	Possible cause
DTC Strategy		• Comparing 2 brake signals during driving	• Poor connection • Open or Short • Faulty PCM
Enable Condi-tions	Case 1	• Engine works • Vehicle Speed Sensor is abnormal.	
	Case 2	• Engine works • Vehicle Speed Sensor is normal and Vehicle Speed is over 20kph during 1sec or more.	
Threshold value		• The one brake signal's change duration when another signal has been changed 〉 0.5 sec	
Diagnosis Time		• Continuous	
MIL On Condition		• 2 driving cycles	

SPECIFICATION E1C5364F

Item	During taking off the brake	During stepping on the brake
Brake Lamp Switch	0V	Battery voltage
Brake Switch	Battery voltage	0V

SCHEMATIC DIAGRAM EE9EC90A

[CIRCUIT DIAGRAM]

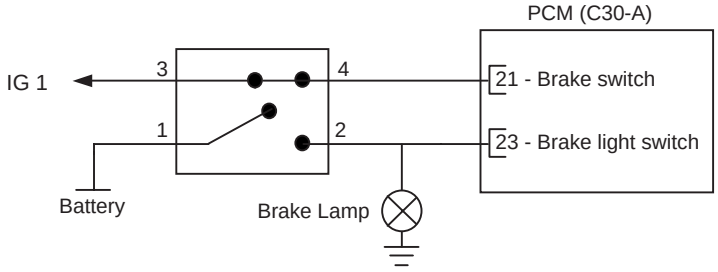

[CONNECTION INFORMATION]

Terminal	Connected to	Function
2	PCM C30-A (23)	Brake light switch
1	Battery	Power Supply (12V)
4	PCM C30-A (21)	Brake switch
3	Battery	Power Supply (12V)

[HARNESS CONNECTOR]

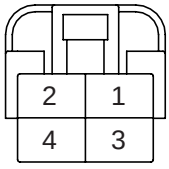

C54

STOP LAMP SWITCH

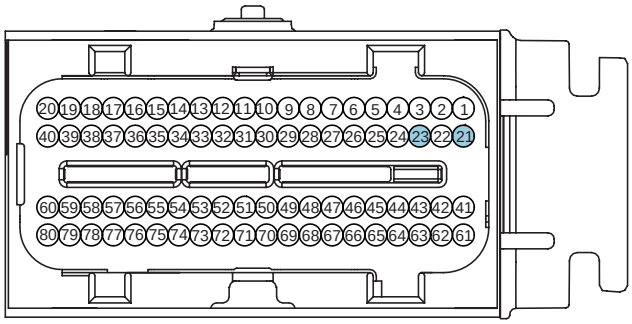

C30-A

PCM

SCMF16365L

MONITOR DTC STATUS E0862CEB

1. Check DTC Status

   1) Connect scantool to Data Link Connector(DLC).

   2) IG "ON".

   3) Select "Diagnostic Trouble Codes(DTCs)" mode, and then Press F4(DTAL) to check DTC's information from the DTCs menu

   4) Read "DTC Status" parameter.

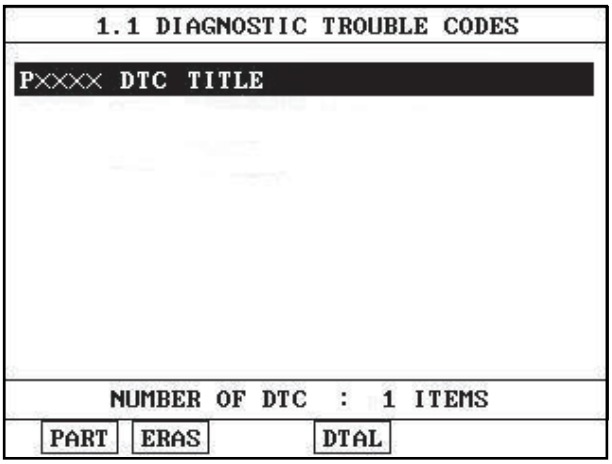

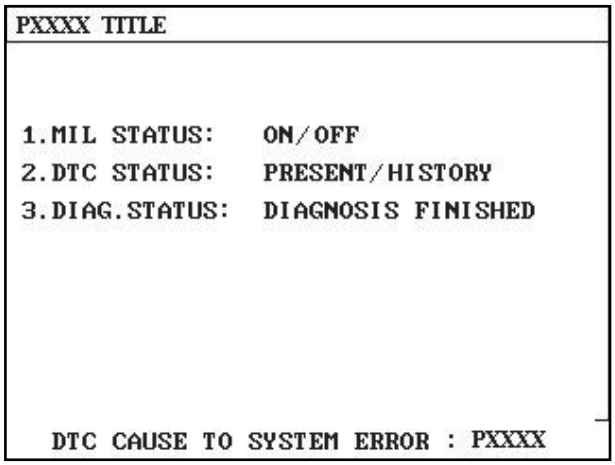

SCMF16159L

5) Is parameter displayed "Present fault"?

YES

▶ Go to "Terminal and connector inspection" procedure.

NO

▶ Fault is intermittent caused by poor contact in the sensor's and/or PCM's connector or was repaired and PCM memory was not cleared. Thoroughly check connectors for looseness, poor connection, ending, corrosion, contamination, deterioration, or damage. Repair or replace as necessary and go to "Verification of Vehicle Repair" procedure.

TERMINAL AND CONNECTOR INSPECTION EEADF250

1. Many malfunctions in the electrical system are caused by poor harness and terminals. Faults can also be caused by interference from other electrical systems, and mechanical or chemical damage.
2. Thoroughly check connectors for looseness, poor connection, bending, corrosion, contamination, deterioration, or damage.
3. Has a problem been found?

YES

▶ Repair as necessary and go to "Verification of Vehicle Repair" procedure

NO

▶ Go to " Power Circuit Inspection " procedure.

POWER CIRCUIT INSPECTION E758E10E

1. Check voltage
   1) IG Key "OFF".
   2) Disconnect the PCM connector.
   3) IG Key "ON" and keep the brake taking off.
   4) Measure the voltage between terminal C30-A (21) of PCM connector and chassis ground.
   5) Measure the voltage between terminal C30-A (23) of PCM connector and chassis ground .
   6) Keep the brake stepping on.
   7) Measure the voltage between terminal C30-A (21) of PCM connector and chassis ground.
   8) Measure the voltage between terminal C30-A (23) of PCM connector and chassis ground .

SPECIFICATION :

Item	During taking off the brake	During stepping on the brake
Brake Lamp Switch	0V	Battery voltage
Brake Switch	Battery voltage	0V

9) Is the measured voltage within specification ?

YES

▶ Thoroughly check connectors for looseness, poor connection, bending, corrosion, contamination, deterioration, or damage. Repair as necessary and go to "Verification of Vehicle Repair" procedure.

NO

▶ Go to "Check open in harness" as follows.

2. Check open in harness

1) IG Key "OFF".

2) Disconnect the brake switch and PCM connector.

3) Measure the resistance between terminal C30-A(21) of PCM harness connector and terminal 4 of Brake switch harness side.

4) Measure the resistance between terminal C30-A(23) of PCM harness connector and terminal 2 of Brake switch harness side.

Specification : Approx. below 1Ω

5) Is the measured resistance within specification ?

YES

▶ Go to "Check voltagen" procedure.

NO

▶ Repair open in circuit and go to "Verification of Vehicle Repair" procedure.

3. Check voltage

1) IG Key "OFF".

2) Disconnect the brake switch connector.

3) Measure the voltage between brake lamp switch terminal and chassis ground.

4) Measure the voltage between brake switch terminal and chassis ground.

5) IG Key "ON".

6) Measure the voltage between brake lamp switch terminal and chassis ground.

7) Measure the voltage between brake switch terminal and chassis ground.

SPECIFICATION :

Item	During taking off the brake	During stepping on the brake
Brake Lamp Switch	0V	Battery voltage
Brake Switch	Battery voltage	0V

8) Is the measured voltage within specification ?

YES

▶ Substitute with a known - good brake switch and check for proper operation. If the problem is corrected, replace brake switch and go to "Verification of Vehicle Repair" procedure.

NO

▶ Check the fuse between battery and brake switch.
▶ Repair open or short in power circuit of brake switch and go to "Verification of Vehicle Repair" procedure.

VERIFICATION OF VEHICLE REPAIR E8BE4E53

After a repair, it is essential to verify that the fault has been corrected.

1. Monitor and record the Freeze Frame Data for the Diagnostic Trouble Code(DTC) which has been diagnosed.
2. Using a Scantool, Clear the DTCs
3. Operate the vehicle within conditions noted in the freeze frame data or enable conditions
4. Monitor that all rediness test have been verified as " Complete "
5. Are any DTCs present ?

YES

▶ Go to the applicable troubleshoooting procedure.

NO

▶ System is performing to specification at this time.

DTC P0506 IDLE AIR CONTROL SYSTEM-RPM LOWER THAN EXPECTED

COMPONENT LOCATION EA62E8A4

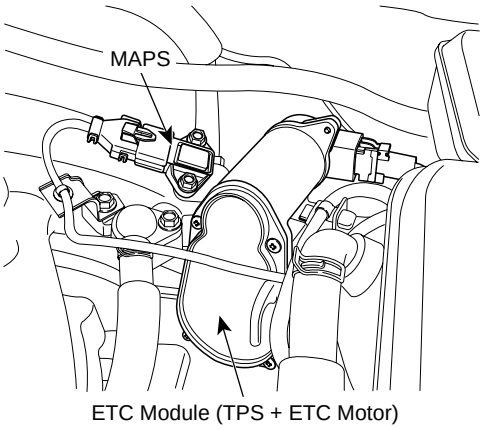

SCMF16192L

GENERAL DESCRIPTION E4D4857B

The idle speed is controlled by the Electrical Throttle Control(ETC) System. ETC system is composed of the throttle motor to operate the throttle valve and the throttle position sensor to detect the opening angle of the throttle valve, the accelerator pedal position sensor to detect the accelerator pedal position and the one valve type throttle body. The ECM controls the throttle motor to provide the proper throttle valve opening angle for the target idle speed.

DTC DESCRIPTION E0E16B88

Checking idle RPM under detecting condition, if if the idle speed is 100RPM below desired idle speed, PCM sets P0506. MIL(Malfunction Indication Lamp) turns on when the malfunction lasts till cosecutive 2 driving cycle.

DTC DETECTING CONDITION EBD800A3

Item	Detecting Condition	Possible cause
DTC Strategy	• Determines if a low idle condition exists.	• Poor connection • Intake/Exhaust system for blockage • Throttle plate for carbon deposits • Faulty ETS motor • Faulty TPS • Faulty ETS system • Faulty PCM
Enable Conditions	• Normal Idle conditions • Canister Purge Fuel Flow ≤ 100 • Barometric Pressure 〉 72kPa • Engine running ≥ 2 sec • Air Intake Temperature ≥ -20℃ (-4˚F) • Coolant Temperature ≥ 0℃ (32˚F) • 11V ≤ Ignition Voltage ≤ 16V • Above conditions met period 〉 3 sec	
Thresh old value	• Real engine speed - Target engine speed 〈 -100rpm	
Diagnosis Time	• Continuous	
MIL On Condition	• 2 driving cycles	

MONITOR DTC STATUS E6751FA9

1. Check DTC Status

1) Connect scantool to Data Link Connector(DLC).

2) IG "ON".

3) Select "Diagnostic Trouble Codes(DTCs)" mode, and then Press F4(DTAL) to check DTC's information from the DTCs menu

4) Read "DTC Status" parameter.

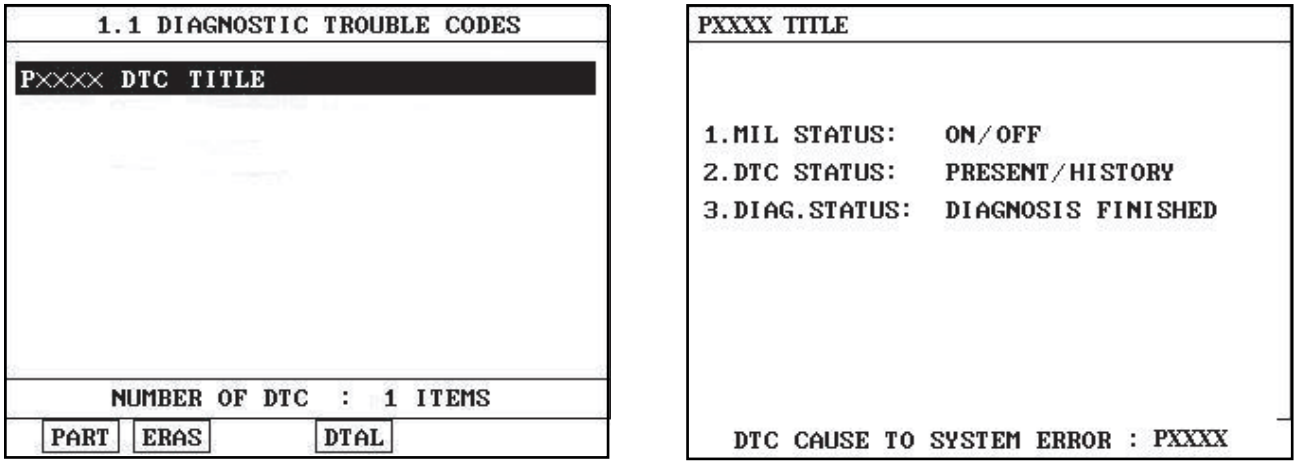

SCMF16159L

5) Is parameter displayed "Present fault"?

YES

▶ Go to "Terminal and connector inspection" procedure.

NO

▶ Fault is intermittent caused by poor contact in the sensor's and/or PCM's connector or was repaired and PCM memory was not cleared. Thoroughly check connectors for looseness, poor connection, ending, corrosion, contamination, deterioration, or damage. Repair or replace as necessary and go to "Verification of Vehicle Repair" procedure.

TERMINAL AND CONNECTOR INSPECTION EAC4DDC3

1. Many malfunctions in the electrical system are caused by poor harness and terminals. Faults can also be caused by interference from other electrical systems, and mechanical or chemical damage.

2. Thoroughly check connectors for looseness, poor connection, bending, corrosion, contamination, deterioration, or damage.

3. Has a problem been found?

YES

▶ Repair as necessary and go to "Verification of Vehicle Repair" procedure

NO

▶ Go to " System Inspection " procedure

SYSTEM INSPECTION ECD0849A

1. Check intake/exhaust system for blockage

   1) Visually/physically inspect the following items:
      - Air cleaner filter element for excessive dirt or for any foreign objects
      - Hoses of intake system for blockage
      - Throttle body inlet for damage or for any foreign objects
      - Throttle plate for carbon deposits
      - Restricted exhaust system

   2) Has a problem been found in any of the above areas?

      YES

      ▶ Replace or repair as necessary and go to "Verification of Vehicle Repair" procedure

      NO

      ▶ Go to "Visually check ETS System" as below

2. Visually check ETS System

   1) Ignition "OFF"

   2) Remove the air hose between MAF sensor and Throttle body.

   3) Visually check the overall ETS system(Throttle valve,ETS motor,APS and TPS).

   4) Has a problem been found?

      YES

      ▶ Repair or replace as necessary and go to "Verification of Vehicle Repair" procedure.

      NO

      ▶ Go to " Component Inspection" procedure.

COMPONENT INSPECTION EDF78774

1. Check ETS motor

   1) Ignition "OFF"

   2) Disconnect ETS motor connector

   3) Measure resistance between terminals "1" and "2" of the ETS motor connector.

Specification: Approx. 1.275 ~ 1.725Ω at 20℃(68 °F)

   4) Is the measured resistance within specifications?

      YES

      ▶ Go to "Check TPS" as below

      NO

▶ Substitute with a known-good ETS motor and check for proper operation. If the problem is corrected, replace ETS motor and then do "ETS Initialization" and go to "Verification of Vehicle Repair" procedure.

2. Check TPS

1) Disconnect TPS connector and measure resistance between terminals 4 and 8 of the TPS connector.

Specification : Approx. 4.0~6.0kΩ (with throttle valve fully closed) at 20°C(68°F)

2) Disconnect TPS connector and measure resistance between terminals 1 and 5 of the TPS connector.

SPECIFICATION:

Item	Sensor Resistance at 20℃ (68°F)
TPS 1	4.0 ~ 6.0 kΩ
TPS 2	2.72 ~ 4.08 kΩ

3) Are the TPS resistance within specifications?

YES

▶ Substitute with a known-good PCM and check for proper operation. If the problem is corrected,replace PCM and then go to "Verification of Vehicle Repair" procedure. If PCM needs to be replaced, do "ETS Initialization" after it is replaced.

NO

▶ Substitute with a known-good TPS and check for proper operation.If the problem is corrected, replace TPS and then do "ETS Initialization". And go to "Verification of Vehicle Repair" procedure.

※ Procedure of ETS Initialization
1. Erase the trouble codes on PCM
2. Turn the ignition key off and keep this condition until the main relay is turned off.(It will takes 10 second)
3. Turn ignition key on more than 1second to record the throttle motor position on the EEPROM

VERIFICATION OF VEHICLE REPAIR EDACDFAA

After a repair, it is essential to verify that the fault has been corrected.

1. Monitor and record the Freeze Frame Data for the Diagnostic Trouble Code(DTC) which has been diagnosed.
2. Using a Scantool, Clear the DTCs
3. Operate the vehicle within conditions noted in the freeze frame data or enable conditions
4. Monitor that all rediness test have been verified as " Complete "
5. Are any DTCs present ?

YES

▶ Go to the applicable troubleshoooting procedure.

NO

▶ System is performing to specification at this time.

DTC P0507 IDLE AIR CONTROL SYSTEM-RPM HIGHER THAN EXPECTED

COMPONENT LOCATION EECC48BE

Refer to DTC P0506.

GENERAL DESCRIPTION E1B8DE35

Refer to DTC P0506.

DTC DESCRIPTION EC7F26BC

Checking idle RPM from under detecting condition, if the idle speed is more than 200 RPM above desired idle speed, PCM sets P0507. MIL(Malfunction Indication Lamp) turns on when the malfunction lasts till cosecutive 2 driving cycle.

DTC DETECTING CONDITION E4304A42

Item	Detecting Condition	Possible cause
DTC Strategy	• Determines if a high idle condition exists.	• Poor connection • Intake system/Vapor hoses for air leakage or disconnection • Faulty Accelerator cable • Faulty ETS motor • Faulty TPS • Faulty ETS system • Faulty PCM
Enable Conditions	• Normal Idle conditions • Canister Purge Fuel Flow ≤ 100 • Barometric Pressure 〉 72kPa • Engine running ≥ 2 sec • Air Intake Temperature ≥ -20℃ (-4˚F) • Coolant Temperature ≥ 0℃ (32˚F) • 11V ≤ Ignition Voltage ≤ 16V • Above conditions met period 〉 3 sec	
Thresh old value	• Real engine speed - Target engine speed 〉 200rpm	
Diagnosis Time	• Continuous	
MIL On Condition	• 2 driving cycles	

MONITOR DTC STATUS EB848DDC

Refer to DTC P0506.

TERMINAL AND CONNECTOR INSPECTION E294E0D6

Refer to DTC P0506.

SYSTEM INSPECTION E41F9115

1. Check intake/exhaust system for blockage

   1) Visually/physically inspect the following items:
      - Intake system for air leakage
      - Vapor hoses for cracks or disconnection

   2) Has a problem been found in any of the above areas?

      YES

▶ Replace or repair as necessary and go to "Verification of Vehicle Repair" procedure

NO

▶ Go to "Visually check ETS System" as below

2. Visually check ETS System

1) Ignition "OFF"

2) Remove the air hose between MAF sensor and Throttle body.

3) Visually check the overall ETS system(Throttle valve,ETS motor,APS and TPS).

4) Has a problem been found?

YES

▶ Repair or replace as necessary and go to "Verification of Vehicle Repair" procedure.

NO

▶ Go to " Component Inspection" procedure.

COMPONENT INSPECTION E38D6FBD

1. Check Accelerator Cable

1) Ignition "OFF" & Engine "OFF"

2) Check free play of accelerator Cable

Specification 1.0 ~ 3.0mm(0.04 ~ 0.12 in)

3) Is the measured resistance within specifications?

YES

▶ Go to "Check TPS" as below

NO

▶ Substitute with a known-good ETS motor and check for proper operation. If the problem is corrected, replace ETS motor and then do "ETS Initialization" and go to "Verification of Vehicle Repair" procedure.

2. Check ETS motor

1) Ignition "OFF"

2) Disconnect ETS motor connector

3) Measure resistance between terminals "1" and "2" of the ETS motor connector.

Specification: Approx. 1.275 ~ 1.725Ω at 20℃(68 °F)

Item	Sensor Resistance
Coll Resistance (Ω)	1.275 ~ 1.725Ω (20℃)

4) Are the TPS resistance within specifications?

YES

▶ Go to "Check TPS" as below

NO

▶ Substitute with a known-good ETS motor and check for proper operation. If the problem is corrected, replace ETS motor and then do "ETS Initialization" and go to "Verification of Vehicle Repair" procedure.

3. Check TPS

1) Disconnect TPS connector and measure resistance between terminals 4 and 8 of the TPS connector.

Specification : Approx. 4.0~6.0kΩ (with throttle valve fully closed) at 20°C(68°F)

2) Disconnect TPS connector and measure resistance between terminals 1 and 5 of the TPS connector.

SPECIFICATION:

Item	Sensor Resistance
TPS 1	4.0 ~ 6.0 kΩ (20℃)
TPS 2	2.72 ~ 4.08 kΩ (20℃)

3) Are the TPS resistance within specifications?

YES

▶ Substitute with a known-good PCM and check for proper operation. If the problem is corrected,replace PCM and then go to "Verification of Vehicle Repair" procedure. If PCM needs to be replaced, do "ETS Initialization" after it is replaced.

NO

▶ Substitute with a known-good TPS and check for proper operation.If the problem is corrected, replace TPS and then do "ETS Initialization". And go to "Verification of Vehicle Repair" procedure.

※ Procedure of ETS Initialization
1. Erase the trouble codes on PCM
2. Turn the ignition key off and keep this condition until the main relay is turned off.(It will takes 10 second)
3. Turn ignition key on more than 1second to record the throttle motor position on the EEPROM

VERIFICATION OF VEHICLE REPAIR E77B3B94

Refer to DTC P0506.

DTC P0532 A/C REFRIGERANT PRESSURE SENSOR "A" CIRCUIT LOW INPUT

COMMPONENT LOCATION ECBA4F4B



SCMF16368L

GENERAL DESCRIPTION E092D000

The ECM(Engine Control Module) receives pressure signal in the A/C refrigerant high pressure side from the A/C refrigerant pressure sensor. This input indicates how much load the A/C compressor is putting on the engine and is one of the factors used by the ECM in order to determine the idle air control position for the idle speed. The circuits consist of a 5V reference and a ground, both provided by the ECM, and a signal from the sensor. The signal is a voltage which is proportional to the A/C pressure from 0 to 5V. Low pressure produces a low voltage signal and high pressure a high-voltage signal.

DTC DESCRIPTION EC914995

Checking output signals from A/C pressure sensor under detecting condition, if an signal below 0.25V lasts for more than 10 sec., PCM sets P0532.

DTC DETECTING CONDITION E858ED9E

Item	Detecting Condition	Possible cause
DTC Strategy	• Detects sensor signal short to low voltage	• Poor connection • Open in power circuit • Open or short to ground in signal circuit • Faulty A/C pressure sensor • Faulty PCM
Enable Conditions	• Engine works	
Thresh old value	• Sensor output voltage 〈 0.25V	
Diagnosis Time	• Continuous (More than 10 seconds failure for every 20 seconds test)	
MIL On Condition	• DTC only (NO MIL ON)	

SPECIFICATION E428FF4C

Pressure(psi)	13.7	127.4	241.2	355.0	468.8
Voltage(V)	0.5	1.5	2.5	3.5	4.5

SCHEMATIC DIAGRAM E445C178

[CIRCUIT DIAGRAM]

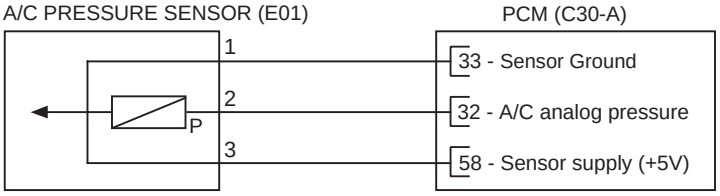

[CONNECTION INFORMATION]

Terminal	Connected to	Function
1	PCM C30-A (33)	Sensor Ground
2	PCM C30-A (32)	A/C analog pressure
3	PCM C30-A (58)	Sensor supply (+5V)

[HARNESS CONNECTOR]

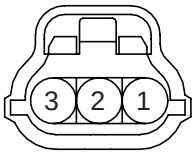

E01

A/C PRESSURE SENSOR

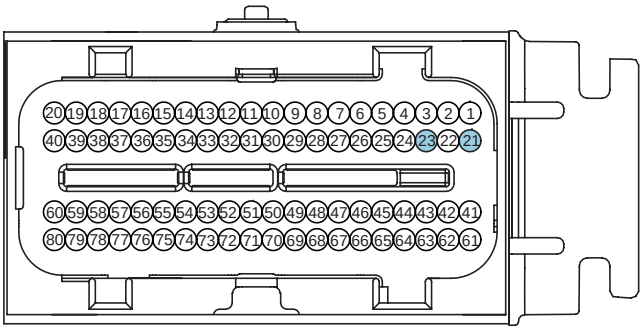

C30-A

PCM

SCMF16369L

SIGNAL WAVEFORM AND DATA EB03F274

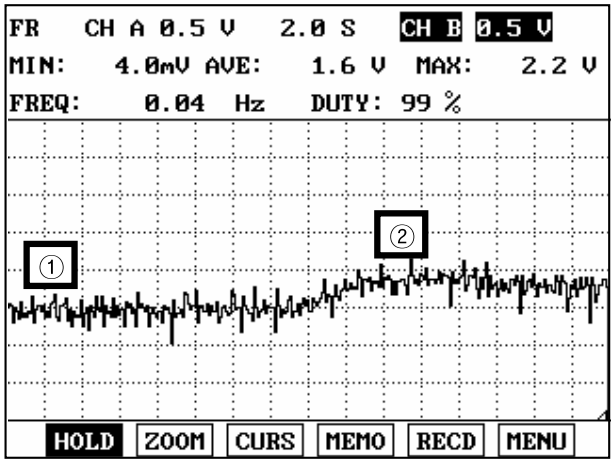

① - A/C OFF & idle state
② - A/C ON & idle state

EGRF884A

MONITOR DTC STATUS EB6B770A

1. Check DTC Status

   1) Connect scantool to Data Link Connector(DLC).

   2) IG "ON".

   3) Select "Diagnostic Trouble Codes(DTCs)" mode, and then Press F4(DTAL) to check DTC's information from the DTCs menu

   4) Read "DTC Status" parameter.

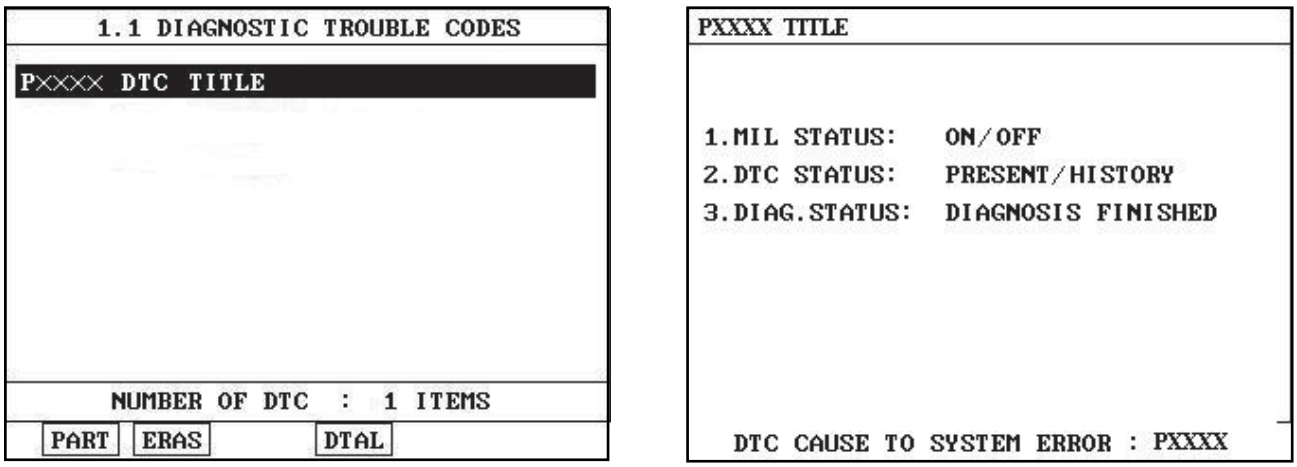

SCMF16159L

5) Is parameter displayed "Present fault"?

YES

▶ Go to "Terminal and connector inspection" procedure.

NO

▶ Fault is intermittent caused by poor contact in the sensor's and/or PCM's connector or was repaired and PCM memory was not cleared. Thoroughly check connectors for looseness, poor connection, ending, corrosion, contamination, deterioration, or damage. Repair or replace as necessary and go to "Verification of Vehicle Repair" procedure.

TERMINAL AND CONNECTOR INSPECTION E243BD27

1. Many malfunctions in the electrical system are caused by poor harness and terminals. Faults can also be caused by interference from other electrical systems, and mechanical or chemical damage.
2. Thoroughly check connectors for looseness, poor connection, bending, corrosion, contamination, deterioration, or damage.
3. Has a problem been found?

YES

▶ Repair as necessary and go to "Verification of Vehicle Repair" procedure

NO

▶ Go to " Power Circuit Inspection " procedure.

POWER CIRCUIT INSPECTION EF2BA5DE

1. IG Key "OFF".
2. Disconnect the A/C pressure sensor connector.
3. IG Key "ON".
4. Measure the voltage between terminal 3 of A/C pressure sensor harness connector and chassis ground.

Specification : approx. 5V

5. Is the measured voltage within specification ?

YES

▶ Go to "Signal circuit inspection" procedure.

NO

▶ Repair Open or Short to ground in A/C pressure sensor power circuit and go to "Verification of Vehicle Repair" procedure.

SIGNAL CIRCUIT INSPECTION E5715370

1. Check short to ground inspection

   1) IG Key "OFF".

   2) Disconnect A/C pressure sensor and PCM connector.

   3) Measure the resistance between terminal 2 of A/C pressure sensor harness connector and chassis ground.

Specification : Infinite

   4) Is the measured resistance within specification ?

YES

▶ Go to "Check open in harness" procedure.

NO

▶ Repair Short to ground in A/C pressure sensor signal circuit and go to "Verification of Vehicle Repair" procedure.

2. Check open in harness

   1) IG Key "OFF".

   2) Disconnect A/C pressure sensor and PCM connector.

   3) Measure the resistance between terminal C30-A (2) of A/C pressure sensor harness connector and terminal 32 of PCM harness connector.

Specification : Approx. below 1Ω

   4) Is the measured resistance within specification ?

YES

▶ Go to "Component inspection" procedure.

NO

▶ Repair Open in A/C pressure signal circuit and go to "Verification of Vehicle Repair" procedure.

COMPONENT INSPECTION E4DCCBE8

1. A/C pressure sensor inspection

   1) IG Key "OFF" and connect the scantool.

   2) Connect the probe to A/C pressure sensor signal and select the oscilloscope in the menu.

   3) Check the waveform with acceleration and deceleration after engine start.

SPECIFICATION :

Pressure(psi)	13.7	127.4	241.2	355.0	468.8
Voltage(V)	0.5	1.5	2.5	3.5	4.5

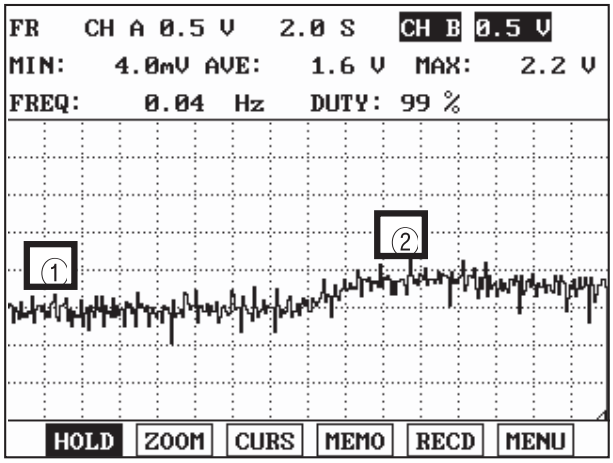

① - A/C OFF & Idle

② - A/C ON & Idle

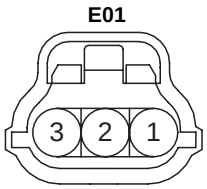

1. A/C pressure sensor ground
2. A/C pressure sensor signal
3. A/C pressure sensor power

SCMF16373L

   4) Is the measured waveform of A/C pressure sensor normal?

YES

▶ Substitute with a known - good PCM and check for proper operation. If the problem is corrected, replace PCM and go to "Verification of Vehicle Repair" procedure.

NO

▶ Substitute with a known - good A/C pressure sensor and check for proper operation. If the problem is corrected, replace A/C pressure sensor and go to "Verification of Vehicle Repair" procedure.

NOTE

There is a memory reset function on scantool that can erase optional parts automatically detected and memorized by PCM. After testing PCM on the vehicle, use this function to reuse the PCM on the others

VERIFICATION OF VEHICLE REPAIR E2DAA8D6

After a repair, it is essential to verify that the fault has been corrected.

1. Monitor and record the Freeze Frame Data for the Diagnostic Trouble Code(DTC) which has been diagnosed.

2. Using a Scantool, Clear the DTCs

3. Operate the vehicle within conditions noted in the freeze frame data or enable conditions
4. Monitor that all rediness test have been verified as " Complete "
5. Are any DTCs present ?

YES

▶ Go to the applicable troubleshoooting procedure.

NO

▶ System is performing to specification at this time.

DTC P0533 A/C REFRIGERANT PRESSURE SENSOR "A" CIRCUIT HIGH INPUT

COMMPONENT LOCATION EA049922

Refer to DTC P0532.

GENERAL DESCRIPTION E2E00DD0

Refer to DTC P0532.

DTC DESCRIPTION EFD3B85E

Checking output signals from A/C pressure sensor under detecting condition, if an signal above 4.65V lasts for more than 10 sec., PCM sets P0533.

DTC DETECTING CONDITION EC676D4D

Item	Detecting Condition	Possible cause
DTC Strategy	• Detects sensor signal short to high voltage	• Poor connection • Short to battery in signal circuit • Open in ground circuit • Faulty A/C pressure sensor • Faulty PCM
Enable Conditions	• Engine works	
Thresh old value	• Sensor output voltage 〉 4.65V	
Diagnosis Time	• Continuous (More than 10 seconds failure for every 20 seconds test)	
MIL On Condition	• DTC only (NO MIL ON)	

SPECIFICATION EF478CAD

Refer to DTC P0532.

SCHEMATIC DIAGRAM E4925B57

Refer to DTC P0532.

SIGNAL WAVEFORM AND DATA E636CEEB

Refer to DTC P0532.

MONITOR DTC STATUS E263372C

Refer to DTC P0532.

TERMINAL AND CONNECTOR INSPECTION EECBB251

Refer to DTC P0532.

POWER CIRCUIT INSPECTION E24F7E47

1. IG Key "OFF".
2. Disconnect the A/C pressure sensor connector.
3. IG Key "ON".
4. Measure the voltage between terminal 3 of A/C pressure sensor harness connector and chassis ground.

Specification : approx. 5V

5. Is the measured voltage within specification ?

YES

▶ Go to "Ground circuit inspection" procedure.

NO

▶ Repair Open in power circuit and go to "Verification of Vehicle Repair" procedure.

GROUND CIRCUIT INSPECTION EE3A1DF0

1. IG Key "OFF".
2. Disconnect the A/C pressure sensor connector.
3. IG Key "ON".
4. Measure the voltage between terminal 3 of A/C pressure sensor harness connector and chassis ground. (Fig A)
5. Measure the voltage between terminal 3 and terminal 1 of A/C pressure sensor harness connector. (Fig B)

Specification : The Difference between "A" and "B" is below 200mV.

6. Is the measured voltage within specification ?

YES

▶ Go to "Signal circuit inspection" procedure.

NO

▶ Repair as necessary and go to "Verification of Vehicle Repair" procedure.

SIGNAL CIRCUIT INSPECTION EDC3237B

1. Voltage inspection
   1) IG Key "OFF".
   2) Disconnect the A/C pressure sensor connector.
   3) IG Key "ON".
   4) Measure the voltage between terminal 2 of A/C pressure sensor harness connector and chassis ground.

Specification : Approx. 0V

5) Is the measured voltage within specification ?

YES

▶ Go to "Component inspection" procedure.

NO

▶ Go to "Check short to battery in harness" procedure.

2. Check short to battery in harness

1) IG Key "OFF".

2) Disconnect A/C pressure sensor connector and PCM connector.

3) Measure the resistance between terminal 2 and terminal 3 of A/C pressure sensor harness connector.

Specification : Infinite

4) Is the measured resistance within specification ?

YES

▶ Go to "Component inspection" procedure.

NO

▶ Repair Short in signal circuit and go to "Verification of Vehicle Repair" procedure.

COMPONENT INSPECTION E5E87679

1. A/C pressure sensor inspection

1) IG Key "OFF" and connect the scantool.

2) Connect the probe to A/C pressure sensor signal and select the oscilloscope in the menu.

3) Check the waveform with acceleration and deceleration after engine start.

SPECIFICATION :

Pressure(psi)	13.7	127.4	241.2	355.0	468.8
Voltage(V)	0.5	1.5	2.5	3.5	4.5

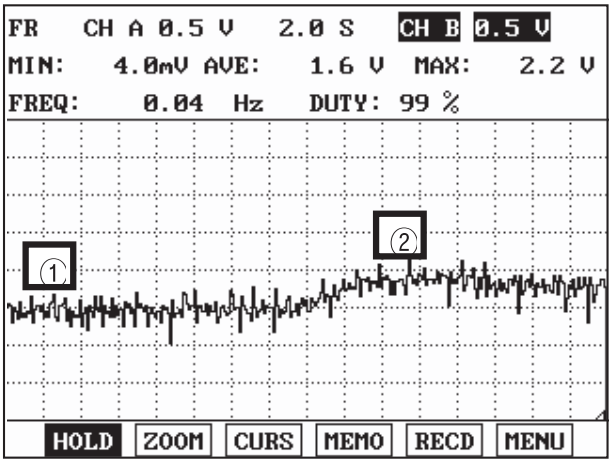

① - A/C OFF & Idle

② - A/C ON & Idle

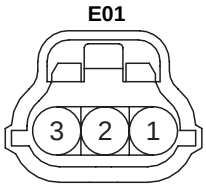

1. A/C pressure sensor ground
2. A/C pressure sensor signal
3. A/C pressure sensor power

SCMF16373L

4) Is the measured waveform of A/C pressure sensor normal?

YES

▶ Substitute with a known - good PCM and check for proper operation. If the problem is corrected, replace PCM and go to "Verification of Vehicle Repair" procedure.

NO

▶ Substitute with a known - good A/C pressure sensor and check for proper operation. If the problem is corrected, replace A/C pressure sensor and go to "Verification of Vehicle Repair" procedure.

NOTE

There is a memory reset function on scantool that can erase optional parts automatically detected and memorized by PCM. After testing PCM on the vehicle, use this function to reuse the PCM on the others

VERIFICATION OF VEHICLE REPAIR E04CD0ED

Refer to DTC P0532.

DTC P0562 SYSTEM VOLTAGE LOW

COMMPONENT LOCATION E4822353

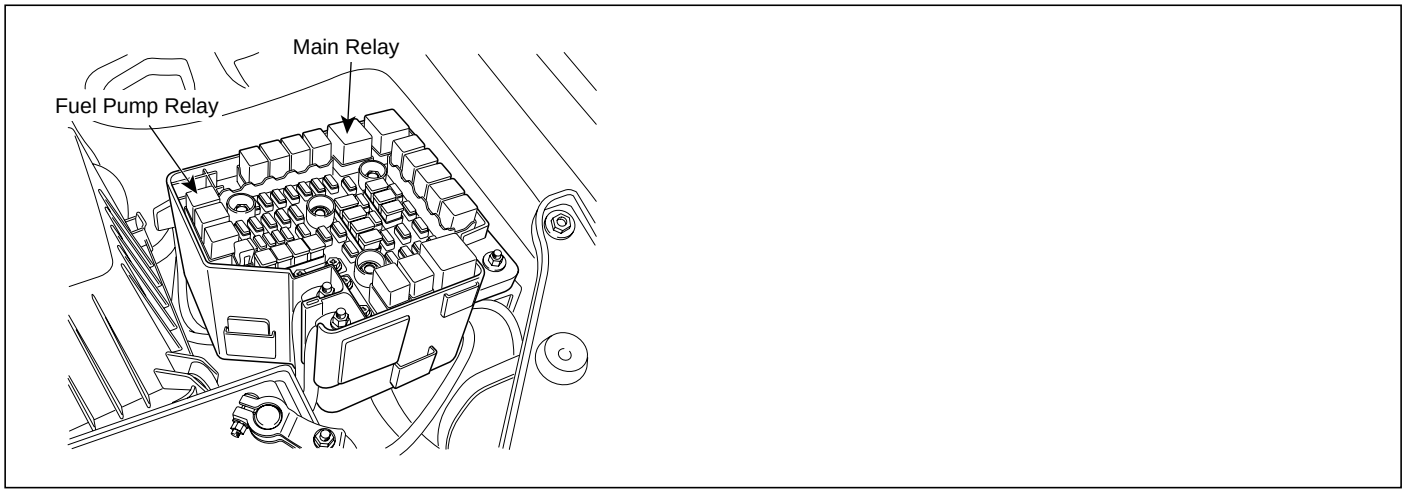

SCMF16254L

GENERAL DESCRIPTION EE0D9898

The ECM provides ground to one side of the coil of the main relay and the other side is connected to the battery. The ECM monitors battery voltage and the voltage after the main relay.

DTC DESCRIPTION E745289C

System Voltage is the ignition voltage potential at the Powertrain Control Module (PCM).PCM measures and compares voltage from ignition key and each relay. With this mechanism, PCM knows if the main relay switch turns on after IG on or if turns OFF after IG off.
During engine running, if battery voltage is below 11V, PCM sets P0562. MIL(Malfunction Indication Lamp) turns on when the malfunction lasts till cosecutive 2 driving cycle.

DTC DETECTING CONDITION ED806959

Item	Detecting Condition	Possible cause
DTC Strategy	• Voltage too low	• Poor connection • Open in power circuit • Faulty charging system • Faulty main relay • Faulty PCM
Enable Conditions	• Engine works • 11V ≤ Battery voltage ≤ 16V	
Thresh old value	• System voltage 〈 11V	
Diagnosis Time	• Continuous	
MIL On Condition	• 2 driving cycles	

SPECIFICATION EC9C973F

Coil Resistance	70Ω ~ 120Ω

SCHEMATIC DIAGRAM EAED338F

[CIRCUIT DIAGRAM]

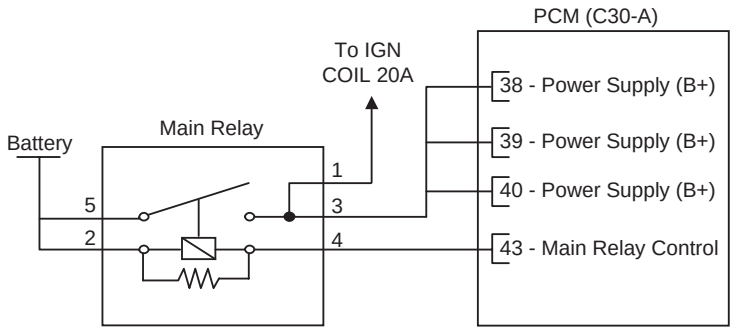

[CONNECTION INFORMATION]

Terminal	Connected to	Function
1	IGN COIL 20A	Power Supply (B+)
2	Battery	Battery Power (B+)
3	PCM C30-A (38)	Power Supply (B+)
	PCM C30-A (39)	
	PCM C30-A (40)	
4	PCM C30-A (43)	Main Relay Control
5	Battery	Battery Power (B+)

[HARNESS CONNECTOR]

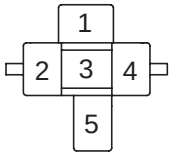

Main Relay

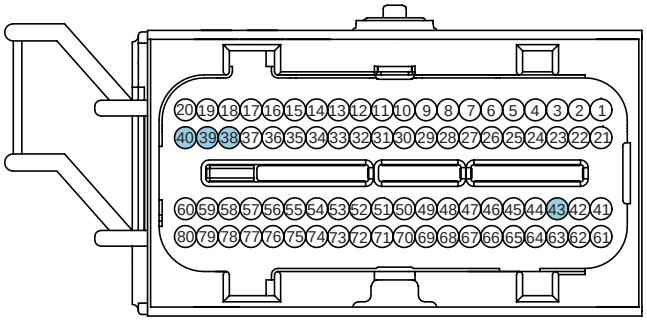

C30-A
PCM

SCMF16377L

MONITOR DTC STATUS EADFFF7A

1. Check DTC Status

   1) Connect scantool to Data Link Connector(DLC).

   2) IG "ON".

   3) Select "Diagnostic Trouble Codes(DTCs)" mode, and then Press F4(DTAL) to check DTC's information from the DTCs menu

   4) Read "DTC Status" parameter.

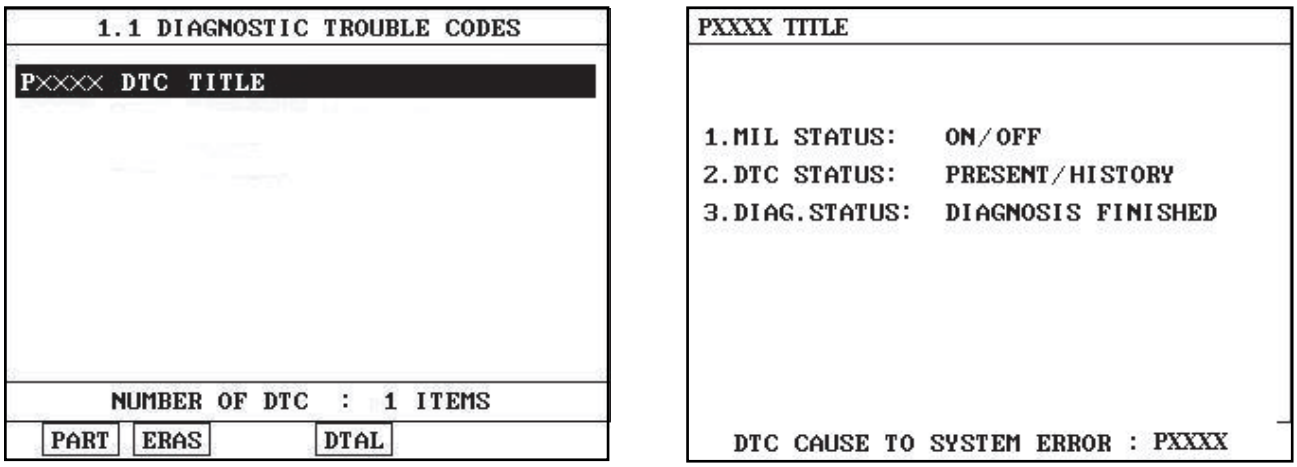

SCMF16159L

5) Is parameter displayed "Present fault"?

YES

▶ Go to "Terminal and connector inspection" procedure.

NO

▶ Fault is intermittent caused by poor contact in the sensor's and/or PCM's connector or was repaired and PCM memory was not cleared. Thoroughly check connectors for looseness, poor connection, ending, corrosion, contamination, deterioration, or damage. Repair or replace as necessary and go to "Verification of Vehicle Repair" procedure.

TERMINAL AND CONNECTOR INSPECTION EA71A57C

1. Many malfunctions in the electrical system are caused by poor harness and terminals. Faults can also be caused by interference from other electrical systems, and mechanical or chemical damage.
2. Thoroughly check connectors for looseness, poor connection, bending, corrosion, contamination, deterioration, or damage.
3. Has a problem been found?

YES

▶ Repair as necessary and go to "Verification of Vehicle Repair" procedure

NO

▶ Go to " Power Circuit Inspection " procedure.

POWER CIRCUIT INSPECTION EC50FD09

1. Power circuit inspection
   1) Key "OFF".
   2) Disconnect the main relay connector.
   3) Key "ON".

4) Measure the voltage between terminal 2 of main relay harness connector and chassis ground.

5) Measure the voltage between terminal 5 of main relay harness connector and chassis ground.

Specification : B+

6) Is the measured voltage within specification ?

YES

▶ Go to "Check open in harness" procedure.

NO

▶ Check the fuse between battery and main relay.
▶ Repair Open or Short to ground in power circuit and go to "Verification of Vehicle Repair" procedure

2. Check open in harness

1) Key "OFF".

2) Disconnect main relay and PCM connector.

3) Measure the resistance between terminal 3 of main relay harness connector and terminals C30-A (38,39,40) of PCM connector.

Specification : Approx. below 1Ω

4) Is the measured resistance within specification ?

YES

▶ Go to "Check short in harness" procedure.

NO

▶ Repair open in harness and go to "Verification of Vehicle Repair" procedure .

3. Check short in harness

1) Key "OFF".

2) Disconnect main relay and PCM connector.

3) Measure the resistance between terminal 3 of main relay harness connector and chassis ground.

Specification : Infinite

4) Is the measured resistance within specification ?

YES

▶ Go to "Control circuit inspection" procedure.

NO

▶ Repair short in harness and go to "Verification of Vehicle Repair" procedure.

CONTROL CIRCUIT INSPECTION E8FBAF69

1. Check short in harness

   1) Key "OFF".

   2) Disconnect main relay and PCM connector.

   3) Measure the resistance between terminal 4 of main relay harness connector and chasses ground.

Specification : Infinite

   4) Is the measured resistance within specification ?

   YES

   ▶ Go to "Check open in harness" procedure.

   NO

   5) ▶ Repair short in control harness and go to "Verification of Vehicle Repair" procedure.

2. Check open in harness

   1) Key "OFF".

   2) Disconnect main relay and PCM connector.

   3) Measure the resistance between terminal 4 of main relay harness connector and terminal C30-A (43) of PCM connector.

Specification : Approx. below 1Ω

   4) Is the measured resistance within specification ?

   YES

   ▶ Go to "Ground circuit inspection" procedure.

   NO

   ▶ Repair Open in control harness and go to "Verification of Vehicle Repair" procedure.

GROUND CIRCUIT INSPECTION E7E80518

1. Open in circuit inspection

   1) Key "OFF".

   2) Disconnect PCM connector.

   3) Measure the resistance between terminals C30-B (35,36) of PCM connector and chassis ground.

   4) Measure the resistance between terminals C30-B (37,38,39) of PCM connector and chassis ground.

Specification : Approx. blow 1Ω

   5) Is the measured resistance within specification ?

YES

▶ Go to "System inspection" procedure.

NO

▶ Repair Open in control harness and go to "Verification of Vehicle Repair" procedure.

SYSTEM INSPECTION EDF7965B

1. Check Alternator circuit

   1) Key "OFF".

   2) Disconnect alternator connector.

   3) Key "ON".

   4) Measure the voltage between terminal 2 of alternator and chassis gound.

   5) Measure the voltage between terminal 3 of alternator and chassis gound.

Specification : B+

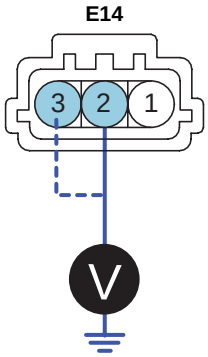

2. Cluster
(Charging MIL)
3. Sensing

SCMF16381L

   6) Is the measured voltage within specification?

YES

▶ Go to "Component inspection" procedure.

NO

▶ In case terminal 2 : Repair MIL circuit, MIL resistor or Open in circuit and go to "Verification of Vehicle Repair" procedure.
▶ In case terminal 3 : Repair the fuse between battery and Ignition switch, the fuse between Ignition switch and alternator or Open in circuit and go to "Verification of Vehicle Repair" procedure.

COMPONENT INSPECTION EDCC3570

1. Main relay inspection

1) Key "OFF".

2) Disconnect the main relay.

3) Measure the resistance between terminal 3 and 5 of main relay.

4) Measure the resistance between terminal 2 and 4 of main relay.

Specification : 70 ~ 120Ω

Terminal	Power approval
3 ~ 5	NO
2 ~ 4	YES (Approx. 70Ω ~ 120Ω)

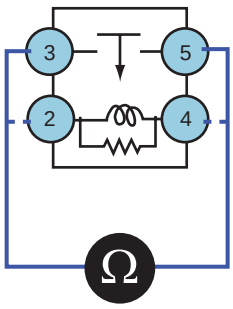

EGRF912A

5) Is the measured resistance within specification ?

YES

▶ Substitute with a known - good PCM and check for proper operation. If the problem is corrected, replace PCM and go to "Verification of Vehicle Repair" procedure.

NO

▶ Substitute with a known - good Main relay and check for proper operation. If the problem is corrected, replace Main relay and go to "Verification of Vehicle Repair" procedure.

NOTE

There is a memory reset function on scantool that can erase optional parts automatically detected and memorized by PCM. After testing PCM on the vehicle, use this function to reuse the PCM on the others

VERIFICATION OF VEHICLE REPAIR E558CCE6

After a repair, it is essential to verify that the fault has been corrected.

1. Monitor and record the Freeze Frame Data for the Diagnostic Trouble Code(DTC) which has been diagnosed.
2. Using a Scantool, Clear the DTCs
3. Operate the vehicle within conditions noted in the freeze frame data or enable conditions

4. Monitor that all rediness test have been verified as " Complete "
5. Are any DTCs present ?

YES

▶ Go to the applicable troubleshoooting procedure.

NO

▶ System is performing to specification at this time.

DTC P0563 SYSTEM VOLTAGE HIGH

COMMPONENT LOCATION E0D02FB6

Refer to DTC P0562.

GENERAL DESCRIPTION E325E8A3

Refer to DTC P0562.

DTC DESCRIPTION EEB19291

System Voltage is the ignition voltage potential at the Powertrain Control Module (PCM).PCM measures and compares voltage from ignition key and each relay. With this mechanism, PCM knows if the main relay switch turns on after IG on or if turns OFF after IG off.
During engine running, if battery voltage is above 16V, PCM sets P0563. MIL(Malfunction Indication Lamp) turns on when the malfunction lasts till cosecutive 2 driving cycle.

DTC DETECTING CONDITION E9F3B8D2

Item	Detecting Condition	Possible cause
DTC Strategy	• Voltage too high	• Poor connection • Short in circuit • Faulty charging system • Faulty main relay • Faulty PCM
Enable Conditions	• Engine works	
Thresh old value	• System voltage 〉 16V	
Diagnosis Time	• Continuous	
MIL On Condition	• 2 driving cycles	

SPECIFICATION EDE82ED2

Refer to DTC P0562.

SCHEMATIC DIAGRAM E7F9ACF9

Refer to DTC P0562.

MONITOR DTC STATUS E3098E3B

Refer to DTC P0562.

TERMINAL AND CONNECTOR INSPECTION E7B7184C

Refer to DTC P0562.

POWER CIRCUIT INSPECTION E52F7AA5

1. Power circuit inspection
   1) Key "OFF".
   2) Disconnect the main relay connector.

3) Key "ON".

4) Measure the voltage between terminal 2 of main relay harness connector and chassis ground.

5) Measure the voltage between terminal 5 of main relay harness connector and chassis ground.

Specification : B+

6) Is the measured voltage within specification ?

YES

▶ Go to "Check short in harness" procedure.

NO

▶ Repair Short in power harness and go to "Verification of Vehicle Repair" procedure.

2. Check short in harness

1) Key "ON".

2) Measure the voltage between terminal C30-A (38, 39, 40) of PCM harness terminal and chassis ground.

Specification : B+

3) Is the measured voltage within specification ?

YES

▶ Go to "System inspection" procedure.

NO

▶ Repair short in power harness and go to "Verification of Vehicle Repair" procedure .

SYSTEM INSPECTION ED02C2D0

1. Check Alternator circuit

1) Key "OFF".

2) Disconnect alternator connector.

3) Key "ON".

4) Measure the voltage between terminal 2 of alternator and chassis gound.

5) Measure the voltage between terminal 3 of alternator and chassis gound.

Specification : B+

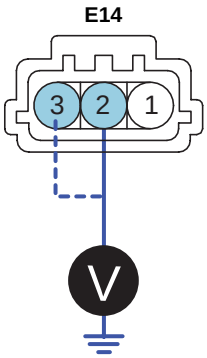

2. Instrument Panel
3. Sensing

SCMF16383L

6) Is the measured voltage within specification?

YES

▶ Go to "Component inspection" procedure.

NO

▶ Repair short in Sensing circuit or MIL circuit and go to "Verification of Vehicle Repair" procedure.

COMPONENT INSPECTION E2DE47BB

1. Main relay inspection

1) Key "OFF".

2) Disconnect the main relay.

3) Measure the resistance between terminal 3 and 5 of main relay.

4) Measure the resistance between terminal 2 and 4 of main relay.

Specification : 70 ~ 120Ω

Terminal	Power approval
3 ~ 5	NO
2 ~ 4	YES (Approx. 70Ω ~ 120Ω)

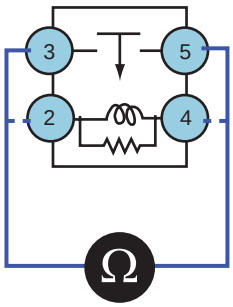

EGRF912A

5) Is the measured resistance within specification ?

YES

▶ Go to "Check Alternator" procedure.

NO

▶ Substitute with a known - good Main relay and check for proper operation. If the problem is corrected, replace Main relay and go to "Verification of Vehicle Repair" procedure.

2. Check Alternator

1) Key "OFF".

2) Check the tension of the belt.

3) Check Battery terminal and Alternator B+ terminal for looseness, corrosion or damage.

4) Engine "ON".

5) Operate electric equipments (Head lamp, Hot wire, etc).

6) accelerate engine to 2000 RPM and measure the battery voltage.

Specification : Approx. 12.5V ~ 14.5V

7) Is the measured voltage within specification ?

YES

▶ Substitute with a known - good PCM and check for proper operation. If the problem is corrected, replace PCM and go to "Verification of Vehicle Repair" procedure.

NO

▶ Substitute with a known - good Alternator and check for proper operation. If the problem is corrected, replace Alternator and go to "Verification of Vehicle Repair" procedure.

NOTE

There is a memory reset function on scantool that can erase optional parts automatically detected and memorized by PCM. After testing PCM on the vehicle, use this function to reuse the PCM on the others

VERIFICATION OF VEHICLE REPAIR E12F704A

Refer to DTC P0562.

DTC P0571 BRAKE SWITCH "A" CIRCUIT

GENERAL DESCRIPTION E05F03C8

The Stop lamp switch is used to judge whether the acceleration system is abnormal or not. The stop lamp switch has a duplex system(signals brake test or brake light) to memorize the abnormality when the signals of depressing and releasing the brake pedal are detected simultaneously.

DTC DESCRIPTION E729BD31

Checking input signals from brake lamp switch under detecting condition, if the operation state of brake lamp switch does not change for more than 3 sec., PCM sets P0571. MIL(Malfunction Indication Lamp) turns on when the malfunction lasts till cosecutive 2 driving cycle.

DTC DETECTING CONDITION E26B2635

Item	Detecting Condition	Possible cause
DTC Strategy	• PCM detects brake lamp input signal when vehicle stops.	• Poor connection • Open or short to ground in signal circuit • Faulty PCM
Enable Conditions	• Engine works • Vehicle speed signal is normal. • Vehicle speed 〉 20kph (during 1sec or more)	
Threshold value	• Vehicle speed 〈 3kph • Vehicle acceleration 〈 -6kph/s • Brake lamp "OFF" and not changing of brake lamp signal for more 3 sec.	
Diagnosis Time	• Continuous	
MIL On Condition	• 2 driving cycles	

SCHEMATIC DIAGRAM E3311F66

[CIRCUIT DIAGRAM]

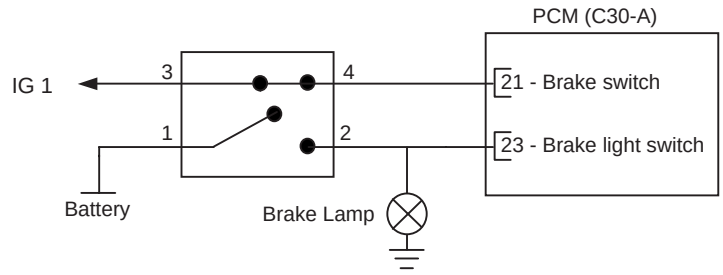

[CONNECTION INFORMATION]

Terminal	Connected to	Function
2	PCM C30-A (23)	Brake light switch
1	Battery	Power Supply (12V)
4	PCM C30-A (21)	Brake switch
3	Battery	Power Supply (12V)

[HARNESS CONNECTOR]

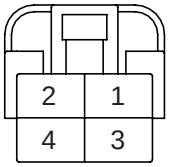

C54

STOP LAMP SWITCH

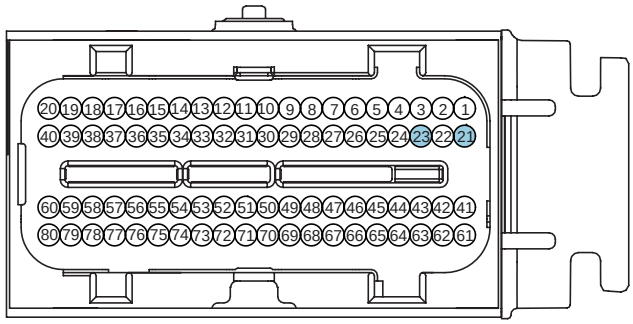

C30-A

PCM

SCMF16365L

MONITOR DTC STATUS EDDDACD9

1. Check DTC Status

   1) Connect scantool to Data Link Connector(DLC).

   2) IG "ON".

   3) Select "Diagnostic Trouble Codes(DTCs)" mode, and then Press F4(DTAL) to check DTC's information from the DTCs menu

   4) Read "DTC Status" parameter.

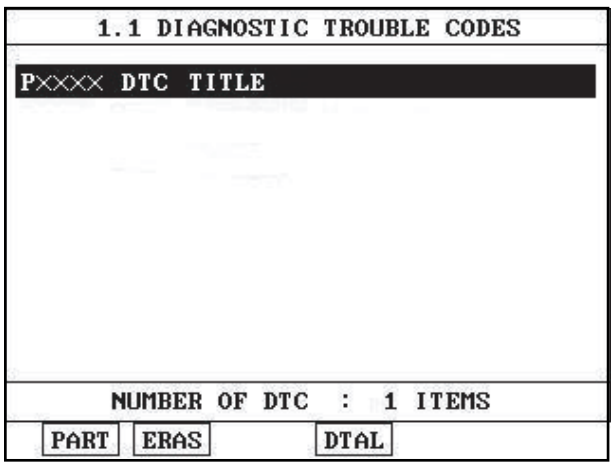

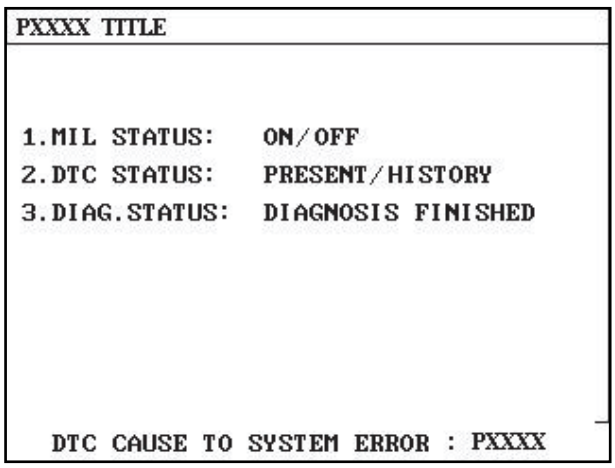

SCMF16159L

5) Is parameter displayed "Present fault"?

YES

▶ Go to "Terminal and connector inspection" procedure.

NO

▶ Fault is intermittent caused by poor contact in the sensor's and/or PCM's connector or was repaired and PCM memory was not cleared. Thoroughly check connectors for looseness, poor connection, ending, corrosion, contamination, deterioration, or damage. Repair or replace as necessary and go to "Verification of Vehicle Repair" procedure.

TERMINAL AND CONNECTOR INSPECTION EC369B30

1. Many malfunctions in the electrical system are caused by poor harness and terminals. Faults can also be caused by interference from other electrical systems, and mechanical or chemical damage.
2. Thoroughly check connectors for looseness, poor connection, bending, corrosion, contamination, deterioration, or damage.
3. Has a problem been found?

YES

▶ Repair as necessary and go to "Verification of Vehicle Repair" procedure

NO

▶ Go to " Power Circuit Inspection " procedure.

POWER CIRCUIT INSPECTION E96451A9

1. Check voltage
   1) IG "OFF".
   2) Disconnect the PCM connector.
   3) IG "ON" and ENG "OFF"
   4) During taking off the brake : Measure the voltage between terminal C30-A (23) of PCM harness connector and chassis ground.
   5) During stepping on the brake : Measure the voltage between terminal C30-A (23) of PCM harness connector and chassis ground.

SPECIFICATION :

Item	During taking off the brake	During stepping on the brake
Brake Lamp Switch	0V	Battery voltage
Brake Switch	Battery voltage	0V

6) Is the measured voltage within specification ?

YES

▶ Thoroughly check connectors for looseness, poor connection, bending, corrosion, contamination, deterioration, or damage. Repair as necessary and go to "Verification of Vehicle Repair" procedure.

NO

▶ Go to "Check open in harness" as follows.

2. Check open in harness

1) IG "OFF".

2) Disconnect the brake switch and PCM connector.

3) Measure the resistance between terminal 23 of PCM harness connector and terminal 2 of Brake switch harness side.

Specification : Approx. below 1Ω

4) Is the measured resistance within specification ?

YES

▶ Go to "Check voltage" as follows.

NO

▶ Repair open in circuit and go to "Verification of Vehicle Repair" procedure.

3. Check voltage

1) IG "OFF".

2) Disconnect the brake switch connector.

3) Measure the voltage between brake lamp switch terminal and chassis ground.

4) IG "ON" and ENG "OFF"

5) Measure the voltage between brake lamp switch terminal and chassis ground.

SPECIFICATION :

Item	During taking off the brake	During stepping on the brake
Brake Lamp Switch	Battery voltage	Battery voltage
Brake Switch	0V	Battery voltage

6) Is the measured voltage within specification ?

YES

▶ Substitute with a known - good brake switch and check for proper operation. If the problem is corrected, replace brake switch and go to "Verification of Vehicle Repair" procedure..

NO

▶ Check the fuse between battery and brake switch.
▶ Repair open or short in power circuit of brake switch and go to "Verification of Vehicle Repair" procedure.

VERIFICATION OF VEHICLE REPAIR E279FF74

After a repair, it is essential to verify that the fault has been corrected.

1. Monitor and record the Freeze Frame Data for the Diagnostic Trouble Code(DTC) which has been diagnosed.
2. Using a Scantool, Clear the DTCs
3. Operate the vehicle within conditions noted in the freeze frame data or enable conditions
4. Monitor that all rediness test have been verified as " Complete "
5. Are any DTCs present ?

YES

▶ Go to the applicable troubleshoooting procedure.

NO

▶ System is performing to specification at this time.

DTC P0601 EEPROM-CHECK SUM ERROR

COMPONENT LOCATION E229539F

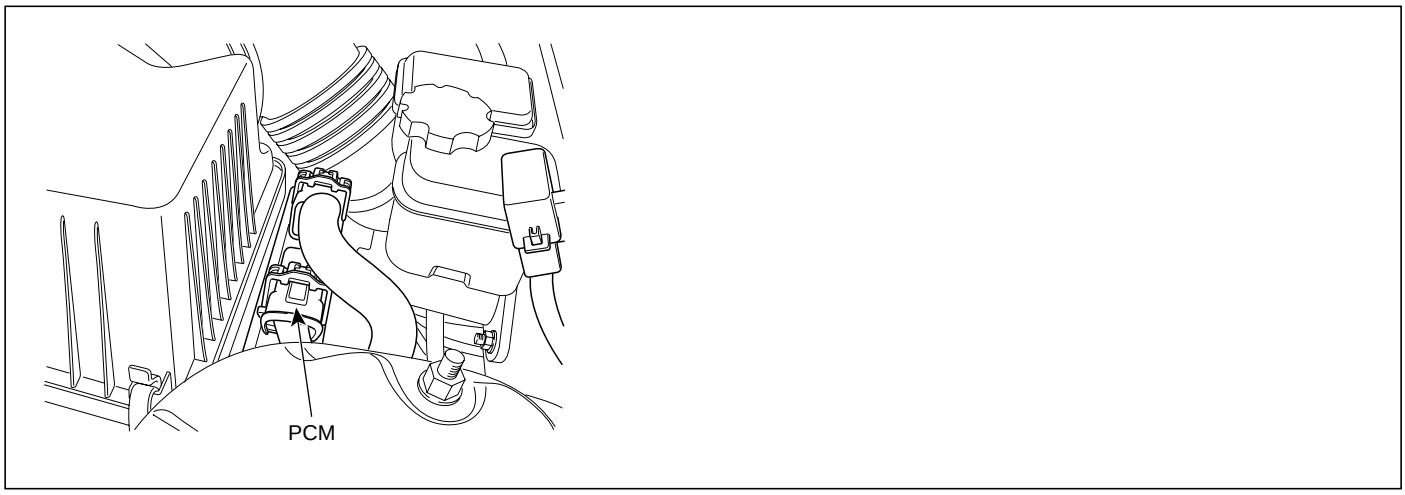

SCMF16386L

GENERAL DESCRIPTION E87E4D85

A malfunction is detected by using a checksum technique for verifying data. The digital data is composed of zeros and ones. A checksum is the total of all ones in a string of data. By comparing the checksum value with a stored value, a malfunction can be detected.

DTC DESCRIPTION E65068E8

If real checksum does not accord with memory checksum, PCM sets P0601 and MIL(Malfunction Indication Lamp) turns on.

DTC DETECTING CONDITION E38A3627

Item	Detecting Condition	Possible cause
DTC Strategy	• Checksum check	• Faulty PCM
Enable Conditions	• -	
Threshold value	• Discordance between the real checksum and the memorized checksum	
Diagnosis Time	• Continuous	
MIL On Condition	• 1 driving cycle	

MONITOR DTC STATUS E7BDFDA8

1. Check DTC Status

   1) Connect scantool to Data Link Connector(DLC).

   2) IG "ON".

   3) Select "Diagnostic Trouble Codes(DTCs)" mode, and then Press F4(DTAL) to check DTC's information from the DTCs menu

4) Read "DTC Status" parameter.

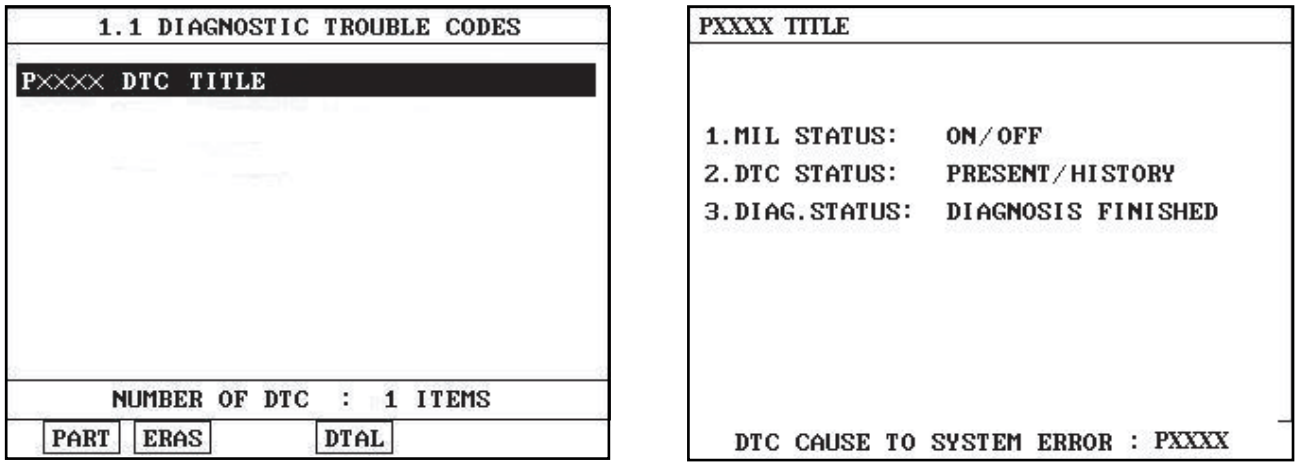

SCMF16159L

5) Is parameter displayed "Present fault"?

YES

▶ Go to "Terminal and connector inspection" procedure.

NO

▶ Fault is intermittent caused by poor contact in the sensor's and/or PCM's connector or was repaired and PCM memory was not cleared. Thoroughly check connectors for looseness, poor connection, ending, corrosion, contamination, deterioration, or damage. Repair or replace as necessary and go to "Verification of Vehicle Repair" procedure.

TERMINAL AND CONNECTOR INSPECTION E2E5805E

1. Many malfunctions in the electrical system are caused by poor harness and terminals. Faults can also be caused by interference from other electrical systems, and mechanical or chemical damage.

2. Thoroughly check connectors for looseness, poor connection, bending, corrosion, contamination, deterioration, or damage.

3. Has a problem been found?

YES

▶ Repair as necessary and go to "Verification of Vehicle Repair" procedure

NO

▶ Substitute with a known-good PCM and check for proper operation. If the problem is corrected,replace PCM and then go to "Verification of Vehicle Repair" procedure.

NOTE

There is a memory reset function on scantool that can erase optional parts automatically detected and memorized by PCM. After testing PCM on the vehicle, use this function to reuse the PCM on the others

VERIFICATION OF VEHICLE REPAIR EDF49698

After a repair, it is essential to verify that the fault has been corrected.

1. Monitor and record the Freeze Frame Data for the Diagnostic Trouble Code(DTC) which has been diagnosed.
2. Using a Scantool, Clear the DTCs
3. Operate the vehicle within conditions noted in the freeze frame data or enable conditions
4. Monitor that all rediness test have been verified as " Complete "
5. Are any DTCs present ?

YES

▶ Go to the applicable troubleshoooting procedure.

NO

▶ System is performing to specification at this time.

DTC P0602 EEPROM-PROGRAMING ERROR

COMPONENT LOCATION E6E49C3C

Refer to DTC P0601.

GENERAL DESCRIPTION EECB64CE

Refer to DTC P0601.

DTC DESCRIPTION E0CE496F

If CPU software version dose not accord with main CPU, PCM sets P0602.

DTC DETECTING CONDITION E88A3072

Item	Detecting Condition	Possible cause
DTC Strategy	• Check internal CPU	• Faulty PCM
Enable Conditions	• -	
Threshold value	• The version discordance among PCU S/W or Calibration	
Diagnosis Time	• Continuous	
MIL On Condition	• 1 driving cycle	

MONITOR DTC STATUS ED153DB8

Refer to DTC P0601.

TERMINAL AND CONNECTOR INSPECTION EB336C96

Refer to DTC P0601.

VERIFICATION OF VEHICLE REPAIR E499B411

Refer to DTC P0601.

DTC P0604 INTERNAL CONTROL MODULE RANDOM ACCESS MEMORY (RAM) ERROR

COMPONENT LOCATION ECDD00AC

Refer to DTC P0601.

GENERAL DESCRIPTION EC8E0935

Refer to DTC P0601.

DTC DESCRIPTION E7CA500D

If the RAM in PCM has errors, PCM sets P0604 and MIL(Malfunction Indication Lamp) turns on.

DTC DETECTING CONDITION E848AF67

Item	Detecting Condition	Possible cause
DTC Strategy	• Check internal CPU	• Faulty PCM
Enable Conditions	• -	
Threshold value	• RAM has errors	
Diagnosis Time	• Continuous	
MIL On Condition	• 1 driving cycle	

MONITOR DTC STATUS ECC7C404

Refer to DTC P0601.

TERMINAL AND CONNECTOR INSPECTION E6886EBD

Refer to DTC P0601.

VERIFICATION OF VEHICLE REPAIR EF1A07CB

Refer to DTC P0601.

DTC P0606 ECM/PCM PROCESSOR(ECM-SELF TEST FAILED)

COMPONENT LOCATION E6BA7101

Refer to DTC P0601.

GENERAL DESCRIPTION E8AE56A0

Refer to DTC P0601.

DTC DESCRIPTION E3F9D10A

Checking PCM under detecting condition, if internal error is detected, PCM sets P0606. And MIL(Malfunction Indication Lamp) turns on.

DTC DETECTING CONDITION EA082F6D

Item	Detecting Condition	Possible cause
DTC Strategy	• Check PCM internal error	• Faulty PCM
Enable Conditions	• 7V 〈 Battery voltage 〈 20V	
Threshold value	• PCM internal error (A/D unit error)	
Diagnosis Time	• Continuous	
MIL On Condition	• 1 driving cycle	

MONITOR DTC STATUS EB03A742

Refer to DTC P0601.

TERMINAL AND CONNECTOR INSPECTION E4C51C74

Refer to DTC P0601.

VERIFICATION OF VEHICLE REPAIR EB22E942

Refer to DTC P0601.

DTC P0638 THROTTLE ACTUATOR CONTROL RANGE/PERFORMANCE

COMPONENT LOCATION E39F0565

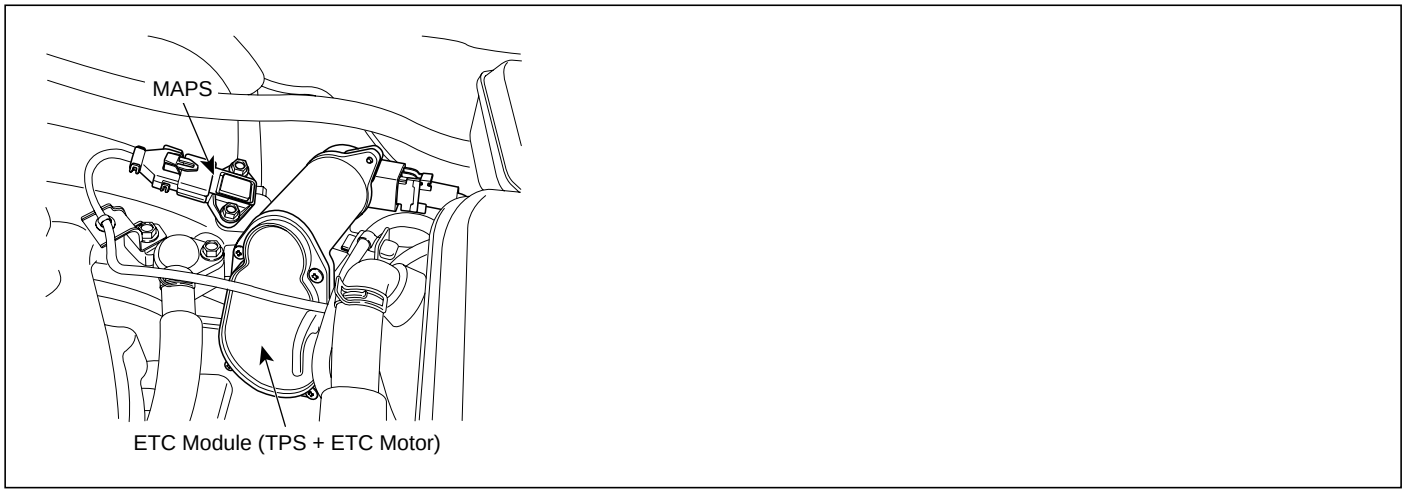

SCMF16192L

GENERAL DESCRIPTION EDD2D537

The Electronic Throttle Control(ETC) system is made of the components throttle body, Throttle Position Sensor(TPS)1 & 2 and Accelerator Position Sensor(APS) 1 & 2. The throttle body contains the actuator, the throttle plate and the throttle position sensor (potentiometer), which are integrated in one housing. The actuator consists of a DC motor with a two-stage gear. The opening angle of the throttle valve is detected by the throttle position sensor which is mounted on the throttle body. And it provides feedback to the ECM to control the throttle motor in order to control the throttle valve opening angle properly in response to the driving condition.

DTC DESCRIPTION EA375F92

Checking output signals from TPS every 8.5 sec. under detecting condition, if the difference between real and target throttle position is above the specified value, PCM sets P0638 and then MIL(Malfunction Indication Lamp) turns on.

DTC DETECTING CONDITION E411BDA4

Item		Detecting Condition	Possible cause
DTC Strategy		• ETS position control malfunction	• Throttle stuck • Open in motor circuit • Faulty motor • Faulty PCM
Enable Conditions		• Engine works • Battery voltage 〉 5V	
Thresh old value	Case1	• l real ETS motor & TPS value - target ETS motor & TPS value l 〉 4.5°	
	Case2	• When real Throttle position 〈36°, real throttle position - target throttle position 〈 - 4.5°	
	Case3	• real throttle position - target throttle position 〈 - 18°	
Diagnosis Time		• Continuous (More than 0.6 seconds failure for every 15.6 seconds test)	
MIL On Condition		• 1 driving cycle	

SPECIFICATION E58C81DC

Throttle opening (°)	Output voltage (V) [Verf = 5.0V]	
	TPS1	TPS2
0°	0.0V	5.0V
10°	0.5V	4.5V
20°	0.9V	4.1V
30°	1.4V	3.6V
40°	1.8V	3.2V
50°	2.3V	2.7V
60°	2.7V	2.3V
70°	3.2V	1.8V
80°	3.6V	1.4V
90°	4.1V	0.9V
100°	4.5V	0.5V
110°	5.0V	0.0V

SCHEMATIC DIAGRAM E32258ED

[CIRCUIT DIAGRAM]

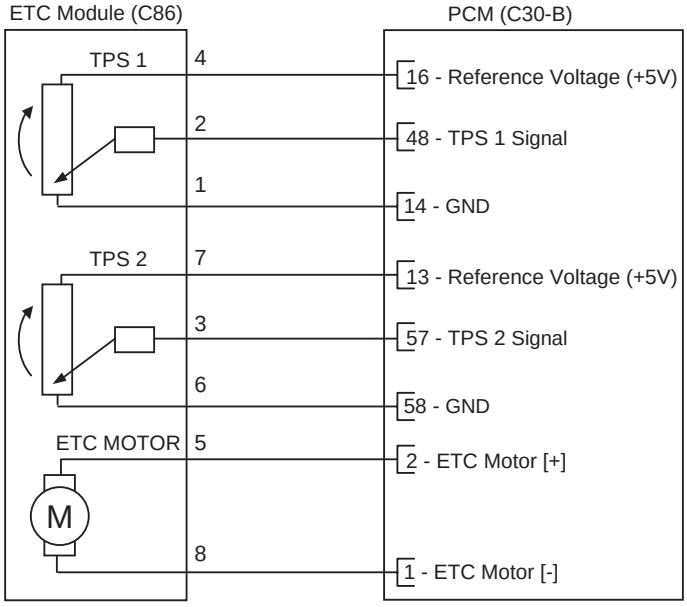

[CONNECTION INFORMATION]

Terminal	Connected to	Function
1	PCM C30-B (14)	TPS 1 Ground
2	PCM C30-B (48)	TPS 1 Signal
3	PCM C30-B (57)	TPS 2 Signal
4	PCM C30-B (16)	TPS 1 Reference Voltage (+5V)
5	PCM C30-B (2)	ETC Motor [+] Control
6	PCM C30-B (58)	TPS 2 Ground
7	PCM C30-B (13)	TPS 2 Reference Voltage (+5V)
8	PCM C30-B (1)	ETC Motor [-] Control

[HARNESS CONNECTORS]



C86

ETC MODULE

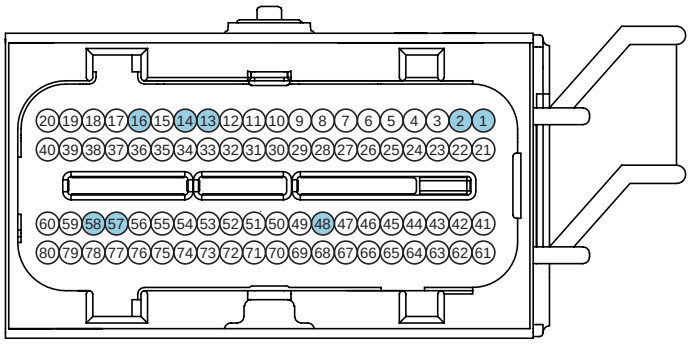

C30-B

PCM

SCMF16101L

SIGNAL WAVEFORM E48A6E0B

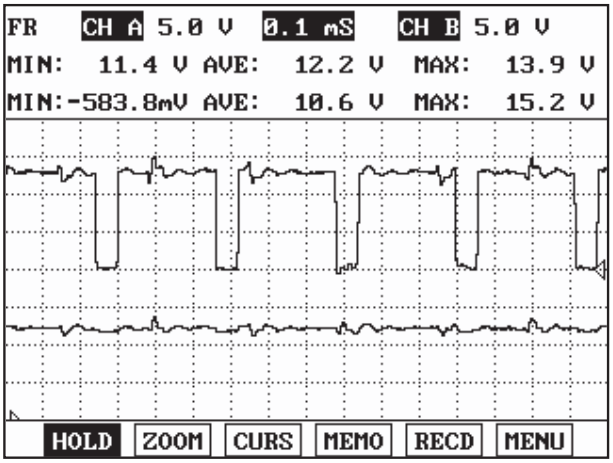

Fig. 1

Fig1) Signal waveform(+/-) instantly with accelerating

EGRF921A

MONITOR DTC STATUS EBABB1E4

1. Check DTC Status

   1) Connect scantool to Data Link Connector(DLC).

   2) IG "ON".

   3) Select "Diagnostic Trouble Codes(DTCs)" mode, and then Press F4(DTAL) to check DTC's information from the DTCs menu

   4) Read "DTC Status" parameter.

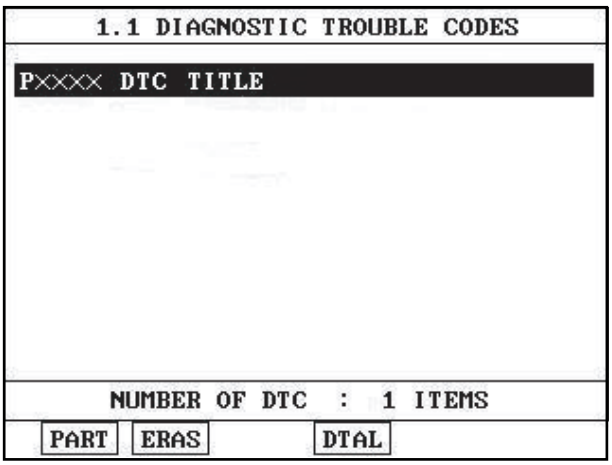

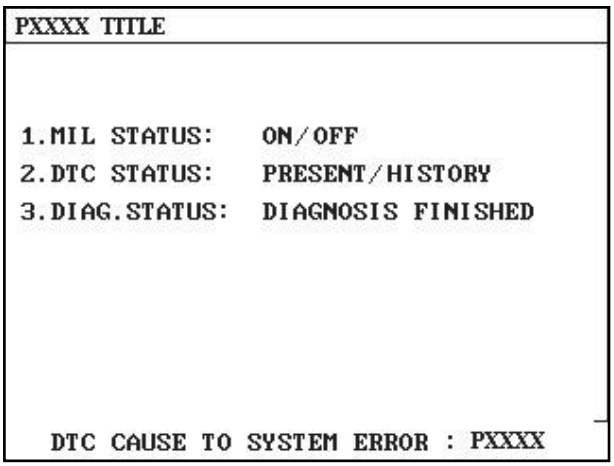

SCMF16159L

   5) Is parameter displayed "Present fault"?

   YES

   ▶ Go to "Terminal and connector inspection" procedure.

NO

▶ Fault is intermittent caused by poor contact in the sensor's and/or PCM's connector or was repaired and PCM memory was not cleared. Thoroughly check connectors for looseness, poor connection, ending, corrosion, contamination, deterioration, or damage. Repair or replace as necessary and go to "Verification of Vehicle Repair" procedure.

TERMINAL AND CONNECTOR INSPECTION E49C836E

1. Many malfunctions in the electrical system are caused by poor harness and terminals. Faults can also be caused by interference from other electrical systems, and mechanical or chemical damage.
2. Thoroughly check connectors for looseness, poor connection, bending, corrosion, contamination, deterioration, or damage.
3. Has a problem been found?

YES

▶ Repair as necessary and go to "Verification of Vehicle Repair" procedure

NO

▶ Go to " Control Circuit Inspection " procedure.

CONTROL CIRCUIT INSPECTION E3BADF5F

1. Check voltage
   1) IG "OFF".
   2) Disconnect ETS motor & TPS connector.
   3) IG "ON" and ENG "OFF"
   4) Measure the voltage between terminal 5,8 of ETS motor & TPS harness connector and chassis ground.

Specification : Approx. 12V

   5) Is the measured voltage within specification?

YES

▶ Go to "Component inspection" procedure.

NO

▶ Go to "Check open in harness" as follows.

2. Open in control circuit inspection
   1) IG "OFF"
   2) Disconnect ETS motor & TPS connector and PCM connector.
   3) Measure the resistance between terminal 5 of ETS motor & TPS harness connector and terminal C30-B (2) of PCM harness connector.

4) Measure the resistance between terminal 8 of ETS motor & TPS harness connector and terminal C30-B (1) of PCM harness connector.

Specification : Approx. below 1Ω

5) Is the measured resistance within specification ?

YES

▶ Go to "Component inspection" procedure.

NO

▶ Repair Open in motor harness and go to "Verification of Vehicle Repair" procedure.

COMPONENT INSPECTION EC9FEB92

1. Check throttle valve for stuck

1) IG "OFF".

2) Disconnect the air hose between throttle body and air mass flow sensor.

3) Check stuck on throttle valve.

4) Is the throttle valve normal?

YES

▶ Go to check "ETS motor resistance" as follows.

NO

▶ Repair or replace as necessary and go to "Verification of Vehicle Repair" procedure.

2. Check ETS motor resistance

1) IG "OFF".

2) Disconnect ETS motor & TPS connector.

3) Measure the resistance between terminal 5 and 8 of ETS motor & TPS connector(component side).

Specification : Approx. 1.275 ~ 1.725Ω @ 23℃ (73.4°F)

4) Is the measured resistance within specification?

YES

▶ Go to "ETC motor actuation test" procedure.

NO

▶ Substitute with a known - good ETC motor and check for proper operation. If the problem is corrected, replace ETC motor and go to "Verification of Vehicle Repair" procedure.

※ Procedure of ETS Initialization

1. Erase the trouble codes on PCM
2. Turn the ignition key off and keep this condition until the main relay is turned off.(It will takes 10 second)
3. Turn ignition key on more than 1second to record the throttle motor position on the EEPROM

3. ETC motor actuation test

1) IG "OFF".

2) Connect ETS motor & TPS connector.

3) After IG "ON", execute the "ETC motor actuation test" by Scantool.

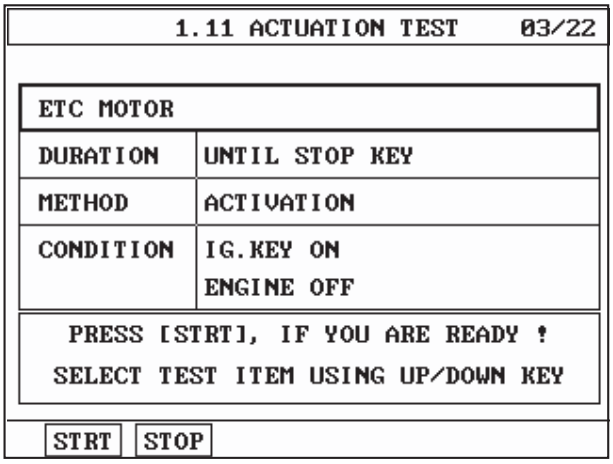

EGRF926A

4) Does the "ETC motor actuation test" execute normally?

YES

▶ Substitute with a known - good PCM and check for proper operation. If the problem is corrected, replace PCM and go to "Verification of Vehicle Repair" procedure.

NO

▶ Substitute with a known - good ETC motor and check for proper operation. If the problem is corrected, replace ETC motor and go to "Verification of Vehicle Repair" procedure.

※ Procedure of ETS Initialization
1. Erase the trouble codes on PCM
2. Turn the ignition key off and keep this condition until the main relay is turned off.(It will takes 10 second)
3. Turn ignition key on more than 1second to record the throttle motor position on the EEPROM

VERIFICATION OF VEHICLE REPAIR EEB6DD19

After a repair, it is essential to verify that the fault has been corrected.

1. Monitor and record the Freeze Frame Data for the Diagnostic Trouble Code(DTC) which has been diagnosed.

2. Using a Scantool, Clear the DTCs

3. Operate the vehicle within conditions noted in the freeze frame data or enable conditions

4. Monitor that all rediness test have been verified as " Complete "

5. Are any DTCs present ?

YES

▶ Go to the applicable troubleshoooting procedure.

NO

▶ System is performing to specification at this time.

DTC P0641 SENSOR REFERENCE VOLTAGE "A" CIRCUIT OPEN

GENERAL DESCRIPTION E15F66A1

The ECM provides a 5volt reference voltage to Throttle Position Sensor 1(TPS1). The ECM monitors reference voltage deviation from the power supply circuit of the sensors.

DTC DESCRIPTION EF6A2456

Checking the voltage from sensor power supply every 1.87 sec. under detecting condition, if the value within detecting condition lasts for more than 0.2 sec., PCM sets P0641. MIL(Malfunction Indicatin Lamp) turns on when the malfunction lasts till consecutive 2 driving cycle.

DTC DETECTING CONDITION E7552101

Item	Detecting Condition	Possible cause
DTC Strategy	• Sensor reference voltage check	• Short in sensor power supply line • Faulty PCM
Enable Conditions	• IG "ON"	
Threshold value	• Sensor supply power 〈 4.5V or 〉 5.5V	
Diagnosis Time	• Continuous (More than 0.2 seconds failure for every 1.87 seconds test)	
MIL On Condition	• 2 driving cycle	

SCHEMATIC DIAGRAM EC1AC7D9

[CIRCUIT DIAGRAM]

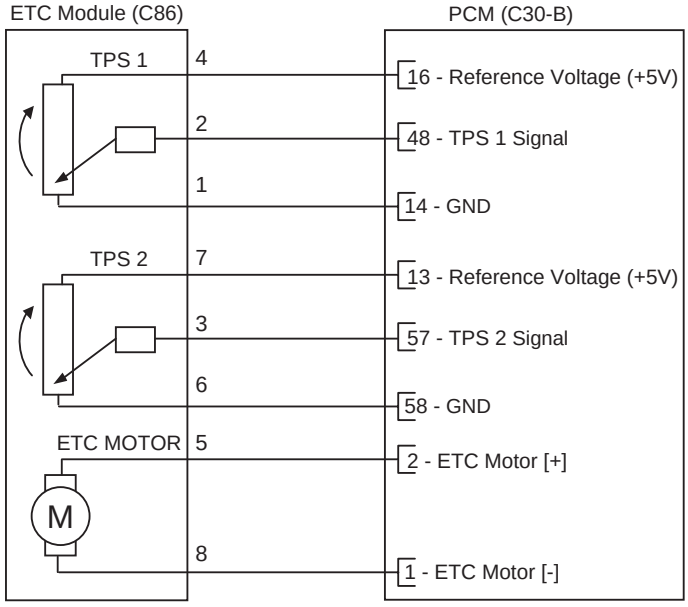

[CONNECTION INFORMATION]

Terminal	Connected to	Function
1	PCM C30-B (14)	TPS 1 Ground
2	PCM C30-B (48)	TPS 1 Signal
3	PCM C30-B (57)	TPS 2 Signal
4	PCM C30-B (16)	TPS 1 Reference Voltage (+5V)
5	PCM C30-B (2)	ETC Motor [+] Control
6	PCM C30-B (58)	TPS 2 Ground
7	PCM C30-B (13)	TPS 2 Reference Voltage (+5V)
8	PCM C30-B (1)	ETC Motor [-] Control

[HARNESS CONNECTORS]

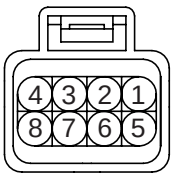

C86

ETC MODULE

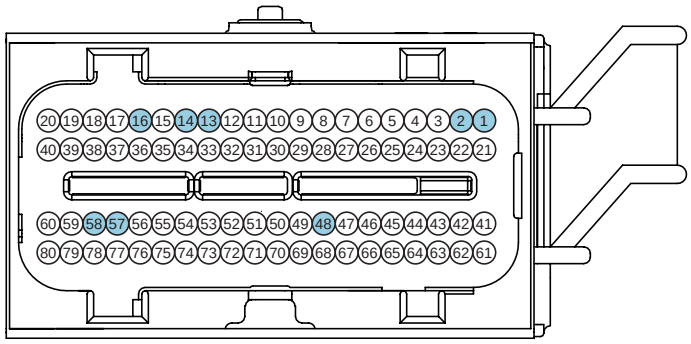

C30-B

PCM

SCMF16101L

MONITOR DTC STATUS EDB80F42

1. Check DTC Status

   1) Connect scantool to Data Link Connector(DLC).

   2) IG "ON".

   3) Select "Diagnostic Trouble Codes(DTCs)" mode, and then Press F4(DTAL) to check DTC's information from the DTCs menu

   4) Read "DTC Status" parameter.

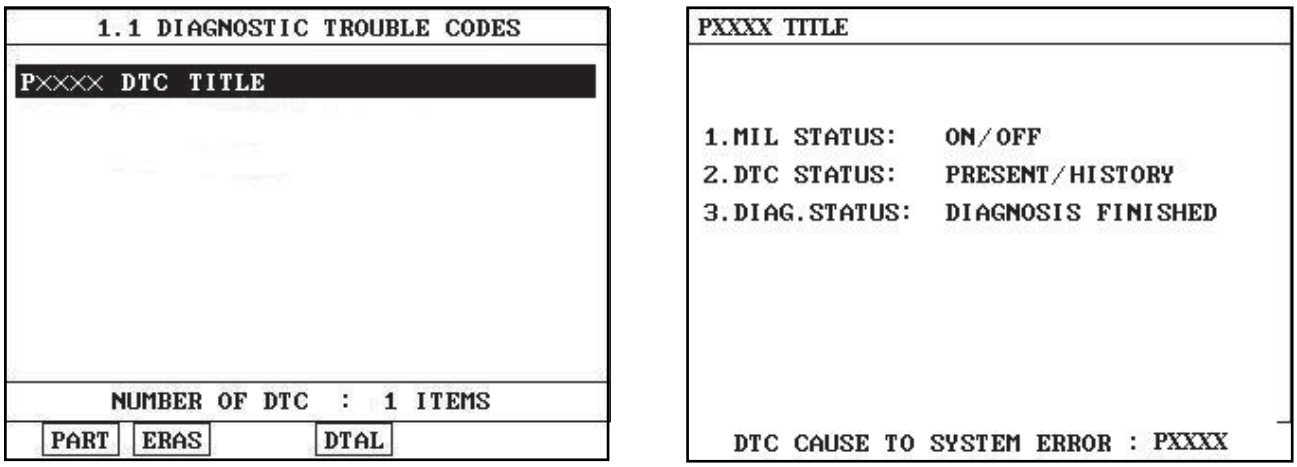

SCMF16159L

5) Is parameter displayed "Present fault"?

YES

▶ Go to "Terminal and connector inspection" procedure.

NO

▶ Fault is intermittent caused by poor contact in the sensor's and/or PCM's connector or was repaired and PCM memory was not cleared. Thoroughly check connectors for looseness, poor connection, ending, corrosion, contamination, deterioration, or damage. Repair or replace as necessary and go to "Verification of Vehicle Repair" procedure.

TERMINAL AND CONNECTOR INSPECTION EC1C2088

1. Many malfunctions in the electrical system are caused by poor harness and terminals. Faults can also be caused by interference from other electrical systems, and mechanical or chemical damage.
2. Thoroughly check connectors for looseness, poor connection, bending, corrosion, contamination, deterioration, or damage.
3. Has a problem been found?

YES

▶ Repair as necessary and go to "Verification of Vehicle Repair" procedure

NO

▶ Go to " Power Circuit Inspection " procedure.

POWER CIRCUIT INSPECTION E1B2DC07

1. Check voltage
   1) IG "OFF".
   2) Disconnect TPS connector.
   3) IG "ON" and ENG "OFF"

4) Measure the voltage between terminal 4 of TPS harness connector and chassis ground.

Specification : Approx. 5V

5) Is the measured voltage within specification ?

YES

▶ Thoroughly check connectors for looseness, poor connection, bending, corrosion, contamination, deterioration, or damage. Repair as necessary and go to "Verification of Vehicle Repair" procedure.

NO

▶ Go to "Check short in power harness" as follows.

2. Check short in power harness

1) IG "OFF".

2) Disconnect TPS connector and PCM connector.

3) Measure the resistance between terminal 4 and 5 of TPS harness connector.

4) Measure the resistance between terminal 4 and 8 of TPS harness connector.

5) Measure the resistance between terminal 4 and 6 of TPS harness connector.

6) Measure the resistance between terminal 4 and 1 of TPS harness connector.

Specification : Infinite

7) Is the measured resistance within specification ?

YES

▶ Substitute with a known - good PCM and check for proper operation.
▶ If the problem is corrected, replace PCM and go to "Verification of Vehicle Repair" procedure.

NO

▶ Repair Short in power circuit and go to "Verification of Vehicle Repair" procedure.

※ Procedure of ETS Initialization
1. Erase the trouble codes on PCM
2. Turn the ignition key off and keep this condition until the main relay is turned off.(It will takes 10 second)
3. Turn ignition key on more than 1second to record the throttle motor position on the EEPROM

VERIFICATION OF VEHICLE REPAIR E34B8F1E

After a repair, it is essential to verify that the fault has been corrected.

1. Monitor and record the Freeze Frame Data for the Diagnostic Trouble Code(DTC) which has been diagnosed.
2. Using a Scantool, Clear the DTCs
3. Operate the vehicle within conditions noted in the freeze frame data or enable conditions
4. Monitor that all rediness test have been verified as " Complete "

5. Are any DTCs present ?

YES

▶ Go to the applicable troubleshoooting procedure.

NO

▶ System is performing to specification at this time.

DTC P0646 A/C CLUTCH RELAY CONTROL CIRCUIT LOW

GENERAL DESCRIPTION EDDD5D8D

The A/C clutch relay is activated if the A/C switch is operated while the blower is running and system operation is enabled by the ECM. When A/C is requested, the Engine Control Module(ECM) provides a ground path to the A/C clutch relay control circuit. When the relay circuit is grounded, the A/C clutch relay is energized. The ECM delays grounding the relay circuit for a short time, so the ECM can adjust the engine idle speed for the additional load. The ECM will temporarily de-energized the A/C clutch relay for one or more of the following conditions:

- Full acceleration when the throttle is at WOT.(Wide Open Throttle)
- Risk of overheating: Engine coolant temp. exceeds threshold value
- A/C system pressure exceeds threshold value
- Engine starting

DTC DESCRIPTION E104ED52

PCM monitors inputted voltage through A/C compressor relay. Checking voltage every 10 sec. under detecting condition, if the voltage lower than the specified value is detected for more than 5 sec., PCM sets P0646.

DTC DETECTING CONDITION EC2A54B9

Item	Detecting Condition	Possible cause
DTC Strategy	• Detects circuit short to low voltage	• Poor connection • Open or short to ground in A/C relay circuit • Faulty A/C relay • Faulty PCM
Enable Conditions	• After 0.5 sec under conditions below • No DTC exists • Engine works • 11V ≤ Battery voltage ≤ 16V	
Threshold value	• Open or short to ground	
Diagnosis Time	• Continuous (More than 5 seconds failure for every 10 seconds test)	
MIL On Condition	• DTC only (NO MIL ON)	

SPECIFICATION E4795868

Coil Resistance
70Ω ~ 120Ω

SCHEMATIC DIAGRAM E7EB010D

[CIRCUIT DIAGRAM]

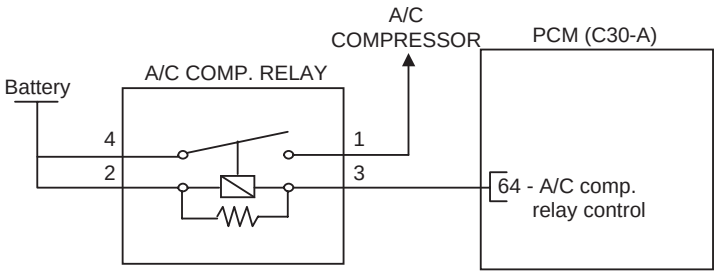

[CONNECTION INFORMATION]

Terminal	Connected to	Function
1	A/C COMPRESSOR	COMPRESSOR Supply
2	Battery	Power Supply (B+)
3	PCM C30-A (64)	A/C comp. relay control
4	Battery	Power Supply (B+)

[HARNESS CONNECTOR]

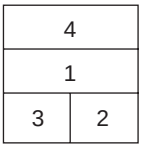

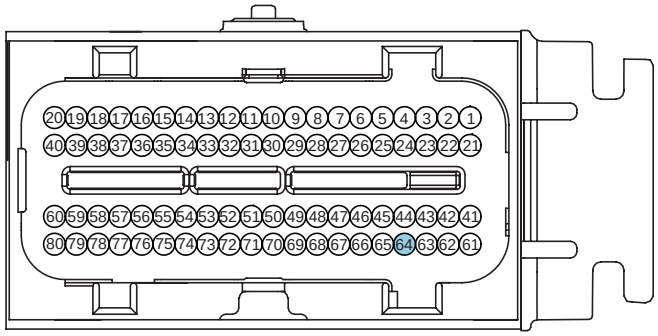

C30-A
PCM

SCMF16392L

MONITOR DTC STATUS E94C88FB

1. Check DTC Status

   1) Connect scantool to Data Link Connector(DLC).

   2) IG "ON".

   3) Select "Diagnostic Trouble Codes(DTCs)" mode, and then Press F4(DTAL) to check DTC's information from the DTCs menu

   4) Read "DTC Status" parameter.

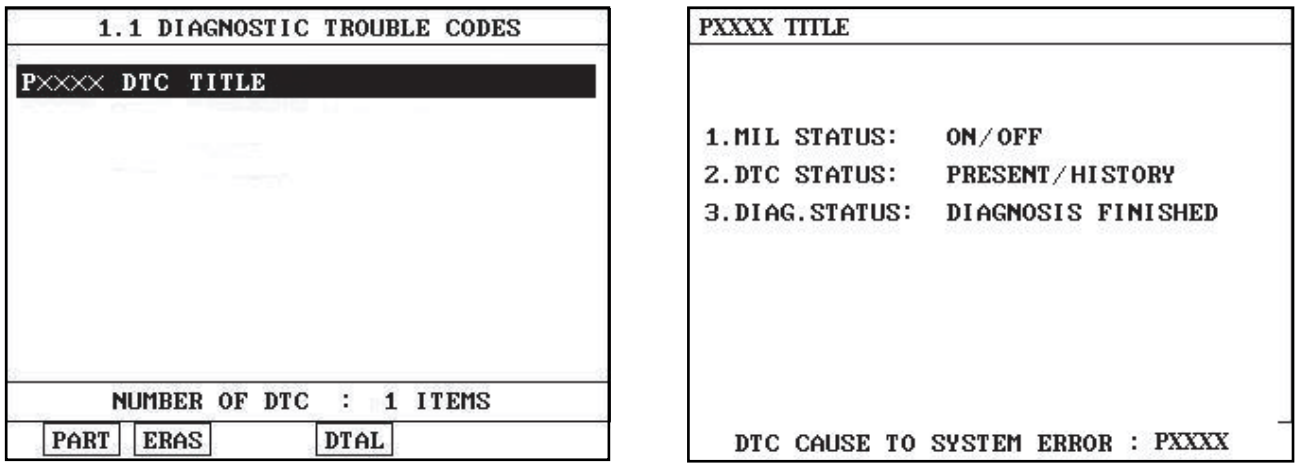

SCMF16159L

5) Is parameter displayed "Present fault"?

YES

▶ Go to "Terminal and connector inspection" procedure.

NO

▶ Fault is intermittent caused by poor contact in the sensor's and/or PCM's connector or was repaired and PCM memory was not cleared. Thoroughly check connectors for looseness, poor connection, ending, corrosion, contamination, deterioration, or damage. Repair or replace as necessary and go to "Verification of Vehicle Repair" procedure.

TERMINAL AND CONNECTOR INSPECTION E6FB52BA

1. Many malfunctions in the electrical system are caused by poor harness and terminals. Faults can also be caused by interference from other electrical systems, and mechanical or chemical damage.
2. Thoroughly check connectors for looseness, poor connection, bending, corrosion, contamination, deterioration, or damage.
3. Has a problem been found?

YES

▶ Repair as necessary and go to "Verification of Vehicle Repair" procedure

NO

▶ Go to " Power Circuit Inspection " procedure.

POWER CIRCUIT INSPECTION E716BEFB

1. Check voltage
   1) IG "OFF".
   2) Disconnect A/C relay connector.
   3) IG "ON" and ENG "OFF"

4) Measure the voltage between terminal 2 of A/C relay harness connector and chassis ground.

5) Measure the voltage between terminal 4 of A/C relay harness connector and chassis ground.

Specification : B+

6) Is the measured voltage normal?

YES

▶ Go to "Control circuit inspection" procedure.

NO

▶ Check the fuse between Battery and A/C relay.
▶ Check Chassis ground 1 and 2 for looseness.
▶ Repair Open or Short to ground in power circuit and go to "Verification of Vehicle Repair" procedure.

CONTROL CIRCUIT INSPECTION E771FA95

1. Check short in harness

1) IG "OFF".

2) Disconnect A/C relay and PCM connector.

3) Measure the resistance between terminal 3 of A/C relay harness connector and chassis ground.

Specification : Infinite

4) Is the measured resistance within specification ?

YES

▶ Go to "Check open in harness" as follows.

NO

▶ Repair Short in Coil control harness and go to "Verification of Vehicle Repair" procedure.

2. Check open in harness

1) IG "OFF".

2) Disconnect A/C relay and PCM connector.

3) Measure the resistance between terminal 3 of A/C relay harness connector and terminal C30-A (64) of PCM harness connector.

Specification : Approx. below 1Ω

4) Is the measured resistance within specification ?

YES

▶ Go to "Component inspection" procedure.

NO

▶ Repair Open in Coil control harness and go to "Verification of Vehicle Repair" procedure.

COMPONENT INSPECTION E51102A9

1. Check A/C relay

   1) IG "OFF".

   2) Disconnect A/C relay.

   3) Measure the resistance between terminal 2 and 3 of A/C relay.

   4) Measure the resistance between terminal 1 and 4 of A/C relay.

Terminal	Power approval
1~4	NO
2~3	YES (70Ω ~ 120Ω)

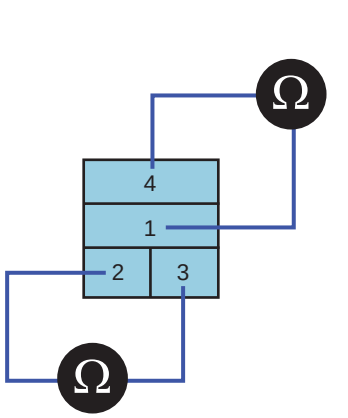

1. Power supply to A/C compressor
2. A/C relay control power
3. A/C relay control
4. A/C relay switch power

EFBF936A

   5) Is the measured resistance within specification ?

YES

▶ Substitute with a known - good PCM and check for proper operation. If the problem is corrected, replace PCM and go to "Verification of Vehicle Repair" procedure.

NO

▶ Substitute with a known - good A/C relay and check for proper operation. If the problem is corrected, replace A/C relay and go to "Verification of Vehicle Repair" procedure.

NOTE

There is a memory reset function on scantool that can erase optional parts automatically detected and memorized by PCM. After testing PCM on the vehicle, use this function to reuse the PCM on the others

VERIFICATION OF VEHICLE REPAIR E90B3F6D

After a repair, it is essential to verify that the fault has been corrected.

1. Monitor and record the Freeze Frame Data for the Diagnostic Trouble Code(DTC) which has been diagnosed.
2. Using a Scantool, Clear the DTCs
3. Operate the vehicle within conditions noted in the freeze frame data or enable conditions
4. Monitor that all rediness test have been verified as " Complete "
5. Are any DTCs present ?

YES

▶ Go to the applicable troubleshoooting procedure.

NO

▶ System is performing to specification at this time.

DTC P0647 A/C CLUTCH RELAY CONTROL CIRCUIT HIGH

GENERAL DESCRIPTION E1B5EB25

Refer to DTC P0646.

DTC DESCRIPTION ECC5A729

PCM monitors inputted voltage through A/C compressor relay. Checking voltage every 10 sec. under detecting condition, if the voltage higher than the specified value is detected for more than 5 sec., PCM sets P0647.

DTC DETECTING CONDITION ECABD7EA

Item	Detecting Condition	Possible cause
DTC Strategy	• Detects circuit short to high voltage	• Poor connection • Short to power in A/C relay circuit • Faulty A/C relay • Faulty PCM
Enable Conditions	• After 0.5 sec under conditions below • No DTC exists • Engine works • 11V ≤ Battery voltage ≤ 16V	
Threshold value	• Short to power	
Diagnosis Time	• Continuous (More than 5 seconds failure for every 10 seconds test)	
MIL On Condition	• DTC only (NO MIL ON)	

SPECIFICATION E468E9AC

Refer to DTC P0646.

SCHEMATIC DIAGRAM E034F9E5

Refer to DTC P0646.

MONITOR DTC STATUS EB070E3B

Refer to DTC P0646.

TERMINAL AND CONNECTOR INSPECTION E5D3822E

Refer to DTC P0646.

POWER CIRCUIT INSPECTION EEB7A706

1. Check voltage
   1) IG "OFF".
   2) Disconnect A/C relay connector.
   3) IG "ON" and ENG "OFF"
   4) Measure the voltage between terminal 2 of A/C relay harness connector and chassis ground.

5) Measure the voltage between terminal 4 of A/C relay harness connector and chassis ground.

Specification : B+

6) Is the measured voltage normal?

YES

▶ Go to "Control circuit inspection" procedure.

NO

▶ Check the fuse between Battery and A/C relay.
▶ Check Chassis ground 1 and 2 for looseness.
▶ Repair Open or Short to ground in power circuit and go to "Verification of Vehicle Repair" procedure.

CONTROL CIRCUIT INSPECTION E1F331DD

1. Check short in harness

1) IG "ON".

2) Disconnect A/C relay.

3) Measure the voltage between terminal 3 of A/C relay harness connector and chassis ground.

Specification : Approx. 0V

4) Is the measured voltage within specification ?

YES

▶ Go to "Component inspection" procedure.

NO

▶ Repair Short in Coil control harness and go to "Verification of Vehicle Repair" procedure.

COMPONENT INSPECTION E2F87DF4

1. Check A/C relay

1) IG "OFF".

2) Disconnect A/C relay.

3) Measure the resistance between terminal 2 and 3 of A/C relay.

4) Measure the resistance between terminal 1 and 4 of A/C relay.

SPECIFICATION

Terminal	Power approval
1~4	NO
2~3	YES (APPROX. 70Ω ~ 120Ω)

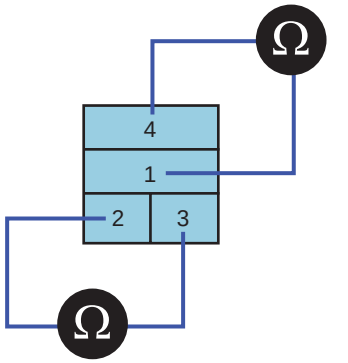

1. Power supply to A/C compressor
2. A/C relay control power
3. A/C relay control
4. A/C relay switch power

EFBF936A

5) Is the measured resistance within specification ?

YES

▶ Substitute with a known - good PCM and check for proper operation. If the problem is corrected, replace PCM and go to "Verification of Vehicle Repair" procedure.

NO

▶ Substitute with a known - good A/C relay and check for proper operation. If the problem is corrected, replace A/C relay and go to "Verification of Vehicle Repair" procedure.

NOTE

There is a memory reset function on scantool that can erase optional parts automatically detected and memorized by PCM. After testing PCM on the vehicle, use this function to reuse the PCM on the others

VERIFICATION OF VEHICLE REPAIR E1B4FDE5

Refer to DTC P0646.

DTC P0650 MALFUNCTION INDICATOR LAMP(MIL) CONTROL CIRCUIT

GENERAL DESCRIPTION E8471A68

The Malfunction Indicator Lamp (MIL), which is located in the instrument cluster, comes on to notify the driver that there may be a problem with the vehicle and that service is needed. Immediately after the ignition switch turns on, the malfunction indicator lamp is lit to indicate that the MIL operates normally and goes off after starting.

DTC DESCRIPTION E6FE14C0

Checking input signal of engine check lamp every 10 sec. under detecting condition, if open, or short to battery or ground is detected for more than 5 sec., PCM sets P0650.

DTC DETECTING CONDITION EC425377

Item	Detecting Condition	Possible cause
DTC Strategy	• Signal low, high	• Poor connection • Open or short in MIL circuit • Faulty MIL • Faulty PCM
Enable Conditions	• After 0.5 sec under conditions below • Engine works • 11V ≤ Battery voltage ≤ 16V	
Threshold value	• Open or short	
Diagnosis Time	• Continuous (More than 5 seconds failure for every 10 seconds test)	
MIL On Condition	• DTC only (NO MIL ON)	

SCHEMATIC DIAGRAM E50746B1

[CIRCUIT DIAGRAM]

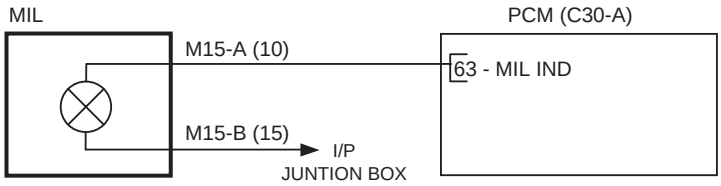

[CONNECTION INFORMATION]

Terminal	Connected to	Function
M15-B (15)	Junction BOX	Power Supply (B+)
M15-A (10)	PCM C30-A (63)	MIL IND

[HARNESS CONNECTOR]

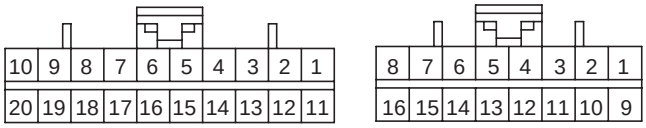

M15-A **M15-B**

INSTRUMENT CLUSTER

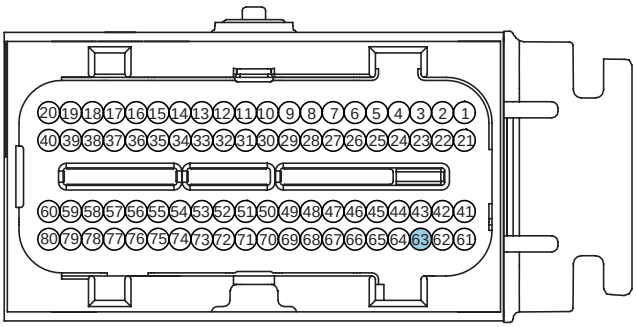

C30-A
PCM

SCMF16394L

MONITOR DTC STATUS E3BAD8B2

1. Check DTC Status

   1) Connect scantool to Data Link Connector(DLC).

   2) IG "ON".

   3) Select "Diagnostic Trouble Codes(DTCs)" mode, and then Press F4(DTAL) to check DTC's information from the DTCs menu

   4) Read "DTC Status" parameter.

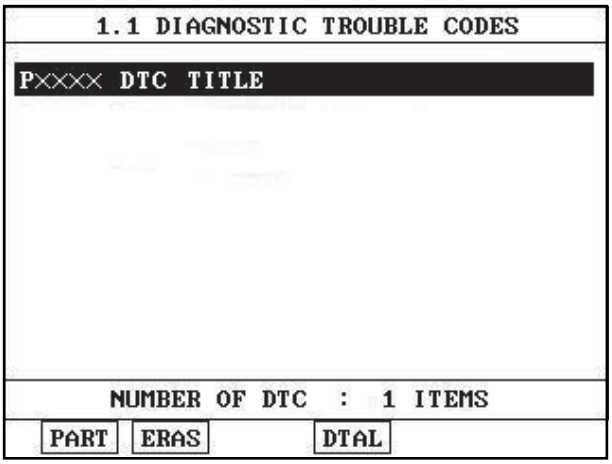

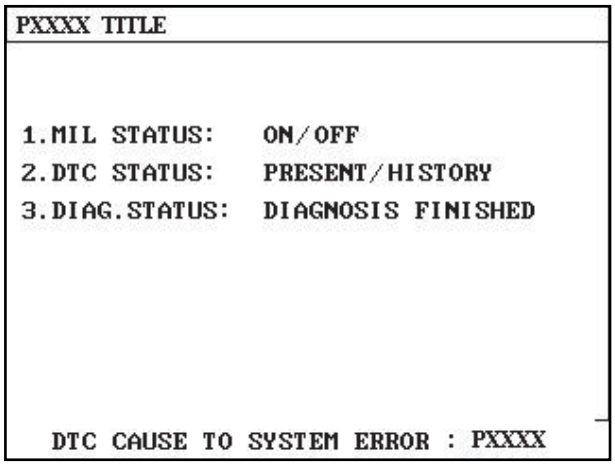

SCMF16159L

5) Is parameter displayed "Present fault"?

YES

▶ Go to "Terminal and connector inspection" procedure.

NO

▶ Fault is intermittent caused by poor contact in the sensor's and/or PCM's connector or was repaired and PCM memory was not cleared. Thoroughly check connectors for looseness, poor connection, ending, corrosion, contamination, deterioration, or damage. Repair or replace as necessary and go to "Verification of Vehicle Repair" procedure.

TERMINAL AND CONNECTOR INSPECTION E6FEECF1

1. Many malfunctions in the electrical system are caused by poor harness and terminals. Faults can also be caused by interference from other electrical systems, and mechanical or chemical damage.
2. Thoroughly check connectors for looseness, poor connection, bending, corrosion, contamination, deterioration, or damage.
3. Has a problem been found?

YES

▶ Repair as necessary and go to "Verification of Vehicle Repair" procedure

NO

▶ Go to " Power Circuit Inspection " procedure.

POWER CIRCUIT INSPECTION E27E1DEF

1. IG "OFF" and disconnect Instrument cluster connector.
2. IG "ON" and ENG "OFF"
3. Measure voltage between terminal 15 of instrument cluster harness connector and chassis ground.

Specification : Approx. B+

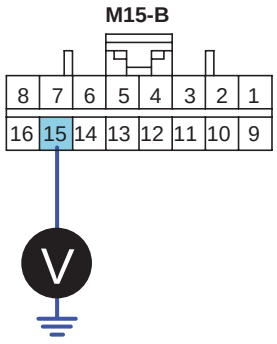

15. Battery voltage

SCMF16395L

4. Is the measured voltage within specification?

YES

▶ Go to "Control Circuit Inspection" procedure.

NO

▶ Check fuse between battery and instrument cluster for open or blown-off.
▶ Repair open or short to ground in harness, and go to "Verification of Vehicle Repair" procedure.

CONTROL CIRCUIT INSPECTION E61B233E

1. IG "OFF" and disconnect PCM connector.
2. IG "ON" and ENG "OFF"
3. Measure voltage between C30-A (63) of PCM harness connector and chassis ground.

Specification : Approx. B+

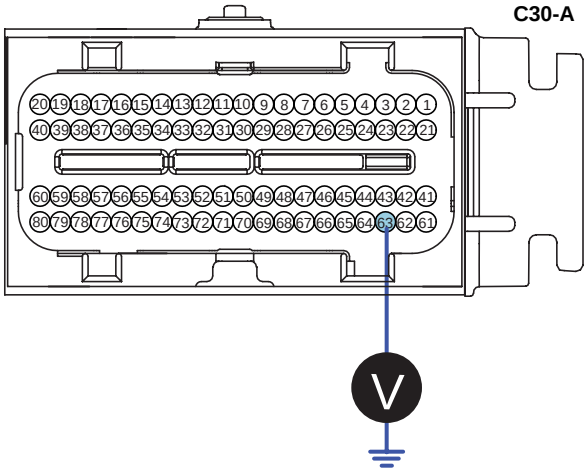

SCMF16396L

4. Is the measured voltage within specification?

YES

▶ Go to "Component Inspection" procedure.

NO

▶ Check open in Engine warning lamp's filament.
▶ Repair open or short to ground in harness, and go to "Verification of Vehicle Repair" procedure.

COMPONENT INSPECTION E94A91A9

1. Check instrument cluster
   1) IG "OFF"
   2) Substitute with a known - good instrument cluster and check for proper operation.
   3) Does it normally operate after replacement?

YES

▶ Replace instrument cluster and go to "Verification of Vehicle Repair" procedure.

NO

▶ Substitute with a known - good PCM and check for proper operation. If the problem is corrected, replace PCM and go to "Verification of Vehicle Repair" procedure.

NOTE

There is a memory reset function on scantool that can erase optional parts automatically detected and memorized by PCM. After testing PCM on the vehicle, use this function to reuse the PCM on the others

VERIFICATION OF VEHICLE REPAIR E19DDF35

After a repair, it is essential to verify that the fault has been corrected.

1. Monitor and record the Freeze Frame Data for the Diagnostic Trouble Code(DTC) which has been diagnosed.
2. Using a Scantool, Clear the DTCs
3. Operate the vehicle within conditions noted in the freeze frame data or enable conditions
4. Monitor that all rediness test have been verified as " Complete "
5. Are any DTCs present ?

YES

▶ Go to the applicable troubleshoooting procedure.

NO

▶ System is performing to specification at this time.

DTC P0651 SENSOR REFERENCE VOLTAGE "B" CIRCUIT OPEN

GENERAL DESCRIPTION E90B3CC0

The ECM provides a 5volt reference voltage to Throttle Position Sensor 2(TPS2). The ECM monitors reference voltage deviation from the power supply circuit of the sensors.

DTC DESCRIPTION E5E773D1

Checking the voltage from sensor power supply every 1.87 sec. under detecting condition, if the value within detecting condition lasts for more than 0.2 sec., PCM sets P0651. MIL(Malfunction Indication Lamp) turns on when the malfunction lasts till consecutive 2 driving cycle.

DTC DETECTING CONDITION E2B19B8E

Item	Detecting Condition	Possible Cause
DTC Strategy	• Sensor reference voltage check	• Short in sensor power supply line • Faulty PCM
Enable Conditions	• IG Key "ON"	
Threshold value	• Sensor supply power 〈 4.5V or 〉 5.5V	
Diagnosis time	• Continuous (More than 0.2 seconds failure for every 1.87 seconds test)	
MIL ON condition	• 2 driving cycles	

SCHEMATIC DIAGRAM EDC1C559

[CIRCUIT DIAGRAM]

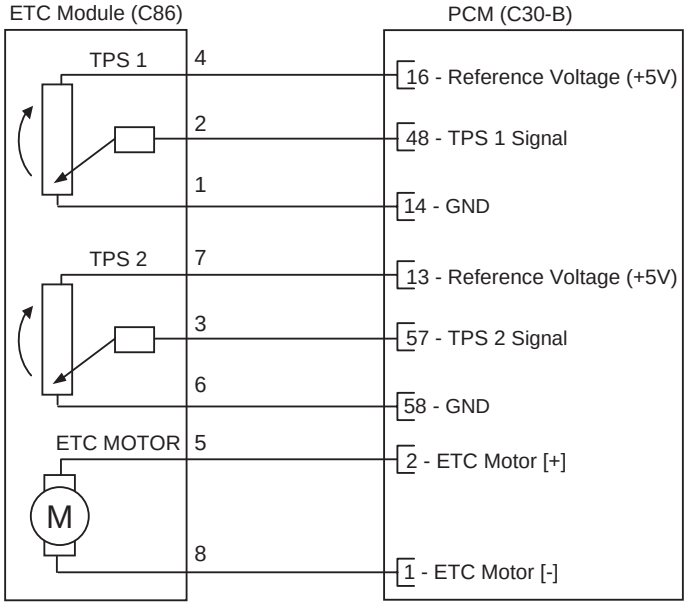

[CONNECTION INFORMATION]

Terminal	Connected to	Function
1	PCM C30-B (14)	TPS 1 Ground
2	PCM C30-B (48)	TPS 1 Signal
3	PCM C30-B (57)	TPS 2 Signal
4	PCM C30-B (16)	TPS 1 Reference Voltage (+5V)
5	PCM C30-B (2)	ETC Motor [+] Control
6	PCM C30-B (58)	TPS 2 Ground
7	PCM C30-B (13)	TPS 2 Reference Voltage (+5V)
8	PCM C30-B (1)	ETC Motor [-] Control

[HARNESS CONNECTORS]



C86

ETC MODULE

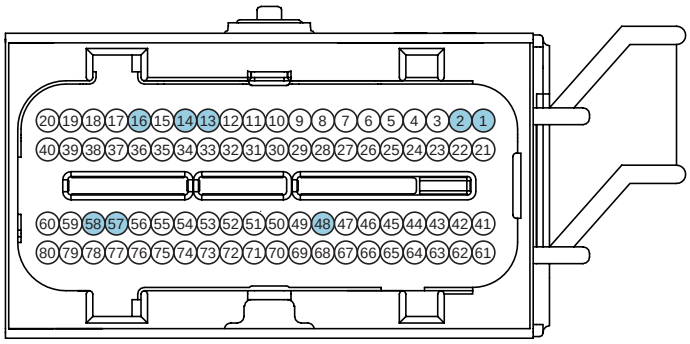

C30-B

PCM

SCMF16101L

MONITOR DTC STATUS E62A3E7B

1. Check DTC Status

   1) Connect scantool to Data Link Connector(DLC).

   2) IG "ON".

   3) Select "Diagnostic Trouble Codes(DTCs)" mode, and then Press F4(DTAL) to check DTC's information from the DTCs menu

   4) Read "DTC Status" parameter.

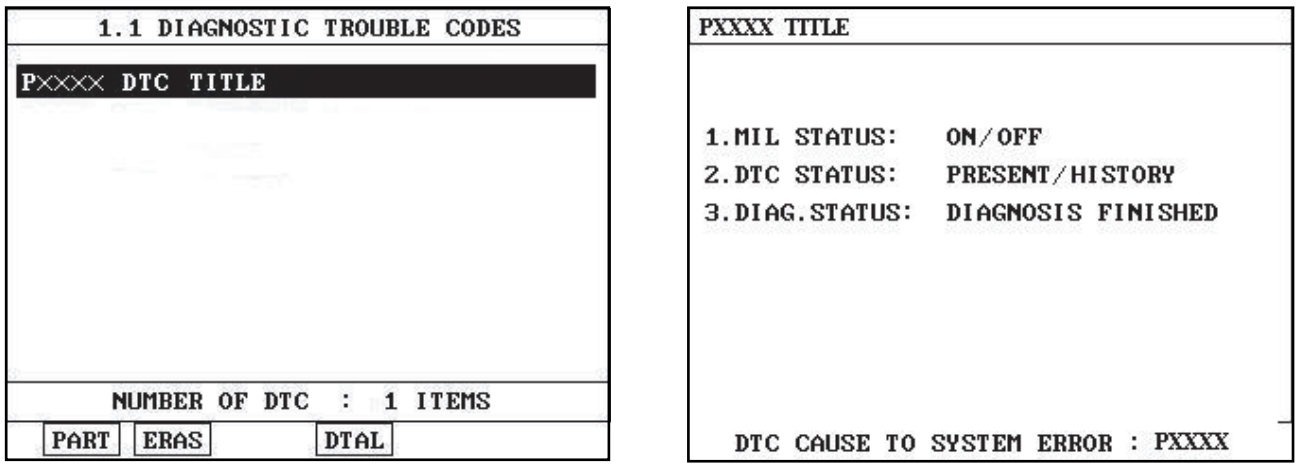

SCMF16159L

5) Is parameter displayed "Present fault"?

YES

▶ Go to "Terminal and connector inspection" procedure.

NO

▶ Fault is intermittent caused by poor contact in the sensor's and/or PCM's connector or was repaired and PCM memory was not cleared. Thoroughly check connectors for looseness, poor connection, ending, corrosion, contamination, deterioration, or damage. Repair or replace as necessary and go to "Verification of Vehicle Repair" procedure.

TERMINAL AND CONNECTOR INSPECTION ECD1D181

1. Many malfunctions in the electrical system are caused by poor harness and terminals. Faults can also be caused by interference from other electrical systems, and mechanical or chemical damage.
2. Thoroughly check connectors for looseness, poor connection, bending, corrosion, contamination, deterioration, or damage.
3. Has a problem been found?

YES

▶ Repair as necessary and go to "Verification of Vehicle Repair" procedure

NO

▶ Go to "Power Circuit Inspection" procedure.

POWER CIRCUIT INSPECTION E00FDD8B

1. Check voltage
   1) IG "OFF".
   2) Disconnect TPS connector.
   3) IG "ON" and ENG "OFF"

4) Measure the voltage between terminal 7 of TPS harness connector and chassis ground.

Specification : Approx. 5V

5) Is the measured voltage within specification ?

YES

▶ Thoroughly check connectors for looseness, poor connection, bending, corrosion, contamination, deterioration, or damage. Repair as necessary and go to "Verification of Vehicle Repair" procedure.

NO

▶ Go to "Check short in harness" as follows.

2. Check short in harness

1) IG "OFF".

2) Disconnect TPS connector and PCM connector.

3) Measure the resistance between terminal 7 and 5 of TPS harness connector.

4) Measure the resistance between terminal 7 and 8 of TPS harness connector.

5) Measure the resistance between terminal 7 and 6 of TPS harness connector.

6) Measure the resistance between terminal 7 and 1 of TPS harness connector.

Specification : Infinite

7) Is the measured resistance within specification ?

YES

▶ Substitute with a known - good PCM and check for proper operation. If the problem is corrected, replace PCM and go to "Verification of Vehicle Repair" procedure.

NO

▶ Repair Short in power harness and go to "Verification of Vehicle Repair" procedure.

※ Procedure of ETS Initialization
1. Erase the trouble codes on PCM
2. Turn the ignition key off and keep this condition until the main relay is turned off.(It will takes 10 second)
3. Turn ignition key on more than 1second to record the throttle motor position on the EEPROM

VERIFICATION OF VEHICLE REPAIR E81DCD4F

After a repair, it is essential to verify that the fault has been corrected.

1. Monitor and record the Freeze Frame Data for the Diagnostic Trouble Code(DTC) which has been diagnosed.
2. Using a Scantool, Clear the DTCs
3. Operate the vehicle within conditions noted in the freeze frame data or enable conditions
4. Monitor that all rediness test have been verified as " Complete "

5. Are any DTCs present ?

YES

▶ Go to the applicable troubleshoooting procedure.

NO

▶ System is performing to specification at this time.

DTC P0660 INTAKE MANIFOLD TUNING VALVE CONTROL CIRCUIT/OPEN (BANK 1)

COMPONENT LOCATION ED18CA5D

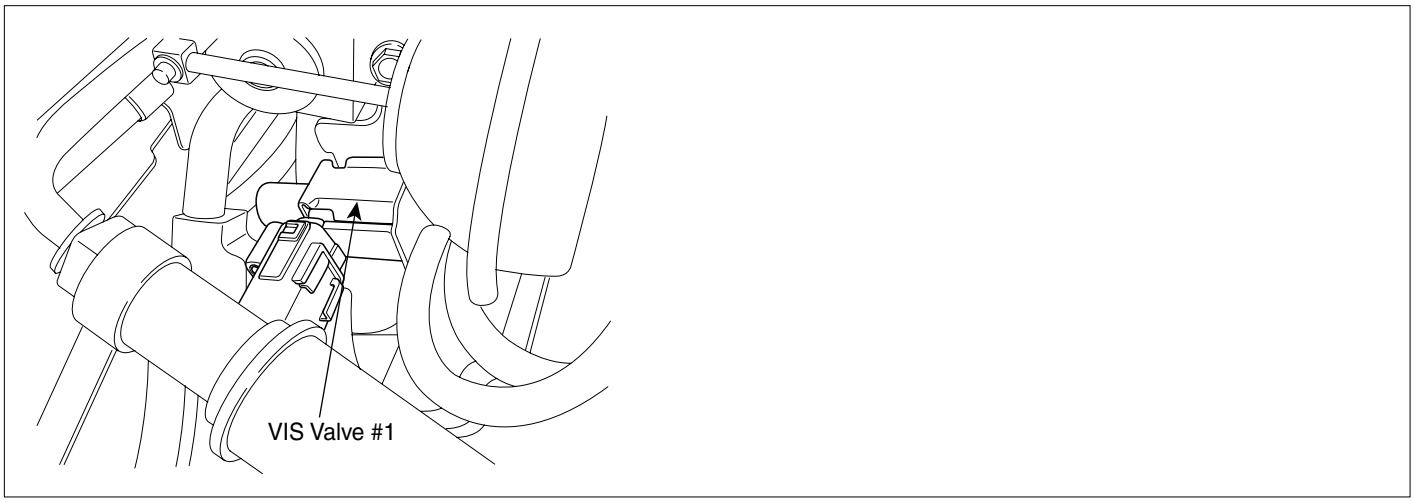

LGLG522A

GENERAL DESCRIPTION E049CBFC

VIS(Variable intake system) is a device which varies the length of intake manifold to genetate maximum power at certain RPM. VIS lengthens intake manifold to improve the torque at low RPM when vehicle speed is low while it shortens intake manifold to raise torque at high RPM when vehicle speed is high. PCM controlls VIS using RPM signal.

DTC DESCRIPTION E8779C5F

Checking the output voltage from VIS #1 every 10 sec. under detecting condition, if the value within detecting condition lasts for more than 5 sec., PCM sets P0660. MIL(Malfunction Indication Lamp) turns on when the malfunction lasts till consecutive 2 driving cycle.

DTC DETECTING CONDITION E2A153B1

Item	Detecting Condition	Possible Cause
DTC Strategy	• Signal low, high	• Poor connection • Open or short in VIS #1 circuit • Faulty VIS #1 • Faulty PCM
Enable condition	• After 0.5 sec under conditions below • Engine works • 11V ≤ Battery voltage ≤ 16V	
Threshold value	• Open or short	
Diagnosis time	• Continuous (More than 5 seconds failure for every 10 seconds test)	
MIL ON condition	• 2 driving cycles	

SPECIFICATION E73DA467

Item	Specification
Coil Resistance (Ω)	32 ± 3Ω [20℃ (68˚F)]

SCHEMATIC DIAGRAM E219059A

[CIRCUIT DIAGRAM]

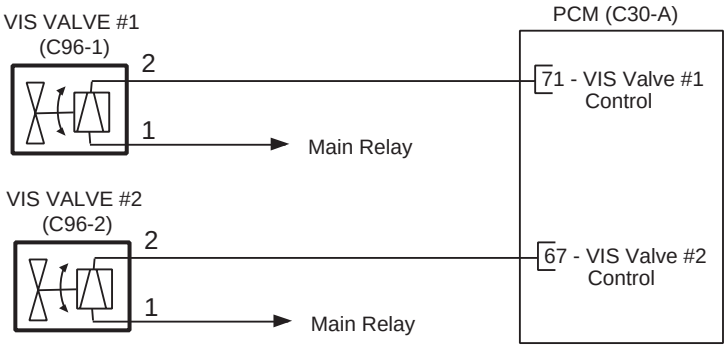

[CONNECTION INFORMATION]

VIS VALVE #1

Terminal	Connected to	Function
1	Main Relay	Battery voltage (B+)
2	PCM C30-A (71)	VIS Valve #1 control

VIS VALVE #2

Terminal	Connected to	Function
1	Main Relay	Battery voltage (B+)
2	PCM C30-A (67)	VIS Valve #2 control

[HARNESS CONNECTORS]

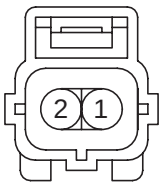

C96-1,2

VIS VALVE #1,2

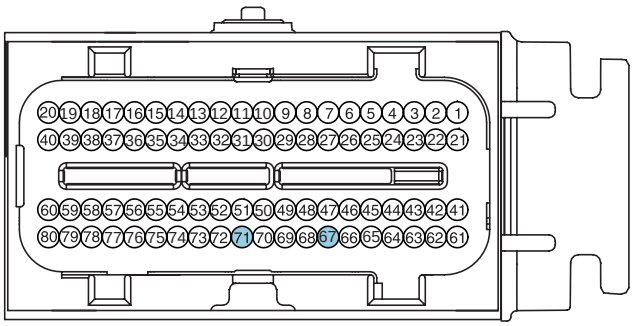

C30-A

PCM

SCMF16121L

MONITOR DTC STATUS ED4CF13B

1. Check DTC Status

   1) Connect scantool to Data Link Connector(DLC).

   2) IG "ON".

   3) Select "Diagnostic Trouble Codes(DTCs)" mode, and then Press F4(DTAL) to check DTC’s information from the DTCs menu

   4) Read "DTC Status" parameter.

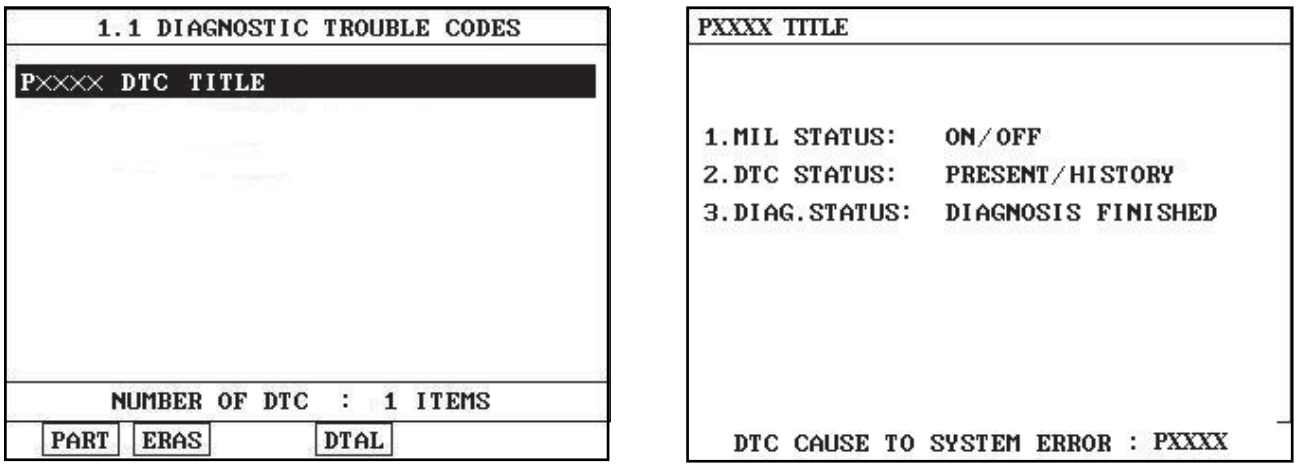

SCMF16159L

5) Is parameter displayed "Present fault"?

YES

▶ Go to "Terminal and connector inspection" procedure.

NO

▶ Fault is intermittent caused by poor contact in the sensor's and/or PCM's connector or was repaired and PCM memory was not cleared. Thoroughly check connectors for looseness, poor connection, ending, corrosion, contamination, deterioration, or damage. Repair or replace as necessary and go to "Verification of Vehicle Repair" procedure.

TERMINAL AND CONNECTOR INSPECTION ED053940

1. Many malfunctions in the electrical system are caused by poor harness and terminals. Faults can also be caused by interference from other electrical systems, and mechanical or chemical damage.
2. Thoroughly check connectors for looseness, poor connection, bending, corrosion, contamination, deterioration, or damage.
3. Has a problem been found?

YES

▶ Repair as necessary and go to "Verification of Vehicle Repair" procedure

NO

▶ Go to "Power Circuit Inspection" procedure.

POWER CIRCUIT INSPECTION EDD22D0E

1. IG "OFF" and disconnect VIS #1 connector.
2. IG "ON" and ENG "OFF"
3. Measure voltage between terminal 1 of VIS #1 harness connector and chassis ground.

Specification : Approx. B+

4. Is the measured voltage within specification?

YES

▶ Go to "Control Circuit Inspection" procedure.

NO

▶ Check fuse connected to power of VIS #1 for open or blown-off.
▶ Repair open or short to ground in harness, and go to "Verification of Vehicle Repair" procedure.

CONTROL CIRCUIT INSPECTION E742D31F

1. Check voltage

   1) IG "OFF" and disconnect VIS #1 connector.

   2) IG "ON" and ENG "OFF"

   3) Measure voltage between terminal 2 of VIS #1 harness connector and chassis ground.

Specification : Approx. 2.5V

   4) Is the measured voltage within specification?

YES

▶ Go to "Component Inspection" procedure.

NO

▶ Go to "Check short in harness" as follows.

2. Check short in harness

   1) IG "OFF" and disconnect VIS #1 connector and PCM connector.

   2) Measure resistance between terminal 2 of VIS #1 harness connector and chassis ground.

   3) Measure resistance between terminals 1 and 2 of VIS #1 harness connector.

Specification : Infinite

   4) Is the measured resistance within specification?

YES

▶ Go to "Check open in harness" as follows.

NO

▶ Repair short in harness, and go to "Verification of Vehicle Repair" procedure.

3. Check open in harness

1) IG "OFF" and disconnect VIS #1 connector and PCM connector.

2) Measure resistance between terminal 2 of VIS #1 harness connector and terminal C30-A (71) of PCM harness connector.

Specification : Below 1Ω

3) Is the measured resistance within specification?

YES

▶ Go to "Component Inspection" procedure.

NO

▶ Repair open in harness, and go to "Verification of Vehicle Repair" procedure.

COMPONENT INSPECTION E902D8C9

1. Check VIS #1

1) IG "OFF" and disconnect VIS #1 connector.

2) Measure resistance between terminals 1 and 2 of VIS #1 connector.(Component side)

Specification : 32 ± 3 Ω [20℃(68˚F)]

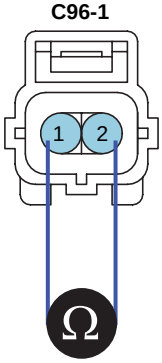

1. VIS Power
2. VIS Control

SCMF16403L

3) Is the measured resistance within specification?

YES

▶ Substitute with a known - good PCM and check for proper operation. If the problem is corrected, replace PCM and go to "Verification of Vehicle Repair" procedure.

NO

▶ Substitute with a known - good VIS #1 and check for proper operation. If the problem is corrected, replace VIS #1 and go to "Verification of Vehicle Repair" procedure.

NOTE

There is a memory reset function on scantool that can erase optional parts automatically detected and memorized by PCM. After testing PCM on the vehicle, use this function to reuse the PCM on the others

VERIFICATION OF VEHICLE REPAIR E0A64B5A

After a repair, it is essential to verify that the fault has been corrected.

1. Monitor and record the Freeze Frame Data for the Diagnostic Trouble Code(DTC) which has been diagnosed.
2. Using a Scantool, Clear the DTCs
3. Operate the vehicle within conditions noted in the freeze frame data or enable conditions
4. Monitor that all rediness test have been verified as " Complete "
5. Are any DTCs present ?

YES

▶ Go to the applicable troubleshoooting procedure.

NO

▶ System is performing to specification at this time.

DTC P0663 INTAKE MANIFOLD TUNING VALVE CONTROL CIRCUIT/OPEN (BANK 2)

COMPONENT LOCATION EFCAD4B7



LGLG523A

GENERAL DESCRIPTION ECB5E846

Refer to DTC P0660.

DTC DESCRIPTION E3722C51

Checking the output voltage from VIS #2 every 10 sec. under detecting condition, if the value within detecting condition lasts for more than 5 sec., PCM sets P0663. MIL(Malfunction Indication Lamp) turns on when the malfunction lasts till consecutive 2 driving cycle.

DTC DETECTING CONDITION E9057D69

Item	Detecting Condition	Possible Cause
DTC Strategy	• Signal low, high	• Poor connection • Open or short in VIS #2 circuit • Faulty VIS #2 • Faulty PCM
Enable condition	• After 0.5 sec under conditions below • Engine works • 11V ≤ Battery voltage ≤ 16V	
Threshold value	• Open or short	
Diagnosis time	• Continuous (More than 5 seconds failure for every 10 seconds test)	
MIL ON condition	• 2 driving cycles	

SPECIFICATION E8B478B3

Refer to DTC P0660.

SCHEMATIC DIAGRAM E2689279

Refer to DTC P0660.

MONITOR DTC STATUS E46376D8

Refer to DTC P0660.

TERMINAL AND CONNECTOR INSPECTION E25928CF

Refer to DTC P0660.

POWER CIRCUIT INSPECTION EE80590E

1. IG "OFF" and disconnect VIS #2 connector.
2. IG "ON" and ENG "OFF"
3. Measure voltage between terminal 1 of VIS #2 harness connector and chassis ground.

Specification : Approx. B+

4. Is the measured voltage within specification?

YES

▶ Go to "Control Circuit Inspection" procedure.

NO

▶ Check fuse connected to power of VIS #2 for open or blown-off.
▶ Repair open or short to ground in harness, and go to "Verification of Vehicle Repair" procedure.

CONTROL CIRCUIT INSPECTION E0E6175D

1. Check voltage
   1) IG "OFF" and disconnect VIS #2 connector.
   2) IG "ON" and ENG "OFF"
   3) Measure voltage between terminal 2 of VIS #2 harness connector and chassis ground.

Specification : Approx. 2.5V

   4) Is the measured voltage within specification?

YES

▶ Go to "Component Inspection" procedure.

NO

▶ Go to "Check short in harness" as follows.

2. Check short in harness
   1) IG "OFF" and disconnect VIS #2 connector and PCM connector.
   2) Measure resistance between terminal 2 of VIS #2 harness connector and chassis ground.

3) Measure resistance between terminals 1 and 2 of VIS #21 harness connector.

Specification : Infinite

4) Is the measured resistance within specification?

YES

▶ Go to "Check open in harness" as follows.

NO

▶ Repair short in harness, and go to "Verification of Vehicle Repair" procedure.

3. Check open in harness

1) IG "OFF" and disconnect VIS #2 connector and PCM connector.

2) Measure resistance between terminal 2 of VIS #2 harness connector and terminal C30-A (67) of PCM harness connector.

Specification : Below 1Ω

3) Is the measured resistance within specification?

YES

▶ Go to "Component Inspection" procedure.

NO

▶ Repair open in harness, and go to "Verification of Vehicle Repair" procedure.

COMPONENT INSPECTION EBB1C557

1. Check VIS #2

1) IG "OFF" and disconnect VIS #2 connector.

2) Measure resistance between terminals 1 and 2 of VIS #2 connector.(Component side)

Specification : 32 ± 3 Ω [20℃(68˚F)]

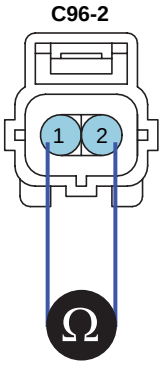

1. VIS Power
2. VIS Control

SCMF16408L

3) Is the measured resistance within specification?

YES

▶ Substitute with a known - good PCM and check for proper operation. If the problem is corrected, replace PCM and go to "Verification of Vehicle Repair" procedure.

NO

▶ Substitute with a known - good VIS #2 and check for proper operation. If the problem is corrected, replace VIS #2 and go to "Verification of Vehicle Repair" procedure.

NOTE

There is a memory reset function on scantool that can erase optional parts automatically detected and memorized by PCM. After testing PCM on the vehicle, use this function to reuse the PCM on the others

VERIFICATION OF VEHICLE REPAIR E121C656

Refer to DTC P0660.

DTC P0685 ECM/PCM POWER RELAY CONTROL CIRCUIT /OPEN

COMPONENT LOCATION E032C31A

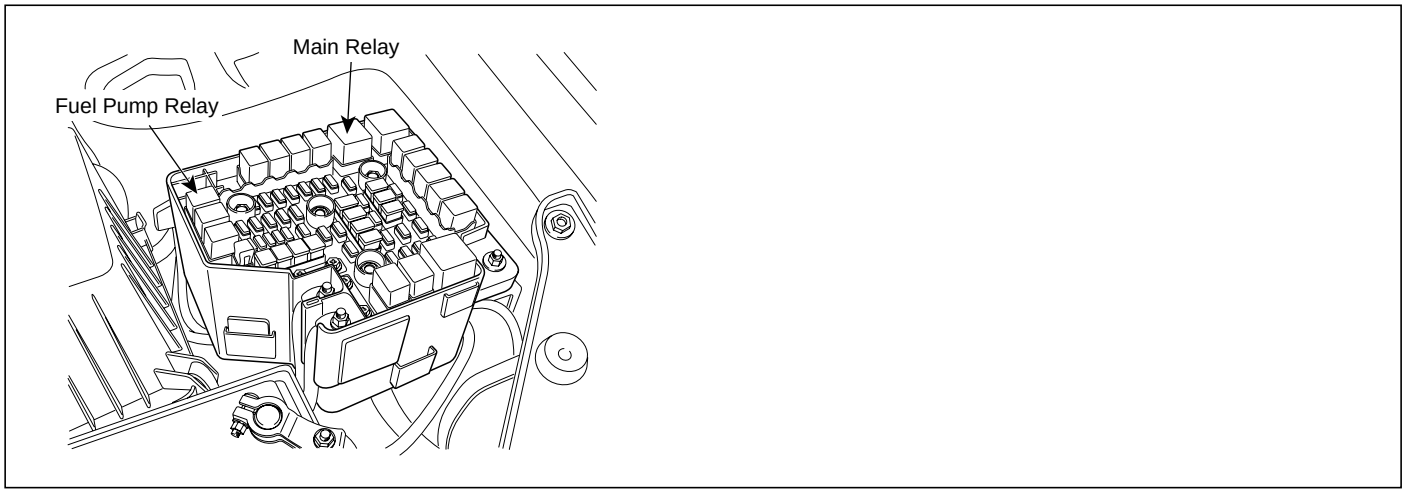

SCMF16254L

GENERAL DESCRIPTION E8B88C29

The ECM provides ground to one side of the coil of the main relay and the other side is connected to the battery. The ECM monitors battery voltage and the voltage after the main relay.

DTC DESCRIPTION E931EEBC

Checking the contolling state of main relay every 10 sec. under detecting condition, if open or short in the circuit is detected for more than 5 sec., PCM sets P0685.

DTC DETECTING CONDITION ED8CA705

Item	Detecting Condition	Possible cause
DTC Strategy	• Detects a short to ground, to battery or open circuit on Main Relay output Fault information provided by an output driver chip.	• Poor Connection • Open or short in control circuit. • Main Relay • PCM
EnableConditions	• Engine Running • 11V ≤ Ignition Voltage ≤ 16V • Enable Time delay ≥ 0.5sec.	
Threshold value	• Open or Short	
DiagnosisTime	• Contineous (More than 5sec. Failure for every 10 sec. test)	
MIL On Condition	• DTC only (NO MIL ON)	

SPECIFICATION E9BBD35F

Coil Resistance
70Ω ~ 120Ω

SCHEMATIC DIAGRAM EDE659D9

[CIRCUIT DIAGRAM]

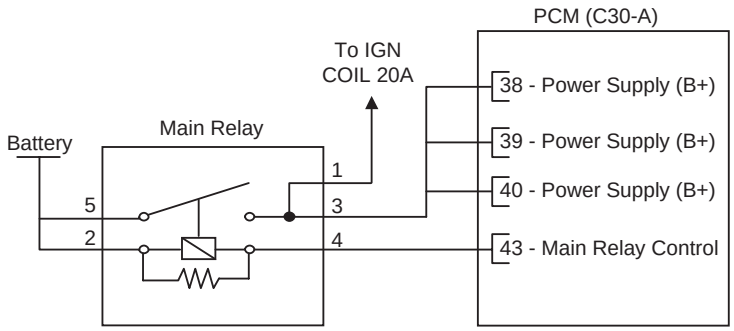

[CONNECTION INFORMATION]

Terminal	Connected to	Function
1	IGN COIL 20A	Power Supply (B+)
2	Battery	Battery Power (B+)
3	PCM C30-A (38)	Power Supply (B+)
	PCM C30-A (39)	
	PCM C30-A (40)	
4	PCM C30-A (43)	Main Relay Control
5	Battery	Battery Power (B+)

[HARNESS CONNECTOR]

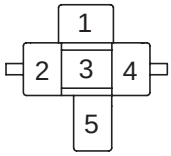

Main Relay

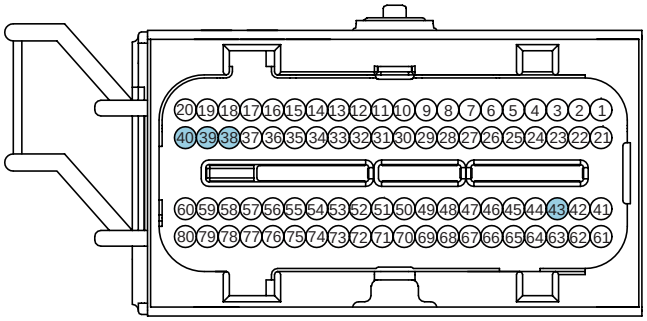

C30-A
PCM

SCMF16377L

MONITOR DTC STATUS EFABA80E

1. Check DTC Status

   1) Connect scantool to Data Link Connector(DLC).

   2) IG "ON".

   3) Select "Diagnostic Trouble Codes(DTCs)" mode, and then Press F4(DTAL) to check DTC’s information from the DTCs menu

   4) Read "DTC Status" parameter.

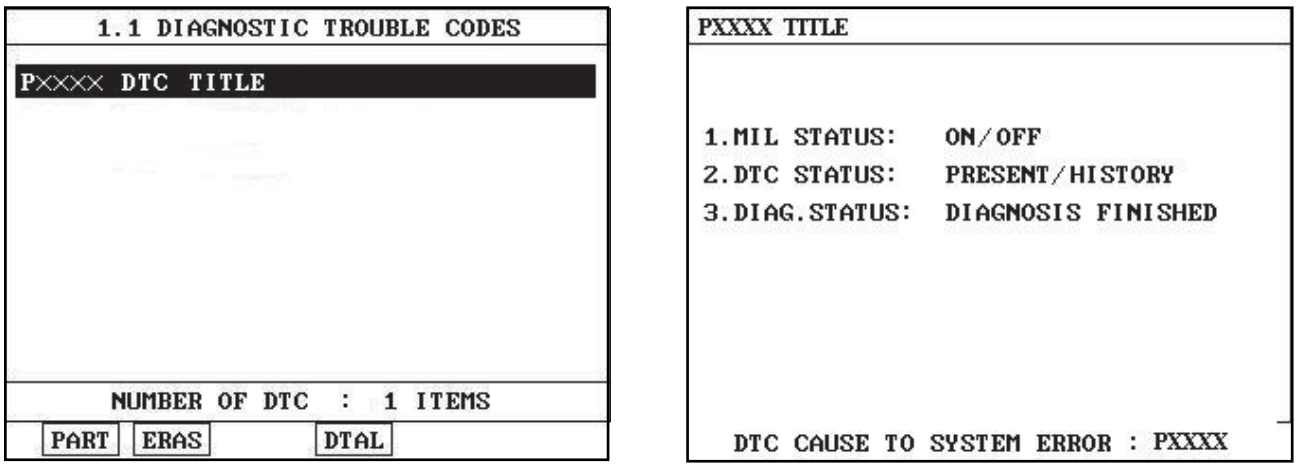

SCMF16159L

5) Is parameter displayed "Present fault"?

YES

▶ Go to "Terminal and connector inspection" procedure.

NO

▶ Fault is intermittent caused by poor contact in the sensor's and/or PCM's connector or was repaired and PCM memory was not cleared. Thoroughly check connectors for looseness, poor connection, ending, corrosion, contamination, deterioration, or damage. Repair or replace as necessary and go to "Verification of Vehicle Repair" procedure.

TERMINAL AND CONNECTOR INSPECTION E746E19E

1. Many malfunctions in the electrical system are caused by poor harness and terminals. Faults can also be caused by interference from other electrical systems, and mechanical or chemical damage.
2. Thoroughly check connectors for looseness, poor connection, bending, corrosion, contamination, deterioration, or damage.
3. Has a problem been found?

YES

▶ Repair as necessary and go to "Verification of Vehicle Repair" procedure

NO

▶ Go to " Power Circuit Inspection " procedure.

POWER CIRCUIT INSEPCTION EDD8F603

1. IG "OFF"
2. Disconnect Main Relay
3. IG "ON" & ENG "OFF".
4. Measure voltage between harness terminal 2 of Main Relay and chassis ground.

5. Measure voltage between harness terminal 5 of Main Relay and chassis ground.

Specification : B+

6. Is the measured voltage within specification ?

YES

▶ Go to "Control Circuit Inspecition" procedure.

NO

▶ Check fuse between battery and main relay is disconnected.
▶ Repair or replace open or short in harness and then go to "Verification of Vehicle Repair" procedure.

CONTROL CIRCUIT INSPECTION EFF0D404

1. Check short in coil control

   1) IG "OFF".

   2) Disconnect Main Relay and PCM connector.

   3) Measure resistance between harness terminal 4 and chassis ground.

   4) Measure resistance between harness terminal 4 and 5 of Main Relay.

Specification : Infinite

   5) Is the measured resistance within specification ?

YES

▶ Go to "Check open in coil control" as follows.

NO

▶ Repair or replace as necessary and then go to " Verification of Vehicle Repair" procedure.

2. Check open in coil control

   1) IG "OFF".

   2) Disconnect Main Relay and PCM connector.

   3) Measure resistance between harness terminal 4 of Main Relay and harness terminal C30-A (43) of PCM harness connector.

Specification : Approx. below 1Ω

   4) Is the measured resistance within specifications ?

YES

▶ Go to "Component Inspection" procedure.

NO

▶ Repair or replace as necessary and then, go to "Verification of Vehicle Repair" procedure.

COMPONENT INSPECTION E3822814

1. Check Main Relay

   1) IG "OFF"

   2) Disconnect Main Relay

   3) Measure resistance between terminal 5 and 3 of Main Relay

   4) Measure resistance between terminal 4 and 2 of Main Relay.

SPECIFICATION :

Terminal	continuity
3 ~ 5	NO
2 ~ 4	YES (Approx. 70Ω ~ 120Ω)

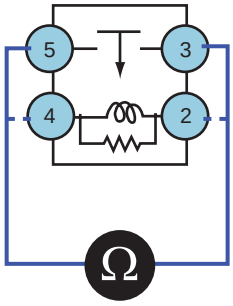

EGRF957A

   5) Is the measured reisistance within specification ?

YES

▶ Substitute with a known - good PCM and check for proper operation.
If the problem is corrected, replace PCM and go to "Verification of Vehicle Repair" procedure.

NOTE

There is a memory reset function on scantool that can erase optional parts automatically detected and memorized by PCM.

NO

▶ Substitute with a known - good Main Relay and check for proper operation.
If the problem is corrected, replace Main Relay and go to "Verification of Vehicle Repair"procedure.

VERIFICATION OF VEHICLE REPAIR EDA192E3

After a repair, it is essential to verify that the fault has been corrected.

1. Monitor and record the Freeze Frame Data for the Diagnostic Trouble Code(DTC) which has been diagnosed.
2. Using a Scantool, Clear the DTCs
3. Operate the vehicle within conditions noted in the freeze frame data or enable conditions
4. Monitor that all rediness test have been verified as " Complete "
5. Are any DTCs present ?

YES

▶ Go to the applicable troubleshoooting procedure.

NO

▶ System is performing to specification at this time.

DTC P CONTROL MANIFOLD ABSOLUTE PRESSURE SENSOR CIRCUIT SHORT - INTERMITTENT HIGH INPUT

COMPONENT LOCATION EA2D644F

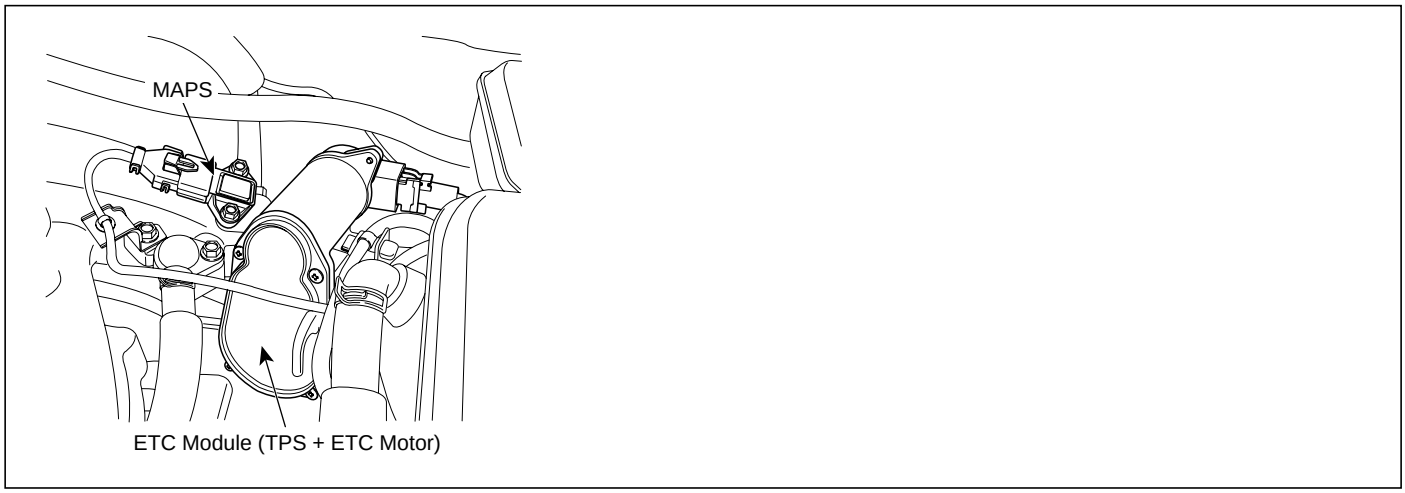

SCMF16192L

GENERAL DESCRIPTION E944F092

The amount of intake air flow must be inputted to PCM in order to determine the fuel injection quantity. MAPS(Manifold Absolute Pressure) calculates the amount of air indirectly as measuring the pressure inside of intake manifold. This mechanism is also called Speed-Density Type.
MAPS transfers analog output signal which is proportional to the change of intake manifold pressure, then, with this signal and RPM, PCM calculates the amount of intake air flow.
MAPS is mounted on surge tank to measure the pressure inside of intake manifold, and it consists of a piezo electric element and hybrid IC which amplifies output signal from the element. A piezo electric element is a sort of a diaphragm using piezo electric effect. One side of the diaphragm is surrounded with vacuum chamber while intake pressure is applied to the other side. Thus, signals are outputted by the transformation of diagphragm according to the change of pressure inside of intake manifold.

DTC DESCRIPTION EDFAE6EB

Checking output signals of MAPS every 60 sec. under detecting condition, if an output signal is above 4.5V for more than 2 sec., PCM sets P1106.

DTC DETECTING CONDITION E75C117E

Item		Detecting Condition	Possible Cause
DTC Strategy		• This code detects a intermittent short to high in either the signal circuit or the MAP sensor	• Poor connection • Short to battery in signal circuit • Open in ground circuit • Faulty MAPS • Faulty PCM
Enable-Condi-tions	Case 1	• No TPS Active Fault Present • No TPS Short Fail Criteria Met • Engine Speed 〈 2500rpm • Throttle Position ≤ 30%	
	Case 2	• No TPS Active Fault Present • No TPS Short Fail Criteria Met • Engine Speed 〉 2500rpm • Throttle Position 〉 40%	
Threshold value		• MAP signal 〉 4.5V	
Diagnosis Time		• Continuous (More than 2 sec. failure for every 60 sec. test)	
MIL On Condition		• DTC only (NO MIL ON)	

SPECIFICATION E4530A26

Pressure(kPa)	20	35	60	95	101.32
Voltage(V)	0.789	1.382	2.369	3.75	4
Allowable error(V)	± 0.045				

SCHEMATIC DIAGRAM E75BE5E6

[CIRCUIT DIAGRAM]

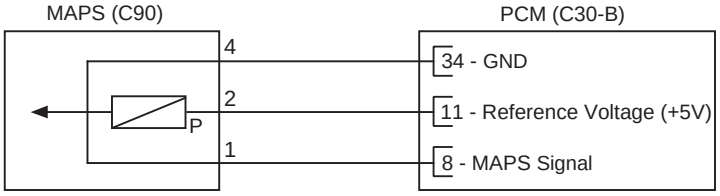

[CONNECTION INFORMATION]

Terminal	Connected to	Function
1	PCM C30-B (8)	MAPS Signal
2	PCM C30-B (11)	Reference Voltage (+5V)
3	-	-
4	PCM C30-B (34)	Sensor ground

[HARNESS CONNECTORS]

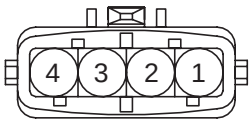

C90

MAPS

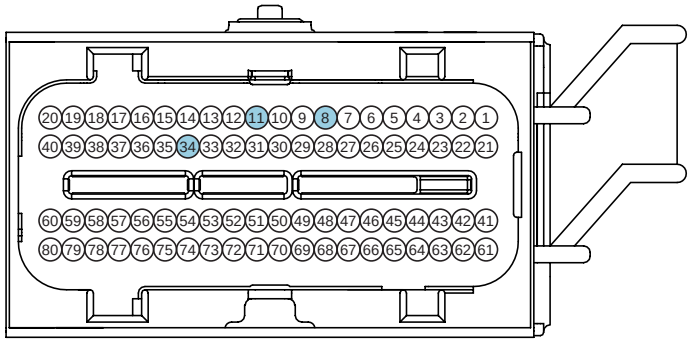

C30-B

PCM

SCMF16105L

SIGNAL WAVEFROM AND DATA ED735DEE

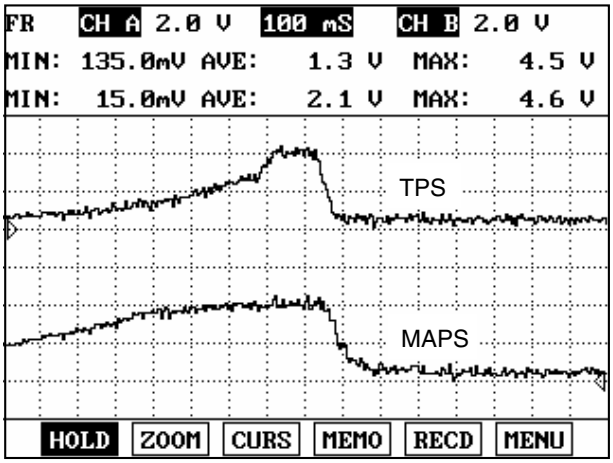

EGRF603X

omparing MAPS and TPS, signals of MAPS and TPS increasess and decrease simultaneously.

MONITOR DTC STATUS E9765A45

1. Check DTC Status

   1) Connect scantool to Data Link Connector(DLC).

   2) IG "ON".

   3) Select "Diagnostic Trouble Codes(DTCs)" mode, and then Press F4(DTAL) to check DTC's information from the DTCs menu

   4) Read "DTC Status" parameter.

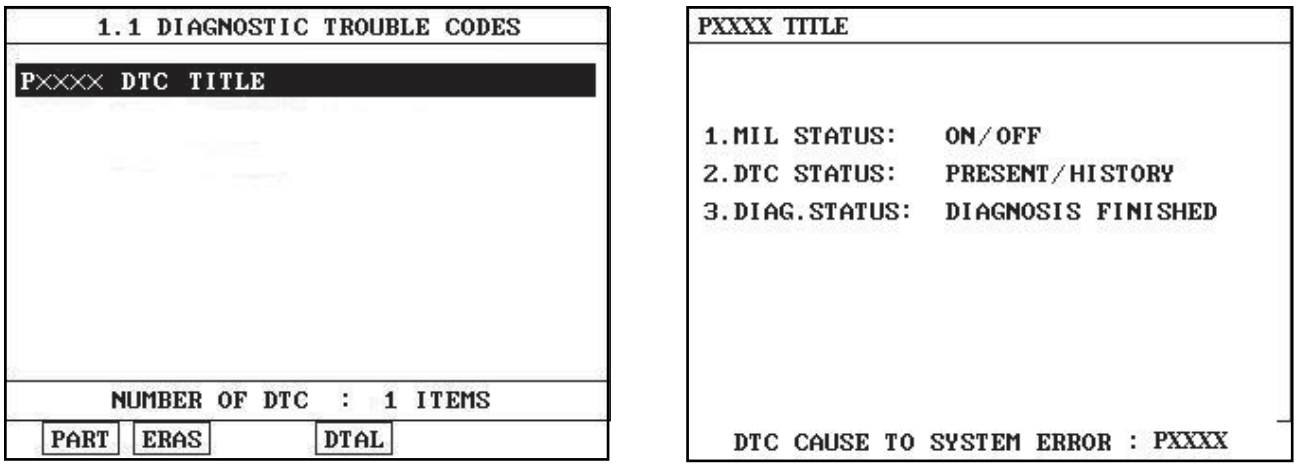

SCMF16159L

   5) Is parameter displayed "Present fault"?

YES

▶ Go to "Terminal and connector inspection" procedure.

NO

▶ Fault is intermittent caused by poor contact in the sensor's and/or PCM's connector or was repaired and PCM memory was not cleared. Thoroughly check connectors for looseness, poor connection, ending, corrosion, contamination, deterioration, or damage. Repair or replace as necessary and go to "Verification of Vehicle Repair" procedure.

TERMINAL AND CONNECTOR INSPECTION E76D2E43

1. Many malfunctions in the electrical system are caused by poor harness and terminals. Faults can also be caused by interference from other electrical systems, and mechanical or chemical damage.
2. Thoroughly check connectors for looseness, poor connection, bending, corrosion, contamination, deterioration, or damage.
3. Has a problem been found ?

YES

▶ Repair or replace if necessary and go to "Verification of Vehicle Repair" procedure

NO

▶ Go to "Power Circuit Inspection" procedure.

POWER CIRCUIT INSPECTION ECD3BC60

1. IG "OFF"
2. Disconnect MAPS connector
3. IG "ON"
4. Measure the voltage between terminal 2 of MAPS harness connector and ground.

Specification : Approx. 5V

5. Is the measured voltage within specification ?

YES

▶ Go to "Ground Circuit Inspection" procedure.

NO

▶ If the voltage is over 5.1V, check short to battery in harness.
▶ Repair or replace as necessary and then, go to "Verification of Vehicle Repair" procedure.

GROUND CIRCUIT INSPECTION E0628D5D

1. IG "OFF".
2. Disconnect MAPS connector.
3. IG "ON" & ENG "OFF"
4. Measure the voltage between terminal 2 of MAPS harness connector and chassis ground.
5. Measure the voltage between terminal 2 and 4 of MAPS harness connector.

Specification : "A" - "B" = : Approx. below 200mV

6. Is the measured voltage within specification ?

YES

▶ Go to "Signal Circuit Inspection" procedure.

NO

▶ Repair contact reistance or open in harness and then go to "Verification of Vehicle Repair" procedure.

SIGNAL CIRCUIT INSPECTION EF6F1F34

1. IG "OFF"
2. Disconnect MAPS and PCM connector.
3. Measure resistance between terminal 1 and 2 of MAPS harness connector.

Specification : Infinite

4. Is the measured resistance within specification ?

YES

▶ Go to "Component inspection" procedure.

NO

▶ Repair short to battery in harness and then go to "Verification of Vehicle Repair" procedure.

COMPONENT INSPECTION E22196FB

1. MAPS performance test
   1) IG "OFF"
   2) Connect scantool to Data Link Connector(DLC) and select "Oscilloscope" then, connect probes to output signal lines of MAPS and TPS.Turn engine "ON" and monitor the waveforms accelerating or decelerating
   3) Start engine and monitor signal waveform during accelleration and decelleration.

SPECIFICATON :

Pressure (kPa)	20	35	60	95	101.32
Voltage (V)	0.789	1.382	2.369	3.75	4
Tolerance (V)	± 0.045				

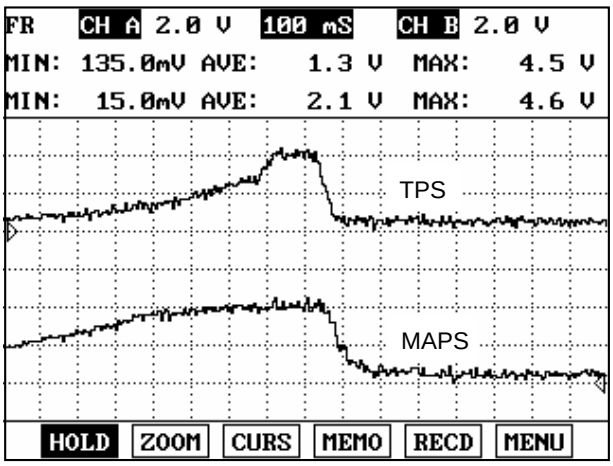

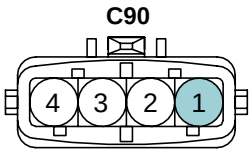

1. MAPS Signal
2. MAPS Power
3. -
4. MAPS Ground

SCMF16197L

4) Is the waveform displayed correctly?(Compare the response time of TPS and MAPS)

YES

▶ Go to "Check PCM".

NO

▶ After replacing MAPS with new one, if it operates normally, replace MAPS and go to "Verification of Vehicle Repair".

2. Check PCM

1) IG "OFF" and disconnect MAPS connector.

2) Connect scantool and IG "ON" & ENG "OFF"

3) Select simulation function on scantool.

4) Simulate voltage at terminal 1 of MAPS harness connector.

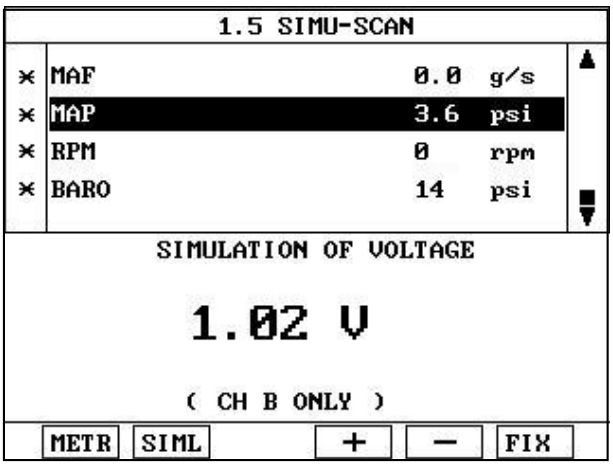

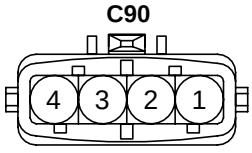

1. MAPS Signal
2. MAPS Power
3. -
4. MAPS Ground

SCMF16198L

5) Does the output voltage response to the change of signal by simulation?

YES

▶ Thoroughly check connectors for looseness, poor connection, bending, corrosion, contamination, deterioration, or damage. Repair or replace if necessary and go to "Verification of Vehicle Repair" procedure

NO

▶ Substitute with a known - good PCM and check for proper operation. If the problem is corrected, replace PCM and go to "Verification of Vehicle Repair" procedure.

NOTE

There is a memory reset function on scantool that can erase optional parts automatically detected and memorized by PCM.Before or after testing PCM on the vehicle, use this function to reuse the PCM on the others

VERIFICATION OF VEHICLE REPAIR E2F62850

After a repair, it is essential to verify that the fault has been corrected.

1. Monitor and record the Freeze Frame Data for the Diagnostic Trouble Code(DTC) which has been diagnosed.
2. Using a Scantool, Clear the DTCs
3. Operate the vehicle within conditions noted in the freeze frame data or enable conditions
4. Monitor that all rediness test have been verified as " Complete "
5. Are any DTCs present ?

YES

▶ Go to the applicable troubleshoooting procedure.

NO

▶ System is performing to specification at this time.

DTC P1107 MANIFOLD ABSOLUTE PRESSURE SENSOR CIRCUIT SHORT - INTERMITTENT LOW INPUT

COMPONENT LOCATION E5265DAD

Refer to DTC P1106.

GENERAL DESCRIPTION E1649484

Refer to DTC P1106.

DTC DESCRIPTION EA745EA1

Checking output signals of MAPS every 60 sec. under detecting condition, if an output signal is below 0.25V for more than 2 sec., PCM sets P1107.

DTC DETECTING CONDITION EBDC59F1

Item		Detecting Condition	Possible Cause
DTC Strategy		• This code detects a intermittent short to low or open in either the signal circuit or the MAP	• Poor Connection • Open or Short to ground in Power Circuit • Open or short to ground in Signal Circuit. • Faulty MAPS • Faulty PCM
Enable Condi-tions	Case 1	• No TPS Active Fault Present • No TPS Short Fail Criteria Met • Ignition Voltage ≥ 11V • Engine Speed 〈 1000rpm • Throttle Position ≤ 0%	
	Case 2	• No TPS Active Fault Present • Ignition Voltage ≥ 11V • Engine Speed 〉 1000rpm • Throttle Position 〉 30%	
Threshold value		• MAP signal 〈 0.25V	
Diagnosis Time		• Continuous (More than 2 sec. failure for every 60 sec. test)	
MIL On Condition		• DTC only (NO MIL ON)	

SPECIFICATION EB133088

Refer to DTC P1106.

SCHEMATIC DIAGRAM E4D4E2C8

Refer to DTC P1106.

SIGNAL WAVEFORM AND DATA EB5BF0EA

Refer to DTC P1106.

MONITOR DTC STATUS EE990409

Refer to DTC P1106.

TERMINAL AND CONNECTOR INSPECTION E1AD95A0

Refer to DTC P1106.

POWER CIRCUIT INSPECTION EC3C4E38

1. IG "OFF"
2. Disconnect MAPS connector.
3. IG "ON"
4. Measure the voltage between terminal 2 of MAPS harness connector and ground.

Specification : Approx. 5V

5. Is the measured voltage within specification ?

YES

▶ Go to "Signal Circuit Inspection" of MAPS.

NO

▶ After repairing open or short to ground in harness and go to "Verification of Vehicle Repair"

SIGNAL CIRCUIT INSPECTION E46CA26A

1. Check short to ground in harness
   1) IG "OFF"
   2) Disconnect MAPS and PCM connector.
   3) Measure the resistance between terminal 1 of MAPS harness connector and ground.

Specification : Infinite

   4) Is the measured resistance within the specification?

YES

▶ Go to "Check open in the harness" of MAPS.

NO

▶ After repairing short to ground in circuits and go to "Verification of Vehicle Repair"

2. Check open in the harness
   1) IG "OFF"
   2) Disconnect MAPS and PCM connector.
   3) Measure the resistance between terminal 1 of MAPS harness connector and terminal C30-B (8) of PCM harness connector

Specification : Approx. below 1 Ω

4) Is the measured resistance within the specification?

YES

▶ Go to "Component Inspection" of MAPS.

NO

▶ Repair open in the harness and go to "Verification of Vehicle Repair".

COMPONENT INSPECTION EFD44281

1. MAPS performance test

1) IG "OFF"

2) Connect scantool to Data Link Connector(DLC) and select "Oscilloscope" then, connect probes to output signal lines of MAPS and TPS.Turn engine "ON" and monitor the waveforms accelerating or decelerating

3) ENG "ON" and monitor signal waveform during accelleration and decelleration.

SPECIFICATON :

Pressure (kPa)	20	35	60	95	101.32
Voltage (V)	0.789	1.382	2.369	3.75	4
Tolerance (V)	± 0.045				

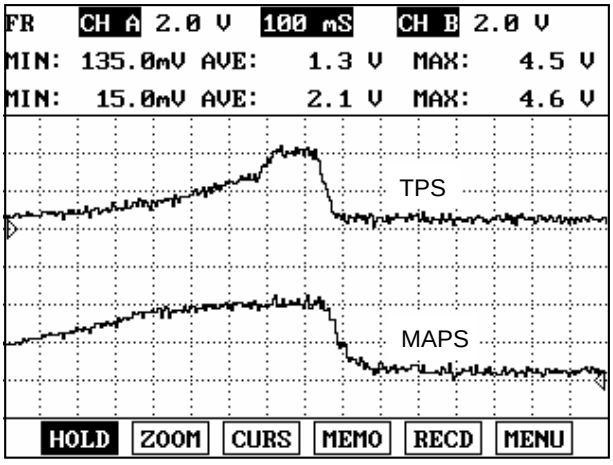

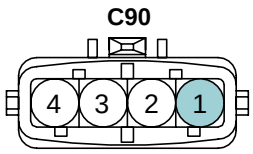

1. MAPS Signal
2. MAPS Power
3. -
4. MAPS Ground

SCMF16197L

4) Is the waveform displayed correctly?(Compare the response time of TPS and MAPS)

YES

▶ Go to "Check PCM".

NO

▶ After replacing MAPS with new one, if it operates normally, replace MAPS and go to "Verification of Vehicle Repair".

2. Check PCM

   1) IG "OFF" disconnect MAPS connector

   2) Connect Scantool and IG "ON" & ENG "OFF"

   3) Select simulation function on scantool.

   4) Simulate voltage at terminal 1 of MAPS harness connector.

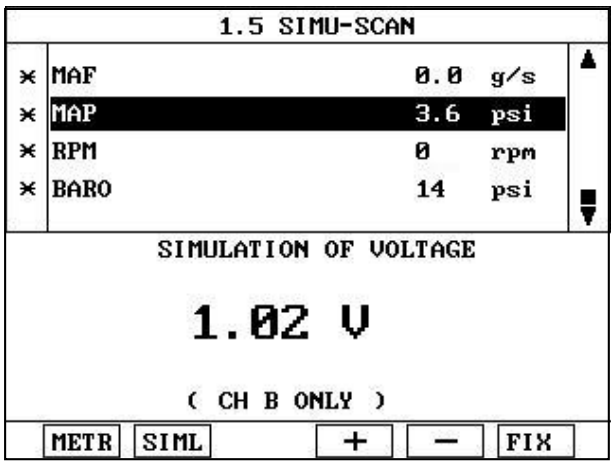

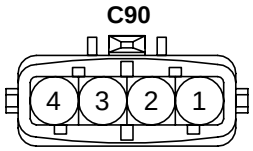

1. MAPS Signal
2. MAPS Power
3. -
4. MAPS Ground

SCMF16198L

   5) Does the output voltage response to the change of signal by simulation?

YES

▶ Thoroughly check connectors for looseness, poor connection, bending, corrosion, contamination, deterioration, or damage. Repair or replace if necessary and go to "Verification of Vehicle Repair" procedure

NO

▶ Substitute with a known - good PCM and check for proper operation. If the problem is corrected, replace PCM and go to "Verification of Vehicle Repair" procedure.

NOTE

There is a memory reset function on scantool that can erase optional parts automatically detected and memorized by PCM.Before or after testing PCM on the vehicle, use this function to reuse the PCM on the others

VERIFICATION OF VEHICLE REPAIR E478E394

Refer to DTC P1106.

DTC P1111 INTAKE AIR TEMPERATURE SENSOR CIRCUIT SHORT - INTERMITTENT HIGH INPUT

COMPONENT LOCATION EF01B093

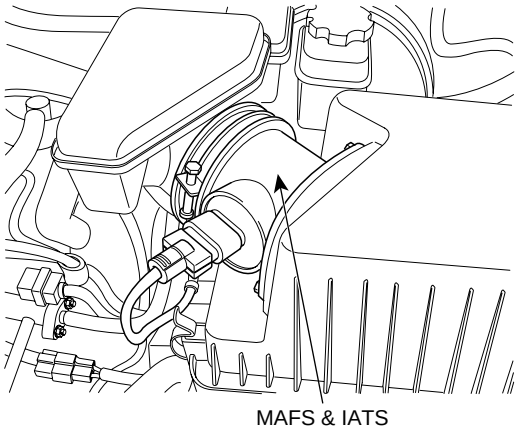

SCMF16185L

GENERAL DESCRIPTION E0E1407B

The Intake Air Temperature Sensor (IATS) is installed into the Mass Air Flow Sensor (MAFS). The IATS uses a thermistor whose resistance changes with the temperature. The electrical resistance of the IATS decreases as the temperature increases, and increases as the temperature decreases. The 5 V power source in the ECM is supplied to the IATS via a resistor in the ECM. That is, the resistor in the ECM and the thermistor in the IATS are connected in series. When the resistance value of the thermistor in IATS changes according to the intake air temperature, the signal voltage also changes. Using this signal, the information of the intake air temperature, the ECM corrects basic fuel injection duration and ignition timing.

DTC DESCRIPTION E0F8336B

Checking output signals of IATS every 120 sec. under detecting condition, if an ouput signal is over 4.9V for more than 4 sec., PCM sets P1111.

DTC DETECTING CONDITION E1AFC8CB

Item		Detecting Condition	Possible Cause
DTC Strategy		• This code detects a continuous short to high in either the signal circuit or the sensor	• Poor Connection • Open or short in signal circuit • Open in ground circuit • Faulty IATS • Faulty PCM
Enable Condi-tions	Case 1	• No VSS Fault Active (No P0501) • No Coolant Short Active Fault Present • No MAF Active Fault Present • Engine Air Flow 〈 15 g/s • Vehicle Speed 〈 25kph • Engine Coolant Temperature 〉 50℃(122 °F) • Engine Running Time 〉 120 sec.	
	Case 2	• No VSS Fault Active (No P0501) • No Coolant Short Active Fault Present • No MAF Active Fault Present • Engine Air Flow 〈 15 g/s • Vehicle Speed 〈 25kph • Ignition off time 〉 360 min. • Engine Coolant Temperature 〉 -10℃(14 °F) • Engine Running	
Threshold value		• IATS signal 〉 4.9V	
Diagnosis Time		• Continuous (More than 4 sec. failure for every 120 sec. test)	
MIL On Condition		• DTC only (NO MIL ON)	

SPECIFICATION ED73A718

Temp. (℃/°F)	Resistance (kΩ)	Temp. (℃/°F)	Resistance (kΩ)
-40(-40)	95.95 ~ 105.78	20(68)	3.42 ~ 3.61
-20(-4)	27.4 ~ 29.77	40(104)	1.43 ~ 1.5
0(32)	9.08 ~ 9.72	60(140)	0.66 ~ 0.69
10(50)	5.49 ~ 5.83	80(176)	0.33 ~ 0.34

SCHEMATIC DIAGRAM E43D15D8

[CIRCUIT DIAGRAM]

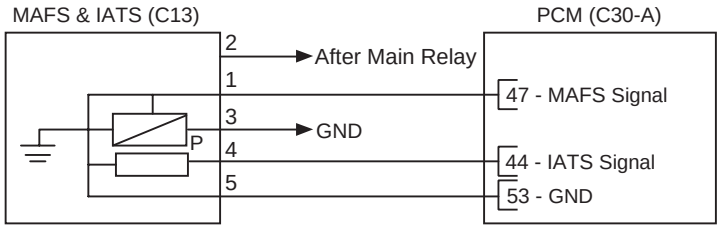

[CONNECTION INFORMATION]

Terminal	Connected to	Function
1	PCM C30-A (47)	MAFS Signal
2	Main Relay	Battery Voltage (B+)
3	Chassis Ground	Ground
4	PCM C30-A (44)	IATS Signal
5	PCM C30-A (53)	Sensor Ground

[HARNESS CONNECTORS]

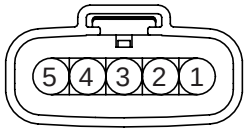

C13

MAFS & IATS

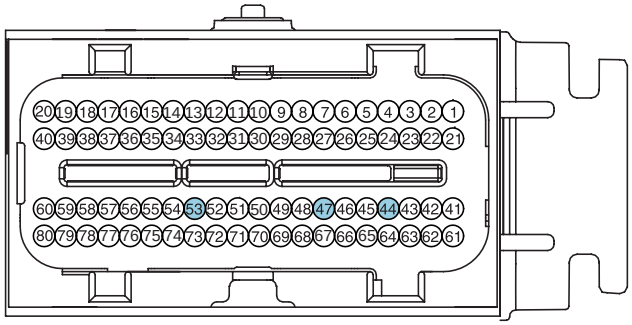

C30-A

PCM

SCMF16104L

SIGNAL WAVEFORM AND DATA E1E6FAE0

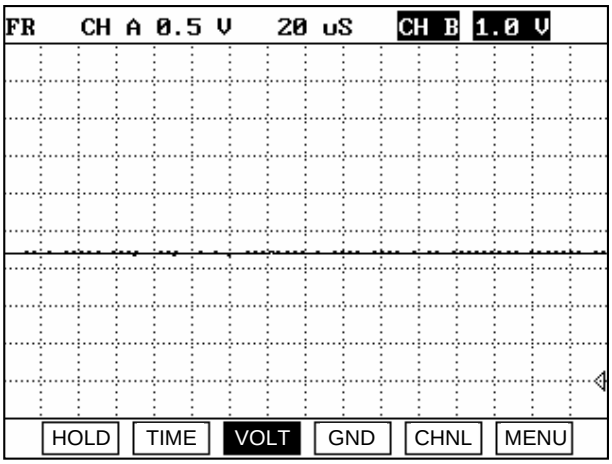

EGRF604E

The output signals of IATS & ECTS change smoothly without any rapid changes. Those have almost same characteristic signal during the early period after start. It means that the temperatures of intake air and engine coolant are depended on the temperature of atmosphere. Meanwhile, during the warming up, the output signal of ECTS is going up increasingly. but, the output signal of IATS changes a little bit. even it may not change almost. It means that the heat of engine does not affect on the temperature of intake air.

MONITOR DTC STATUS EA02AEA0

1. Check DTC Status

    1) Connect scantool to Data Link Connector(DLC).

2) IG "ON".

3) Select "Diagnostic Trouble Codes(DTCs)" mode, and then Press F4(DTAL) to check DTC's information from the DTCs menu

4) Read "DTC Status" parameter.

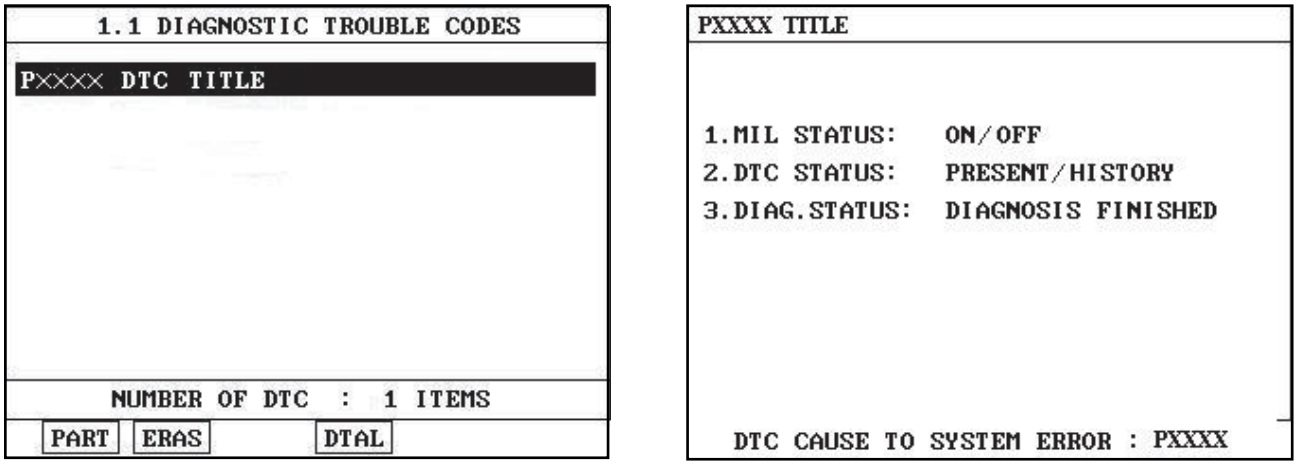

SCMF16159L

5) Is parameter displayed "Present fault"?

YES

▶ Go to "Terminal and connector inspection" procedure.

NO

▶ Fault is intermittent caused by poor contact in the sensor's and/or PCM's connector or was repaired and PCM memory was not cleared. Thoroughly check connectors for looseness, poor connection, ending, corrosion, contamination, deterioration, or damage. Repair or replace as necessary and go to "Verification of Vehicle Repair" procedure.

TERMINAL AND CONNECTOR INSPECTION E84E251C

1. Many malfunctions in the electrical system are caused by poor harness and terminals. Faults can also be caused by interference from other electrical systems, and mechanical or chemical damage.

2. Thoroughly check connectors for looseness, poor connection, bending, corrosion, contamination, deterioration, or damage.

3. Has a problem been found?

YES

▶ Repair as necessary and go to "Verification of Vehicle Repair" procedure

NO

▶ Go to "Signal Circuit Inspection" procedure.

SIGNAL CIRCUIT INSPECTION EFB4B430

1. Check voltage

   1) IG "OFF" and disconnect IATS connector.

   2) IG "ON" and ENG "OFF"

   3) Measure voltage between terminal 4 of IATS harness connector and chassis ground.

Specification : Approx. 5V

   4) Is the measured voltage within specification ?

YES

▶ Go to "Ground Circuit Inspection" procedure.

NO

▶ If the voltage is 0V, go to "Check open in harness" as follows. If the voltage is more than 5.1V, go to "Check short to battery in harness" as follows.

2. Check short to battery in harness

   1) IG "OFF" and disconnect IATS connector and PCM connector.

   2) Measure resistance between terminals 2 and 4 of IATS harness connector.

   3) Measure resistance between terminals 1 and 4 of IATS harness connector.

Specification : Infinite

   4) Is the measured resistance within specification?

YES

▶ Go to "Component Inspection" procedure.

NO

▶ Repair short to battery in harness and go to "Verification of Vehicle Repair" procedure.

3. Check open in harness

   1) IG "OFF" and disconnect IATS connector and PCM connctor.

   2) Measure resistance between terminal 4 of IATS harness connector and C30-A (44) of PCM harness connector.

Specification : below 1Ω

   3) Is the measured resistance within specification?

YES

▶ Go to "Ground Circuit Inspection" procedure.

NO

▶ Repair open in harness and go to "Verification of Vehicle Repair" procedure.

GROUND CIRCUIT INSPECTION EBAC49D2

1. IG "OFF" and disconnect IATS connector.
2. Measure voltage between terminal 4 of IATS harness connector and chassis ground.
3. Measure voltage between terminals 4 and 5 of IATS harness connector.

Specification : Voltage difference between measurement "A" and "B" is below 200mV.



SCMF16203L

4. Is the measured voltage within specification ?

YES

▶ Go to "Component Inspection" procedure.

NO

▶ Repair contact resistance or open in harness and go to "Verification of Vehicle Repair" procedure.

COMPONENT INSPECTION EABFAED3

1. Check IATS
   1) IG "OFF" and disconnect IATS connector.
   2) Measure resistance between teminals 4 and 5 of IATS connector.(Component side)

SPECIFICATON :

Temp. (℃/℉)	Resistance (kΩ)	Temp. (℃/℉)	Resistance (kΩ)
-40(-40)	95.95 ~ 105.78	20(68)	3.42 ~ 3.61
-20(-4)	27.4 ~ 29.77	40(104)	1.43 ~ 1.5
0(32)	9.08 ~ 9.72	60(140)	0.66 ~ 0.69
10(50)	5.49 ~ 5.83	80(176)	0.33 ~ 0.34

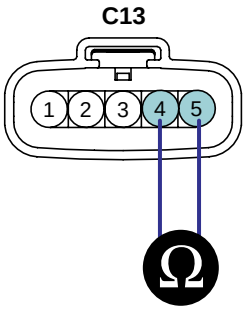

1. MAFS Signal
2. MAFS Power
3. MAFS Ground
4. IATS Signal
5. IATS Ground

SCMF16204L

3) Is the measured resistance within specification ?

YES

▶ Go to "Check PCM" as follows.

NO

▶ Substitute with a known - good IATS and check for proper operation. If the problem is corrected, replace IATS and go to "Verification of Vehicle Repair" procedure.

2. Check PCM

1) IG "OFF" and connect scantool.

2) Disconnect IATS connector and connect probe to terminal 4 of IATS harness connector.

3) IG "ON" and ENG "OFF" and simulation Function on scantool.

4) Simulate voltage at terminal 4 of IATS harness connector.

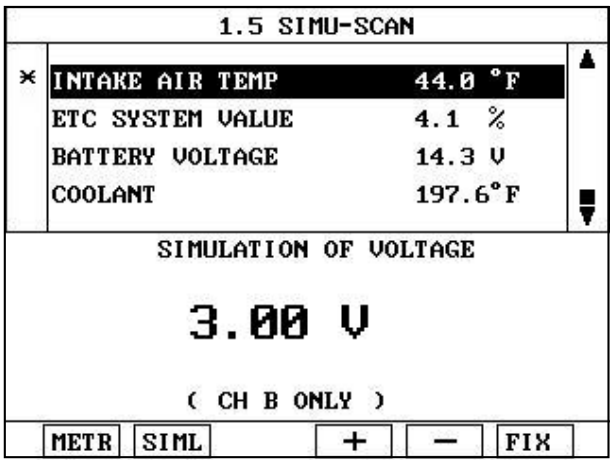

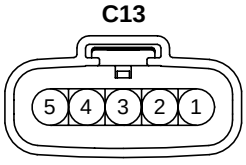

1. MAFS Signal
2. MAFS Power
3. MAFS Ground
4. IATS Signal
5. IATS Ground

SCMF16205L

5) Does the signal value of IAT sensor change according to simulation voltage ?

YES

▶ Thoroughly check connectors for looseness, poor connection, bending, corrosion, contamination, deterioration, or damage. Repair or replace as necessary and go to "Verification of Vehicle Repair" procedure.

NO

▶ Substitute with a known - good PCM and check for proper operation. If the problem is corrected, replace PCM and go to "Verification of Vehicle Repair" procedure.

NOTE

There is a memory reset function on scantool that can erase optional parts automatically detected and memorized by PCM.
Before or after testing PCM on the vehicle, use this function to reuse the PCM on the others.

VERIFICATION OF VEHICLE REPAIR E33673FE

After a repair, it is essential to verify that the fault has been corrected.

1. Monitor and record the Freeze Frame Data for the Diagnostic Trouble Code(DTC) which has been diagnosed.
2. Using a Scantool, Clear the DTCs
3. Operate the vehicle within conditions noted in the freeze frame data or enable conditions
4. Monitor that all rediness test have been verified as " Complete "
5. Are any DTCs present ?

YES

▶ Go to the applicable troubleshoooting procedure.

NO

▶ System is performing to specification at this time.

DTC P1112 INTAKE AIR TEMPERATURE SENSOR CIRCUIT SHORT - INTERMITTENT LOW INPUT

COMPONENT LOCATION EE64C5F4

Refer to DTC P1111.

GENERAL DESCRIPTION E1876C90

Refer to DTC P1111.

DTC DESCRIPTION E8A6F59D

Checking output signals of IATS every 20 sec. under detecting condition, if an ouput signal is below 0.1V for more than 10 sec., PCM sets P1112.

DTC DETECTING CONDITION EB10DA7C

Item		Detecting Condition	Possible Cause
DTC Strategy		• This code detects a continuous short to ground in either the signal circuit or the sensor	• Poor Connection • Short to ground in signal circuit. • Faulty IATS • Faulty PCM
Enable Condi-tions	Case 1	• Engine Run State • No VSS Fault Active • Vehicle Speed 〉 50kph(31mph) • IAT Short Low Enable Criteria Met	
	Case 2	• Engine Running Time 〉 120sec. • IG "OFF" time 〉 360min. • IAT Short Low Enable Criteria Met	
Threshold value		• IATS signal 〈 0.1V	
Diagnosis Time		• Continuous (More than 10 sec. failure for every 20 sec. test)	
MIL On Condition		• DTC only	

SPECIFICATION E8D6E9DC

Refer to DTC P1111.

SCHEMATIC DIAGRAM EF759E70

Refer to DTC P1111.

SIGNAL WAVEFORM AND DATA E01DD8F1

Refer to DTC P1111.

MONITOR DTC STATUS EF79ACC8

Refer to DTC P1111.

TERMINAL AND CONNECTOR INSPECTION E58ED658

Refer to DTC P1111.

SIGNAL CIRCUIT INSPECTION EF4CCDA1

1. Check voltage
   1) IG "OFF" and disconnect IATS connector.
   2) IG "ON" and ENG "OFF"
   3) Measure voltage between terminal 4 of IATS harness connector and chassis ground.

Specification : Approx. 5V

   4) Is the measured voltage within specification ?

YES

▶ Go to "Component Inspection" procedure.

NO

▶ Go to " Check short to ground in harness" procedure.

2. Check short to ground in harness
   1) IG "OFF" and disconnect IATS connector and PCM connector.
   2) Measure resistance between terminal 4 of IATS harness connector and chassis ground.
   3) Measure resistance between terminals 4 and 5 of IATS harness connector.
   4) Measure resistance between terminals 4 and 3 of IATS harness connector.

Specification : Infinite

   5) Is the measured resistance within specification?

YES

▶ Go to "Component inspection" procedure.

NO

▶ Repair short to ground in harness and go to "Verification of Vehicle Repair" procedure.

COMPONENT INSPECTION E57797EC

1. Check IATS
   1) IG "OFF" and disconnect IATS connector.
   2) Measure resistance between teminals 4 and 5 of IATS connector.(Component side)

SPECIFICATON :

Temp. (℃/℉)	Resistance (kΩ)	Temp. (℃/℉)	Resistance (kΩ)
-40(-40)	95.95 ~ 105.78	20(68)	3.42 ~ 3.61
-20(-4)	27.4 ~ 29.77	40(104)	1.43 ~ 1.5
0(32)	9.08 ~ 9.72	60(140)	0.66 ~ 0.69
10(50)	5.49 ~ 5.83	80(176)	0.33 ~ 0.34

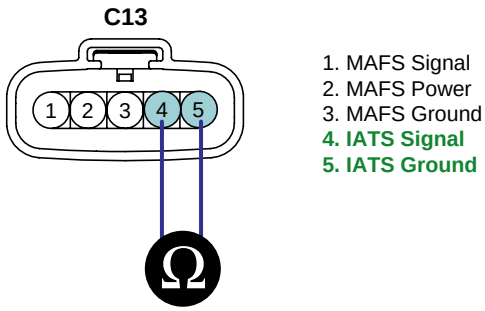

1. MAFS Signal
2. MAFS Power
3. MAFS Ground
4. IATS Signal
5. IATS Ground

SCMF16204L

3) Is the measured resistance within specification ?

YES

▶ Go to "Check PCM" as follows.

NO

▶ Substitute with a known - good IATS and check for proper operation. If the problem is corrected, replace IATS and go to "Verification of Vehicle Repair" procedure.

2. Check PCM

1) IG "OFF" and connect scantool.

2) Disconnect IATS connector and connect probe to terminal 4 of IATS harness connector.

3) IG "ON" and ENG "OFF" and simulation Function on scantool.

4) Simulate voltage at terminal 4 of IATS harness connector.

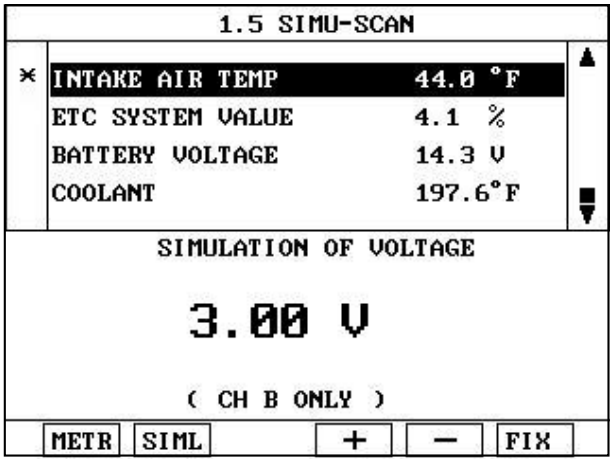

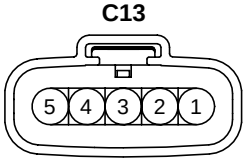

1. MAFS Signal
2. MAFS Power
3. MAFS Ground
4. IATS Signal
5. IATS Ground

SCMF16205L

5) Does the signal value of IAT sensor change according to simulation voltage ?

YES

▶ Thoroughly check connectors for looseness, poor connection, bending, corrosion, contamination, deterioration, or damage. Repair or replace as necessary and go to "Verification of Vehicle Repair" procedure.

NO

▶ Substitute with a known - good PCM and check for proper operation. If the problem is corrected, replace PCM and go to "Verification of Vehicle Repair" procedure.

NOTE

There is a memory reset function on scantool that can erase optional parts automatically detected and memorized by PCM.
Before or after testing PCM on the vehicle, use this function to reuse the PCM on the others.

VERIFICATION OF VEHICLE REPAIR EAB20578

Refer to DTC P1111.

DTC P1114 ENGINE COOLANT TEMPERATURE SENSOR CIRCUIT INTERMITTENT LOW INPUT

COMPONENT LOCATION E5C90ED0

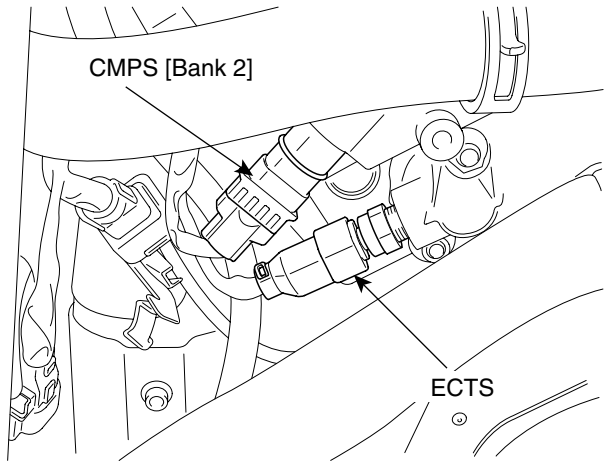

LGLG510A

GENERAL DESCRIPTION ED9EA229

The Engine Coolant Temperature Sensor (ECTS) is located in the engine coolant passage of the cylinder head for detecting the engine coolant temperature. The ECTS uses a thermistor whose resistance changes with the temperature. The electrical resistance of the ECTS decreases as the temperature increases, and increases as the temperature decreases. The reference 5 V in the ECM is supplied to the ECTS via a resistor in the ECM. That is, the resistor in the ECM and the thermistor in the ECTS are connected in series. When the resistance value of the thermistor in the ECTS changes according to the engine coolant temperature, the output voltage also changes. During cold engine operation the ECM increases the fuel injection duration and controls the ignition timing using the information of engine coolant temperature to avoid engine stalling and improve drivability.

DTC DESCRIPTION E3E7E1FA

Checking output signals from ECTS every 120 sec. under detecting condition, if an output signal is below 0.1V for more than 4 sec., PCM sets P1114.

DTC DETECTING CONDITION EB0C21F2

Item		Detecting Condition	Possible Cause
DTC Strategy		• This code detects a intermittent short to ground in the signal circuit or the sensor	• Poor Connection • Short to ground in signal Circuit • Faulty ECTS • Faulty PCM
Enable Conditions	Case 1	• Engine Running Time 〉 120sec.	
	Case 2	• Soak Time 〉 360min. • Engine Running	
Threshold value		• Coolant signal 〈 0.1V	
Diagnosis Time		• Continuous (More than 4 sec. failure for every 120 sec. test)	
MIL On Condition		• DTC only (NO MIL ON)	

SPECIFICATION E44D6B52

Temp. (℃/℉)	Resistance (kΩ)	Temp. (℃/℉)	Resistance (kΩ)
-40(-40)	48.14	40(104)	1.15
-20(-4)	14.13 ~ 16.83	60(140)	0.59
0(32)	5.79	80(176)	0.32
20(68)	2.31 ~ 2.59		

SCHEMATIC DIAGRAM E3EDDA96

[CIRCUIT DIAGRAM]

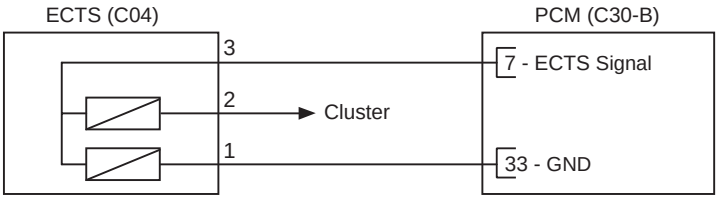

[CONNECTION INFORMATION]

Terminal	Connected to	Function
1	PCM C30-B (33)	Sensor ground
2	Cluster	-
3	PCM C30-B (7)	ECTS Signal

[HARNESS CONNECTORS]

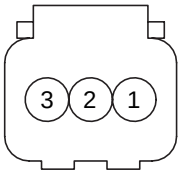

C04

ECTS

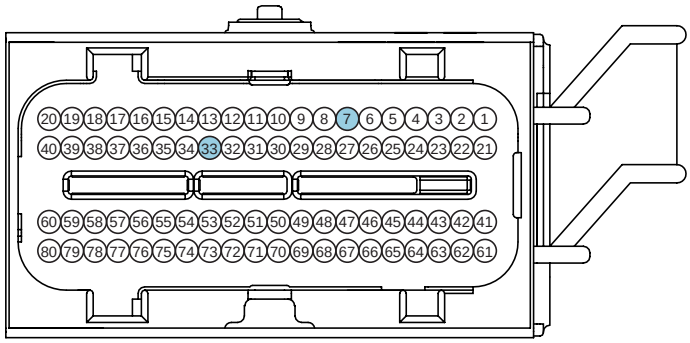

C30-B

PCM

SCMF16106L

SIGNAL WAVEFORM AND DATA E667E278

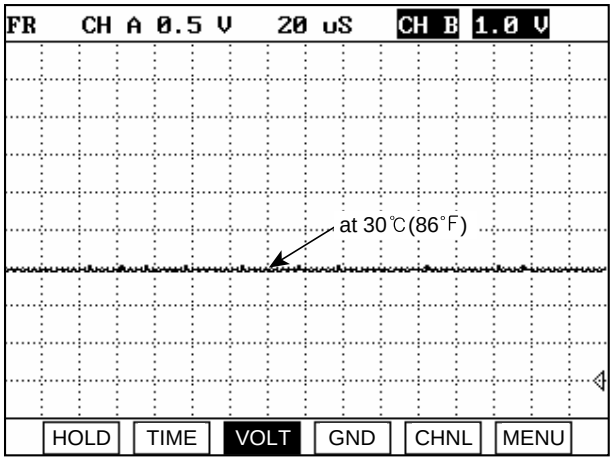

EGRF604P

The output signals of IATS & ECTS change smoothly without any rapid changes. Those have almost same characteristic signal during the early period after start. It means that the temperatures of intake air and engine coolant are depended on

the temperature of atmosphere. Meanwhile, during the warming up, the output signal of ECTS is going up increasingly. but, the output signal of IATS changes a little bit. even it may not change almost. It means that the heat of engine does not affect on the temperature of intake air.

MONITOR DTC STATUS EF86F17F

1. Check DTC Status

   1) Connect scantool to Data Link Connector(DLC).

   2) IG "ON".

   3) Select "Diagnostic Trouble Codes(DTCs)" mode, and then Press F4(DTAL) to check DTC's information from the DTCs menu

   4) Read "DTC Status" parameter.

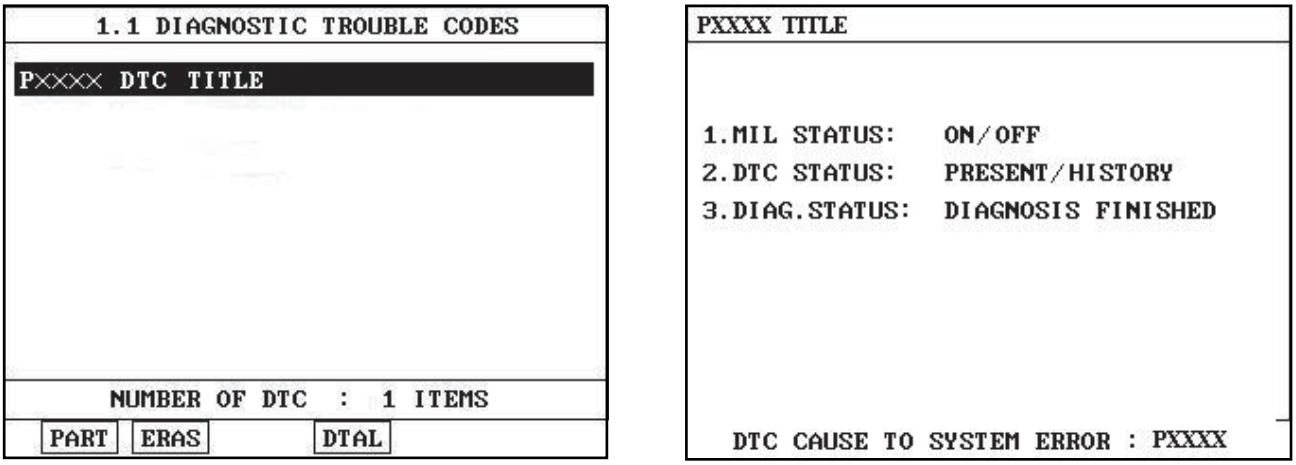

SCMF16159L

   5) Is parameter displayed "Present fault"?

YES

▶ Go to "Terminal and connector inspection" procedure.

NO

▶ Fault is intermittent caused by poor contact in the sensor's and/or PCM's connector or was repaired and PCM memory was not cleared. Thoroughly check connectors for looseness, poor connection, ending, corrosion, contamination, deterioration, or damage. Repair or replace as necessary and go to "Verification of Vehicle Repair" procedure.

TERMINAL AND CONNECTOR INSPECTION E8321A87

1. Many malfunctions in the electrical system are caused by poor harness and terminals. Faults can also be caused by interference from other electrical systems, and mechanical or chemical damage.

2. Thoroughly check connectors for looseness, poor connection, bending, corrosion, contamination, deterioration, or damage.

3. Has a problem been found?

YES

▶ Repair as necessary and go to "Verification of Vehicle Repair" procedure

NO

▶ Go to "Signal Circuit Inspection" procedure.

SIGNAL CIRCUIT INSPECTION E1B03909

1. Check voltage

   1) IG "OFF" and disconnect ECTS connector.

   2) IG "ON" and ENG "OFF"

   3) Measure voltage between terminal 3 of ECTS harness connector and chassis ground.

Specification : Approx. 5V

   4) Is the measured voltage within specification ?

      YES

      ▶ Go to "Component Inspection" procedure.

      NO

      ▶ Go to "Check short to ground in harness" as follows.

2. Check short to ground in harness

   1) IG "OFF" and disconnect ECTS connector and PCM connector.

   2) Measure resistance between terminal 3 of ECTS harness connector and chassis ground.

   3) Measure resistance between terminals 1 and 3 of ECTS harness connector.

Specification : Infinite

   4) Is the measured resistance within specification?

      YES

      ▶ Go to "Component Inspection" procedure.

      NO

      ▶ Repair short to ground in harness, and go to "Verification of Vehicle Repair" procedure.

COMPONENT INSPECTION ED03F372

1. Check ECTS

   1) IG "OFF" and disconnect ECTS connector.

   2) Measure resistance between terminals 1 and 3 of ECTS connector.(Component side)

SPECIFICATON :

Temp. (℃/℉)	Resistance (kΩ)	Temp. (℃/℉)	Resistance (kΩ)
-40(-40)	48.14	40(104)	1.15
-20(-4)	14.13 ~ 16.83	60(140)	0.59
0(32)	5.79	80(176)	0.32
20(68)	2.31 ~ 2.59		

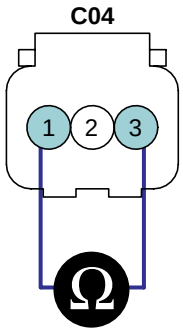

1. ECTS Ground
2. To Gauge
3. ECTS Signal

SCMF16211L

3) Is the measured resistance within specification?

YES

▶ Go to "Check PCM" as follows.

NO

▶ Substitute with a known - good ECTS and check for proper operation. If the problem is corrected, replace ECTS and go to "Verification of Vehicle Repair" procedure.

2. Check PCM

1) IG "OFF" and connect scantool.

2) Connect probe to terminal 3 of ECTS harness connector.

3) IG "ON" and ENG "OFF" and simulation Function on scantool.

4) Simulate voltage at terminal 3 of ECTS harness connector.

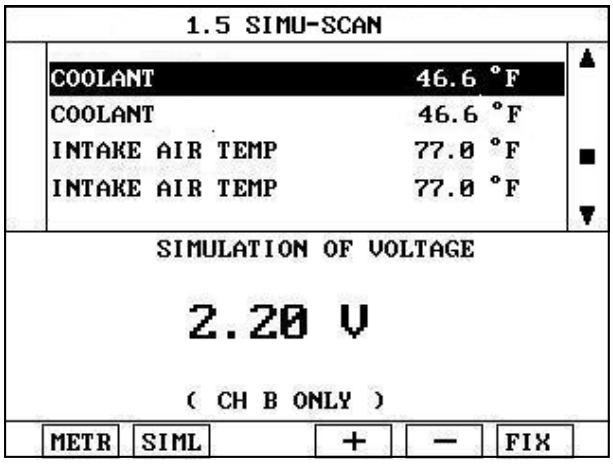

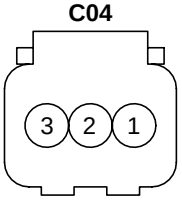

1. ECTS Ground
2. To Gauge
3. ECTS Signal

SCMF16212L

5) Does the signal value of ECT sensor change according to simulation voltage ?

YES

▶ Thoroughly check connectors for looseness, poor connection, bending, corrosion, contamination, deterioration, or damage. Repair or replace as necessary and go to "Verification of Vehicle Repair" procedure.

NO

▶ Substitute with a known - good PCM and check for proper operation. If the problem is corrected, replace PCM and go to "Verification of Vehicle Repair" procedure.

NOTE

There is a memory reset function on scantool that can erase optional parts automatically detected and memorized by PCM.
Before or after testing PCM on the vehicle, use this function to reuse the PCM on the others.

VERIFICATION OF VEHICLE REPAIR EB43BBD0

After a repair, it is essential to verify that the fault has been corrected.

1. Monitor and record the Freeze Frame Data for the Diagnostic Trouble Code(DTC) which has been diagnosed.
2. Using a Scantool, Clear the DTCs
3. Operate the vehicle within conditions noted in the freeze frame data or enable conditions
4. Monitor that all rediness test have been verified as " Complete "
5. Are any DTCs present ?

YES

▶ Go to the applicable troubleshoooting procedure.

NO

▶ System is performing to specification at this time.

DTC P1115 ENGINE COOLANT TEMPERATURE SENSOR CIRCUIT - INTERMITTENT HIGH INPUT

COMPONENT LOCATION E6E3F387

Refer to DTC P1114.

GENERAL DESCRIPTION ED21BC73

Refer to DTC P1114.

DTC DESCRIPTION EF56256D

Checking output signals from ECTS every 120 sec. under detecting condition, if an output signal is above 4.9V for more than 4 sec., PCM sets P1115.

DTC DETECTING CONDITION EE0C1355

Item		Detecting Condition	Possible Cause
DTC Strategy		• This code detects a intermittent open or short to battey in the signal circuit or the sensor	• Poor Connection • Open or short to battery in signal Circuit • Open in Ground Circuit. • Faulty ECTS • Faulty PCM
Enable Condi-tions	Case 1	• Engine Running Time 〉 120sec.	
	Case 2	• Soak Time 〉 360min. • Engine Running	
Threshold value		• Coolant signal 〉 4.9V	
Diagnosis Time		• Continuous (More than 4 sec. failure for every 120 sec. test)	
MIL On Condition		• DTC only (NO MIL ON)	

SPECIFICATION E10F035E

Refer to DTC P1114.

SCHEMATIC DIAGRAM EDE41432

Refer to DTC P1114.

SIGNAL WAVEFORM AND DATA E9107FF0

Refer to DTC P1114.

MONITOR DTC STATUS EEDAEBB3

Refer to DTC P1114.

TERMINAL AND CONNECTOR INSPECTION E08DB827

Refer to DTC P1114.

SIGNAL CIRCUIT INSPECTION EB1410D1

1. Check voltage

   1) IG "OFF" and disconnect ECTS connector.

   2) IG "ON" and ENG "OFF"

   3) Measure voltage between terminal 3 of ECTS harness connector and chassis ground.

Specification : Approx. 5V

   4) Is the measured voltage within specification ?

YES

▶ Go to "Ground Circuit Inspection" procedure.

NO

▶ If voltage is 0V, go to "Check open in harness" as follows. If it is more than 5.1V, go to "Check short to battery in harness" as follows

2. Check short to battery in harness

   1) IG "OFF" and disconnect ECTS connector and PCM connector.

   2) Measure resistance between terminals 2 and 3 of ECTS harness connector.

Specification : Infinite

   3) Is the measured resistance within specification?

YES

▶ Go to "Component Inspection" procedure.

NO

▶ Repair short to battery in harness, and go to "Verification of Vehicle Repair" procedure.

3. Check open in harness

   1) IG "OFF" and disconnect ECTS connector and PCM connector.

   2) Measure resistance between terminal 3 of ECTS harness connector and terminal C30-B (7) of PCM harness connector.

Specification : Below 1Ω

   3) Is the measured resistance within specification?

YES

▶ Go to "Ground Circuit Inspection" procedure.

NO

▶ Repair open in harness, and go to "Verification of Vehicle Repair" procedure.

GROUND CIRCUIT INSPECTION EE4A2CDF

1. IG "OFF" and disconnect ECTS connector.
2. Measure voltage between terminal 3 of ECTS harness connector and chassis ground.
3. Measure voltage between terminals 1 and 3 of ECTS harness connector.

Specification : Voltage difference between measurement "A" and "B" is below 200mV.

4. Is the measured voltage within specification?

YES

▶ Go to "Component Inspection" procedure.

NO

▶ Repair open or contact resistance in harness, and go to "Verification of Vehicle Repair" procedure.

COMPONENT INSPECTION E296506E

1. Check ECTS
   1) IG "OFF" and disconnect ECTS connector.
   2) Measure resistance between terminals 1 and 3 of ECTS connector.(Component side)

SPECIFICATON :

Temp. (℃/℉)	Resistance (kΩ)	Temp. (℃/℉)	Resistance (kΩ)
-40(-40)	48.14	40(104)	1.15
-20(-4)	14.13 ~ 16.83	60(140)	0.59
0(32)	5.79	80(176)	0.32
20(68)	2.31 ~ 2.59		

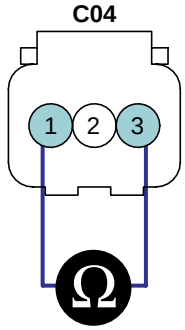

1. ECTS Ground
2. To Gauge
3. ECTS Signal

SCMF16211L

   3) Is the measured resistance within specification?

YES

▶ Go to "Check PCM" as follows.

NO

▶ Substitute with a known - good ECTS and check for proper operation. If the problem is corrected, replace ECTS and go to "Verification of Vehicle Repair" procedure.

2. Check PCM

1) IG "OFF" and connect scantool.

2) Connect probe to terminal 3 of ECTS harness connector.

3) IG "ON" and ENG "OFF" and simulation Function on scantool.

4) Simulate voltage at terminal 3 of ECTS harness connector.

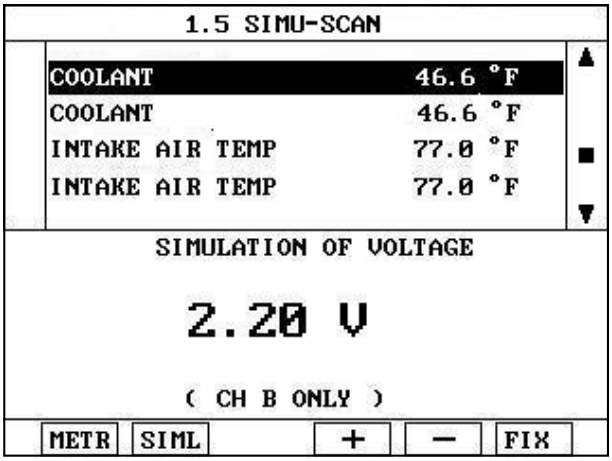

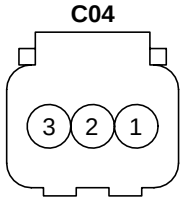

1. ECTS Ground
2. To Gauge
3. ECTS Signal

SCMF16212L

5) Does the signal value of ECT sensor change according to simulation voltage ?

YES

▶ Thoroughly check connectors for looseness, poor connection, bending, corrosion, contamination, deterioration, or damage. Repair or replace as necessary and go to "Verification of Vehicle Repair" procedure.

NO

▶ Substitute with a known - good PCM and check for proper operation. If the problem is corrected, replace PCM and go to "Verification of Vehicle Repair" procedure.

NOTE

There is a memory reset function on scantool that can erase optional parts automatically detected and memorized by PCM.
Before or after testing PCM on the vehicle, use this function to reuse the PCM on the others.

VERIFICATION OF VEHICLE REPAIR EEAC6FF5

Refer to DTC P1114.

DTC P1295 ETC (ELECTRONIC THROTTLE CONTROL) SYSTEM MALFUNCTION - POWER MANAGEMENT

COMPONENT LOCATION E6E0C9FA

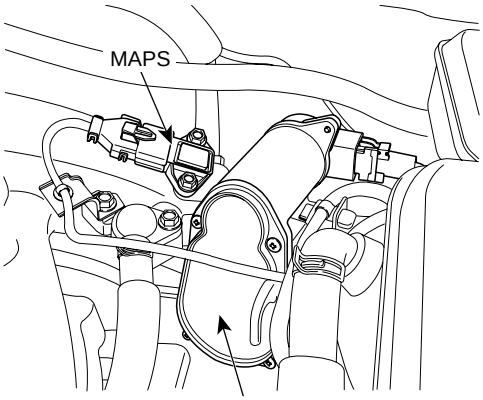

SCMF16192L

GENERAL DESCRIPTION EC81A79C

The Electronic Throttle Control(ETC) system is made of the components throttle body, Throttle Position Sensor(TPS)1 & 2 and Accelerator Position Sensor(APS) 1 & 2. The throttle body contains the actuator, the throttle plate and the throttle position sensor (potentiometer), which are integrated in one housing. The actuator consists of a DC motor with a two-stage gear. The opening angle of the throttle valve is detected by the throttle position sensor which is mounted on the throttle body. And it provides feedback to the ECM to control the throttle motor in order to control the throttle valve opening angle properly in response to the driving condition.

DTC DESCRIPTION E476FA42

If power management mode is recognized under detecting condition, PCM sets P1295. And MIL(Malfunction Indication Lamp) turns on.

DTC DETECTING CONDITION ED114BD2

Item	Detecting Condition	Possible cause
DTC Strategy	• This code detects if the system is in Power Management Mode	• TPS Malfunction • TPS Malfunction + MAFSMalfunction • MAP Malfunction + TPSMalfunction • Faulty PCM
EnableConditions	• Ignition On	
Threshold value	• Power Management Mode is active	
DiagnosisTime	• -	
MIL On Condition	• 1 Driving Cycle	

SCHEMATIC DIAGRAM EF168216

[CIRCUIT DIAGRAM]

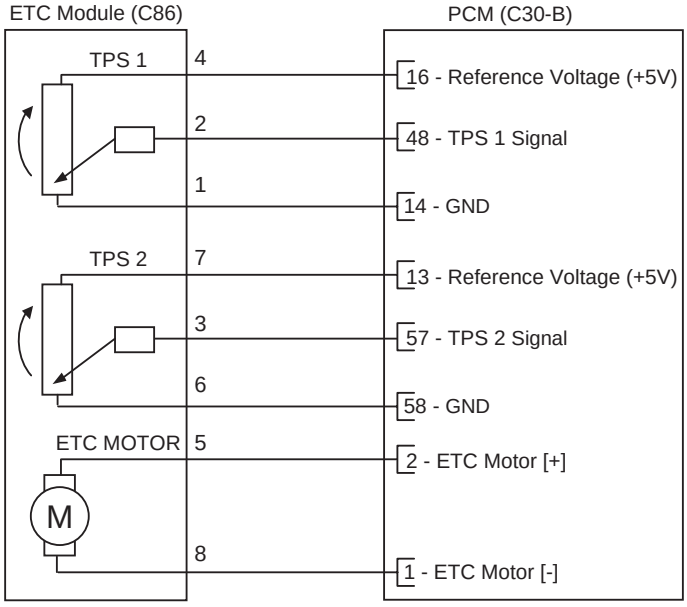

[CONNECTION INFORMATION]

Terminal	Connected to	Function
1	PCM C30-B (14)	TPS 1 Ground
2	PCM C30-B (48)	TPS 1 Signal
3	PCM C30-B (57)	TPS 2 Signal
4	PCM C30-B (16)	TPS 1 Reference Voltage (+5V)
5	PCM C30-B (2)	ETC Motor [+] Control
6	PCM C30-B (58)	TPS 2 Ground
7	PCM C30-B (13)	TPS 2 Reference Voltage (+5V)
8	PCM C30-B (1)	ETC Motor [-] Control

[HARNESS CONNECTORS]



C86

ETC MODULE

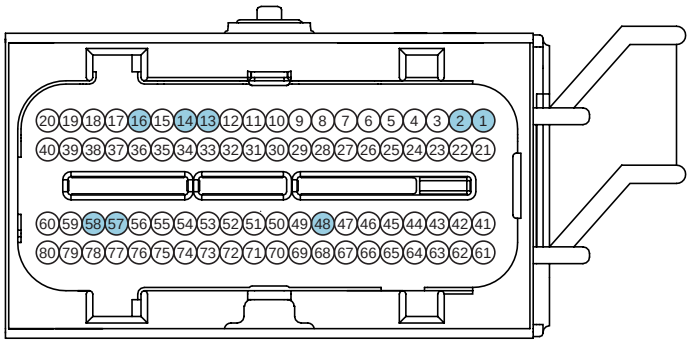

C30-B

PCM

SCMF16101L

MONITOR DTC STATUS ECC8FD7A

1. Check DTC Status

   1) Connect scantool to Data Link Connector(DLC).

   2) IG "ON".

   3) Select "Diagnostic Trouble Codes(DTCs)" mode, and then Press F4(DTAL) to check DTC's information from the DTCs menu

   4) Read "DTC Status" parameter.

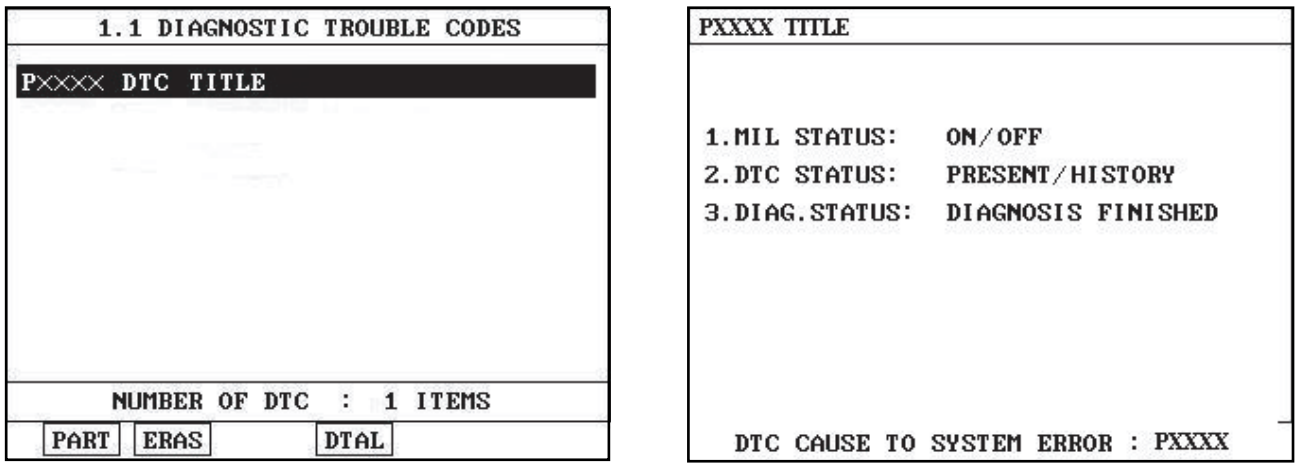

SCMF16159L

5) Is parameter displayed "Present fault"?

YES

▶ Go to "Terminal and connector inspection" procedure.

NO

▶ Fault is intermittent caused by poor contact in the sensor's and/or PCM's connector or was repaired and PCM memory was not cleared. Thoroughly check connectors for looseness, poor connection, ending, corrosion, contamination, deterioration, or damage. Repair or replace as necessary and go to "Verification of Vehicle Repair" procedure.

VERIFICATION OF VEHICLE REPAIR E003F048

After a repair, it is essential to verify that the fault has been corrected.

1. Monitor and record the Freeze Frame Data for the Diagnostic Trouble Code(DTC) which has been diagnosed.
2. Using a Scantool, Clear the DTCs
3. Operate the vehicle within conditions noted in the freeze frame data or enable conditions
4. Monitor that all rediness test have been verified as " Complete "
5. Are any DTCs present ?

YES

▶ Go to the applicable troubleshoooting procedure.

NO

▶ System is performing to specification at this time.

DTC P1523 ETC (ELECTRONIC THROTTLE CONTROL) SYSTEM MALFUNCTION - THROTTLE VALVE STUCK

COMPONENT LOCATION EB59E45B

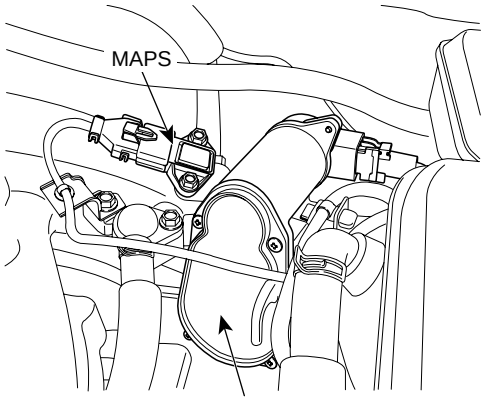

SCMF16192L

GENERAL DESCRIPTION EE5F5D1C

The Electronic Throttle Control(ETC) system is made of the components throttle body, Throttle Position Sensor(TPS)1 & 2 and Accelerator Position Sensor(APS) 1 & 2. The throttle body contains the actuator, the throttle plate and the throttle position sensor (potentiometer), which are integrated in one housing. The actuator consists of a DC motor with a two-stage gear. The opening angle of the throttle valve is detected by the throttle position sensor which is mounted on the throttle body. And it provides feedback to the ECM to control the throttle motor in order to control the throttle valve opening angle properly in response to the driving condition.

DTC DESCRIPTION EB974B1A

Checking throttle valve return state, under detecting condition, if an output signal is within the threshold value for more than designated time, PCM sets P1523.

DTC DETECTING CONDITION E50C17A4

Item	Detecting Condition	Possible cause
DTC Strategy	• This code detects when throttle fails to return to the unpowered default position when power to the ETC motor is turned off.	• Carbon in throttle • Broken Throttle return spring • throttle sticky • throttle icy • PCM
EnableConditions	• Throttle Actuation Mode Previous NOT Off • Throttle Actuation Mode is Off • ETC Power Control Mode = Normal • TPS 1 & 2 = normal • Sensor Supply voltage = Normal	
Threshold value	• If throttle did not return to default range within calculated seconds of turning off, increment fail count.	
DiagnosisTime	• Continuous	
MIL On Condition	• DTC only (NO MIL ON)	

SPECIFICATION E619966F

Throttle opening (°)	Output voltage (V) [Vref = 5.0V]	
	TPS1	TPS2
0°	0.0V	5.0V
10°	0.5V	4.5V
20°	0.9V	4.1V
30°	1.4V	3.6V
40°	1.8V	3.2V
50°	2.3V	2.7V
60°	2.7V	2.3V
70°	3.2V	1.8V
80°	3.6V	1.4V
90°	4.1V	0.9V
100°	4.5V	0.5V
110°	5.0V	0.0V

SCHEMATIC DIAGRAM ED82E1D0

[CIRCUIT DIAGRAM]

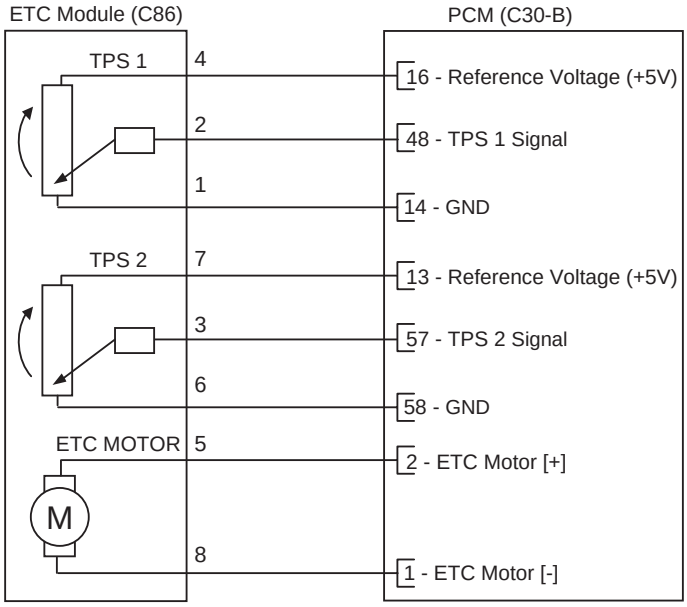

[CONNECTION INFORMATION]

Terminal	Connected to	Function
1	PCM C30-B (14)	TPS 1 Ground
2	PCM C30-B (48)	TPS 1 Signal
3	PCM C30-B (57)	TPS 2 Signal
4	PCM C30-B (16)	TPS 1 Reference Voltage (+5V)
5	PCM C30-B (2)	ETC Motor [+] Control
6	PCM C30-B (58)	TPS 2 Ground
7	PCM C30-B (13)	TPS 2 Reference Voltage (+5V)
8	PCM C30-B (1)	ETC Motor [-] Control

[HARNESS CONNECTORS]

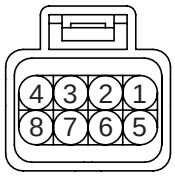

C86

ETC MODULE

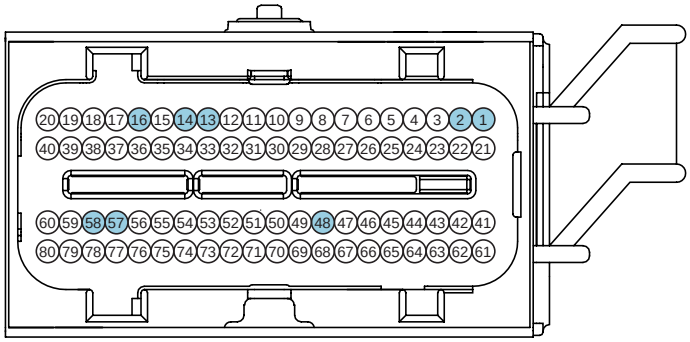

C30-B

PCM

SCMF16101L

SIGNAL WAVEFROM AND DATA EE3582E5

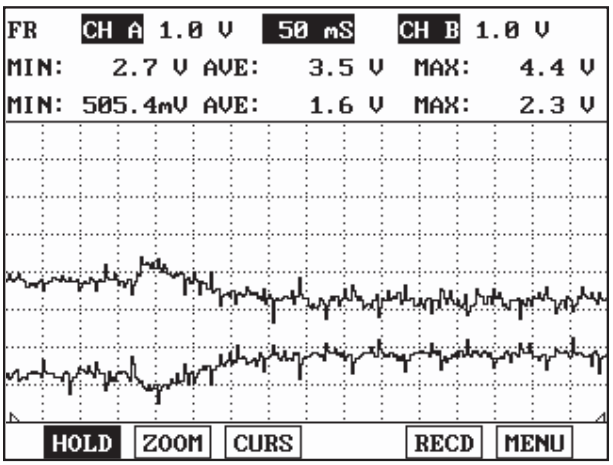

Stepping on accelleraton pedal.

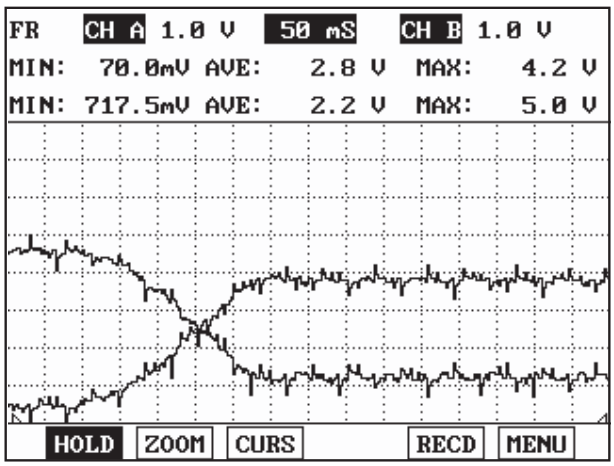

Pulling out accelleration cable with hand.

EGRF963A

MONITOR DTC STATUS E4C7F759

1. Check DTC Status

   1) Connect scantool to Data Link Connector(DLC).

   2) IG "ON".

   3) Select "Diagnostic Trouble Codes(DTCs)" mode, and then Press F4(DTAL) to check DTC's information from the DTCs menu

   4) Read "DTC Status" parameter.

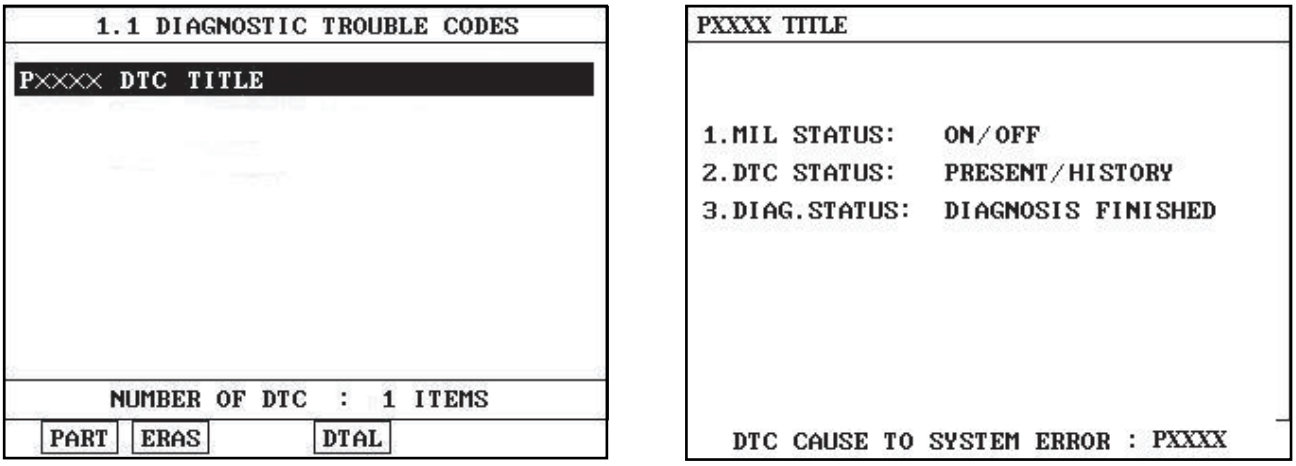

SCMF16159L

   5) Is parameter displayed "Present fault"?

YES

▶ Go to "System Inspection" procedure.

NO

▶ Fault is intermittent caused by poor contact in the sensor's and/or PCM's connector or was repaired and PCM memory was not cleared. Thoroughly check connectors for looseness, poor connection, ending, corrosion, contamination, deterioration, or damage. Repair or replace as necessary and go to "Verification of Vehicle Repair" procedure.

SYSTEM INSPECTION E088FCD7

1. Visual Inspection

   1) IG "OFF".

   2) Check throttle valve after removing air duct.
      - Carbon deposit.
      - Throttle icy
      - Broken return spring.
      - Throttle sticky

   3) Is the throttle valve return O.K ?

YES

▶ Substitute with a known-good PCM and check for proper operation. If the problem is corrected,replace PCM and then go to "Verification of Vehicle Repair" procedure.

NOTE

There is a memory reset function on scantool that can erase optional parts automaticallydetected and memorized by PCM.
Before or after testing PCM on the vehicle, use this function to reuse the PCM on the others

NO

▶ Repair or replace as necessary and then, do ETS Initialization" as follows. then, go to "Verification of Vehicle Repair" procedure.

※ Procedure of ETS Initialization
1. Erase the trouble codes on PCM
2. Turn the ignition key off and keep this condition until the main relay is turned off.(It will takes 10sec.)
3. Turn ignition key on more than 1second to record the throttle motor position on the EEPROM

VERIFICATION OF VEHICLE REPAIR E5449986

After a repair, it is essential to verify that the fault has been corrected.

1. Monitor and record the Freeze Frame Data for the Diagnostic Trouble Code(DTC) which has been diagnosed.
2. Using a Scantool, Clear the DTCs
3. Operate the vehicle within conditions noted in the freeze frame data or enable conditions
4. Monitor that all rediness test have been verified as " Complete "
5. Are any DTCs present ?

YES

▶ Go to the applicable troubleshoooting procedure.

NO

▶ System is performing to specification at this time.

DTC P2104 ETC (ELECTRONIC THROTTLE CONTROL) SYSTEM MALFUNCTION - FORCED IDLE

COMPONENT LOCATION EAF6C0A5

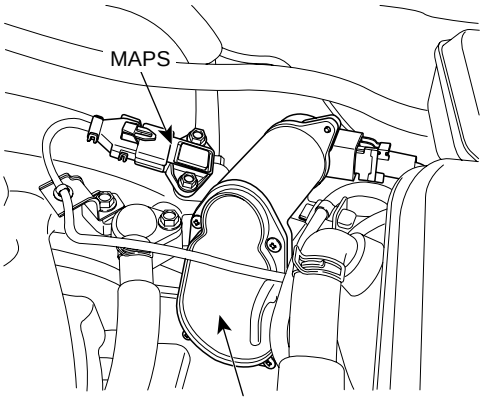

SCMF16192L

GENERAL DESCRIPTION E672DD19

The Electronic Throttle Control(ETC) system is made of the components throttle body, Throttle Position Sensor(TPS)1 & 2 and Accelerator Position Sensor(APS) 1 & 2. The throttle body contains the actuator, the throttle plate and the throttle position sensor (potentiometer), which are integrated in one housing. The actuator consists of a DC motor with a two-stage gear. The opening angle of the throttle valve is detected by the throttle position sensor which is mounted on the throttle body. And it provides feedback to the ECM to control the throttle motor in order to control the throttle valve opening angle properly in response to the driving condition.

DTC DESCRIPTION E079537C

PCM recognizes vehicle state as forced idle under detecting condition, and sets P2104 and then MIL(Malfunction Indication Lamp) turns on.

DTC DETECTING CONDITION EA11BB7A

Item	Detecting Condition	Possible cause
DTC Strategy	• This code detects if the system is in Forced Idle Mode	• Faulty APS • Faulty APS+Brake • Faulty APS + Vehicle speed sensor • Faulty APS + Vehicle speed sensor + Brake • Faulty PCM
Enable Conditions	• Ignition "ON"	
Threshold value	• Forced Idle Mode is active	
DiagnosisTime	• -	
MIL On Condition	• 1 Driving Cycle	

SCHEMATIC DIAGRAM EEFB2F29

[CIRCUIT DIAGRAM]

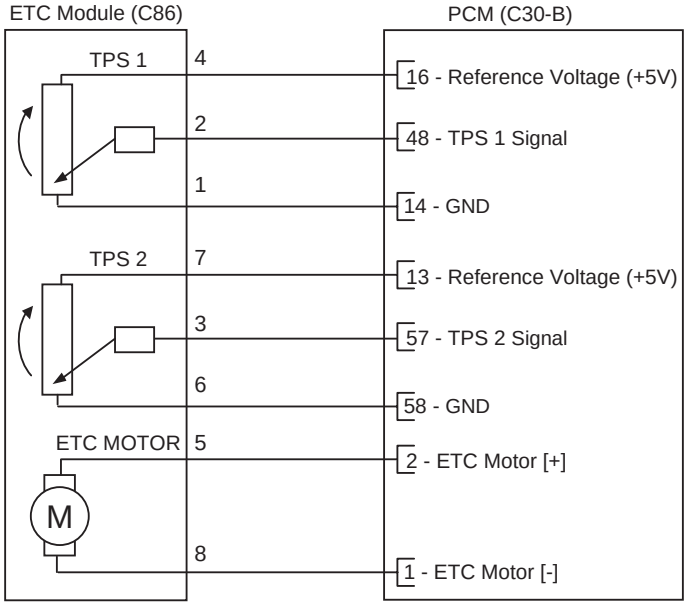

[CONNECTION INFORMATION]

Terminal	Connected to	Function
1	PCM C30-B (14)	TPS 1 Ground
2	PCM C30-B (48)	TPS 1 Signal
3	PCM C30-B (57)	TPS 2 Signal
4	PCM C30-B (16)	TPS 1 Reference Voltage (+5V)
5	PCM C30-B (2)	ETC Motor [+] Control
6	PCM C30-B (58)	TPS 2 Ground
7	PCM C30-B (13)	TPS 2 Reference Voltage (+5V)
8	PCM C30-B (1)	ETC Motor [-] Control

[HARNESS CONNECTORS]



C86

ETC MODULE

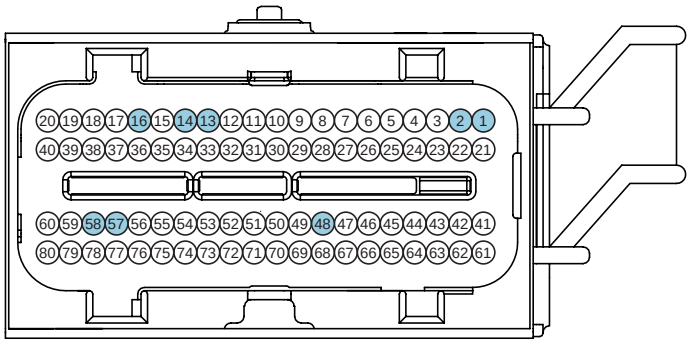

C30-B

PCM

SCMF16101L

MONITOR SCANTOOL DATA E02E6F62

1. Connect scantool to DLC(Data Link Connector)
2. IG "ON" & Monitor that any different DTC(Diagnostic Trouble Code) is existed.
   (There will be at least one more DTC which causes this DTC P2104 to retrieve)
3. Repair the DTCs cause DTC P2104 first according to the designated trouble shooting guide.
   (After repairing the DTCs cause DTC P2104 , don't forget to do "ETC Initialization" as follows.
4. Is the same DTC occurred ?

YES

▶Substitute with a known-good PCM and check for proper operation. If the problem is corrected,replace PCM and then go to "Verification of Vehicle Repair" procedure.

NOTE

There is a memory reset function on scantool that can erase optional parts automaticallydetected and memorized by PCM.
Before or after testing PCM on the vehicle, use this function to reuse the PCM on the others

NO

▶ Go to "Verification of Vehicle Repair" procedure.

※ Procedure of ETS Initialization
1. Erase the trouble codes on PCM
2. Turn the ignition key off and keep this condition until the main relay is turned off.(It will takes 10sec.)
3. Turn ignition key on more than 1second to record the throttle motor position on the EEPROM

VERIFICATION OF VEHICLE REPAIR E595CAE4

After a repair, it is essential to verify that the fault has been corrected.

1. Monitor and record the Freeze Frame Data for the Diagnostic Trouble Code(DTC) which has been diagnosed.
2. Using a Scantool, Clear the DTCs
3. Operate the vehicle within conditions noted in the freeze frame data or enable conditions
4. Monitor that all rediness test have been verified as " Complete "
5. Are any DTCs present ?

YES

▶ Go to the applicable troubleshoooting procedure.

NO

▶ System is performing to specification at this time.

DTC P2105 ETC (ELECTRONIC THROTTLE CONTROL) SYSTEM MALFUNCTION - FORCED ENGINE SHUTDOWN

COMPONENT LOCATION EA5E2801

Refer to DTC P2104.

GENERAL DESCRIPTION E4E6418B

Refer to DTC P2104.

DTC DESCRIPTION E6116072

PCM recognizes vehicle state as forced engine stop under detecting condition, and sets P2105 and then MIL(Malfunction Indication Lamp) turns on.

DTC DETECTING CONDITION E09C8745

Item	Detecting Condition	Possible cause
DTC Strategy	• This code detects if the system is in Forced Engine Shutdown Mode	• Faulty AFS+MAPS+ETS • Faulty PCM
Enable Conditions	• Ignition "ON"	
Threshold value	• Forced Engine Shutdown Mode Active	
DiagnosisTime	• -	
MIL On Condition	• 1 Driving Cycle	

SCHEMATIC DIAGRAM EB102176

Refer to DTC P2104.

MONITOR SCANTOOL DATA ECA63EBC

1. Connect scantool to DLC(Data Link Connector)
2. IG "ON" & Monitor that any different DTC(Diagnostic Trouble Code) is existed.
   (There will be at least one more DTC which causes this DTC P2105 to retrieve)
3. Repair the DTCs cause DTC P2105 first according to the designated trouble shooting guide.
   (After repairing the DTCs cause DTC P2105 , don't forget to do "ETC Initialization" as follows.
4. Is the same DTC occurred ?

YES

▶Substitute with a known-good PCM and check for proper operation. If the problem is corrected,replace PCM and then go to "Verification of Vehicle Repair" procedure.

NOTE

There is a memory reset function on scantool that can erase optional parts automaticallydetected and memorized by PCM.
Before or after testing PCM on the vehicle, use this function to reuse the PCM on the others

NO

▶ Go to "Verification of Vehicle Repair" procedure.

※ Procedure of ETS Initialization
1. Erase the trouble codes on PCM
2. Turn the ignition key off and keep this condition until the main relay is turned off.(It will takes 10sec.)
3. Turn ignition key on more than 1second to record the throttle motor position on the EEPROM

VERIFICATION OF VEHICLE REPAIR E7707F60

Refer to DTC P2104.

DTC P2106 ETC (ELECTRONIC THROTTLE CONTROL) SYSTEM MALFUNCTION - FORCED LIMITED POWER

COMPONENT LOCATION E8EA6F9D

Refer to DTC P2104.

GENERAL DESCRIPTION E9FD069C

Refer to DTC P2104.

DTC DESCRIPTION EAA5A429

PCM recognizes vehicle state as forced limited power mode under detecting condition, and sets P2106 and then MIL(Malfunction Indication Lamp) turns on.

DTC DETECTING CONDITION E4E9FD11

Item	Detecting Condition	Possible cause
DTC Strategy	• This code detects if the system is in Limit Performance Mode	• Faulty APS • Faulty APS+Brake • Faulty APS + Vehicle speed sensor • Faulty APS + Vehicle speed sensor + Brake • Faulty PCM
Enable Conditions	• Ignition "ON"	
Threshold value	• Limit Performance Mode is active	
DiagnosisTime	• -	
MIL On Condition	• 1 Driving Cycle	

SCHEMATIC DIAGRAM E62C293C

Refer to DTC P2104.

MONITOR SCANTOOL DATA EF3BB7D0

1. Connect scantool to DLC(Data Link Connector)
2. IG "ON" & Monitor that any different DTC(Diagnostic Trouble Code) is existed.
   (There will be at least one more DTC which causes this DTC P2106 to retrieve)
3. Repair the DTCs cause DTC P2106 first according to the designated trouble shooting guide.
   (After repairing the DTCs cause DTC P2106 , don't forget to do "ETC Initialization" as follows.
4. Is the same DTC occurred ?

YES

▶Substitute with a known-good PCM and check for proper operation. If the problem is corrected,replace PCM and then go to "Verification of Vehicle Repair" procedure.

NOTE

There is a memory reset function on scantool that can erase optional parts automaticallydetected and memorized by PCM.
Before or after testing PCM on the vehicle, use this function to reuse the PCM on the others

NO

▶ Go to "Verification of Vehicle Repair" procedure.

※ Procedure of ETS Initialization
1. Erase the trouble codes on PCM
2. Turn the ignition key off and keep this condition until the main relay is turned off.(It will takes 10sec.)
3. Turn ignition key on more than 1second to record the throttle motor position on the EEPROM

VERIFICATION OF VEHICLE REPAIR E76BBC64

Refer to DTC P2104.

DTC P2122 THROTTLE/PEDAL POSITION SENSOR/SWITCH "D" CIRCUIT LOW INPUT

COMPONENT LOCATION E0BE8A33

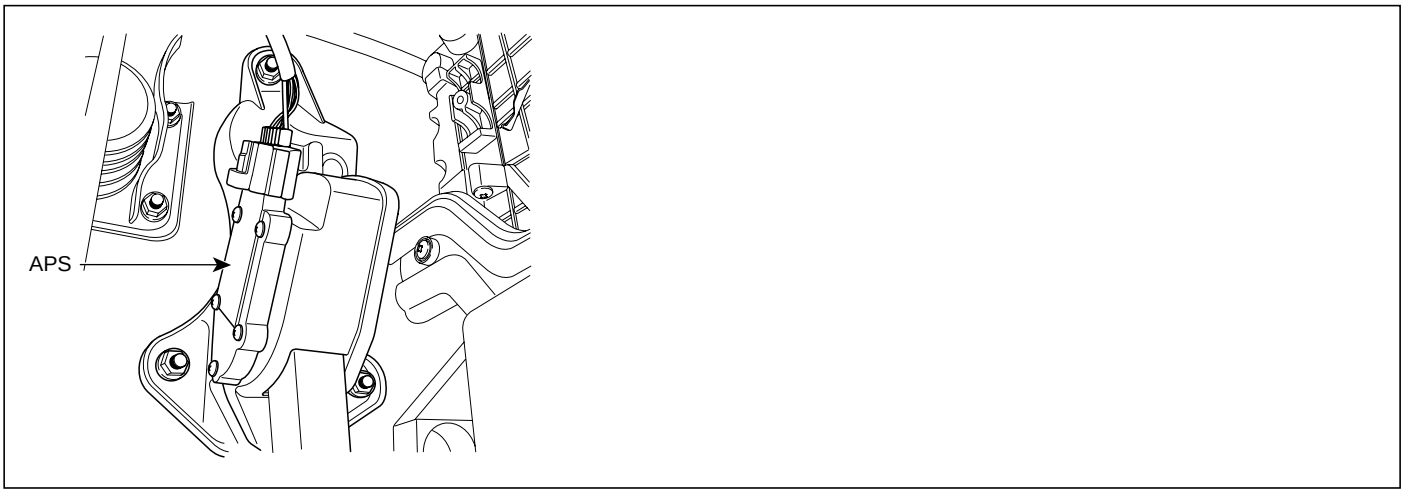

SCMF16410L

GENERAL DESCRIPTION E88851B5

The Electronic Throttle Control(ETC) system is made of the components throttle body, Throttle Position Sensor(TPS) 1 & 2 and Accelerator Position Sensor(APS) 1 & 2. The APS is mounted in the accelerator pedal to detect the opening angle of the accelerator pedal. It has 2 sensors to detect the accelerator position and a malfunction of the accelerator position sensor. The ECM judges the current opening angle of the accelerator pedal from APS1 & 2, and the ECM controls the throttle motor based on these signals.

DTC DESCRIPTION E1F29B0E

Checking output signals from APS 1, under detecting condition, if output signals are below the threshold, PCM sets P2122 and then MIL(Malfunction Indication Lamp) turns on.

DTC DETECTING CONDITION E55FAB15

Item	Detecting Condition	Possible Cause
DTC Strategy	• This code detects a continuous short to ground or open in either the circuit or the sensor (0-100%)	• Poor connection • Open or short to ground in Power circuit • Open or short to ground in Signal Circuit • Faulty APS • Faulty PCM
Enable Conditions	• Ignition "ON"	
Threshold	• APS1 〈 0.125V	
Diagnosis Time	• Contineous (More than 0.18sec. Failure for every 7.8sec. Test)	
MIL On Condition	• 1 Driving Cycle	

SPECIFICATION E25F0160

Pedal Position	Output Voltage(V) [Vref = 5.0V]	
	APS1	APS2
C.T	0.7 ~ 0.8V	0.29 ~ 0.46V
W.O.T	3.85 ~ 4.35V	1.93 ~ 2.18V

SCHEMATIC DIAGRAM EBAF75D1

[CIRCUIT DIAGRAM]

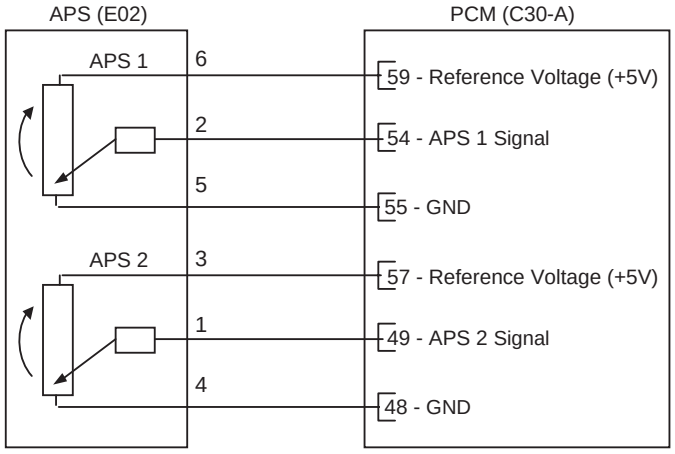

[CONNECTION INFORMATION]

Terminal	Connected to	Function
1	PCM C30-A (49)	APS 2 Signal
2	PCM C30-A (54)	APS 1 Signal
3	PCM C30-A (57)	APS 2 Reference Voltage (+5V)
4	PCM C30-A (48)	APS 2 Ground
5	PCM C30-A (55)	APS 1 Ground
6	PCM C30-A (59)	APS 1 Reference Voltage (+5V)

[HARNESS CONNECTORS]

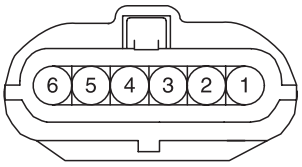

E02

APS

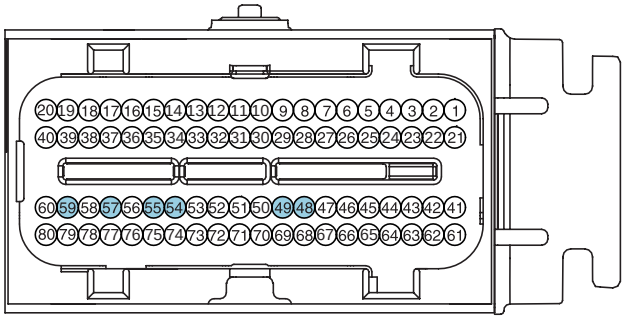

C30-A

PCM

SCMF16124L

SIGNAL WAVEFROM AND DATA E2434D88

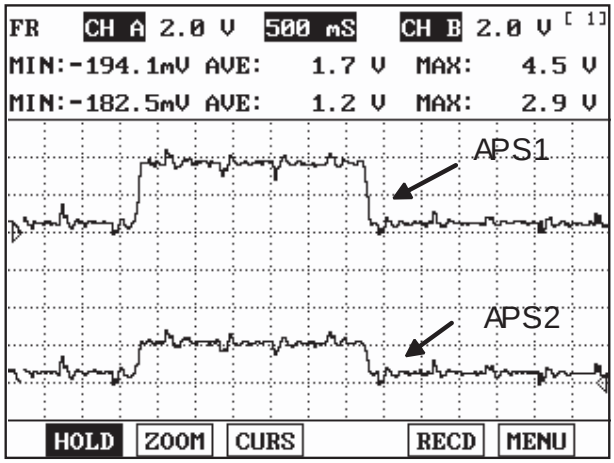

Fig. 1

Fig. 1 : This is a signal waveform of APS 1 & 2 which shows that APS 2 increases voltage just half of APS 1 voltage increase when accelleration.

EGRF970A

MONITOR DTC STATUS EFFCAAE2

1. Check DTC Status

   1) Connect scantool to Data Link Connector(DLC).

   2) IG "ON".

   3) Select "Diagnostic Trouble Codes(DTCs)" mode, and then Press F4(DTAL) to check DTC's information from the DTCs menu

   4) Read "DTC Status" parameter.

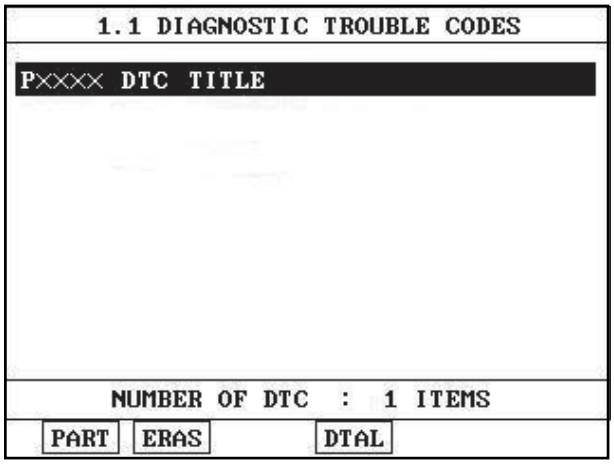

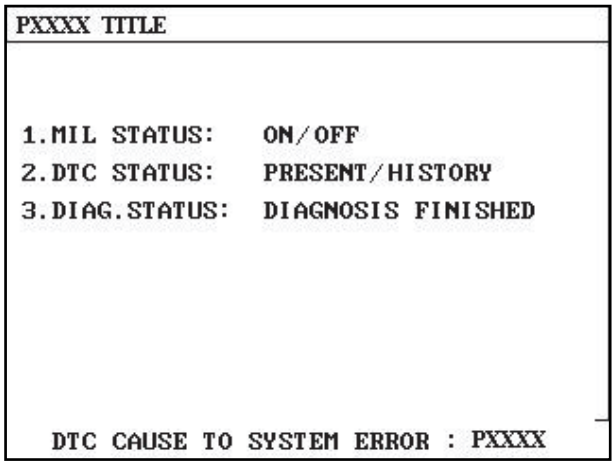

SCMF16159L

   5) Is parameter displayed "Present fault"?

YES

▶ Go to "Terminal and connector inspection" procedure.

NO

▶ Fault is intermittent caused by poor contact in the sensor's and/or PCM's connector or was repaired and PCM memory was not cleared. Thoroughly check connectors for looseness, poor connection, ending, corrosion, contamination, deterioration, or damage. Repair or replace as necessary and go to "Verification of Vehicle Repair" procedure.

TERMINAL AND CONNECTOR INSPECTION E3ADD732

1. Many malfunctions in the electrical system are caused by poor harness and terminals. Faults can also be caused by interference from other electrical systems, and mechanical or chemical damage.
2. Thoroughly check connectors for looseness, poor connection, bending, corrosion, contamination, deterioration, or damage.
3. Has a problem been found?

YES

▶Repair as necessary and go to "Verification of Vehicle Repair" procedure

NO

▶Go to " Power Circuit Inspection " procedure.

POWER CIRCUIT INSPECTION ED8D9E1F

1. IG "OFF" and disconnect APS connector.
2. IG "ON" & ENG "OFF"
3. Measure voltage between harness terminal 6 of APS and chassis ground.

Specification : Approx. 5V

4. Is the measured voltage within specification ?

YES

▶ Go to "Signal Circuit Inspection" procedure.

NO

▶ Repair or replace as necessary and then, go to "Verification of Vehicle Repair" procedure.

SIGNAL CIRCUIT INSPECTION E9B78805

1. Check short to ground in harness
   1) IG "OFF".
   2) Disconnect APS & PCM connector.
   3) Measure resistance between terminal 2 of APS harness connector and chassis ground.
   4) Measure resistance between terminal 2 and 5 of APS harness connector.

5) Measure resistance between terminal 2 and 4 of APS harness connector.

Specification : Infinite

6) Is the measured resistance within specification ?

YES

▶ Go to "Check open in harness" as follows.

NO

▶ Repair or replace as necessary and then, go to "Verification of Vehicle Repair" procedure.

2. Check open in harness

1) IG "OFF"

2) Disconnect "APS" and "PCM" connector.

3) Measure resistance between terminal 2 of APS harness connector and terminal C30-A (54) of PCM harness connector.

Specification : Approx. below 1Ω

4) Is the measured resistance within in specification ?

YES

▶ Go to "Component Inspection" procedure.

NO

▶ Repair or replace as necessary and then, go to "Verification of Vehicle Repair" procedure.

COMPONENT INSPECTION E1388164

1. Check APS

1) IG "ON" & ENG "OFF".

2) Measure signal waveform of APS by pressing and depressing accellerator pedal.

SPECIFICATION :

Pedal Position	Output Voltage(V) [Vref = 5.0V]	
	APS1	APS2
C.T	0.7 ~ 0.8V	0.29 ~ 0.46V
W.O.T	3.85 ~ 4.35V	1.93 ~ 2.18V

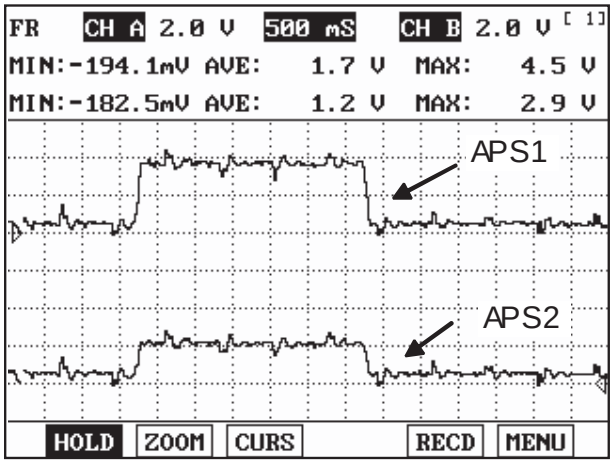

EGRF975A

3) Is the measured signal waveform O.K ?

YES

▶ Substitute with a known-good PCM and check for proper operation. If the problem is corrected,replace PCM and then go to "Verification of Vehicle Repair" procedure.

NOTE

There is a memory reset function on scantool that can erase optional parts automaticallydetected and memorized by PCM.
Before or after testing PCM on the vehicle, use this function to reuse the PCM on the others

NO

▶ Substitute with a known-good APS and check for proper operation. If the problem is corrected,replace APS and then go to "Verification of Vehicle Repair" procedure.

VERIFICATION OF VEHICLE REPAIR EF0B52E1

After a repair, it is essential to verify that the fault has been corrected.

1. Monitor and record the Freeze Frame Data for the Diagnostic Trouble Code(DTC) which has been diagnosed.
2. Using a Scantool, Clear the DTCs
3. Operate the vehicle within conditions noted in the freeze frame data or enable conditions
4. Monitor that all rediness test have been verified as " Complete "
5. Are any DTCs present ?

YES

▶ Go to the applicable troubleshoooting procedure.

NO

▶ System is performing to specification at this time.

DTC P2123 THROTTLE/PEDAL POSITION SENSOR/SWITCH "D" CIRCUIT HIGH INPUT

COMPONENT LOCATION EC80C888

Refer to DTC P2122.

GENERAL DESCRIPTION E0ED6377

Refer to DTC P2122.

DTC DESCRIPTION EEE20455

Checking output signals from APS 1, under detecting condition, if output signals are above the threshol, PCM sets P2123 and then MIL(Malfunction Indication Lamp) turns on.

DTC DETECTING CONDITION EC4C88A8

Item	Detecting Condition	Possible Cause
DTC Strategy	• This code detects a short to high in either the circuit or the sensor	• Poor connection • Short to battery in Signal Circuit • Open in Ground Circuit • Faulty APS • Faulty PCM
Enable Conditions	• Ignition "ON"	
Threshold	• APS1 〉 4.5V	
Diagnosis Time	• Continuous (More than 0.18sec. Failure for every 7.8sec. Test)	
MIL On Condition	• 1 Driving Cycle	

SPECIFICATION ED0F7FE7

Refer to DTC P2122.

SCHEMATIC DIAGRAM EAB55143

Refer to DTC P2122.

SIGNAL WAVEFROM AND DATA E7B2C861

Refer to DTC P2122.

MONITOR DTC STATUS EB28C76E

Refer to DTC P2122.

TERMINAL AND CONNECTOR INSPECTION E8D924E5

Refer to DTC P2122.

SIGNAL CIRCUIT INSPECTION E294F1F8

1. Check short to battery in harness

   1) IG "OFF".

   2) Disconnect APS and PCM connector.

   3) Measure resistance between terminal 3 and 2 of APS harness connector.

   4) Measure resistance between terminal 2 and 6 of APS harness connector.

Specification : Infinite

   5) Is the measured resistance within specification ?

YES

▶ Go to "Ground Circuit Inspection" procedure.

NO

▶ Repair or replace as necessary and then, go to "Verification of Vehicle Repair" procedure.

GROUND CIRCUIT INSPECTION E7F55DD4

1. Check open in harness

   1) IG "OFF".

   2) Disconnect APS connector.

   3) Measure voltage between terminal 6 of APS harness connector and chassis ground.(Fig. A)

   4) Measure voltage between terminal 6 and 5 of APS harness connector.(Fig. B)

Specification : Fig. "A" - Fig. "B" = approx. below. 200mV.

   5) Is the measured voltage within specification ?

YES

▶ Go to "Component Inspection" procedure.

NO

▶ Repair or replace contact resistance or open in harness and then, go to "Verification of VehicleRepair" procedure.

COMPONENT INSPECTION EF093B88

1. Check APS

   1) Ignition "ON" & ENG "OFF".

   2) Measure waveform of APS by pressing and depressing accellerator pedal with scantool.

SPECIFICATION :

Pedal Position	Output Voltage(V) [Vref = 5.0V]	
	APS1	APS2
C.T	0.7 ~ 0.8V	0.29 ~ 0.46V
W.O.T	3.85 ~ 4.35V	1.93 ~ 2.18V

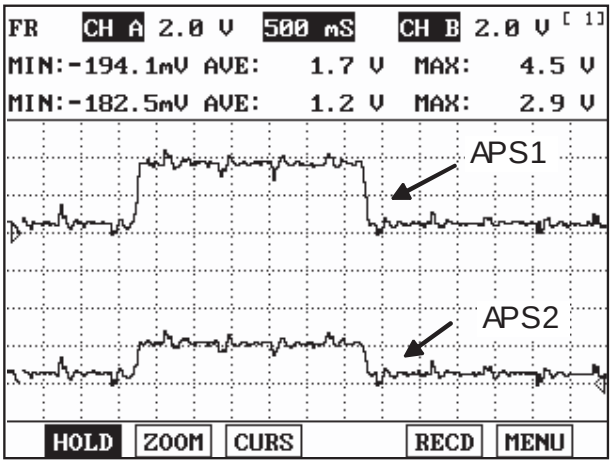

EGRF975A

3) Is the measured signal waveform O.K ?

YES

▶ Substitute with a known-good PCM and check for proper operation. If the problem is corrected,replace PCM and then go to "Verification of Vehicle Repair" procedure.

NOTE

There is a memory reset function on scantool that can erase optional parts automaticallydetected and memorized by PCM.
Before or after testing PCM on the vehicle, use this function to reuse the PCM on the others

NO

▶ Substitute with a known-good APS and check for proper operation. If the problem is corrected,replace APS and then go to "Verification of Vehicle Repair" procedure.

VERIFICATION OF VEHICLE REPAIR E9D238F9

Refer to DTC P2122.

DTC P2127 THROTTLE/PEDAL POSITION SENSOR/SWITCH "E" CIRCUIT LOW INPUT

COMPONENT LOCATION E25E809E

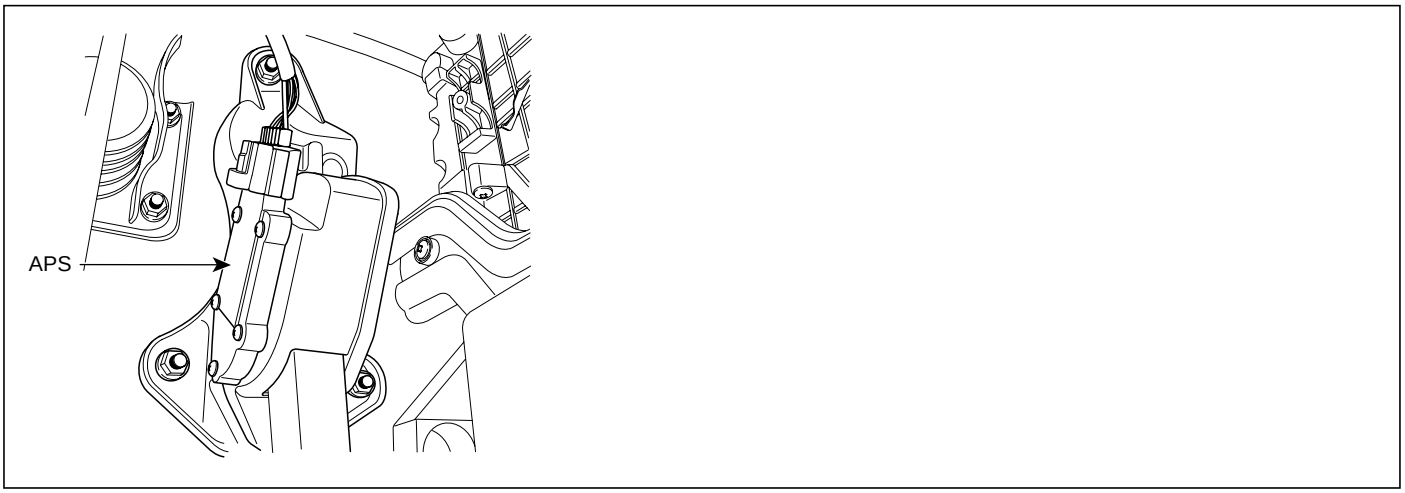

SCMF16410L

GENERAL DESCRIPTION EB95F666

The Electronic Throttle Control(ETC) system is made of the components throttle body, Throttle Position Sensor(TPS) 1 & 2 and Accelerator Position Sensor(APS) 1 & 2. The APS is mounted in the accelerator pedal to detect the opening angle of the accelerator pedal. It has 2 sensors to detect the accelerator position and a malfunction of the accelerator position sensor. The ECM judges the current opening angle of the accelerator pedal from APS1 & 2, and the ECM controls the throttle motor based on these signals.

DTC DESCRIPTION ED213EE1

Checking output signals from APS 2, under detecting condition, if output signals are below the threshold, PCM sets P2127 and then MIL(Malfunction Indication Lamp) turns on.

DTC DETECTING CONDITION EA171D94

Item	Detecting Condition	Possible Cause
DTC Strategy	• This code detects a continuous short to ground or open in either the circuit or the sensor	• Poor connection • Open or short to ground in Power Circuit • Open or short to ground in Signal Circuit • Faulty APS • Faulty PCM
Enable Conditions	• Ignition "ON"	
Threshold	• APS1 〈 0.125V	
Diagnosis Time	• Contineous (More than 0.18sec. Failure for every 7.8sec. Test)	
MIL On Condition	• 1 Driving Cycle	

SPECIFICATION E2CFB9C8

Pedal Position	Output Voltage(V) [Vref = 5.0V]	
	APS1	APS2
C.T	0.7 ~ 0.8V	0.29 ~ 0.46V
W.O.T	3.85 ~ 4.35V	1.93 ~ 2.18V

SCHEMATIC DIAGRAM EAB6B552

[CIRCUIT DIAGRAM]

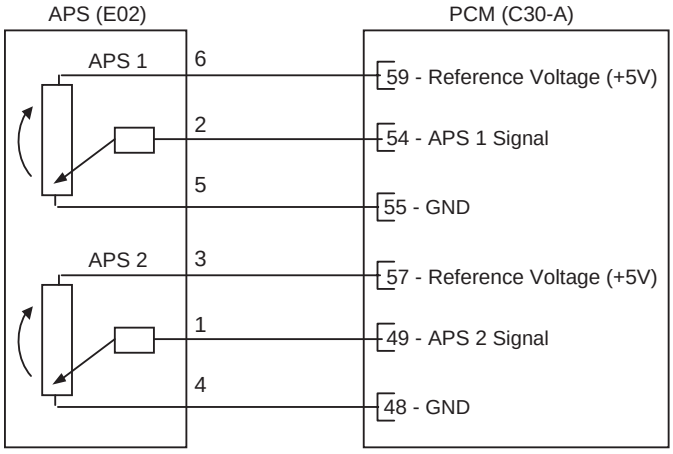

[CONNECTION INFORMATION]

Terminal	Connected to	Function
1	PCM C30-A (49)	APS 2 Signal
2	PCM C30-A (54)	APS 1 Signal
3	PCM C30-A (57)	APS 2 Reference Voltage (+5V)
4	PCM C30-A (48)	APS 2 Ground
5	PCM C30-A (55)	APS 1 Ground
6	PCM C30-A (59)	APS 1 Reference Voltage (+5V)

[HARNESS CONNECTORS]

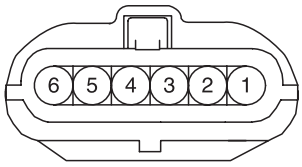

E02

APS

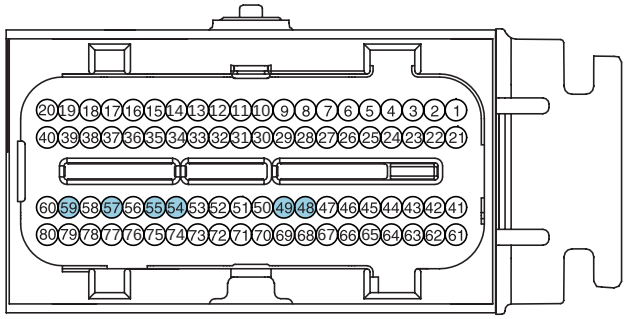

C30-A

PCM

SCMF16124L

SIGNAL WAVEFROM AND DATA E0A303E9

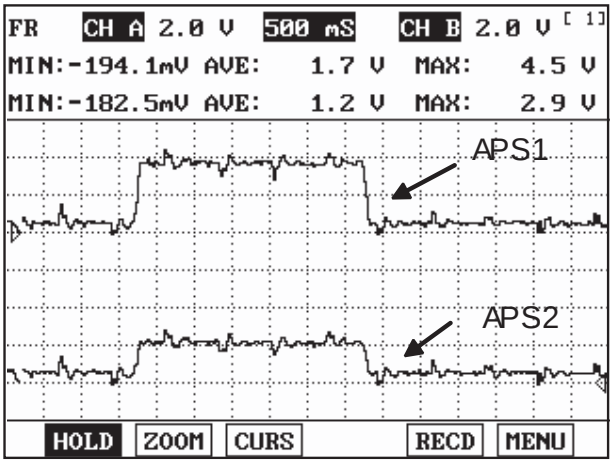

Fig. 1

Fig. 1 : This is a signal waveform of APS 1 & 2 which shows that APS 2 increases voltage just half of APS 1 voltage increase when accelleration.

EGRF970A

MONITOR DTC STATUS E088E573

1. Check DTC Status

   1) Connect scantool to Data Link Connector(DLC).

   2) IG "ON".

   3) Select "Diagnostic Trouble Codes(DTCs)" mode, and then Press F4(DTAL) to check DTC's information from the DTCs menu

   4) Read "DTC Status" parameter.

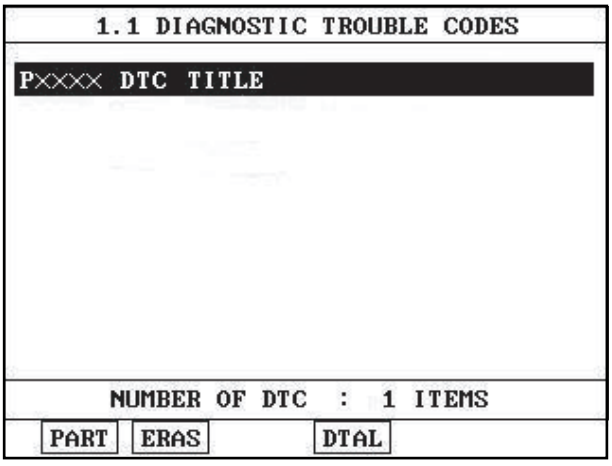

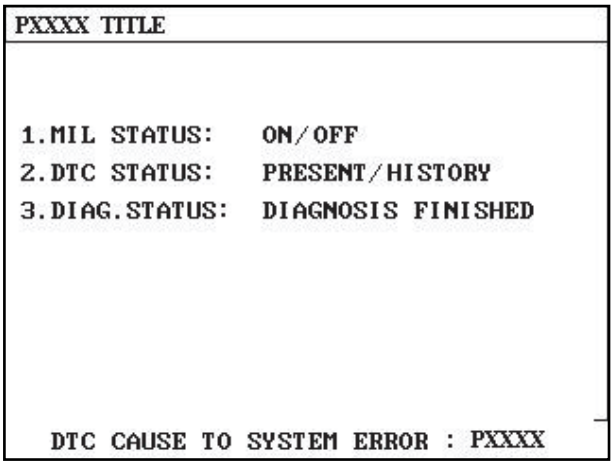

SCMF16159L

   5) Is parameter displayed "Present fault"?

YES

▶ Go to "Terminal and connector inspection" procedure.

NO

▶ Fault is intermittent caused by poor contact in the sensor's and/or PCM's connector or was repaired and PCM memory was not cleared. Thoroughly check connectors for looseness, poor connection, ending, corrosion, contamination, deterioration, or damage. Repair or replace as necessary and go to "Verification of Vehicle Repair" procedure.

TERMINAL AND CONNECTOR INSPECTION E782158C

1. Many malfunctions in the electrical system are caused by poor harness and terminals. Faults can also be caused by interference from other electrical systems, and mechanical or chemical damage.
2. Thoroughly check connectors for looseness, poor connection, bending, corrosion, contamination, deterioration, or damage.
3. Has a problem been found?

YES

▶ Repair as necessary and go to "Verification of Vehicle Repair" procedure

NO

▶ Go to "Power Circuit Inspection " procedure.

POWER CIRCUIT INSPECTION E32CA386

1. IG "OFF".
2. Disconnect APS connector.
3. IG "ON" & ENG "OFF".
4. Measure voltage between termial 3 of APS harness connector and chassis ground.

Specification : Approx. 5V

5. Is the measured voltage within specification ?

YES

▶ Go to "Signal Circuit Inspection" procedure.

NO

▶ Repair or replace as necessary and then, go to 'Verification of Vehicle Repair" procedure.

SIGNAL CIRCUIT INSPECTION E046360C

1. Check short to ground in harness
   1) IG "OFF".
   2) Disconnect APS and PCM connector.
   3) Measure resistance between terminal 1 of APS harness connector and chassis ground.

4) Measure resistance between terminal 1 and 5 of APS harness connector.

5) Measure resistance between terminal 1 and 4 of APS harness connector.

Specification : Infinite

6) Is the measured resistance within specification ?

YES

▶ Go to "Check open in harness" as follows.

NO

▶ Repair or replace as necessary and then, go to "Verification of Vehicle Repair" procedure.

2. Check open in harness

1) IG "OFF".

2) Disconnect APS and PCM connector.

3) Measure resistance between terminal 1 of APS harness connector and terminal C30-A (49) of PCM harness connector.

Specification : Approx. below 1Ω

4) Is the measured resistance within specification ?

YES

▶ Go to "Component Inspection" procedure.

NO

▶ Repair or replace as necessary and then, go to "Verification of Vehicle Repair" procedure.

COMPONENT INSPECTION E95BEDB4

1. Check APS

1) Ignition "ON" & ENG "OFF".

2) Measure waveform of APS by pressing and depressing accellerator pedal with scantool.

SPECIFICATION :

Pedal Position	Output Voltage(V) [Vref = 5.0V]	
	APS1	APS2
C.T	0.7 ~ 0.8V	0.29 ~ 0.46V
W.O.T	3.85 ~ 4.35V	1.93 ~ 2.18V

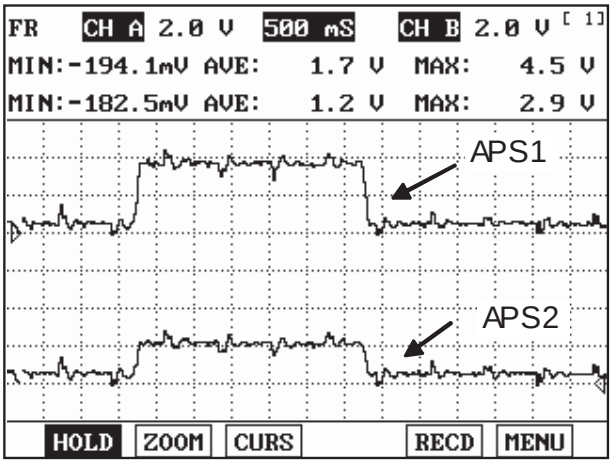

EGRF975A

3) Is the measured signal waveform O.K ?

YES

▶ Substitute with a known-good PCM and check for proper operation. If the problem is corrected,replace PCM and then go to "Verification of Vehicle Repair" procedure.

NOTE

There is a memory reset function on scantool that can erase optional parts automaticallydetected and memorized by PCM.
Before or after testing PCM on the vehicle, use this function to reuse the PCM on the others

NO

▶ Substitute with a known-good APS and check for proper operation. If the problem is corrected,replace APS and then go to "Verification of Vehicle Repair" procedure.

VERIFICATION OF VEHICLE REPAIR E4CF9F32

After a repair, it is essential to verify that the fault has been corrected.

1. Monitor and record the Freeze Frame Data for the Diagnostic Trouble Code(DTC) which has been diagnosed.
2. Using a Scantool, Clear the DTCs
3. Operate the vehicle within conditions noted in the freeze frame data or enable conditions
4. Monitor that all rediness test have been verified as " Complete "
5. Are any DTCs present ?

YES

▶ Go to the applicable troubleshoooting procedure.

NO

▶ System is performing to specification at this time.

DTC P2128 THROTTLE/PEDAL POSITION SENSOR/SWITCH "E" CIRCUIT HIGH INPUT

COMPONENT LOCATION E7A0BA19

Refer to DTC P2127.

GENERAL DESCRIPTION EB70AF82

Refer to DTC P2127.

DTC DESCRIPTION E8C2A639

Checking output signals from APS 2, under detecting condition, if output signals are above the threshold, PCM sets P2128 and then MIL(Malfunction Indication Lamp) turns on.

DTC DETECTING CONDITION E50B99ED

Item	Detecting Condition	Possible Cause
DTC Strategy	• This code detects a continuous short to ground or open in either the circuit or the sensor	• Poor connection • Short to battery in Signal Circuit • Open in Ground Circuit • Faulty APS • Faulty PCM
Enable Conditions	• Ignition "ON"	
Threshold	• APS2 〉 3V	
Diagnosis Time	• Continuous (More than 0.18sec. Failure for every 7.8sec. Test)	
MIL On Condition	• 1 Driving Cycle	

SPECIFICATION ED176FA6

Refer to DTC P2127.

SCHEMATIC DIAGRAM EB805662

Refer to DTC P2127.

SIGNAL WAVEFROM AND DATA E2F1536A

Refer to DTC P2127.

MONITOR DTC STATUS ECDE74E9

Refer to DTC P2127.

TERMINAL AND CONNECTOR INSPECTION E9E39273

Refer to DTC P2127.

SIGNAL CIRCUIT INSPECTION EEFFBACB

1. Check short to battery in harness

   1) IG "OFF".

   2) Disconnect APS and PCM connector.

   3) Measure resistance between terminal 1 and 3 of APS harness connector.

   4) Measure resistance between terminal 1 and 6 of APS harness connector.

Specification : Infinite

   5) Is the measured reisistance within specification ?

YES

▶ Go to "Ground Circuit Inpsection" procedure.

NO

▶ Repair or replace as necessary and then, go to "Verification of Vehicle Repair" procedure.

GROUND CIRCUIT INSPECTION E3E6D32A

1. Check open in harness

   1) IG "OFF"

   2) Disconnect APS connector.

   3) Measure voltage between terminal 3 of APS harness connector and chassis ground.(Fig. A)

   4) Measure voltage between terminal 3 and 4 of APS harness connector.(Fig. B)

Specification : Fig."A" - Fig. "B" = Approx. below 200mV

   5) Is the measured voltage within specification ?

YES

▶ Go to "Component Inspection" procedure.

NO

▶ Repair or replace as necessary and then, go to "Verification of Vehicle Repair" procedure.

COMPONENT INSPECTION EA552CA3

1. Check APS

   1) Ignition "ON" & ENG "OFF".

   2) Measure waveform of APS by pressing and depressing accellerator pedal with scantool.

SPECIFICATION :

Pedal Position	Output Voltage(V) [Vref = 5.0V]	
	APS1	APS2
C.T	0.7 ~ 0.8V	0.29 ~ 0.46V
W.O.T	3.85 ~ 4.35V	1.93 ~ 2.18V

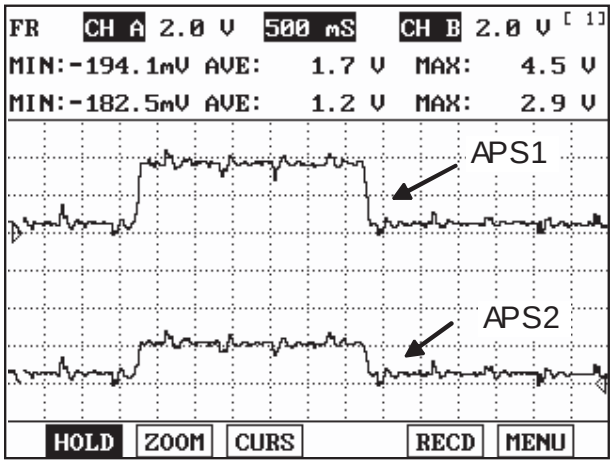

EGRF975A

3) Is the measured signal waveform O.K ?

YES

▶ Substitute with a known-good PCM and check for proper operation. If the problem is corrected,replace PCM and then go to "Verification of Vehicle Repair" procedure.

NOTE

There is a memory reset function on scantool that can erase optional parts automaticallydetected and memorized by PCM.
Before or after testing PCM on the vehicle, use this function to reuse the PCM on the others

NO

▶ Substitute with a known-good APS and check for proper operation. If the problem is corrected,replace APS and then go to "Verification of Vehicle Repair" procedure.

VERIFICATION OF VEHICLE REPAIR EFB6E222

Refer to DTC P2127.

DTC P2135 THROTTLE/PEDAL POSITION SENSOR/SWITCH "A" / "B" VOLTAGE CORRELATION

COMPONENT LOCATION E54108CE

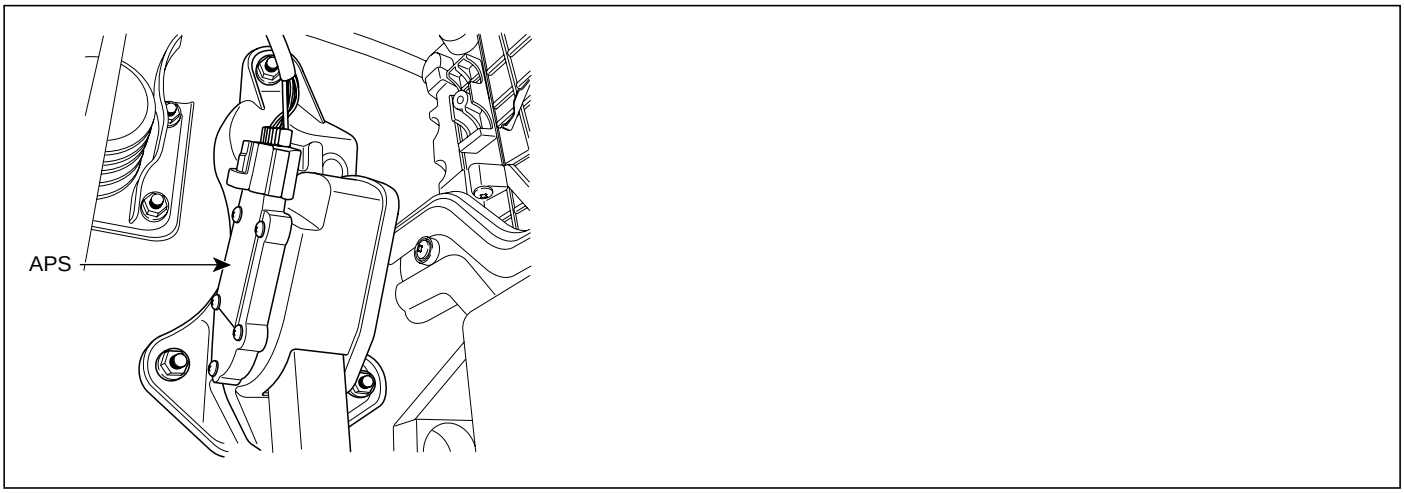

SCMF16410L

GENERAL DESCRIPTION EE7EF8F3

The Electronic Throttle Control(ETC) system is made of the components throttle body, Throttle Position Sensor(TPS)1 & 2 and Accelerator Position Sensor(APS) 1 & 2. TPS1 & 2 are sharing the same source voltage and ground.The throttle valve opening is control by throttle motor which is controlled by Engine Control Module(ECM).The opposite position indicator shows inverted signal characteristics.TPS1 output voltage increases smoothly in proportion with the throttle valve opening angle after starting. TPS2 output voltage decreases in inverse proportion with the throttle valve opening angle after starting. TPS provides feedback to the ECM to control the throttle motor in order to control the throttle valve opening angle properly in response to the driving condition.

DTC DESCRIPTION EF544ACE

Checking output signals from TPS 1 and 2, under detecting condition, if output signals difference between TPS1 and TPS2 are detected more than 4.5% for the specified number of times., PCM sets P2135. MIL(Malfunction Indication Lamp) turns on when the malfunction lasts till consecutive 2 driving cycle.

DTC DETECTING CONDITION E5764B91

Item	Detecting Condition	Possible Cause
DTC Strategy	• Determines if TPS # 1 disagrees with TPS # 2	• Poor connection • Open or short in TPS circuit • Faulty TPS • Faulty PCM
Enable condition	• Ignition "ON"	
Threshold value	• Difference between average values of TPS1 and TPS2 〉 4.5%	
Diagnosis time	• Continuous (More than 0.34sec failure for every 10.92sec. Test)	
MIL ON condition	• 1 driving cycles	

SCHEMATIC DIAGRAM E6FFC24B

[CIRCUIT DIAGRAM]

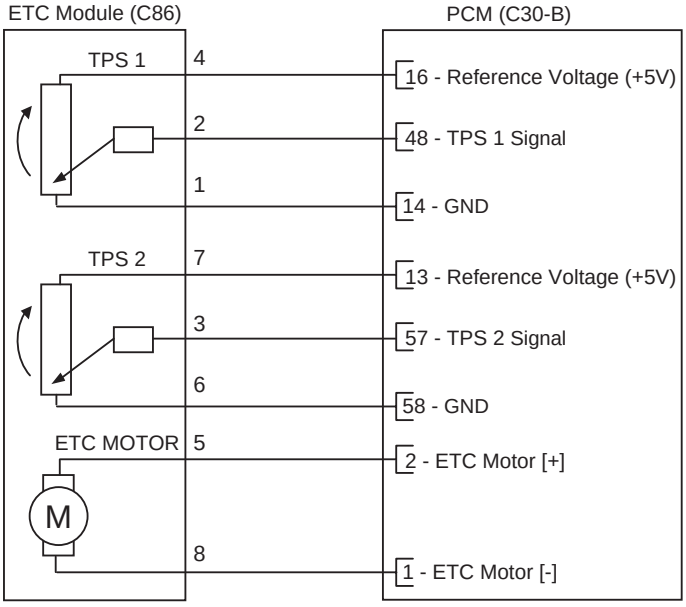

[CONNECTION INFORMATION]

Terminal	Connected to	Function
1	PCM C30-B (14)	TPS 1 Ground
2	PCM C30-B (48)	TPS 1 Signal
3	PCM C30-B (57)	TPS 2 Signal
4	PCM C30-B (16)	TPS 1 Reference Voltage (+5V)
5	PCM C30-B (2)	ETC Motor [+] Control
6	PCM C30-B (58)	TPS 2 Ground
7	PCM C30-B (13)	TPS 2 Reference Voltage (+5V)
8	PCM C30-B (1)	ETC Motor [-] Control

[HARNESS CONNECTORS]

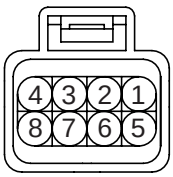

C86

ETC MODULE

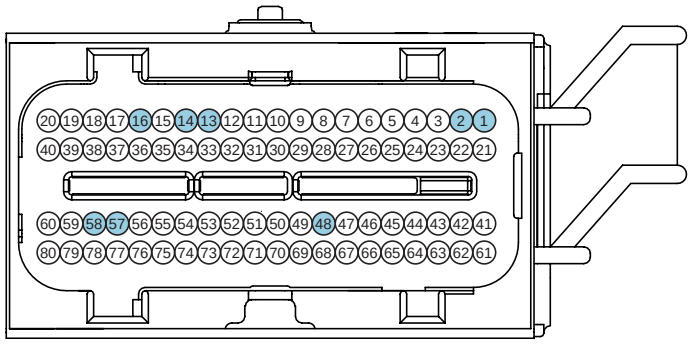

C30-B

PCM

SCMF16101L

SPECIFICATION E6C4A697

Throttle opening (°)	Output voltage(V) [Vref=5.0V]	
	TPS1	TPS2
0°	0.0V	5.0V
10°	0.5V	4.5V
20°	0.9V	4.1V
30°	1.4V	3.6V
40°	1.8V	3.2V
50°	2.3V	2.7V
60°	2.7V	2.3V
70°	3.2V	1.8V
80°	3.6V	1.4V

90°	4.1V	0.9V
100°	4.5V	0.5V
110°	5.0V	0.0V

MONITOR DTC STATUS E52B2098

1. Check DTC Status

   1) Connect scantool to Data Link Connector(DLC).

   2) IG "ON".

   3) Select "Diagnostic Trouble Codes(DTCs)" mode, and then Press F4(DTAL) to check DTC's information from the DTCs menu

   4) Read "DTC Status" parameter.

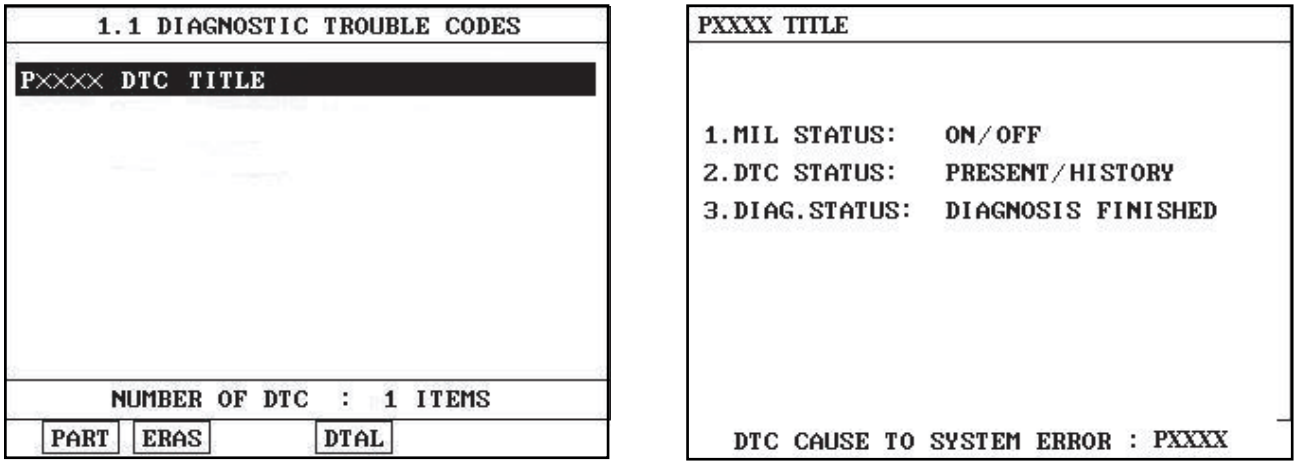

SCMF16159L

   5) Is parameter displayed "Present fault"?

YES

▶ Go to "Terminal and connector inspection" procedure.

NO

▶ Fault is intermittent caused by poor contact in the sensor's and/or PCM's connector or was repaired and PCM memory was not cleared. Thoroughly check connectors for looseness, poor connection, ending, corrosion, contamination, deterioration, or damage. Repair or replace as necessary and go to "Verification of Vehicle Repair" procedure.

TERMINAL AND CONNECTOR INSPECTION E18311F3

1. Many malfunctions in the electrical system are caused by poor harness and terminals. Faults can also be caused by interference from other electrical systems, and mechanical or chemical damage.

2. Thoroughly check connectors for looseness, poor connection, bending, corrosion, contamination, deterioration, or damage.

3. Has a problem been found?

YES

▶ Repair as necessary and go to "Verification of Vehicle Repair" procedure

NO

▶ Go to "Power Circuit Inspection " procedure.

POWER CIRCUIT INSPECTION E9FFC195

1. IG "OFF".
2. Disconnect TPS connector.
3. IG "ON" & ENG "OFF".
4. Measure voltage between terminal 7 of TPS harness connector and chassis ground.
5. Measure voltage between terminal 4 of TPS harness connector and chassis ground.

Specification : Approx. 5V

6. Is the measured voltage within specification ?

YES

▶ Go to "Signal Circuit Inspection" procedure.

NO

▶ Repair or replace as necessary and then, go to "Verification of Vehicle Repair" procedure.

SIGNAL CIRCUIT INSPECTION EF8A326B

1. IG "OFF".
2. Disconnect TPS & PCM connector.
3. Measure resistance between terminal 5 and 2 of TPS harness connector.

Specification : Infinite

4. Is the measured resistance within specification ?

YES

▶ Go to "Component Inspection" procedure.

NO

▶ Repair or replace as necessary and then, go to "Verification of Vehicle Repair" procedure.

COMPONENT INSPECTION ED70587B

1. Check TPS

1) Ignition "ON" & ENG "OFF".

2) Monitor signal waveform of TPS by stepping on and off the accellerator padel on scantool

SPECIFICATION :

Throttle opening (°)	Output voltage(V) [Vref=5.0V]	
	TPS1	TPS2
0°	0.0V	5.0V
10°	0.5V	4.5V
20°	0.9V	4.1V
30°	1.4V	3.6V
40°	1.8V	3.2V
50°	2.3V	2.7V
60°	2.7V	2.3V
70°	3.2V	1.8V
80°	3.6V	1.4V
90°	4.1V	0.9V
100°	4.5V	0.5V
110°	5.0V	0.0V

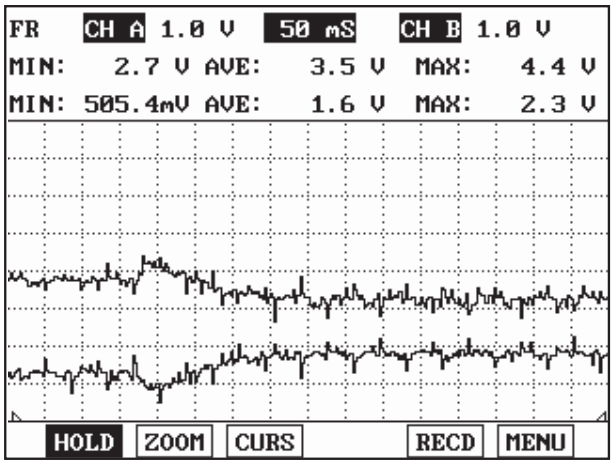

Pressing acllerator pedal at idle

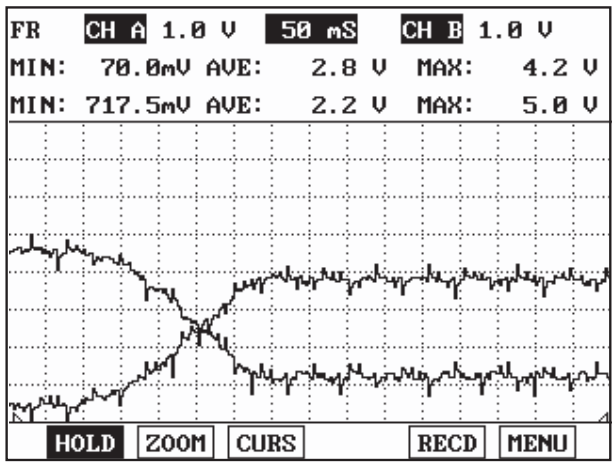

Pulling out accellerator cable with hand at idle

EGRF986A

3) Is the measured signal waveform O.K ?

YES

▶ Substitute with a known-good PCM and check for proper operation. If the problem is corrected,replace PCM and then go to "Verification of Vehicle Repair" procedure.

NOTE

There is a memory reset function on scantool that can erase optional parts automaticallydetected and memorized by PCM.
Before or after testing PCM on the vehicle, use this function to reuse the PCM on the others

NO

▶ Substitute with a known-good TPS and check for proper operation. If the problem is corrected,replace TPS and then go to "Verification of Vehicle Repair" procedure.
(After replacing ETC, do initialization of ETC as follows)

※ **PROCEDURE OF ETS INITIALIZATION**

1. Erase the trouble codes on PCM
2. Turn the ignition key off and keep this condition until the main relay is turned off.(It will takes 10sec.)
3. Turn ignition key on more than 1second to record the throttle motor position on the EEPROM

VERIFICATION OF VEHICLE REPAIR ECE44003

After a repair, it is essential to verify that the fault has been corrected.

1. Monitor and record the Freeze Frame Data for the Diagnostic Trouble Code(DTC) which has been diagnosed.
2. Using a Scantool, Clear the DTCs
3. Operate the vehicle within conditions noted in the freeze frame data or enable conditions
4. Monitor that all rediness test have been verified as " Complete "
5. Are any DTCs present ?

YES

▶ Go to the applicable troubleshoooting procedure.

NO

▶ System is performing to specification at this time.

DTC P2138 THROTTLE/PEDAL POSITION SENSOR/SWITCH "D" / "E" VOLTAGE CORRELATION

COMPONENT LOCATION EC293548

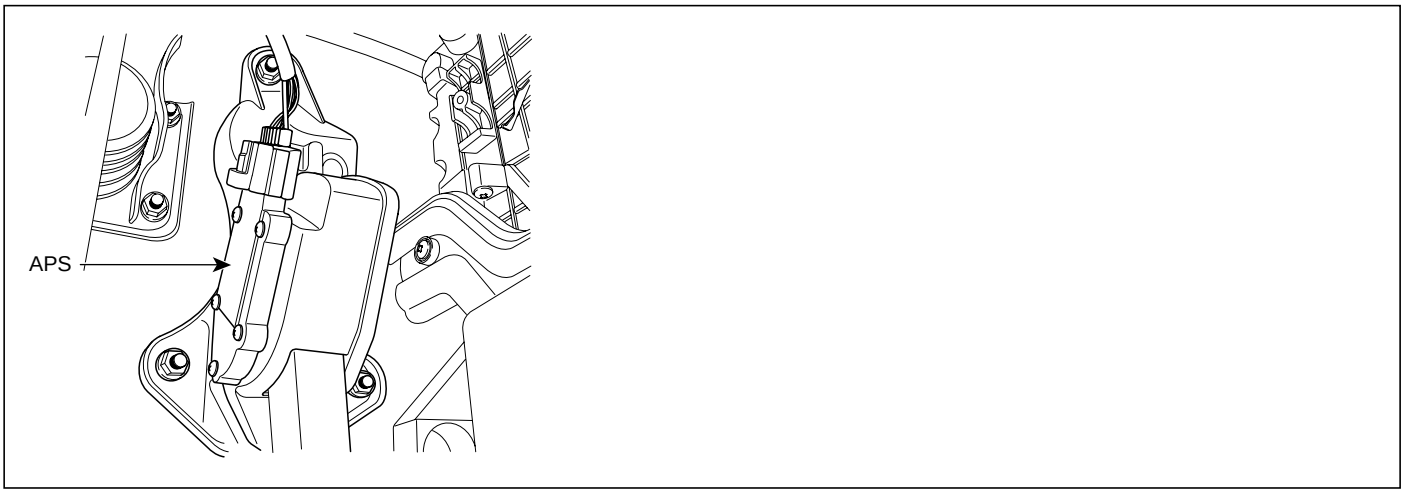

SCMF16410L

GENERAL DESCRIPTION EE42BF44

The Electronic Throttle Control(ETC) system is made of the components throttle body, Throttle Position Sensor(TPS) 1 & 2 and Accelerator Position Sensor(APS) 1 & 2. The APS is mounted in the accelerator pedal to detect the opening angle of the accelerator pedal. It has 2 sensors to detect the accelerator position and a malfunction of the accelerator position sensor. The ECM judges the current opening angle of the accelerator pedal from APS1 & 2, and the ECM controls the throttle motor based on these signals.

DTC DESCRIPTION E52F0EF2

Checking output signals from APS 1 and 2, under detecting condition, if output signals difference between APS 1 and 2 are detected more than 4.5% for the specified number of times., PCM sets P2138 and then MIL(Malfunction Indication Lamp) turns on.

DTC DETECTING CONDITION E658889F

Item	Detecting Condition	Possible Cause
DTC Strategy	• This code detects a correlation error between APS 1 and APS 2	• Poor connection • Open or short in APS Circuit • Faulty APS • Faulty PCM
Enable condition	• Ignition "ON"	
Threshold value	• Difference between APS1 and APS2 Normalized values 〉 4.5%	
Diagnosis time	• Contineous (More than 0.32sec. Failure for every 9.36sec. Test)	
MIL ON condition	• 1 Driving Cycle	

SPECIFICATION E5ADAEB3

Pedal Position	Output Voltage(V) [Vref = 5.0V]	
	APS1	APS2
C.T	0.7 ~ 0.8V	0.29 ~ 0.46V
W.O.T	3.85 ~ 4.35V	1.93 ~ 2.18V

SCHEMATIC DIAGRAM EB14BE4E

[CIRCUIT DIAGRAM]

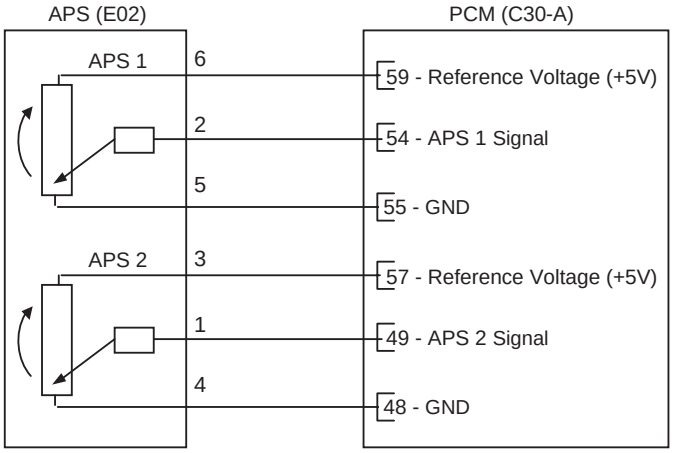

[CONNECTION INFORMATION]

Terminal	Connected to	Function
1	PCM C30-A (49)	APS 2 Signal
2	PCM C30-A (54)	APS 1 Signal
3	PCM C30-A (57)	APS 2 Reference Voltage (+5V)
4	PCM C30-A (48)	APS 2 Ground
5	PCM C30-A (55)	APS 1 Ground
6	PCM C30-A (59)	APS 1 Reference Voltage (+5V)

[HARNESS CONNECTORS]

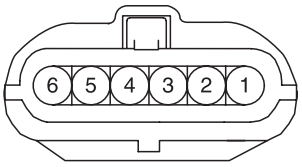

E02

APS

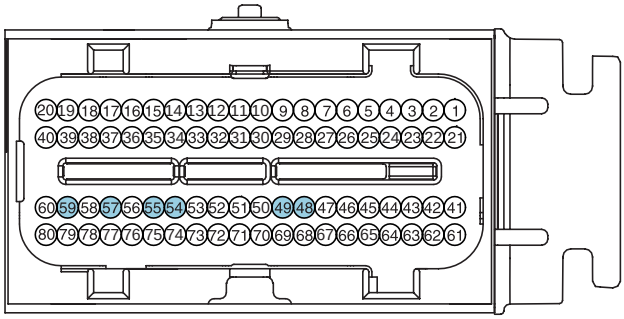

C30-A

PCM

SCMF16124L

SIGNAL WAVEFROM AND DATA E2010367

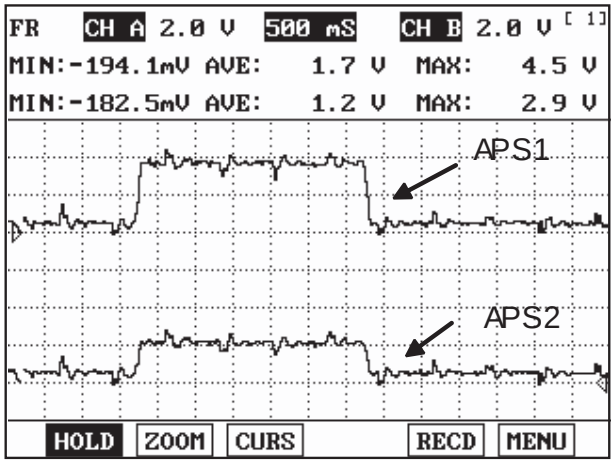

Fig. 1

Fig. 1 : This is a signal waveform of APS 1 & 2 which shows that APS 2 increases voltage just half of APS 1 voltage increase when accelleration.

EGRF970A

MONITOR DTC STATUS EF6ECCAA

1. Check DTC Status

   1) Connect scantool to Data Link Connector(DLC).

   2) IG "ON".

   3) Select "Diagnostic Trouble Codes(DTCs)" mode, and then Press F4(DTAL) to check DTC's information from the DTCs menu

   4) Read "DTC Status" parameter.

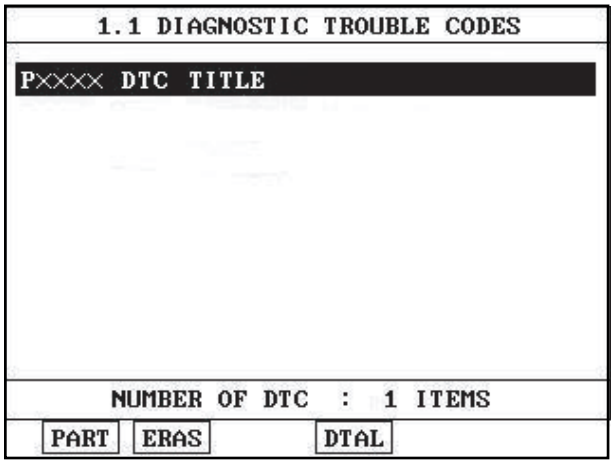

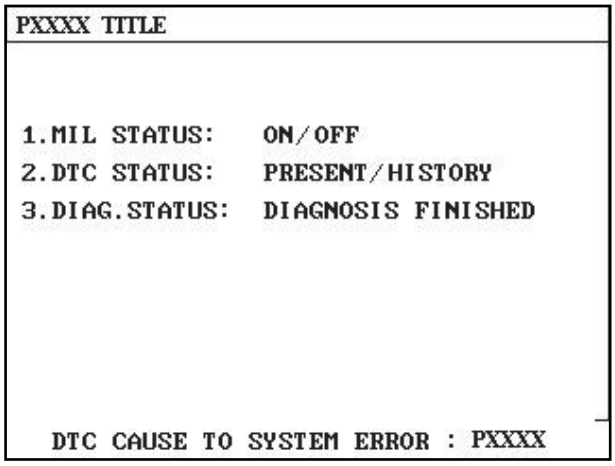

SCMF16159L

   5) Is parameter displayed "Present fault"?

   YES

   ▶ Go to "Terminal and connector inspection" procedure.

NO

▶ Fault is intermittent caused by poor contact in the sensor's and/or PCM's connector or was repaired and PCM memory was not cleared. Thoroughly check connectors for looseness, poor connection, ending, corrosion, contamination, deterioration, or damage. Repair or replace as necessary and go to "Verification of Vehicle Repair" procedure.

TERMINAL AND CONNECTOR INSPECTION EFE15F35

1. Many malfunctions in the electrical system are caused by poor harness and terminals. Faults can also be caused by interference from other electrical systems, and mechanical or chemical damage.
2. Thoroughly check connectors for looseness, poor connection, bending, corrosion, contamination, deterioration, or damage.
3. Has a problem been found?

YES

▶Repair as necessary and go to "Verification of Vehicle Repair" procedure

NO

▶Go to " Power Circuit Inspection " procedure.

POWER CIRCUIT INSPECTION EEB805D6

1. IG "OFF"
2. Disconnect APS connector.
3. IG "ON" & ENG "OFF".
4. Measure voltage between terminal 3 of APS harness connector and chassis ground.
5. Measure voltage between terminal 6 of APS harnesss connector and chassis ground.

Specification : Approx. 5V

6. Is the measured voltage within specification ?

YES

▶ Go to "Signal Circuit Inspection" procedure.

NO

▶ Repair or replace as necessary and then, go to "Signal Circuit Inspection" procedure.

SIGNAL CIRCUIT INSPECTION ECC0CD0B

1. IG "OFF".
2. Disconnect APS and PCM connector.
3. Measure resistance between terminal 1 and 2 of APS harness connector.

Specification : Infinite

4. Is the measured resistance within specification ?

YES

▶ Go to "Component Inspection" procedure.

NO

▶ Repair or replace as necessary and then, go to "Verification of Vehicle Repair" procedure.

COMPONENT INSPECTION E5400450

1. Check APS

   1) IG "ON" & ENG "OFF".

   2) Measure signal waveform of APS 1 and APS 2 by stepping on and off with scantool

SPECIFICATION :

Pedal Position	Output Voltage(V) [Vref = 5.0V]	
	APS1	APS2
C.T	0.7 ~ 0.8V	0.29 ~ 0.46V
W.O.T	3.85 ~ 4.35V	1.93 ~ 2.18V

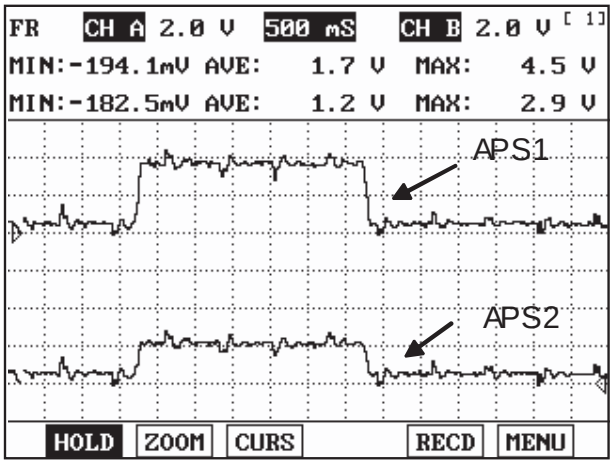

EGRF986E

   3) Is the measured signal waveform O.K ?

YES

▶ Substitute with a known-good PCM and check for proper operation. If the problem is corrected,replace PCM and then go to "Verification of Vehicle Repair" procedure.

NOTE

There is a memory reset function on scantool that can erase optional parts automaticallydetected and memorized by PCM.
Before or after testing PCM on the vehicle, use this function to reuse the PCM on the others

NO

▶ Substitute with a known-good APS and check for proper operation. If the problem is corrected,replace APS and then go to "Verification of Vehicle Repair" procedure.

VERIFICATION OF VEHICLE REPAIR EE76DF17

After a repair, it is essential to verify that the fault has been corrected.

1. Monitor and record the Freeze Frame Data for the Diagnostic Trouble Code(DTC) which has been diagnosed.
2. Using a Scantool, Clear the DTCs
3. Operate the vehicle within conditions noted in the freeze frame data or enable conditions
4. Monitor that all rediness test have been verified as " Complete "
5. Are any DTCs present ?

YES

▶ Go to the applicable troubleshoooting procedure.

NO

▶ System is performing to specification at this time.

DTC P2173 ETC (ELECTRONIC THROTTLE CONTROL) SYSTEM MALFUNCTION - HIGH AIR FLOW DETECTED

COMPONENT LOCATION EFFBE3B3

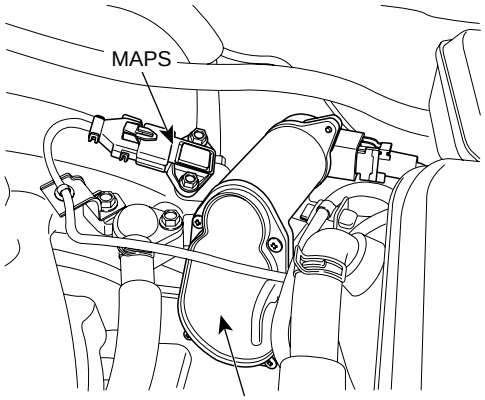

SCMF16192L

GENERAL DESCRIPTION E292F965

The Electronic Throttle Control(ETC) system is made of the components throttle body, Throttle Position Sensor(TPS)1 & 2 and Accelerator Position Sensor(APS) 1 & 2. The throttle body contains the actuator, the throttle plate and the throttle position sensor (potentiometer), which are integrated in one housing. The actuator consists of a DC motor with a two-stage gear. The opening angle of the throttle valve is detected by the throttle position sensor which is mounted on the throttle body. And it provides feedback to the ECM to control the throttle motor in order to control the throttle valve opening angle properly in response to the driving condition.

DTC DESCRIPTION E2141A89

Comparing real intake air flow and the intake air flow calculated by ETS, under detecting condition, if the difference of air flow more than threshold is detected for more than 3.9 sec., PCM sets P2173 and then MIL(Malfunction Indication Lamp) turns on.

DTC DETECTING CONDITION EE78EB92

Item		Detecting Condition	Possible Cause
DTC Strategy		• The engine airflow measurements not based on throttle position are compared with throttle position based estimated airflow.	• Air Leakage between TPS and MAFS • Faulty throttle body • Faulty PCM
Enable Conditions		• Engine running • Throttle Actuation Mode is not OFF • MAP Sensor is not failed • MAF Sensor is not failed • IAT sensor is not failed	
Thresh-old	Case 1	• Speed-Density Airflow - ETC estimated airflow 〉 9 g/s	
	Case 2	• MAF reading - ETC estimated airflow 〉 7g/s	
Diagnosis Time		• Contineous (More than 3.9sec. Failure for every 15.6sec. Test)	
MIL On Condition		• 1 Driving Cycle	

SPECIFICATION E6F349EF

MAFS

Air flow (kg/h)	Frequency (Hz)
0 kg/h	720 ~ 880 Hz
12.6 kg/h	2,595 Hz
18.0 kg/h	2,930 Hz
23.4 kg/h	3,208 Hz
32.4 kg/h	3,609 Hz
43.2 kg/h	3,975 Hz
57.6 kg/h	4,361 Hz
72.0 kg/h	4,683 Hz
108.0 kg/h	5,362 Hz
144.0 kg/h	5,885 Hz
198.0 kg/h	6,527 Hz
270.0 kg/h	7,219 Hz
360.0 kg/h	7,945 Hz
486.0 kg/h	8,736 Hz
666.0 kg/h	9,660 Hz
900.0 kg/h	10,613 Hz

TPS

Throttle opening (°)	Output voltage(V) [Vref=5.0V]	
	TPS1	TPS2
0°	0.0V	5.0V
10°	0.5V	4.5V

V20°	0.9V	4.1V
30°	1.4V	3.6V
40°	1.8V	3.2V
50°	2.3V	2.7V
60°	2.7V	2.3V
70°	3.2V	1.8V
80°	3.6V	1.4V
90°	4.1V	0.9V
100°	4.5V	0.5V
110°	5.0V	0.0V

MAPS

Pressure(kPa)(kPa)	Output voltage(V)
20.0kPa	0.79V
35kPa	1.382V
46.66kPa	1.84V
60kPa	2.369V
90kPa	3.75V
101.32kPa	4.00V

SCHEMATIC DIAGRAM E4E2CD87

[CIRCUIT DIAGRAM]

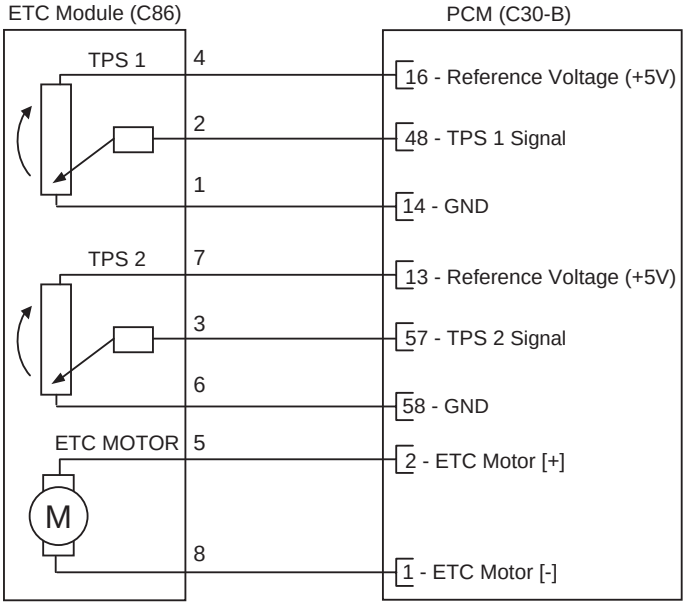

[CONNECTION INFORMATION]

Terminal	Connected to	Function
1	PCM C30-B (14)	TPS 1 Ground
2	PCM C30-B (48)	TPS 1 Signal
3	PCM C30-B (57)	TPS 2 Signal
4	PCM C30-B (16)	TPS 1 Reference Voltage (+5V)
5	PCM C30-B (2)	ETC Motor [+] Control
6	PCM C30-B (58)	TPS 2 Ground
7	PCM C30-B (13)	TPS 2 Reference Voltage (+5V)
8	PCM C30-B (1)	ETC Motor [-] Control

[HARNESS CONNECTORS]

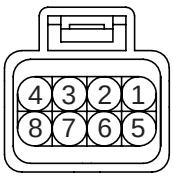

C86

ETC MODULE

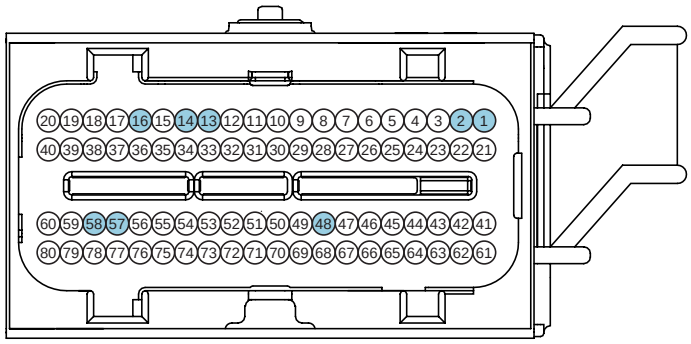

C30-B

PCM

SCMF16101L

MONITOR DTC STATUS EAB43615

1. Check DTC Status

   1) Connect scantool to Data Link Connector(DLC).

   2) IG "ON".

   3) Select "Diagnostic Trouble Codes(DTCs)" mode, and then Press F4(DTAL) to check DTC's information from the DTCs menu

   4) Read "DTC Status" parameter.

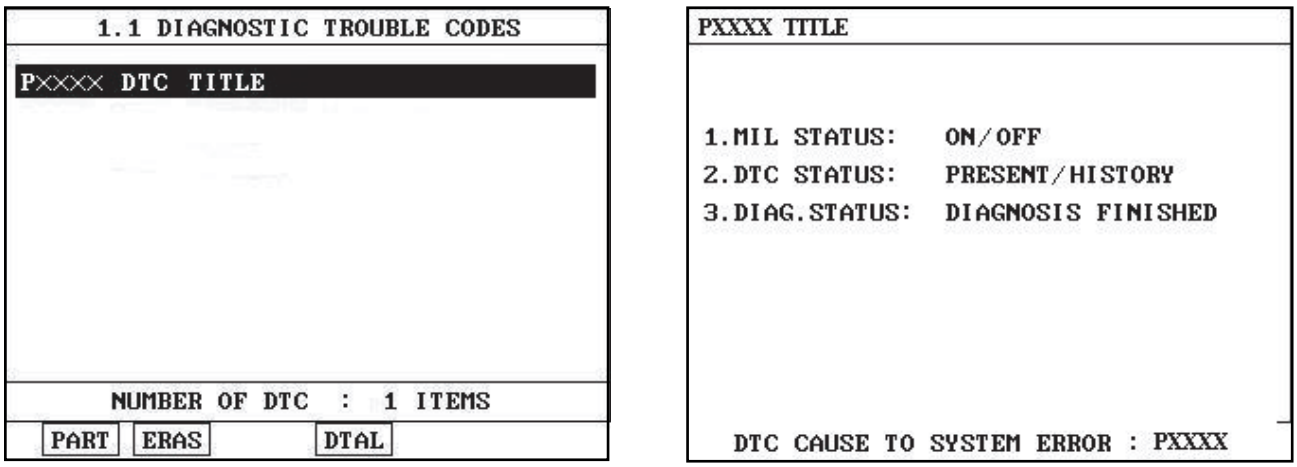

SCMF16159L

5) Is parameter displayed "Present fault"?

YES

▶ Go to "System Inspection" procedure.

NO

▶ Fault is intermittent caused by poor contact in the sensor's and/or PCM's connector or was repaired and PCM memory was not cleared. Thoroughly check connectors for looseness, poor connection, ending, corrosion, contamination, deterioration, or damage. Repair or replace as necessary and go to "Verification of Vehicle Repair" procedure.

SYSTEM INSPECTION EFDBC19F

1. Visual Inspection

1) Check the air hose between MAFS and throttle body is torn or installation.

2) Check deforamtion, crack or installation of throttle valve(body)

3) Has a problem been found ?

YES

▶ Substitute with a known-good Air hose or throttle body and check for proper operation.
If the problem is corrected,replace air hose or throttle body and then go to "Verification of Vehicle Repair" procedure.

NO

▶ Substitute with a known-good PCM and check for proper operation. If the problem is corrected,replace PCM and then go to "Verification of Vehicle Repair" procedure.

NOTE

There is a memory reset function on scantool that can erase optional parts automaticallydetected and memorized by PCM.
Before or after testing PCM on the vehicle, use this function to reuse the PCM on the others

※ PROCEDURE OF ETS INITIALIZATION

1. Erase the trouble codes on PCM
2. Turn the ignition key off and keep this condition until the main relay is turned off.(It will takes 10sec.)
3. Turn ignition key on more than 1second to record the throttle motor position on the EEPROM

VERIFICATION OF VEHICLE REPAIR ED410949

After a repair, it is essential to verify that the fault has been corrected.

1. Monitor and record the Freeze Frame Data for the Diagnostic Trouble Code(DTC) which has been diagnosed.
2. Using a Scantool, Clear the DTCs
3. Operate the vehicle within conditions noted in the freeze frame data or enable conditions
4. Monitor that all rediness test have been verified as " Complete "
5. Are any DTCs present ?

YES

▶ Go to the applicable troubleshoooting procedure.

NO

▶ System is performing to specification at this time.

DTC P2187 SYSTEM TOO LEAN AT IDLE (←ADDITIVE) (BANK 1)
DTC P2189 SYSTEM TOO LEAN AT IDLE (←ADDITIVE) (BANK 2)

GENERAL DESCRIPTION EC6A1680

In order to provide the best possible combination of drivability, fuel economy and emission control, the ECM uses a closed loop air/fuel metering system. The ECM monitors the HO2S signal voltage and adjusts fuel delivery based it in closed loop fuel control. Changes in fuel delivery will be indicated by the long-term and the short-term fuel trim values. The ideal fuel trim value is around 0%. The ECM will add fuel when the HO2S signal is indicating a lean condition. Additional fuel is indicated by fuel trim values that are above 0%. The ECM will reduce fuel when the HO2S signal is indicating a rich condition. Reduction in fuel is indicated by fuel trim values that are below 0%. The DTC relevant to fuel trim will be set when the amount reaches excessive levels because of a lean or rich condition.

DTC DESCRIPTION E072F760

Checking air-fuel ratio correction value every 0.75 sec. at idle, if the value within the detecting condition for more than 0.3 sec., PCM sets P2187/P2189. MIL(Malfunction Indication Lamp) turns on when the malfunction lasts till consecutive 2 driving cycle.

DTC DETECTING CONDITION E36D2926

Item	Detecting Condition	Possible cause
DTC Strategy	• Fuel Trim Idle Condition Option Limits Exceeded	• Sensors related to Fuel Trim • Intake system • Fuel Pressure • Faulty PCM
Enable Conditions	• 550rpm ≤ Engine Speed ≤ 4000rpm • 60℃ (140˚F) ≤ Engine coolant temperature ≤ 114.992℃ (239˚F) • -10℃ (14˚F) ≤ Intake Air Temperature ≤ 60℃ (140˚F) • 0° ≤ Throttle Position ≤ 72° • 25kPa ≤ Engine Load ≤ 90kPa • 1.5g/s ≤ Intake Air Flow ≤ 80g/s • Barometric Pressure ≥ 72kPa • Vehicle Speed ≤ 130km/h • System Voltage ≥ 11V • Closed Loop Active • Other diagnostic fault not active	
Threshold value	• Average of short term fuel trim 〉 1.5 • Average of long term fuel trim 〉 0.76	
Diagnosis Time	• Continuous (More than 0.375sec. Failure for every 0.75sec. Test)	
MIL On Condition	• 2 Driving Cycles	

MONITOR DTC STATUS ED3BB1B6

1. Check DTC Status

   1) Connect scantool to Data Link Connector(DLC).

   2) IG "ON".

   3) Select "Diagnostic Trouble Codes(DTCs)" mode, and then Press F4(DTAL) to check DTC's information from the DTCs menu

4) Read "DTC Status" parameter.

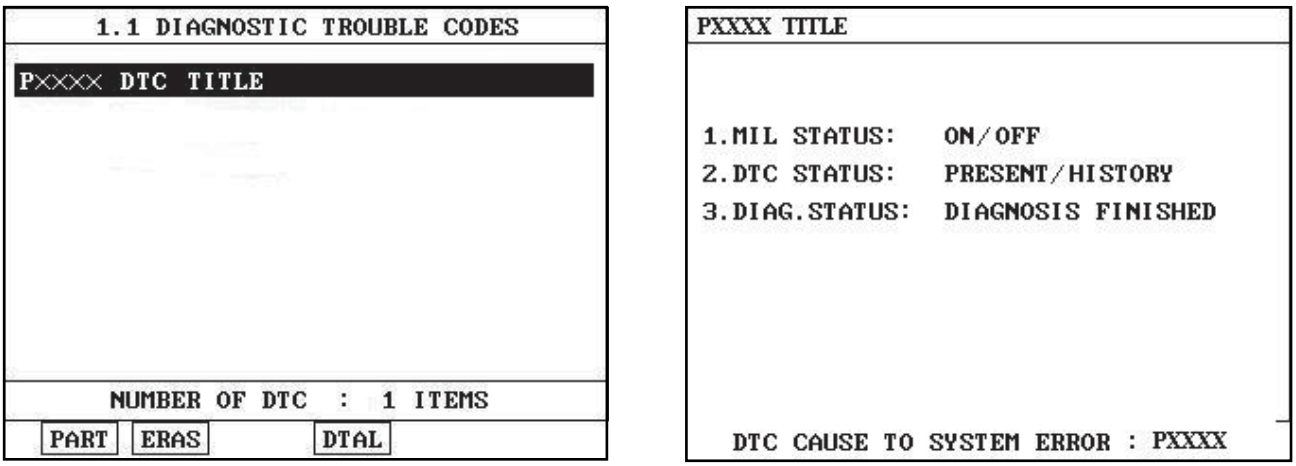

SCMF16159L

5) Is parameter displayed "Present fault"?

YES

▶ Go to "Terminal and connector inspection" procedure.

NO

▶ Fault is intermittent caused by poor contact in the sensor's and/or PCM's connector or was repaired and PCM memory was not cleared. Thoroughly check connectors for looseness, poor connection, ending, corrosion, contamination, deterioration, or damage. Repair or replace as necessary and go to "Verification of Vehicle Repair" procedure.

TERMINAL AND CONNECTOR INSPECTION E26AAA82

1. Many malfunctions in the electrical system are caused by poor harness and terminals. Faults can also be caused by interference from other electrical systems, and mechanical or chemical damage.
2. Thoroughly check connectors for looseness, poor connection, bending, corrosion, contamination, deterioration, or damage.
3. Has a problem been found?

YES

▶ Repair as necessary and go to "Verification of Vehicle Repair" procedure

NO

▶ Go to "System Inspection " procedure.

SYSTEM INSPECTION E2F3961E

1. Check Air leakage

1) Check gasket is contaminated or misinstalled.
▶ Installation or any damage of Throttle body gasket
▶ Installation or any damage of the gasket between intake manifold and surge tank.

▶ Clogging of intake manifold or injectors resulting from foreign materials.
▶ Open stuck of PCSV caused by foreign materials between surge tank and PCSV.

2) Has a problem been found ?

YES

▶ Repair or replace as necessary and then, go to "Verification of Vehicle Repair" procedure.

NO

▶ Go to "Check Fuel Line Inspection" as follows.

2. Check Fuel Line Inspection

1) Check clog, contamination and installation of each hose as follows.
▶ Check connection of each fuel line.
▶ Check damage, interference and installation of vaccum hose connected to fuel line.
▶ Check that fuel pipe in the fuel line is bent and sqeezed.
▶ Check any fuel leakage from fuel pipe in the fuel line.

2) Has a problem been found ?

YES

▶ Repair or replace as necessary and then, go to "Verification of Vehicle Repair" procedure.

NO

▶ Go to "Check fuel pressure" as follows.

3. Check Fuel Pressure

NOTE

- *Be cautious that Fuel is explosive and an empty fuel tank can still contain explosive gases.When working on fuel system make sure to supply adequate ventilation to the work area. Do not smoke, and keep sparks and open flames away.*
- *The fuel system remains under pressure when the engine is not running. Release fuel system pressure before disconnecting any fuel line to reduce the chance of presonal injury or fire damage to vehicle components.*

1) Start the engine and disconnect the fuel pump relay.

2) Wait until fuel in fuel line is exhausted and the engine stalls.

3) Turn the ignition switch OFF position.

4) Install the special service tool for measuring the fuel pressure between the delivery pipe and the fuel feed hose.

5) Connect the fuel pump relay.

6) With fuel pressure applied, check the three is no fuel leakage from the fuel pressure gauge or connection part.

7) Start the engine and measure the fuel pressure at idle.

Specification : 374 ~ 384 kpa (3.82 ~ 3.92 kg/㎠, 54.3 ~ 55.8psi)

8) Stop the engine and check for a change in the fuel pressure gauge reading.

Specification : After engine stops, the gauge reading should hold for about 5 minutes.

9) Is the measured fuel pressure within specification?

YES

▶ Go to "Component Inspection" procedure.

YES

▶ Go to "Verification of Vehicle Repair" procedure.
▶ And then, go to " Verification of Vehicle Repair" procedure, and the go to "Verification of Vehicle Repair" procedure.

Condition	Possible Cause	Suspected area
Fuel pressure too low	Clogged filter	Fuel filter
	Fuel leak on the fuel-pressure regulator that is assembled on fuel pump because of poor seating of the fuel-pressure regulator	Fuel pressure regulator
Fuel pressure too high	Sticking fuel pressure regulator	Fuel pressure regulator
Fuel pressure drops slowly after engine is stopped	Injector leak	Injector
Fuel pressure drops immediately after engine is stopped	The check valve within the fuel pump is open	Fuel pump

COMPONENT INSPECTION E3E5E1E4

1. Check PCV

1) IG "OFF".

2) Remove PCV valve and then, check that plunger in the PCV is moving.

3) Is the PCV normal ?

YES

▶ Go to "Check PCSV" as follows.

NO

▶ Substitute with a known-good PCV and check for proper operation. If the problem is corrected,replace PCV and then go to "Verification of Vehicle Repair" procedure.

2. Check PCSV

1) IG "OFF".

2) Remove PCSV and Vaccum Hose

3) Check that PCSV is just one way solenoid valve

4) Is the PCSV normal ?

YES

▶ Go to "Check injector" as follows.

NO

▶ Substitute with a known-good PCSV and check for proper operation. If the problem is corrected,replace PCSV and then go to "Verification of Vehicle Repair" procedure.

3. Check injector

1) IG "OFF"

2) Remove injector.

3) Check that injector hole is clogged by foreign materials.

4) Measure resistance between terminal 1 an 2 of injector connector.(Component Side)

SPECIFICATION :

Temp.	Resistance
20℃ (68°F)	13.8 ~ 15.2Ω

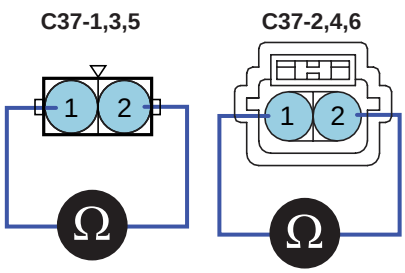

SCMF16425L

5) Is the measured resistance within specification ?

YES

▶ Go to "Check component related to fuel trim" as follows.

NO

▶ Substitute with a known-good injector and check for proper operation. If the problem is corrected,replace injector and then go to "Verification of Vehicle Repair" procedure.

4. Check component related to fuel trim

1) Check component related to fuel trim such as HO2S, MAFS,MAPS, TPS, ECTS, PCSV and Injectores) - Refer to each designated trouble shooting guide.

2) Are those component related to fuel trim O.K ?

YES

▶ Substitute with a known-good PCM and check for proper operation. If the problem is corrected,replace PCM and then go to "Verification of Vehicle Repair" procedure.

NOTE

There is a memory reset function on scantool that can erase optional parts automaticallydetected and memorized by PCM.

NO

▶ Repair or replace as necessary and then, go to "Verification of Vehicle Repair" procedure.

VERIFICATION OF VEHICLE REPAIR E81D2902

After a repair, it is essential to verify that the fault has been corrected.

1. Monitor and record the Freeze Frame Data for the Diagnostic Trouble Code(DTC) which has been diagnosed.
2. Using a Scantool, Clear the DTCs
3. Operate the vehicle within conditions noted in the freeze frame data or enable conditions
4. Monitor that all rediness test have been verified as " Complete "
5. Are any DTCs present ?

YES

▶ Go to the applicable troubleshoooting procedure.

NO

▶ System is performing to specification at this time.

DTC P2188 SYSTEM TOO RICH AT IDLE (BANK 1)
DTC P2190 SYSTEM TOO RICH AT IDLE (BANK 2)

GENERAL DESCRIPTION E608ACB0

Refer to DTC P2187.

DTC DESCRIPTION EF24E337

Checking air-fuel ratio correction value every 0.75 sec. at idle, if the value within the detecting condition for more than 0.3 sec., PCM sets P2188/P2190. MIL(Malfunction Indication Lamp) turns on when the malfunction lasts till consecutive 2 driving cycle.

DTC DETECTING CONDITION E1AF6575

Item	Detecting Condition	Possible cause
DTC Strategy	• Fuel Trim Idle Condition Option Limits Exceeded	• Sensors related to Fuel Trim • Intake system • Fuel Pressure • Faulty PCM
Enable Conditions	• 550rpm ≤ Engine Speed ≤ 4000rpm • 60℃ (140˚F) ≤ Engine coolant temperature ≤ 114.992℃ (239˚F) • -10℃ (14˚F) ≤ Intake Air Temperature ≤ 60℃ (140˚F) • 0° ≤ Throttle Position ≤ 72° • 25kPa ≤ Engine Load ≤ 90kPa • 1.5g/s ≤ Intake Air Flow ≤ 80g/s • Barometric Pressure ≥ 72kPa • Vehicle Speed ≤ 130km/h • System Voltage ≥ 11V • Closed Loop Active • Other diagnostic fault not active	
Threshold value	• Average of short term fuel trim 〈 0.8 • Average of long term fuel trim 〈 1.24	
DiagnosisTime	• Continuous (More than 0.375sec. Failure for every 0.75sec. Test)	
MIL On Condition	• 2 Driving Cycles	

MONITOR DTC STATUS EFE1F32A

Refer to DTC P2187.

TERMINAL AND CONNECTOR INSPECTION E563AF09

Refer to DTC P2187.

SYSTEM INSPECTION EC9F9E30

1. Check air clog.

   1) Check Contamination ,Gasket installation as follows
      ▶ Damage or installation of throttle body gasket.
      ▶ Check clog of air cleaner

▶ Clog or contamination of intake manifold or injectors caused by foreign materials
▶ Check vaccum hose connected to surge tank is normal.

2) Has a problem been found ?

YES

▶ Repair or replace as necessary and then, go to "Verification of Vehicle Repair"procedure.

NO

▶ Go to "Check Fuel Pressure" as follows

2. Check Fuel Pressure.

NOTE

- *Be cautious that Fuel is explosive and an empty fuel tank can still contain explosive gases.When working on fuel system make sure to supply adequate ventilation to the work area. Do not smoke, and keep sparks and open flames away.*
- *The fuel system remains under pressure when the engine is not running. Release fuel system pressure before disconnecting any fuel line to reduce the chance of presonal injury or fire damage to vehicle components.*

1) Start the engine and disconnect the fuel pump relay.

2) Wait until fuel in fuel line is exhausted and the engine stalls.

3) Turn the ignition switch OFF position.

4) Install the special service tool for measuring the fuel pressure between the delivery pipe and the fuel feed hose.

5) Connect the fuel pump relay.

6) With fuel pressure applied, check the three is no fuel leakage from the fuel pressure gauge or connection part.

7) Start the engine and measure the fuel pressure at idle.

Specification : 374 ~ 384 kpa (3.82 ~ 3.92 kg/㎠, 54.3 ~ 55.8psi)

8) Stop the engine and check for a change in the fuel pressure gauge reading.

Specification : After engine stops, the gauge reading should hold for about 5 minutes.

9) Is the measured fuel pressure within specification?

YES

▶ Go to "Component Inspection"procedure.

NO

▶ Repair or replace according to the table below, And then go to " Verification of Vehicle Repair" procedure.

Condition	Possible Cause	Suspected area
Fuel pressure too low	Clogged filter	Fuel filter
	Fuel leak on the fuel-pressure regulator that is assembled on fuel pump because of poor seating of the fuel-pressure regulator	Fuel pressure regulator
Fuel pressure too high	Sticking fuel pressure regulator	Fuel pressure regulator
Fuel pressure drops slowly after engine is stopped	Injector leak	Injector
Fuel pressure drops immediately after engine is stopped	The check valve within the fuel pump is open	Fuel pump

COMPONENT INSPECTION E9FE482D

1. Check PCV

   1) IG "OFF".

   2) Remove PCV valve and then, check that plunger in the PCV is moving.

   3) Is the PCV normal ?

   YES

   ▶ Go to "Check PCSV" as follows.

   NO

   ▶ Substitute with a known-good PCV and check for proper operation. If the problem is corrected,replace PCV and then go to "Verification of Vehicle Repair" procedure.

2. Check PCSV

   1) IG "OFF".

   2) Remove PCSV and Vaccum Hose

   3) Check that PCSV is just one way solenoid valve

   4) Is the PCSV normal ?

   YES

   ▶ Go to "Check injector" as follows.

   NO

   ▶ Substitute with a known-good PCSV and check for proper operation. If the problem is corrected,replace PCSV and then go to "Verification of Vehicle Repair" procedure.

3. Check injector

   1) IG "OFF"

   2) Remove injector.

   3) Check that injector hole is clogged by foreign materials.

4) Measure resistance between terminal 1 an 2 of injector connector.(Component Side)

SPECIFICATION :

Temp.	Resistance
20℃ (68°F)	13.8 ~ 15.2Ω

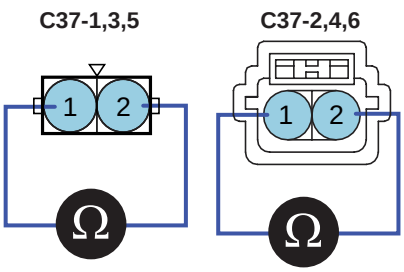

SCMF16425L

5) Is the measured resistance within specification ?

YES

▶ Go to "Check component related to fuel trim" as follows.

NO

▶ Substitute with a known-good injector and check for proper operation. If the problem is corrected,replace injector and then go to "Verification of Vehicle Repair" procedure.

4. Check component related to fuel trim

1) Check component related to fuel trim such as HO2S, MAFS,MAPS, TPS, ECTS, PCSV and Injectores) - Refer to each designated trouble shooting guide.

2) Are those component related to fuel trim O.K ?

YES

▶ Substitute with a known-good PCM and check for proper operation. If the problem is corrected,replace PCM and then go to "Verification of Vehicle Repair" procedure.

NOTE

There is a memory reset function on scantool that can erase optional parts automaticallydetected and memorized by PCM.

NO

▶ Repair or replace as necessary and then, go to "Verification of Vehicle Repair" procedure.

VERIFICATION OF VEHICLE REPAIR E4DF84FC

Refer to DTC P2187.

DTC P2195 HO2S SIGNAL STUCK LEAN (BANK 1 / SENSOR 1)

COMPONENT LOCATION E74F8321

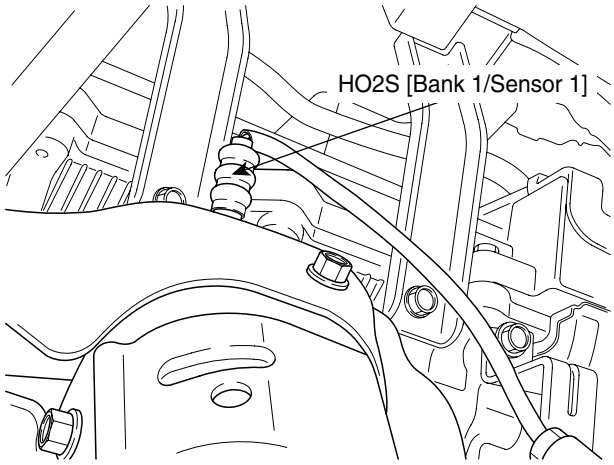

LGLG504A

GENERAL DESCRIPTION E72A34C4

In order to control emissions of the CO, HC and NOx components of the exhaust gas, heated oxygen sensor (HO2S), mounted on the front side and rear side of catalytic converter, detects the oxygen content in the exhaust gas. The front HO2S signal is used to control air/fuel ratio (closed loop fuel control) and the rear HO2S signal is used to monitor front HO2S and catalyst for proper operation. The HO2S requires a minimum temperature to operate properly and provide a closed loop fuel control system. The HO2S contains the heater element to reduce its warming-up time and ensure its performance during all driving conditions. The oxygen sensor generates a voltage that indicates the difference between the oxygen content of the exhaust stream and the oxygen content of ambient air. When the exhaust stream is " rich," there is more oxygen in the ambient air than in the exhaust stream, so the voltage will be higher.

DTC DESCRIPTION E622C1AE

Checking output signals from HO2S under detecting condition, if HO2S's signal is lean during power enrichment conditions, PCM sets P2195. MIL(Malfunction Indication Lamp) turns on when the malfunction lasts till consecutive 2 driving cycle.

DTC DETECTING CONDITION E1EC9544

Item	Detecting Condition	Possible cause
DTC Strategy	• Monitor HO2S's signal	• Poor Connection • Faulty HO2S • Clogging of fuel filter in fuel pump • Faulty PCM
Enable Conditions	• Battery voltage ≥ 10V • Engine running ≥ 60sec. • Power Enrichment conditions • Engine warm-up state • Not in Transient Conditions	
Threshold value	• HO2S's signal < 0.35V and Air Fuel Ratio ≤ 13.5	
DiagnosisTime	• Continuous (More than 8 sec. failure for every 9 sec. Test)	
MIL On Condition	• 2 Driving Cycles	

SPECIFICATION EF6C8E54

(REFERENCE ONLY)

Test Condition	HO2S Voltage(Sensor1)	HO2S Voltage(Sensor2)
HO2S Signal at idle after warm-up	Signal is commonly switching from rich to lean more than 3 times in 10 sec.	Signal is commonly above 0.6V.
HO2S signal at open circuit (Pumping current OFF)	Approx. 0.45V	
HO2S signal at open circuit (Pumping current ON)	Approx. 3.5V	

SCHEMATIC DIAGRAM EF321788

[CIRCUIT DIAGRAM]

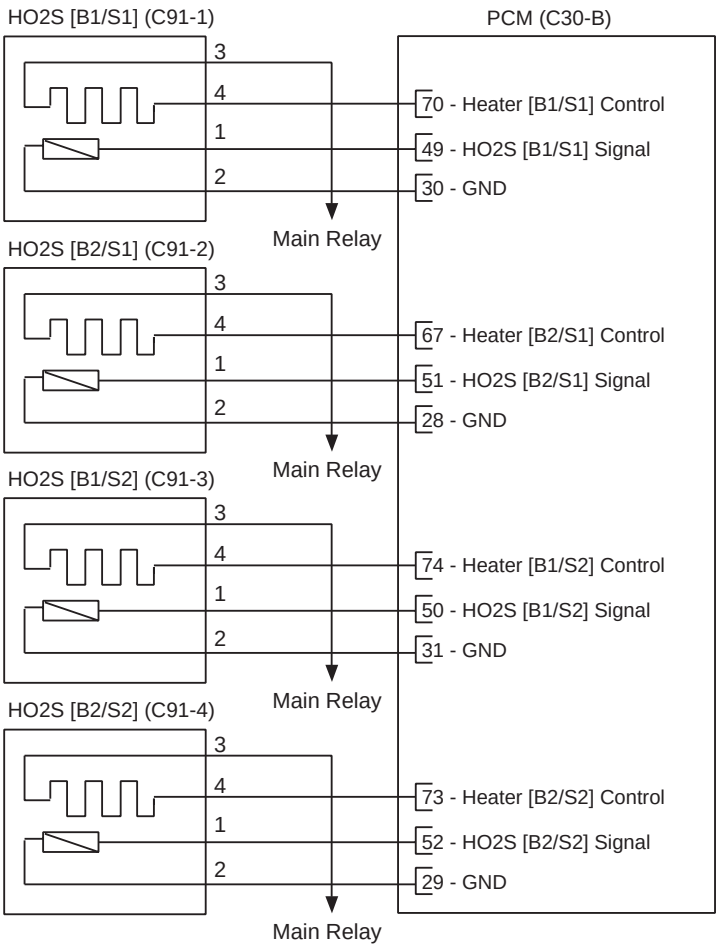

[CONNECTION INFORMATION]

HO2S [B1/S1]

Terminal	Connected to	Function
1	PCM C30-B (49)	HO2S [B1/S1] Signal
2	PCM C30-B (30)	Sensor ground
3	Main Relay	Battery Voltage (B+)
4	PCM C30-B (70)	Heater [B1/S1] Control

HO2S [B2/S1]

Terminal	Connected to	Function
1	PCM C30-B (51)	HO2S [B2/S1] Signal
2	PCM C30-B (28)	Sensor ground
3	Main Relay	Battery Voltage (B+)
4	PCM C30-B (67)	Heater [B2/S1] Control

HO2S [B1/S2]

Terminal	Connected to	Function
1	PCM C30-B (50)	HO2S [B1/S2] Signal
2	PCM C30-B (31)	Sensor ground
3	Main Relay	Battery Voltage (B+)
4	PCM C30-B (74)	Heater [B1/S2] Control

HO2S [B2/S2]

Terminal	Connected to	Function
1	PCM C30-B (52)	HO2S [B2/S2] Signal
2	PCM C30-B (29)	Sensor ground
3	Main Relay	Battery Voltage (B+)
4	PCM C30-B (73)	Heater [B2/S2] Control

[HARNESS CONNECTORS]



C91-1,2

HO2S [Bank 1/Sensor 1]
HO2S [Bank 2/Sensor 1]

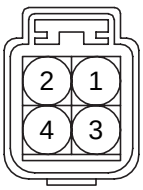

C91-3,4

HO2S [Bank 1/Sensor 2]
HO2S [Bank 2/Sensor 2]

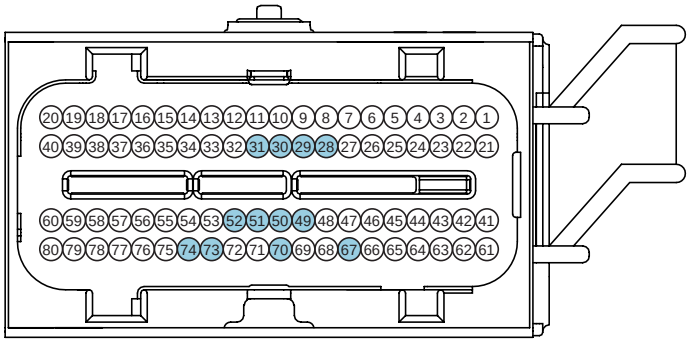

C30-B

PCM

SCMF16110L

SIGNAL WAVEFORM AND DATA ECDD1CFC

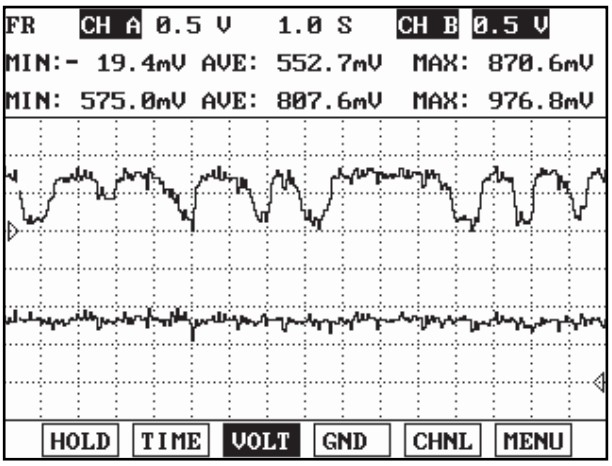

Fig) Signal waveforms of front HO2S(the upper) and rear HO2S(the lower)

SCMF16223L

After warming-up, if accelerator pedal is released suddenly around 4000rpm, the HO2S signal reading will be lower than 200mV resulting from Fuel cut-off for the moment. Conversely, if suddenly accelerator pedal is depressed, HO2S signal reading will be around 0.6V ~1.0V. At idle, Normally HO2S signal will switch from lean to rich with 3 Hz. And as racing, Its frequency rises.

MONITOR DTC STATUS EC91DBE0

1. Check DTC Status

   1) Connect scantool to Data Link Connector(DLC).

   2) IG "ON".

   3) Select "Diagnostic Trouble Codes(DTCs)" mode, and then Press F4(DTAL) to check DTC's information from the DTCs menu

   4) Read "DTC Status" parameter.

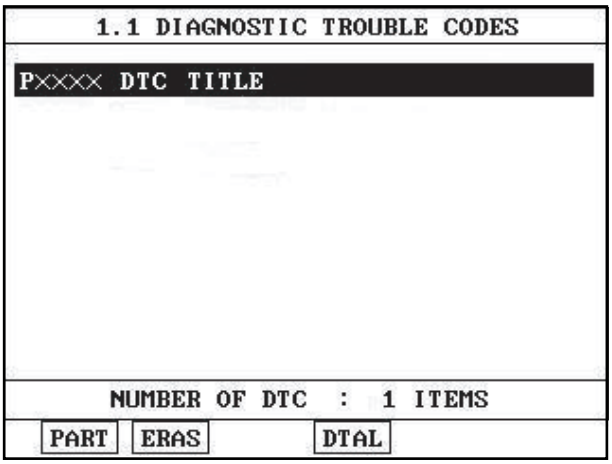

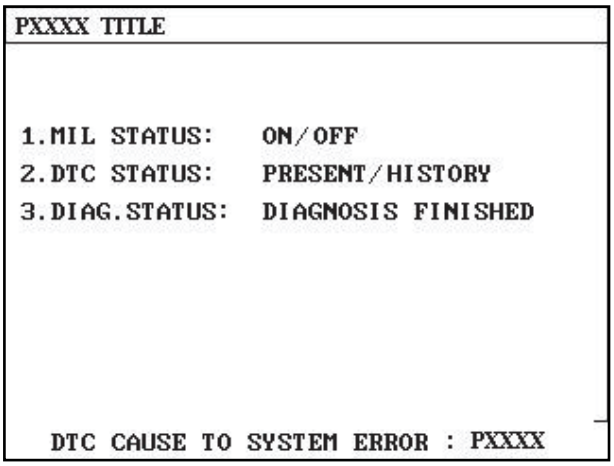

SCMF16159L

   5) Is parameter displayed "Present fault"?

YES

▶ Go to "Component Inspection" procedure.

NO

▶ Fault is intermittent caused by poor contact in the sensor's and/or PCM's connector or was repaired and PCM memory was not cleared. Thoroughly check connectors for looseness, poor connection, ending, corrosion, contamination, deterioration, or damage. Repair or replace as necessary and go to "Verification of Vehicle Repair" procedure..

COMPONENT INSPECTION E30CE7C1

1. Check the condition of HO2S

   1) Check HO2S for poor connection or loose terminal.

   2) Check if HO2S is ensurely installed.

   3) Is the conditions of HO2S normal ?

   YES

   ▶ Go to "Check the Signal waveform of HO2S" as follows.

   NO

   ▶ Repair it and then go to "Verification of Vehicle Repair" procedure.

2. Check the Signal waveform of HO2S

   1) IG "OFF" and connect HO2S connector.

   2) Engine start.

   3) After warming-up, monitor signal waveform of HO2S with scantool.?

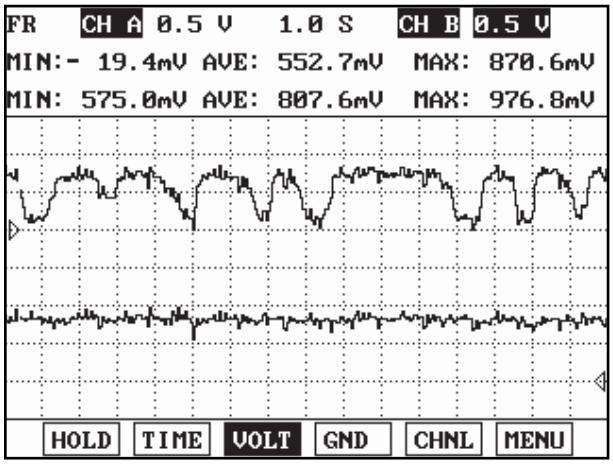

Fig) Signal waveform of front(the upper) and rear(the lower) HO2S at idle

SCMF16225L

   4) Is the sensor switching properly?

   YES

▶ Go to "Check fuel filter" as follows.

NO

▶ Substitute with a known - good HO2S and check for proper operation.
If the problem is corrected, go to "Verification of Vehicle Repair" procedure.

3. Check the fuel filter of fuel pump

   1) IG "OFF" and disconnect the fuel pump connector.

   2) Start the engine and wait until fuel in fuel line is exhausted. After the engine stalls, IG "OFF"

   3) Remove the fuel pump assembly.

   4) Check the fuel filter for clogging by dust, a foreign substance.

   5) Is the fuel filter O.K.?

      YES

      ▶ Substitute with a known - good PCM and check for proper operation.
      If the problem is corrected, replace PCM and go to "Verification of Vehicle Repair" procedure.

      NO

      ▶ Substitute with a known - good fuel filter and check for proper operation.
      If the problem is corrected, go to "Verification of Vehicle Repair" procedure.

NOTE

There is a memory reset function on scantool that can erase optional parts automatically detected and memorized by PCM. Before or after testing PCM on the vehicle, use this function to reuse the PCM on the others.

VERIFICATION OF VEHICLE REPAIR E7B398AA

After a repair, it is essential to verify that the fault has been corrected.

1. Monitor and record the Freeze Frame Data for the Diagnostic Trouble Code(DTC) which has been diagnosed.
2. Using a Scantool, Clear the DTCs
3. Operate the vehicle within conditions noted in the freeze frame data or enable conditions
4. Monitor that all rediness test have been verified as " Complete "
5. Are any DTCs present ?

   YES

   ▶ Go to the applicable troubleshoooting procedure.

   NO

   ▶ System is performing to specification at this time.

DTC P2196 HO2S SIGNAL STUCK RICH (BANK 1 / SENSOR 1)

COMPONENT LOCATION E162B279

Refer to DTC P2195.

GENERAL DESCRIPTION E4511625

Refer to DTC P2195.

DTC DESCRIPTION EC9FDB54

Checking output signals from HO2S under detecting condition, if HO2S's signal is rich during fuel cut-off conditions, PCM sets P2196. MIL(Malfunction Indication Lamp) turns on when the malfunction lasts till consecutive 2 driving cycle.

DTC DETECTING CONDITION EED8307F

Item	Detecting Condition	Possible cause
DTC Strategy	• Monitor HO2S's signal	• Poor Connection • Faulty HO2S • Faulty PCM
Enable Conditions	• Battery voltage ≥ 10V • Engine running ≥ 60sec • Fuel cut-off conditions • Engine warm-up state • Not in Transient Conditions	
Threshold value	• HO2S's signal > 0.42V	
DiagnosisTime	• Continuous (More than 8 sec. failure for every 9 sec. Test)	
MIL On Condition	• 2 Driving Cycles	

SPECIFICATION EAB4411D

Refer to DTC P2195.

SCHEMATIC DIAGRAM E973CBAA

Refer to DTC P2195.

SIGNAL WAVEFORM AND DATA E0C0F1BD

Refer to DTC P2195.

MONITOR DTC STATUS E7335320

Refer to DTC P2195.

COMPONENT INSPECTION EA6FE12F

1. Check the condition of HO2S

    1) Check HO2S for poor connection or loose terminal.

2) Check if HO2S is ensurely installed.

3) Is the conditions of HO2S normal ?

YES

▶ Go to "Check the Signal waveform of HO2S" as follows.

NO

▶ Repair it and then go to "Verification of Vehicle Repair" procedure.

2. Check the Signal waveform of HO2S

1) IG "OFF" and connect HO2S connector.

2) Engine start.

3) After warming-up, monitor signal waveform of HO2S with scantool.?

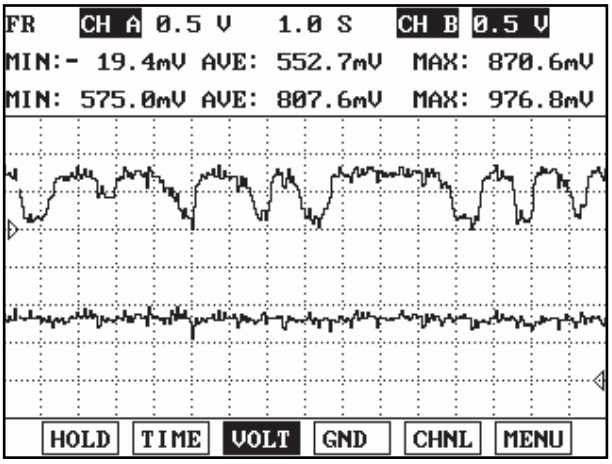

Fig) Signal waveform of front(the upper) and rear(the lower) HO2S at idle

SCMF16225L

4) Is the sensor switching properly?

YES

▶ Substitute with a known - good PCM and check for proper operation.
If the problem is corrected, replace PCM and go to "Verification of Vehicle Repair" procedure.

NO

▶ Substitute with a known - good HO2S and check for proper operation.
If the problem is corrected, go to "Verification of Vehicle Repair" procedure.

NOTE

There is a memory reset function on scantool that can erase optional parts automaticallydetected and memorized by PCM. Before or after testing PCM on the vehicle, use this function to reuse the PCM on the others.

VERIFICATION OF VEHICLE REPAIR E0913C4F

Refer to DTC P2195.

DTC P2197 HO2S SIGNAL STUCK LEAN (BANK 2 / SENSOR 1)

COMPONENT LOCATION ECEB14C1

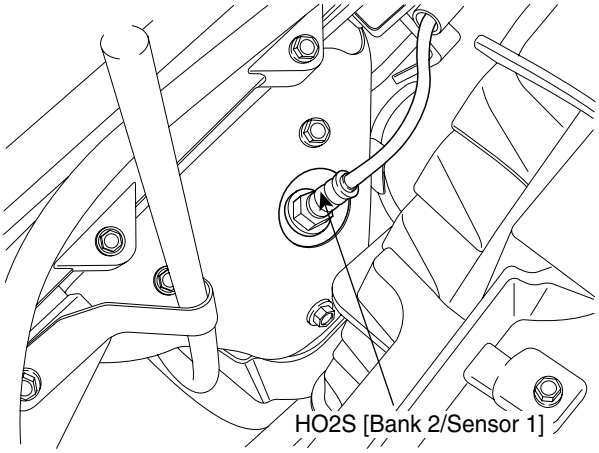

LGLG506A

GENERAL DESCRIPTION E3645AB8

In order to control emissions of the CO, HC and NOx components of the exhaust gas, heated oxygen sensor (HO2S), mounted on the front side and rear side of catalytic converter, detects the oxygen content in the exhaust gas. The front HO2S signal is used to control air/fuel ratio (closed loop fuel control) and the rear HO2S signal is used to monitor front HO2S and catalyst for proper operation. The HO2S requires a minimum temperature to operate properly and provide a closed loop fuel control system. The HO2S contains the heater element to reduce its warming-up time and ensure its performance during all driving conditions. The oxygen sensor generates a voltage that indicates the difference between the oxygen content of the exhaust stream and the oxygen content of ambient air. When the exhaust stream is " rich," there is more oxygen in the ambient air than in the exhaust stream, so the voltage will be higher.

DTC DESCRIPTION E21645C5

Checking output signals from HO2S under detecting condition, if HO2S's signal is lean during power enrichment conditions, PCM sets P2197. MIL(Malfunction Indication Lamp) turns on when the malfunction lasts till consecutive 2 driving cycle.

DTC DETECTING CONDITION E815CC81

Item	Detecting Condition	Possible cause
DTC Strategy	• Monitor HO2S's signal	• Poor Connection • Faulty HO2S • Clogging of fuel filter in fuel pump • Faulty PCM
Enable Conditions	• Battery voltage ≥ 10V • Engine running ≥ 60sec. • Power Enrichment conditions • Engine warm-up state • Not in Transient Conditionsatus	
Threshold value	• HO2S's signal < 0.35V and Air Fuel Ratio ≤ 13.5	
DiagnosisTime	• Continuous (More than 8 sec. failure for every 9 sec. Test)	
MIL On Condition	• 2 Driving Cycles	

SPECIFICATION E7DC80BC

(REFERENCE ONLY)

Test Condition	HO2S Voltage(Sensor1)	HO2S Voltage(Sensor2)
HO2S Signal at idle after warm-up	Signal is commonly switching from rich to lean more than 3 times in 10 sec.	Signal is commonly above 0.6V.
HO2S signal at open circuit (Pumping current OFF)	Approx. 0.45V	
HO2S signal at open circuit (Pumping current ON)	Approx. 3.5V	

SCHEMATIC DIAGRAM E84C21A1

[CIRCUIT DIAGRAM]

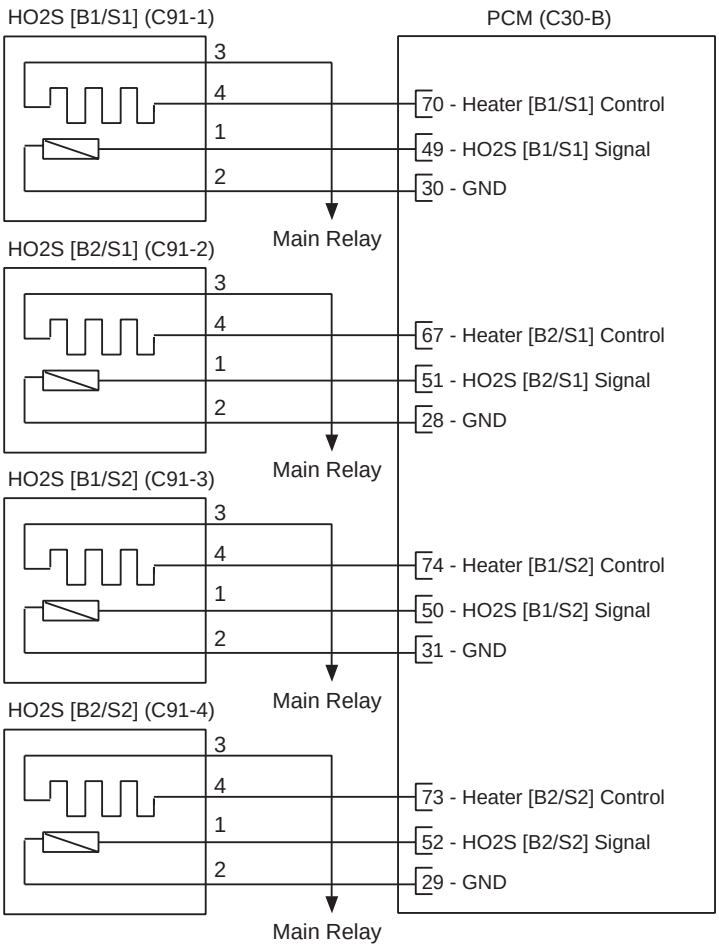

[CONNECTION INFORMATION]

HO2S [B1/S1]

Terminal	Connected to	Function
1	PCM C30-B (49)	HO2S [B1/S1] Signal
2	PCM C30-B (30)	Sensor ground
3	Main Relay	Battery Voltage (B+)
4	PCM C30-B (70)	Heater [B1/S1] Control

HO2S [B2/S1]

Terminal	Connected to	Function
1	PCM C30-B (51)	HO2S [B2/S1] Signal
2	PCM C30-B (28)	Sensor ground
3	Main Relay	Battery Voltage (B+)
4	PCM C30-B (67)	Heater [B2/S1] Control

HO2S [B1/S2]

Terminal	Connected to	Function
1	PCM C30-B (50)	HO2S [B1/S2] Signal
2	PCM C30-B (31)	Sensor ground
3	Main Relay	Battery Voltage (B+)
4	PCM C30-B (74)	Heater [B1/S2] Control

HO2S [B2/S2]

Terminal	Connected to	Function
1	PCM C30-B (52)	HO2S [B2/S2] Signal
2	PCM C30-B (29)	Sensor ground
3	Main Relay	Battery Voltage (B+)
4	PCM C30-B (73)	Heater [B2/S2] Control

[HARNESS CONNECTORS]



C91-1,2

HO2S [Bank 1/Sensor 1]
HO2S [Bank 2/Sensor 1]

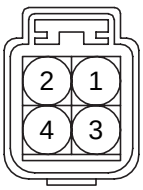

C91-3,4

HO2S [Bank 1/Sensor 2]
HO2S [Bank 2/Sensor 2]

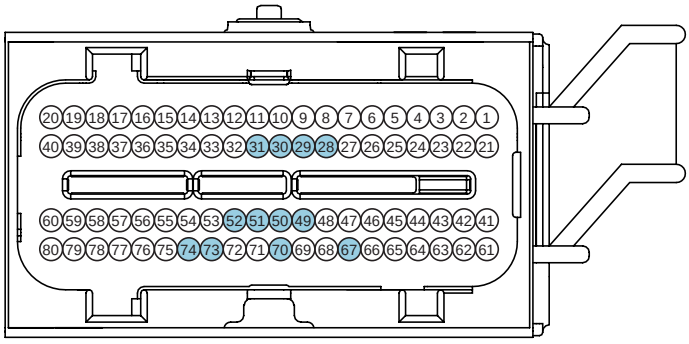

C30-B

PCM

SCMF16110L

SIGNAL WAVEFORM AND DATA EB33658C

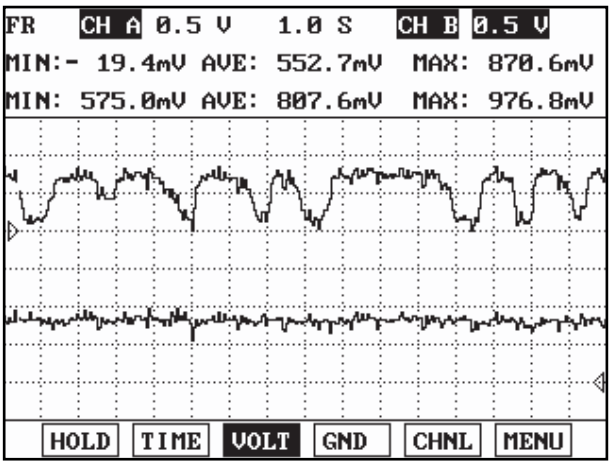

Fig) Signal waveforms of front HO2S(the upper) and rear HO2S(the lower)

SCMF16223L

After warming-up, if accelerator pedal is released suddenly around 4000rpm, the HO2S signal reading will be lower than 200mV resulting from Fuel cut-off for the moment. Conversely, if suddenly accelerator pedal is depressed, HO2S signal reading will be around 0.6V ~1.0V. At idle, Normally HO2S signal will switch from lean to rich with 3 Hz. And as racing, Its frequency rises.

MONITOR DTC STATUS E3C15C92

1. Check DTC Status

   1) Connect scantool to Data Link Connector(DLC).

   2) IG "ON".

   3) Select "Diagnostic Trouble Codes(DTCs)" mode, and then Press F4(DTAL) to check DTC's information from the DTCs menu

   4) Read "DTC Status" parameter.

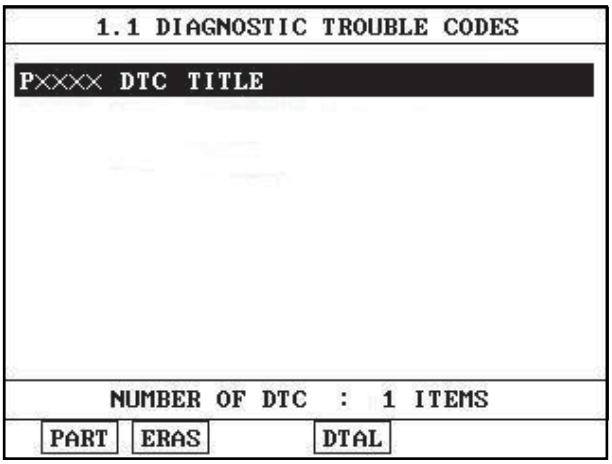

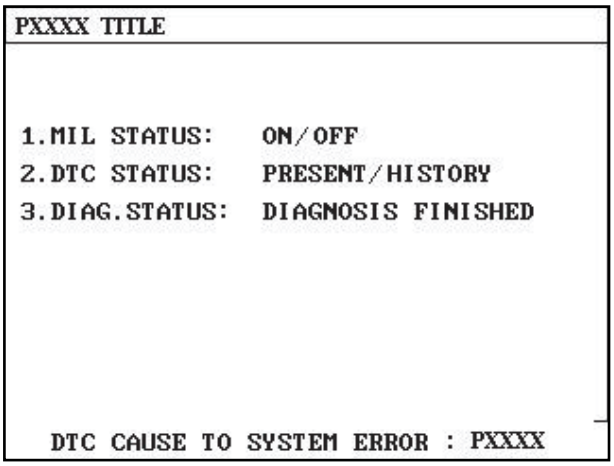

SCMF16159L

   5) Is parameter displayed "Present fault"?

YES

▶ Go to "Component Inspection" procedure.

NO

▶ Fault is intermittent caused by poor contact in the sensor's and/or PCM's connector or was repaired and PCM memory was not cleared. Thoroughly check connectors for looseness, poor connection, ending, corrosion, contamination, deterioration, or damage. Repair or replace as necessary and go to "Verification of Vehicle Repair" procedure.

COMPONENT INSPECTION E2E4FDEE

1. Check the condition of HO2S

   1) Check HO2S for poor connection or loose terminal.

   2) Check if HO2S is ensurely installed.

   3) Is the conditions of HO2S normal ?

   YES

   ▶ Go to "Check the Signal waveform of HO2S" as follows.

   NO

   ▶ Repair it and then go to "Verification of Vehicle Repair" procedure.

2. Check the Signal waveform of HO2S

   1) IG "OFF" and connect HO2S connector.

   2) Engine start.

   3) After warming-up, monitor signal waveform of HO2S with scantool.?

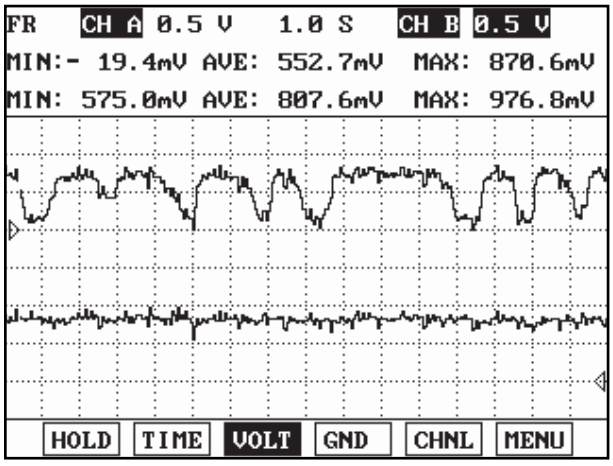

Fig) Signal waveform of front(the upper) and rear(the lower) HO2S at idle

SCMF16225L

   4) Is the sensor switching properly?

   YES

▶ Go to "Check fuel filter" as follows.

NO

▶ Substitute with a known - good HO2S and check for proper operation.
If the problem is corrected, go to "Verification of Vehicle Repair" procedure.

3. Check the fuel filter of fuel pump

   1) IG "OFF" and disconnect the fuel pump connector.

   2) Start the engine and wait until fuel in fuel line is exhausted. After the engine stalls, IG "OFF"

   3) Remove the fuel pump assembly.

   4) Check the fuel filter for clogging by dust, a foreign substance.

   5) Is the fuel filter O.K.?

      YES

      ▶ Substitute with a known - good PCM and check for proper operation.
      If the problem is corrected, replace PCM and go to "Verification of Vehicle Repair" procedure.

      NO

      ▶ Substitute with a known - good fuel filter and check for proper operation.
      If the problem is corrected, go to "Verification of Vehicle Repair" procedure.

NOTE

There is a memory reset function on scantool that can erase optional parts automatically detected and memorized by PCM. Before or after testing PCM on the vehicle, use this function to reuse the PCM on the others.

VERIFICATION OF VEHICLE REPAIR E5D33ACC

After a repair, it is essential to verify that the fault has been corrected.

1. Monitor and record the Freeze Frame Data for the Diagnostic Trouble Code(DTC) which has been diagnosed.
2. Using a Scantool, Clear the DTCs
3. Operate the vehicle within conditions noted in the freeze frame data or enable conditions
4. Monitor that all rediness test have been verified as " Complete "
5. Are any DTCs present ?

   YES

   ▶ Go to the applicable troubleshoooting procedure.

   NO

   ▶ System is performing to specification at this time.

DTC P2198 HO2S SIGNAL STUCK RICH (BANK 2 / SENSOR 1)

COMPONENT LOCATION E1A74602

Refer to DTC P2197.

GENERAL DESCRIPTION E3D25E6A

Refer to DTC P2197.

DTC DESCRIPTION E792AE78

Checking output signals from HO2S under detecting condition, if HO2S's signal is rich during fuel cut-off conditions, PCM sets P2198. MIL(Malfunction Indication Lamp) turns on when the malfunction lasts till consecutive 2 driving cycle.

DTC DETECTING CONDITION E576419E

Item	Detecting Condition	Possible cause
DTC Strategy	• Monitor HO2S's signal	• Poor Connection • Faulty HO2S • Faulty PCM
Enable Conditions	• Battery voltage ≥ 10V • Engine running ≥ 60sec. • Fuel cut-off conditions • Engine warm-up state • Not in Transient Conditionsatus	
Threshold value	• HO2S's signal > 0.42V	
DiagnosisTime	• Continuous (More than 8 sec. failure for every 9 sec. Test)	
MIL On Condition	• 2 Driving Cycles	

SPECIFICATION E021974B

Refer to DTC P2197.

SCHEMATIC DIAGRAM E7E982CC

Refer to DTC P2197.

SIGNAL WAVEFORM AND DATA EE49F467

Refer to DTC P2197.

MONITOR DTC STATUS E47391E3

Refer to DTC P2197.

COMPONENT INSPECTION E688A7CE

1. Check the condition of HO2S

    1) Check HO2S for poor connection or loose terminal.

2) Check if HO2S is ensurely installed.

3) Is the conditions of HO2S normal ?

YES

▶ Go to "Check the Signal waveform of HO2S" as follows.

NO

▶ Repair it and then go to "Verification of Vehicle Repair" procedure.

2. Check the Signal waveform of HO2S

1) IG "OFF" and connect HO2S connector.

2) Engine start.

3) After warming-up, monitor signal waveform of HO2S with scantool.?

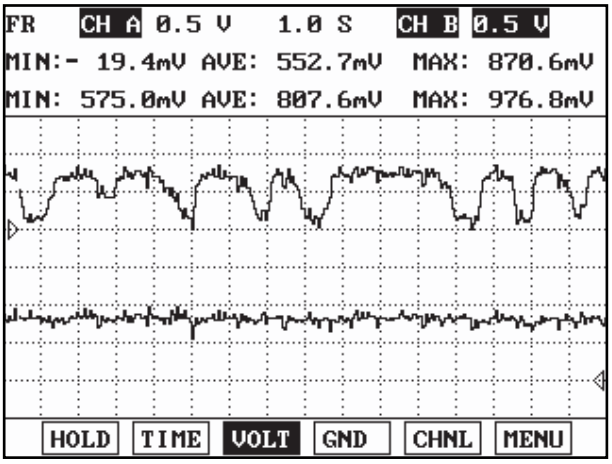

Fig) Signal waveform of front(the upper) and rear(the lower) HO2S at idle

SCMF16225L

4) Is the sensor switching properly?

YES

▶ Substitute with a known - good PCM and check for proper operation.
If the problem is corrected, replace PCM and go to "Verification of Vehicle Repair" procedure.

NO

▶ Substitute with a known - good HO2S and check for proper operation.
If the problem is corrected, go to "Verification of Vehicle Repair" procedure.

NOTE

There is a memory reset function on scantool that can erase optional parts automaticallydetected and memorized by PCM. Before or after testing PCM on the vehicle, use this function to reuse the PCM on the others.

VERIFICATION OF VEHICLE REPAIR ED59D34E

Refer to DTC P2197.

DTC P2270 O2 SENSOR SIGNAL STUCK LEAN (BANK 1 / SENSOR 2)

COMPONENT LOCATION E0BA2B9F

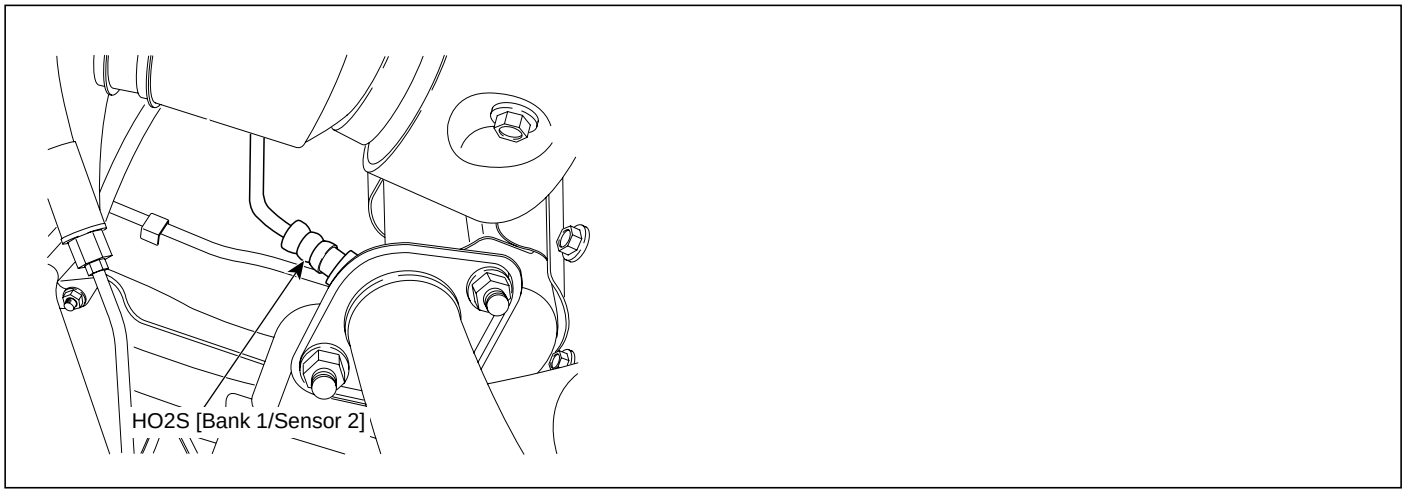

SCMF16165L

GENERAL DESCRIPTION E1E3E707

The rear heated oxygen sensor is mounted on the rear side of the Catalytic Converter (warm-up catalytic converter) or in the rear exhaust pipe, which is able to detect catalyst efficiency. The rear heated oxygen sensor (HO2S) produces a voltage between 0V and 1V. This rear heated oxygen sensor is used to estimate the oxygen storage capability. If a catalyst has good conversion properties, the oxygen fluctuations are smoothed by the oxygen storage capacity of the catalyst. If the conversion provided by the catalyst is low due to aging, poisoning or misfiring, then the oxygen fluctuations are similar to signals from the front oxygen sensor.

DTC DESCRIPTION E3CF5835

Checking output signals from HO2S under detecting condition, if HO2S's signal is lean during power enrichment conditions, PCM sets P2270. MIL(Malfunction Indication Lamp) turns on when the malfunction lasts till consecutive 2 driving cycle.

DTC DETECTING CONDITION EA5010E1

Item	Detecting Condition	Possible cause
DTC Strategy	• Monitor HO2S's signal	• Poor Connection • Faulty HO2S • Clogging of fuel filter in fuel pump • Faulty PCM
Enable Conditions	• Battery voltage ≥ 10V • Engine running ≥ 60sec. • Power Enrichment conditions • Engine warm-up state • Not in Transient Conditions	
Threshold value	• HO2S's signal < 0.35V and Air Fuel Ratio ≤ 13.5	
Diagnosis Time	• Continuous (More than 8 sec. failure for every 9 sec. Test)	
MIL On Condition	• 2 Driving Cycles	

SPECIFICATION E0CB4CF7

(REFERENCE ONLY)

Test Condition	HO2S Voltage(Sensor1)	HO2S Voltage(Sensor2)
HO2S Signal at idle after warm-up	Signal is commonly switching from rich to lean more than 3 times in 10 sec.	Signal is commonly above 0.6V.
HO2S signal at open circuit (Pumping current OFF)	Approx. 0.45V	
HO2S signal at open circuit (Pumping current ON)	Approx. 3.5V	

SCHEMATIC DIAGRAM E9A1FBC4

[CIRCUIT DIAGRAM]

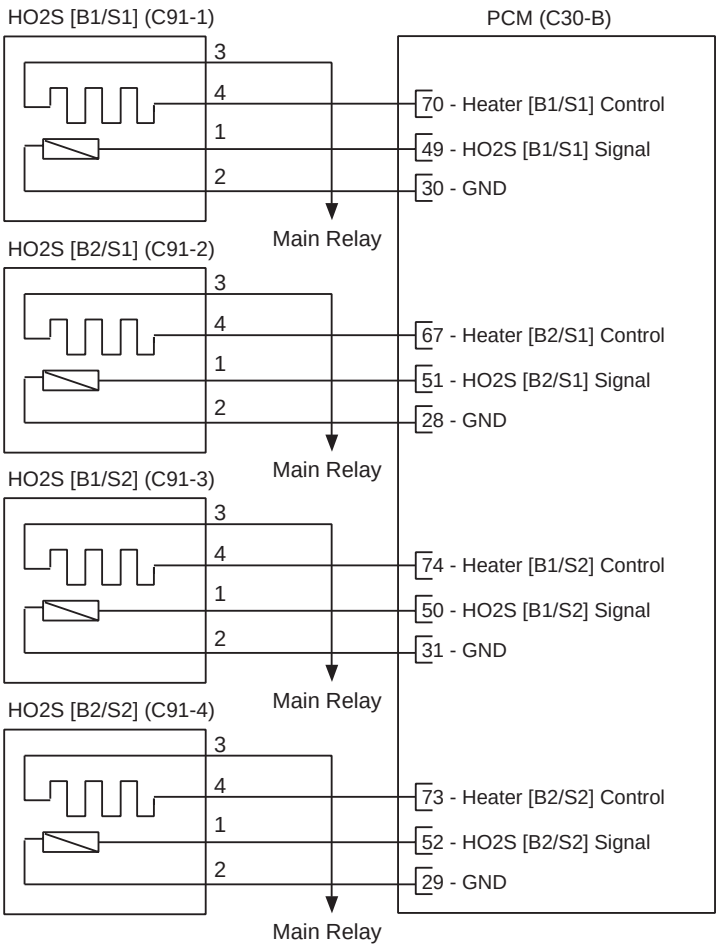

[CONNECTION INFORMATION]

HO2S [B1/S1]

Terminal	Connected to	Function
1	PCM C30-B (49)	HO2S [B1/S1] Signal
2	PCM C30-B (30)	Sensor ground
3	Main Relay	Battery Voltage (B+)
4	PCM C30-B (70)	Heater [B1/S1] Control

HO2S [B2/S1]

Terminal	Connected to	Function
1	PCM C30-B (51)	HO2S [B2/S1] Signal
2	PCM C30-B (28)	Sensor ground
3	Main Relay	Battery Voltage (B+)
4	PCM C30-B (67)	Heater [B2/S1] Control

HO2S [B1/S2]

Terminal	Connected to	Function
1	PCM C30-B (50)	HO2S [B1/S2] Signal
2	PCM C30-B (31)	Sensor ground
3	Main Relay	Battery Voltage (B+)
4	PCM C30-B (74)	Heater [B1/S2] Control

HO2S [B2/S2]

Terminal	Connected to	Function
1	PCM C30-B (52)	HO2S [B2/S2] Signal
2	PCM C30-B (29)	Sensor ground
3	Main Relay	Battery Voltage (B+)
4	PCM C30-B (73)	Heater [B2/S2] Control

[HARNESS CONNECTORS]



C91-1,2

HO2S [Bank 1/Sensor 1]
HO2S [Bank 2/Sensor 1]

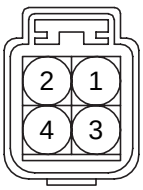

C91-3,4

HO2S [Bank 1/Sensor 2]
HO2S [Bank 2/Sensor 2]

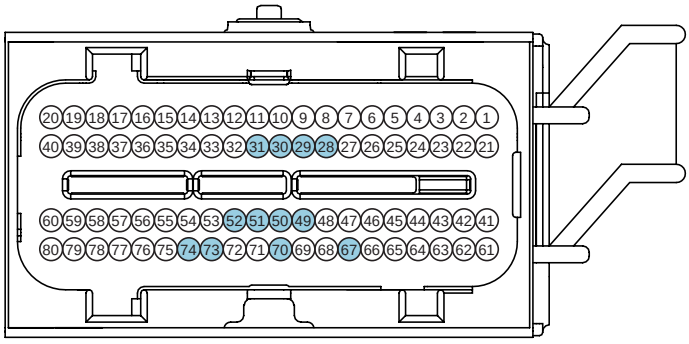

C30-B

PCM

SCMF16110L

SIGNAL WAVEFORM AND DATA EC8D199E

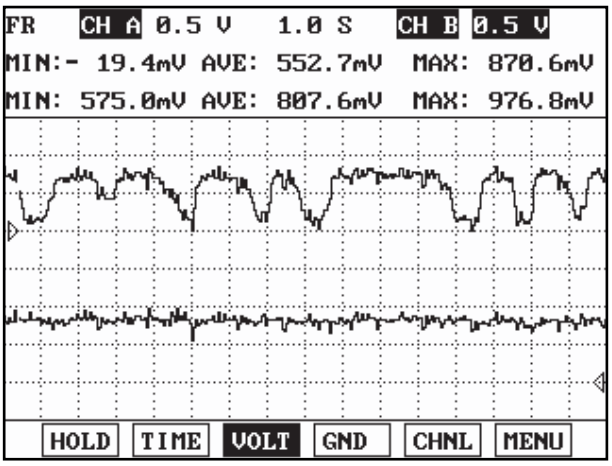

Fig) Signal waveforms of front HO2S(the upper) and rear HO2S(the lower)

SCMF16223L

After warming-up, if accelerator pedal is released suddenly around 4000rpm, the HO2S signal reading will be lower than 200mV resulting from Fuel cut-off for the moment. Conversely, if suddenly accelerator pedal is depressed, HO2S signal reading will be around 0.6V ~1.0V. At idle, Normally HO2S signal will switch from lean to rich with 3 Hz. And as racing, Its frequency rises.

MONITOR DTC STATUS E209D901

1. Check DTC Status

   1) Connect scantool to Data Link Connector(DLC).

   2) IG "ON".

   3) Select "Diagnostic Trouble Codes(DTCs)" mode, and then Press F4(DTAL) to check DTC's information from the DTCs menu

   4) Read "DTC Status" parameter.

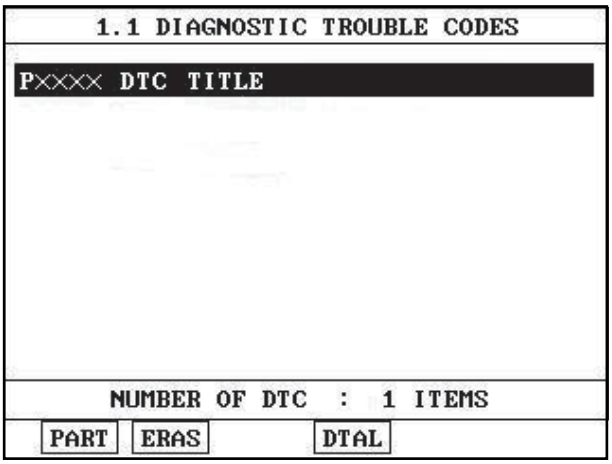

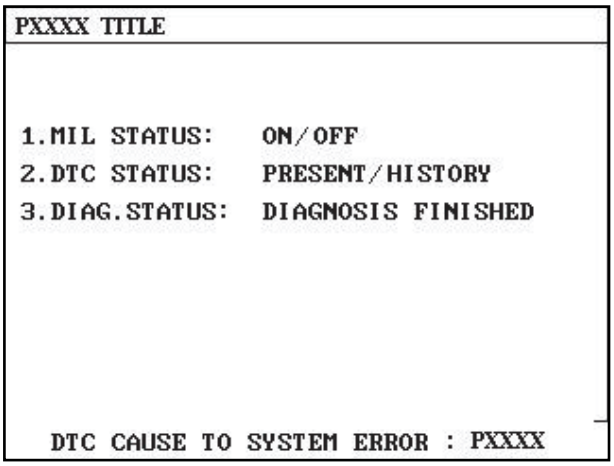

SCMF16159L

   5) Is parameter displayed "Present fault"?

YES

▶ Go to "Component Inspection" procedure.

NO

▶ Fault is intermittent caused by poor contact in the sensor's and/or PCM's connector or was repaired and PCM memory was not cleared. Thoroughly check connectors for looseness, poor connection, ending, corrosion, contamination, deterioration, or damage. Repair or replace as necessary and go to "Verification of Vehicle Repair" procedure.

COMPONENT INSPECTION E4CFC8AB

1. Check the condition of HO2S

   1) Check HO2S for poor connection or loose terminal.

   2) Check if HO2S is ensurely installed.

   3) Is the conditions of HO2S normal ?

   YES

   ▶ Go to "Check the Signal waveform of HO2S" as follows.

   NO

   ▶ Repair it and then go to "Verification of Vehicle Repair" procedure.

2. Check the Signal waveform of HO2S

   1) IG "OFF" and connect HO2S connector.

   2) Engine start.

   3) After warming-up, monitor signal waveform of HO2S with scantool.?

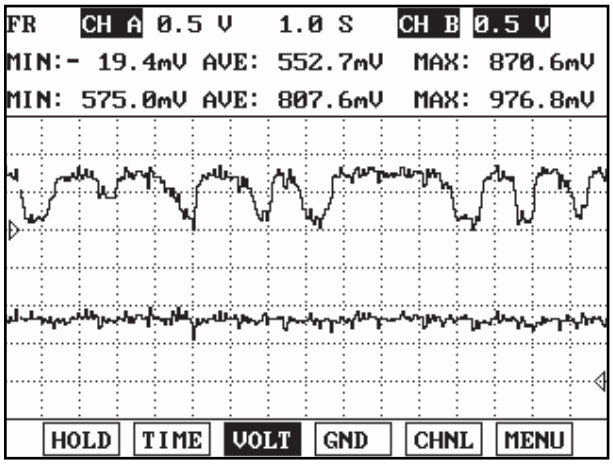

Fig) Signal waveform of front(the upper) and rear(the lower) HO2S at idle

SCMF16225L

   4) Is the sensor switching properly?

   YES

▶ Go to "Check fuel filter" as follows.

NO

▶ Substitute with a known - good HO2S and check for proper operation.
If the problem is corrected, go to "Verification of Vehicle Repair" procedure.

3. Check the fuel filter of fuel pump

   1) IG "OFF" and disconnect the fuel pump connector.

   2) Start the engine and wait until fuel in fuel line is exhausted. After the engine stalls, IG "OFF"

   3) Remove the fuel pump assembly.

   4) Check the fuel filter for clogging by dust, a foreign substance.

   5) Is the fuel filter O.K.?

      YES

      ▶ Substitute with a known - good PCM and check for proper operation.
      If the problem is corrected, replace PCM and go to "Verification of Vehicle Repair" procedure.

      NO

      ▶ Substitute with a known - good fuel filter and check for proper operation.
      If the problem is corrected, go to "Verification of Vehicle Repair" procedure.

NOTE

There is a memory reset function on scantool that can erase optional parts automatically detected and memorized by PCM. Before or after testing PCM on the vehicle, use this function to reuse the PCM on the others.

VERIFICATION OF VEHICLE REPAIR E538C54C

After a repair, it is essential to verify that the fault has been corrected.

1. Monitor and record the Freeze Frame Data for the Diagnostic Trouble Code(DTC) which has been diagnosed.
2. Using a Scantool, Clear the DTCs
3. Operate the vehicle within conditions noted in the freeze frame data or enable conditions
4. Monitor that all rediness test have been verified as " Complete "
5. Are any DTCs present ?

   YES

   ▶ Go to the applicable troubleshoooting procedure.

   NO

   ▶ System is performing to specification at this time.

DTC P2271 O2 SENSOR SIGNAL STUCK RICH (BANK 1 / 2 SENSOR 1)

COMPONENT LOCATION EA3D78C1

Refer to DTC P2270.

GENERAL DESCRIPTION EFC7EA8D

Refer to DTC P2270.

DTC DESCRIPTION EEBEAC61

Checking output signals from HO2S under detecting condition, if HO2S's signal is rich during fuel cut-off conditions, PCM sets P2271. MIL(Malfunction Indication Lamp) turns on when the malfunction lasts till consecutive 2 driving cycle.

DTC DETECTING CONDITION EA11B8E6

Item	Detecting Condition	Possible cause
DTC Strategy	• Monitor HO2S's signal	• Poor Connection • Faulty HO2S • Faulty PCM
Enable Conditions	• Battery voltage ≥ 10V • Engine running ≥ 60sec. • Fuel cut-off conditions • Engine warm-up state • Not in Transient Conditions	
Threshold value	• HO2S's signal > 0.42V	
Diagnosis Time	• Continuous (More than 8 sec. failure for every 9 sec. Test)	
MIL On Condition	• 2 Driving Cycles	

SPECIFICATION E92C9C03

Refer to DTC P2270.

SCHEMATIC DIAGRAM E181B282

Refer to DTC P2270.

SIGNAL WAVEFORM AND DATA E9EBFE74

Refer to DTC P2270.

MONITOR DTC STATUS E62EEA8B

Refer to DTC P2270.

COMPONENT INSPECTION E4CCDBB3

1. Check the condition of HO2S

    1) Check HO2S for poor connection or loose terminal.

2) Check if HO2S is ensurely installed.

3) Is the conditions of HO2S normal ?

YES

▶ Go to "Check the Signal waveform of HO2S" as follows.

NO

▶ Repair it and then go to "Verification of Vehicle Repair" procedure.

2. Check the Signal waveform of HO2S

1) IG "OFF" and connect HO2S connector.

2) Engine start.

3) After warming-up, monitor signal waveform of HO2S with scantool.?

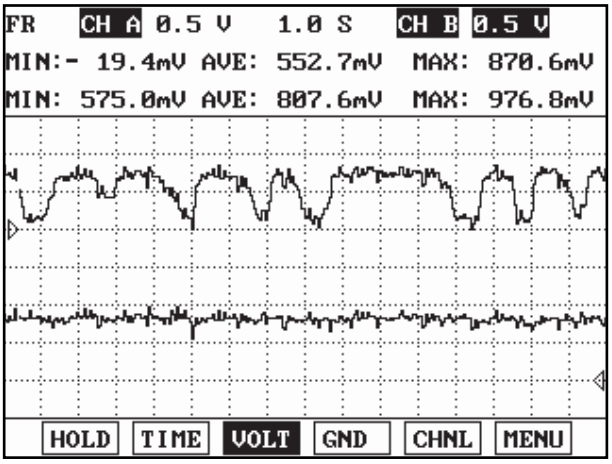

Fig) Signal waveform of front(the upper) and rear(the lower) HO2S at idle

SCMF16225L

4) Is the sensor switching properly?

YES

▶ Substitute with a known - good PCM and check for proper operation.
If the problem is corrected, replace PCM and go to "Verification of Vehicle Repair" procedure.

NO

▶ Substitute with a known - good HO2S and check for proper operation.
If the problem is corrected, go to "Verification of Vehicle Repair" procedure.

NOTE

There is a memory reset function on scantool that can erase optional parts automaticallydetected and memorized by PCM. Before or after testing PCM on the vehicle, use this function to reuse the PCM on the others.

VERIFICATION OF VEHICLE REPAIR E375662C

Refer to DTC P2270.

DTC P2272 HO2S SIGNAL STUCK LEAN (BANK 2 / SENSOR 2)

COMPONENT LOCATION E102FFFA

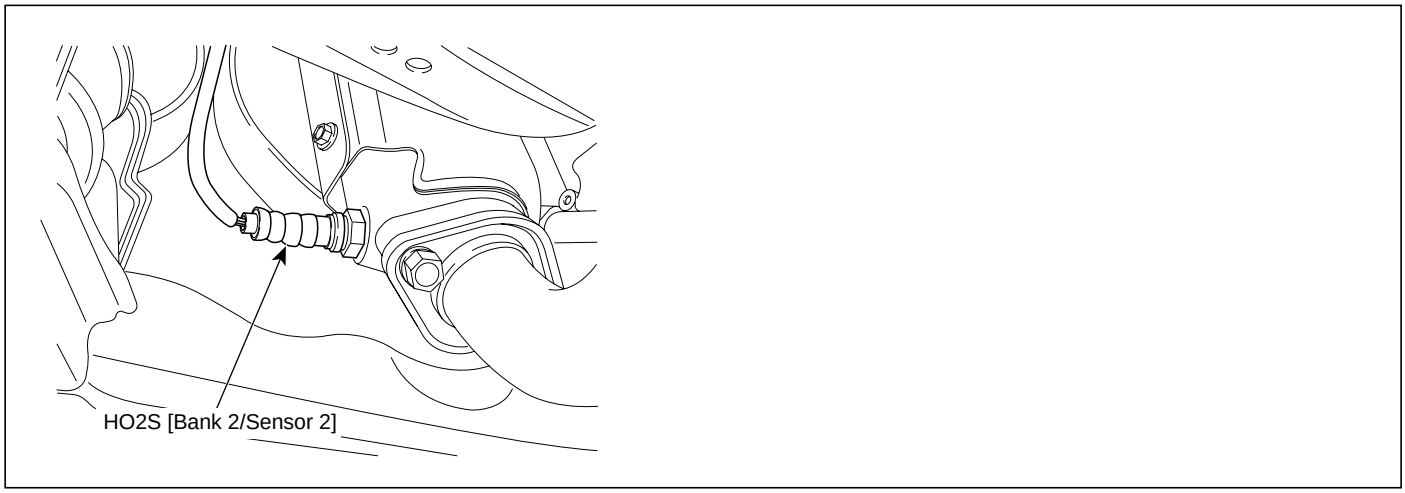

SCMF16176L

GENERAL DESCRIPTION E19C9915

The rear heated oxygen sensor is mounted on the rear side of the Catalytic Converter (warm-up catalytic converter) or in the rear exhaust pipe, which is able to detect catalyst efficiency. The rear heated oxygen sensor (HO2S) produces a voltage between 0V and 1V. This rear heated oxygen sensor is used to estimate the oxygen storage capability. If a catalyst has good conversion properties, the oxygen fluctuations are smoothed by the oxygen storage capacity of the catalyst. If the conversion provided by the catalyst is low due to aging, poisoning or misfiring, then the oxygen fluctuations are similar to signals from the front oxygen sensor.

DTC DESCRIPTION EA1F9A79

Checking output signals from HO2S under detecting condition, if HO2S's signal is lean during power enrichment conditions, PCM sets P2272. MIL(Malfunction Indication Lamp) turns on when the malfunction lasts till consecutive 2 driving cycle.

DTC DETECTING CONDITION E544989E

Item	Detecting Condition	Possible cause
DTC Strategy	• Monitor HO2S's signal	• Poor Connection • Faulty HO2S • Clogging of fuel filter in fuel pump • Faulty PCM
Enable Conditions	• Battery voltage ≥ 10V • Engine running ≥ 60sec. • Power Enrichment conditions • Engine warm-up state • Not in Transient Conditions	
Threshold value	• HO2S's signal < 0.35V and Air Fuel Ratio ≤ 13.5	
Diagnosis Time	• Continuous (More than 8 sec. failure for every 9 sec. Test)	
MIL On Condition	• 2 Driving Cycles	

SPECIFICATION EB49A558

(REFERENCE ONLY)

Test Condition	HO2S Voltage(Sensor1)	HO2S Voltage(Sensor2)
HO2S Signal at idle after warm-up	Signal is commonly switching from rich to lean more than 3 times in 10 sec.	Signal is commonly above 0.6V.
HO2S signal at open circuit (Pumping current OFF)	Approx. 0.45V	
HO2S signal at open circuit (Pumping current ON)	Approx. 3.5V	

SCHEMATIC DIAGRAM ED382119

[CIRCUIT DIAGRAM]

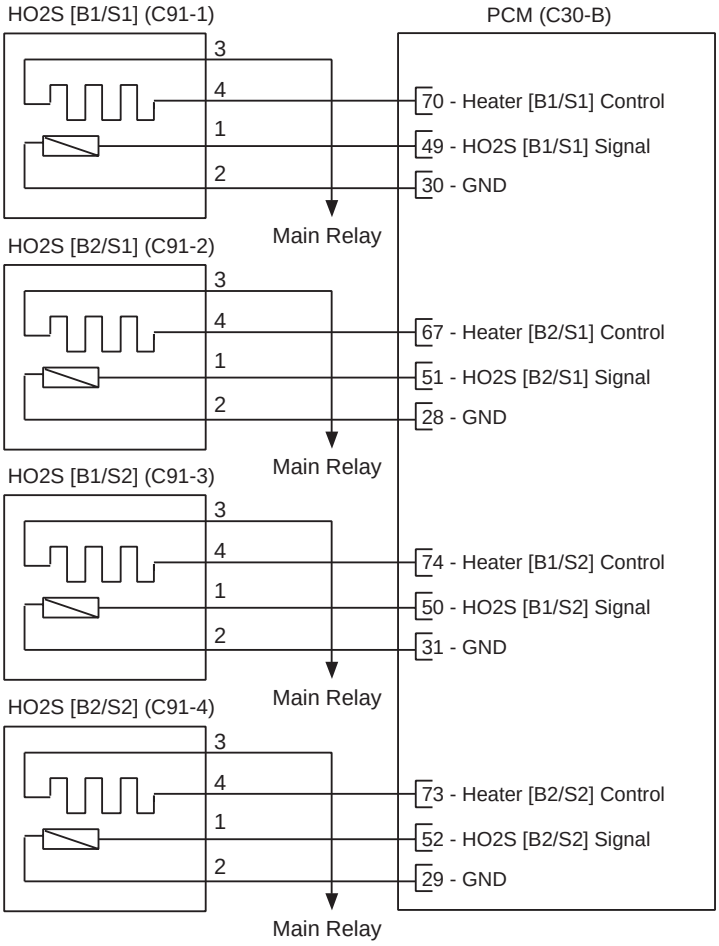

[CONNECTION INFORMATION]

HO2S [B1/S1]

Terminal	Connected to	Function
1	PCM C30-B (49)	HO2S [B1/S1] Signal
2	PCM C30-B (30)	Sensor ground
3	Main Relay	Battery Voltage (B+)
4	PCM C30-B (70)	Heater [B1/S1] Control

HO2S [B2/S1]

Terminal	Connected to	Function
1	PCM C30-B (51)	HO2S [B2/S1] Signal
2	PCM C30-B (28)	Sensor ground
3	Main Relay	Battery Voltage (B+)
4	PCM C30-B (67)	Heater [B2/S1] Control

HO2S [B1/S2]

Terminal	Connected to	Function
1	PCM C30-B (50)	HO2S [B1/S2] Signal
2	PCM C30-B (31)	Sensor ground
3	Main Relay	Battery Voltage (B+)
4	PCM C30-B (74)	Heater [B1/S2] Control

HO2S [B2/S2]

Terminal	Connected to	Function
1	PCM C30-B (52)	HO2S [B2/S2] Signal
2	PCM C30-B (29)	Sensor ground
3	Main Relay	Battery Voltage (B+)
4	PCM C30-B (73)	Heater [B2/S2] Control

[HARNESS CONNECTORS]



C91-1,2

HO2S [Bank 1/Sensor 1]
HO2S [Bank 2/Sensor 1]

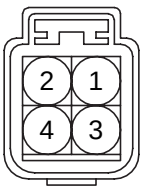

C91-3,4

HO2S [Bank 1/Sensor 2]
HO2S [Bank 2/Sensor 2]

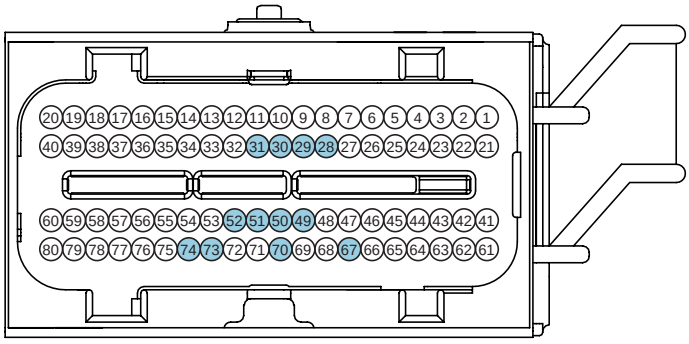

C30-B

PCM

SCMF16110L

SIGNAL WAVEFORM AND DATA E2BA8DCB

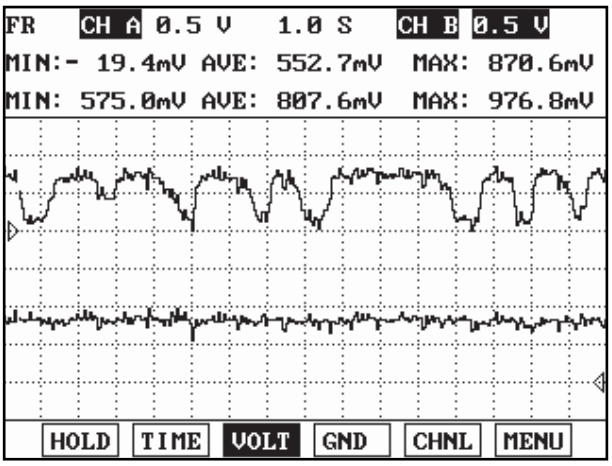

Fig) Signal waveforms of front HO2S(the upper) and rear HO2S(the lower)

SCMF16223L

After warming-up, if accelerator pedal is released suddenly around 4000rpm, the HO2S signal reading will be lower than 200mV resulting from Fuel cut-off for the moment. Conversely, if suddenly accelerator pedal is depressed, HO2S signal reading will be around 0.6V ~1.0V. At idle, Normally HO2S signal will switch from lean to rich with 3 Hz. And as racing, Its frequency rises.

MONITOR DTC STATUS EDE0794A

1. Check DTC Status

   1) Connect scantool to Data Link Connector(DLC).

   2) IG "ON".

   3) Select "Diagnostic Trouble Codes(DTCs)" mode, and then Press F4(DTAL) to check DTC's information from the DTCs menu

   4) Read "DTC Status" parameter.

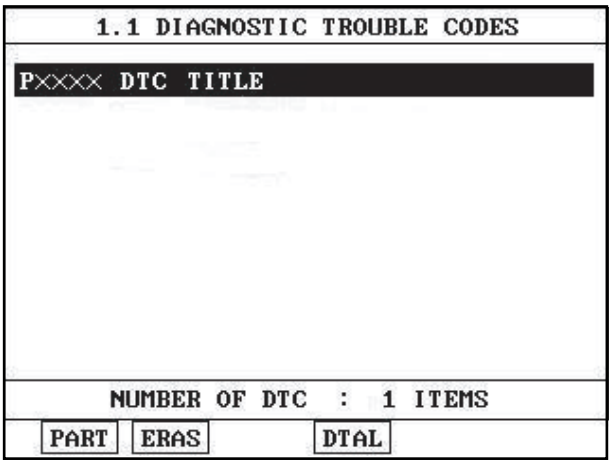

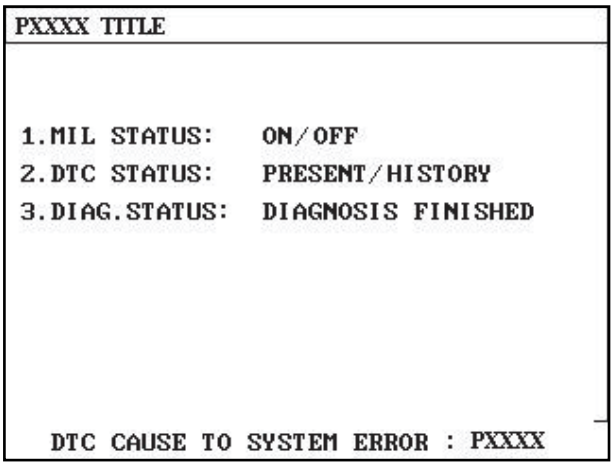

SCMF16159L

   5) Is parameter displayed "Present fault"?

YES

▶ Go to "Component Inspection" procedure.

NO

▶ Fault is intermittent caused by poor contact in the sensor's and/or PCM's connector or was repaired and PCM memory was not cleared. Thoroughly check connectors for looseness, poor connection, ending, corrosion, contamination, deterioration, or damage. Repair or replace as necessary and go to "Verification of Vehicle Repair" procedure.

COMPONENT INSPECTION E219BE04

1. Check the condition of HO2S

   1) Check HO2S for poor connection or loose terminal.

   2) Check if HO2S is ensurely installed.

   3) Is the conditions of HO2S normal ?

   YES

   ▶ Go to "Check the Signal waveform of HO2S" as follows.

   NO

   ▶ Repair it and then go to "Verification of Vehicle Repair" procedure.

2. Check the Signal waveform of HO2S

   1) IG "OFF" and connect HO2S connector.

   2) Engine start.

   3) After warming-up, monitor signal waveform of HO2S with scantool.?

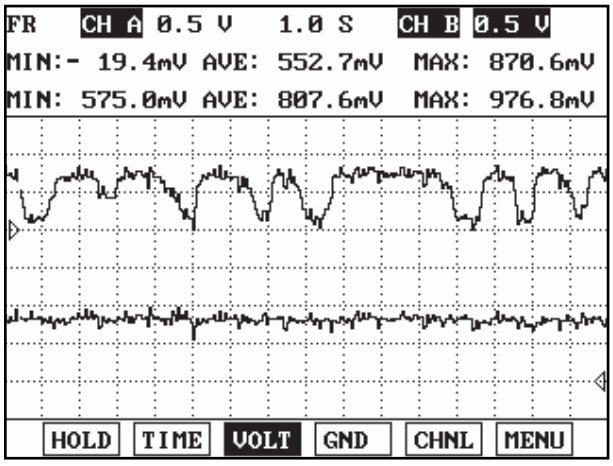

Fig) Signal waveform of front(the upper) and rear(the lower) HO2S at idle

SCMF16225L

   4) Is the sensor switching properly?

   YES

▶ Go to "Check fuel filter" as follows.

NO

▶ Substitute with a known - good HO2S and check for proper operation.
If the problem is corrected, go to "Verification of Vehicle Repair" procedure.

3. Check the fuel filter of fuel pump

   1) IG "OFF" and disconnect the fuel pump connector.

   2) Start the engine and wait until fuel in fuel line is exhausted. After the engine stalls, IG "OFF"

   3) Remove the fuel pump assembly.

   4) Check the fuel filter for clogging by dust, a foreign substance.

   5) Is the fuel filter O.K.?

      YES

      ▶ Substitute with a known - good PCM and check for proper operation.
      If the problem is corrected, replace PCM and go to "Verification of Vehicle Repair" procedure.

      NO

      ▶ Substitute with a known - good fuel filter and check for proper operation.
      If the problem is corrected, go to "Verification of Vehicle Repair" procedure.

NOTE

There is a memory reset function on scantool that can erase optional parts automatically detected and memorized by PCM. Before or after testing PCM on the vehicle, use this function to reuse the PCM on the others.

VERIFICATION OF VEHICLE REPAIR E3AE4890

After a repair, it is essential to verify that the fault has been corrected.

1. Monitor and record the Freeze Frame Data for the Diagnostic Trouble Code(DTC) which has been diagnosed.
2. Using a Scantool, Clear the DTCs
3. Operate the vehicle within conditions noted in the freeze frame data or enable conditions
4. Monitor that all rediness test have been verified as " Complete "
5. Are any DTCs present ?

   YES

   ▶ Go to the applicable troubleshoooting procedure.

   NO

   ▶ System is performing to specification at this time.

DTC P2273 HO2S SIGNAL STUCK RICH (BANK 2 / SENSOR 2)

COMPONENT LOCATION E1290AB1

Refer to DTC P2272.

GENERAL DESCRIPTION EACCB643

Refer to DTC P2272.

DTC DESCRIPTION EE9ECA5D

Checking output signals from HO2S under detecting condition, if HO2S's signal is rich during fuel cut-off conditions, PCM sets P2273. MIL(Malfunction Indication Lamp) turns on when the malfunction lasts till consecutive 2 driving cycle.

DTC DETECTING CONDITION EC3634CF

Item	Detecting Condition	Possible cause
DTC Strategy	• Monitor HO2S's signal	• Poor Connection • Faulty HO2S • Faulty PCM
Enable Conditions	• Battery voltage ≥ 10V • Engine running ≥ 60sec. • Fuel cut-off conditions • Engine warm-up state • Not in Transient Conditions.	
Threshold value	• HO2S's signal > 0.42V	
Diagnosis Time	• Continuous (More than 8 sec. failure for every 9 sec. Test)	
MIL On Condition	• 2 Driving Cycles	

SPECIFICATION EC3DAADD

Refer to DTC P2272.

SCHEMATIC DIAGRAM EDB55561

Refer to DTC P2272.

SIGNAL WAVEFORM AND DATA E4EBDD14

Refer to DTC P2272.

MONITOR DTC STATUS E4037FE2

Refer to DTC P2272.

COMPONENT INSPECTION E00CD08E

1. Check the condition of HO2S

    1) Check HO2S for poor connection or loose terminal.

2) Check if HO2S is ensurely installed.

3) Is the conditions of HO2S normal ?

YES

▶ Go to "Check the Signal waveform of HO2S" as follows.

NO

▶ Repair it and then go to "Verification of Vehicle Repair" procedure.

2. Check the Signal waveform of HO2S

1) IG "OFF" and connect HO2S connector.

2) Engine start.

3) After warming-up, monitor signal waveform of HO2S with scantool.?

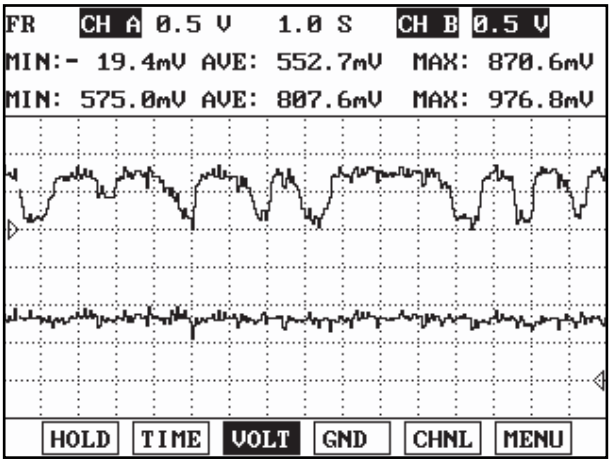

Fig) Signal waveform of front(the upper) and rear(the lower) HO2S at idle

SCMF16225L

4) Is the sensor switching properly?

YES

▶ Substitute with a known - good PCM and check for proper operation.
If the problem is corrected, replace PCM and go to "Verification of Vehicle Repair" procedure.

NO

▶ Substitute with a known - good HO2S and check for proper operation.
If the problem is corrected, go to "Verification of Vehicle Repair" procedure.

NOTE

There is a memory reset function on scantool that can erase optional parts automaticallydetected and memorized by PCM. Before or after testing PCM on the vehicle, use this function to reuse the PCM on the others.

VERIFICATION OF VEHICLE REPAIR E42DD3FF

Refer to DTC P2272.

DTC P2610 ECM/PCM INTERNAL ENGINE OFF TIMER PERFORMANCE

COMPONENT LOCATION EF84EAD7

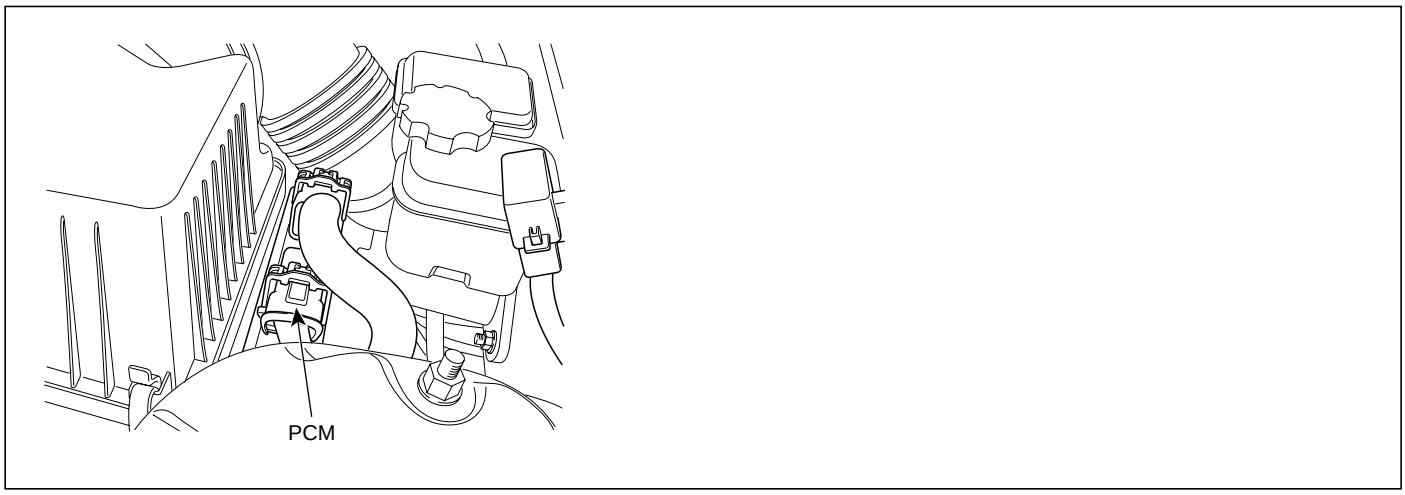

SCMF16386L

GENERAL DESCRIPTION E5334D98

Continuing to calculate data of several sensor despite turning ignition OFF, when ignition turns ON, this enables PCM to be easy using calculated data.

DTC DESCRIPTION E14CFFF7

If abnormal counterdown is detected for a calibratable time, PCM sets P2610. MIL(Malfunction Indication Lamp) turns on when the malfunction lasts till consecutive 2 driving cycle.

DTC DETECTING CONDITION E4B758C2

ITEM		Detecting Condition	Possible Cause
DTC Strategy	Case 1	• Compares the time elapsed recorded by the LPC against that recorded by the test timer	• PCM
	Case 2	• Checks for abnormal resets of the LPC	
Enable-Condition	Case 1	• Engine running 〉 10sec. • Battery voltage 〉 8V	
	Case 2	• No Memory Failure Occurred	
Thresh-old	Case 1	• The difference between the Counter by the low power counter and the calibration the test timer clocks up 〉 2sec.	
	Case 2	• The LPC is reset to zero abnormally	
Diagnosis Time		• -	
MIL On Condition		• 2 Driving Cycle	

MONITOR DTC STATUS E75D5DB7

1. Check DTC Status

1) Connect scantool to Data Link Connector(DLC).

2) IG "ON".

3) Select "Diagnostic Trouble Codes(DTCs)" mode, and then Press F4(DTAL) to check DTC's information from the DTCs menu

4) Read "DTC Status" parameter.

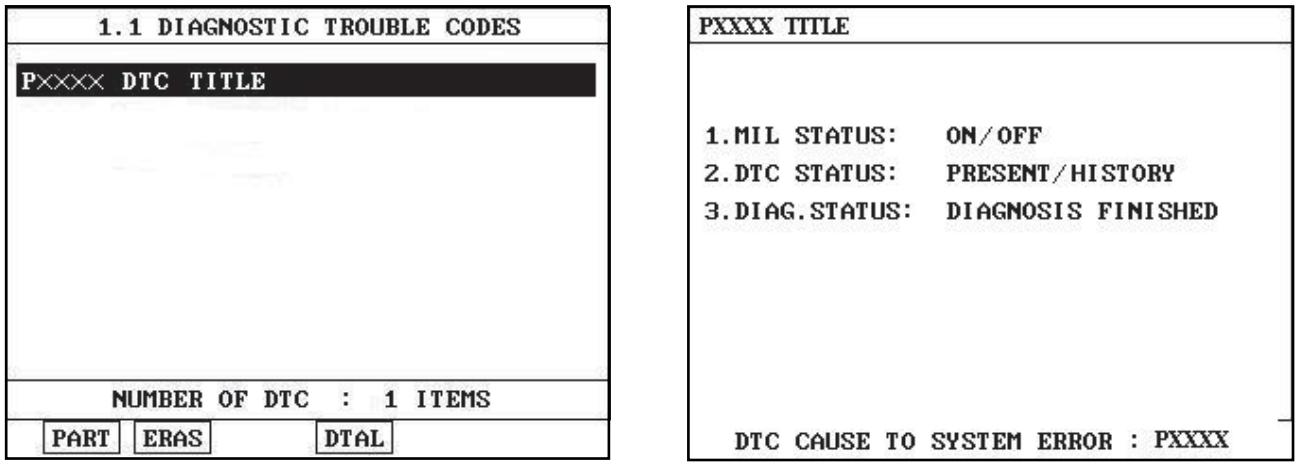

SCMF16159L

5) Is parameter displayed "Present fault"?

YES

▶ Go to "Terminal and connector inspection" procedure.

NO

▶ Fault is intermittent caused by poor contact in the sensor's and/or PCM's connector or was repaired and PCM memory was not cleared. Thoroughly check connectors for looseness, poor connection, ending, corrosion, contamination, deterioration, or damage. Repair or replace as necessary and go to "Verification of Vehicle Repair" procedure.

TERMINAL AND CONNECTOR INSPECTION E371FCF4

1. Many malfunctions in the electrical system are caused by poor harness and terminals. Faults can also be caused by interference from other electrical systems, and mechanical or chemical damage.

2. Thoroughly check connectors for looseness, poor connection, bending, corrosion, contamination, deterioration, or damage.

3. Has a problem been found?

YES

▶ Repair as necessary and go to "Verification of Vehicle Repair" procedure.

NO

▶ Substitute with a known-good PCM and check for proper operation. If the problem is corrected,replace PCM and then go to "Verification of Vehicle Repair" procedure.

NOTE

There is a memory reset function on scantool that can erase optional parts automaticallydetected and memorized by PCM.

VERIFICATION OF VEHICLE REPAIR E5910E0D

After a repair, it is essential to verify that the fault has been corrected.

1. Monitor and record the Freeze Frame Data for the Diagnostic Trouble Code(DTC) which has been diagnosed.
2. Using a Scantool, Clear the DTCs
3. Operate the vehicle within conditions noted in the freeze frame data or enable conditions
4. Monitor that all rediness test have been verified as " Complete "
5. Are any DTCs present ?

YES

▶ Go to the applicable troubleshoooting procedure.

NO

▶ System is performing to specification at this time.

DTC U0001 CAN COMMUNICATION MALFUNCTION

GENERAL DESCRIPTION E03A959E

Several control units are applied to electronically controlled vehicles. These units perform each control with informations from various sensors. Thus, sharing signal information from sensors is needed, so CAN communication type whose communication speed is high and insensitive to electrical noise by spark generation is adopted to controlling power-train(PCM, ABS, ESP)
As sharing signals of engine speed, APS, gear shifting, torque reduction in ESP,ABS and various modules, active control is performed.

DTC DESCRIPTION E21BF1DB

Checking CAN communication, under detecting condition, if an error within the detecting condition is detected for more than 1.5 sec., PCM sets U0001. MIL(Malfunction Indication Lamp) turns on when the malfunction lasts till consecutive 2 driving cycle.

DTC DETECTING CONDITION E42C5BA1

Item	Detecting Condition	Possible cause
DTC Strategy	• Detects failures in communication between the PCM and another or modules in the vehicle which are on the CAN serial bus.	• CAN BUS • CAN communication module component
EnableConditions	• Engine Run Time ≥ 2sec. • Ignition Voltage ≥ 11V	
Threshold value	• CAN communicatin error	
DiagnosisTime	• Continuous	
MIL On Condition	• 2 Driving Cycles	

SPECIFICATION E4BAA2D9

Format	DIGITAL "0"		DIGITAL "1"(BUS IDLE)		CAN Communication Line Resistance	
	HIGH	LOW	HIGH	LOW	PCM	Passenger compartment junction block
CAN 2.0B	3.5V	1.5V	2.5V	2.5V	120Ω (20℃)	120Ω (20℃)

SCHEMATIC DIAGRAM EC3D749D

[CIRCUIT DIAGRAM]

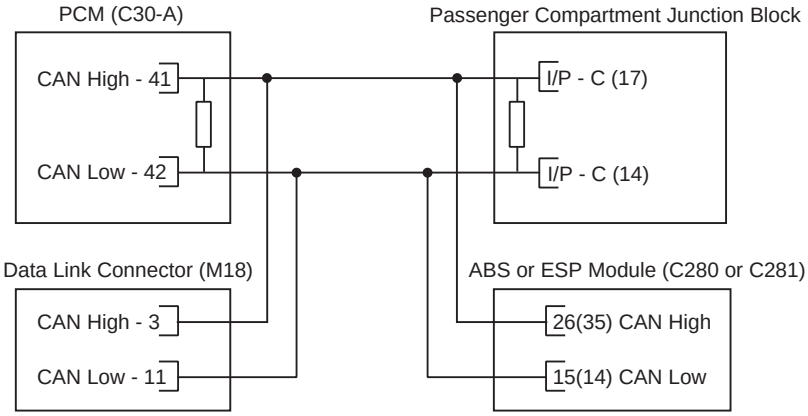

[HARNESS CONNECTORS]

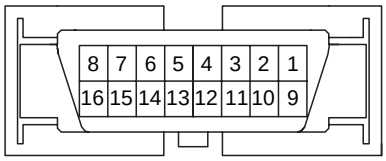

M10

(Data Link Connection)

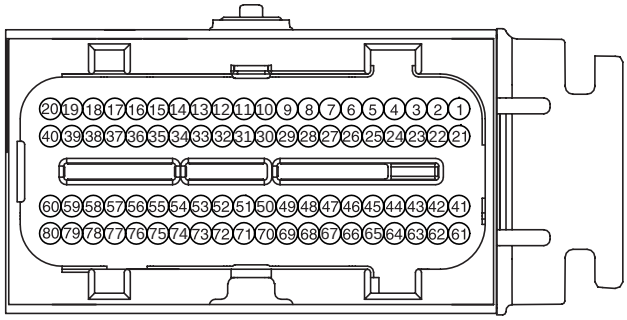

C30-A

PCM

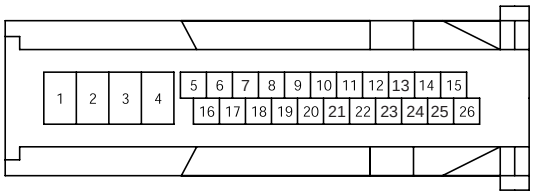

C280

ABS Module

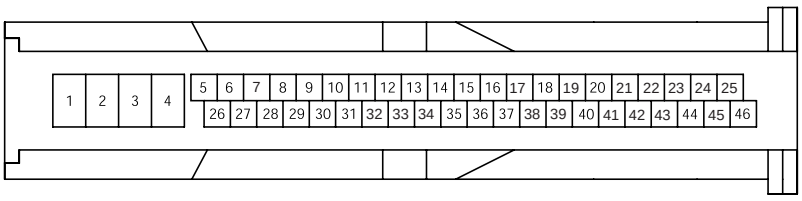

C281

EPS Module

SCMF16426L

SIGNAL WAVEFROM AND DATA EFD86111

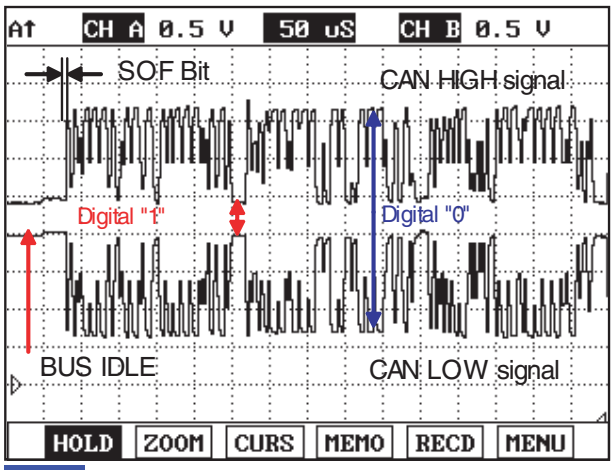

Fig.1

Fig.1) CAN communication waveform

Monitoring CAN HIGH and LOW simultaneously is important in monitoring CAN communication waveform.
When CAN HIGH signal rise to 3.5V and LOW signal drops to 1.5V - voltage difference between HIGH and LOW signal is 2V - at BUS IDLE state(DIGITAL "1") whose reference voltage is 2.5V, "0" is recognized. Besides, comparing HIGH and LOW signal if opposite waveform is detected with the reference voltage of 2.5V, Check if current cam signal transfers correctly.
Continuous "0"signal above 6BIT means the occurence of error in CAN communication. 1BIT is easily distinguished as calculating the time when "SOF"(START OF FRAME) which notifies the start of frame occurs.
Check if "0"signal above 6BIT is detected continuously when monitoring CAN communication waveform.

LGLG397A

MONITOR DTC STATUS E9EAD6E3

1. Check DTC Status

   1) Connect scantool to Data Link Connector(DLC).

   2) IG "ON".

   3) Select "Diagnostic Trouble Codes(DTCs)" mode, and then Press F4(DTAL) to check DTC's information from the DTCs menu

   4) Read "DTC Status" parameter.

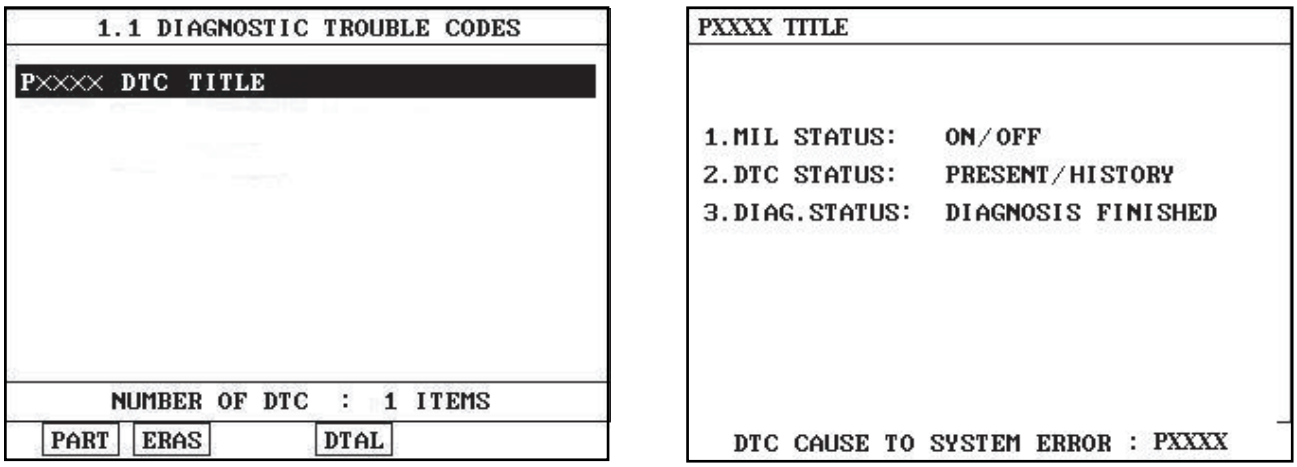

SCMF16159L

5) Is parameter displayed "Present fault"?

YES

▶ Go to "Terminal and connector inspection" procedure.

NO

▶ Fault is intermittent caused by poor contact in the sensor's and/or PCM's connector or was repaired and PCM memory was not cleared. Thoroughly check connectors for looseness, poor connection, ending, corrosion, contamination, deterioration, or damage. Repair or replace as necessary and go to "Verification of Vehicle Repair" procedure

TERMINAL AND CONNECTOR INSPECTION E0934A34

1. Many malfunctions in the electrical system are caused by poor harness and terminals. Faults can also be caused by interference from other electrical systems, and mechanical or chemical damage.
2. Thoroughly check connectors for looseness, poor connection, bending, corrosion, contamination, deterioration, or damage.
3. Has a problem been found?

YES

▶ Repair as necessary and go to "Verification of Vehicle Repair" procedure

NO

▶ Go to "Signal Circuit Inspection" procedure.

SIGNAL CIRCUIT INSPECTION E385D809

1. Check CAN BUS resistance in Data Link Connector
   1) Ignition "OFF"
   2) Measure the resistance between terminals 3 and 11 of data link connector (Test 1)
   3) Disconnect PCM connector.

4) Measure the resistance between terminals 3 and 11 of data link connector (Test 2)

Specification : PCM and ABS(or ESP) connected : 60 ± 3Ω (Test 1)
PCM and ABS(or ESP) disconnected : 120 ± 3Ω (Test 2)

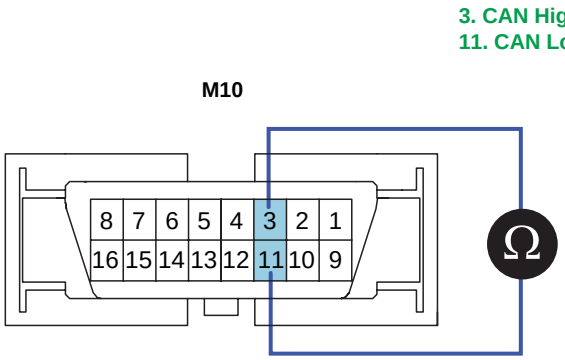

SCMF16428L

5) Is CAN BUS resistance within the specification?

YES

▶ Go to "2.Check short to ground in CAN BUS" as follows.

NO

▶ Below 10Ω for both conditions(disconnected, connected) : Repair short between CAN BUS lines and go to "Verification of Vehicle Repair".
▶ 120Ω for both conditions(disconnected, connected) : Go to "4. Check CAN BUS continuity".
▶ Infinite Ω for both conditions(disconnected, connected) :Repair open in CAN communication circuit between DLC terminal and In-pannel junction box.

2. Check short to ground in CAN BUS

1) Ignition "OFF"

2) Disconnect PCM and ABS(or ESP) connector.

3) Check continuity between DLC terminal 3 and chassis ground. (CAN HIGH line)

4) Check continuity between DLC terminal 11 and chassis ground. (CAN LOW line)

Specification : Discontinuity (Infinite Ω)

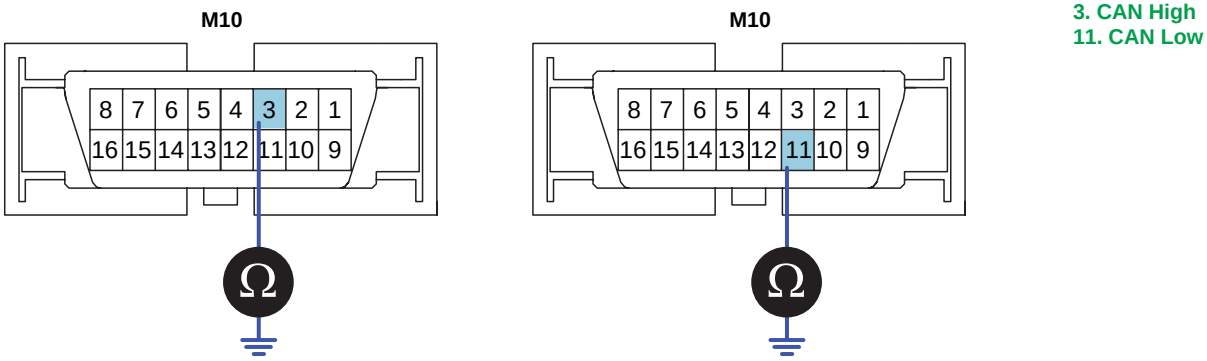

3. CAN High
11. CAN Low

SCMF16429L

5) Is measured resistance within the specification?

YES

▶ Go to "3. Check short to battery in CAN BUS".

NO

▶ Repair short to ground in circuit and go to "Verification of Vehicle Repair".

3. Check short to battery in CAN BUS

1) Ignition "OFF"

2) Disconnect PCM and ABS(or ESP) connector.

3) Ignition "ON"

4) Measure the voltage of DLC terminal 3. (CAN HIGH line)

5) Measure the voltage of DLC terminal 11. (CAN LOW line)

Specification : 0.0V~0.1V

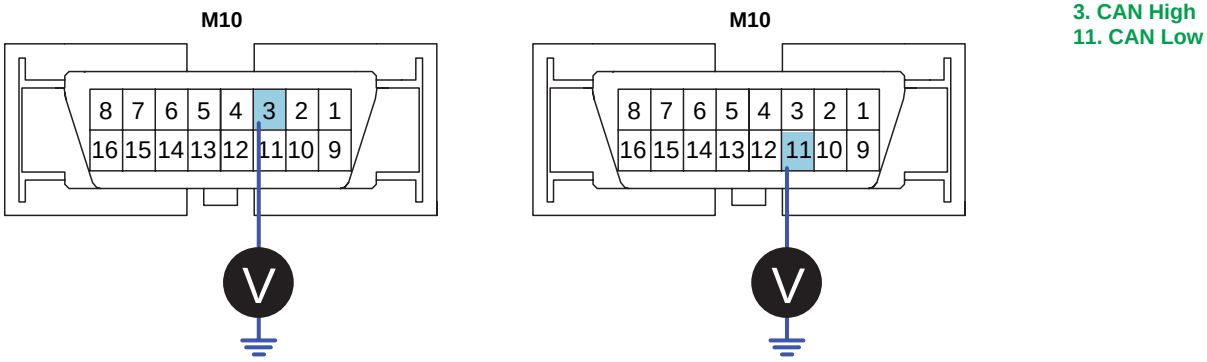

3. CAN High
11. CAN Low

SCMF16430L

6) Is measured resistance within the specification with both connector disconnected?

YES

▶ Go to"4. Check CAN BUS continuity" as follows.

NO

▶ Repair short to battery and go to "Verification of Vehicle Repair".

4. Check CAN BUS continuity

   1) Ignition "OFF"

   2) Disconnect PCM and ABS(or ESP) connector.

   3) Check continuity in CAN HIGH line.
   (CAN HIGH : PCM connector (C201-1) terminal 41, ABS connector terminal 11, ESP connector terminal 7, Data link connector(DLC) terminal 3)

   4) Check continuity CAN LOW line.
   (CAN LOW : PCM connector (C201-1) terminal 42, ABS connector terminal 10, ESP connector terminal 22, Data link connector(DLC) terminal 11)

Specification : Continuity(below 1.0Ω)

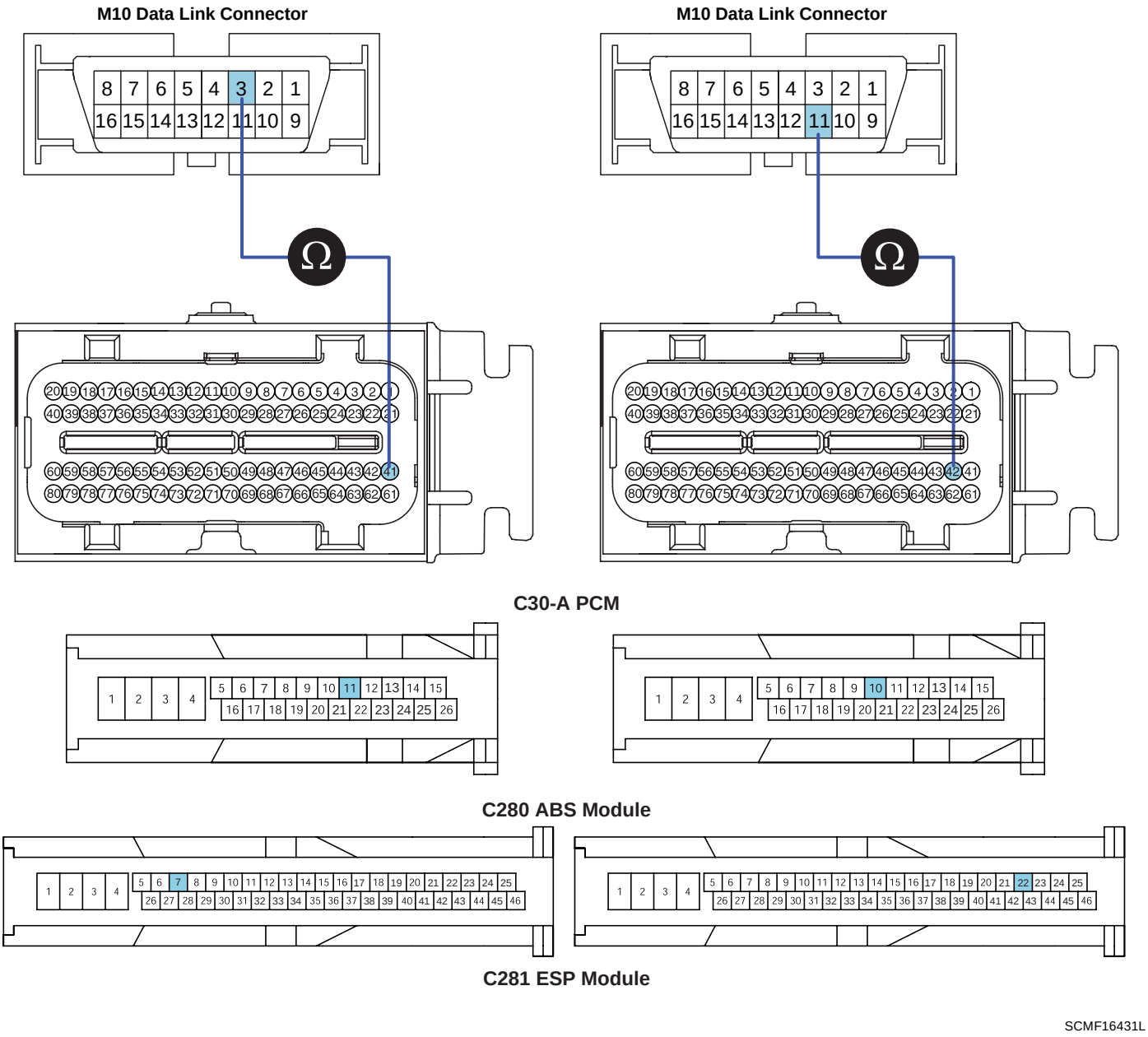

5) Is the measured resistance within the specification?

YES

▶ Go to "Component Inspection".

NO

▶ Repair open in CAN BUS line and go to "Verification of Vehicle Repair".

COMPONENT INSPECTION EB35D1E8

1. Check CAN communication waveform generation

1) Ignition "OFF"

2) Connect 2 channel scope to DLC terminal 3(CAN HIGH) and 11(CAN LOW).

3) Ignition "ON" after connecting only PCM to CAN BUS.

4) Ignition "ON" after connecting only ABS or ESP module to CAN BUS.

Specification : At Ignition "ON", the waveform same as "Signal Waveform & Data" of above signal waveform.
※ Different from "Signal Waveform & Data", if 1) both CAN HIGH and LOW signal are fixed at 2.5 V or 2) HIGH and LOW signal are fixed at 3.5 V and 1.5 V, respectively, it is due to communication error between modules.

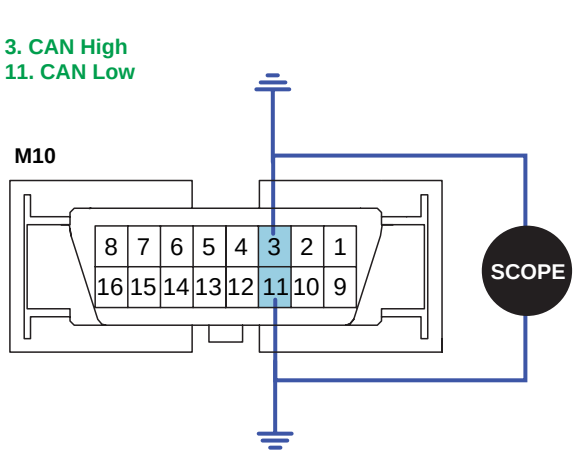

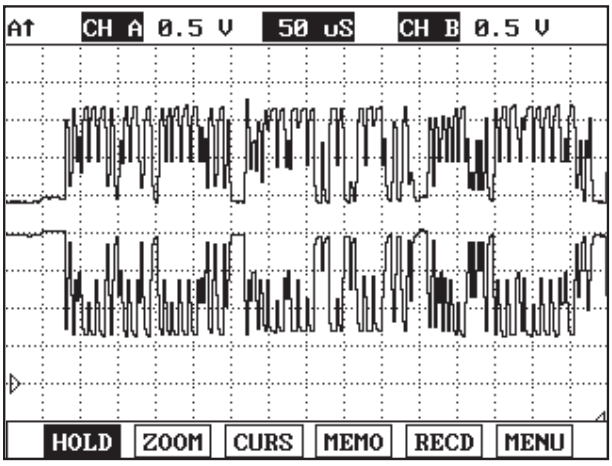

SCMF16432L

5) Does correct waveform generate from each module?

YES

▶ Go to "Verification of Vehicle Repair".

NO

▶ Replace the module which generates poor communication waveform, and go to "Verification of Vehicle Repair".

VERIFICATION OF VEHICLE REPAIR EDE62C44

After a repair, it is essential to verify that the fault has been corrected.

1. Monitor and record the Freeze Frame Data for the Diagnostic Trouble Code(DTC) which has been diagnosed.
2. Using a Scantool, Clear the DTCs
3. Operate the vehicle within conditions noted in the freeze frame data or enable conditions
4. Monitor that all rediness test have been verified as " Complete "
5. Are any DTCs present ?

YES

▶ Go to the applicable troubleshoooting procedure.

NO

▶ System is performing to specification at this time.

FUEL DELIVERY SYSTEM

COMPONENT LOCATION E01D0466

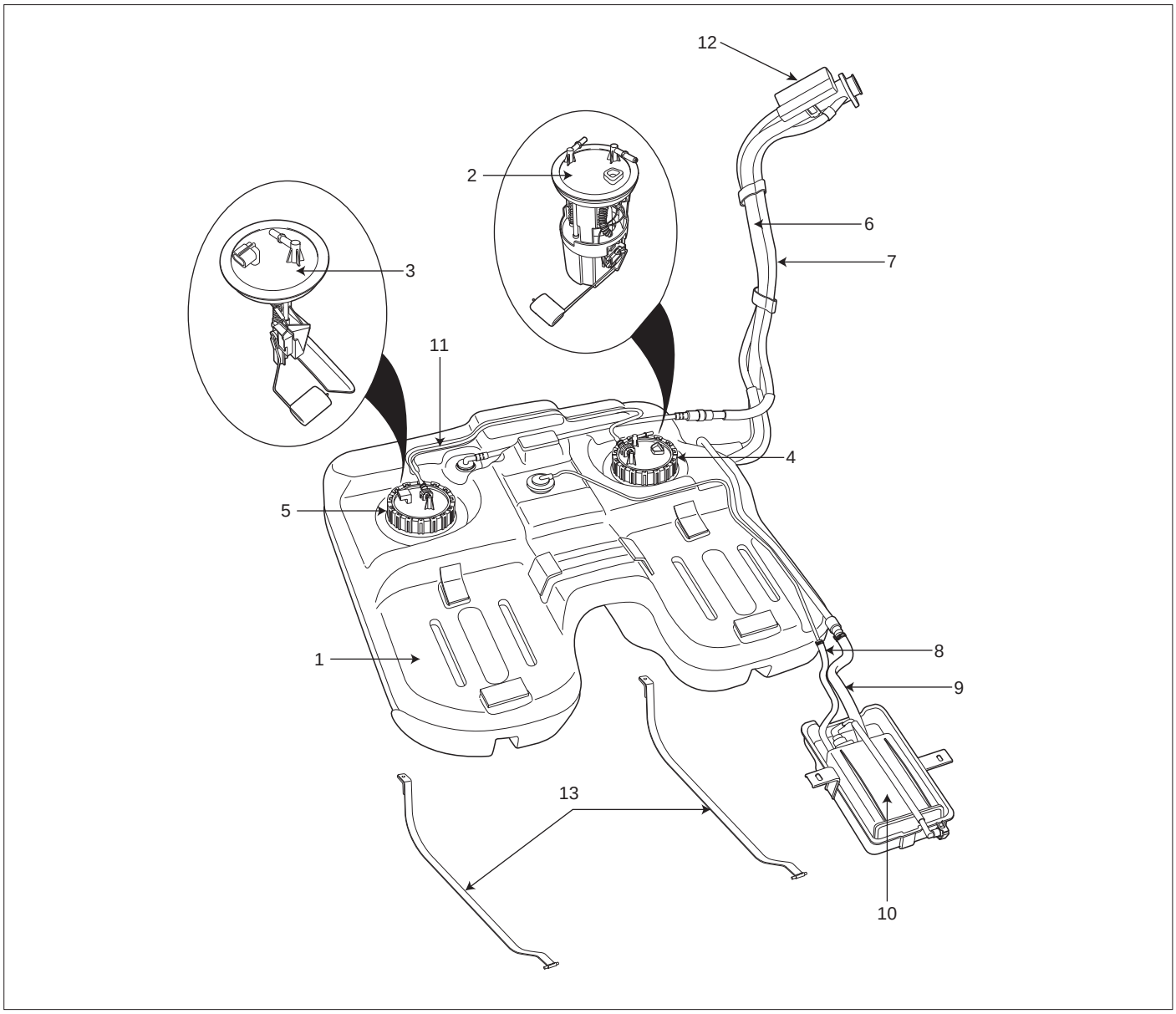

1. Fuel Tank
2. Fuel Pump
   (includig Fuel Filter and Fuel Pressure Regulator)
3. Sub Fuel Sender
4. Plate Cover (Fuel Pump)
5. Plate Cover (Sub Fuel Sender)
6. Fuel Filler Pipe
7. Leveling Pipe
8. Tube (Fuel Tank ↔ Canister)
9. Tube (Canister ↔ Fuel Tank Air Filter)
10. Canister
11. Suction Tube
12. Fuel Tank Air Filter
13. Fuel Tank Band

SCMF16132L

FUEL PRESSURE TEST EE0B21DE

1. PREPARING

1. Remove the 2nd seat (Refer to "BD" group in this SERVICE MANUAL).
2. Open the carpet for fuel pump and remove the service cover for fuel pump (A).

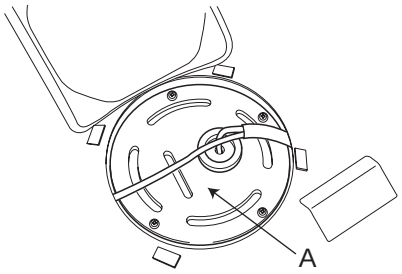

2. RELEASE THE INTERNAL PRESSURE

1. Disconnect the fuel pump connector (A).
2. Start the engine and wait until fuel in fuel line is exhausted.
3. After the engine stalls, turn the ignition switch to OFF position and disconnect the negative (-) terminal from the battery.

NOTE

Be sure to reduce the fuel pressure before disconnecting the fuel feed hose, otherwise fuel will spill out.

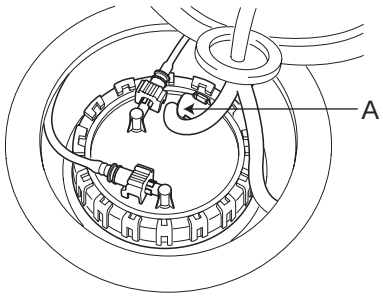

3. INSTALL THE SPECIAL SERVICE TOOL (SST) FOR MEASURING THE FUEL PRESSURE

1. Disconnect the fuel feed hose from the delivery pipe.

CAUTION

Cover the hose connection with a shop towel to prevent splashing of fuel caused by residual pressure in the fuel line.

2. Install the Fuel Pressure Gage Adapter (09353-38000) between the delivery pipe and the fuel feed hose.
3. Connect the Fuel Pressure Gage Connector (09353-24000) to the Fuel Pressure Gage Adapter (09353-38000).
4. Connect the Fuel Pressure Gage and Hose (09353-24100) to Fuel Pressure Gage Connector (09353-24000).
5. Connect the fuel feed hose to the Fuel Pressure Gage Adapter (09353-38000).

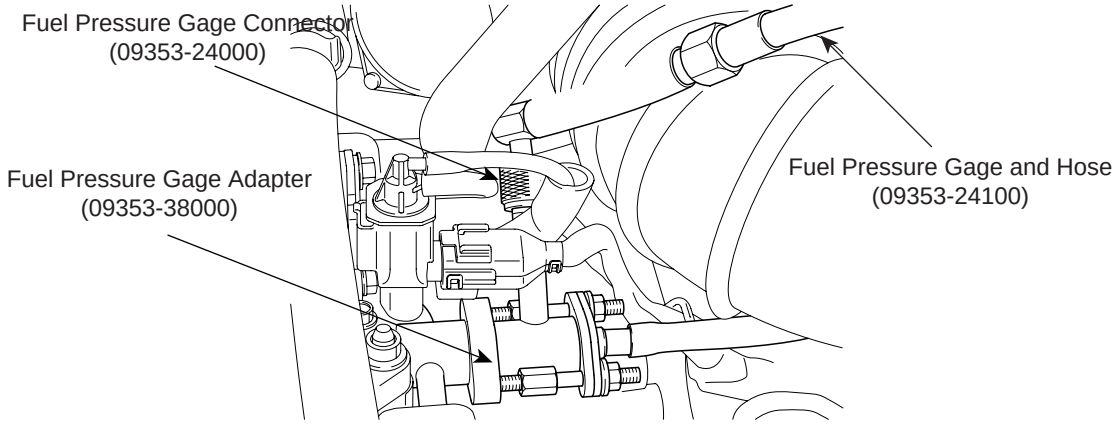

SCMF16133L

4. INSPECT FUEL LEAKAGE ON CONNECTION

1. Connect the battery negative (-) terminal.
2. Apply battery voltage to the fuel pump terminal and activate the fuel pump. With fuel pressure applied, check that there is no fuel leakage from the fuel pressure gauge or connection part.

5. FUEL PRESURE TEST

1. Diconnect the negative (-) terminal from the battery.
2. Connect the fuel pump connector.
3. Connect the battery negative (-) terminal.
4. Start the engine and measure the fuel pressure at idle.

Standard Value: 375 ~ 385 kpa (3.82 ~ 3.92 kgf/㎠, 54.3 ~ 55.8 psi)

- If the measured fuel pressure differs from the standard value, perform the necessary repairs using the table below.

Condition	Probable Cause	Suspected Area
Fuel Pressure too low	Clogged fuel filter	Fuel filter
	Fuel leak on the fuel-pressure regulator that is assembled on fuel pump because of poor seating of the fuel-pressure regulator.	Fuel Pressure Regulator
Fuel Pressure too High	Sticking fuel pressure regulator	Fuel Pressure Regulator

5. Stop the engine and check for a change in the fuel pressure gauge reading.

After engine stops, the gage reading should hold for about 5 minutes

- Observing the declination of the fuel pressure when the gage reading drops and perform the necessary repairs using the table below.

Condition	Probable Cause	Supected Area
Fuel pressure drops slowly after engine is stopped	Injector leak	Injector
Fuel pressure drops immediately after engine is stopped	The check valve within the fuel pump is open	Fuel Pump

6. RELEASE THE INTERNAL PRESSURE

1. Disconnect the fuel pump connector (A).
2. Start the engine and wait until fuel in fuel line is exhausted.
3. After the engine stalls, turn the ignition switch to OFF position and diconnect the negative (-) terminal from the battery.

NOTE

Be sure to reduce the fuel pressure before disconnecting the fuel feed hose, otherwise fuel will spill out.

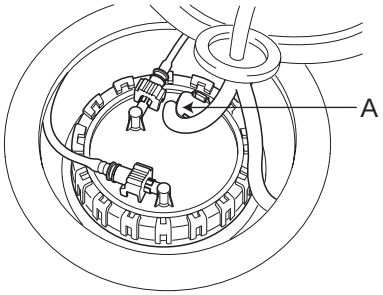

7. REMOVE THE SPECIAL SERVICE TOOL (SST) AND CONNECT THE FUEL LINE

1. Disconnect the Fuel Pressure Gage and Hose (09353-24100) from the Fuel Pressure Gage Connector (09353-24000).
2. Disconnect the Fuel Pressure Gage Connector (09353-24000) from the Fuel Pressure Gage Adapter (09353-38000).
3. Disconnect the fuel feed hose from the Fuel Pressure Gage Adapter (09353-38000).
4. Disconnect the Fuel Pressure Gage Adapter (09353-38000) from the delivery pipe.

CAUTION

Cover the hose connection with a shop towel to prevent splashing of fuel caused by residual pressure in the fuel line.

5. Conenct the fuel feed hose to the delivery pipe.

8. INSPECT FUEL LEAKAGE ON CONNECTION

1. Connect the battery negative (-) terminal.
2. Apply battery voltage to the fuel pump terminal and activate the fuel pump. With fuel pressure applied, check that there is no fuel leakage from the fuel pressure gauge or connection part.
3. If the vehicle is normal, connect the fuel pump connector.

SCMF16134L

FUEL PUMP

REMOVAL (INCLUDING FUEL FILTER AND FUEL PRESSURE REGULATOR) E7DAE93F

1. Preparation

   1) Remove the 2nd seat (Refer to "BD" group in this SERVICE MANUAL).

   2) Open the carpet for fuel pump (A).

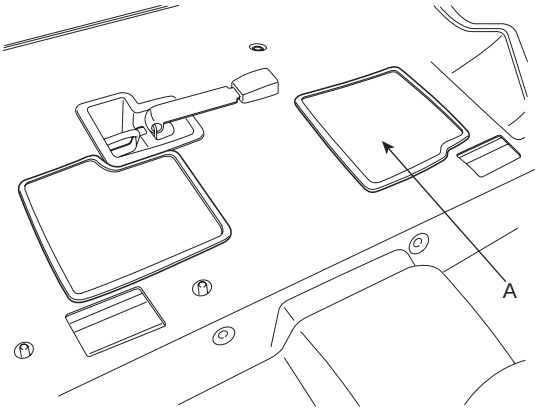

SCMF16135L

   3) Remove the service cover for fuel pump (A).

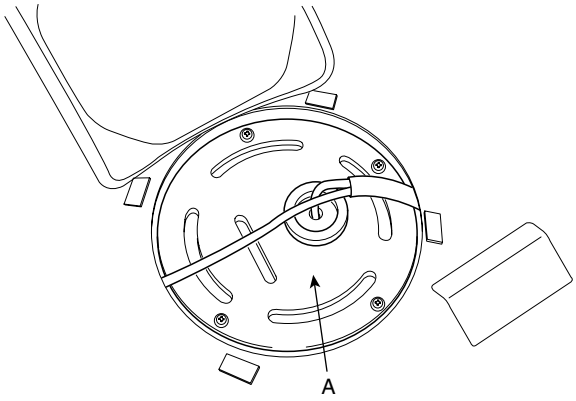

SCMFL6636D

   4) Disconnect the fuel pump connector (A).

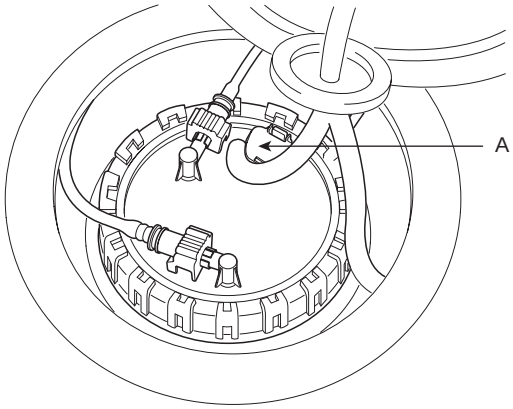

SCMF16137L

   5) Start the engine and wait until fuel in fuel line is exhausted.

   6) After engine stops, turn the ignition switch off.

2. Disconnect the fuel feed quick-connector (A) and the suction tube quick-connector (B).

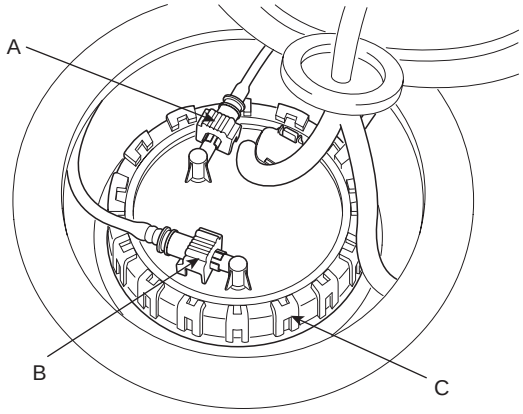

SCMF16138L

3. Remove the plate cover (C) with the special service tool (SST No.: 09310-2B100) and the remove the fuel pump from the fuel tank.

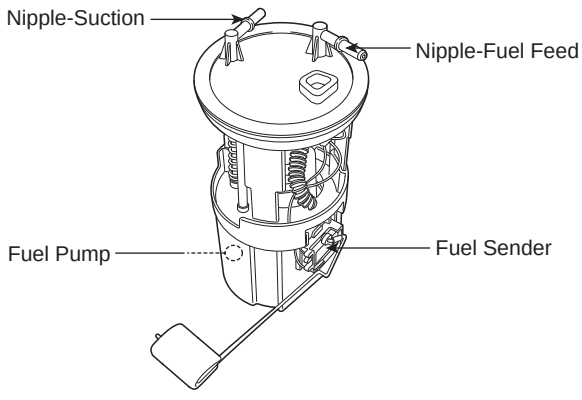

SCMF16139L

INSTALLATION EA87EA44

1. Install the fuel pump in according to the reverse order of "REMOVAL" procedure.

Fuel pump plate cover tightening: 58.8 ~ 68.6N·m (6.0~ 7.0kgf·m, 43.4 ~ 50.6lbf·ft)

SUB FUEL SENDER

REMOVAL EA9FF7BE

1. Preparation

   1) Remove the 2nd seat (Refer to "BD" group in this SERVICE MANUAL).

   2) Open the carpet for fuel pump (A).

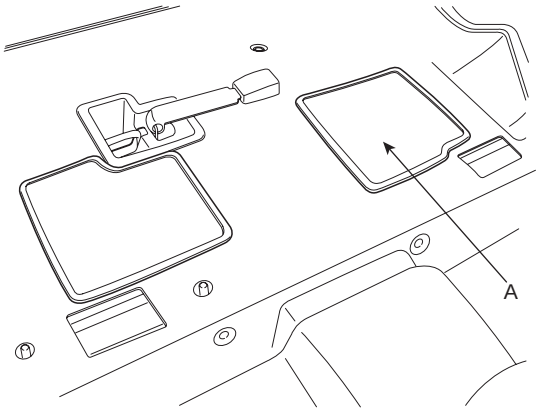

SCMF16135L

   3) Remove the service cover for fuel pump (A).

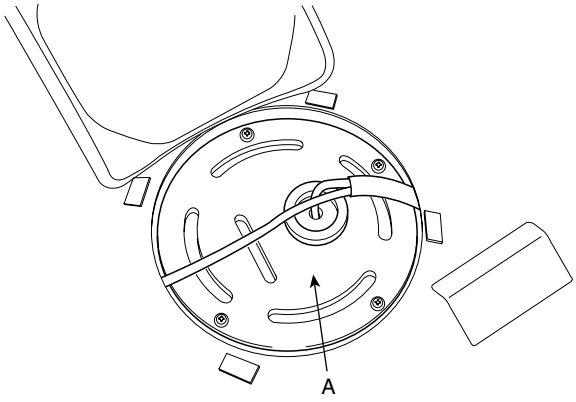

SCMFL6636D

   4) Disconnect the fuel pump connector (A).

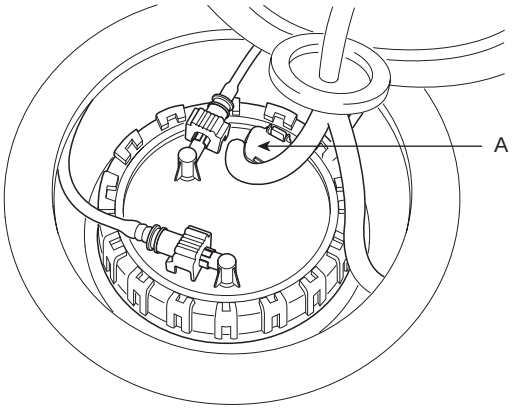

SCMF16137L

   5) Start the engine and wait until fuel in fuel line is exhausted.

   6) After engine stops, turn the ignition switch off.

2. Open the carpet for sub fuel sender (A).

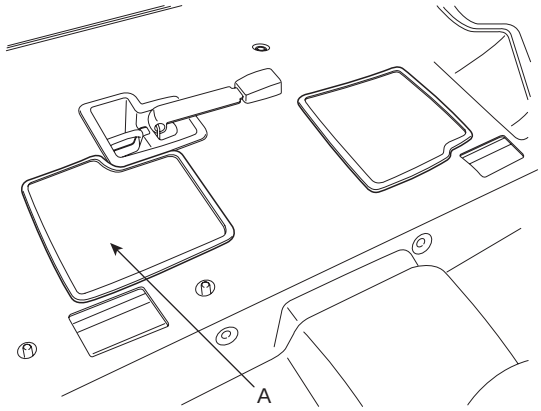

SCMF16140L

3. Open the service cover for sub fuel sender (A).

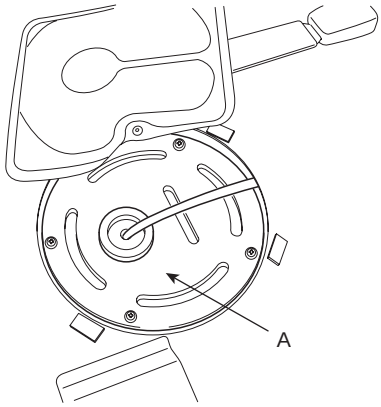

SCMFL6649D

4. Disconnect the sub fuel sender connector (A) and the suction tube quick-connector (B).

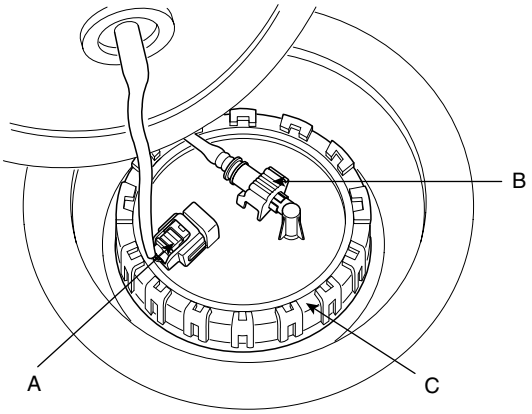

SCMFL6650D

5. Remove the plate cover (C) with the special service tool (SST No.: 09310-2B100) and remove the sub fuel sender from the fuel tank.

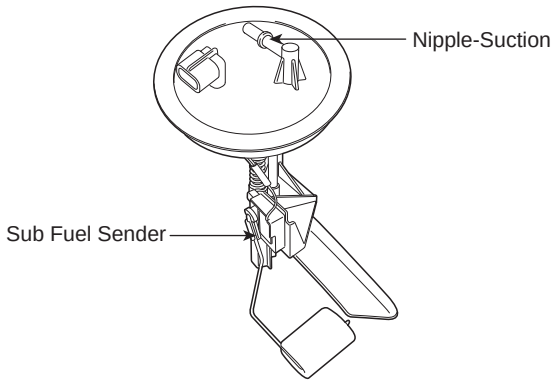

SCMF16142L

INSTALLATION EA259FCE

1. Install the sub fuel sender in according to the reverse order of "REMOVAL" procedure.

Sub fuel sender plate cover tightening: 58.8 ~ 68.6N·m (6.0~ 7.0kgf·m, 43.4 ~ 50.6lbf·ft)

FUEL TANK

REMOVAL ECA56A48

1. Preparation

   1) Remove the 2nd seat (Refer to "BD" group in this SERVICE MANUAL).

   2) Open the carpet for fuel pump (A).

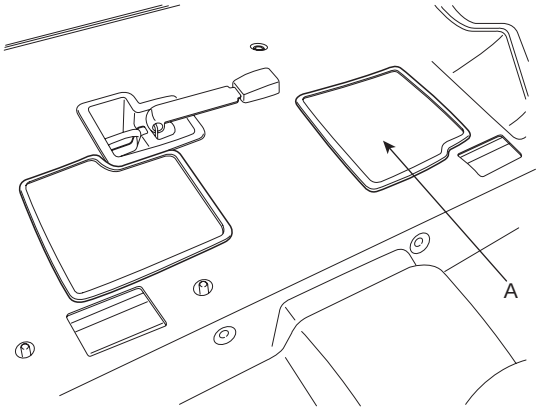

SCMF16135L

   3) Remove the service cover for fuel pump (A).

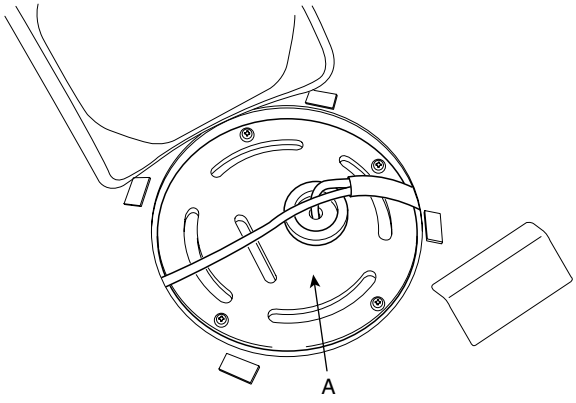

SCMFL6636D

   4) Disconnect the fuel pump connector (A).

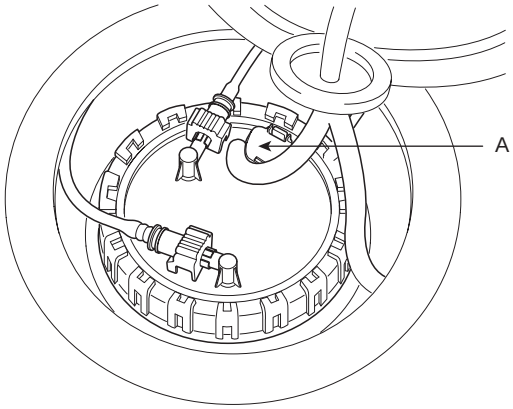

SCMF16137L

   5) Start the engine and wait until fuel in fuel line is exhausted.

   6) After engine stops, turn the ignition switch off.

2. Disconnect the fuel feed quick-connector (A).

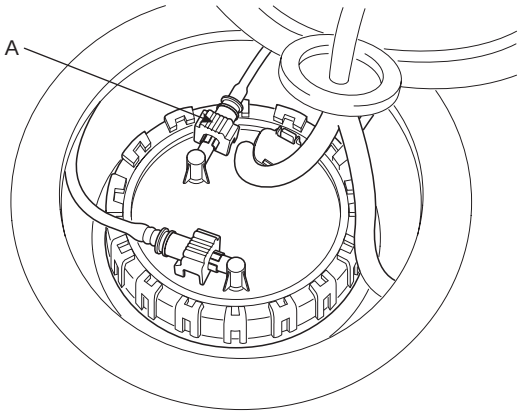

SCMF16143L

3. Open the carpet for sub fuel sender (A).

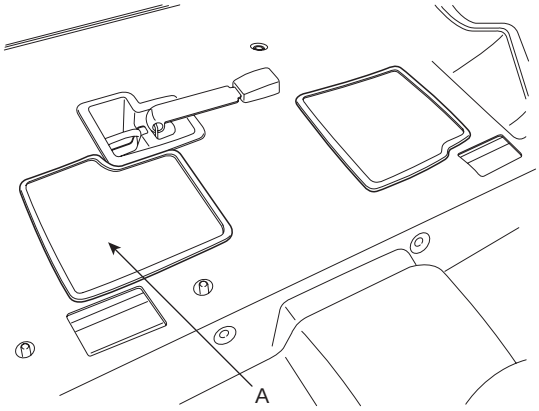

SCMF16140L

4. Open the service cover for sub fuel sender (A).

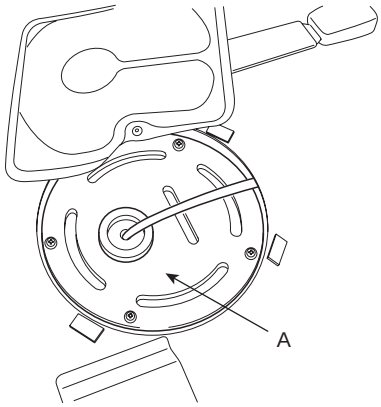

SCMFL6649D

5. Disconnect the sub fuel sender connector (A).

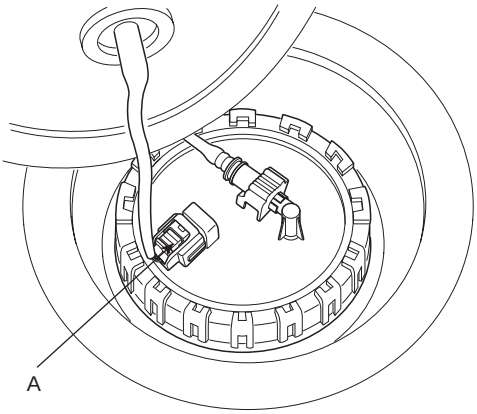

SCMF16144L

6. Lift the vehicle and remove the muffler assembly and the propeller shaft (4WD) (Refer to "EM" and "DS" groups in this SERVICE MANUAL).
7. Support the fuel tank with a jack.
8. Disconnect the fuel filler hose (A).

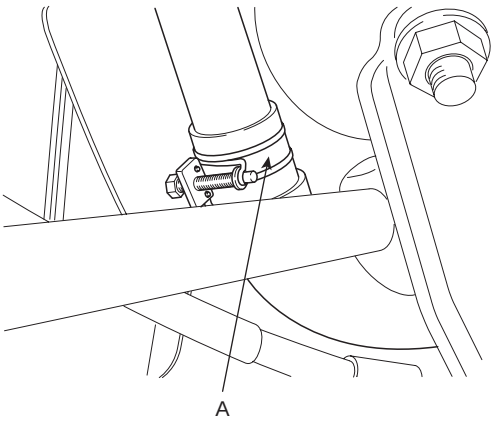

SCMFL6640D

9. Disconnect the leveling hose quick-connector (A) and the vacuum tube quick-connector (B) connecting the canister and the fuel tank air filter.

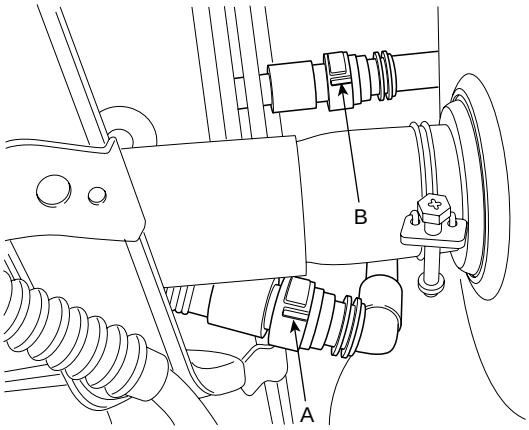

SCMF16013L

10. Disconnect the vacuum hoses (A,B).

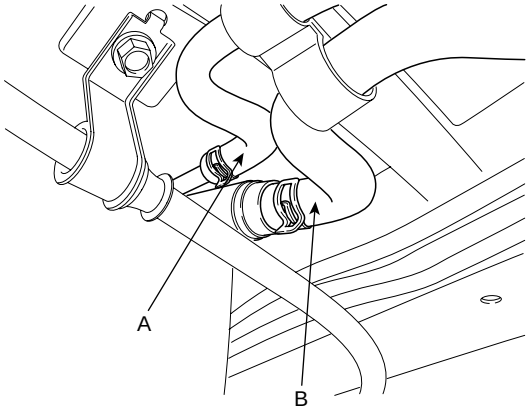

SCMF16145L

11. Disconnect the 4WD coupling control wiring (A) from the fuel tank cover.

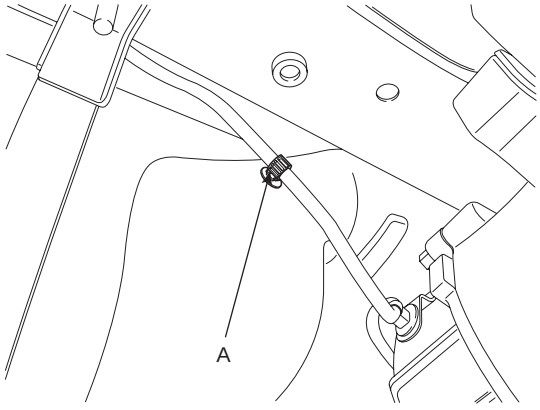

SCMFL6642D

12. Unscrew the fuel tank bank mounting nuts (A) and remove the fuel tank from the vehicle.

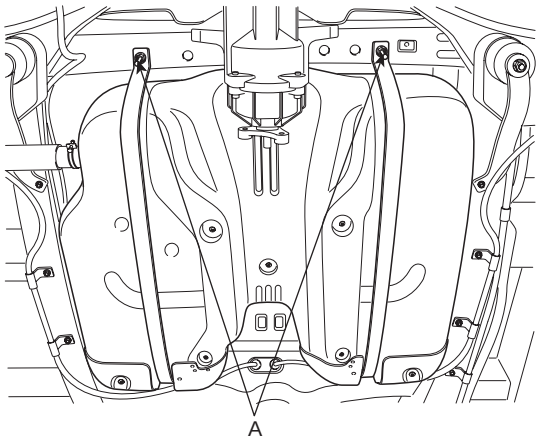

SCMFL6643D

INSTALLATION EB787B61

1. Install the fuel tank in according to the reverse order of "REMOVAL" procedure.

Fuel tank band mounting nuts: 39.2 ~ 53.9N·m (4.0 ~ 5.5kgf·m, 28.9 ~ 39.8lbf·ft)

FILLER-NECK ASSEMBLY

REMOVAL EDDD3969

1. Disconnect the fuel filler hose (A).

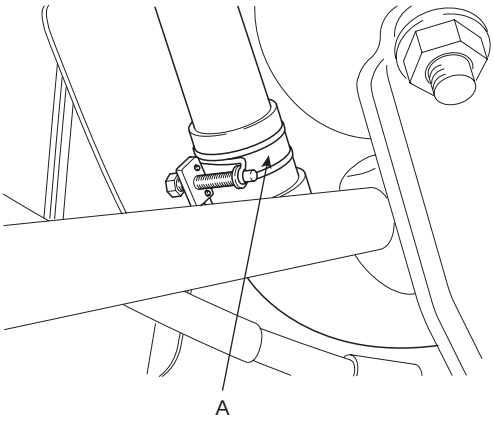

SCMFL6640D

2. Disconnect the leveling hose quick-connector (A) and the vacuum tube quick-connector (B) connecting the canister and the fuel tank air filter.

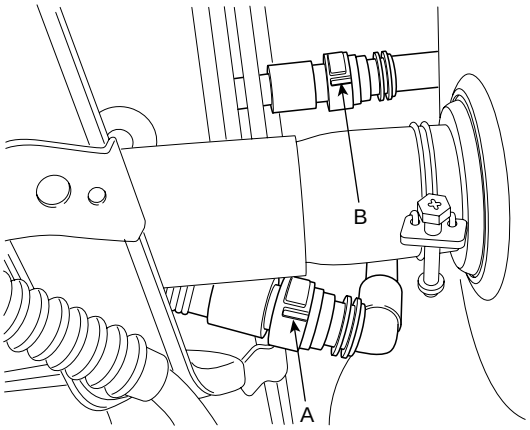

SCMF16013L

3. Open the fuel filler door and unfasten the filler-neck assembly mounting screws (A).

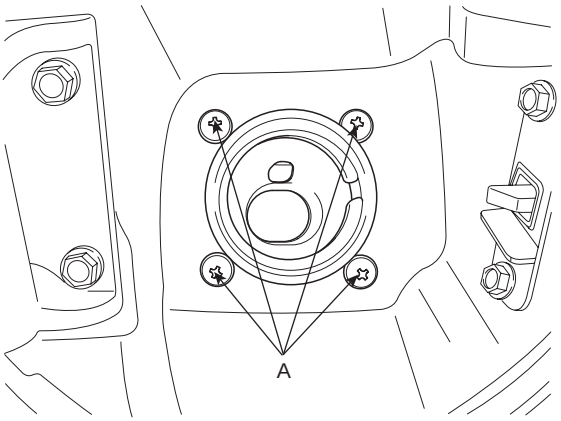

SCMFL6655D

4. Remove the rear-LH wheel & tire, and the inner wheel house (Refer to "DS" group in this SERVICE MANUAL).

5. Remove the bracket mounting nuts (A) and remove the filler-neck assembly.

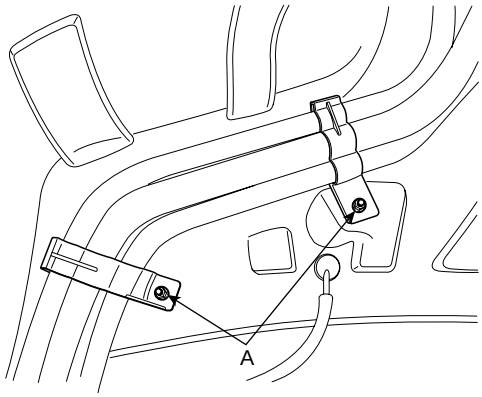

SCMF16010L

INSTALLATION E099635F

1. Install the filler-neck assembly in according to the reverse order of "REMOVAL" procedure.

ACCELERATOR PEDAL

REMOVAL EEBBB3FC

1. Turn ignition switch off and disconnect the battery (-) cable from the battery.
2. Disconnect the accelerator position sensor connector (A).

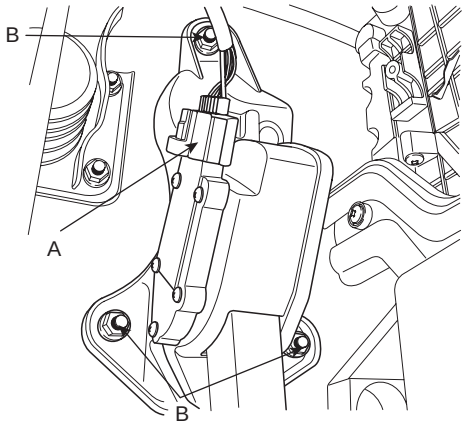

SCMFL6656D

3. Unfasten the mounting nuts (B) and remove the accelerator pedal from the vehicle.

INSTALLATION ED3291DE

1. Install the accelerator pedal in according to the reverse order of "REMOVAL" procedure.

Accelerator pedal mounting nuts: 16.7 ~ 25.5N·m (1.7 ~ 2.6kgf·m, 12.3 ~ 18.8lbf·ft)

Clutch System

GENERAL

CLUTCH SYSTEM

CLUTCH COVER AND DISC
CLUTCH PEDAL
CLUTCH MASTER CYLINDER

GENERAL

SPECIFICATION EC11DECE

Item	SPECIFICATION
Clutch operation	Hydraulic type
Clutch disc	Single dry with diaphragm
Clutch cover assembly	Self Adjusting Clutch

TIGHTENING TORQUE

Item	Nm	kgf.m	lb-ft
Clutch cover (6EA)	25~36	2.5~3.6	18.2~26.2
Clutch pedal bracket mounting	17~26	1.7~2.6	12.3~18.9
Oil chamber bolt	8~12	0.8~1.2	5.8~8.6
Connecting rod adjusting bolt	9~14	0.9~1.4	6.5~10.1
Clutch master cylinder mounting	17~26	1.7~2.6	12.3~18.8
Clutch switch nut	8~10	0.8~1.0	5.8~7.27
Clutch pedal bolt/nut	25~34	2.5~3.4	18.1~24.7
Ignition lock switch nut	8~10	0.8~1.0	5.8~7.27
C.S.C. assembly mounting nut	12~15	1.2~1.5	8.7~10.8

SERVICE STANDARD

Item	Standard value [mm(in)]
Clutch pedal stroke	150~155 (5.90~6.10)
Clutch pedal free play	6~13 (0.24~0.51)

SPECIAL TOOLS EE92F61C

Tool (Number and Name)	Illustration	Use
09411-43000 Clutch disc guide	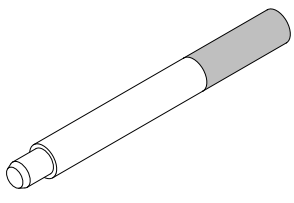 LOKG002A	Installation of the clutch disc

CLUTCH SYSTEM

DESCRIPTION EB27D04B

SELF ADJUSTING CLUTCH(S.A.C.) COVER

- As a clutch disc facing is worn away according to its durability, a cover weight is increasing and a clutch pedal pressure can be more needed.
- To make up for this defect, the self adjusting clutch system makes the requsted pedal pressure minimized so that makes the maintenance cycle longer.

GENERAL CLUTCH COVER

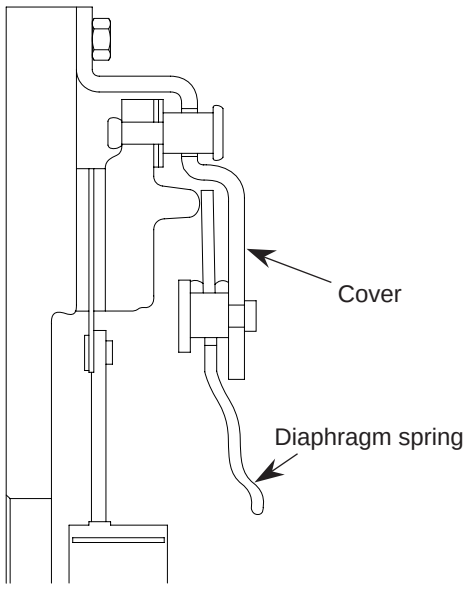

· In a general clutch cover, the diaphragm spring increases the weight to the disc in proportion to abrasion.

SELF ADJUSTING CLUTCH COVER

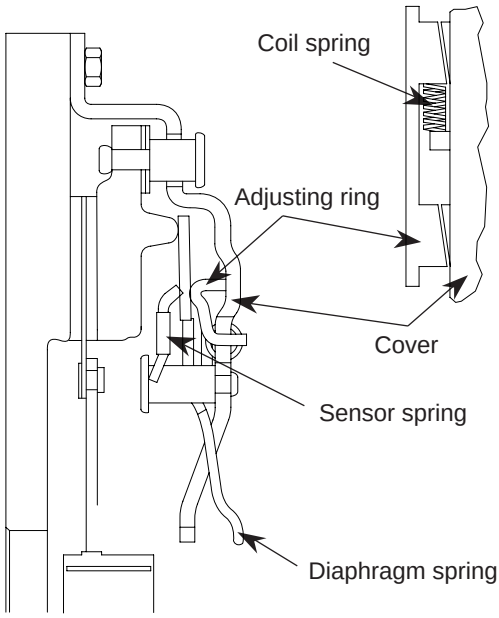

· In a self adjusting clutch, the adjusting ring prevents the diaphragm spring from being raised to the transmission side in spite of abrasion.

LOKG001A

CONCENTRIC SLAVE CYLINDER-C.S.C.

It improves working efficiency and lowers the number and the weight of part by unifing clutch release control parts(clutch release bearing ~ clutch release cylinder) in a manual transaxle.

OPERATION ECCA75CF

CONCENTRIC SLAVE CYLINDER-C.S.C

When the clutch pedal is pressed, oil pressure is transmitted along the arrow directions shown below and that moves the clutch slave cylinder and the diaphragm spring of the clutch cover.

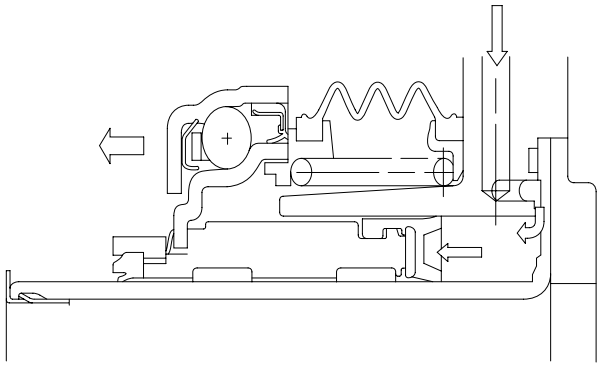

KORE001B

CLUTCH COVER AND DISC

COMPONENTS E501F1C7

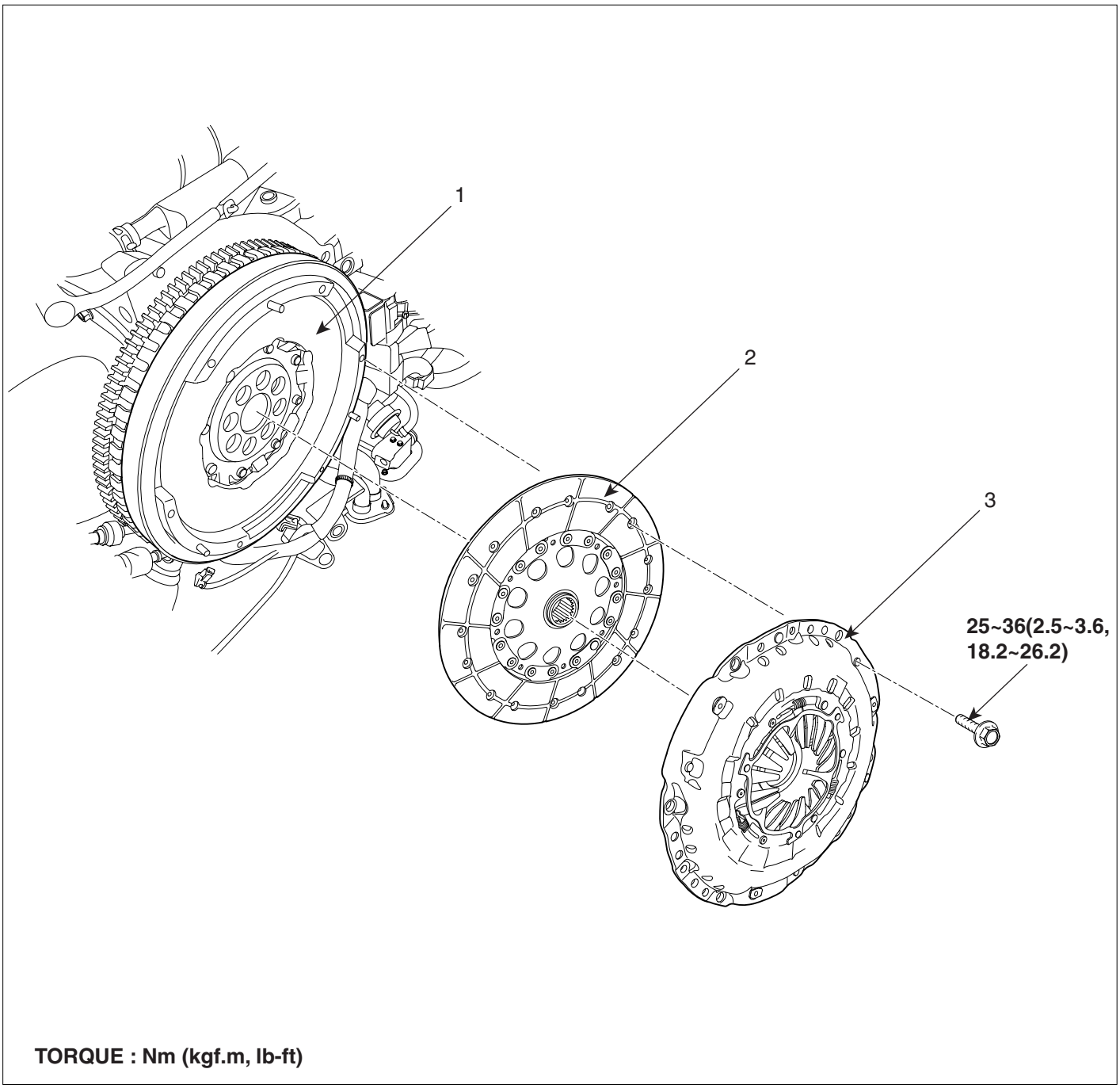

1. Engine flywheel
2. Clutch disc
3. Clutch cover

LOKG001B

REPLACEMENT E879B1FB

1. Remove a transaxle assembly (refer to 'MT'-group).
2. Remove the clutch cover bolts. Not to be bent or twisted, loosen them in diagonal directions.

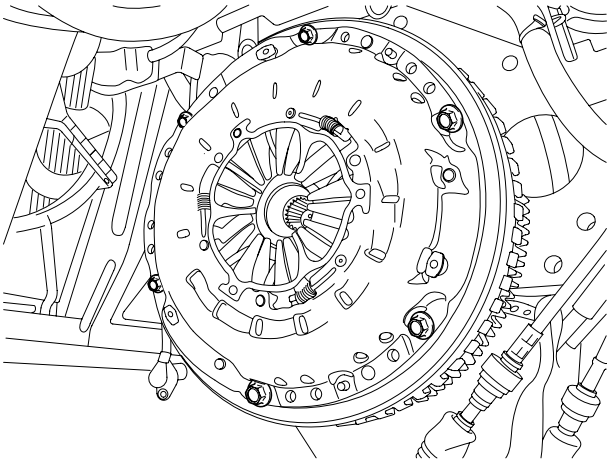

LOKG001D

3. Remove the clutch cover and disc.
4. Using the SST(09411-43000), install a clutch disc and cover.

CAUTION

- ***Replace a clutch cover and disc as a set.***

**** Possible problems when not following the caution***

- ***When replacing only a disc, slip problem can occur because of the initial clamp load loss by the adjusting ring's unusual work.***
- ***When replacing only a disc, it can be difficult to cut power because the thickness of the disc cannot be permitted.***

- ***Apply grease on a disc spline part and transmission input shaft spline part as required.***

**** Possible problems when not following***

- ***When not applying: Excessively wear of splines and bad clutch operation***
- ***When excessively applying: Scattered grease by centrifugal force conteminates the clutch disc. Loss of friction force can cause a slip***

- ***The 'T/M SIDE' marked surface should face the transaxle.***
  → If the surface face the opposite side, there can be an interference between a disc and a flywheel surface.

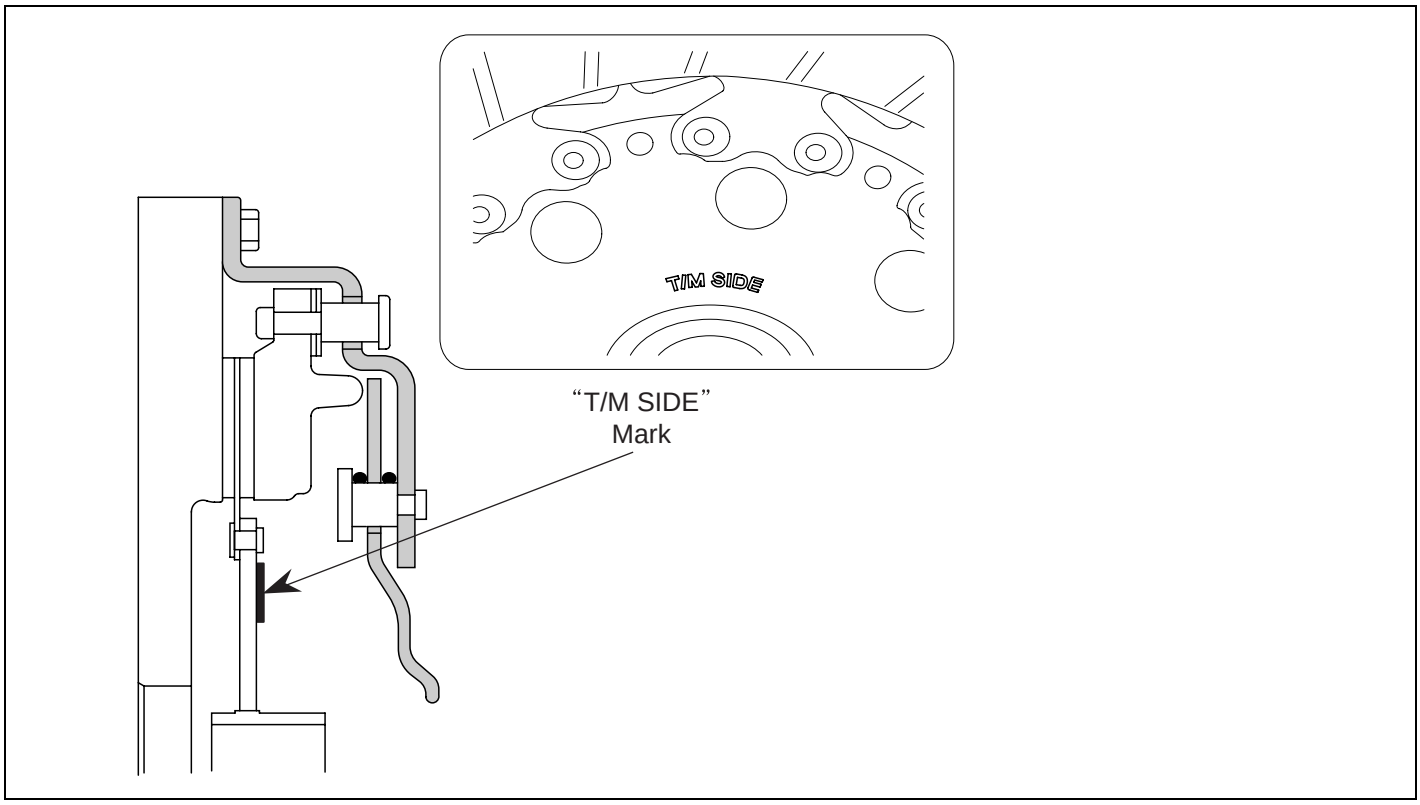

LOKG001E

5. Tighten the clutch cover.

TORQUE:
24.5~35.3Nm (2.5~3.6kgf.m, 18.1~26.0lb-ft) (6EA)

CAUTION

When installing the clutch cover, tighten the bolts in diagonal directions not to be bent or twisted.

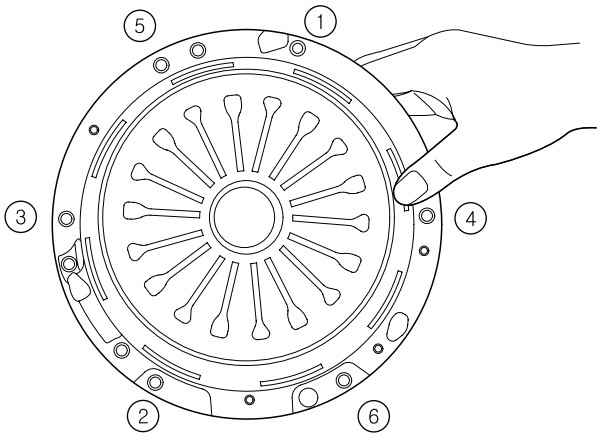

LOKG001F

CAUTION

**** Possible problems when not following***

- ***When tightening the bolt completely at a time: the clutch cover can be twisted and vibration can occur.***
- ***On vehicles with self adjusting clutches, it is necessary to follow this caution.***
- ***Not following tightening torque: There can be bad torque transmission in clutch and relaxation possibility of bolts.***

INSPECTION EA41A5EB

1. Inspect diaphragm spring wear which is in contact with a concentric slave cylinder bearing.

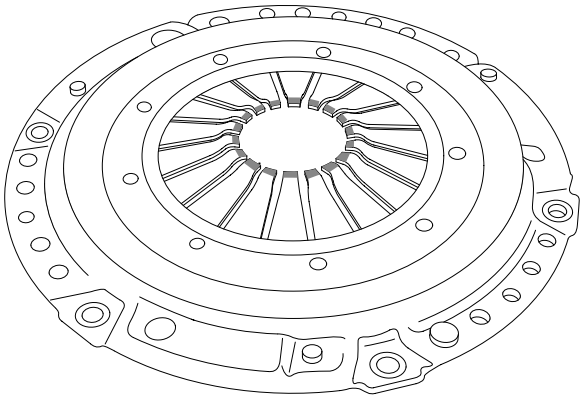

KORE002I

2. Check the clutch cover and disc surface for wear or crack.

3. Check the clutch disc lining for slipping or oil mark.

4. Measure the depth from a clutch lining surface to a rivet. If the measured value is less than the specification below, replace it.

Specification: 0.3mm(0.0118in)

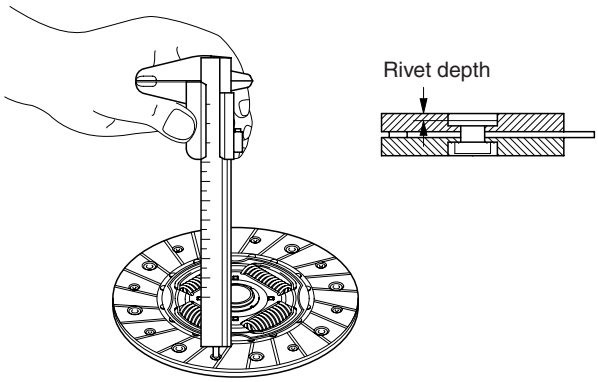

EORE002J

CLUTCH PEDAL

COMPONENTS EBB8432D

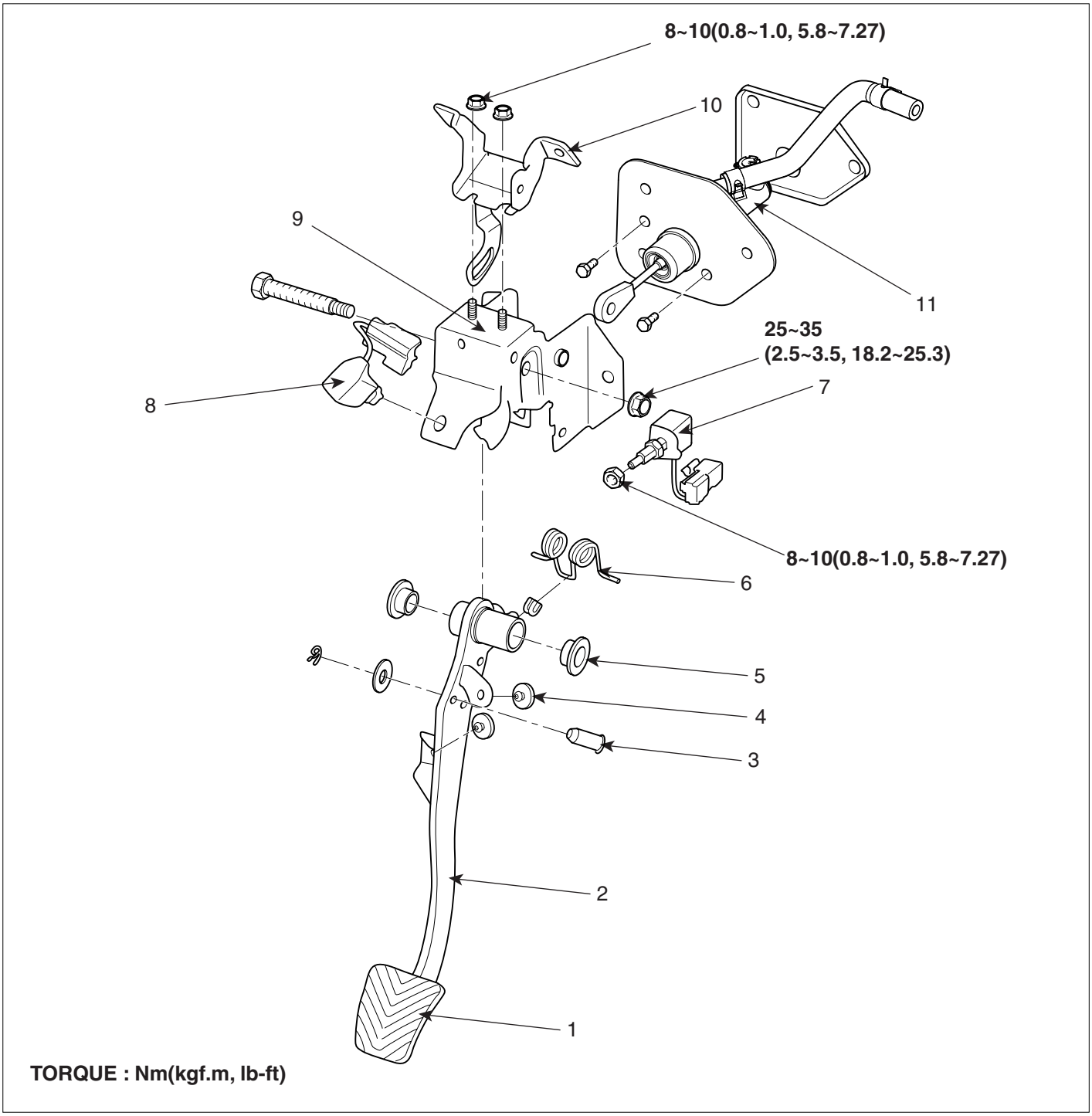

1. Pedal pad
2. Clutch arm assembly
3. Self locking pin
4. Stopper
5. Bush
6. Turn over spring
7. Ignition lock switch
8. Ignition lock switch
9. Clutch member assembly
10. Cowl bracket assembly
11. Clutch master cylinder assembly

SCMCH6002L

REMOVAL E9CFD3B5

NOTE

Do not spill brake fluid on the vehicle; it may damage the paint if brake fluid does contact the paint, wash it off immediately with water.

1. Remove the brake fluid fron the clutch master cylinder reservoir with a syringe.
2. Clamp the clutch master cylinder hose(A). If there is no enough room for clamping, you can also clamp the hose from the brake master cylinder side.

[LHD]

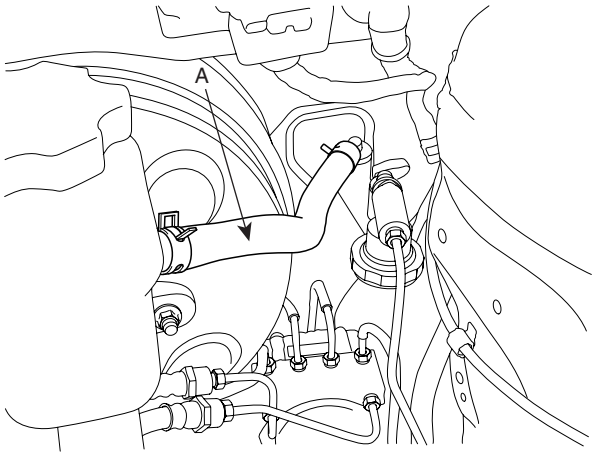

SCMCH6001D

[RHD]

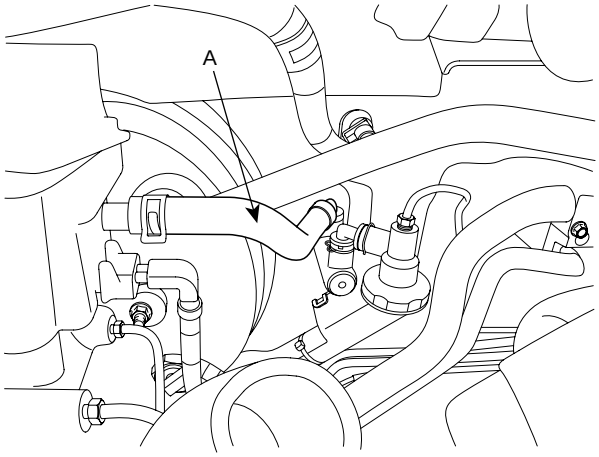

SCMCH6008L

3. Disconnect the hose(A) from the cylinder by releasing the clutch master cylinder clamp.

[LHD]

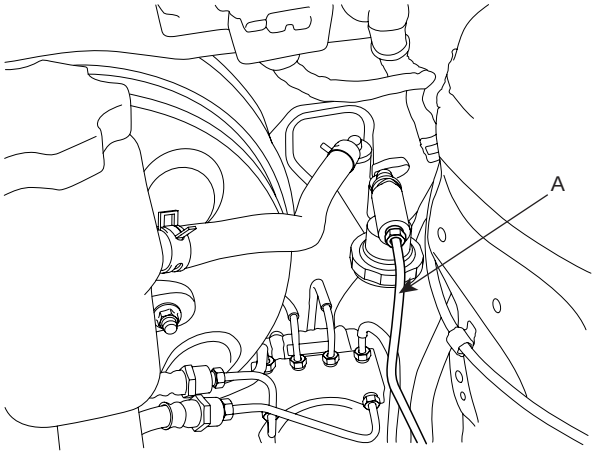

SCMCH6002D

[RHD]

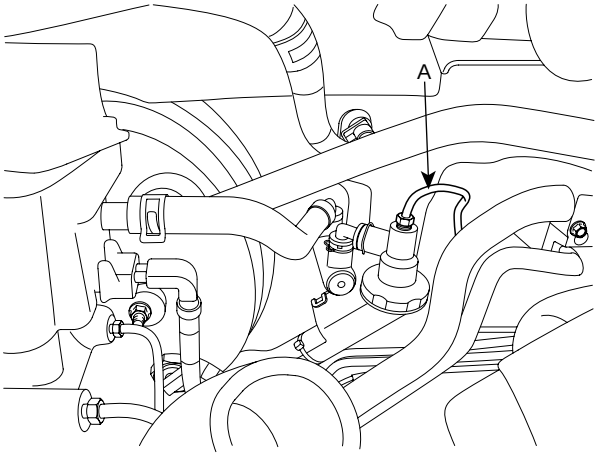

SCMCH6010L

4. Remove the ignition lock switch.

5. Remove the clutch pedal assembly mounting nuts (A-3ea) and bolt (B-2ea).

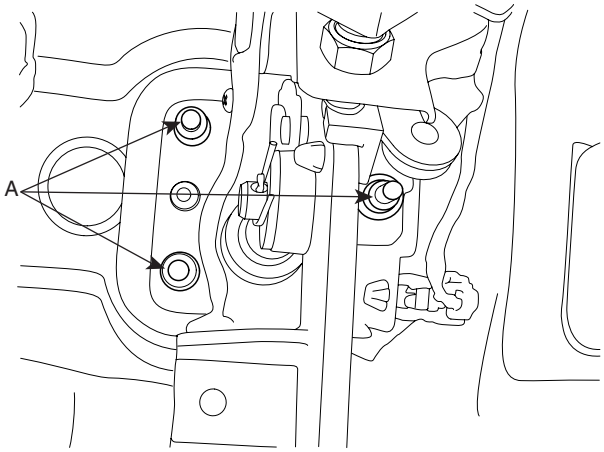

SCMCH6007D

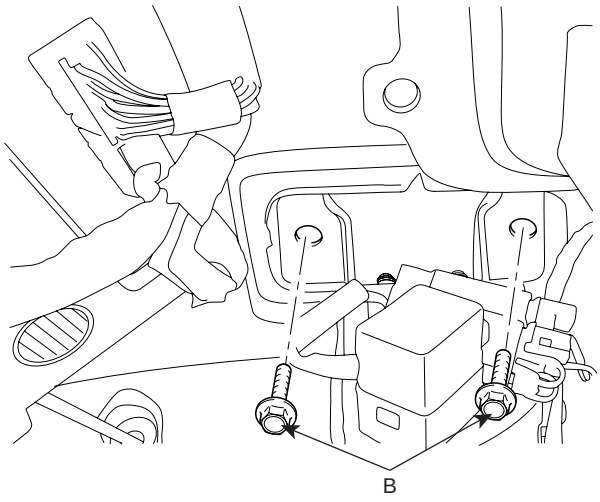

SCMCH6004D

6. Remove the clutch pedal and the master cylinder assembly together.

INSTALLATION EA045E12

NOTE

- *The clutch pedal and the clutch master cylinder are supplied as an assembly.*
- *Inspect the continuity of the ignition lock switch.*
- *Remove the floor mat before adjusting the clutch pedal.*

1. Installation is in reverse order of removal.

2. Install a new one by tightening the bolts of the clutch pedal bracket.

TORQUE :
19~26 Nm(1.9~2.6 kgf.m, 13.8~18.9 Ib-ft)

3. Bleed the air in C.S.C.(Concentric Slave Cylinder) system refering to ADJUSTMENT PROCEDURE.

4. Adjust the clutch pedal and the ignition lock switch.

INSPECTION E5F8EBFA

IGNITION LOCK SWITCH

1. Disconnect 2P-connector from a ignition lock switch.

2. Disconnect the ignition lock switch. (if you can install a tester with the switch fixed, this step can be omissible)

3. Check for continuity between terminals. (refer to the table below)

Clutch pedal position	Ignition lock switch	Continuity
Released	Released	NO
Pressed	Pressed	YES

If there is difference between what tested and the table above, replace the ignition lock switch with a new one.
If not, install the ignition lock switch and adjust the clutch pedal.

TORQUE :
8~10Nm (0.8~1.0kgf.m, 5.8~7.2lb-ft)

ADJUSTMENT PROCEDURE E412CCDF

CONCENTRIC SLAVE CYLINDER AIR BLEEDING PROCEDURE

1. After disconnecting a cap from the concentric slave cylinder air bleeder, insert a vinyl hose in the plug.
2. Loosening the plug screw, press and release the clutch pedal about 10 times.

   NOTE

   Hold the air bleeder body not to rotate with a spanner(A). The holding is needed when the plug loosened or tightened.

3. Tighten the plug during the clutch pedal pressed. Afterwards, raise the pedal with a hand.

TORQUE :
25~29Nm (2.5~2.9Kgf.m, 18.2~21.1lb-ft)

4. After pressing the clutch pedal 3 times more, loosen the plug and retighten it with the pedal pressed. Raise it again, then.
5. Repeat the step 4 two or three times. (until there is no bubble in the fluid)

   CAUTION

   1. Do not clamp the pipe of a concentric slave cylinder.
   2. Be careful not to damage O-rings.

CLUTCH PEDAL AND IGNITION LOCK SWITCH

NOTE

- *Inspect a ignition lock switch.*
- *Remove the driver's seat mat to adjust a clutch pedal.*
- *No gap between a clutch master cylinder pistion and push rod can cause clutch slip.*

1. Loosen and draw out the bolt until it is off the pedal surface.
2. Push and pull a clutch master cylinder push rod to satisfy the specification below.

Specification [mm(in)]
Clutch pedal stroke(A) - 150~155(5.90~6.10)
Clutch pedal free play(B) - 6~13(0.24~0.51)
Clutch pedal distance(C) - 234.7(9.24)

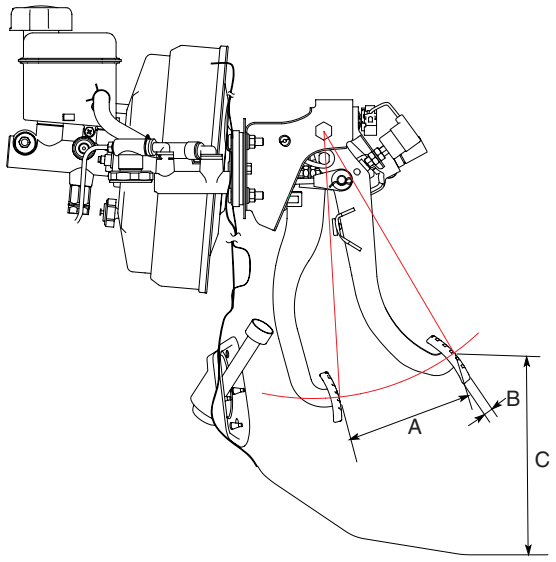

SCMCH6005D

3. With no pressure on a clutch pedal, tighten the bolt until it contacts on the pedal.
4. Fix the bolt with a nut.

TORQUE :
14~20Nm (1.4~2.0kgf.m, 10.2~14.5lb-ft)

5. Press the clutch pedal to the seat ground.

6. Adjust the ignition lock switch position with the pedal a little(23~26mm) raised.

7. Install the ignition lock switch firmly.

TORQUE:
8~10Nm (0.8~1.0kgf.m, 5.8~7.2lb-ft)

CLUTCH MASTER CYLINDER

COMPONENTS EA99ED83

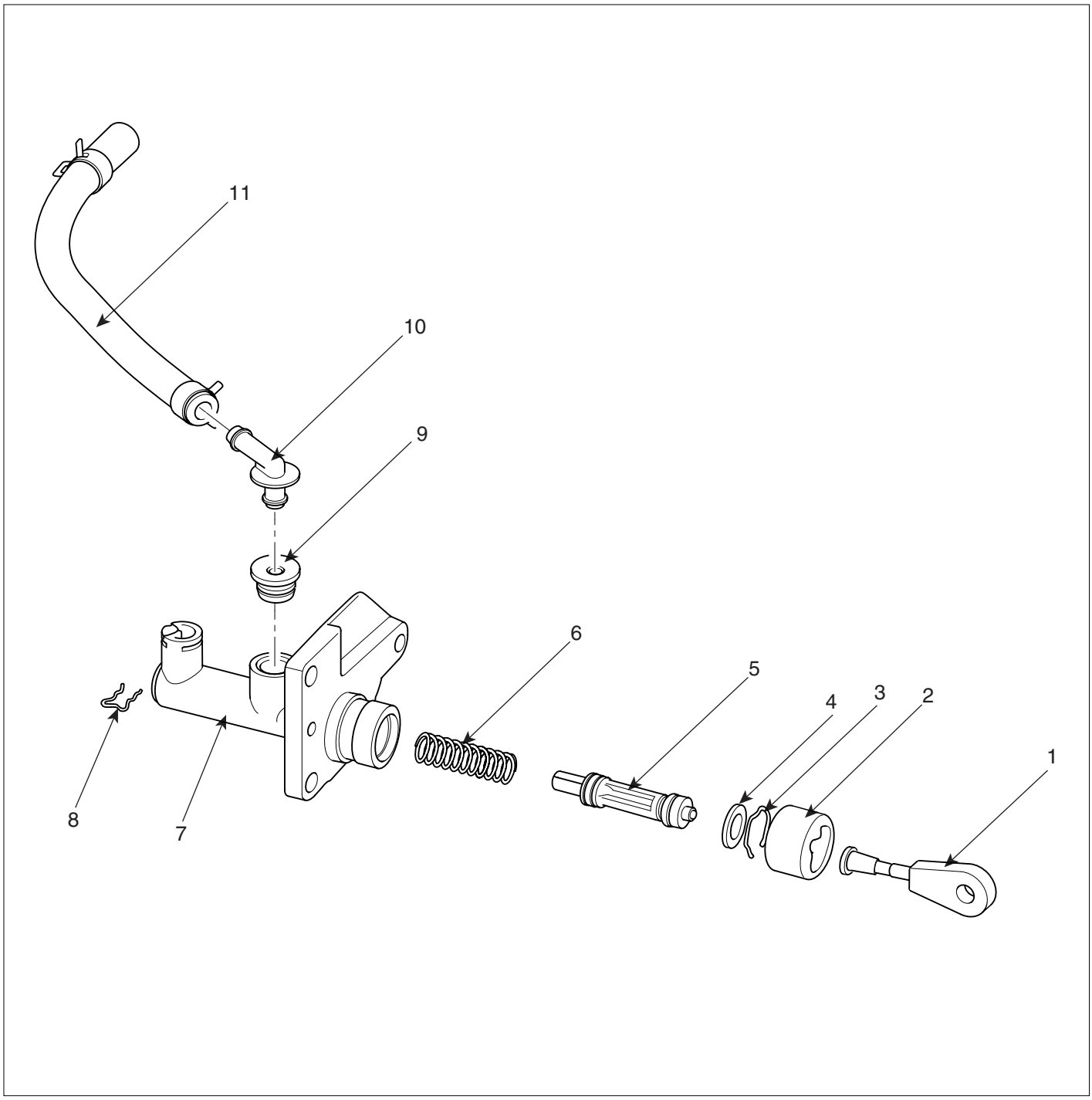

1. Rod assembly
2. Boot
3. Key
4. Plate
5. Piston assembly
6. Spring
7. Body assembly
8. Clip
9. Rubber
10. Nipple
11. Plexible hose

SCMCH6001L

Manual Transaxle (M5GF2)

GENERAL

MANUAL TRANSAXLE SYSTEM
- MANUAL TRANSAXLE
- MANUAL TRANSAXLE SHIFT CONTROL SYSTEM

TRANSFER CASE ASSEMBLY
- TRANSFER CASE
- TRANSFER DRIVE GEAR
- HYPOID GEAR
- PINION SHAFT AND CASE
- COUPLING ASSEMBLY

GENERAL

SPECIFICATION ED0183A6

Engine type		μ 2.7
Manual transaxle type		M5GF2
Gear ratio	1st	3.273
	2nd	1.794
	3rd	1.552
	4th	1.176
	5th	0.974
	Reverse	3.416
Final gear ratio		4.333
T/M oil capacity(ℓ)※		1.9 liter (2.0077US qt, 1.6718mp qt)

※ The quantity in the chart above is for the reference. The actual filling quantity of the automatic transaxle fluid must be set according to 'INSPECTION' or 'REPLACEMENT' procedure of the automatic transaxle fluid.

Recommended transaxle oil			SAE75W/85 or API GL-4
Check & Replenishment			Every one year or every 100,000km
Replacement	Private use	Normal use	No service required
		Severe use(※)	Every 100,000 Km
	Business use		

※ Severe use(marked '※') is defined as:

1. Driving on rough road(bumpy road, gravel road, snowy road, unpaved road etc.).
2. Driving on mountain road, ascent/descent.
3. Repetition of short distance driving.
4. More than 50% operation in heavy city traffic during hot weather above 32°C(89.6°F).
5. Police car, Taxi, Commercial type operation or trailer towing, etc.

TIGHTENING TORQUE

Item	Nm	kgf.m	lb-ft
Oil drain plug	30~35	3.0~3.5	21.7~25.3
Oil filler plug	30~35	3.0~3.5	21.7~25.3
Back up lamp switch	30~35	3.0~3.5	21.7~25.3
Control shaft assembly	10~12	1.0~1.2	7.2~8.7
Select lever	43~55	4.3~5.5	31.1~39.8
Shift link assembly	43~55	4.3~5.5	31.1~39.8
Transaxle mounting bracket assembly	65~85	6.5~8.5	47.0~61.5
Transaxle and enging mounting bolt	65~85	6.5~8.5	47.0~61.5

SERVICE STANDARD

Item	Specification [mm(inch)]
Differential end play	0.15T-0.20T (0.0059T~0.0079T)
Input shaft end play	0.05T-0 (0.0020T~0)
1st output shaft end play	0.05T-0.10T (0.0020T~0.0039T)
2nd output shaft end play	0.05T-0.10T (0.0020T~0.0039T)
1st gear end play	0.135T-0.435T (0.0053T~0.0171T)
2nd gear end play	0.230T-0.430T (0.0091T~0.0169T)
3rd gear end play	0.142T-0.472T (0.0056T~0.0186T)
4th gear end play	0.230T-0.430T (0.0091T~0.0169T)
5th gear end play	0.125T-0.305T (0.0049T~0.0120T)
Reverse gear end play	0.135T-0.345T (0.0053T~0.0136T)

LUBRICANTS E71A8BF7

Item	Lubricant	Quantity
Transaxle input shaft splin	CASMOLY L9508	0.2 gr.
Transaxle case gasket	LOCTITE 587	As required
Concentric slave cylinder assembly	KLUBER 9R100	As reguired

SPECIL TOOLS E43B86CA

Item (Number & Name)	Illustration	Use
09452-21200 Oil seal installer	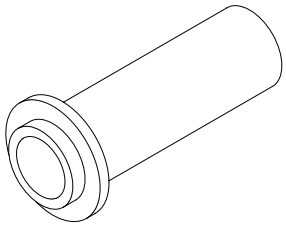 AMJF002A	Oil seal installation
09200-38001 Engine supporting fisture	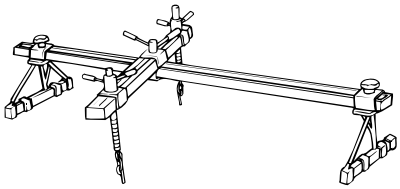 AMJF002B	Removal and installation of transaxle
09455-32200 Oil seal puller	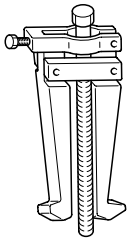 UMQG010A	Removal of oil seal
09455-21000 Bearing & gear puller	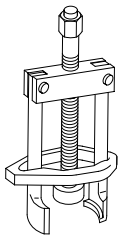 UMQG010B	Removal of taper roller bearing
09432-33200 Plate	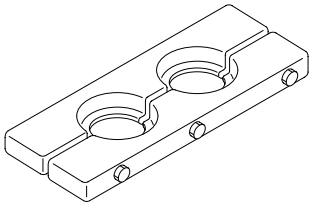 D3233200	Removal of oil seal

Item (Number & Name)	Illustration	Use
09478-26100 Backing plate remover	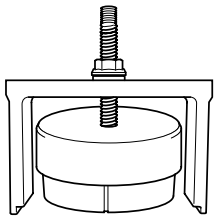 EKJD506Z	Removal of 4WD coupling backing plate
09478-26000 Flange oil seal installer	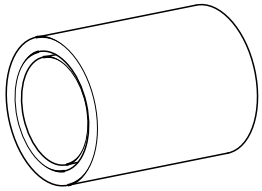 EKJA006A	Installation of 4WD coupling flange oil seal

MANUAL TRANSAXLE SYSTEM

SERVICE ADJUSTMENT PROCEDURE EC3FEB20

TRANSMISSION OIL INSPECTION AND REPLACEMENT

1. After parking the vehicle on a plain, stop the engine.
2. After removing the oil filler plug and washer, inspect the manual transaxle fluid condition and quantity.
3. If the manual transaxle fluid is contaminated, drain it out by removing the oil drain plug.
4. Tighten the new oil drain plug and feed manual transaxle fluid to a proper level.

TORQUE:
29.4~34.4 Nm(3.0~3.5kgf.m, 21.7~25.3lb-ft)
Oil type: SAE75W/85
Oil quantity:
1.9 liter(2.0077 US qt, 1.6718 lmp qt)

5. Retighten the oil filler plug with a new washer.

TORQUE:
29.4~34.4 Nm(3.0~3.5kgf.m, 21.7~25.3lb-ft)

BACK UP LAMP SWITCH INSPECTION

1. Disconnect the back up lamp switch connector(A).

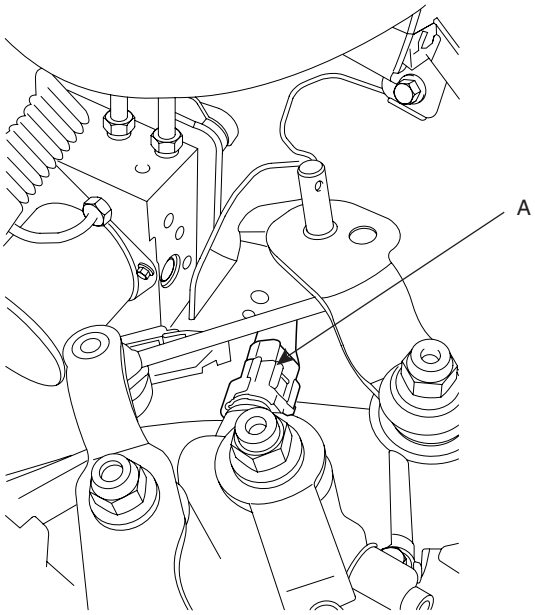

KMRE009E

2. Inspect the continuity of the switch. When the shift lever is located in reverse range, it should be applied an electric current.
3. Replace the back up lamp switch, if necessary.

TORQUE:
29.4~34.4 Nm(3.0~3.5kgf.m, 21.7~25.3lb-ft)

MANUAL TRANSAXLE

COMPONENTS E3ECD674

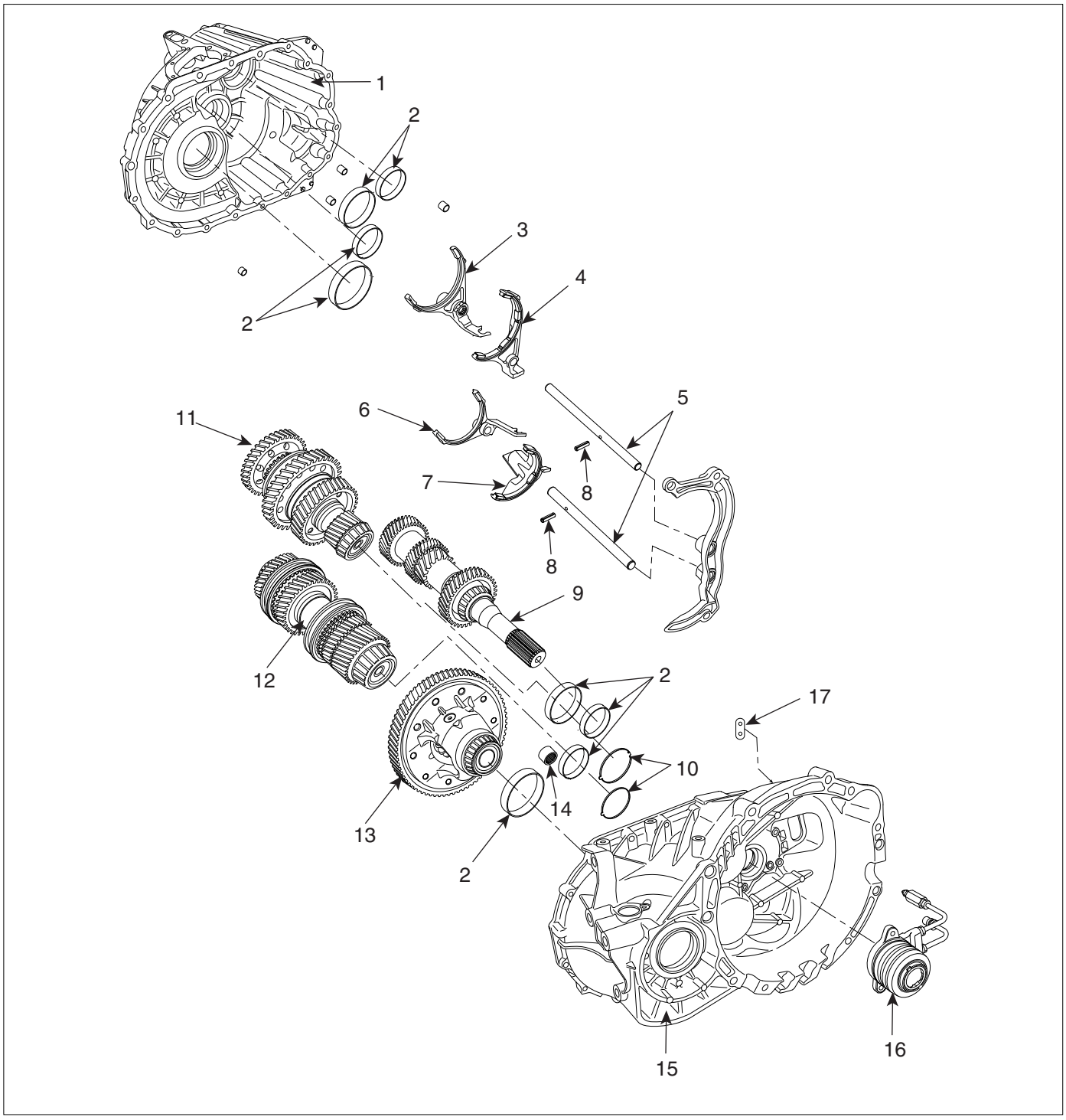

1. Transaxle case
2. Taper roller bearing outer race
3. 1st/2nd shift fork
4. Reverse shift fork
5. Shift rail
6. 3rd/4th shift fork
7. 5th/6th shift fork
8. Spring pin
9. Input shaft
10. Oil guide
11. 1st output shaft
12. 2nd output shaft
13. Differential assembly
14. Needle bearing
15. Clutch housing
16. Concentric slave cylinder assembly
17. Boot

EMRE006A

REMOVAL E1C16812

CAUTION

- ***Use a cover not to damage the vehicle surface.***
- ***Disconnect connectors carefully not to be damaged.***

NOTE

- *Mark wires or hoses for identification not to be confused.*

1. Remove the inter cooler assembly and the engine cover.(See 'EM' group).
2. Remove the battery (A).

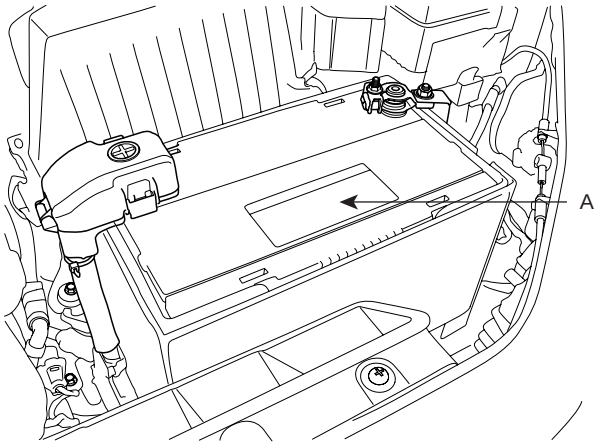

SCMMT6001D

3. Disconnect the AFS connector (A).

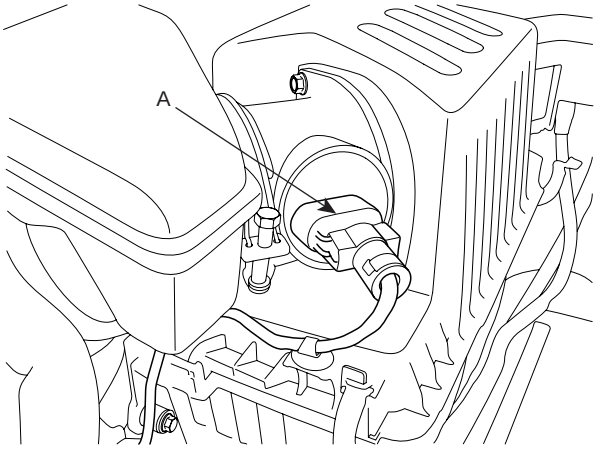

SCMMT6001L

4. Remove the air cleaner hose(B) and loosen the clamp bolt(A).

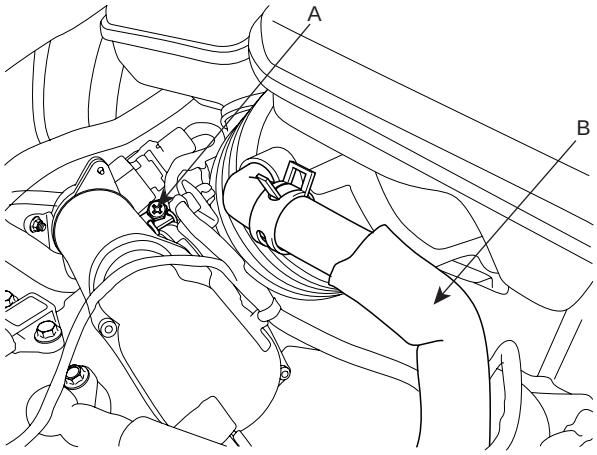

SCMMT6017L

5. Remove the air cleaner upper cover(B) by removing the clips(A).

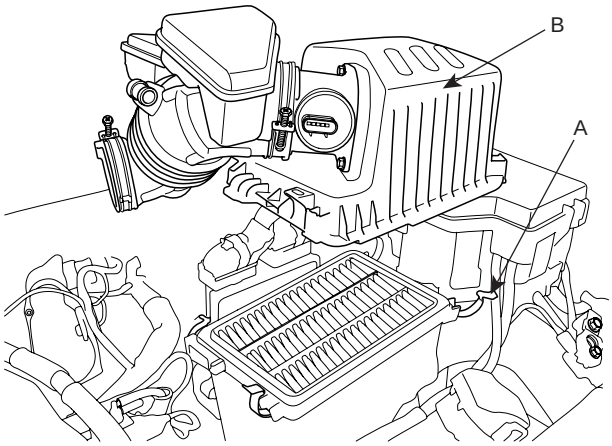

SCMAT6004D

6. Remove the air cleaner assembly (B) by removing the two mounting bolts(A).

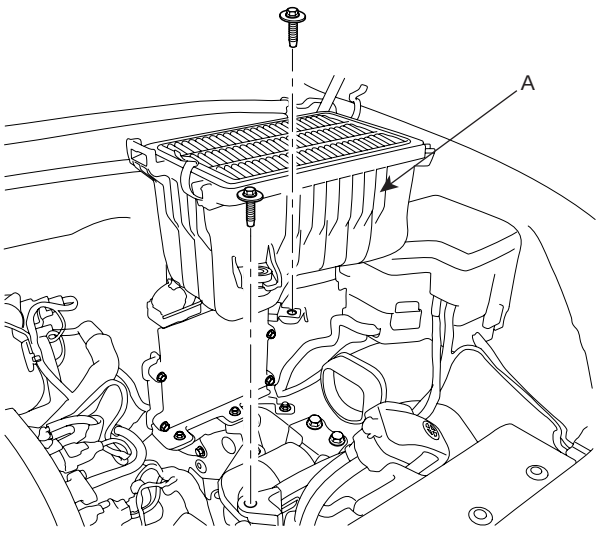

SCMAT6005D

7. Remove the battery tray (B) by removing the four mounting bolts (A).

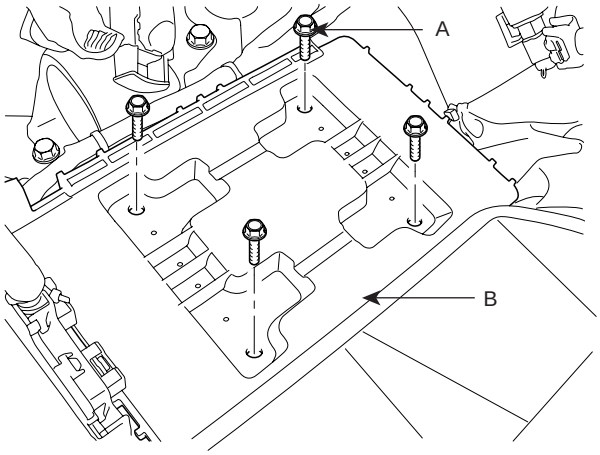

SCMMT6005D

8. Remove the ground wire (A) from the transaxle case.

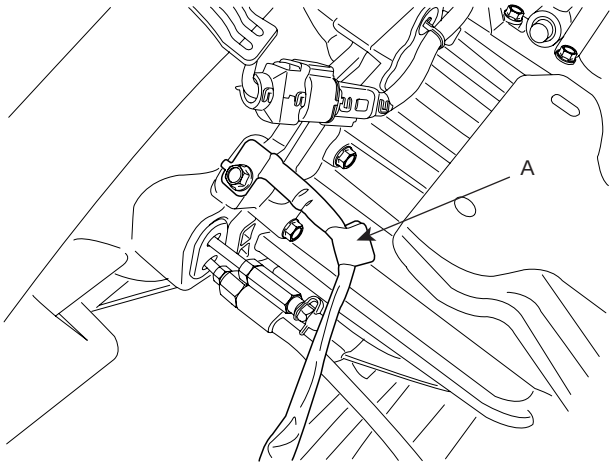

SCMMT6003L

9. Disconnect the vehicle speed sensor connector (A) and the back up lamp switch(B).

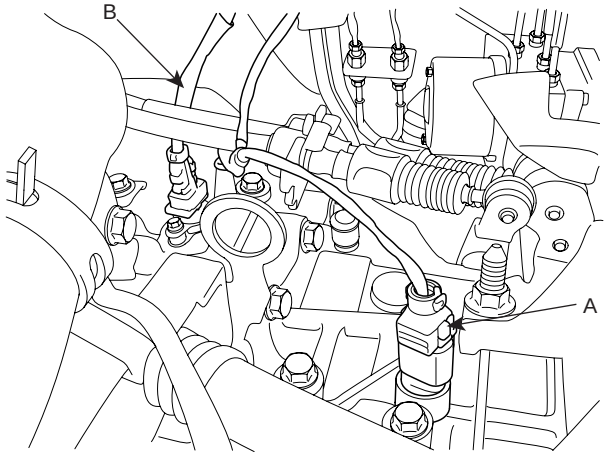

AMLF012A

10. Remove the control cable assemblies(A) by removing the snap pins(B) and clips(C).

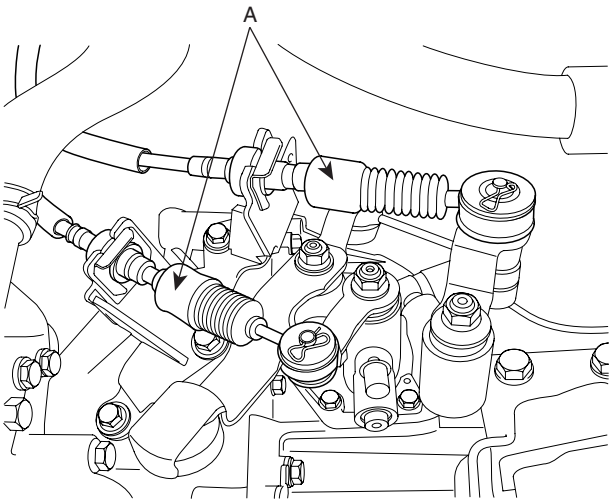

KMRE009D

11. Remove C.S.C (Concentric Slave Cylinder) tube(A) which is being clamped by loosening the nut(B).

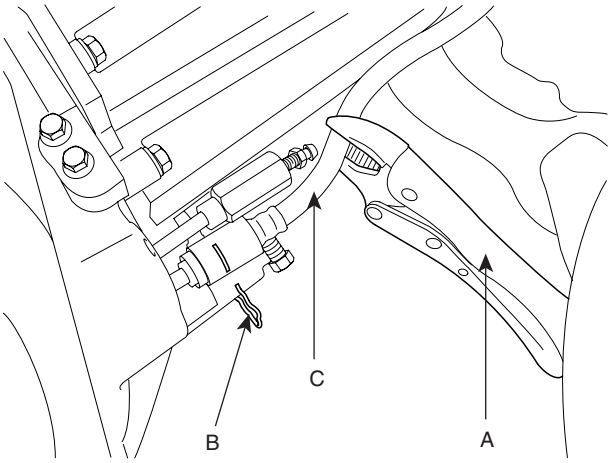

KMRE009F

12. Remove the four mounting bolts of upper part of the transaxle.

13. Support the engine and transaxle by using the special tool (09200-38001).

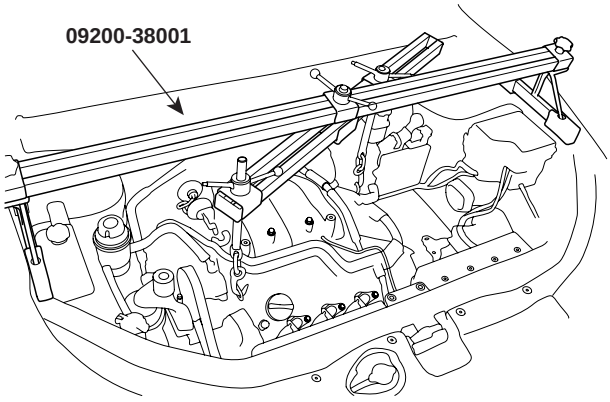

SCMMT6004L

14. Remove the transaxle insulator bracket (B) by removing the bolts (A).

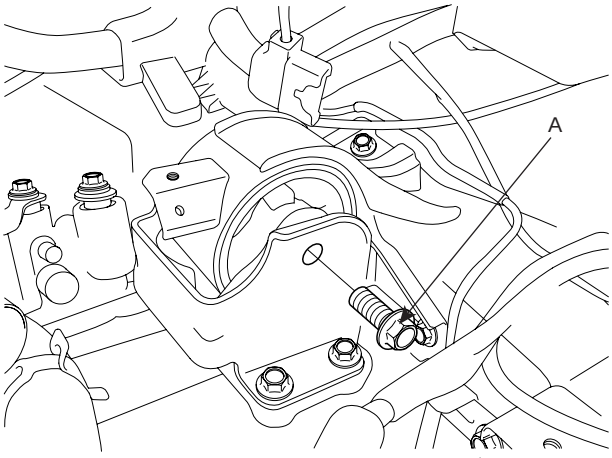

KMRE009W

15. Remove the front wheels and tires. (see SS group)

16. Lift up the vehicle.

17. Remove the steering column joint bolt. (see ST group).

18. Remove the under cover(A).

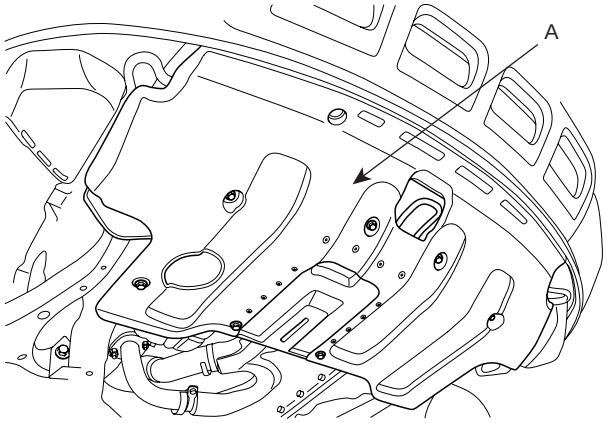

SCMMT6026L

19. Drain power steering oil through the return tube. (see ST group)

20. Disconnect the power steering pressure hose (A) from the power steering oil pump.

21. Drain the tranaxle fluid through the drain plug.

22. Disconnect the lower arm, the tie rod end ball joint, the stabilizer bar link from the front knuckle. (see SS group)

23. Remove the roll stopper mounting bolts.

24. Remove the mounting bolts from the sub frame by supporting the sub frame with a jack. (see SS group)

25. Remove the drive shafts from the transaxle. (see DS group)

26. Disconnect the starter motor connector and remove the starter motor. (see EE group)

27. In case of 4WD, remove the transfer case assembly.(See 'Transfer case' removal).

28. Remove the mounting bolts of lower part of the transaxle, and the left side cover and remove the transaxle assembly by supporting it with a jack.

INSTALLATION E3C9C32E

Installation is in the reverse order of removal.
Perform the following :

- Adjust the shift cable.
- Refill the transaxle with fluid.
- Refill the radiator with engine coolant.
- Bleed air from the cooling system with the heater valve open.
- Clean the battery posts and cable terminals with sandpaper, assemble them, and apply grease to prevent corrosion.

1. Lowering the vehicle or lifting up a jack, install the transaxle assembly.

2. Tighten the transaxle under mounting bolts.

TORQUE:
65~85 Nm(6.5~8.5 kgf.m, 47.0~61.5 lb-ft)

3. Install the starter motor and connect the starter motor connector. (see EE group)

4. In case of 4WD, install the transfer case assembly.(See 'Transfer case' installation)

5. Install the drive shafts to the transaxle. (See "DS" group)

6. Install the transaxle insulator (B) and mounting bracket (C) by tightening the bolts (A).

TORQUE:
60~80 Nm (6~8 kgf.m, 43.6~58.2 lb-ft)

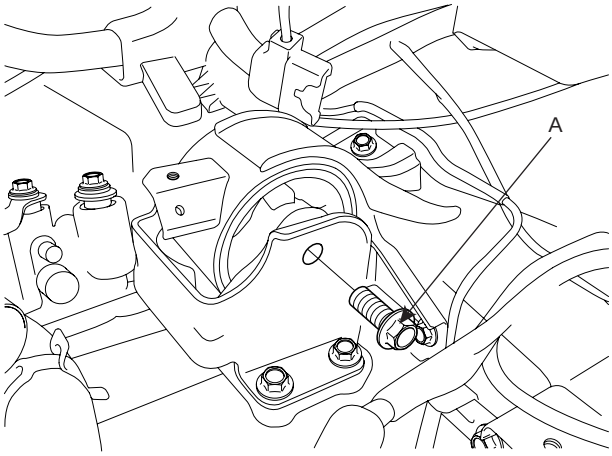

KMRE009W

7. Install the sub frame. (see SS group)

TORQUE:
60~80 Nm(6.0~8.0 kgf.m, 65.1~79.5 lb-ft)

8. Connect the power steering return hose. (see ST group)

9. Connect the lower arm, the rod end ball joint, the stabilizer bar link to the front knuckle.(see SS group)

10. Install the steering column joint bolt.(See ST group).

11. Install the C.S.C (Cincentric Slave Cylinder) tube(A) by tightening the nut(B).

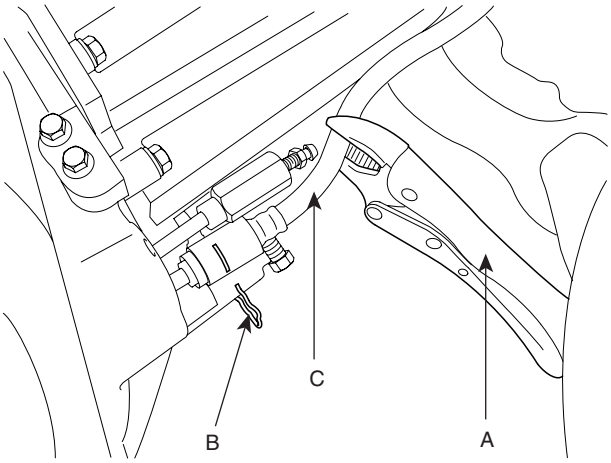

KMRE009F

12. Refill transaxle oil through the inlet hole(A).

TORQUE:
30~35 Nm(3.0~3.5 kgf.m, 21.8~25.4 lb-ft)

13. Install the under cover(A).

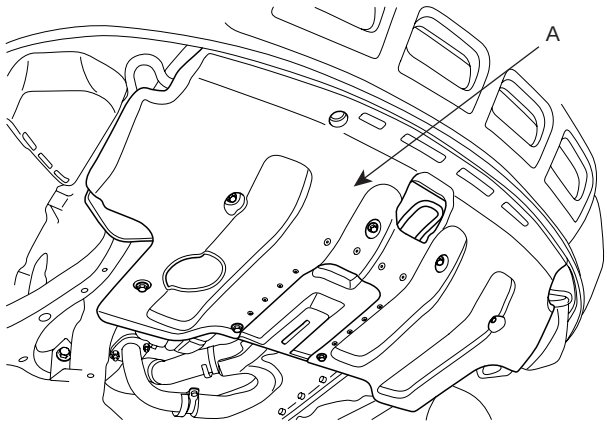

SCMMT6026L

14. Install the front wheels and tires. (see SS group)

15. Tighten the transaxle mounting bolts and remove the SST (09200-38001) holding the engine and transaxle assembly.

TORQUE:
65~85Nm(6.5~8.5kgf.m, 47.0~61.5 lb-ft)

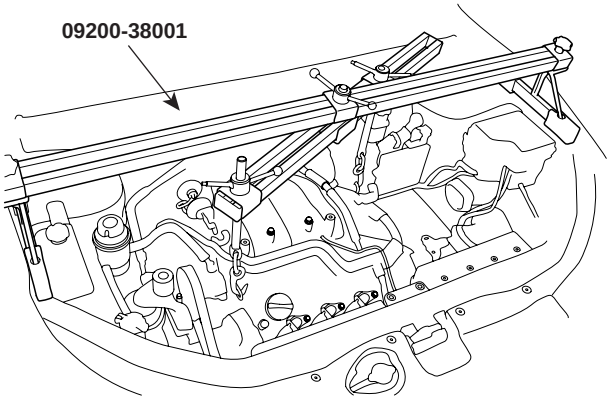

SCMMT6005L

16. Connect the power steering pressure hose (A) to the power steering oil pump.

17. Install the control cable assemblies(A) by tightening the clips (C) and snap pins (B).

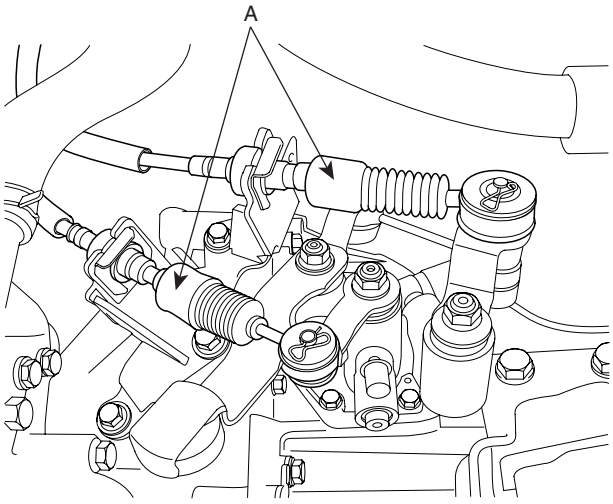

KMRE009D

18. Install the vehicle speed sensor connector (A).

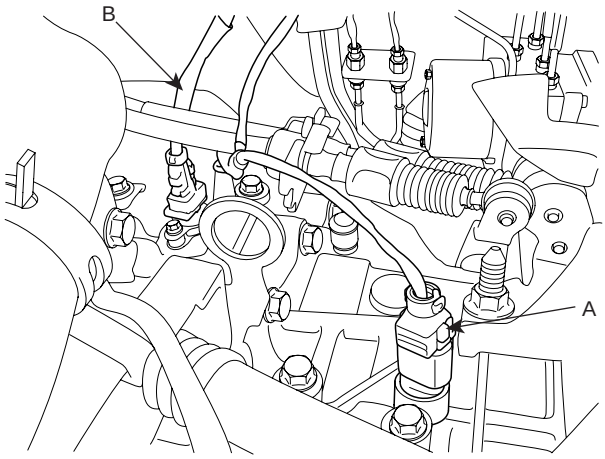

AMLF012A

19. Install the ground wire (A) from the transaxle case.

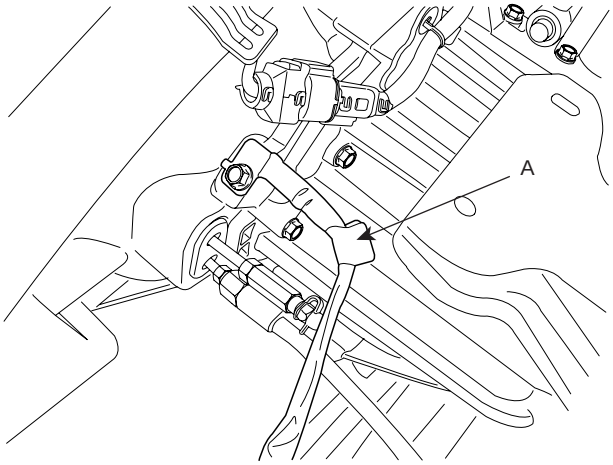

SCMMT6003L

20. Install the battery tray (B) by removing the four mounting bolts (A).

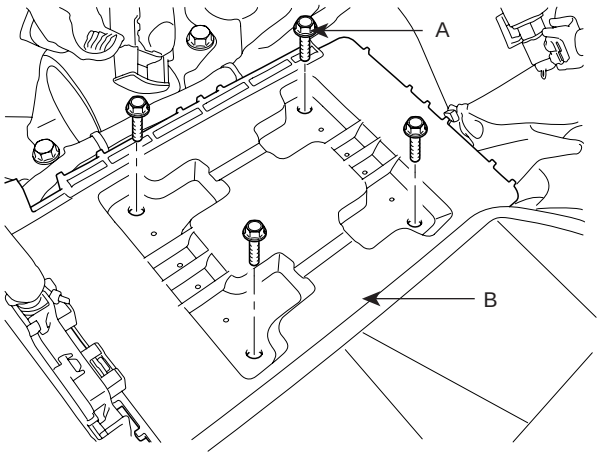

SCMMT6005D

21. Install the air cleaner assembly (B) by tightening the two mounting bolts(A).

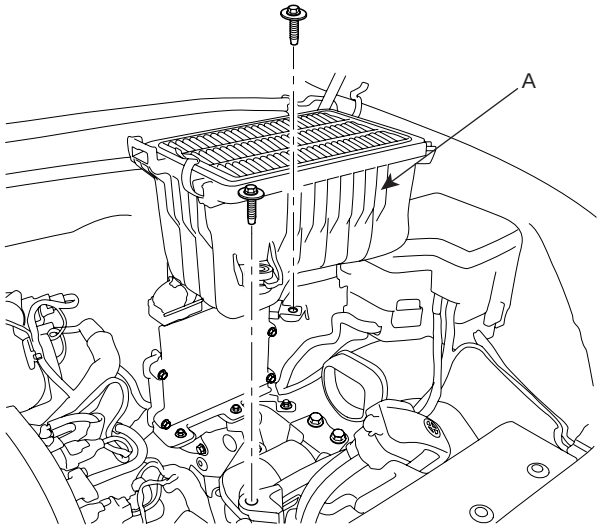

SCMAT6005D

22. Install the air cleaner upper cover (A).

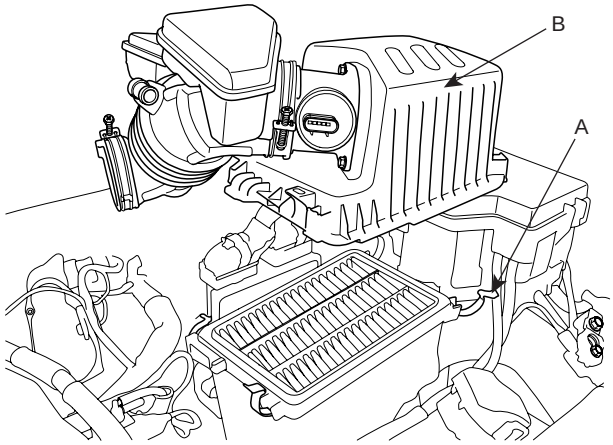

SCMAT6004D

23. Install the air cleaner hose(B) and tighten the clamp bolt(A).

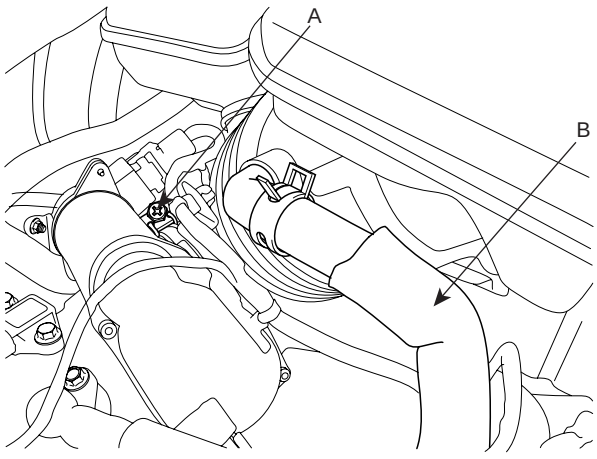

SCMMT6020L

24. Connect the AFS connector (A).

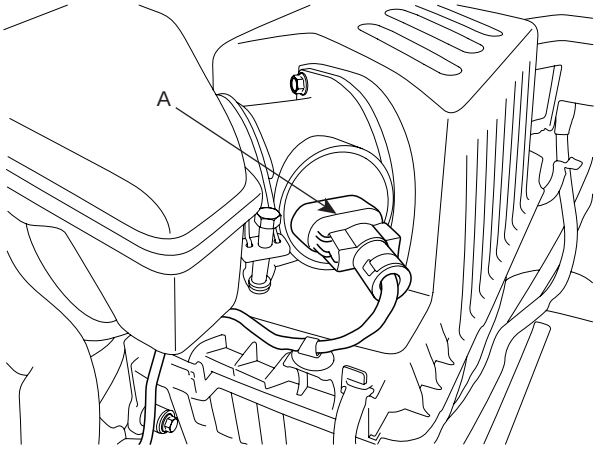

SCMMT6009L

25. Install the battery (A).

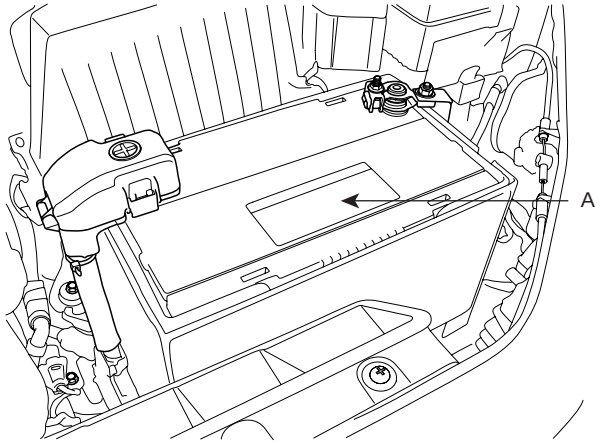

SCMMT6001D

26. Refill the power steering fluid.(See 'ST' group)

CAUTION

Bleed air in the system, after installing the inter cooler assembly and the engine cover.

27. Install the engine cover and the inter cooler assembly.(See 'EM' group)

MANUAL TRANSAXLE SHIFT CONTROL SYSTEM

COMPONENTS(1) E154A40E

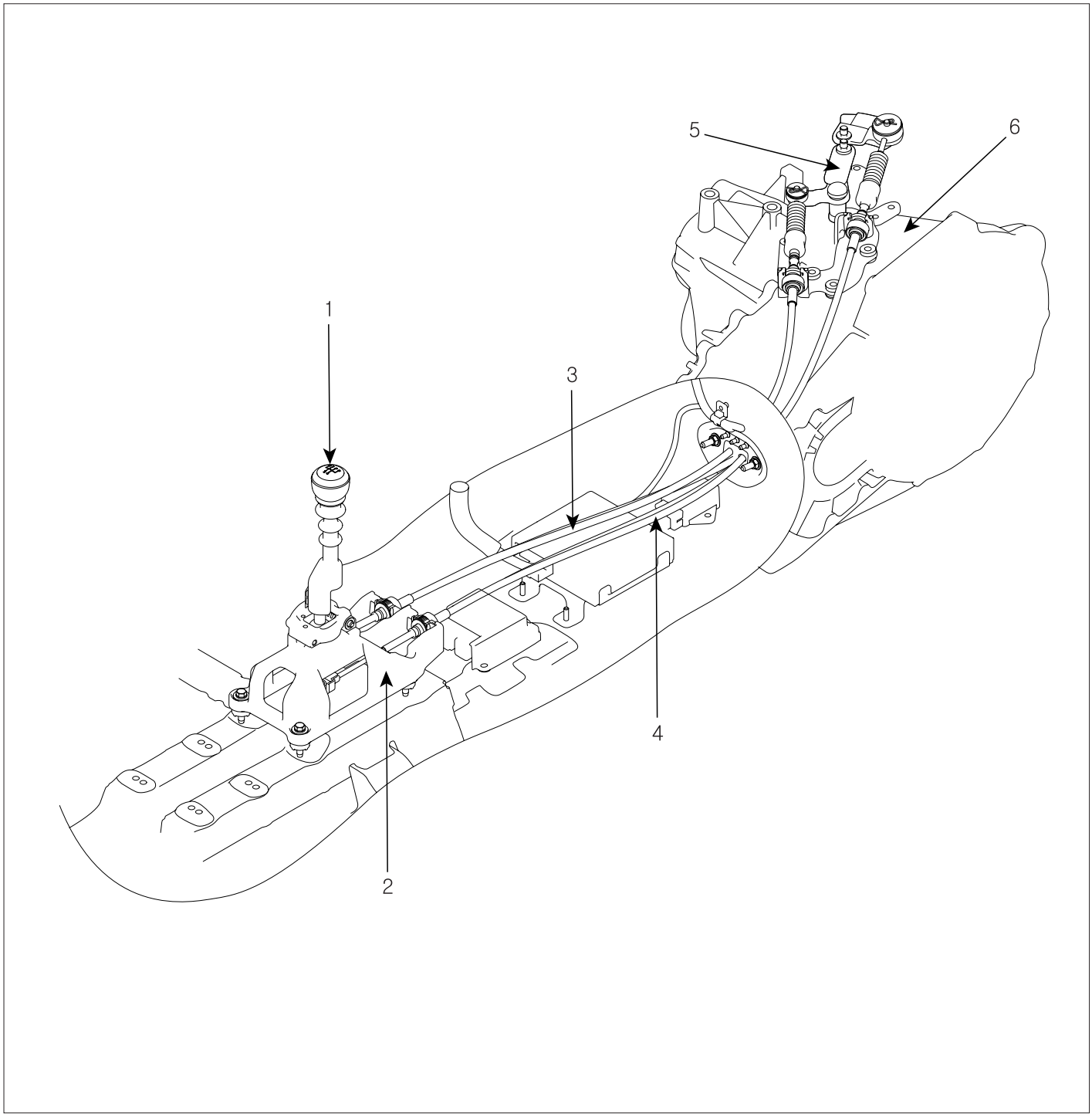

1. Shift lever knob
2. Shift lever assembly
3. Select cable assembly
4. Shift cable assembly
5. Shift lever assembly(MT side)
6. Manual transaxle assembly

SCMMT6600L

COMPONENTS(2)

[LHD]

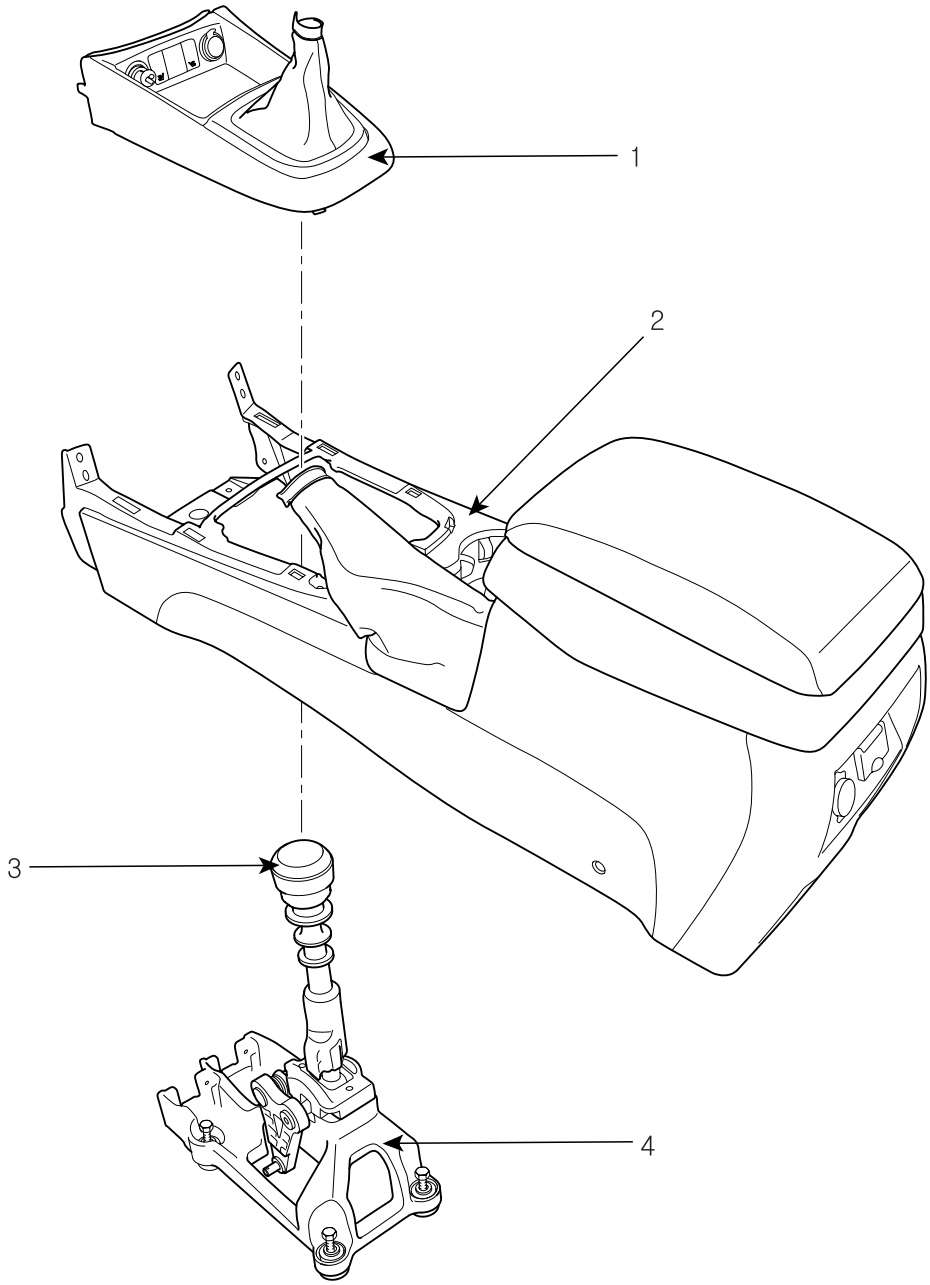

1. Console upper cover
2. Center console
3. Shift lever knob
4. Shift lever assembly

SCMMT6601L

[RHD]

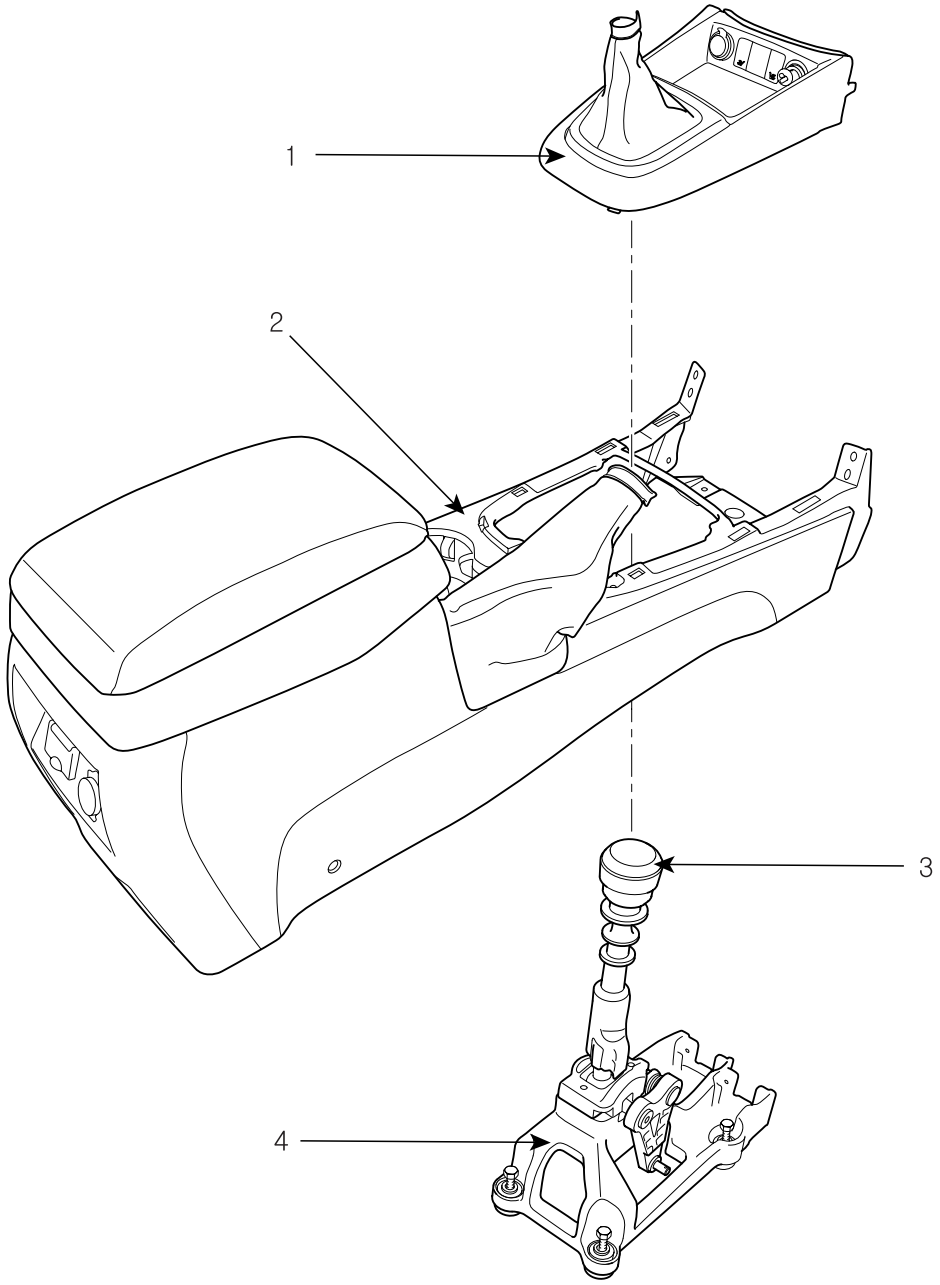

1. Console upper cover
2. Center console
3. Shift lever knob
4. Shift lever assembly

SCMMT6602L

REMOVAL E2DD20BB

1. Remove the upper cover(A) from the center console.
[LHD]

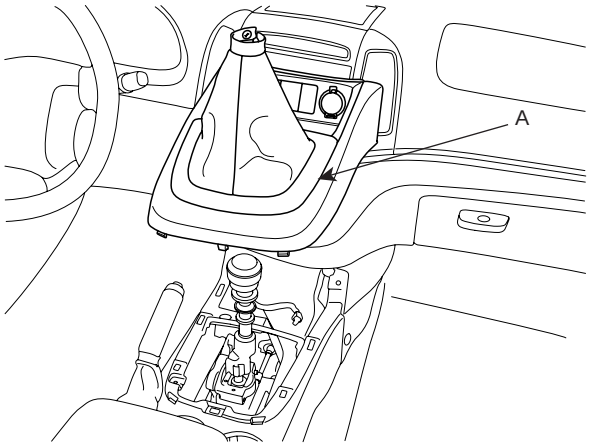

SCMMT6028D

[RHD]

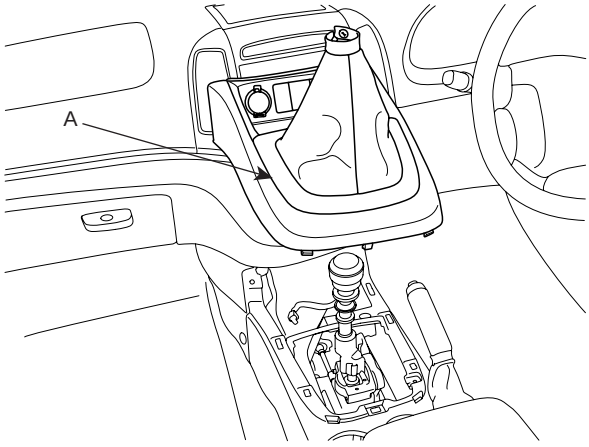

SCMMT6028R

2. Remove the center console.(see BD group)
[LHD]

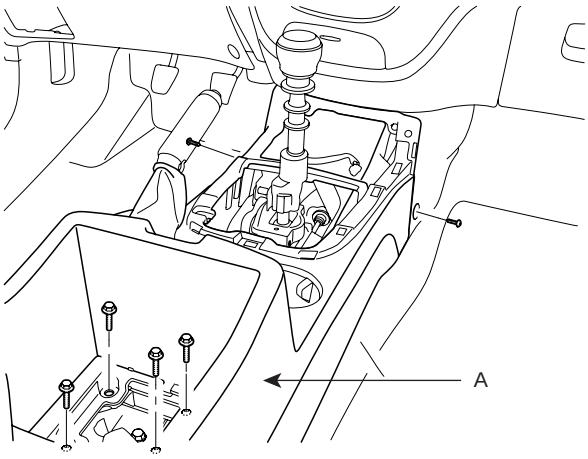

SCMMT6029D

[RHD]

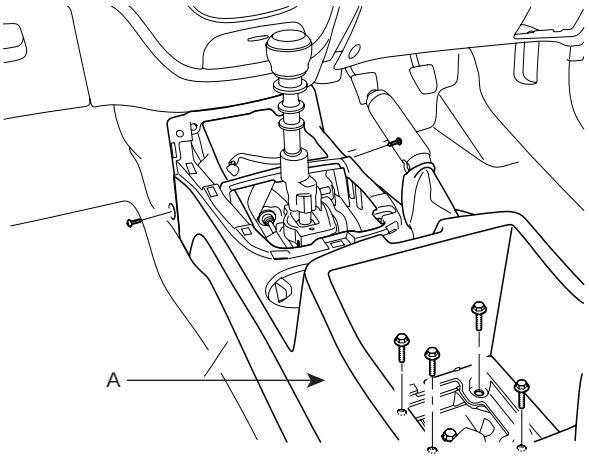

SCMMT6029R

3. Remove the snap pin(A) from the select cable and the clips(B).

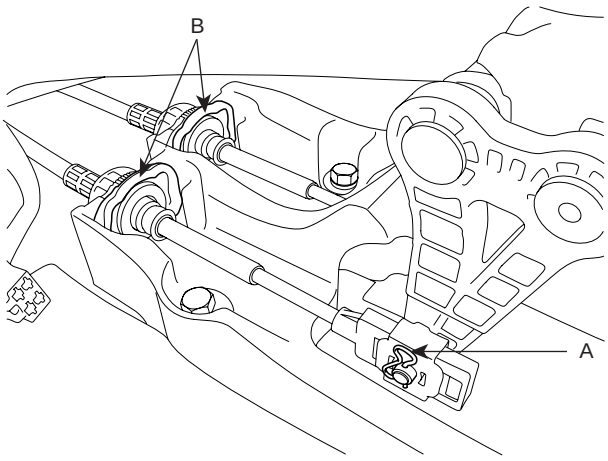

SCMMT6030D

4. Remove the clip(A) from the shift cable.

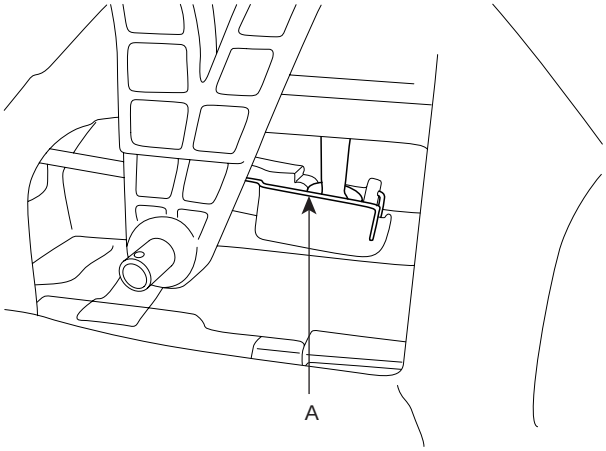

SCMMT6031D

5. Remove the shift lever assembly(A).

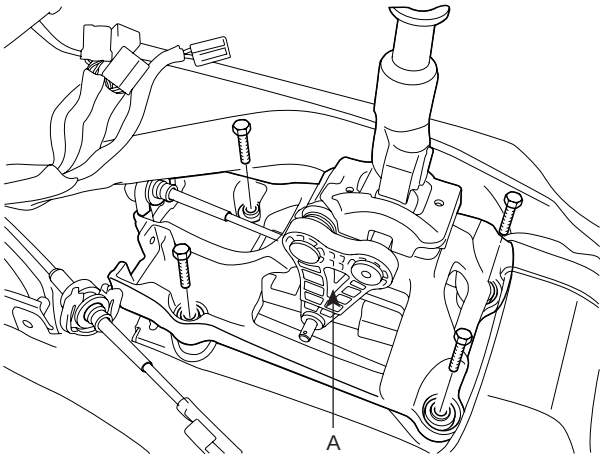

SCMMT6032D

6. Remove the retainer(A) and the nuts(B).

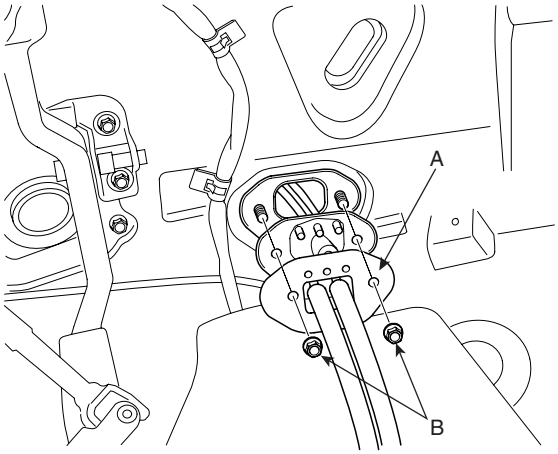

AMJF500A

7. Remove the cable assembly from the transaxle.(see Transaxle removal)

8. Remove the select and shift cable assemblies.

INSPECTION E9EE6C5E

1. Check the select cable for proper operation and for damage.

2. Check the shift cable for proper operation and for damage.

3. Check the boots for damage.

4. Check the boots for wear abrasion sticking, restricted movement or damage.

5. Check for the weak or damaged spring.

INSTALLATION E4EF81B3

1. Install the cable assembly placing the select and shift lever in neutral position.(see to Transaxle installation)

2. Install the retainer(A) and nuts(B).

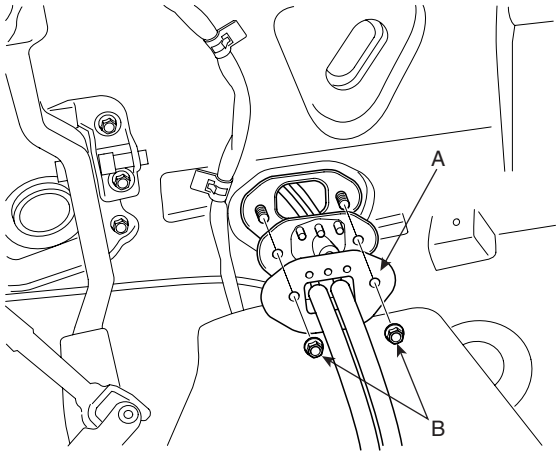

AMJF500A

3. Install the shift lever assembly(A).

TORQUE :
9~14Nm(0.9~1.4kgf.m, 6~9.5Ib-ft)

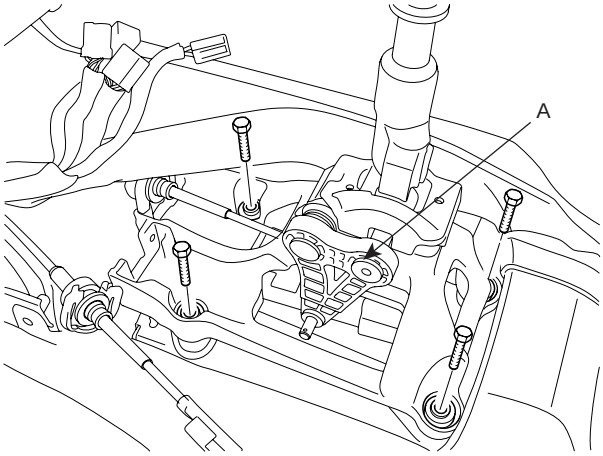

SCMMT6061D

4. Install the clip(A) connecting the shift cable and the shift lever.

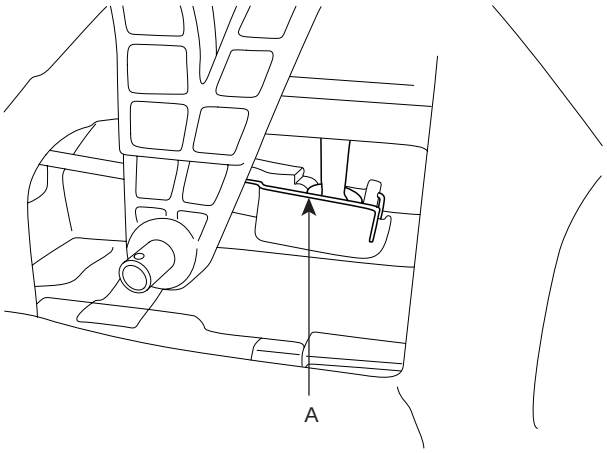

SCMMT6031D

5. Move the slide clip(B) of guide member(A) in the direction as shown in the illustration.

NOTE

Adjust the slide clip fit into the select lever moving the slide clip in the direction.

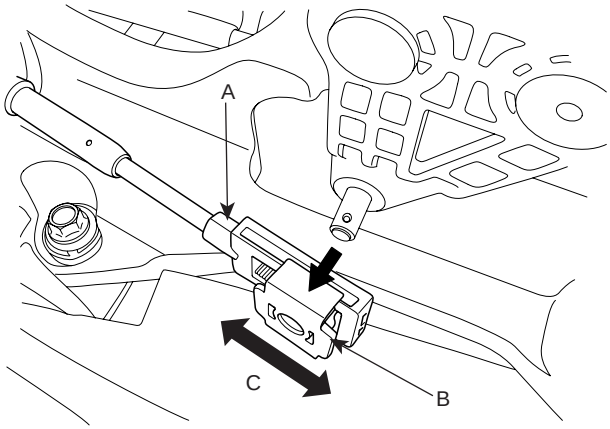

AMLF005A

6. Install the guide member(A) of the select cable(B).

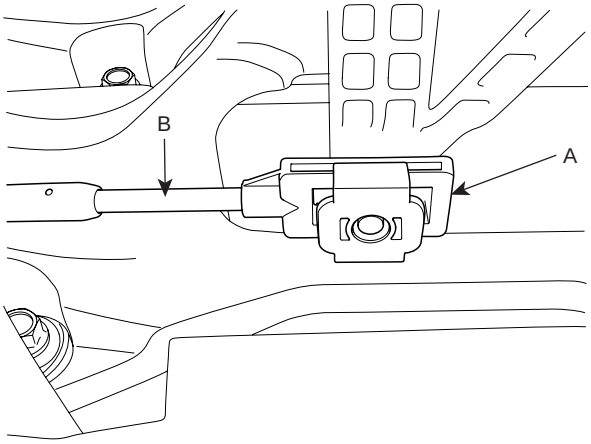

AMLF006A

7. Adjust the slide clip(B) to fit it into the select lever pin(A) and install the snap pin(C).

NOTE

Insert the slide clip in the direction as shown in the illustration.

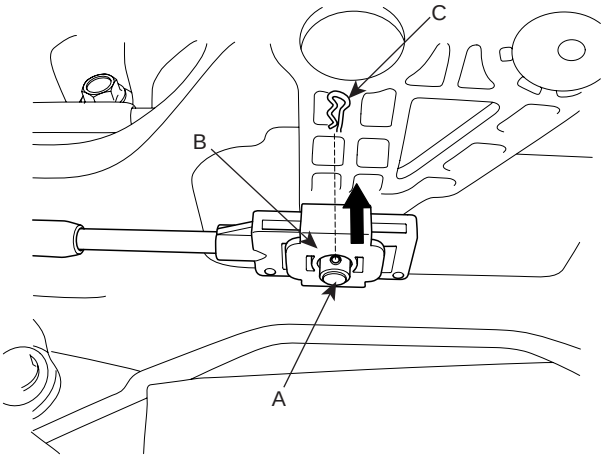

AMLF007A

8. Install the center console(A).
[LHD]

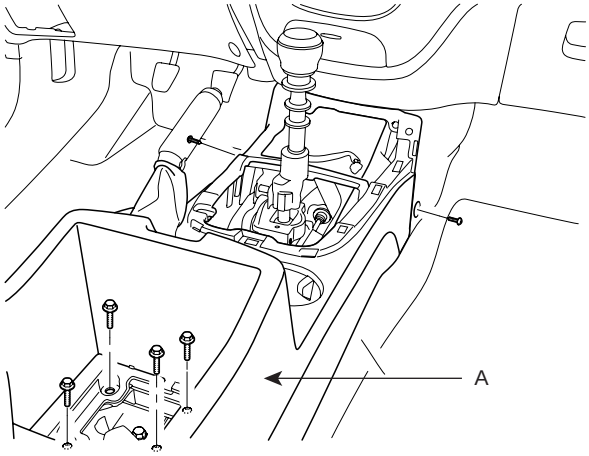

SCMMT6029D

[RHD]

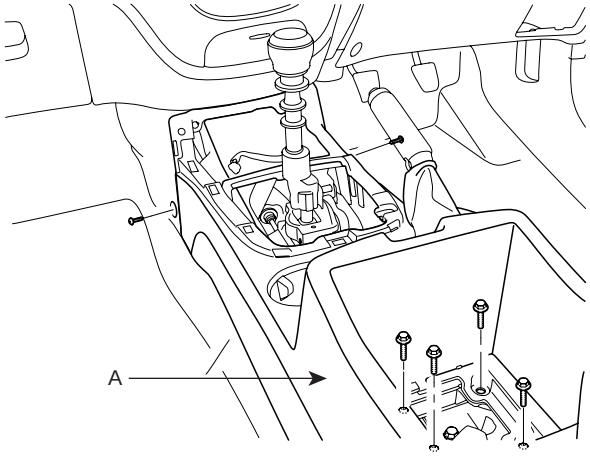

SCMMT6029R

9. Install the upper cover(A) to the center conole.
[LHD]

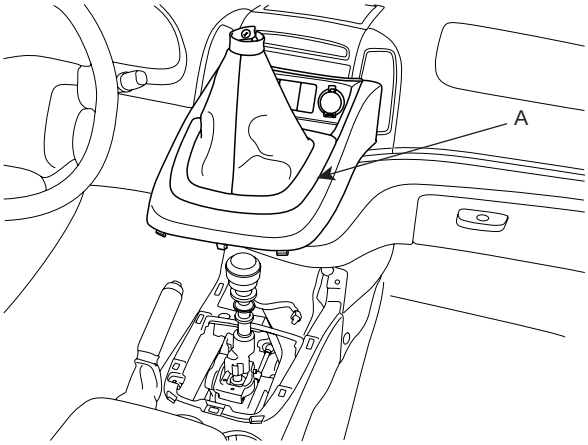

SCMMT6028D

[RHD]

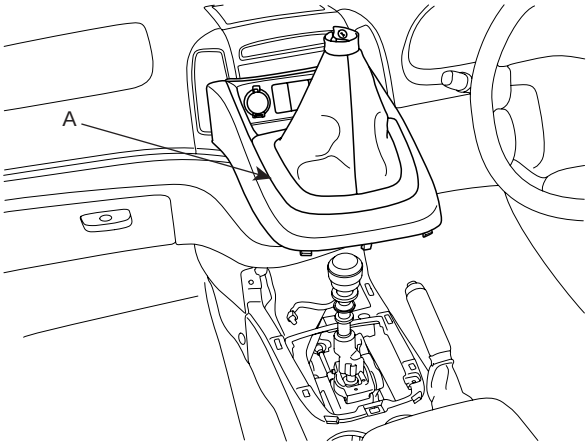

SCMMT6028R

TRANSFER CASE ASSEMBLY

POWER FLOW MECHANISM E2A1A036

- Normal driving situation: 2WD base driving
- 4WD driving in driving situations (rapid activation, cornering etc.)

1. Input the information from each sensor in vehicle
   - Input torque (Throttle position sensor)
   - Cornering situation (Steering angle sensor)
   - Vehicle speed and different wheel speed front & rear (Wheel speed sensor)
   - Braking situation (Brake signal and ABS signal)
2. Distributed the required driving force after 4WD ECU operates.
3. EMC (Electric Magnetic Clutch) operates the primary clutch.

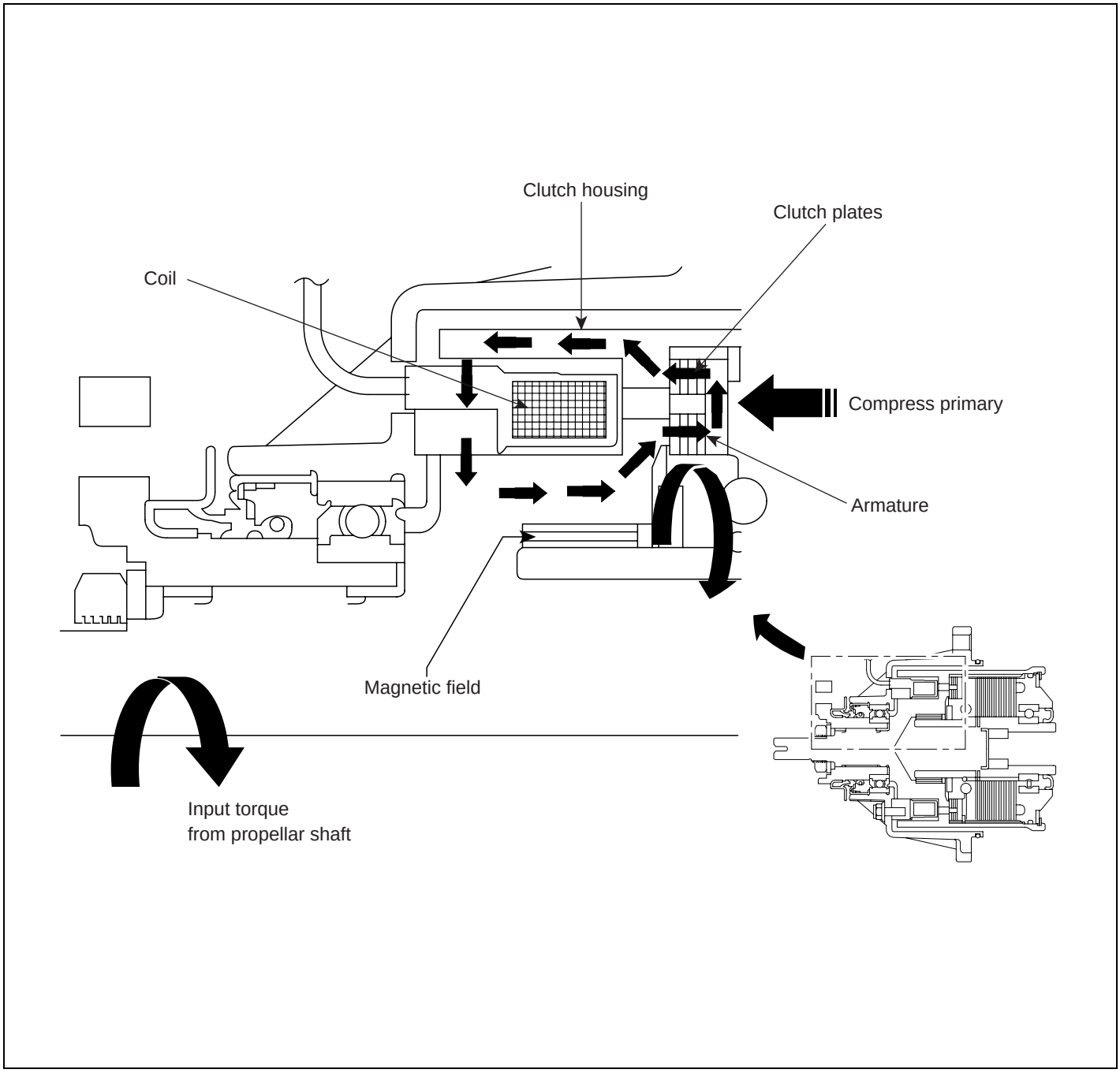

EKQE003C

4. Control the cam's opening gap by operation of primary clutch.

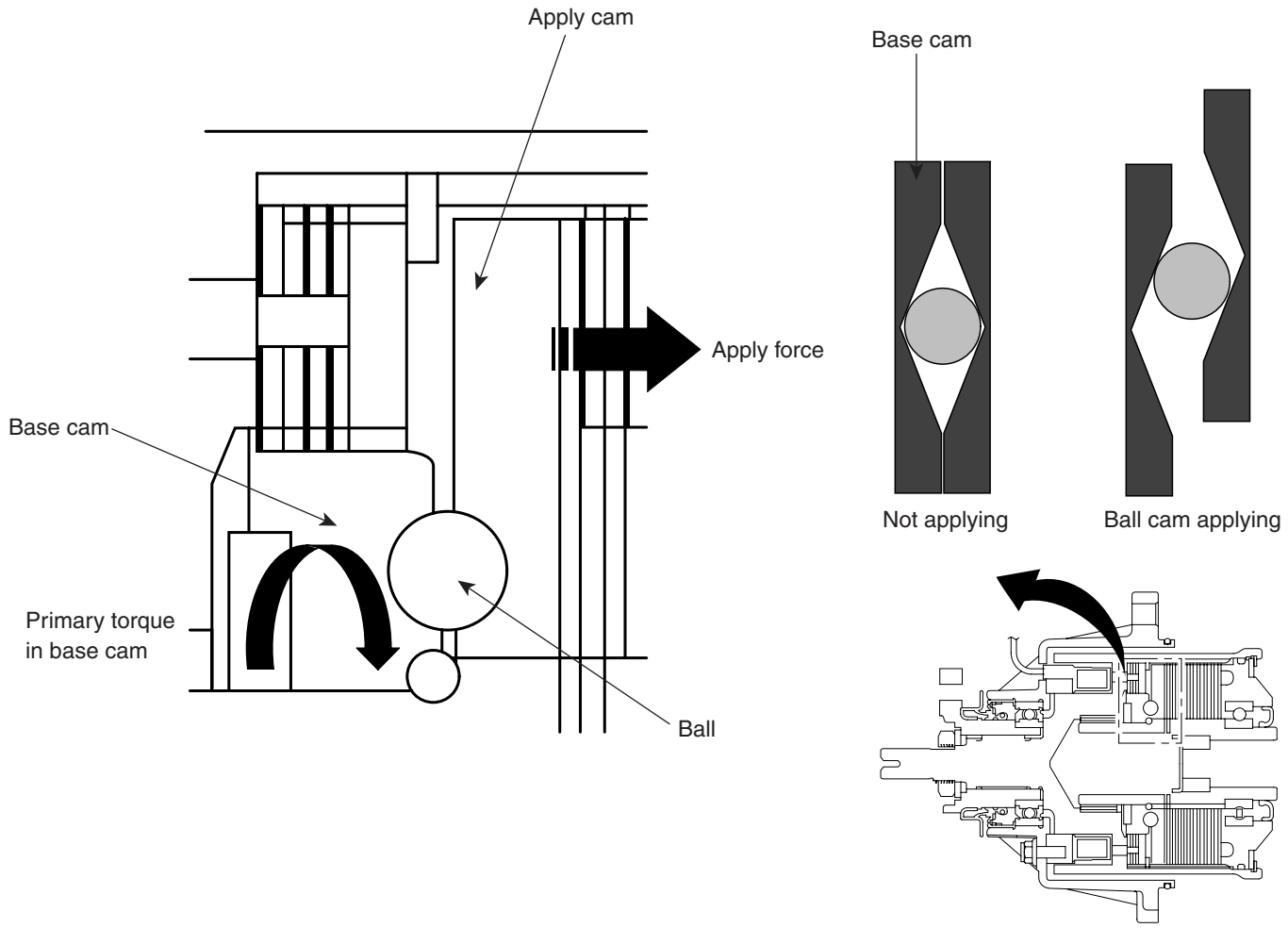

EKQE004C

5. Control the slip of inner & outer plate.
   Control variably the driving force distribution to optimize front & rear driving force.

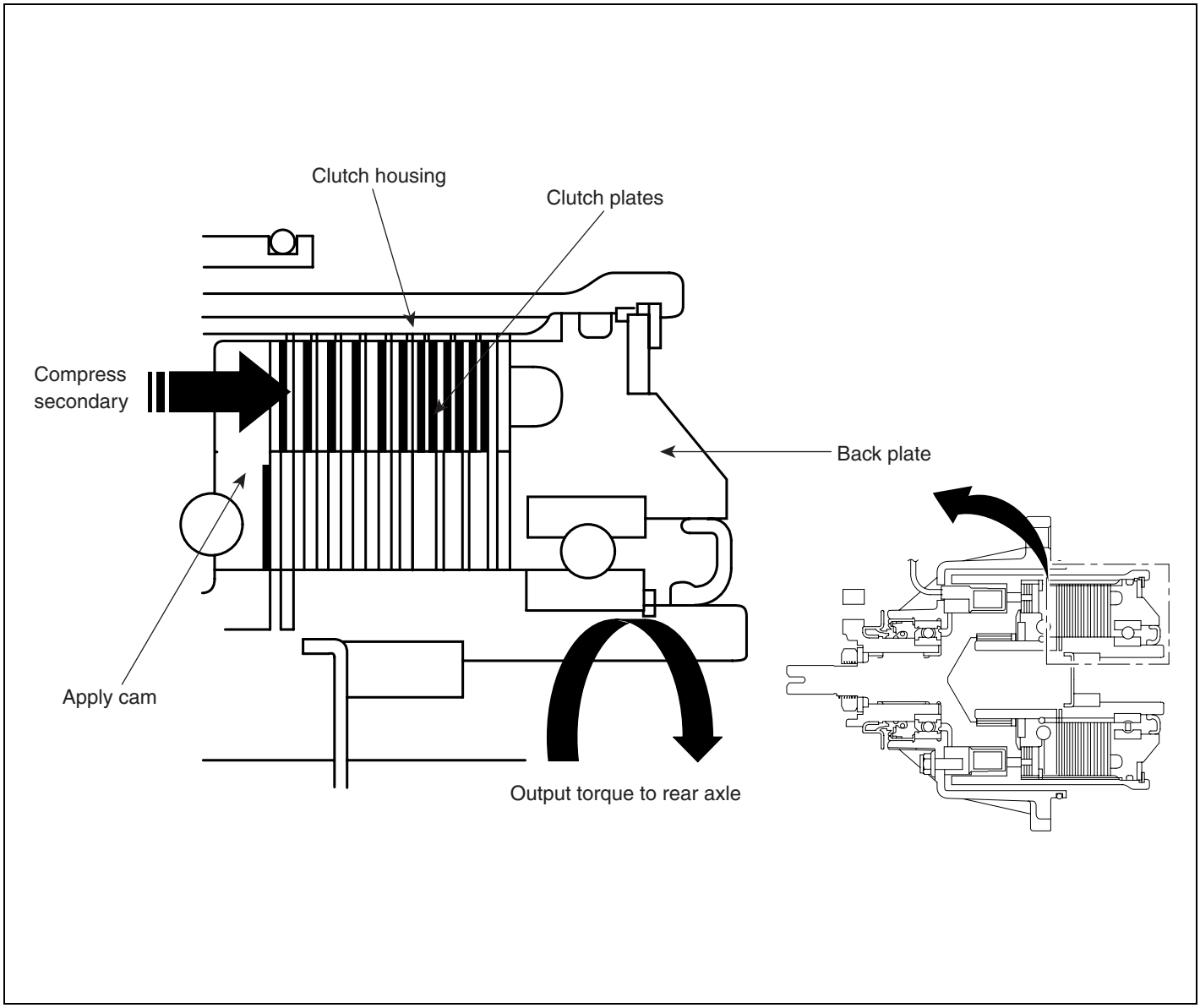

EKQE005C

SYSTEM SCHEMATICS E3DEDDB2

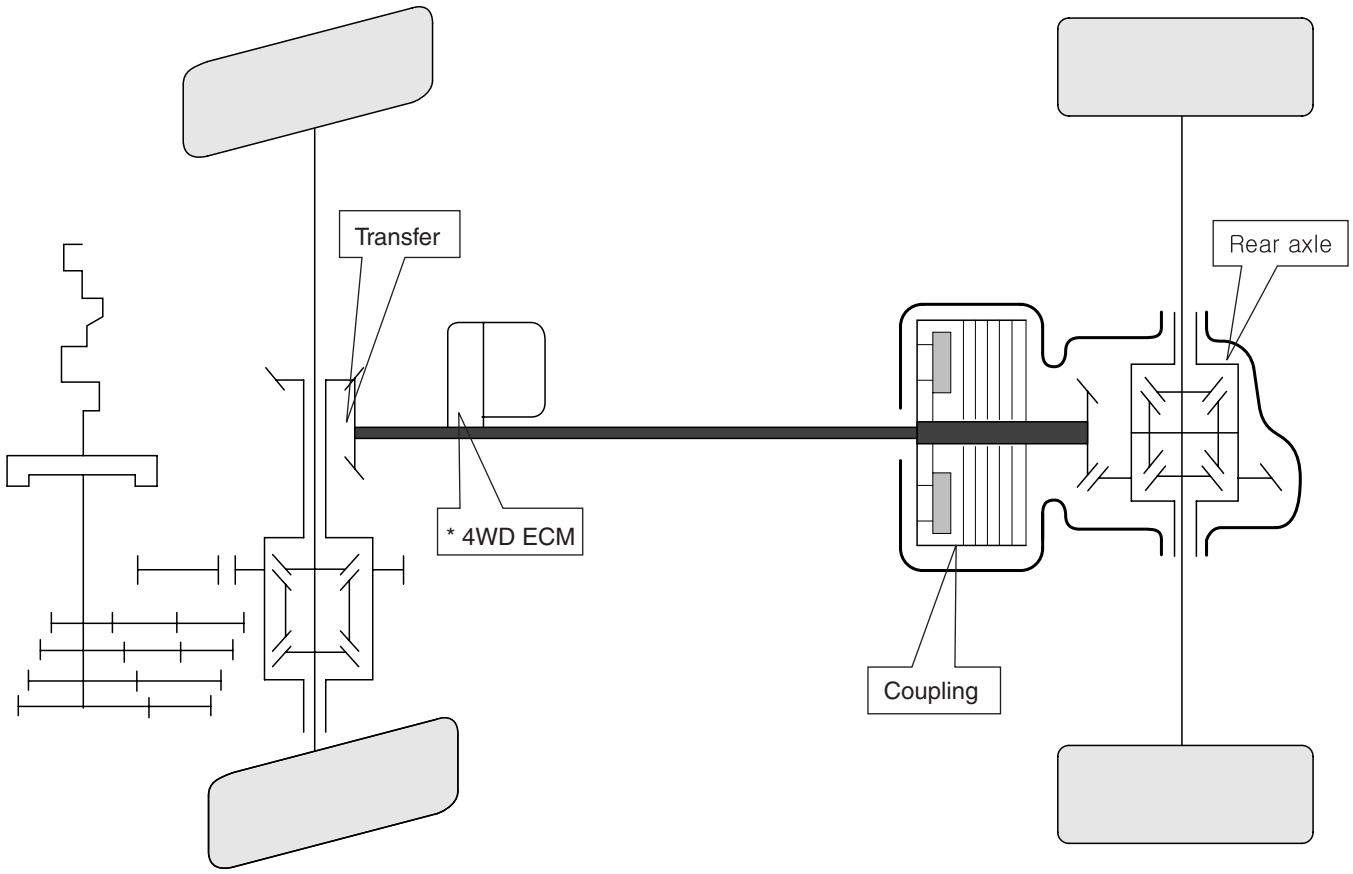

* 4WD ECM is located under a select lever bracket

EKQE001C

CONTROL ALGORITHM FLOW CHART

The base control algorithm of the ITM ECM is defined by the following flowchart:

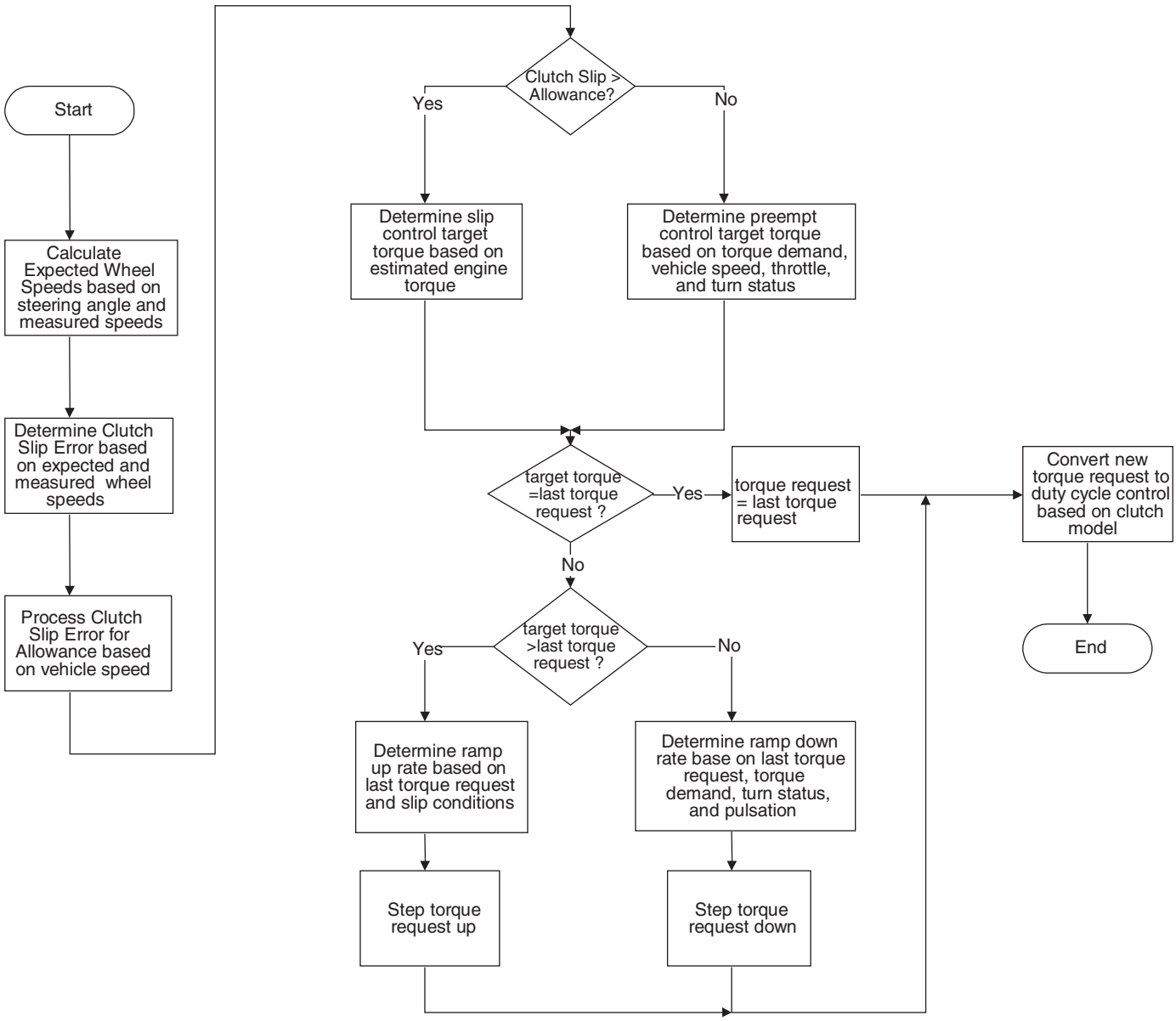

ELQE214A

LOCK MODE DESCRIPTION

- Based on a driver request for lock mode, the system will supply a fixed torque to the ITM-I clutch.
- When the vehicle exceeds 30KPH the system will begin to disable lock mode by ramping down the ITM clutch torque. When the vehicle exceeds 40 KPH the ITM clutch is reduced to its minimum torque value. Lock mode is re-enabled following the same speed-to-torque map.
- Lock mode is activated based on part number.

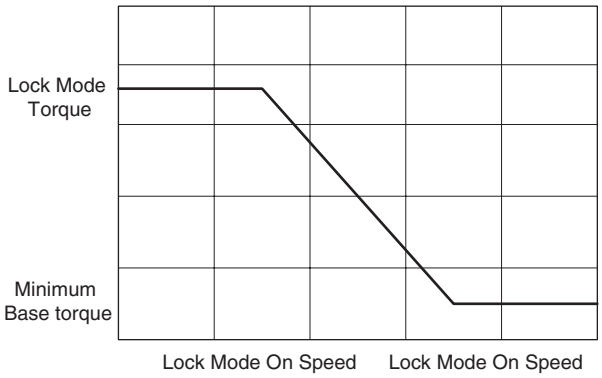

ELQE501I

- Lock mode will override all other system requests except for during an ABS event. During an ABS event the ITM clutch is turned off.
- If there is a speed sensor signal fault, the speeds are no longer considered reliable and lock mode will be disabled.

DTC TROUBLESHOOTING EB8E3D51

4WD ECM DTC INDEX

DTC No.	DESCRIPTION	4WD MIL	REMARK
P0120	TPS LOSS OF SIGNAL	Whenever the DTCs relevant to 4WD ECM are set, 4WD MIL(*) will blink.	MT-29
P1717	STEER 1 INPUT SIGNAL		MT-33
P1718	STEER 3 IN PUT SIGNAL		MT-40
P1719	STEER N INPUT SIGNAL		MT-44
P1728	EMC-OPEN/SHORT TO BATTERY		MT-48
P1745	ECU INVALID PART NUMBER		MT-54
P1750	FRONT LEFT SPEED SENSOR(FL)-With ESP, ABS		MT-57
P1751	FRONT RIGHT SPEED SENSOR(FR)-With ESP, ABS		MT-57
P1752	REAR LEFT SPEED SENSOR(RL)-With ESP, ABS		MT-57
P1753	REAR RIGHT SPEED SENSOR(RR)-With ESP, ABS		MT-57
P1769	TIRE SIZE FAULT		MT-61
P1770	ECU LOCK MODE THERMAL PROTECT		MT-63
P1771	ECU SHUTDOWN THERMAL PROTECT		MT-63
P1780	INVALIID ENGINE SIZE		MT-66
U0001	CAN BUS OFF		MT-68
U0100	CAN MI-COM OR CIRCUIT MAL		MT-72
U0101	TCU-ITM CAN COMM. LINE		MT-73
U0121	ABS-ITM CAN COMM. LINE		MT-74
U0122	ESP-ITM CAN COMM. LINE		MT-75
U0126	SAS-ITM CAN COMM. LINE		MT-76

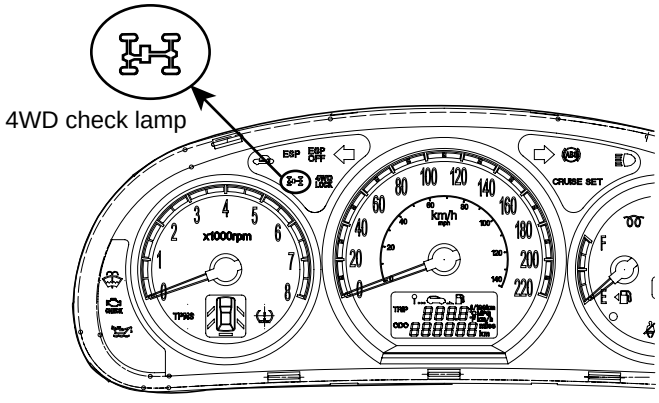

SCMMT6024L

4WD ECM PIN DESCRIPITION

C258

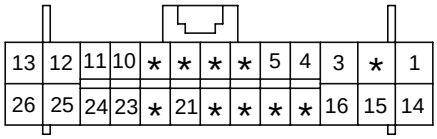

SCMMT6012L

Terminal Number	Description	Remark
1	EMC OUTPUT	
2	STEERING REFERANCEE - 5V	W/O ESP
3	STEERING *2	W/O ESP
4	STEERING *1	W/O ESP
5	-	
6	DIAGNOSTIC LAMP	
7	-	
8	-	
9	-	
10	-	
11	4 WHEEL DRIVE INDICATOR	
12	IGNITION INPUT	
13	K-LINE	
14	EMC RTN	
15	STEERING REFERANCE RTN	W/O ESP
16	STEERING REFERANCE C	W/O ESP
17	LOCK SWITCH INPUT	
18	-	
19	-	
20	-	
21	-	
22	CAN HIGH	
23	CAN LOW	
24	ECU GROUND	
25	-	
26	BATTERY INPUT	

DTC P0120 THROTTLE/PEDAL POSITION SENSOR/SWITCH "A" CIRCUIT (GASOLINE) / ACCELERATOR POSITION SENSOR 1-GENERAL ERROR (DIESEL)

COMPONENT LOCATION ED441AB4

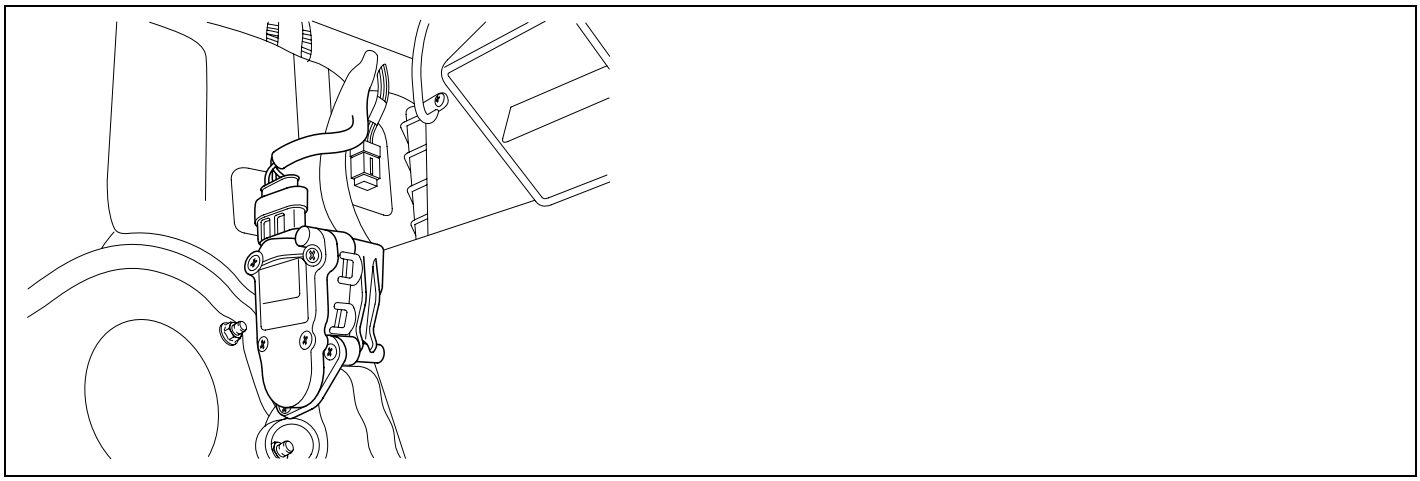

SCMMT6200L

GENERAL DESCRIPTION EA846609

TPS(or APS) signal which is used for judging driver's intention is received from engine ECU through CAN line.
This signal is a criteria signal to determind amount of torque distribution at front/rear wheel with steering angle sensor, wheel speed sensor, break signal.

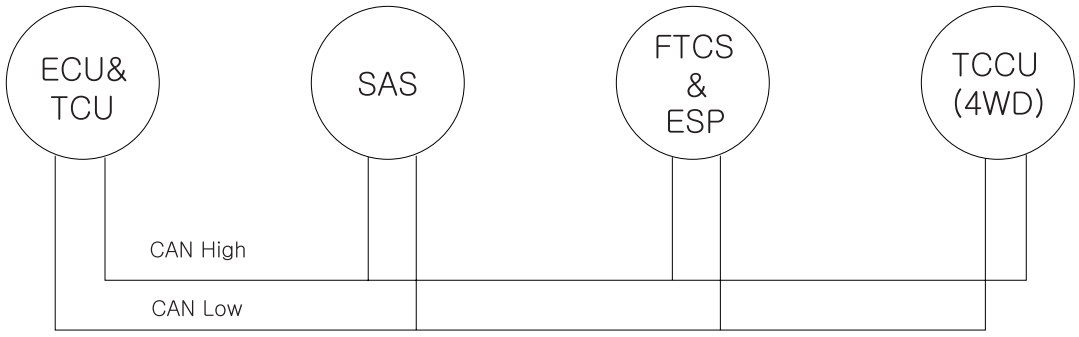

SCMMT6201L

DTC DESCRIPTION E6107AF4

This code related to communication line between ECU and TCCU is set when CAN signal from ECU can't received for more than 1sec or ECU internal error occur.
If failure is detected TCCU prohibits the ITM control and cuts the current to control coil.

DTC DETECTING CONDITION EB0BF0AC

Item	Detecting Condition	Possible Cause
DTC Strategy	• Loss of signal out of range	• ECM,TCCU connector looseness and poor terminal to wire connection • CAN HIGH/LOW circuit open/short • APS(TPS) faulty • Faulty ECM • Faulty TCCU
Enable Conditions	• Message present 1.0 sec self clearing	
Threshold Value	• A fault code of FFH from the C.A.N. Bus, Signal lost for 1 sec. Fault code stored in memory	
Diagnosticn Time	• 1 sec	
MIL on condition	• 0.5 Sec	
Fail Safe	• TPS=0 ITM Controller will not re-act to pre-empt. Pre-empt=0. The ECU will not send current to the clutch coil	

SIGNAL WAVEFORM & DATA E6A8A621

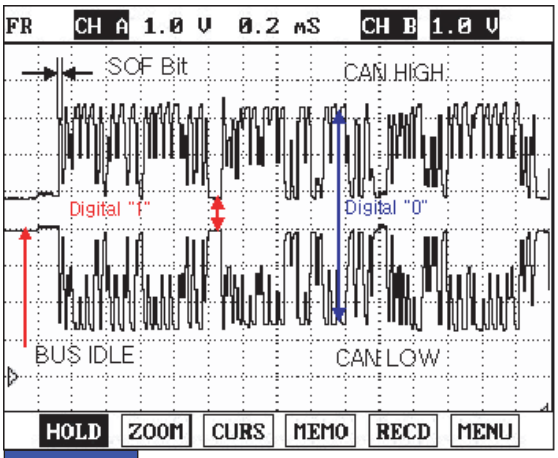

FIG.1)

FIG.1) CAN Signal : high & low

SCMMT6202L

TERMINAL AND CONNECTOR INSPECTION EF0D1B03

1. Many malfunctions in the electrical system are caused by poor harness and terminals. Faults can also be caused by interference from other electrical systems, and mechanical or chemical damage.

2. Thoroughly check connectors for looseness, poor connection, bending, corrosion, contamination, deterioration,or damage.

3. Has a problem been found?

YES

▶ Repair as necessary and go to "Verification of Vehicle Repair" procedure.

NO

▶ Go to " CAN Signal Inspection " procedure.

CAN SIGNAL INSPECTION EBD92ADA

1. Ignition ON, Engine : ON.
2. TCCU connector : Connect.
3. Monitor signal waveform between terminal 4, 5 of TCCU harness connector and chassis ground.
4. Shift to N Range.

Specification : Signal Waveform & Data

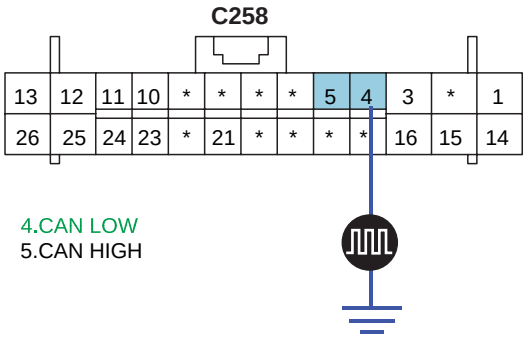

SCMMT6203L

CAUTION

The above value is only for reference.
The actual value may differ from it according to various engine condition.

5. Is CAN Signal display near the specified value?

YES

▶ Fault is intermittent caused by poor contact in the sensor's and/or TCCU's connector or was repaired and TCCU memory was not cleared.Thoroughly check connectors for looseness, poor connection, bending, corrosion, contamination, deterioration, or damage. Repair or replace as necessary and then go to "Verification of Vehicle Repair" procedure.

NO

▶ Go to " CAN comm. Line Inspection " procedure.

CAN COMM. LINE INSPECTION E1ADC5FF

1. IG "OFF" & ENG "OFF"
2. TCCU connector : Disconnect.
3. Measure resistance between terminal "4" of the TCCU harness connector and terminal "5" of the TCCU harness connector.

Specification : Approx. 60Ω

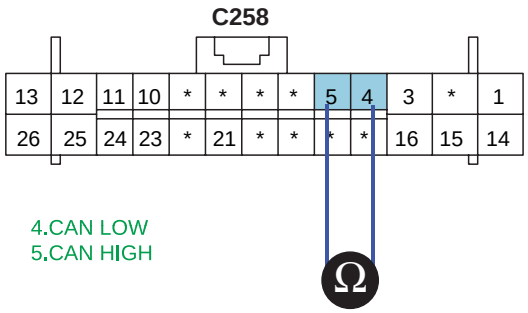

SCMMT6204L

CAUTION

The above value is only for reference.
The actual value may differ from it according to various engine condition.

4. Is resistance display near the specified value?

YES

▶ Fault is intermittent caused by open or short in CAN signal harnessor was repaired and TCCU memory was not cleared. Go to the applicable troubleshooting procedure.

NO

▶ Check for open/short in CAN comunication line of TCCU circuit.
▶ Check for the signal or component of Engine control module.
▶ Repair as necessary and then go to "Verification of Vehicle Repair" procedure.

VERIFICATION OF VEHICLE REPAIR E822CE08

1. Connect scan tool and select "Diagnostic Trouble Codes(DTCs)" mode.
2. Using scantool, Clear DTC.
3. Operate the vehicle within DTC Enable conditions in General information.
4. Are any DTCs present ?

YES

▶ Go to the applicable troubleshooting procedure.

NO

▶ System is performing to specification at this time.

DTC P1717 STEER 1 INPUT SIGNAL

COMPONENT LOCATION E4F433AA

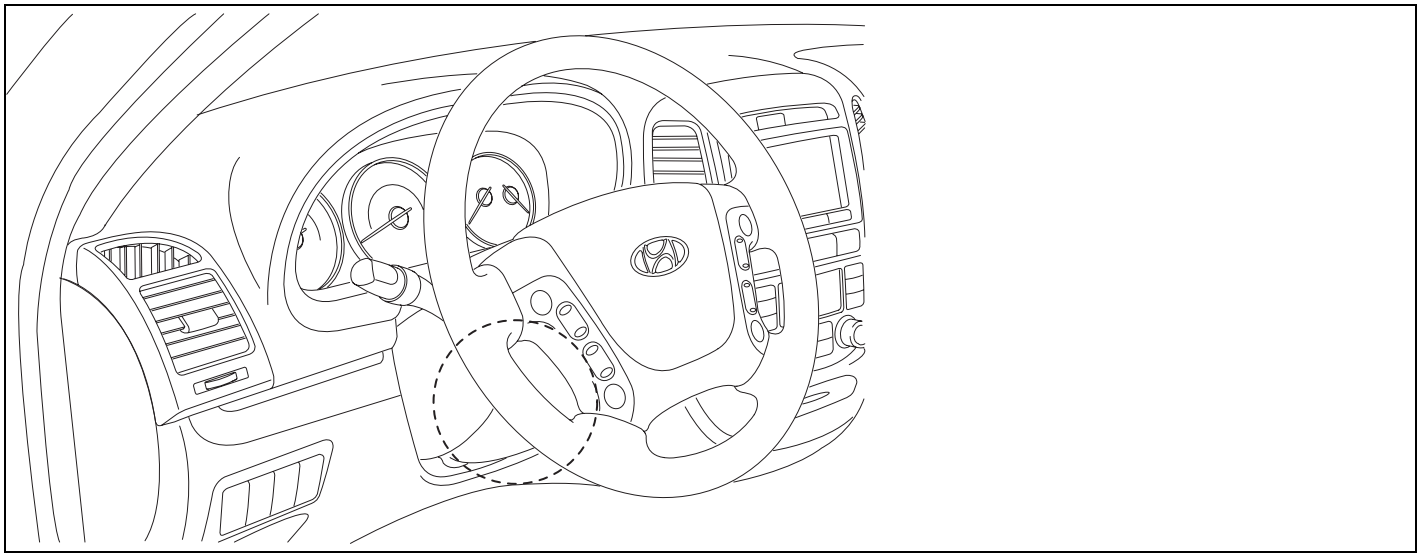

SCMMT6205L

GENERAL DESCRIPTION EFE432CF

Steering Wheel Angle Sensor installed in steering wheel prevents a state of TCB(Tight Corner Braking) by sensing the rotating direction & straight driving of vehicle and is used for EMC duty control. In case of ESP system applied, 4WD ECU receives this signal through CAN line. If it is not the case, 4WD ECU receives this signal from Steering Wheel Angle Sensor directly.

※ TCB (Tight Corner Braking) : TCB is that the vehicle makes an abnormal noise and hesistation when the vehicle turns left / right fully with low speed at a paved road.

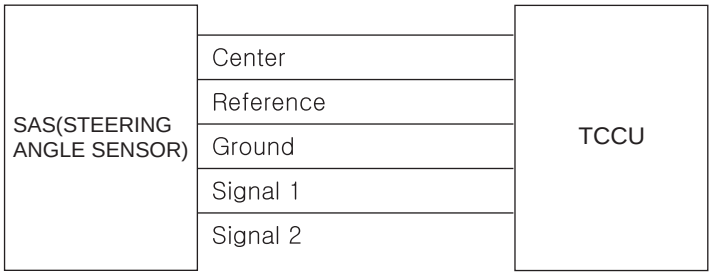

SCMMT6206L

DTC DESCRIPTION E07482E9

This code related to Steering Angle Sensor Signal(#1) is set when voltage of signal is above 4.5V or loss of signal is occurred for more than 1sec. In case of ESP system applied, this code is set when can bus off or ecu enternal error is occurred.

If failure is detected TCCU prohibits the ITM control and cuts the current to control coil.

DTC DETECTING CONDITION EAF2258A

Item	Detecting Condition	Possible Cause
DTC Strategy	• Loss of signal out of range	• Steering angle sensor,TCCU connector looseness and poor terminal to wire connection. • Steering angle sensor circuit open/short • Faulty Steering angle sensor • Faulty TCCU
Enable Conditions	• V < 4.5 for 1.0 sec self clearing	
Threshold Value	• Out of Range signal: Voltage > = 4.5vdc for greater than one (1) second	
Diagnostic Time	• 1 sec	
MIL on condition	• 0.5 Sec	
Fail Safe	• Steering Wheel Sensor input=0. The ECU will not send current to the clutch coil	

SIGNAL WAVEFORM & DATA E2B0FABE

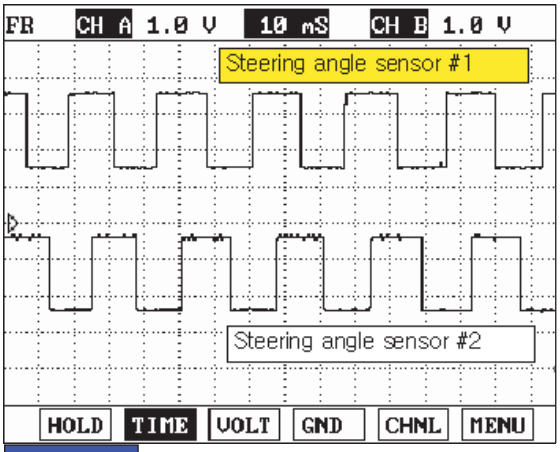

FIG.1)

FIG.1) Steering Wheel Angle Sensor #1,#2

SCMMT6207L

TERMINAL AND CONNECTOR INSPECTION E32B0EAC

1. Many malfunctions in the electrical system are caused by poor harness and terminals. Faults can also be caused by interference from other electrical systems, and mechanical or chemical damage.

2. Thoroughly check connectors for looseness, poor connection, bending, corrosion, contamination, deterioration,or damage.

3. Has a problem been found?

YES

▶ Repair as necessary and go to "Verification of Vehicle Repair" procedure.

NO

▶ Go to " Steering angle sensor #1 Signal Inspection " procedure.

STEERING ANGLE SENSOR #1 SIGNAL INSPECTION E1F7D6DC

1. Ignition ON, Engine : ON.
2. Connect TCCU, Steering angle sensor connector.
3. Monitor signal waveform between terminal 3 of Steering angle sensor harness connector and chassis ground.
4. Turn steering Wheel to the right or left.

Specification : Signal Waveform & Data

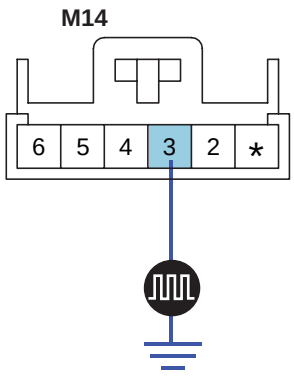

5.Center
6.Reference
2.Ground
4.S2
3.S1

SCMMT6208L

CAUTION

The above value is only for reference.
The actual value may differ from it according to various engine condition.

5. Is Steering angle sensor #1 Signal display near the specified value?

YES

▶ Fault is intermittent caused by poor contact in the sensor's and/or TCCU's connector or was repaired and TCCU memory was not cleared. Thoroughly check connectors for looseness, poor connection, bending, corrosion, contamination, deterioration, or damage. Repair or replace as necessary and then go to "Verification of Vehicle Repair" procedure.

NO

▶ Go to " Steering angle sensor Reference voltage inspection " procedure.

STEERING ANGLE SENSOR REFERENCE VOLTAGE INSPECTION EEA70C9E

1. Ignition "ON",Engine "OFF".
2. TCCU, Steering angle sensor connector : Connect.
3. Measure voltage between terminal 6 of Steering angle sensor harness connector and chassis ground.

Specification : Approx. 5V

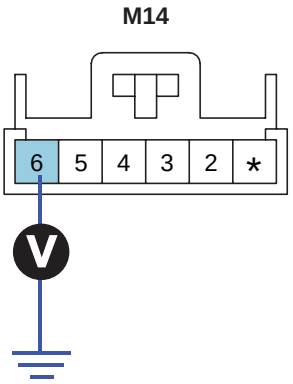

5.Center
6.Reference
2.Ground
4.S2
3.S1

SCMMT6209L

CAUTION

The above value is only for reference.
The actual value may differ from it according to various engine condition.

4. Is voltage display near the specified value?

YES

▶ Go to " Steering angle sensor ground harness open circuit inspection " procedure.

NO

▶ Check for Steering angle sensor Reference harness.
▶ Repair as necessary and then go to "Verification of Vehicle Repair" procedure.

STEERING ANGLE SENSOR GROUND HARNESS OPEN CIRCUIT INSPECTION E8D94F1B

1. Ignition OFF, Engine "OFF".

2. TCCU, Steering angle sensor connector : Connect.

3. Measure resistance between terminal 2 of Steering angle sensor harness connector and chassis ground.

Specification : 1Ω below

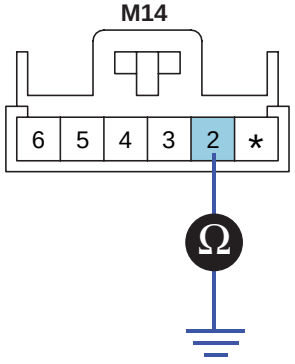

5.Center
6.Reference
2.Ground
4.S2
3.S1

SCMMT6210L

CAUTION

The above value is only for reference.
The actual value may differ from it according to various engine condition.

4. Is resistance display near the specified value?

YES

▶ Go to " Steering angle sensor #1 ,short to signal line ground Inspection " procedure.

NO

▶ Check for open circuit of Steering angle sensor ground harness.
▶ Repair as necessary and then go to "Verification of Vehicle Repair" procedure.

SIGNAL CITCUIT INSPECTION EA133810

STEERING ANGLE SENSOR #1 ,SHORT TO SIGNAL LINE GROUND INSPECTION

1. Ignition OFF, Engine "OFF".
2. TCCU, Steering angle sensor connector : Disconnect.
3. Measure resistance between terminal 3 of Steering angle sensor harness connector and chassis ground.

Specification : ∝ Ω

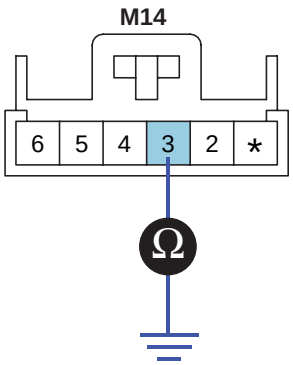

5.Center
6.Reference
2.Ground
4.S2
3.S1

SCMMT6211L

CAUTION

The above value is only for reference.
The actual value may differ from it according to various engine condition.

4. Is resistance display near the specified value?

YES

▶ Go to " Steering angle sensor #1 signal line open Inspection " procedure.

NO

▶ Check for short to ground circuit of Steering angle sensor #1Signal circuit.
▶ Repair as necessary and then go to "Verification of Vehicle Repair" procedure.

STEERING ANGLE SENSOR #1 SIGNAL LINE OPEN INSPECTION

1. Ignition OFF, Engine "OFF".
2. TCCU, Steering angle sensor connector : Disconnect.
3. Measure resistance between terminal 3 of Steering angle sensor harness connector and terminal 23 of TCCU harness connector.

Specification : 1Ω

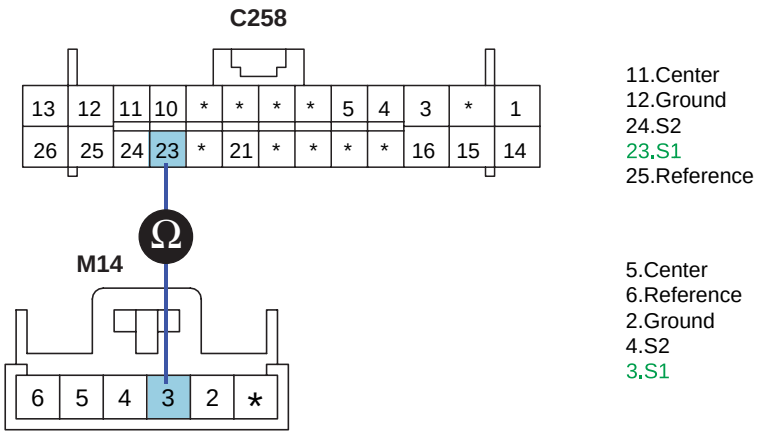

SCMMT6212L

CAUTION

The above value is only for reference.
The actual value may differ from it according to various engine condition.

4. Is resistance display near the specified value?

YES

- ▶ Substitute with a known-good TCCU or Steering angle sensor and check for proper operation.
- ▶ If the problem is corrected, replace TCCU and then go to "Verification of Vehicle Repair" procedure.

NO

- ▶ Check for open circuit of Steering angle sensor #1 Signal circuit.
- ▶ Repair as necessary and then go to "Verification of Vehicle Repair" procedure.

VERIFICATION OF VEHICLE REPAIR EB22A662

1. Connect scan tool and select "Diagnostic Trouble Codes(DTCs)" mode.
2. Using scantool, Clear DTC.
3. Operate the vehicle within DTC Enable conditions in General information.
4. Are any DTCs present ?

YES

▶ Go to the applicable troubleshooting procedure.

NO

▶ System is performing to specification at this time.

DTC P1718 STEER 2 INPUT SIGNAL

COMPONENT LOCATION EC78ED86

Refer to DTC P1717.

GENERAL DESCRIPTION E2DC7841

Refer to DTC P1717.

DTC DESCRIPTION EDE7BFFA

This code related to Steering Angle Sensor Signal(#2) is set when voltage of signal is above 4.5V or loss of signal is occurred for more than 1sec. In case of ESP system applied, this code is set when can bus off or ecu enternal error is occurred.
If failure is detected TCCU prohibits the ITM control and cuts the current to control coil.

DTC DETECTING CONDITION E7C94F60

Item	Detecting Condition	Possible Cause
DTC Strategy	• Loss of signal out of range	• Steering angle sensor,TCCU connector looseness and poor terminal to wire connection. • Steering angle sensor circuit open/short • Faulty Steering angle sensor • Faulty TCCU
Enable Conditions	• V < 4.5 for 1.0 sec self clearing	
Threshold Value	• Out of Range signal: Voltage > = 4.5vdc for greater than one (1) second	
Diagnostic Time	• 1 sec	
MIL on condition	• 0.5 Sec	
Fail Safe	• Steering Wheel Sensor input=0. The ECU will not send current to the clutch coil	

SIGNAL WAVEFORM & DATA EAC4AD16

Refer to DTC P1717.

TERMINAL AND CONNECTOR INSPECTION E6EEAC30

Refer to DTC P1717.

STEERING ANGLE SENSOR #2 SIGNAL INSPECTION E14B5B9F

1. Ignition ON, Engine : ON.
2. Connect TCCU, Steering angle sensor connector.
3. Monitor signal waveform between terminal 4 of Steering angle sensor harness connector and chassis ground.
4. Turn steering Wheel to the right or left.

Specification : Signal Waveform & Data

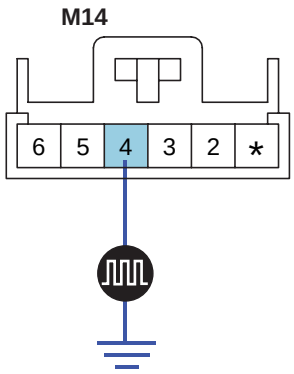

5.Center
6.Reference
2.Ground
4.S2
3.S1

SCMMT6213L

CAUTION

The above value is only for reference.
The actual value may differ from it according to various engine condition.

5. Is Steering angle sensor #2 Signal display near the specified value?

YES

▶ Fault is intermittent caused by poor contact in the sensor's and/or TCCU's connector or was repaired and TCCU memory was not cleared.Thoroughly check connectors for looseness, poor connection, bending, corrosion, contamination, deterioration, or damage. Repair or replace as necessary and then go to "Verification of Vehicle Repair" procedure.

NO

▶ Go to " Steering angle sensor Reference voltage inspection " procedure.

STEERING ANGLE SENSOR REFERENCE VOLTAGE INSPECTION EDC8105E

Refer to DTC P1717.

STEERING ANGLE SENSOR GROUND HARNESS OPEN CIRCUIT INSPECTION E8D94F2B

Refer to DTC P1717.

SIGNAL CIRCUIT INSPECTION ED758FEB

STEERING ANGLE SENSOR #2 ,SHORT TO SIGNAL LINE GROUND INSPECTION

1. Ignition OFF, Engine "OFF".
2. TCCU, Steering angle sensor connector : Disconnect.
3. Measure resistance between terminal 4 of Steering angle sensor harness connector and chassis ground.

Specification : ∝ Ω

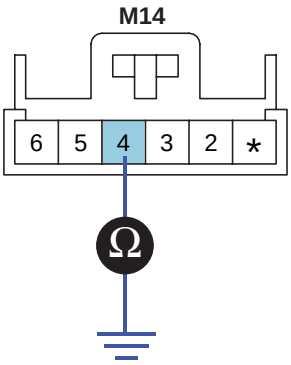

5.Center
6.Reference
2.Ground
4.S2
3.S1

SCMMT6214L

CAUTION

The above value is only for reference.
The actual value may differ from it according to various engine condition.

4. Is resistance display near the specified value?

YES

▶ Go to " Steering angle sensor #2, signal line open inspection " procedure.

NO

▶ Check for ground to short circuit of Steering angle sensor #2 Signal circuit.
▶ Repair as necessary and then go to "Verification of Vehicle Repair" procedure.

STEERING ANGLE SENSOR #2, SIGNAL LINE OPEN INSPECTION

1. Ignition OFF, Engine "OFF".

2. TCCU, Steering angle sensor connector : Disconnect.

3. Measure resistance between terminal 4 of Steering angle sensor harness connector and terminal 24 of TCCU harness connector.

Specification : 1Ω below

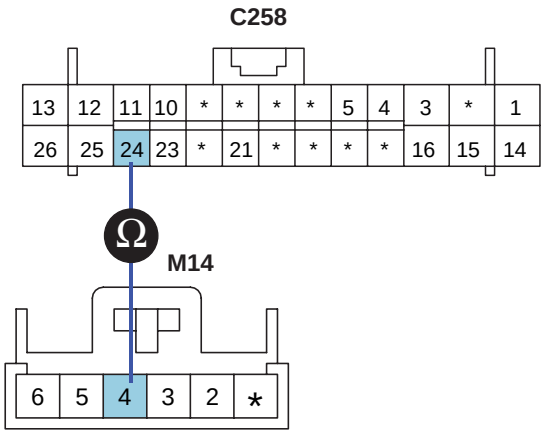

11.Center
12.Ground
24.S2
23.S1
25.Reference

5.Center
6.Reference
2.Ground
4.S2
3.S1

SCMMT6215L

CAUTION

The above value is only for reference.
The actual value may differ from it according to various engine condition.

4. Is resistance display near the specified value?

YES

- ▶ Substitute with a known-good TCCU or Steering angle sensor and check for proper operation.
- ▶ If the problem is corrected, replace TCCU and then go to "Verification of Vehicle Repair" procedure.

NO

- ▶ Check for open circuit of Steering angle sensor #2 Signal circuit.
- ▶ Repair as necessary and then go to "Verification of Vehicle Repair" procedure.

VERIFICATION OF VEHICLE REPAIR ED2F3124

Refer to DTC P1717.

DTC P1719 STEER N INPUT SIGNAL

COMPONENT LOCATION E7CACB5A

Refer to DTC P1717.

GENERAL DESCRIPTION ED3C0CD0

Refer to DTC P1717.

DTC DESCRIPTION E67918ED

This code related to Steering Angle Sensor Signal(#N) is set when voltage of signal is above 4.5V or loss of signal is occurred for more than 1sec. In case of ESP system applied, this code is set when can bus off or ecu enternal error is occurred.
If failure is detected TCCU prohibits the ITM control and cuts the current to control coil.

DTC DETECTING CONDITION E2DBF1B8

Item	Detecting Condition	Possible Cause
DTC Strategy	• Loss of signal out of range	• Steering angle sensor,TCCU connector looseness and poor terminal to wire connection. • Steering angle sensor circuit open/short • Faulty Steering angle sensor • Faulty TCCU
Enable Conditions	• V < 4.5 for 1.0 sec self clearing	
Threshold Value	• Out of Range signal: Voltage > = 4.5vdc for greater than one (1) second	
Diagnostic Time	• 1 sec	
MIL on condition	• 0.5 Sec	
Fail Safe	• Steering Wheel Sensor input=0. The ECU will not send current to the clutch coil	

SIGNAL WAVEFORM & DATA EA80BF3A

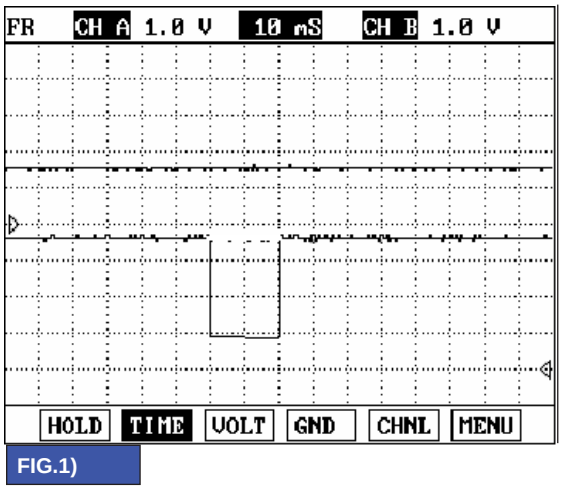

FIG.1)

FIG.1) Steering Wheel Angle Sensor #Neutral

TERMINAL AND CONNECTOR INSPECTION EF0BAACF

Refer to DTC P1717.

STEERING ANGLE NEUTRAL SIGNAL INSPECTION E8D2E24E

1. Ignition ON, Engine : ON.
2. Connect TCCU, Steering angle sensor connector.
3. Monitor signal waveform between terminal 5 of Steering angle sensor harness connector and chassis ground.
4. Turn steering Wheel to the right or left.

Specification : Signal Waveform & Data

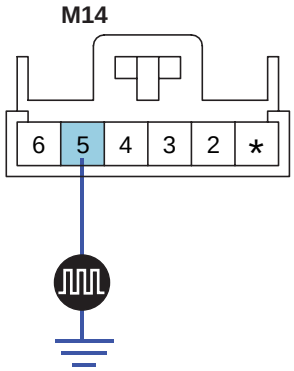

5.Center
6.Reference
2.Ground
4.S2
3.S1

SCMMT6217L

CAUTION

The above value is only for reference.
The actual value may differ from it according to various engine condition.

5. Is Steering angle Neutral Signal display near the specified value?

YES

▶ Fault is intermittent caused by poor contact in the sensor's and/or TCCU's connector or was repaired and TCCU memory was not cleared.Thoroughly check connectors for looseness, poor connection, bending, corrosion, contamination, deterioration, or damage. Repair or replace as necessary and then go to "Verification of Vehicle Repair" procedure.

NO

▶ Go to " Steering angle sensor Reference voltage inspection " procedure.

STEERING ANGLE SENSOR REFERENCE VOLTAGE INSPECTION E4ADA3BF

Refer to DTC P1717.

STEERING ANGLE SENSOR GROUND HARNESS OPEN CIRCUIT INSPECTION E18CBABF

Refer to DTC P1717.

SIGNAL CIRCUIT INSPECTION EAFC5079

STEERING ANGLE NEUTRAL SIGNAL ,SHORT TO SIGNAL LINE GROUND INSPECTION

1. Ignition OFF, Engine "OFF".
2. TCCU, Steering angle sensor connector : Disconnect.
3. Measure resistance between terminal 5 of Steering angle sensor harness connector and chassis ground.

Specification : ∝ Ω

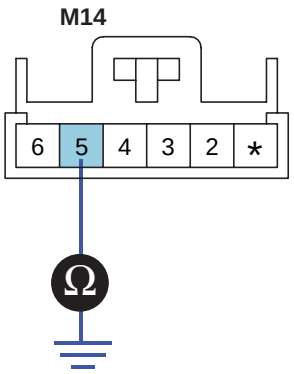

5.Center
6.Reference
2.Ground
4.S2
3.S1

SCMMT6218L

CAUTION

The above value is only for reference.
The actual value may differ from it according to various engine condition.

4. Is resistance display near the specified value?

YES

▶ Go to " Steering angle Neutral Signal open Inspection " procedure.

NO

▶ Check for ground to short circuit of Steering angle Neutral Signal circuit.
▶ Repair as necessary and then go to "Verification of Vehicle Repair" procedure.

STEERING ANGLE NEUTRAL SIGNAL OPEN INSPECTION

1. Ignition OFF, Engine "OFF".
2. TCCU, Steering angle sensor connector : Disconnect.
3. Measure resistance between terminal 3 of Steering angle sensor harness connector and terminal 23 of TCCU harness connector.

Specification : 1Ω below

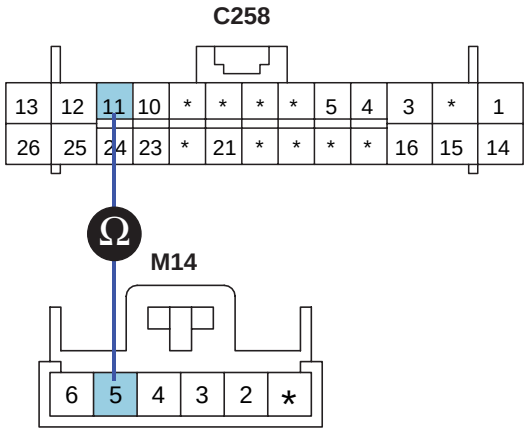

11.Center
12.Ground
24.S2
23.S1
25.Reference

5.Center
6.Reference
2.Ground
4.S2
3.S1

SCMMT6219L

CAUTION

The above value is only for reference.
The actual value may differ from it according to various engine condition.

4. Is resistance display near the specified value?

YES

- ▶ Substitute with a known-good TCCU or Steering angle sensor and check for proper operation.
- ▶ If the problem is corrected, replace TCCU and then go to "Verification of Vehicle Repair" procedure.

NO

- ▶ Check for open circuit of Steering angle sensor Neutral Signal circuit.
- ▶ Repair as necessary and then go to "Verification of Vehicle Repair" procedure.

VERIFICATION OF VEHICLE REPAIR E7C1536E

Refer to DTC P1717.

DTC P1728 EMC-OPEN/SHORT TO BATTERY

COMPONENT LOCATION EB2DAF9D

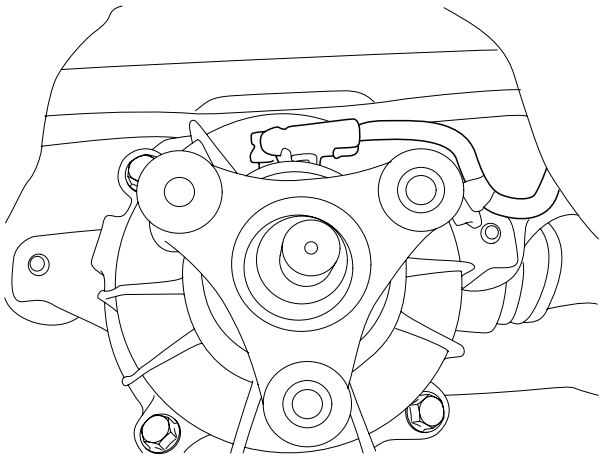

SCMMT6220L

GENERAL DESCRIPTION E6AC1A4E

Vehicle uses 2WD(2 wheel drive) for driving at normal speed, but sometimes it uses 4WD (4 wheel drive) accordign to driving condition.
(cornering or acceleration)
EMC(Electric Magnetic Clutch) distributes proper torque to front wheel by controling amount of current inside EMC coil.
That time power pressing the multi plate clutch by apply cam is changed by a rate of EMC duty. after multi plate clutch start slip the force for acceletion at front/rear wheel is controlled at a range of 100:0 ~ 50 : 50.
ITM system has 4WD-LOCK function that can make driving force to 50:50 by compulsion according to driver's intention.

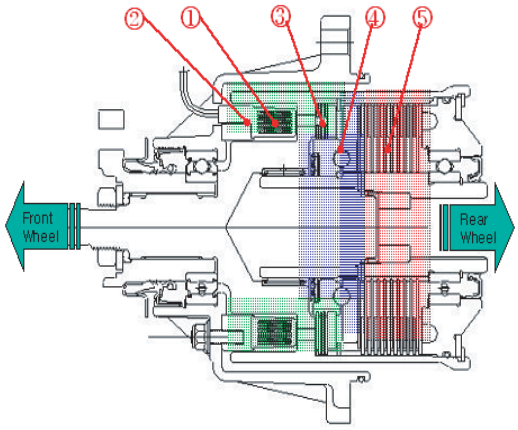

1. COIL
2. ROTOR
3. PRIMARY CLUTCH
4. AFLY CAM
5. SECONDARY CLUTCH

SCMMT6221L

DTC DESCRIPTION ECD9BB2F

This DTC code is related to the EMC and is set If control harness has an open or short to battery source.
If failure is detected TCCU prohibits the ITM control and vehicle is controlled with 2WD by intercepting EMC current.

DTC DETECTING CONDITION EFE07CFD

Item	Detecting Condition	Possible Cause
DTC Strategy	• Short/ Open to Battery	• Power supply malfunction • EMC,TCCU connector looseness and poor terminal to wire connection • EMC circuit open or short to battery • Faulty EMC motor • Faulty TCCU
Enable Conditions	• Ignition cycle required	
Threshold Value	• 25 occurrences in a row mature	
Diagnostic Time	• 1 sec	
MIL on condition	• 0.5 Sec	
Fail Safe	• EMC Error will turn ITM off. The ECU will not send current to the clutch coil	

SIGNAL WAVEFORM & DATA E1DC70C7

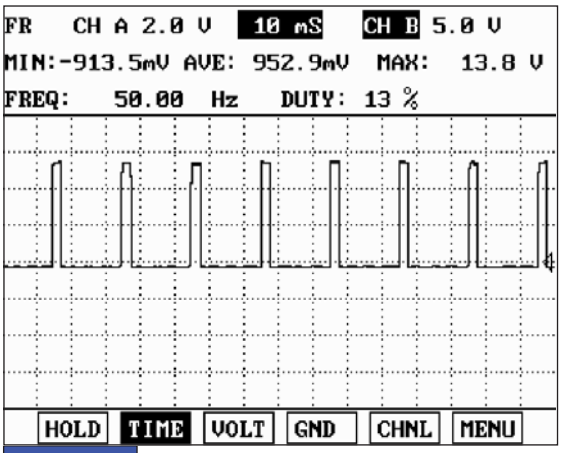

FIG.1)

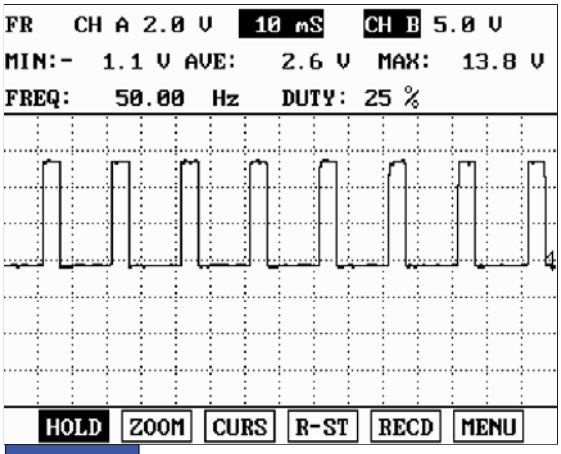

FIG.2)

FIG.1) EMC Signal : Idling .
FIG.2) EMC Signal : Throttle Valve Open .

SCMMT6222L

TERMINAL AND CONNECTOR INSPECTION E4F1CEBD

1. Many malfunctions in the electrical system are caused by poor harness and terminals. Faults can also be caused by interference from other electrical systems, and mechanical or chemical damage.
2. Thoroughly check connectors for looseness, poor connection, bending, corrosion, contamination, deterioration,or damage.
3. Has a problem been found?

YES

▶ Repair as necessary and go to "Verification of Vehicle Repair" procedure.

NO

▶ Go to " EMC Signal Inspection " procedure.

EMC SIGNAL INSPECTION E5D2F7F5

1. Ignition ON, Engine : ON.
2. TCCU, EMC connector : Connect.
3. Monitor signal waveform between terminal 1 of EMC harness connector and chassis ground.
4. Shift to N Range.

Specification : Signal Waveform & Data

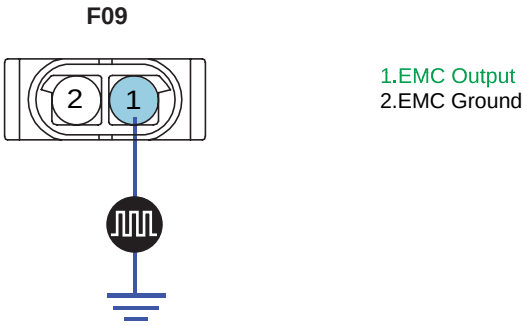

SCMMT6223L

CAUTION

The above value is only for reference.
The actual value may differ from it according to various engine condition.

5. Is EMC Signal display near the specified value?

YES

▶ Fault is intermittent caused by poor contact in the sensor's and/or TCCU's connector or was repaired and TCCU memory was not cleared.Thoroughly check connectors for looseness, poor connection, bending, corrosion, contamination, deterioration, or damage. Repair or replace as necessary and then go to "Verification of Vehicle Repair" procedure.

NO

▶ Go to " EMC wiring battery short Inspection " procedure.

EMC WIRING BATTERY SHORT INSPECTION EB741C81

1. IG "OFF" & ENG "OFF".
2. Electric Magnet Valve Clutch,TCCU connector : Disconnect.
3. IG "ON.
4. Measure voltage between terminal 1 of EMC harness connector and chassis ground.

Specification : 0 V

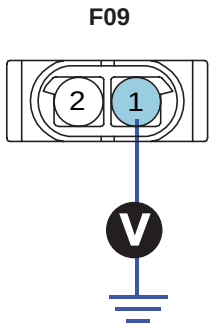

1.EMC Output
2.EMC Ground

SCMMT6224L

CAUTION

The above value is only for reference.
The actual value may differ from it according to various engine condition.

5. Is voltage display near the specified value?

YES

▶ Go to " EMC harness open Inspection " procedure.

NO

▶ Check for short to battery in EMC harness.
▶ Repair as necessary and then go to "Verification of Vehicle Repair" procedure.

EMC HARNESS OPEN INSPECTION E03FBE34

1. Ignition OFF, Engine "OFF".
2. Electric Magnet Valve Clutch, TCCU connector : Disconnect.
3. Measure resistance between terminal 1 or 2 of Electric Magnet Valve Clutch harness connector and terminal 26 or 13 of TCCU harness connector.

Specification : 1Ω below

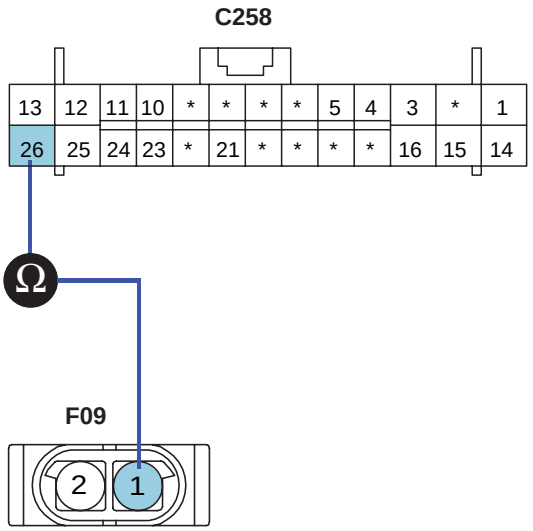

13.EMC Ground
26.EMC Output

1.EMC Output
2.EMC Ground

SCMMT6225L

CAUTION

The above value is only for reference.
The actual value may differ from it according to various engine condition.

4. Is resistance display near the specified value?

YES

▶ Go to " Component inspection " procedure.

NO

▶ Check for open in EMC harness.
▶ Repair as necessary and then go to "Verification of Vehicle Repair" procedure.

COMPONENT INSPECTION E65DEC1E

1. IG "OFF" & ENG "OFF".
2. EMC connector : Disconnect.
3. Measure the resistance(Component side) between terminals "1" and "2" of the "Electric Magnet Valve Clutch".

Specification : Approx. 1.8 ~ 2.2 Ω

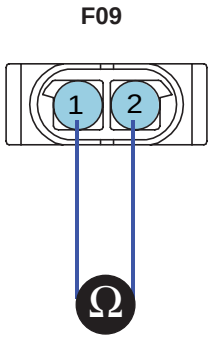

1.EMC Output
2.EMC Ground

SCMMT6226L

4. Is resistance display near the specified value?

YES

▶ Substitute with a known-good "TCCU" and check for proper operation. If the problem is corrected, replace "TCCU" and then go to "Verification of Vehicle Repair" procedure.

NO

▶ Substitute with a known-good "EMC coil" and check for proper operation. If the problem is corrected, replace "EMC coil" and then go to "Verification of Vehicle Repair" procedure.

VERIFICATION OF VEHICLE REPAIR EB61469D

1. Connect scan tool and select "Diagnostic Trouble Codes(DTCs)" mode.
2. Using scantool, Clear DTC.
3. Operate the vehicle within DTC Enable conditions in General information.
4. Are any DTCs present ?

YES

▶ Go to the applicable troubleshooting procedure.

NO

▶ System is performing to specification at this time.

DTC P1745 ECU INVALID PART NUMBER

COMPONENT LOCATION EED8DCAA

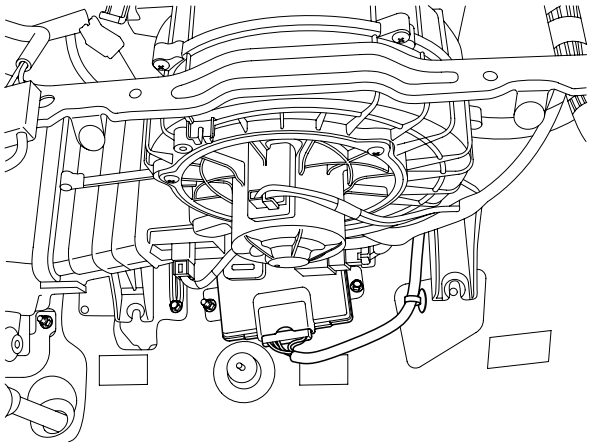

SCMMT6227L

GENERAL DESCRIPTION EFA7B80A

Many control units is applied to the vehicle due to vehicle to be electronic control type and these perform many controls by receiving signals from sensors. So the common use of each sensors and the need of comunizing informations became a prominent figure. CAN comunication method is used at power train (ABS, trnasmission, engine, ECS etc) control of vehicle because it withstands eletronical external noise by spark and can high-speed comunication. Though CAN communication, ECM and TCM hold engin RPM, APS, step of trensmission, decreasing of torque in common and perform the active control.

CAN:Engine Data (TPS,RPM...)	CAN: Engine Data (TPS,RPM...) ABS Data (4Wheel Signals, ABS/TCS Active data...)	CAN: Engine Data (TPS,RPM...) ESP Data (Steering Angle Sensor 4Wheel Signals, ABS/TCS Active data...)
NON-ABS →	ABS/TCS →	ESP

SCMMT6228L

DTC DESCRIPTION E1FF3DAB

This DTC is set when inappropriate 4WD-ECU(TCCU) is detected.
If failure is detected TCCU prohibits the ITM control.

DTC DETECTING CONDITION E193DCCA

Item	Detecting Condition	Possible Cause
DTC Strategy	• Invalid part number	• Part Number • Faulty TCCU
Enable Conditions	• Ignition cycle required	
Threshold Value	• 1 occurrence will mature	
Diagnostic Time	• 1.0 Sec	
MIL on condition	• 0.5 Sec	
Fail Safe	• Clutch will not react correctly as vehicle inputs are not defined	

MONITOR DTC STATUS E36A9876

1. Connect scantool to Data Link Connector(DLC).
2. Warm up the engine to normal operating temperature.
3. Monitor DTC(Diagnostics Trouble Code) on the scantool.

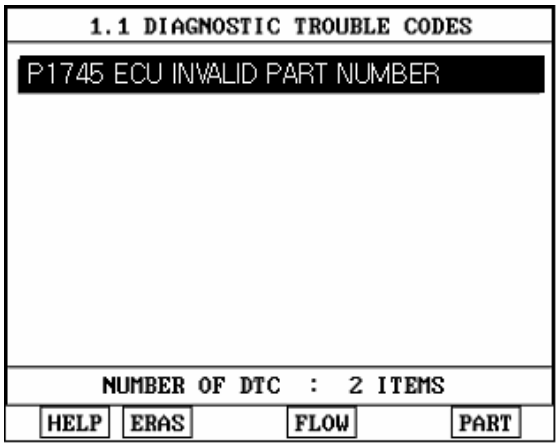

SCMMT6229L

4. Is the same DTC displayed again?

YES

▶ Check if equipped option(ABS/TCS, ESP) and part number is qualified specification Repair or replace as necessary and go to "Verification of vehicle Repair" procedure.

NO

▶ Fault is intermittent caused by poor contact in the sensor's and/or TCCU's connector or was repaired and TCCU memory was not cleared. Thoroughly check connectors for looseness, poor connection, bending, corrosion, contamination, deterioration, or damage. Repair or replace as necessary and go to "Verification of vehicle Repair" procedure.

VERIFICATION OF VEHICLE REPAIR EC67C92F

1. Connect scan tool and select "Diagnostic Trouble Codes(DTCs)" mode.
2. Using scantool, Clear DTC.

3. Operate the vehicle within DTC Enable conditions in General information.
4. Are any DTCs present ?

YES

▶ Go to the applicable troubleshooting procedure.

NO

▶ System is performing to specification at this time.

DTC P1750 FRONT LEFT SPEED SENSOR(FL)-WITH ESP, ABS
DTC P1751 FRONT RIGHT SPEED SENSOR(FR)-WITH ESP, ABS
DTC P1752 REAR LEFT SPEED SENSOR(RL)-WITH ESP, ABS
DTC P1753 REAR RIGHT SPEED SENSOR(RR)-WITH ESP, ABS

COMPONENT LOCATION ECA43AE8

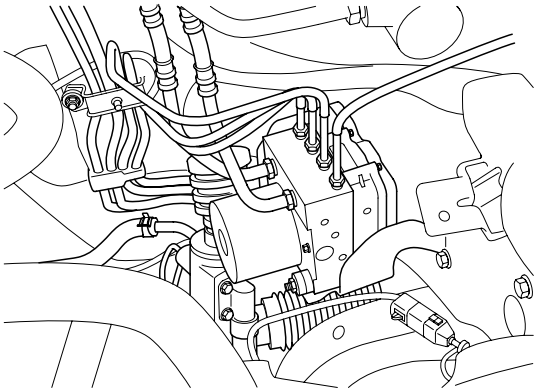

SCMMT6251L

GENERAL DESCRIPTION E991A797

Wheel Speed Sensor senses vehicle speed and difference between front and rear wheel speed.
Opreation for getting Rotating Speeds of front/rear wheel can be got from deviding wheel speed sensor Rotating Speeds of front/rear by 2.
In case of ESP(or FTCS) system applied 4WD ECU receives this signal through CAN line, If it is not the case 4WD ECU receives this signal directly by using PWM communication line.
The wheel speed sensor is the essential component the ITM ECU uses to determine how to distribute driving force to front / rear wheel with steering angle sensor signal and TPS, brake signal.

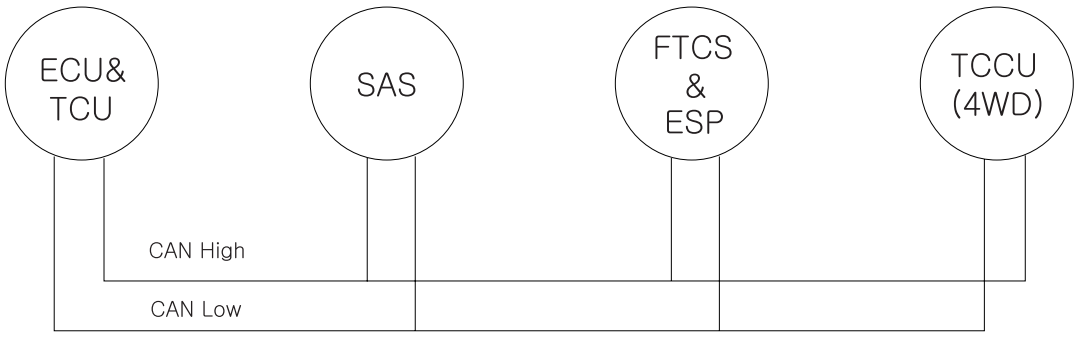

SCMMT6201L

DTC DESCRIPTION EF7E6A55

This code related to communication line between ECU and TCCU is set when CAN signal from ECU can't received for more than 1sec or ECU internal error occur.
If failure is detected TCCU prohibits the ITM control and cuts the current to control coil.

DTC DETECTING CONDITION EAC96709

Item	Detecting Condition	Possible Cause
DTC Strategy	Loss of signal	• ABS MODULE,TCCU connector looseness and poor terminal to wire connection • Wheel sensor comm line circuit open/short • Faulty Wheel sensor • Faulty ABS MODULE • Faulty TCCU
Enable Conditions	• Message present 1.0 sec self clearing	
Threshold Value	• Measure individual wheel, if speed difference is 30kph for 30 seconds fault code will be set.ignition cycle reset	
Diagnostic Time	• 1 sec	
MIL on condition	• 0.5 Sec	
Fail Safe	• Speed sensor error will turn ITM off. ITM will not have output	

SIGNAL WAVEFORM & DATA EA69653C

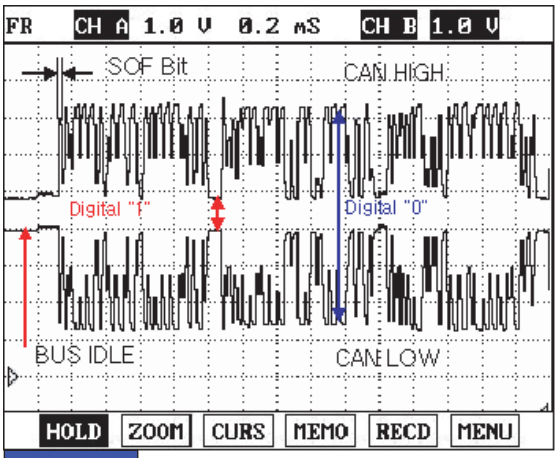

FIG.1)

FIG.1) CAN Signal : high & low

SCMMT6202L

TERMINAL AND CONNECTOR INSPECTION EAF40840

1. Many malfunctions in the electrical system are caused by poor harness and terminals. Faults can also be caused by interference from other electrical systems, and mechanical or chemical damage.

2. Thoroughly check connectors for looseness, poor connection, bending, corrosion, contamination, deterioration,or damage.

3. Has a problem been found?

YES

▶ Repair as necessary and go to "Verification of Vehicle Repair" procedure.

NO

▶ Go to " CAN Signal Inspection " procedure.

CAN SIGNAL INSPECTION EECE4F12

1. Ignition ON, Engine : ON.
2. TCCU connector : Connect.
3. Monitor signal waveform between terminal 4, 5 of TCCU harness connector and chassis ground.
4. Start and drive vehicle in gear and maintain vehicle speed approx. 10km/h or less(6mph or less).

Specification : Signal Waveform & Data

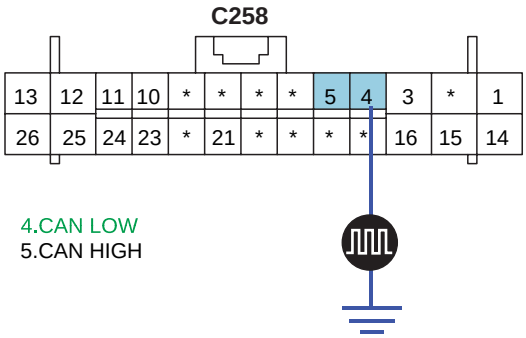

SCMMT6203L

CAUTION

The above value is only for reference.
The actual value may differ from it according to various engine condition.

5. Is CAN(FLSS)comm. Line Signal display near the specified value?

YES

▶ Fault is intermittent caused by poor contact in the sensor's and/or TCCU's connector or was repaired and TCCU memory was not cleared.Thoroughly check connectors for looseness, poor connection, bending, corrosion, contamination, deterioration, or damage. Repair or replace as necessary and then go to "Verification of Vehicle Repair" procedure.

NO

▶ Go to " CAN comm. Line Inspection " procedure.

CAN COMM. LINE INSPECTION E3A1FC87

1. IG "OFF" & ENG "OFF"
2. TCCU connector : Disconnect.
3. Measure resistance between terminal "4" of the TCCU harness connector and terminal "5" of the TCCU harness connector.

Specification : Approx. 60Ω

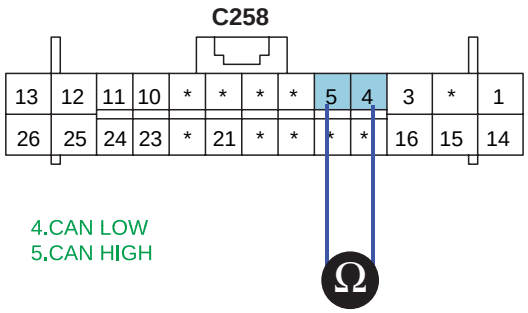

SCMMT6204L

CAUTION

The above value is only for reference.
The actual value may differ from it according to various engine condition.

4. Is resistance display near the specified value?

YES

▶ Fault is intermittent caused by open or short in CAN signal harnessor was repaired and TCCU memory was not cleared. Go to the applicable troubleshooting procedure.

NO

▶ Check for open/short in CAN comunication line of TCCU circuit.
▶ Check for the signal or component of ESP(ABS control module).
▶ Repair as necessary and then go to "Verification of Vehicle Repair" procedure.

VERIFICATION OF VEHICLE REPAIR EEC10AB2

1. Connect scan tool and select "Diagnostic Trouble Codes(DTCs)" mode.
2. Using scantool, Clear DTC.
3. Operate the vehicle within DTC Enable conditions in General information.
4. Are any DTCs present ?

YES

▶ Go to the applicable troubleshooting procedure.

NO

▶ System is performing to specification at this time.

DTC P1769 TIRE SIZE FAULT

GENERAL DESCRIPTION EFD10536

ITM(InterActive Torque Management) system can detect the tire size fault by calculating each wheel speed, if the tire size equipped at the vehicle is 10% bigger than normal tire.
Wheel Speed Sensor senses vehicle speed and difference between front and rear wheel speed.
Opreation for getting Rotating Speeds of front/rear wheel can be got from deviding wheel speed sensor Rotating Speeds of front/rear by 2

DTC DESCRIPTION E8EDED27

This code is set, if ITM-ECU detect tha the tire size is 10% bigger than normal tire by calculating each wheel speed.
When the failure is set there is no signal in the warning lamp, just ITM-ECU sets and stores this code.

DTC DETECTING CONDITION E64DBDBB

Item	Detecting Condition	Possible Cause
DTC Strategy	• A tire is estimated to have a tire size 10% more that the base tire size	• TIRE SIZE (OEM:235/60R18) • Faulty TCCU
Enable Conditions	• Message present 1.0 sec self clearing	
Threshold Value	• Estimated tire size has been detected and has matured for 1 second	
Diagnostic Time	• 1.0 Sec	
MIL on condition		
Fail Safe	• Active fault is set, but lamp is not turned on	

MONITOR DTC STATUS E69ABB1F

1. Connect scantool to Data Link Connector(DLC).
2. Warm up the engine to normal operating temperature.
3. Monitor DTC(Diagnostics Trouble Code) on the scantool.

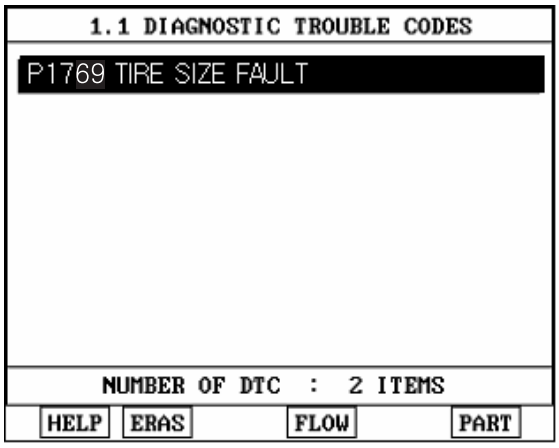

SCMMT6232L

4. Is the same DTC displayed again?

YES

▶ Check part number and tire size.
▶ Repair or replace as necessary and go to "Verification of vehicle Repair" procedure.

NO

▶ Fault is intermittent caused by poor contact in the sensor's and/or TCCU's connector or was repaired and TCCU memory was not cleared. Thoroughly check connectors for looseness, poor connection, bending, corrosion, contamination, deterioration, or damage. Repair or replace asnecessary and go to "Verification of vehicle Repair" procedure .

VERIFICATION OF VEHICLE REPAIR E66FC18C

1. Connect scan tool and select "Diagnostic Trouble Codes(DTCs)" mode.
2. Using scantool, Clear DTC.
3. Operate the vehicle within DTC Enable conditions in General information.
4. Are any DTCs present ?

YES

▶ Go to the applicable troubleshooting procedure.

NO

▶ System is performing to specification at this time.

DTC P1770 ECU LOCK MODE THERMAL PROTECT
DTC P1771 ECU SHUTDOWN THERMAL PROTECT

COMPONENT LOCATION EEBCAF5E

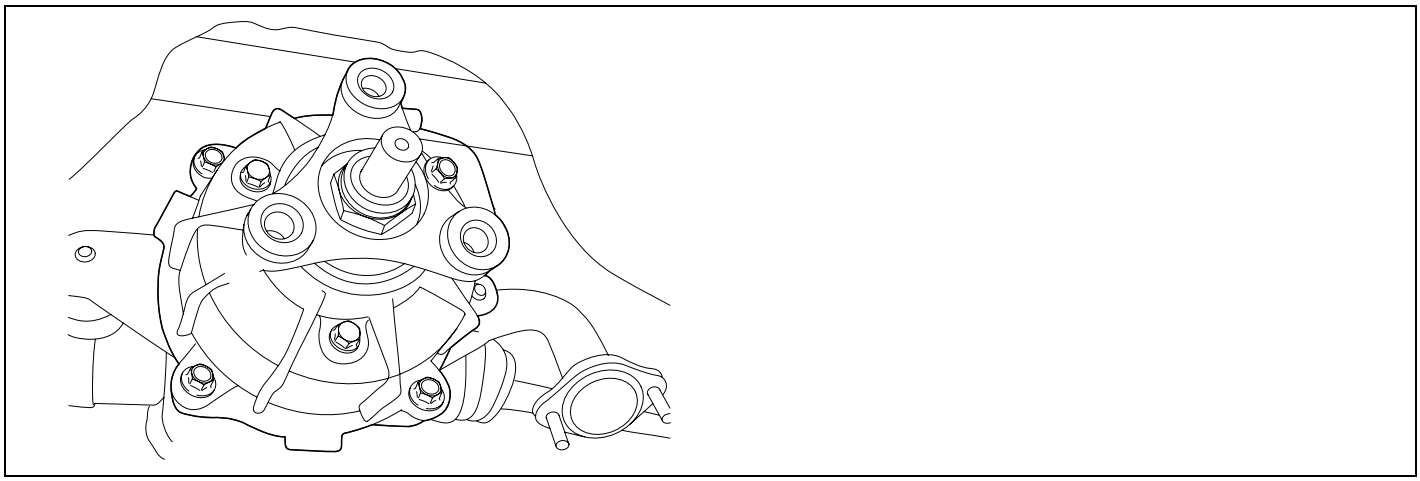

SCMMT6233L

GENERAL DESCRIPTION E09AAC8E

Vehicle uses 2WD(2 wheel drive) for driving at normal speed, but sometimes it uses 4WD (4 wheel drive) accordign to driving condition.
(cornering or acceleration)
EMC(Electric Magnetic Clutch) distributes proper torque to front wheel by controling amount of current inside EMC coil.
That time power pressing the multi plate clutch by apply cam is changed by a rate of EMC duty. after multi plate clutch start slip the force for acceletion at front/rear wheel is controlled at a range of 100:0 ~ 50 : 50.
ITM system has 4WD-LOCK function that can make driving force to 50:50 by compulsion according to driver's intention.

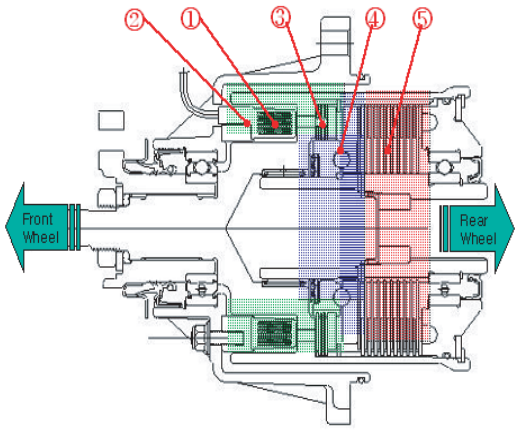

1. COIL
2. ROTOR
3. PRIMARY CLUTCH
4. AFLY CAM
5. SECONDARY CLUTCH

SCMMT6221L

DTC DESCRIPTION EBB8DBC2

When the failure is set there is no signal in the warning lamp, just ITM-ECU sets and stores this code.
If the ITM-ECU decides that the clutch(EMC) and oil are over-heated (above specified value) for more than 1s.
When the failure is set there is no signal in the warning lamp, just ITM-ECU sets and stores this code.

DTC DETECTING CONDITION E0EB96FA

Item	Detecting Condition	Possible Cause
DTC Strategy	• EMC lock mode plate and oil temp thresholds exceeded	• Faulty SWITCH(4WD-LOCK) • Faulty EMC • Faulty TCCU
Enable Conditions	• Message present 1.0 sec self clearing	
Threshold Value	• Thresholds exceeded for 1 second	
Diagnostic Time	• 1 sec	
MIL on condition		
Fail Safe	• ECU will go into lock mode, Lock mode indicator on	

MONITOR DTC STATUS E1EECCC7

1. Connect scantool to Data Link Connector(DLC).
2. Warm up the engine to normal operating temperature.
3. Monitor DTC(Diagnostics Trouble Code) on the scantool.

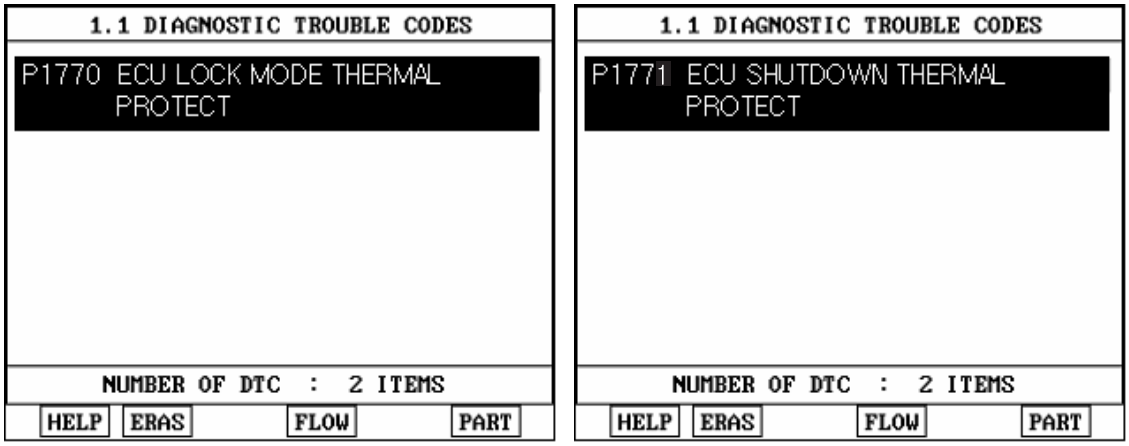

SCMMT6253L

4. Is the same DTC displayed again?

YES

▶ Check EMC, switch (4WD LOCK) condition.
▶ Repair or replace as necessary and go to "Verification of vehicle Repair" procedure.

NO

▶ Fault is intermittent caused by poor contact in the sensor's and/or TCCU's connector or was repaired and TCCU memory was not cleared. Thoroughly check connectors for looseness, poor connection, bending, corrosion, contamination, deterioration, or damage. Repair or replace asnecessary and go to "Verification of vehicle Repair" procedure.

VERIFICATION OF VEHICLE REPAIR EDD5D9A4

1. Connect scan tool and select "Diagnostic Trouble Codes(DTCs)" mode.
2. Using scantool, Clear DTC.
3. Operate the vehicle within DTC Enable conditions in General information.
4. Are any DTCs present ?

YES

▶ Go to the applicable troubleshooting procedure.

NO

▶ System is performing to specification at this time.

DTC P1780 TORQUE CONTROL SIGNAL FAILURE

GENERAL DESCRIPTION EC0D21BA

Many control units is applied to the vehicle due to vehicle to be electronic control type and these perform many controls by receiving signals from sensors. So the common use of each sensors and the need of comunizing informations became a prominent figure. CAN comunication method is used at power train (ABS, trnasmission, engine, ECS etc) control of vehicle because it withstands eletronical external noise by spark and can high-speed comunication. Though CAN communication, ECM and TCM hold engin RPM, APS, step of trensmission, decreasing of torque in common and perform the active control.

DTC DESCRIPTION EC77CBDC

This code is set, if ITM-ECU detects invailid engine information like engine displacement, torque.
If failure is detected TCCU prohibits the ITM control and cuts the current to control coil.

DTC DETECTING CONDITION E3FAAEF6

Item	Detecting Condition	Possible Cause
DTC Strategy	• Invalid Engine size received	• Invalid Engine size received
Enable Conditions	• Message present 1.0 sec self clearing	
Threshold Value	• Invalid engine size received for greater than 1 second, and a fault will be set	
Diagnostic Time	• 1 sec	
MIL on condition	• 0.5 Sec	
Fail Safe	• Engine size set to zero, ECU will not send current to the clutch coil	

MONITOR DTC STATUS E4A702B4

1. Connect scantool to Data Link Connector(DLC).
2. Warm up the engine to normal operating temperature.
3. Monitor DTC(Diagnostics Trouble Code) on the scantool.

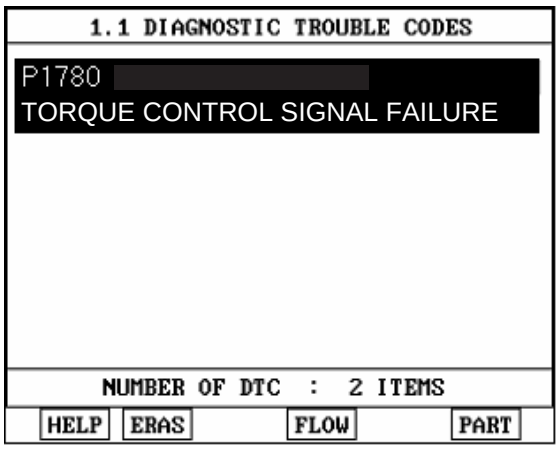

SCMMT6237L

4. Is the same DTC displayed again?

YES

▶ Check engine information.
▶ Repair or replace as necessary and go to "Verification of vehicle Repair" procedure.

NO

▶ Fault is intermittent caused by poor contact in the sensor’s and/or TCCU’s connector or was repaired and TCCU memory was not cleared. Thoroughly check connectors for looseness, poor connection, bending, corrosion, contamination, deterioration, or damage. Repair or replace asnecessary and go to "Verification of vehicle Repair" procedure.

VERIFICATION OF VEHICLE REPAIR EBF42BE2

1. Connect scan tool and select "Diagnostic Trouble Codes(DTCs)" mode.
2. Using scantool, Clear DTC.
3. Operate the vehicle within DTC Enable conditions in General information.
4. Are any DTCs present ?

YES

▶ Go to the applicable troubleshooting procedure.

NO

▶ System is performing to specification at this time.

DTC U0001 CAN COMMUNICATION MALFUNCTION

COMPONENT LOCATION E4802A94

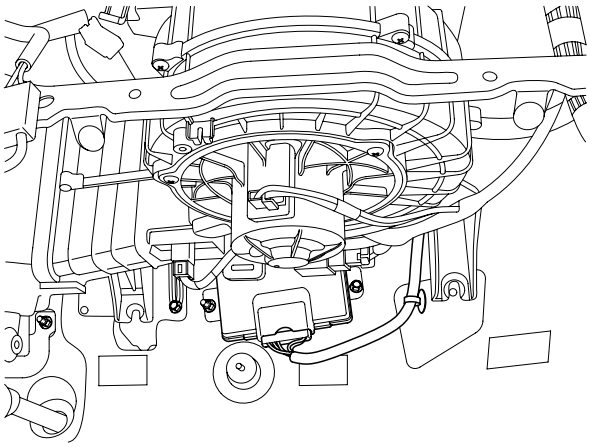

SCMMT6238L

GENERAL DESCRIPTION E44A6ABE

CAN communication is a parallel circuit to interchange information among each units. CAN communication can share much information with units more faster and more efficiently by using specified language.
CAN-High line is twisted with CAN-Low line as a purpose in preventing from a noise.
ITM-ECU performs active control by sharing signals of engine RPM, APS, shift position, torque reduction.

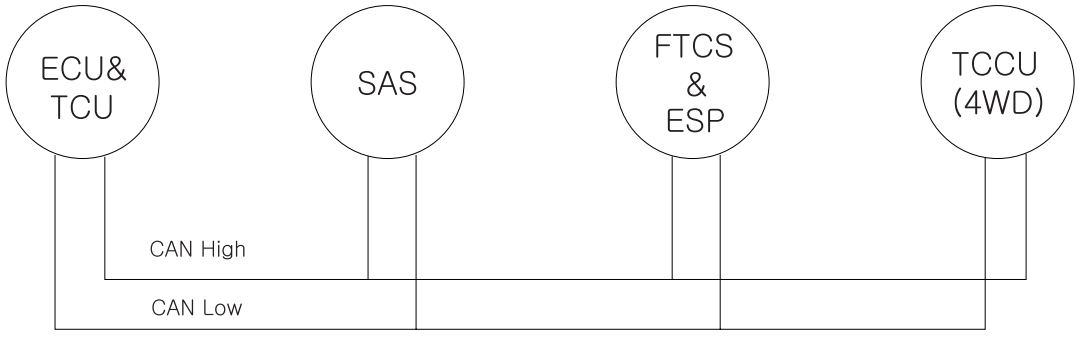

SCMMT6201L

DTC DESCRIPTION EECAE073

This code related to communication line between ECU(PCU, ABS, ESP) and TCCU is set when CAN signal from ECU can't received for more than 1sec or ECU internal error occur.
If failure is detected TCCU prohibits the ITM control and cuts the current to control coil.

DTC DETECTING CONDITION E201F760

Item	Detecting Condition	Possible Cause
DTC Strategy	• CAN Transmit error/loss of comm..	• CAN HIGH/LOW circuit open/short • Faulty CAN MODULE
Enable Conditions	• Message present 1.0 sec self clearing	
Threshold Value	• CAN Transmit counter exceeds 255 will reset CAN module	
Diagnostic Time	• 1 sec	
MIL on condition	• 0.5 Sec	
Fail Safe	• TPS=0 ITM Controller will not re-act to pre-empt. Pre-empt=0. The ECU will not send current to the clutch coil	

SIGNAL WAVEFORM & DATA EA6C1D0B

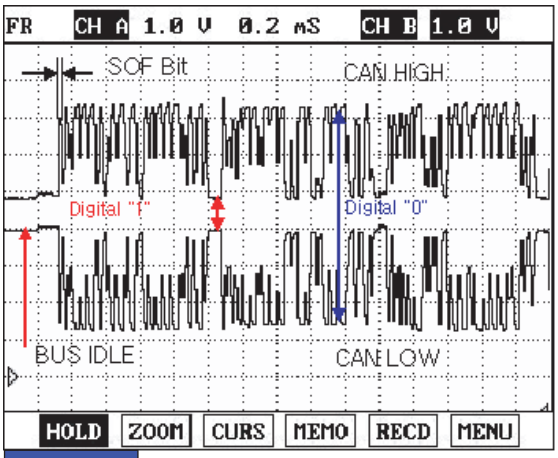

FIG.1)

FIG.1) CAN Signal : high & low

SCMMT6202L

TERMINAL AND CONNECTOR INSPECTION E2D01AD7

1. Many malfunctions in the electrical system are caused by poor harness and terminals. Faults can also be caused by interference from other electrical systems, and mechanical or chemical damage.

2. Thoroughly check connectors for looseness, poor connection, bending, corrosion, contamination, deterioration,or damage.

3. Has a problem been found?

YES

▶ Repair as necessary and go to "Verification of Vehicle Repair" procedure.

NO

▶ Go to " CAN Signal Inspection " procedure.

CAN COMM. LINE INSPECTION EE333DD6

1. Ignition ON, Engine : ON.
2. TCCU connector : Connect.
3. Monitor signal waveform between terminal 4, 5 of TCCU harness connector and chassis ground.
4. Shift to N Range.

Specification : Signal Waveform & Data

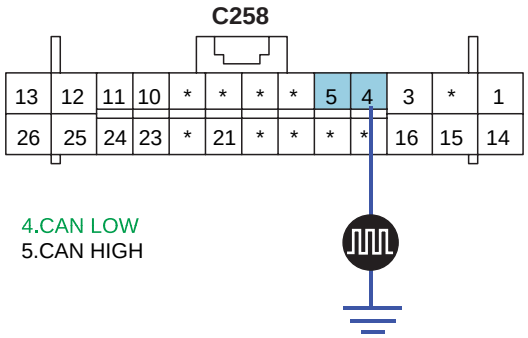

SCMMT6203L

CAUTION

The above value is only for reference.
The actual value may differ from it according to various engine condition.

5. Is CAN Signal display near the specified value?

YES

▶ Fault is intermittent caused by poor contact in the sensor's and/or TCCU's connector or was repaired and TCCU memory was not cleared.Thoroughly check connectors for looseness, poor connection, bending, corrosion, contamination, deterioration, or damage. Repair or replace as necessary and then go to "Verification of Vehicle Repair" procedure.

NO

▶ Go to " CAN comm. Line Inspection " procedure.

CAN COMM. LINE INSPECTION EDBBE2F5

1. IG "OFF" & ENG "OFF"
2. TCCU connector : Disconnect.
3. Measure resistance between terminal "4" of the TCCU harness connector and terminal "5" of the TCCU harness connector.

Specification : Approx. 60Ω

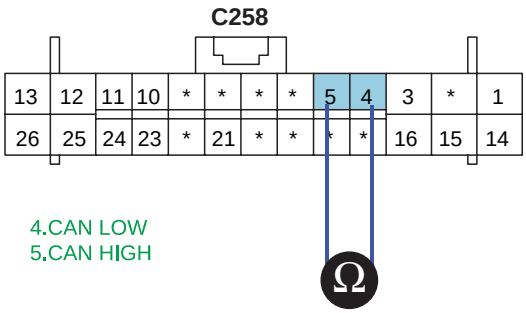

SCMMT6204L

CAUTION

The above value is only for reference.
The actual value may differ from it according to various engine condition.

4. Is resistance display near the specified value?

YES

▶ Fault is intermittent caused by open or short in CAN signal harnessor was repaired and TCCU memory was not cleared. Go to the applicable troubleshooting procedure.

NO

▶ Check for open/short in CAN comunication line of TCCU circuit.
▶ Check for the signal or component of Engine control module.
▶ Repair as necessary and then go to "Verification of Vehicle Repair" procedure.

VERIFICATION OF VEHICLE REPAIR E1A9C7BA

1. Connect scan tool and select "Diagnostic Trouble Codes(DTCs)" mode.
2. Using scantool, Clear DTC.
3. Operate the vehicle within DTC Enable conditions in General information.
4. Are any DTCs present ?

YES

▶ Go to the applicable troubleshooting procedure.

NO

▶ System is performing to specification at this time.

DTC U0100 CAN MI-COM OR CIRCUIT MAL.

COMPONENT LOCATION E0C48A9A

Refer to DTC U0001.

GENERAL DESCRIPTION EF2C406E

Refer to DTC U0001.

DTC DESCRIPTION E5DAC2B5

Refer to DTC U0001.

DTC DETECTING CONDITION E1D8BD4B

Item	Detecting Condition	Possible Cause
DTC Strategy	• ECU-ITM communication line or ECU side malfunction	• CAN HIGH/LOW circuit open/short • Faulty CAN MODULE
Enable Conditions	• Message present 1.0 sec self clearing	
Threshold Value	• Loss of EMS1 or EMS2 message for greater than 1 second, and a fault will be set	
Diagnostic Time	• 1 sec	
MIL on condition	• 0.5 Sec	
Fail Safe	• ECU will not react to Engine speed or torque. ECU will not send current to the clutch coil	

SIGNAL WAVEFORM & DATA E1CD9DB4

Refer to DTC U0001.

TERMINAL AND CONNECTOR INSPECTION E59B59F7

Refer to DTC U0001.

CAN COMM. LINE INSPECTION EF5EDCF7

Refer to DTC U0001.

SIGNAL CIRCUIT INSPECTION E086FF9D

Refer to DTC U0001.

VERIFICATION OF VEHICLE REPAIR EF6FD225

Refer to DTC U0001.

DTC U0101 SERIAL COMMUNICATION PROBLEM WITH TCU (TIMEOUT)

COMPONENT LOCATION E43D32B9

Refer to DTC U0001.

GENERAL DESCRIPTION E1BE0D4E

Refer to DTC U0001.

DTC DESCRIPTION EEDC0F62

Refer to DTC U0001.

DTC DETECTING CONDITION E4F4CC75

Item	Detecting Condition	Possible Cause
DTC Strategy	• TCU-ITM communication line or ECU side malfunction. (A/T only)	• CAN HIGH/LOW circuit open/short • Faulty TCU • Faulty TCCU
Enable Conditions	• Message present 1.0 sec self clearing	
Threshold Value	• Loss of TCU1 message for greater than 1 second, and a fault will be set. This fault applies to an automatic transmission only	
Diagnostic Time	• 1 sec	
MIL on condition	• 0.5 Sec	
Fail Safe	• Trans gear set to first, engine torque set to zero, ECU will not send current to the clutch coil	

SIGNAL WAVEFORM & DATA E837FFC1

Refer to DTC U0001.

TERMINAL AND CONNECTOR INSPECTION E0D72C99

Refer to DTC U0001.

CAN COMM. LINE INSPECTION EE92706C

Refer to DTC U0001.

CAN COMM. LINE INSPECTION EAFF0DAD

Refer to DTC U0001.

VERIFICATION OF VEHICLE REPAIR E8FD6BFE

Refer to DTC U0001.

DTC U0121 ABS-ITM CAN COMM. LINE

COMPONENT LOCATION EF99EAF9

Refer to DTC U0001.

GENERAL DESCRIPTION EE8BDFF2

Refer to DTC U0001.

DTC DESCRIPTION E020A53D

Refer to DTC U0001.

DTC DETECTING CONDITION ECC1E571

Item	Detecting Condition	Possible Cause
DTC Strategy	• ABS-ITM Communication Line, or ECU side malfunction	• CAN HIGH/LOW circuit open/short • Faulty ABS/ESP • Faulty TCCU
Enable Conditions	• Message present 1.0 sec self clearing	
Threshold Value	• Loss of the 4D0H message for greater than 1 second	
Diagnostic Time	• 1 sec	
MIL on condition	• 0.5 Sec	
Fail Safe	• Fault code stored in memory, and ABS/ESP strategy deactivated	

SIGNAL WAVEFORM & DATA E9AD7FBA

Refer to DTC U0001.

TERMINAL AND CONNECTOR INSPECTION E8BD2069

Refer to DTC U0001.

CAN SIGNAL INSPECTION ED3A75F7

Refer to DTC U0001.

SIGNAL CIRCUIT INSPECTION EE087EE6

Refer to DTC U0001.

VERIFICATION OF VEHICLE REPAIR ED5BEFB0

Refer to DTC U0001.

DTC U0122 ECM-TCS CAN ERROR

COMPONENT LOCATION ED4BD0B6

Refer to DTC U0001.

GENERAL DESCRIPTION ECF706BF

Refer to DTC U0001.

DTC DESCRIPTION E19C04E0

Refer to DTC U0001.

DTC DETECTING CONDITION E8C4D43D

Item	Detecting Condition	Possible Cause
DTC Strategy	• ESP-ITM Communication Line, or ECU side malfunction	• CAN HIGH/LOW circuit open/short • Faulty ABS/ESP • Faulty TCCU
Enable Conditions	• Message present 1.0 sec self clearing	
Threshold Value	• Loss of the Wheel Speed sensor signals for greater than one (1) second, and a fault will be set	
Diagnostic Time	• 1 sec	
MIL on condition	• 0.5 Sec	
Fail Safe	• See Speed Sensors	

SIGNAL WAVEFORM & DATA E6C97CDF

Refer to DTC U0001.

TERMINAL AND CONNECTOR INSPECTION EBB081A5

Refer to DTC U0001.

CAN SIGNAL INSPECTION EAD6B84C

Refer to DTC U0001.

CAN COMM. LINE INSPECTION EC91CE9A

Refer to DTC U0001.

VERIFICATION OF VEHICLE REPAIR E5E1AF1E

Refer to DTC U0001.

DTC U0126 SAS-ITM CAN COMM. LINE

COMPONENT LOCATION E5648EBD

Refer to DTC U0001.

GENERAL DESCRIPTION E3336C2E

Refer to DTC U0001.

DTC DESCRIPTION EC1EEAB6

Refer to DTC U0001.

DTC DETECTING CONDITION E7F8EF16

Item	Detecting Condition	Possible Cause
DTC Strategy	• SAS-ITM Communication Line, or ECU side malfunction	• CAN HIGH/LOW circuit open/short • Faulty SAS(ESP only) • Faulty TCCU
Enable Conditions	• Message present 1.0 sec self clearing	
Threshold Value	• Loss of the Wheel Speed sensor signals for greater than one (1) second, and a fault will be set	
Diagnostic Time	• 1 sec	
MIL on condition	• 0.5 Sec	
Fail Safe	• See Speed Sensors	

SIGNAL WAVEFORM & DATA ED8FBCCA

Refer to DTC U0001.

TERMINAL AND CONNECTOR INSPECTION EB05A52D

Refer to DTC U0001.

WAVEFORM INSPECTI E52C587A

Refer to DTC U0001.

SIGNAL CIRCUIT INSPECTION EFEFCEA0

Refer to DTC U0001.

VERIFICATION OF VEHICLE REPAIR EBCAE600

Refer to DTC U0001.

TRANSFER CASE

COMPONENTS E5DB3362

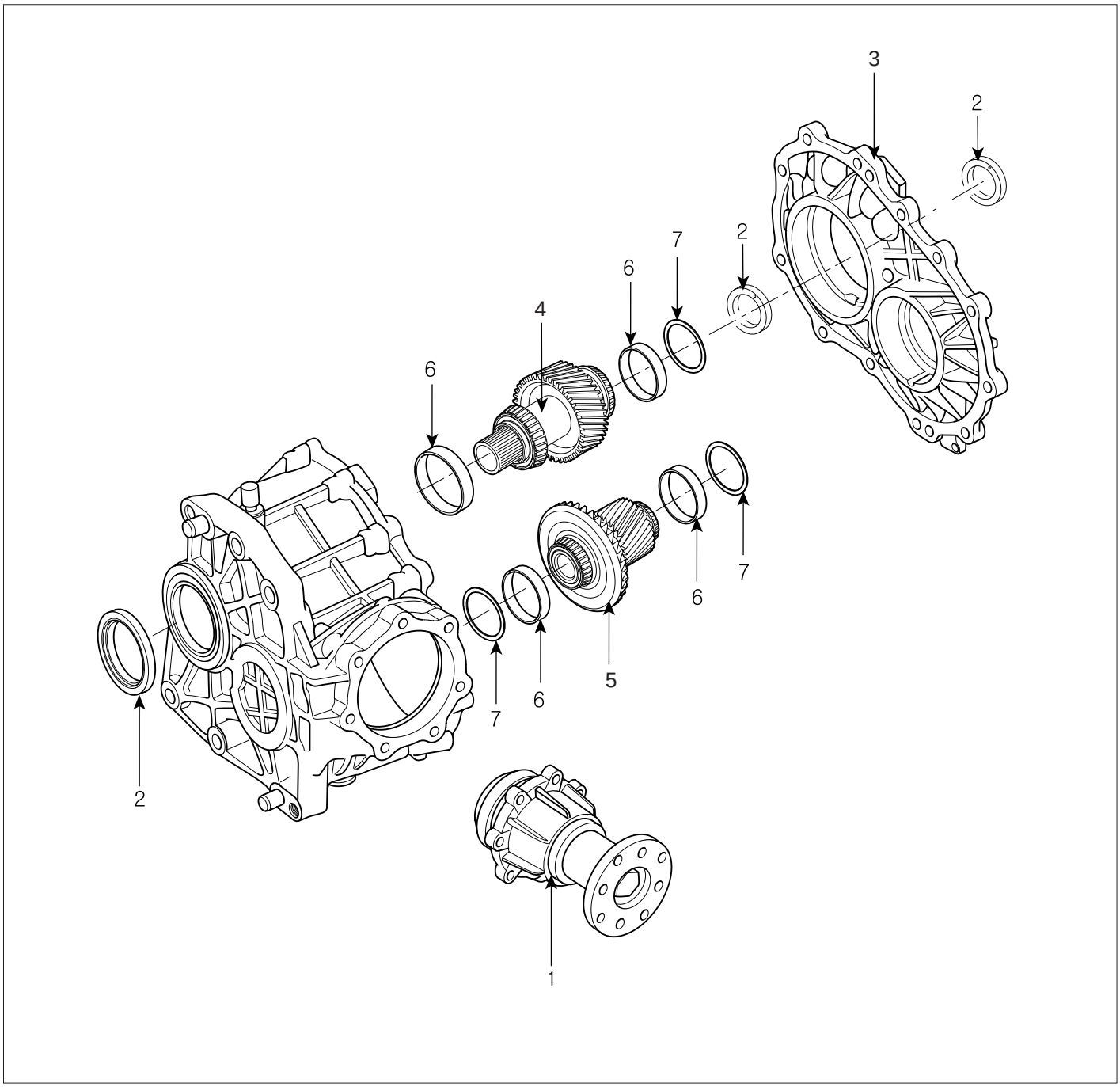

1. Pinion assembly
2. Oil seal
3. Transfer cover
4. Transfer drive gear assembly
5. Hypoid gear shaft assembly
6. Bearing outer race
7. Spacer

SCMMT6021L

INSPECTION E046DF3C

CHECK FOR TRANSFER OIL

1. Check and replenish the transfer oil every 40,000km(24,855 miles).

REPLACEMENT E6E243DF

TRANSFER OIL REPLACEMENT.

1. Replace the oil every 100,000km(62,137miles) in a general condition and every 40,000km(24,854miles) in severe usage conditions.

NOTE

1. Severe usage (marked '') is defined as*
a. Frequent driving on rough road (Bumpy road, gravel road, snowy road, unpaved road . Etc.)
b. Frequent driving on mountain road, ascent/descent.
c. Police, taxi, commercial type operation or trailer towing. Etc.)

2. Transfer & diff carrier lubricants should be changed anytime transfer & diff carrier have been submerged in water

REMOVAL EE0686D7

[DIESEL 2.2L]

1. Remove the battery (-) terminal.
2. Lift up the vehicle.
3. Remove the propellar shaft (see 'DS' group-'PROPELLAR SHAFT')
4. Remove the front muffler(see EM group).
5. Remove the RH driveshaft (see 'DS' group-'DRIVESHAFT').
6. Loosen the oil drain plug(A) and drain the fluid.

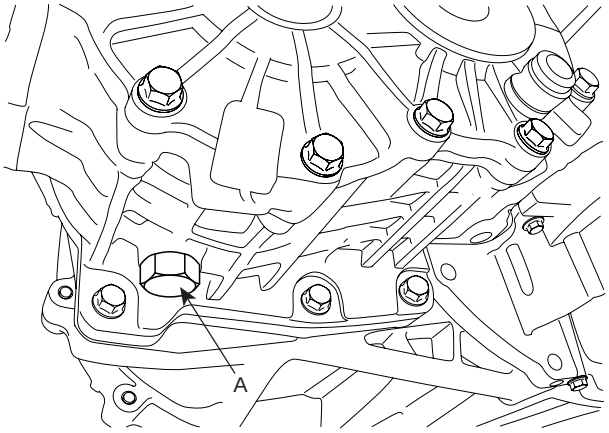

SCMMT6062D

7. After draining, re-tighten the oil drain plug.

TORQUE :
40~60 Nm (4~6 kgf.m, 28.9~43.4 lb-ft)

8. Remove the bracket mounting bolts(A-4ea).

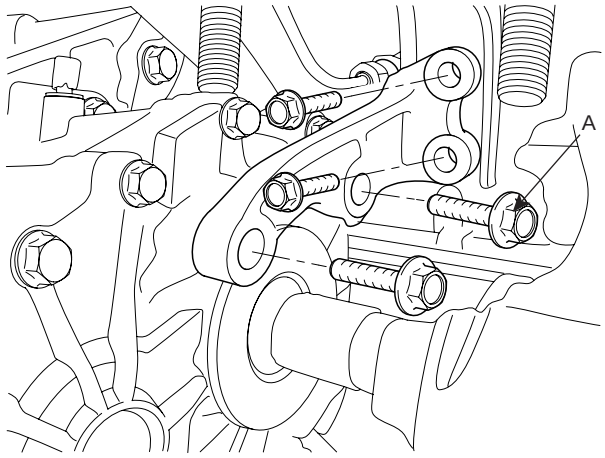

SCMMT6030L

9. Remove the transfer case assembly by removing the mounting bolts(A-6ea).

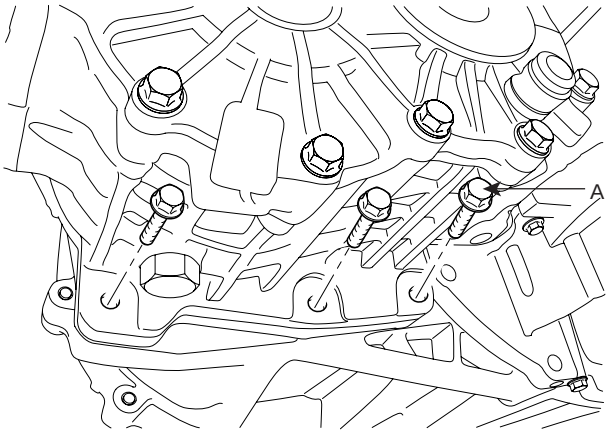

SCMMT6029L

[GASOLINE 2.7L]

NOTE

1. The repair of the transfer assembly requires a special skill and furthermore an improper adjustment of the spacers may cause a severe noise and durability issue.
2. Hypoid gear set is manufactured and controlled as a pair. Any replacement of the part is to be done as a pair, hypoid gear shaft assembly (47308-39200) and pinion shaft (47311-39000).

1. Remove the battery negative (-) cable.
2. Disconnect the oxygen sensor connector(A,B) and remove the oxygen sensor connector bracket. (Engine room right side).

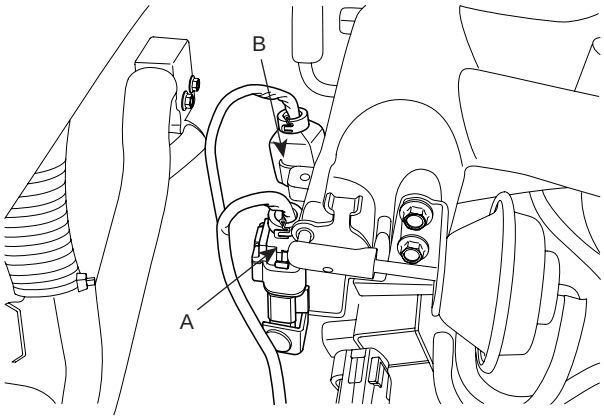

SCMMT6025L

3. Remove the wheel and tire (Right side).
4. Remove the engine side cover(A) (Right side).
5. Remove the drive shaft(A) from the transfer.(see DS group)
6. Remove the front exhaust pipe assembly(A).

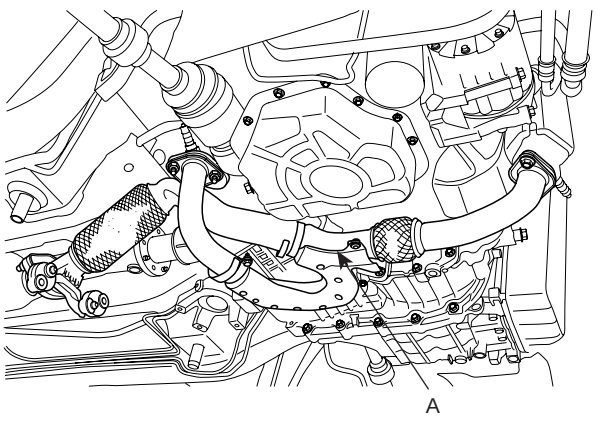

SCMMT6022L

7. Drain the transfer oil through drain plug hole.
8. Remove the pinion case mounting bolts(A-4ea).

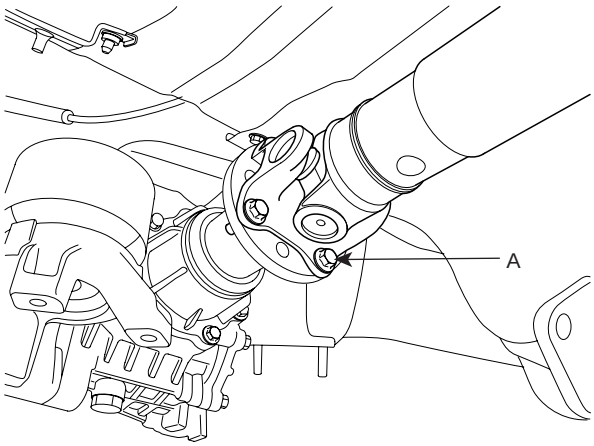

SCMMT6027L

9. Remove the heat protector(A) using a hexagonal socket.

NOTE

To remove the heat protector mounting bolt easily, before removing the heat protector mounting bolts(3EA), apply the mounting bolt with "WD-40 stops squeaks".

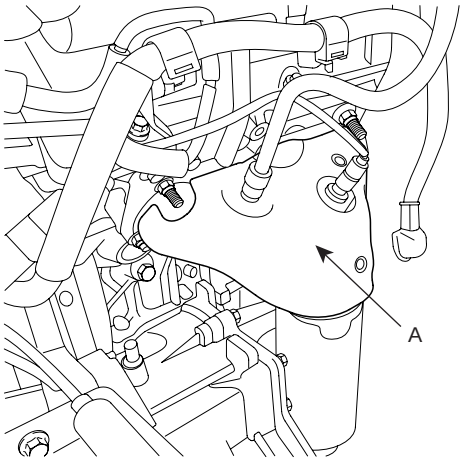

UMQG002K

10. Lift up the vehicle.
11. Remove the exhaust manifold mounting nuts(7EA).

NOTE

To remove the exhaust manifold mounting nut easily, before removing the exhaust manifold mounting nuts(7EA), apply the mounting nuts with "WD-40 stops squeaks".

12. Remove the transfer mounting bracket(A).
13. Remove the transfer mounting bolts(4EA).

14. Using a flat head screw driver, remove the transfer from the transaxle by moving the driver to left and right directions.

DISASSEMBLY E1E594D1

1. Drain the transfer oil through drain plug hole.
2. Remove the pinion assembly mounting bolts (7EA) and then remove the pinion assembly(A).

NOTE

This assembly can be removed with a propella shaft assembly in 'REMOVAL' step.

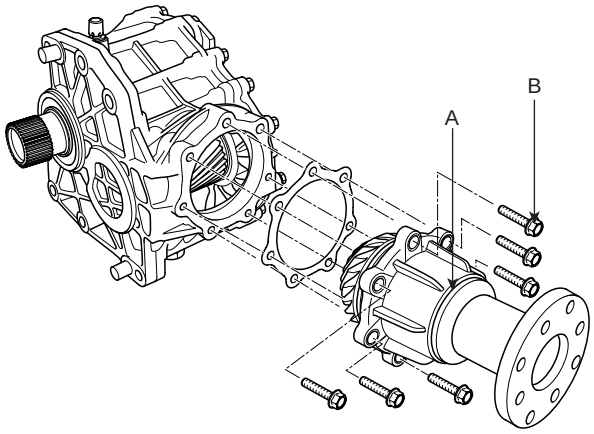

SCMMT6070D

3. Remove the dust cover(A).

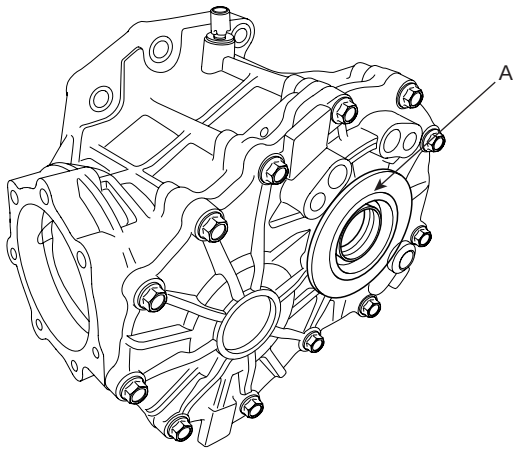

SCMMT6071D

4. Remove the transfer cover(A).

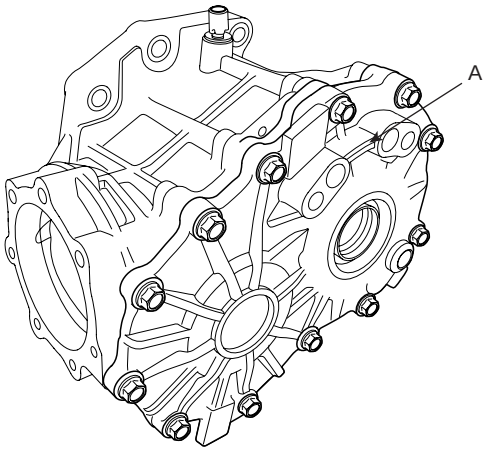

SCMMT6077D

5. Remove the transfer drive gear assembly(A) and the hypoid gear shaft assembly(B) from the trasfer housing.

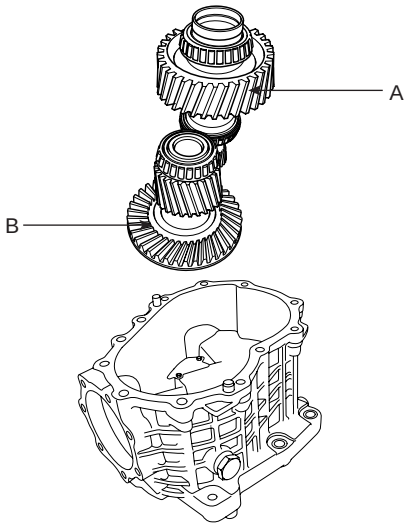

SCMMT6072D

6. Remove the oil seal(A)(47452-39000, transfer drive gear left hand side).

NOTE

When reassembling the transfer, be sure to always replace the oil seal(47452-39000) with new part.

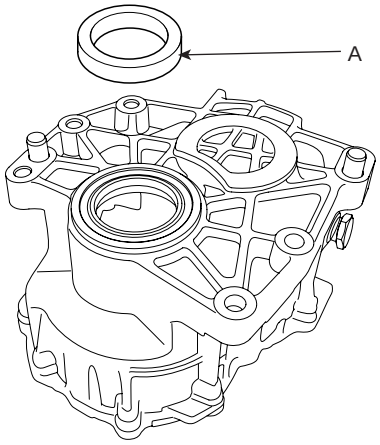

SCMMT6073D

7. Remove the oil seal(47352-39300) inside the transfer cover.

8. Using a sliding hammer, remove the taper roller bearing outer races(C) from the transfer cover(A) and housing(B).

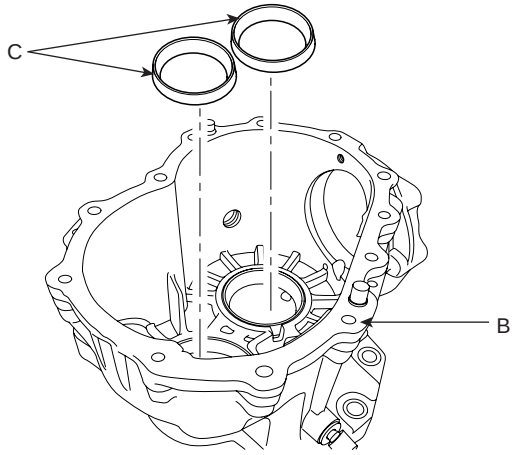

SCMMT6074D

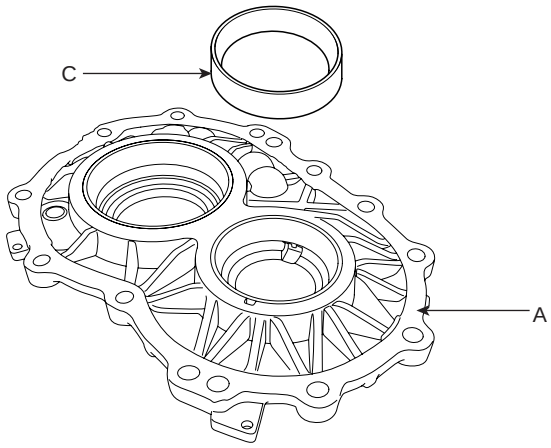

SCMMT6075D

9. Remove the oil seal(A) from the transfer cover.

NOTE

When reassembling the transfer, be sure to always replace the oil seal(47350-39300) with new part.

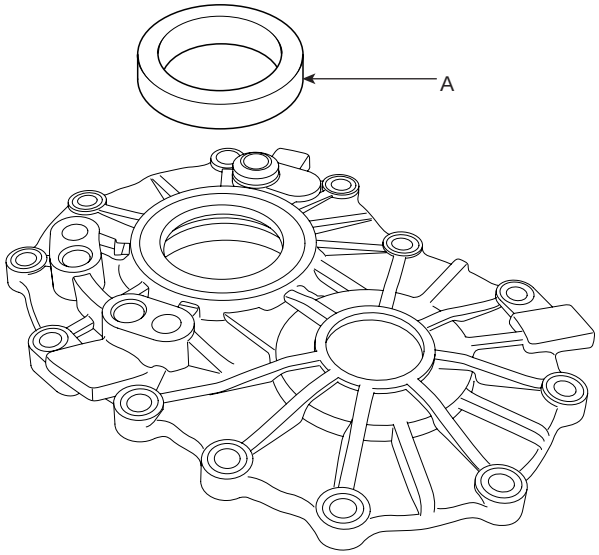

SCMMT6076D

REASSEMBLY E6E29444

NOTE

1. *Clean all parts except the taper roller bearings. Be careful about the direction of seals.*
2. *Oil bearings with hypoid gear oil API GL5.*
3. *Smear involute splines all covering with high pressure grease "Klueber microlube GNY202".*
4. *Measuring temperature: 20°±5°C.*
5. *O-ring has to be dipped into hypoid gear oil API GL5. Allow excess oil to drain.*
6. *Contact surface of the transfer housing to be coated with "SEALANT 732" or equivalent (silicon type sealing agent) prior to mounting. Coating thickness: 0.1mm MIN. Prior to coating, mating surfaces must be clean and free from oil and grease.*
7. *Transfer oil specification : Hypoid gear oil "API GL5, SAE 75W/90 SHELL SPIRAX EQUIVA-LENT". Filled up to lower filler plug thread level(Approx. 0.8L)*
8. *The hypoid gear set must be managed as a pair. Whenever installing or replacing a hypoid gear shaft assembly(47339-39300) or a pinion shaft(47311-39300). Make sure to install or replace as a pair.*
9. *In reassembling, refer to the two figures below.*

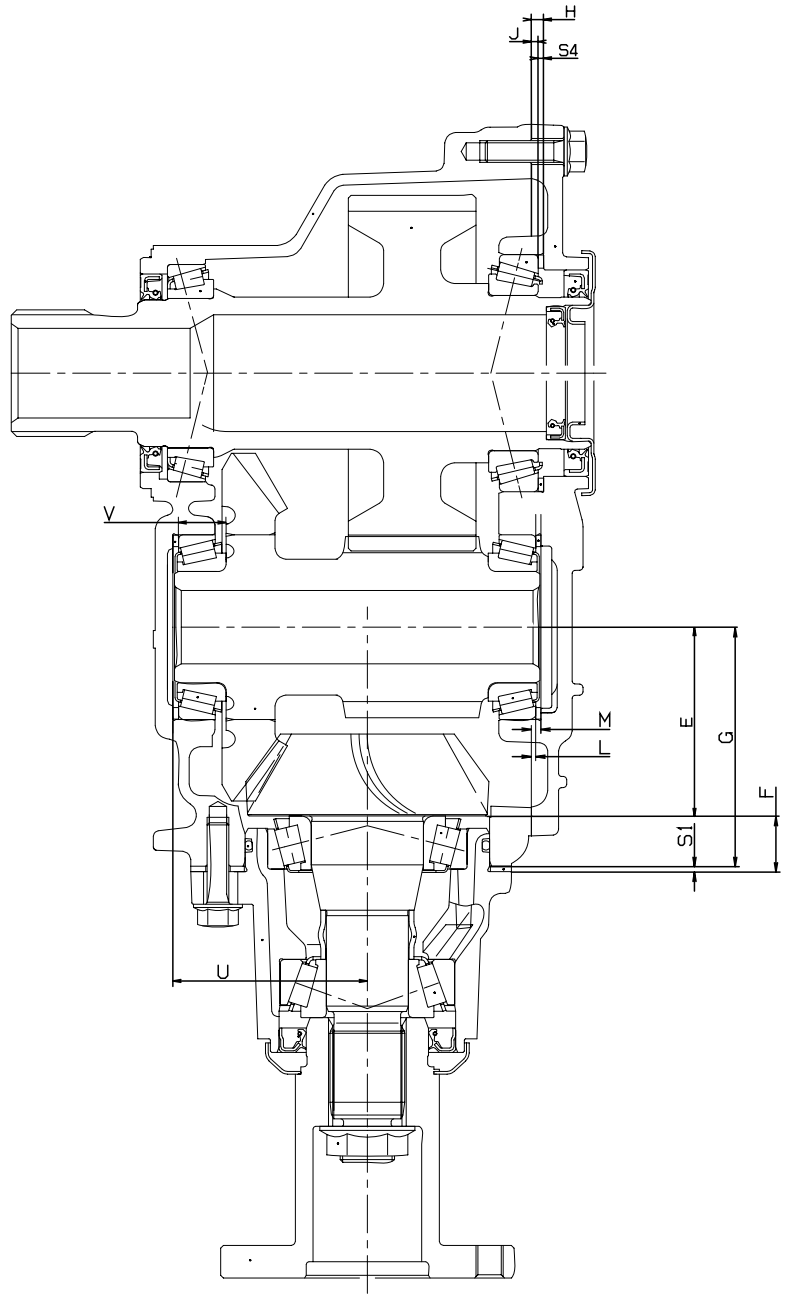

SCMMT6042D

1. Install the transfer drive gear with the taper roller bearings(47366-39000 and 47465-39000) into transfer housing.
2. Applying the preload(100 to 200N) to bearings, measure the dimension J.
3. Measure the dimension H on transfer cover(47314-39200).
4. Select the spacer thickness from the chart below. Thickness S4= H-J+K. (K: Bearing preload = 0.07 to 0.11mm.)

Corresponding preload torque(measured without seals) : 120 to 180Ncm.

PART NUMBER	SPACER THICKNESS (mm)
47383-39152	1.520-1.539
47383-39154	1.540-1.559
47383-39156	1.560-1.579
47383-39158	1.580-1.599
47383-39160	1.600-1.619

PART NUMBER	SPACER THICKNESS (mm)
47383-39162	1.620-1.639
47383-39164	1.640-1.659
47383-39166	1.660-1.679
47383-39168	1.680-1.699
47383-39170	1.700-1.719
47383-39172	1.720-1.739
47383-39174	1.740-1.759
47383-39176	1.760-1.779
47383-39178	1.780-1.779
47383-39180	1.800-1.819
47383-39182	1.820-1.839
47383-39185	1.85-1.88
47383-39189	1.89-1.92
47383-39193	1.93-1.96
47383-39197	1.97-2.00
47383-39201	2.01-2.04
47383-39205	2.05-2.08
47383-39209	2.09-2.12
47383-39213	2.13-2.16
47383-39217	2.17-2.20
47383-39221	2.21-2.24
47383-39225	2.25-2.28
47383-39229	2.29-2.32
47383-39233	2.33-2.36

5. Reassemble the selected spacer above.

6. Measure the dimension U and V.
   U···. Finished dimension of transfer housing.
   V···. Distance from back of the hypoid gear to bearing measured under 100 to 200N preload.

7. Select the spacer thickness from the chart below. Thickness S2=U-(V + mounting distance 52.0 mm).

PART NUMBER	SPACER THICKNESS(mm)
47384-39130	1.300-1.319
47384-39132	1.320-1.339
47384-39134	1.340-1.359
47384-39136	1.360-1.379
47384-39138	1.380-1.399
47384-39140	1.400-1.419

PART NUMBER	SPACER THICKNESS(mm)
47384-39142	1.420-1.439
47384-39144	1.440-1.459
47384-39146	1.460-1.479
47384-39148	1.480-1.499
47384-39150	1.500-1.519
47384-39152	1.520-1.539
47384-39154	1.540-1.559
47384-39156	1.560-1.579
47384-39158	1.580-1.599
47384-39160	1.600-1.619
47384-39162	1.620-1.639
47384-39164	1.640-1.659
47384-39166	1.660-1.679
47384-39168	1.680-1.699
47384-39170	1.700-1.719
47384-39172	1.720-1.739
47384-39174	1.740-1.759
47384-39176	1.760-1.779
47384-39178	1.780-1.799
47384-39180	1.800-1.819
47384-39182	1.820-1.839
47384-39184	1.840-1.859
47384-39186	1.860-1.879
47384-39188	1.880-1.899
47384-39190	1.900-1.919
47384-39192	1.920-1.939
47384-39194	1.940-1.959
47384-39196	1.960-1.979
47384-39198	1.980-1.999
47384-39200	2.000-2.019
47384-39202	2.020-2.039
47384-39204	2.040-2.059
47384-39206	2.060-2.079
47384-39208	2.080-2.099
47384-39210	2.100-2.119
47384-39212	2.120-2.139
47384-39214	2.140-2.159
47384-39216	2.160-2.179

PART NUMBER	SPACER THICKNESS(mm)
47384-39218	2.180-2.199
47384-39220	2.200-2.219
47384-39222	2.220-2.239
47384-39224	2.240-2.259
47384-39226	2.260-2.279
47384-39228	2.280-2.299
47384-39230	2.300-2.319
47384-39232	2.320-2.339
47384-39234	2.34-2.37
47384-39238	2.38-2.41
47384-39242	2.42-2.45
47384-39246	2.46-2.49
47384-39250	2.50-2.53

8. Install the spacer selected above, the taper roller bearings and the hypoid gear shaft assembly (47339-39300). And preload the assembly without the spacer(Hypoid gear shaft assembly-Transfer cover side) with 100 to 200N.

9. Measure the dimension L after 10 rotations.

10. Measure the dimension M on transfer cover (47314-39300).

11. Select the spacer thickness from the chart above in the step 7. Thickness S3=M-L+(0.09 to 0.12mm) preload.

12. Install the spacer selected above.

13. Install the taper roller bearing outer races to the transfer housing and cover.

14. Install a new oil seal(A) in the transfer housing.

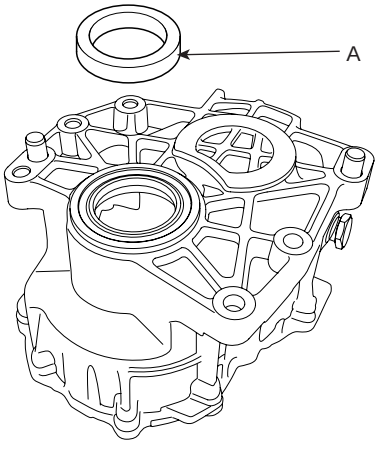

SCMMT6073D

15. Install the hypoid gear shaft assembly(A) and the transfer drive gear assembly(B) in the transfer housing.

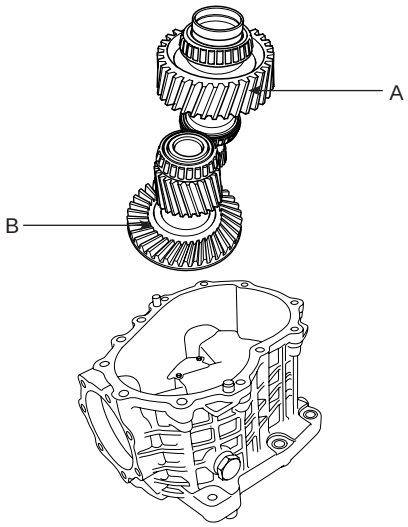

SCMMT6072D

16. Measure the dimension F.
F···. Assembled dimension of pinion assembly.
G···. Finished dimension of transfer housing.(=88.0mm)
E···. Mounting distance(=69.500 ± deviation).

17. Select the spacer thickness from the chart below. Thickness S1=E+F-G

NOTE

If it is not possible to reach the exact mounting distance, select the next thinner spacer S1.

PART NUMBER	SPACER THICKNESS(mm)
47385-39125	1.25-1.28
47385-39129	1.29-1.32
47385-39133	1.33-1.36
47385-39137	1.37-1.40
47385-39141	1.41-1.44
47385-39145	1.45-1.48
47385-39149	1.49-1.52
47385-39153	1.53-1.56
47385-39157	1.57-1.60
47385-39161	1.61-1.64
47385-39165	1.65-1.68
47385-39169	1.69-1.72
47385-39172	1.720-1.739
47385-39174	1.740-1.759

PART NUMBER	SPACER THICKNESS(mm)
47385-39176	1.760-1.779
47385-39178	1.780-1.799
47385-39180	1.800-1.819
47385-39182	1.820-1.839
47385-39184	1.840-1.859
47385-39186	1.860-1.879
47385-39188	1.880-1.899
47385-39190	1.900-1.919
47385-39192	1.920-1.939
47385-39194	1.940-1.959
47385-39196	1.960-1.979
47385-39198	1.980-1.999
47385-39200	2.000-2.019
47385-39202	2.020-2.039
47385-39204	2.040-2.059
47385-39206	2.060-2.079

PART NUMBER	SPACER THICKNESS(mm)
47385-39208	2.080-2.099
47385-39210	2.100-2.119
47385-39213	2.13-2.16
47385-39217	2.17-2.20
47385-39221	2.21-2.24
47385-39225	2.25-2.28
47385-39229	2.29-2.32
47385-39233	2.33-2.36

18. Install the pinion assembly with the selected spacer above and measure the circumference backlash on pinion.
(Measuring diameter, backlash and permissible deviations for measurement on pinion, see table below).
If the result is out of permissible range, change the spacer thickness S2, then start again with the step 8~12).

TIPS FOR SPACER ADJUSTMENT FOR HYPOID GEAR BACKLASH AND CONTACT PATTERN

ITEM	SYMPTOM	REMEDY
Backlash	When more than the standard value (0.16 ~ 0.21mm)	Adjust backlash by installing the spacer S1 using a thinner one and gradually installing a thicker one.
	When less than the standard value (0.16 ~0.21mm)	Adjust backlash by installing the spacer S1 using a thicker one and gradually installing a thinner one.

ITEM	SYMPTOM	REMEDY
Hypoid gear tooth contacy pattern	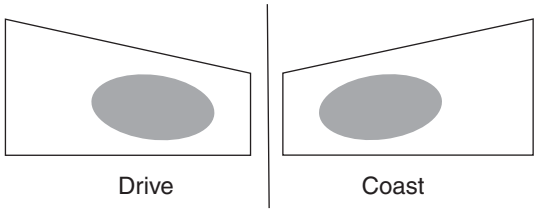 UMQG004D	• Normal state • Standard tooth pattern - Both drive and coast surfaces are in center in lateral direction and slightly incline to TOE side in vertical direction • If the pattern deviates from the standard, adjust it by following procedure
	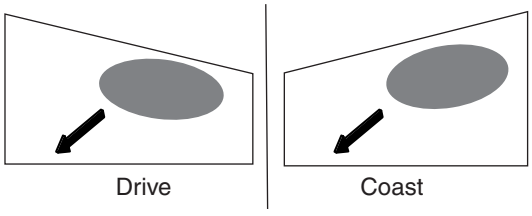 UMQG004E	• Abnormal state • The dirve surface inclines to TOE and TOP and the coast surface inclines to HEEL and TOP The tooth contact pattern can be moved to the arrow direction by installing the spacer S2 using a thinner one and gradually installing a thicker one.

19. Remove the pinion assembly. With the spacer S3 and transfer cover mounted, combined preload torque for the hypoid gear shaft assembly and transfer gear (measured on transfer gear) should be 2.7 to 3.8Nm. The spacer S3 has to be changed, if the preload torque is not within the permissible range.

20. Tighten the pinion assembly mounting bolts (B-7EA) to install the pinion assembly(A).

TORQUE:
37~40 Nm(3.7~4.0 kgf.m, 14.5~21.7 lb-ft)

NOTE

1. Before installing the pinion assembly, check the pinion O-ring and apply the oil to the O-ring.
2. To make the installation of the pinion to the transfer easier, tap the pinion using a plastic hammer after aligning the bolt holes.

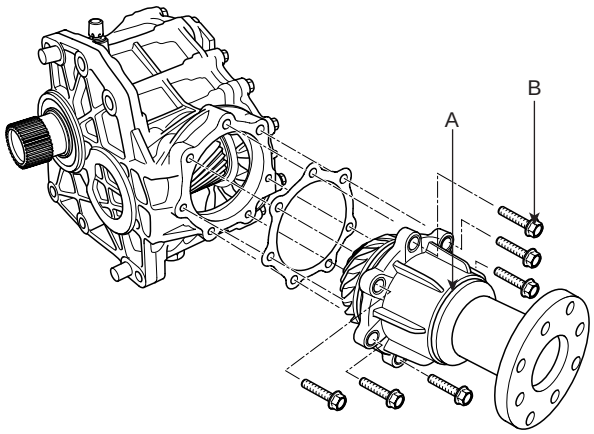

SCMMT6070D

INSTALLATION E5F331AD

[DIESEL 2.2L]

1. Installation is in reverse order of removal.

CAUTION

Must use a new O-ring(47354-39300) which is placed between the transaxle and the transfer case.

2. Remove the filler plug(A).

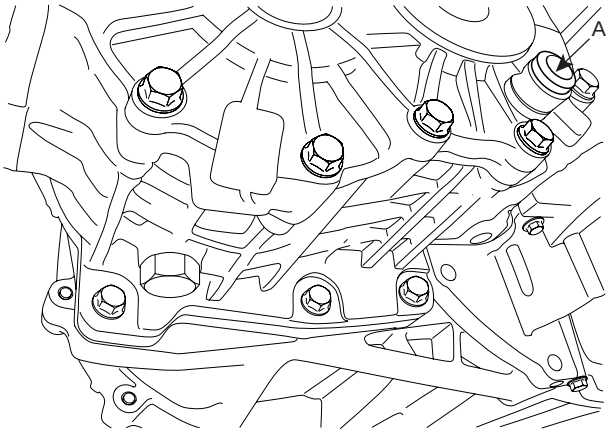

SCMMT6063D

3. Refill the specification to the specified quantity.

Specification : API GL-5, SAE 75w/90
Quantity : Approx 0.8L

[GASOLINE 2.7L]

1. Install the transfer assembly to the transaxle.

NOTE

To install the transfer easily, install it by moving the pinion left and right directions, and slightly rotating the inner drive shaft of transfer assembly.

2. Install the transfer mounting bolts(4EA).

TORQUE:
62~67 Nm(6.2~6.7 kgf.m, 44.8~48.5 lb-ft)

3. Install the transfer mounting bracket.

TORQUE:
47~51 Nm(4.7~5.1 kgf.m, 34.0~36.9 lb-ft) - 2EA
24~28 Nm(2.4~2.8 kgf.m, 17.4~20.3 lb-ft) - 2EA

4. Tighten the exhaust manifold mounting nuts(7EA).

TORQUE:
30~35 Nm(3.0~3.5 kgf.m, 21.7~25.3 lb-ft)

5. Tighten the heat protector(A) mounting nuts(3EA).

TORQUE:
11.8~14.7 Nm(1.2~1.5 kgf.m, 8.7~10.8 lb-ft)

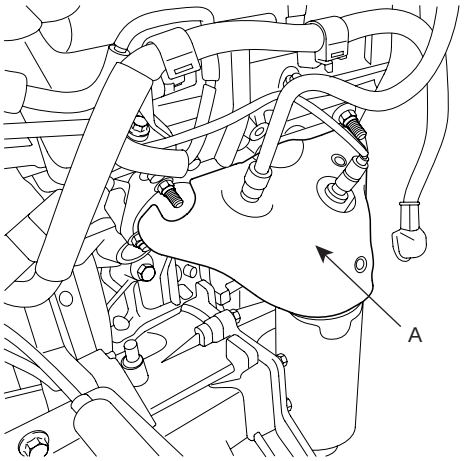

UMQG002K

6. Tighten the pinion case mounting bolts(6EA).

TORQUE:
37~40 Nm(3.7~4.0 kgf.m, 14.5~21.7 lb-ft)

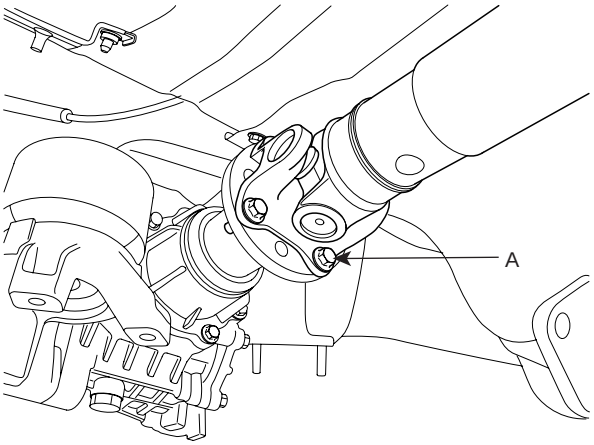

SCMMT6027L

7. Refill the transfer oil through the filler plug.

8. Install the front exhaust pipe assembly(A).

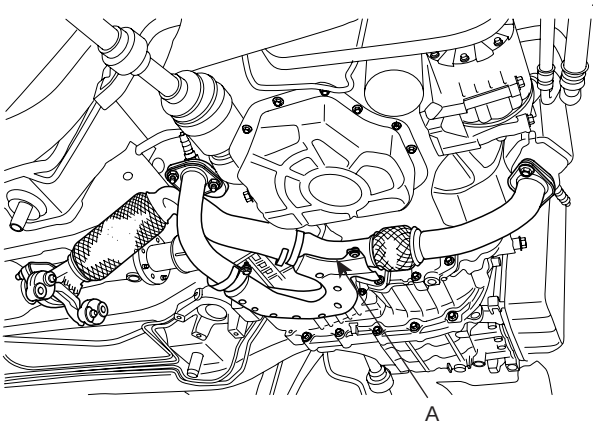

SCMMT6022L

9. Install the drive shaft(RH) to the transfer assembly, lower arm ball joint mounting and steering bar tie rod ball joint.

10. Lower the vehicle down.

11. Install the engine side cover (RH) and the wheel and tire(RH).

12. Install the oxygen sensor connector bracket and connect the oxygen sensor connector(A,B). (Engine room right side).

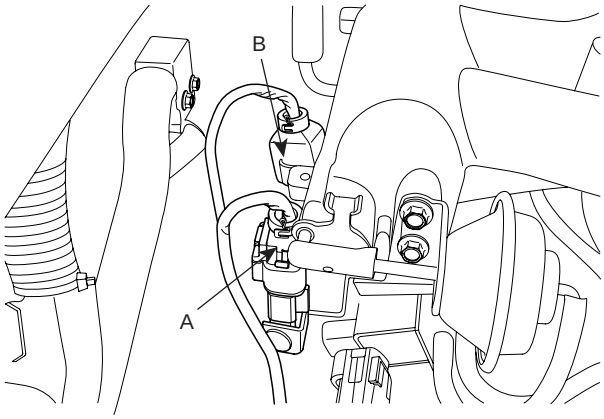

SCMMT6025L

13. Connect the battery negative (-) cable.

TRANSFER DRIVE GEAR

COMPONENTS EA0B2C67

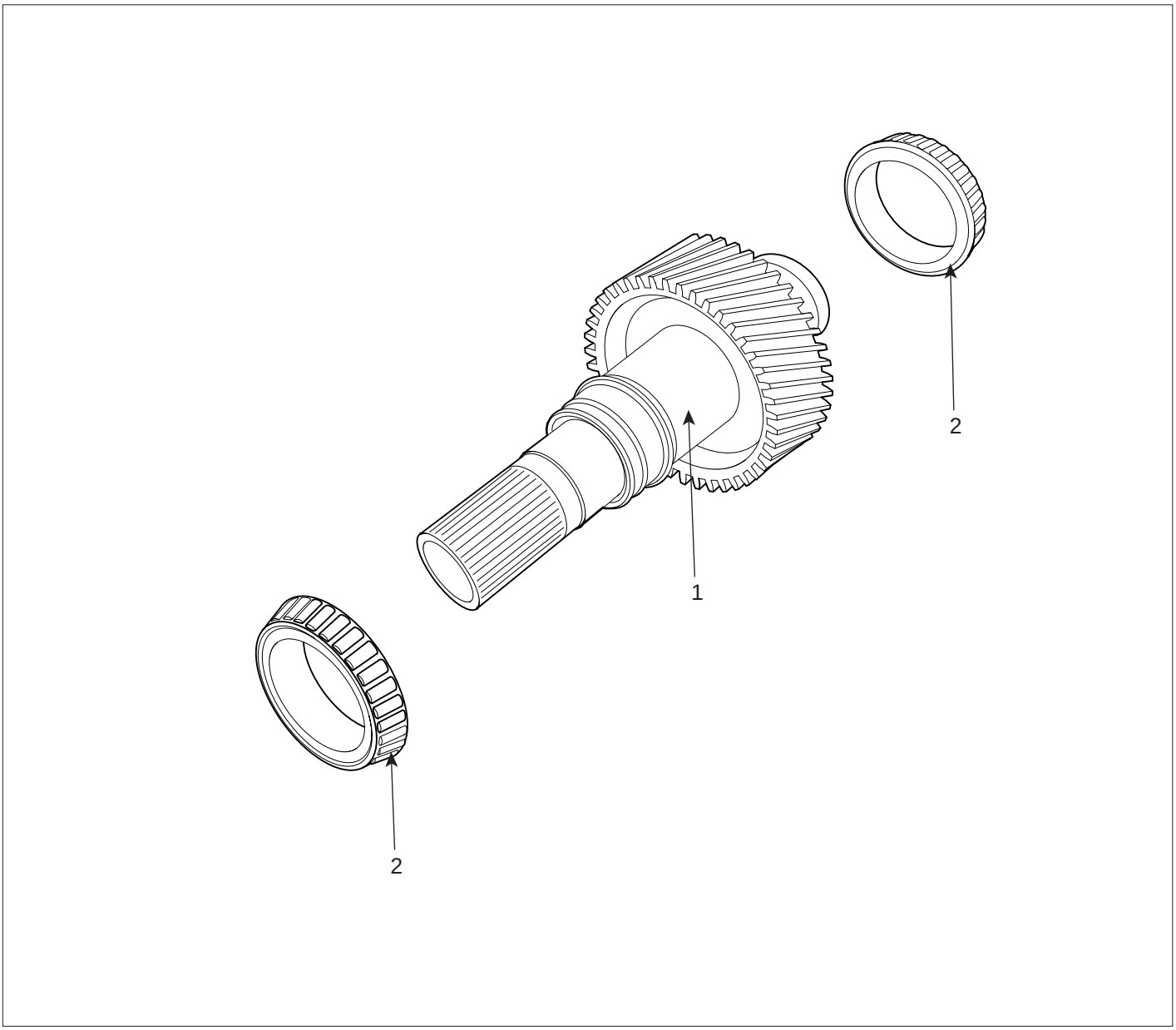

1. Transfer drive gear
2. Taper roller bearing

SCMMT6013L

DISASSEMBLY EECF47C9

1. Remove the oil seal(A) from the transfer drive gear.

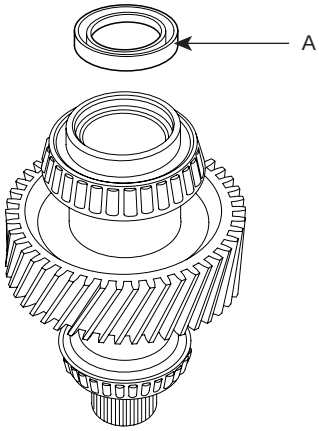

UMQG006B

2. Using the SST(09455-21000), remove the taper roller bearings(A) from the both sides of the transfer drive gear assembly.

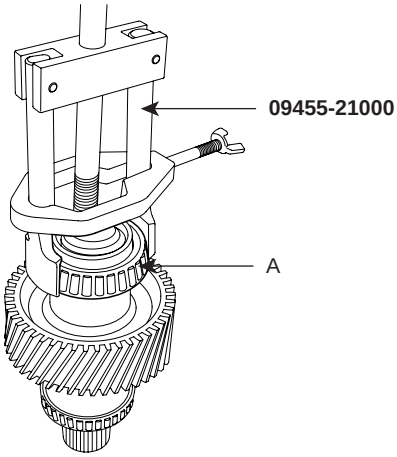

UMQG006C

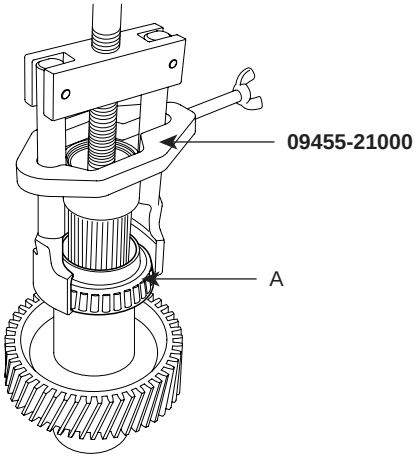

UMQG006D

REASSEMBLY E07549D3

1. Using a press machine, install the taper roller bearings(A) to the transfer drive gear.

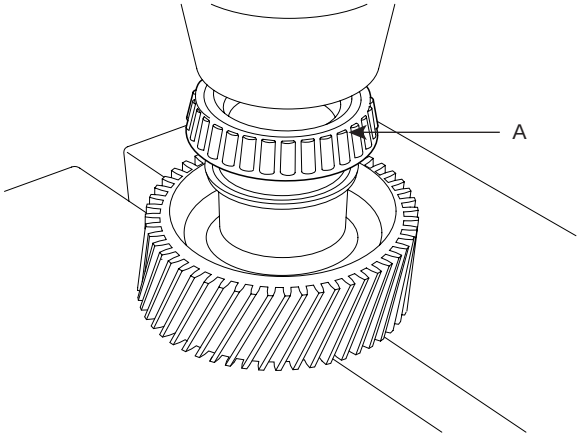

UMQG006F

HYPOID GEAR

COMPONENTS EDEC1CEB

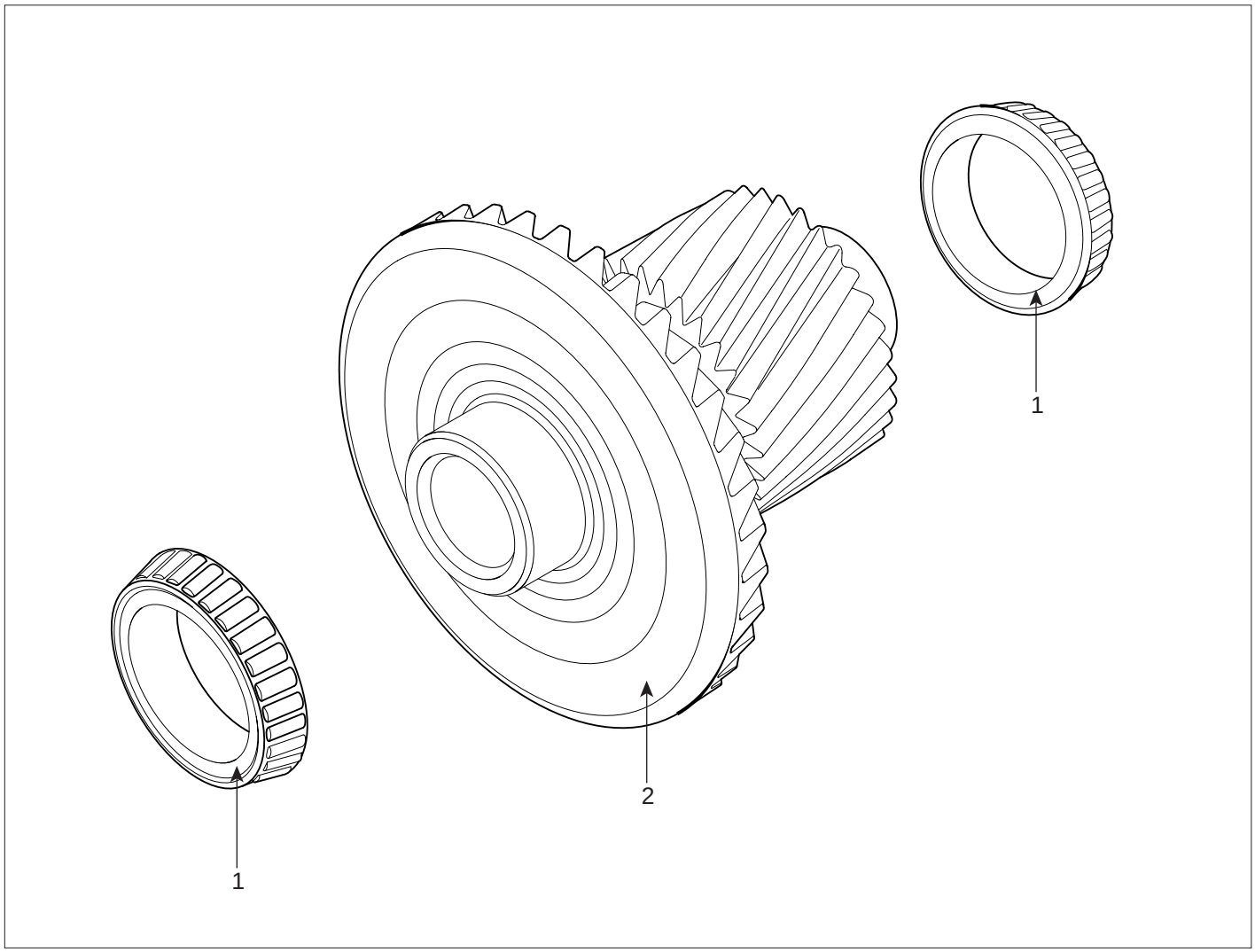

1. Taper roller bearing
2. Hypoid gear

UMQG007A

DISASSEMBLY E8DD87F3

1. Using the SST(09455-21000), remove the taper roller bearing(A) from the hypoid gear shaft assembly.

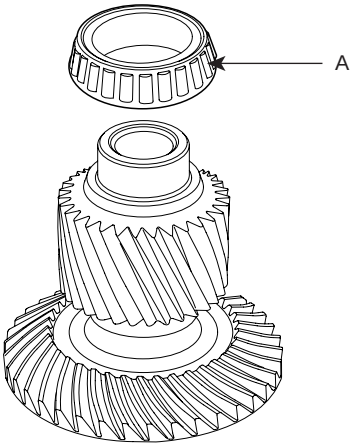

UMQG007C

2. Using the SST(09455-21000), remove the other taper roller bearing(A) from the hypoid gear shaft assembly.

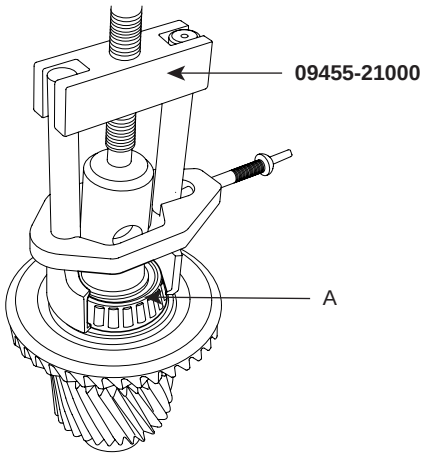

UMQG007D

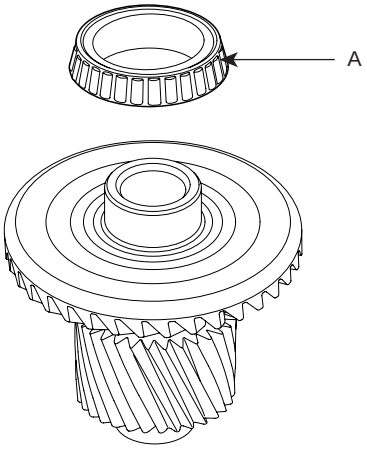

UMQG007E

REASSEMBLY EE2B9974

1. Using a press machine, install the taper roller bearings(A) to the hypoid gear shaft assembly.

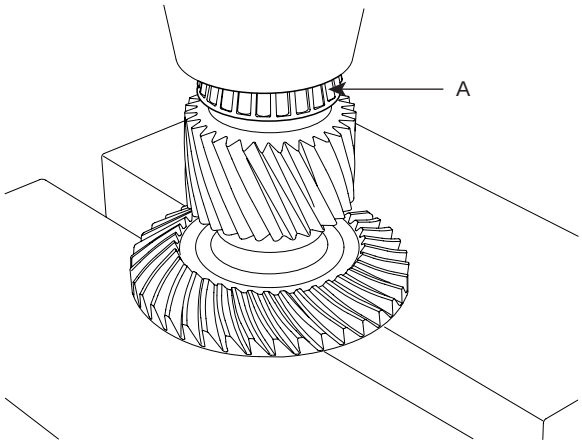

UMQG007F

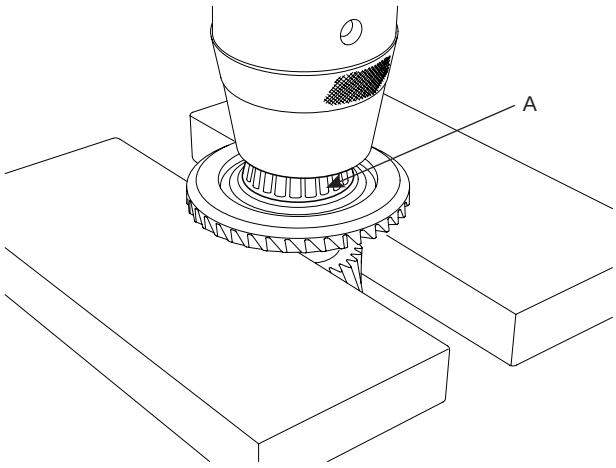

UMQG007G

PINION SHAFT AND CASE

COMPONENTS E3FABF07

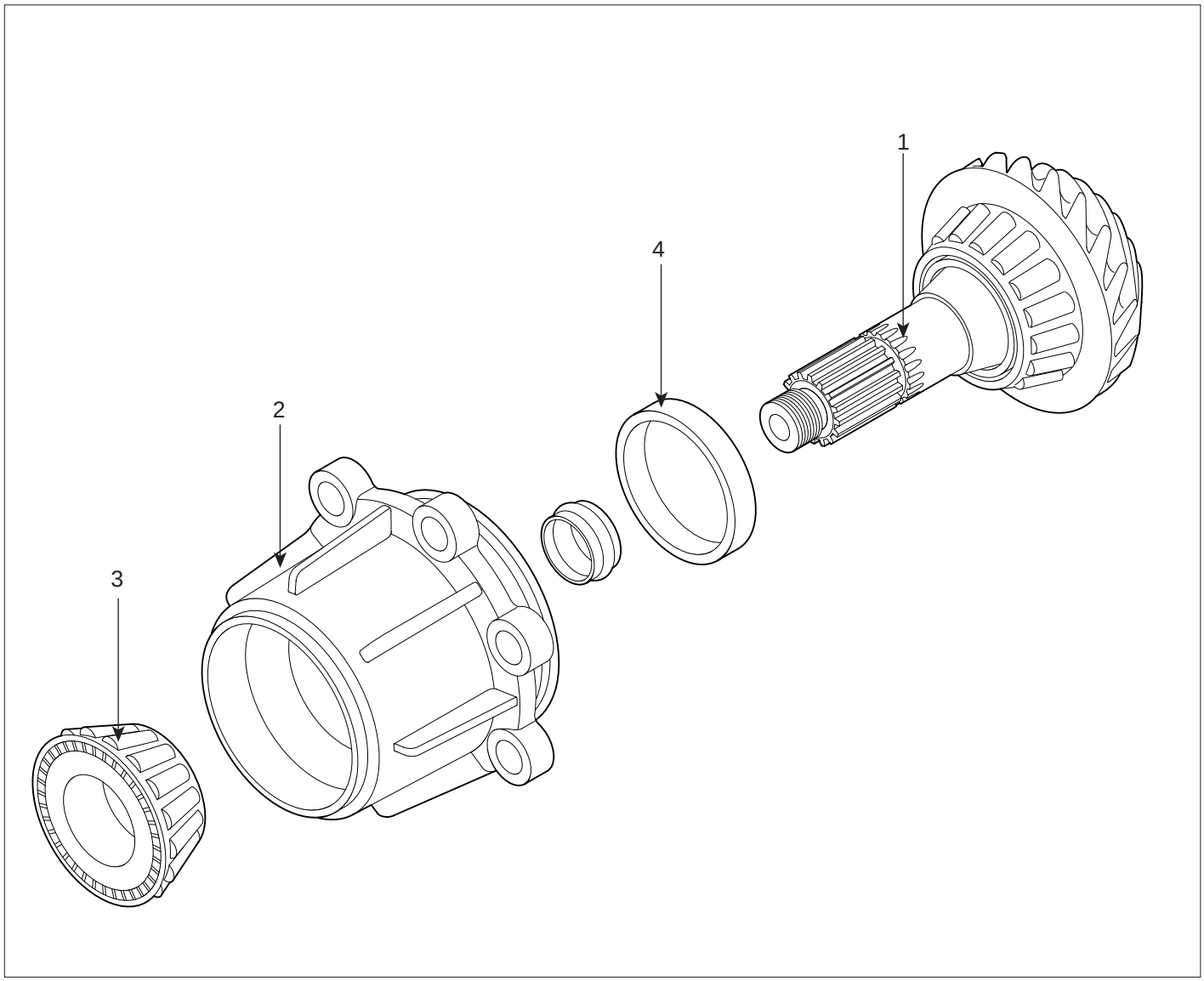

1. Pinion shaft
2. Pinion case
3. Taper roller bearing
4. Taper roller bearing outer race

UMQG005A

DISASSEMBLY E4671E56

1. Remove the O-ring(A) from the pinion shaft and case assembly.

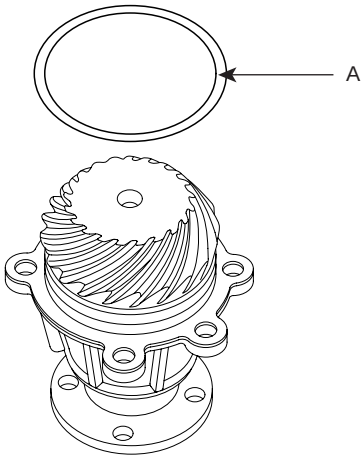

UMQG005B

2. Remove the spacer(A).

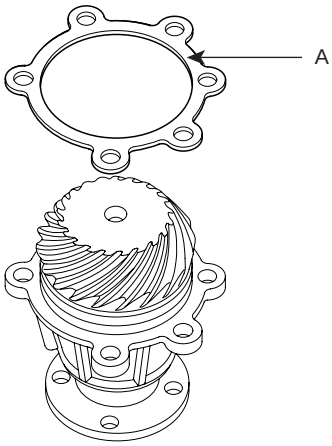

UMQG005C

3. Loosen the HEX lock nut(A).

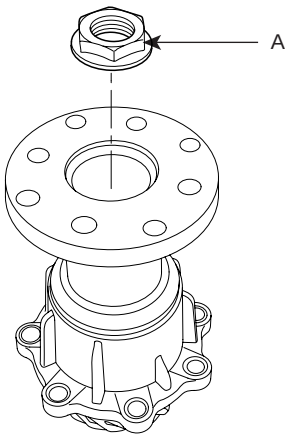

SCMMT6080D

4. Remove the rear flange assembly(A).

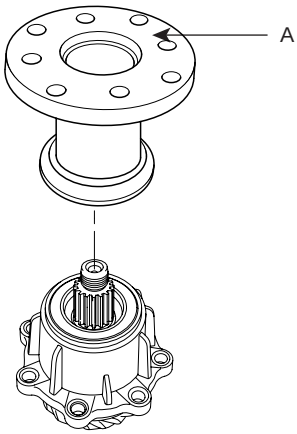

SCMMT6081D

5. Using the SST(09455-32200), remove the oil seal(A) from the pinion case.

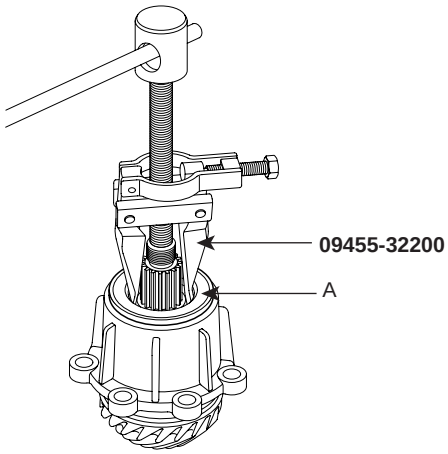

UMQG005F

6. Using a press machine, remove the pinion shaft(A) from the pinion case(B).

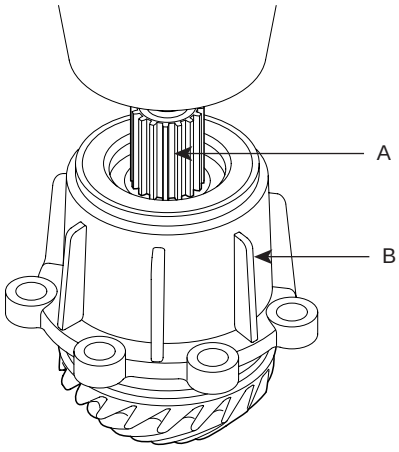

UMQG005G

7. Take out the taper roller bearing(A) from the pinion case(B).

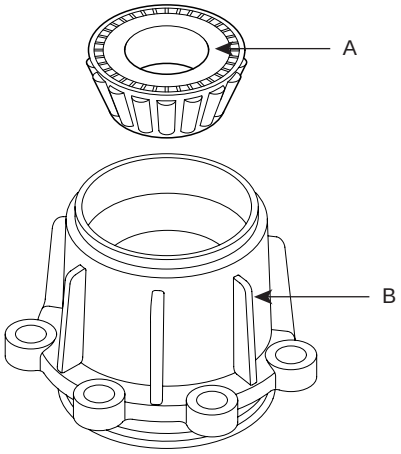

UMQG005H

8. Using a sliding hammer(A), remove the taper roller bearing outer race(B) from the pinion case(C).

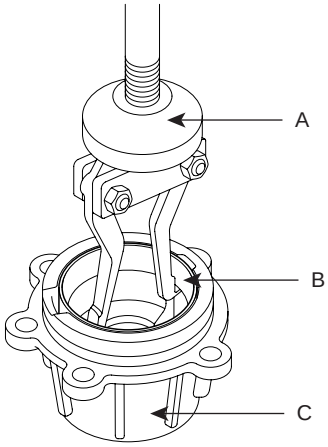

UMQG005I

REASSEMBLY E546DB0B

1. Assemble the taper roller bearing outer races.

2. Using a press machine, install the taper roller bearing(C) and the pinion shaft(A) in the pinion case(B).

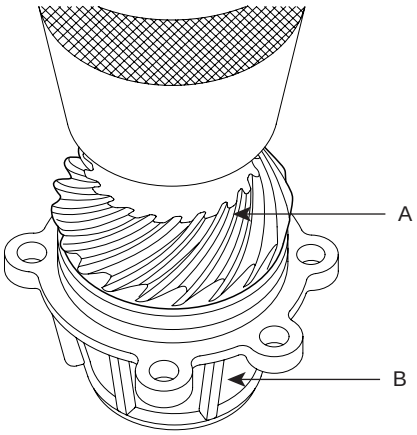

UMQG005J

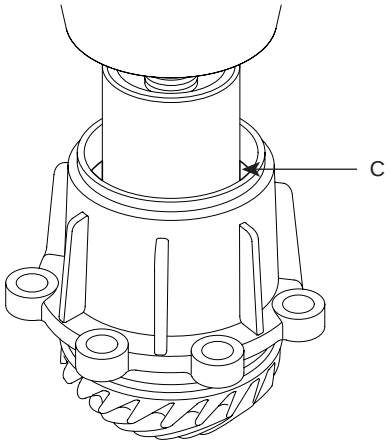

UMQG005K

3. Install the oil seal and the rear flange assembly as shown below and screw down the hex lock nut(A) until an axial clearance B of 0.25mm to 0.75mm between pinion and pinion case results.

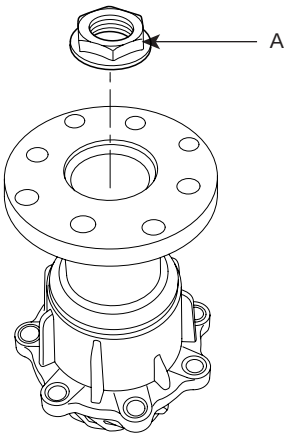

SCMMT6080D

1) Measurement of B
   - Apply an additional 200N tension load F1 to the pinion head according to arrangement Y. Rotate the pinion 10 times and measure dimension C.
   - Apply a 200N load F2 to the rear flange. Rotate the pinion 10 times and measure dimension D.
     B=C-D

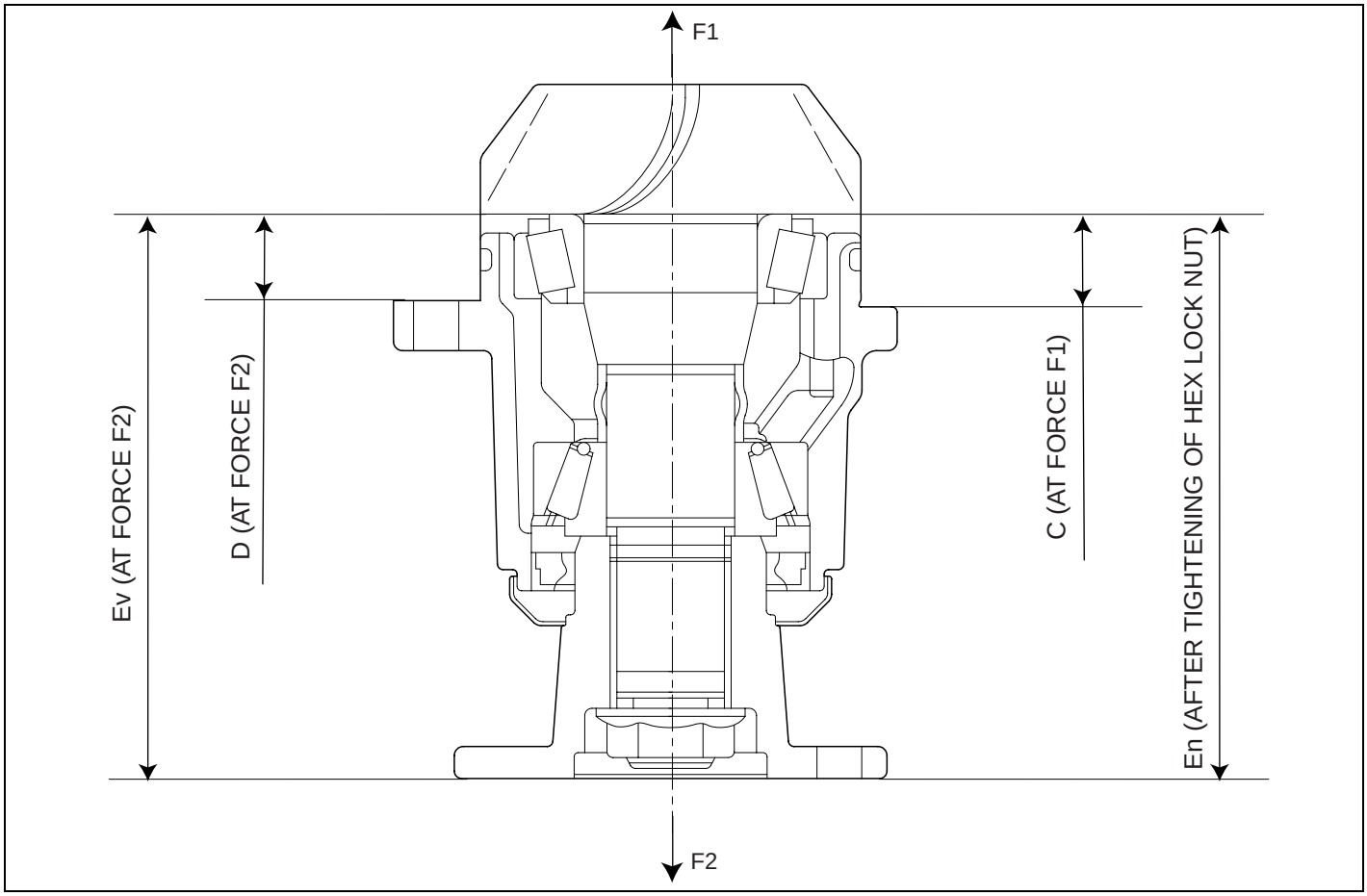

UMQG005L

2) Measure dimension Ev.

3) Tighten HEX lock nut.

4) Measure the drag torque of the pinion assembly. Target is 180-210Ncm. To achieve the target preload torque, it is permissible to gradually increase the tightening torque.

CAUTION

If the permissible preload torque of 210Ncm is exceeded, it is not allowed to loosen Hex lock nut. Disassemble the whole pinion assembly. Replace the collapsible spacer and repeat the mounting procedure.

5) Measure dimension En.

6) Check preload. A preload torque of 180 to 210 Ncm corresponds to a bearing preload of 0.12 to 0.16mm.
   Ev-En-B=0.12 to 0.16mm

CAUTION

Twice use of collapsible spacer is not permitted(Permanent deformation).

4. Assemble the O-ring and select the proper spacer later when reassembling the transfer case.

COUPLING ASSEMBLY

COMPONENTS EC967608

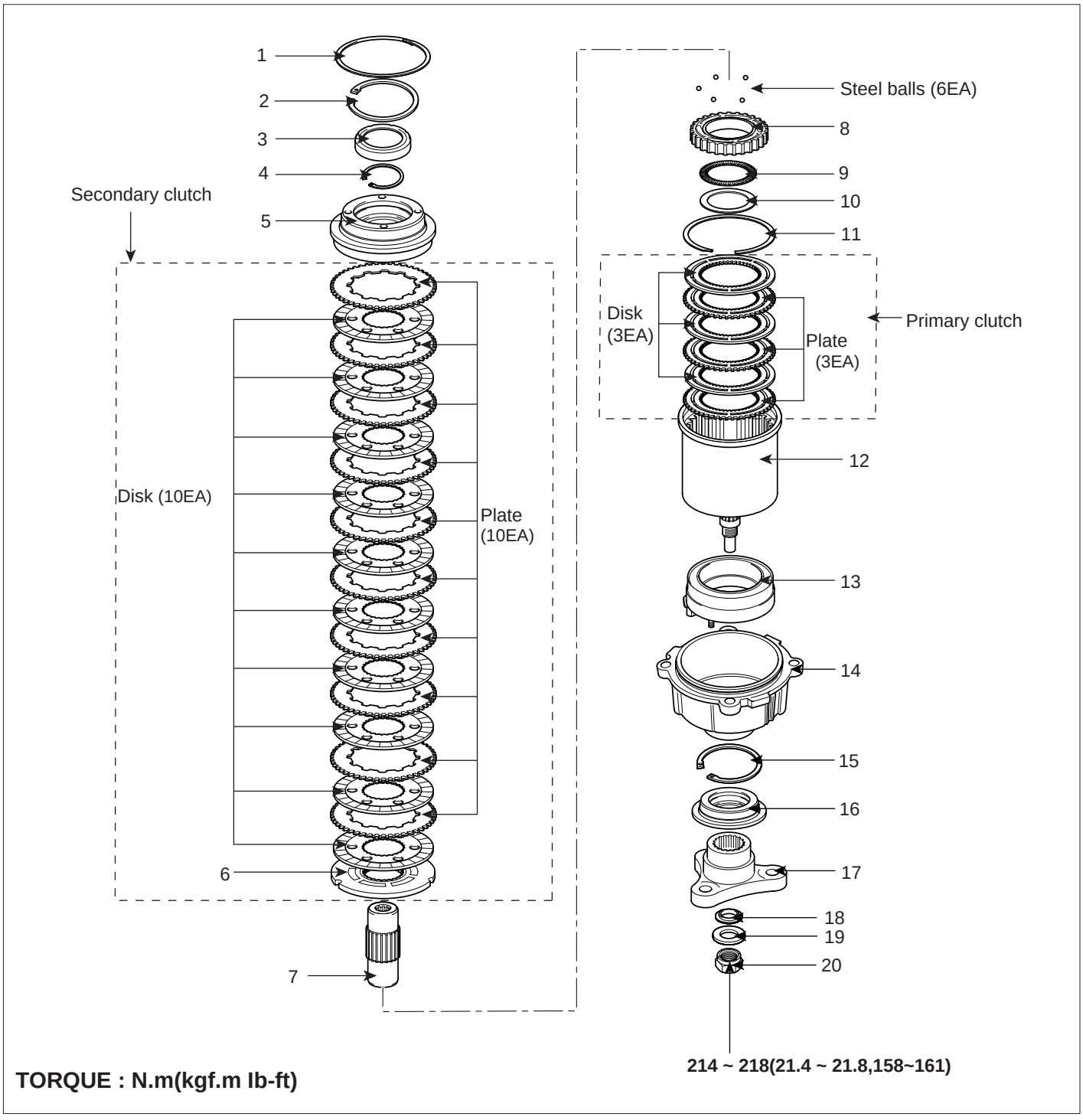

1. Wave spring
2. Snap ring
3. Oil seal
4. Snap ring
5. Back plate
6. Armature
7. Input shaft
8. Base cam
9. Thrust washer
10. Thrust race
11. Snap ring
12. Clutch housing
13. Electric magnetic
14. Coupling case
15. Sanp ring
16. Oil seal
17. Flange
18. Oil seal
19. Spacer
20. Nut

SCMMT6015L

REMOVAL E1DE3520

1. Remove the 4WD coupling bolts (A-3EA) mounted to the rear propellar shaft(B).

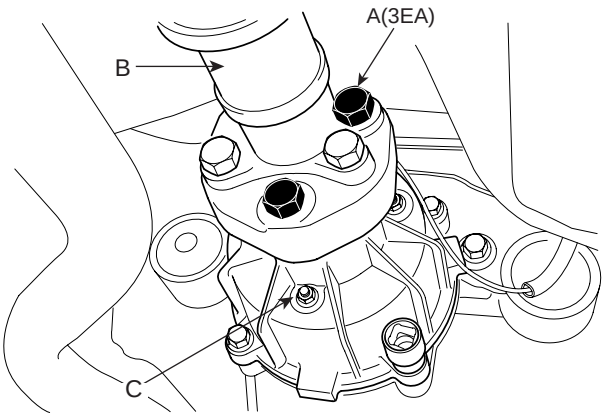

KKQE007C

2. Using a flat tool(A), separate the propellar shaft(C) from 4WD coupling(B).

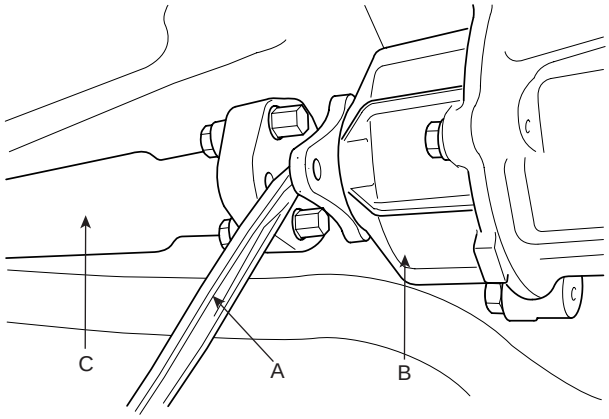

KKQE008C

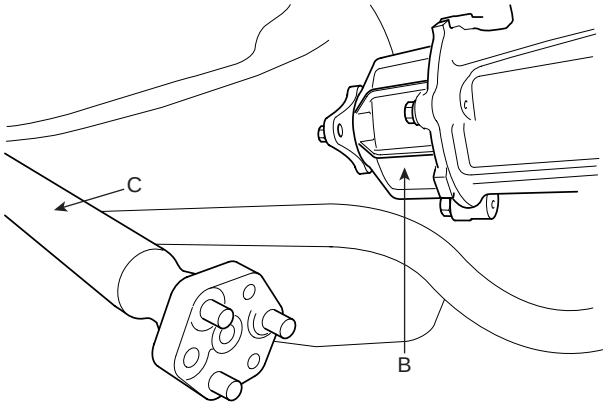

KKQE009C

3. Remove the rear axle (B-Differential carrier) bolts mounted to the 4WD coupling(A) by a socket(C).

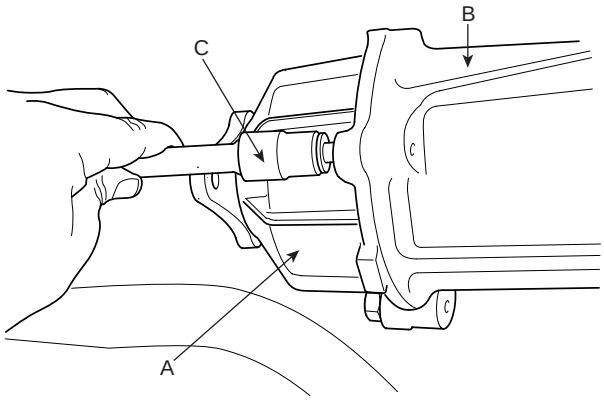

KKQE010C

4. Remove the electric magnetic clutch connector(A).

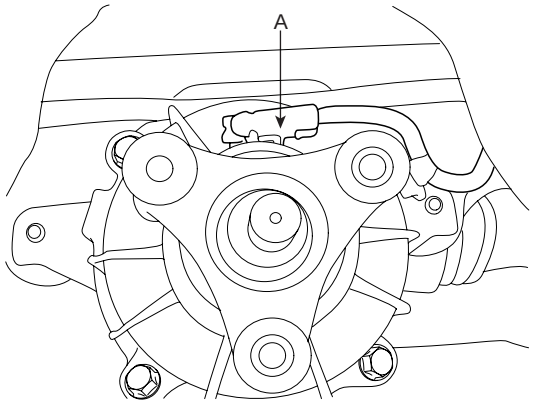

SCMMT6016L

5. Remove the 4WD coupling assembly mounting bolts(A-4ea).

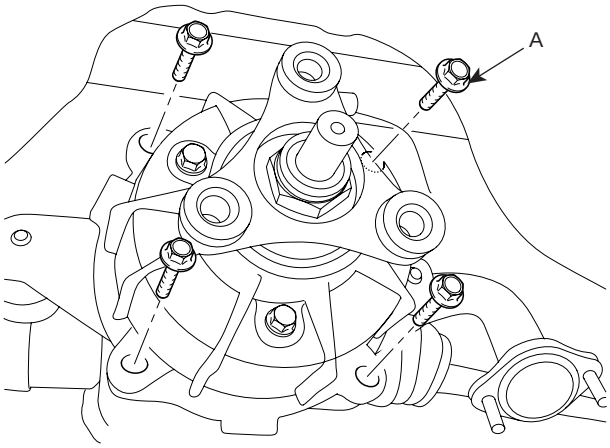

SCMMT6064D

6. Using a flat tool(A), separate the 4WD coupling assembly(B) from the rear differential carrier(C).

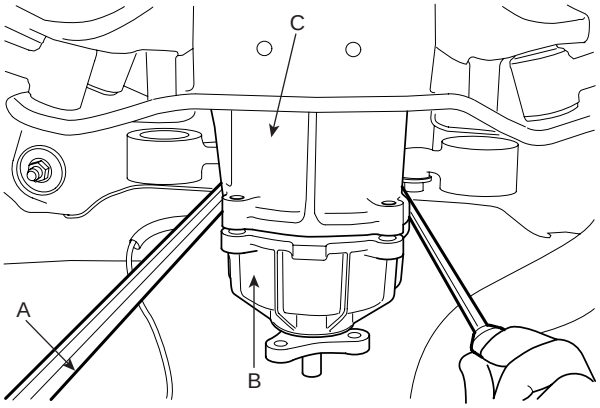

KKQE012C

7. Remove the 4WD coupling assembly(A).

DISASSEMBLY E50DFC6F

1. Remove the coupling(A) flange(B) mounting nut(C).

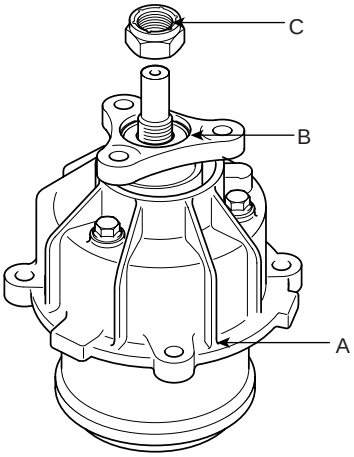

KKQE014C

2. Remove the flange spacer(A).

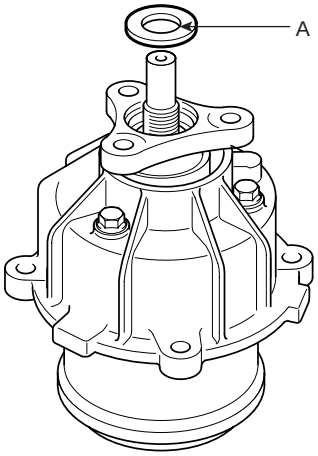

KKQE015C

3. Remove the coupling flange oil seal(A).

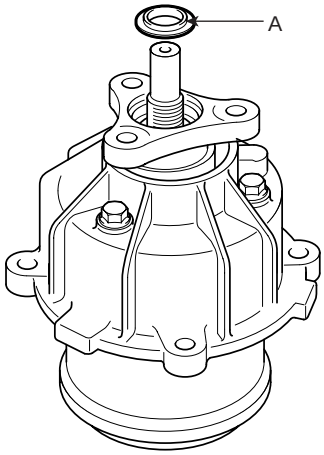

KKQE016C

4. Using a general tool, 3-way puller(A), remove the flange assembly(B) from the coupling(C).

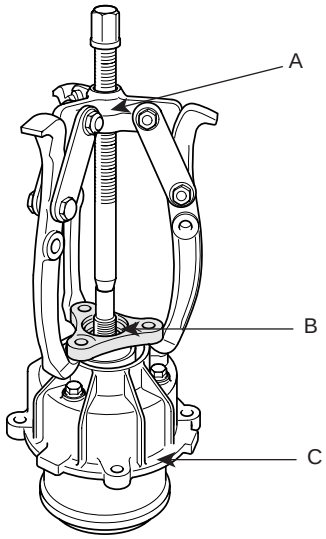

EKQE017C

5. Remove the flange oil seal(A) using special tool (09432-33200).

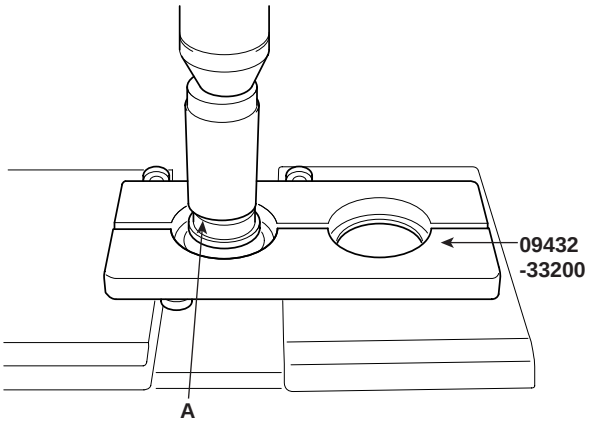

EKQE018C

6. Remove the coupling case assembly(A).

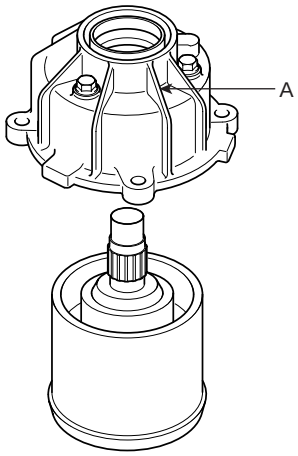

KKQE019C

1) Remove the coupling case oil seal(A)

NOTE

Insert the (-) driver between the oil seal and the clutch housing, then remove the oil seal

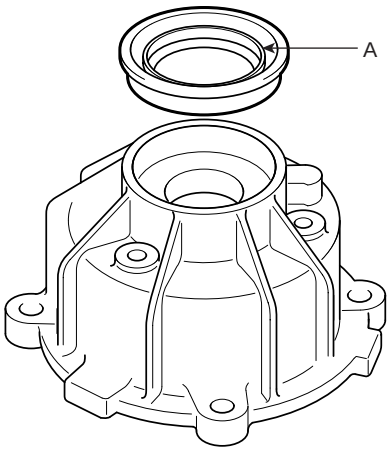

KKQE020C

2) Remove the snap ring.

3) Remove the Electric Magnetic clutch(B) mounting nuts (A-3EA).

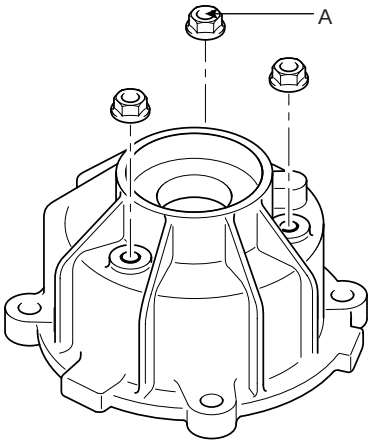

KKQE021C

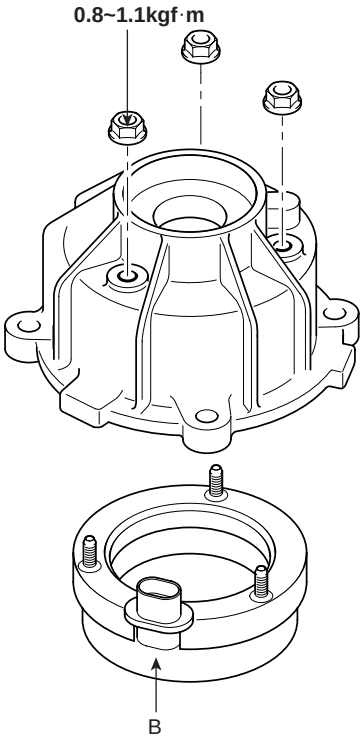

KKQE022C

7. Remove the wave spring(B) for fixing the back plate(A) and the secondary clutch assembly.

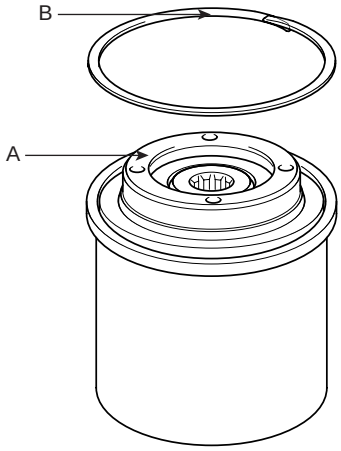

KKQE023C

8. Remove the snap ring(A).

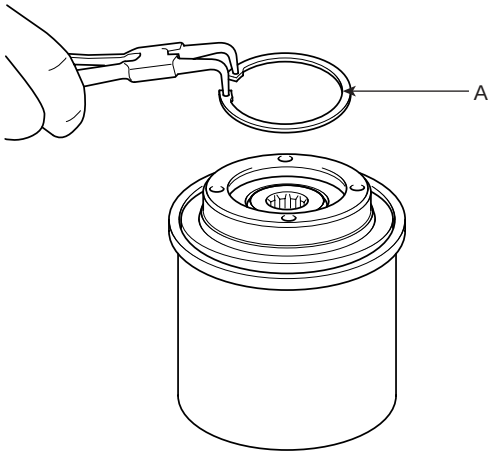

KKQE024C

9. After removing the oil seal, remove the snap ring(A).

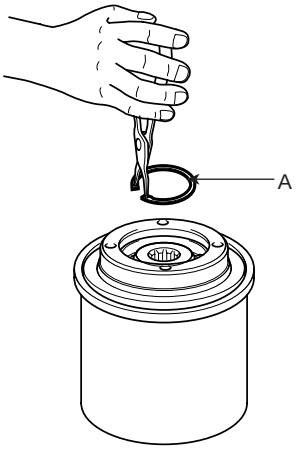

KKQE025C

10. Remove the back plate and the secondary clutch(A) assembly simultaneously using special tool (09478-26100).

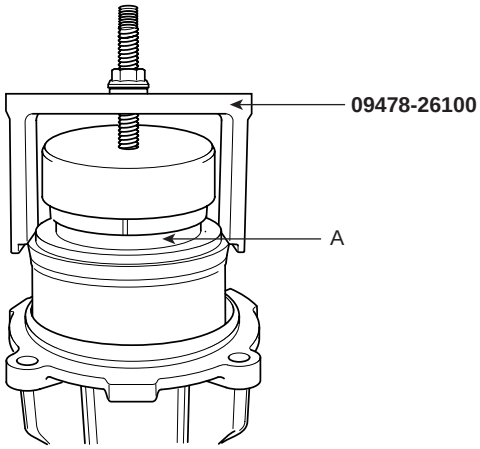

KKQE026C

1) Separate the back plate(A) from the input shaft.

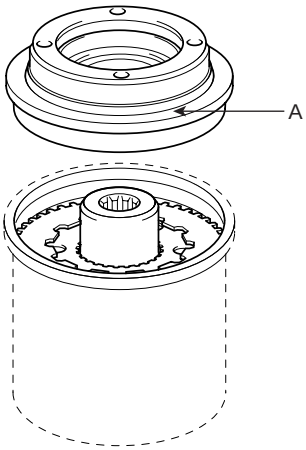

KKQE027C

2) Remove the plates (A-10EA) and the discs (B-10EA).

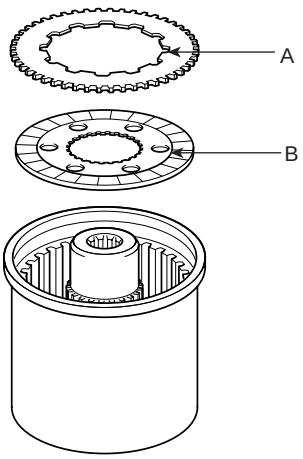

KKQE028C

3) Remove the armature(A).

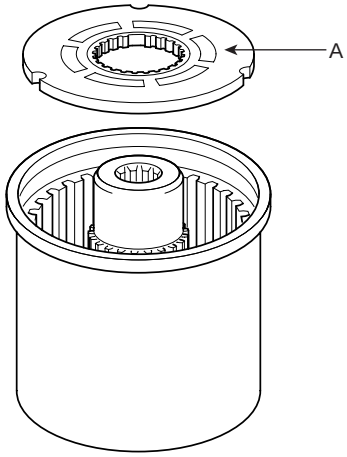

KKQE029C

4) Remove the input shaft(A).

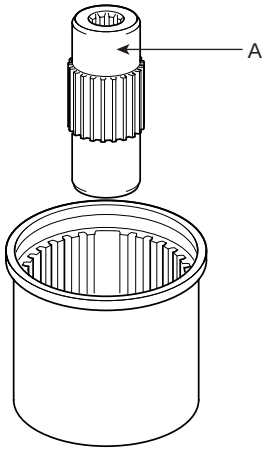

KKQE030C

11. Remove the steel balls (A-6EA) on the base cam.

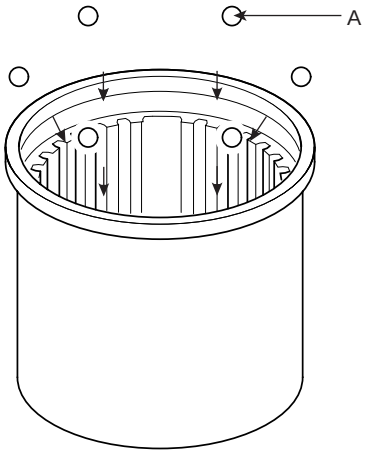

KKQE031C

12. Remove the base cam(A).

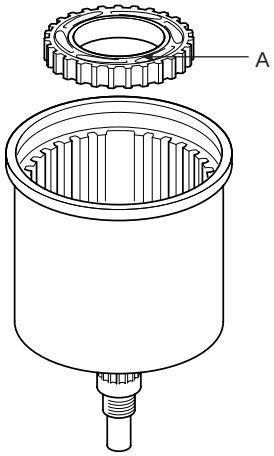

KKQE032C

13. Remove the thrust washer(A).

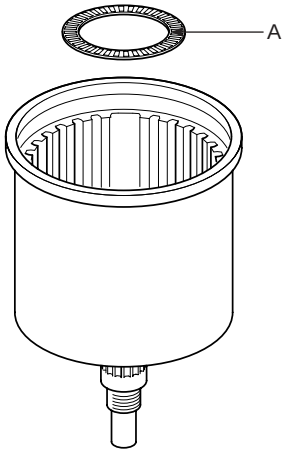

KKQE033C

14. Remove the thrust race.

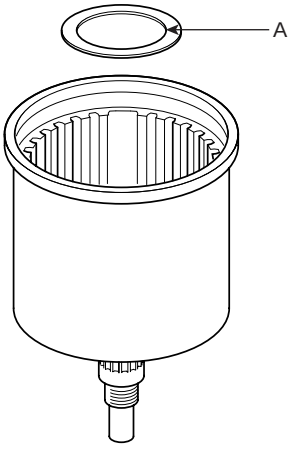

KKQE034C

15. Remove the snap ring(A).

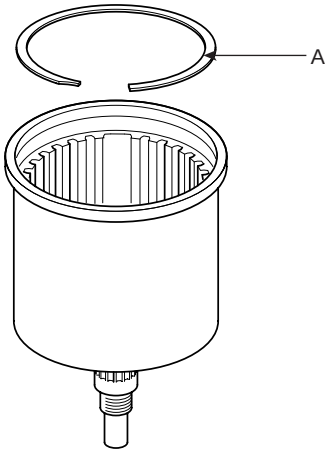

KKQE035C

16. Remove the disk(A) of the primary clutch.

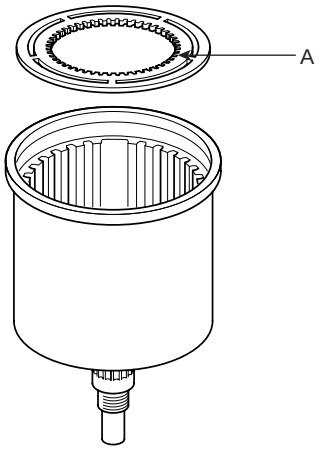

KKQE036C

17. Remove the plate(A) of the primary clutch.

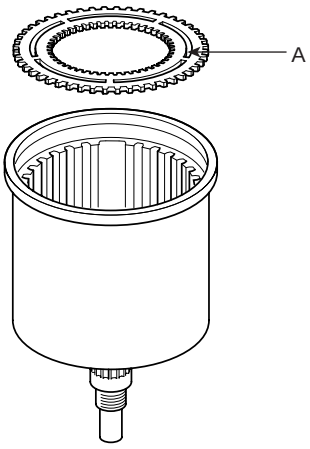

KKQE037C

NOTE

Additionally remove each 2EA discs and plates alternately.

REASSEMBLY EBAA23A8

1. When reassembling the back plate oil seal(A), reassemble it using a suitable tool(B).

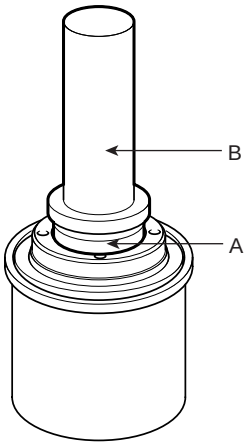

KKQE038C

2. In case of the coupling case oil seal(A), too, reassemble it using a suitable tool(B).

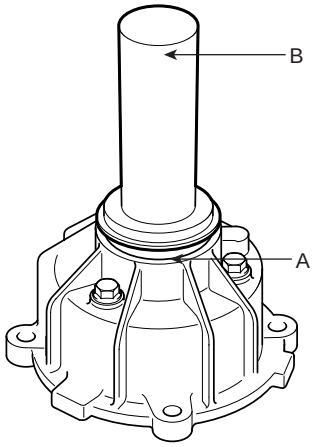

KKQE039C

3. When reassembling the 4WD coupling assembly and the flange(A), too, reassemble them using a suitable tool(B).

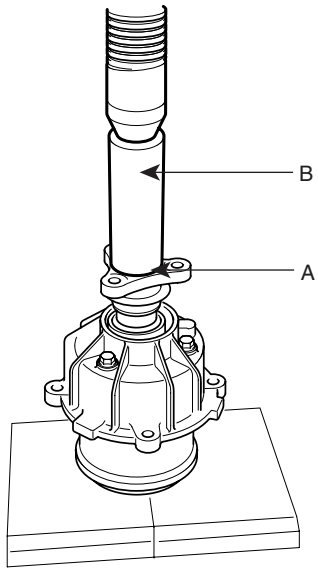

EKQE040C

4. Install the flange(A) oil seal(B) using special tool(09478-26000).

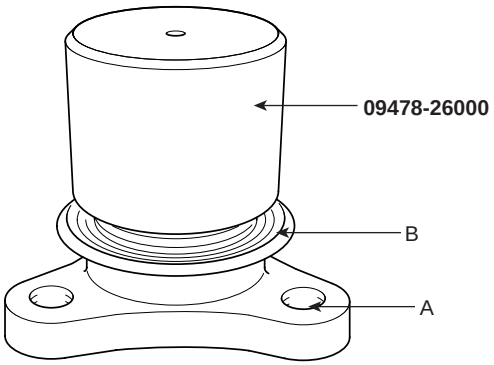

KKQE041C

INSTALLATION E0B9AE32

Installation is the reverse of the removal.

Manual Transaxle (M5HF2)

GENERAL MANUAL TRANSAXLE

MANUAL TRANSAXLE SYSTEM

GENERAL

SPECIFICATIONS EB4D4ABB

Model			M5HF2
Related engine			D2.2
Torque [Nm (kgf.m, lb-ft)			350 (35, 253)
Full length [mm(in)]			392.5 (15.45)
Weight [N(kgf, lbf)]			673.7 (68.7, 151)
Oil capacity			1.85ℓ
Oil replacement	Private use	Normal	No Need
		Severe(※)	100,000 Km
	Business use		100,000 Km
Gear ratio	1st		3.875
	2nd		2.130
	3rd		1.205
	4th		0.848
	5th		0.827
	Reverse		4.413
	Reduction gear ratio		4.500/3.706
Lubricant			SAE 75W/85, API GL - 4

※Severe(marked '※') is definde as:

1. Driving on rough road(bumpy road, gravel road, snowy road, unpaved road etc.).
2. Driving on mountain road, ascent/descent.
3. Repetition of short distance driving.
4. More than 50% operation in heavy city traffic during hot weather above 32°C(89.6°F).
5. Police car, Taxi, Commercial type operation of trailer towing, etc.

TIGHTENING TORQUE

Item	Nm	kgf.m	lb-ft
Oil drain plug	40~60	4.0~6.0	28.9~43.4
Shift control cable bracket	15~22	1.5~2.2	10.9~16
Oil filler plug	30~35	3.0~3.5	21.7~25.3
Back up lamp switch	30~35	3.0~3.5	21.7~25.3
Transaxle mounting bracket assembly	60~80	6.0~8.0	43.6~58.2
Transaxle and engine mounting bolt	80~100	8.0~10.0	57.9~72.3
'N' Position switch	30~35	3.0~3.5	21.7~25.3

SERVICE STANDARD

Item	Specification [mm(in)]
Differential end play	0.05T-0.10T
Input shaft end play	0.01L-0.12L
Output shaft end play	0-0.05T
1st gear end play	0.11L-0.22L
2nd gear end play	0.11L-0.22L
3rd gear end play	0.11L-0.22L
4th gear end play	0.11L-0.22L
5th gear end play	0.11L-0.22L
Reverse gear end play	0.11L-0.22L

LUBRICANTS ECE1FD06

Item	Lubricant	Quantity
Transaxle input shaft splin	CASMOLY L9508	0.2 gr.
Transaxle case gasket	LOCTITE 587	As required

SPECIAL TOOLS E43B86CA

Item (Number & Name)	Illustration	Use
09452-21200 Oil seal installer	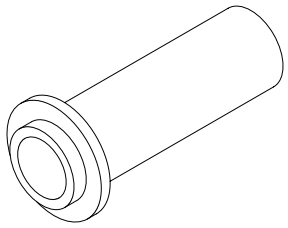 AMJF002A	Oil seal installation
09200-38001 Engine supporting fisture	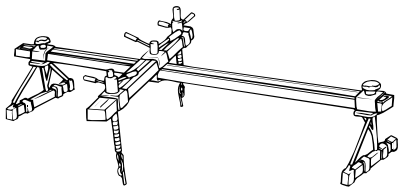 AMJF002B	Removal and installation of transaxle

MANUAL TRANSAXLE SYSTEM

DESCRIPTION E0C8C4CC

CM Diesel (D2.2) model has the manual transaxle (M5HF2).

IMPROVEMENT

ITEM	Improvement
Better shift feeling	1. New shift pattern 2. Multi cone synchronizer system 3. Module of control system 4. New type of poppet ball
Better duability	1. Optimizing strength of shift control system 2. Optimizing strength of housing and cases (for NVH) 3. Carbonized material for synchronized rings
Cost saving & Convenience	1. Permanent oil (low viscosity)

This new shift pattern has the same shift direction for both 1st and Reverse which is convenient when on traffic jam or parking (1↔R).
You should pull the lower part of the shift lever to shift in reverse.

SHIFT CONTROL SYSTEM

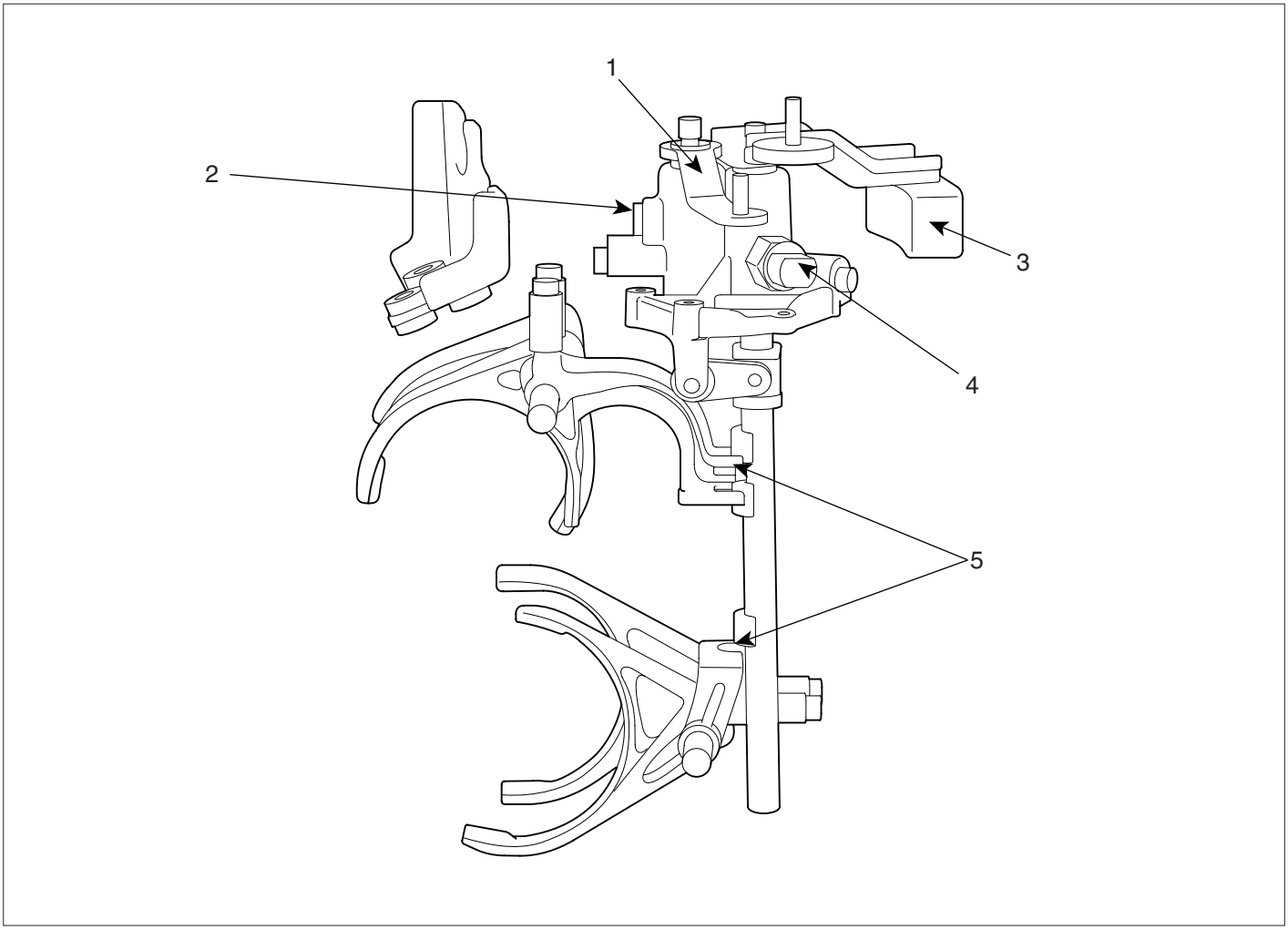

1. Select lever
2. Neutral position switch
3. Shift lever
4. Backup lamp switch
5. Control finger

LMKF001C

SYNCHRONIZER SYSTEM

COMPONENTS

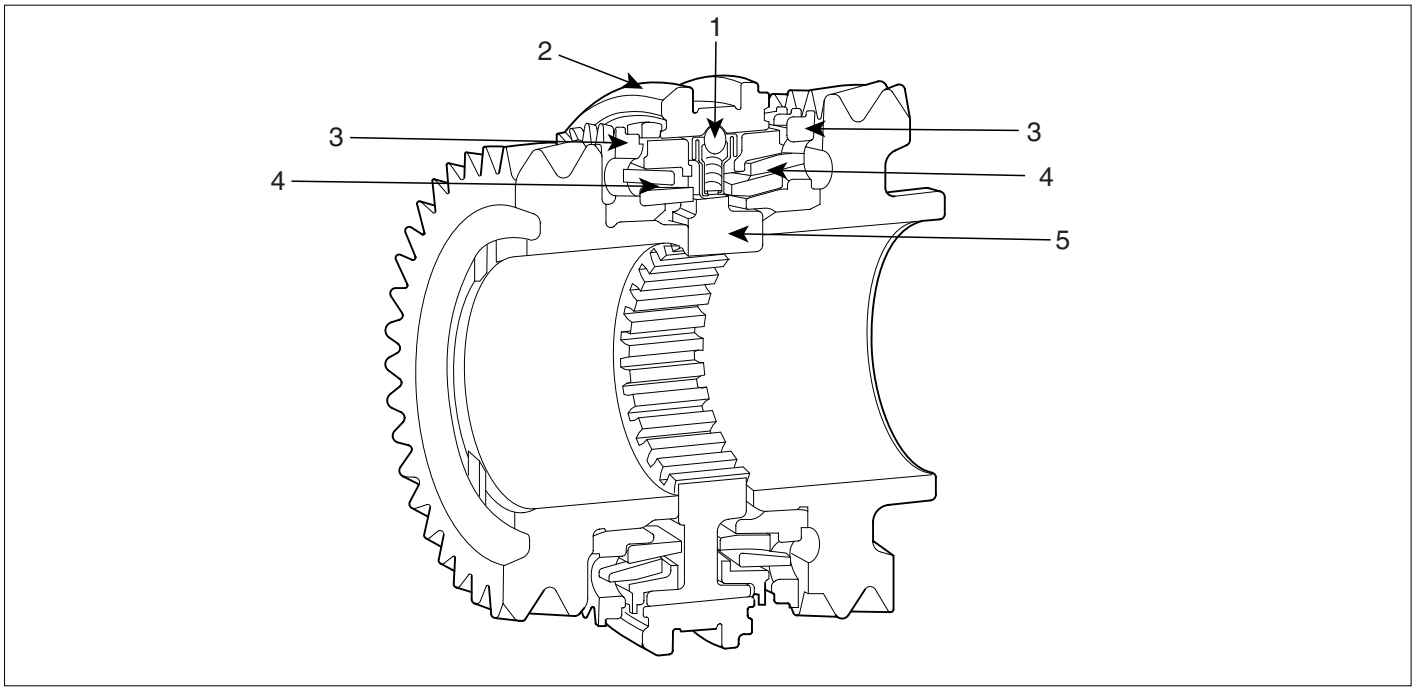

1. Synchronizer key
2. Synchronizer sleeve
3. Clutch gear
4. Synchronizer ring
5. Synchronizer hub

LMKF001E

MANUAL TRANSAXLE

COMPONENTS E235BFF3

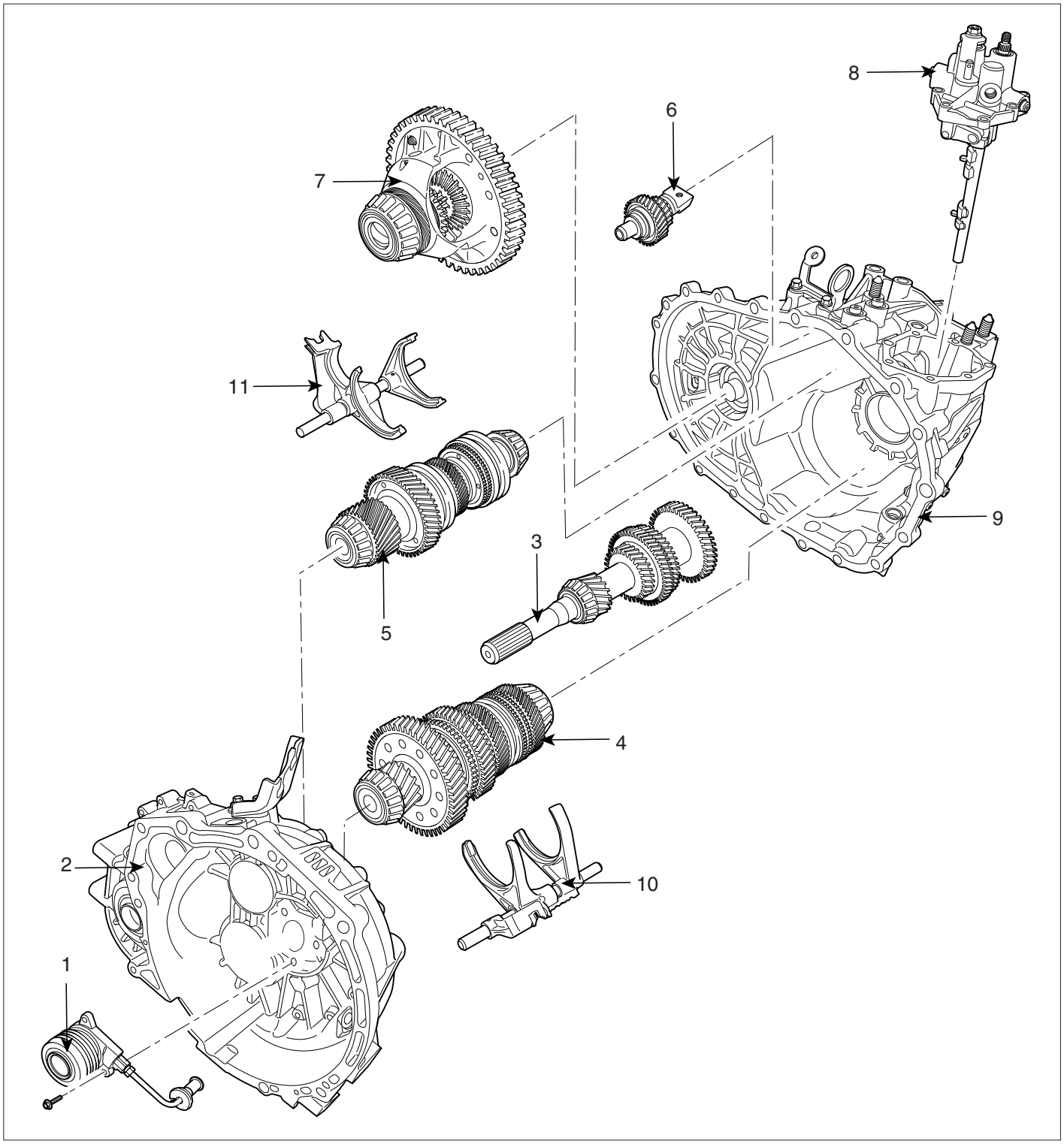

1. C.S.C. (Concentric Slave Cylinder)
2. Clutch housing
3. Input shaft
4. 1st output shaft
5. 2nd output shaft
6. Reverse idler gear assembly
7. Differential assembly
8. Control shaft assembly
9. Transaxle case
10. 3rd/4th shift rail sub assembly
11. 5th/Reverse shift rail sub assembly

LMKF002A

REMOVAL E4ACFE47

CAUTION

- ***Use a cover not to damage the vehicle surface.***
- ***Disconnect connectors carefully not to be damaged.***

NOTE

- *Mark wires or hoses for identification not to be confused.*

1. Remove the inter cooler assembly and the engine cover.(see 'EM' group).
2. Remove the battery (A).

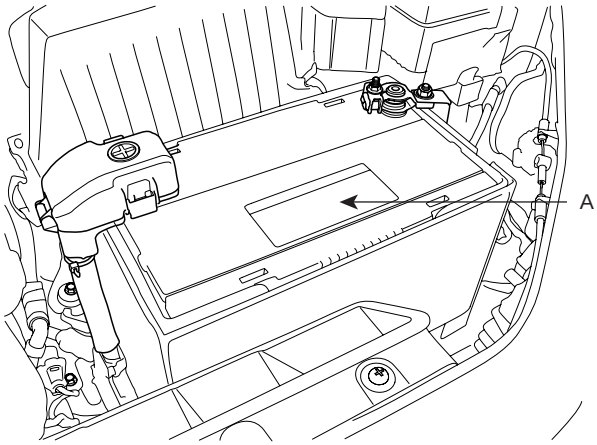

SCMMT6001D

3. Disconnect the AFS connector (A).

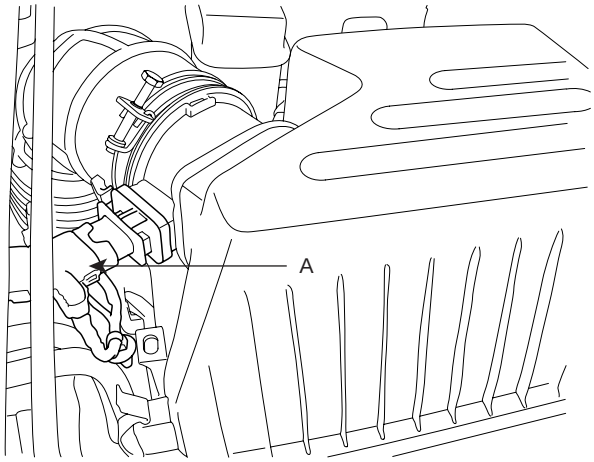

SCMMT6002D

4. Remove the air cleaner upper cover (B) by loosening the clamp(A) and the clips.

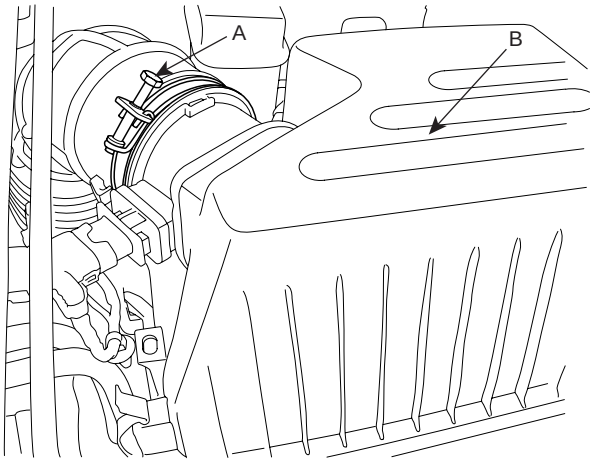

SCMMT6060D

5. Remove the air cleaner assembly (B) by removing the two mounting bolts(A).

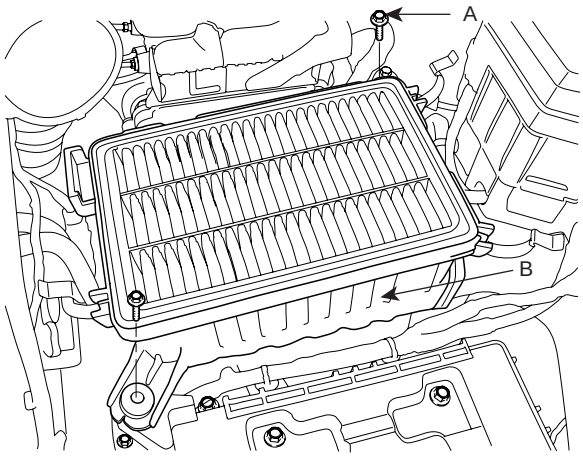

SCMMT6004D

6. Remove the battery tray (B) by removing the four mounting bolts (A).

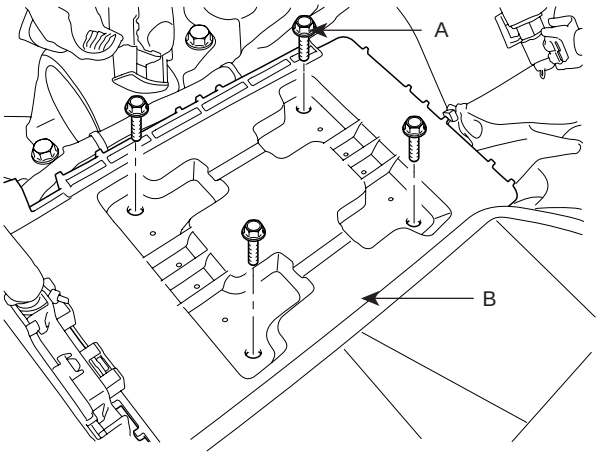

SCMMT6005D

7. Remove the ground wire (A) from the transaxle case.

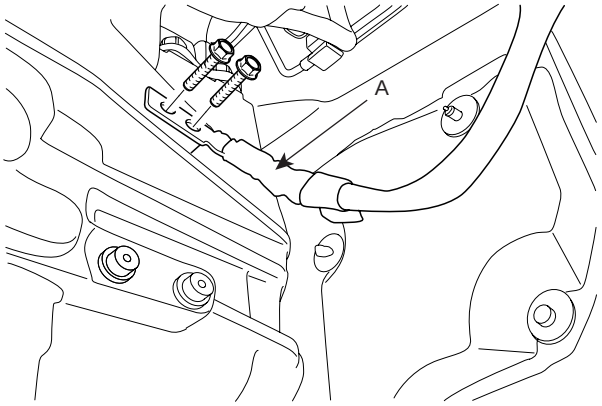

SCMMT6006D

8. Remove the vehicle speed sensor connector (A).

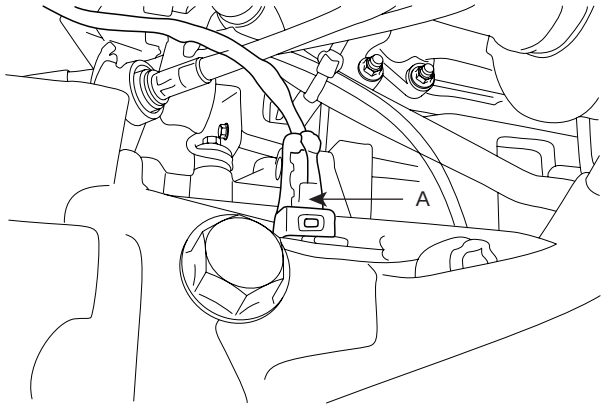

SCMMT6007D

9. Remove the control cable assemblies(A) by removing the snap pins(B) and clips(C).

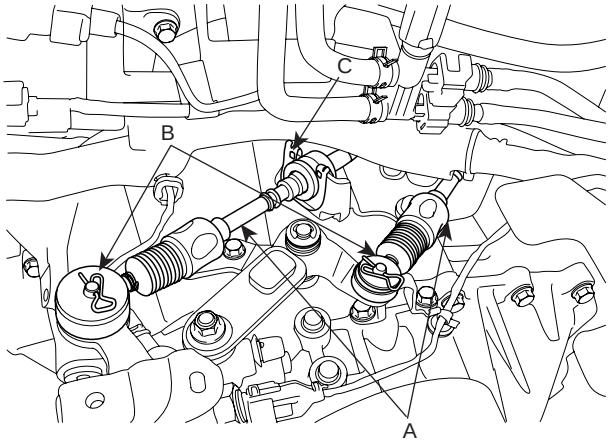

SCMMT6008D

10. Disconnect the "N" (A) and the "R" (B) position switch.

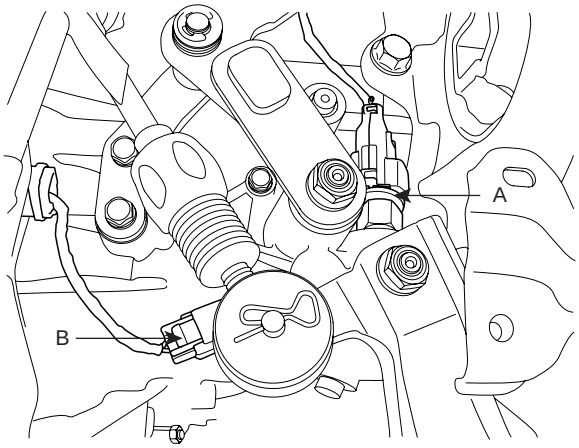

SCMMT6009D

11. Remove C.S.C (Concentric Slave Cylinder) tube(A) which is being clamped by loosening the nut(B).

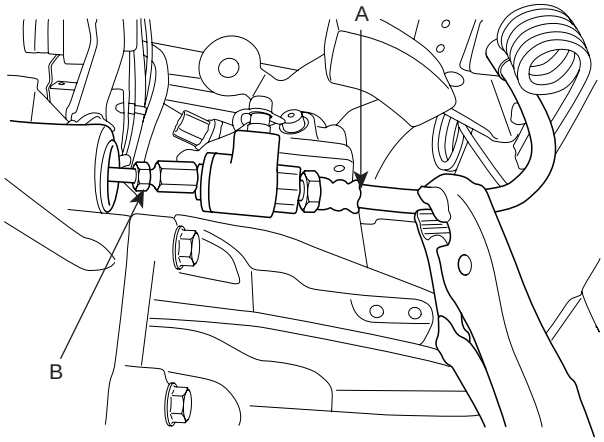

SCMMT6010D

12. Remove the four mounting bolts(A) of upper part of the transaxle.

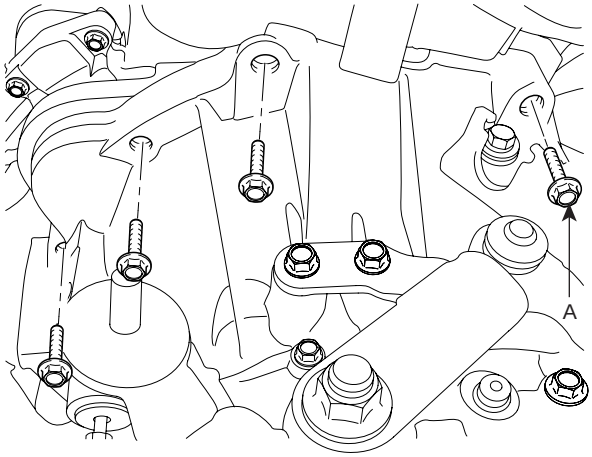

SCMMT6011D

13. Support the engine and transaxle by using the special tool (09200-38001).

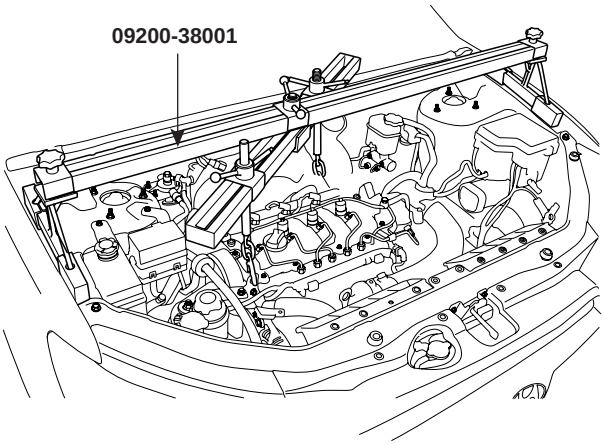

SCMMT6012D

14. Remove the transaxle insulator bracket (B) by removing the bolts (A).

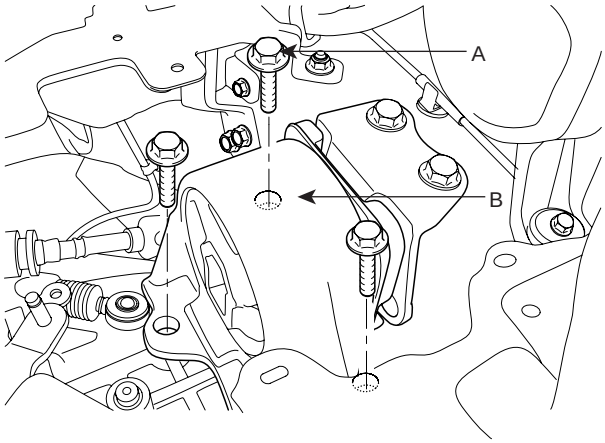

SCMMT6013D

15. Remove the front wheels and tires. (see SS group)

16. Lift up the vehicle.

17. Remove the steering column joint bolt. (see ST group).

18. Remove the under cover(A).

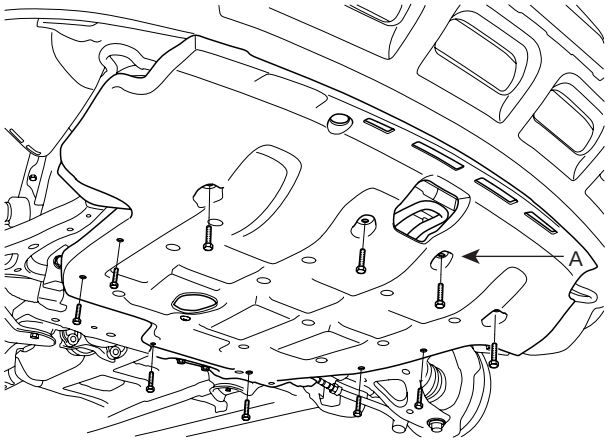

SCMMT6014D

19. Drain power steering oil through the return tube. (see ST group)

20. Disconnect the power steering pressure hose (A) from the power steering oil pump.

21. Drain the tranaxle fluid through the drain plug.

22. Disconnect the lower arm, the tie rod end ball joint, the stabilizer bar link from the front knuckle. (see SS group)

23. Remove the roll stopper mounting bolts.

24. Remove the mounting bolts from the sub frame by supporting the sub frame with a jack. (see SS group)

25. Remove the drive shafts from the transaxle. (see DS group)

26. Disconnect the starter motor connector and remove the starter motor. (see EE group)

27. In case of 4WD, remove the transfer case assembly.(see 'Transfer case' removal).

28. Remove the mounting bolts(A-3ea, B-2ea) of lower part of the transaxle, and the left side cover and remove the transaxle assembly by supporting it with a jack.

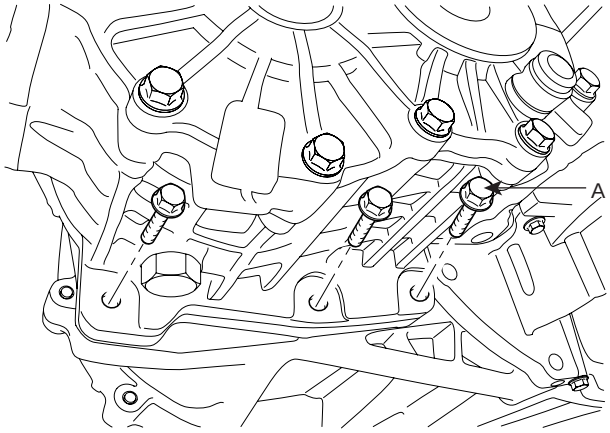

SCMMT6017D

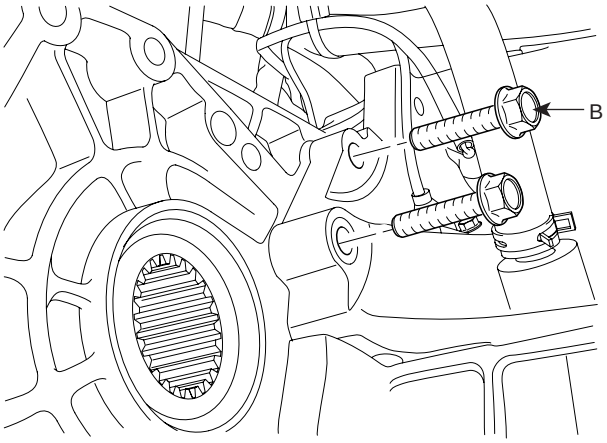

SCMMT6018D

INSTALLATION E552EB03

Installation is in the reverse order of removal.
Perform the following :

- Adjust the shift cable.
- Refill the transaxle with fluid.
- Refill the radiator with engine coolant.
- Bleed air from the cooling system with the heater valve open.
- Clean the battery posts and cable terminals with sandpaper, assemble them, and apply grease to prevent corrosion.

1. Lowering the vehicle or lifting up a jack, install the transaxle assembly.

2. Tighten the transaxle under mounting bolts(A-3ea, B-2ea).

TORQUE:
65~85 Nm(6.5~8.5 kgf.m, 47.0~61.5 lb-ft)

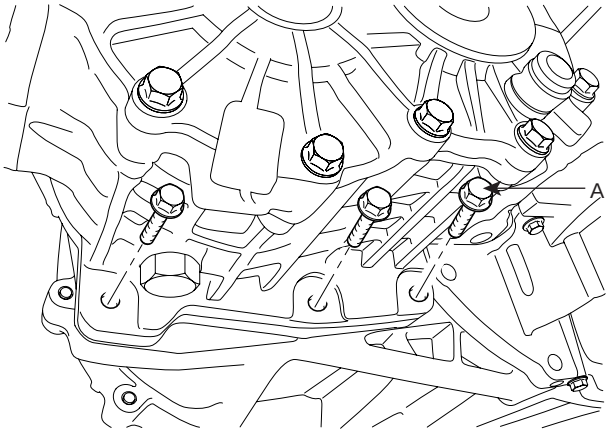

SCMMT6017D

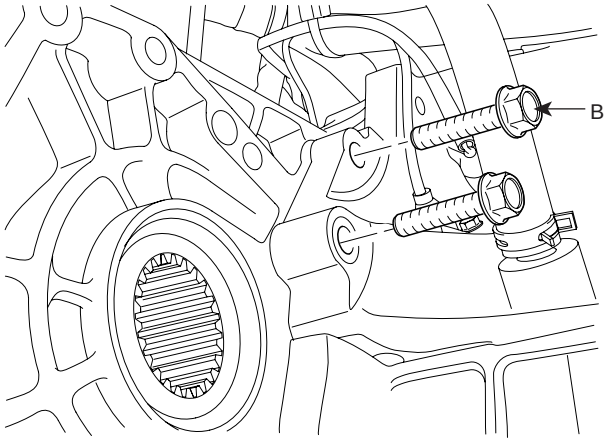

SCMMT6018D

3. Install the starter motor and connect the starter motor connector. (see EE group)

4. In case of 4WD, install the transfer case assembly.(see 'Transfer case' installation)

5. Install the drive shafts to the transaxle. (See "DS" group)

6. Install the transaxle insulator (B) and mounting bracket (C) by tightening the bolts (A).

TORQUE:
60~80 Nm (6~8 kgf.m, 43.6~58.2 lb-ft)

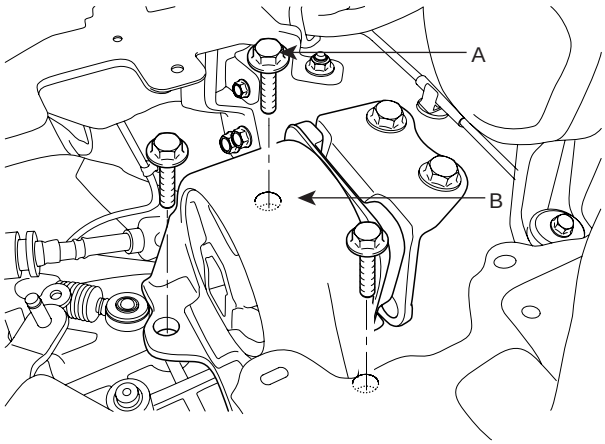

SCMMT6013D

7. Install the sub frame. (see SS group)

TORQUE:
60~80 Nm(6~8 kgf.m, 65.1~79.5 lb-ft)

8. Connect the power steering return hose. (see ST group)

9. Connect the lower arm, the rod end ball joint, the stabilizer bar link to the front knuckle.(see SS group)

10. Install the steering column joint bolt.(See ST group).

11. Install the C.S.C (Cincentric Slave Cylinder) tube(A) by tightening the nut(B).

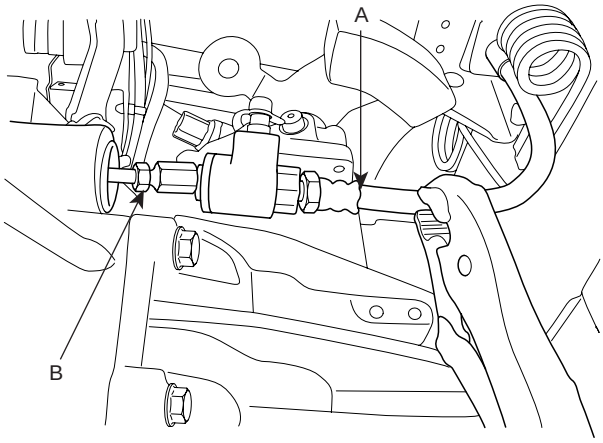

SCMMT6010D

12. Refill transaxle oil through the inlet hole(A).

TORQUE:
30~35 Nm(3.0~3.5 kgf.m, 21.8~25.4 lb-ft)

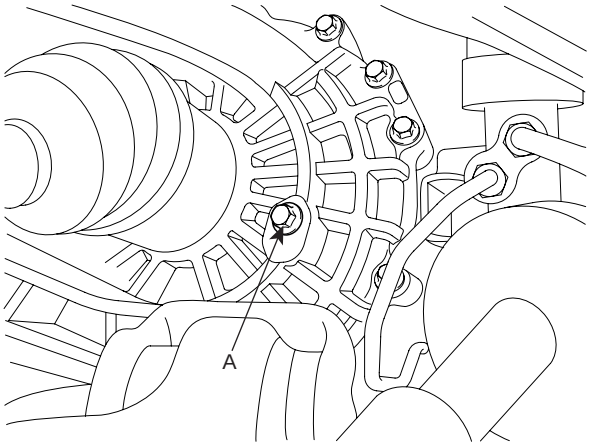

AMKF002J

13. Install the under cover(A).

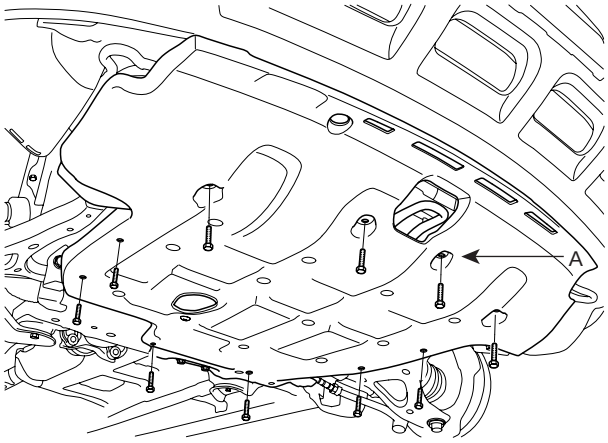

SCMMT6014D

14. Install the front wheels and tires. (see SS group)

15. Tighten the transaxle mounting bolts(A-4ea) and remove the SST (09200-38001) holding the engine and transaxle assembly.

TORQUE:
80~100Nm(8.0~10.0 kgf.m, 57.9~72.3 lb-ft)

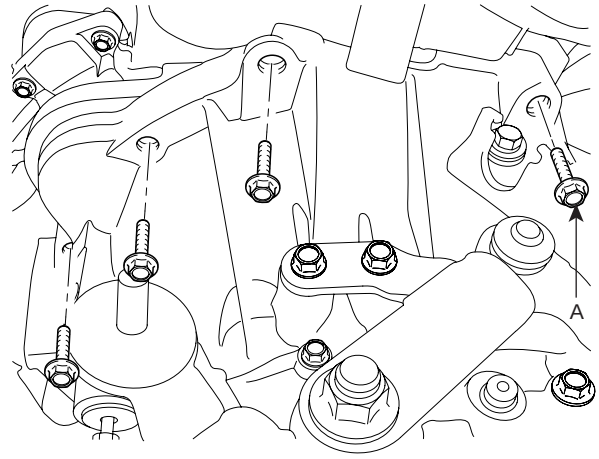

SCMMT6011D

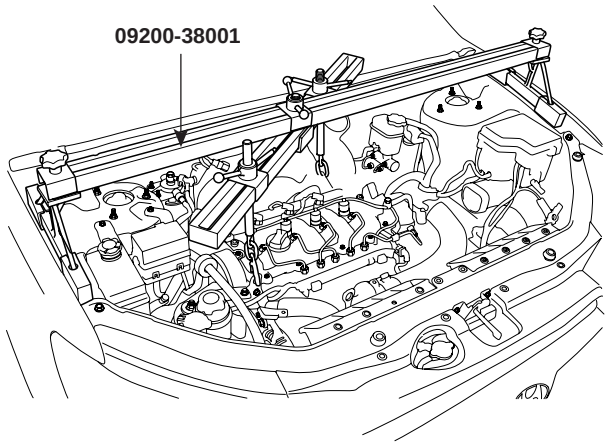

SCMMT6012D

16. Connect the power steering pressure hose (A) to the power steering oil pump.

17. Connect the "N" (A) and the "R" (B) position switch.

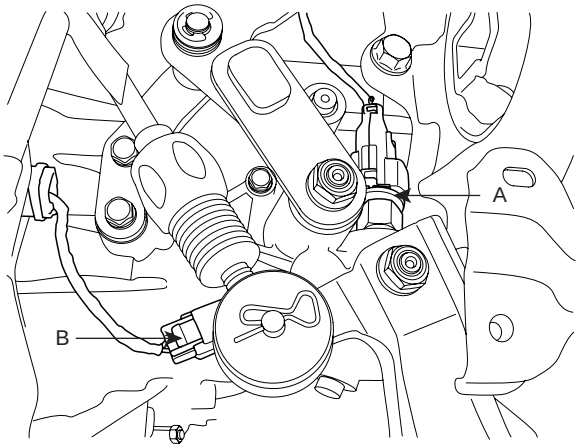

SCMMT6009D

18. Install the control cable assemblies(A) by tightening the clips (C) and snap pins (B).

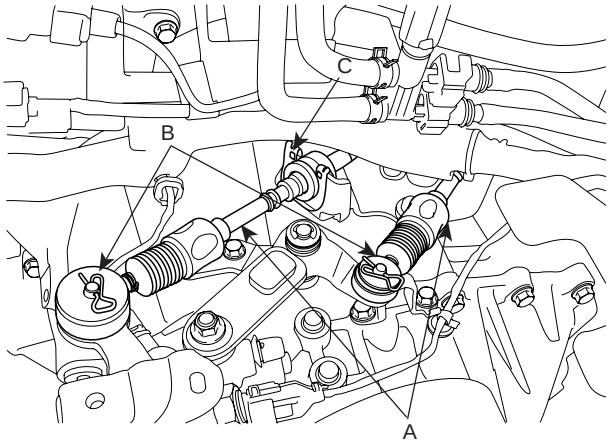

SCMMT6008D

19. Install the vehicle speed sensor connector (A).

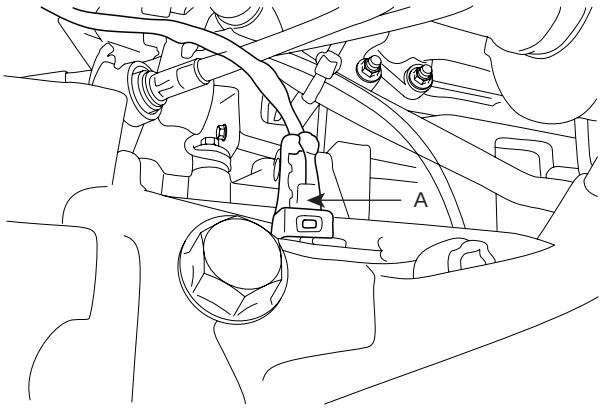

SCMMT6007D

20. Install the ground wire (A) from the transaxle case.

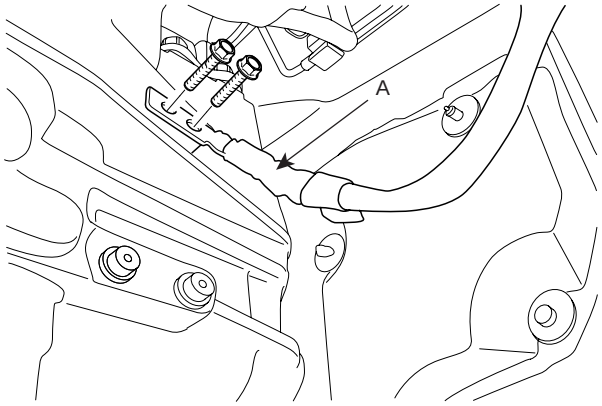

SCMMT6006D

21. Install the battery tray (B) by removing the four mounting bolts (A).

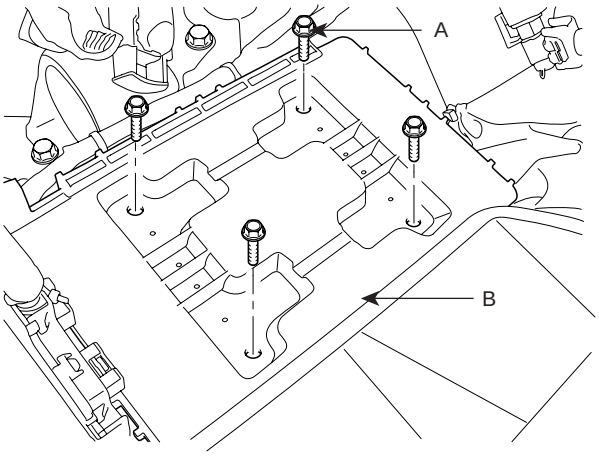

SCMMT6005D

22. Install the air cleaner assembly (B) by tightening the two mounting bolts(A).

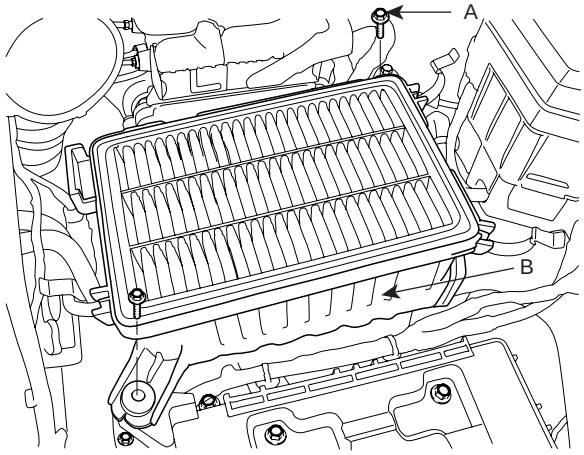

SCMMT6004D

23. Install the air cleaner upper cover (B) by tightening the clamp(A) and the clips.

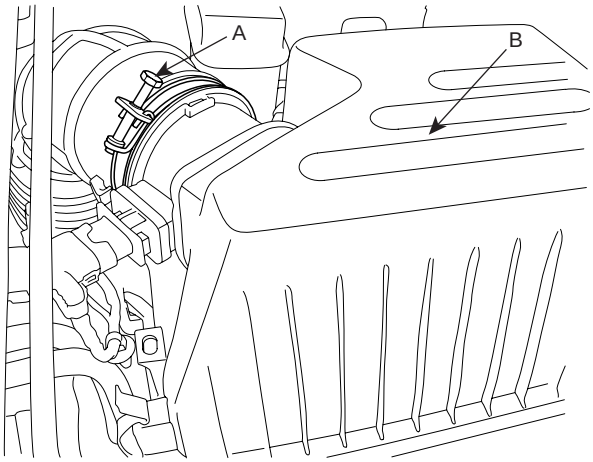

SCMMT6060D

24. Connect the AFS connector (A).

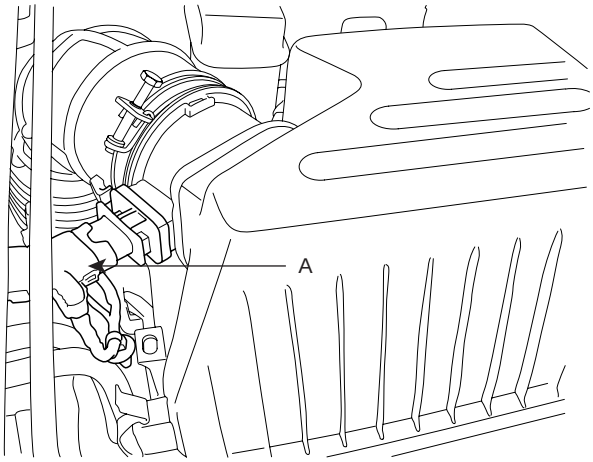

SCMMT6002D

25. Install the battery (A).

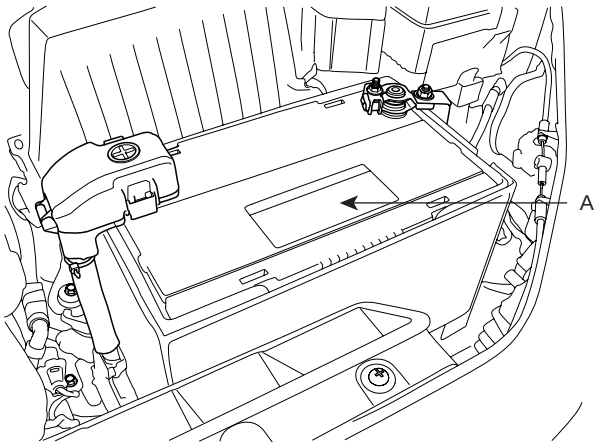

SCMMT6001D

26. Refill the power steering fluid.(see 'ST' group)

CAUTION

Bleed air in the system, after installing the inter cooler assembly and the engine cover.

27. Install the engine cover and the inter cooler assembly.(see 'EM' group)

Automatic Transaxle (F4A51)

GENERAL

AUTOMATIC TRANSAXLE SYSTEM
AUTOMATIC TRANSAXLE

AUTOMATIC TRANSAXLE CONTROL SYSTEM
SOLENOID VALVE
VFS(VARIABLE FORCE SOLENOID) VALVE
INPUT SPEED SENSOR
OUTPUT SPEED SENSOR
TRANSAXLE OIL TEMPERATURE SENSOR
TRANSAXLE RANGE (TR) SWITCH
SHIFT LEVER

GENERAL

SPECIFICATION E63CDC3E

Item		F4A51
Torque converter type		3-element, 1-stage, 2-phase type
Transaxle type		4-speed forward, 1-speed reverse
Engine displacement		2.7L GSL
Gear ratio	1st	2.842
	2nd	1.529
	3rd	1.000
	4th	0.712
	Reverse	2.480
Final gear ratio		3.770
Shift pattern	Variable	
Shift range	4range (P-R-N-D) + Sports mode	
Shift range valve	PWM ; 5EA(Duty control) , VFS	
Stall speed	2100~2900rpm	
Planetary gear	2EA(Output planetary/Overdrive planetary)	
Clutch	3EA	
Brake	2EA	
OWC	1EA	

TIGHTENING TORQUE

ITEM	Nm	kgf·m	lb-ft
Control cable nut	8 ~ 12	0.8 ~ 1.2	5.8 ~ 8.6
Input shaft speed sensor	10 ~ 12	1.0 ~1.2	7 ~ 8
Output shaft speed sensor	10 ~ 12	1.0 ~1.2	7 ~ 8
Manual control lever	18 ~ 25	1.8 ~ 2.5	13 ~ 18
Transaxle range switch	10 ~ 12	1.0 ~1.2	7 ~ 8
Valve body cover	10 ~ 12	1.0 ~1.2	7 ~ 8
Valve body mounting bolt	10 ~ 12	1.0 ~1.2	7 ~ 8
Oil temperature sensor	10 ~ 12	1.0 ~1.2	7 ~ 8
Oil filler plug	29 ~ 34	2.9 ~ 3.4	21.4 ~ 25.1
Oil drain plug	40 ~ 50	4.0 ~ 5.0	29 ~ 36
Solenoid valve support	5 ~ 7	0.5 ~ 0.7	4 ~ 5
Pressure check plug	8 ~ 10	0.8 ~ 1.0	6 ~ 7
Transaxle mounting sub bracket nut	60 ~ 80	6.0 ~ 8.0	43 ~ 58
Transaxle mounting bracket bolts	40 ~ 55	4.0 ~ 5.5	29 ~ 40
Transaxle mounting insulator bolt	90 ~ 110	9.0 ~ 11	65 ~ 80
Transaxle and engine mounting bolt	65 ~ 85	6.5 ~ 8.5	47 ~ 61.5
Drive plate bolt	46 ~ 53	4.6 ~ 5.3	33.3 ~ 38.3

LUBRICANT E896282A

Item	Specified lubricant	Quantity
Transmission oil	Diamond ATF SP-III	7.8ℓ (8.2 Us qt, 6.9Imp.qt)

SEALANT

Item	Specified Sealant
Rear cover Torque converter housing Valve body cover	Three Bond - TB 1281B or LOCTITE - FMD - 546
Transmission case side cover	Three Bond - TB 1389 or LOCTITE - 518
Side cover	Three Bond - TB 1389 or LOCTITE - 518/587

SPECIAL TOOLS EACCB44F

TOOL (Number and name)	Illustration	Use
09200 - 38001 Engine support fixture	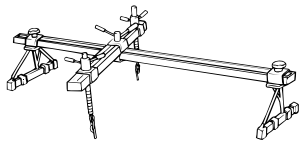 D0038001	Removal and installation of transaxle.

REFERENCE SERVICE TOOLS

Tool (Number and Name)	Remark
TRK00A Wiring Repair Kit	For more information of the wiring repair kit, please refer to BE group - "REFERENCE SERVICE TOOLS"

AUTOMATIC TRANSAXLE SYSTEM

DESCRIPTION EE89AD48

The automatic transmission is a combination of 3-element 2-phase 1-stage torque converter and double shaft electrocally-controlled unit which provides 4 speeds forward and 1 reverse. To improve the efficiency of power transmission, the line pressure control was changed applying " Variable Force Solenoid (VFS) valve" on this model. However, adopting VFS on this model, the line pressure is variably changed according to TPS and the vehicle speed, this will enable more improved efficiency of power transmission and fuel consumption.

CHARACTERISTICS

Some of the characteristics include:
- ▶ Different power transfer
- ▶ Different component layout
- ▶ New shift logic(HIVEC) to improve shift feeling
- ▶ Position of Valve Body
- ▶ Variable shift pattern
- ▶ Communication protocol and method
- ▶ Step gate type shift lever.

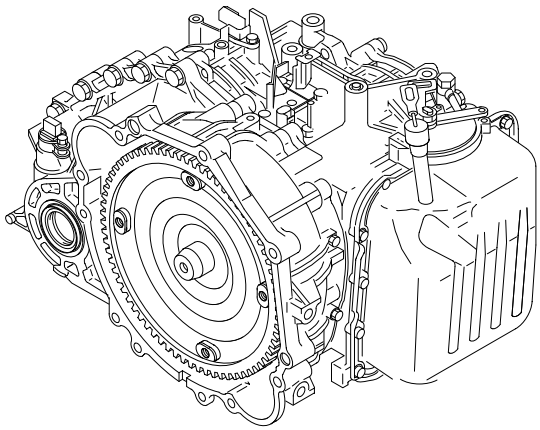

EKRF071A

Item	Details
Weight Reduction	1. Aluminum oil pump - 2.3kg Approx 2. Pressed parts - Retainer and hub of brakes and clutches - Carrier of planetary gear set
Better shift quality	1. Independent control of clutches and brakes enabled better control of hydraulic pressure and skiped shifts (4 to 2, 3 to 1) 2. During N to D or N to R shift, feedback control adopted. 3. When starting from Creep condition, reduction of shock.(Creep condition is controlled with 1st gear) 4. Solenoid valve frequency is increased for more accurate control. 35Hz to 61.3Hz except DCCSV that is 35Hz and VFS that is 600Hz. 5. HIVEC adoption for better shift feeling. 6. Variable shift pattern.
Increase in Power train efficiency	1. Fully Variable Line Pressure 2. VFS(Variable Force Solenoid)
Dynamic drive by sports mode	- Manual shifting possible - Step gate type shift lever 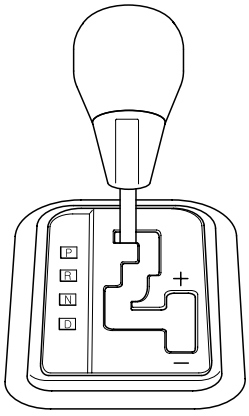 EKRF072A

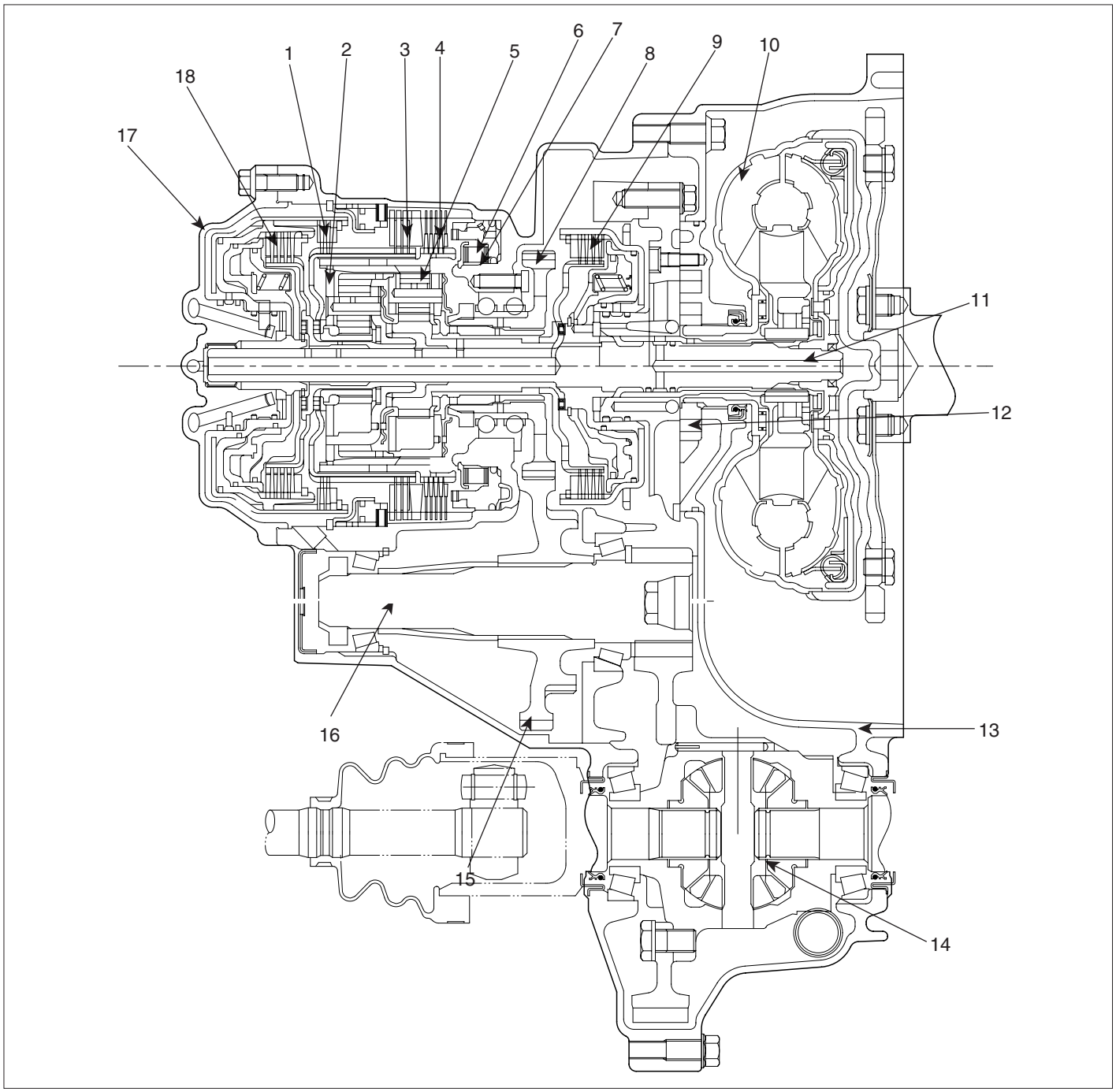

1. Reverse clutch
2. Overdrive planetary gear set
3. Second brake
4. Low-reverse brake
5. Output plantary gear set
6. Oneway clutch
7. Oneway clutch inner race
8. Transfer drive gear
9. Underdrive clutch
10. Torque converter
11. Input shaft
12. Oil pump
13. Converter housing
14. Differential
15. Transfer driven gear
16. Output shaft
17. Rear cover
18. Overdrive clutch

EKRF001A

MECHANICAL SYSTEM

OPERATION COMPONENTS AND FUNCTION

Operating Element	Symbol	Function
Under drive clutch	UD	Connect input shaft and under drive sun gear
Reverse clutch	REV	Connect input shaft and reverse sun gear
Overdrive clutch	OD	Connect input shaft and over drive carrier
Low & Reverse brake	LR	Hold LR annulus gear and OD carrier
Second brake	2ND	Hold reverse sun gear
One way clutch	OWC	Restrict the rotating direction of low & reverse annulus gear

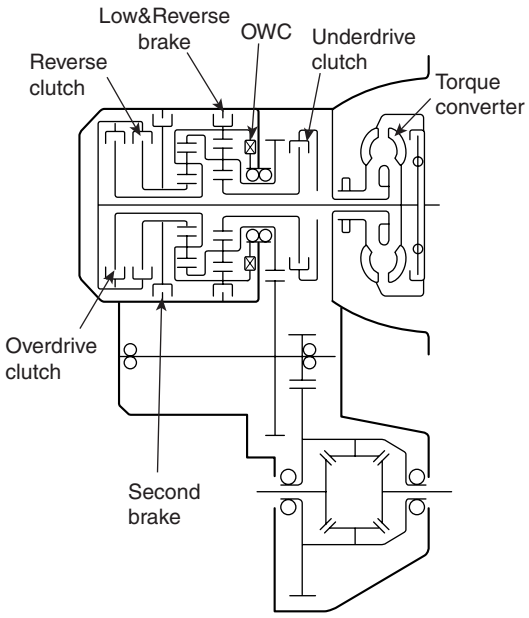

EKRF002A

OPERATING ELEMENTS

	UD/C	OD/C	REV/C	2ND/B	LR/B	OWC
P					●	
R			●		●	
N					●	
D1	●				●	○
D2	●			●		
D3	●	●				
D4		●		●		

1) ○ : OWC is operated when shifts from 1st gear to 2nd gear.
2) L & R brake is released in 1st gear when the vehicle speed is more than 5KPH approximately.

TORQUE CONVERTER AND SHAFT

The torque converter consists of an impeller(pump), turbine and stator assembly in a single unit. The pump is connected to the engine crankshaft and turns as the engine turns. This drawing force is transmitted to the turbine through the oil which is recycled by the stator.
The transmission has two parallel shafts ; the input shaft and the output shaft. Both shafts are in line with the engine crankshaft. The input shaft includes the overdrive clutch, reverse clutch, underdrive clutch, one way clutch, 2ND brake, low & reverse brake, overdrive planetary carrier, output planetary carrier and transfer drive gear. The output shaft includes the transfer driven gear.

CLUTCHES

The gear changing mechanism utilizes three multi-disc clutches. The retainers of these clutches are fabricated from high-precision sheet metal for lightness and ease of production. Also, more responsive gearshifts at high engine speeds are achieved by a pressure-balanced piston mechanism that cancels out centrifugal hydraulic pressure. This mechanism replaces the conventional ball check valve.

UNDERDRIVE CLUTCH

The underdrive clutch operates in 1st, 2nd, and 3rd gears and transmits driving force from the input shaft to the underdrive sun gear(A).
The components comprising the under clutch are as illustrated below.
Hydraulic pressure acts in the piston pressure chamber(B) (between the piston(c) and retainer) and thus pushes the piston(C). In turn, the piston depresses the clutch discs and thereby transmits driving force from the retainer(D) to the hub(E) side.

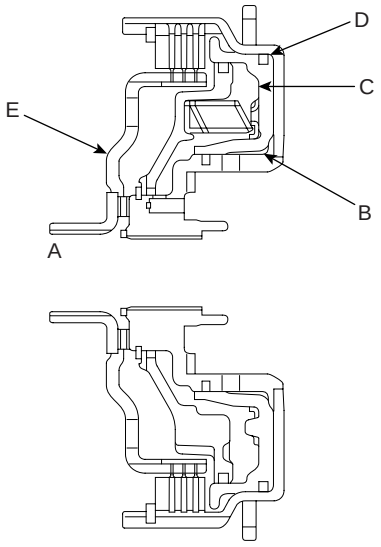

EKRF002B

At high speed, fluid remaining in the piston pressure chamber is subjected to centrifugal force and attempts to push the piston.
However, fluid in the balance fluid chamber(A) (the space between the piston and return spring retainer(B)) is also subjected to centrifugal force.
Thus, the hydraulic pressure on one side of the piston cancels out the hydraulic pressure on the other side, and the piston does not move.

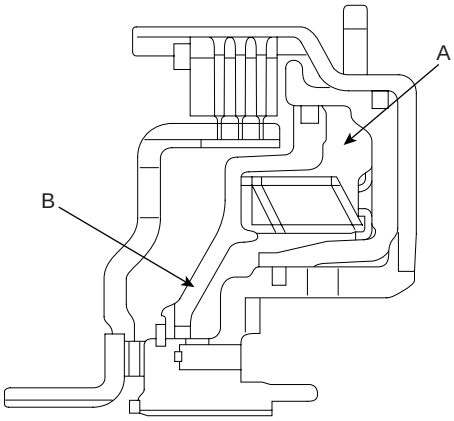

EKRF002C

REVERSE CLUTCH AND OVERDRIVE CLUTCH

The reverse clutch(C) operates when the reverse gear is selected and transmits driving force from the input shaft to the reverse sun gear.
The overdrive clutch(D) operates in 3rd and 4th gears and transmits driving force from the input shaft to the overdrive planetary carrier and low-reverse annulus gear.

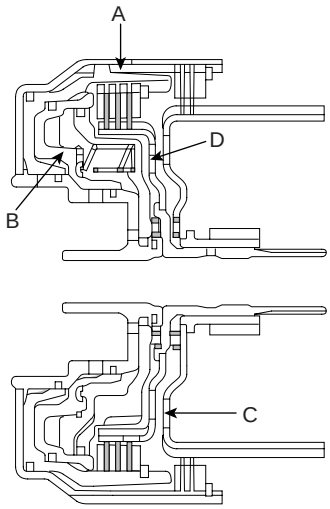

EKRF002D

BRAKES

The gear changing mechanism utilizes two multi-disc brakes.

LOW & REVERSE BRAKE AND SECOND BRAKE

The low & reverse brake(A) operates in 1st and reverse gears, when the vehicle is parked, and during manual operation. It locks the low & reverse annulus gear and overdrive planetary carrier to the case.
The second(C) brake(B) operates in 2nd and 4th gears and locks the reverse sun gear(D) to the case.
The components comprising the low & reverse brake and second brake are as illustrated below.
As shown, the discs and plates of the two brakes are arranged on either side of the rear cushion plate(E), which is itself secured to the case(F) by a snap ring.

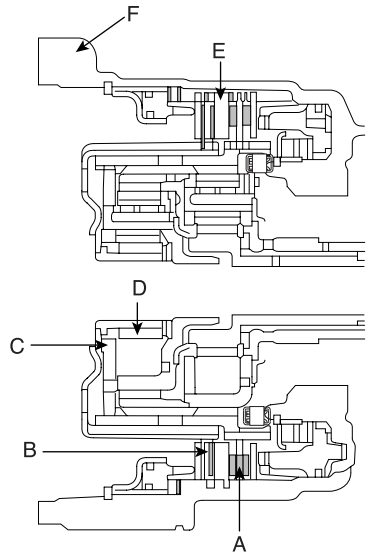

EKRF002E

OWC

To improve the shift feeling from 1st to 2nd gear, OWC was adopted on the low & reverse brake annulus gear. Instead of hydraulic fixing by Low & reverse brake at the 1st gear, this mechanical fixing device was used. This structure is not a new concept, because this OWC already has been installed on the previous models.

ACCUMULATORS

Number	Function Name	Color
1	Low & Reverse Brake	None
2	Underdrive Clutch	Yellow
3	Second Brake	Blue
4	Overdrive Clutch	None

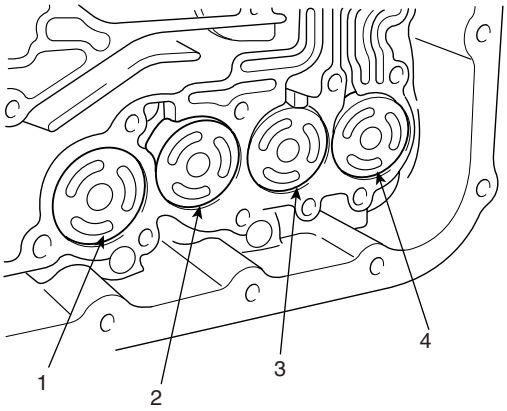

EKRF002F

OBJECTIVE

* Energy (hydraulic pressure) storage
* Impact and pulsation damping when solenoid valves operating
* Operation as spring element
* Smooth shifting by preventing sudden operation of clutches and brakes

TRANSFER DRIVE GEAR

With the transfer drive gear, increased tooth height and a higher contact ratio have reduced gear noise.
Also, the bearing that supports the drive gear is a preloaded type that eliminates rattle, and the rigidity of the gear mounting has been increased by bolting the bearing directly onto the case.

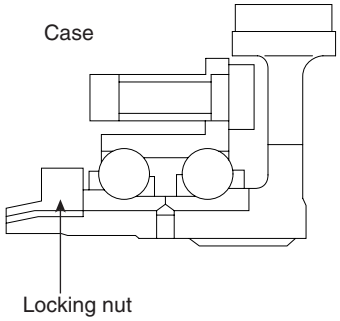

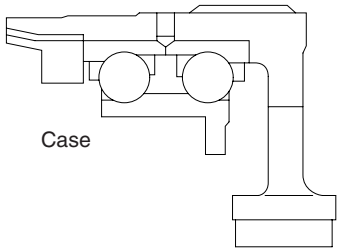

EKRF002G

OUTPUT SHAFT/TRANSFER DRIVEN GEAR

As shown in the illustration below, the transfer driven gear is press-fitted onto the output shaft, and the output shaft is secured by a locking nut and supported by bearings.
The locking nut has a left-handed thread, and a hexagonal hole in the other end of the shaft enables the shaft to be held in position for locking nut removal.

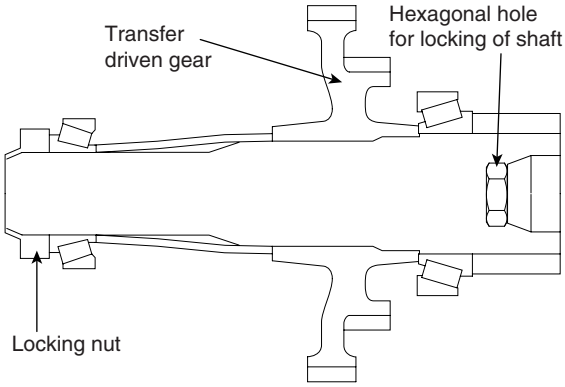

EKRF002H

MANUAL CONTROL SYSTEM

MANUAL CONTROL LEVER

The manual control lever is fitted to the top of the valve body and is linked to the parking roller rod and manual control valve pin.
A detent mechanism is provided to improve the gear shift feeling during manual selection.

PARKING MECHANISM

When the manual control lever is moved to the parking position, the parking roller rod moves along the parking roller support and pushes up the parking sprag.
As a result, the parking sprag meshes with the transfer driven gear (parking gear), thereby locking the output shaft. To minimize the operating force required, a roller is fitted to the end of the rod.

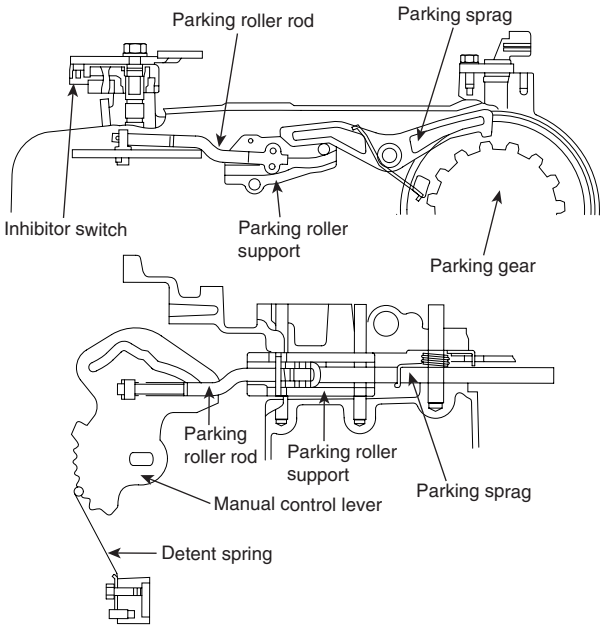

EKRF002I

POWER TRAIN E5E54FA9

P POSITION

Hydraulic pressure is applied to the LR brake and the RED brake, so power is not transmitted from the input shaft to the UD clutch or OD clutch, and the output shaft is locked by the park brake pawl interlocking the park gear.

N POSITION

Hydraulic pressure is applied to the LR brake(A) and the RED brake, so power is not transmitted from the input shaft to the UD clutch or OD clutch.

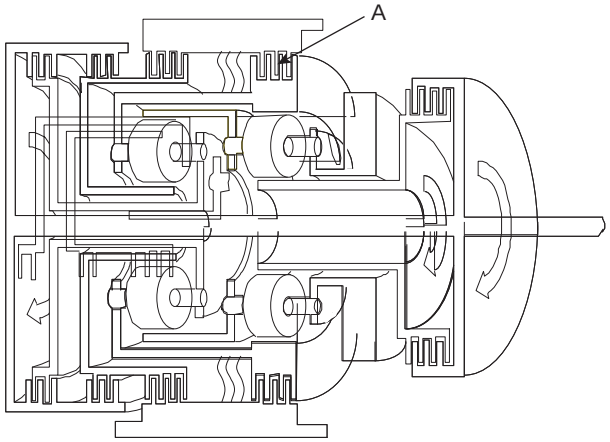

EKRF003A

1ST GEAR POWER FLOW

Hydraulic pressure is applied to the UD clutch(B) the LR brake(A) and the one way clutch(OWC), then the UD clutch transmits driving force from the input shaft to the UD sun gear, and the LR brake locks the LR annulus gear to the case.The UD sun gear of the planetary gear drives the output pinion gear, and the LR brake locks the annulus gear, and the output pinion drives the output carriers, and the output carrier drives the transfer drive gear, and the transfer drive gear drives the transfer driven gear of the output shaft, and power is transmitted to the differential gear through the differential drive gear.

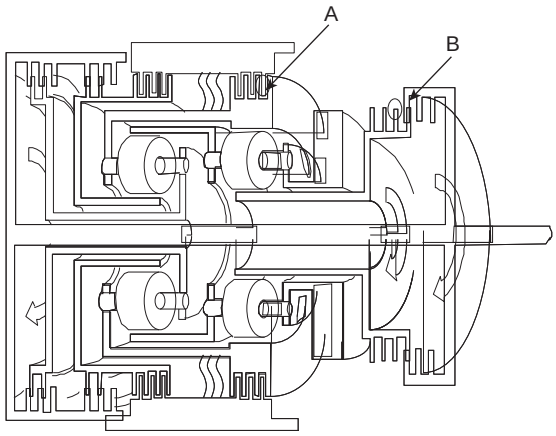

EKRF003B

2ND GEAR POWER FLOW

Hydraulic pressure is applied to the UD clutch(A) the 2nd brake(B) and the one way clutch(OWC), then the UD clutch transmits driving force from the input shaft to the UD sun gear, and the 2nd brake locks the reverse sun gear to the case.The UD sun gear of the planetary gear drives the output pinion gear and the LR annulus gear, and the LR annulus gear drives the OD planetary carriers, and OD planetary carriers drives OD pinion gear, and the OD pinion gear drives the output carriers, and the output carrier drives the transfer drive gear, and the transfer drive gear drives the transfer driven gear of the output shaft, and power is transmitted to the differential gear through the differential drive gear.

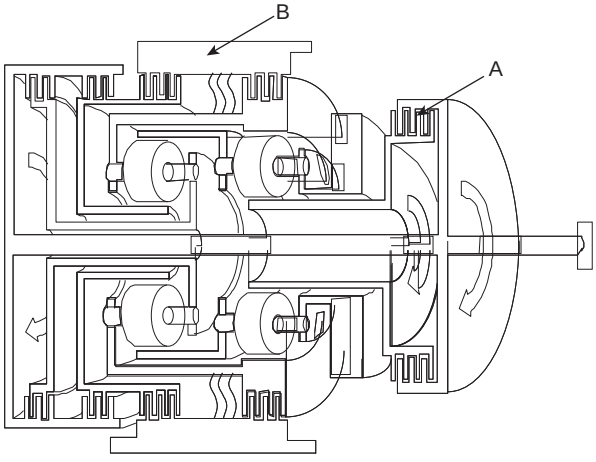

EKRF003C

3RD GEAR POWER FLOW

Hydraulic pressure is applied to the UD clutch(A) and the OD clutch(B), then the UD clutch transmits driving force from the input shaft to the UD sun gear, and the OD clutch transmits driving force from the input shaft to the overdrive planetary carrier and low & reverse annulus gear.The UD sun gear of the planetary gear drives the output pinion gear and the LR annulus gear, and the LR annulus gear drives the OD pinion gear through the OD planetary carrier, and the OD pinion gear drives the reverse sun gear and the output carrier.The OD clutch drives the OD carrier, and the OD carrier drives the OD pinion gear, and the OD pinion gear drives the reverse sun gear and the output carrier, and the output carrier drives the transfer drive gear, and the transfer drive gear drives the transfer driven gear of the output shaft, and power is transmitted to the differential gear through the differential drive gear.

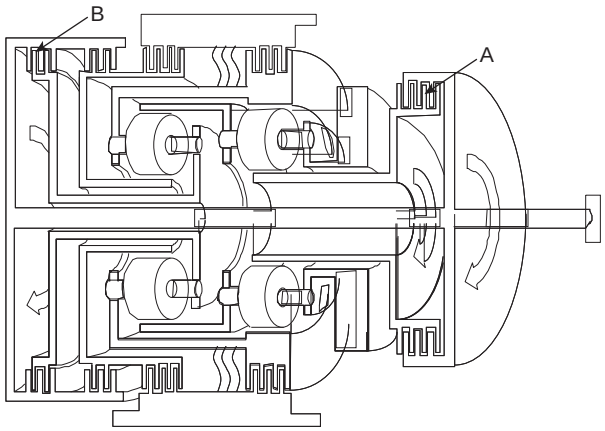

EKRF003D

4TH GEAR POWER FLOW

Hydraulic pressure is applied to the OD clutch(A) and the 2nd brake(B), then the OD clutch transmits driving force from the input shaft to the OD planetary carrier and LR annulus gear, and the 2nd brake locks the reverse sun gear to the case.The OD clutch drives the OD carrier, and the OD carrier drives the OD pinion gear and the LR annulus gear, and the OD pinion gear drives the output carrier, and the output carrier drives the transfer drive gear, and the transfer drive gear drives the transfer driven gear of the output shaft, and power is transmitted to the differential gear through the differential drive gear.

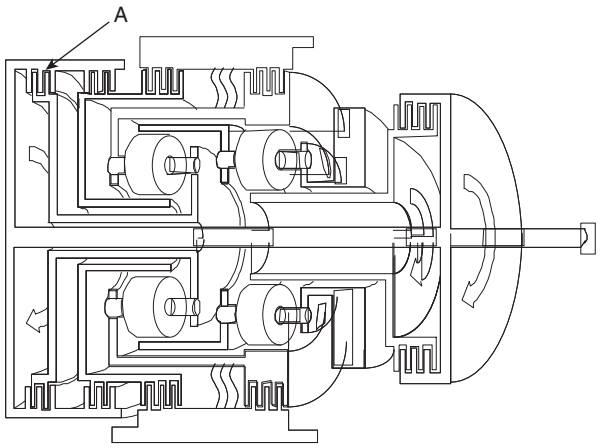

EKRF003E

REVERSE GEAR POWER FLOW

Hydraulic pressure is applied to the reverse clutch(A) and the LR brake(B), then the reverse clutch transmits driving force from the input shaft to the reverse sun gear, and the LR brake locks the LR annulus gear and OD planetary carrier to the case.The reverse clutch drives the reverse sun gear, and the reverse sun gear drives the output carrier through the OD pinion gear, and the output carrier drives the transfer drive gear, and the transfer drive gear drives the transfer driven gear of the output shaft, and power is transmitted to the differential gear through the differential drive gear.

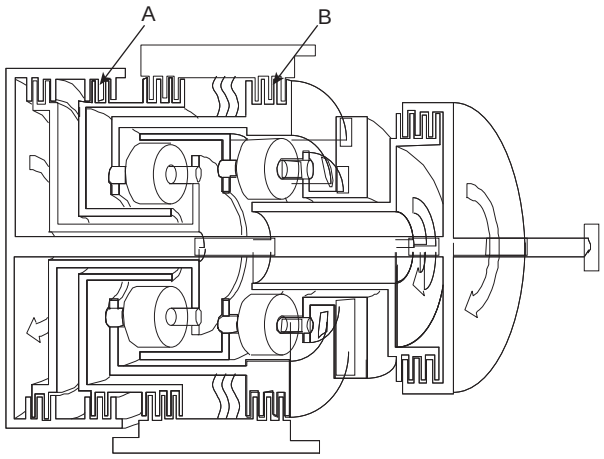

EKRF003F

HYDRAULIC CONTROL SYSTEM E4DCC033

DESCRIPTION

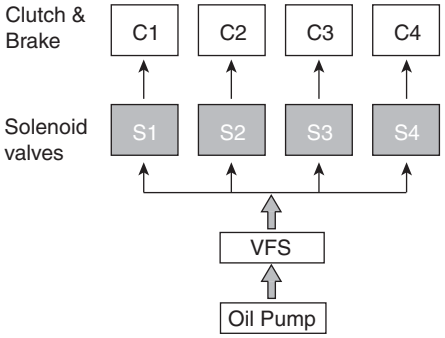

Each clutch and brake have a Solenoid valve for independent control of hydraulic pressure

EKRF003G

- Better and smoother shift quality.
- In order to prevent ATF leakage from the valve body or each elements, the exhaust ports have been grouped into only one with an addition of a check ball.
- If a failure occurs in its electric control, the switch valve and fail safe valve is able to move to enable 3rd speed drive or reverse.
- The hydraulic system consists of oil pump, regulator valve, solenoid valves, pressure control valve and valve body.
- In order to control the optimal line pressure and inprove the efficiency of power transmission according to maximize the efficiency of the oil pump, VFS(Variable Force Solenoid) valve has been added in the valve body hydralic circuit.

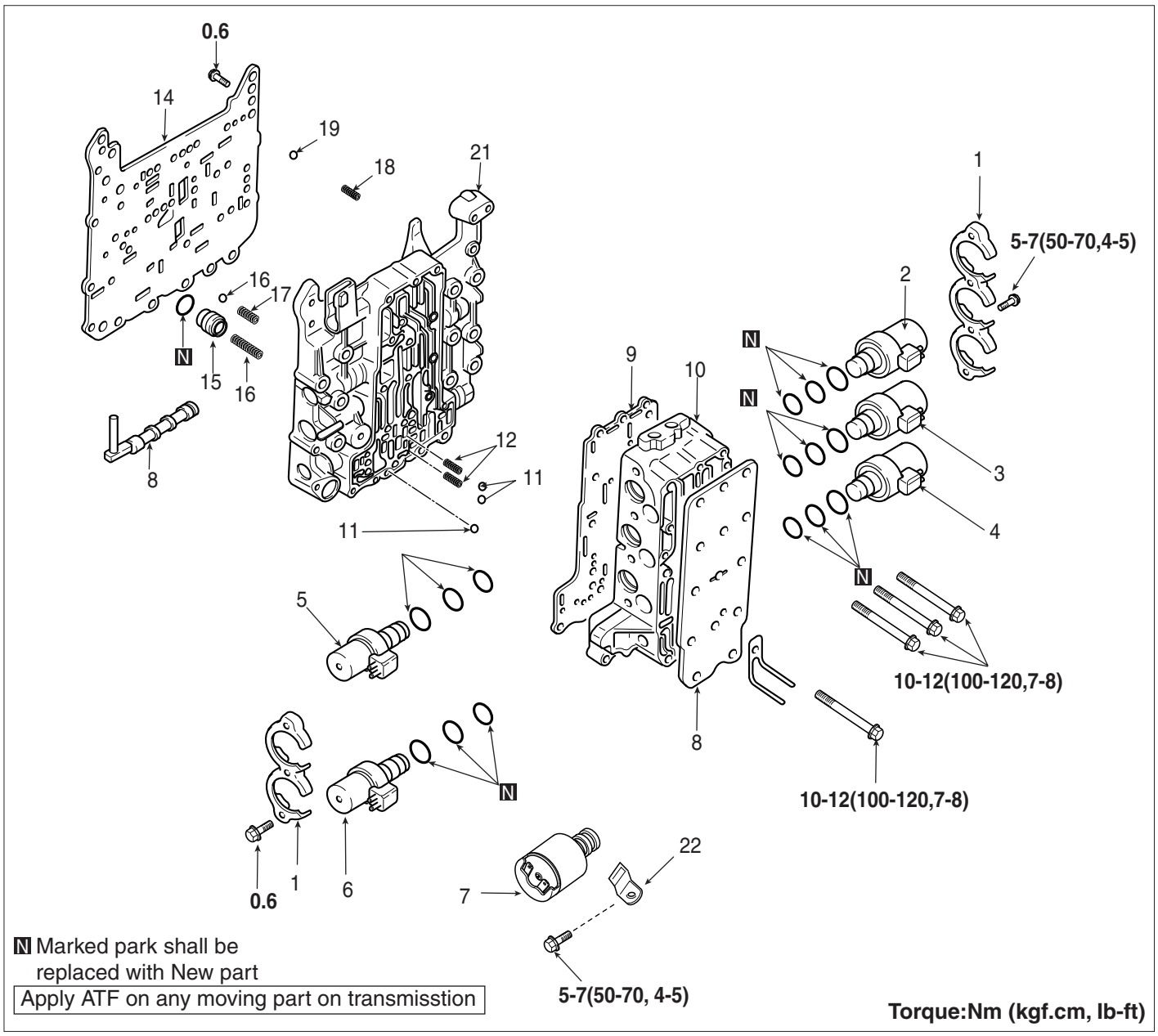

Disassembly steps
1. Solenoid valve support
2. UD clutch solenoid valve
3. 2nd brake solenoid valve
4. Damper clutch control solenoid\oid valve
5. OD clutch solenoid valve
6. Low and reverse brake solenoid valve
7. VFS solenoid valve
8. Manual valve
9. Cover
10. Plate
11. Outside valve body assembly
12. Steel ball (Orifice check ball)
13. Spring
14. Plate
15. Damping valve
16. Damping valve spring
17. Steel ball (line relief)
18. Spring
19. Steel ball (Orifice check ball)
20. Spring
21. Inside valve body assembly
22. VFS plate

EKRF003H

VFS (VARIABLE FORCE SOLENOID)

VRS Function

The spool rod in VFS is not duty cycled like one of PWM, it minutely vibrates at the range between the control port and exhaust port to control the hydraulic pressure. That is, it uses the equilibrium effect between the spring force and the magnetic force, the spring force is mechanical characteristics decided at the stage of design and the magnetic force is controlled by TCM. This electrical magnetic force is proportional to the current. So TCM will control the current.

In case of VFS valve, the electrical ' time constant' is considered to decide the frequency for the current not to be fluctuated even though turns on or off the input signal. The electrical ' time constant' is much more fast than one of mechanical so the frequency of VFS is extremely higher than the conventional PWM type.

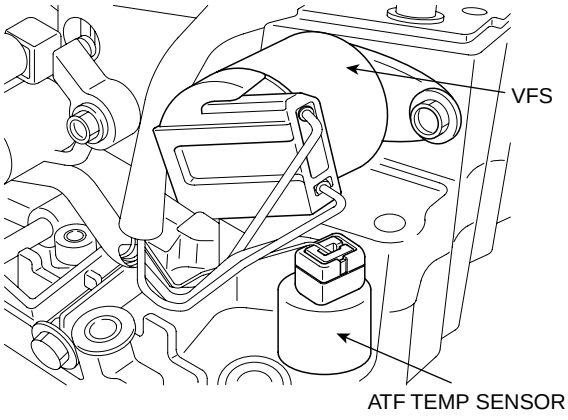

EKRF081A

Characteristics of Bosch VFS:
Supply pressure : 700～1600kPa
Control pressure: typically 600～0 kPa
Current range: typically 0～1,000 mA
Dither frequency: Up to 600 Hz
Dimension: 32 mm protrusion reach 42 mm

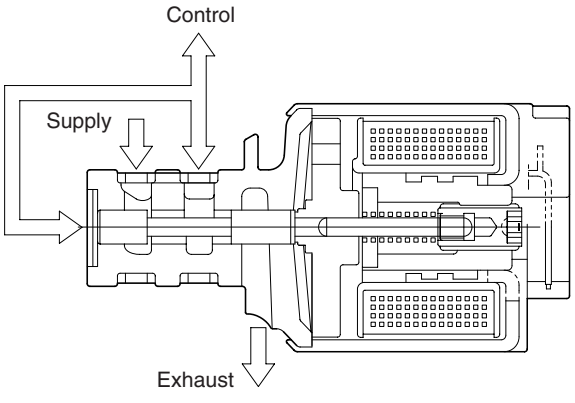

EKRF082A

The reducing pressure will be supplied to the ' Supply' port of the VFS valve on the above illustration to control the line pressure.

REDUCING PRESSURE

FUNCTION

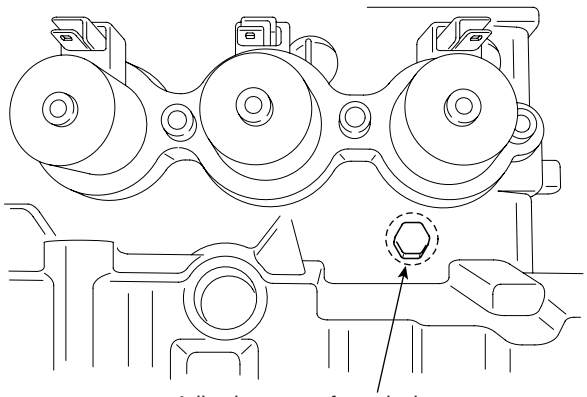

EKRF083A

As same as one of Alpha or Beta automatic transaxle system, this reducing valve length can be adjusted by rotating the screw on the picture. As you rotate the screw toward clockwise by 90˚, the reducing pressure will increase about 1.0bar. However, the reducing pressure is used just as a ' supply pressure' for the solenoid valves (except Low & Reverse, Reduction and Damper Clutch control solen), so this may not be handled to rotate in the field service shop. VFS is operated based on the ' supply pressure' and it outputs the ' control pressure' to control the regulator valve indirectly. While developing the VFS system, the line pressure was used as a ' supply pressure' for VFS and other solenoid valves but it has been changed into additional ' reducing pressure' because the line pressure is variably changed by VFS so the control pressure becomes unstable and some hydraulic pressure oscillation occurred. That is why the reducing pressure has been added in the hydraulic circuit of VFS system for both 4th and 5th speed A/T.

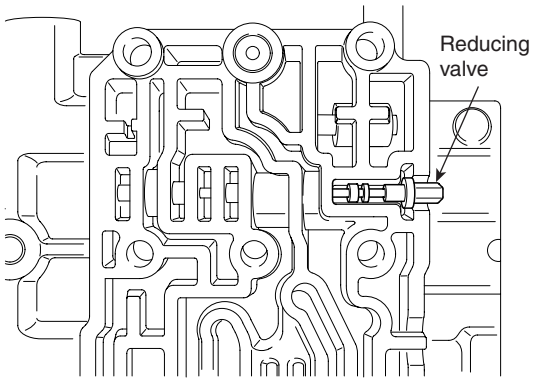

<Valve body>

EKRF084A

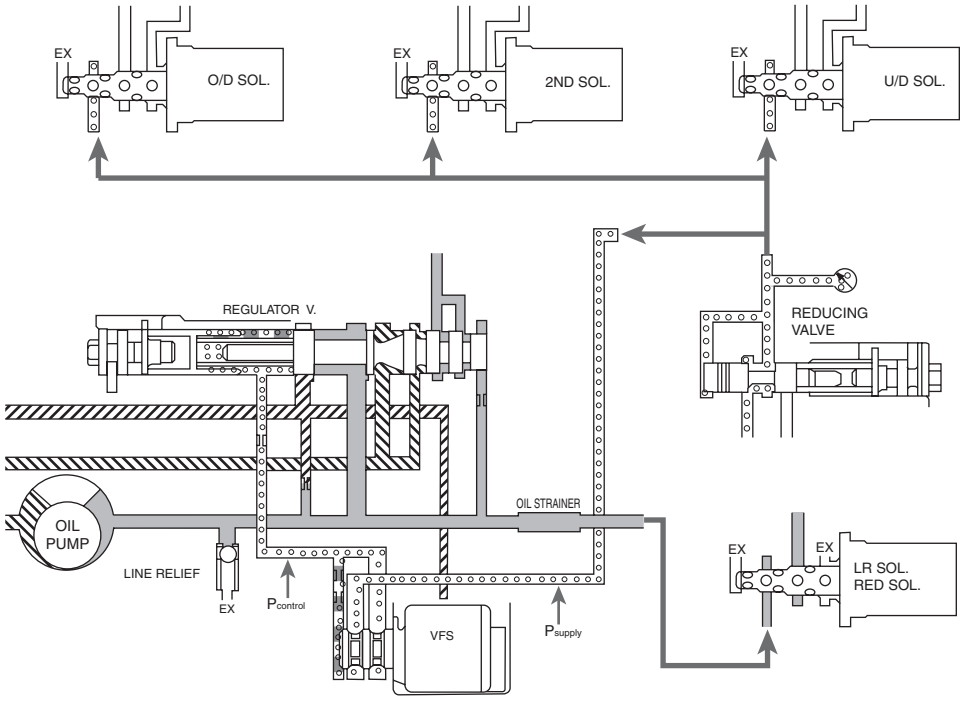

EKRF085A

The reducing pressure is about 6.5bar and this value does not be changed regardless of the driving or engine load condition. Be sure that the conventional line pressure is used for the ' supply pressure' of Low & Reverse, Reduction solenoid because the variable line pressure is not available at reverse range.

HYDRULIC PRESSURE TABLE

Under the constant current amount of VFS (200mA), the line pressure will become as below table. Be sure that the following data can be achieved by specific special facility or device to check the performance of A/T assembly (not on the vehicle), however we can refer the maximum pressure value according to each element.

Solenoid valve Duty(%)					Measured Element	Pressure kPa(Psi)
LR	2ND	UD	OD	RED*		
0	100	0	100	0	LR	1030±20(149±3)
60	↑	↑	↑	↑		520±40(75±6)
75	↑	↑	↑	↑		230±40(33±6)
100	↑	↑	↑	↑		0
100	0	0	100	0	2ND	1030±20(149±3)
↑	60	↑	↑	↑		550±40(80±6)
↑	75	↑	↑	↑		220±40(32±6)
↑	100	↑	↑	↑		0
100	100	0	0	0	OD	1030±20(149±3)
↑	↑	↑	60	↑		520±40(75±6)
↑	↑	↑	75	↑		210±40(30±6)
↑	↑	↑	100	↑		0
100	100	0	0	0	UD	1030±20(149±3)
↑	↑	60	↑	↑		470±40(68±6)
↑	↑	75	↑	↑		170±40(25±6)
↑	↑	100	↑	↑		0
100	0	100	0	100	DIR*	0
75	↑	↑	↑	↑		270±40(39±6)
60	↑	↑	↑	↑		540±40(78±6)
0	↑	↑	↑	↑		1030±20(149±3)

Measuring condition:
1. PG-A (Input speed): 2,500rpm
2. Manual valve position: D
3. DCC Solenoid duty: 0%

N-P

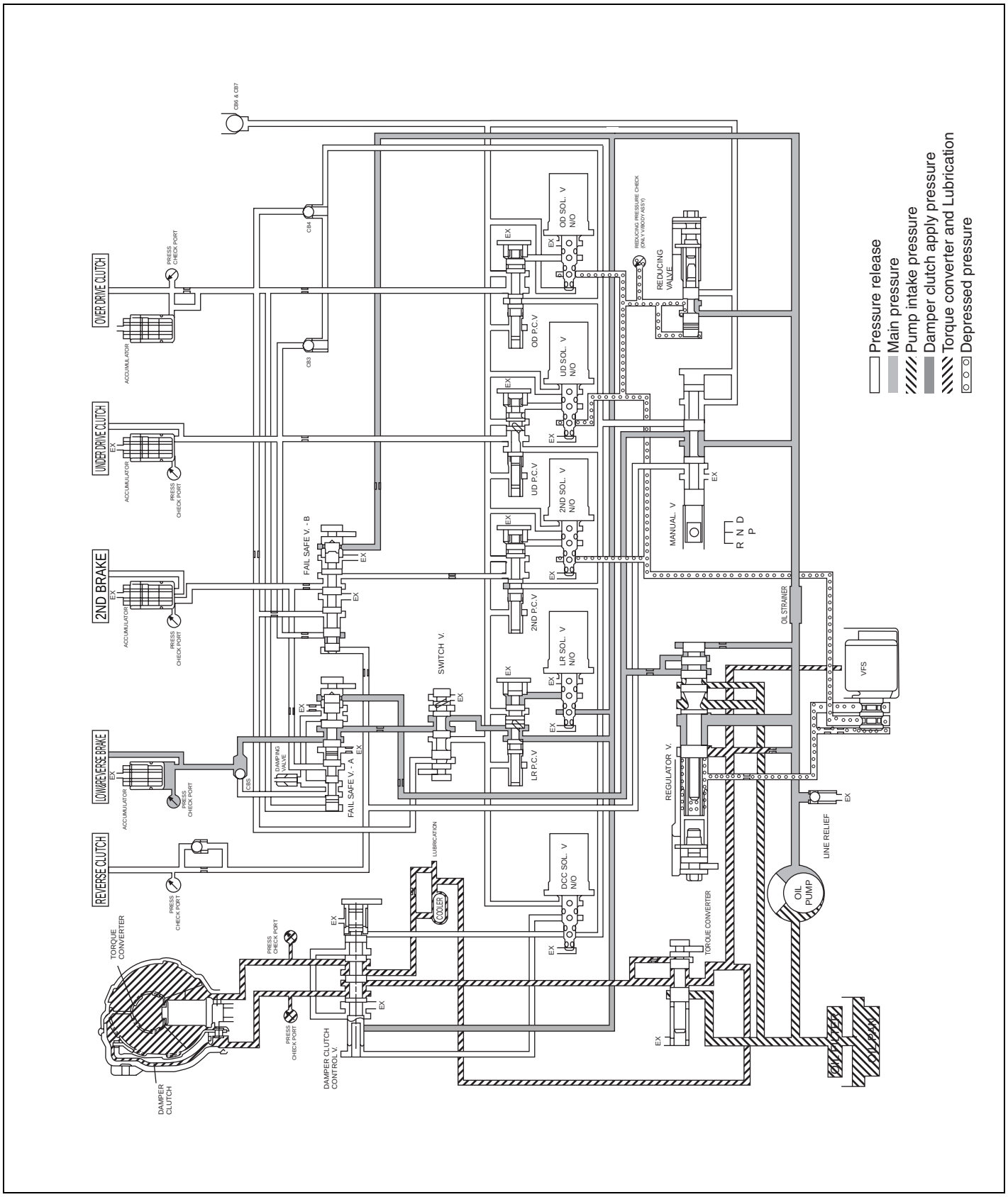
Pressure release
Main pressure
Pump intake pressure
Damper clutch apply pressure
Torque converter and Lubrication
Depressed pressure
OVER DRIVE CLUTCH
UNDER DRIVE CLUTCH
2ND BRAKE
LOW/REVERSE BRAKE
REVERSE CLUTCH
ACCUMULATOR
PRESS CHECK PORT
C0&C7
C1&4
C3
C2
C1&5
FAIL SAFE V. - B
FAIL SAFE V. - A
DAMPING VALVE
SWITCH V.
OD SOL. V N/O
OD P.C.V
UD SOL. V N/O
UD P.C.V
2ND SOL. V N/O
2ND P.C.V
LR SOL. V N/O
LR P.C.V
DCC SOL. V N/O
REDUCING PRESSURE CHECK (ONLY V/BODY ASSY)
REDUCING VALVE
MANUAL V
R N D P
OIL STRAINER
VFS
REGULATOR V.
LINE RELIEF
OIL PUMP
TORQUE CONVERTER
COOLER
LUBRICATION
DAMPER CLUTCH CONTROL V.
DAMPER CLUTCH
EX

EKRF017H

D 1ST GEAR

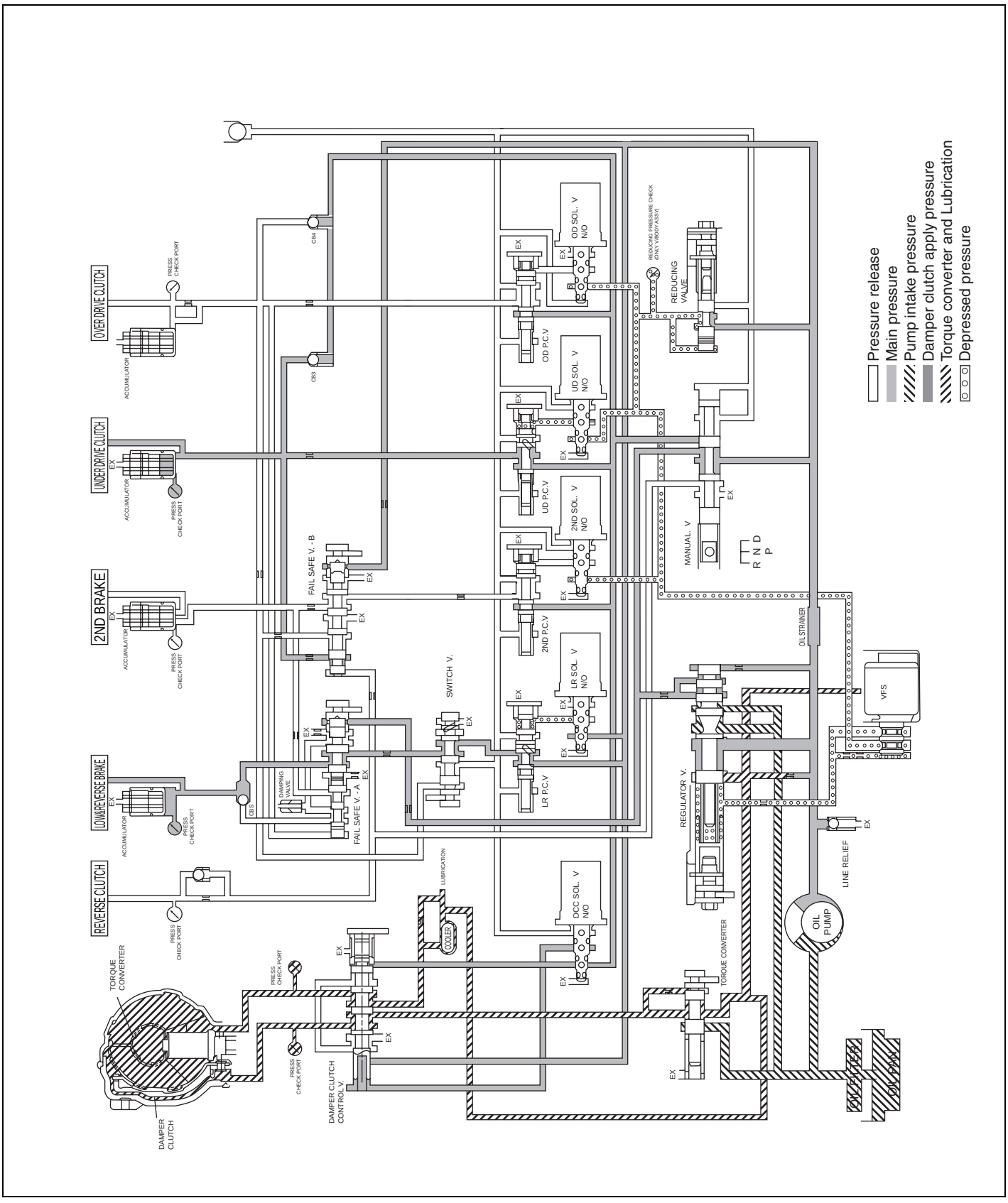

EKRF017I

D 2ND GEAR

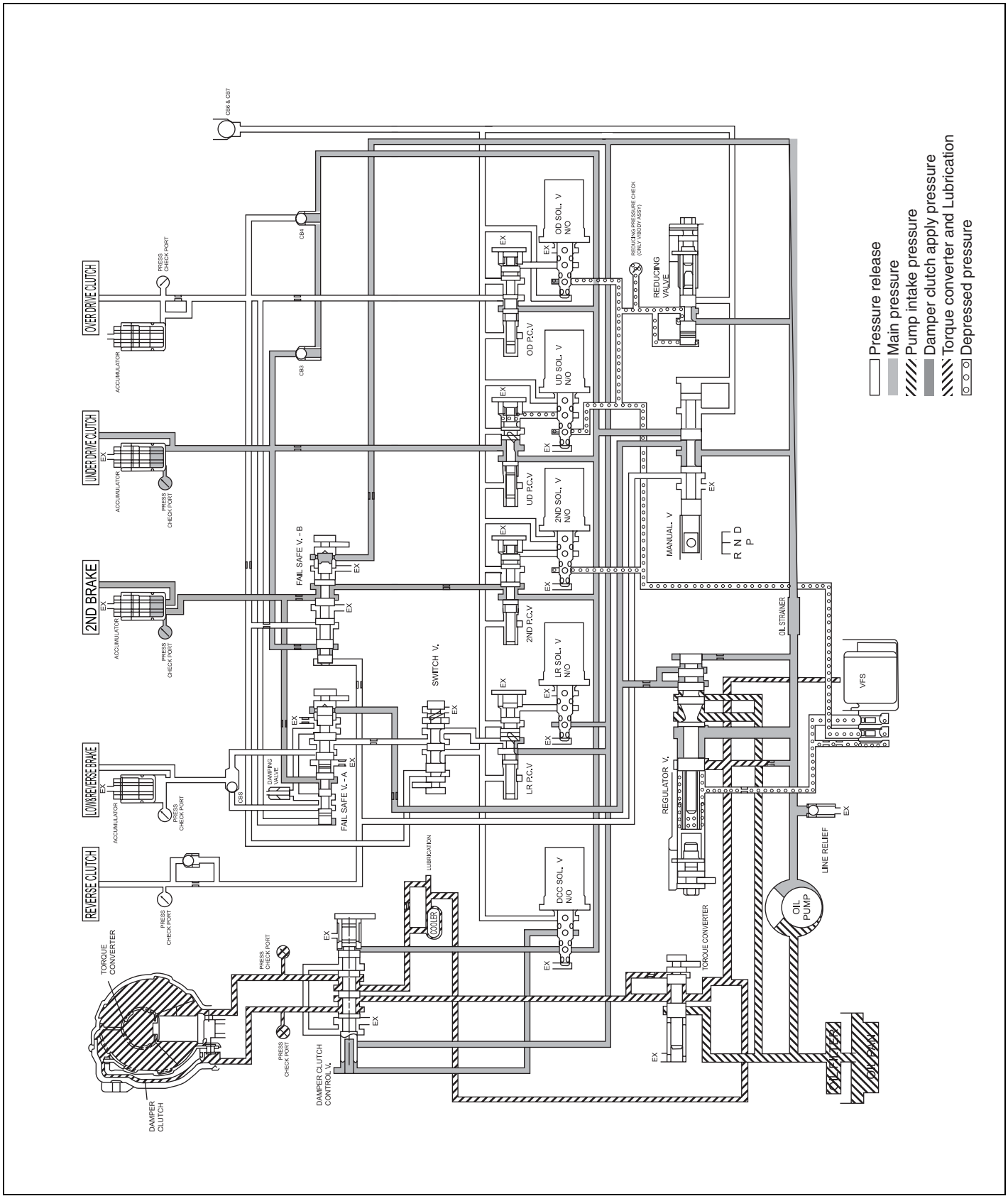

EKRF017J

D 3RD GEAR

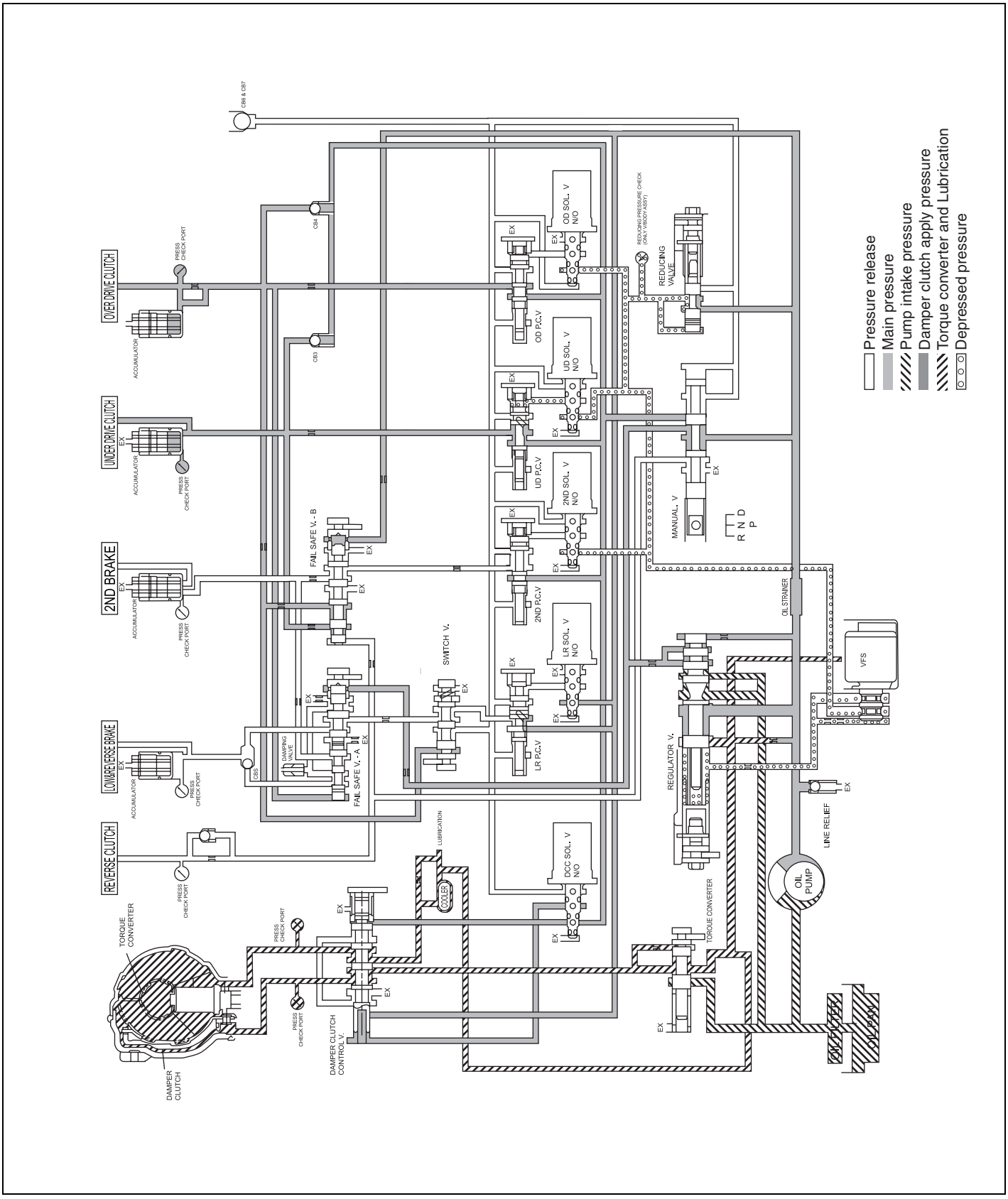

EKRF017K

D 4TH GEAR

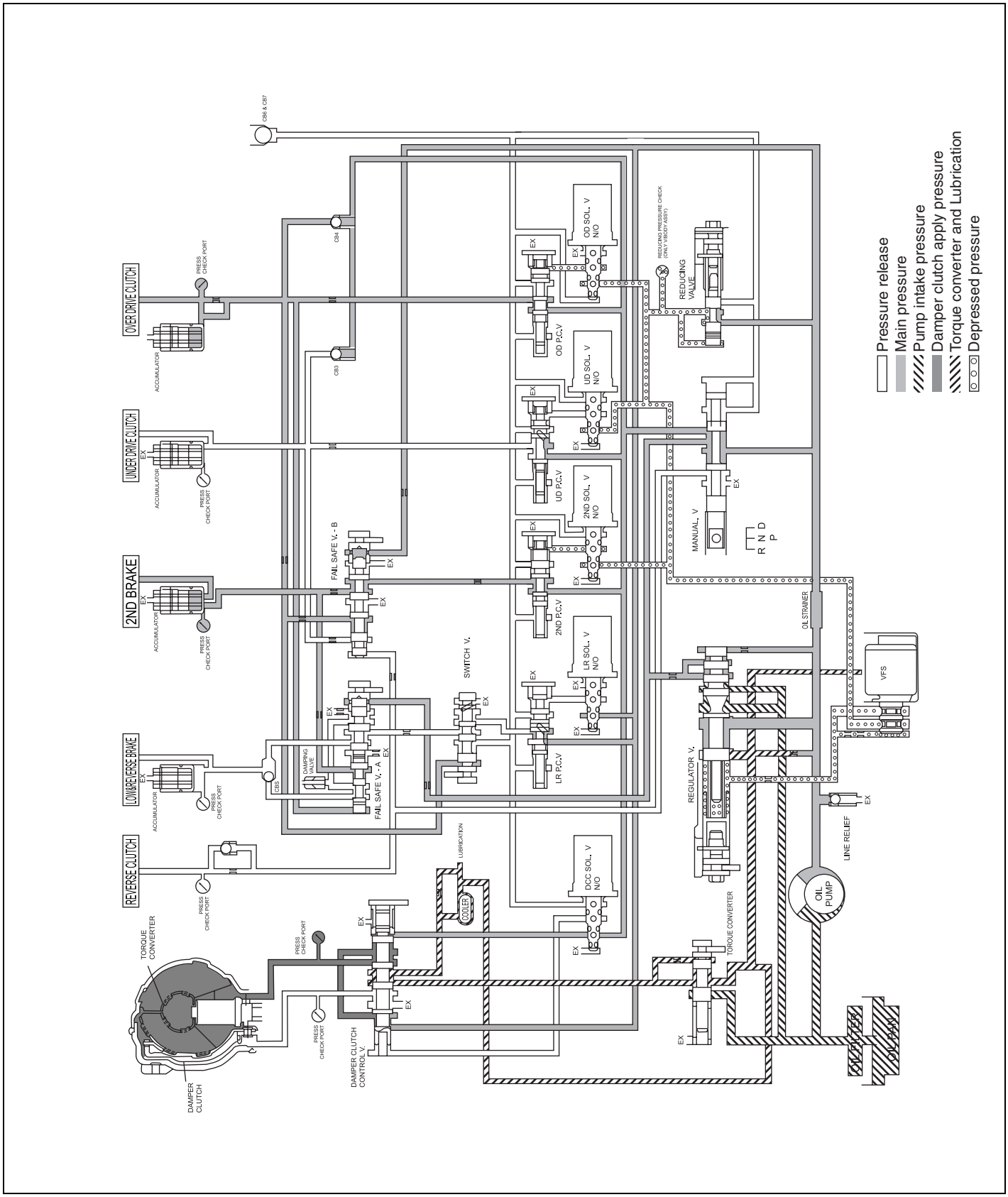

EKRF017L

REVERSE

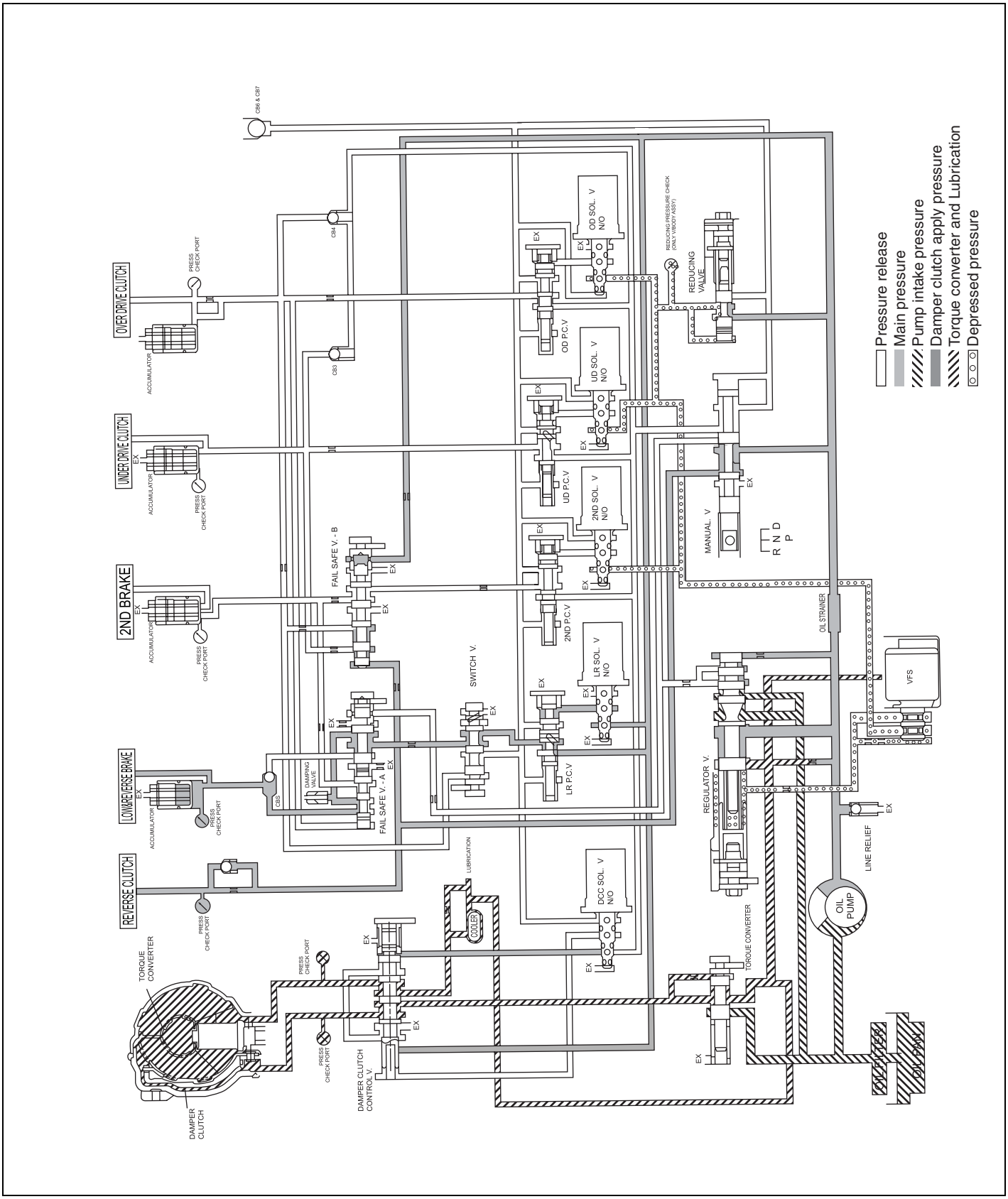

EKRF017M

ELECTRONIC CONTROL SYSTEM E1D6CFCD

DESCRIPTION

The electronic control system used in the new generation auto transaxle is far superior to the previous systems. This system is able to adopt a variable shift pattern for smooth and problem free shifting.

A solenoid valve is applied to each of the clutches and brakes and is independently controlled. Feedback control and correction control is performed in all gears as well as utilization of mutual control system to increase shift feeling. The torque converter damper clutch uses a partial lock up and full lock-up system. An additional control method called the HIVEC system (neural network) is adopted to increase shift feeling.

BLOCK DIAGRAM (CAN)

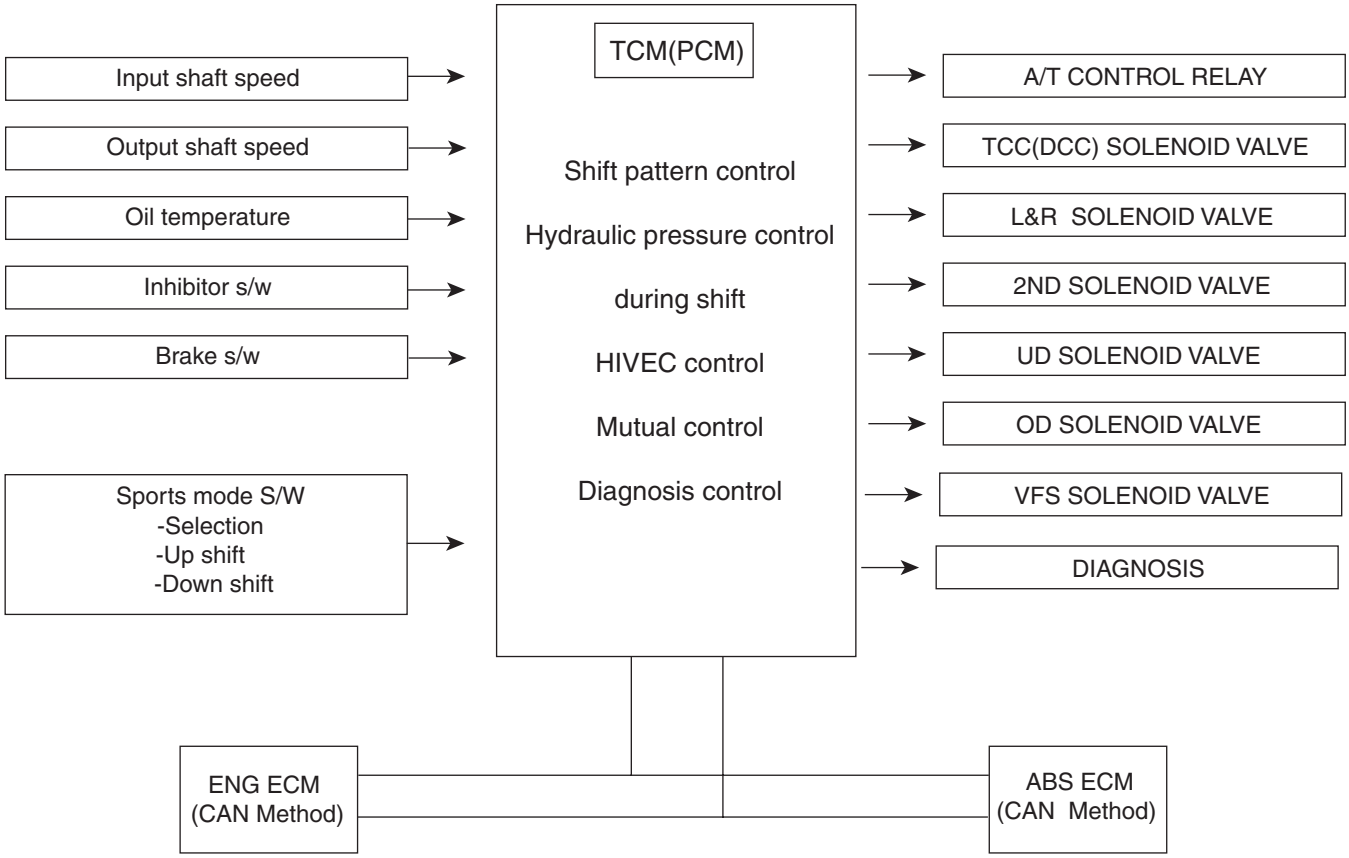

EKRF004G

ELECTRIC CONTROL LOCATION

The TCM(PCM) is located on the intake manifold in the engine room.

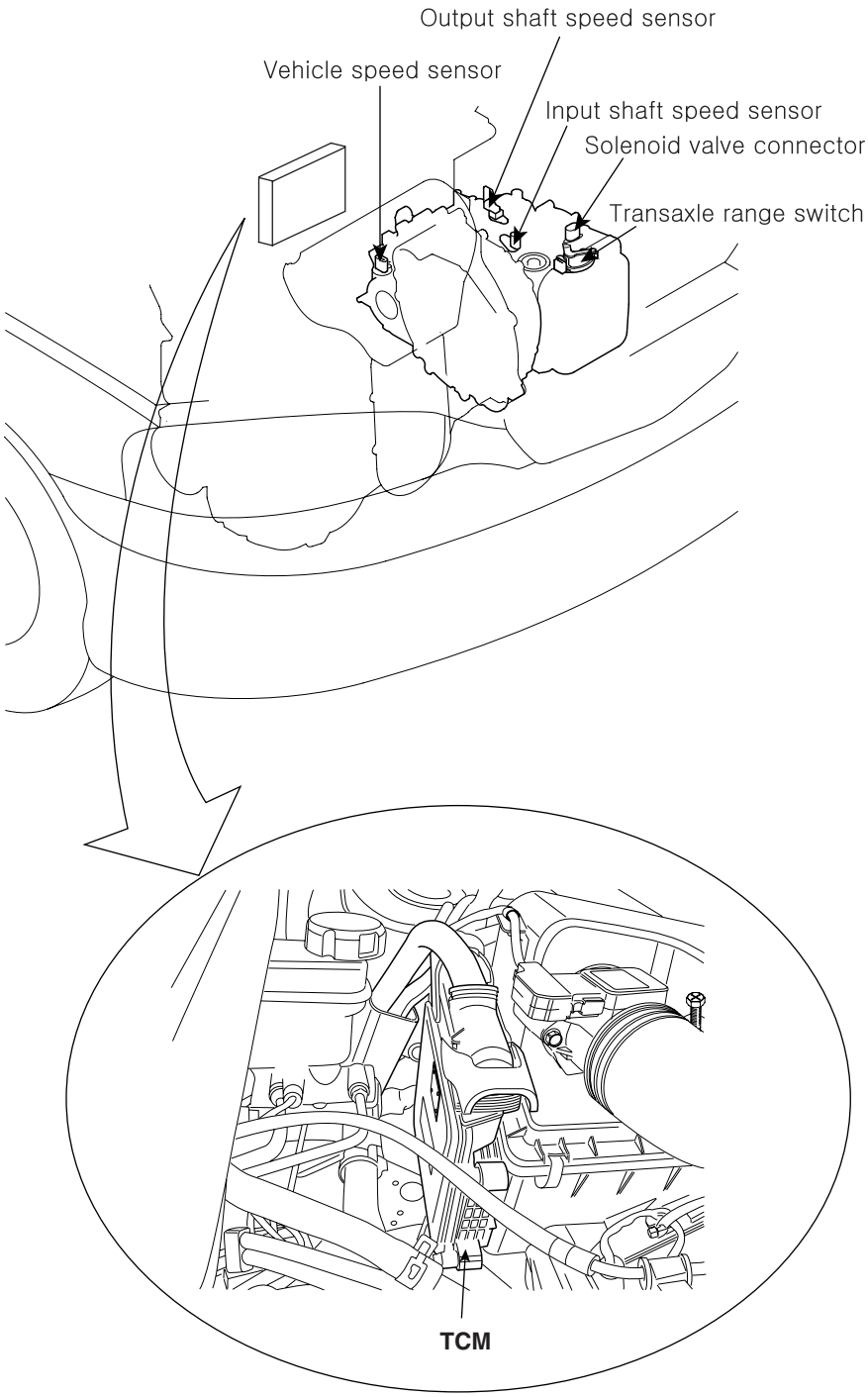

EKRF087A

OPERATING COMPONENTS AND FUNCTIONS

Sensor	Function
Input shaft speed sensor	Detect turbine speed at UD retainer
Output shaft speed sensor	Detect T/F drive gear speed at T/F driven gear (4A/T)
Crank angle sensor	Detect engine speed
TPS(Gasoline)	Throttle opening ratio by potentiometer
Air conditioner switch	A/C load by thermister
Inhibitor switch	Select lever position by contact switch
Brake switch	Brake pedal position
Vehicle speed sensor	Detect vehicle speed by speedometer driven gear
Sport mode switch	Sport mode On/Off signal
Sport mode up-shift switch	Sport mode up-shift signal
Sport mode downshift switch	Sport mode downshift signal
Request of torque reduction	Send the request of torque reduction to ECM
ABS-ECM, Engine ECM	In case of CAN communication

SPORTS MODE

SPORTS MODE SWITCH

Sports mode allows the manual up-shift and downshift with the accelerator pedal is depressed. The prompt response and shift would be obtained due to the continuous shifting without cutting of driving power. The shifting time is also decreased about 0.1sec during up-shift, 0.2sec during downshift. As the selector lever is pushed upward or downward one time, the gear is up shifted or downshifted by one gear.

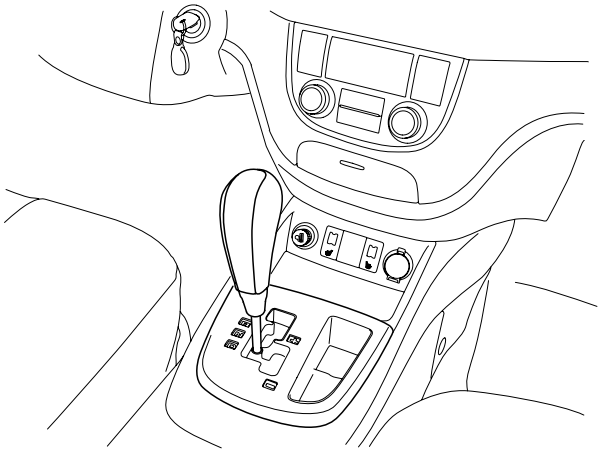

SCMAT6509L

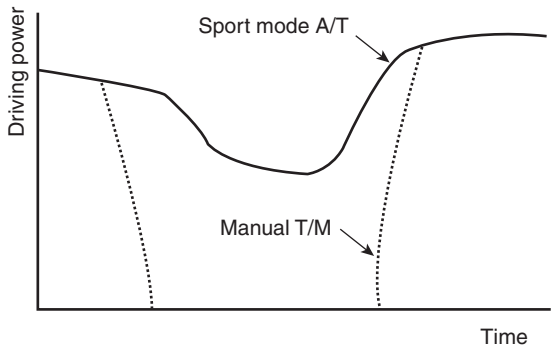

EKRF005C

SIGNALS OF SPORTS MODE SWITCH

Items	Mode S/W	UP S/W	DOWN S/W
D range selection	OFF	OFF	OFF
Sports mode selection	ON	OFF	OFF
Sports mode up-shift selection	ON	ON	OFF
Sports mode downshift selection	ON	OFF	ON

CONTROLLER AREA NETWORK (CAN)

Previously, for different computers in the vehicle to share the same information, each signal required a different pin and wiring. However, with the introduction of a CAN system, only two lines are required to achieve the same function. The information is in digital format. This method does not use an integrated ECM.

Frequency: 500Kbit/sec

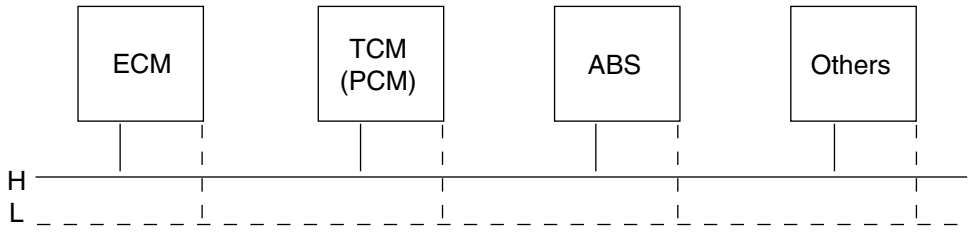

EKRF005D

Input signals to TCM(PCM) through ' CAN communication'

- Engine rpm, TPS signal
- A/CON signal, Engine coolant temperature
- Quantity of intake airflow, Vehicle speed
- Shift holding signal (FTCS ON)

Output signals from TCM(PCM) through ' CAN communication'

- Request signal for torque reduction
- ATF temperature, TCM(PCM) type, TCM(PCM) error or not
- Damper clutch ON, OFF / Gear position

TCM PIN DESCRIPITION

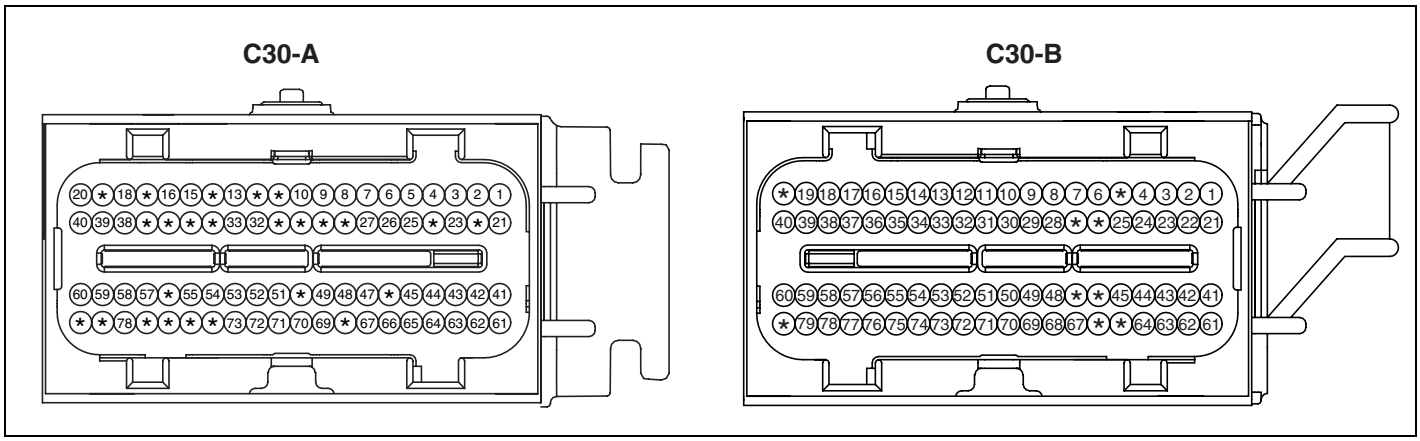

SCMAT6501L

PIN No.	Check item	Condition	Input/Output value		Measurement Value	Remarks
			Type	Level		
A01	2nd CAN_HI	-	-	-	-	-
A02	2nd CAN_LO	-	-	-	-	-
A03	P Range Selection	P Position Otherwise	DC Voltage	V_BAT Max. 1.0V	12.9V 0V	
A04	R Range Selection	R Position Otherwise	DC Voltage	V_BAT Max. 1.0V	12.3V 0V	
A05	N Range Selection	N Position Otherwise	DC Voltage	V_BAT Max. 1.0V	13.2V 0V	
A06	D Range Selection	D Position Otherwise	DC Voltage	V_BAT Max. 1.0V	13.2V 0V	
A07	Select Position	-	DC Voltage	V_BAT Max. 1.0V	13.2V 0V	
A08	Up Position	-	DC Voltage	V_BAT Max. 1.0V	13.2V 0V	
A09	Down Position	-	DC Voltage	V_BAT Max. 1.0V	13.2V 0V	
A12	N.A	-	-	-	-	
A14	N.A	-	-	-	-	
A19	N.A	-	-	-	-	
A20	A/T Control Relay	Relay On Relay Off	DC Voltage	V_BAT Max. 1.0V Vpeak : Max. 70V Resistance : 680Ω	13.8V 0V -0.7V Resistance : 680Ω	
		W/H Open		DTC Spec : P0890	DTC : P0890	
A27	Diagnosis "K"	Communicated with GST	Pulse	At transmitting HI : V_BAT* 80%↑ LO : V_BAT * 20%↓ AT receiving HI : V_BAT* 70%↑ LO : V_BAT*30%↓	11.3V 0.14/ 0.32V	V_BAT : 13.2V

PIN No.	Check item	Condition	Input/Output value		Measurement Value	Remarks
			Type	Level		
A31	N.A	-	-	-	-	
A32	A/C Pressure Analog	-	-	-	-	-
A34	N.A	-	-	-	-	
A36	N.A	-	-	-	-	
A37	N.A	-	-	-	-	
A41	CAN_HI	Recessive Dominant	Pulse	2.0 ~ 3.0 V 2.75 ~ 4.5 V	3.85V 2.5V	
A42	CAN_LO	Recessive Dominant	Pulse	2.0 ~ 3.0 V 0.5 ~ 2.25 V	2.55V 1.34V	
A60	A/T PWR Source	IG Off IG On IG. Key On IG. Key Off Idle Key Off from Idle Fuse 1/2/3 Removal Condition	DC Voltage	Max. 0.5 V V_BAT MAX. +/- 75V (ECU GND) MAX. +/- 75V (ECU GND) MAX. +/- 75V (ECU GND) MAX. +/- 75V (ECU GND) MAX. +/- 75V (ECU GND)	0V 11.9V +30V / -10V or less ↑	
		W/H Open		DTC Spec : P0888	DTC : P0888	
A73	Shift Position Signal(To Cluster)	Running 1 gear 2 gear 3 gear 4 gear 5 gear	Pulse Duty ↑ ↑ ↑ ↑	HI : V_BAT LO : Max. 1.0V Freq.: 50±2Hz (Reference) 12.5±2% 27.5±2% 42.5±2% 57.5±2% 72.5±2%	N.A	Sports mode
B03	UD Solenoid	Shifting	Pulse	HI : V_BAT LO : Max. 1.0V Vpeak : Max. 70V	14.4V 0.35V 56.3V	
		W/H Open		DTC Spec : P0755	DTC : P0755	
B05	N.A	-	-	-	-	
B06	Oil temperature sensor_ATM	Idle	Analog	0.5V ~ 4.5V	4.4V 3.1V	16Hz
B09	Output speed sensor	30kph	Pulse	HI : Min. 4.0V LO : Max. 1.0V	5.08V 0.34V	
		W/H Open		DTC Spec : P0722	DTC : P0722	
B10	Input speed sensor	Idle	Pulse	HI : Min. 4.0V LO : Max. 1.0V	5.06V 0.35V	630Hz
		W/H Open		DTC Spec : P0717	DTC : P0717	
B20	N.A	-	-	-	-	

PIN No.	Check item	Condition	Input/Output value		Measurement Value	Remarks
			Type	Level		
B22	LR Solenoid	Shifting	Pulse	HI : V_BAT LO : Max. 1.0V Vpeak : Max. 70V	13.9V 0.38V 56.1V	
		W/H Open		DTC Spec : P0750	DTC : P0750	
B26	N.A	-	-	-	-	
B27	N.A	-	-	-	-	
B33	GND_Sensor	Idle	DC Voltage	Max. 50 mV	13mV	WTS & OTS_ATM
		W/H Open		DTC Spec : P0118/ 1115	DTC : P0118/ P1115	
B42	OD Solenoid	Shifting	Pulse	HI : V_BAT LO : Max. 1.0V Vpeak : Max. 70V	15.4V 0.45V 56.3V	
		W/H Open		DTC Spec : P0765	DTC : P0765	
B43	DCC solenoid	Lock_Up on	Pulse	HI : V_BAT LO : Max. 1.0V Vpeak : Max. 70V	15.4V 0.45V 56.3V	
		W/H Open		DTC Spec : P0743	DTC : P0743	
B44	RED Solenoid	Shifting	Pulse	HI : V_BAT LO : Max. 1.0V Vpeak : Max. 70V	15.4V 0.45V 56.3V	
		W/H Open		DTC Spec : P0770	DTC : P0770	
B45	2ND Solenoid	Shifting	Pulse	HI : V_BAT LO : Max. 1.0V Vpeak : Max. 70V	15.4V 0.45V 56.3V	
		W/H Open		DTC Spec : P0760	DTC : P0760	
B46	N.A	-	-	-	-	
B47	N.A	-	-	-	-	
B59	Variable Solenoid (-)	Idle	Pulse	HI : V_BAT LO : Max. 1.0V Vpeak : Max. 70V	1.8/1.2V - N range 0.03V(DC) - D range	600Hz
		W/H Open		DTC Spec : P0748	DTC : P0748	
B65	N.A	-	-	-	-	
B66	N.A	-	-	-	-	
B75	Variable Solenoid (+)	Idle	Pulse	HI : V_BAT LO : Max. 1.0V Vpeak : Max. 70V	13.1V -0.07V	
		W/H Open		DTC Spec : P0748	DTC : P0748	
B80	N.A	-	-	-	-	

SERVICE ADJUSTMENT PROCEDURE E32348DF

AUTOMATIC TRANSAXLE FLUID

INSPECTION

1. Drive the vehicle until the fluid reaches normal operating temperature [70~80°C].
2. Place the vehicle on a level surface.
3. Move the selector lever through all gear positions. This will fill the torque converter and the hudraulic system with fluid and move the selector lever to the "N" (Neutral) or "P"(Park) position.
4. Before removing the oil level gauge, wipe all contaminants from around the oil level gauge. Then take out the oil level gauge and check the condition of the fluid.

NOTE

If the fluid smells as if it is burning, it means that the fluid has been contaminated by fine particles from the bushes and friction materials, a transaxle overhaul may be necessary.

5. Check that the fluid level is at the HOT mark on the oil level gauge. If the fluid level is low, add automatic transaxle fluid until the level reaches the "HOT" mark.

Auto transaxle fluid: DIAMOND ATF SP-III, SK ATF SP-III Quantity : 7.8ℓ (8.2 US qt, 6.9 lmp.qt)

NOTE

Low fluid level can cause a variety of a abnormal conditions because it allows the pump to take in air along with fluid. Air trapped in the hydraulic system forms bubbles, which are compressable. Therefore, pressures will be erratic, causing delayed shifting ,slipping clutches and brakes, etc. Improper filling can also raise fluid level too high. When the transaxle has too much fluid, gears churn up foam and acuise the same conditions which occur with low fluid level, resulting in accelerated deterioration of automatic transaxle fluid. In either case, air bubbles can cause overheating, and fluid oxidation, which can interfere with normal valve, clutch, and brake operation. Foaming can also result in fluid escaping from the transaxle vent where it may be mistaken for a leak.

6. Insert the oil level gauge(A) securely.

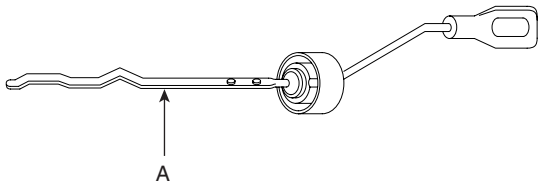

EKRF008A

NOTE

When new, automatic transmission fluid should be red. The red dye is added so the assembly plant can identify it as transmission fluid and distinguish it from engine oil or antifreeze. The red dye, which is not an indicator of fluid quality, is not permanent. As the vehicle is driven the transmission fluid will begin to look darker. The color may eventually appear light brown.

REPLACEMENT

If you have a fluid changer, use this changer to replace the fluid. If you do not, replace it using the following procedure.

1. Disconnect the hose which connects the transmission and the oil cooler which is within the radiator only in 2.4L engine(3.3L-the oil cooler is separated).
2. Start the engine and let the fluid drain out.

Running conditions : "N" range with engine idling.

CAUTION

The engine should be stopped within one minute after it is started. If the fluid has all drained out before then, the engine should be stopped at that point.

3. Romove the drain plug(A) from the bottom of the transmission case to drain the fluid.

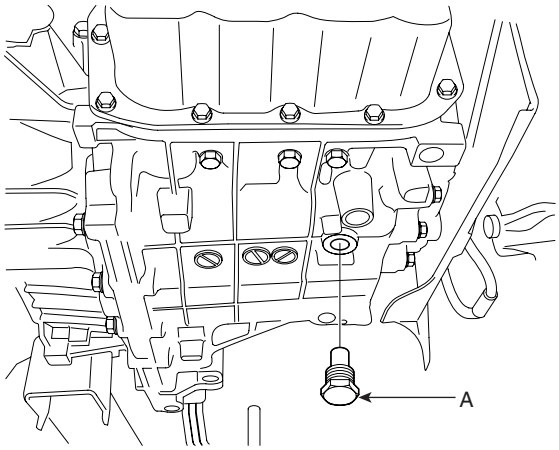

EKRF073A

4. Install the drain plug via the gasket, and tighten it to the specified torque.

TORQUE :
40~50Nm (4.0~5.0 kgf.m, 29~36 lb-ft)

5. Pour the new fluid in through the oil filler tube.

CAUTION

Stop pouring if the full volume of fluid cannot be poured in.

6. Repeat the procedure in step (2).

NOTE

Check the old fluid for contamination. If it has been contaminated, repeat the steps (5) and (6).

7. Pour the new fluid in through the oil filler tube.

8. Reconnect the hose which was disconnected in step (1) above and firmly replace the oil level gauge.(In case of this "replace", this means after wiping off any dirt around the oil level gauge, insert it into the filler tube.)

9. Start the engine and run it at idle for 1~2 minutes.

10. Move the select lever through all positions, and then move it to the "N" position.

11. Drive the vehicle until the fluid temperature rises to the normal temperature (70~80°C), and then check the fluid level again. The fluid level must be at the HOT mark.

12. Firmly insert the oil level gauge(A) into the oil filler tube.

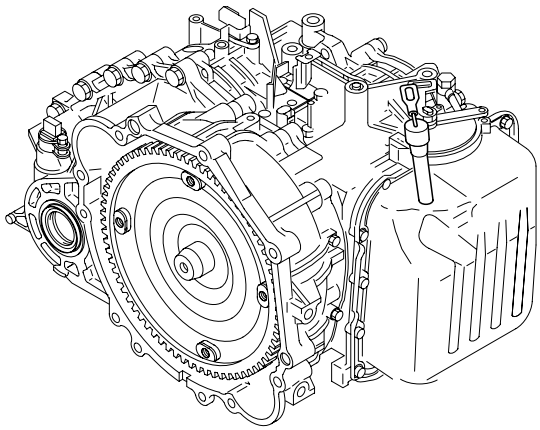

EKRF008B

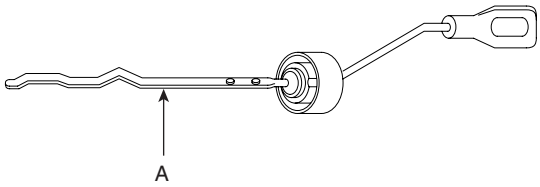

EKRF008A

TROUBLESHOOTING EE0B83F5

DIAGNOSIS FLOW

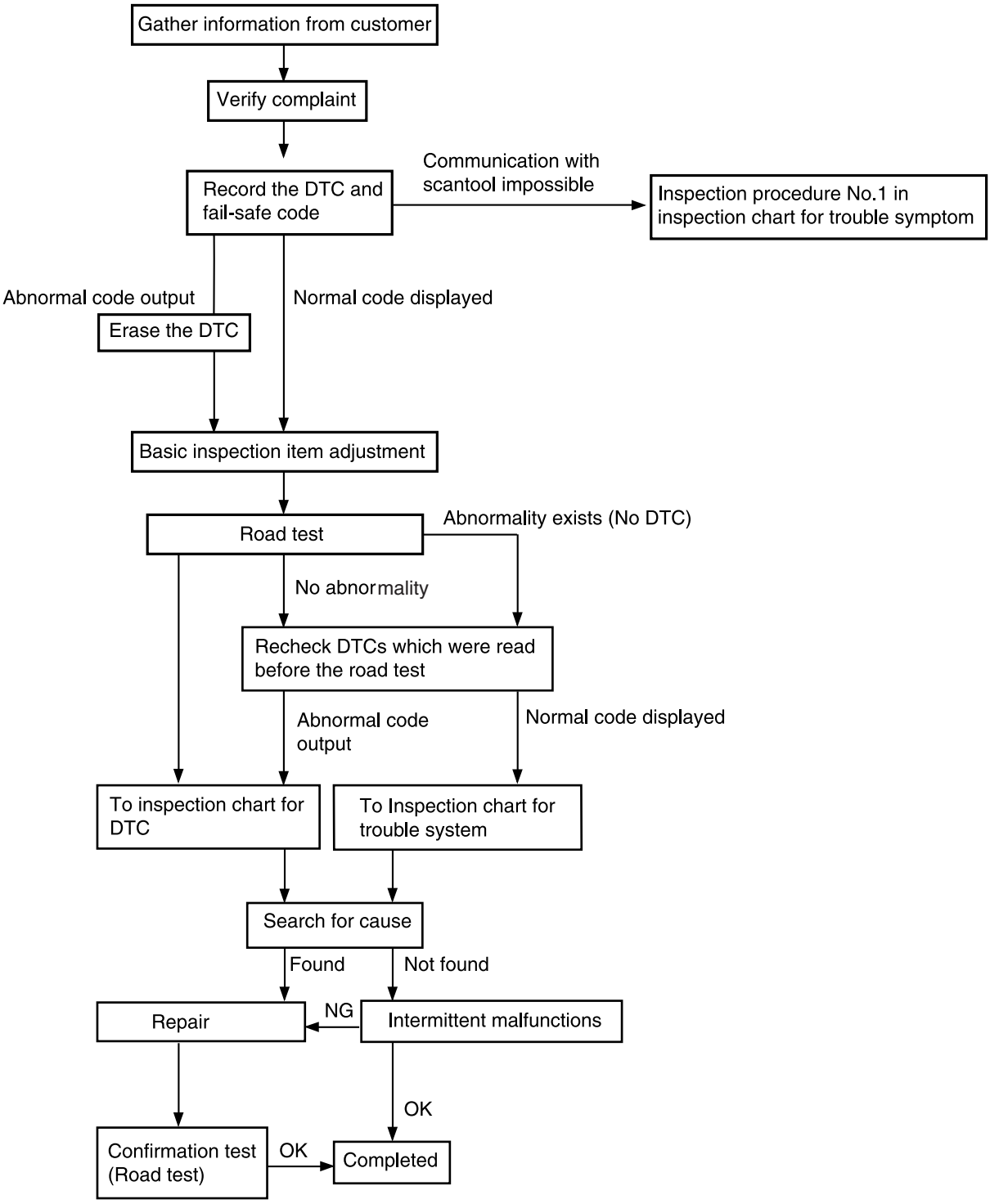

EKRF007A

INSPECTION CHART FOR TROUBLE SYMPTOMS

Trouble symptom		Probable cause
Communication with HI-SCAN is not possible If communication with the HI-SCAN is not possible, the cause is probably a defective diagnosis line or the TCM(PCM) is not functioning.		- Malfunction diagnosis line - Malfunction of connector - Malfunction of the TCM(PCM)
Driving impossible	**Starting impossible** Starting is not possible when the selector lever is in P or N range. In such cases, the cause is probably a defective engine system, torque converter or oil pump.	- Malfunction of the engine system - Malfunction of the torque converter - Malfunction of the oil pump
	Does not move forward If the vehicle does not move forward when the selector lever is shifted from N to D, 3, 2 or L range while the engine is idling, the cause is probably abnormal line pressure or a malfunction of the underdrive clutch or valve body.	- Abnormal line pressure - Malfunction of the underdrive solenoid valve - Malfunction of the underdrive clutch - Malfunction of the valve body
	Does not reverse If the vehicle does not reverse when the selector lever is shifted from N to R range while the engine is idling, the cause is probably abnormal pressure in the reverse clutch or low and reverse brake or a malfunction of the reverse clutch, low and reverse brake or valve body.	- Abnormal reverse clutch pressure - Abnormal low and reverse brake pressure - Malfunction of the low and reverse brake solenoid valve - Malfunction of the reverse clutch - Malfunction of the low and reverse brake - Malfunction of the valve body
	Does not move (forward or reverse) If the vehicle does not move forward or reverse when the selector lever is shifted to any position while the engine is idling, the cause is probably abnormal line pressure or a malfunction of the power train, oil pump or valve body.	- Abnormal line pressure - Malfunction of power train - Malfunction of the oil pump - Malfunction of the valve body
Malfunction when starting	**Engine stalling when shifting** If the engine stalls when the selector lever is shifted from N to D or R range while the engine is idling, the cause is probably a malfunction of the engine system, damper clutch solenoid valve, valve body or torque converter (damper clutch malfunction).	- Malfunction of the engine system - Malfunction of the damper clutch control solenoid valve - Malfunction of the valve body - Malfunction of the torque converter (Malfunction of the damper clutch)
	Shocks when changing from N to D and large time lag If abnormal shocks or a time lag of 2 seconds or more occur when the selector lever is shifted from N to D range while the engine is idling, the cause is probably abnormal underdrive clutch pressure or a malfunction of the underdrive clutch, valve body or idle position switch.	- Abnormal underdrive clutch pressure - Abnormal low and reverse brake pressure - Malfunction of the underdrive solenoid valve - Malfunction of the valve body - Malfunction of the idle position switch

Trouble symptom		Probable cause
Malfunction when starting	**Shocks when changing from N to R and large time lag** If abnormal shocks or a time lag of 2 seconds or more occur when the selector lever is shifted from N to R range while the engine is idling, the cause is probably abnormal reverse clutch pressure or low and reverse brake pressure, or a malfunction of the reverse clutch, low and reverse brake, valve body or idle position switch.	- Abnormal reverse clutch pressure - Abnormal low and reverse brake pressure - Malfunction of the low and reverse solenoid valve - Malfunction of the reverse clutch - Malfunction of the low and reverse brake - Malfunction of the valve body - Malfunction of the idle position switch
	Shocks when changing from N to D, N to R and large time lag If abnormal shocks or a time lag of 2 seconds or more occur when the selector lever is shifted from N to D range and from N to R range while the engine is idling, the cause is probably abnormal line pressure or a malfunction of the oil pump or valve body.	- Abnormal line pressure - Malfunction of the oil pump - Malfunction of the valve body
Malfunction when shifting	**Shocks and running up** If shocks occur when driving due to up shifting or down shifting and the transmission speed becomes higher than the engine speed, the cause is probably abnormal line pressure or a malfunction of a solenoid valve, oil pump, valve body or of a brake or clutch.	- Abnormal line pressure - Malfunction of each solenoid valve - Malfunction of the oil pump - Malfunction of the valve body - Malfunction of each brake or each clutch
Displaced shifting points	**All points** If all shift points are displaced while driving, the cause is probably a malfunction of the output shaft speed sensor, TPS or of a solenoid valve.	- Malfunction of the output shaft speed sensor - Malfunction of the throttle position sensor - Malfunction of each solenoid valve - Abnormal line pressure - Malfunction of the valve body - Malfunction of the TCM(PCM)
	Some points If some of the shift points are displaced while driving, the cause is probably a malfunction of the valve body, or it is related to control and is not an abnormality.	- Malfunction of the valve body
Does not shift	**No diagnosis codes** If shifting does not occur while driving and no diagnosis codes are output, the cause is probably a malfunction of the transaxle range switch, or TCM(PCM)	- Malfunction of the transaxle range - Malfunction of the TCM(PCM)
Malfunction while driving	**Poor acceleration** If acceleration is poor even if down shifting occurs while driving, the cause is probably a malfunction of the engine system or of a brake or clutch.	- Malfunction of the engine system - Malfunction of the brake or clutch

Trouble symptom		Probable cause
Malfunction while driving	**Vibration** If vibration occurs when driving at constant speed or when accelerating and deceleration in top range, the cause is probably abnormal damper clutch pressure or a malfunction of the engine system, damper clutch control solenoid valve, torque converter or valve body.	- Abnormal damper clutch pressure - Malfunction of the engine system - Malfunction of the damper clutch control solenoid valve - Malfunction of the torque converter - Malfunction of the valve body
Transaxle range switch system The cause is probably a malfunction of the inhibitor switch circuit, ignition switch circuit or a defective TCM(PCM).		- Malfunction of the transaxle range switch - Malfunction of the ignition switch - Malfunction of connector - Malfunction of the TCM(PCM)
Idle position switch system The cause is probably a defective idle position switch circuit, or a defective TCM(PCM).		- Malfunction of the triple pressure switch - Malfunction of connector - Malfunction of the TCM(PCM)
Triple pressure switch system The cause is probably a defective dual pressure switch circuit or a defective TCM(PCM).		- Malfunction of the triple pressure switch - Malfunction of connector - Malfunction of A/C system - Malfunction of the TCM(PCM)
Vehicle speed sensor system The cause is probably a defective vehicle speed sensor circuit or a defective TCM(PCM).		- Malfunction of the vehicle speed sensor - Malfunction of connector - Malfunction of the TCM(PCM)

DTC TROUBLESHOOTING INDEX

No.	Code	Item	MIL	Remark
1	P0707	TRANSAXLE RANGE SWITCH CIRCUIT LOW INPUT	ON	AT-48
2	P0708	TRANSAXLE RANGE SWITCH CIRCUIT HIGH INPUT	ON	AT-55
3	P0711	TRANSAXLE FLUID TEMPERATURE SENSOR RATIONALITY	ON	AT-58
4	P0712	TRANSAXLE FLUID TEMPERATURE SENSOR CIRCUIT LOW INPUT	ON	AT-64
5	P0713	TRANSAXLE FLUID TEMPERATURE SENSOR CIRCUIT HIGH INPUT	ON	AT-66
6	P0717	A/T INPUT SPEED SENSOR CIRCUIT - OPEN or SHORT(GND)	ON	AT-69
7	P0722	AT OUTPUT SPEED SENSOR CIRCUIT - OPEN or SHORT(GND)	ON	AT-76
8	P0731	GEAR 1 INCORRECT RATIO	ON	AT-83
9	P0732	GEAR 2 INCORRECT RATIO	ON	AT-89
10	P0733	GEAR 3 INCORRECT RATIO	ON	AT-94
11	P0734	GEAR 4 INCORRECT RATIO	ON	AT-99
12	P0741	TORQUE CONVERTER CLUTCH STUCK OFF	ON	AT-103
13	P0742	TORQUE CONVERTER CLUTCH STUCK ON	ON	AT-106
14	P0743	TORQUE CONVERTER CLUTCH CONTROL SOLENOID VALVE - OPEN or SHORT(GND)	ON	AT-109
15	P0748	VFS SOLENOID	OFF	AT-117
16	P0750	LOW and REVERSE SOLENOID VALVE CIRCUIT - OPEN or SHORT(GND)	ON	AT-124
17	P0755	UNDER DRIVE SOLENOID VALVE CIRCUIT - OPEN or SHORT(GND)	ON	AT-131
18	P0760	SECOND SOLENOID VALVE CIRCUIT - OPEN or SHORT(GND)	ON	AT-138
19	P0765	OVERDRIVE SOLENOID VALVE CIRCUIT - OPEN or SHORT(GND)	ON	AT-145
20	P0885	A/T CONTROL RELAY - OPEN or SHORT(GND)	ON	AT-152
21	P0890	TCM power Relay sense circuit low	ON	AT-157
22	P0891	TCM power Relay sense circuit High	ON	AT-158

FAILSAFE

Activation and deactivation of error failsafe is coordinated Error failsafe Management.
Once Error failsafe is activated, it will be kept until ignition key OFF.
In every new TCM start, TCM start with No Error failsafe and No Error present.

0. Mechanical Limp Home Mode
   - Switch off A/T relay

1. Electrical Limp Home Mode
   - Keep 2nd / 3rd gear

2. Prohibit Intelligent Shift
   - Fuzzy SAT(Siements Adaptive Transmission) shift pattern (Medium Driver, Sporty Driver) will not be used

3. Prohibit Adaptive Control
   - No learning is done

6. Prohibit Torque Reduction Request
   - No torque reduction is sent to ECU

7. Prohibit Lockup Control
   - Stay in non-lockup control state

8. Substitute Input Value Oil Temperature
   - Set oil temperature(tf) to 80° C (192°F)

9. Substitute Value Speed Ratio
   - Set speed ratio to 0.7

10. Substitute CAN Input Value
    - Set engine torque to 42%
    - Set throttle position to 50%
    - Set accelerator pedal signal to 50%
    - Set engine speed (Ne) to 3000 rpm
    - Set vehicle speed to 0 km/h
    - Set status of air condition relay to OFF

11. Prohibit VFS control
    - Stop the Line Pressure Control till IG Off

FAILSAFE ACCORDING TO THE DTC

NOTE

- *Refer the detail description in the previous page for the indicated number on the ' Failsafe' column.*

Items	Type of error	Failsafe	OBD-II relevant DTC	DTC
Oil temperature sensor	Short to ground	2, 3, 7, 8, 11	P0712	P0712
	Open or short to B+		P0713	P0713
	Stuck signal		P0711	P0711
	Sensor fail		P0711	P0711
PG-A	Short to ground	1,11	P0717	P0717
	Open or short to B+			
PG-B	Short to ground		P0722	P0722
	Open or short to B+			
	Sensor fail		P0721	P0721
Brake switch	Open	2	–	P0713
	Short to B+			
LR Solenoid valve	Short to B+	0,11	P0750	P0750
	Open or short to ground			
2nd Solenoid valve	Short to B+		P0760	P0760
	Open or short to ground			
UD Solenoid valve	Short to B+		P0755	P0755
	Open or short to ground			
OD Solenoid valve	Short to B+		P0765	P0765
	Open or short to ground			
	Open or short to B+		P0765	P0765
DCC Solenoid valve	Short to B+		P0743	P0743
	Open or short to ground			
1st speed asynchronous	Synchronous error	0,11	P0731	P0731
2nd speed asynchronous	Synchronous error		P0732	P0732
3rd speed asynchronous	Synchronous error		P0733	P0733
4th speed asynchronous	Synchronous error		P0734	P0734
Reverse speed asynchronous	Synchronous error		–	–
CAN	No ID from ECM	2,3,6,7,9,10,11	–	P1604
	CAN BUS off		–	P1603
Damper clutch	Abnormal system	7	P0741	P0741
A/T relay	Short to ground or open	0,11	P0885	P0885

Items	Type of error	Failsafe	OBD-II relevant DTC	DTC
Inhibitor switch	Short to ground or open	—	P0707	P0707
	Short to B+ or short between switches		P0708	P0708
VFS	Short to B+	11	—	P0748
	Short to ground	0,11		
	Open	11		
CKP sensor	Sensor error	Ne=3,000rpm 7,9	—	—
TPS sensor	Sensor error	TPS=50%	—	—

SERVICE DATA LIST(WITH SCAN TOOL)

No.	ITEM NAME	UNIT	DATA	Data Description	Failure
1	ENGINE RPM	rpm	700 rpm	Current Engine rpm	0 rpm
2	VEHICLE SPEED	km/h	0km/h	Current Vehicle speed	0km/h
3	THROTTLE P.SENSOR	%	12.5%	Current TPS open angle	0%
4	INPUT SPEED(PG-A)	rpm	700 rpm	Input speed rpm. Always output rpm when turning start ON	0 rpm
5	OUTPUT SPEED(PG-B)	rpm	0 rpm	Output speed rpm. Always output rpm when driving	0 rpm
6	DCC(TCC) SOLENOID DUTY	%	0%	Control 0% → 100% when operating Damper Clutch	
7	DAMPER CLUTCH SLIP	rpm	260 rpm	Current Damper clutch slip ratio	0 rpm
8	LR SOLENOID DUTY	%	100%	Control 100% → 0% when operating brake	0%
9	UD SOLENOID DUTY	%	100%	Control 100% → 0% when operating clutch	0%
10	2ND SOLENOID DUTY	%	100%	Control 100% → 0% when operating clutch	0%
11	OD SOLENOID DUTY	%	100%	Control 100% → 0% when operating clutch	0%
12	VFS SOLENOID DUTY	%	0~400%	—	
13	OIL TEMPERATURE	°C	40°C	Current Oil temperature	80°C
14	SHIFT POSITION	N,P,REV/1st G/…/5th G	D	Current shift position	P, N
15	SELECT LEVEL	P,N/R/D/SPORTS	D	Current shift lever position	P, N
16	A/CON SWITCH	OFF/ON/-/NOT SUPP	OFF	-	
17	IDLE STATUS	OFF/ON/-/NOT SUPP	ON	When idling, ON	
18	BRAKE SWITCH	OFF/ON/-/NOT SUPP	ON	When braking, ON	
19	AUTO CRUISE SWITCH	OFF/ON/-/NOT SUPP			
20	AUTO CRUISE RELEASE	—	—		

No.	ITEM NAME	UNIT	DATA	Data Description	Failure
21	SPORT MODE SELECT SW	OFF/ON/-/NOT SUPP	ON	When selecting sport mode, ON	
22	SPORT MODE UP SW	OFF/ON/-/NOT SUPP	ON	When Selecting Sport mode up, ON	
23	SPORT MODE DOWN SW	OFF/ON/-/NOT SUPP	ON	When selecting sport mode down, ON	
24	A/T CONTROL RELAY VOLT	V	12.9V		0V
25	ENGINE TORQUE	%	20%		
26	HIVEC MODE	A/B/C/D/E/F/G/H/I/J/K	F	A/B/C/D is control mode, F is release mode	F

HIVEC -SAT(SIEMENS ADAPTIVE TRANSMISSION CONTROL) MODE (SHIFT PATTEN)

Shift patten	Description(Help)	SCAN DISPLAY
ECONOMY	Economy Driver shift patten for flat road	A
MEDIUM	Shift patten for medium road	B
SPORTS	Shift patten for sport road	C
LOAD 1	Shift patten for low land, slow grade and slope	D
LOAD 2	Shift patten for low land, steep grade and slope	E
LOAD 3	Shift patten for downhill road	F
LOAD 1 HI ALT	Shift patten for high land, steep grade and slope	G
LOAD 2 HI ALT	Shift patten for low land, steep grade and slope	H
HI TEMP	Shift patten for high temperture ATF	I
WARM UP	Shift patten for exhaust gas decrease	J
HOLD	Shift patten for when hold, switch on	K

ACTUATOR INSPECTION

NO	ITEM NAME	Actuator Driving	Condition
1	LR SOLENOID(SCSV A)	Solenoid valve driver for 5sec.	1. IG Key ON 2. Inhibitor SW normal 3. P range 4. Vehicle speed 0km/h 5. Engine stop 6. No failure 7. TPS < 1V
2	UD SOLENOID(SCSV B)		
3	2ND SOLENOID(SCSV C)		
4	OD SOLENOID(SCSV D)		
5	TORQUE CONVERTER SOLENOID VALVE		
6	A/T CONTROL RELAY	OFF for 3 sec.	-
7	INTELLIGENT SHIFT PROHIBIT	Prohibit until IG off	-
8	CLEAR LEARNING VALUE	-	-

ROAD TEST

No.	Condition	Operation	Judgment value	Check item
1	Ignition switch : OFF	Ignition switch (1) ON	Battery voltage (mV)	Control relay
2	• Ignition switch : ON • Engine : Stopped • Selector lever position : P	Selector lever position (1) P, (2) R, (3) N, (4) D	(1) P, (2) R, (3) N, (4) D	Transaxle range switch
		Accelerator pedal (1) Released (2) Half depressed (3) Depressed	(1) 400~1,000 mV (2)Gradually rises from (1) (3) 4,500~5,000 mV	Throttle position sensor
		Brake pedal (1) Depressed (2) Released	(1) ON (2) OFF	Brake switch
3	• Ignition switch : ST • Engine : Stopped	Starting test with lever P or N range	Starting should be possible	Starting possible or impossible
4	Warming up	Drive for 15 minutes or more so that the automatic fluid temperature becomes 70~90°C	Gradually rises to 70~90°C	Oil temperature sensor
5	• Engine : Idling • Selector lever position : N	A/C switch (1) ON (2) OFF	(1) ON (2) OFF	Triple pressure switch
		Accelerator pedal (1) Released (2) Half depressed	(1) ON (2) OFF	Idle position switch
			(1) 600~900 rpm (2) Gradually rises from (1)	
			(1) Data changes	Communication with engine-ECU
		Selector lever position (1) N→D (2) N→R	Should be no abnormal shifting shocks Time lag should be within 2 seconds	Malfunction when starting

No.	Condition	Operation	Judgment value	Check item
6	Selector lever position : N (Carry out on a flat and straight road)	Selector lever position and vehicle speed 1. Idling in 1st gear (Vehicle stopped) 2. Driving at constant speed of 20 km/h in 1st gear 3. Driving at constant speed of 30 km/h in 2nd gear 4. Driving at 50 km/h in 3rd gear with accelerator fully closed 5. Driving at constant speed of 50 km/h in 4th gear	(2) 1st, (4) 3rd, (3) 2nd, (5) 4th	Shift condition
			(2) 0%, (4) 100%, (3) 100%, (5) 100%	Low and reverse solenoid valve
			(2) 0%, (4) 0%, (3) 0%	Underdrive solenoid valve
			(1) 100%, (2) 0%, (3) 100%	Second solenoid valve
			(2) 100%, (3) 100%, (4) 0%	Overdrive solenoid valve
			(1) 0km/h (4) 50km/h	Vehicle speed sensor
			(4) 1,800 ~ 2,100rpm	Input shaft speed sensor
			(4) 1,800 ~ 2,100rpm	Output shaft speed sensor
7	Selector lever position : D (Carry out on a flat and straight road)	• Accelerate to 4th gear at a throttle position sensor output of 1.5V (accelerator opening angle of 30 %). • Gently decelerate to a standstill. • Accelerate to 4th gear at a throttle position sensor output of 2.5 V (accelerator opening angle of 50%). • While driving at 60 km/h in 4th gear, shift down to 3rd gear. • While driving at 40 km/h in 3rd gear, shift down to 2nd gear. • While driving at 20 km/h in 2nd gear, shift down to 1st gear.	For (1), (2) and (3), the reading should be the same as the specified output shaft torque, and no abnormal shocks should occur. For (4), (5) and (6), downshifting should occur immediately after the shifting operation is made.	Malfunction when shifting
				Displaced shift points
				Does not shift
				Does not shift from 1 to 2 or 2 to 1
				Does not shift from 2 to 3 or 3 to 2
				Does not shift from 3 to 4 or 4 to 3
8	Selector lever position : N (Carry out on a flat and straight road)	Move selector lever to R range drive at constant speed of 10km/h	The ratio between input and output shaft speed sensor data should be the same as the gear ratio when reversing.	Does not shift

TORQUE CONVERTER STALL TEST

This test measures the maximum engine speed when the selector lever is in the D or R position. The torque converter stalls to test the operation of the torque converter, starter motor, one-way clutch operation, the holding performance of the clutches, and brakes in the transaxle.

CAUTION

Do not let anybody stand in front of or behind the vehicle while this test is being carried out

1. Check the automatic transmission fluid level and temperature, and the engine coolant temperature.
   - Fluid level : At the HOT mark on the oil level gauge
   - Fluid temperature : 80~100°C (176~212°F)
   - Engine coolant temperature : 80~100°C(176~212°F)
2. Prevent all the wheels from moving during the test.
3. Pull the parking brake lever up, with the brake pedal fully depressed.
4. Start the engine.
5. Move the selector lever to the "D" position, fully depress the accelerator pedal and take a reading of the maximum engine speed at this time.

Stall speed : 2,100~2,900rpm

CAUTION

- ***The throttle should not be left fully open for any more than five seconds.***
- ***If carrying out the stall test two or more times, move the selector lever to the "N" position and run the engine at 1,000 r/min to let the automatic transaxle fluid cool down before carrying out subsequent tests.***

6. Move the selector lever to the "R" position and carry out the same test again.

TORQUE CONVERTER STALL TEST CONCLUSION

1. Stall speed is too high in both "D" and "R" ranges
   - Low line pressure
   - Low & reverse brake(B) slippage
2. Stall speed is to high in "D" range only
   - Underdrive clutch(C) slippage
3. Stall speed is too high in "R" range only
   - Reverse clutch(A) slippage
4. Stall speed too low in both "D" and "R" ranges
   - Malfunction of torque converter(D)
   - Insufficient engine output

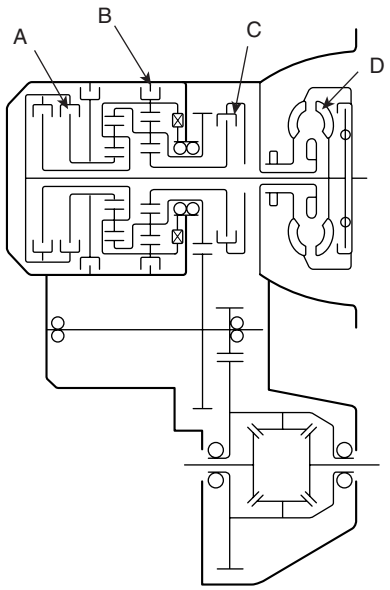

EKRF007F

HYDRAULIC PRESSURE TEST

1. Warm up the engine until the automatic transaxle fluid temperature is 80-100°C.
2. Lift up the vehicle so that the wheels are free to turn.
3. Connect the special tool (oil pressure gauge) to each pressure discharge port.
4. Measure the hydraulic pressure at each port under the conditions given in the standard hydraulic pressure table, and check that the measured values are within the standard value ranges.
5. If a value is outside the standard range, correct the problem while referring to the hydraulic pressure test diagnosis table.

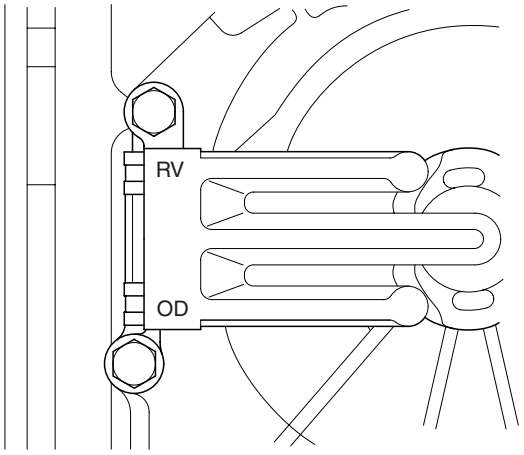

EKRF007I

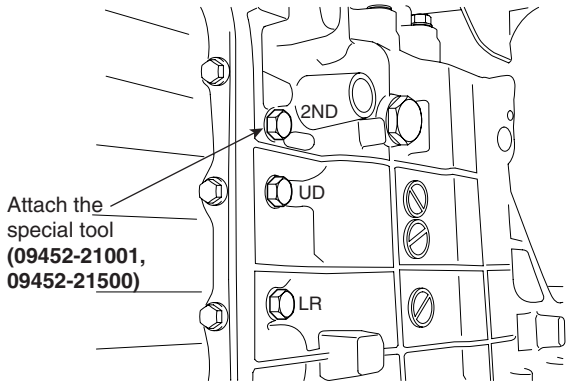

EKRF007G

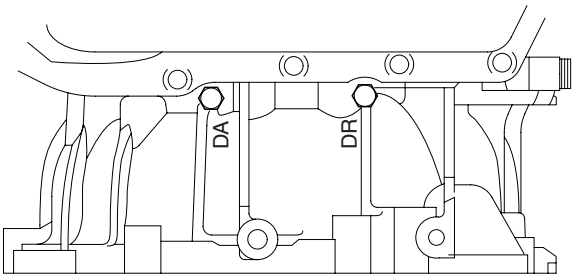

EKRF007H

STANDARD HYDRAULIC PRESSURE TEST

Measurement condition			Standard hydraulic pressure kPa (psi)						
Selector lever position	Shift position	Engine speed (rpm)	Under drive clutch pressure	Reverse clutch pressure	Overdrive clutch pressure	Low & reverse brake pressure	Second brake pressure	Damper clutch Apply pressure (DA)	Damper clutch Release pressure (DR)
P	-	2,500	-	-	-	260-340 (38-50)	-	-	-
R	Reverse	2,500	-	1,270-1,770 (185-256)	-	1,270-1,770 (185-256)	-	-	-
N	-	2,500	-	-	-	260-340 (38-50)	-	-	-
D	1st gear	2,500	430-510 (62-74)	-	-	1,010-1,050 (146-152)	-	-	-
	2nd gear	2,500	430-510 (62-74)	-	-	-	430-510 (62-74)	-	-
	3rd gear	2,500	430-510 (62-74)	-	430-510 (62-74)	-	-	More than 730 (100)	0-10 (0-1)
	4th gear	2,500	-	-	430-510 (62-74)	-	780-880 (110-130)	More than 730 (100)	0-10 (0-1)

※ The values are subject to change according to vehicle model or condition

※ Depress the acceleration pedal "GENTLY" under no load when measuring the hydraulic pressure.

DTC P0707 TRANSAXLE RANGE SWITCH - LOW INPUT

COMPONENT LOCATION E9A1E3F5

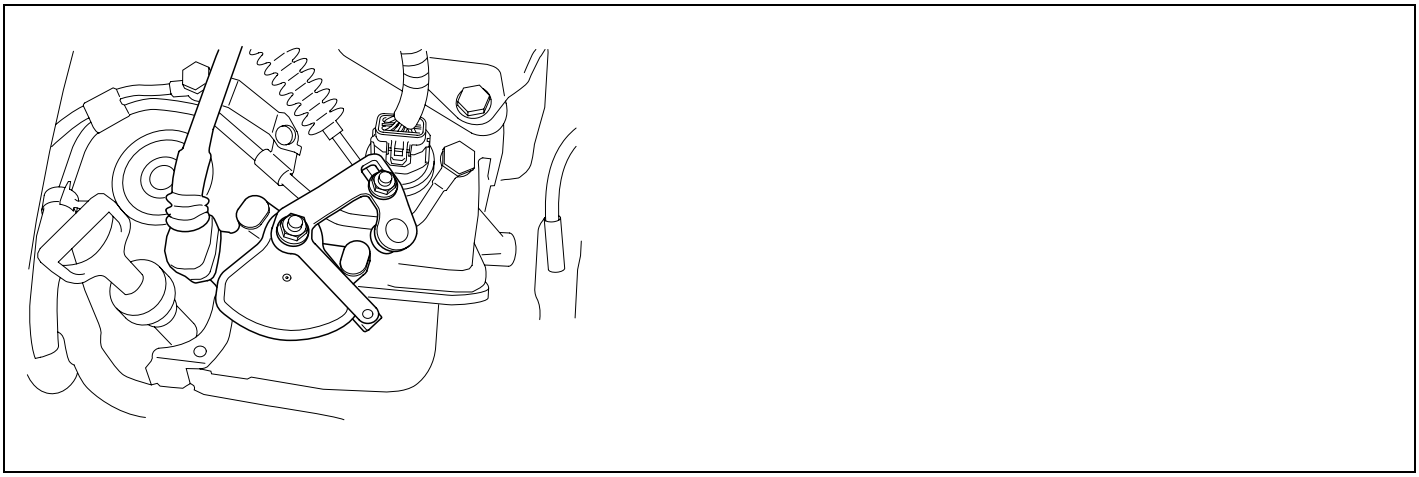

EKKE108A

GENERAL DESCRIPTION E2CDEB72

The Transaxle Range Switch sends the shift lever position information to the TCM(PCM) using a 12V (battery voltage) signal. When the shift lever is in the D (Drive) position the output signal of Transaxle Range Switch is 12V and in all other positions the voltage is 0V. The TCM(PCM) judges the shift lever position by reading all signals, for the Transaxle Range Switch, simultaneously.

DTC DESCRIPTION EA59FEC0

The TCM(PCM) sets this code when the Transaxle Range Switch has no output signal for more than 30 seconds.

DTC DETECTING CONDITION EEDFCC13

Item	Detecting Condition	Possible cause
DTC Strategy	• Check for no signal	• Open or short in circuit • Faulty Shift cable adjustment • Faulty Inhibitor switch and Manual control lever position adjustment • Faulty TRANSAXLE RANGE SWITCH • Faulty TCM(PCM)
Enable Conditions	• Engine state = "RUN" • 11V ≤ Battery Voltage ≤ 16V • TPS ≥ 3%	
Threshold value	• No signal detected	
Diagnostic Time	• More than 30seconds	
Fail Safe	• Recognition as previous signal. - When P-D or R-D or D-R SHIFT is detected, it is regarded as N-D or N-R though "N" signal is not detected - When sports mode S/W is ON without P,R,N, D-RANGE signals, it is regarded sports mode. (DTC is not set)	

SIGNAL WAVEFORM EC2E1E1D

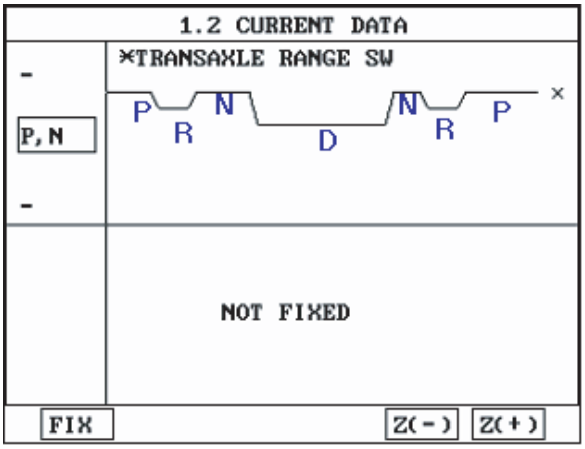

EKBF100A

MONITOR SCANTOOL DATA E10EDAD4

1. Connect scantool to data link connector(DLC).
2. Ignition "ON" & Engine "OFF".
3. Monitor the "TRANSAXLE RANGE SWITCH" parameter on the scantool.
4. Shift selector lever from "P" range to "D" range.

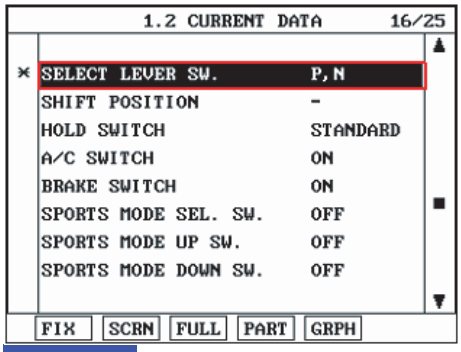

FIG.1)

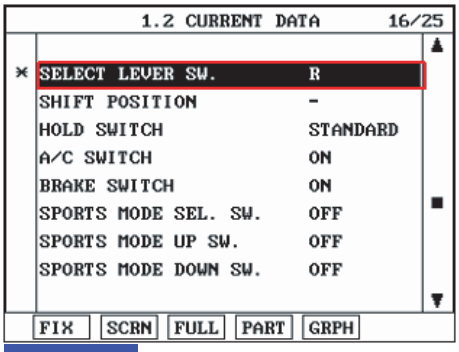

FIG.2)

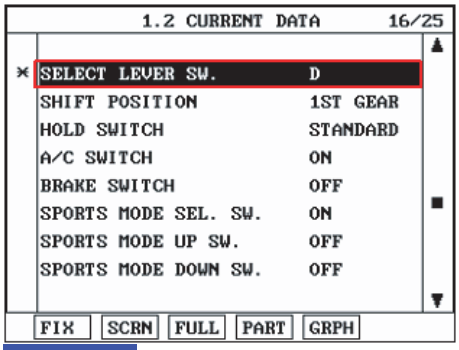

FIG.3)

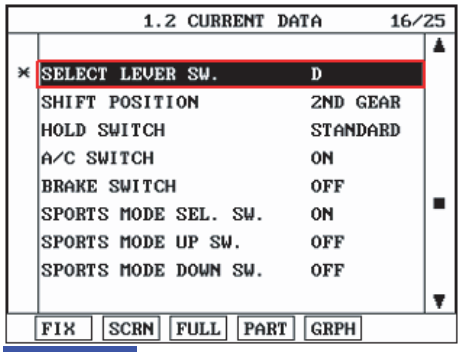

FIG.4)

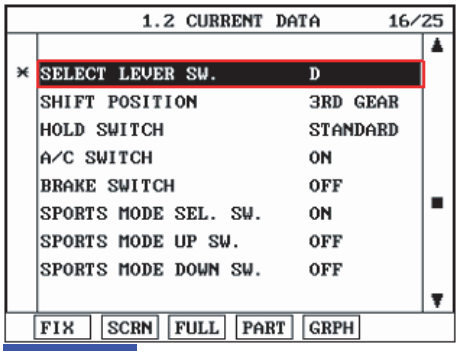

FIG.5)

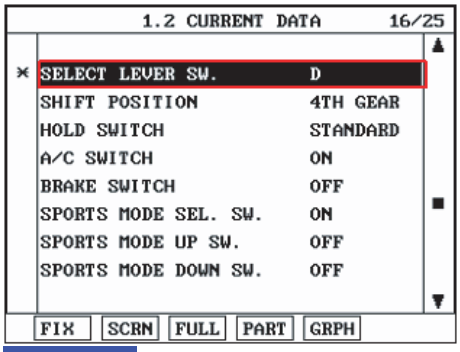

FIG.6)

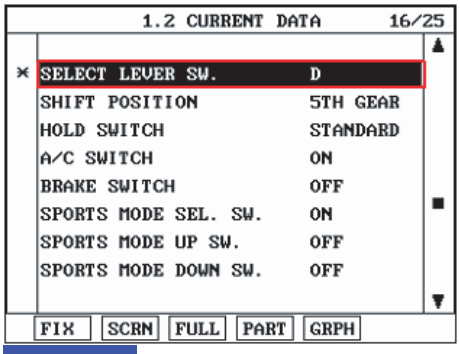

FIG.7)

FIG. 1) "P,N" Range
FIG. 2) "R" Range
FIG. 3) "D" Range 1st gear
FIG. 4) "D" Range 2nd gear
FIG. 5) "D" Range 3re gear
FIG. 6) "D" Range 4th gear
FIG. 7) "D" Range 5th gear

LLLG100A

5. Does "TRANSAXLE RANGE SWITCH" follow the reference data?

YES

▶ Fault is intermittent caused by poor contact in the sensor's and/or TCM(PCM)'s connector or was repaired and TCM(PCM) memory was not cleared. Thoroughly check connectors for looseness, poor connection, bending, corrosion, contamination, deterioration or damage. Repair or replace as necessary and go to "Verification of Vehicle Repair" procedure.

NO

▶ Go to "Terminal & connector inspection" procedure.

※ Most of fault that happen about inhibitor switch, result from faulty shift cable adjustment or incorrect location of manual control lever and inhibitor switch. So, when DTC which related Inhibitor switch or engine start defectiveness at "P" range happen, After check the shift cable adjustment or location of manual control lever and inhibitor switch, repair or replace as necessary.

TERMINAL & CONNECTOR INSPECTION EC9C5732

1. Many malfunctions in the electrical system are caused by poor harness and terminals. Faults can also be caused by interference from other electrical systems, and mechanical or chemical damage.
2. Thoroughly check connectors for looseness, poor connection, bending, corrosion, contamination, deterioration, or damage.
3. Has a problem been found?

YES

▶ Repair as necessary and go to "Verification of vehicle repair" procedure.

NO

▶ Go to "Power circuit inspection" procedure.

POWER SUPPLY CIRCUIT INSPECTION EE59EA80

1. CHECK POWER TO RANGE SWITCH
   1) Disconnect "TRANSAXLE RANGE SWITCH" connector.
   2) Ignition "ON" & Engine "OFF".
   3) Measure voltage between terminal "8" of the sensor harness connector and chassis ground.

Specification : approx. B+

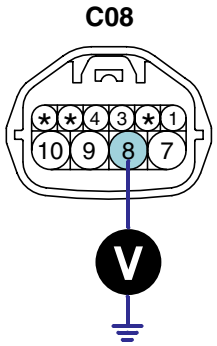

1. D Range
3. P Range
4. N Range
7. R Range
8. Power supply IG1
9. Starting circuit
10. Starting circuit

SCMAT6701L

4) Is voltage within specifications?

YES

▶ Go to "Signal circuit inspection" procedure.

NO

▶ Check that Fuse 10A is installed or not blown.
▶ Check for open in harness. Repair as necessary and go to "Verification of vehicle repair" procedure.

SIGNAL CIRCUIT INSPECTION E2609BDA

1. Ignition "OFF".
2. Disconnect "TRANSAXLE RANGE SWITCH" and "TCM(PCM)" connector.
3. Measure resistance between each terminal of the sensor harness connector and TCM(PCM) harness connector as below.

Specification :

Pin No of "TRANSAXLE RANGE SWITCH"	C08 No.1	C08 No.3	C08 No.4	C08 No.7
Pin No of "PCM" harness	C30-A No.6	C30-A No.3	C30-A No.5	C30-A No.4
Specification	0Ω	0Ω	0Ω	0Ω

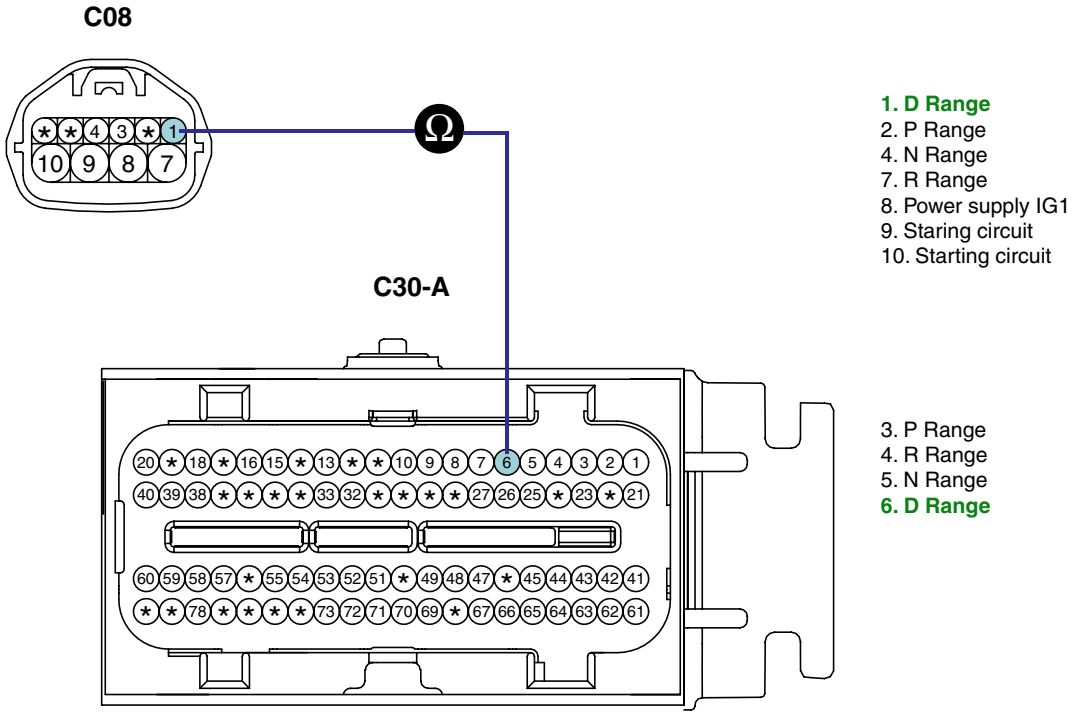

SCMAT6702L

4. Is resistance within specifications?

YES

▶ Go to "Component inspection" procedure.

NO

▶ Check for Open in harness. Repair as necessary and Go to "Verification of Vehicle Repair" procedure.

COMPONENT INSPECTION EFFA7D74

1. Ignition "OFF".
2. Remove "TRANSAXLE RANGE SWITCH".
3. Measure the resistance between each terminal of the sensor.

Specification : Approx. 0 Ω

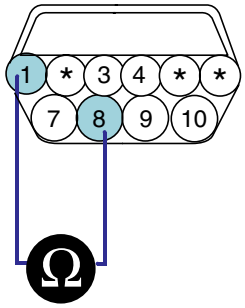

C08
Component side

1. D Range
3. P Range
4. N Range
7. R Range
8. Power supply IG1
9. Starting circuit
10. Starting circuit

Terminal / Range	P	R	N	D	3	2	L
1				●			
2						●	
3	●						
4			●				
5					●		
6							●
7		●					
8	●	●	●	●	●	●	●
9	●		●				
10	●		●				

[RANGE SWITCH continuity check table (Case of SPORTS MODE vehicle has no 3,2,L range)]

SCMAT6703L

4. Is resistance within specifications?

YES

▶ Substitute with a known-good PCM/TCM and check for proper operation. If the problem is corrected, replace PCM/TCM as necessary and then go to "Verification of Vehicle Repair" procedure.

NO

▶ Replace "TRANSAXLE RANGE SWITCH" as necessary and Go to "Verification of Vehicle Repair" procedure.

VERIFICATION OF VEHICLE REPAIR EB7F7EB6

After a repair, it is essential to verify that the fault has been corrected.

1. Connect scantool and select "Diagnostic Trouble Codes(DTCs)" mode.
2. Using a scantool, Clear DTC.
3. Operate the vehicle within DTC Enable conditions in General information.
4. Are any DTCs present?

YES

▶ Go to the applicable troubleshooting procedure.

NO

▶ System performing to specification at this time.

DTC P0708 TRANSAXLE RANGE SWITCH - HIGH INPUT

COMPONENT LOCATION E8ECC177

Refer to DTC P0707.

GENERAL DESCRIPTION E7E46C8A

Refer to DTC P0707.

DTC DESCRIPTION ED5D0931

The TCM sets this code when the Transaxle Range Switch outputs multiple signals for more than 30 seconds.

DTC DETECTING CONDITION EEFC7EC9

Item	Detecting Condition	Possible cause
DTC Strategy	• Check for multiful signals	• Open or short in TRANSAXLE RANGE SWITCH • Faulty Shift cable adjustment • Faulty Inhibitor switch and Manual control lever position adjustment • Faulty TRANSAXLE RANGE SWITCH • Faulty PCM
Enable Conditions	• Engine state = "RUN" • 11V ≤ Battery Voltage ≤ 16V • TPS ≥ 3%	
Threshold value	• Multiple signal	
Diagnostic Time	• More than 30sec	
Fail Safe	• Recognition as previous signal - When signal is input "D" and "N" at the same time, TCM regards it as "N" RANGE - After PCM/TCM Reset, If the if the PCM/TCM detects multiple signal or no signal, then it holds the 3rd gear position	

SIGNAL WAVEFORM E9A9AA09

Refer to DTC P0707.

MONITOR SCANTOOL DATA ECBB7BFE

Refer to DTC P0707.

TERMINAL & CONNECTOR INSPECTION EA22C7FA

Refer to DTC P0707.

POWER SUPPLY CIRCUIT INSPECTION EEAF065B

1. Disconnect "TRANSAXLE RANGE SWITCH" connector.
2. Ignition "ON" & Engine "OFF".
3. Measure voltage between each terminal of the sensor harness connector and chassis ground.

Specification :

TERMINAL(C08)	No.1	No.3	No.4	No.7	No.8	No.9	No.10
SPECIFICATION	0V	0V	0V	0V	0V	0V	0V

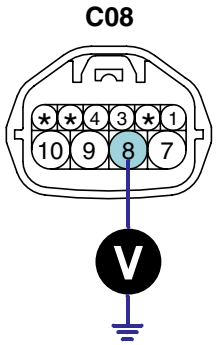

1. D Range
3. P Range
4. N Range
7. R Range
8. Power supply IG1
9. Starting circuit
10. Starting circuit

SCMAT6701L

4. Is voltage within specifications?

YES

▶ Go to "Signal circuit inspection" procedure.

NO

▶ Check for Short in harness. Repair as necessary and Go to "Verification of Vehicle Repair" procedure.

SIGNAL CIRCUIT INSPECTION EBF2BDAA

1. Ignition "OFF".
2. Disconnect "TRANSAXLE RANGE SWITCH" and "TCM(PCM)" connector.
3. Measure resistance between each terminals of the sensor harness to check for Short.

Specification : Infinite

C08

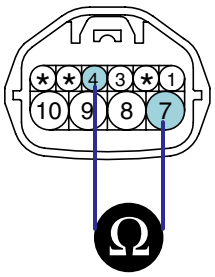

1. D Range
3. P Range
4. N Range
7. R Range
8. Power supply IG1
9. Starting circuit
10. Starting circuit

SCMAT6704L

4. Is resistance within specifications?

YES

▶ Go to "Component inspection" procedure.

NO

▶ Check for Short in harness. Repair as necessary and Go to "Verification of Vehicle Repair" procedure.

COMPONENT INSPECTION EBE9E25B

Refer to DTC P0707.

VERIFICATION OF VEHICLE REPAIR E9F40C05

Refer to DTC P0707.

DTC P0711 TRANSAXLE FLUID TEMPERATURE SENSOR RATIONALITY

COMPONENT LOCATION EFB9EACF

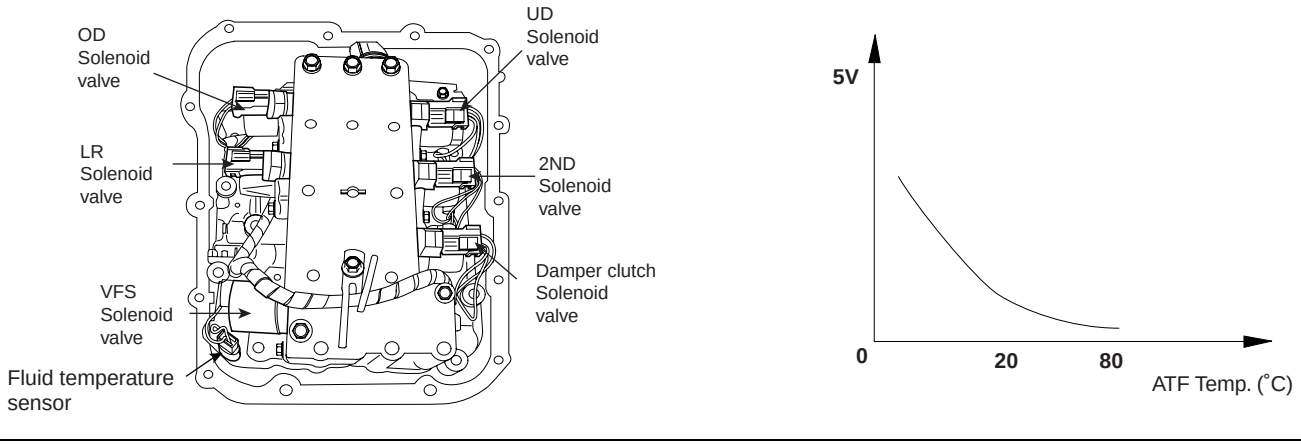

EKRF404A

GENERAL DESCRIPTION EC83584F

The automatic TRANSAXLE fluid(ATF) temperature sensor is installed in the Valve Body. This sensor uses a thermistor whose resistance changes according to the temperature changes. The TCM supplies a 5V reference voltage to the sensor, and the output voltage of the sensor changes when the ATF temperature varies. The automatic TRANSAXLE fluid(ATF) temperature provides very important data for the TCM's control of the Torque Converter Clutch, and is also used for many other purposes.

DTC DESCRIPTION E8DBFA31

This DTC code is set when the ATF temperature output voltage is lower than a value generated by thermistor resistance, in a normal operating range, for approximately 1 second or longer. The TCM regards the ATF temperature as fixed at a value of 80°C(176°F).

DTC DETECTING CONDITION E8626E39

Item	Detecting Condition	Possible cause
DTC Strategy	• Check rationality	• Sensor signal circuit is short to ground • Faulty sensor • Faulty PCM
Enable Conditions 1)	• Intake air temperature ≥ -25°C(-13°F) • Engine state = RUN • No error with relations other sensors • Engine be cooled sufficiently	
Enable Conditions 2)	• Engine state = RUN • Average start up temperature of TM stuck diagnostic ≤ 55°C(131°F)	
Threshold Value 1)	• ATF Temp - Coolant Temp ≥ 20°C(68°F)	
Threshold Value 2)	• ATF Temp - TM start up Temp ≤ 0.5°C(32.9°F)	
Diagnostic Time 1)	• more than 1 second	
Diagnostic Time 2)	• more than 900 seconds	
Fail Safe	• Learning control and Intelligent shift are inhibited • Fluid temperature is regarded as 80°C(176°F)	

SPECIFICATION EDE1646A

TEMP.[°C(°F)]	Resistance(kΩ)	TEMP.[°C(°F)]	Resistance(kΩ)
-40(-40°F)	139.5	80(176°F)	1.08
-20(-4°F)	47.7	100(212°F)	0.63
0(32°F)	18.6	120(248°F)	0.38
20(68°F)	8.1	140(284°F)	0.25
40(104°F)	3.8	160(320°F)	0.16
60(140°F)	1.98		

MONITOR SCANTOOL DATA EB5C6397

1. Connect scantool to data link connector(DLC).
2. Engine "ON".
3. Monitor the "TRANSAXLE FLUID TEMPERATURE SENSOR" parameter on the scan tool.

Specification : Increasing Gradually

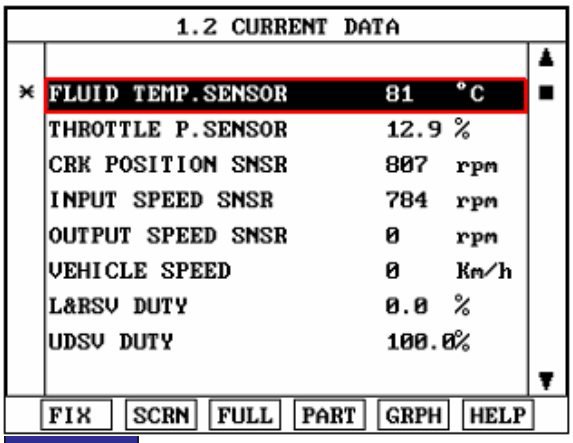

FIG.1)

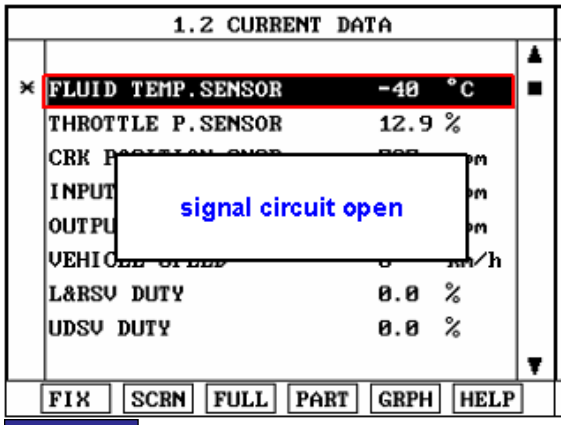

FIG.2)

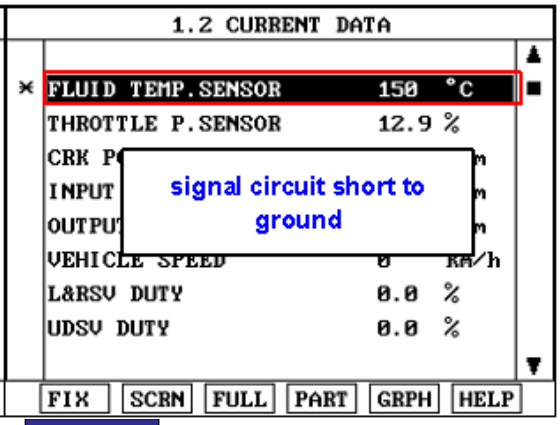

FIG.3)

FIG.1) Normal
FIG.2) Signal harness Open
FIG.3) Signal harness Short

SCMAT6706L

4. Does "TRANSAXLE FLUID TEMPERATURE SENSOR " follow the reference data?

YES

▶ Fault is intermittent caused by poor contact in the sensor's and/or TCM(PCM)'s connector or was repaired and TCM(PCM) memory was not cleared. Thoroughly check connectors for looseness, poor connection, bending, corrosion, contamination, deterioration or damage. Repair or replace as necessary and go to "Verification of Vehicle Repair" procedure.

NO

▶ Go to "Terminal & connector inspection" procedure.

TERMINAL & CONNECTOR INSPECTION E9C55AF4

1. Many malfunctions in the electrical system are caused by poor harness and terminals. Faults can also be caused by interference from other electrical systems, and mechanical or chemical damage.
2. Thoroughly check connectors for looseness, poor connection, bending, corrosion, contamination, deterioration, or damage.
3. Has a problem been found?

YES

▶ Repair as necessary and go to "Verification of vehicle Repair" procedure.

NO

▶ Go to "Component inspection" procedure.

COMPONENT INSPECTION E1BE9EA6

1. CHECK "TRANSAXLE FLUID TEMPERATURE SENSOR"
   1) Ignition "OFF".
   2) Disconnect the "TRANSAXLE FLUID TEMPERATURE SENSOR" connector.
   3) Measure the resistance between terminals "1" and "2" of the "TRANSAXLE FLUID TEMPERATURE SENSOR".

Specification : Refer to "Reference data"

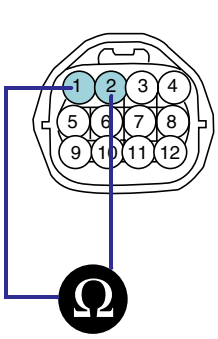

1.TRANSAXLE FLUID TEMPERATURE SENSOR
2.Sensor ground

SCMAT6707L

[REFERENCE DATA]

TEMP.[°C(°F)]	Resistance(kΩ)	TEMP.[°C(°F)]	Resistance(kΩ)
-40(-40°F)	139.5	80(176°F)	1.08
-20(-4°F)	47.7	100(212°F)	0.63
0(32°F)	18.6	120(248°F)	0.38
20(68°F)	8.1	140(284°F)	0.25
40(104°F)	3.8	160(320°F)	0.16
60(140°F)	1.98		

4) Is resistance within specifications?

YES

▶ Go to "CHECK PCM/TCM " as below.

NO

▶ Replace "TRANSAXLE FLUID TEMPERATURE SENSOR" as necessary and Go to "Verification of Vehicle Repair" procedure.

2. CHECK TCM

1) Ignition "ON" & Engine "OFF".

2) Connect "TRANSAXLE FLUID TEMPERATURE SENSOR" connector.

3) Install scan tool and select a SIMU-SCAN.

4) Simulate voltage (0→5V) to "TRANSAXLE FLUID TEMPERATURE SENSOR" signal circuit.

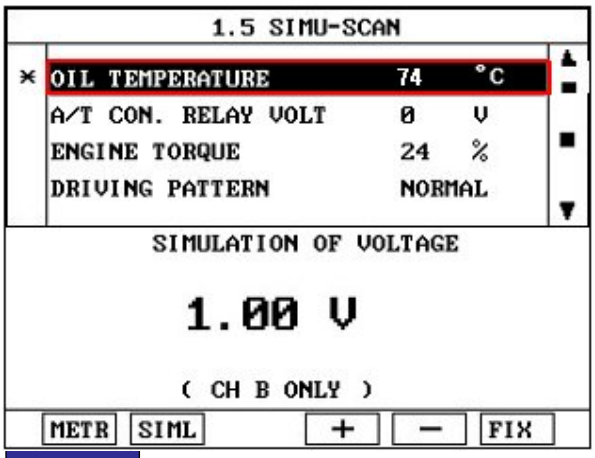

FIG.1)

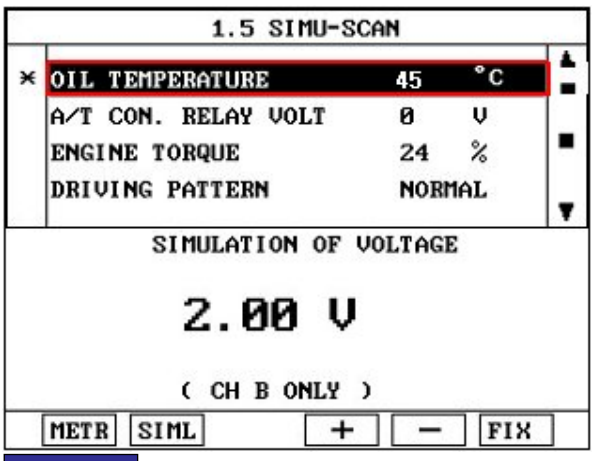

FIG.2)

FIG.1) INPUT 1.00V → 74˚C
FIG.2) INPUT 2.00V → 45˚C

※The values are subject to change according to vehicle model or conditions.

SCMAT6708L

5) Is FLUID TEMP. SENSOR signal value changed according to simulation voltage?

YES

▶ Thoroughly check connectors for looseness, poor connection, bending, corrosion, contamination, deterioration, or damage. Repair or replace as necessary and then go to "Verification of Vehicle Repair" procedure.

NO

▶ Substitute with a known-good PCM/TCM and check for proper operation. If the problem is corrected, replace PCM/TCM as necessary and then go to "Verification of Vehicle Repair" procedure.

VERIFICATION OF VEHICLE REPAIR EDCB245C

After a repair, it is essential to verify that the fault has been corrected.

1. Connect scantool and select "Diagnostic Trouble Codes(DTCs)" mode.
2. Using a scantool, Clear DTC.
3. Operate the vehicle within DTC Enable conditions in General information.
4. Are any DTCs present?

YES

▶ Go to the applicable troubleshooting procedure.

NO

▶ System performing to specification at this time.

DTC P0712 FLUID(OIL) TEMPERATURE SENSOR CIRCUIT - LOW

COMPONENT LOCATION EABFE2F5

Refer to DTC P0711.

GENERAL DESCRIPTION E280CF0F

Refer to DTC P0711.

DTC DESCRIPTION E940D9AD

Refer to DTC P0711.

DTC DETECTING CONDITION E912F15B

Item	Detecting Condition	Possible cause
DTC Strategy	• Check for Voltage range	• Sensor signal circuit is short to ground • Faulty sensor • Faulty PCM
Enable Conditions	• Engine state = RUN	
Threshold Value	• voltage $< 0.07V$	
Diagnostic Time	• more than 1sec	
Fail Safe	• Learning control and Intelligent shift are inhibited • Fluid temperature is regarded as 80°C(176°F)	

SPECIFICATION EADC79F4

Refer to DTC P0711.

MONITOR SCANTOOL DATA E659A0E5

Refer to DTC P0711.

TERMINAL & CONNECTOR INSPECTION EEEAC089

Refer to DTC P0711.

SIGNAL CIRCUIT INSPECTION E4E1C15E

1. Ignition "ON" & Engine "OFF".
2. Disconnect the "TRANSAXLE FLUID TEMPERATURE SENSOR" connector.
3. Measure the voltage between terminal "1" of the "TRANSAXLE FLUID TEMPERATURE SENSOR" harness connector and chassis ground.

Specification : Approx. 5 V

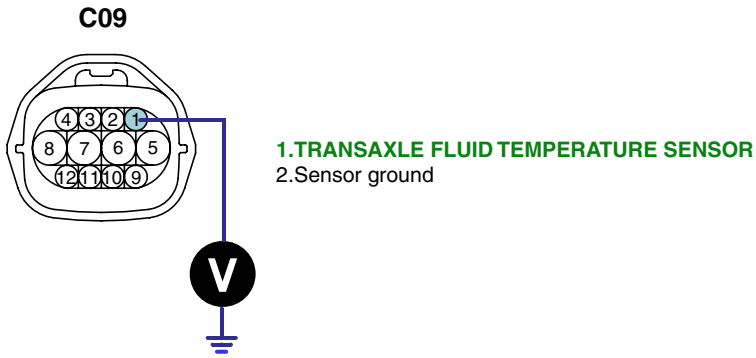

SCMAT6710L

4. Is voltage within specifications?

YES

▶ Go to "Component Inspection" procedure.

NO

▶ Check for short to ground in harness. Repair as necessary and Go to "Verification of Vehicle Repair" procedure.

COMPONENT INSPECTION EE688D63

Refer to DTC P0711.

VERIFICATION OF VEHICLE REPAIR EEECDE81

Refer to DTC P0711.

DTC P0713 FLUID(OIL) TEMPERATURE SENSOR CIRCUIT - HIGH

COMPONENT LOCATION E112171F

Refer to DTC P0711.

GENERAL DESCRIPTION E4C2B6D1

Refer to DTC P0711.

DTC DESCRIPTION EB21AF10

This DTC code is set when the ATF temperature output voltage is higher than a value generated by thermistor resistance, in a normal operating range, for an extended period of time . The TCM regards the ATF temperature as fixed at a value of 80 °C(176°F).

DTC DETECTING CONDITION ED640D86

Item	Detecting Condition	Possible cause
DTC Strategy	• Check for Voltage range	• Sensor signal circuit is short to ground • Faulty sensor • Faulty PCM
Enable Conditions	• Intake air temperature ≥ -23.5°C(-10.3°F) • Engine state = RUN	
Threshold Value	• Voltage ≥4.9V	
Diagnostic Time	• more than 1sec	
Fail Safe	• Learning control and Intelligent shift are inhibited • Fluid temperature is regarded as 80°C(176°F)	

SPECIFICATION EB5D8F22

Refer to DTC P0711.

MONITOR SCANTOOL DATA EA9AC2B4

Refer to DTC P0711.

TERMINAL & CONNECTOR INSPECTION EF3D1B31

Refer to DTC P0711.

SIGNAL CIRCUIT INSPECTION EBD69471

1. Ignition "ON" & Engine "OFF".
2. Disconnect the "TRANSAXLE FLUID TEMPERATURE SENSOR" connector.
3. Measure the voltage between terminal "1" of the "TRANSAXLE FLUID TEMPERATURE SENSOR" harness connector and chassis ground.

Specification : Approx. 5 V

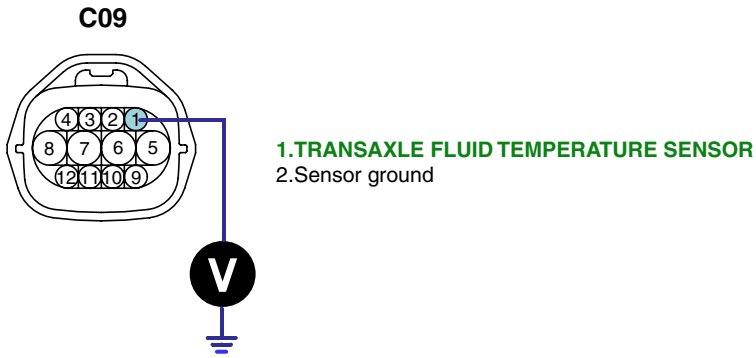

SCMAT6710L

4. Is voltage within specifications ?

YES

▶ Go to "Ground circuit inspection" procedure.

NO

▶ Check for short to ground in harness. Repair as necessary and Go to "Verification of Vehicle Repair" procedure .

GROUND CIRCUIT INSPECTION E2DB489D

1. Ignition "ON" & Engine "OFF".
2. Disconnect the "TRANSAXLE FLUID TEMPERATURE SENSOR" connector.
3. Measure the resistance between terminal "2" of the "TRANSAXLE FLUID TEMPERATURE SENSOR" harness connector and chassis ground.

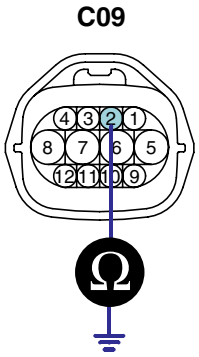

1.TRANSAXLE FLUID TEMPERATURE SENSOR
2.Sensor ground

SCMAT6711L

4. Is resistance within specifications?

YES

▶ Go to "Component inspection" procedure.

NO

▶ Check for open in harness. Repair as necessary and Go to "Verification of Vehicle Repair" procedure .

COMPONENT INSPECTION EAD3DADE

Refer to DTC P0711.

VERIFICATION OF VEHICLE REPAIR E0650E06

Refer to DTC P0711.

DTC P0717 INPUT SPEED SENSOR CIRCUIT - NO SIGNAL

COMPONENT LOCATION E797E84F

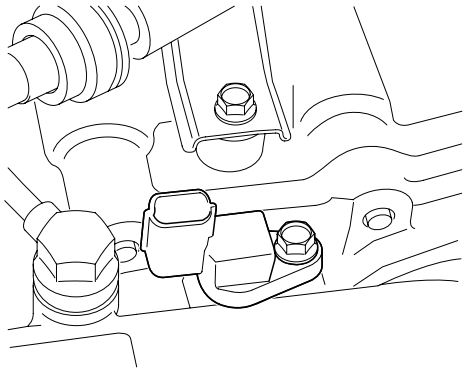

BKQE004A

GENERAL DESCRIPTION E76AE310

The input(turbine) speed sensor outputs pulse-signals according to the revolutions of the input shaft of the transmission. The TCM determines the input shaft speed by counting the frequency of the pulses. This value is mainly used to control the optimum fluid pressure during shifting.

DTC DESCRIPTION EA26773D

The TCM sets this code if an output pulse-signal is not detected, from the input speed sensor, when the vehicle is running faster than 30 km/h. The Fail-Safe function will be set by the TCM if this code is detected.

DTC DETECTING CONDITION E1DD9E22

Item	Detecting Condition	Possible cause
DTC Strategy	• Speed rationality check	• Signal circuit is open or short. • Sensor power circuit is open • Sensor ground circuit is open • Faulty INPUT SPEED SENSOR • Faulty PCM/TCM
Enable Conditions	• Vehicle speed is over 19 Mile/h(30 Km/h) and Ne≥ 1000rpm in D,3,2,L(A/T range switch) and SP(SPORTS MODE) • 11V ≤ Battery Voltage ≤ 16V • TM oil temperature ≥ -23°C(-9.4°F)	
Threshold value	• No signal	
Diagnostic Time	• More than 1sec	
Fail Safe	• Locked into 3rd or 2nd gear • Manual shifting is possible(2 nd → 3 rd, 3 rd → 2 nd)	

SPECIFICATION E6CCF378

Input shaft & Output shaft speed sensor
- Type : Hall sensor
- Current consumption : 22mA(MAX)
- Sensor body and sensor connector have been unified as one.

SIGNAL WAVEFORM E56F58CC

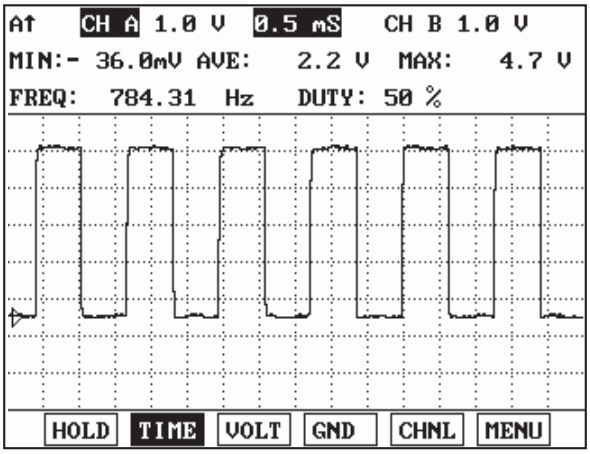

EKBF105A

MONITOR SCANTOOL DATA E6AA00CD

1. Connect scan tool to data link connector(DLC).
2. Engine "ON".
3. Monitor the "INPUT SPEED SENSOR" parameter on the scantool.
4. Driving at speed of over 19 Mile/h(30 Km/h).

Specification : Increasing Gradually

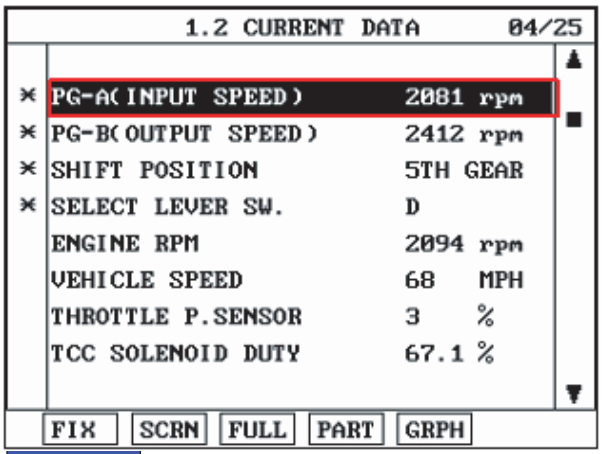

FIG.1)

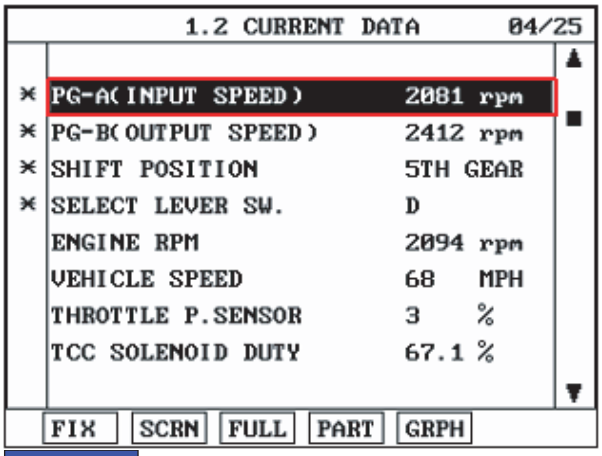

FIG.2)

FIG.1) Idling
FIG.2) Accelerating

SCMAT6712L

5. Does "Input speed sensor" follow the reference data?

YES

▶ Fault is intermittent caused by poor contact in the sensor's and/or TCM(PCM)'s connector or was repaired and TCM(PCM) memory was not cleared. Thoroughly check connectors for looseness, poor connection, bending, corrosion, contamination, deterioration or damage. Repair or replace as necessary and go to "Verification of Vehicle Repair" procedure.

NO

▶ Go to "Terminal & connector inspection" procedure.

TERMINAL & CONNECTOR INSPECTION EA95DEFD

1. Many malfunctions in the electrical system may be caused from poor harness and terminals. These faults can be caused by interference from other electrical systems and mechanical or chemical damage.
2. Thoroughly check connectors for looseness, poor connection, bending, corrosion, contamination, deterioration, or damage.
3. Has a problem been found?

YES

▶ Repair as necessary and go to "Verification of vehicle repair" procedure.

NO

▶ Go to "Signal circuit inspection" procedure.

SIGNAL CIRCUIT INSPECTION E803DB9A

1. Ignition "ON" & Engine "OFF".
2. Disconnect the "INPUT SPEED SENSOR" connector.
3. Measure voltage between terminal "2" of the INPUT SPEED SENSOR harness connector and chassis ground.

Specification : approx. 5V

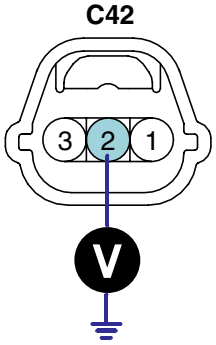

1. Sensor ground
2. **Input speed sensor**
3. Power supply IG1

SCMAT6713L

4. Is voltage within specification?

YES

▶ Go to "Power circuit Inspection" procedure.

NO

▶ Check for open or short in harness. Repair as necessary and Go to "Verification of Vehicle Repair" procedure.
▶ If signal circuit in harness is OK, Go to "Check PCM/TCM" of the "Component Inspection" procedure.

POWER SUPPLY CIRCUIT INSPECTION EAE9B04E

1. Ignition "ON" & Engine "OFF".
2. Disconnect the "INPUT SPEED SENSOR" connector.
3. Measure voltage between terminal "3" of the INPUT SPEED SENSOR harness connector and chassis ground.

Specification : approx. B+

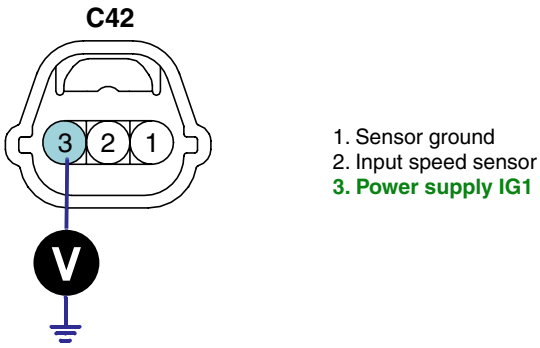

1. Sensor ground
2. Input speed sensor
3. **Power supply IG1**

SCMAT6714L

4. Is voltage within specification?

YES

▶ Go to "Ground circuit inspection" procedure.

NO

▶ Check for open in harness. Repair as necessary and Go to "Verification of Vehicle Repair" procedure.

GROUND CIRCUIT INSPECTION E3AABC89

1. Ignition "ON" & Engine "OFF".
2. Disconnect the "INPUT SPEED SENSOR" connector.
3. Measure resistance between terminal "1" of the INPUT SPEED SENSOR harness connector and chassis ground.

Specification : approx. 0 Ω

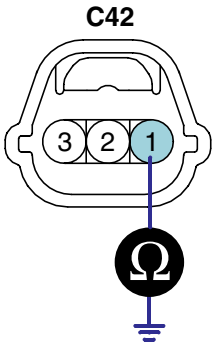

1. **Sensor ground**
2. Input speed sensor
3. Power supply IG1

SCMAT6715L

4. Is resistance within specification ?

YES

▶ Go to "Component Inspection" procedure.

NO

▶ Check for open in harness. Repair as necessary and Go to "Verification of Vehicle Repair" procedure.
▶ If ground circuit in harness is OK, Go to "Check PCM/TCM" of the "Component Inspection" procedure.

COMPONENT INSPECTION EB3A35B0

1. Check "INPUT SPEED SENSOR"
   1) Ignition "OFF".
   2) Disconnect the "INPUT SPEED SENSOR" connector.
   3) Measure resistance between terminal "1","2" and "2","3" and "1","3" of the "INPUT SPEED SENSOR" connector.

Specification : Refer to "Reference data"

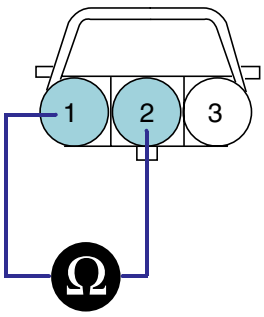

C42
Component side

1. Sensor ground
2. Input speed sensor
3. Power supply IG1

SCMAT6716L

4) Is resistance within specifications?

[REFERENCE DATA]

Data	Reference Data	
Current	22 mA	
Air Gap	Input sensor	1.3 mm
	Output sensor	0.85 mm
Resistance	Input sensor	Above 4 MΩ
	Output sensor	Above 4 MΩ
Voltage	High	4.8 ~ 5.2V
	Low	Below 0.8V

YES

▶ Go to "CHECK PCM" as below.

NO

▶ Replace "INPUT SPEED SENSOR" as necessary and Go to "Verification of Vehicle Repair" procedure.

2. CHECK PCM/TCM

1) Ignition "ON" & Engine "OFF".

2) Connect "INPUT SPEED SENSOR" connector.

3) Install scantool and select a SIMU-SCAN.

4) Simulate frequency to INPUT SPEED SENSOR signal circuit.

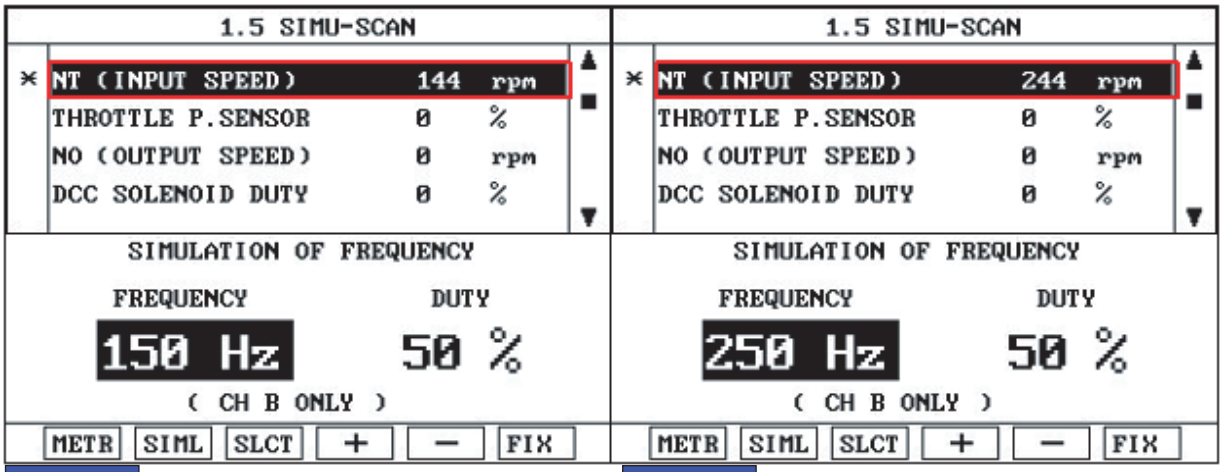

FIG.1) FIG.2)

FIG.1) INPUT 150Hz → 144rpm
FIG.2) INPUT 250Hz → 244 rpm

※The values are subject to change according to vehicle model or conditions

SCMAT6717L

5) Is "INPUT SPEED SENSOR" signal value changed according to simulation frequency?

YES

▶ Thoroughly check connectors for looseness, poor connection, bending, corrosion, contamination, deterioration, or damage. Repair or replace as necessary and then go to "Verification of Vehicle Repair" procedure.

NO

▶ Substitute with a known-good PCM/TCM and check for proper operation. If the problem is corrected, replace PCM/TCM as necessary and then go to "Verification of Vehicle Repair" procedure.

VERIFICATION OF VEHICLE REPAIR EF6AF9F6

After a repair, it is essential to verify that the fault has been corrected.

1. Connect scan tool and select "Diagnostic Trouble Codes(DTCs)" mode.
2. Using a scan tool, Clear DTC.
3. Operate the vehicle within DTC Enable conditions in General information.
4. Is resistance within specification ?

YES

▶ Go to the applicable troubleshooting procedure.

NO

▶ System performing to specification at this time.

DTC P0722 OUTPUT SPEED SENSOR CIRCUIT - NO SIGNAL

COMPONENT LOCATION E262AC7C

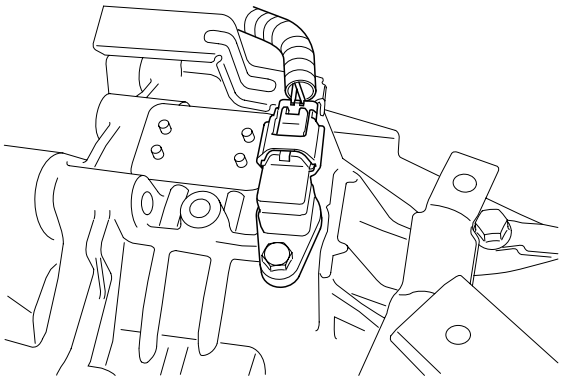

BKQE005A

GENERAL DESCRIPTION E8B3A5DF

The Output Speed Sensor outputs pulse-signals according to the revolutions of the output shaft of the transmission. The Output Speed Sensor is installed in front of the Transfer Drive Gear to determine the Transfer Drive Gear rpms by counting the frequency of the pulses. This value, together with the throttle position data, is mainly used to decide the optimum gear position.

DTC DESCRIPTION EADEF85D

The TCM sets this code if the calculated value of the pulse-signal is noticeably different from the value calculated, using the Vehicle Speed Sensor output, when the vehicle is running faster than 30 km/h. The TCM will initiate the fail safe function if this code is detected.

DTC DETECTING CONDITION E8B5DC1C

Item	Detecting Condition	Possible cause
DTC Strategy	• Speed rationality check	• Signal circuit is open or short • Sensor power circuit is open • Sensor ground circuit is open • Faulty OUTPUT SPEED SENSOR • Faulty PCM
Enable Conditions	• Vehicle speed is over 19 Mile/h(30 Km/h) and Ne≥ 1000rpm in D,3,2,L(A/T range switch) and SP(SPORTS MODE) • 11V ≤ Battery Voltage ≤ 16V • TM oil temperature ≥ -23°C(-9.4°F)	
Threshold value	• Vehicle speed calculated from output speed ≤ 10%(the vehicle speed from vehicle speed sensor)	
Diagnostic Time	• More than 1sec	
Fail Safe	• Locked into 3rd or 2nd gear. • Apply an electric current to solenoid valve • Manual shifting is possible(2 nd → 3 rd, 3 rd → 2 nd)	

SPECIFICATION E5381A0E

Input shaft & Output shaft speed sensor
- Type : Hall sensor
- Current consumption : 22mA(MAX)
- Sensor body and sensor connector have been unified as one.

SIGNAL WAVEFORM EB18EDEE

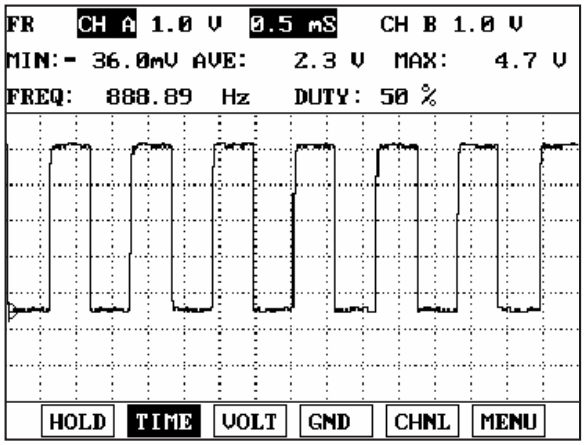

LLLG106B

MONITOR SCANTOOL DATA E4C2F196

1. Connect scantool to data link connector(DLC).
2. Engine "ON".
3. Monitor the "OUTPUT SPEED SENSOR" parameter on the scantool.
4. Driving at speed of over 19 Mile/h(30 Km/h).

Specification : Increasing Gradually

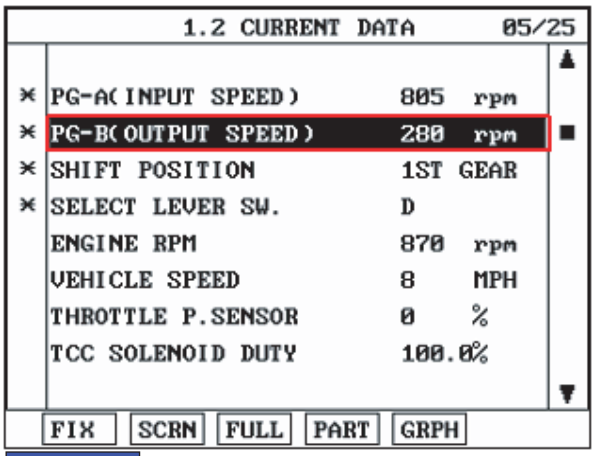

FIG.1)

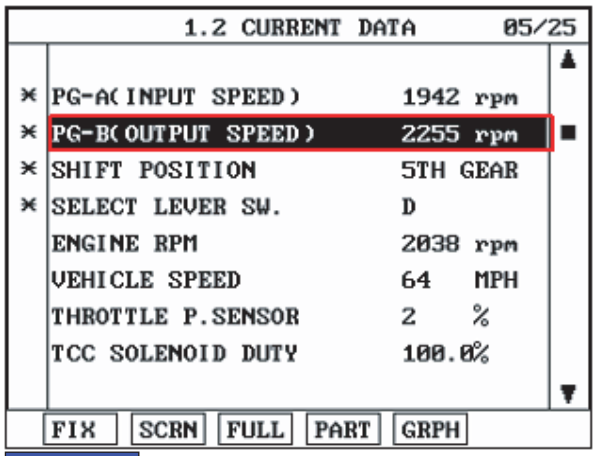

FIG.2)

FIG.1) Low-speed
FIG.2) High-speed

SCMAT6720L

5. Does "Output speed sensor" follow the reference data?

YES

▶ Fault is intermittent caused by poor contact in the sensor's and/or TCM(PCM)'s connector or was repaired and TCM(PCM) memory was not cleared. Thoroughly check connectors for looseness, poor connection, bending, corrosion, contamination, deterioration or damage. Repair or replace as necessary and go to "Verification of Vehicle Repair" procedure.

NO

▶ Go to "Terminal & connector inspection" procedure.

TERMINAL & CONNECTOR INSPECTION E1DDBA29

1. Many malfunctions in the electrical system may be caused from poor harness and terminals. These faults can be caused by interference from other electrical systems and mechanical or chemical damage.
2. Thoroughly check connectors for looseness, poor connection, bending, corrosion, contamination, deterioration, or damage.
3. Has a problem been found?

YES

▶ Repair as necessary and go to "Verification of vehicle Repair" procedure.

NO

▶ Go to "Signal circuit inspection" procedure.

SIGNAL CIRCUIT INSPECTION E3695DC8

1. Ignition "ON" & Engine "OFF".
2. Disconnect the "OUTPUT SPEED SENSOR" connector.
3. Measure voltage between terminal "2" of the OUTPUT SPEED SENSOR harness connector and chassis ground.

Specification : approx. 5V

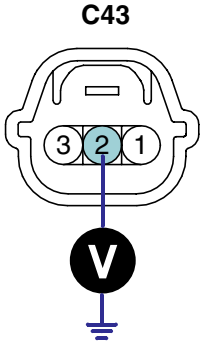

1. Sensor ground
2. **Output speed sensor**
3. Power supply IG1

SCMAT6721L

4. Is voltage within specification?

YES

▶ Go to "Power circuit Inspection" procedure.

NO

▶ Check for open or short in harness. Repair as necessary and Go to "Verification of Vehicle Repair" procedure.
▶ If signal circuit in harness is OK, Go to "Check PCM/TCM" of the "Component Inspection" procedure.

POWER SUPPLY CIRCUIT INSPECTION EFBB0B79

1. Ignition "ON" & Engine "OFF".
2. Disconnect the "OUTPUT SPEED SENSOR" connector.
3. Measure voltage between terminal "3" of the "OUTPUT SPEED SENSOR" harness connector and chassis ground.

Specification : approx. B+

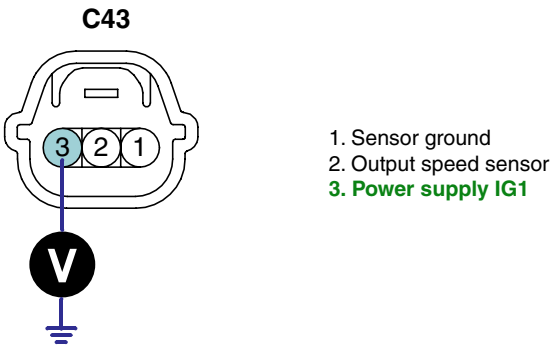

1. Sensor ground
2. Output speed sensor
3. Power supply IG1

SCMAT6722L

4. Is voltage within specification?

YES

▶ Go to "Ground circuit inspection" procedure.

NO

▶ Check for open in harness. Repair as necessary and Go to "Verification of Vehicle Repair" procedure.

GROUND CIRCUIT INSPECTION E05BDEBB

1. Ignition "ON" & Engine "OFF".
2. Disconnect the "OUTPUT SPEED SENSOR" connector.
3. Measure resistance between terminal "1" of the OUTPUT SPEED SENSOR harness connector and chassis ground.

Specification : Approx. 0Ω

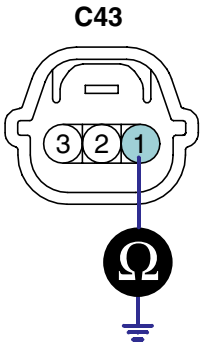

1. Sensor ground
2. Output speed sensor
3. Power supply IG1

SCMAT6723L

4. Is resistance within specifications?

YES

▶ Go to "Component Inspection" procedure.

NO

▶ Check for open in harness. Repair as necessary and Go to "Verification of Vehicle Repair" procedure.
▶ If ground circuit is OK, Go to "Check PCM/TCM" of the "Component Inspection" procedure.

COMPONENT INSPECTION EB96B3E7

1. Check "OUTPUT SPEED SENSOR"

   1) Ignition "OFF".

   2) Disconnect the "OUTPUT SPEED SENSOR" connector.

   3) Measure resistance between terminal "1","2" and "2","3" and "1","3" of the "OUTPUT SPEED SENSOR" connector.

Specification : Refer to "Reference data"

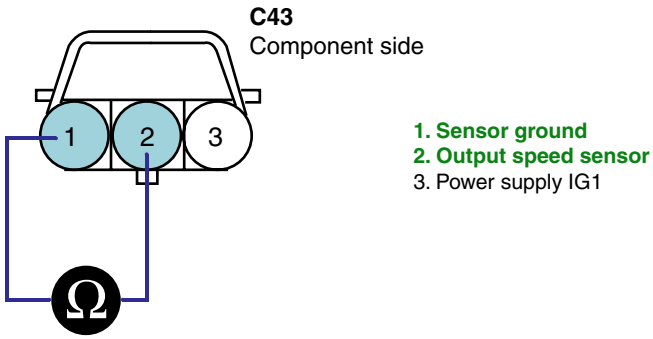

SCMAT6724L

   4) Is resistance within specifications?

[REFERENCE DATA]

Data	Reference Data	
Current	22 mA	
Air Gap	Input sensor	1.3 mm
	Output sensor	0.85 mm
Resistance	Input sensor	Above 4 MΩ
	Output sensor	Above 4 MΩ
Voltage	High	4.8 ~ 5.2V
	Low	Below 0.8V

YES

▶ Go to "CHECK PCM/TCM " as below.

NO

▶ Replace "OUTPUT SPEED SENSOR" as necessary and Go to "Verification of Vehicle Repair" procedure.

2. CHECK PCM/TCM

1) Ignition "ON" & Engine "OFF".

2) Connect "OUTPUT SPEED SENSOR" connector.

3) Install scantool and select a SIMU-SCAN.

4) Simulate frequency to OUTPUT SPEED SENSOR signal circuit.

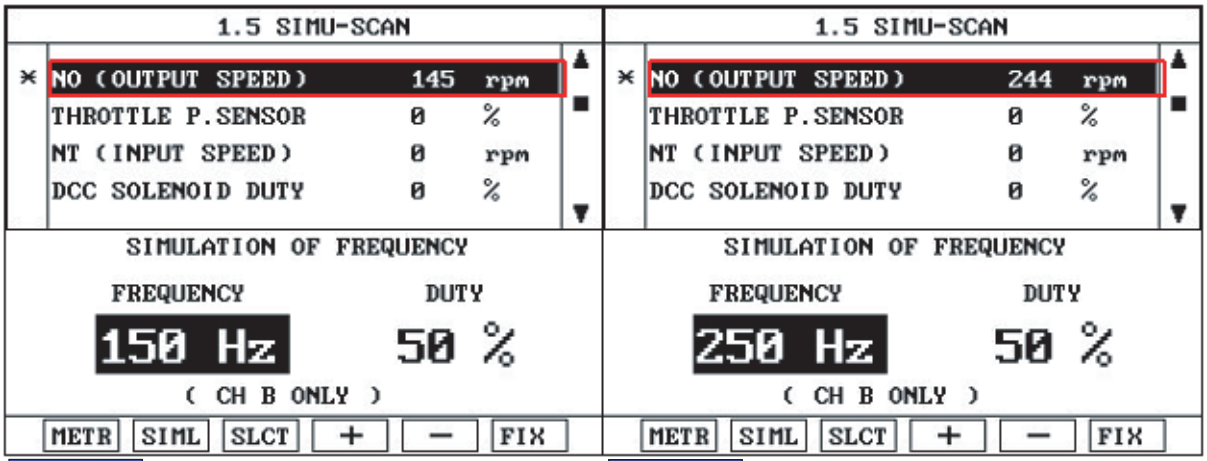

FIG.1) FIG.2)

FIG.1) OUTPUT 150Hz → 145rpm
FIG.2) OUTPUT 250Hz → 244rpm

SCMAT6725L

5) Is "OUTPUT SPEED SENSOR" signal value changed according to simulation frequency?

YES

▶ Thoroughly check connectors for looseness, poor connection, bending, corrosion, contamination, deterioration, or damage. Repair or replace as necessary and then go to "Verification of Vehicle Repair" procedure.

NO

▶ Substitute with a known-good PCM/TCM and check for proper operation. If the problem is corrected, replace PCM/TCM as necessary and then go to "Verification of Vehicle Repair" procedure.

VERIFICATION OF VEHICLE REPAIR E1DFB50D

Refer to DTC P0707.

DTC P0731 GEAR 1 INCORRECT RATIO

COMPONENT LOCATION EABBAF1A

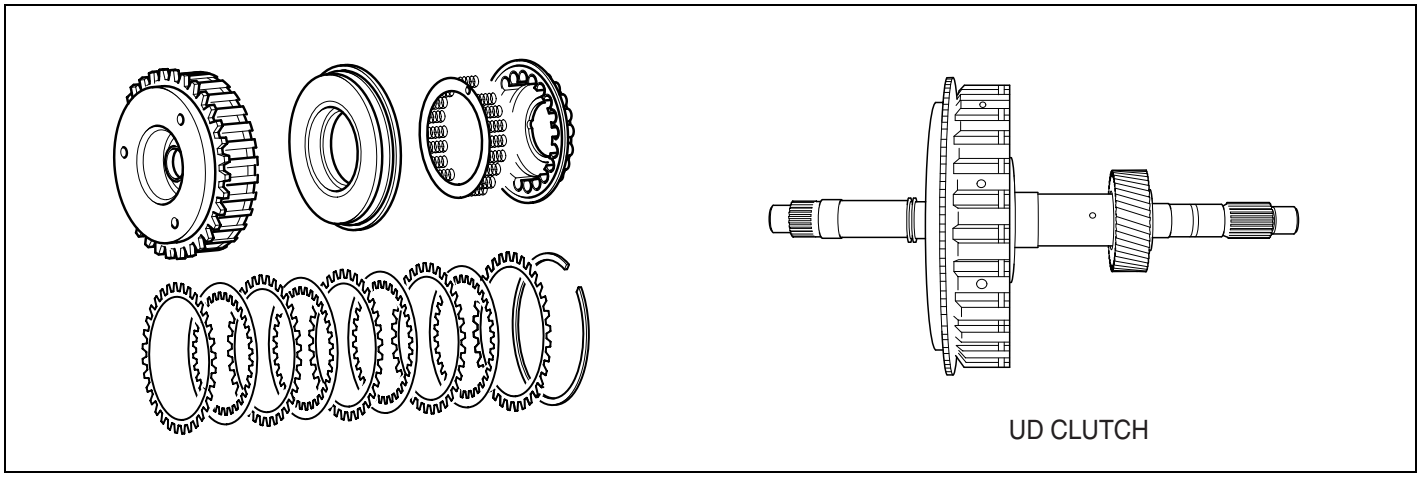

BKQE006A

GENERAL DESCRIPTION E5E949DC

The value of the input shaft speed should be equal to the value of the output shaft speed, when multiplied by the 1st gear ratio, while the transaxle is engaged in the 1st gear. For example, if the output speed is 1000 rpm and the 1st gear ratio is 2.842, then the input speed is 2,842 rpm.

DTC DESCRIPTION E8EE1872

This code is set if the value of input shaft speed is not equal to the value of the output shaft, when multiplied by the 1st gear ratio, while the transaxle is engaged in 1st gear. This malfunction is mainly caused by mechanical troubles such as control valve sticking or solenoid valve malfunctioning rather than an electrical issue.

DTC DETECTING CONDITION E1BA8AD7

Item	Detecting Condition	Possible cause
DTC Strategy	• 1st gear incorrect ratio	• Faulty Input speed sensor • Faulty output speed sensor • Faulty UD clutch or LR brake or Oneway clutch
Enable Conditions	• Engine speed > 450rpm • Output speed > 350rpm • Shift stage 1st. gear • Input speed > 0rpm • A/T oil temp sensor voltage < 4.5V • Voltage of Battery > 10V • TRANSAXLE RANGE SWITCH is normal and after 2sec is passed from IG ON	
Threshold value	• | Input speed/1st gear ratio - output speed | ≥ 200rpm	
Diagnostic Time	• More than 1sec	
Fail Safe	• Locked into 3rd gear. (If diagnosis code P0731 is output four times, the transaxle is locked into 3rd gear)	

SIGNAL WAVEFORM EDFCA11D

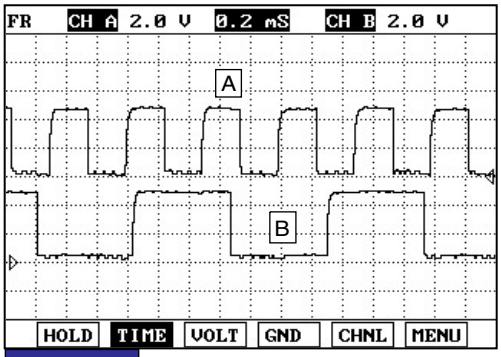

FIG.1)

A : INPUT SPEED SENSOR
B : OUTPUT SPEED SENSOR

ELQE031A

MONITOR SCANTOOL DATA E24B9E96

1. Connect scantool to data link connector(DLC).
2. Engine "ON".
3. Monitor the "ENGINE SPEED, INPUT SPEED SENSOR, OUTPUT SPEED SENSOR, GEAR POSITION" parameter on the scantool.
4. Perform the "STALL TEST" with gear position "1"

Specification : 2000~2700 engine rpm

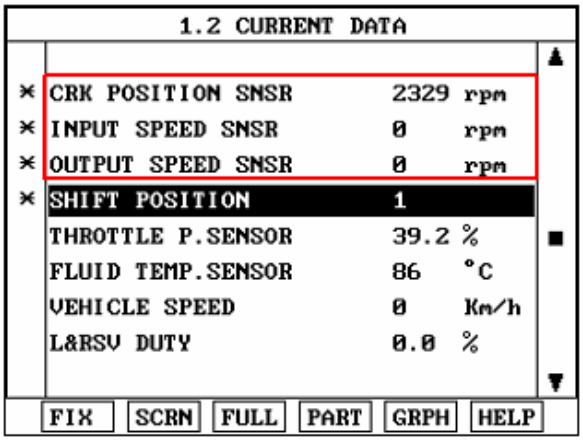

ELQE032A

OPERATING ELEMENT OF EACH SHIFTING RANGE

	UD/C	OD/C	REV/C	2ND/B	LR/B	OWC
P					●	
R			●		●	
N					●	
D1	●				●	○
D2	●			●		
D3	●	●				
D4		●		●		

※ Low & Reverse Brake is released when the vehicle speed is over 7Km/h(5 MPH).

Stall test procedure in D1 and reason

Procedure

1. Warm up the engine
2. After positioning the select lever in "D" , depress the foot brake pedal fully. After that, depress the accelerator pedal to the maximum

   * The slippage of 1st gear operating parts can be detected by stall test in D

Reason for stall test

1. If there is no mechanical defaults in A/T, all slippage occurs in the torque converter.
2. Therefore, engine revolution is output, but input and output speed revolution must be "zero" due to wheel's lock.
3. If 1st gear operating part has faults, input speed revolution will be out of specification.
4. If output speed revolution is output. It means that the foot brake force is not applied fully. Remeasuring is required.

5. Is "STALL TEST " within specification?

YES

▶ Go to "Signal Circuit Inspection" procedure.

NO

▶ Go to "Component inspection" procedure.

CAUTION

- ***Do not let anybody stand in front of or behind the vehicle while this test is being carried out.***
- ***Check the A/T fluid level and temperature and the engine coolant temperature.***
  - ***Fluid level : At the hot mark on the oil level gauge.***
  - ***Fluid temperature : 176 °F~ 212 °F (80~100 °C).***
  - ***Engine coolant temperature : 176 °F~ 212 °F (80~100 °C).***

- ***Chock both rear wheels(left and right).***
- ***Pull the parking brake lever on with the brake pedal fully depressed.***
- ***The throttle should not be left fully open for more than eight seconds.***
- ***If carrying out the stall test two or more times, move the select lever to the "N" position and run the engine at 1,000 rpm to let the A/T fluid cool down before carrying out subsequent tests.***

SIGNAL CIRCUIT INSPECTION EB710A73

1. Connect Scantool.
2. Engine "ON".
3. Monitor the "INPUT & OUTPUT SPEED SENSOR" parameter on the scantool.
4. Accelerate the Engine speed until about 2000 rpm in the 1st gear.

Specification : INPUT SPEED - (OUTPUT SPEED × GEAR RATIO) ≤ 200 RPM

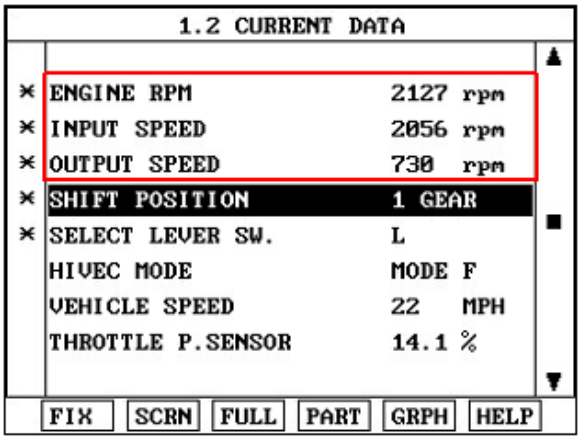

ELQE033A

5. Are "INPUT & OUTPUT SPEED SENSOR" within specifications?

YES

▶ Go to "Component Inspection" procedure.

NO

▶ Check for electrical noise of circuit in INPUT & OUTPUT SPEED SENSOR or replace INPUT & OUTPUT SPEED SENSOR. Repair as necessary and go to "Verification of Vehicle Repair" procedure.

COMPONENT INSPECTION EE456CB2

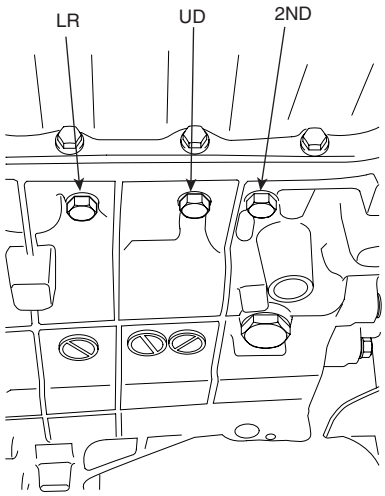

EKBF107D

1. Connect oil pressure gauge to "UD" and "L/R" port.
2. Engine "ON".
3. Drive the car with gear position 1 in "SPORTS MODE".
4. Compare it with reference data as below.

Specification : shown below

Measurement condition			Standard hydraulic pressure kPa (psi)						
Selector lever position	Shift position	Engine speed (rpm)	Under drive clutch pressure	Reverse clutch pressure	Over-drive clutch pressure	Low & reverse brake pressure	Second brake pressure	Damper clutch Apply pressure (DA)	Damper clutch Release pressure (DR)
P	-	2,500	-	-	-	260-340 (38-50)	-	-	-
R	Reverse	2,500	-	1,270-1,770 (185-256)	-	1,270-1,770 (185-256)	-	-	-
N	-	2,500	-	-	-	260-340 (38-50)	-	-	-
D	1st gear	2,500	430-510 (62-74)	-	-	1,010-1,050 (146-152)	-	-	-
	2nd gear	2,500	430-510 (62-74)	-	-	-	430-510 (62-74)	-	-
	3rd gear	2,500	430-510 (62-74)	-	430-510 (62-74)	-	-	More than 730 (100)	0-10 (0-1)
	4th gear	2,500	-	-	430-510 (62-74)	-	780-880 (110-130)	More than 730 (100)	0-10 (0-1)

※ The values are subject to change according to vehicle model or condition

5. Is oil pressure value within specification?

YES

▶ Repair AUTO TRANSAXLE(Clutch or Brake) as necessary and Go to "Verification of Vehicle Repair" procedure.

NO

▶ Replace AUTO TRANSAXLE (BODY CONTROL VALVE faulty) as necessary and go to "Verification of Vehicle Repair " procedure.

VERIFICATION OF VEHICLE REPAIR EDA4F3A2

After a repair, it is essential to verify that the fault has been corrected.

1. Connect scan tool and select "Diagnostic Trouble Codes(DTCs)" mode.
2. Using a scantool, Clear DTC.
3. Operate the vehicle within DTC Enable conditions in general information.
4. Are any DTCs present ?

YES

▶ Go to the applicable troubleshooting procedure.

NO

▶ System performing to specification at this time.

DTC P0732 GEAR 2 INCORRECT RATIO

COMPONENT LOCATION EE695120

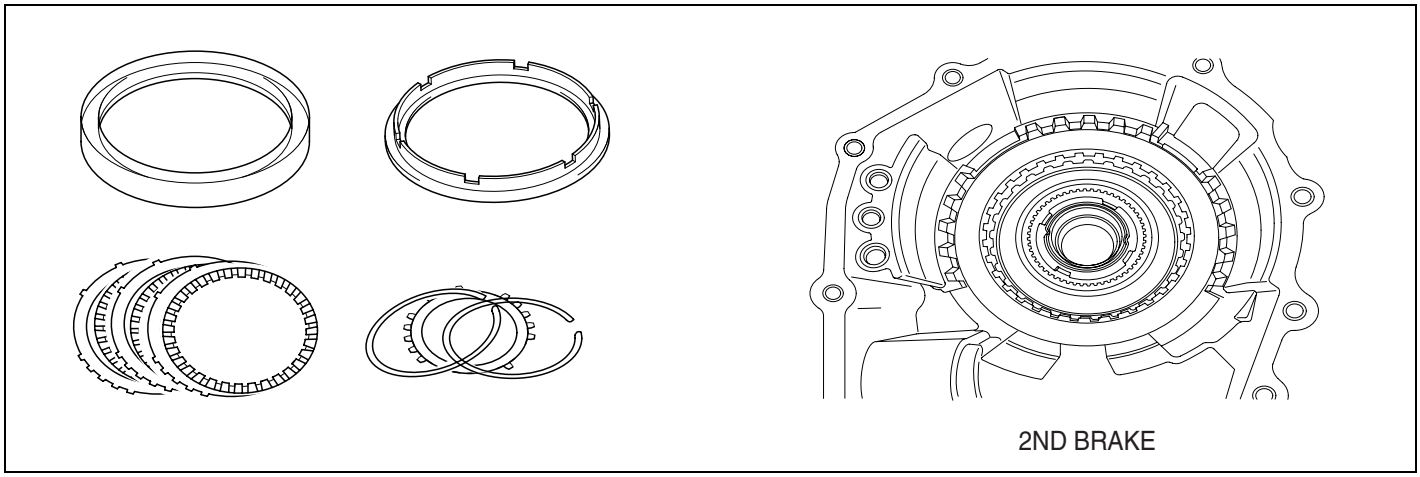

BKQE007A

GENERAL DESCRIPTION E93FBD85

The value of the input shaft speed should be equal to the value of the output shaft speed, when multiplied by the 2nd gear ratio, while the transaxle is engaged in the 2nd gear. For example, if the output speed is 1000 rpm and the 2nd gear ratio is 1.529, then the input speed is 1,529 rpm.

DTC DESCRIPTION EE795493

This code is set if the value of input shaft speed is not equal to the value of the output shaft, when multiplied by the 2nd gear ratio, while the transaxle is engaged in 2nd gear. This malfunction is mainly caused by mechanical troubles such as control valve sticking or solenoid valve malfunctioning rather than an electrical issue.

DTC DETECTING CONDITION EBEC8FAD

Item	Detecting Condition	Possible cause
DTC Strategy	• 2nd gear incorrect ratio	• Faulty Input speed sensor • Faulty output speed sensor • Faulty UD clutch or 2nd brake
Enable Conditions	• Engine speed > 450rpm • Output speed > 350rpm • Shift stage 2nd. gear • Input speed > 0rpm • A/T oil temp sensor voltage < 4.5V • Voltage of Battery > 10V • TRANSAXLE RANGE SWITCH is normal	
Threshold value	• | Input speed/2nd gear ratio - output speed | ≥ 200rpm	
Diagnostic Time	• More than 1sec	
Fail Safe	• Locked into 3 rd gear. (If diagnosis code P0732 is output four times, the transaxle is locked into 3rd gear)	

SIGNAL WAVEFORM EABEDEE1

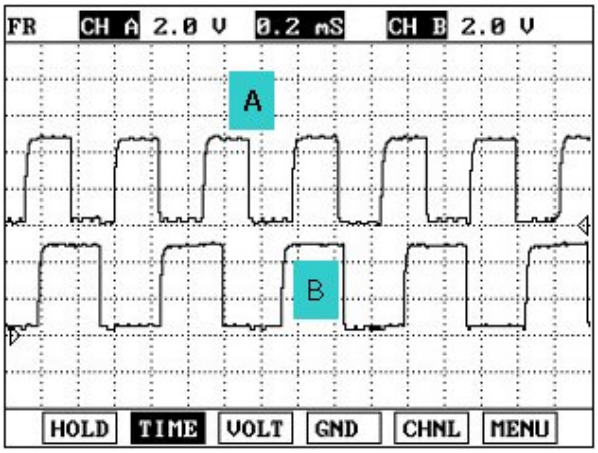

LKLG107A

MONITOR SCANTOOL DATA E2E040A6

1. Connect scantool to data link connector(DLC).
2. Engine "ON".
3. Monitor the "ENGINE SPEED, INPUT SPEED SENSOR, OUTPUT SPEED SENSOR, GEAR POSITION" parameter on the scantool.
4. Perform the "STALL TEST" with gear position "2".

Specification : 2000~2700 engine rpm

※ This test is possible only for "HOLD S/W" or "SPORTS MODE" applied vehicles.

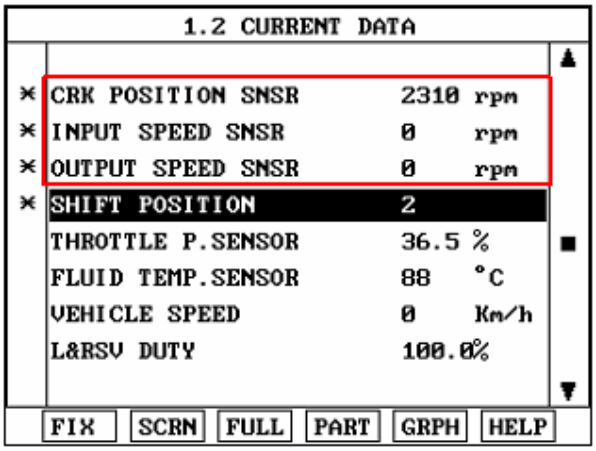

ELQE034A

OPERATING ELEMENT OF EACH SHIFTING RANGE

	UD/C	OD/C	REV/C	2ND/B	LR/B	OWC
P					●	
R			●		●	
N					●	
D1	●				●	○
D2	●			●		
D3	●	●				
D4		●		●		

※ Low & Reverse Brake is released when the vehicle speed is over 7Km/h(5 MPH).

Stall test procedure in D2 and reason

Procedure

1. Warm up the engine
2. After positioning the select lever in "D" , depress the foot brake pedal fully after that, depress the accelerator pedal to the maximum

   * The slippage of 1st gear operating parts can be detected by stall test in D2.

Reason for stall test

1. If there are mechanical defaults in A/T, all slippage occurs in the torque converter.
2. Therefore, engine revolution is output, but input and output speed revolution must be "zero" due to wheel's lock.
3. If 2nd brake system(2nd gear operating part) has faults, input speed revolution will be out of specification.
4. If wheel spin occurs, the applied brake force is not adequate. Retry using more brake force.

5. Is "STALL TEST " within specification?

YES

▶ Go to "Signal Circuit Inspection" procedure.

NO

▶ Go to "Component Inspection" procedure.

CAUTION

● ***Do not let anybody stand in front of or behind the vehicle while this test is being carried out.***
● ***Check the A/T fluid level and temperature and the engine coolant temperature.***
- ***Fluid level : At the hot mark on the oil level gauge.***
- ***Fluid temperature : 80~100 °C (176 °F~ 212 °F).***
- ***Engine coolant temperature : 80~100 °C (176 °F~ 212 °F).***

● ***Chock both rear wheels(left and right).***
● ***Pull the parking brake lever on with the brake pedal fully depressed.***
● ***The throttle should not be left fully open for more than eight seconds.***
● ***If carrying out the stall test two or more times, move the select lever to the "N" position and run the engine at 1,000 rpm to let the A/T fluid cool down before carrying out subsequent tests.***

SIGNAL CIRCUIT INSPECTION E442E1EC

1. Connect Scantool.
2. Engine "ON".
3. Monitor the "INPUT & OUTPUT SPEED SENSOR" parameter on the scantool.
4. Accelerate the Engine speed until about 2000 rpm in the 2nd gear.

Specification : INPUT SPEED - (OUTPUT SPEED × GEAR RATIO) ≤ 200 RPM

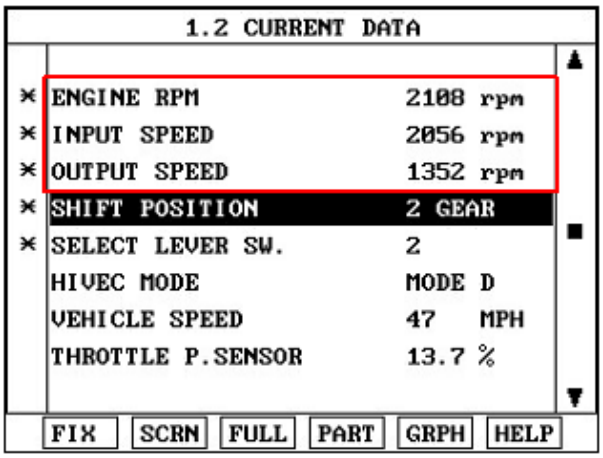

ELQE035A

5. Are "INPUT & OUTPUT SPEED SENSOR" within specifications?

YES

▶ Go to "Component Inspection" procedure.

NO

▶ Check for electrical noise of circuit in INPUT & OUTPUT SPEED SENSOR or replace INPUT & OUTPUT SPEED SENSOR. Repair as necessary and go to "Verification of Vehicle Repair" procedure.

COMPONENT INSPECTION E64FC4DF

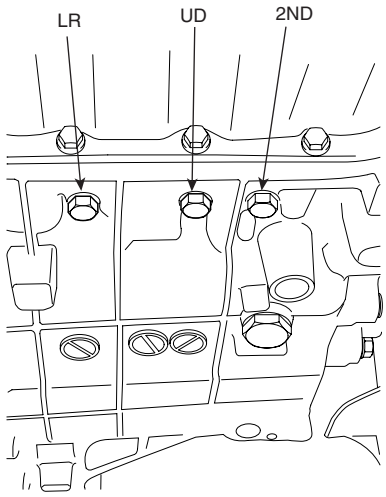

EKBF107D

1. Connect Oil pressure gauge to "UD" and "2ND" port.
2. Engine "ON".
3. Drive the car with gear position 2 in "SPORTS MODE".
4. Compare it with reference data as below.

Specification : Refer to DTC P0731.

5. Is oil pressure value within specification?

YES

▶ Repair AUTO TRANSAXLE(Clutch or Brake) as necessary and go to "Verification of Vehicle Repair" procedure.

NO

▶ Replace AUTO TRANSAXLE (BODY CONTROL VALVE faulty) as necessary and go to "Verification of Vehicle Repair " procedure.

VERIFICATION OF VEHICLE REPAIR EEF09061

Refer to DTC P0731.

DTC P0733 GEAR 3 INCORRECT RATIO

COMPONENT LOCATION EF3CAD3C

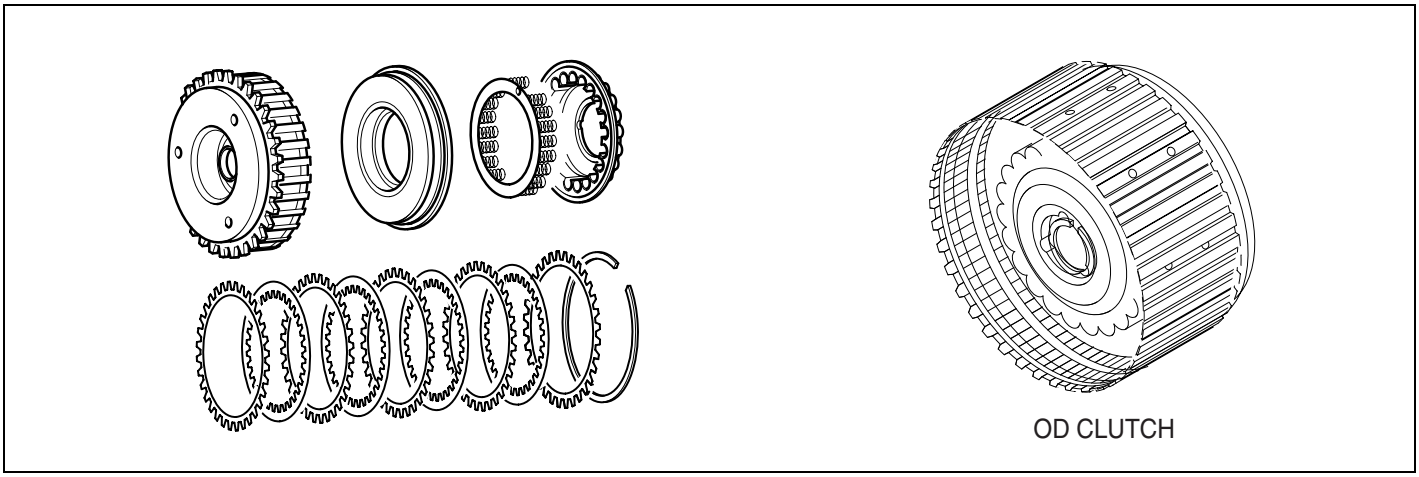

BKQE008A

GENERAL DESCRIPTION E2653AF7

The value of the input shaft speed should be equal to the value of the output shaft speed, when multiplied by the 3rd gear ratio, while the transaxle is engaged in the 3rd gear. For example, if the output speed is 1,000 rpm and the 3rd gear ratio is 1.000, then the input speed is 1,000 rpm.

DTC DESCRIPTION EC52C1ED

This code is set if the value of input shaft speed is not equal to the value of the output shaft, when multiplied by the 3rd gear ratio, while the transaxle is engaged in 3rd gear. This malfunction is mainly caused by mechanical troubles such as control valve sticking or solenoid valve malfunctioning rather than an electrical issue.

DTC DETECTING CONDITION E49BBC9E

Item	Detecting Condition	Possible cause
DTC Strategy	• 3rd gear incorrect ratio	• Faulty Input speed sensor • Faulty output speed sensor • Faulty UD clutch or OD clutch
Enable Conditions	• Engine speed > 450rpm • Output speed > 900rpm • Shift stage 3rd. gear • Input speed > 0rpm • A/T oil temp sensor voltage < 4.5V • Voltage of Battery > 10V • TRANSAXLE RANGE SWITCH is normal and after 2sec is passed from IG ON	
Threshold value	• | Input speed/3rd gear ratio - output speed | ≥ 200rpm	
Diagnostic Time	• More than 1sec	
Fail Safe	• Locked into 3rd gear. (If diagnosis code P0733 is output four times, the transaxle is locked into 3rd gear)	

SIGNAL WAVEFORM E7BB8AC0

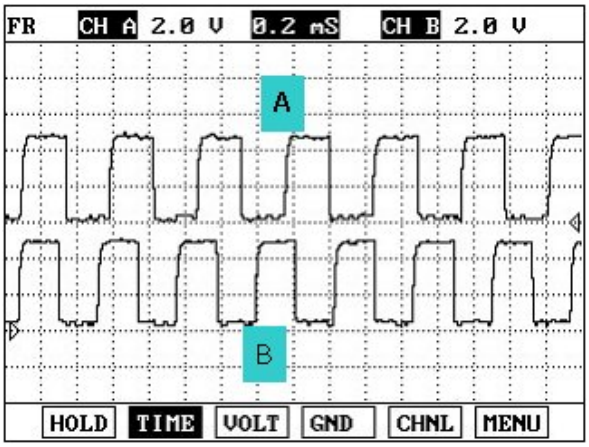

LKLG107B

MONITOR SCANTOOL DATA EC3727C9

1. Connect scantool to data link connector(DLC).
2. Engine "ON".
3. Monitor the "ENGINE SPEED, INPUT SPEED SENSOR, OUTPUT SPEED SENSOR, GEAR POSITION" parameter on the scantool.
4. Disconnect the solenoid valve connector and perform the "STALL TEST".

Specification : 2000~2700 engine rpm

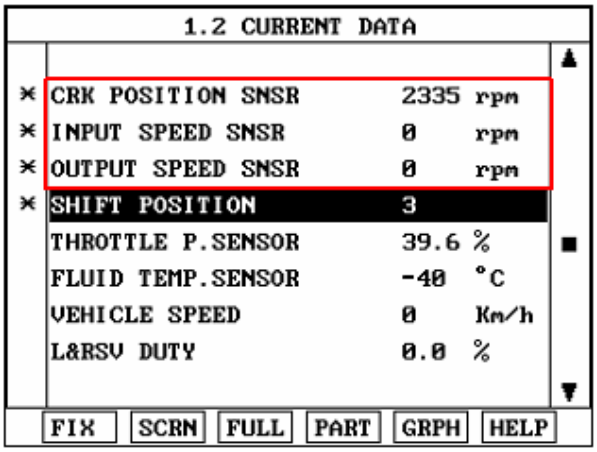

ELQE036A

OPERATING ELEMENT OF EACH SHIFTING RANGE

	UD/C	OD/C	REV/C	2ND/B	LR/B	OWC
P					●	
R			●		●	
N					●	
D1	●				●	○
D2	●			●		
D3	●	●				
D4		●		●		

※ Low & Reverse Brake is released when the vehicle speed is over 7Km/h(5 MPH).

Stall test procedure in D3 and reason

Procedure

1. Warm up the engine
2. Set 3rd gear hold by disconnecting the solenoid valve connector. Fully depress the brake pedal, then place the transaxle gear lever into "D" range. Press and hold the accelerator pedal to the floor for no more than eight seconds while observing the engine, input speed, and output speed RPM values.

   * The slippage of 3rd gear operating parts can be detected by stall test in D3

Reason for stall test

1. If there is no mechanical defaults in A/T, all slippage occurs in torque converter.
2. Therefore, engine revolution is output, but input and output speed revolution must be "zero" due to wheel's lock.
3. If OD clutch system(3rd gear operating part) has faults, input speed revolution will be out of specification.
4. If output speed revolution is output. It means that the foot brake force is not applied fully. Retesting using greater braking force is required.

5. Is "STALL TEST " within specification?

YES

▶ Go to "Signal Circuit Inspection" procedure.

NO

▶ Go to "Component Inspection" procedure.

CAUTION

- ***Do not let anybody stand in front of or behind the vehicle while this test is being carried out.***
- ***Check the A/T fluid level and temperature and the engine coolant temperature.***
  - ***Fluid level : At the hot mark on the oil level gauge.***
  - ***Fluid temperature : 80~100 °C (176 °F~ 212 °F).***
  - ***Engine coolant temperature : 80~100 °C (176 °F~ 212 °F).***

- ***Chock both rear wheels(left and right).***
- ***Pull the parking brake lever on with the brake pedal fully depressed.***
- ***The throttle should not be left fully open for more than eight seconds.***
- ***If carrying out the stall test two or more times, move the select lever to the "N" position and run the engine at 1,000 rpm to let the A/T fluid cool down before carrying out subsequent tests.***

SIGNAL CIRCUIT INSPECTION ED81421B

1. Connect Scantool.
2. Engine "ON".
3. Monitor the "INPUT & OUTPUT SPEED SENSOR" parameter on the scantool.
4. Accelerate the Engine speed until about 2000 rpm in the 3rd gear.

Specification : INPUT SPEED - (OUTPUT SPEED × GEAR RATIO) ≤ 200 RPM

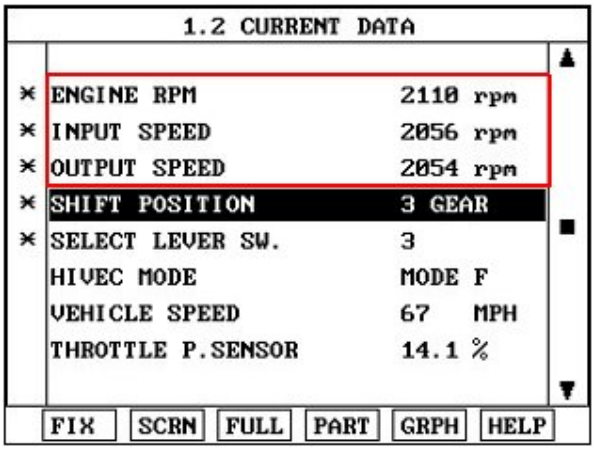

ELQE037A

5. Are "INPUT & OUTPUT SPEED SENSOR" within specifications?

YES

▶ Go to "Component Inspection" procedure.

NO

▶ Check for electrical noise of circuit in INPUT & OUTPUT SPEED SENSOR or replace INPUT & OUTPUT SPEED SENSOR. Repair as necessary and go to "Verification of Vehicle Repair" procedure.

COMPONENT INSPECTION EFAA83C0

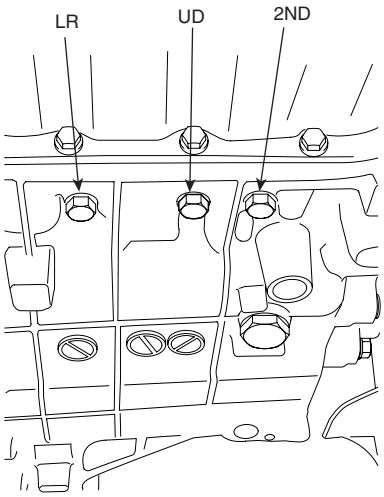

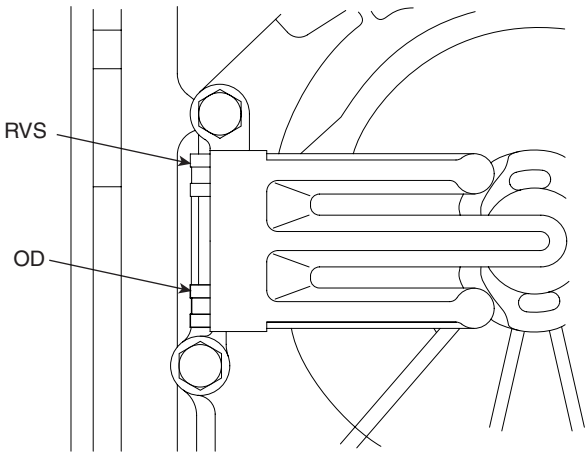

EKBF109D

1. Connect Oil pressure gauge to "UD" and "OD" port.
2. Engine "ON".
3. Drive a car with gear position 3 in fail mode.
4. Compare it with reference data as below.

Specification : Refer to DTC P0731.

5. Is oil pressure value within specification?

YES

▶ Repair AUTO TRANSAXLE(Clutch or Brake) as necessary and go to "Verification of Vehicle Repair" procedure.

NO

▶ Replace AUTO TRANSAXLE (BODY CONTROL VALVE faulty) as necessary and go to "Verification of Vehicle Repair " procedure.

VERIFICATION OF VEHICLE REPAIR E7BDCB35

Refer to DTC P0731.

DTC P0734 GEAR 4 INCORRECT RATIO

COMPONENT LOCATION E4C25870

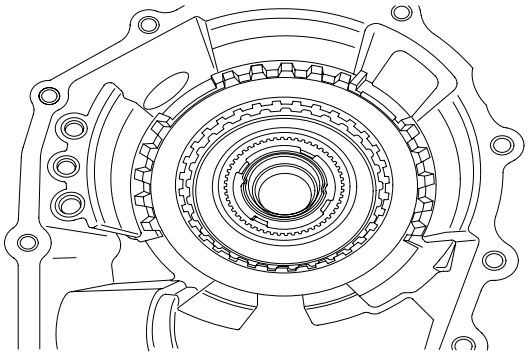

2ND BRAKE

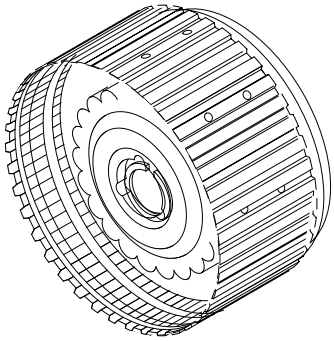

OD CLUTCH

BKQE010A

GENERAL DESCRIPTION E64BBE3B

The value of the input shaft speed should be equal to the value of the output shaft speed, when multiplied by the 4th gear ratio, while the transaxle is engaged in the 4th gear. For example, if the output speed is 1,000 rpm and the 4th gear ratio is 0.712, then the input speed is 0,712 rpm.

DTC DESCRIPTION EC34EBAD

This code is set if the value of input shaft speed is not equal to the value of the output shaft, when multiplied by the 4th gear ratio, while the transaxle is engaged in 4th gear. This malfunction is mainly caused by mechanical troubles such as control valve sticking or solenoid valve malfunctioning rather than an electrical issue.

DTC DETECTING CONDITION E4B3180C

Item	Detecting Condition	Possible cause
DTC Strategy	• 4th gear incorrect ratio	• Faulty Input speed sensor • Faulty output speed sensor • Faulty UD clutch or 2nd brake
Enable Conditions	• Engine speed > 450rpm • Output speed > 900rpm • Shift stage 4th. gear • Input speed > 0rpm • A/T oil temp sensor voltage < 4.5V • Voltage of Battery > 10V • TRANSAXLE RANGE SWITCH is normal and above 2sec is passed from IG ON	
Threshold value	• | Input speed/4th gear ratio - output speed | ≥ 200rpm	
Diagnostic Time	• More than 1sec	
Fail Safe	• Locked into 3rd gear. (If diagnosis code P0734 is output four times, the transaxle is locked into 3rd gear)	

SIGNAL WAVEFORM EC9BDEAE

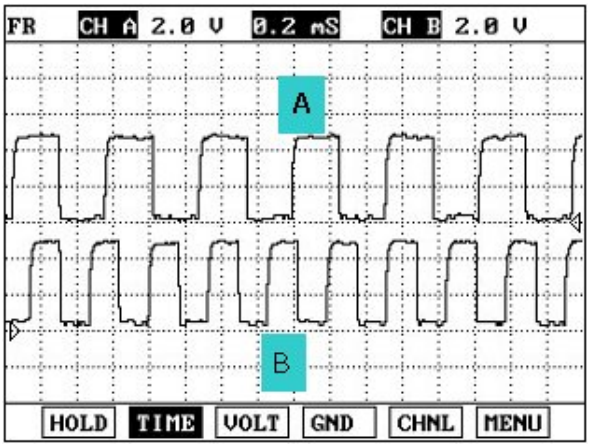

LKLG107C

MONITOR SCANTOOL DATA EC8F0610

※ It is difficult to "STALL TEST" in 4th gear, therefore Go to "Signal Circuit Inspection" procedure.

OPERATING ELEMENT OF EACH SHIFTING RANGE

	UD/C	OD/C	REV/C	2ND/B	LR/B	OWC
P					●	
R			●		●	
N					●	
D1	●				●	○
D2	●			●		
D3	●	●				
D4		●		●		

※ Low & Reverse Brake is released when the vehicle speed is over 7Km/h(5 MPH).

SIGNAL CIRCUIT INSPECTION E99C24DA

1. Connect Scantool.
2. Engine "ON".
3. Monitor the "INPUT & OUTPUT SPEED SENSOR" parameter on the scantool.
4. Accelerate the Engine speed until about 2000 rpm in the 4th gear.

Specification : INPUT SPEED - (OUTPUT SPEED × GEAR RATIO) ≤ 200 RPM

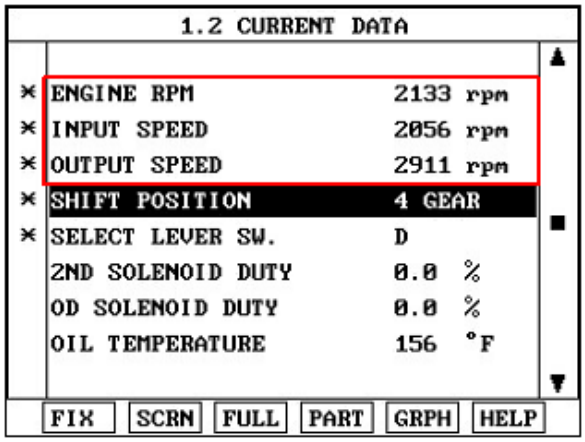

ELQE038A

5. Are "INPUT & OUTPUT SPEED SENSOR" within specifications?

YES

▶ Go to "Component Inspection" procedure.

NO

▶ Check for electrical noise of circuit in INPUT & OUTPUT SPEED SENSOR or replace INPUT & OUTPUT SPEED SENSOR. Repair as necessary and go to "Verification of Vehicle Repair" procedure.

COMPONENT INSPECTION EFE04A6C

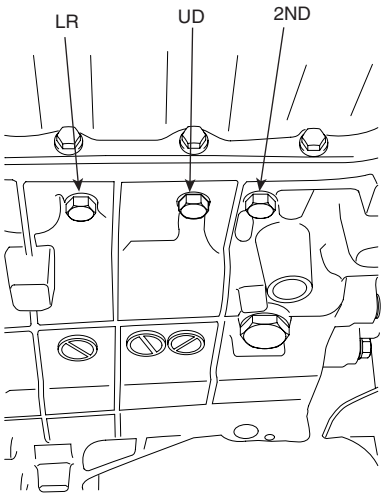

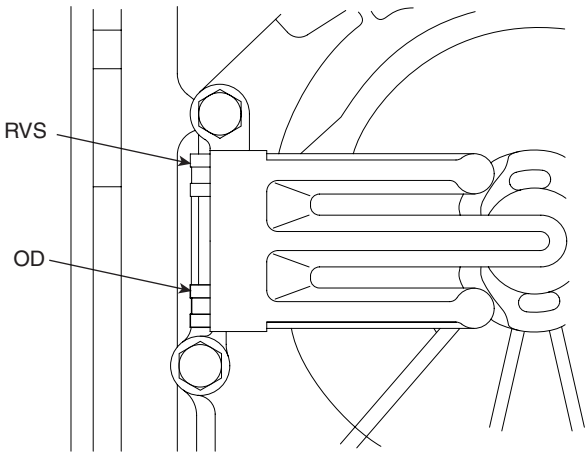

EKBF109D

1. Connect Oil pressure gauge to "OD" and "2nd" port.
2. Engine "ON".
3. Drive the car with gear position "4".
4. Compare it with reference data as below.

Specification : Refer to DTC P0731.

5. Is oil pressure value within specification?

YES

▶ Repair AUTO TRANSAXLE(Clutch or Brake) as necessary and go to "Verification of Vehicle Repair" procedure.

NO

▶ Replace AUTO TRANSAXLE (BODY CONTROL VALVE faulty) as necessary and go to "Verification of Vehicle Repair " procedure.

VERIFICATION OF VEHICLE REPAIR EC1BC0DB

Refer to DTC P0731.

DTC P0741 TORQUE CONVERTER CLUTCH CIRCUIT - STUCK OFF

GENERAL DESCRIPTION ECAA9FDC

The PCM/TCM controls the locking and unlocking of the Torque Converter Clutch (or Damper Clutch), to the input shaft of the transmission, by appling hydraulic pressure. The main purpose of T/C clutch control is to save fuel by decreasing the hydraulic load inside the T/C. The PCM/TCM outputs duty pulses to control the Damper Clutch Control Solenoid Valve(DCCSV) and hydraulic pressure is applied to the DC according to the DCC duty ratio value. When the duty ratio is high, high pressure is applied and the Damper Clutch is locked. The normal operating range of the Damper Clutch Control duty ratio value is from 30%(unlocked) to 85%(locked).

DTC DESCRIPTION ED347B7C

The PCM/TCM increases the duty ratio to engage the Damper Clutch by monitoring slip rpms (difference vlaue beteween engine speed and turbine speed). To decrease the slip of the Damper Clutch, the PCM/TCM increases the duty ratio by appling more hyraulic pressure. When slip rpm does not drop under some value with 100% duty ratio, the PCM/TCM determines that the Torque Converter Clutch is stuck OFF and sets this code.

DTC DETECTING CONDITION E3022CAC

Item	Detecting Condition	Possible cause
DTC Strategy	• Stuck "OFF"	※ TORQUE CONVERTER(DAMPER) CLUTCH : TCC • Faulty TCC or oil pressure system • Faulty TCC solenoid valve • Faulty body control valve • Faulty PCM/TCM
Enable Conditions	• Always	
Threshold value	• TCC duty > 0% or TCC abnormal slip counter ≥ 4	
Diagnostic Time	• 1 second	
Fail Safe	• Damper clutch abnormal system (If diagnosis code P0741 is output four times, TORQUE CONVERTER(DAMPER) CLUTCH is not controlled by PCM/TCM)	

MONITOR SCANTOOL DATA E2404E0E

1. Connect scantool to data link connector(DLC).
2. Engine "ON".
3. Select "D RANGE" and drive vehicle.
4. Monitor the "TORQUE CONVERTER(DAMPER) CLUTCH" parameter on the scantool.

Specification : TCC SLIP < 160RPM(In condition that TCC SOL. DUTY > 40%)

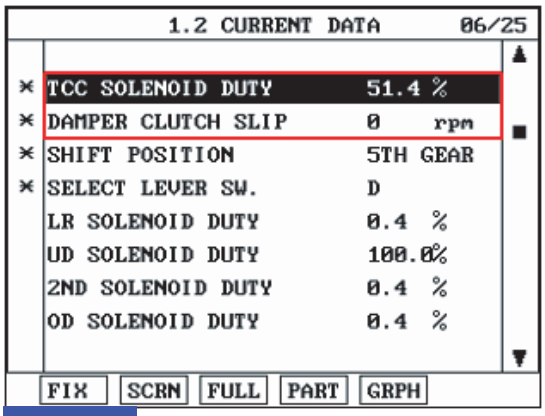

FIG.1)

FIG.1) : Normal status

LLLG112A

5. Are "TCC SOLENOID DUTY and TCC SLIP" within specifications?

YES

▶ Fault is intermittent caused by poor contact in the sensor's and/or TCM(PCM)'s connector or was repaired and TCM(PCM) memory was not cleared. Thoroughly check connectors for looseness, poor connection, bending, corrosion, contamination, deterioration or damage. Repair or replace as necessary and go to "Verification of vehicle repair" procedure.

NO

▶ Go to "Component inspection" procedure.

COMPONENT INSPECTION E2BA45DD

1. CHECK TORQUE CONVERTER CLUTCH SOLENOID VALVE

   1) Connect scantool to data link connector(DLC).

   2) Ignition "ON" & Engine "OFF".

   3) Select A/T Solenoid valve Actuator test and Operate Actuator test.

   4) Can you hear operating sound for using TCC SOLENOID VALVE Actuator Testing Function?

   YES

   ▶ Go to "CHECK OIL PRESSURE" as below.

   NO

   ▶ Replace "TCC SOLENOID VALVE" as necessary and Go to "Verification of Vehicle Repair" procedure.

2. CHECK OIL PRESSURE

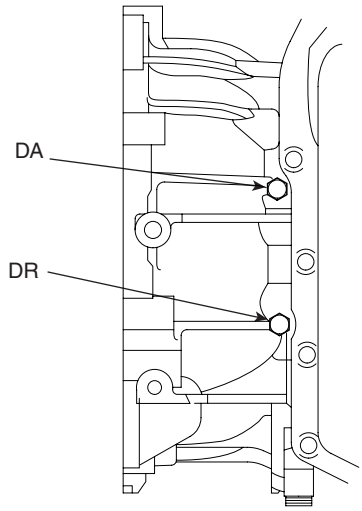

KKCF212B

1) Connect oil pressure gauge to "DA" ports.

2) Engine "ON".

3) After connecting Scantool and monitor the "TCC SOLENIOD VALVE DUTY" parameter on the scantool data list.

4) Operate vehicle with 3rd or 4th gear and operate the "TCC SOLENIOD VALVE DUTY" more than 85%.

5) Is oil pressure value within specification?

YES

▶ Repair TORQUE CONVERTER CLUTCH(REPLACE Torque Converter) as necessary and Go to "Verification of Vehicle Repair " procedure.

NO

▶ Replace A/T assembly (possible to BODY CONTROL VALVE faulty) as necessary and Go to "Verification of Vehicle Repair " procedure.

VERIFICATION OF VEHICLE REPAIR E1A6C21F

After a repair, it is essential to verify that the fault has been corrected.

1. Connect scantool and select "Diagnostic Trouble Codes(DTCs)" mode.
2. Using a scantool, Clear DTC.
3. Operate the vehicle within DTC Enable conditions in General information.
4. Are any DTCs present ?

YES

▶ Go to the applicable troubleshooting procedure.

NO

▶ System performing to specification at this time.

DTC P0742 TORQUE CONVERTER CLUTCH CIRCUIT - STUCK ON

GENERAL DESCRIPTION E14AFC7F

Refer to DTC P0741.

DTC DESCRIPTION EEB0CCA2

The TCM increases the duty ratio to engage the Damper Clutch by monitoring the slip rpms (difference value between engine speed and turbine speed). If a very small amount of slip rpm is maintained though the TCM applies 0% duty ratio value, then the TCM determines that the Torque Converter Clutch is stuck ON and sets this code.

DTC DETECTING CONDITION EDF0F9BC

Item	Detecting Condition	Possible cause
DTC Strategy	• Stuck "ON"	※ TORQUE CONVERTER(DAMPER) CLUTCH : TCC • Faulty TCC or oil pressure system • Faulty TCC solenoid valve • Faulty body control valve • Faulty TCM(PCM)
Enable Conditions	• Throttle position > 20% • Output speed > 500 rpm • Manifold air pressure > 60 kPa • A/T range switch D,SP • TCC stuck on delay timer > 5 secs	
Threshold value	• | Engine rpm - Input speed sensor rpm | ≤ 20 rpm	
Diagnostic Time	• More than 1sec	
Fail Safe	• Damper clutch abnormal system (If diagnosis code P0741 is output four times, TORQUE CONVERTER(DAMPER) CLUTCH is not controlled by PCM/TCM)	

MONITOR SCANTOOL DATA EDFE4CBB

1. Connect scantool to data link connector(DLC).
2. Engine "ON".
3. Select "D RANGE" and drive vehicle.
4. Monitor the "TORQUE CONVERTER(DAMPER) CLUTCH" parameter on the scantool.

Specification : TCC SLIP > 5RPM

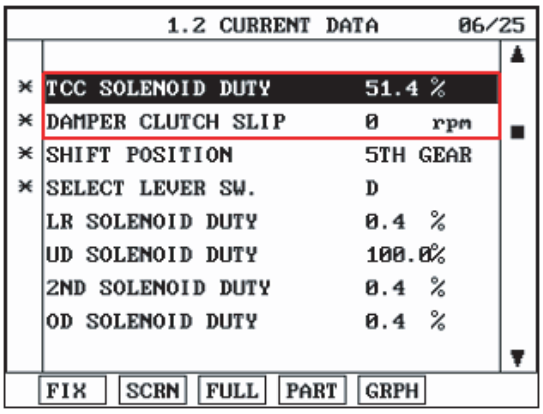

SCMAT6726L

5. Is TCC SLIP" within specifications?

YES

▶ Fault is intermittent caused by poor contact in the sensor's and/or TCM(PCM)'s connector or was repaired and TCM(PCM) memory was not cleared. Thoroughly check connectors for looseness, poor connection, bending, corrosion, contamination, deterioration or damage. Repair or replace as necessary and go to "Verification of vehicle repair" procedure.

NO

▶ Go to "Component inspection" procedure.

COMPONENT INSPECTION E791E44B

1. CHECK TORQUE CONVERTER CLUTCH SOLENOID VALVE

   1) Connect scantool to data link connector(DLC).

   2) Ignition "ON" & Engine "OFF".

   3) Select A/T solenoid valve actuator test and operate actuator test.

   4) Can you hear operating sound for using TCC SOLENOID VALVE actuator testing function?

   YES

   ▶ Go to "CHECK OIL PRESSURE" as below.

   NO

   ▶ Repair or replace as necessary and then go to "Verification of vehicle repair" procedure.

2. CHECK OIL PRESSURE

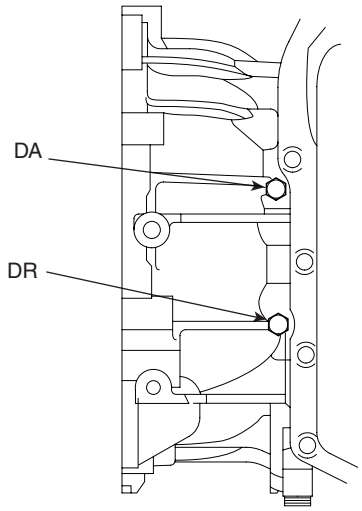

KKCF212B

1) Connect oil pressure gauge to "DR" ports.
2) Ignition "ON" & Engine "OFF".
3) After connecting scantool and monitor the "TCC SOLENIOD VALVE DUTY" parameter on the scantool data list.
4) Select 1st gear and accelerate Engine speed to 2500 rpm.
5) Measure oil pressure.
6) Is oil pressure value within specification?

Specification : approx. 598.2034KPa(6.1kg/cm²)

YES

▶ Repair TORQUE CONVERTER CLUTCH(REPLACE Torque Converter) as necessary and go to "Verification of vehicle repair" procedure.

NO

▶ Replace A/T assembly (possible to BODY CONTROL VALVE faulty) as necessary and Go to "Verification of vehicle Repair" procedure.

VERIFICATION OF VEHICLE REPAIR E4AD7DD3

Refer to DTC P0741.

DTC P0743 TORQUE CONVERTER CLUTCH CIRCUIT - ELECTRICAL

COMPONENT LOCATION EA07A4D4

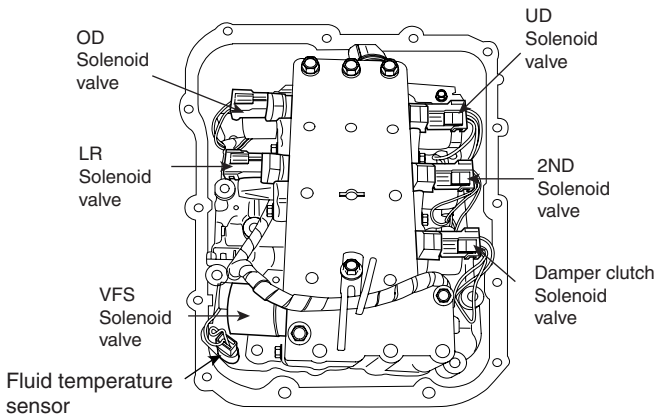

EKRF410A

GENERAL DESCRIPTION E406CFBC

The PCM/TCM controls the locking and unlocking of the Torque Converter Clutch (or Damper Clutch), to the input shaft of the transmission, by appling hydraulic pressure. The main purpose of T/C clutch control is to save fuel by decreasing the hydraulic load inside the T/C. The PCM/TCM outputs duty pulses to control the Damper Clutch Control Solenoid Valve(DCCSV) and hydraulic pressure is applied to the DC according to the DCC duty ratio value. When the duty ratio is high, high pressure is applied and the Damper Clutch is locked. The normal operating range of the Damper Clutch Control duty ratio value is from 30%(unlocked) to 85%(locked).

DTC DESCRIPTION E172CCCE

The PCM/TCM checks the Damper Clutch Control Signal by monitoring the feedback signal from the solenoid valve drive circuit. If an unexpected signal is monitored (for example, high voltage is detected when low voltage is expected, or low voltage is detected when high voltage is expected) the PCM/TCM judges that DCCSV circuit is malfunctioning and sets this code.

DTC DETECTING CONDITION EFAE4AC1

Item	Detecting Condition	Possible cause
DTC Strategy	• Check voltage range	※ TORQUE CONVERTER(DAMPER) CLUTCH : TCC • Open or short in circuit • Faulty TCC SOLENOID VALVE • Faulty PCM/TCM
Enable Conditions	• 16V > Voltage Battery > 11V • In gear state(no gear shifting) 500msec is passed from turn on the relay • A/T Relay = ON • Engine state = RUN	
Threshold value	• Feedback voltage from DCC control solenoid > vb-2V and DCC control duty is 100%	
Diagnostic Time	• More than 2 seconds	
Fail Safe	• Locked in 3rd gear.(Control relay off)	

SPECIFICATION E7EDFA7E

Solenoid Valve for Pressure Control

- Sensor type : Normal open 3-way
- Operating temperature : -22~266°F(-30°C~130°C)
- Frequency :
  - LR, 2ND, UD, OD, RED : 61.27Hz (at the ATF temp. -20°C above)
  - DCC : 30.64Hz
    ※ KM series : 35Hz

- Internal resistance :
  - 2.7~3.4Ω (68°F or 20°C)

- Surge voltage : 56 V

SIGNAL WAVEFORM E224E54A

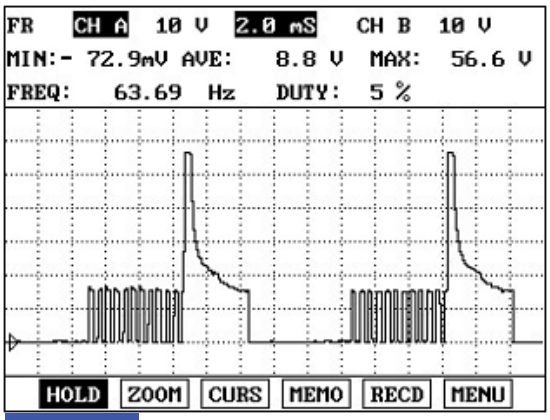

FIG.1)

FIG.1) : Operating of "DCCSV"

EKBF115A

MONITOR SCANTOOL DATA EDBDCD5A

1. Connect scantool to data link connector(DLC)
2. Engine "ON".
3. Monitor the "TCC SOL. VALVE" parameter on the scantool
4. Select "D RANGE" and Operate "TCC SOLENOID DUTY" more than 40%.

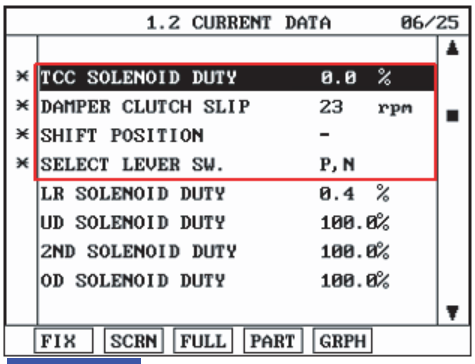

FIG.1)

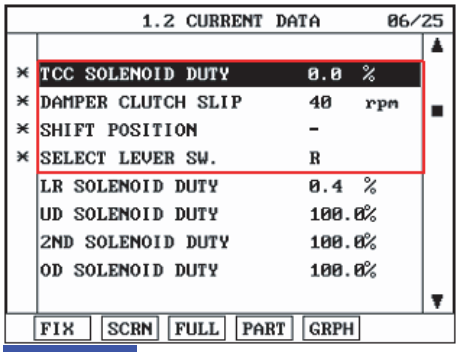

FIG.2)

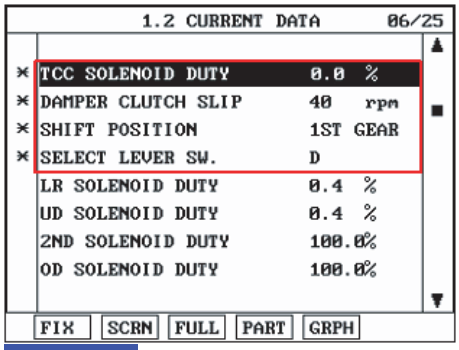

FIG.3)

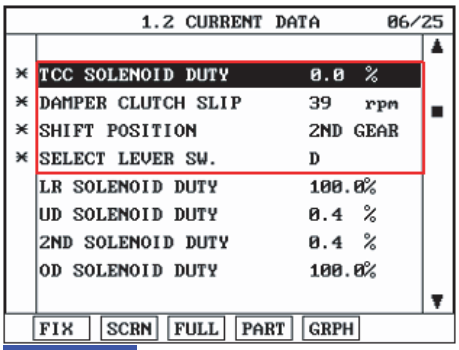

FIG.4)

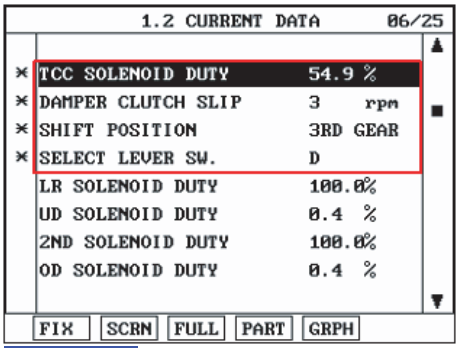

FIG.5)

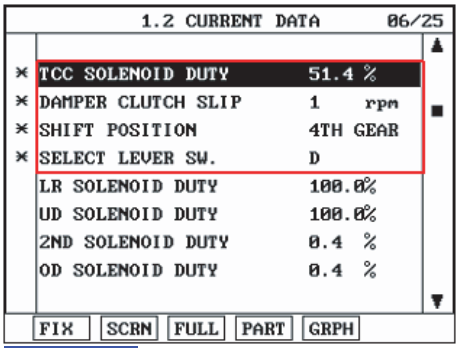

FIG.6)

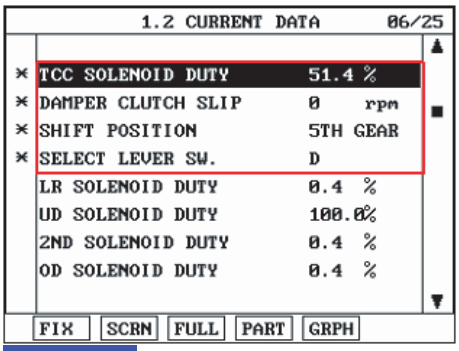

FIG.7)

FIG. 1) P,N
FIG. 2) "R"
FIG. 3) "D 1st" gear
FIG. 4) "2nd" gear
FIG. 5) "3rd" gear
FIG. 6) "4th" gear
FIG. 7) "5th" gear

LLLG114A

5. Does "TCC SOLENOID DUTY " follow the reference data?

YES

▶ Fault is intermittent caused by poor contact in the sensor's and/or TCM(PCM)'s connector or was repaired and TCM(PCM) memory was not cleared. Thoroughly check connectors for looseness, poor connection, bending, corrosion, contamination, deterioration or damage. Repair or replace as necessary and go to "Verification of vehicle repair" procedure.

NO

▶ Go to "Terminal & connector inspection " procedure.

TERMINAL & CONNECTOR INSPECTION E40ECA9A

1. Many malfunctions in the electrical system are caused by poor harness and terminals. Faults can also be caused by interference from other electrical systems, and mechanical or chemical damage.
2. Thoroughly check connectors for looseness, poor connection, bending, corrosion, contamination, deterioration, or damage.
3. Has a problem been found?

YES

▶ Repair as necessary and then go to "Verification of vehicle repair" procedure.

NO

▶ Go to "Power supply circuit inspection" procedure.

POWER SUPPLY CIRCUIT INSPECTION EFEDF07D

1. Disconnect "A/T SOLENOID VALVE" connector.
2. Measure voltage between terminal "5" of the sensor harness connector and chassis ground.
3. Turn ignition switch OFF → ON

Specification: 12V is measured only for approx. 0.5sec

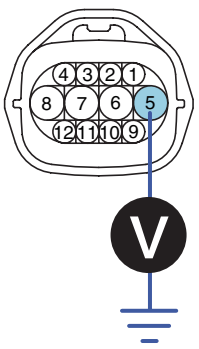

3. UD solenoid valve
4. 2ND solenoid valve
5. A/T battery
6. A/T battery
7. VF solenoid valve(+)
8. VF solenoid valve(-)
9. DCC solenoid valve
10.RED solenoid valve
11. LR solenoid valve
12. OD solenoid valve

SCMAT6730L

4. Is voltage within specifications?

YES

▶ Go to "Signal circuit inspection" procedure.

NO

▶ Check that A/T-20A fuse in engine room junction is installed or not blown.
▶ Check for open in harness. Repair as necessary and go to "Verification of vehicle repair" procedure.

SIGNAL CIRCUIT INSPECTION EAA2FDEB

1. Check signal circuit open inspection.

   1) Ignition "OFF".

   2) Disconnect "A/T SOLENOID VALVE" connector and "PCM/TCM" connector.

   3) Measure resistance between terminal "9" of the ATM SOLENOID VALVE harness connector and terminal "43" of the TCM harness connector.

Specification: approx. 0 Ω

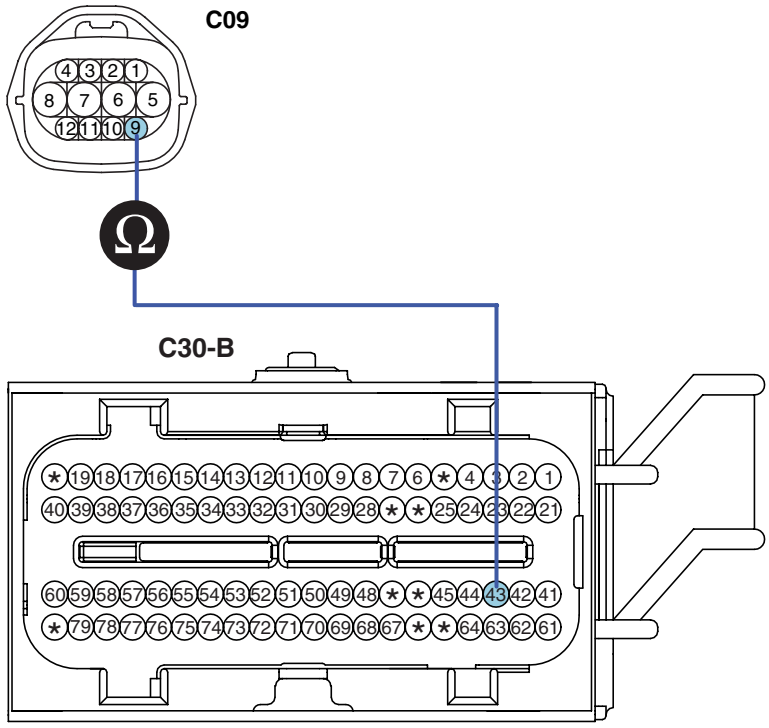

3. UD solenoid valve
4. 2ND solenoid valve
5. A/T battery
6. A/T battery
7. VF solenoid valve(+)
8. VF solenoid valve(-)
9. DCC solenoid valve
10. RED solenoid valve
11. LR solenoid valve
12. OD solenoid valve

42. OD solenoid valve control
45. 2ND solenoid valve control
43. DCC solenoid valve control
44. RED solenoid valve
75. VF solenoid valve(+)
59. VF solenoid valve(-)
22. LR solenoid valve control
03. UD solenoid valve control

SCMAT6731L

4) Is resistance within specifications?

YES

▶ Go to "Check signal circuit short inspection" procedure.

NO

▶ Check for open in harness. Repair as necessary and go to "Verification of vehicle repair" procedure.

2. Check signal circuit short inspection

1) Ignition "OFF".

2) Disconnect "A/T SOLENOID VALVE" connector and "PCM/TCM" connector.

3) Measure resistance between terminal "9" of the ATM SOLENOID VALVE harness and chassis ground.

Specification: Infinite

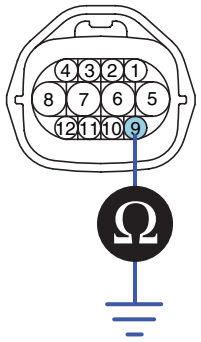

3. UD solenoid valve
4. 2ND solenoid valve
5. A/T battery
6. A/T battery
7. VF solenoid valve(+)
8. VF solenoid valve(-)
9. DCC solenoid valve
10.RED solenoid valve
11. LR solenoid valve
12. OD solenoid valve

SCMAT6732L

4) Is resistance within specifications?

YES

▶ Go to "Component inspection" procedure.

NO

▶ Check for short to ground in harness. Repair as necessary and go to "Verification of vehicle repair" procedure.

COMPONENT INSPECTION EAAC290B

1. CHECK SOLENOID VALVE

   1) Ignition "OFF".

   2) Disconnect "A/T SOLENOID VALVE" connector.

   3) Measure resistance between terminal "5" and terminal "9" of the ATM SOLENOID VALVE harness connector.

Specification: Approximately 2.7~3.4 Ω [20°C(68°F)]

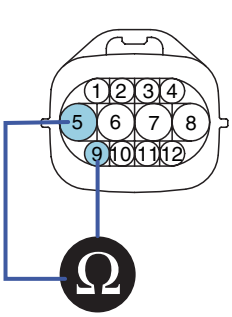

3. UD solenoid valve
4. 2ND solenoid valve
5. A/T battery
6. A/T battery
7. VF solenoid valve(+)
8. VF solenoid valve(-)
9. DCC solenoid valve
10. RED solenoid valve
11. LR solenoid valve
12. OD solenoid valve

SCMAT6733L

   4) Is resistance within specification?

YES

▶ Go to "CHECK PCM/TCM" as below.

NO

▶ Replace TCC SOLENOID VALVE as necessary and go to "Verification of vehicle repair" procedure.

2. CHECK PCM/TCM

   1) Connect scantool to data link connector(DLC).

   2) Ignition "ON" & Engine "OFF".

   3) Select A/T solenoid valve actuator test and operate actuator test.

   4) Can you hear operating sound for TCC SOLENOID VALVE actuator testing function?

YES

▶ Go to "Verification of vehicle repair" procedure.

NO

▶ Replace PCM/TCM as necessary and go to "Verification of vehicle repair" procedure.

ACTUATOR TEST CONDITION

1. IG SWITCH ON
2. TRANSAXLE RANGE SWITCH is normal
3. P RANGE
4. Vehicle Speed 0mph(0km/h)
5. Throttle position sensor < 1V
6. IDLE SWITCH ON
7. ENGINE RPM 0

VERIFICATION OF VEHICLE REPAIR EB78553C

After a repair, it is essential to verify that the fault has been corrected.

1. Connect scantool and select "Diagnostic Trouble Codes(DTCs)" mode.
2. Using a scantool, Clear DTC.
3. Operate the vehicle within DTC Enable conditions in General information.
4. Are any DTCs present?

YES

▶ Go to the applicable troubleshooting procedure.

NO

▶ System performing to specification at this time.

DTC P0748 PRESSURE CONTROL SOLENOID VALVE A - ELECTRICAL

COMPONENT LOCATION EC6BF3EE

Refer to DTC P0743.

GENERAL DESCRIPTION E363780E

Variable Faced Solenoid (Linear Solenoid) : With the duty control which uses higher frequency(600Hz), instead of the existing PWM type which adapts low frequency(60Hz) to control, spool valve can be controlled precisely.
In PWM control, the amount of oil flow is determined by the duration of "ON"signal among continuously repeated ON/OFF signals.
In VFS, the amount is decided by how widely spool valve open the passage of going through.

DTC DESCRIPTION EE1EC5BB

The TCM checks the VFS Control Signal by monitoring the feedback signal from the solenoid valve drive circuit. If an unexpected signal is monitored (for example, high voltage is detected when low voltage is expected, or low voltage is detected when high voltage is expected), the TCM judges that the Low and Reverse control solenoid circuit is malfunctioning and sets this code.

DTC DETECTING CONDITION E12CA0CF

Item	Detecting Condition	Possible cause
DTC Strategy	• Check voltage range	• Open or short in circuit • Faulty VFS SOLENOID VALVE • Faulty PCM/TCM
Enable Conditions	• 16V > Voltage Battery > 11V • In gear state(no gear shifting) 500msec is passed from turn on the relay • A/T Relay = ON • Engine state = RUN	
Threshold value	• Out of available voltage range	
Diagnostic Time	• More than 2 seconds	
Fail Safe	• Locked in 3rd gear (Control relay off)	

SPECIFICATION EDB255C8

Solenoid Valve for Pressure Control
- Sensor type : Normal open 3-way
- Operating temperature : -22~266°F(-30°C～130°C)
- Frequency :
  - LR, 2ND, UD, OD, RED : 61.27Hz (at the ATF temp. -20°C above)
  - DCC : 30.64Hz
  - VFS : 600 ± 20Hz
    ※ KM series : 35Hz

- Internal resistance :
  - 2.7~3.4Ω (68°F or 20°C) - LR, 2ND, UD, OD, RED, DCC
  - 4.35±0.35Ω (68°F or 20°C) - VFS

- Surge voltage : 56 V(except VFS)

SIGNAL WAVEFORM EB6E4BE0

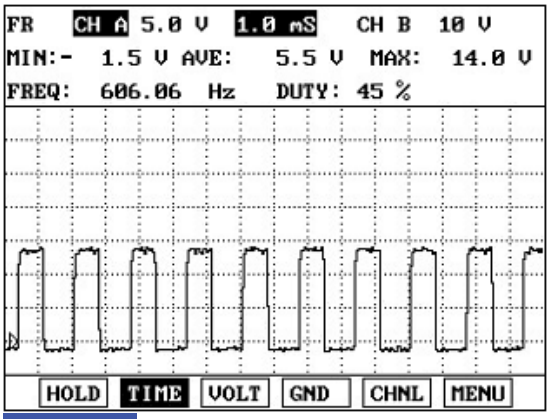

FIG.1)

FIG.1) : Wave form of "VFS"

EKBF116A

MONITOR SCANTOOL DATA E08C07BE

1. Connect scantool to data link connector(DLC).
2. Engine "ON".
3. Monitor the "PRESS CONTROL SOL. VALVE" parameter on the scantool.
4. Shift gear at each position.

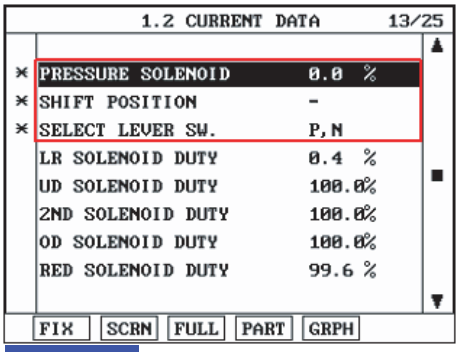

FIG.1)

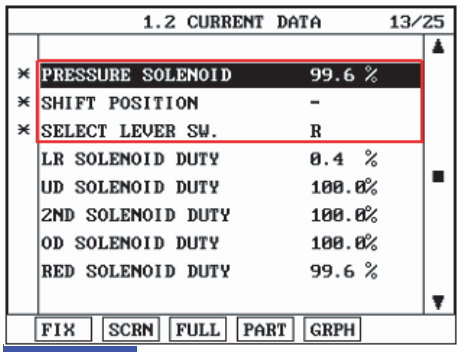

FIG.2)

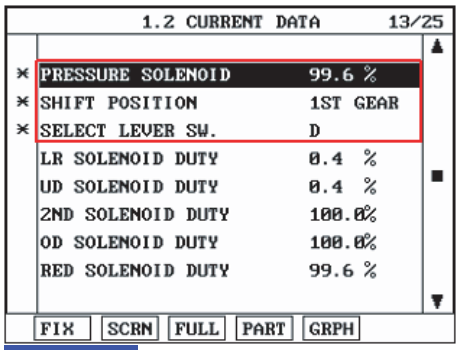

FIG.3)

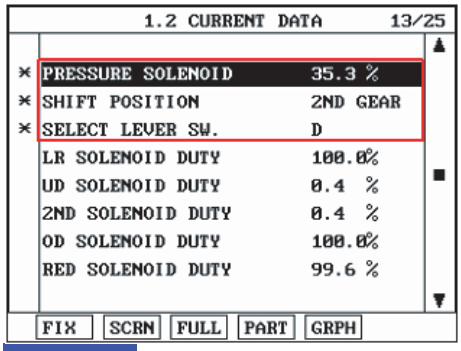

FIG.4)

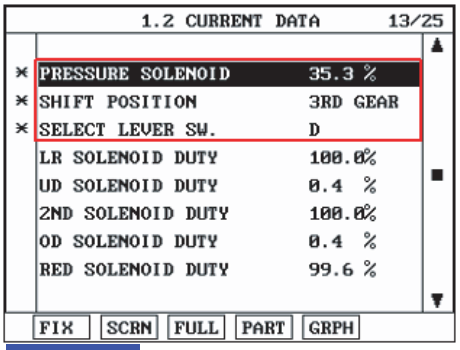

FIG.5)

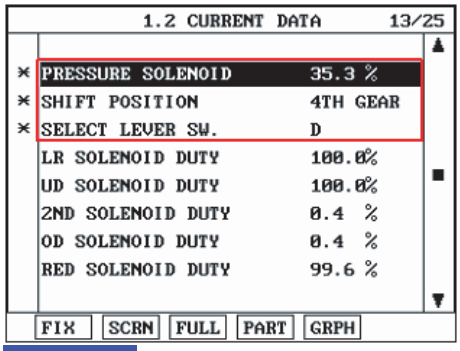

FIG.6)

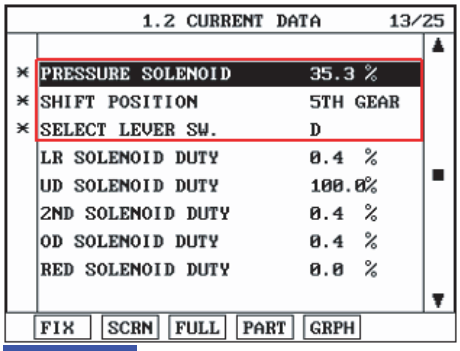

FIG.7)

FIG. 1) P,N
FIG. 2) "R"
FIG. 3) "D 1st" gear
FIG. 4) "2nd" gear
FIG. 5) "3rd" gear
FIG. 6) "4th" gear
FIG. 7) "5th" gear

SCMAT6736L

5. Does "PRESS CONTROL SOL DUTY " follow the reference data?

YES

▶ Fault is intermittent caused by poor contact in the sensor's and/or TCM(PCM)'s connector or was repaired and TCM(PCM) memory was not cleared. Thoroughly check connectors for looseness, poor connection, bending, corrosion, contamination, deterioration or damage. Repair or replace as necessary and go to "Verification of vehicle repair" procedure.

NO

▶ Go to "Terminal & connector inspection" procedure.

TERMINAL & CONNECTOR INSPECTION E9A1C782

Refer to DTC P0743.

POWER SUPPLY CIRCUIT INSPECTION EE693FC6

1. Disconnect "A/T SOLENOID VALVE" connector.
2. Measure voltage between terminal "7" of the sensor harness connector and chassis ground.
3. Measure voltage of VFS solenoid valve.

Specification: Approx.12V

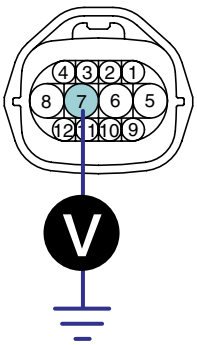

3. UD solenoid valve
4. 2ND solenoid valve
5. A/T battery
6. A/T battery
7. A/T battery
8. VF solenoid valve
9. DCC solenoid valve
11. LR solenoid valve
12. OD solenoid valve

SCMAT6737L

4. Is voltage within specifications?

YES

▶ Go to "Signal circuit inspection" procedure.

NO

▶ Check that A/T-20A fuse in engine room junction is installed or not blown.
▶ Check for open in harness. Repair as necessary and go to "Verification of vehicle repair" procedure.

SIGNAL CIRCUIT INSPECTION E6B9E4FC

1. Check signal circuit open inspection.

   1) Ignition "OFF".

   2) Disconnect "A/T SOLENOID VALVE" connector and "PCM/TCM" connector.

   3) Measure resistance between terminal "7" of the ATM SOLENOID VALVE harness connector and terminal "75" of the PCM/TCM harness connector.

Specification: approx. 0 Ω

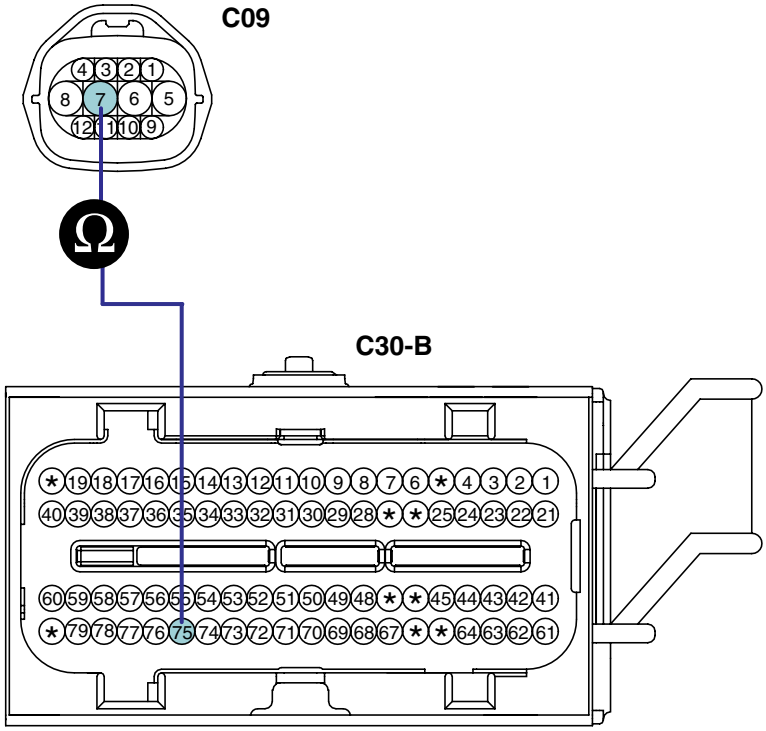

3. UD solenoid valve
4. 2ND solenoid valve
5. A/T battery
6. A/T battery
7. VF solenoid valve(+)
8. VF solenoid valve(+)
9. DCC solenoid valve
10. RED solenoid valve
11. LR solenoid valve
12. OD solenoid valve

42. OD solenoid valve control
45. 2ND solenoid valve control
43. DCC solenoid valve control
44. RED solenoid valve
75. VF solenoid valve(+)
59. VF solenoid valve(-)
22. LR solenoid valve control
03. UD solenoid valve control

SCMAT6738L

   4) Is resistance within specifications?

YES

▶ Go to "Check signal circuit short inspection" procedure.

NO

▶ Check for open in harness. Repair as necessary and go to "Verification of vehicle repair" procedure.

2. Check signal circuit short inspection

   1) Ignition "OFF".

   2) Disconnect "A/T SOLENOID VALVE" connector and "PCM/TCM" connector

   3) Measure resistance between terminal "7" of the ATM SOLENOID VALVE harness and chassis ground.

Specification: Infinite

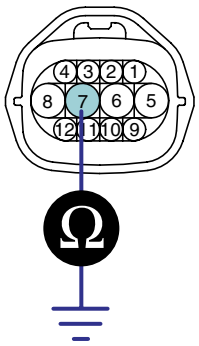

3. UD solenoid valve
4. 2ND solenoid valve
5. A/T battery
6. A/T battery
7. VF solenoid valve(-)
8. VF solenoid valve(+)
9. DCC solenoid valve
10.RED solenoid valve
11. LR solenoid valve
12. OD solenoid valve

SCMAT6739L

4) Is resistance within specifications?

YES

▶ Go to "Component inspection" procedure.

NO

▶ Check for short to ground in harness. Repair as necessary and go to "Verification of vehicle repair" procedure.

COMPONENT INSPECTION E836FB63

1. CHECK SOLENOID VALVE

1) Ignition "OFF".

2) Disconnect "A/T SOLENOID VALVE" connector.

3) Measure resistance between terminal "7" and terminal "8" of the ATM SOLENOID VALVE harness connector.

Specification: Approximately 4.35±0.35Ω [20°C(68°F)]

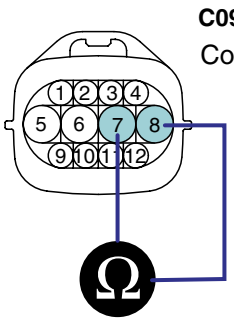

3. UD solenoid valve
4. 2ND solenoid valve
5. A/T battery
6. A/T battery
7. VF solenoid valve(+)
8. VF solenoid valve(-)
9. DCC solenoid valve
10.RED solenoid valve
11. LR solenoid valve
12. OD solenoid valve

SCMAT6740L

4) Is resistance within specification?

YES

▶ Go to "CHECK PCM/TCM" as below.

NO

▶ Replace "PRESS CONTROL SOL VALVE(VFS)" as necessary and go to "Verification of vehicle repair" procedure.

2. CHECK PCM/TCM

   1) Connect scantool to data link connector(DLC).

   2) Ignition "ON" & Engine "OFF".

   3) Select A/T Solenoid valve Actuator test and Operate Actuator test.

   4) Can you hear operating sound for "PRESS CONTROL SOL VALVE(VFS)" Actuator testing function?

      YES

      ▶ Go to "Verification of vehicle repair" procedure.

      NO

      ▶ Replace PCM/TCM as necessary and go to "Verification of vehicle repair" procedure.

      ACTUATOR TEST CONDITION
      1. IG SWITCH ON
      2. TRANSAXLE RANGE SWITCH is normal
      3. P RANGE
      4. Vehicle Speed 0mph(0km/h)
      5. Throttle position sensor < 1V
      6. IDLE SWITCH ON
      7. ENGINE RPM 0

VERIFICATION OF VEHICLE REPAIR E0EAF7CB

Refer to DTC P0743.

DTC P0750 SHIFT CONTROL SOLENOID VALVE A CIRCUIT MALFUNCTION

COMPONENT LOCATION EB49F3FD

Refer to DTC P0743.

GENERAL DESCRIPTION EEC6AFAA

The Automatic transmission changes the gear position of the transmission by utilizing a combination of clutches and brakes, which are controlled by solenoid valves. This automatic transmission consists of a: LR (Low and Reverse Brake), 2ND (2nd Brake), UD (Under Drive Clutch), OD (Over Drive Clutch), REV (Reverse Clutch), and RED (Reduction Brake, only for 5 speed transmissions). The LR Brake is engaged in the 1st gear and reverse gear positions.

DTC DESCRIPTION ECD36756

The TCM checks the Low and Reverse Control Signal by monitoring the feedback signal from the solenoid valve drive circuit. If an unexpected signal is monitored (for example, high voltage is detected when low voltage is expected, or low voltage is detected when high voltage is expected), the TCM judges that the Low and Reverse control solenoid circuit is malfunctioning and sets this code.

DTC DETECTING CONDITION E94E629F

Item	Detecting Condition	Possible cause
DTC Strategy	• Check voltage range	• Open or short in circuit • Faulty LR SOLENOID VALVE • Faulty PCM/TCM
Enable Conditions	• 16V > Voltage Battery > 11V • In gear state(no gear shifting) 500msec is passed from turn on the relay • A/T Relay = ON • Engine state = RUN	
Threshold value	• Out of available voltage range	
Diagnostic Time	• More than 2 seconds	
Fail Safe	• Locked in 3rd gear.(Control relay off)	

SPECIFICATION E3EBEAB1

Refer to DTC P0743.

SIGNAL WAVEFORM E2DCC546

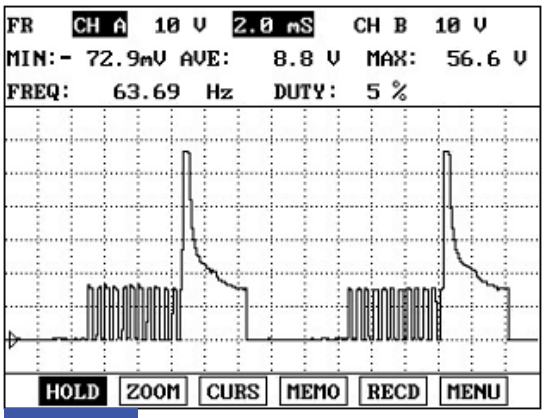

FIG.1)

FIG.1) : "2nd" gear → "1st" gear

EKBF117A

MONITOR SCANTOOL DATA E220AD8E

1. Connect scantool to data link connector(DLC).
2. Engine "ON".
3. Monitor the "LR SOL. VALVE" parameter on the scantool.
4. Shift gear at each position.

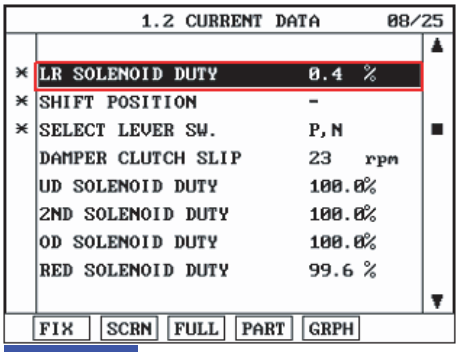

FIG.1)

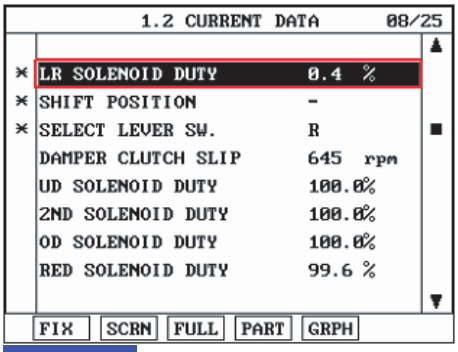

FIG.2)

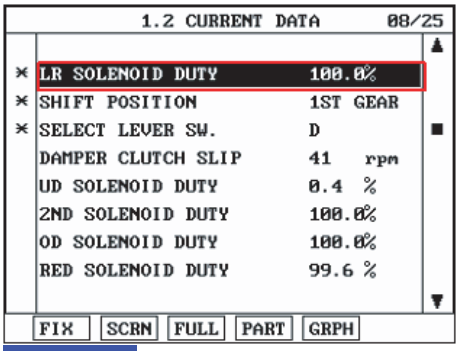

FIG.3)

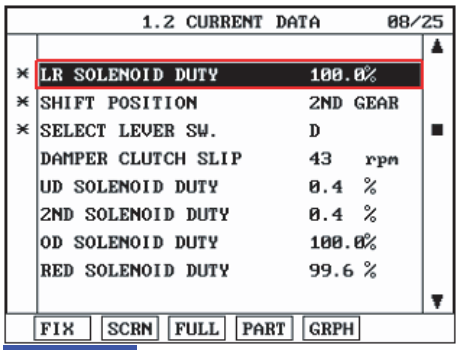

FIG.4)

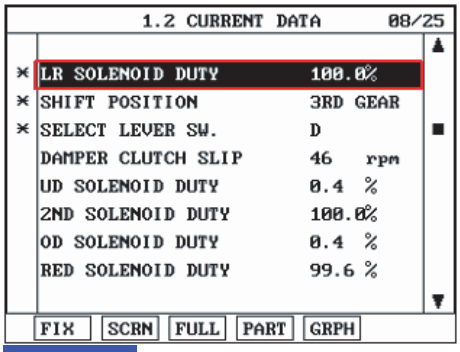

FIG.5)

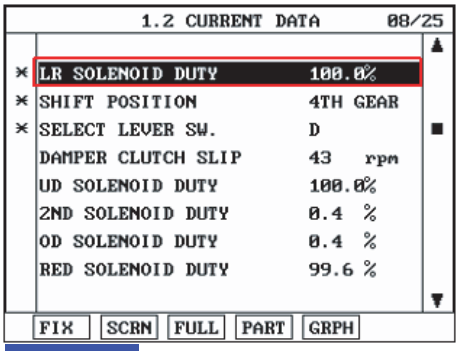

FIG.6)

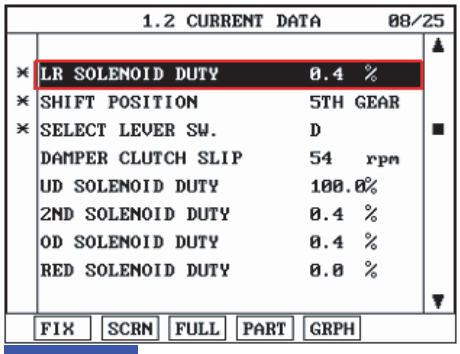

FIG.7)

FIG. 1) P,N
FIG. 2) "R"
FIG. 3) "D 1st" gear
FIG. 4) "2nd" gear
FIG. 5) "3rd" gear
FIG. 6) "4th" gear
FIG. 7) "5th" gear

SCMAT6741L

5. Does "LR SOLENOID DUTY " follow the reference data?

YES

▶ Fault is intermittent caused by poor contact in the sensor's and/or TCM(PCM)'s connector or was repaired and TCM(PCM) memory was not cleared. Thoroughly check connectors for looseness, poor connection, bending, corrosion, contamination, deterioration or damage. Repair or replace as necessary and go to "Verification of vehicle repair" procedure.

NO

▶ Go to "Terminal & connector inspection " procedure.

TERMINAL & CONNECTOR INSPECTION ECA3B290

Refer to DTC P0743.

POWER SUPPLY CIRCUIT INSPECTION EAC8F5C7

Refer to DTC P0743.

SIGNAL CIRCUIT INSPECTION E63BEBD5

1. Check signal circuit open inspection

   1) Ignition "OFF".

   2) Disconnect "A/T SOLENOID VALVE" connector and "PCM/TCM" connector.

   3) Measure resistance between terminal "11" of the ATM SOLENOID VALVE harness connector and terminal "22" of the PCM/TCM harness connector.

Specification: approx. 0 Ω

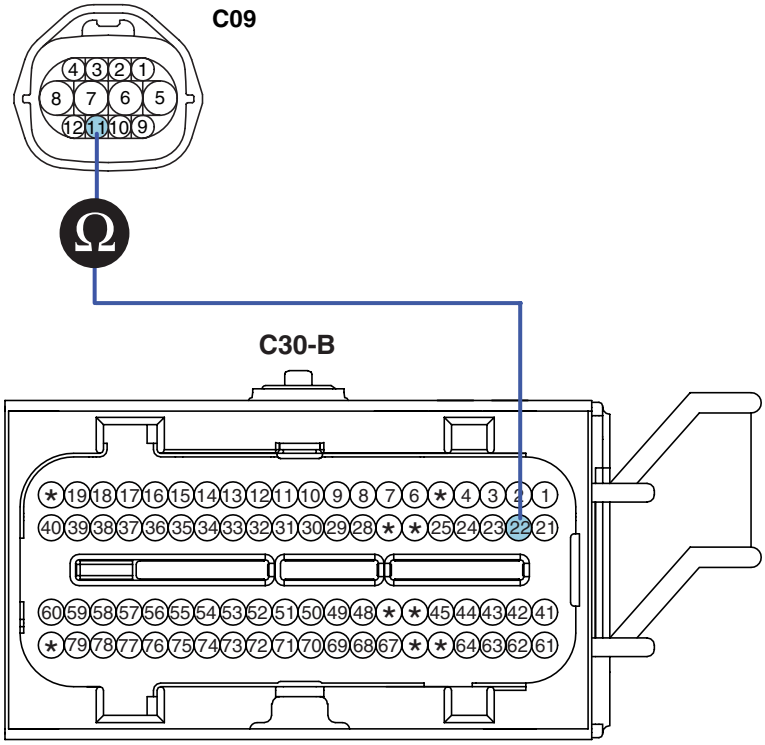

3. UD solenoid valve
4. 2ND solenoid valve
5. A/T battery
6. A/T battery
7. VF solenoid valve(+)
8. VF solenoid valve(-)
9. DCC solenoid valve
10.RED solenoid valve
11. LR solenoid valve
12. OD solenoid valve

42.OD solenoid valve control
45.2ND solenoid valve control
43.DCC solenoid valve control
44.RED solenoid valve
75.VF solenoid valve(+)
59.VF solenoid valve(-)
22.LR solenoid valve control
03.UD solenoid valve control

SCMAT6742L

4) Is resistance within specifications?

YES

▶ Go to "Check signal circuit short inspection" procedure.

NO

▶ Check for open in harness. Repair as necessary and go to "Verification of vehicle repair" procedure.

2. Check signal circuit short inspection

1) Ignition "OFF".

2) Disconnect "A/T SOLENOID VALVE" connector and "PCM/TCM" connector.

3) Measure resistance between terminal "11" of the ATM SOLENOID VALVE harness and chassis ground.

Specification: Infinite

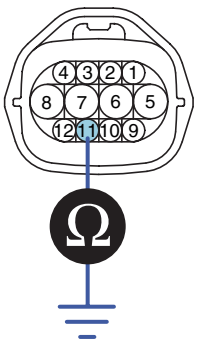

3. UD solenoid valve
4. 2ND solenoid valve
5. A/T battery
6. A/T battery
7. VF solenoid valve(+)
8. VF solenoid valve(-)
9. DCC solenoid valve
10.RED solenoid valve
11. LR solenoid valve
12. OD solenoid valve

SCMAT6743L

4) Is resistance within specifications?

YES

▶ Go to "Component inspection" procedure.

NO

▶ Check for short to ground in harness. Repair as necessary and go to "Verification of vehicle repair" procedure.

COMPONENT INSPECTION E6D76BCE

1. CHECK SOLENOID VALVE

1) Ignition "OFF".

2) Disconnect "A/T SOLENOID VALVE" connector.

3) Measure resistance between terminal "5" and terminal "11" of the ATM SOLENOID VALVE harness connector.

Specification: Approximately 2.7~3.4 Ω [20°C(68°F)]

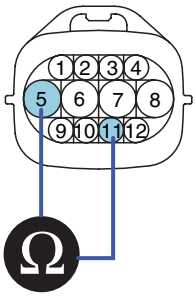

C09

Component Side

3. UD solenoid valve
4. 2ND solenoid valve
5. A/T battery
6. A/T battery
7. VF solenoid valve(+)
8. VF solenoid valve(-)
9. DCC solenoid valve
10.RED solenoid valve
11. LR solenoid valve
12. OD solenoid valve

SCMAT6744L

4) Is resistance within specification?

YES

▶ Go to "CHECK PCM/TCM" as below.

NO

▶ Replace LR SOLENOID VALVE as necessary and go to "Verification of vehicle repair" procedure.

2. CHECK PCM/TCM

1) Connect scantool to data link connector(DLC).

2) Ignition "ON" & Engine "OFF".

3) Select A/T solenoid valve actuator test and operate actuator test.

4) Can you hear operating sound for LR SOLENOID VALVE actuator testing function?

YES

▶ Go to "Verification of vehicle repair" procedure.

NO

▶ Replace PCM/TCM as necessary and go to "Verification of vehicle repair" procedure.

ACTUATOR TEST CONDITION

1. IG SWITCH ON
2. TRANSAXLE RANGE SWITCH is normal
3. P RANGE
4. Vehicle Speed 0mph(0km/h)
5. Throttle position sensor < 1V
6. IDLE SWITCH ON
7. ENGINE RPM 0

VERIFICATION OF VEHICLE REPAIR EB0D2E1E

Refer to DTC P0743.

DTC P0755 SHIFT CONTROL SOLENOID VALVE B CIRCUIT MALFUNCTION

COMPONENT LOCATION E89B6127

Refer to DTC P0743.

GENERAL DESCRIPTION EC5FC358

The Automatic transmission changes the gear position of the transmission by utilizing a combination of clutches and brakes, which are controlled by solenoid valves. This automatic transmission consists of a: LR (Low and Reverse Brake), 2ND (2nd Brake), UD (Under Drive Clutch), OD (Over Drive Clutch), REV (Reverse Clutch), and RED (Reduction Brake, only for 5 speed transmissions).
The UD Clutch is engaged in the 1st gear, 2nd gear and 3rd gear positions.

DTC DESCRIPTION EEB2AA3F

The TCM checks the Under Drive Clutch Control Signal by monitoring the feedback signal from the solenoid valve drive circuit. If an unexpected signal is monitored (for example, high voltage is detected when low voltage is expected, or low voltage is detected when high voltage is expected), the TCM judges that Under Drive control solenoid circuit is malfunctioning and sets this code.

DTC DETECTING CONDITION EFEA610C

Item	Detecting Condition	Possible cause
DTC Strategy	• Check voltage range	• Open or short in circuit • Faulty UD SOLENOID VALVE • Faulty PCM/TCM
Enable Conditions	• 16V > Voltage Battery > 11V • In gear state(no gear shifting) 500msec is passed from turn on the relay • A/T Relay = ON • Engine state = RUN	
Threshold value	• Out of available voltage range	
Diagnostic Time	• More than 2 seconds	
Fail Safe	• Locked in 3rd gear.(Control relay off)	

SPECIFICATION E690711E

Refer to DTC P0743.

SIGNAL WAVEFORM E0532F7D

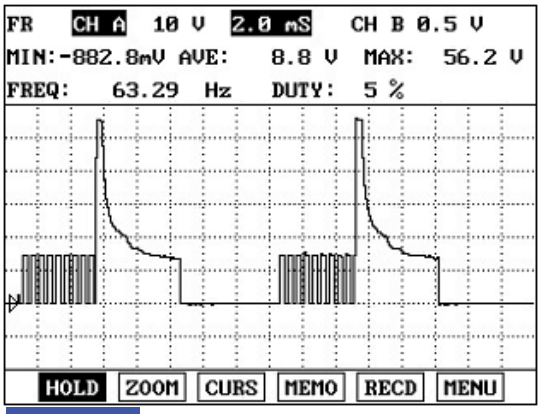

FIG.1)

FIG.1) : "N" → "D"

EKBF118A

MONITOR SCANTOOL DATA E74D5AEA

1. Connect scantool to data link connector(DLC).
2. Engine "ON".
3. Monitor the "UD SOL. VALVE" parameter on the scantool.
4. Shift gear at each position.

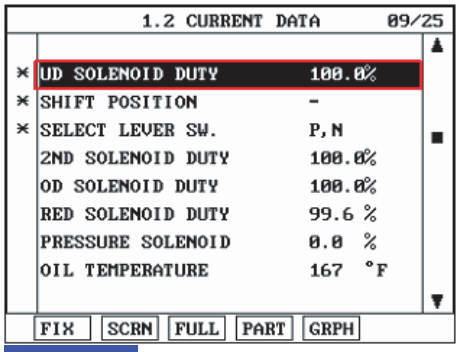

FIG.1)

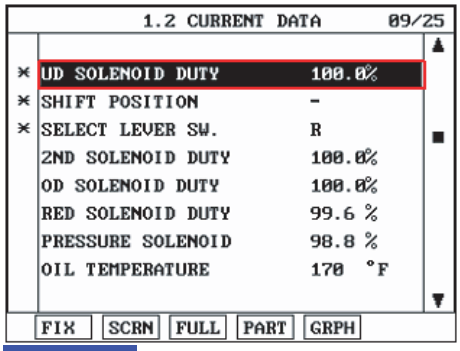

FIG.2)

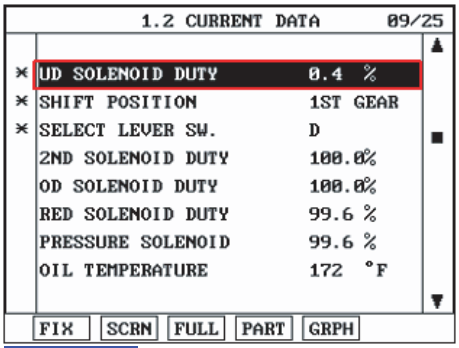

FIG.3)

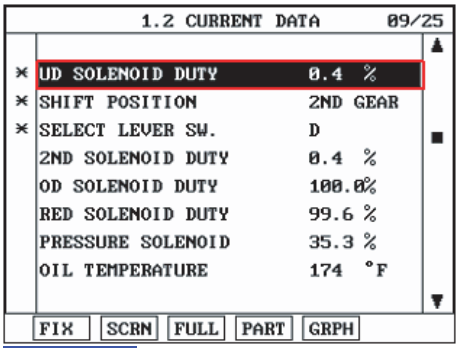

FIG.4)

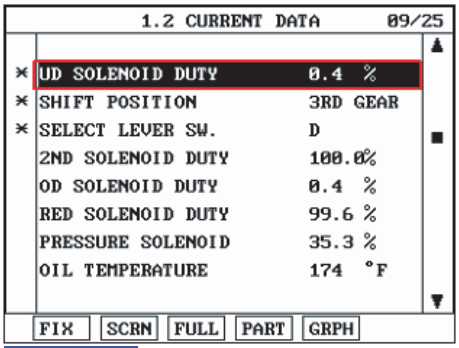

FIG.5)

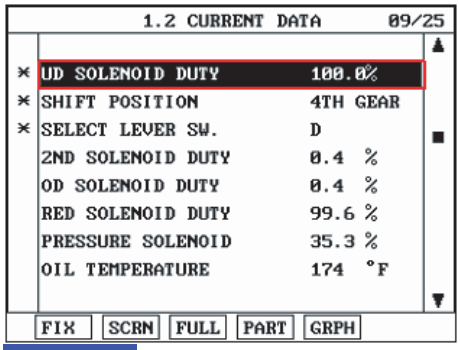

FIG.6)

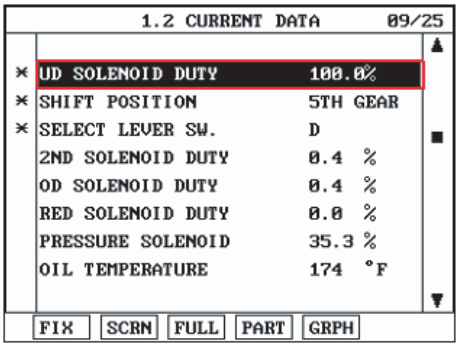

FIG.7)

FIG. 1) P,N
FIG. 2) "R"
FIG. 3) "D 1st" gear
FIG. 4) "2nd" gear
FIG. 5) "3rd" gear
FIG. 6) "4th" gear
FIG. 7) "5th" gear

SCMAT6745L

5. Does "UD SOLENOID DUTY " follow the reference data?

YES

▶ Fault is intermittent caused by poor contact in the sensor's and/or TCM(PCM)'s connector or was repaired and TCM(PCM) memory was not cleared. Thoroughly check connectors for looseness, poor connection, bending, corrosion, contamination, deterioration or damage. Repair or replace as necessary and go to "Verification of vehicle repair" procedure.

NO

▶ Go to "Terminal & connector inspection" procedure.

TERMINAL & CONNECTOR INSPECTION E4BDD1F6

Refer to DTC P0743.

POWER SUPPLY CIRCUIT INSPECTION E736436B

1. Disconnect "A/T SOLENOID VALVE" connector.
2. Measure voltage between terminal "6" of the sensor harness connector and chassis ground.
3. Turn ignition switch OFF → ON.

Specification: 12V is measured only for approx. 0.5sec

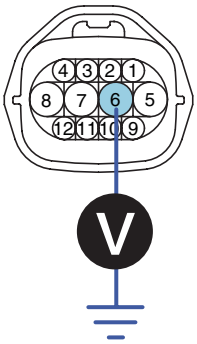

3. UD solenoid valve
4. 2ND solenoid valve
5. A/T battery
6. A/T battery
7. VF solenoid valve(+)
8. VF solenoid valve(-)
9. DCC solenoid valve
10. RED solenoid valve
11. LR solenoid valve
12. OD solenoid valve

SCMAT6746L

4. Is voltage within specifications?

YES

▶ Go to "Signal circuit inspection" procedure.

NO

▶ Check that A/T-20A fuse in engine room junction is installed or not blown.
▶ Check for open in harness. Repair as necessary and go to "Verification of vehicle repair" procedure.

SIGNAL CIRCUIT INSPECTION E5D6EC84

1. Check signal circuit open inspection

   1) Ignition "OFF".

   2) Disconnect "A/T SOLENOID VALVE" connector and "PCM/TCM" connector.

   3) Measure resistance between terminal "3" of the ATM SOLENOID VALVE harness connector and terminal "3" of the PCM/TCM harness connector.

Specification: approx. 0 Ω

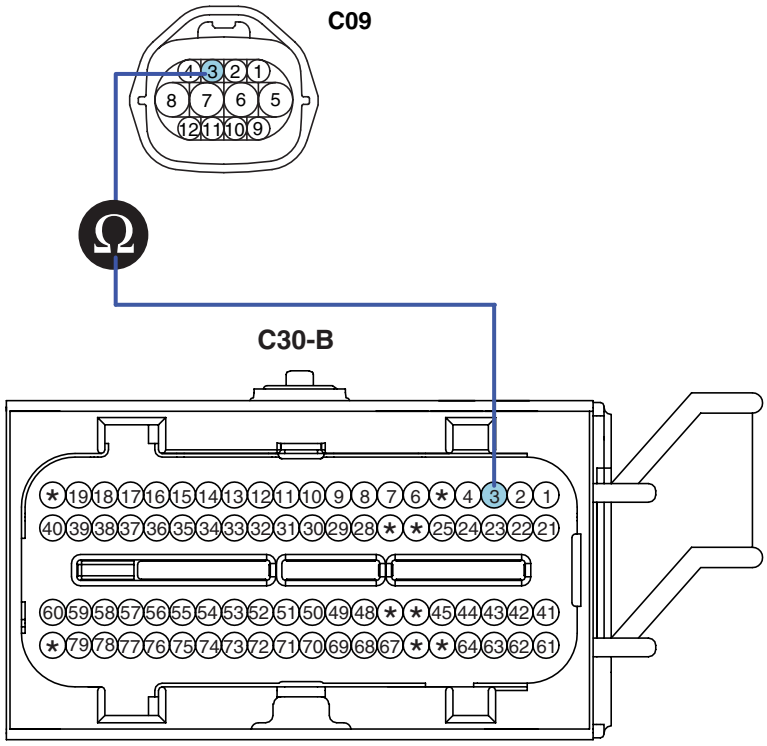

3. UD solenoid valve
4. 2ND solenoid valve
5. A/T battery
6. A/T battery
7. VF solenoid valve(+)
8. VF solenoid valve(-)
9. DCC solenoid valve
10.RED solenoid valve
11. LR solenoid valve
12. OD solenoid valve

42.OD solenoid valve control
45.2ND solenoid valve control
43.DCC solenoid valve control
44.RED solenoid valve
75.VF solenoid valve(+)
59.VF solenoid valve(-)
22.LR solenoid valve control
03.UD solenoid valve control

SCMAT6747L

   4) Is resistance within specifications?

YES

▶ Go to "Check signal circuit short inspection" procedure.

NO

▶ Check for open in harness. Repair as necessary and go to "Verification of vehicle repair" procedure.

2. Check signal circuit short inspection

   1) Ignition "OFF".

   2) Disconnect "A/T SOLENOID VALVE" connector and "PCM/TCM" connector.

   3) Measure resistance between terminal "3" of the ATM SOLENOID VALVE harness and chassis ground.

Specification: Infinite

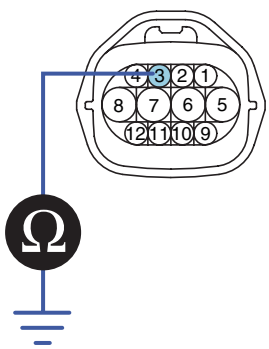

3. UD solenoid valve
4. 2ND solenoid valve
5. A/T battery
6. A/T battery
7. VF solenoid valve(+)
8. VF solenoid valve(-)
9. DCC solenoid valve
10.RED solenoid valve
11. LR solenoid valve
12. OD solenoid valve

SCMAT6748L

4) Is resistance within specifications?

YES

▶ Go to "Component inspection" procedure.

NO

▶ Check for short to ground in harness. Repair as necessary and go to "Verification of vehicle repair" procedure.

COMPONENT INSPECTION EB8A623F

1. CHECK SOLENOID VALVE

1) Ignition "OFF".

2) Disconnect "A/T SOLENOID VALVE" connector.

3) Measure resistance between terminal "3" and terminal "6" of the ATM SOLENOID VALVE harness connector.

Specification: Approximately 2.7~3.4 Ω [20°C(68°F)]

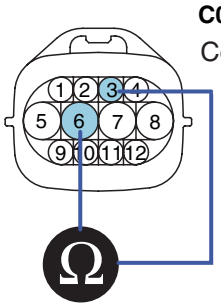

3. UD solenoid valve
4. 2ND solenoid valve
5. A/T battery
6. A/T battery
7. VF solenoid valve(+)
8. VF solenoid valve(-)
9. DCC solenoid valve
10.RED solenoid valve
11. LR solenoid valve
12. OD solenoid valve

SCMAT6749L

4) Is resistance within specification?

YES

▶ Go to "CHECK PCM/TCM" as below.

NO

▶ Replace UD SOLENOID VALVE as necessary and go to "Verification of vehicle repair" procedure.

2. CHECK PCM/TCM

   1) Connect scantool to data link connector(DLC).

   2) Ignition "ON" & Engine "OFF".

   3) Select ATM solenoid valve actuator test and operate actuator test.

   4) Can you hear operating sound for UD SOLENOID VALVE actuator testing function?

   YES

   ▶ Go to "Verification of vehicle repair" procedure.

   NO

   ▶ Replace PCM/TCM as necessary and go to "Verification of vehicle repair" procedure.

   ACTUATOR TEST CONDITION
   1. IG SWITCH ON
   2. TRANSAXLE RANGE SWITCH is normal
   3. P RANGE
   4. Vehicle Speed 0mph(0km/h)
   5. Throttle position sensor < 1V
   6. IDLE SWITCH ON
   7. ENGINE RPM 0

VERIFICATION OF VEHICLE REPAIR ECF2D3A5

Refer to DTC P0743.

DTC P0760 SHIFT CONTROL SOLENOID VALVE C CIRCUIT MALFUNCTION

COMPONENT LOCATION E1994EC6

Refer to DTC P0743.

GENERAL DESCRIPTION EE1A17C7

The Automatic transmission changes the gear position of the transmission by utilizing a combination of clutches and brakes, which are controlled by solenoid valves. This automatic transmission consists of a: LR (Low and Reverse Brake), 2ND (2nd Brake), UD (Under Drive Clutch), OD (Over Drive Clutch), REV (Reverse Clutch), and RED (Reduction Brake, only for 5 speed transmissions).
The 2ND Brake is engaged in the 2nd gear and 4th gear positions.

DTC DESCRIPTION E2AC72C5

The TCM checks the Under Drive Clutch Control Signal by monitoring the feedback signal from the solenoid valve drive circuit. If an unexpected signal is monitored, (For example, high voltage is detected when low voltage is expected or low voltage is detected when high voltage is expected) the TCM judges that 2nd Brake drive control solenoid circuit is malfunctioning and sets this code.

DTC DETECTING CONDITION EE1D0BD8

Item	Detecting Condition	Possible cause
DTC Strategy	• Check voltage range	• Open or short in circuit • Faulty 2ND SOLENOID VALVE • Faulty PCM/TCM
Enable Conditions	• 16V > Voltage Battery > 11V • In gear state(no gear shifting) 500msec is passed from turn on the relay • A/T Relay = ON • Engine state = RUN	
Threshold value	• Out of available voltage range	
Diagnostic Time	• More than 2 seconds	
Fail Safe	• Locked in 3rd gear.(Control relay off)	

SPECIFICATION E84E22AA

Refer to DTC P0743.

SIGNAL WAVEFORM EF2EFDF9

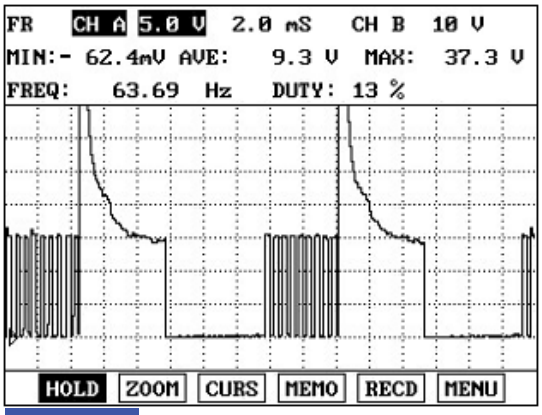

FIG.1)

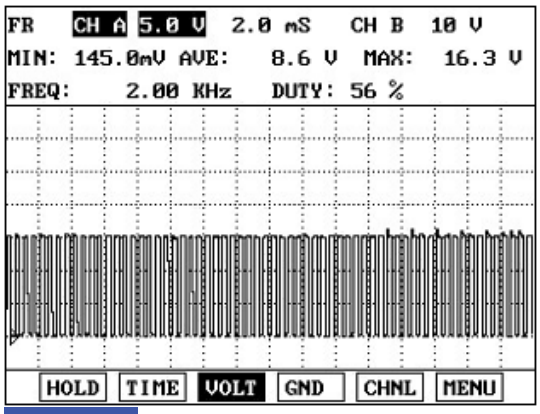

FIG.2)

FIG. 1) "2ND" gear → "1st" gear
FIG. 2) "P & N" Range

EKBF119A

MONITOR SCANTOOL DATA EF772FBB

1. Connect scantool to data link connector(DLC).
2. Engine "ON".
3. Monitor the "2nd SOL. VALVE" parameter on the scantool.
4. Shift gear at each position.

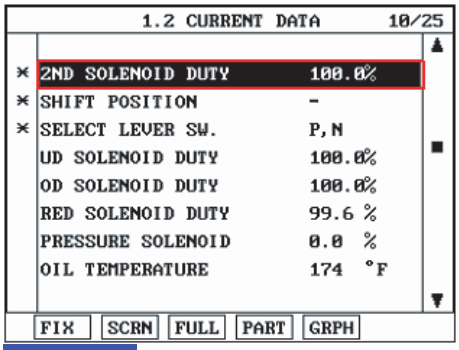

FIG.1)

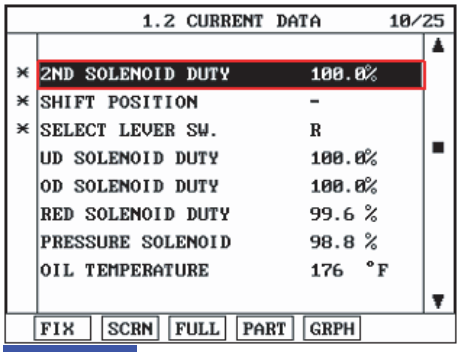

FIG.2)

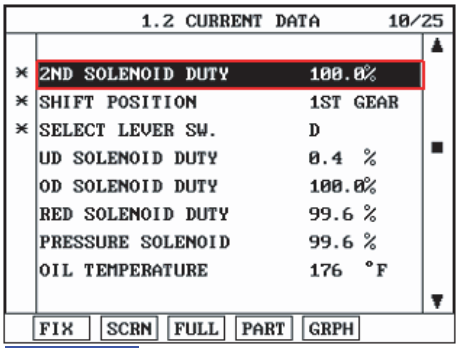

FIG.3)

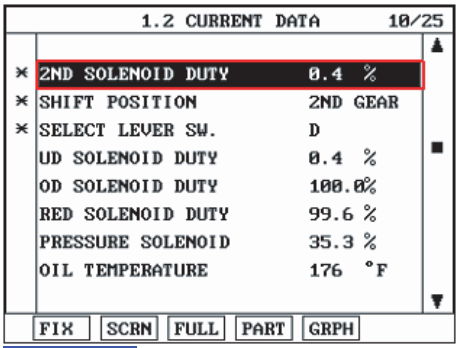

FIG.4)

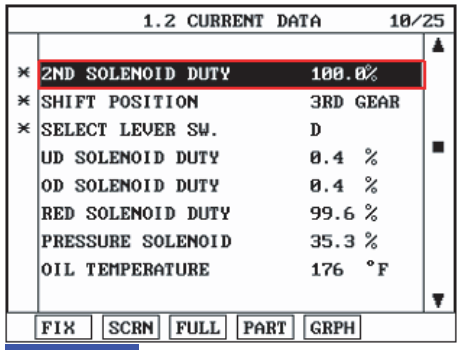

FIG.5)

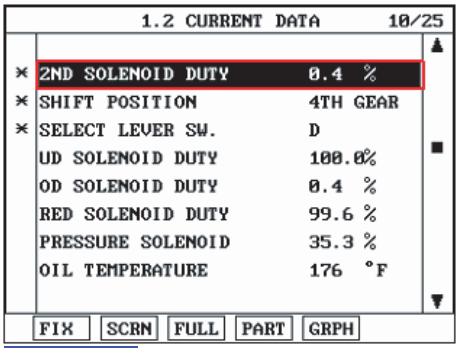

FIG.6)

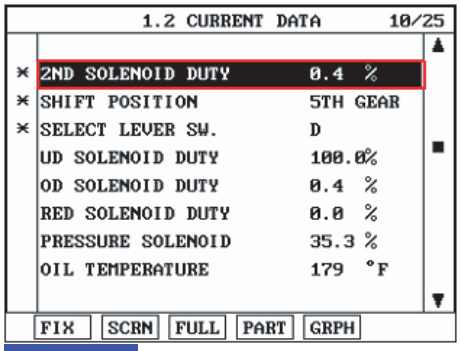

FIG.7)

FIG. 1) P,N
FIG. 2) "R"
FIG. 3) "D 1st" gear
FIG. 4) "2nd" gear
FIG. 5) "3rd" gear
FIG. 6) "4th" gear
FIG. 7) "5th" gear

SCMAT6750L

5. Does "2nd SOLENOID DUTY " follow the reference data?

YES

▶ Fault is intermittent caused by poor contact in the sensor's and/or TCM(PCM)'s connector or was repaired and TCM(PCM) memory was not cleared. Thoroughly check connectors for looseness, poor connection, bending, corrosion, contamination, deterioration or damage. Repair or replace as necessary and go to "Verification of vehicle repair" procedure.

NO

▶ Go to "Terminal & connector inspection " procedure.

TERMINAL & CONNECTOR INSPECTION ED8CD3AF

Refer to DTC P0743.

POWER SUPPLY CIRCUIT INSPECTION EDF39BB7

1. Disconnect "A/T SOLENOID VALVE" connector.
2. Measure voltage between terminal "6" of the sensor harness connector and chassis ground.
3. Turn ignition switch OFF → ON.

Specification: 12V is measured only for approx. 0.5sec

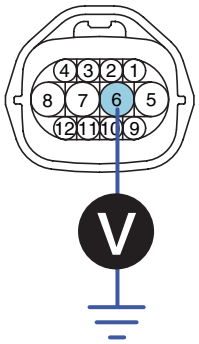

3. UD solenoid valve
4. 2ND solenoid valve
5. A/T battery
6. A/T battery
7. VF solenoid valve(+)
8. VF solenoid valve(-)
9. DCC solenoid valve
10. RED solenoid valve
11. LR solenoid valve
12. OD solenoid valve

SCMAT6746L

4. Is voltage within specifications?

YES

▶ Go to "Signal circuit inspection" procedure.

NO

▶ Check that A/T-20A fuse in engine room junction is installed or not blown.
▶ Check for open in harness. Repair as necessary and go to "Verification of vehicle repair" procedure.

SIGNAL CIRCUIT INSPECTION EBE86DF0

1. Check signal circuit open inspection

   1) Ignition "OFF".

   2) Disconnect "A/T SOLENOID VALVE" connector and "PCM" connector.

   3) Measure resistance between terminal "4" of the ATM SOLENOID VALVE harness connector and terminal "45" of the PCM/TCM harness connector.

Specification: approx. 0 Ω

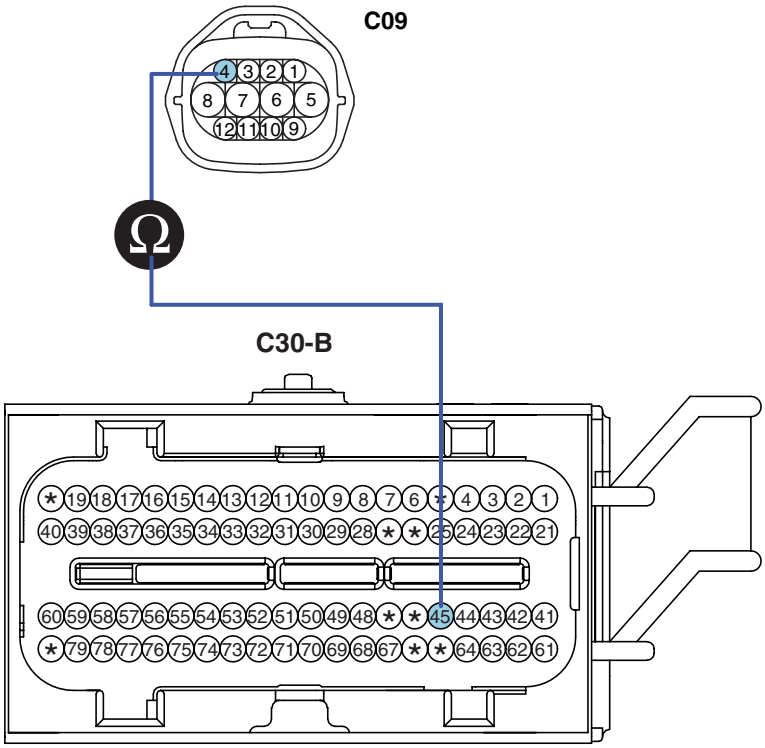

3. UD solenoid valve
4. 2ND solenoid valve
5. A/T battery
6. A/T battery
7. VF solenoid valve(+)
8. VF solenoid valve(-)
9. DCC solenoid valve
10.RED solenoid valve
11. LR solenoid valve
12. OD solenoid valve

42.OD solenoid valve control
45.2ND solenoid valve control
43.DCC solenoid valve control
44.RED solenoid valve
75.VF solenoid valve(+)
59.VF solenoid valve(-)
22.LR solenoid valve control
03.UD solenoid valve control

SCMAT6751L

   4) Is resistance within specifications?

YES

▶ Go to "Check signal circuit short inspection" procedure.

NO

▶ Check for open in harness. Repair as necessary and go to "Verification of vehicle repair" procedure.

2. Check signal circuit short inspection

   1) Ignition "OFF".

   2) Disconnect "A/T SOLENOID VALVE" connector and "PCM/TCM" connector.

   3) Measure resistance between terminal "4" of the ATM SOLENOID VALVE harness and chassis ground.

Specification: Infinite

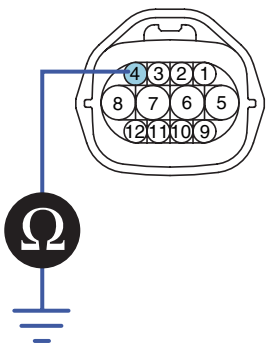

3. UD solenoid valve
4. 2ND solenoid valve
5. A/T battery
6. A/T battery
7. VF solenoid valve(+)
8. VF solenoid valve(-)
9. DCC solenoid valve
10.RED solenoid valve
11. LR solenoid valve
12. OD solenoid valve

SCMAT6752L

4) Is resistance within specifications?

YES

▶ Go to "Component inspection" procedure.

NO

▶ Check for short to ground in harness. Repair as necessary and go to "Verification of vehicle repair" procedure.

COMPONENT INSPECTION E4CEF6BC

1. CHECK SOLENOID VALVE

1) Ignition "OFF".

2) Disconnect "A/T SOLENOID VALVE" connector.

3) Measure resistance between terminal "4" and terminal "6" of the ATM SOLENOID VALVE harness connector.

Specification: Approximately 2.7~3.4 Ω [20°C(68°F)]

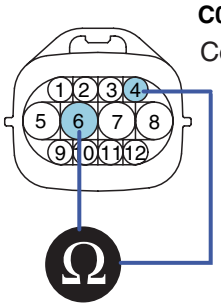

3. UD solenoid valve
4. 2ND solenoid valve
5. A/T battery
6. A/T battery
7. VF solenoid valve(+)
8. VF solenoid valve(-)
9. DCC solenoid valve
10.RED solenoid valve
11. LR solenoid valve
12. OD solenoid valve

SCMAT6753L

4) Is resistance within specification?

YES

▶ Go to "CHECK PCM/TCM" as below.

NO

▶ Replace 2nd SOLENOID VALVE as necessary and go to "Verification of vehicle repair" procedure.

2. CHECK PCM/TCM

1) Connect scantool to data link connector(DLC).

2) Ignition "ON" & Engine "OFF".

3) Select A/T solenoid valve actuator test and operate actuator test.

4) Can you hear operating sound for 2nd SOLENOID VALVE actuator testing function?

YES

▶ Go to "Verification of vehicle repair" procedure.

NO

▶ Replace PCM/TCM as necessary and go to "Verification of vehicle repair" procedure.

ACTUATOR TEST CONDITION

1. IG SWITCH ON
2. TRANSAXLE RANGE SWITCH is normal
3. P RANGE
4. Vehicle Speed 0mph(0km/h)
5. Throttle position sensor < 1V
6. IDLE SWITCH ON
7. ENGINE RPM 0

VERIFICATION OF VEHICLE REPAIR E281AE36

Refer to DTC P0743.

DTC P0765 SHIFT CONTROL SOLENOID VALVE D CIRCUIT MALFUNCTION

COMPONENT LOCATION EED27453

Refer to DTC P0743.

GENERAL DESCRIPTION E331DF52

The Automatic transmission changes the gear position of the transmission by utilizing a combination of clutches and brakes, which are controlled by solenoid valves. This automatic transmission consists of a: LR (Low and Reverse Brake), 2ND (2nd Brake), UD (Under Drive Clutch), OD (Over Drive Clutch), REV (Reverse Clutch), and RED (Reduction Brake, only for 5 speed transmissions).
The OD Clutch is engaged in the 3rd gear and 4th gear positions.

DTC DESCRIPTION EC62EBFF

The TCM checks the Under Drive Clutch Control Signal by monitoring the feedback signal from the solenoid valve drive circuit. If an unexpected signal is monitored (for example, high voltage is detected when low voltage is expected or low voltage is detected when high voltage is expected), the TCM judges that the OVER DRIVE CLUTCH drive control solenoid circuit is malfunctioning and sets this code.

DTC DETECTING CONDITION EAECAFE2

Item	Detecting Condition	Possible cause
DTC Strategy	• Check voltage range	• Open or short in circuit • Faulty OD SOLENOID VALVE • Faulty PCM/TCM
Enable Conditions	• 16V > Voltage Battery > 11V • In gear state(no gear shifting) 500msec is passed from turn on the relay • A/T Relay = ON • Engine state = RUN	
Threshold value	• Out of available voltage range	
Diagnostic Time	• More than 2 seconds	
Fail Safe	• Locked in 3rd gear.(Control relay off)	

SPECIFICATION E765188E

Refer to DTC P0743.

SIGNAL WAVEFORM E50A1C64

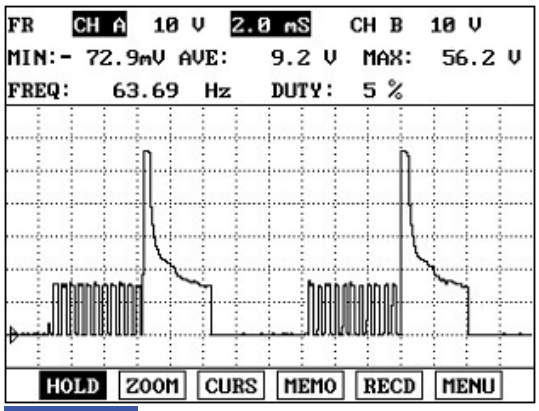

FIG.1)

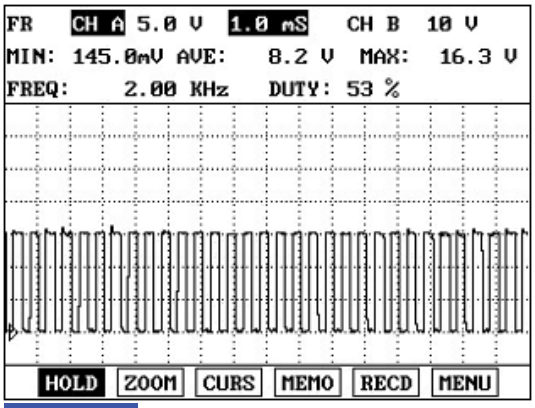

FIG.2)

FIG. 1) "3rd" gear → "2nd" gear
FIG. 2) "P & N" Range

EKBF120A

MONITOR SCANTOOL DATA E41DE2CD

1. Connect scantool to data link connector(DLC).
2. Engine "ON".
3. Monitor the "OD SOL. VALVE" parameter on the scantool.
4. Shift gear at each position.

Specification: 2nd gear → 0.0%, 3nd gear → 100%

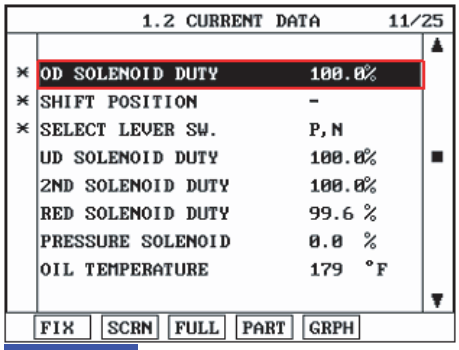

FIG.1)

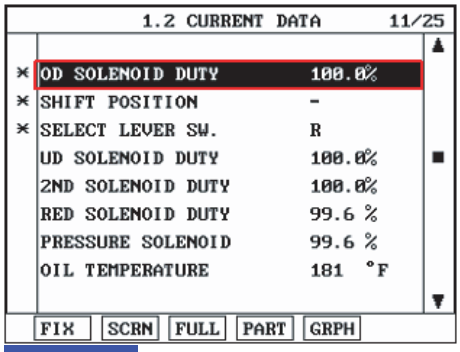

FIG.2)

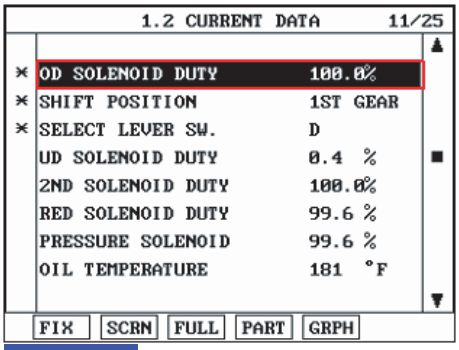

FIG.3)

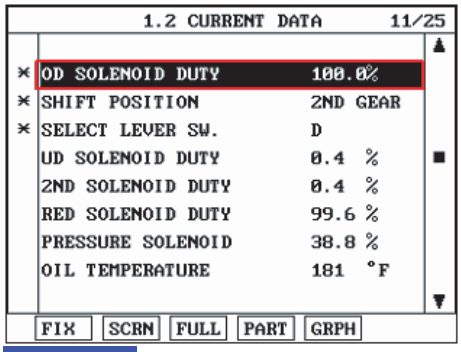

FIG.4)

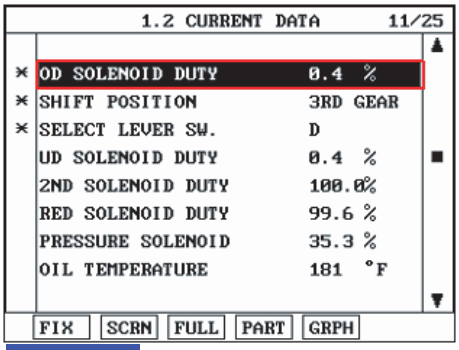

FIG.5)

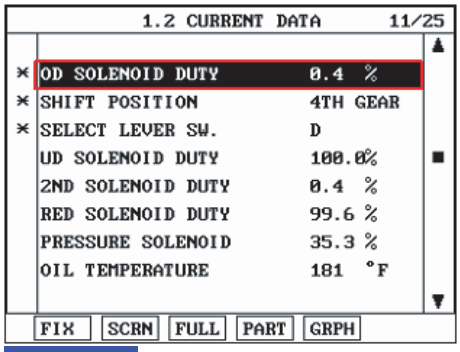

FIG.6)

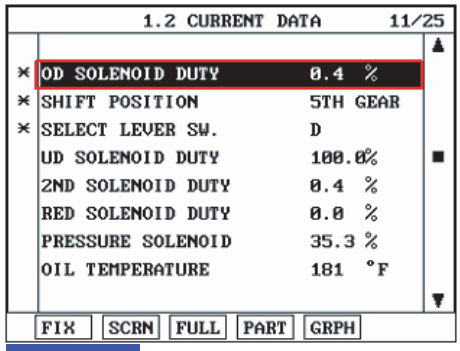

FIG.7)

FIG. 1) P,N
FIG. 2) "R"
FIG. 3) "D 1st" gear
FIG. 4) "2nd" gear
FIG. 5) "3rd" gear
FIG. 6) "4th" gear
FIG. 7) "5th" gear

SCMAT6755L

5. Does "OD SOLENOID DUTY " follow the reference data?

YES

▶ Fault is intermittent caused by poor contact in the sensor's and/or TCM(PCM)'s connector or was repaired and TCM(PCM) memory was not cleared. Thoroughly check connectors for looseness, poor connection, bending, corrosion, contamination, deterioration or damage. Repair or replace as necessary and go to "Verification of vehicle repair" procedure.

NO

▶ Go to "Terminal & connector inspection " procedure.

TERMINAL & CONNECTOR INSPECTION EE0FBE41

Refer to DTC P0743.

POWER SUPPLY CIRCUIT INSPECTION E4ECB63A

1. Disconnect "A/T SOLENOID VALVE" connector.
2. Measure voltage between terminal "6" of the sensor harness connector and chassis ground.
3. Turn ignition switch OFF → ON.

Specification: 12V is measured only for approx. 0.5sec

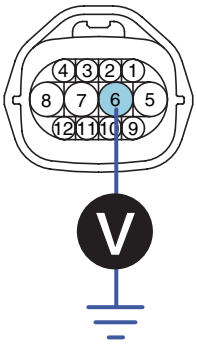

3. UD solenoid valve
4. 2ND solenoid valve
5. A/T battery
6. A/T battery
7. VF solenoid valve(+)
8. VF solenoid valve(-)
9. DCC solenoid valve
10. RED solenoid valve
11. LR solenoid valve
12. OD solenoid valve

SCMAT6746L

4. Is voltage within specifications?

YES

▶ Go to "Signal circuit inspection" procedure.

NO

▶ Check that A/T-20A fuse in engine room junction is installed or not blown.
▶ Check for open in harness. Repair as necessary and go to "Verification of vehicle repair" procedure.

SIGNAL CIRCUIT INSPECTION ED6CEE06

1. Check signal circuit open inspection

   1) Ignition "OFF".

   2) Disconnect "A/T SOLENOID VALVE" connector and "PCM/TCM" connector.

   3) Measure resistance between terminal "12" of the ATM SOLENOID VALVE harness connector and terminal "42" of the PCM/TCM harness connector.

Specification: approx. 0 Ω

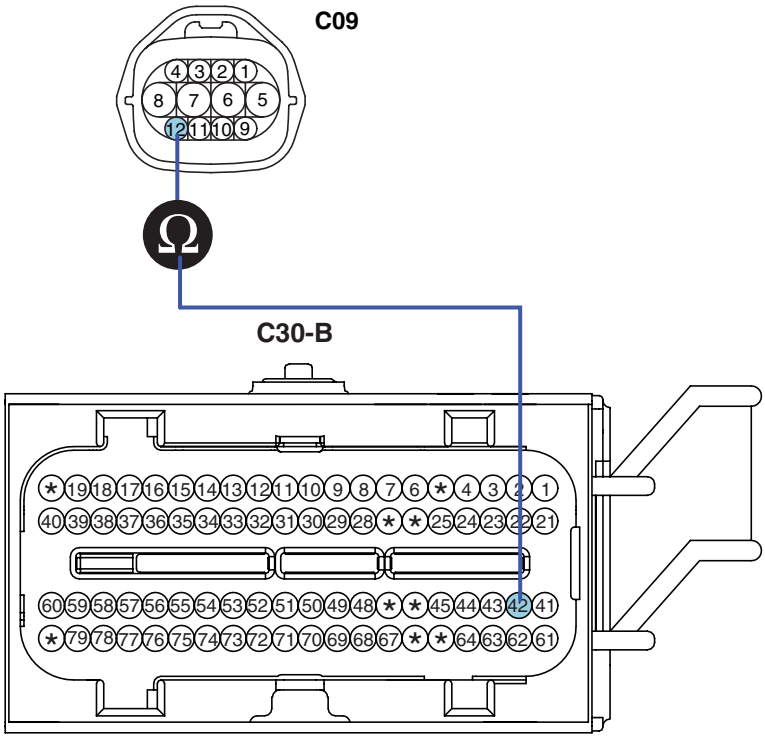

3. UD solenoid valve
4. 2ND solenoid valve
5. A/T battery
6. A/T battery
7. VF solenoid valve(+)
8. VF solenoid valve(-)
9. DCC solenoid valve
10. RED solenoid valve
11. LR solenoid valve
12. OD solenoid valve

42. OD solenoid valve control
45. 2ND solenoid valve control
43. DCC solenoid valve control
44. RED solenoid valve
75. VF solenoid valve(+)
59. VF solenoid valve(-)
22. LR solenoid valve control
03. UD solenoid valve control

SCMAT6756L

   4) Is resistance within specifications?

YES

▶ Go to "Check signal circuit short inspection" procedure.

NO

▶ Check for open in harness. Repair as necessary and go to "Verification of vehicle repair" procedure.

2. Check signal circuit short inspection

   1) Ignition "OFF".

   2) Disconnect "A/T SOLENOID VALVE" connector and "PCM/TCM" connector.

   3) Measure resistance between terminal "12" of the ATM SOLENOID VALVE harness and chassis ground.

Specification: Infinite

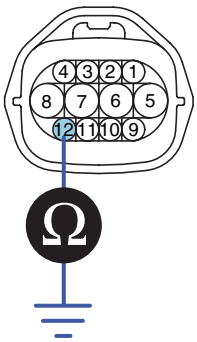

3. UD solenoid valve
4. 2ND solenoid valve
5. A/T battery
6. A/T battery
7. VF solenoid valve(+)
8. VF solenoid valve(-)
9. DCC solenoid valve
10.RED solenoid valve
11. LR solenoid valve
12. OD solenoid valve

SCMAT6757L

4) Is resistance within specifications?

YES

▶ Go to "Component inspection" procedure.

NO

▶ Check for short to ground in harness. Repair as necessary and go to "Verification of vehicle repair" procedure.

COMPONENT INSPECTION E39F8164

1. CHECK SOLENOID VALVE

1) Ignition "OFF".

2) Disconnect "A/T SOLENOID VALVE" connector.

3) Measure resistance between terminal "6" and terminal "12" of the ATM SOLENOID VALVE harness connector.

Specification: Approximately 2.7~3.4 Ω [20°C(68°F)]

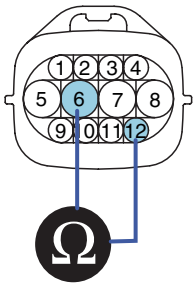

3. UD solenoid valve
4. 2ND solenoid valve
5. A/T battery
6. A/T battery
7. VF solenoid valve(+)
8. VF solenoid valve(-)
9. DCC solenoid valve
10.RED solenoid valve
11. LR solenoid valve
12. OD solenoid valve

SCMAT6758L

4) Is resistance within specification?

YES

▶ Go to "CHECK PCM/TCM" as below.

NO

▶ Replace OD SOLENOID VALVE as necessary and go to "Verification of vehicle repair" procedure.

2. CHECK PCM/TCM

   1) Connect scantool to data link connector(DLC).

   2) Ignition "ON" & Engine "OFF".

   3) Select A/T solenoid valve actuator test and operate actuator test.

   4) Can you hear operating sound for OD SOLENOID VALVE actuator testing function?

   YES

   ▶ Go to "Verification of vehicle repair" procedure.

   NO

   ▶ Replace PCM/TCM and go to "Verification of vehicle repair" procedure.

   ACTUATOR TEST CONDITION
   1. IG SWITCH ON
   2. TRANSAXLE RANGE SWITCH is normal
   3. P RANGE
   4. Vehicle Speed 0mph(0km/h)
   5. Throttle position sensor < 1V
   6. IDLE SWITCH ON
   7. ENGINE RPM 0

VERIFICATION OF VEHICLE REPAIR E4B7ED91

Refer to DTC P0743.

DTC P0885 A/T RELAY CIRCUIT MALFUNCTION

COMPONENT LOCATION ECA1B33F

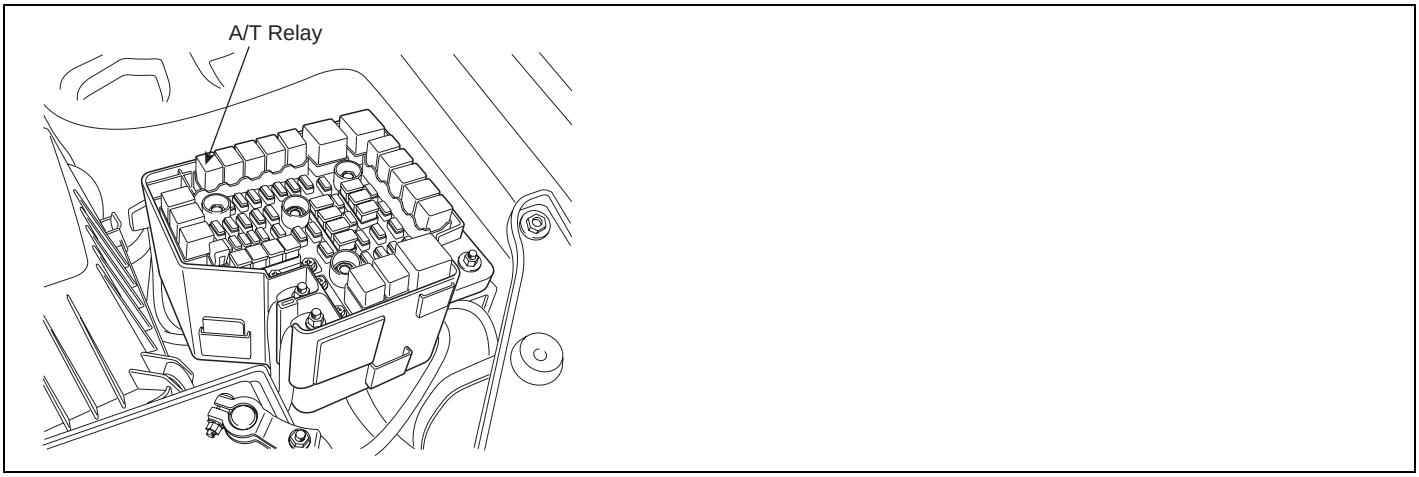

SCMAT6759L

GENERAL DESCRIPTION E834BA5A

The HIVEC Automatic Transmission supplies the power to the solenoid valves by way of a control relay. When the TCM sets the relay to ON, the relay operates and the battery power is supplied to all the solenoid valves. When the TCM sets the relay to OFF, all solenoid valve power is shut off and the transmission is held in the 3rd gear position. (Fail Safe Mode).

DTC DESCRIPTION EF467A4B

The TCM checks the A/T control relay signal by monitoring the control signal. If, after the ignition key is turned on, an unexpected voltage value, which is quite a bit lower than battery voltage is detected, the TCM sets this code.

DTC DETECTING CONDITION ED9294F2

Item	Detecting Condition	Possible cause
DTC Strategy	• Check voltage range	• Open or short in circuit • Faulty A/T control relay • Faulty PCM/TCM
Enable Conditions	• 16V > Voltage Battery > 11V • Time after TCM turns on > 0.5sec	
Threshold value	• 16V > Voltage Battery > 11V	
Diagnostic Time	• more than 1 second	
Fail Safe	• Locked in 3rd gear.(control relay off)	

MONITOR SCANTOOL DATA EA054F02

1. Connect scantool to data link connector(DLC).
2. Ignition "ON" & Engine "OFF".
3. Monitor the "A/T CON. RELAY VOLT" parameter on the scantool.

Specification : Approx. B+

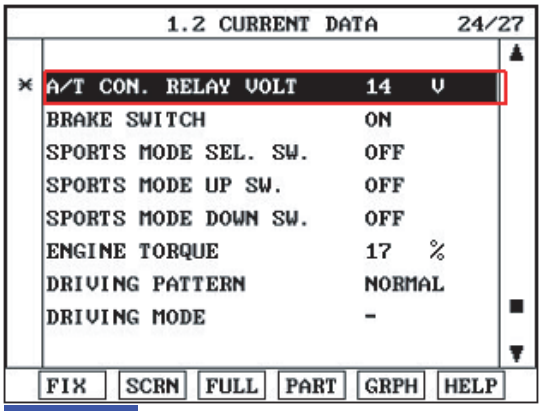

FIG.1)

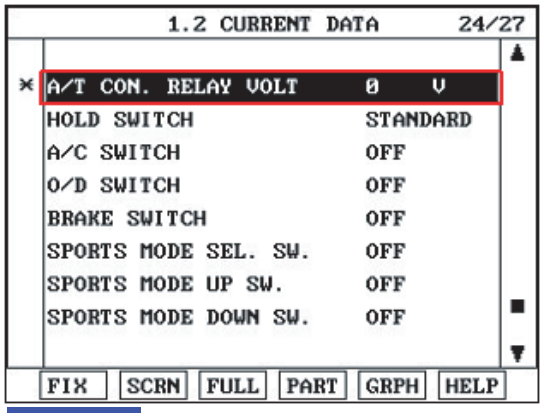

FIG.2)

FIG. 1) Normal status for "A/T RELAY"
FIG. 2) Open status for "A/T RELAY"

LLLG121A

4. Is A/T RELAY VOLT within specifications?

YES

▶ Fault is intermittent caused by poor contact in the sensor's and/or TCM(PCM)'s connector or was repaired and TCM(PCM) memory was not cleared. Thoroughly check connectors for looseness, poor connection, bending, corrosion, contamination, deterioration or damage. Repair or replace as necessary and go to "Verification of Vehicle Repair" procedure.

NO

▶ Go to "Terminal & Connector Inspection" procedure.

TERMINAL & CONNECTOR INSPECTION E35CA1F8

1. Many malfunctions in the electrical system are caused by poor harness and terminals. Faults can also be caused by interference from other electrical systems, and mechanical or chemical damage.
2. Thoroughly check connectors for looseness, poor connection, bending, corrosion, contamination, deterioration, or damage.
3. Has a problem been found?

YES

▶ Repair as necessary and then go to "Verification of Vehicle Repair" procedure.

NO

▶ Go to "Power circuit inspection" procedure.

POWER SUPPLY CIRCUIT INSPECTION ECAC216B

1. Ignition "ON" & Engine "OFF".
2. Disconnect the "A/T CONTROL RELAY" connector.
3. Measure the voltage between terminal "1" of the "A/T CONTROL RELAY" harness(JC101) connector and chassis ground.

Specification : Approx. B+

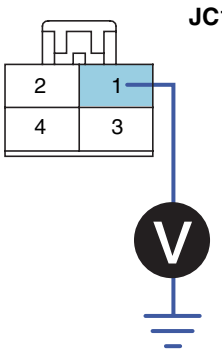

1.Battery
2.Ground
3.Battery Voltage
(Supplying Power to solenoid valve)
4.A/T control relay

LLLG121B

4. Is voltage within specifications?

YES

▶ Go to "Signal circuit inspection" procedure.

NO

▶ Check that A/T-20A Fuse in engine room junction is installed or not blown.
▶ Check for Open in harness. Repair as necessary and Go to "Verification of Vehicle Repair" procedure.

SIGNAL CIRCUIT INSPECTION ED1FB39A

1. CHECK A/T control relay harness

1) Ignition "OFF".

2) Disconnect the "A/T CONTROL RELAY" connector.

3) Measure the voltage between terminal "4" of the "A/T CONTROL RELAY" harness connector and chassis ground.

4) Engine OFF → ON.

Specification: 12V is measured only for approx. 0.5sec

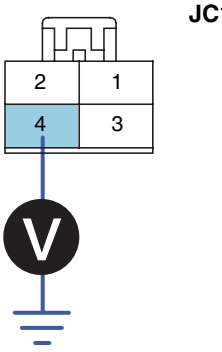

1.Battery
2.Ground
3.Battery Voltage
(Supplying Power to solenoid valve)
4.A/T control relay

LLLG121C

5) Is voltage within specifications?

YES

▶ Go to "Check Supplying Power to solenoid valve" procedure.

NO

▶ Check for open in harness. Repair as necessary and Go to "Verification of Vehicle Repair" procedure.
▶ If signal circuit is OK, Substitute with a known-good PCM/TCM and check for proper operation. If the problem is corrected, replace PCM/TCM and then go to "Verification of Vehicle Repair" procedure.

2. CHECK Supplying Power to solenoid valve harness

1) Ignition "OFF".

2) Disconnect the "A/T CONTROL RELAY" and PCM/TCM connector.

3) Measure the resistance between terminal "3" of the "A/T CONTROL RELAY" harness connector and terminal "60" of the PCM/TCM harness connector.

Specification : Approx. 0 Ω

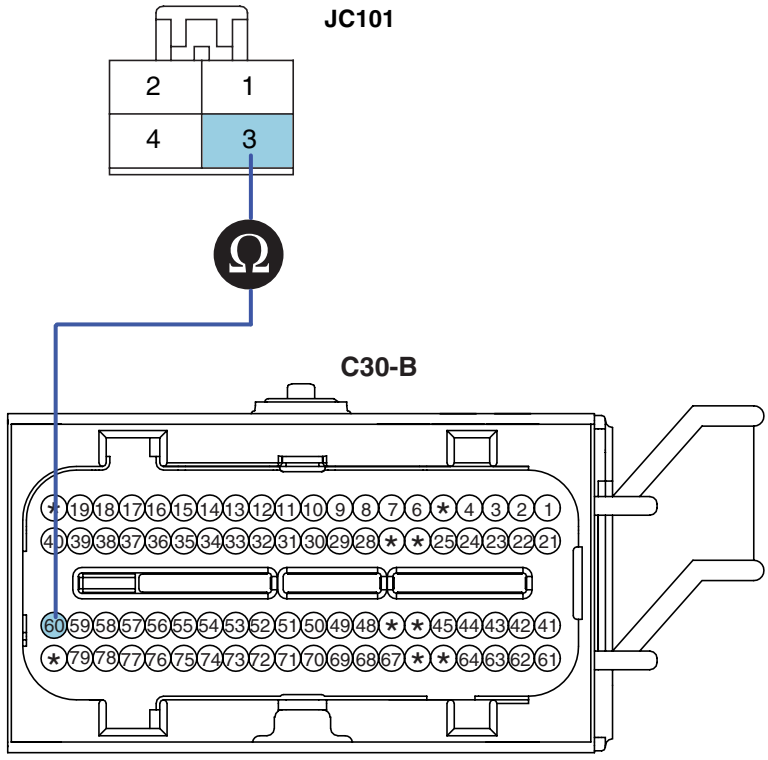

SCMAT6760L

4) Is resistance within specifications?

YES

▶ Go to "Ground circuit inspection" procedure.

NO

▶ Check that A/T-15A Fuse in engine room junction is installed or not blown.
▶ Check for open in harness. Repair as necessary and Go to "Verification of Vehicle Repair" procedure.

GROUND CIRCUIT INSPECTION E49F4B4D

1. Ignition "OFF".
2. Connect the "A/T CONTROL RELAY" connector.
3. Measure the resistance between terminal "2" of the "A/T CONTROL RELAY" harness connector and chassis ground.

Specification : Approx. 0 Ω

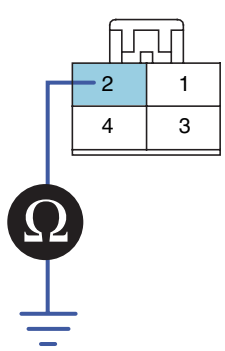

1.Battery
2.Ground
3.Battery Voltage
(Supplying Power to solenoid valve)
4.A/T control relay

LLLG121E

4. Is resistance within specifications?

YES

▶ Thoroughly check connectors for looseness, poor connection, bending, corrosion, contamination, deterioration, or damage. Repair or replace as necessary and then go to "Verification of Vehicle Repair" procedure.

NO

▶ Replace FRONT AREA MODULE and then go to "Verification of Vehicle Repair" procedure.

VERIFICATION OF VEHICLE REPAIR E048B9EA

After a repair, it is essential to verify that the fault has been corrected.

1. Connect scantool and select "Diagnostic Trouble Codes(DTCs)" mode.
2. Using a scantool, Clear DTC.
3. Operate the vehicle within DTC Enable conditions in General information.
4. Are any DTCs present ?

YES

▶ Go to the applicable troubleshooting procedure.

NO

▶ System performing to specification at this time.

DTC P0890 AT RELAY - LOW CIRCUIT

COMPONENT LOCATION E2C4DADB

Refer to DTC P0885.

GENERAL DESCRIPTION EF65CE2B

Refer to DTC P0885.

DTC DESCRIPTION EBCD7EE4

Refer to DTC P0885.

DTC DETECTING CONDITION E55DA70D

Item	Detecting Condition	Possible cause
DTC Strategy	• Check voltage range	• Open or short in circuit • Faulty A/T control relay • Faulty PCM/TCM
Enable Conditions	• 16V > Voltage Battery > 11V • Time after TCM turns on > 0.5sec	
Threshold value	• Feedback Voltage ≤ 0.5V	
Diagnostic Time	• more than 1 second	
Fail Safe	• Locked in 3rd gear.(control relay off)	

MONITOR SCANTOOL DATA E6A54CCB

Refer to DTC P0885.

TERMINAL & CONNECTOR INSPECTION E264C8FD

Refer to DTC P0885.

POWER SUPPLY CIRCUIT INSPECTION E951BEC5

Refer to DTC P0885.

SIGNAL CIRCUIT INSPECTION E8967CCC

Refer to DTC P0885.

GROUND CIRCUIT INSPECTION E5ACD2E7

Refer to DTC P0885.

VERIFICATION OF VEHICLE REPAIR E8C0A417

Refer to DTC P0885.

DTC P0891 AT RELAY - OPEN CIRCUIT

COMPONENT LOCATION EE31B58B

Refer to DTC P0885.

GENERAL DESCRIPTION EEEDFCCA

Refer to DTC P0885.

DTC DESCRIPTION E9741811

Refer to DTC P0885.

DTC DETECTING CONDITION E6AAEAD4

Item	Detecting Condition	Possible cause
DTC Strategy	• Check voltage range	• Open or short in circuit • Faulty A/T control relay • Faulty PCM/TCM
Enable Conditions	• 16V > Voltage Battery > 11V • Time after TCM turns on > 0.5sec	
Threshold value	• Feedback Voltage ≥ 20V	
Diagnostic Time	• more than 1 second	
Fail Safe	• Locked in 3rd gear.(control relay off)	

MONITOR SCANTOOL DATA EB96F3E1

Refer to DTC P0885.

TERMINAL & CONNECTOR INSPECTION E56804FB

Refer to DTC P0885.

POWER SUPPLY CIRCUIT INSPECTION E6F6ADE0

Refer to DTC P0885.

SIGNAL CIRCUIT INSPECTION EAE638C0

Refer to DTC P0885.

GROUND CIRCUIT INSPECTION E087FAFA

Refer to DTC P0885.

VERIFICATION OF VEHICLE REPAIR E14B1FDF

Refer to DTC P0885.

AUTOMATIC TRANSAXLE

COMPONENTS (1) E605139C

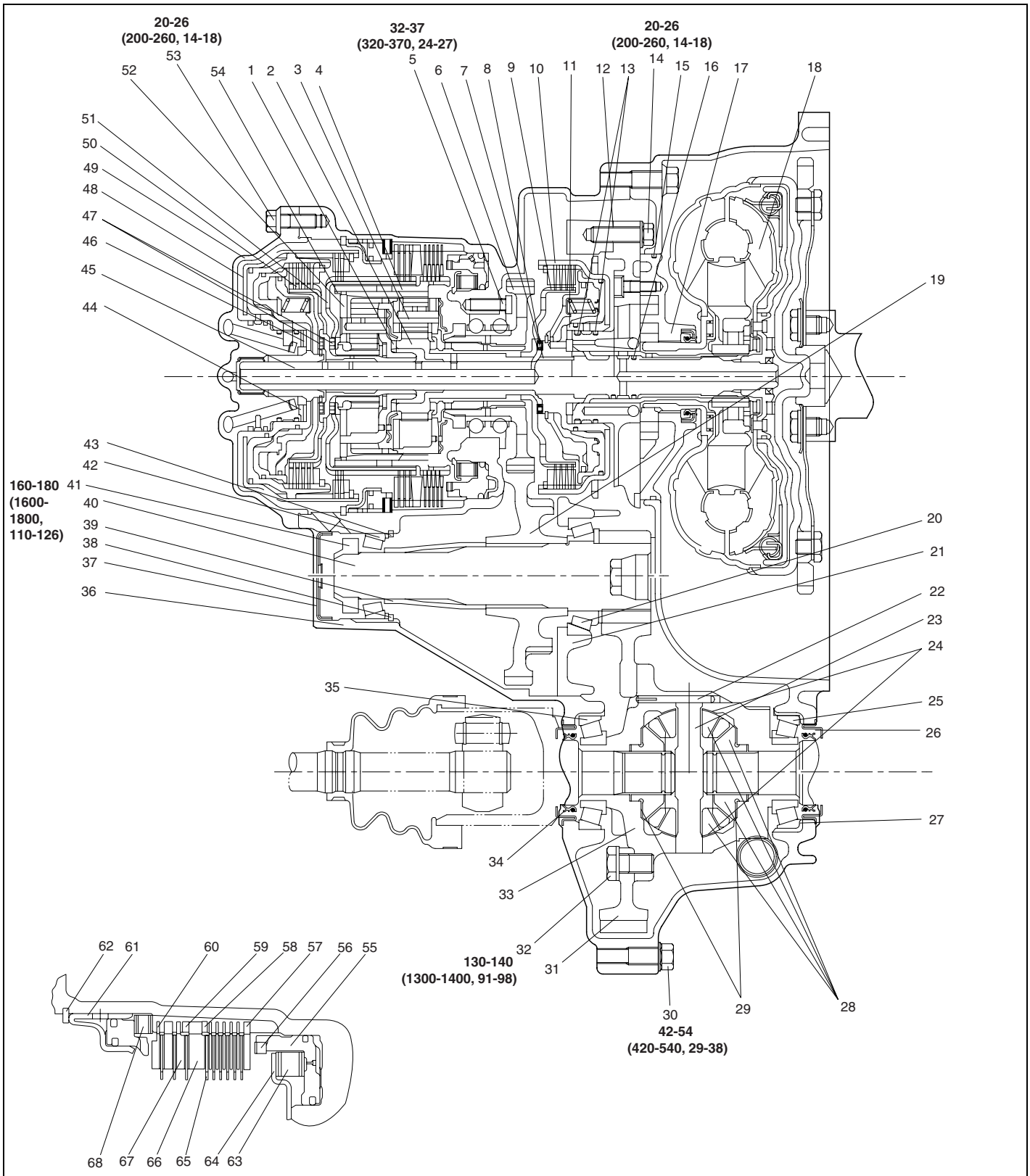

TORQUE : Nm (kgf.cm, lb-ft)

EKRF012A

1. Thrust bearing
2. Underdrive sun gear
3. Output carrier
4. Low and reverse annulus gear
5. Bolt
6. Transfer drive gear
7. Snap ring
8. Thrust bearing
9. Underdrive clutch hub
10 . Underdrive clutch
11. Thrust washer
12. Oil pump gasket
13. Seal ring
14. Flange bolt
15. O-ring
16. Seal ring
17. Oil pump
18. Torque converter
19. Transfer driven gear
20. Taper roller bearing
21. Bearing retainer
22. Lock pin
23. Pinion shaft
24. Washer
25. Taper roller bearing
26. Oil seal
27. Differential spacer
28. Differential gear
29. Differential spacer set
30. Flange bolt
31. Differential drive gear
32. Fly wheel bolt
33. Differential case
34. Oil seal
35. Transmission case
36. One-way Clutch Inner Race
37. Sealing cap
38. Output spacer set
39. Collar
40. Output shaft
41. Locking pin
42. Roller bearing
43. Snap ring
44. Thrust race
45. Input shaft
46. Thrust bearing
47. Thrust bearing
48. Return & O/D clutch
49. Rear cover
50. O/D clutch hub
51. Return sun gear
52. Output carrier
53. Flange bolt
54. Snap ring
55. Low and reverse brake piston
56. Wave spring
57. Brake pressure plate
58. Snap ring
59. Snap ring set
60. Brake pressure plate
61. 2nd brake retainer
62. Snap ring
63. 2nd brake return spring
64. Brake disc
65. Brake reaction plate
66. Brake plate
67. Brake spring retainer
68. Low and reverse return spring

EKRF012B

COMPONENTS (2)

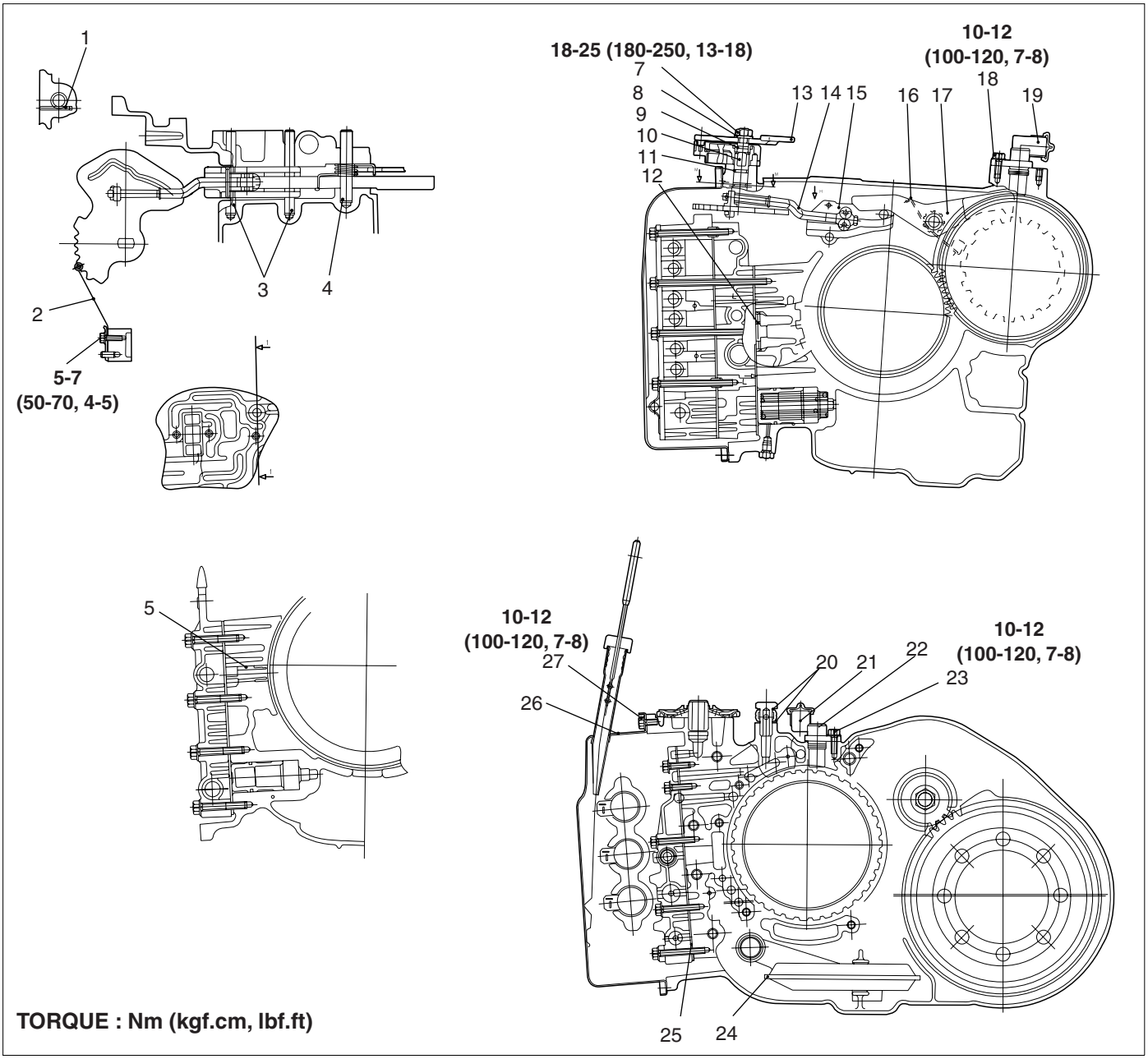

1. Roller
2. Detent spring
3. Parking roller shaft
4. Parking spring shaft
5. Oil seal
6. 2nd brake retainer
7. Flange nut
8. Spring washer
9. Oil ring
10. Manual control shaft
11. Oil ring
12. Oil strainer
13. Manual control lever
14. Parking roller rod
15. Parking roller shaft
16. Parking sprag
17. Parking sprag shaft
18. Flange bolt
19. Output speed sensor
20. Eye bolt
21. Gasket
22. Input speed sensor
23. Flange bolt
24. Oil filter
25. Valve body gasket
26. Valve body
27. Flange bolt

EKRF012C

COMPONENTS (3)

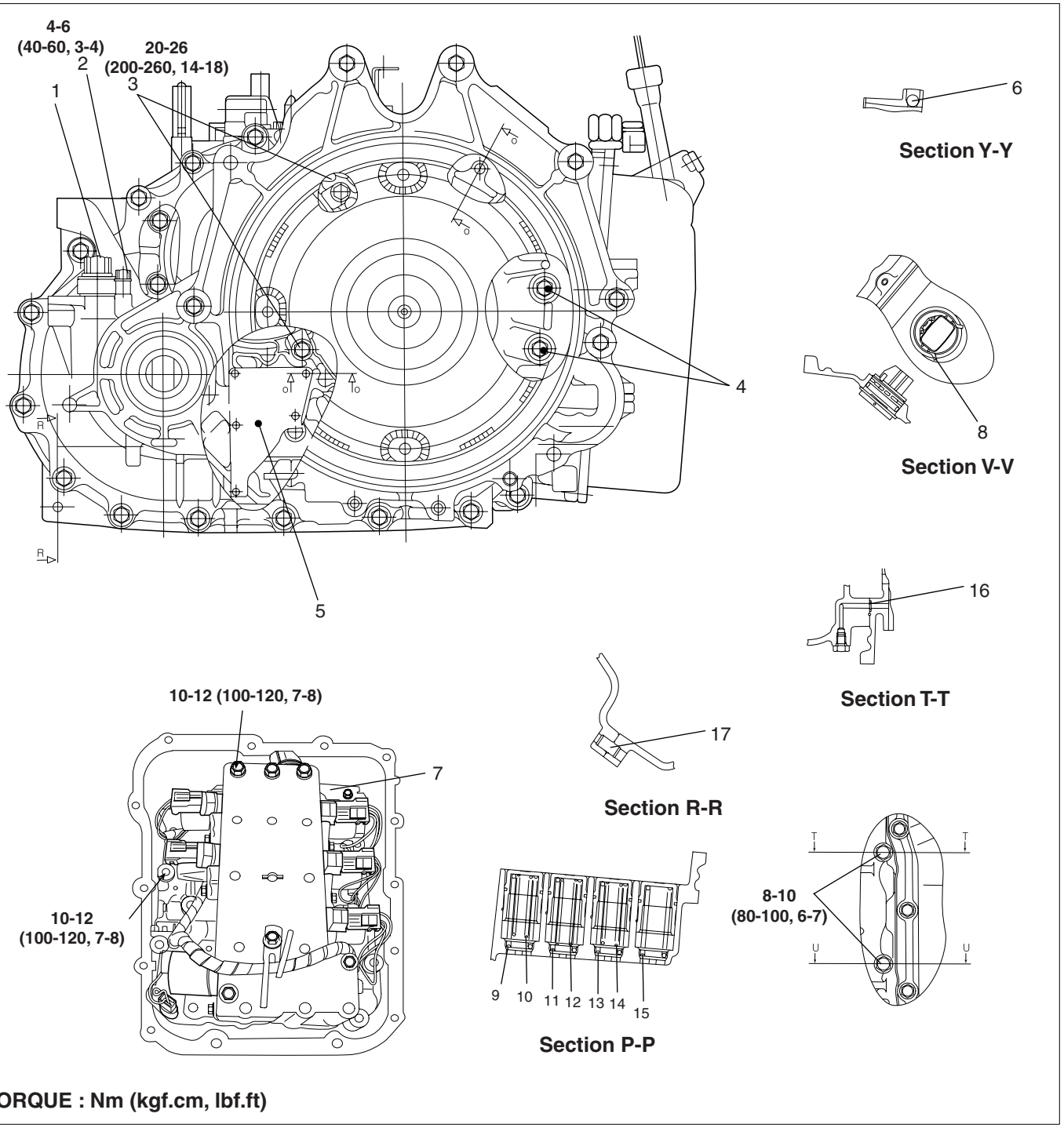

TORQUE : Nm (kgf.cm, lbf.ft)

1. Vehicle speed sensor
2. Washer
3. Seal bolt
4. Flange bolt
5. Oil guide
6. Steel ball
7. Harness
8. Snap ring
9. Coil spring
10. Coil spring
11. Coil spring
12. Coil spring
13. Coil spring
14. Coil spring
15. Coil spring
16. O-ring
17. Dowel pin

EKRF091A

COMPONENTS (4)

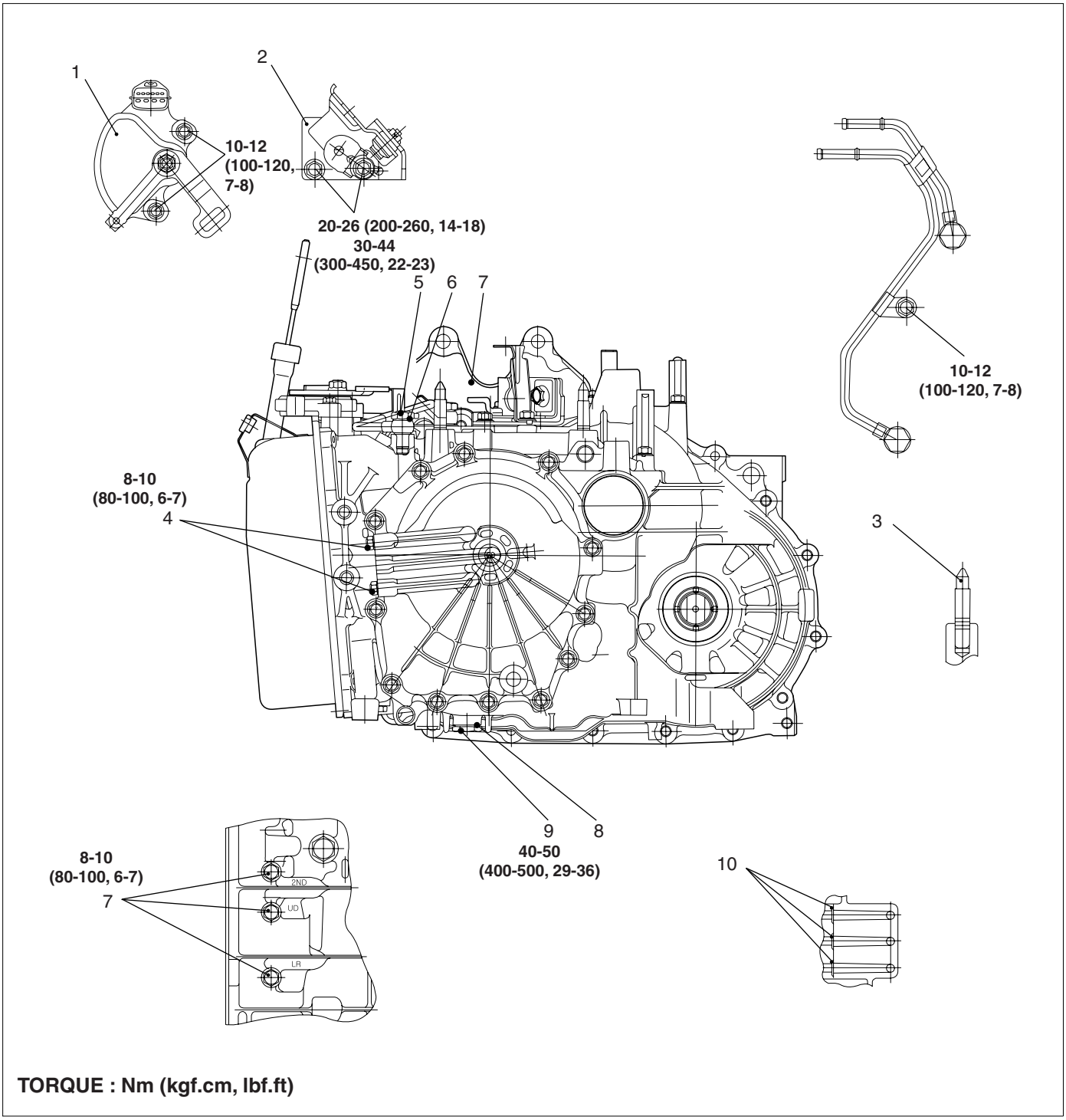

1. Inhibitor switch
2. Control cable bracket
3. Stud
4. Pressure check plug
5. Eye bolt
6. Gasket
7. Converter housing
8. Gasket
9. Magnet plug
10. Accumulator piston

EKRF012D

REMOVAL E69F6B73

CAUTION

- ***Use a cover not to damage the vehicle surface.***
- ***Disconnect connectors carefully not to be damaged.***

NOTE

- *Mark wires or hoses for identification.*

1. Remove the inter cooler and the engine cover. (see EM group)
2. Remove the battery (A).

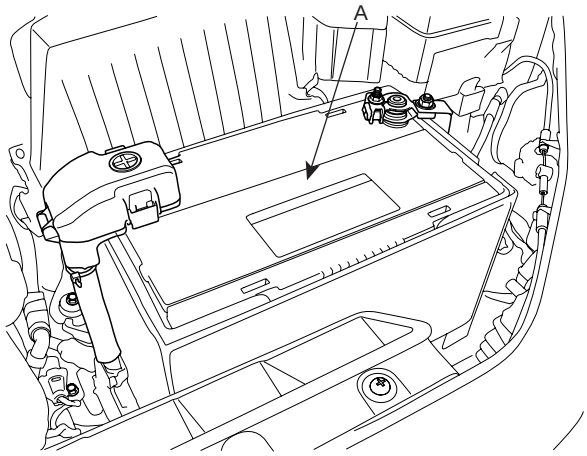

SCMAT6001D

3. Disconnect the AFS connector (A).

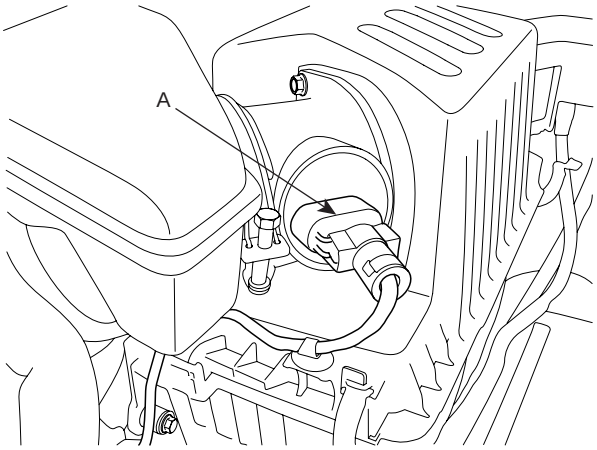

SCMAT6002D

4. Lossen the clamp bolt (A) and disconnect the air cleaner hose (B).

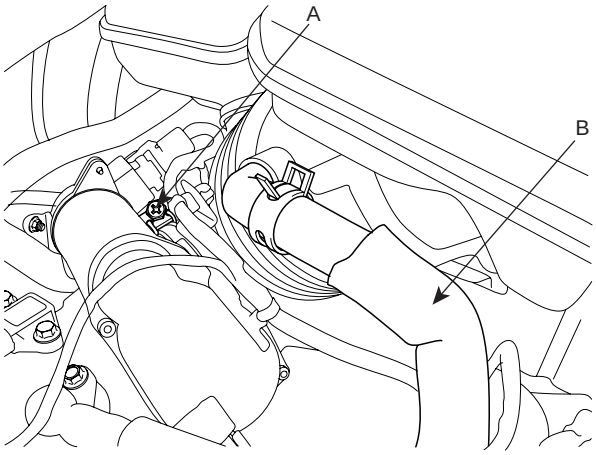

SCMAT6003D

5. Remove the air cleaner upper cover (B) by removing the clips (A).

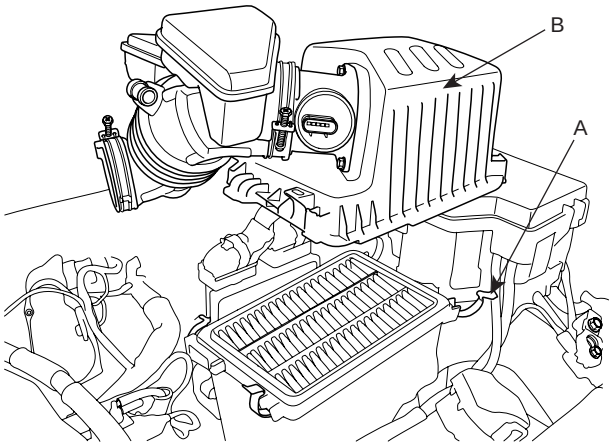

SCMAT6004D

6. Remove the air cleaner lower part (A) by removing the two mounting bolts.

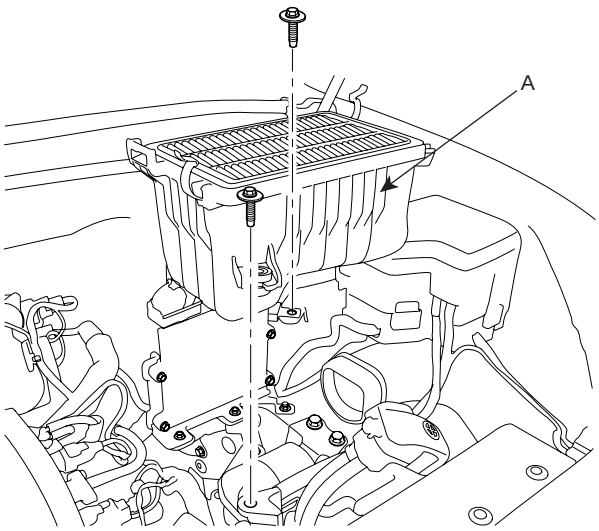

SCMAT6005D

7. Remove the battery tray (B) by removing the four mounting bolts (A).

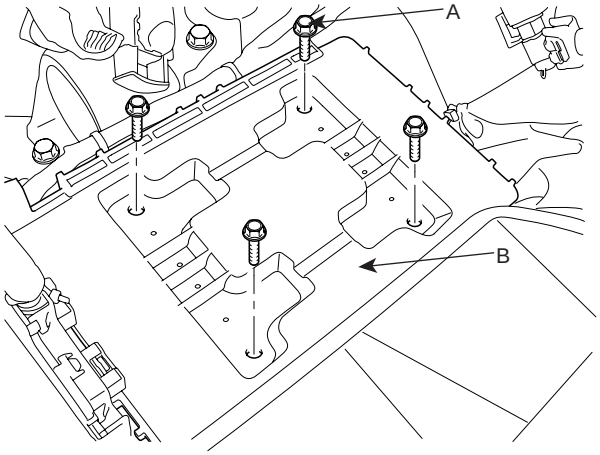

SCMAT6006D

8. Disconnect the transaxle wire harness connectors.

1) Remove the inhibiter switch connector (A).

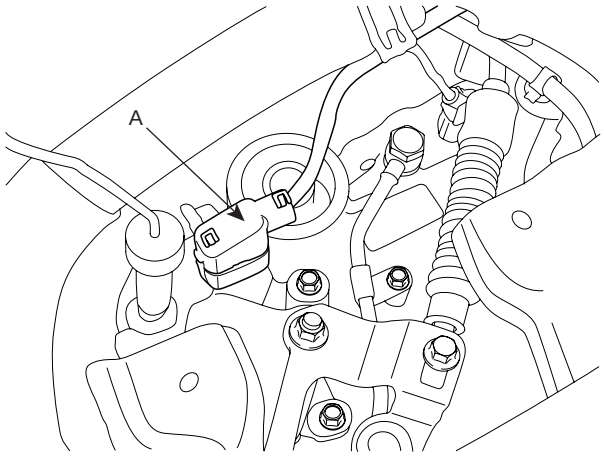

SCMAT6007D

2) Remove the solenoid valve connector (A).

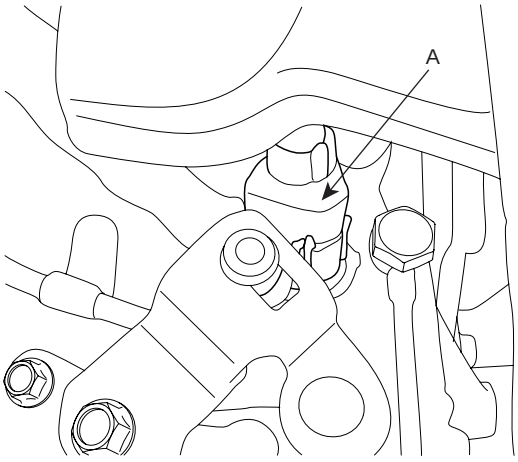

SCMAT6008D

3) Remove the input speed sensor connector (A).

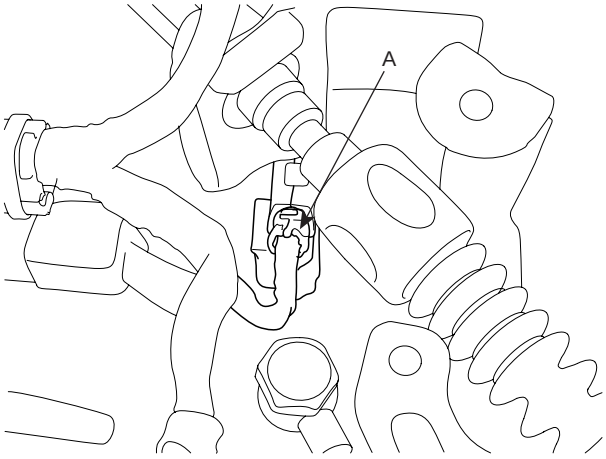

SCMAT6009D

4) Remove the output speed sensor connector (A).

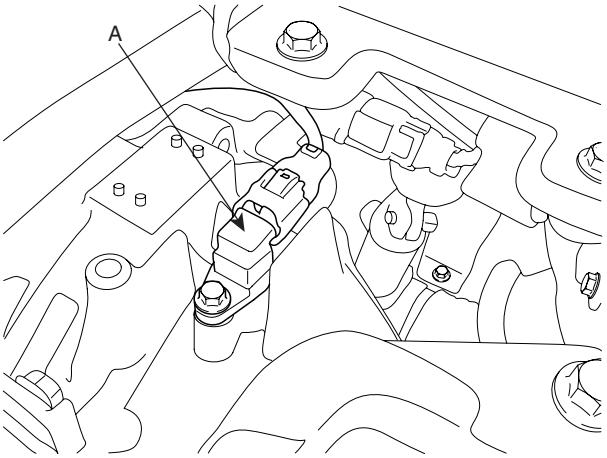

SCMAT6502L

5) Remove the vehicle speed sensor connector (A).

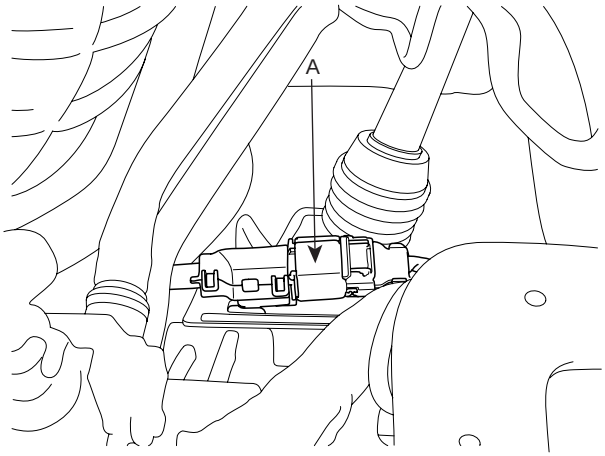

SCMAT6011D

9. Remove the control cable assembly(C) by removing the nut (A) and clip (B).

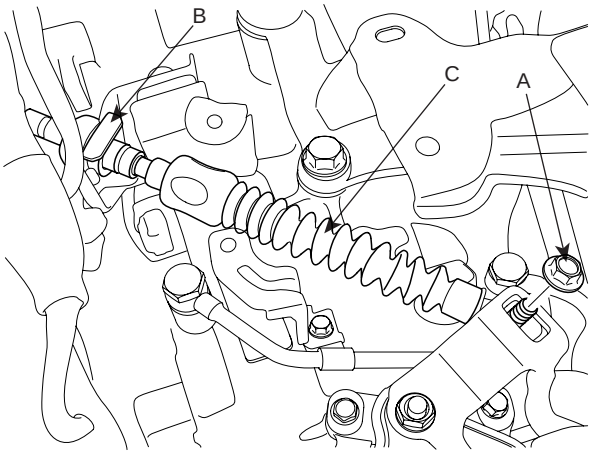

SCMAT6012D

10. Disconnect the transaxle oil cooler hoses (B) from the tubes by loosening the clamps (A).

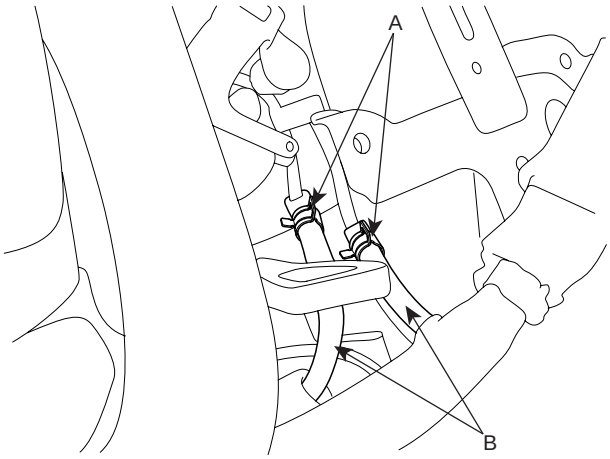

SCMAT6013D

11. Remove the transaxle mounting bolts (A).

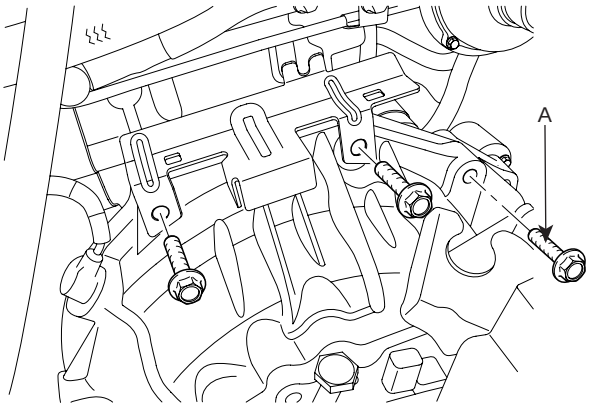

AKKF002O

12. Remove the starter motor by disconnecting the connector. (see EE group)

13. Using the SST(09200-38001), hold the engine and transaxle assembly safely.

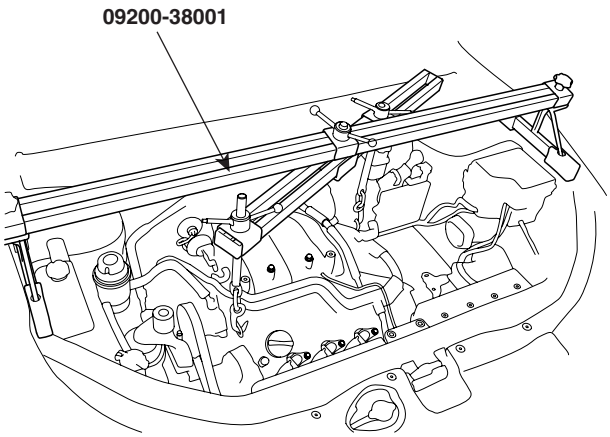

SCMAT6503L

14. Remove the transaxle insulator mounting bolts (A).

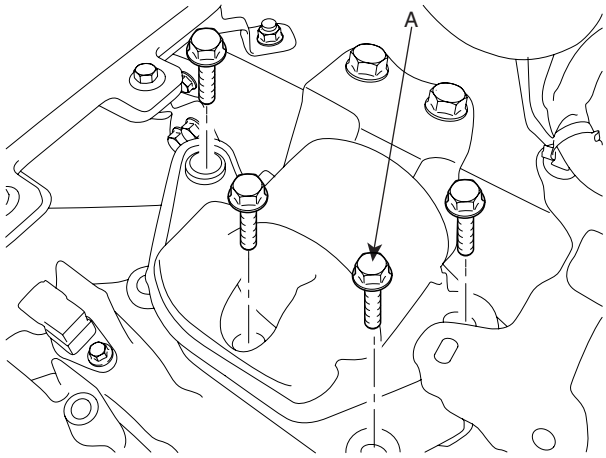

SCMAT6504L

15. Remove the front wheels. (see SS group)

16. Lift up the vehicle.

17. Remove the power steering column joint bolt and the EPS connector. (see ST group)

18. Remove the under cover (A).

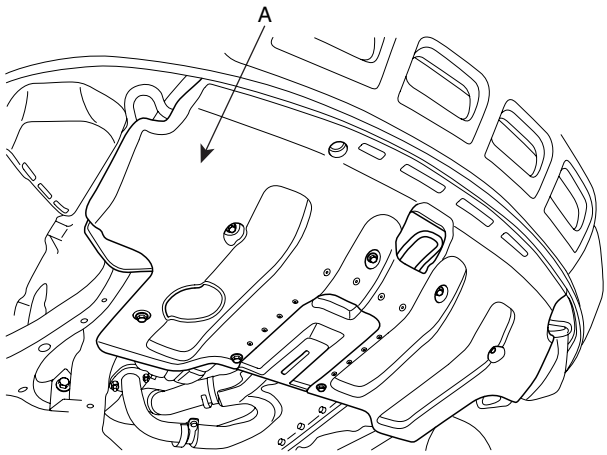

SCMAT6505L

19. Drain the transaxle fluid.

20. Drain power steering fluid through the return tube(A). (see ST group)

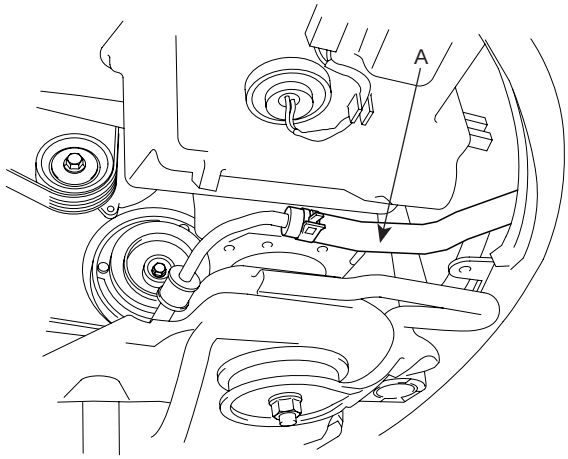

SCMAT6010L

21. Disconnect the power steering pressure tube (A) from the power steering oil pump.

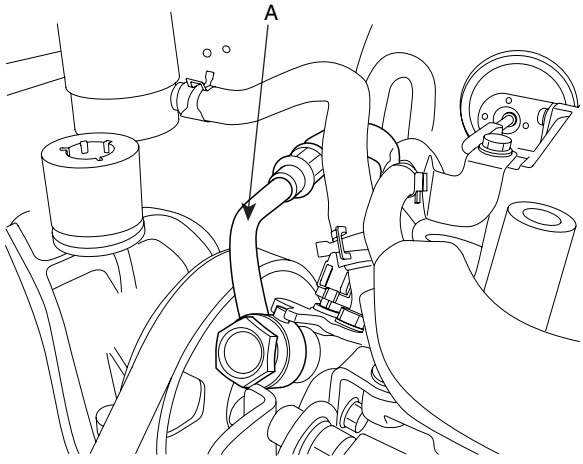

SCMAT6506L

22. Disconnect the lower arm, the tie rod end ball joint, the stabilizer bar link from the front knuckle. (see SS group)

23. Remove the roll stopper mounting bolts.

24. Remove the mounting bolts from the sub frame by supporting the sub frame with a jack. (see SS group)

25. Remove drive shaft from transaxle. (see DS group).

26. Install a jack for supporting the transaxle assembly.

27. In case of 4WD, remove the transfer case assembly. (see MT group's 'Transfer case')

28. Remove the drive plate bolts (A) and the transaxle lower mounting bolts (B-4EA).

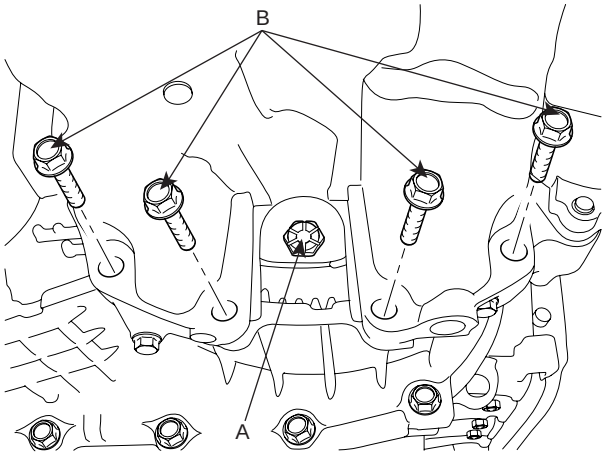

SCMAT6019D

29. Lifting the vehicle up and lowering the jack slowly, remove the transaxle assembly.

INSTALLATION EE2647DD

Installation is in the reverse order of removal.
Perform the following :

- Adjust the shift cable.
- Refill the transaxle with fluid.
- Refill the radiator with engine coolant.
- Bleed air from the cooling system with the heater valve open.
- Clean the battery posts and cable terminals with sandpaper, assemble them, and apply grease to prevent corrosion.

1. Lowering the vehicle or lifting up a jack, install the transaxle assembly.

2. Tighten the transaxle lower mounting bolts (B-4EA).

TORQUE:
65~85 Nm(6.5~8.5 kgf.m, 47.0~61.5 lb-ft)

3. Install the drive plate bolts (A) by turning the timing gear.

TORQUE:
46~53 Nm(4.6~5.3 kgf.m, 33.3~38.3 lb-ft)

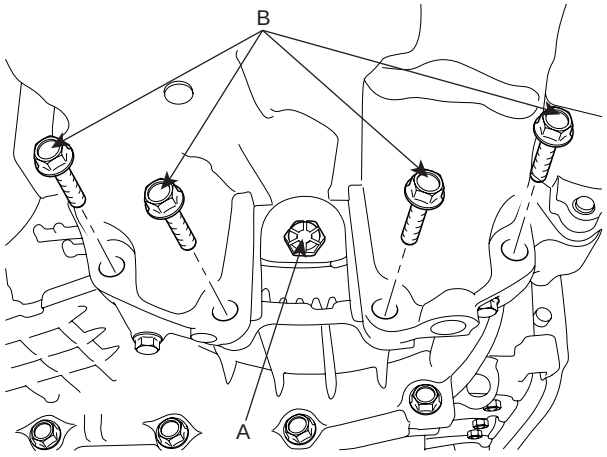

SCMAT6019D

4. In case of 4WD, install the transfer case assembly. (see MT group's 'Transfer case')

5. After removing a jack, insert the drive shafts. (see DS group)

6. Install the sub frame. (see SS group).

7. Tighten the roll stopper mounting bolts.

TORQUE:
90~110 Nm(9~11 kgf.m, 65.1~79.5 lb-ft)

8. Connect the lower arm, the tie rod end ball joint, the stabilizer bar link to the front knuckle. (see SS group)

9. Install the under cover (A).

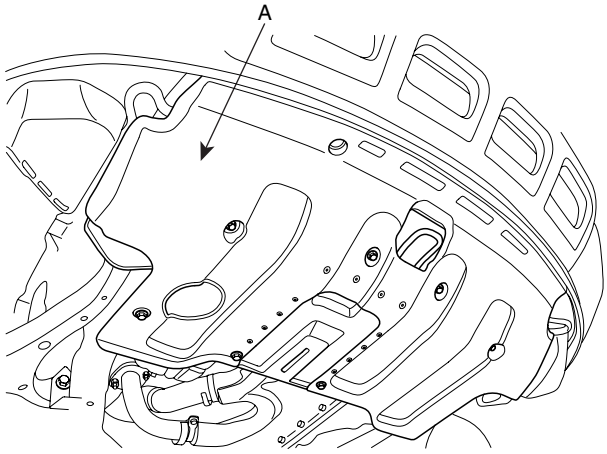

SCMAT6505L

10. Install the steering column joint bolt and the EPS connector. (see ST group)

11. Connect the return tube(A) with a clamp. (see ST group)

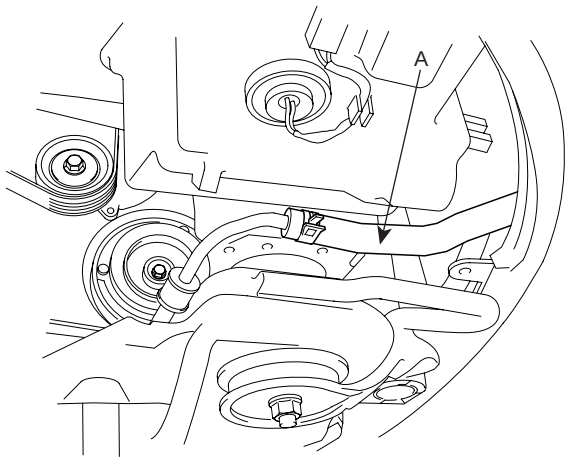

SCMAT6010L

12. Install the front wheels and tires.

13. Tighten the transaxle insulator mounting bolt (A).

TORQUE:
90~110 Nm(9~11 kgf.m, 65.1~79.5 lb-ft)

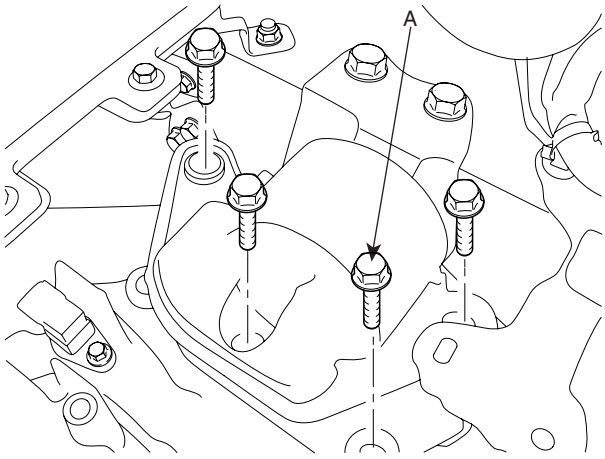

SCMAT6504L

14. Tighten the transaxle mounting bolts (A).

TORQUE:
65~85 Nm(6.5~8.5 kgf.m, 47.0~61.5 lb-ft)

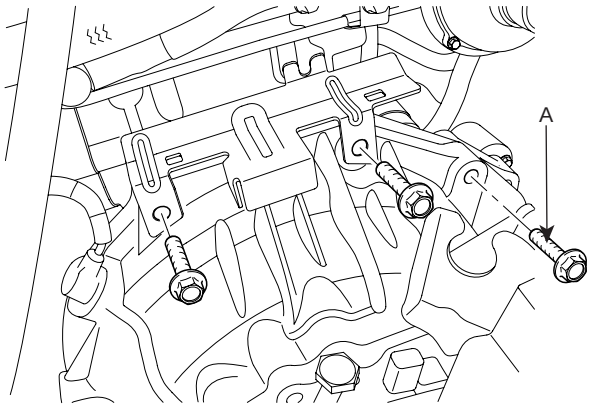

AKKF002O

15. Remove the SST (09200-38001) holding the engine and transaxle assembly.

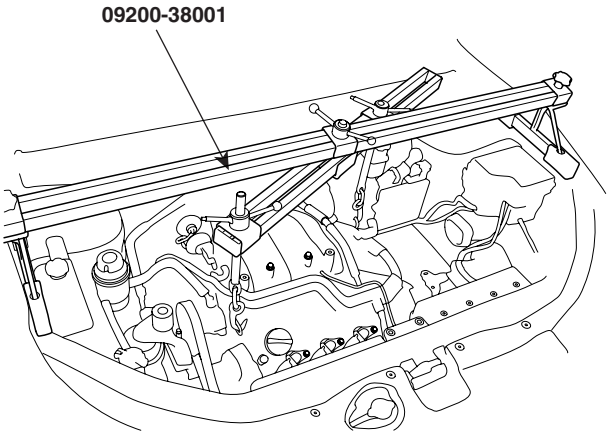

SCMAT6503L

16. Install the starter motor. (see EE group).

TORQUE:
65~85 Nm(6.5~8.5 kgf.m, 47.0~61.5 lb-ft)

17. Connect the power steering pressure tube (A) to the power steering oil pump.

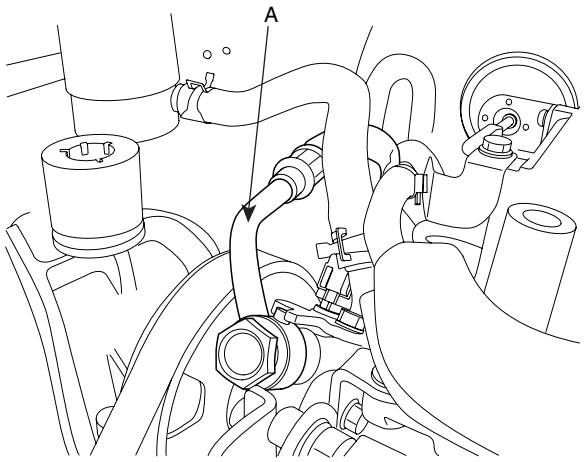

SCMAT6506L

18. Connect the transaxle oil cooler hoses (A) to the tubes by fastening the clamps (B).

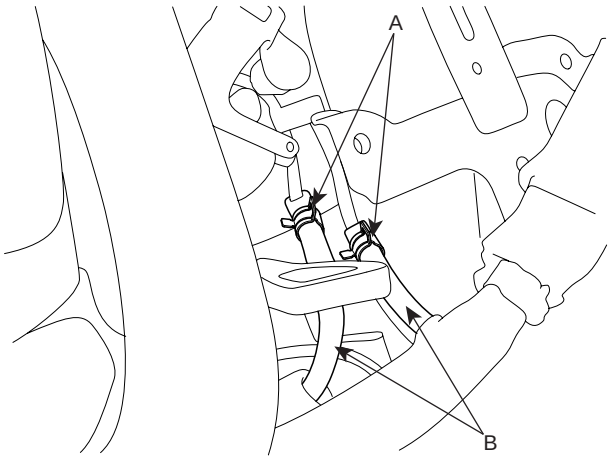

SCMAT6013D

19. Install the control cable assembly(C) by tightening the nut (A) and clip (B).

TORQUE:
8~12 Nm(0.8~1.2 kgf.m, 5.8~8.6 lb-ft)

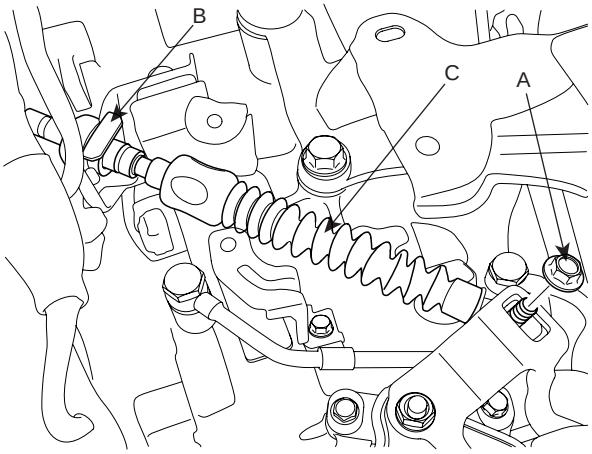

SCMAT6012D

20. Connect the transaxle wire harness connectors.

1) Install the inhibiter switch connector (A).

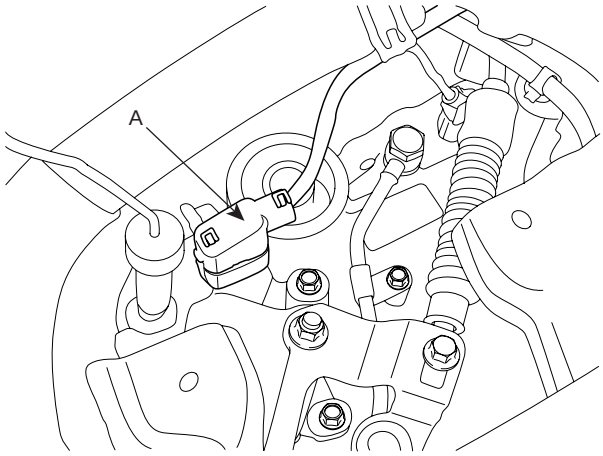

SCMAT6007D

2) Install the solenoid valve connector (A).

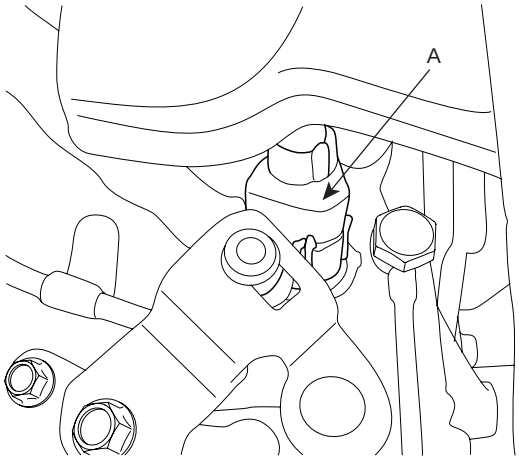

SCMAT6008D

3) Install the input speed sensor connector (A).

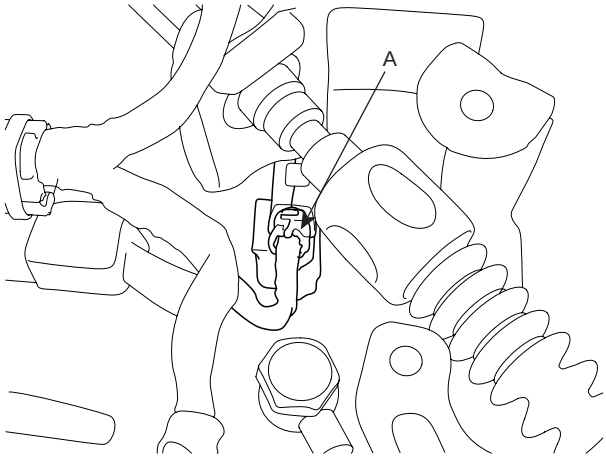

SCMAT6009D

4) Install the output speed sensor connector (A).

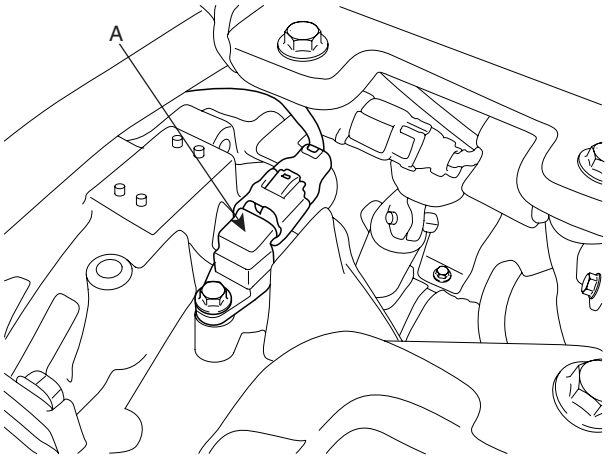

SCMAT6502L

5) Install the vehicle speed sensor connector (A).

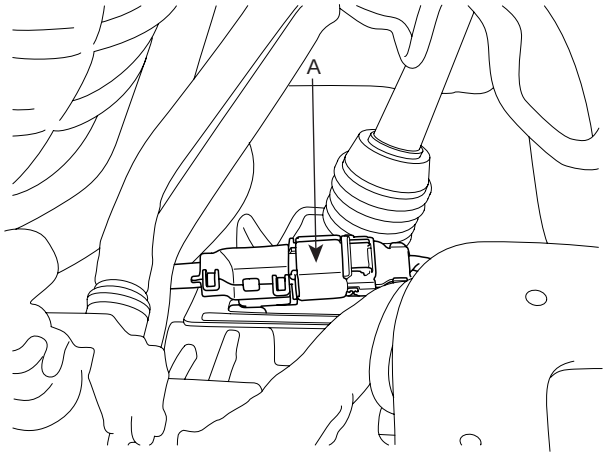

SCMAT6011D

21. Install the battery tray (B) by tightening the four mounting bolts (A).

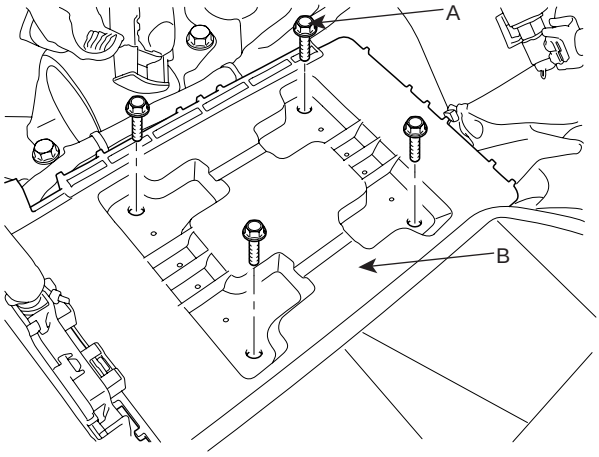

SCMAT6006D

22. Install the air cleaner lower part (A) by installing the two mounting bolts.

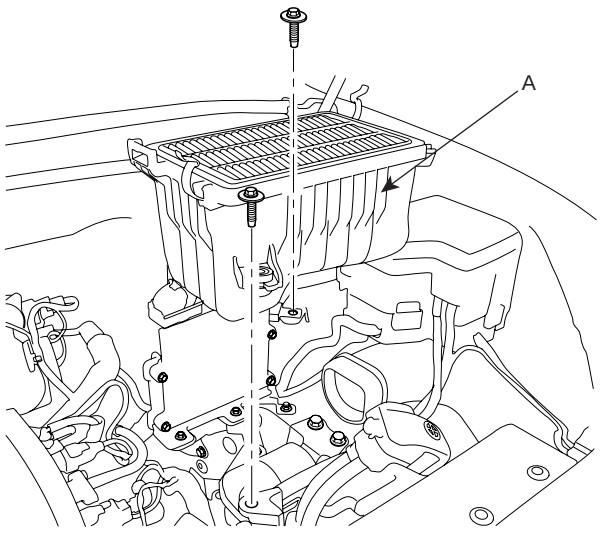

SCMAT6005D

23. Install the air cleaner upper cover (B) by installing the clips (A).

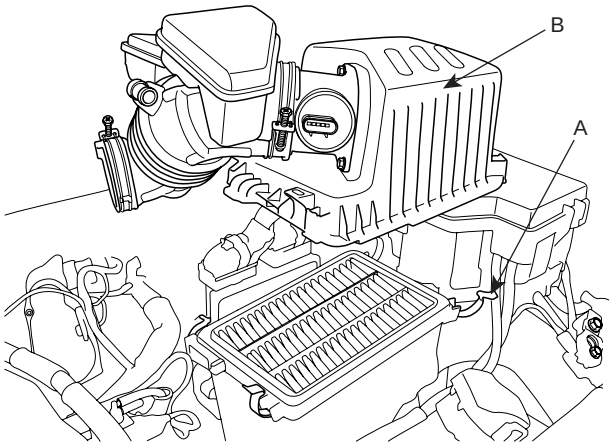

SCMAT6004D

24. Connect the air cleaner hose (B) and tighten the clamp bolt (A).

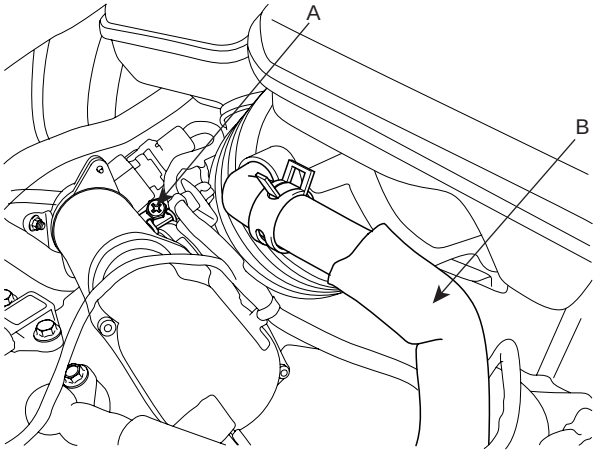

SCMAT6003D

25. Connect the AFS connector (A).

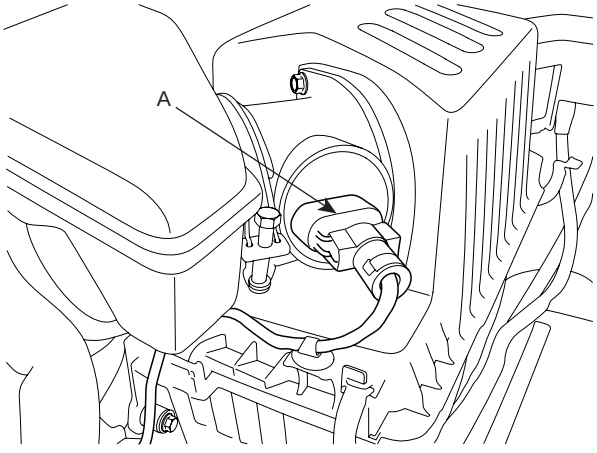

SCMAT6002D

26. Install the battery (A).

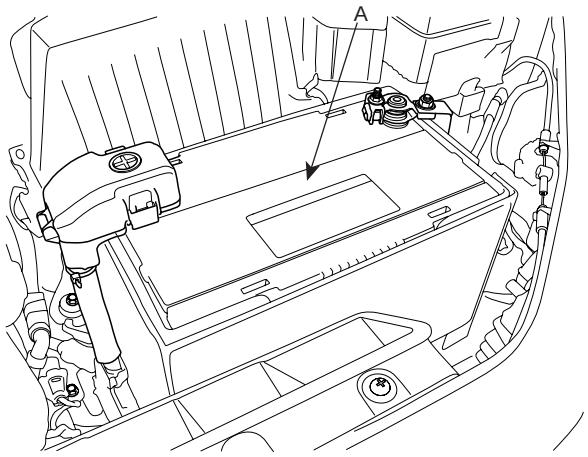

SCMAT6001D

27. Refill the transaxle fluid. (see 'Service adjustment procedure')

28. Refill the power steering fluid. (see 'ST' group)

CAUTION

After installing the inter cooler assembly, bleed the air in the system.

29. Install the engine cover and the inter cooler assembly. (see 'EM' group)

NOTE

When replacing the automatic transaxle, reset the automatic transaxle's values by using the High- Scan Pro.

a. Connect the Hi-Scan Pro connector to the data link connector under the crash pad and power cable to the cigar jack under the center facia.
b. Turn the ignition switch on and power on the Hi-Scan Pro.
c. Select the vehicle's name.
d. Select 'AUTOMATIC TRANSAXLE'.

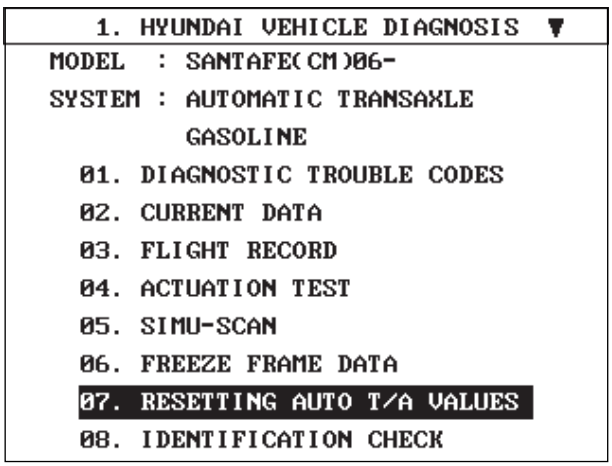

SCMAT6511L

e. Select 'RESETTING AUTO T/A VALUES' and perform the procedure.

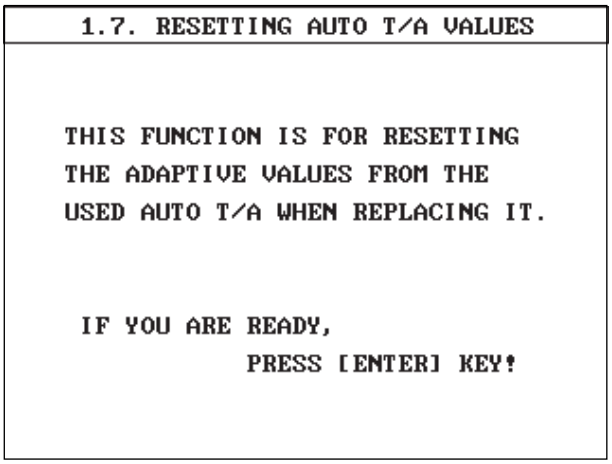

SCMAT6512L

f. Perform the procedure by pressing F1 (REST).

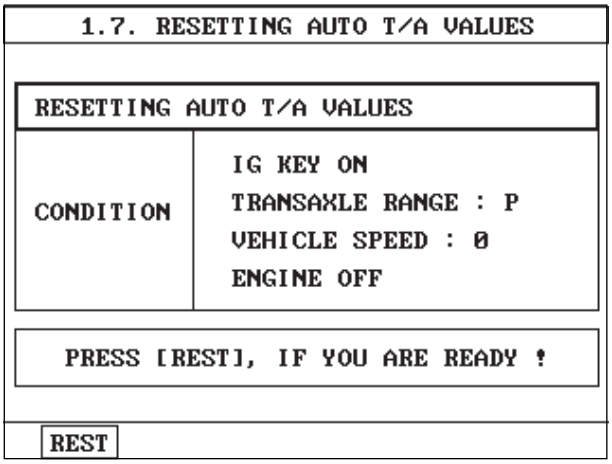

SCMAT6513L

AUTOMATIC TRANSAXLE CONTROL SYSTEM

SOLENOID VALVE

DESCRIPTION ECF5C218

ACTUATORS

Solenoid Valve for Pressure Control

- Sensor type: Normal open 3-way
- Operating temperature : -30°C～130°C(-22°F~266°F)
- Frequency:

LR, 2ND, UD, OD: 61.27Hz (at the ATF temp. above -20°C(-4°F))
DCC: 30.64Hz

- Internal resistance:

3.0 ± 0.5 Ω (LR, 2ND, UD, OD, TCC)
4.35 ± 0.5 Ω (VFS)

- Surge voltage: 56 V (Except VFS)

(LR, 2ND, UD, OD, DCC)

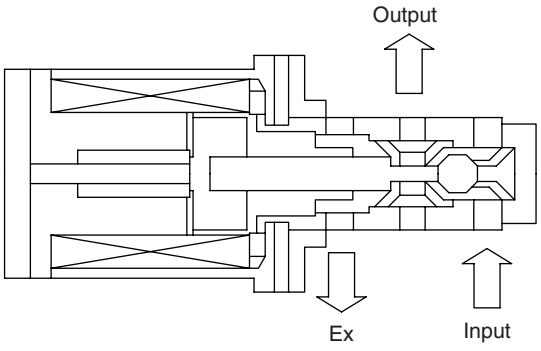

EKRF018J

LOCATION

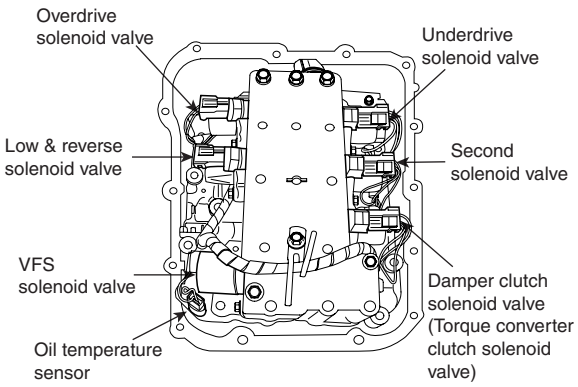

EKRF018K

SOLENOID VALVES SCHEDULE

Position	Solenoid valves				
Operation	LR	2ND	UD	OD	* DCC
1st gear	OFF	ON	OFF	ON	OFF
2nd gear	ON	OFF	OFF	ON	OFF
3rd gear	ON	ON	OFF	OFF	ON
4th gear	ON	OFF	ON	OFF	ON
Reverse	OFF	ON	ON	ON	OFF
N, P (STD. mode)	OFF	ON	ON	ON	OFF
N, P (Hold mode)	ON	OFF	ON	ON	OFF

*: Reference value.
(DCC solenoid valve will be ON when the operating condition is satisfied)

INSPECTION E7AEA75F

1. If the value is out of specification according to the chart below, remove the valve body cover.

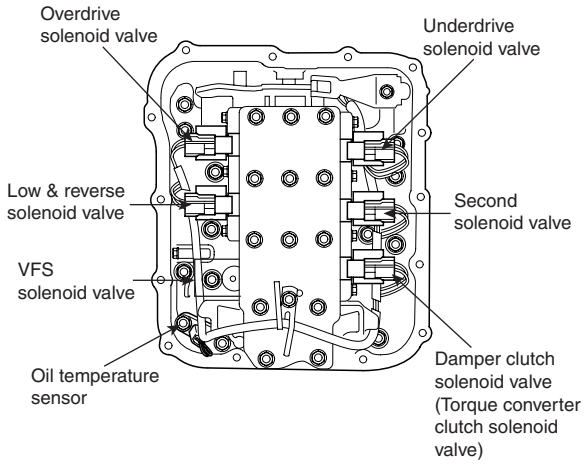

EKRF011A

2. Measure the resistance again after disconnecting solenoid valve connector.

Specification (20°C):
2.5 ~ 3.5 Ω (LR, 2ND, UD, OD, TCC)

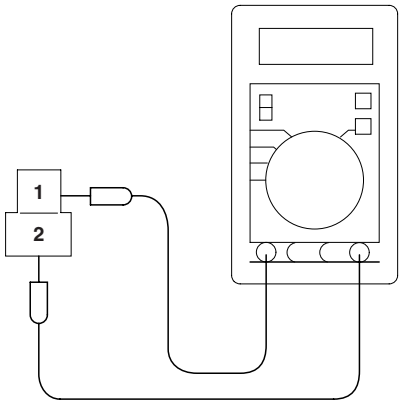

EKRF011B

3. If the value is out of specification replace the solenoid valve.

Pin No.	Name	Resistance
6 & 9	DCC (TCC)	2.5~3.5Ω (20°C)
6 & 11	LR	
4 & 5	2ND	
3 & 5	UD	
5 & 12	OD	

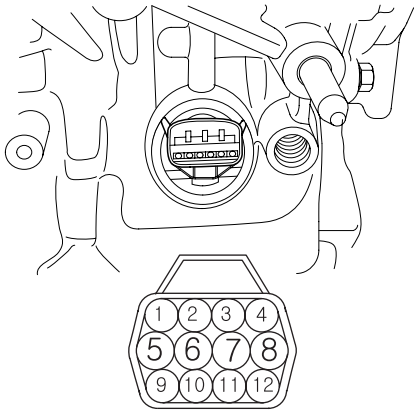

EKRF011C

VFS(VARIABLE FORCE SOLENOID) VALVE

DESCRIPTION E95DAC46

ACTUATORS

Solenoid Valve for Pressure Control

- Sensor type: Normal open 3-way
- Operating temperature : -30°C～130°C(-22°F~266°F)
- Frequency:
LR, 2ND, UD, OD: 61.27Hz (at the ATF temp. above -20°C(-4°F))
DCC: 30.64Hz
- Internal resistance:
3.0 ± 0.5 Ω (LR, 2ND, UD, OD, TCC)
4.35 ± 0.5 Ω (VFS)
- Surge voltage: 56 V (Except VFS)

(VFS)

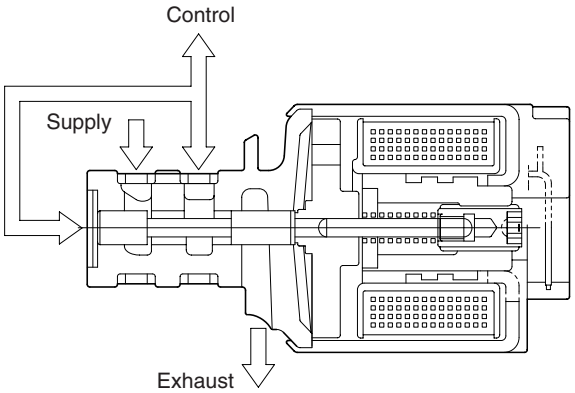

EKRF082A

LOCATION

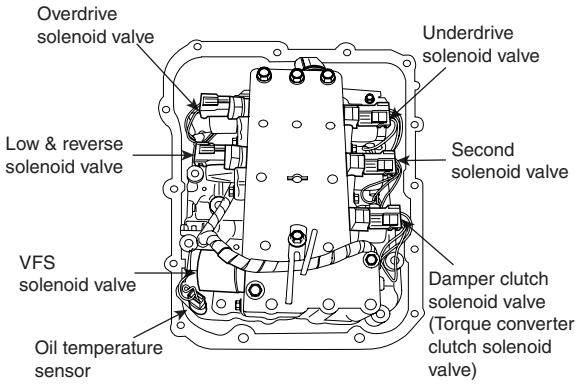

EKRF018K

VFS CONTROL PRESSURE

Input Current(mA)	Control Pressure (No line pressure)			
	Increasing Current			Decreasing Current
	MAX. (Kgf/㎠) [Kpa]	MIN. (Kgf/㎠) [Kpa]	△ (Kgf/㎠) [Kpa]	MIN. (Kgf/㎠) [Kpa]
100	6.52 [639]	5.87 [575]	[64]	
200	6.23 [611]	5.70 [559]	[52]	5.43 [532]
300	5.76 [564]	5.24 [514]	[50]	4.49 [484]
400	5.08 [498]	4.59 [450]	[48]	4.30 [421]
500	4.24 [416]	3.78 [370]	[46]	3.52 [345]
700	2.29 [224]	1.82 [178]	[46]	1.51 [148]
800	1.41 [138]	0.09 [88]	[50]	0.58 [57]
900	0.65 [64]	0.14 [14]	[50]	0 [0]
1,000	0.24 [24]	0 [0]	[24]	
1,100	0.24 [24]	0 [0]	[24]	

*Test condition:
Ps : Supply Pressure (Ps = 7.1 ± 0.3 KGf/㎠)
Pc : Control Pressure
Pex : Exhaust Pressure (Atmosphere pressure)
ATF : DIAMOND ATF SP-III
ATF temperature : 30 ± 3°C (86°F)
- Coil resistance : 4.35 ± 35Ω
- Dither Frequency : 600 ± 20Hz
In case of VFS solenoid valve, the relation between Duty and oil pressure can't be expressed.

INSPECTION E976C1C7

1. If the value is out of specification according to the chart below, remove the valve body cover.

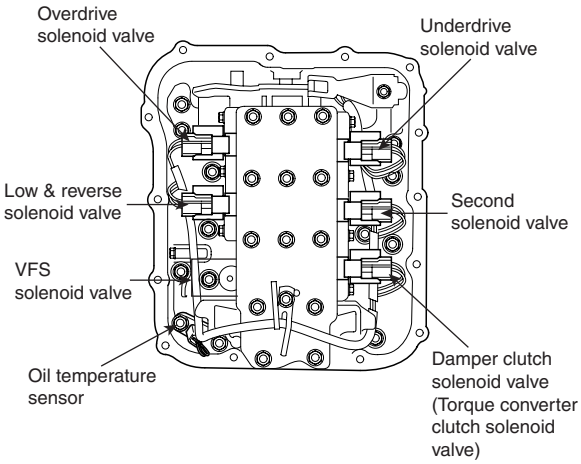

EKRF011A

2. Measure the resistance again after disconnecting solenoid valve connector.

Pin No.	Name	Resistance
7 & 8	VFS	4.3~4.4Ω (20°C)

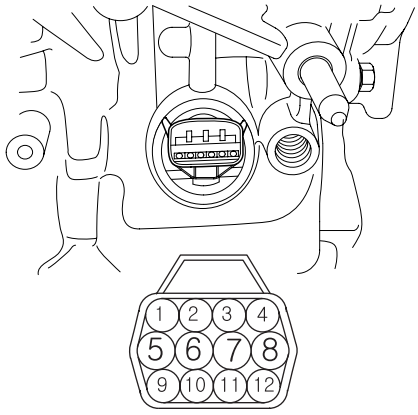

EKRF011C

Specification (20°C):
4.3 ~ 4.4Ω (VFS)

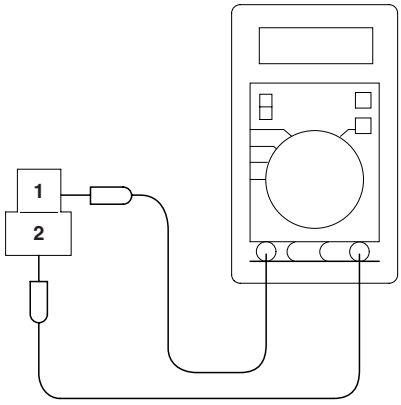

EKRF011B

3. If the value is out of specification replace the solenoid valve.

INPUT SPEED SENSOR

- Type: Hall sensor
- Current consumption: 22mA (MAX.)
- Sensor body and sensor connector have been unified as one.

DESCRIPTION E4C6DCFB

INPUT SHAFT SPEED SENSOR

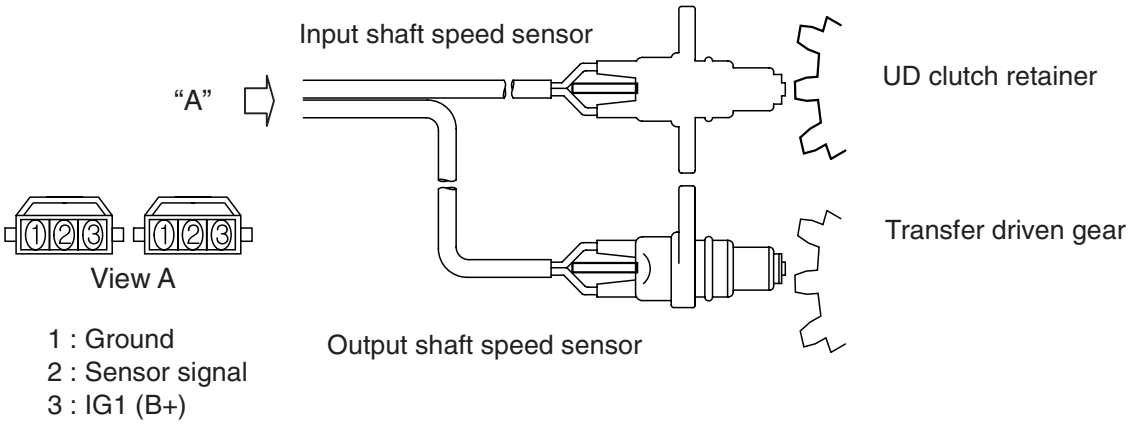

EKRF018A

HALL TYPE SENSOR: SPECIFICATION

Air gap (mm)	Input shaft speed sensor	1.3
Coil Resistance	Input shaft speed sensor	over 1MΩ
Peak-Peak Voltage	High	4.8~5.2V
	Low	0.8V

WAVE FORM WITH HIGH-SCAN

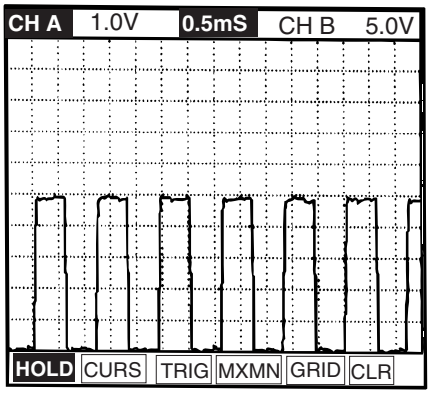

EKRF018B

HALL TYPE SENSOR: STRUCTURE & INTERFACE

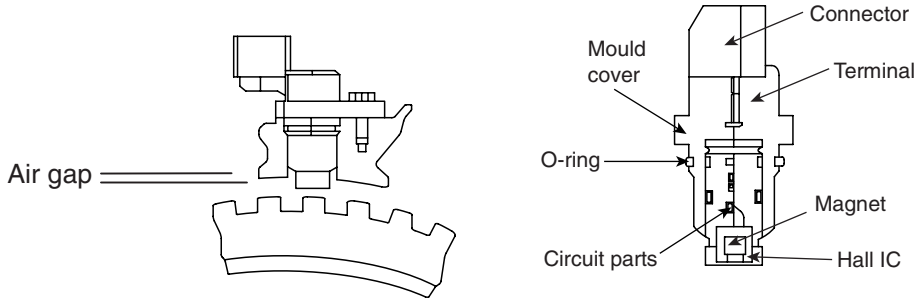

EKRF018E

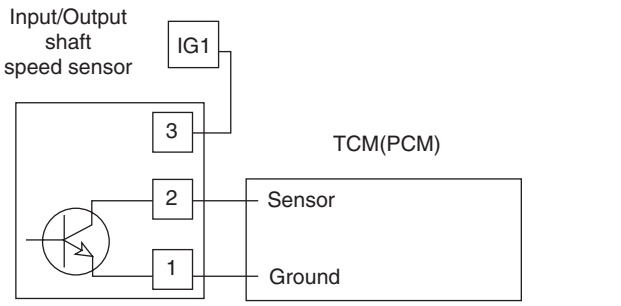

EKRF018C

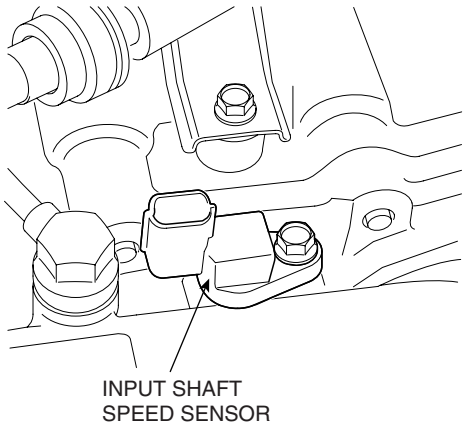

EKRF018D

REPLACEMENT E437642C

1. Remove the battery and air cleaner (see "Transaxle range switch replacement").
2. Remove the transaxle range switch connector.
3. Remove the control cable to transaxle range switch mounting nut.
4. Remove the input shaft speed sensor(A).
   1) Disconnect the input shaft speed sensor connector.
   2) Remove the bolt(B).

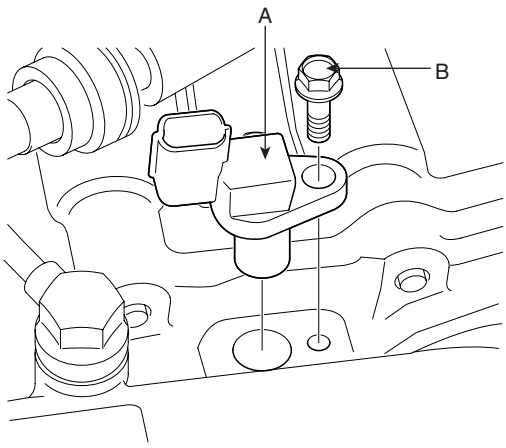

EKRF009F

   3) Inspect the input shaft speed sensor bore.
5. Apply a light coat of automatic transaxle fluid to the O-ring seal before installation.
6. Install the input shaft speed sensor.
7. Install the control cable mounting bracket.
8. Connect the input shaft speed sensor connector.
9. Install the holder of the control cable.
10. Adjust the control cable to transaxle range switch and tighten the transaxle manual lever to the control cable mounting nut. (see "Automatic transaxle shift control installation")
11. Installation is the reverse of removal.

OUTPUT SPEED SENSOR

- Type: Hall sensor
- Current consumption: 22mA (MAX.)
- Sensor body and sensor connector have been unified as one.

DESCRIPTION E5FABE4A

OUTPUT SHAFT SPEED SENSOR

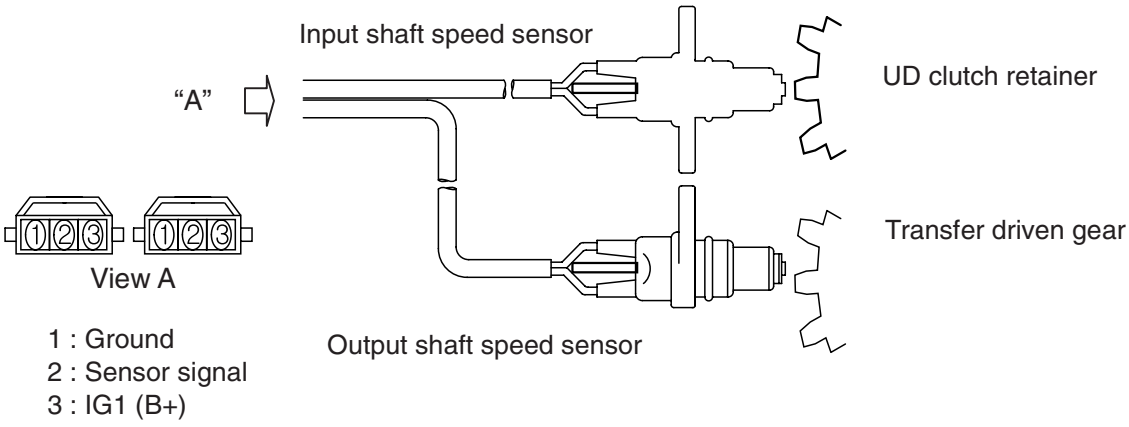

EKRF018A

HALL TYPE SENSOR: SPECIFICATION

Air gap (mm)	Output shaft speed sensor	0.85
Coil Resistance	Output shaft speed sensor	over 1MΩ
Peak-Peak Voltage	High	4.8~5.2V
	Low	0.8V

WAVE FORM WITH HIGH-SCAN

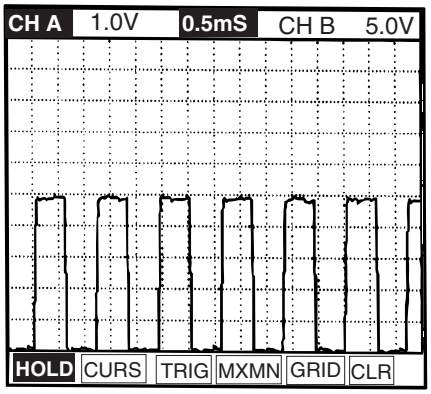

EKRF018B

HALL TYPE SENSOR: STRUCTURE & INTERFACE

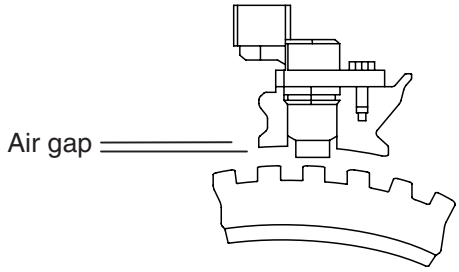

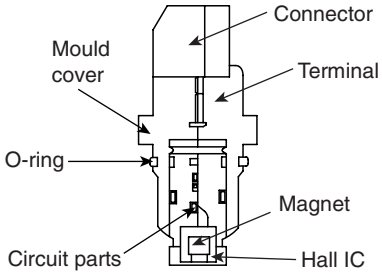

EKRF018E

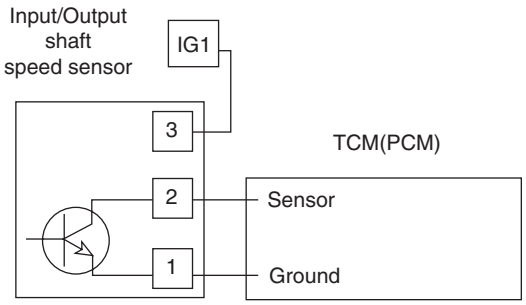

EKRF018C

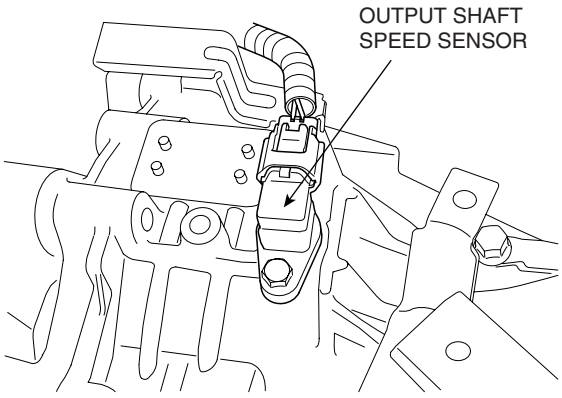

EKRF018F

REPLACEMENT E20A06B9

1. Remove the battery and air cleaner. (see "Transaxle range switch replacement")
2. Remove the output shaft speed sensor(A).

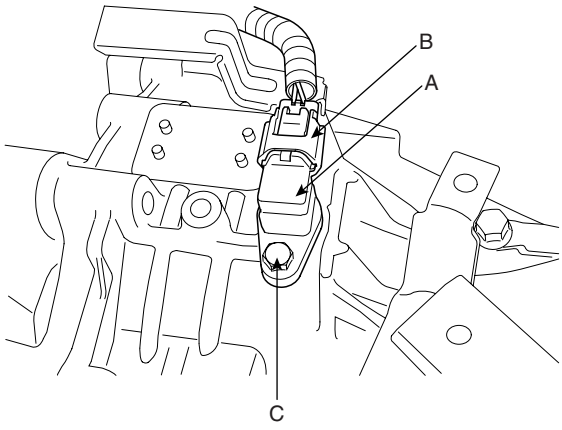

EKRF010A

   1) Disconnect the output shaft speed sensor connector(B).
   2) Remove the bolt(C).
   3) Inspect the output shaft speed sensor bore.
3. Apply a light coat of automatic transaxle fluid to the O-ring seal before installation.
4. Installation is the reverse of removal.

TRANSAXLE OIL TEMPERATURE SENSOR

DESCRIPTION E122ACC8

OIL TEMPERATURE SENSOR

The oil temperature sensor is of the thermistor type, and senses the automatic transaxle fluid temperature. Using the signal from this sensor, TCM(PCM) controls the shift pattern optimally during shift. In order to operate the damper clutch, this signal is also referred.
- Range of temperature : -40°C～145°C
- Type: Separated type (High / Low temperature)
- Standard value of internal resistance

Temp.[°C(°F)]	Resistance(kΩ)	Temp.[°C(°F)]	Resistance(kΩ)
-40(-40)	139.5	80(176)	1.08
-20(-4)	47.7	100(212)	0.63
0(32)	18.6	120(248)	0.38
20(68)	8.1	140(284)	0.25
40(104)	3.8	160(320)	0.16
60(140)	1.98		

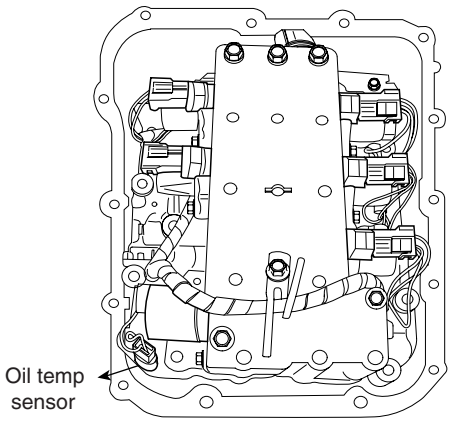

EKRF018G

REPLACEMENT EEC35FED

1. Remove the automatic transaxle assembly.
2. Remove the valve body cover(refer to the overhaul manual).
3. Disconnect the oil temperature sensor connector.
4. Remove the oil temperature sensor(B), loosening the mounting bolt(A).

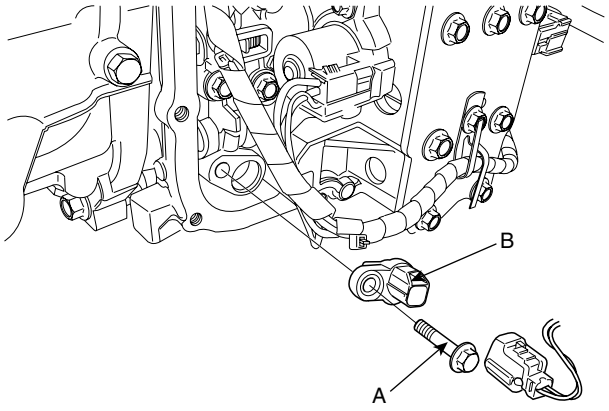

EKRF009C

5. Replace the sensor with the new one and reassemble the rest of the parts.

INSPECTION EFB6BAFB

1. Remove the oil temperature sensor(A).

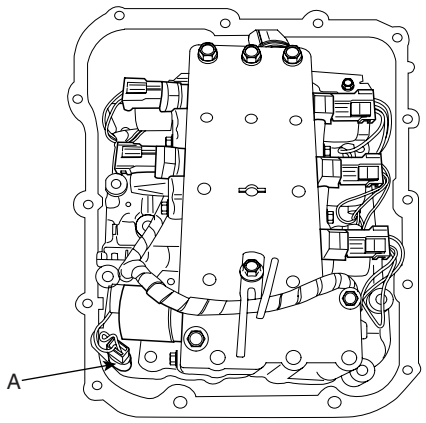

EKRF009D

2. Measure the resistance between the terminal 1 and 2 of the sensor connector.

Temp.[°C(°F)]	Resistance(KΩ)
0(32) 100(212)	18.6 0.63

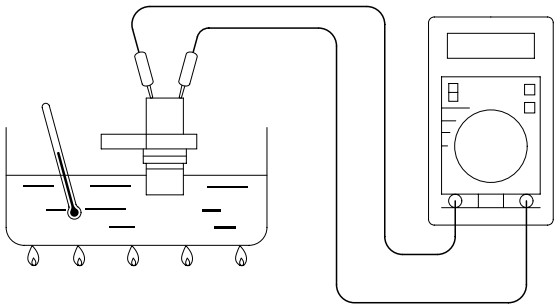

EKRF009E

3. If the value is out of the specfication, replace the oil temperature sensor.

TRANSAXLE RANGE (TR) SWITCH

DESCRIPTION E88015D4

INHIBITOR SWITCH

- Type: Rotary contact type
- Range of temperature : -40˚C～145˚C(-40˚F~293˚F)

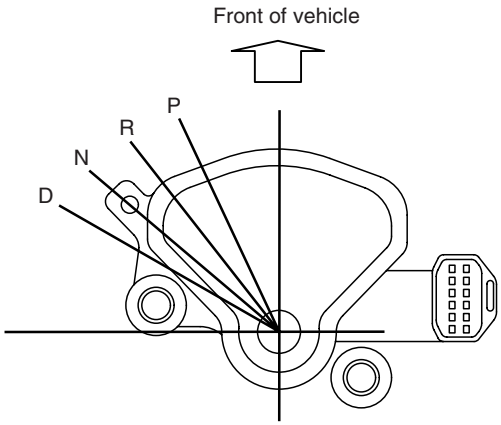

EKRF018H

INHIBITOR SWITCH - CONTINUITY CHECK(SPORTS MODE)

Range	Terminal Number									
	1	2	3	4	5	6	7	8	9	10
P			○	—	—	—	—	○	○	○
R							○	○		
N				○	—	—	—	○	○	○
D	○	—	—	—	—	—	—	○		

EKRF018I

REPLACEMENT EE7E45CD

1. Pull up the parking brake.
2. Position the shift lever in 'N' range.
3. Remove the air cleaner assembly.
4. Remove the battery.
5. Remove the battery tray.
6. Remove the inhibiter switch connector.
7. Remove the shift cable mounting nut(A).

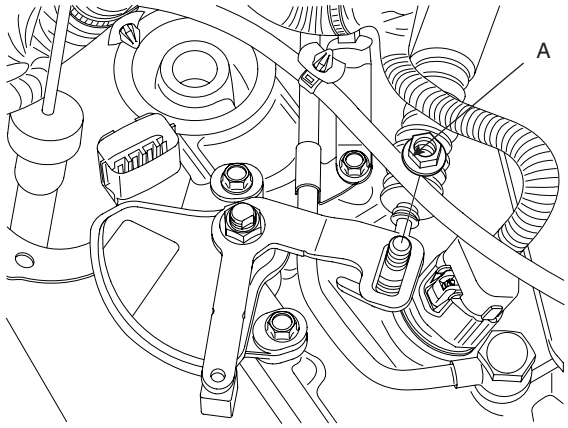

EKRF008E

8. Remove the inhibiter switch loosening the mounting bolts.
9. Refering to 'INSPECTION', check for continuity. If there is an error, replace the inhibiter switch.

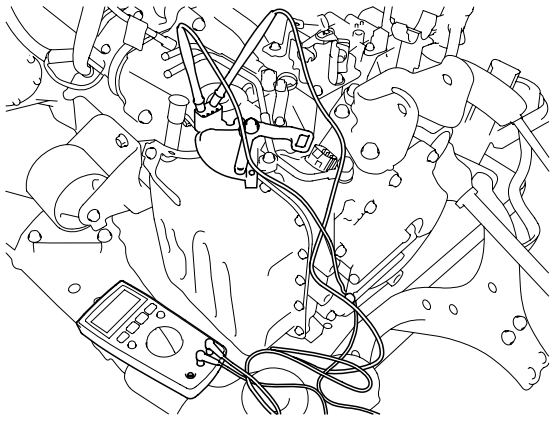

EKRF008F

10. After tightening the shift cable mounting nut, connect the inhibiter switch.
11. Install the battery, battery tray and the air cleaner assembly.

INSPECTION E5BFD847

1. Check for the starter motor when the ignition switch is at 'START' position and the shift lever at 'P' or 'N' range.
2. Check for the rear lamp when the ignition switch if it does not work properly.
3. Check for the inhibiter switch if it does not work properly.
4. If the inhibiter switch is not fixed in a proper position, reassemble it in the right position.
5. Re-check 1 and 2 procedures.
6. Using a scan tool, confirm the DTCs.
7. Disconnect the battery (-) terminal and the inhibiter switch.
8. Check for continuity between terminals at the switch connector.

Range	Terminal Number									
	1	2	3	4	5	6	7	8	9	10
P			○					○	○	○
R							○	○		
N				○				○	○	○
D	○							○		

EKRF008G

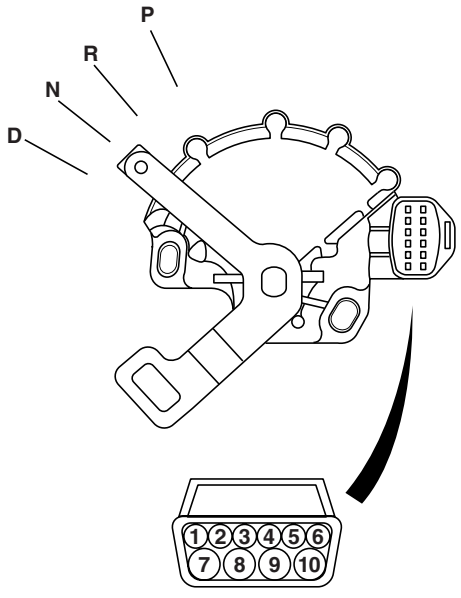

EKRF008H

9. If there is not continuity between the terminals in the table above for each switch position, replace the inhibiter switch.

ADJUSTMENT EB9F50D8

1. Set the select lever to the "N" position.
2. Loosen the control cable to manual control lever coupling nut to free the cable and lever.
3. Set the manual control lever to the neutral position.

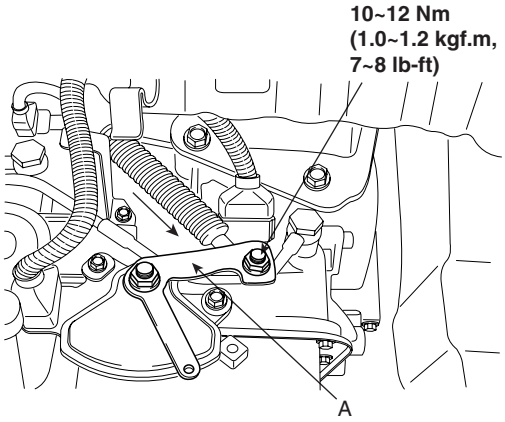

EKRF009A

4. Loosen the transaxle range switch body mounting bolts and then turn the transaxle range switch body so the hole in the end of the manual control lever and the hole (cross section A-A in the figure) in the flange of the transaxle range switch body flange are aligned.

5. Tighten the transaxle range switch body mounting bolts to the specified torque. Make sure at this time that the position of the switch body did not move.

TORQUE :
10～12Nm (1.0~1.2kgf.m, 7~8lb-ft)

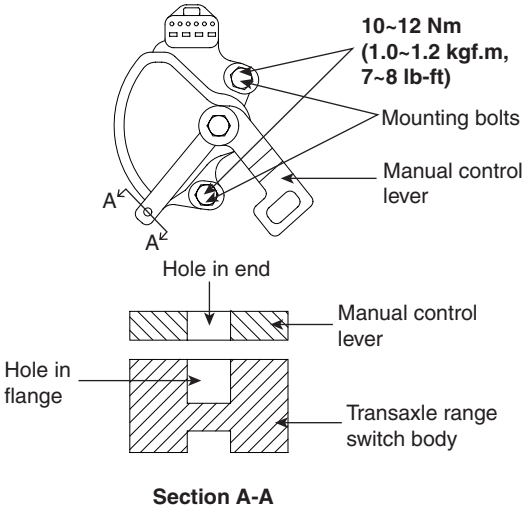

EKRF009B

6. Gently pull the transmission control cable in the direction of the arrow, and then tighten the adjusting nut.

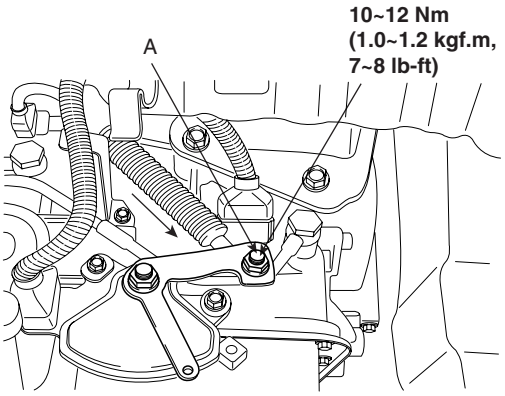

EKRF090A

7. Check that the select lever is in the "N" position.

SHIFT LEVER

COMPONENTS (1) EA3EE691

[LHD]

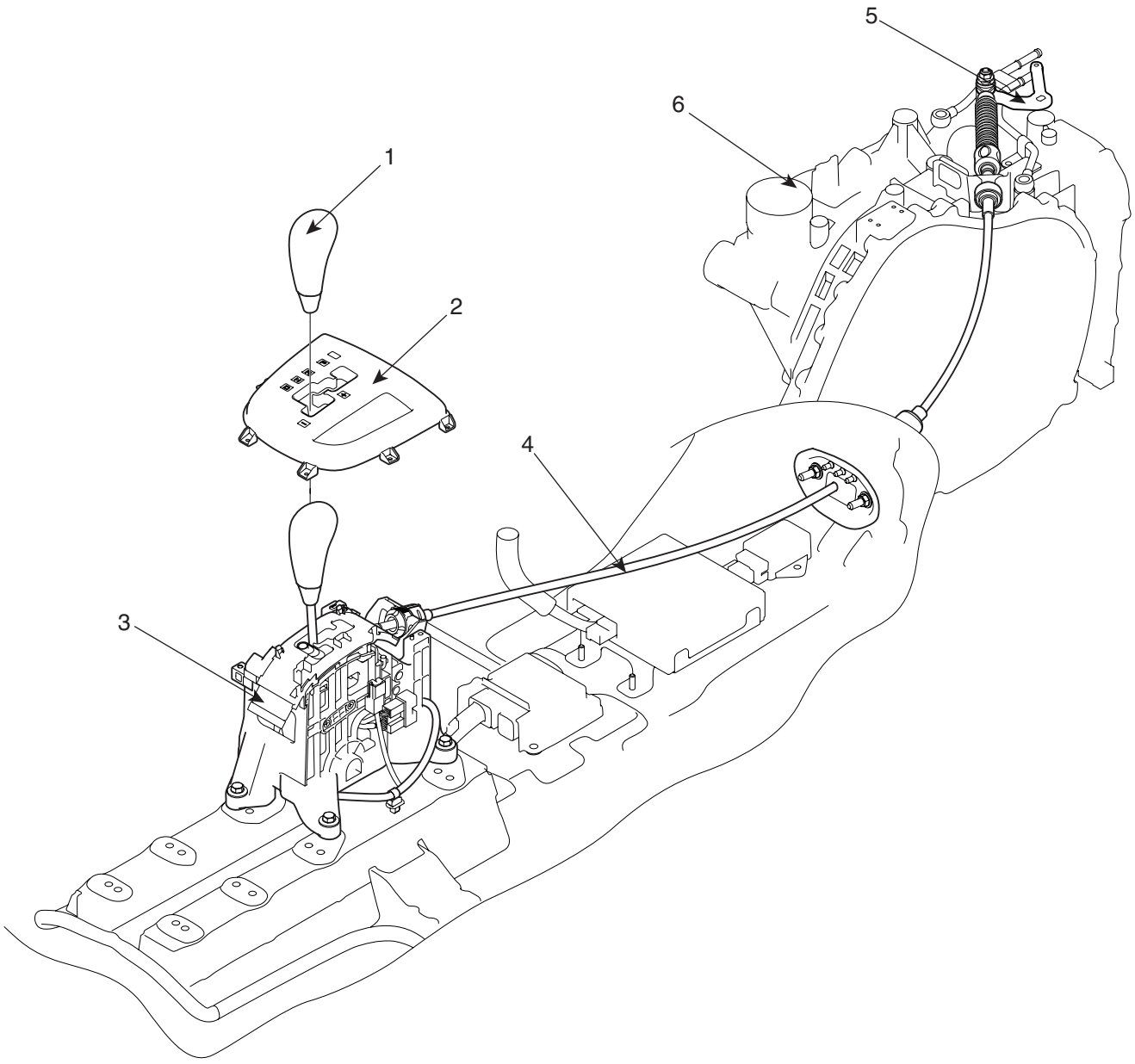

1. Shift lever knob
2. Indicator assembly
3. Shift lever assembly
4. Control cable assembly
5. Shift lever assembly (AT side)
6. Automatic transaxle assembly

SCMAT6507L

[RHD]

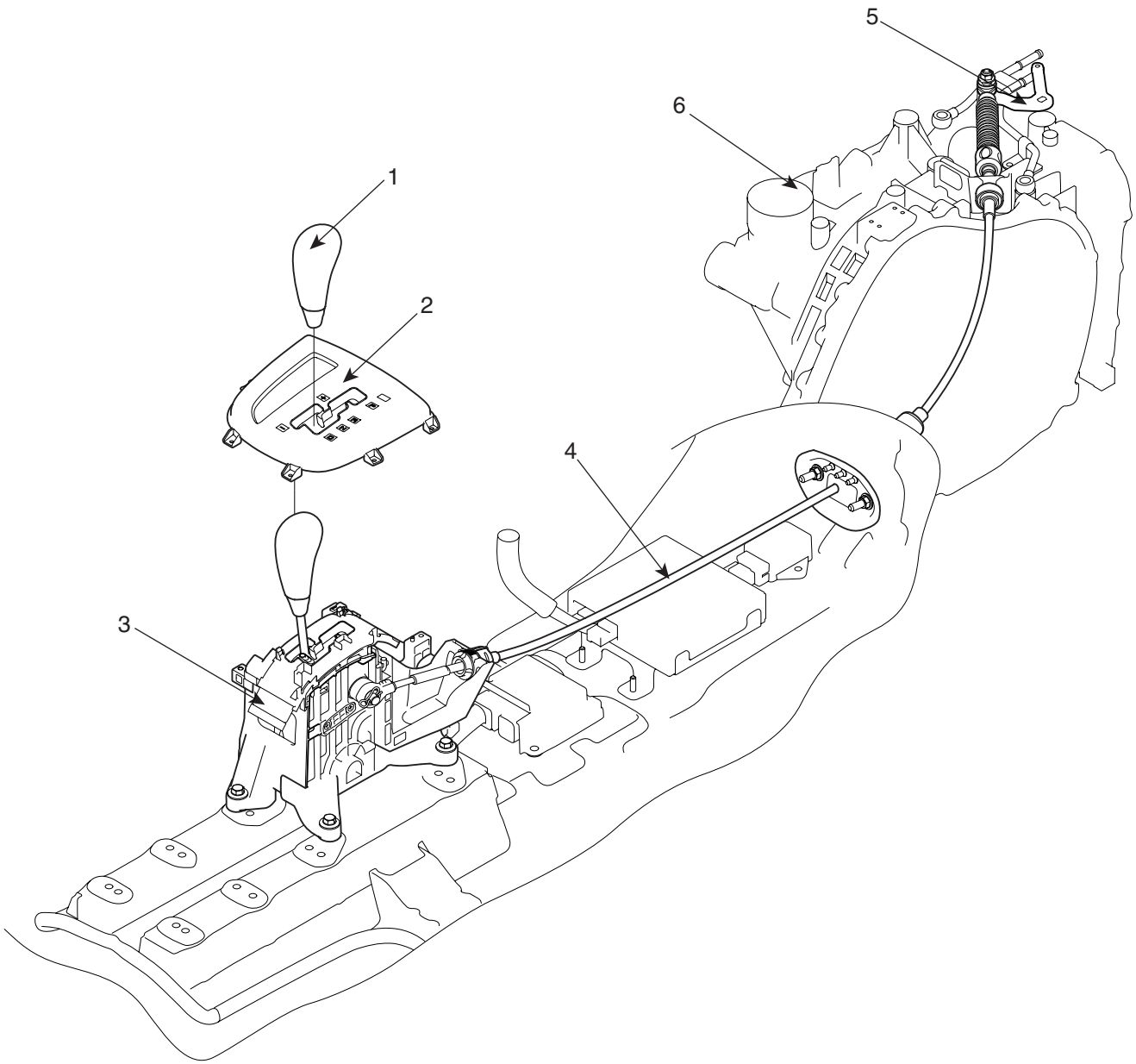

1. Shift lever knob
2. Indicator assembly
3. Shift lever assembly
4. Control cable assembly
5. Shift lever assembly (AT side)
6. Automatic transaxle assembly

SCMAT6507R

COMPONENTS (2)

[LHD]

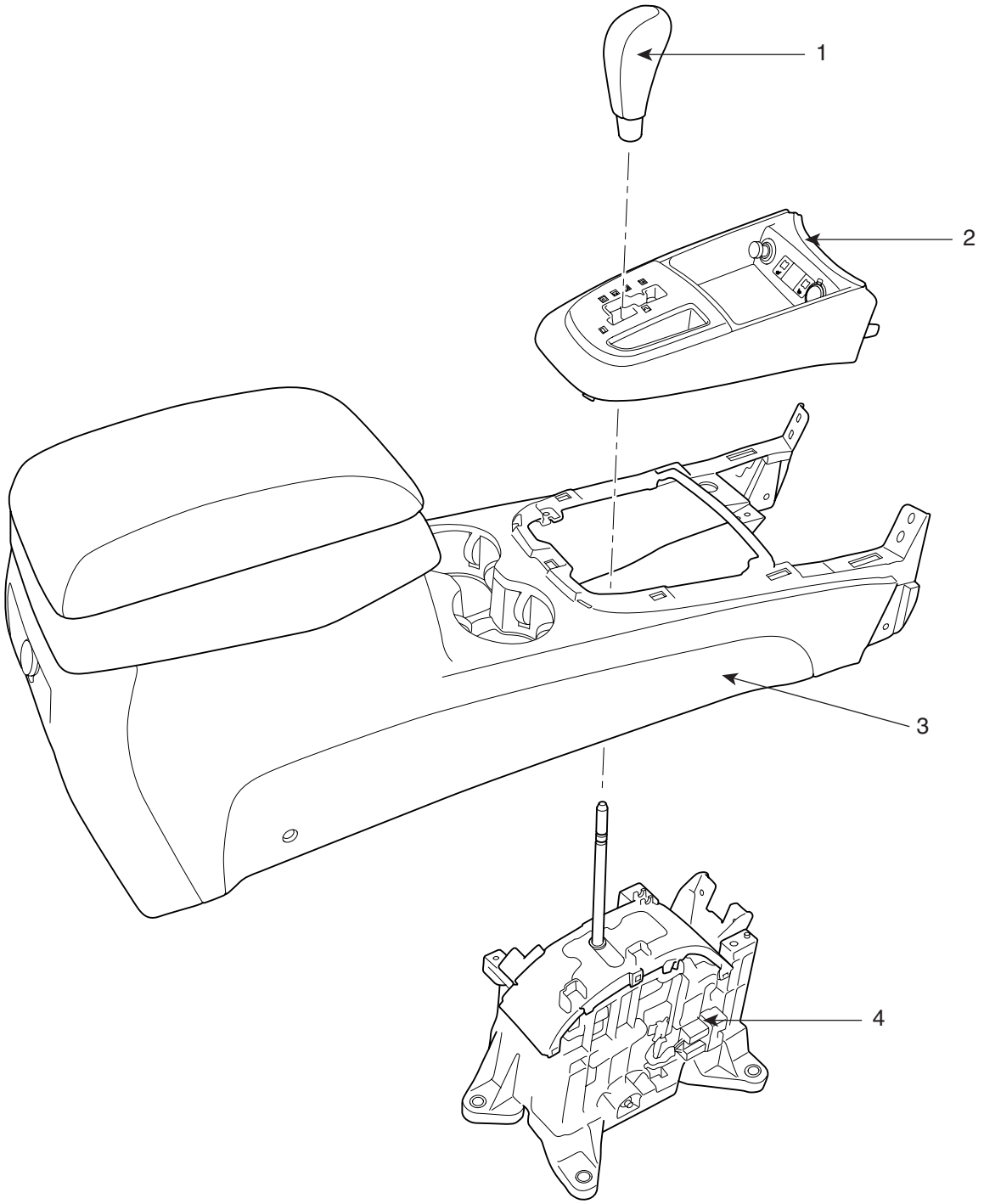

1. Shift lever knob
2. Center console cover
3. Center console
4. Shift lever

SCMAT6508L

[RHD]

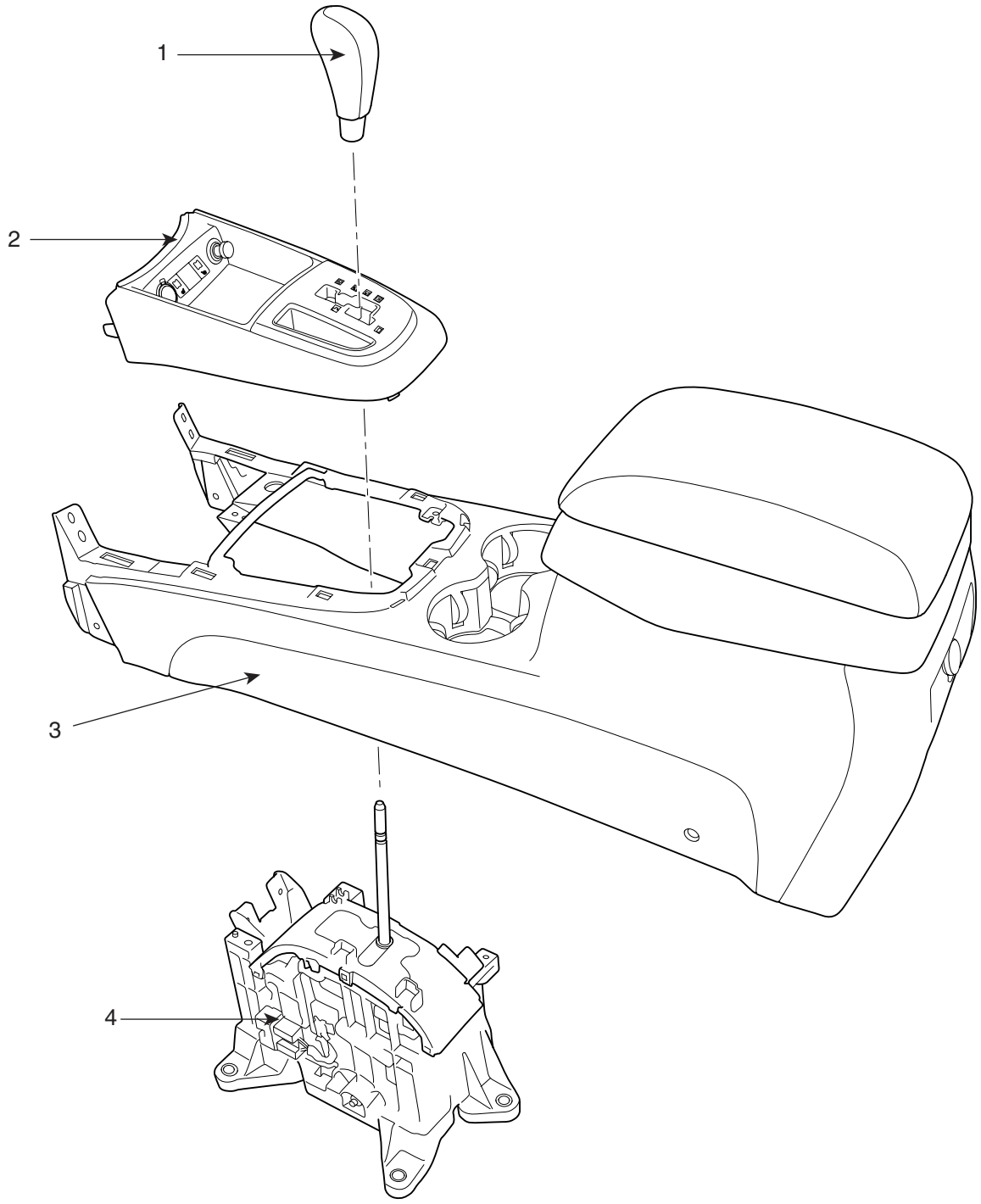

1. Shift lever knob
2. Center console cover
3. Center console
4. Shift lever

SCMAT6508R

REMOVAL EFBDD5ED

1. Remove the shift lever knob(A).

[LHD]

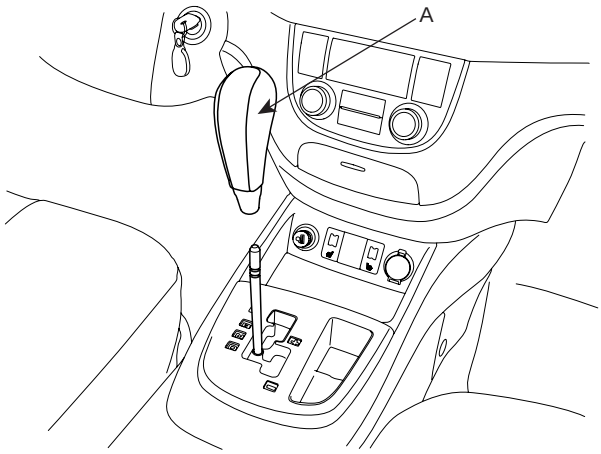

SCMAT6022D

[RHD]

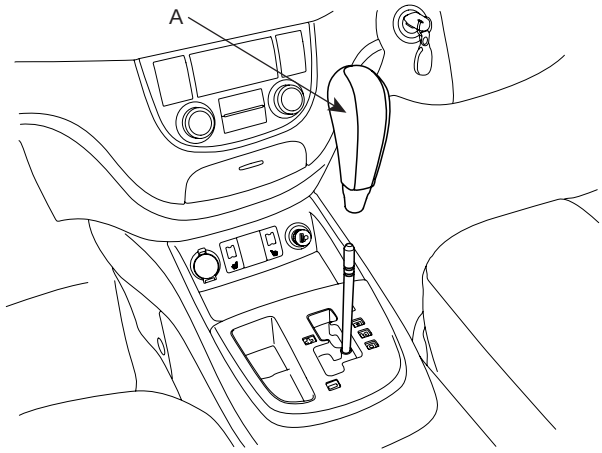

SCMAT6022R

2. Remove the center console cover (A).

[LHD]

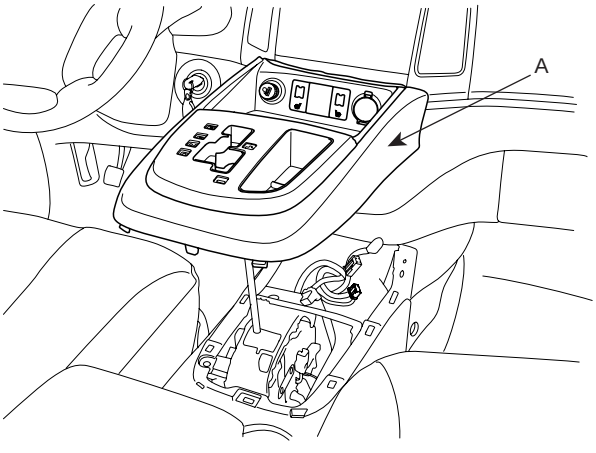

SCMAT6023D

[RHD]

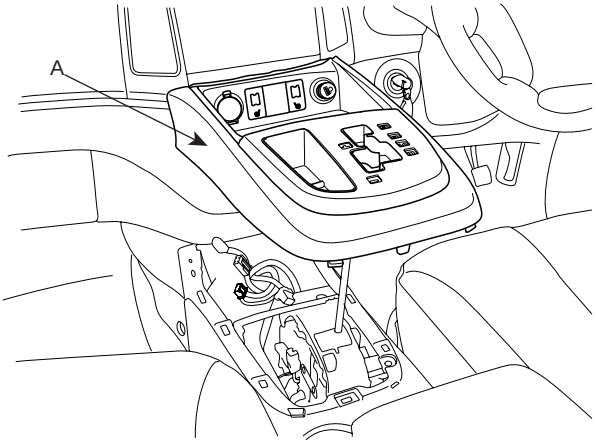

SCMAT6023R

3. Remove the center console cover by removing the two screws (A) and the four bolts (B). (See BD group)

[LHD]

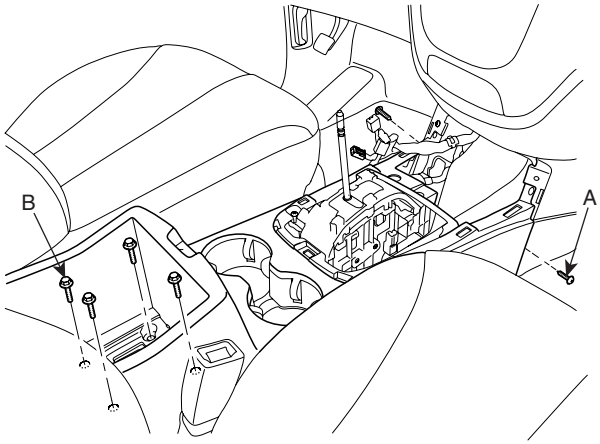

SCMAT6024D

[RHD]

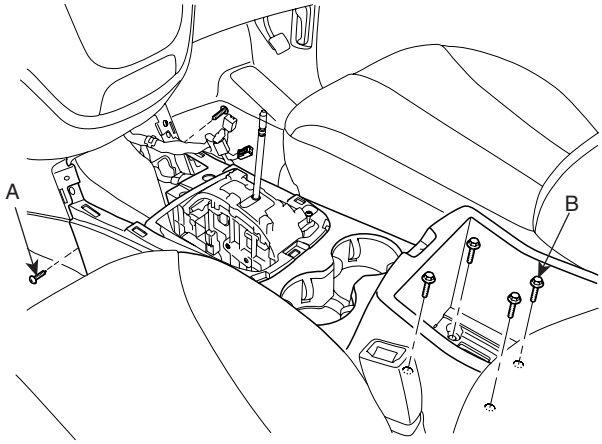

SCMAT6024R

4. Disconnect the interlock switch connector (A).

[LHD]

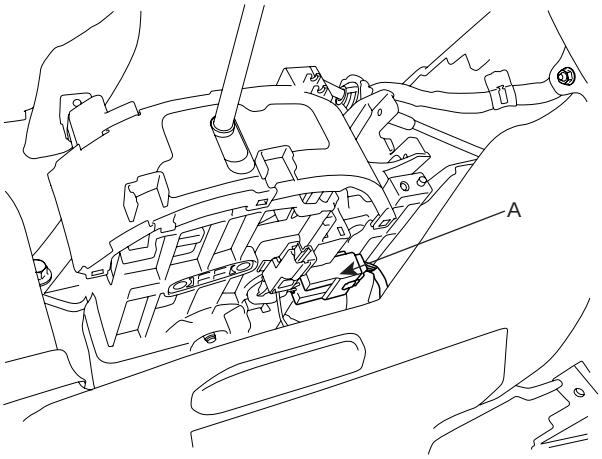

SCMAT6025D

[RHD]

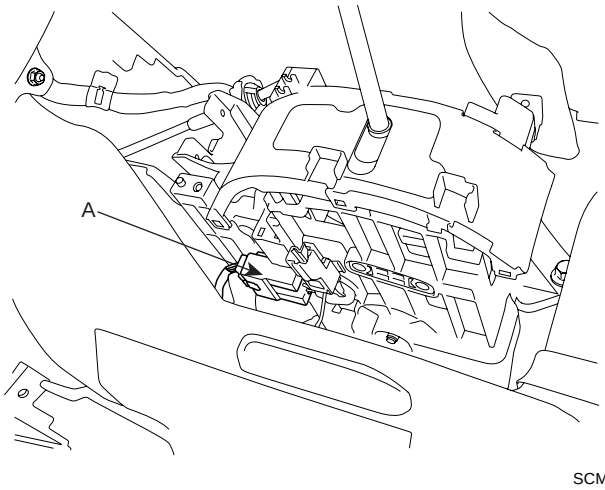

SCMAT6025R

5. Remove the control cable assembly by removing the snap pin (A) and the clip (B).

[LHD]

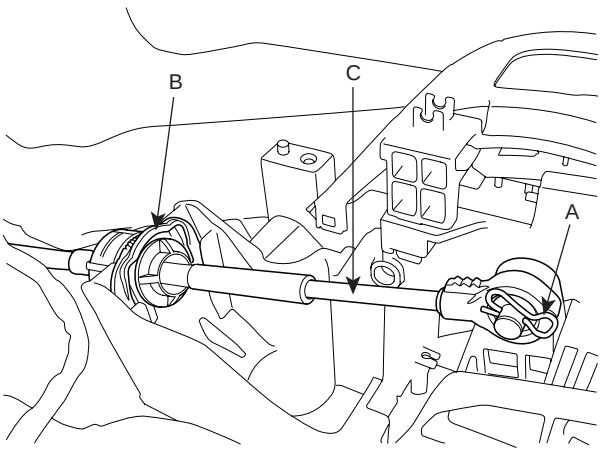

SCMAT6026D

[RHD]

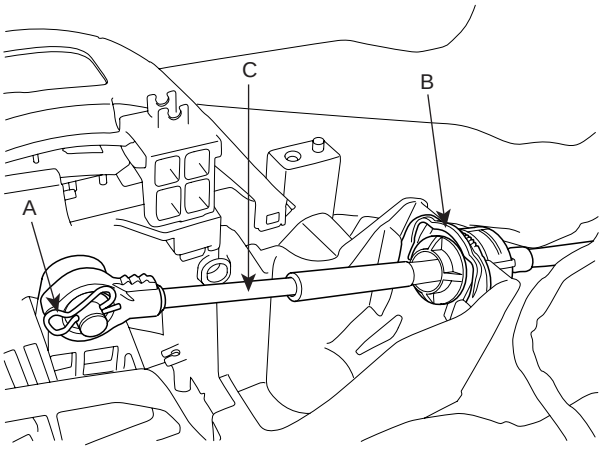

SCMAT6026R

6. Remove the shift lever bolts (A-4ea).

[LHD]

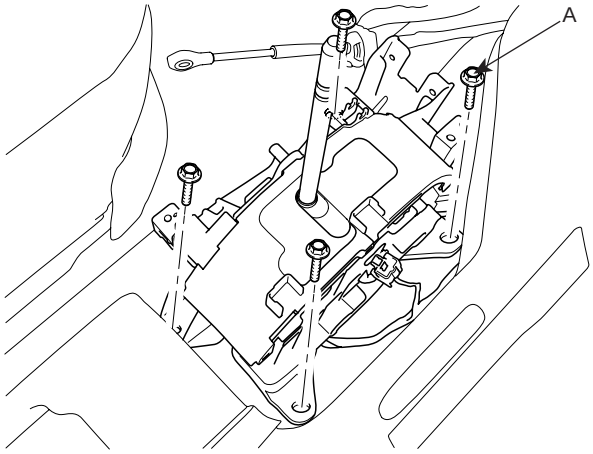

SCMAT6027D

[RHD]

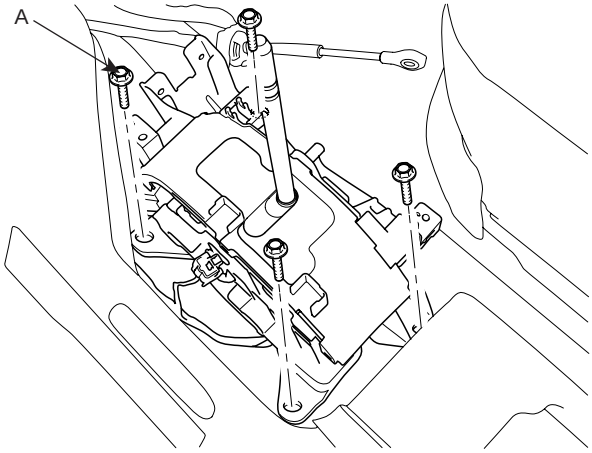

SCMAT6027R

7. Remove the shift lever assembly.

INSPECTION E20B75D9

1. Adjusting method for T/M control cable

   1) Set room side lever and T/M side lever to "N" position.

   2) Connect room side lever and shift cable.

   3) Connect T/M side lever to cable in a following orders.
      a. Push cable lightly to "F" direction shown to eliminate FREE PLAY of cable.
      b. Tighten adjusting nut(C).

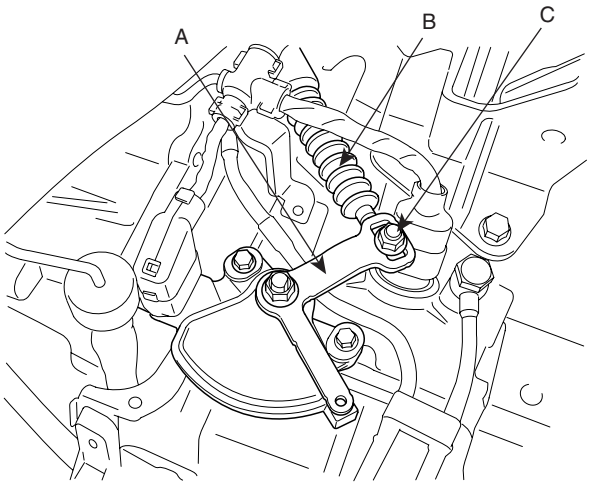

LKLG002B

   4) After adjusting according to (2)-(4). Check to be sure that this part operates surely at each range of T/M side corresponding to each position of room lever.

INSTALLATION EC05C9CB

1. Installation is the reverse of removal.

Automatic Transaxle (A5HF1)

GENERAL

AUTOMATIC TRANSAXLE SYSTEM
AUTOMATIC TRANSAXLE

AUTOMATIC TRANSAXLE CONTROL SYSTEM
SOLENOID VALVE
VFS(VARIABLE FORCE SOLENOID) VALVE
INPUT SPEED SENSOR
OUTPUT SPEED SENSOR
TRANSAXLE OIL TEMPERATURE SENSOR
TRANSAXLE RANGE (TR) SWITCH

GENERAL

SPECIFICATIONS EA49B794

Engine type		DIESEL(D2.2)
Transaxle type		A5HF1
Gear ratio	1ST	4.497
	2ND	2.442
	3RD	1.686
	4TH	1.233
	5TH	0.868
	REV.	4.586
Final gear ratio		3.333
T/M oil capacity(ℓ)※		10.9

※ The quantity in the chart above is for the reference. The actual filling quantity of the automatic transaxle fluid must be set according to 'INSPECTION' or 'REPLACEMENT' procesure of the automatic transaxle fluid.

Recommended transaxle oil			Diamond ATF SP Ⅲ or SK ATF SP Ⅲ
Check & Replenishment			Every one year or every 20,000km Every one year or every 15,000km only for European contries
Replacement	Private use	Normal use	No service required Every 100,000km only for Australia Every 90,000km only for European contries
		Severe use(*)	Every 40,000km Every 45,000km only for European contries
	Business use		

* Severe use(marked ' * ') is defined as:

1. Driving on rough road(bumpy road, gravel road, snowy road, unpaved road etc.).
2. Driving on mountain road, ascent/descent.
3. Repetition of short distance driving.
4. More than 50% operation in heavy city traffic during hot weather above 32°C(89.6°F).
5. Police car, Taxi, Commercial type operation or trailer towing, etc.

TIGHTENING TORQUE

ITEM		Nm	kgf·m	lb-ft
Control cable nut		8 ~ 12	0.8 ~ 1.2	5.8 ~ 8.6
Input shaft speed sensor		10 ~ 12	1.0 ~1.2	7 ~ 8
Output shaft speed sensor		10 ~ 12	1.0 ~1.2	7 ~ 8
Manual control lever		18 ~ 25	1.8 ~ 2.5	13 ~ 18
Transaxle range switch		10 ~ 12	1.0 ~1.2	7 ~ 8
Valve body cover		13 ~ 15	1.3 ~1.5	9.4 ~ 10.8
Valve body mounting bolt		10 ~ 12	1.0 ~1.2	7 ~ 8
Oil temperature sensor		10 ~ 12	1.0 ~1.2	7 ~ 8
Oil filler plug		29 ~ 34	2.9 ~ 3.4	21.4 ~ 25.1
Oil drain plug		40 ~ 50	4.0 ~ 5.0	29 ~ 36
Solenoid valve support		5 ~ 7	0.5 ~ 0.7	4 ~ 5
Pressure check plug		8 ~ 10	0.8 ~ 1.0	6 ~ 7
Transaxle mounting sub bracket nut		60 ~ 80	6.0 ~ 8.0	43 ~ 58
Transaxle mounting bracket bolts		40 ~ 55	4.0 ~ 5.5	29 ~ 40
Transaxle mounting insulator bolt		90 ~ 110	9.0 ~ 11	65 ~ 80
Transaxle and engine mounting bolt	Engine side(4ea)	65 ~ 85	6.5 ~ 8.5	47 ~ 61.5
	Transaxle side(3ea)	43 ~ 55	4.3 ~ 5.5	31.1 ~ 39.7
Drive plate bolt		46 ~ 53	4.6 ~ 5.3	33.3 ~ 38.3

LUBRICANT EFD4BAE2

Item	Specified lubricant	Quantity
Transmission oil	Diamond ATF SP-III	7.8ℓ (8.2 Us qt, 6.9Imp.qt)

SEALANT

Item	Specified Sealant
Rear cover Torque converter housing Valve body cover	Three Bond - TB 1281B or LOCTITE - FMD - 546
Transmission case side cover	Three Bond - TB 1389 or LOCTITE - 518
Side cover	Three Bond - TB 1389 or LOCTITE - 518/587

SPECIAL TOOLS EE7DCEB2

Tool (Number and name)	Illustration	Use
09200-38001 Engine support fixture	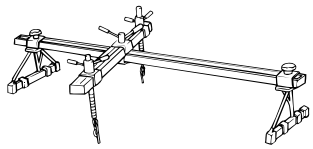 KKBF030A	- Removal and installation of transaxle

REFERENCE SERVICE TOOLS

Tool (Number and Name)	Remark
TRK00A Wiring Repair Kit	For more information of the wiring repair kit, please refer to BE group - "REFERENCE SERVICE TOOLS"

AUTOMATIC TRANSAXLE SYSTEM

DESCRIPTION E717EDDE

1. Structure & Technical highlights

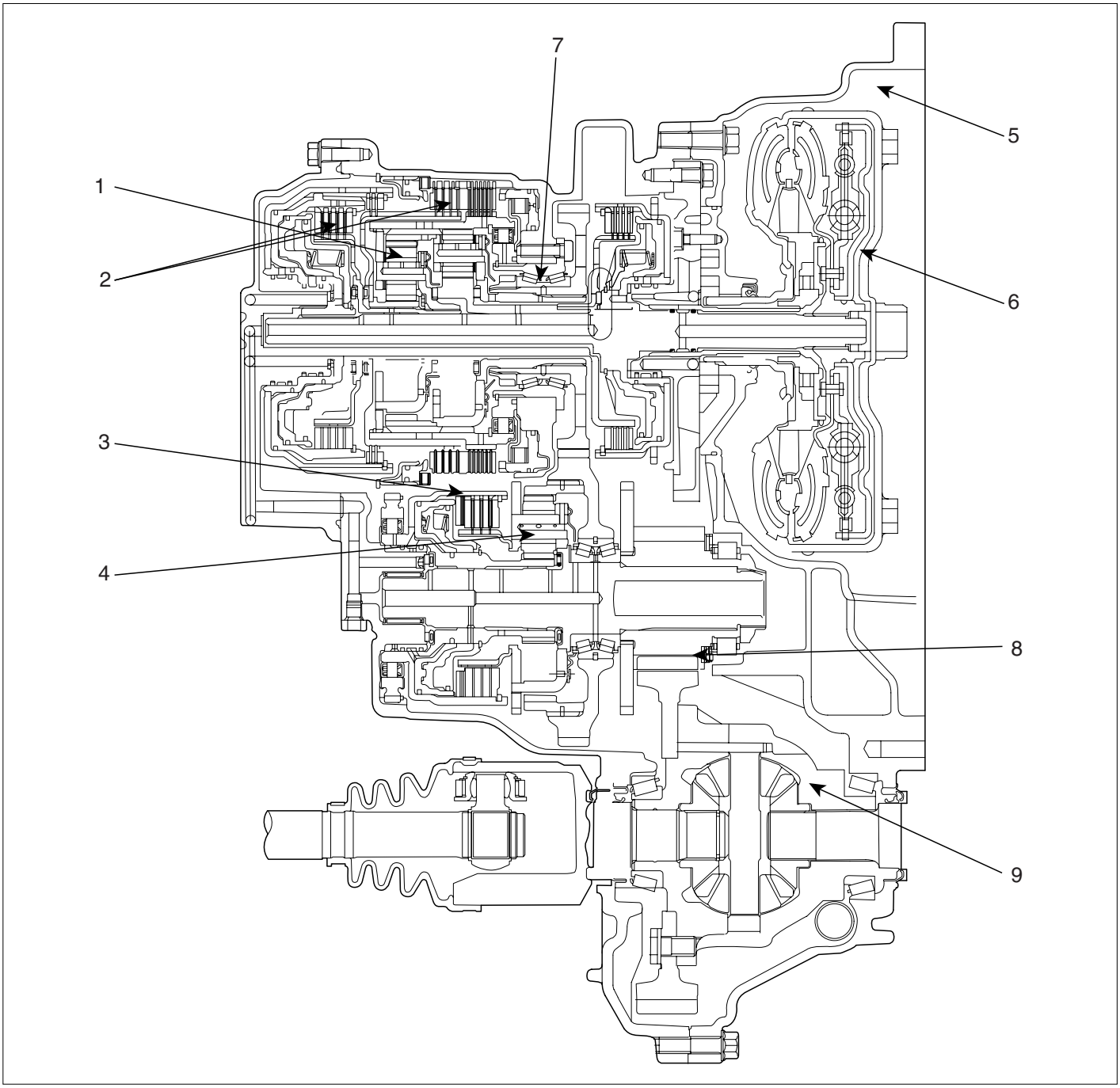

1. Overdrive planetary gear (3→4 pinions)
2. SSP(Single sided plate)
   -Overdrive clutch
   -2ND brake
3. Reduction band (Piston increased)
4. Direct planetary gear (3→4 pinions)
5. Case/ Housing intensity reinforced & redesigned
6. High capacity torque converter
7. Bearing outer diameter increased (Φ5 mm)
8. Differential gear (Increased width by 2mm)
9. Differential capacity increased (6.1→7)

EKBF002A

2. Variable Line Pressure Control
   - Description
     - Form the most suitable line pressure according to the vehicle driving condition
   - Special Features
     - VFS (Variable Force Solenoid) valve (For varying line pressure)
     - Reducing valve added(Stabilize control pressure in shiftings)
   - Effects
     - Improved power transmission efficiency and fuel consumption

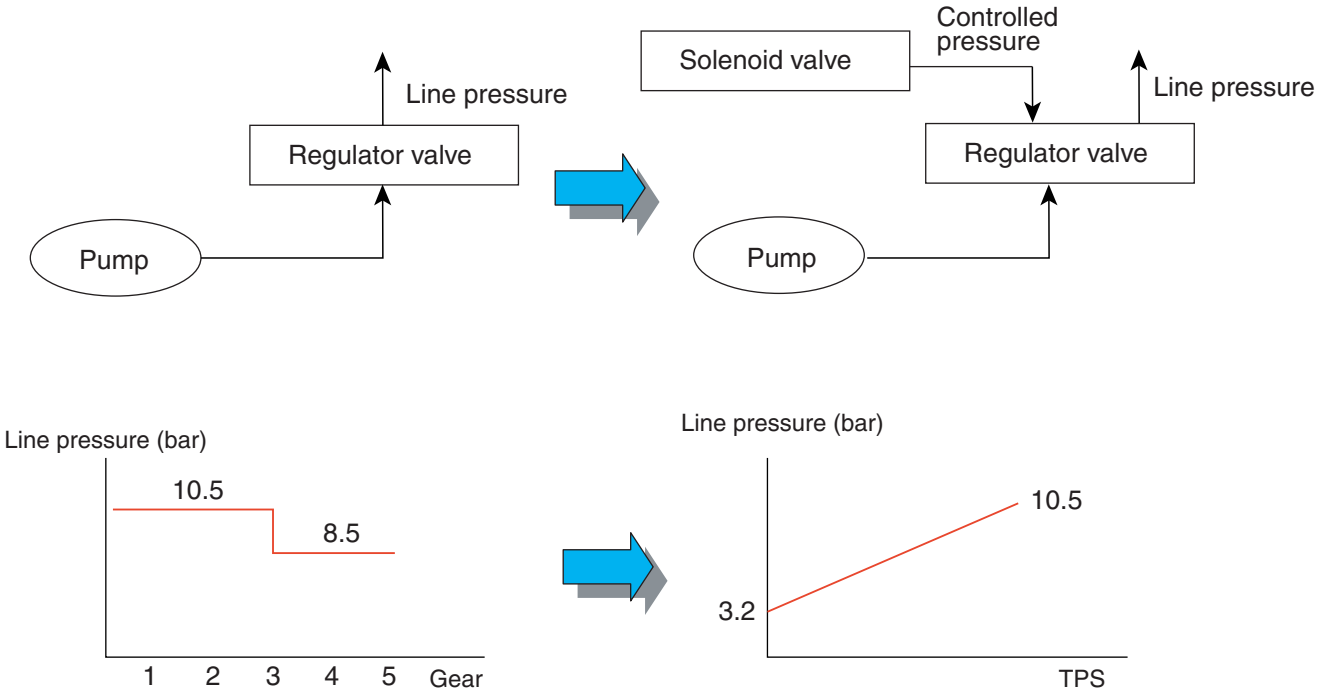

EKBF002B

3. Gear durability improvement and less-noisy gear development
   - Description
     - Optimal gear transmission ratio design from analyzing gears
   - Special Features
     - Apply High-strength gear material
     - Gear teeth width increased
     - Planetary gear (3 pinions → 4 pinions)
     - Less-noisy gear development
   - Effects
     - Durability improvement
     - Reduction of noise level

4. Case/Housing intensity reinforced
   - Description
     - Case/Housing intensity reinforced
   - Special Features
     - Converter housing intensity reinforced(Ribs added and thickness increased)
     - Most suitable stiff reinforcement through analyzing
   - Effects
     - Intensity increased and banding vibration decreased
     - NVH Performance improvement

5. New frictional material
   - Description
     - Apply new frictional material for capacity and durability improvement
   - Special Features
     - SSP (Single Sided Plate) applied only on overdrive clutch and 2nd brake
     - Apply the next generation frictional material(BWA 6100/D 0880-88)
   - Effects

- Thermal absorption capacity improvement
- Energy capacity and durability improvement

MECHANICAL SYSTEM EC240FFA

CLUTCHES AND BRAKES FOR EACH RANGE

		UD Clutch	OD Clutch	2ND Brake	LR Brake	REV Clutch	RED Brake	DIR Clutch	OWC 1	OWC 2
P		-	-	-	O	-	O	-	-	-
R		-	-	-	O	O	O	-	-	-
N		-	-	-	O	-	O	-	-	-
D	1st	O	-	-	O	-	O	-	●	●
	2nd	O	-	O	-	-	O	-	-	●
	3rd	O	O	-	-	-	O	-	-	●
	4th	-	O	O	-	-	O	-	-	●
	5th	-	O	O	-	-	-	O	-	-

(● : Locked when driving)

FUNCTIONS OF CLUTCHES AND BRAKES

Element	Sign	Function
Underdrive clutch	UD	Connect the input shaft with the underdrive sun gear
Reverse clutch	REV	Connect the input shaft with the reverse sun gear
Overdrive clutch	OD	Connect the input shaft with the overdrive carrier
Direct clutch	DIR	Connect the direct sun gear with the direct carrier
Low & Reverse brake	LR	Fix the planetary gear and the overdrive carrier
2nd brake	2ND	Fix the reverse sun gear
Reduction brake	RED	Fix the direct sun gear
One way clutch 1	OWC 1	Control the rotational driection of the low & reverse ring gear
One way clutch 2	OWC 2	Control the rotational driection of the direct sun gear

AUTOMATIC TRANSAXLE HYDRAULIC CIRCUIT

P/N

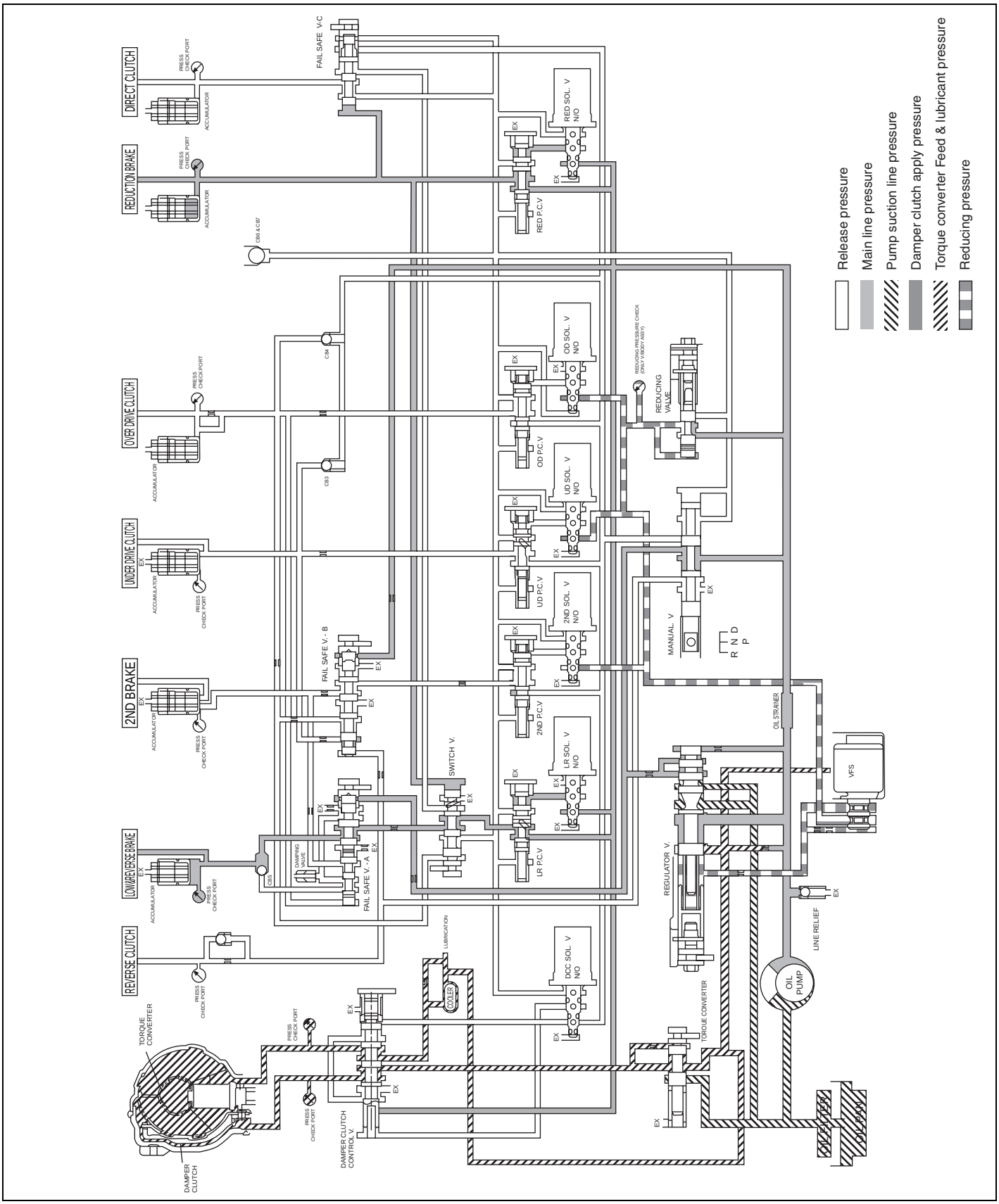

EKBF004A

D(1 RANGE)

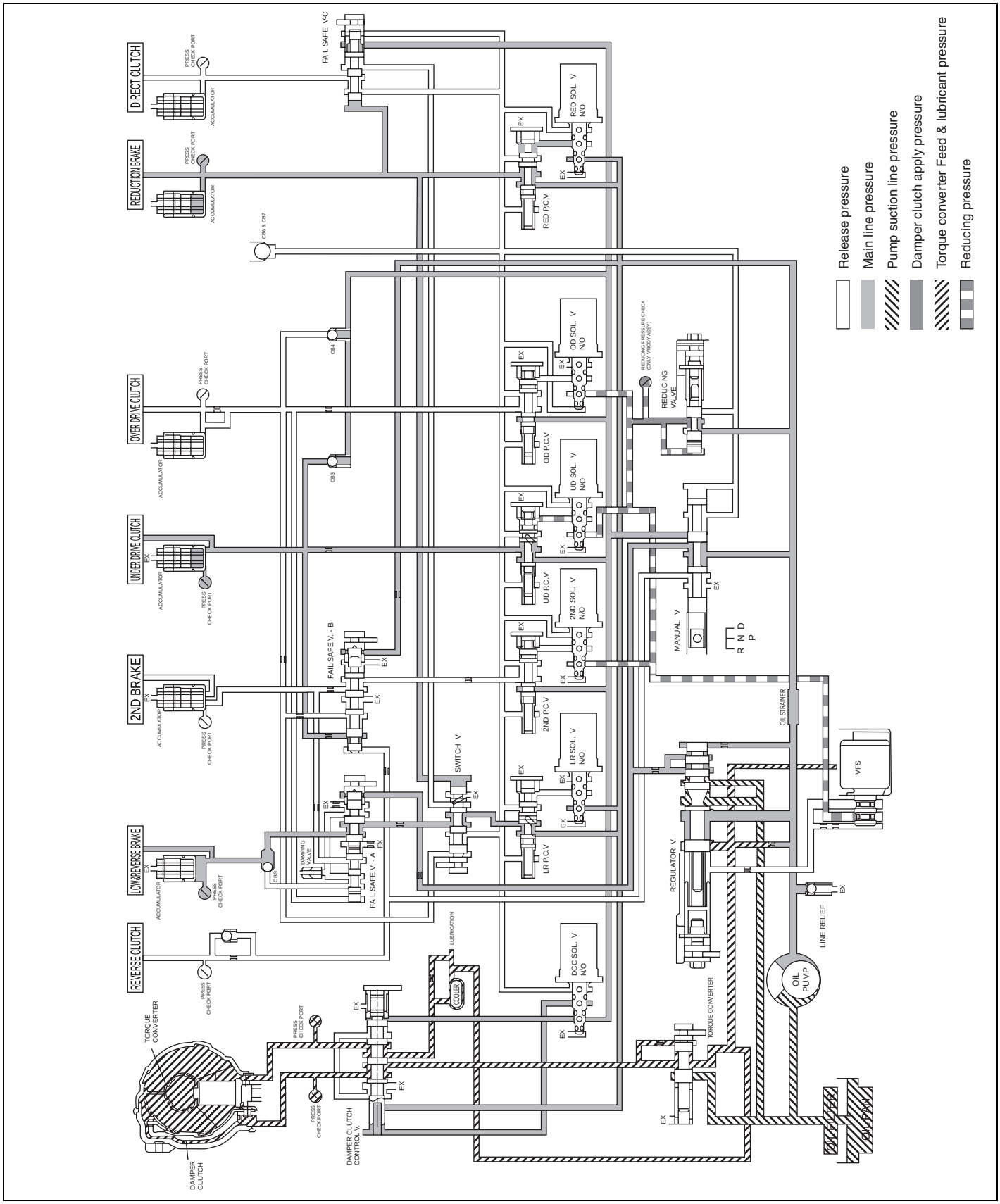

EKBF004B

D(2 RANGE)

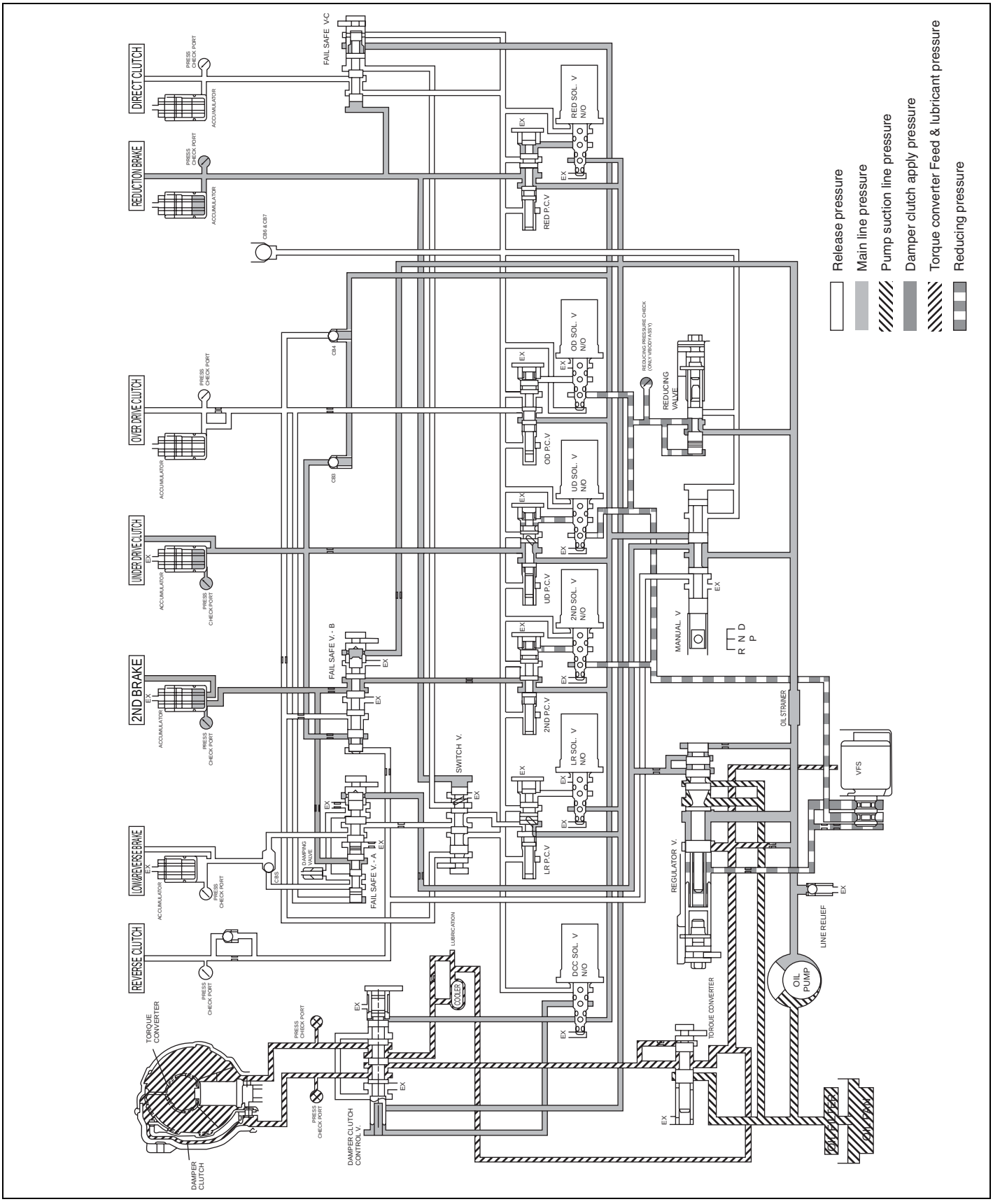

EKBF004C

D(3 RANGE)

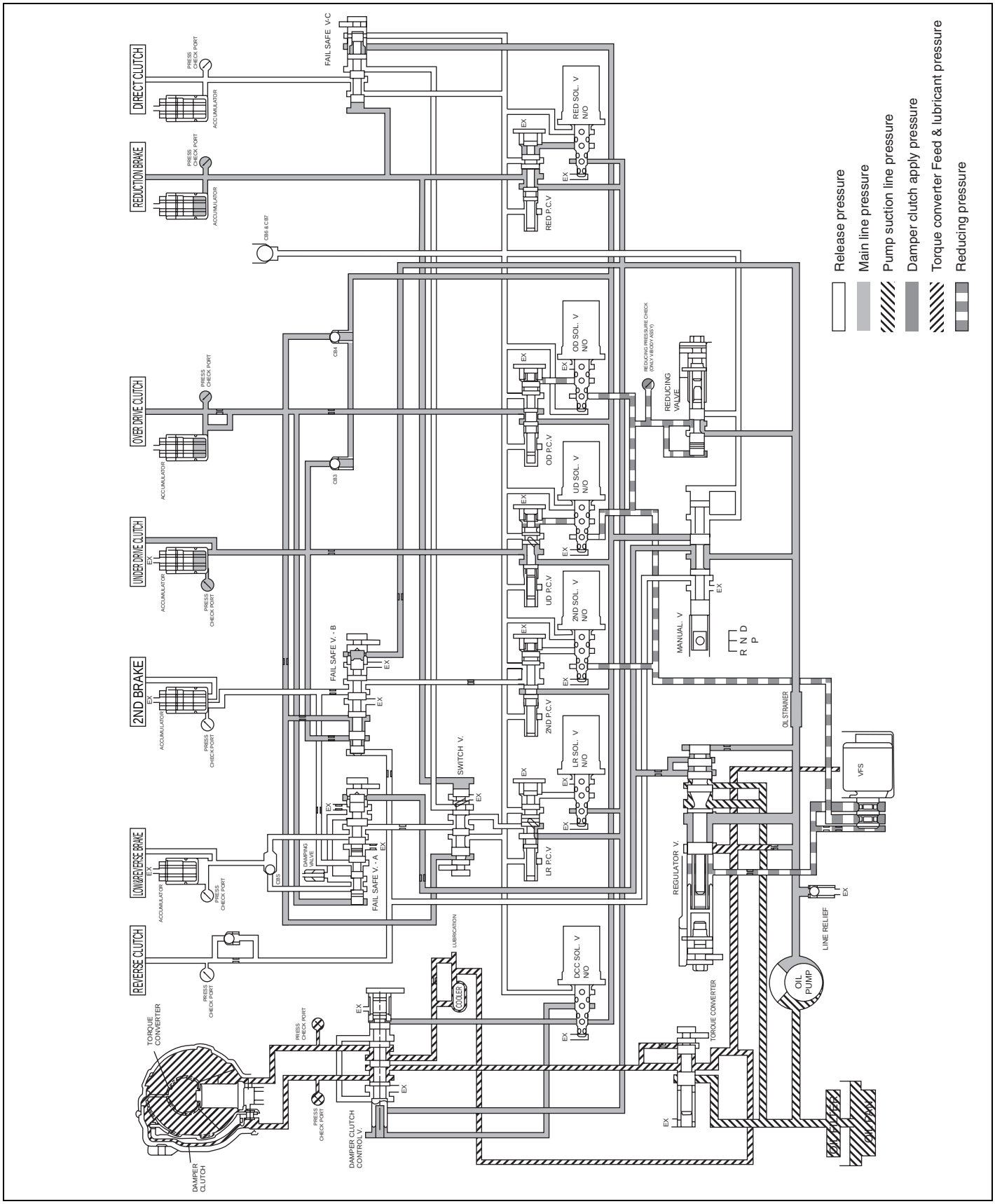

EKBF004D

D(4 RANGE)

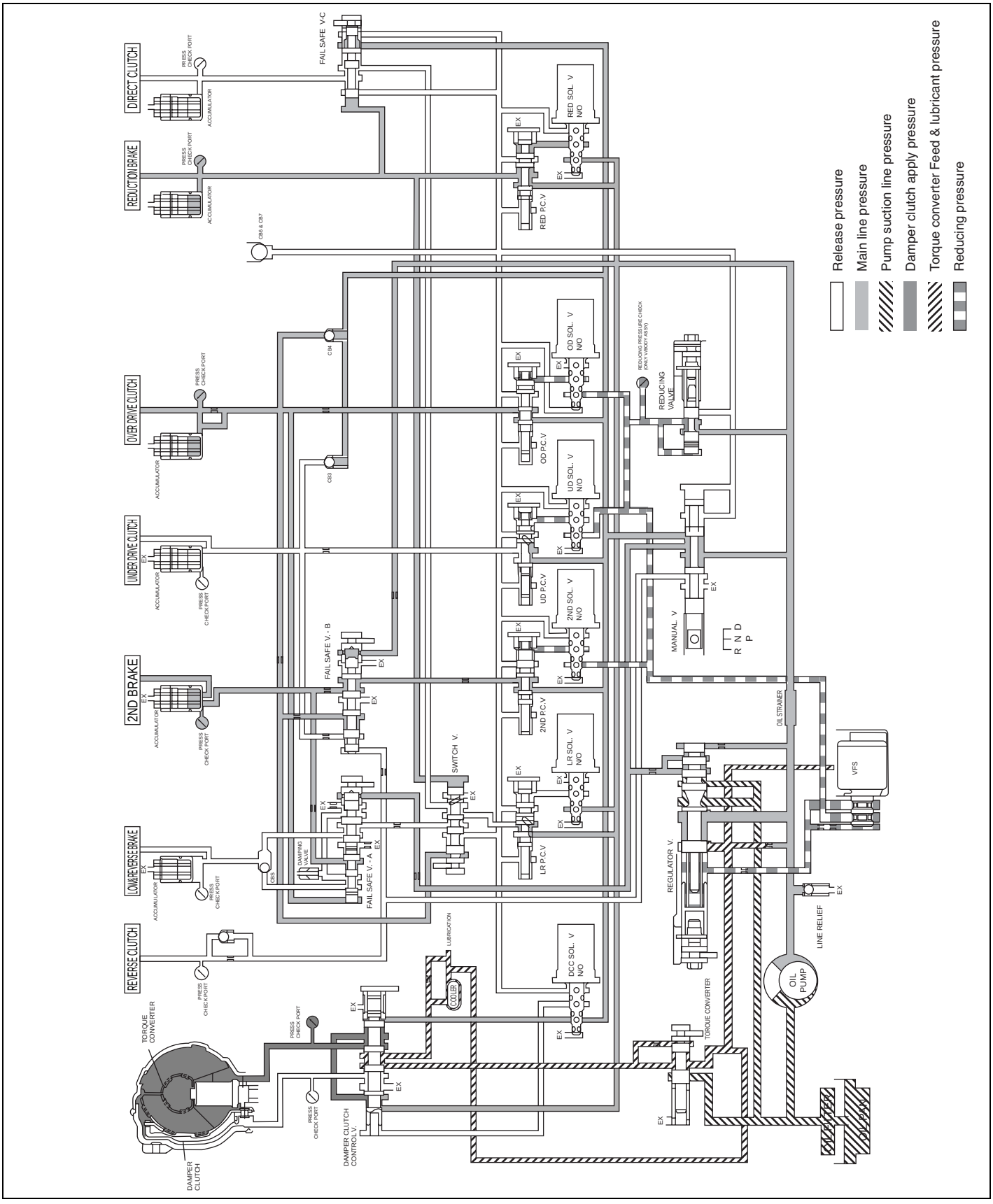

EKBF004E

D(5 RANGE)

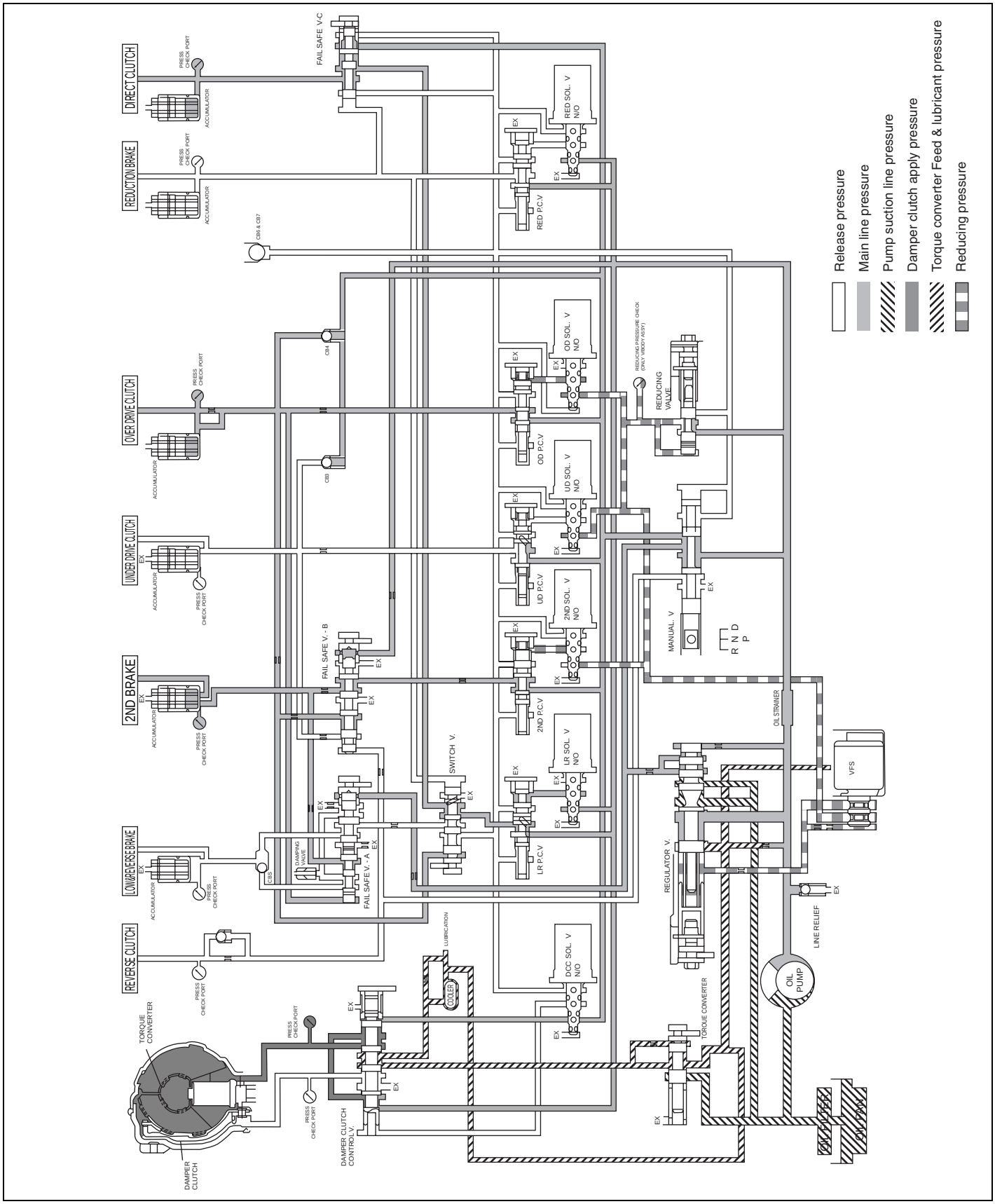

EKBF004F

R RANGE

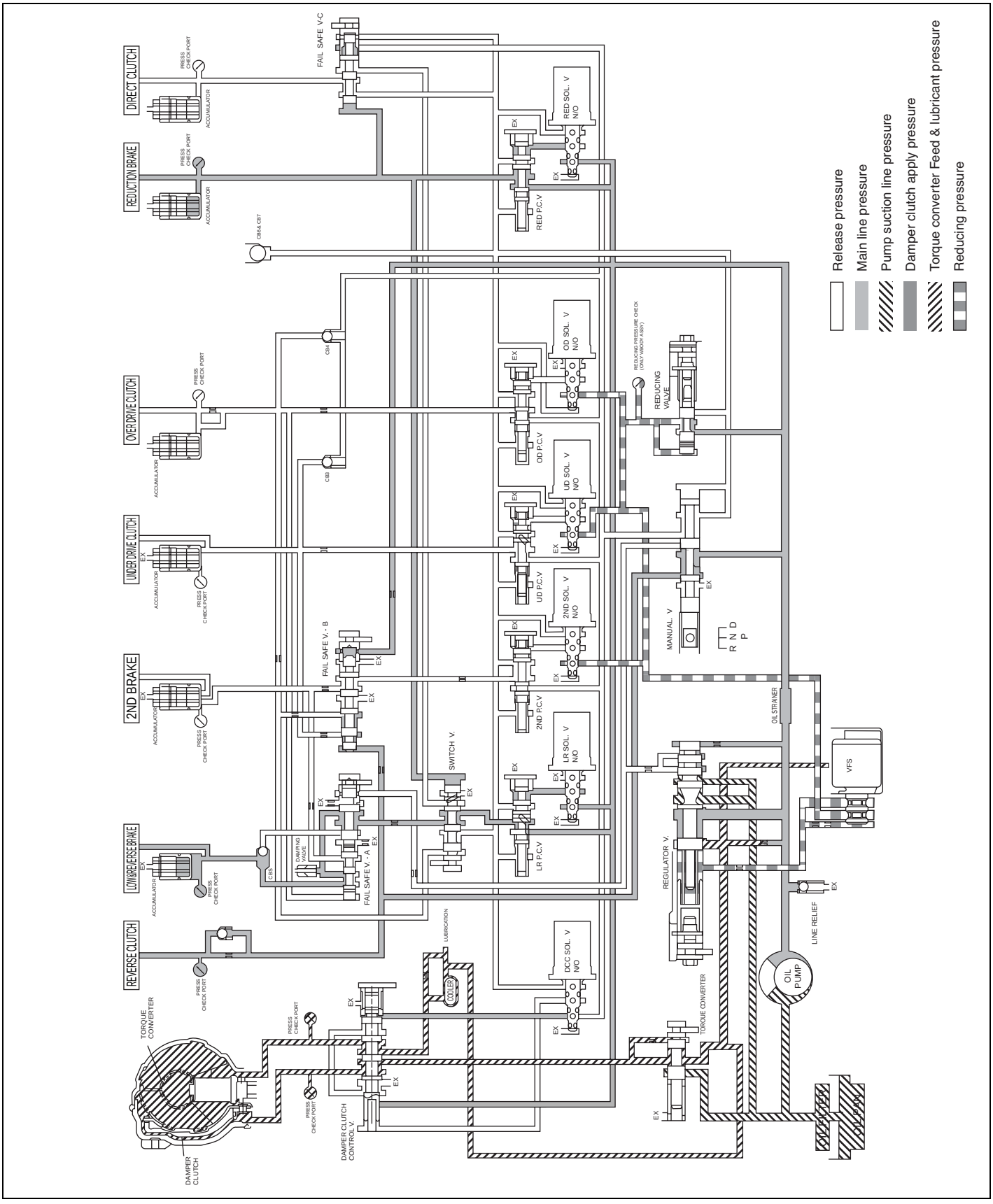

EKBF004G

INSPECTION CHART FOR DIAGNOSIS TROUBLE CODES (DTC) ECBB50AE

[2.2 DIESEL]

No	Code	Item	MIL	Remark
1	P0560	EEPROM BACK-UP LINE OPEN	OFF	ATA-21
2	P0605	EEPROM ERROR	OFF	ATA-23
3	P0703	BRAKE SWITCH SHORT	OFF	ATA-25
4	P0707	TRANSAXLE RANGE SWITCH CIRCUIT LOW INPUT	OFF	ATA-30
5	P0708	TRANSAXLE RANGE SWITCH CIRCUIT HIGH INPUT	OFF	ATA-37
7	P0712	TRANSAXLE FLUID TEMPERATURE SENSOR CIRCUIT LOW INPUT	OFF	ATA-40
8	P0713	TRANSAXLE FLUID TEMPERATURE SENSOR CIRCUIT HIGH INPUT	OFF	ATA-46
9	P0717	A/T INPUT SPEED SENSOR CIRCUIT - OPEN or SHORT(GND)	OFF	ATA-48
10	P0722	AT OUTPUT SPEED SENSOR CIRCUIT - OPEN or SHORT(GND)	OFF	ATA-55
11	P0731	GEAR 1 INCORRECT RATIO	OFF	ATA-61
12	P0732	GEAR 2 INCORRECT RATIO	OFF	ATA-67
13	P0733	GEAR 3 INCORRECT RATIO	OFF	ATA-72
14	P0734	GEAR 4 INCORRECT RATIO	OFF	ATA-77
15	P0735	GEAR 5 INCORRECT RATIO	OFF	ATA-81
17	P0741	TORQUE CONVERTER CLUTCH STUCK OFF	OFF	ATA-85
19	P0743	TORQUE CONVERTER CLUTCH CONTROL SOLENOID VALVE - OPEN or SHORT(GND)	OFF	ATA-89
21	P0748	VARIABLE FORCE SOLENOIDE VALVE - OPEN or SHORT(GND)	OFF	ATA-96
22	P0750	LOW and REVERSE SOLENOID VALVE CIRCUIT - OPEN or SHORT(GND)	OFF	ATA-103
23	P0755	UNDERDRIVE SOLENOID VALVE CIRCUIT - OPEN or SHORT(GND)	OFF	ATA-110
24	P0760	SECOND SOLENOID VALVE CIRCUIT - OPEN or SHORT(GND)	OFF	ATA-117
25	P0765	OVERDRIVE SOLENOID VALVE CIRCUIT - OPEN or SHORT(GND)	OFF	ATA-124
26	P0770	REDUCTION SOLENOID VALVE CIRCUIT - OPEN or SHORT(GND)	OFF	ATA-131
27	P0885	A/T CONTROL RELAY - SHORT(GND)	OFF	ATA-138
28	U0001	CAN BUS OFF	OFF	ATA-145
29	U0100	CAN TIME OUT FROM ECU	OFF	ATA-149

INPUT/OUTPUT SIGNAL VOLTAGE CHECK SHEET

[2.2 DIESEL]

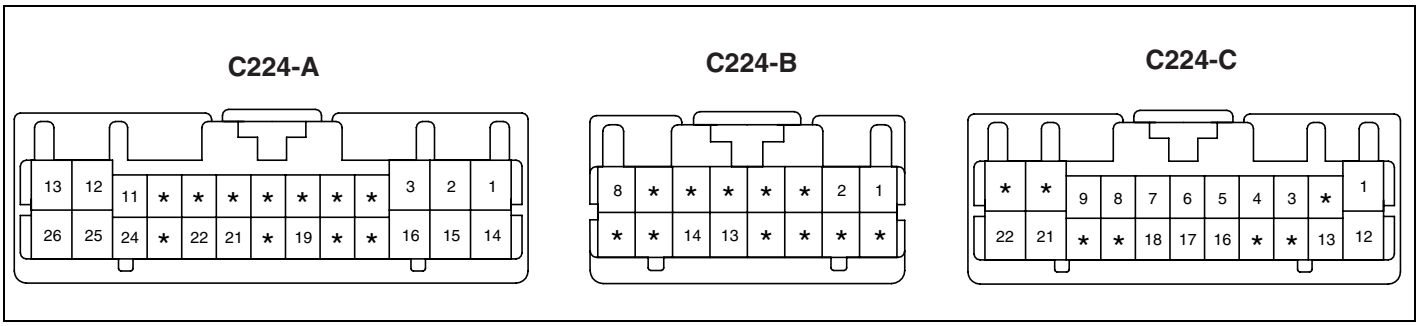

SCMAT6050D

PIN No.	Check item	Condition	Input/Output value		Measure-ment Value	Remarks
			Type	Level		
A01	UD Solenoid	Shifting	Pulse	HI : V_BAT LO : Max. 1.0V Vpeak : Max. 70V		-
A02 A03	A/T PWR Source	IG Off IG On IG. Key On IG. Key Off Idling Key Off from Idling Removing fuse 1/2/3 Refer to *1)	DC	Max. 0.5 V V_BAT Max. +/- 75V (ECU GND) Max. +/- 75V (ECU GND) Max. +/- 75V (ECU GND) Max. +/- 75V (ECU GND) Max. +/- 75V (ECU GND)	 0.1 V 12.9 V N/A	-
A08	A/Cruise Signal	NORMAL ON CONTROL	DC	V_BAT 0 ~ 0.5 V		NO ACC
A11 A24	V_IG	IG Off IG On IG. Key On IG. Key Off Idling Key Off from Idling Removing fuse 1/2/3 Refer to *1)	DC	Max. 0.5 V V_BAT Max. +/- 75V (ECU GND) Max. +/- 75V (ECU GND) Max. +/- 75V (ECU GND) Max. +/- 75V (ECU GND) Max. +/- 75V (ECU GND)	 0.1 V 12.7 V N/A	
A12	GND_PWR 1	Idling	DC	Max. 50mV		
A13	GND_PWR 2	Idling	DC	Max. 50mV		
A14	OD Solenoid	Shifting	Pulse	HI : V_BAT LO : Max. 1.0V Vpeak : Max. 70V		
A15	Damper clutch Solenoid	Lock_Up On	Pulse	HI : V_BAT LO : Max. 1.0V Vpeak : Max. 70V		
A16	2ND Solenoid	Shifting	Pulse	HI : V_BAT LO : Max. 1.0V Vpeak : Max. 70V		

PIN No.	Check item	Condition	Input/Output value		Measure-ment Value	Remarks
			Type	Level		
A19	Flash PWR Source	IG On IG Off	DC	4.0~5.0V Max. 0.5 V	4.7 V 0.1 V	
A21	Shift Position Signal (To Cluster)	Driving 1st 2nd 3rd 4th 5th	Pulse Duty ↑ ↑ ↑ ↑	HI : V_BAT LO : Max . 1.0V Freq.: 50 Hz±2% 12.5±2% 27.5±2% 42.5±2% 57.5±2% 72.5±2%	13.1 V 0.1 V 50 Hz 12.4 % 27.6 % 42.4 % 57.4 % 72.2 %	
A22	VFS Solenoid	Shifting	Pulse	HI : V_BAT LO : Max. 1.0V	13.6 V 0.3 V	
A25	GND_PWR 3	Idling	DC	Max. 50mV		
A26	GND_PWR 4	Idling	DC	Max. 50mV		
B01	Input speed sensor	Idling	Pulse	HI : Min. 4.0V LO : Max. 1.0V	5.18 V 0.5 V	
B02	Output speed sensor	30kph	Pulse	HI : Min. 4.0V LO : Max. 1.0V	5.18 V 0.5 V	
B08	V_BAT	Removing Key All	Cur-rent DC	Max. 2.0 mA V_BAT	1.03 mA 13.1 V	
B13	GND_Sensor	Idling	DC	Max. 50mV	0.76mV	
B14	Oil temp sensor_ATM	Idling	Analog	0.5V ~ 4.5V	2.68 V	59°C
C01	RED Solenoid	Shifting	Pulse	HI : V_BAT LO : Max. 1.0V Vpeak : Max. 70V		
C03	CAN_HI	HI LOW	Pulse	2.0 ~ 3.0 V 2.75～4.5 V	2.52 V 3.76 V	
C04	CAN_LO	HI LOW	Pulse	2.0 ~ 3.0 V 0.5～2.25 V	2.54 V 1.34 V	
C05	P range Selection	P Position Others	DC	V_BAT Max. 1.0V	12.6 V 0 V	
C06	N range Selection	N Position Others	DC	V_BAT Max. 1.0V	12.6 V 0 V	
C07	SPT Select Selection	Select Position Others	DC	V_BAT Max. 1.0V	12.4 V 0 V	
C08	SPT Down Selection	Down Position Others	DC	V_BAT Max. 1.0V	12.4 V 0 V	
C09	Brake SW(N.O)	Release Push	DC	Max. 0.5V V_BAT	12.2 V 0 V	
C12	LR Solenoid	Shifting	Pulse	HI : V_BAT LO : Max. 1.0V Vpeak : Max. 70V		

PIN No.	Check item	Condition	Input/Output value		Measure-ment Value	Remarks
			Type	Level		
C13	Diagnosis "K"	Using scantool	Pulse	Sending HI : V_BAT * 80%↑ LO : V_BAT * 20%↓ Receiving HI : V_BAT * 70%↑ LO : V_BAT * 30%↓	10.8 V 0.2 V	
C16	R range Selection	R Position Others	DC	V_BAT Max. 1.0V	12.2 V 0 V	
C17	D range Selection	D Position Others	DC	V_BAT Max. 1.0V	12.4 V 0 V	
C18	SPT Up Selection	UP Position Others	DC	V_BAT Max. 1.0V	12.6 V 0 V	
C21	Relay A/T control	Relay Off Relay On	DC	Max. 1.0V V_BAT	11.6 V 0 V	
C22	Earth for SIGNAL	Idling	DC	Max. 50 mV		

*1) Condition to measure surge on power : Falling Edge -70V, Rising Edge : 70V, Measuring time : 0.1 us/div.
*2) Condition to measure surge on signal : Falling Edge -25V, Rising Edge : 25V, Measuring time : 0.1 us/div.

SERVICE ADJUSTMENT PROCEDURE EEBAACB2

AUTOMATIC TRANSAXLE FLUID

INSPECTION

1. Drive the vehicle until the fluid reaches normal operating temperature [70~80°C(158~176°F)].
2. Place the vehicle on a level surface.
3. Move the selector lever through all gear positions. This will fill the torque converter and the hudraulic system with fluid and move the selector lever to the "N" (Neutral) or "P"(Park) position.
4. Before removing the oil level gauge, wipe all contaminants from around the oil level gauge. Then take out the oil level gauge and check the condition of the fluid.

NOTE

If the fluid smells as if it is burning, it means that the fluid has been contaminated by fine particles from the bushes and friction materials, a transaxle overhaul may be necessary.

5. Check that the fluid level is at the HOT mark on the oil level gauge. If the fluid level is low, add automatic transaxle fluid until the level reaches the "HOT" mark.

Auto transaxle fluid: DIAMOND ATF SP-III, SK ATF SP-III Quantity : 10.9ℓ (Diesel)

NOTE

Low fluid level can cause a variety of a abnormal conditions because it allows the pump to take in air along with fluid. Air trapped in the hydraulic system forms bubbles, which are compressable. Therefore, pressures will be erratic, causing delayed shifting ,slipping clutches and brakes, etc. Improper filling can also raise fluid level too high. When the transaxle has too much fluid, gears churn up foam and acuise the same conditions which occur with low fluid level, resulting in accelerated deterioration of automatic transaxle fluid. In either case, air bubbles can cause overheating, and fluid oxidation, which can interfere with normal valve, clutch, and brake operation. Foaming can also result in fluid escaping from the transaxle vent where it may be mistaken for a leak.

6. Insert the oil level gauge securely.

NOTE

When new, automatic transmission fluid should be red. The red dye is added so the assembly plant can identify it as transmission fluid and distinguish it from engine oil or antifreeze. The red dye, which is not an indicator of fluid quality, is not permanent. As the vehicle is driven the transmission fluid will begin to look darker. The color may eventually appear light brown.

REPLACEMENT

If you have a fluid changer, use this changer to replace the fluid. If you do not, replace it using the following procedure.

1. Disconnect the hose which connects the transmission and the oil cooler.
2. Start the engine and let the fluid drain out.

Running conditions : "N" range with engine idling.

CAUTION

The engine should be stopped within one minute after it is started. If the fluid has all drained out before then, the engine should be stopped at that point.

3. Romove the drain plug(A) from the bottom of the transmission case to drain the fluid.

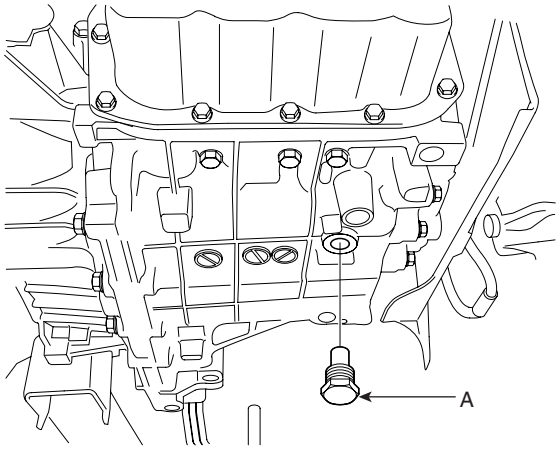

KKRE004C

4. Install the drain plug via the gasket, and tighten it to the specified torque.

TORQUE :
40 ~ 50Nm (4 ~ 5 kgf.m, 29 ~ 36 lb-ft)

5. Pour the new fluid in through the oil filler tube.

   CAUTION

   Stop pouring if the full volume of fluid cannot be poured in.

6. Repeat the procedure in step (2).

   NOTE

   Check the old fluid for contamination. If it has been contaminated, repeat the steps (5) and (6).

7. Pour the new fluid in through the oil filler tube.

8. Reconnect the hose which was disconnected in step (1) above and firmly replace the oil level gauge.(In case of this "replace", this means after wiping off any dirt around the oil level gauge, insert it into the filler tube.)

9. Start the engine and run it at idle for 1~2 minutes.

10. Move the select lever through all positions, and then move it to the "N" position.

11. Drive the vehicle until the fluid temperature rises to the normal temperature [70~80°C(158~176°F)], and then check the fluid level again. The fluid level must be at the HOT mark.

12. Firmly insert the oil level gauge into the oil filler tube.

DTC P0560 SYSTEM VOLTAGE

COMPONENT LOCATION E659BC0A

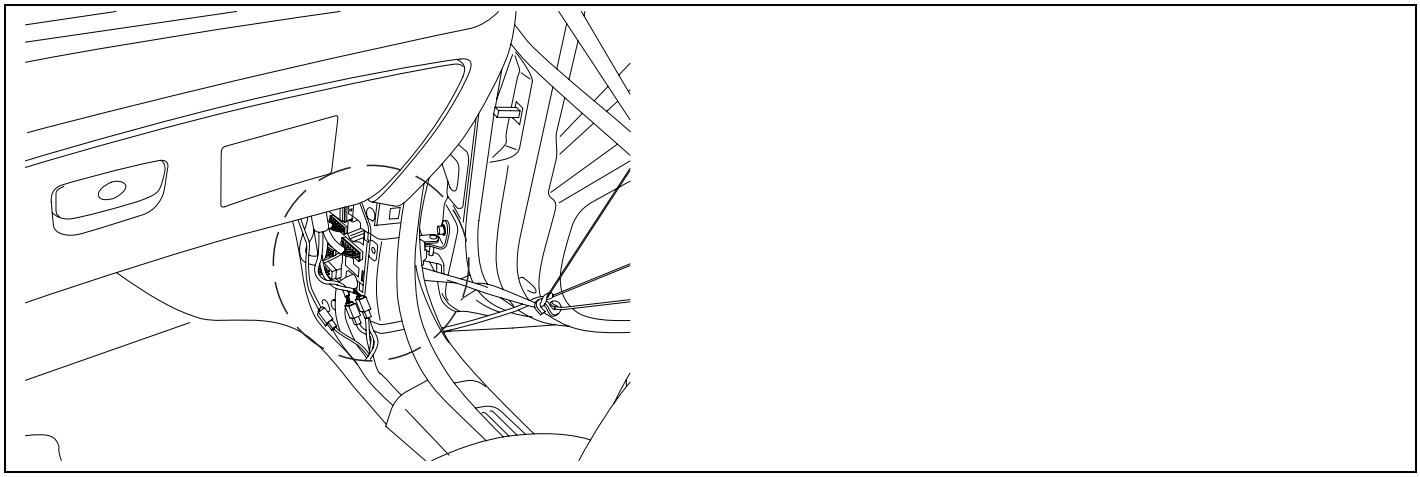

SCMAT6303D

GENERAL DESCRIPTION EFE964B1

TCU saves "LEARNING VALUE" and keeps it at certain value. Thorough this process, in order to "LEARNING VALUE" is protected from being erased at disconnecting battery cable and maintaining related components.

DTC DESCRIPTION EEAEA029

The TCM is detected an unexpected communication error with "EEPROM", the TCM sets this code.

DTC DETECTING CONDITION EE30DF34

Item	Detecting Condition	Possible cause
DTC Strategy	• Check Voltage range	• Faulty TCM • Faulty in harness
Enable Conditions	• Ne is normal • Ne ≥ 400rpm • Vb(Backup-line) ≥ 9V • Not Fail Safe Status • IG "ON"	
Threshold value	• Backup-line < 7 Volt	
Diagnostic Time	• 10sec	
Fail Safe		

COMPONENT INSPECTION E1E4F0FA

1. Connect scantool to data link connector.
2. Ignition "ON" & Engine "OFF".
3. Monitor the "DTC".
4. Is DTC Re-displayed?

YES

▶ Substitute with a known-good PCM/TCM and check for proper operation. If the problem is corrected, replace PCM/TCM as necessary and then go to "Verification of Vehicle Repair" procedure.

NO

▶ Go to "Verification of Vehicle Repair" procedure.

VERIFICATION OF VEHICLE REPAIR E532BD22

After a repair, it is essential to verify that the fault has been corrected.

1. Connect scan tool and select "Diagnostic Trouble Codes(DTCs)" mode.
2. Using a scantool, Clear DTC.
3. Operate the vehicle within DTC Enable conditions in General information.
4. Are any DTCs present ?

YES

▶ Go to the applicable troubleshooting procedure.

NO

▶ System performing to specification at this time.

DTC P0605 INTERNAL CONTROL MODULE READ ONLY MEMORY(ROM) ERROR

COMPONENT LOCATION EDD83FE7

Refer to DTC P0560.

GENERAL DESCRIPTION E9E58920

Refer to DTC P0560.

DTC DETECTING CONDITION E18AFFA4

Item	Detecting Condition	Possible Cause
DTC Strategy	• Check COMMUNICATION	• Faulty TCM
Enable Conditions	• COMMUNICATION ERROR WITH "EEPROM"	
Threshold Value	• Communication fail	
Diagnostic Time	• Detecting 20 times	
Fail safe		

COMPONENT INSPECTION EEE49117

1. Ignition "ON" & Engine "OFF".
2. Connect scan tool and select "Diagnostic Trouble Codes(DTCs)" mode.
3. Using a scantool, Clear DTC.
4. Using a "SCAN TOOL", Operate "LEARNING " Reset.
5. Perform the "LEARNING"
6. IG OFF ↔ IG ON (Repeat 2~3times), and then Monitor the "DTC"
7. Is DTC Re-displayed ?

YES

▶ Substitute with a known-good PCM/TCM and check for proper operation. If the problem is corrected, replace PCM/TCM as necessary and then Go to "Verification of Vehicle Repair" procedure.

NO

▶ Fault is intermittent caused by poor contact in the sensor's and/or TCM(PCM)'s connector or was repaired and TCM(PCM) memory was not cleared. And Go to Component Inspection procedure.

METHOD OF LEARNING RESET

※IT IS NECESSARY TO LEARNING RESET, AFTER REPLACED TRANSMISSION

1. ERASING CONDITION

1) SELECT LEVER POSITION IS "P" OR "N"

2) VEHICLE SPEED = 0km/h

3) IGNITION "ON", ENGINE "OFF"

2. USING A SCAN TOOL, OPERATE "LEARNING" RESET

3. IG "ON" ↔ IG "OFF"(2~3 TIMES), AFTER ERASE

VERIFICATION OF VEHICLE REPAIR EB77E6F8

Refer to DTC P0560.

DTC P0703 BRAKE S/W MALFUNCTION

COMPONENT LOCATION EAF521FA

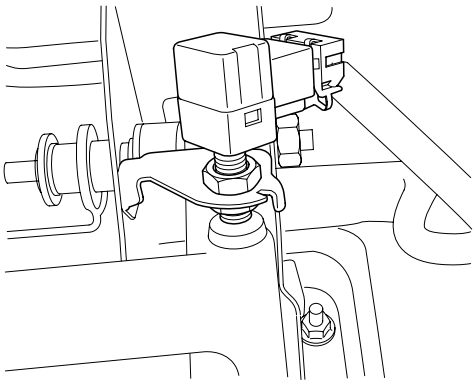

AKKF101A

GENERAL DESCRIPTION EAC62EEC

The HIVEC Automatic Transmission's function, of intelligence control, is based on the Fuzzy Control System. The Fuzzy Control System determines optimal gear positions as related to driver's intention and current driving conditions. The Brake Switch provides important information by deciding whether the vehicle is decelerating by the depression of the brake pedal, or if the speed is decreasing because the vehicle is running on the uphill.

DTC DESCRIPTION EBB9FC9A

The TCM(PCM) sets this code if a Brake Switch signal is input continuously, for an extended period of time, when the vehicle is supposed to be running (moving).

DTC DETECTING CONDITION E5D5DA82

Item	Detecting Condition	Possible Cause
DTC Strategy	• check signal for B+ Short	• Short to battery in circuit • Faulty Brake SWITCH Adjustment • Faulty Brake SWITCH • Faulty PCM
Enable Conditions	• No(Output Speed Sensor) ≥ 240rpm • Brake Switch "ON"	
Threshold Value	• +B Short	
Diagnostic Time	• More than 5 mins	
Fail Safe	• Intelligent-Shift is inhibited	

MONITOR SCANTOOL DATA EA94E582

1. Connect scantool to data link connector(DLC).
2. Ignition "ON" & Engine "OFF".
3. Monitor the "STOP LAMP SWITCH" parameter on the scantool.
4. Depress and release Foot Brake.

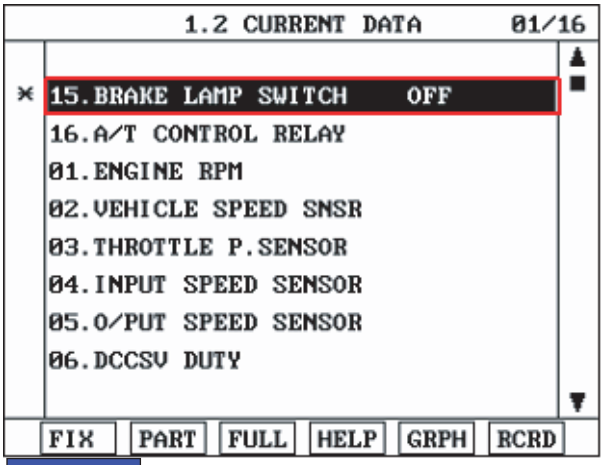

FIG.1)

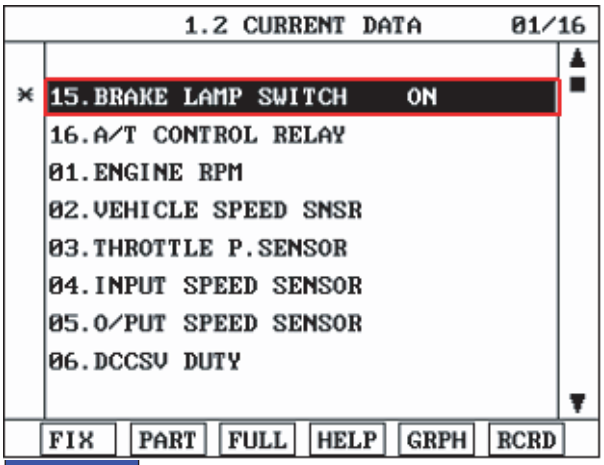

FIG.2)

FIG.1) Release foot brake status.
FIG.2) Depress foot brake status.

LKKG114A

5. Does "STOP LAMP SWITCH" follow the reference data?

YES

▶ Fault is intermittent caused by poor contact in the sensor's and/or TCM(PCM)'s connector or was repaired and TCM(PCM) memory was not cleared. Thoroughly check connectors for looseness, poor connection, bending, corrosion, contamination, deterioration or damage. Repair or replace as necessary and go to "Verification of Vehicle Repair" procedure

NO

▶ Go to "Terminal & Connector Inspection" procedure.

TERMINAL & CONNECTOR INSPECTION EEE141C4

1. Many malfunctions in the electrical system are caused by poor harness and terminals. Faults can also be caused by interference from other electrical systems, and mechanical or chemical damage.
2. Thoroughly check connectors for looseness, poor connection, bending, corrosion, contamination, deterioration, or damage.
3. Has a problem been found?

YES

▶ Repair as necessary and go to "Verification of Vehicle Repair" procedure.

NO

▶ Go to "Signal Circuit Inspection" procedure.

SIGNAL CIRCUIT INSPECTION EF97CFB5

1. Ignition "ON" & Engine "OFF".
2. Disconnect "BRAKE LAMP SWITCH" connector.
3. Measure voltage between terminal "1" of the sensor harness connector and chassis ground.

Specification : 0V

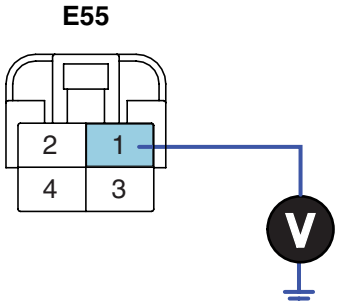

1.Stop lamp signal to TCM
2.Battery

LKKG114B

4. Is voltage within specifications?

YES

▶ Go to "Component Inspection" procedure.

NO

▶ Check for Short to power circuit in harness. Repair as necessary and Go to "Verification of Vehicle Repair" procedure.

COMPONENT INSPECTION EC61D0D6

1. Check "STOP LAMP SWITCH"

   1) Ignition "OFF" & Engine "OFF".

   2) Disconnect "STOP LAMP SWITCH" connector and Remove "STOP LAMP SWITCH".

   3) Measure resistance between terminal "1" and "2" of the STOP LAMP SWITCH when plunger of the STOP LAMP SWITCH is pushed in.

Specification : Infinite

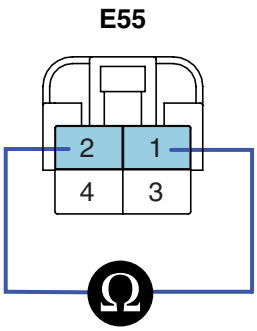

1.Stop lamp signal to TCM
2.Battery

LKKG114C

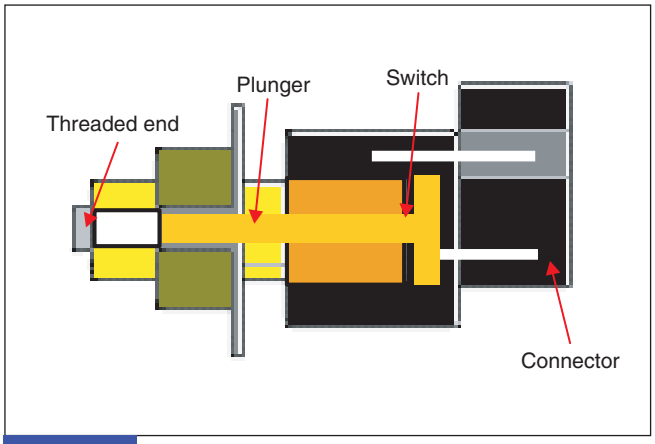

FIG.1)

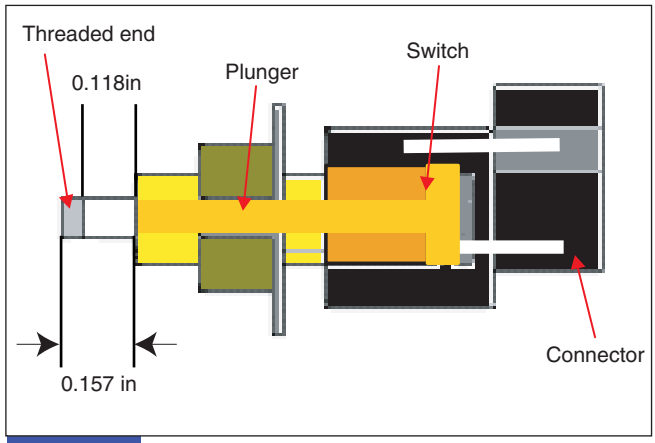

FIG.2)

FIG.1) Brake pedal is released-∞Ω
FIG.2) Brake pedal is depressed-0Ω

LKKG114D

   4) Is resistance within specifications?

YES

▶ Go to "Adjust STOP LAMP SWITCH" as below.

NO

▶ Replace "STOP LAMP SWITCH" as necessary and Go to "Verification of Vehicle Repair" procedure.

2. Adjust "STOP LAMP SWITCH" Clearance

   1) Ignition "OFF" & Engine "OFF".

   2) Reinstall "STOP LAMP SWITCH".

   3) Adjust "STOP LAMP SWITCH" Clearance as below.

Specification : 0.9mm(0.04in)

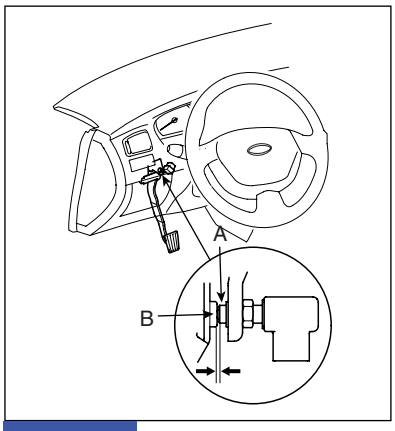

FIG.1)

FIG. 1) method of adjust : Screw in the "STOP LAMP SWITCH" until its plunger is fully de-pressed(threaded end (A) touching the pad (B) on the pedal arm). Then back off the switch 3/4 turn to make 0.9mm(0.04In) of clearance between the threaded end and pad Tighten the locknut firmly. Connect the "STOP LAMP SWITCH" connector. Make sure that the stop lamp goes off when the pedal is released.

LKKG114E

   4) After Adjusting, has problem been solved ?

   YES

   ▶ Go to "Verification of Vehicle Repair" procedure.

   NO

   ▶ Substitute with a known-good TCM/PCM and check for proper operation. If the problem is corrected, replace TCM/PCM and go to "Verification of Vehicle Repair" procedure.

VERIFICATION OF VEHICLE REPAIR E3DE13FA

After a repair, it is essential to verify that the fault has been corrected.

1. Connect scan tool and select "Diagnostic Trouble Codes(DTCs)" mode.
2. Using a scantool, Clear DTC.
3. Operate the vehicle within DTC Enable conditions in General information.
4. Are you DTCs present?

   YES

   ▶ Go to the applicable troubleshooting procedure.

   NO

   ▶ System performing to specification at this time.

DTC P0707 TRANSAXLE RANGE SWITCH - LOW INPUT

COMPONENT LOCATION EFE3A0CB

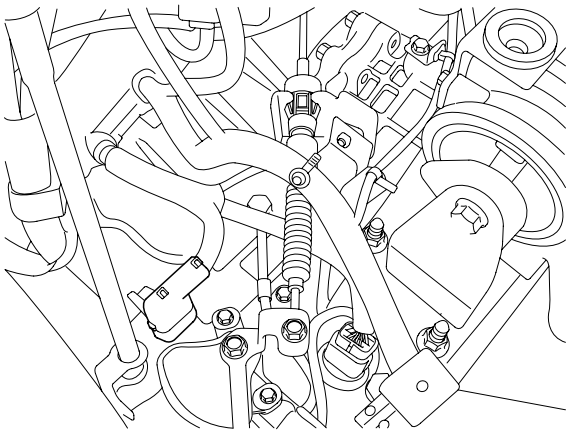

AKKF102A

GENERAL DESCRIPTION ECE1DD54

The Transaxle Range Switch sends the shift lever position information to the TCM(PCM) using a 12V (battery voltage) signal. When the shift lever is in the D (Drive) position the output signal of Transaxle Range Switch is 12V and in all other positions the voltage is 0V. The TCM(PCM) judges the shift lever position by reading all signals, for the Transaxle Range Switch, simultaneously.

DTC DESCRIPTION E161CB4E

The TCM(PCM) sets this code when the Transaxle Range Switch has no output signal for more than 30 seconds.

DTC DETECTING CONDITION EC4CBDED

Item	Detecting Condition	Possible cause
DTC Strategy	• Check for No signal	• Faulty Shift cable adjustment • Faulty Inhibitor switch and Manual control lever position adjustment • Open or short in circuit • Faulty TRANSAXLE RANGE SWITCH • Faulty TCM(PCM)
Enable Conditions	• Ne ≥ 1500 rpm • Vth ≥ 1.016V • Not FailSafe Status	
Threshold value	• No signal detected	
Diagnostic Time	• More than 30sec	
Fail Safe	• Recognition as previous signal - When P-D or R-D or D-R SHIFT is detected, it is regarded as N-D or N-R though "N" signal is not detected - When sports mode S/W is ON without P,R,N, D-RANGE signals, it is regarded sports mode.(DTC is not set)	

SIGNAL WAVEFORM EFAF83EC

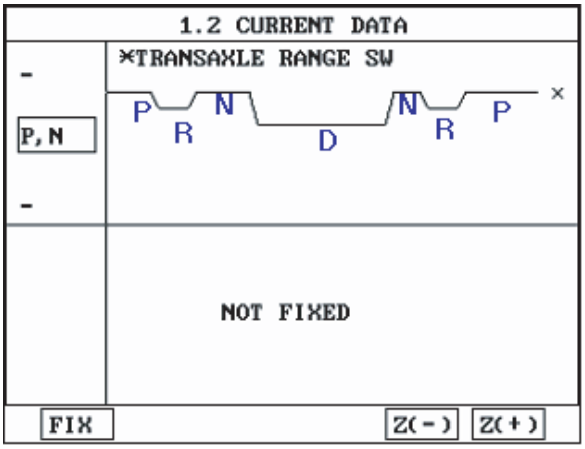

EKBF100A

MONITOR SCANTOOL DATA E9FAB598

1. Connect scantool to data link connector(DLC).
2. Ignition "ON" & Engine "OFF".
3. Monitor the "TRANSAXLE RANGE SWITCH" parameter on the scantool.
4. Shift selector lever from "P" range to other range.

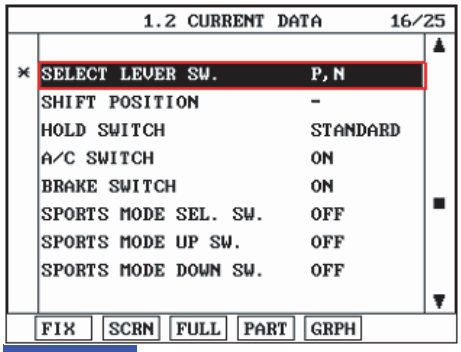

FIG.1)

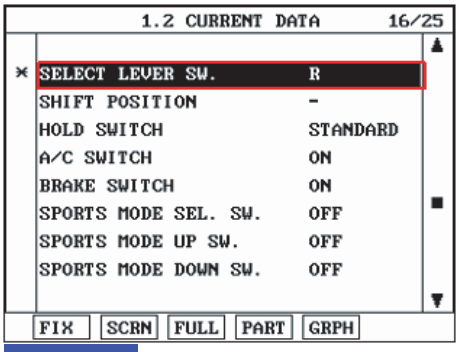

FIG.2)

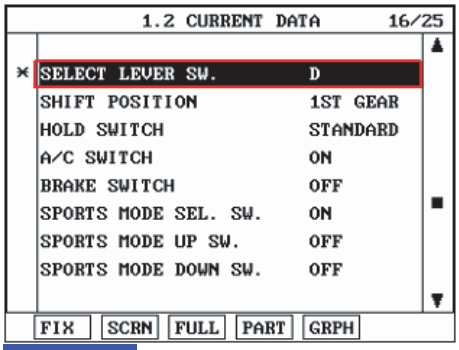

FIG.3)

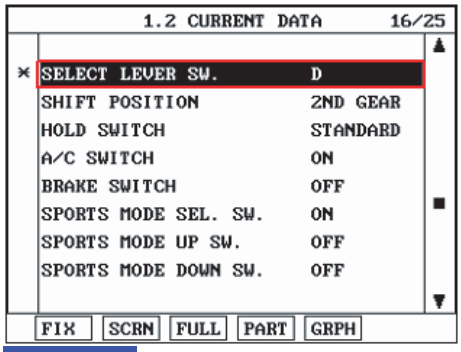

FIG.4)

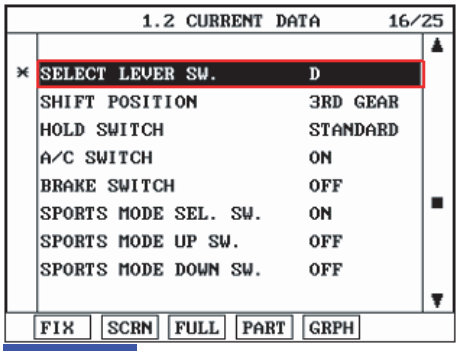

FIG.5)

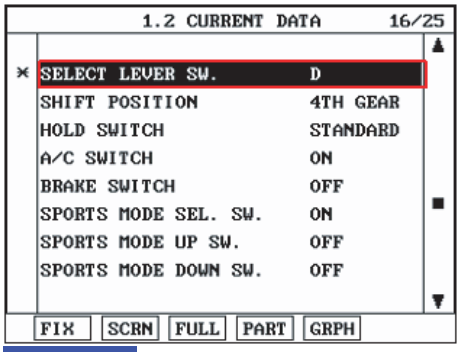

FIG.6)

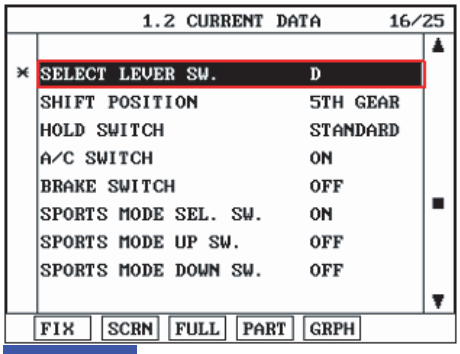

FIG.7)

FIG. 1) "P,N" Range
FIG. 2) "R" Range
FIG. 3) "D" Range 1st gear
FIG. 4) "D" Range 2nd gear
FIG. 5) "D" Range 3re gear
FIG. 6) "D" Range 4th gear
FIG. 7) "D" Range 5th gear

LLLG100A

5. Does "TRANSAXLE RANGE SWITCH" follow the reference data?

YES

▶ Fault is intermittent caused by poor contact in the sensor's and/or TCM(PCM)'s connector or was repaired and TCM(PCM) memory was not cleared. Thoroughly check connectors for looseness, poor connection, bending, corrosion, contamination, deterioration or damage. Repair or replace as necessary and go to "Verification of Vehicle Repair" procedure.

NO

▶ Go to "Terminal & connector inspection" procedure.

※ Most of fault that happen about inhibitor switch, result from faulty shift cable adjustment or incorrect location of manual control lever and inhibitor switch. So, when DTC which related Inhibitor switch or engine start defectiveness at "P" range happen, After check the shift cable adjustment or location of manual control lever and inhibitor switch, repair or replace as necessary.

TERMINAL & CONNECTOR INSPECTION EAA31DB3

1. Many malfunctions in the electrical system are caused by poor harness and terminal condition. Faults can also be caused by interference from other electrical systems, and mechanical or chemical damage.
2. Thoroughly check connectors for looseness, poor connection, bending, corrosion, contamination, deterioration, or damage.
3. Has a problem been found?

YES

▶ Repair as necessary and go to "Verification of vehicle repair" procedure.

NO

▶ Go to "Power circuit inspection" procedure.

POWER SUPPLY CIRCUIT INSPECTION E8EED173

1. CHECK POWER TO RANGE SWITCH

   1) Disconnect "TRANSAXLE RANGE SWITCH" connector.

   2) Ignition "ON" & Engine "OFF".

   3) Measure voltage between terminal "8" of the sensor harness connector and chassis ground.

Specification : approx. B+

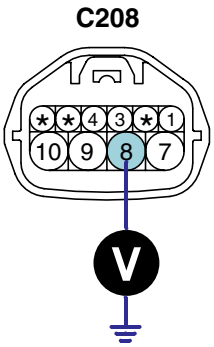

1. D Range
3. P Range
4. N Range
7. R Range
8. Power supply IG1
9. Starting circuit
10. Starting circuit

SCMAT6301L

   4) Is voltage within specifications?

YES

▶ Go to "Signal circuit inspection" procedure.

NO

▶ Check that Fuse 10A is installed or not blown.
▶ Check for open in harness. Repair as necessary and go to "Verification of vehicle repair" procedure.

SIGNAL CIRCUIT INSPECTION E7739DDB

1. Ignition "OFF".
2. Disconnect "TRANSAXLE RANGE SWITCH" and "TCM(PCM)" connector.
3. Measure resistance between each terminal of the sensor harness connector and TCM(PCM) harness connector as below.

Specification :

Pin No of "TRANSAXLE RANGE SWITCH"	C208 No.1	C208 No.3	C208 No.4	C208 No.7
Pin No of "TCM(PCM)" harness	C224-C No.17	C224-C No.5	C224-C No.6	C224-C No.16
Specification	0Ω	0Ω	0Ω	0Ω

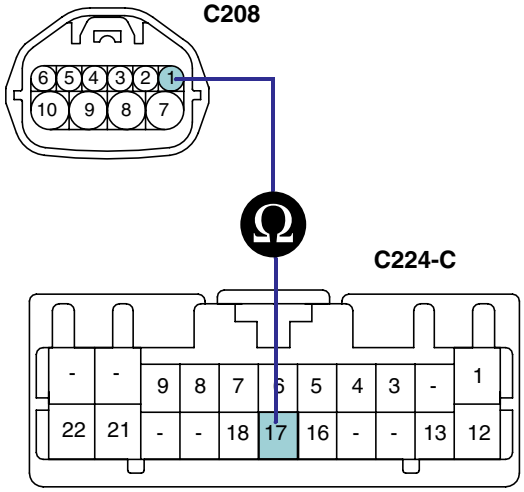

1. D Range
3. P Range
4. N Range
7. R Range
8. Power supply IG1
9. Starting circuit
10. Starting circuit

17. P Range
5. R Range
6. N Range
16. D Range

SCMAT6302L

4. Is resistance within specifications?

YES

▶ Go to "Component inspection" procedure.

NO

▶ Check for Open in harness. Repair as necessary and Go to "Verification of Vehicle Repair" procedure.

COMPONENT INSPECTION EDE50D35

1. Ignition "OFF".
2. Remove "TRANSAXLE RANGE SWITCH".
3. Measure the resistance between each terminal of the sensor.

Specification : approx. 0 Ω

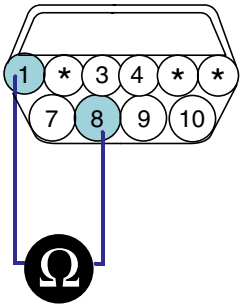

C208
Component side

1. D Range
3. P Range
4. N Range
7. R Range
8. Power supply IG1
9. Starting circuit
10. Starting circuit

Terminal / Range	P	R	N	D	3	2	L
1				●			
2						●	
3	●						
4			●				
5					●		
6							●
7		●					
8	●	●	●	●	●	●	●
9	●		●				
10	●		●				

[RANGE SWITCH continuity check table (Case of SPORTS MODE vehicle has no 3,2,L range)]

SCMAT6303L

4. Is resistance within specifications?

YES

▶ Substitute with a known-good PCM/TCM and check for proper operation. If the problem is corrected, replace PCM/TCM as necessary and then go to "Verification of Vehicle Repair" procedure.

NO

▶ Replace "TRANSAXLE RANGE SWITCH" as necessary and Go to "Verification of Vehicle Repair" procedure.

VERIFICATION OF VEHICLE REPAIR EFEEFADF

After a repair, it is essential to verify that the fault has been corrected.

1. Connect scantool and select "Diagnostic Trouble Codes(DTCs)" mode.
2. Using a scantool, Clear DTC.
3. Operate the vehicle within DTC Enable conditions in General information.
4. Are any DTCs present?

YES

▶ Go to the applicable troubleshooting procedure.

NO

▶ System performing to specification at this time.

DTC P0708 TRANSAXLE RANGE SWITCH - HIGH INPUT

COMPONENT LOCATION EC58535A

Refer to DTC P0707.

GENERAL DESCRIPTION E3DEE0BD

Refer to DTC P0707.

DTC DESCRIPTION EFF1CACD

The TCM sets this code when the Transaxle Range Switch outputs multiple signals for more than 30 seconds.

DTC DETECTING CONDITION EDECC03F

Item	Detecting Condition	Possible cause
DTC Strategy	• Check for multiple signals	• Faulty Shift cable adjustment • Faulty Inhibitor switch and Manual control lever position adjustment • Open or short in circuit • Faulty TRANSAXLE RANGE SWITCH • Faulty TCM(PCM)
Enable Conditions	• IG "ON" • Not FailSafe Status	
Threshold value	• Multiple signal	
Diagnostic Time	• More than 30sec	
Fail Safe	• Recognition as previous signal - When P-D or R-D or D-R SHIFT is detected, it is regarded as N-D or N-R though "N" signal is not detected - When sports mode S/W is ON without P,R,N, D-RANGE signals, it is regarded sports mode.(DTC is not set)	

SIGNAL WAVEFORM E887562F

Refer to DTC P0707.

MONITOR SCANTOOL DATA E8B2B8B7

Refer to DTC P0707.

TERMINAL & CONNECTOR INSPECTION E548DF70

Refer to DTC P0707.

POWER SUPPLY CIRCUIT INSPECTION EFA6EE5A

1. Disconnect "TRANSAXLE RANGE SWITCH" connector.
2. Ignition "ON" & Engine "OFF".
3. Measure voltage between each terminal of the sensor harness connector and chassis ground.

Specification :

TERMINAL(C208)	No.1	No.3	No.4	No.7	No.8	No.9	No.10
SPECIFICATION	0V	0V	0V	0V	0V	0V	0V

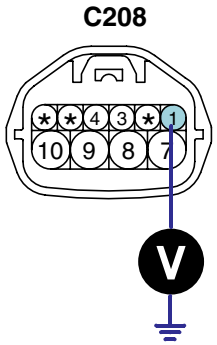

1. D Range
3. P Range
4. N Range
7. R Range
8. Power supply IG1
9. Starting circuit
10. Starting circuit

SCMAT6311L

4. Is voltage within specifications?

YES

▶ Go to "Signal circuit inspection" procedure.

NO

▶ Check for Short in harness. Repair as necessary and Go to "Verification of Vehicle Repair" procedure.

SIGNAL CIRCUIT INSPECTION EAC4BB41

1. Ignition "OFF".
2. Disconnect "TRANSAXLE RANGE SWITCH" and "TCM(PCM)" connector.
3. Measure resistance between each terminals of the sensor harness to check for Short.

Specification : Infinite

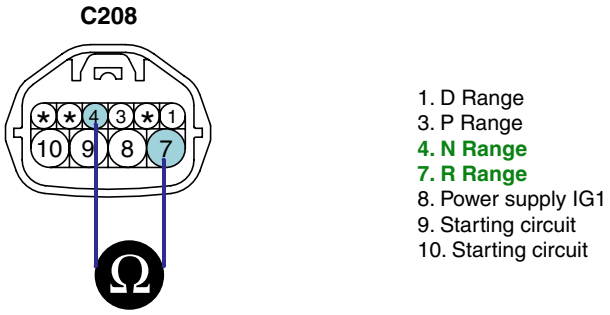

1. D Range
3. P Range
4. N Range
7. R Range
8. Power supply IG1
9. Starting circuit
10. Starting circuit

SCMAT6312L

4. Is resistance within specifications?

YES

▶ Go to "Component inspection" procedure.

NO

▶ Check for Short in harness. Repair as necessary and Go to "Verification of Vehicle Repair" procedure.

COMPONENT INSPECTION EC9018D7

Refer to DTC P0707.

VERIFICATION OF VEHICLE REPAIR EC17DB6F

<Refer to DTC P0707.

DTC P0712 FLUID(OIL) TEMPERATURE SENSOR CIRCUIT - LOW

COMPONENT LOCATION E526BABE

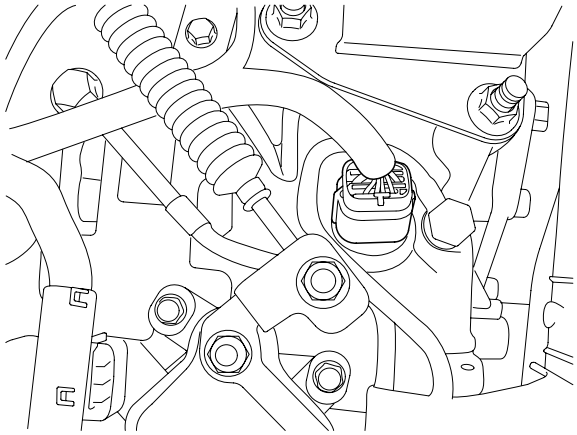

AKKF104A

GENERAL DESCRIPTION EC4171B6

The automatic TRANSAXLE fluid(ATF) temperature sensor is installed in the Valve Body. This sensor uses a thermistor whose resistance changes according to the temperature changes. The TCM supplies a 5V reference voltage to the sensor, and the output voltage of the sensor changes when the ATF temperature varies. The automatic TRANSAXLE fluid(ATF) temperature provides very important data for the TCM's control of the Torque Converter Clutch, and is also used for many other purposes.

DTC DESCRIPTION E459DF00

This DTC code is set when the ATF temperature output voltage is lower than a value generated by thermistor resistance, in a normal operating range, for approximately 1 second or longer. The TCM regards the ATF temperature as fixed at a value of 80°C(176°F).

DTC DETECTING CONDITION ECBFCFAC

Item	Detecting Condition	Possible cause
DTC Strategy	• Check for ground short	• Sensor signal circuit is short to ground. • Faulty sensor • Faulty PCM
Enable Conditions	• IG "ON" • Ne or Nt ≥ 400rpm • Not FailSafe Status	
Threshold Value	• voltage < 0.49V	
Diagnostic Time	• more than 1sec	
Fail Safe	• Learning control and Intelligent shift are inhibited. • Fluid temperature is regarded as 80°C(176°F)	

SPECIFICATION EC943BC5

TEMP.[°C(°F)]	Resistance(kΩ)	TEMP.[°C(°F)]	Resistance(kΩ)
-40(-40)	139.5	80(176)	1.08
-20(-4)	47.7	100(212)	0.63
0(32)	18.6	120(248)	0.38
20(68)	8.1	140(284)	0.25
40(104)	3.8	160(320)	0.16
60(140)	1.98		

MONITOR SCANTOOL DATA EEF7E77E

1. Connect scantool to data link connector(DLC).
2. Engine "ON".
3. Monitor the "TRANSAXLE FLUID TEMPERATURE SENSOR" parameter on the scan tool.

Specification : Increasing Gradually

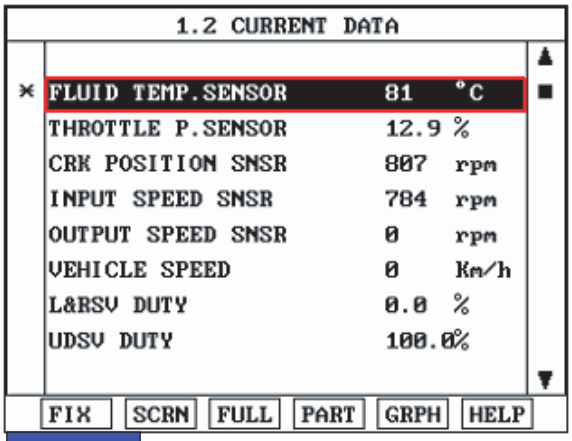

FIG.1)

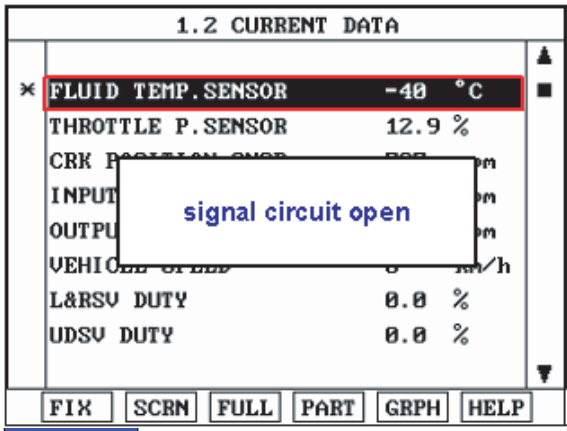

FIG.2)

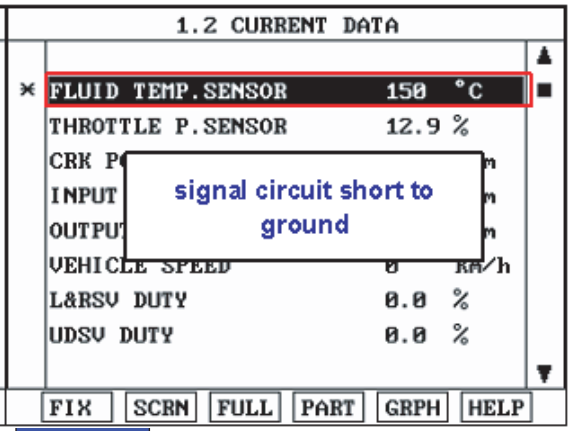

FIG.3)

FIG.1) Normal
FIG.2) Signal harness Open
FIG.3) Signal harness Short

SCMAT6321L

4. Does "TRANSAXLE FLUID TEMPERATURE SENSOR" follow the reference data?

YES

▶ Fault is intermittent caused by poor contact in the sensor's and/or TCM(PCM)'s connector or was repaired and TCM(PCM) memory was not cleared. Thoroughly check connectors for looseness, poor connection, bending, corrosion, contamination, deterioration or damage. Repair or replace as necessary and go to "Verification of Vehicle Repair" procedure.

NO

▶ Go to "Terminal & connector inspection" procedure.

TERMINAL & CONNECTOR INSPECTION E5EC571F

1. Many malfunctions in the electrical system are caused by poor harness and terminal condition. Faults can also be caused by interference from other electrical systems, and mechanical or chemical damage.
2. Thoroughly check connectors for looseness, poor connection, bending, corrosion, contamination, deterioration, or damage.
3. Has a problem been found?

YES

▶ Repair as necessary and go to "Verification of vehicle Repair" procedure.

NO

▶ Go to "Component inspection" procedure.

SIGNAL CIRCUIT INSPECTION EF4A81C2

1. Ignition "ON" & Engine "OFF".
2. Disconnect the "TRANSAXLE FLUID TEMPERATURE SENSOR" connector.
3. Measure the voltage between terminal "1" of the "TRANSAXLE FLUID TEMPERATURE SENSOR" harness connector and chassis ground.

Specification : Approx. 5 V

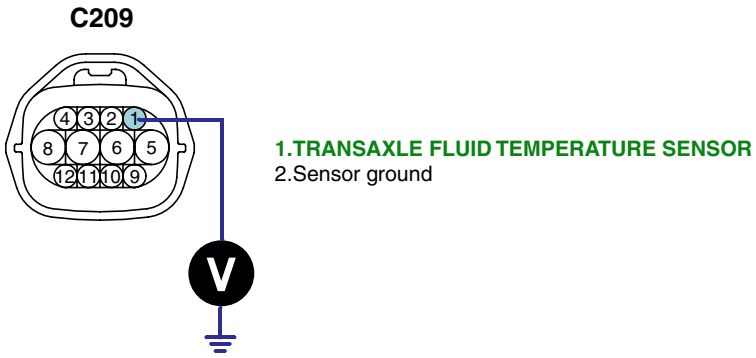

SCMAT6322L

4. Is voltage within specifications ?

YES

▶ Go to "Component Inspection" procedure.

NO

▶ Check for short to ground in harness. Repair as necessary and Go to "Verification of Vehicle Repair" procedure.

COMPONENT INSPECTION EF85D5EE

1. CHECK "TRANSAXLE FLUID TEMPERATURE SENSOR"

   1) Ignition "OFF".

   2) Disconnect the "TRANSAXLE FLUID TEMPERATURE SENSOR" connector.

   3) Measure the resistance between terminals "1" and "2" of the "TRANSAXLE FLUID TEMPERATURE SENSOR".

Specification : Refer to "Reference data"

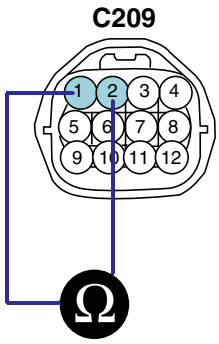

1.TRANSAXLE FLUID TEMPERATURE SENSOR
2.Sensor ground

SCMAT6323L

[REFERENCE DATA]

TEMP.[°C(°F)]	Resistance(kΩ)	TEMP.[°C(°F)]	Resistance(kΩ)
-40(-40)	139.5	80(176)	1.08
-20(-4)	47.7	100(212)	0.63
0(32)	18.6	120(248)	0.38
20(68)	8.1	140(284)	0.25
40(104)	3.8	160(320)	0.16
60(140)	1.98		

   4) Is resistance within specifications?

   YES

   ▶ Go to "CHECK PCM/TCM " as below.

   NO

   ▶ Replace "TRANSAXLE FLUID TEMPERATURE SENSOR" as necessary and Go to "Verification of Vehicle Repair" procedure.

2. CHECK PCM

   1) Ignition "ON" & Engine "OFF".

   2) Connect "TRANSAXLE FLUID TEMPERATURE SENSOR" connector.

   3) Install scan tool and select a SIMU-SCAN.

   4) Simulate voltage (0→5V) to "TRANSAXLE FLUID TEMPERATURE SENSOR" signal circuit.

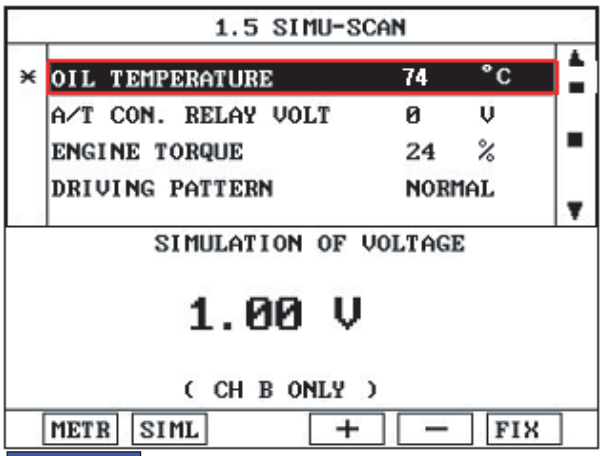

FIG.1)

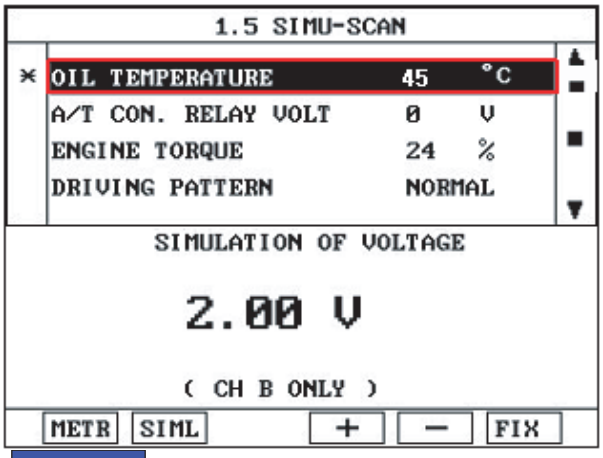

FIG.2)

FIG.1) INPUT 1.00V → 74˚C
FIG.3) INPUT 2.00V → 45˚C

※The values are subject to change according to vehicle model or conditions.

SCMAT6324L

5) Is FLUID TEMP. SENSOR signal value changed according to simulation voltage?

YES

▶ Thoroughly check connectors for looseness, poor connection, bending, corrosion, contamination, deterioration, or damage. Repair or replace as necessary and then go to "Verification of Vehicle Repair" procedure.

NO

▶ Substitute with a known-good PCM/TCM and check for proper operation. If the problem is corrected, replace PCM/TCM as necessary and then go to "Verification of Vehicle Repair" procedure.

VERIFICATION OF VEHICLE REPAIR E909F321

After a repair, it is essential to verify that the fault has been corrected.

1. Connect scantool and select "Diagnostic Trouble Codes(DTCs)" mode.
2. Using a scantool, Clear DTC.
3. Operate the vehicle within DTC Enable conditions in General information.
4. Are any DTCs present?

YES

▶ Go to the applicable troubleshooting procedure.

NO

▶ System performing to specification at this time.

DTC P0713 FLUID(OIL) TEMPERATURE SENSOR CIRCUIT - HIGH

COMPONENT LOCATION E2AB033F

Refer to DTC P0712.

GENERAL DESCRIPTION EE6A7CC5

Refer to DTC P0712.

DTC DESCRIPTION E1F791FC

This DTC code is set when the ATF temperature output voltage is higher than a value generated by thermistor resistance, in a normal operating range, for an extended period of time. The TCM regards the ATF temperature as fixed at a value of 80°C(176°F).

DTC DETECTING CONDITION EF37E4AB

Item	Detecting Condition	Possible cause
DTC Strategy	• Check voltage range	• Sensor signal circuit is short to ground • Faulty sensor • Faulty PCM
Enable Conditions	• Engine speed > 2000rpm • Output speed > 1000rpm • Accumulated time in above condition : 10 min • Not FailSafe Status	
Threshold Value	• voltage > 4.57 V	
Diagnostic Time	• more than 60 seconds	
Fail Safe	• Learning control and Intelligent shift are inhibited • Fluid temperature is regarded as 80°C(176°F)	

SPECIFICATION E8A7022C

Refer to DTC P0712.

MONITOR SCANTOOL DATA EBDED7FA

Refer to DTC P0712.

TERMINAL & CONNECTOR INSPECTION EEF8AAFC

Refer to DTC P0712.

SIGNAL CIRCUIT INSPECTION EB170543

Refer to DTC P0712.

GROUND CIRCUIT INSPECTION E2F22C3F

1. Ignition "ON" & Engine "OFF".
2. Disconnect the "TRANSAXLE FLUID TEMPERATURE SENSOR" connector.
3. Measure the resistance between terminal "2" of the "TRANSAXLE FLUID TEMPERATURE SENSOR" harness connector and chassis ground.

Specification : Approx. 0Ω

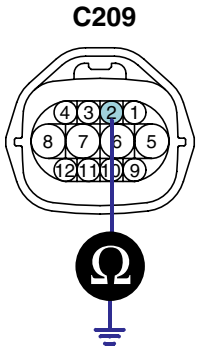

1.TRANSAXLE FLUID TEMPERATURE SENSOR
2.Sensor ground

SCMAT6325L

4. Is resistance within specifications?

YES

▶ Go to "Component inspection" procedure.

NO

▶ Check for open in harness. Repair as necessary and Go to "Verification of Vehicle Repair" procedure .

COMPONENT INSPECTION EF9EE8D6

Refer to DTC P0712.

VERIFICATION OF VEHICLE REPAIR E1E4DA2B

Refer to DTC P0712.

DTC P0717 INPUT SPEED SENSOR CIRCUIT - NO SIGNAL

COMPONENT LOCATION E42CBC20



AKKF107A

GENERAL DESCRIPTION EAEFD19C

The input(turbine) speed sensor outputs pulse-signals according to the revolutions of the input shaft of the transmission. The TCM determines the input shaft speed by counting the frequency of the pulses. This value is mainly used to control the optimum fluid pressure during shifting.

DTC DESCRIPTION E189A5C6

The TCM sets this code if an output pulse-signal is not detected, from the input speed sensor, when the vehicle is running faster than 30 km/h. The Fail-Safe function will be set by the TCM if this code is detected.

DTC DETECTING CONDITION E2EDB3C2

Item	Detecting Condition	Possible cause
DTC Strategy	• Check voltage range	• Signal circuit is open or short. • Sensor power circuit is open • Sensor ground circuit is open • Faulty INPUT SPEED SENSOR • Faulty PCM/TCM
Enable Conditions	• Inhibitor Switch position is D,3,2,L(A/T range switch) and SP(SPORTS MODE) • Eng revolution ≥ 2600 rpm In 1st or 2nd gear • A/T oil temp sensor voltage < 4.57 V • Not Fail Safe Status	
Threshold value	• No signal	
Diagnostic Time	• More than 1sec	
Fail Safe	• Locked into 3rd or 2nd gear. • Manual shifting is possible(2 nd → 3 rd, 3 rd → 2 nd)	

SPECIFICATION EADEFDB4

Input shaft & Output shaft speed sensor
- Type : Hall sensor
- Current consumption : 22mA(MAX)
- Sensor body and sensor connector have been unified as one.

SIGNAL WAVEFORM E703B2FE

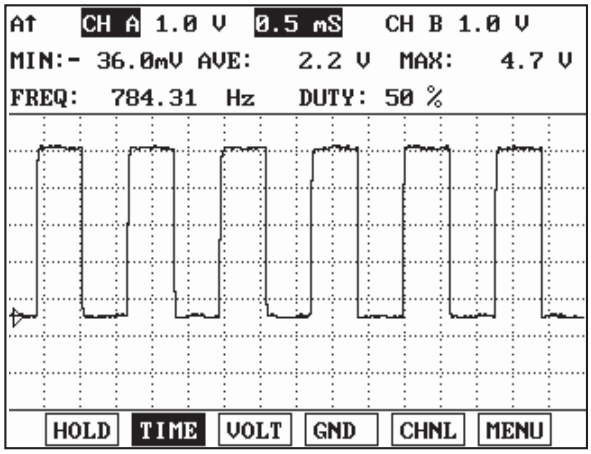

EKBF105A

MONITOR SCANTOOL DATA E83AE782

1. Connect scan tool to data link connector(DLC).
2. Engine "ON".
3. Monitor the "INPUT SPEED SENSOR" parameter on the scantool.
4. Driving at speed of over 19 Mile/h(30 Km/h).

Specification : Increasing Gradually

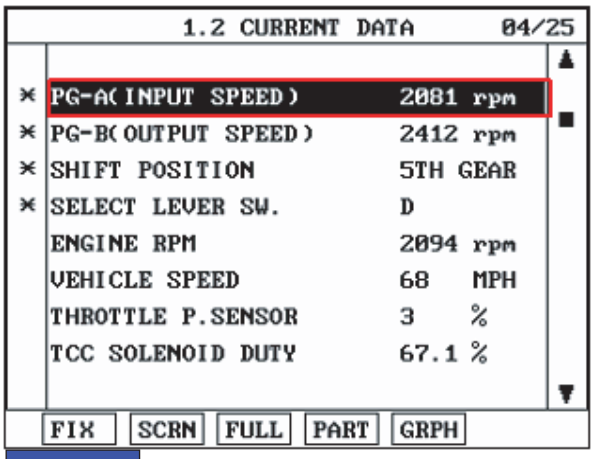

FIG.1)

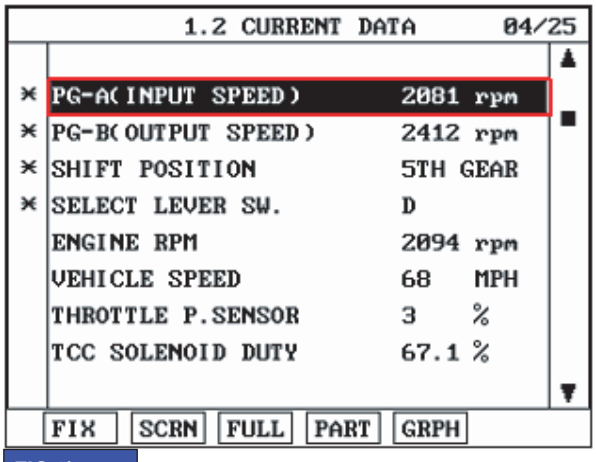

FIG.2)

FIG.1) Idling
FIG.2) Accelerating

SCMAT6331L

5. Does "Input speed sensor" follow the reference data?

YES

▶ Fault is intermittent caused by poor contact in the sensor's and/or TCM(PCM)'s connector or was repaired and TCM(PCM) memory was not cleared. Thoroughly check connectors for looseness, poor connection, bending, corrosion, contamination, deterioration or damage. Repair or replace as necessary and go to "Verification of Vehicle Repair" procedure.

NO

▶ Go to "Terminal & connector inspection" procedure.

TERMINAL & CONNECTOR INSPECTION EC769CA3

1. Many malfunctions in the electrical system may be caused from poor harness and terminal condition. These faults can be caused by interference from other electrical systems and mechanical or chemical damage.
2. Thoroughly check connectors for looseness, poor connection, bending, corrosion, contamination, deterioration, or damage.
3. Has a problem been found?

YES

▶ Repair as necessary and go to "Verification of vehicle repair" procedure.

NO

▶ Go to "Signal circuit inspection" procedure.

SIGNAL CIRCUIT INSPECTION E3B4D0BC

1. Ignition "ON" & Engine "OFF".
2. Disconnect the "INPUT SPEED SENSOR" connector.
3. Measure voltage between terminal "2" of the INPUT SPEED SENSOR harness connector and chassis ground.

Specification : approx. 5V

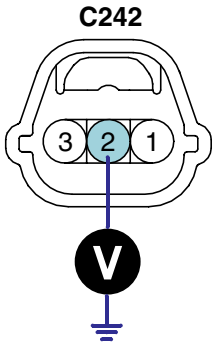

1. Sensor ground
2. **Input speed sensor**
3. Power supply IG1

SCMAT6332L

4. Is voltage within specification?

YES

▶ Go to "Power circuit Inspection" procedure.

NO

▶ Check for open or short in harness. Repair as necessary and Go to "Verification of Vehicle Repair" procedure.
▶ If signal circuit in harness is OK, Go to "Check PCM/TCM" of the "Component Inspection" procedure.

POWER SUPPLY CIRCUIT INSPECTION ECE0DC8E

1. Ignition "ON" & Engine "OFF".
2. Disconnect the "INPUT SPEED SENSOR" connector.
3. Measure voltage between terminal "3" of the INPUT SPEED SENSOR harness connector and chassis ground.

Specification : approx. B+

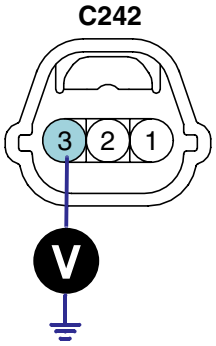

1. Sensor ground
2. Input speed sensor
3. **Power supply IG1**

SCMAT6333L

4. Is voltage within specification ?

YES

▶ Go to "Ground circuit inspection" procedure.

NO

▶ Check for open in harness. Repair as necessary and Go to "Verification of Vehicle Repair" procedure.

GROUND CIRCUIT INSPECTION EBCBAF15

1. Ignition "ON" & Engine "OFF".
2. Disconnect the "INPUT SPEED SENSOR" connector.
3. Measure resistance between terminal "1" of the INPUT SPEED SENSOR harness connector and chassis ground.

Specification : approx. 0 Ω

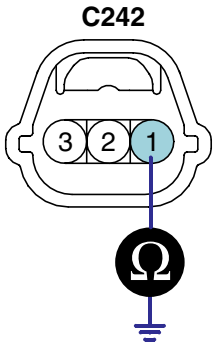

1. Sensor ground
2. Input speed sensor
3. Power supply IG1

SCMAT6334L

4. Is resistance within specification?

YES

▶ Go to "Component Inspection" procedure.

NO

▶ Check for open in harness. Repair as necessary and Go to "Verification of Vehicle Repair" procedure.
▶ If ground circuit in harness is OK, Go to "Check PCM/TCM" of the "Component Inspection" procedure.

COMPONENT INSPECTION EDFB0779

1. Check "INPUT SPEED SENSOR"

   1) Ignition "OFF".

   2) Disconnect the "INPUT SPEED SENSOR" connector.

   3) Measure resistance between terminal "1","2" and "2","3" and "1","3" of the "INPUT SPEED SENSOR" connector.

Specification : Refer to "Reference data"

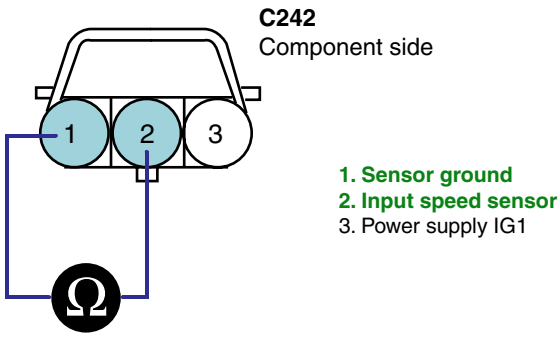

SCMAT6335L

   4) Is resistance within specifications?

[REFERENCE DATA]

Data	Reference Data	
Current	22 mA	
Air Gap	Input sensor	1.3 mm
	Output sensor	0.85 mm
Resistance	Input sensor	Above 4 MΩ
	Output sensor	Above 4 MΩ
Voltage	High	4.8 ~ 5.2V
	Low	Below 0.8V

YES

▶ Go to "CHECK PCM" as below.

NO

▶ Replace "INPUT SPEED SENSOR" as necessary and Go to "Verification of Vehicle Repair" procedure.

2. CHECK PCM/TCM

   1) Ignition "ON" & Engine "OFF".

   2) Connect "INPUT SPEED SENSOR" connector.

   3) Install scantool and select a SIMU-SCAN.

   4) Simulate frequency to INPUT SPEED SENSOR signal circuit.

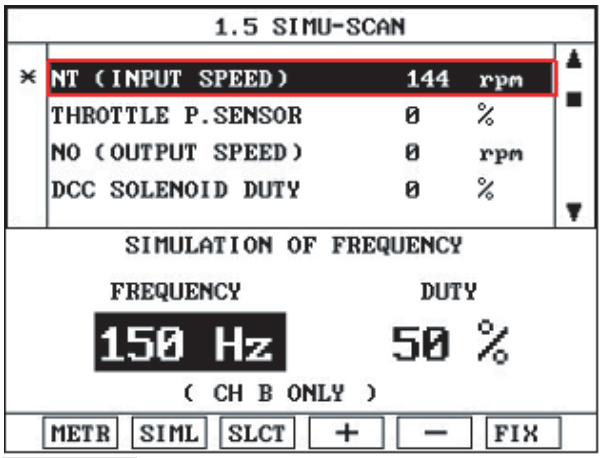

FIG.1)

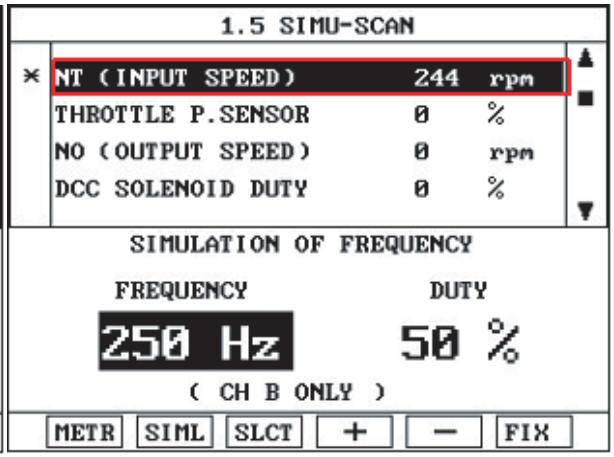

FIG.2)

FIG.1) INPUT 150Hz → 144rpm
FIG.2) INPUT 250Hz → 244rpm

※ The values are subject to change according to vehicle model or conditions

EKBF105G

5) Is "INPUT SPEED SENSOR" signal value changed according to simulation frequency?

YES

▶ Thoroughly check connectors for looseness, poor connection, bending, corrosion, contamination, deterioration, or damage. Repair or replace as necessary and then go to "Verification of Vehicle Repair" procedure.

NO

▶ Substitute with a known-good PCM/TCM and check for proper operation. If the problem is corrected, replace PCM/TCM as necessary and then go to "Verification of Vehicle Repair" procedure.

VERIFICATION OF VEHICLE REPAIR EE5DDD84

After a repair, it is essential to verify that the fault has been corrected.

1. Connect scan tool and select "Diagnostic Trouble Codes(DTCs)" mode.
2. Using a scan tool, Clear DTC.
3. Operate the vehicle within DTC Enable conditions in General information.
4. Is resistance within specification ?

YES

▶ Go to the applicable troubleshooting procedure.

NO

▶ System performing to specification at this time.

DTC P0722 OUTPUT SPEED SENSOR CIRCUIT - NO SIGNAL

COMPONENT LOCATION EABFACED

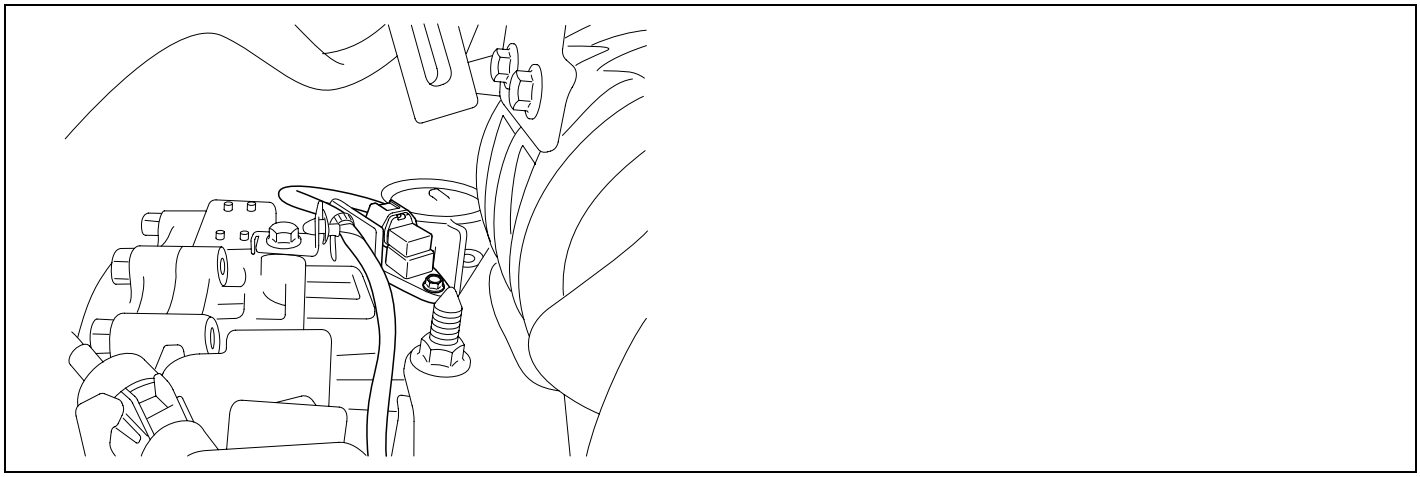

SCMAT6304D

GENERAL DESCRIPTION E23829A7

The Output Speed Sensor outputs pulse-signals according to the revolutions of the output shaft of the transmission. The Output Speed Sensor is installed in front of the Transfer Drive Gear to determine the Transfer Drive Gear rpms by counting the frequency of the pulses. This value, together with the throttle position data, is mainly used to decide the optimum gear position.

DTC DESCRIPTION EF6EE2C7

The TCM sets this code if the calculated value of the pulse-signal is noticeably different from the value calculated, using the Vehicle Speed Sensor output, when the vehicle is running faster than 30 km/h. The TCM will initiate the fail safe function if this code is detected.

DTC DETECTING CONDITION EF9F8AC3

Item	Detecting Condition	Possible cause
DTC Strategy	• Check voltage range	• Signal circuit is open or short • Sensor power circuit is open • Sensor ground circuit is open • Faulty OUTPUT SPEED SENSOR • Faulty PCM
Enable Conditions	• Vehicle speed is over 19 Mile/h(30 Km/h) in D,3,2,L(A/T range switch) and SP(SPORTS MODE) • Eng revolution ≥ 2600 rpm In 1st or 2nd gear • A/T oil temp sensor voltage < 4.57 V • Not Fail Safe Status	
Threshold value	• If the output from the output speed sensor is continuously 50% lower than the value calculated by vehicle speed sensor	
Diagnostic Time	• More than 1sec	
Fail Safe	• Locked into 3rd or 2nd gear • Apply an electric current to Solenoid valve • Manual shifting is possible(2nd→3rd, 3rd→2nd)	

SPECIFICATION EDEFCFB1

Refer to DTC P0717.

SIGNAL WAVEFORM EB135F12

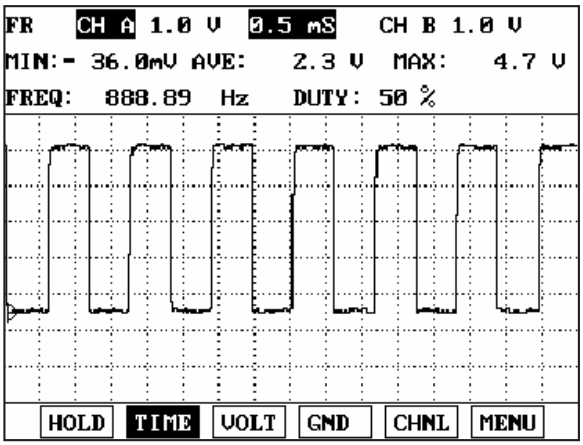

EKBF106A

MONITOR SCANTOOL DATA E0309262

1. Connect scantool to data link connector(DLC).
2. Engine "ON".
3. Monitor the "OUTPUT SPEED SENSOR" parameter on the scantool.
4. Driving at speed of over 30 Km/h(19 mph).

Specification : Increasing Gradually

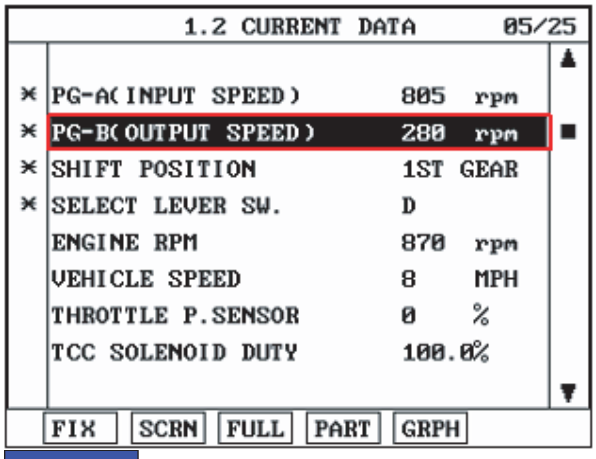

FIG.1)

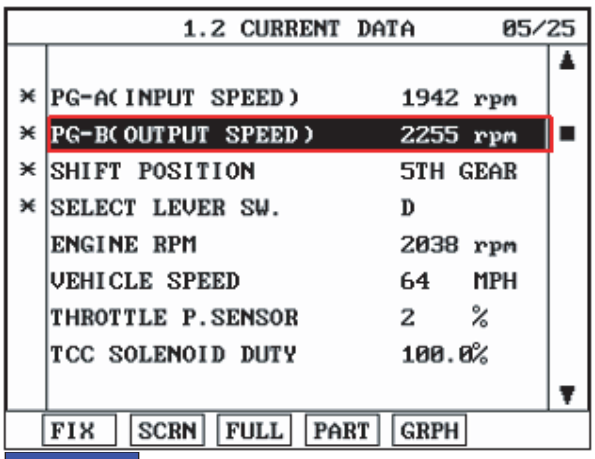

FIG.2)

FIG.1) Low-speed
FIG.2) High-speed

SCMAT6341L

5. Does "Output speed sensor" follow the reference data?

YES

▶ Fault is intermittent caused by poor contact in the sensor's and/or TCM(PCM)'s connector or was repaired and TCM(PCM) memory was not cleared. Thoroughly check connectors for looseness, poor connection, bending, corrosion, contamination, deterioration or damage. Repair or replace as necessary and go to "Verification of Vehicle Repair" procedure.

NO

▶ Go to "Terminal & connector inspection" procedure.

TERMINAL & CONNECTOR INSPECTION EF868D27

Refer to DTC P0717.

SIGNAL CIRCUIT INSPECTION E5D5E9A7

1. Ignition "ON" & Engine "OFF".
2. Disconnect the "OUTPUT SPEED SENSOR" connector.
3. Measure voltage between terminal "2" of the OUTPUT SPEED SENSOR harness connector and chassis ground.

Specification : approx. 5V

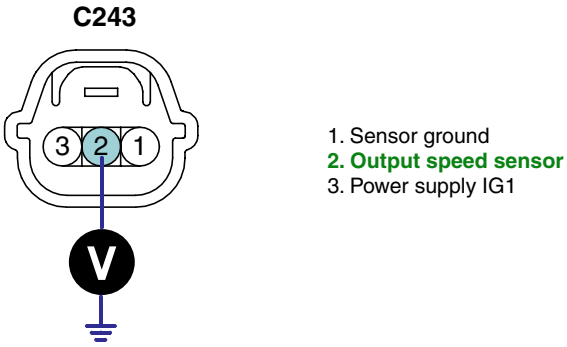

1. Sensor ground
2. **Output speed sensor**
3. Power supply IG1

SCMAT6342L

4. Is voltage within specification?

YES

▶ Go to "Power circuit Inspection" procedure.

NO

▶ Check for open or short in harness. Repair as necessary and Go to "Verification of Vehicle Repair" procedure.
▶ If signal circuit in harness is OK, Go to "Check PCM/TCM" of the "Component Inspection" procedure.

POWER SUPPLY CIRCUIT INSPECTION EFB2AF6A

1. Ignition "ON" & Engine "OFF".
2. Disconnect the "OUTPUT SPEED SENSOR" connector.
3. Measure voltage between terminal "3" of the "OUTPUT SPEED SENSOR" harness connector and chassis ground.

Specification : approx. B+

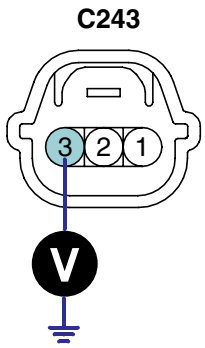

1. Sensor ground
2. Output speed sensor
3. **Power supply IG1**

SCMAT6343L

4. Is voltage within specification?

YES

▶ Go to "Ground circuit inspection" procedure.

NO

▶ Check for open in harness. Repair as necessary and Go to "Verification of Vehicle Repair" procedure.

GROUND CIRCUIT INSPECTION E8A15D01

1. Ignition "ON" & Engine "OFF".
2. Disconnect the "OUTPUT SPEED SENSOR" connector.
3. Measure resistance between terminal "1" of the OUTPUT SPEED SENSOR harness connector and chassis ground.

Specification : approx. 0Ω

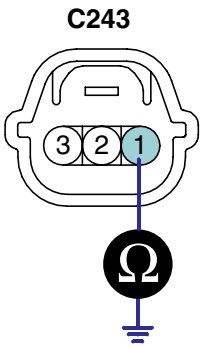

1. **Sensor ground**
2. Output speed sensor
3. Power supply IG1

SCMAT6344L

4. Is resistance within specifications?

YES

▶ Go to "Component Inspection" procedure.

NO

▶ Check for open in harness. Repair as necessary and Go to "Verification of Vehicle Repair" procedure.
▶ If ground circuit is OK, Go to "Check PCM/TCM" of the "Component Inspection" procedure.

COMPONENT INSPECTION E75FB13E

1. Check "OUTPUT SPEED SENSOR"

   1) Ignition "OFF".

   2) Disconnect the "OUTPUT SPEED SENSOR" connector.

   3) Measure resistance between terminal "1","2" and "2","3" and "1","3" of the "OUTPUT SPEED SENSOR" connector.

Specification : Refer to "Reference data"

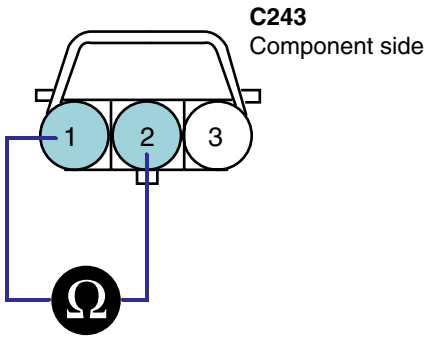

1. Sensor ground
2. Output speed sensor
3. Power supply IG1

SCMAT6345L

   4) Is resistance within specifications?

[REFERENCE DATA]

Data	Reference Data	
Current	22 mA	
Air Gap	Input sensor	1.3 mm
	Output sensor	0.85 mm
Resistance	Input sensor	Above 4 MΩ
	Output sensor	Above 4 MΩ
Voltage	High	4.8 ~ 5.2V
	Low	Below 0.8V

YES

▶ Go to "CHECK PCM/TCM " as below.

NO

▶ Replace "OUTPUT SPEED SENSOR" as necessary and Go to "Verification of Vehicle Repair" procedure.

2. CHECK PCM/TCM

1) Ignition "ON" & Engine "OFF".

2) Connect "OUTPUT SPEED SENSOR" connector.

3) Install scantool and select a SIMU-SCAN.

4) Simulate frequency to OUTPUT SPEED SENSOR signal circuit.

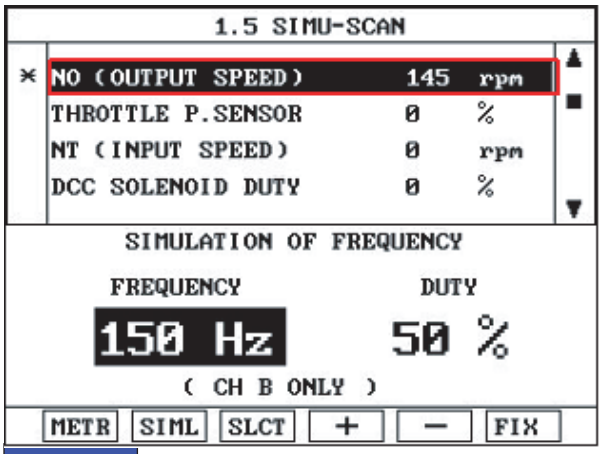

FIG.1)

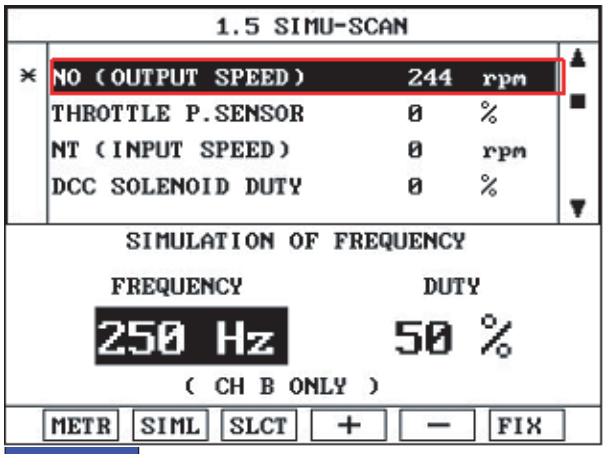

FIG.2)

FIG.1) INPUT 150Hz → 145rpm
FIG.2) INPUT 250Hz → 244rpm

※ The values are subject to change according to vehicle model or conditions

EKBF106G

5) Is "OUTPUT SPEED SENSOR" signal value changed according to simulation frequency?

YES

▶ Thoroughly check connectors for looseness, poor connection, bending, corrosion, contamination, deterioration, or damage. Repair or replace as necessary and then go to "Verification of Vehicle Repair" procedure.

NO

▶ Substitute with a known-good PCM/TCM and check for proper operation. If the problem is corrected, replace PCM/TCM as necessary and then go to "Verification of Vehicle Repair" procedure.

VERIFICATION OF VEHICLE REPAIR EE9B7BA0

Refer to DTC P0717.

DTC P0731 GEAR 1 INCORRECT RATIO

COMPONENT LOCATION E7E3BCB9

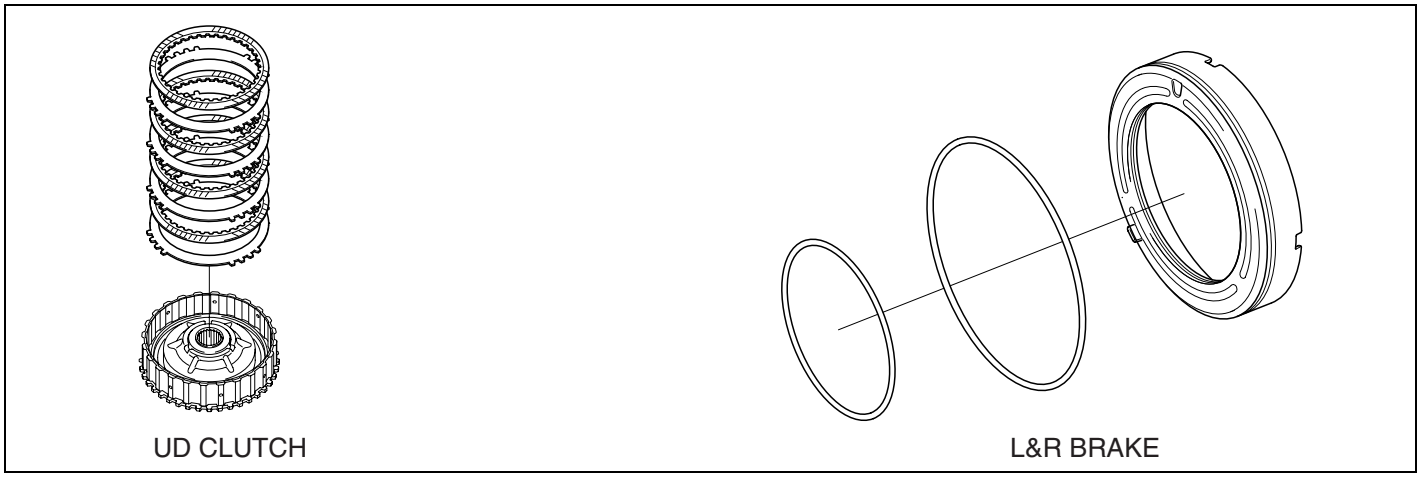

EKBF300A

GENERAL DESCRIPTION E452D379

The value of the input shaft speed should be equal to the value of the output shaft speed, when multiplied by the 1st gear ratio, while the transaxle is engaged in the 1st gear. For example, if the output speed is 1000 rpm and the 1st gear ratio is 4.497, then the input speed is 4,497 rpm.

DTC DESCRIPTION E26B1774

This code is set if the value of input shaft speed is not equal to the value of the output shaft, when multiplied by the 1st gear ratio, while the transaxle is engaged in 1st gear. This malfunction is mainly caused by mechanical troubles such as control valve sticking or solenoid valve malfunctioning rather than an electrical issue.

DTC DETECTING CONDITION EEABEA7B

Item	Detecting Condition	Possible cause
DTC Strategy	• 1st gear incorrect ratio	• Faulty Input speed sensor • Faulty output speed sensor • Faulty UD clutch or LR brake or Oneway clutch
Enable Conditions	• Engine speed > 450rpm • Output speed > 350rpm • After 2 sec is passed from shift finish of shift to 1st gear • Input speed > 0rpm • A/T oil temp > -23.5°C(-9.4°F) • Voltage of Battery > 10V • TRANSAXLE RANGE SWITCH is normal	
Threshold value	• | Input speed - output speed ×1st gear ratio | ≥ 200rpm	
Diagnostic Time	• more than 1sec	
Fail Safe	• Locked into 3rd gear.(If diagnosis code P0731 is output four times, the transaxle is locked into 3rd gear)	

SIGNAL WAVEFORM E4B9132B

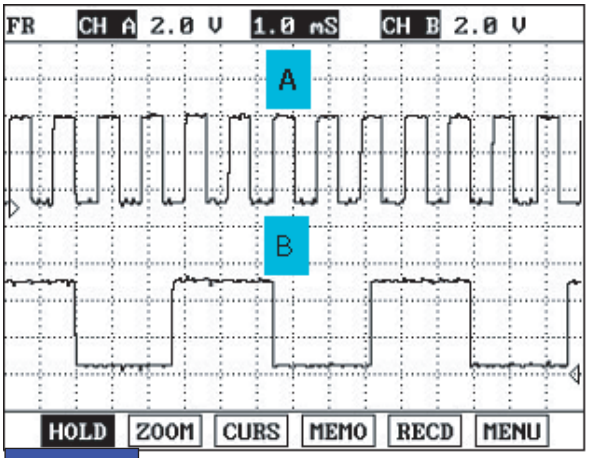

FIG.1)

A : INPUT SPEED SENSOR
B : OUTPUT SPEED SENSOR

EKBF107A

MONITOR SCANTOOL DATA EEFABBAD

1. Connect scan tool to data link connector(DLC).
2. Engine "ON".
3. Monitor the "ENGINE SPEED, INPUT SPEED SENSOR, OUTPUT SPEED SENSOR, GEAR POSITION" parameter on the scan tool.
4. Perform the "STALL TEST" with gear position "1"

Specification : 2100~2800 engine rpm

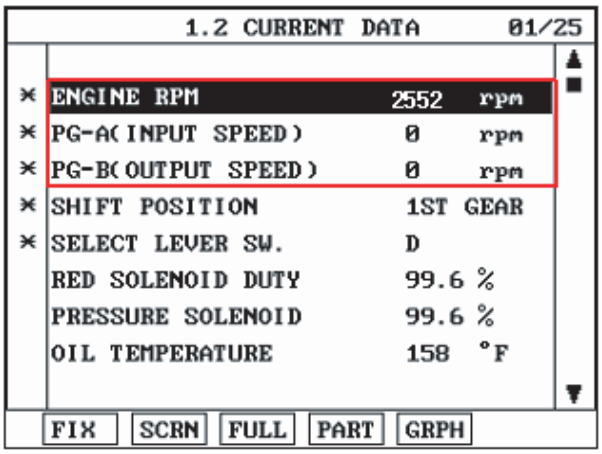

SCMAT6351L

OPERATING ELEMENT OF EACH SHIFTING RANGE

GEAR POSI-TION	ELEMENT								
	L/R BRAKE	2ND BRAKE	U/D CLUTCH	O/D CLUTCH	RED BRAKE	DIR CLUTCH	REV CLUTCH	OWC1	OWC2
1st	O		O		O			●	●
2nd		O	O		O				●
3rd			O	O	O				●
4th		O		O	O				●
5th		O		O		O			
REV	O				O		O		
N,P	O				O				

Low & Reverse Brake is released When the vehicle speed over the 5MPH(7km/h).

Stall test procedure in D1 and reason

Procedure

1. Warm up the engine.
2. After positioning the select lever in "D", depress the foot brake pedal fully after that, depress the accelerator pedal to the maximum.
   * The slippage of 1st gear operating parts can be detected by stall test in D

Reason for stall test

1. If there is no mechanical defaults in A/T, all slippages occurrs in torque converter.
2. Therefore, engine revolution is output, but input and output speed revolution must be "zero" due to wheel's lock.
3. If 1st gear operating part has faults, input speed revolution will be out of specification.
4. If output speed revolution is output. It means that the foot brake force is not applied fully. Remeasuring is required.

5. Is "STALL TEST " within specification?

YES

▶ Go to "Signal circuit inspection" procedure.

NO

▶ Go to "Component inspection" procedure.

CAUTION

1. ***Do not let anybody stand in front of or behind the vehicle while this test is being carried out.***
2. ***Check the A/T fluid level and temperature and the engine coolant temperature.***
   - ***Fluid level : At the hot mark on the oil level gauge.***
   - ***Fluid temperature : 176 °F~ 212 °F (80~100 °C).***
   - ***Engine coolant temperature : 176 °F~ 212 °F (80~100 °C).***
3. ***Chock both rear wheel(left and right).***
4. ***Pull the parking brake lever on with the brake pedal fully depressed.***
5. ***The throttle should not be left fully open for more than eight second.***
6. ***If stall test is being performed more than once, move the selector lever to 'N' and run the engine at 1000 RPM to allow the transaxle fluid to cool prior to subsequent tests.***

SIGNAL CIRCUIT INSPECTION EDA47110

1. Connect Scan tool.
2. Engine "ON".
3. Monitor the "INPUT & OUTPUT SPEED SENSOR" parameter on the scan tool.
4. Accelerate the Engine speed until about 2000 rpm in the 1st gear.

Specification : INPUT SPEED - (OUTPUT SPEED × GEAR RATIO) ≤ 200 RPM

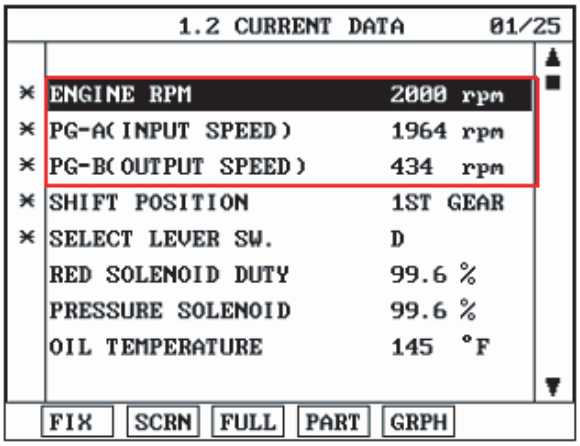

LKKG107E

5. Does "INPUT & OUTPUT SPEED SENSOR" within specifications?

YES

▶ Go to "Component Inspection" procedure.

NO

▶ Check for electrical noise of circuit in INPUT &OUTPUT SPEED SENSOR or Replace INPUT & OUTPUT SPEED SENSOR. Repair as necessary and Go to "Verification of Vehicle Repair" procedure.

COMPONENT INSPECTION E65C8AD4

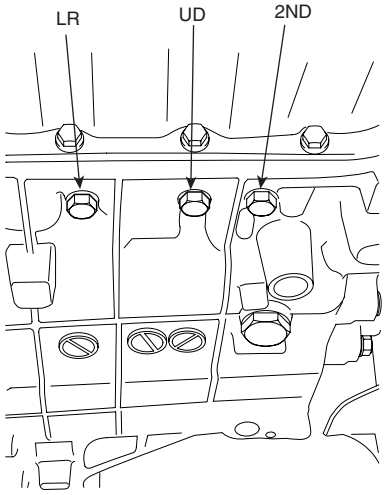

EKBF107D

1. Connect oil pressure gauge to "UD" and "L/R" and "RED" port.
2. Engine "ON".
3. Drive a car with gear position 1 in "SPORTS MODE".
4. Compare it with reference data as below.

Specification : refer to Standard Oil Pressure Table as below

LEVER POSITION	INPUT SPEED	VFS CURRENT	SOLENOID VALVE DUTY (%)						ELEMENT	P(MPa)
			LR	DCC	2ND	UD	OD	RED*		
D	2500rpm	200mA	0	0	100	0	100	0	LR	1.03±0.02
↑	↑	↑	60	↑	↑	↑	↑	↑		0.52±0.04
↑	↑	↑	75	↑	↑	↑	↑	↑		0.23±0.04
↑	↑	↑	100	↑	↑	↑	↑	↑		0
↑	↑	↑	100	↑	0	0	100	0	2ND	1.03±0.02
↑	↑	↑	↑	↑	60	↑	↑	↑		0.55±0.04
↑	↑	↑	↑	↑	75	↑	↑	↑		0.22±0.04
↑	↑	↑	↑	↑	100	↑	↑	↑		0
↑	↑	↑	100	↑	100	0	0	0	OD	1.03±0.02
↑	↑	↑	↑	↑	↑	↑	60	↑		0.52±0.04
↑	↑	↑	↑	↑	↑	↑	75	↑		0.21±0.04
↑	↑	↑	↑	↑	↑	↑	100	↑		0
↑	↑	↑	100	↑	100	0	0	0	UD	1.03±0.02
↑	↑	↑	↑	↑	↑	60	↑	↑		0.47±0.04
↑	↑	↑	↑	↑	↑	75	↑	↑		0.17±0.04
↑	↑	↑	↑	↑	↑	100	↑	↑		0
↑	↑	↑	100	↑	0	100	0	0	RED*	1.03±0.02
↑	↑	↑	↑	↑	↑	↑	↑	60		0.54±0.04
↑	↑	↑	↑	↑	↑	↑	↑	75		0.27±0.04
↑	↑	↑	↑	↑	↑	↑	↑	100		0
↑	↑	↑	100	↑	0	100	0	100	DIR*	0
↑	↑	↑	75	↑	↑	↑	↑	↑		0.27±0.04
↑	↑	↑	60	↑	↑	↑	↑	↑		0.54±0.04
↑	↑	↑	0	↑	↑	↑	↑	↑		1.03±0.02
R	↑	250mA	0	↑	100	100	100	0	LR	1.55±0.25

※ The values are subject to change according to vehicle model or condition.

EKBF107E

5. Is oil pressure value within specifications?

YES

▶ Repair AUTO TRANSAXLE(Clutch or Brake) as necessary and Go to "Verification of Vehicle Repair" procedure.

NO

▶ Replace AUTO TRANSAXLE (BODY CONTROL VALVE faulty) as necessary and Go to "Verification of Vehicle Repair " procedure.

VERIFICATION OF VEHICLE REPAIR E90D4F81

After a repair, it is essential to verify that the fault has been corrected.

1. Connect scantool and select "Diagnostic Trouble Codes(DTCs)" mode.
2. Using a scantool, Clear DTC.
3. Operate the vehicle within DTC Enable conditions in General information.
4. Are any DTCs present ?

YES

▶ Go to the applicable troubleshooting procedure.

NO

▶ System performing to specification at this time.

DTC P0732 GEAR 2 INCORRECT RATIO

COMPONENT LOCATION E0F5DE82

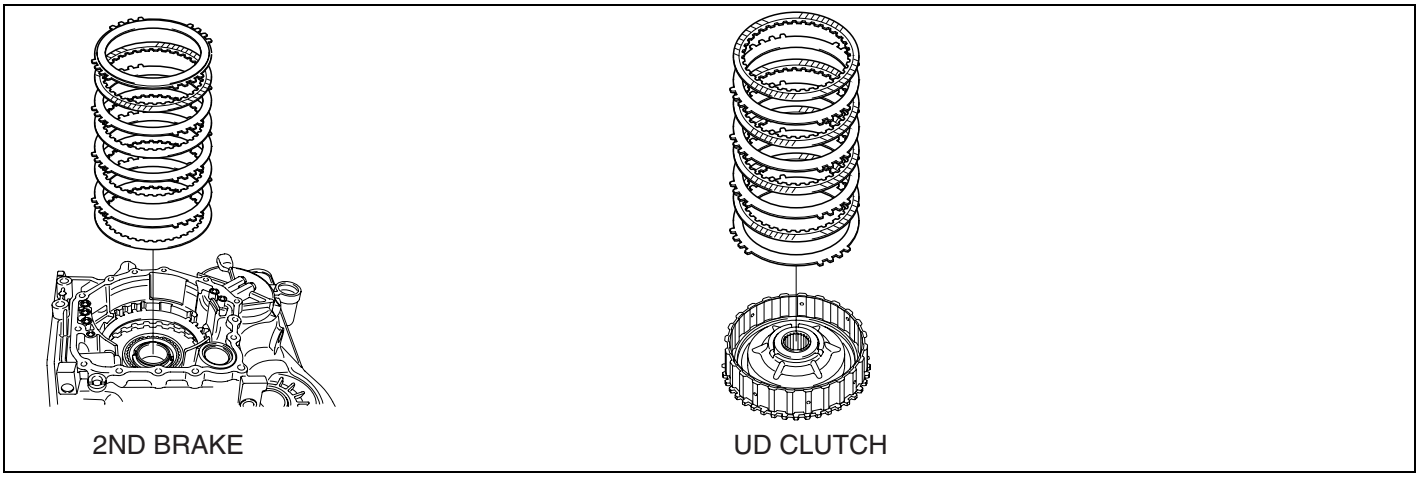

EKBF300B

GENERAL DESCRIPTION E0E24CF7

The value of the input shaft speed should be equal to the value of the output shaft speed, when multiplied by the 2nd gear ratio, while the transaxle is engaged in the 2nd gear. For example, if the output speed is 1000 rpm and the 2nd gear ratio is 2.442, then the input speed is 2,442 rpm.

DTC DESCRIPTION E79E971D

This code is set if the value of input shaft speed is not equal to the value of the output shaft, when multiplied by the 2nd gear ratio, while the transaxle is engaged in 2nd gear. This malfunction is mainly caused by mechanical troubles such as control valve sticking or solenoid valve malfunctioning rather than an electrical issue.

DTC DETECTING CONDITION E6FA6BCA

Item	Detecting Condition	Possible cause
DTC Strategy	• 2nd gear incorrect ratio	• Faulty Input speed sensor • Faulty output speed sensor • Faulty UD clutch or 2nd brake
Enable Conditions	• Engine speed > 450rpm • Output speed > 500rpm • After 2sec is passed from shift finish of shift to 2nd gear • Input speed > 0rpm • A/T oil temp > -23.5°C(-9.4°F) • Voltage of Battery > 10V • TRANSAXLE RANGE SWITCH is normal	
Threshold value	• | Input speed/2nd gear ratio - output speed | ≥ 200rpm	
Diagnostic Time	• more than 1sec	
Fail Safe	• Locked into 3 rd gear.(If diagnosis code P0732 is output four times, the transaxle is locked into 3rd gear)	

SIGNAL WAVEFORM E6EC8EC1

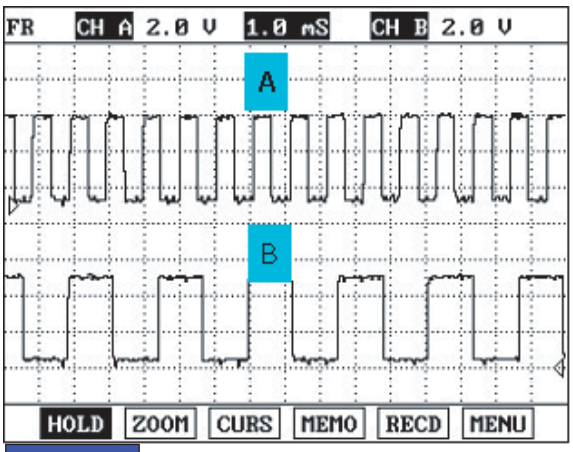

FIG.1)

A : INPUT SPEED SENSOR
B : OUTPUT SPEED SENSOR

EKBF108A

MONITOR SCANTOOL DATA E10BDE50

1. Connect scan tool to data link connector(DLC).
2. Engine "ON".
3. Monitor the "ENGINE SPEED, INPUT SPEED SENSOR, OUTPUT SPEED SENSOR, GEAR POSITION" parameter on the scan tool.
4. Perform the "STALL TEST" with gear position "2".

Specification : 2100~2800 engine rpm

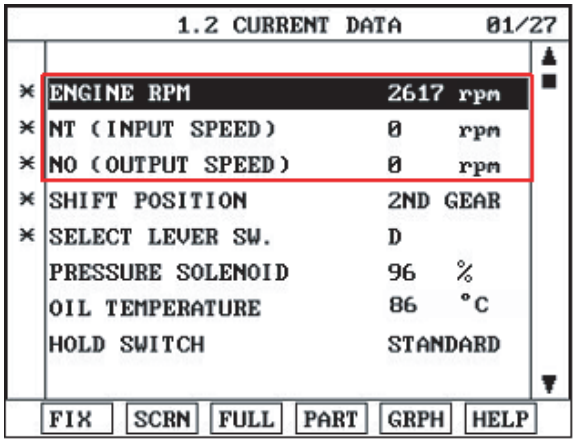

EKBF108B

OPERATING ELEMENT OF EACH SHIFTING RANGE

GEAR POSI-TION	ELEMENT								
	L/R BRAKE	2ND BRAKE	U/D CLUTCH	O/D CLUTCH	RED BRAKE	DIR CLUTCH	REV CLUTCH	OWC1	OWC2
1st	O		O		O			●	●
2nd		O	O		O				●
3rd			O	O	O				●
4th		O		O	O				●
5th		O		O		O			
REV	O				O		O		
N,P	O				O				

Low & Reverse Brake is released When the vehicle speed over the 5MPH(7km/h)

Stall test procedure in D2 and reason

Procedure

1. Warm up the engine.
2. After positioning the select lever in "D" or "ON" of the HOLD SW (Operate UP SHIFT in case of "SPORTS MODE"),depress the foot brake pedal fully after that, depress the accelerator pedal to the maximum.
   * The slippage of 2nd gear operating parts can be detected by stall test in D2.

Reason for stall test

1. If there is no mechanical defaults in A/T, all slippages occurrs in torque converter.
2. Therefore, engine revolution is output, but input and output speed revolution must be "zero" due to wheel's lock.
3. If 2nd brake system(2nd gear operating part) has faults, input speed revolution will be out of specification.
4. If output speed revolution is output. It means that the foot brake force is not applied fully. Remeasuring is required.

5. Is "STALL TEST " within specification?

YES

▶ Go to "Signal circuit inspection" procedure.

NO

▶ Go to "Component inspection" procedure.

CAUTION

1. ***Do not let anybody stand in front of or behind the vehicle while this test is being carried out.***
2. ***Check the A/T fluid level and temperature and the engine coolant temperature.***
   - ***Fluid level : At the hot mark on the oil level gauge.***
   - ***Fluid temperature : 176 °F~ 212 °F (80~100 °C).***
   - ***Engine coolant temperature : 176 °F~ 212 °F (80~100 °C).***
3. ***Chock both rear wheel(left and right).***
4. ***Pull the parking brake lever on with the brake pedal fully depressed.***
5. ***The throttle should not be left fully open for more than eight second.***
6. ***If stall test is being performed more than once, move the selector lever to 'N' and run the engine at 1000 RPM to allow the transaxle fluid to cool prior to subsequent tests.***

SIGNAL CIRCUIT INSPECTION E4CCFA74

1. Connect Scantool.
2. Engine "ON".
3. Monitor the "INPUT & OUTPUT SPEED SENSOR" parameter on the scantool.
4. Accelerate the Engine speed until about 2000 rpm in the 2nd gear.

Specification : INPUT SPEED - (OUTPUT SPEED × GEAR RATIO) ≤ 200 RPM

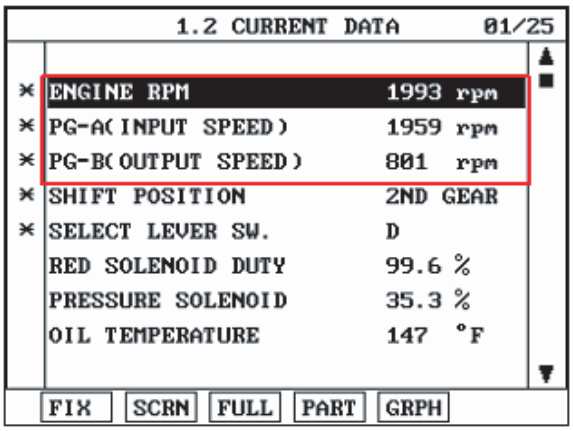

LKKG108E

5. Does "INPUT & OUTPUT SPEED SENSOR" within specifications?

YES

▶ Go to "Component Inspection" procedure.

NO

▶ Check for electrical noise of circuit in INPUT & OUTPUT SPEED SENSOR or Replace INPUT & OUTPUT SPEED SENSOR. Repair as necessary and Go to "Verification of Vehicle Repair" procedure.

COMPONENT INSPECTION E682A591

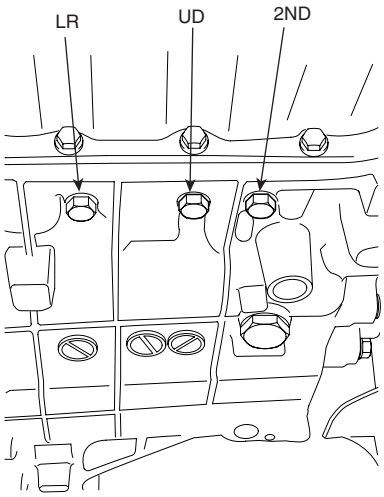

EKBF108D

1. Connect oil pressure gauge to "UD" and "2ND" and "RED" port.
2. Engine "ON".
3. Drive a car with gear position 2 in "SPORTS MODE".
4. Compare it with reference data as below.

Specification : Refer to DTC P0731

5. Is oil pressure value within specifications?

YES

▶ Repair AUTO TRANSAXLE(Clutch or Brake) as necessary and Go to "Verification of Vehicle Repair" procedure.

NO

▶ Replace AUTO TRANSAXLE (BODY CONTROL VALVE faulty) as necessary and Go to "Verification of Vehicle Repair " procedure.

VERIFICATION OF VEHICLE REPAIR E3F6C260

Refer to DTC P0731.

DTC P0733 GEAR 3 INCORRECT RATIO

COMPONENT LOCATION E82A95B5

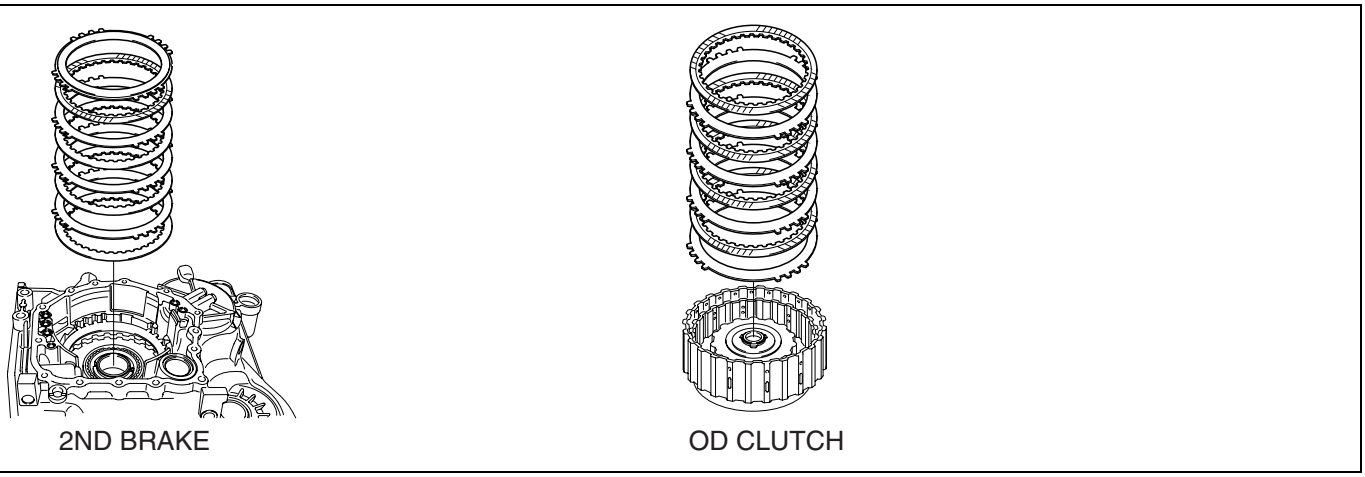

EKBF300E

GENERAL DESCRIPTION E2F0A586

The value of the input shaft speed should be equal to the value of the output shaft speed, when multiplied by the 3rd gear ratio, while the transaxle is engaged in the 3rd gear. For example, if the output speed is 1,000 rpm and the 3rd gear ratio is 1.686, then the input speed is 1,686 rpm.

DTC DESCRIPTION E6DFDA57

This code is set if the value of input shaft speed is not equal to the value of the output shaft, when multiplied by the 3rd gear ratio, while the transaxle is engaged in 3rd gear. This malfunction is mainly caused by mechanical troubles such as control valve sticking or solenoid valve malfunctioning rather than an electrical issue.

DTC DETECTING CONDITION E0EAA5E4

Item	Detecting Condition	Possible cause
DTC Strategy	• 3rd gear incorrect ratio	• Faulty Input speed sensor • Faulty output speed sensor • Faulty UD clutch or OD clutch
Enable Conditions	• Engine speed > 450rpm • Output speed > 900rpm • After 2 sec is passed from shift finish of shift to 3rd gear • Input speed > 0rpm • A/T oil temp > -23.5°C(-9.4°F) • Voltage of Battery > 10V • TRANSAXLE RANGE SWITCH is normal	
Threshold value	• | Input speed/3rd gear ratio - output speed | ≥ 200rpm	
Diagnostic Time	• more than 1sec	
Fail Safe	• Locked into 3 rd gear.(If diagnosis code P0733 is output four times, the transaxle is locked into 3rd gear)	

SIGNAL WAVEFORM EBA5589F

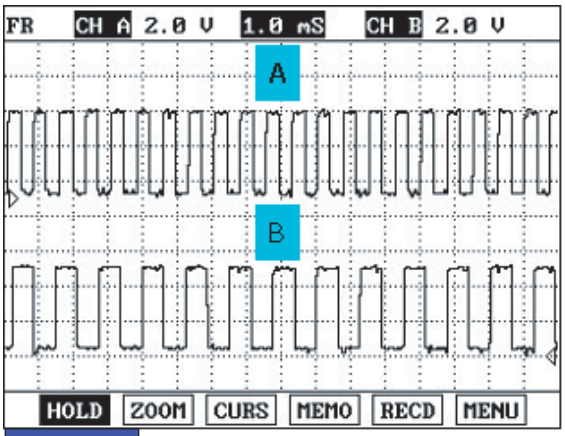

FIG.1)

A : INPUT SPEED SENSOR
B : OUTPUT SPEED SENSOR

EKBF109A

MONITOR SCANTOOL DATA E7787F30

1. Connect scan tool to data link connector(DLC).
2. Engine "ON".
3. Monitor the "ENGINE SPEED, INPUT SPEED SENSOR, OUTPUT SPEED SENSOR, GEAR POSITION" parameter on the scan tool.
4. Disconnect the solenoid valve connector and perform the "STALL TEST".

Specification : 2100~2800 engine rpm

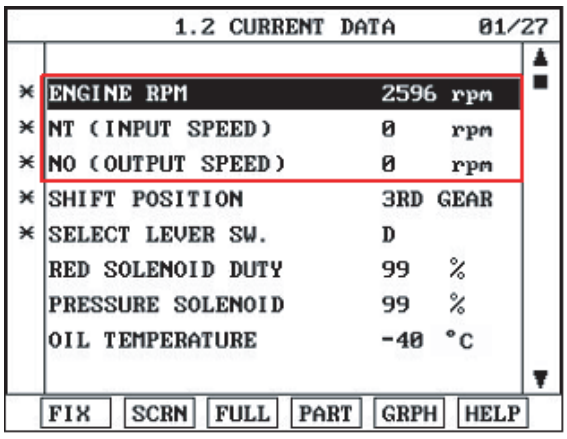

EKBF109B

OPERATING ELEMENT OF EACH SHIFTING RANGE

GEAR POSI-TION	ELEMENT								
	L/R BRAKE	2ND BRAKE	U/D CLUTCH	O/D CLUTCH	RED BRAKE	DIR CLUTCH	REV CLUTCH	OWC1	OWC2
1st	O		O		O			●	●
2nd		O	O		O				●
3rd			O	O	O				●
4th		O		O	O				●
5th		O		O		O			
REV	O				O		O		
N,P	O				O				

Low & Reverse Brake is released When the vehicle speed over the 5MPH(7km/h)

Stall test procedure in D3 and reason

Procedure

1. Warm up the engine.
2. After making 3rd gear hold by disconnecting the solenoid connector, and Then depress the foot brake pedal fully After that, step on the accelerator pedal to the maximum.
   * The slippage of 3rd gear operating parts can be detected by stall test in D3.

Reason for stall test

1. If there is no mechanical defaults in A/T, all slippages occurrs in torque converter.
2. Therefore, engine revolution is output, but input and output speed revolution must be "zero" due to wheel's lock.
3. If OD clutch system(3rd gear operating part) has faults, input speed revolution will be out of specification.
4. If output speed revolution is output. It means that the foot brake force is not applied fully. Remeasuring is required.

5. Is "STALL TEST " within specification?

YES

▶ Go to "Signal circuit inspection" procedure.

NO

▶ Go to "Component inspection" procedure.

CAUTION

1. Do not let anybody stand in front of or behind the vehicle while this test is being carried out.
2. Check the A/T fluid level and temperature and the engine coolant temperature.
- ***Fluid level : At the hot mark on the oil level gauge.***
- ***Fluid temperature : 176 °F~ 212 °F (80~100 °C).***
- ***Engine coolant temperature : 176 °F~ 212 °F (80~100 °C).***

3. Chock both rear wheel(left and right).
4. Pull the parking brake lever on with the brake pedal fully depressed.
5. The throttle should not be left fully open for more than eight second.
6. If stall test is being performed more than once, move the selector lever to 'N' and run the engine at 1000 RPM to allow the transaxle fluid to cool prior to subsequent tests.

SIGNAL CIRCUIT INSPECTION E88593BD

1. Connect Scantool.
2. Engine "ON".
3. Monitor the "INPUT & OUTPUT SPEED SENSOR" parameter on the scantool.
4. Accelerate the Engine speed until about 2000 rpm in the 3rd gear.

Specification : INPUT SPEED - (OUTPUT SPEED × GEAR RATIO) ≤ 200 RPM

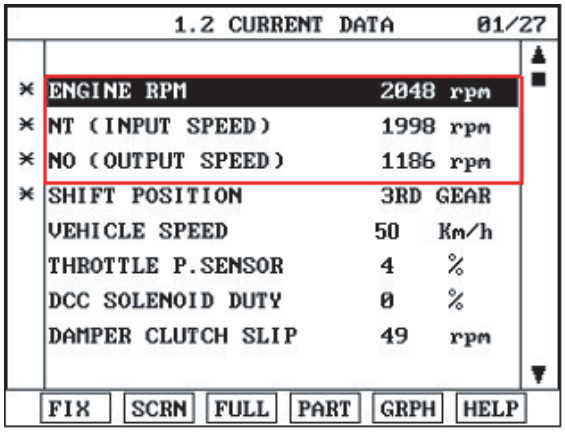

EKBF109C

5. Is "INPUT & OUTPUT SPEED SENSOR" within specifications?

YES

▶ Go to "Component Inspection" procedure.

NO

▶ Check for electrical noise of circuit in INPUT & OUTPUT SPEED SENSOR or Replace INPUT & OUTPUT SPEED SENSOR. Repair as necessary and Go to "Verification of Vehicle Repair" procedure .

COMPONENT INSPECTION EBA7A39D

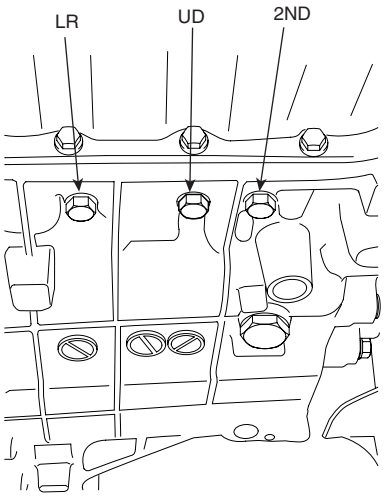

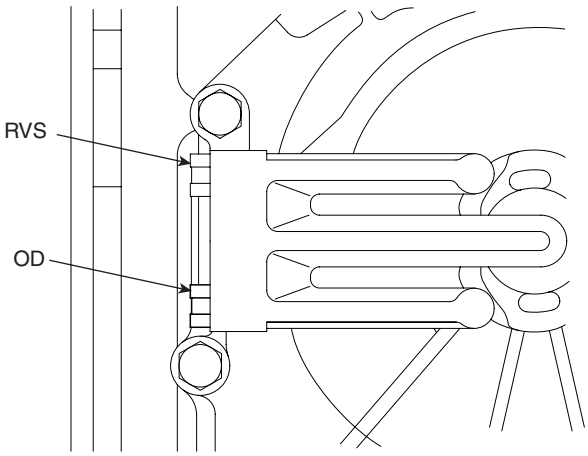

EKBF109D

1. Connect oil pressure gauge to "UD" and "OD" and "RED" port.
2. Engine "ON".
3. Drive a car with gear position 3 in "SPORTS MODE".
4. Compare it with reference data as below.

Specification : Refer to DTC P0731

5. Is oil pressure value within specifications?

YES

▶ Repair AUTO TRANSAXLE(Clutch or Brake) as necessary and Go to "Verification of Vehicle Repair" procedure.

NO

▶ Replace AUTO TRANSAXLE (BODY CONTROL VALVE faulty) as necessary and Go to "Verification of Vehicle Repair" procedure.

VERIFICATION OF VEHICLE REPAIR E30B2DBE

Refer to DTC P0731.

DTC P0734 GEAR 4 INCORRECT RATIO

COMPONENT LOCATION E32F0641

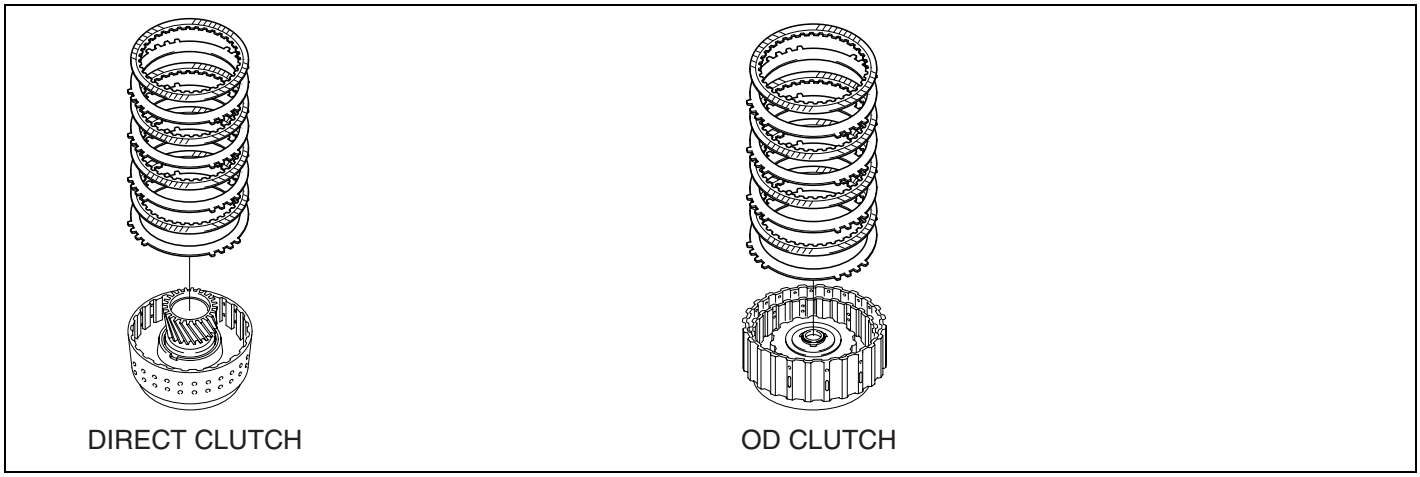

EKBF300D

GENERAL DESCRIPTION ECF8BAB8

The value of the input shaft speed should be equal to the value of the output shaft speed, when multiplied by the 4th gear ratio, while the transaxle is engaged in the 4th gear. For example, if the output speed is 1,000 rpm and the 4th gear ratio is 1.233, then the input speed is 1,233 rpm.

DTC DESCRIPTION E1BE8B16

This code is set if the value of input shaft speed is not equal to the value of the output shaft, when multiplied by the 4th gear ratio, while the transaxle is engaged in 4th gear. This malfunction is mainly caused by mechanical troubles such as control valve sticking or solenoid valve malfunctioning rather than an electrical issue.

DTC DETECTING CONDITION EDC1DA1C

Item	Detecting Condition	Possible cause
DTC Strategy	• 4th gear incorrect ratio	• Faulty Input speed sensor • Faulty output speed sensor • Faulty UD clutch or 2nd brake
Enable Conditions	• Engine speed > 450rpm • Output speed > 900rpm • After 2 sec is passed from shift finish of shift to 4th gear • Input speed > 0rpm • A/T oil temp sensor voltage < 4.5V • Voltage of Battery > 10V • TRANSAXLE RANGE SWITCH is normal	
Threshold value	• | Input speed/4th gear ratio - output speed | ≥ 200rpm	
Diagnostic Time	• More than 1sec	
Fail Safe	• Locked into 3 rd gear.(If diagnosis code P0734 is output four times, the transaxle is locked into 3rd gear)	

SIGNAL WAVEFORM E1A2A310

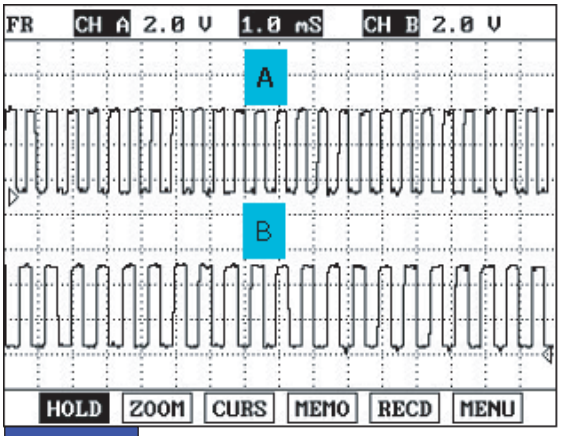

FIG.1)

A : INPUT SPEED SENSOR
B : OUTPUT SPEED SENSOR

EKBF110A

MONITOR SCANTOOL DATA E3711A1E

※ Go to "Signal circuit Inspection" procedure.

OPERATING ELEMENT OF EACH SHIFTING RANGE

GEAR POSI-TION	ELEMENT								
	L/R BRAKE	2ND BRAKE	U/D CLUTCH	O/D CLUTCH	RED BRAKE	DIR CLUTCH	REV CLUTCH	OWC1	OWC2
1st	O		O		O			●	●
2nd		O	O		O				●
3rd			O	O	O				●
4th		O		O	O				●
5th		O		O		O			
REV	O				O		O		
N,P	O				O				

Low & Reverse Brake is released When the vehicle speed over the 5MPH(7km/h)

SIGNAL CIRCUIT INSPECTION E90DE02D

1. Connect Scantool.
2. Engine "ON".
3. Monitor the "INPUT & OUTPUT SPEED SENSOR" parameter on the scantool.
4. Accelerate the Engine speed until about 2000 rpm in the 4th gear.

Specification : INPUT SPEED - (OUTPUT SPEED × GEAR RATIO) ≤ 200 RPM

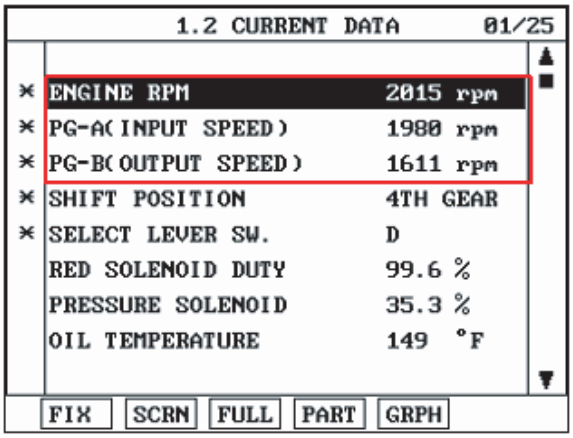

LKKG110D

5. Is "INPUT & OUTPUT SPEED SENSOR" within specifications?

YES

▶ Go to "Component Inspection" procedure.

NO

▶ Check for electrical noise of circuit in INPUT & OUTPUT SPEED SENSOR or Replace INPUT & OUTPUT SPEED SENSOR. Repair as necessary and Go to "Verification of Vehicle Repair" procedure.

COMPONENT INSPECTION EF8ABA6E

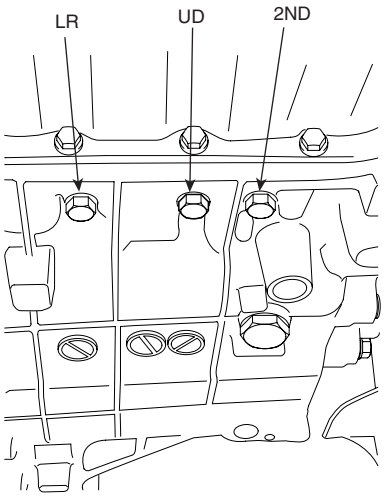

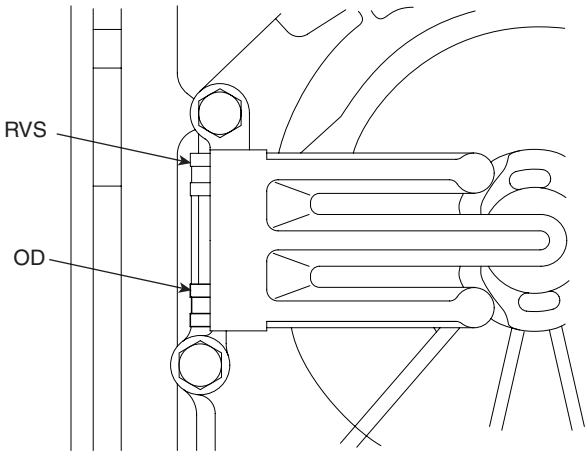

EKBF110C

1. Connect oil pressure gauge to "2ND" and "OD" and "RED" port.
2. Engine "ON".
3. Drive a car with gear position 4 in "SPORTS MODE".
4. Compare it with reference data as below.

Specification : Refer to DTC P0731

5. Is oil pressure value within specifications?

YES

▶ Repair AUTO TRANSAXLE(Clutch or Brake) as necessary and Go to "Verification of Vehicle Repair" procedure.

NO

▶ Replace AUTO TRANSAXLE (BODY CONTROL VALVE faulty) as necessary and Go to "Verification of Vehicle Repair" procedure.

VERIFICATION OF VEHICLE REPAIR E4FEA9B6

Refer to DTC P0731.

DTC P0735 GEAR 5 INCORRECT RATIO

COMPONENT LOCATION E7F59CA4

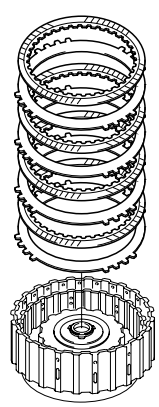

OD CLUTCH

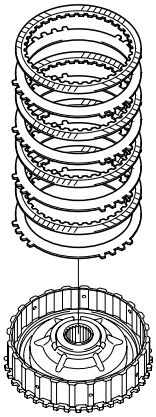

UD CLUTCH

EKBF300C

GENERAL DESCRIPTION E2F16E1A

The value of the input shaft speed should be equal to the value of the output shaft speed, when multiplied by the 5th gear ratio, while the transaxle is engaged in the 5th gear. For example, if the output speed is 1,000 rpm and the 5th gear ratio is 0.868, then the input speed is 868 rpm.

DTC DESCRIPTION E0A9DE14

This code is set if the value of input shaft speed is not equal to the value of the output shaft, when multiplied by the 5th gear ratio, while the transaxle is engaged in 5th gear. This malfunction is mainly caused by mechanical troubles such as control valve sticking or solenoid valve malfunctioning rather than an electrical issue.

DTC DETECTING CONDITION E705144B

Item	Detecting Condition	Possible cause
DTC Strategy	• 5th gear incorrect ratio	• Faulty Input speed sensor • Faulty output speed sensor • Faulty UD clutch or 2nd brake
Enable Conditions	• Engine speed > 450rpm • Output speed > 900rpm • After 2 sec is passed from shift finish of shift to 5th gear • Input speed > 0rpm • A/T oil temp sensor voltage < 4.5V • Voltage of Battery > 10V • TRANSAXLE RANGE SWITCH is normal	
Threshold value	• | Input speed/5th gear ratio - output speed | ≥ 200rpm	
Diagnostic Time	• More than 1sec	
Fail Safe	• Locked into 3 rd gear.(If diagnosis code 0735 is output four times, the transaxle is locked into 3rd gear)	

SIGNAL WAVEFORM EE9B7FFF

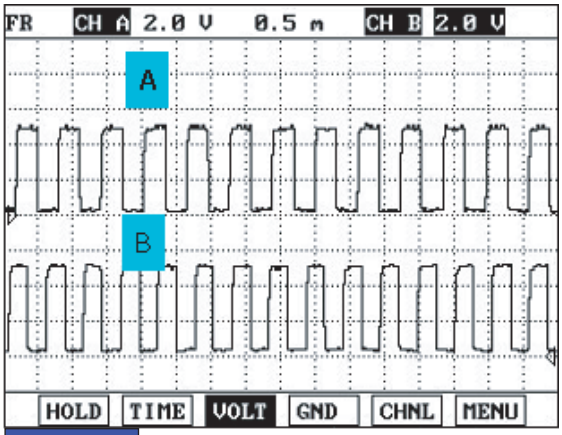

FIG.1)

A : INPUT SPEED SENSOR
B : OUTPUT SPEED SENSOR

EKBF111A

MONITOR SCANTOOL DATA E4E5CFF7

※ Go to "Signal circuit Inspection" procedure

OPERATING ELEMENT OF EACH SHIFTING RANGE

GEAR POSI-TION	ELEMENT								
	L/R BRAKE	2ND BRAKE	U/D CLUTCH	O/D CLUTCH	RED BRAKE	DIR CLUTCH	REV CLUTCH	OWC1	OWC2
1st	O		O		O			●	●
2nd		O	O		O				●
3rd			O	O	O				●
4th		O		O	O				●
5th		O		O		O			
REV	O				O		O		
N,P	O				O				

Low & Reverse Brake is released When the vehicle speed over the 5MPH(7km/h)

SIGNAL CIRCUIT INSPECTION E96CF16A

1. Connect Scan tool.
2. Engine "ON".
3. Monitor the "INPUT & OUTPUT SPEED SENSOR" parameter on the scan tool.
4. Accelerate the Engine speed until about 2000 rpm in the 5th gear.

Specification : INPUT SPEED - (OUTPUT SPEED × GEAR RATIO) ≤ 200 RPM

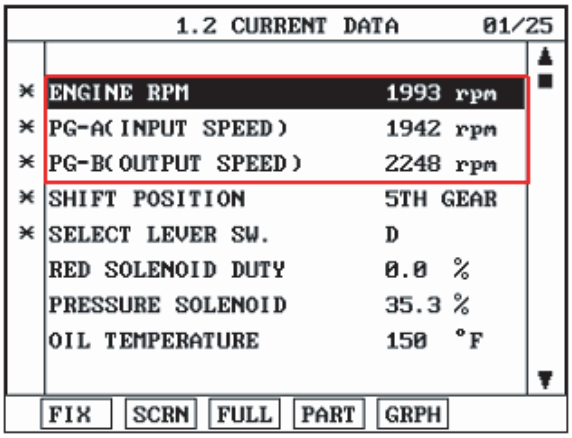

LKKG111D

5. Does "INPUT & OUTPUT SPEED SENSOR" follow the reference data?

YES

▶ Go to "Component Inspection" procedure.

NO

▶ Check for electrical noise of circuit in INPUT & OUTPUT SPEED SENSOR or Replace INPUT & OUTPUT SPEED SENSOR. Repair as necessary and Go to "Verification of Vehicle Repair" procedure.

COMPONENT INSPECTION E4A28F94

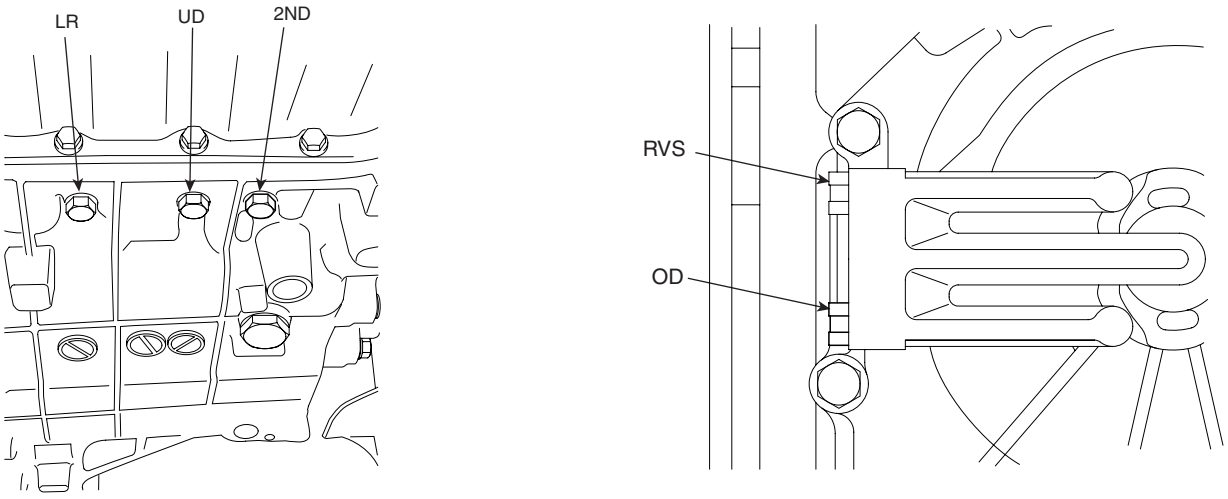

EKBF111C

1. Connect oil pressure gauge to "OD" and "2nd" and "DIR" port.
2. Engine "ON".
3. Drive a car with gear position "5".
4. Compare it with reference data as below.

Specification : Refer to DTC P0731

5. Is oil pressure value within specification?

YES

▶ Repair AUTO TRANSAXLE(Clutch or Brake) as necessary and Go to "Verification of Vehicle Repair" procedure.

NO

▶ Replace AUTO TRANSAXLE (BODY CONTROL VALVE faulty) as necessary and Go to "Verification of Vehicle Repair" procedure.

VERIFICATION OF VEHICLE REPAIR E06AE1A6

Refer to DTC P0731.

DTC P0741 TORQUE CONVERTER CLUTCH CIRCUIT - STUCK OFF

GENERAL DESCRIPTION E07758A2

The PCM/TCM controls the locking and unlocking of the Torque Converter Clutch (or Damper Clutch), to the input shaft of the transmission, by appling hydraulic pressure. The main purpose of T/C clutch control is to save fuel by decreasing the hydraulic load inside the T/C. The PCM/TCM outputs duty pulses to control the Damper Clutch Control Solenoid Valve(DCCSV) and hydraulic pressure is applied to the DC according to the DCC duty ratio value. When the duty ratio is high, high pressure is applied and the Damper Clutch is locked. The normal operating range of the Damper Clutch Control duty ratio value is from 30%(unlocked) to 85%(locked).

DTC DESCRIPTION EAAEC30F

The PCM/TCM increases the duty ratio to engage the Damper Clutch by monitoring slip rpms (difference vlaue beteween engine speed and turbine speed). To decrease the slip of the Damper Clutch, the PCM/TCM increases the duty ratio by appling more hyraulic pressure. When slip rpm does not drop with 100% duty ratio, the PCM/TCM determines that the Torque Converter Clutch is stuck OFF and sets this code.

DTC DETECTING CONDITION E5D59CBB

Item	Detecting Condition	Possible cause
DTC Strategy	• Stuck "OFF"	※ TORQUE CONVERTER(DAMPER) CLUTCH : TCC • Faulty TCC or oil pressure system • Faulty TCC solenoid valve • Faulty body control valve • Faulty PCM/TCM
Enable Conditions	• DCC Solenoid valve is being controled • DCC Solenoid valve duty rate is 100% • Not FailSafe Status • IG "ON"	
Threshold value	• Detected abnormal slip	
Diagnostic Time	• more than 4sec	
Fail Safe	• Damper clutch abnormal system (If diagnosis code P0741 is output four times, TORQUE CONVERTER(DAMPER) CLUTCH is not controlled by PCM/TCM)	

MONITOR SCANTOOL DATA E19AD886

1. Connect scantool to data link connector(DLC).
2. Engine "ON".
3. Select "D RANGE" and drive vehicle.
4. Monitor the "TORQUE CONVERTER(DAMPER) CLUTCH" parameter on the scantool.

Specification : TCC SLIP < 160RPM(In condition that TCC SOL. DUTY > 80%)

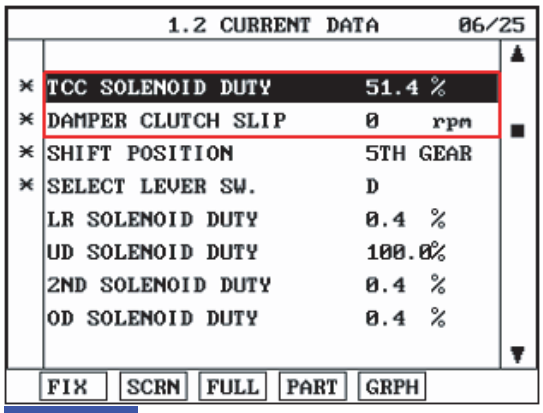

FIG.1)

FIG.1) : Normal status

SCMAT6352L

5. Are "TCC SOLENOID DUTY and TCC SLIP" within specifications?

YES

▶ Fault is intermittent caused by poor contact in the sensor's and/or TCM(PCM)'s connector or was repaired and TCM(PCM) memory was not cleared. Thoroughly check connectors for looseness, poor connection, bending, corrosion, contamination, deterioration or damage. Repair or replace as necessary and go to "Verification of vehicle repair" procedure.

NO

▶ Go to "Component inspection" procedure.

COMPONENT INSPECTION E6C4F1B9

1. CHECK TORQUE CONVERTER CLUTCH SOLENOID VALVE

   1) Connect scantool to data link connector(DLC).

   2) Ignition "ON" & Engine "OFF".

   3) Select A/T solenoid valve actuator test and operate actuator test.

   4) Can you hear operating tone for using TCC SOLENOID VALVE actuator testing function?

   YES

   ▶ Go to "CHECK OIL PRESSURE" as below.

   NO

   ▶ Replace "TCC SOLENOID VALVE" as necessary and go to "Verification of vehicle repair" procedure.

2. CHECK OIL PRESSURE

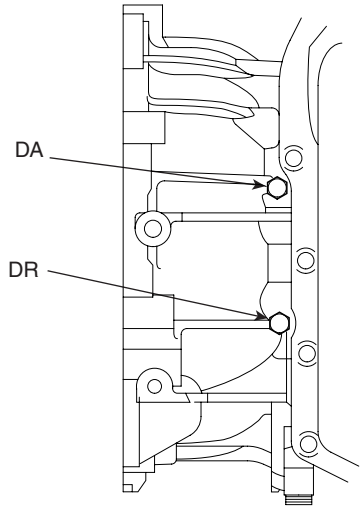

KKCF212B

   1) Connect oil pressure gauge to "DA" ports.

   2) Engine "ON".

   3) After connecting Scantool and monitor the "TCC SOLENIOD VALVE DUTY" parameter on the scantool data list.

   4) Operate vehicle with 3rd or 4th gear and operate the "TCC SOLENIOD VALVE DUTY" more than 85%.

Specification :
Oil pressure gauge approx 735.4960KPa(7.5kg/㎠)-(In condition that TCC SOL. DUTY > 85%)

5) Is oil pressure value within specification?

YES

▶ Repair TORQUE CONVERTER CLUTCH(REPLACE Torque Converter) as necessary and go to "Verification of vehicle repair" procedure.

NO

▶ Replace A/T assembly (or valve body assembly) as necessary and go to "Verification of vehicle repair" procedure.

VERIFICATION OF VEHICLE REPAIR EAFEDF81

After a repair, it is essential to verify that the fault has been corrected.

1. Connect scantool and select "Diagnostic Trouble Codes(DTCs)" mode.
2. Using a scantool, Clear DTC.
3. Operate the vehicle within DTC Enable conditions in General information.
4. Are any DTCs present ?

YES

▶ Go to the applicable troubleshooting procedure.

NO

▶ System performing to specification at this time.

DTC P0743 TORQUE CONVERTER CLUTCH CIRCUIT - ELECTRICAL

COMPONENT LOCATION EEF13DF1

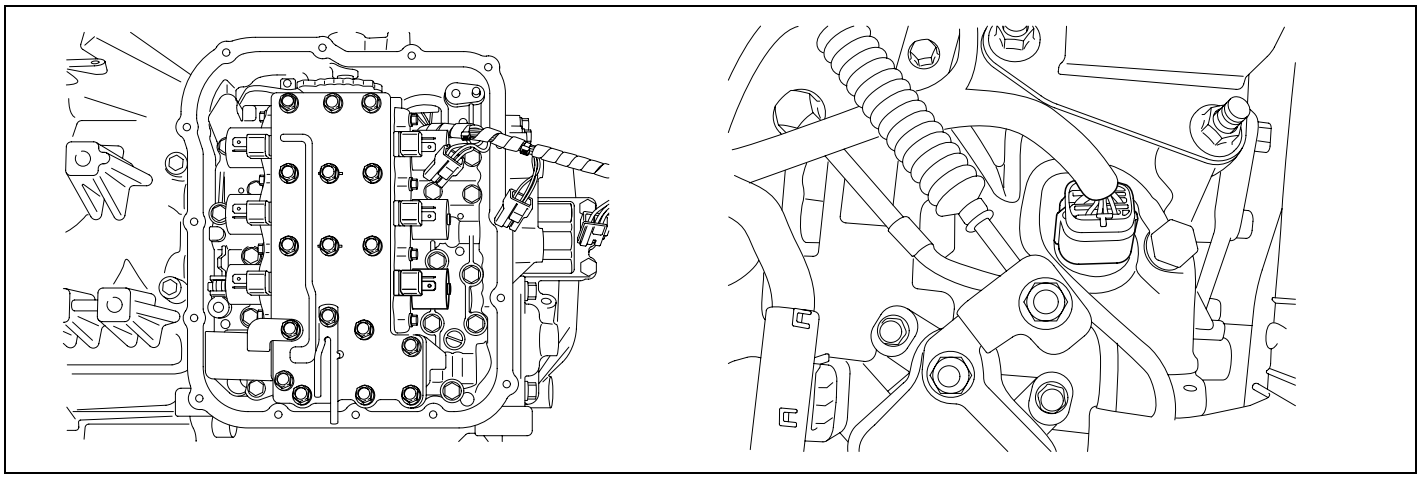

AKKF116A

GENERAL DESCRIPTION E5CEBC87

The PCM/TCM controls the locking and unlocking of the Torque Converter Clutch (or Damper Clutch), to the input shaft of the transmission, by appling hydraulic pressure. The main purpose of T/C clutch control is to save fuel by decreasing the hydraulic load inside the T/C. The PCM/TCM outputs duty pulses to control the Damper Clutch Control Solenoid Valve(DCCSV) and hydraulic pressure is applied to the DC according to the DCC duty ratio value. When the duty ratio is high, high pressure is applied and the Damper Clutch is locked. The normal operating range of the Damper Clutch Control duty ratio value is from 30%(unlocked) to 85%(locked).

DTC DESCRIPTION E7853B62

The PCM/TCM checks the Damper Clutch Control Signal by monitoring the feedback signal from the solenoid valve drive circuit. If an unexpected signal is monitored (for example, high voltage is detected when low voltage is expected, or low voltage is detected when high voltage is expected) the PCM/TCM judges that DCCSV circuit is malfunctioning and sets this code.

DTC DETECTING CONDITION E2767337

Item	Detecting Condition	Possible cause
DTC Strategy	• Stuck "ON"	※ TORQUE CONVERTER(DAMPER) CLUTCH : TCC • Faulty TCC or oil pressure system • Faulty TCC solenoid valve • Faulty body control valve • Faulty TCM(PCM)
Enable Conditions	• DCC Solenoid valve is being controlled • Voltage of AT relay ≥ 10V • Not Fail Safe Status • IG "ON"	
Threshold value	• DCC Solenoid valve status "OPEN" or "GROUND SHORT"	
Diagnostic Time	• more than 320msec	
Fail Safe	• Locked in 3 rd gear.(Control relay off)	

SPECIFICATION EDB8AE29

Solenoid Valve for Pressure Control

- Sensor type : Normal open 3-way
- Operating temperature : -22~266°F(-30°C～130°C)
- Frequency :
  - LR, 2ND, UD, OD, RED : 61.27Hz (at the ATF temp. -20°C above)
  - DCC : 30.64Hz
  - VFS : 600 ± 20Hz

- Internal resistance :
  - 2.7~3.4Ω (68°F or 20°C) - LR, 2ND, UD, OD, RED, DCC
  - 4.35±0.35Ω (68°F or 20°C) - VFS

- Surge voltage : 56 V(except VFS)

SIGNAL WAVEFORM EDC0EEC0

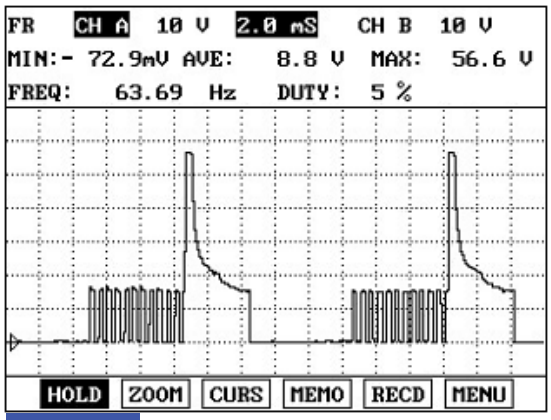

FIG.1)

FIG.1) : Operating of "DCCSV"

EKBF115A

MONITOR SCANTOOL DATA EF966DFD

1. Connect scantool to data link connector(DLC)
2. Engine "ON".
3. Monitor the "TCC SOL. VALVE" parameter on the scantool
4. Select "D RANGE" and Operate "TCC SOLENOID DUTY" more than 40%.

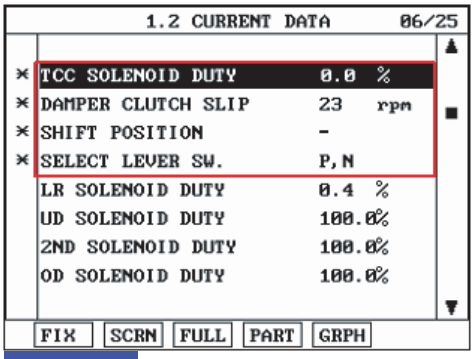

FIG.1)

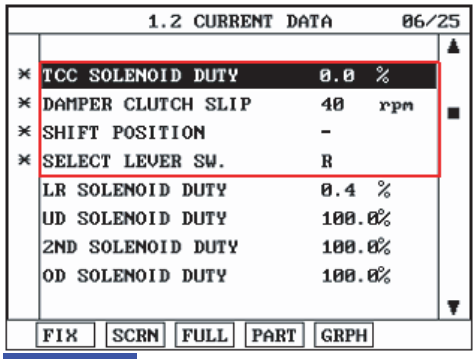

FIG.2)

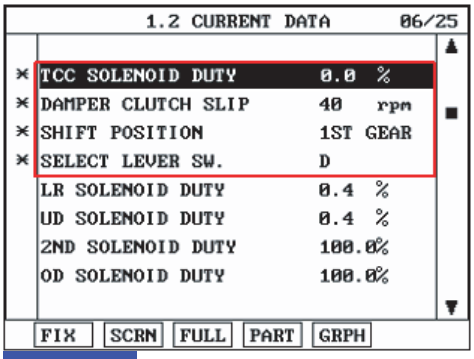

FIG.3)

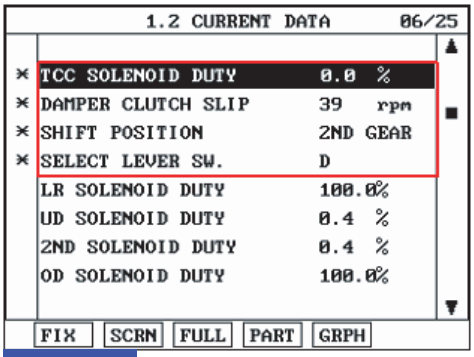

FIG.4)

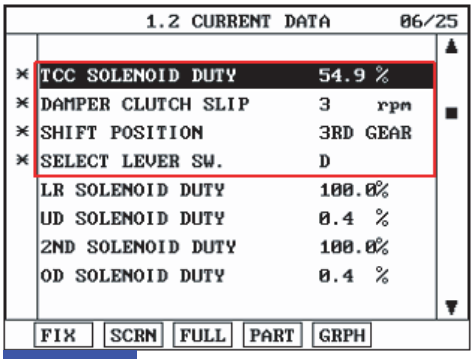

FIG.5)

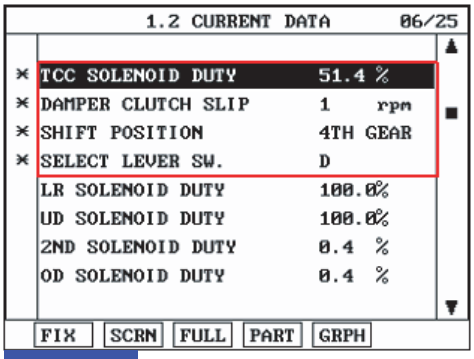

FIG.6)

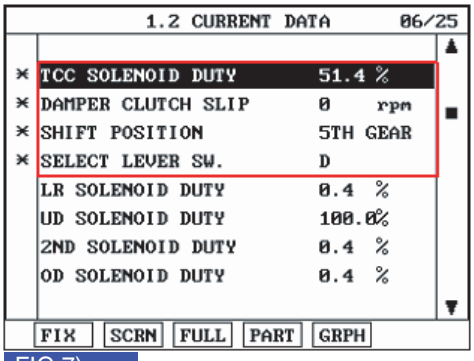

FIG.7)

FIG. 1) P,N
FIG. 2) "R"
FIG. 3) "D 1st" gear
FIG. 4) "2nd" gear
FIG. 5) "3rd" gear
FIG. 6) "4th" gear
FIG. 7) "5th" gear

LKKG209B

5. Does "TCC SOLENOID DUTY " follow the reference data?

YES

▶ Fault is intermittent caused by poor contact in the sensor's and/or TCM(PCM)'s connector or was repaired and TCM(PCM) memory was not cleared. Thoroughly check connectors for looseness, poor connection, bending, corrosion, contamination, deterioration or damage. Repair or replace as necessary and go to "Verification of vehicle repair" procedure.

NO

▶ Go to "Terminal & connector inspection " procedure.

TERMINAL & CONNECTOR INSPECTION E1343488

1. Many malfunctions in the electrical system are caused by poor harness and terminal condition. Faults can also be caused by interference from other electrical systems, and mechanical or chemical damage.
2. Thoroughly check connectors for looseness, poor connection, bending, corrosion, contamination, deterioration, or damage.
3. Has a problem been found?

YES

▶ Repair as necessary and then go to "Verification of vehicle repair" procedure.

NO

▶ Go to "Power supply circuit inspection" procedure.

POWER SUPPLY CIRCUIT INSPECTION E0470472

1. Disconnect "A/T SOLENOID VALVE" connector.
2. Measure voltage between terminal "6" of the sensor harness connector and chassis ground.
3. Engine OFF → ON.

Specification: 12V is measured only for approx. 0.5sec

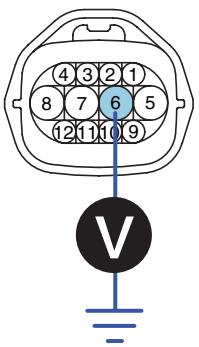

3. UD solenoid valve
4. 2ND solenoid valve
5. A/T battery
6. **A/T battery**
7. VF solenoid valve(-)
8. VF solenoid valve(+)
9. DCC solenoid valve
10. RED solenoid valve
11. LR solenoid valve
12. OD solenoide valve

SCMAT6361L

4. Is voltage within specifications?

YES

▶ Go to "Signal circuit inspection" procedure.

NO

▶ Check that A/T-20A fuse in engine room junction is installed or not blown.
▶ Check for open in harness. Repair as necessary and go to "Verification of vehicle repair" procedure.

SIGNAL CIRCUIT INSPECTION E958FA8D

1. Check signal circuit open inspection.

1) Ignition "OFF".

2) Disconnect "A/T SOLENOID VALVE" connector and "PCM/TCM" connector.
Measure resistance between terminal "9" of the ATM SOLENOID VALVE harness connector and terminal "15" of the TCM harness connector.

Specification: approx. 0 Ω

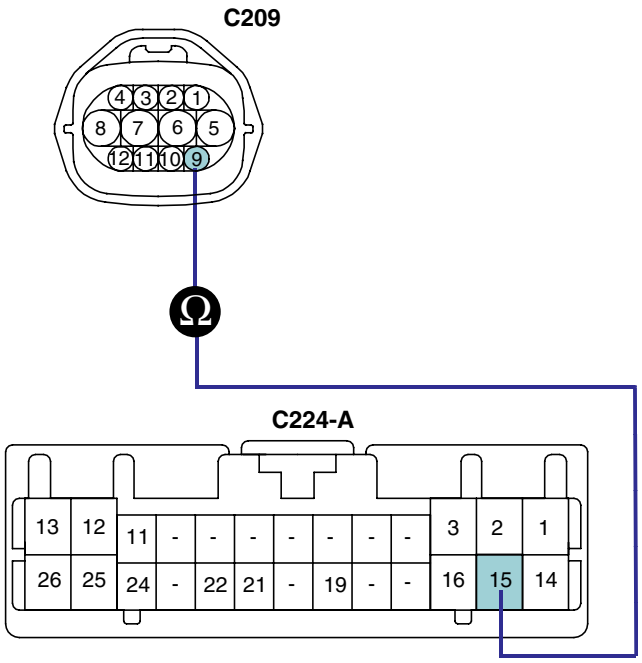

3. UD solenoid valve
4. 2ND solenoid valve
5. A/T battery
6. A/T battery
7. VF solenoid valve(+)
8. VF solenoid valve(-)
9. DCC solenoid valve
10. RED solenoid valve
11. LR solenoid valve
12. OD solenoid valve

01. UD solenoid valve control
14. OD solenoid valve control
15. DCC solenoid valve control
16. 2ND solenoid valve control
22. VF solenoid valve(-)

SCMAT6362L

3) Is resistance within specifications?

YES

▶ Go to "Check signal circuit short inspection" procedure.

NO

▶ Check for open in harness. Repair as necessary and go to "Verification of vehicle repair" procedure.

2. Check signal circuit short inspection

1) Ignition "OFF".

2) Disconnect "A/T SOLENOID VALVE" connector and "PCM/TCM" connector.

3) Measure resistance between terminal "9" of the ATM SOLENOID VALVE harness and chassis ground.

Specification: Infinite

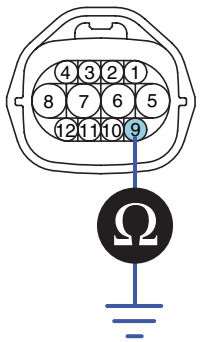

3. UD solenoid valve
4. 2ND solenoid valve
5. A/T battery
6. A/T battery
7. VF solenoid valve(+)
8. VF solenoid valve(-)
9. DCC solenoid valve
10.RED solenoid valve
11. LR solenoid valve
12. OD solenoide valve

SCMAT6363L

4) Is resistance within specifications?

YES

▶ Go to "Component inspection" procedure.

NO

▶ Check for short to ground in harness. Repair as necessary and go to "Verification of vehicle repair" procedure.

COMPONENT INSPECTION E8A46886

1. CHECK SOLENOID VALVE

1) Ignition "OFF".

2) Disconnect "A/T SOLENOID VALVE" connector.

3) Measure resistance between terminal "6" and terminal "9" of the ATM SOLENOID VALVE harness connector.

Specification: Approximately 2.7~3.4 Ω [20°C(68°F)]

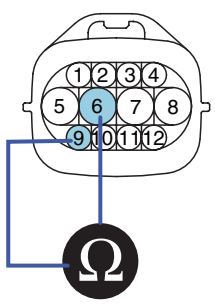

3. UD solenoid valve
4. 2ND solenoid valve
5. A/T battery
6. A/T battery
7. VF solenoid valve(-)
8. VF solenoid valve(+)
9. DCC solenoid valve
10.RED solenoid valve
11. LR solenoid valve
12. OD solenoide valve

SCMAT6364L

4) Is resistance within specification?

YES

▶ Go to "CHECK PCM/TCM" as below.

NO

▶ Replace TCC SOLENOID VALVE as necessary and go to "Verification of vehicle repair" procedure.

2. CHECK PCM/TCM

1) Connect scantool to data link connector(DLC).

2) Ignition "ON" & Engine "OFF".

3) Select A/T solenoid valve actuator test and operate actuator test.

4) Can you hear operating sound for TCC SOLENOID VALVE actuator testing function?

YES

▶ Go to "Verification of vehicle repair" procedure.

NO

▶ Replace PCM/TCM as necessary and go to "Verification of vehicle repair" procedure.

ACTUATOR TEST CONDITION

1. IG SWITCH ON
2. TRANSAXLE RANGE SWITCH is normal
3. P RANGE
4. Vehicle Speed 0mph(0km/h)
5. Throttle position sensor < 1V
6. IDLE SWITCH ON
7. ENGINE RPM 0

VERIFICATION OF VEHICLE REPAIR E21BB1F7

After a repair, it is essential to verify that the fault has been corrected.

1. Connect scantool and select "Diagnostic Trouble Codes(DTCs)" mode.
2. Using a scantool, Clear DTC.
3. Operate the vehicle within DTC Enable conditions in General information.
4. Are any DTCs present?

YES

▶ Go to the applicable troubleshooting procedure.

NO

▶ System performing to specification at this time.

DTC P0748 PRESSURE CONTROL SOLENOID VALVE A - ELECTRICAL

COMPONENT LOCATION EE1ADEA9

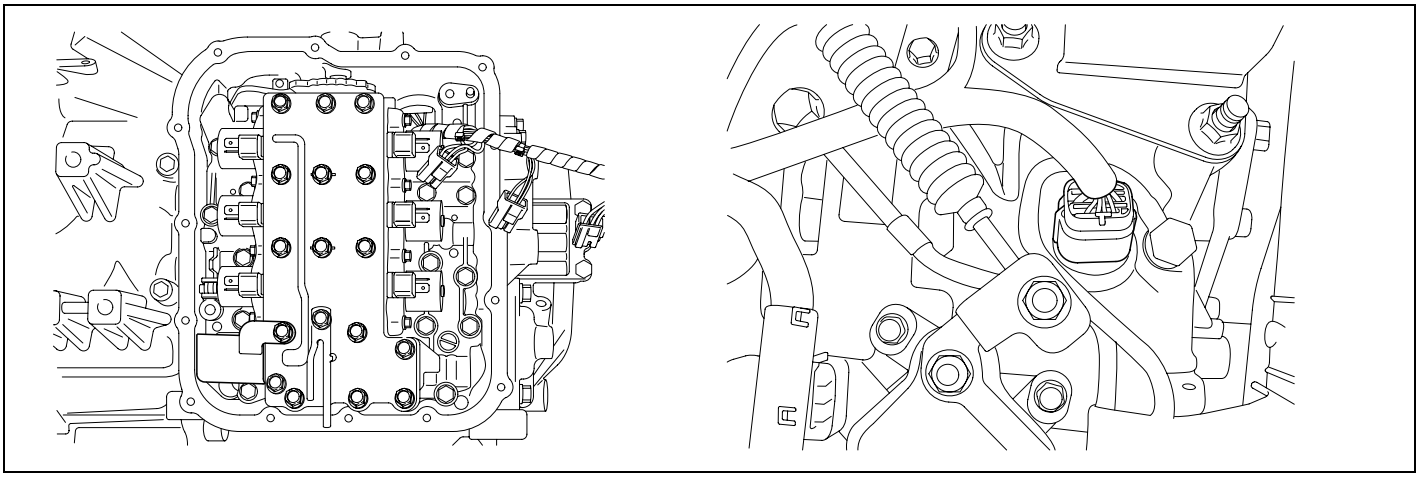

AKKF116U

GENERAL DESCRIPTION E8C28EFB

Variable Force Solenoid (Linear Solenoid) : With the duty control which uses higher frequency(600Hz), instead of the existing PWM type which adapts low frequency(60Hz) to control, spool valve can be controlled precisely.
In PWM control, the amount of oil flow is determined by the duration of "ON"signal among continuously repeated ON/OFF signals.
In VFS, the amount is decided by the width of the oil passage.

DTC DESCRIPTION E7FEEABF

The TCM checks the VFS Control Signal by monitoring the feedback signal from the solenoid valve drive circuit. If an unexpected signal is monitored (for example, high voltage is detected when low voltage is expected, or low voltage is detected when high voltage is expected), the TCM judges that the Low and Reverse control solenoid circuit is malfunctioning and sets this code.

DTC DETECTING CONDITION E7DA9EA8

Item	Detecting Condition	Possible cause
DTC Strategy	• Check voltage range	• Open or short in circuit • Faulty VF SOLENOID VALVE • Faulty PCM/TCM
Enable Conditions	• 18V > Voltage Battery > 10V • VFS SOL Duty ≥ 8.4% • IG "ON" • Not Fail Safe Status	
Threshold value	• Out of available voltage range	
Diagnostic Time	• more than 320msec	
Fail Safe	• GRD shord : Locked in 3 rd gear.(Control relay off) • OPEN or B+ short : not control VFS	

SPECIFICATION EC6F1DB0

Refer to DTC P0743.

SIGNAL WAVEFORM E8AAAE5D

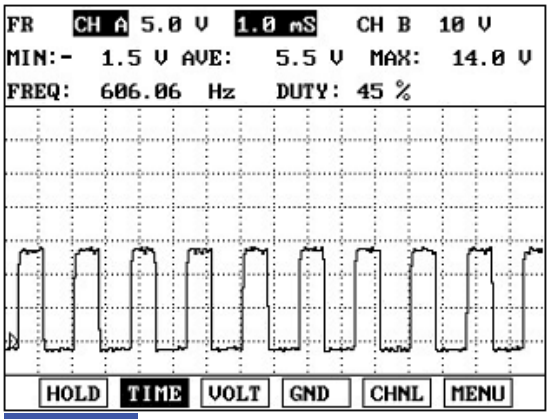

FIG.1)

FIG.1) : Wave form of "VFS"

EKBF116A

MONITOR SCANTOOL DATA ED568D3E

1. Connect scantool to data link connector(DLC).
2. Engine "ON".
3. Monitor the "PRESS CONTROL SOL. VALVE" parameter on the scantool.
4. Shift gear at each position.

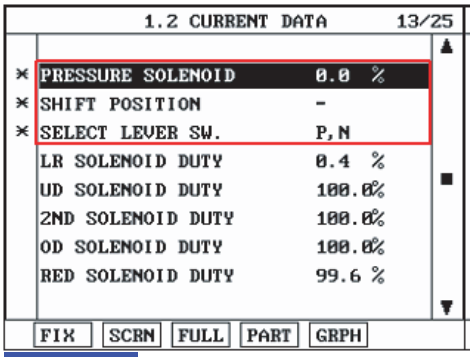

FIG.1)

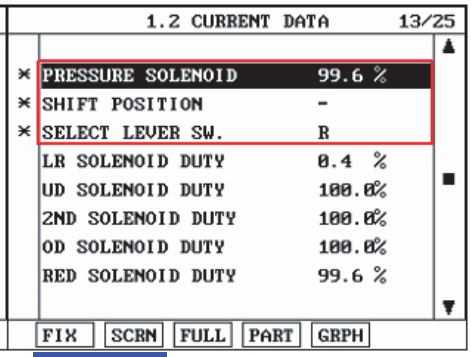

FIG.2)

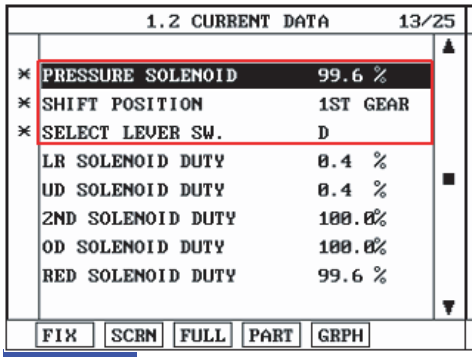

FIG.3)

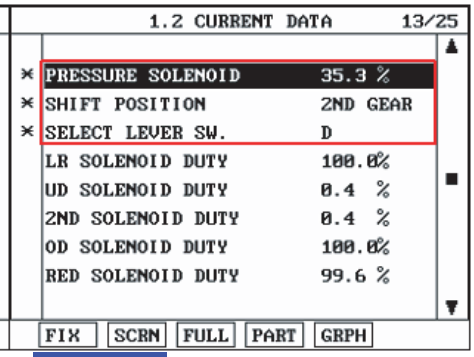

FIG.4)

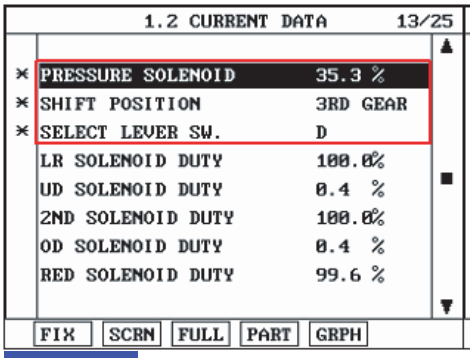

FIG.5)

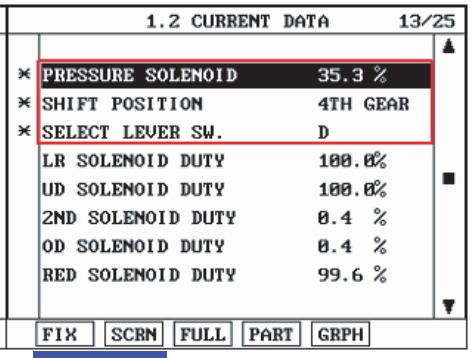

FIG.6)

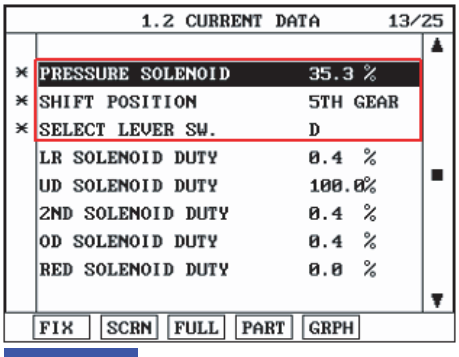

FIG.7)

FIG. 1) P,N
FIG. 2) "R"
FIG. 3) "D 1st" gear
FIG. 4) "2nd" gear
FIG. 5) "3rd" gear
FIG. 6) "4th" gear
FIG. 7) "5th" gear

LKKG209C

5. Does "PRESS CONTROL SOL DUTY " follow the reference data?

YES

▶ Fault is intermittent caused by poor contact in the sensor's and/or TCM(PCM)'s connector or was repaired and TCM(PCM) memory was not cleared. Thoroughly check connectors for looseness, poor connection, bending, corrosion, contamination, deterioration or damage. Repair or replace as necessary and go to "Verification of vehicle repair" procedure.

NO

▶ Go to "Terminal & connector inspection" procedure.

TERMINAL & CONNECTOR INSPECTION E8D66ED7

Refer to DTC P0743.

POWER SUPPLY CIRCUIT INSPECTION E62D4DDE

1. Disconnect "A/T SOLENOID VALVE" connector.
2. Measure voltage between terminal "7" of the sensor harness connector and chassis ground.
3. Measure voltage of VFS solenoid valve.

Specification: Approx.12V

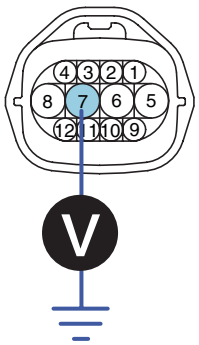

3. UD solenoid valve
4. 2ND solenoid valve
5. A/T battery
6. A/T battery
7. VF solenoid valve(+)
8. VF solenoid valve(-)
9. DCC solenoid valve
10. RED solenoid valve
11. LR solenoid valve
12. OD solenoide valve

SCMAT6365L

4. Is voltage within specifications?

YES

▶ Go to "Signal circuit inspection" procedure.

NO

▶ Check that A/T-20A fuse in engine room junction is installed or not blown.
▶ Check for open in harness. Repair as necessary and go to "Verification of vehicle repair" procedure.

SIGNAL CIRCUIT INSPECTION EFA578D0

1. Check signal circuit open inspection.

   1) Ignition "OFF".

   2) Disconnect "A/T SOLENOID VALVE" connector and "PCM/TCM" connector.
   Measure resistance between terminal "7" of the ATM SOLENOID VALVE harness connector and terminal "22" of the PCM/TCM harness connector.

Specification: approx. 0 Ω

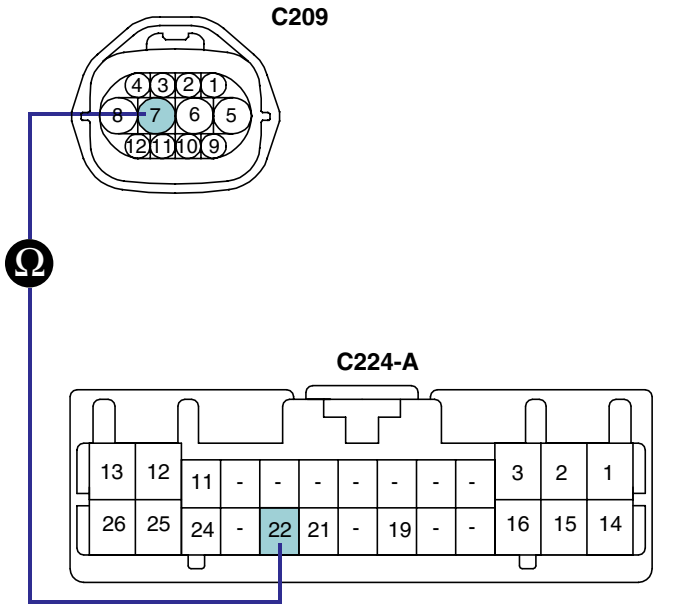

3. UD solenoid valve
4. 2ND solenoid valve
5. A/T battery
6. A/T battery
7. VF solenoid valve(+)
8. VF solenoid valve(-)
9. DCC solenoid valve
10. RED solenoid valve
11. LR solenoid valve
12. OD solenoide valve

01. UD solenoid valve control
14. OD solenoid valve control
15. DCC solenoid valve control
16. 2ND solenoid valve control
22. VF solenoid valve(-)

SCMAT6366L

   3) Is resistance within specifications?

YES

▶ Go to "Check signal circuit short inspection" procedure.

NO

▶ Check for open in harness. Repair as necessary and go to "Verification of vehicle repair" procedure.

2. Check signal circuit short inspection

   1) Ignition "OFF".

   2) Disconnect "A/T SOLENOID VALVE" connector and "PCM/TCM" connector

   3) Measure resistance between terminal "8" of the ATM SOLENOID VALVE harness and chassis ground.

Specification: Infinite

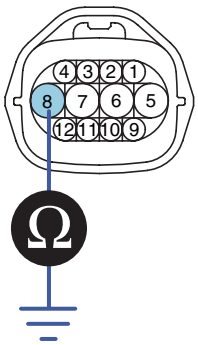

3. UD solenoid valve
4. 2ND solenoid valve
5. A/T battery
6. A/T battery
7. VF solenoid valve(+)
8. VF solenoid valve(-)
9. DCC solenoid valve
10.RED solenoid valve
11. LR solenoid valve
12. OD solenoide valve

SCMAT6367L

4) Is resistance within specifications?

YES

▶ Go to "Component inspection" procedure.

NO

▶ Check for short to ground in harness. Repair as necessary and go to "Verification of vehicle repair" procedure.

COMPONENT INSPECTION EBB36BC3

1. CHECK SOLENOID VALVE

1) Ignition "OFF".

2) Disconnect "A/T SOLENOID VALVE" connector.

3) Measure resistance between terminal "7" and terminal "8" of the ATM SOLENOID VALVE harness connector.

Specification: Approximately 4.35±0.35Ω [20°C(68°F)]

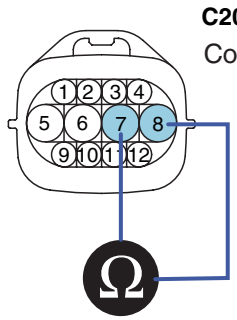

3. UD solenoid valve
4. 2ND solenoid valve
5. A/T battery
6. A/T battery
7. VF solenoid valve(+)
8. VF solenoid valve(-)
9. DCC solenoid valve
10.RED solenoid valve
11. LR solenoid valve
12. OD solenoide valve

SCMAT6368L

4) Is resistance within specification?

YES

▶ Go to "CHECK PCM/TCM" as below.

NO

▶ Replace "PRESS CONTROL SOL VALVE(VFS)" as necessary and go to "Verification of vehicle repair" procedure.

2. CHECK PCM/TCM

1) Connect scantool to data link connector(DLC).

2) Ignition "ON" & Engine "OFF".

3) Select A/T Solenoid valve Actuator test and Operate Actuator test.

4) Can you hear operating sound for "PRESS CONTROL SOL VALVE(VFS)" Actuator testing function?

YES

▶ Go to "Verification of vehicle repair" procedure.

NO

▶ Replace PCM/TCM as necessary and go to "Verification of vehicle repair" procedure.

ACTUATOR TEST CONDITION
1. IG SWITCH ON
2. TRANSAXLE RANGE SWITCH is normal
3. P RANGE
4. Vehicle Speed 0mph(0km/h)
5. Throttle position sensor < 1V
6. IDLE SWITCH ON
7. ENGINE RPM 0

VERIFICATION OF VEHICLE REPAIR E34559E6

Refer to DTC P0743.

DTC P0750 SHIFT CONTROL SOLENOID VALVE A CIRCUIT MALFUNCTION

COMPONENT LOCATION EC54E5ED

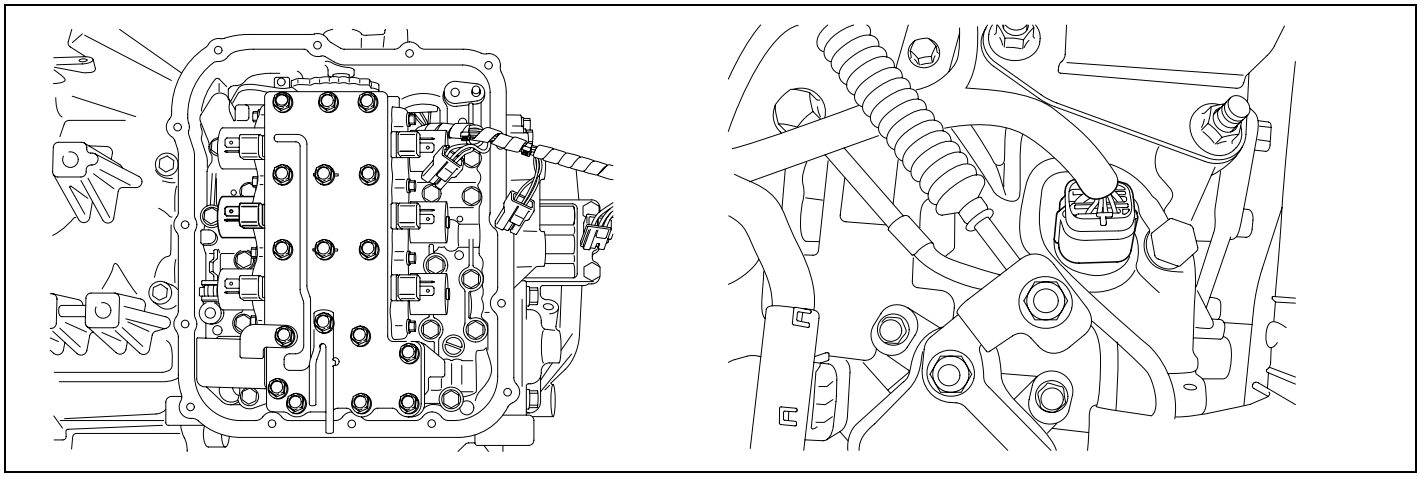

AKKF117G

GENERAL DESCRIPTION E9004129

The Automatic transmission changes the gear position of the transmission by utilizing a combination of clutches and brakes, which are controlled by solenoid valves. This automatic transmission consists of a: LR (Low and Reverse Brake), 2ND (2nd Brake), UD (Under Drive Clutch), OD (Over Drive Clutch), REV (Reverse Clutch), and a RED (Reduction Brake, only for 5 speed transmissions). The LR Brake is engaged in the 1st gear and reverse gear positions.

DTC DESCRIPTION E700E62E

The TCM checks the Low and Reverse Control Signal by monitoring the feedback signal from the solenoid valve drive circuit. If an unexpected signal is monitored (for example, high voltage is detected when low voltage is expected, or low voltage is detected when high voltage is expected), the TCM judges that the Low and Reverse control solenoid circuit is malfunctioning and sets this code.

DTC DETECTING CONDITION ECAEDCB1

Item	Detecting Condition	Possible cause
DTC Strategy	• Check voltage range	• Open or short in circuit • Faulty LR SOLENOID VALVE • Faulty PCM/TCM
Enable Conditions	• Not being control for "N-D or N-R" • Voltage of AT relay ≥ 10V • Not Fail Safe Status • IG "ON"	
Threshold value	• Out of available voltage range	
Diagnostic Time	• more than 320 ms	
Fail Safe	• Locked in 3 rd gear.(Control relay off)	

SPECIFICATION EBBA2E7C

Refer to DTC P0743.

SIGNAL WAVEFORM E657B66E

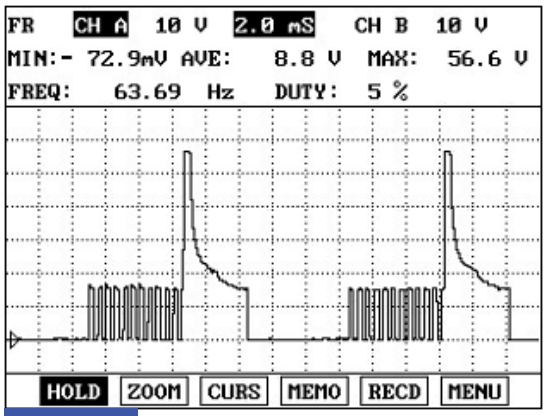

FIG.1)

FIG.1) : "2nd" gear → "1st" gear

EKBF117A

MONITOR SCANTOOL DATA EBC98BD9

1. Connect scantool to data link connector(DLC).
2. Engine "ON".
3. Monitor the "LR SOL. VALVE" parameter on the scantool.
4. Shift gear at each position.

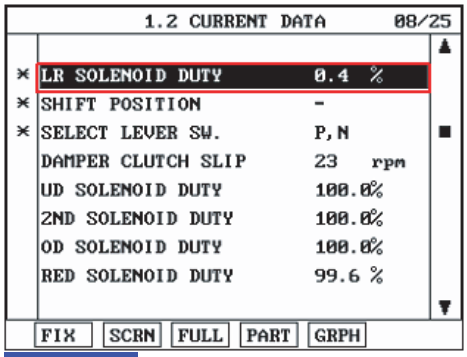

FIG.1)

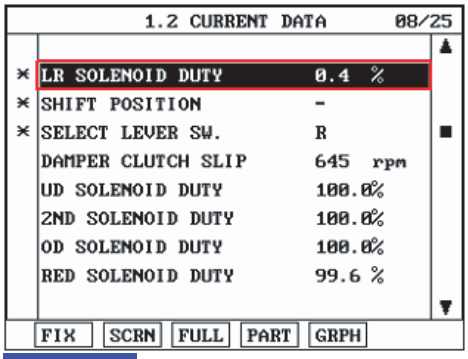

FIG.2)

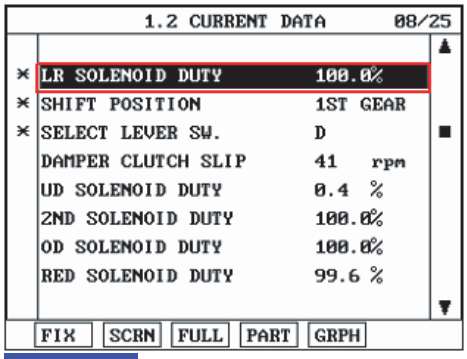

FIG.3)

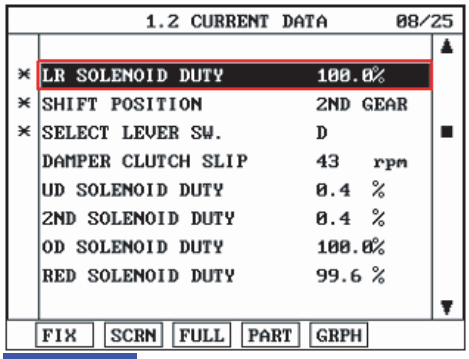

FIG.4)

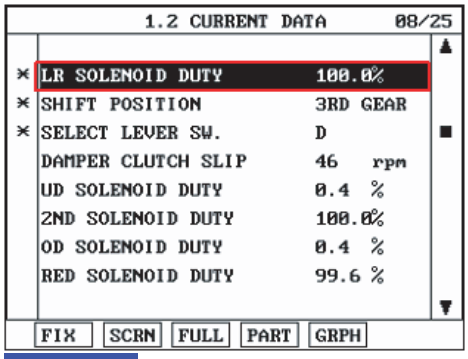

FIG.5)

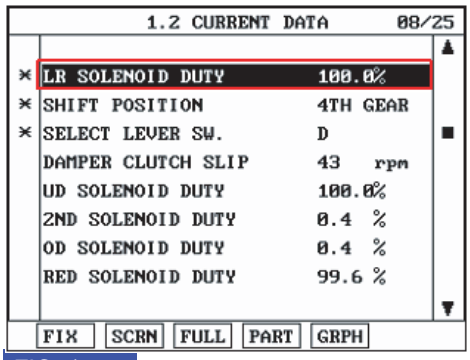

FIG.6)

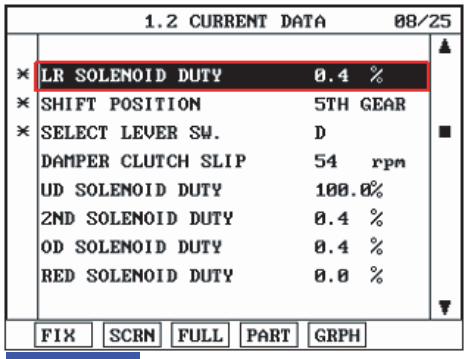

FIG.7)

FIG. 1) P,N
FIG. 2) "R"
FIG. 3) "D 1st" gear
FIG. 4) "2nd" gear
FIG. 5) "3rd" gear
FIG. 6) "4th" gear
FIG. 7) "5th" gear

5. Does "LR SOLENOID DUTY " follow the reference data?

YES

▶ Fault is intermittent caused by poor contact in the sensor's and/or TCM(PCM)'s connector or was repaired and TCM(PCM) memory was not cleared. Thoroughly check connectors for looseness, poor connection, bending, corrosion, contamination, deterioration or damage. Repair or replace as necessary and go to "Verification of vehicle repair" procedure.

NO

▶ Go to "Terminal & connector inspection " procedure.

TERMINAL & CONNECTOR INSPECTION E8E9D1C6

Refer to DTC P0743.

POWER SUPPLY CIRCUIT INSPECTION EEDFC93C

1. Disconnect "A/T SOLENOID VALVE" connector.
2. Measure voltage between terminal "6" of the sensor harness connector and chassis ground.
3. Engine OFF → ON.

Specification: 12V is measured only for approx. 0.5sec

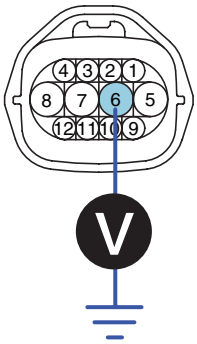

3. UD solenoid valve
4. 2ND solenoid valve
5. A/T battery
6. A/T battery
7. VF solenoid valve(-)
8. VF solenoid valve(+)
9. DCC solenoid valve
10.RED solenoid valve
11. LR solenoid valve
12. OD solenoide valve

SCMAT6361L

4. Is voltage within specifications?

YES

▶ Go to "Signal circuit inspection" procedure.

NO

▶ Check that A/T-20A fuse in engine room junction is installed or not blown.
▶ Check for open in harness. Repair as necessary and go to "Verification of vehicle repair" procedure.

SIGNAL CIRCUIT INSPECTION EDD3AF39

1. Check signal circuit open inspection

   1) Ignition "OFF".

   2) Disconnect "A/T SOLENOID VALVE" connector and "PCM/TCM" connector.
   Measure resistance between terminal "11" of the ATM SOLENOID VALVE harness connector and terminal "12" of the PCM/TCM harness connector.

Specification: approx. 0 Ω

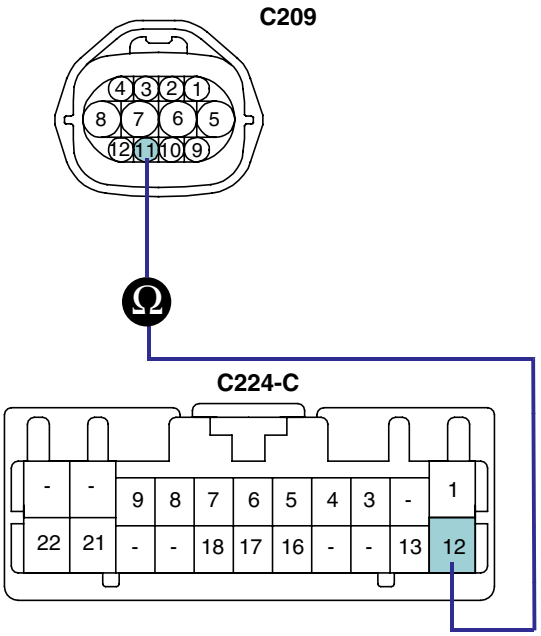

3. UD solenoid valve
4. 2ND solenoid valve
5. A/T battery
6. A/T battery
7. VF solenoid valve(+)
8. VF solenoid valve(-)
9. DCC solenoid valve
10. RED solenoid valve
11. LR solenoid valve
12. OD solenoid valve

1. RED solenoid valve
12. LR solenoid valve

SCMAT6371L

   3) Is resistance within specifications?

YES

▶ Go to "Check signal circuit short inspection" procedure.

NO

▶ Check for open in harness. Repair as necessary and go to "Verification of vehicle repair" procedure.

2. Check signal circuit short inspection

   1) Ignition "OFF".

   2) Disconnect "A/T SOLENOID VALVE" connector and "PCM/TCM" connector.

   3) Measure resistance between terminal "11" of the ATM SOLENOID VALVE harness and chassis ground.

Specification: Infinite

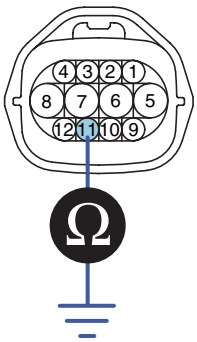

3. UD solenoid valve
4. 2ND solenoid valve
5. A/T battery
6. A/T battery
7. VF solenoid valve(+)
8. VF solenoid valve(-)
9. DCC solenoid valve
10.RED solenoid valve
11. LR solenoid valve
12. OD solenoide valve

SCMAT6372L

4) Is resistance within specifications?

YES

▶ Go to "Component inspection" procedure.

NO

▶ Check for short to ground in harness. Repair as necessary and go to "Verification of vehicle repair" procedure.

COMPONENT INSPECTION EDFF35FB

1. CHECK SOLENOID VALVE

1) Ignition "OFF".

2) Disconnect "A/T SOLENOID VALVE" connector.

3) Measure resistance between terminal "6" and terminal "11" of the ATM SOLENOID VALVE harness connector.

Specification: Approximately 2.7~3.4 Ω [20°C(68°F)]

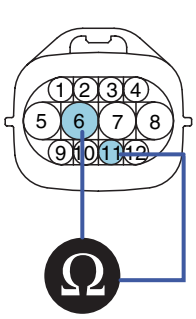

3. UD solenoid valve
4. 2ND solenoid valve
5. A/T battery
6. A/T battery
7. VF solenoid valve(+)
8. VF solenoid valve(-)
9. DCC solenoid valve
10.RED solenoid valve
11. LR solenoid valve
12. OD solenoide valve

SCMAT6373L

4) Is resistance within specification?

YES

▶ Go to "CHECK PCM/TCM" as below.

NO

▶ Replace LR SOLENOID VALVE as necessary and go to "Verification of vehicle repair" procedure.

2. CHECK PCM/TCM

   1) Connect scantool to data link connector(DLC).

   2) Ignition "ON" & Engine "OFF".

   3) Select A/T solenoid valve actuator test and operate actuator test.

   4) Can you hear operating sound for LR SOLENOID VALVE actuator testing function?

   YES

   ▶ Go to "Verification of vehicle repair" procedure.

   NO

   ▶ Replace PCM/TCM as necessary and go to "Verification of vehicle repair" procedure.

   ACTUATOR TEST CONDITION
   1. IG SWITCH ON
   2. TRANSAXLE RANGE SWITCH is normal
   3. P RANGE
   4. Vehicle Speed 0mph(0km/h)
   5. Throttle position sensor < 1V
   6. IDLE SWITCH ON
   7. ENGINE RPM 0

VERIFICATION OF VEHICLE REPAIR EDDAF7CA

Refer to DTC P0743.

DTC P0755 SHIFT CONTROL SOLENOID VALVE B CIRCUIT MALFUNCTION

COMPONENT LOCATION E7C0CAFC

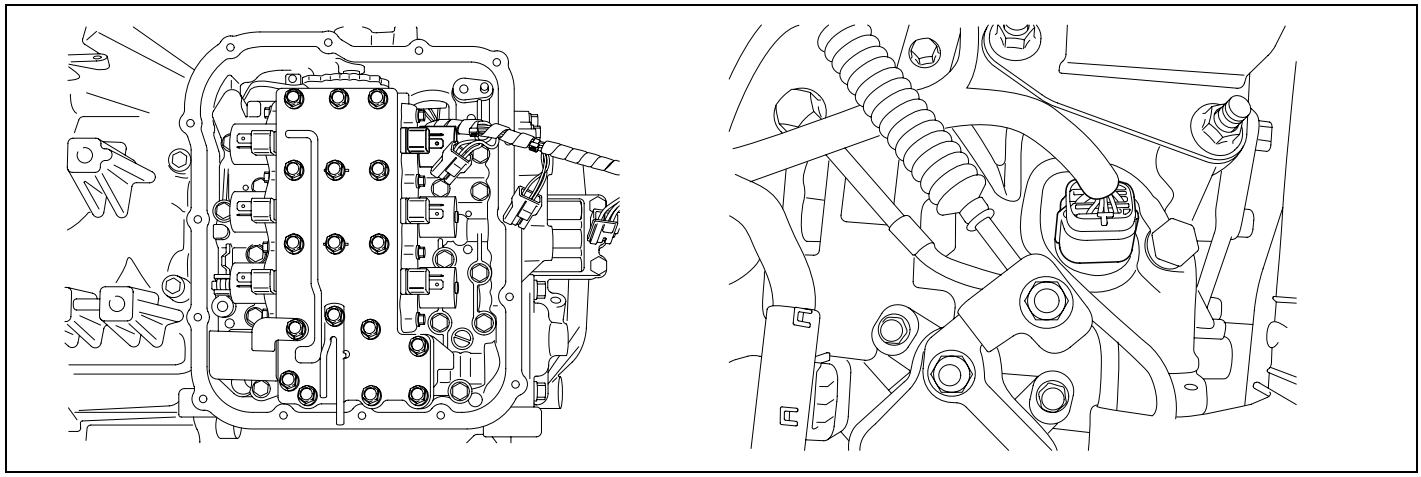

AKKF118G

GENERAL DESCRIPTION EDA36EBC

The Automatic transmission changes the gear position of the transmission by utilizing a combination of clutches and brakes, which are controlled by solenoid valves. This automatic transmission consists of a: LR (Low and Reverse Brake), 2ND (2nd Brake), UD (Under Drive Clutch), OD (Over Drive Clutch), REV (Reverse Clutch), and a RED (Reduction Brake, only for 5 speed transmissions).
The UD Clutch is engaged in the 1st gear, 2nd gear and 3rd gear positions.

DTC DESCRIPTION EE4CCE54

The TCM checks the Under Drive Clutch Control Signal by monitoring the feedback signal from the solenoid valve drive circuit. If an unexpected signal is monitored (for example, high voltage is detected when low voltage is expected, or low voltage is detected when high voltage is expected), the TCM judges that Under Drive control solenoid circuit is malfunctioning and sets this code.

DTC DETECTING CONDITION E2CC19A0

Item	Detecting Condition	Possible cause
DTC Strategy	• Check voltage range	• Open or short in circuit • Faulty UD SOLENOID VALVE • Faulty PCM/TCM
Enable Conditions	• Not being control for "N-D or N-R" • Voltage of AT relay ≥ 10V • Not Fail Safe Status • IG "ON"	
Threshold value	• Out of available voltage range	
Diagnostic Time	• more than 320 ms	
Fail Safe	• Locked in 3 rd gear.(Control relay off)	

SPECIFICATION E6666FEF

Refer to DTC P0743.

SIGNAL WAVEFORM EFCFA1B5

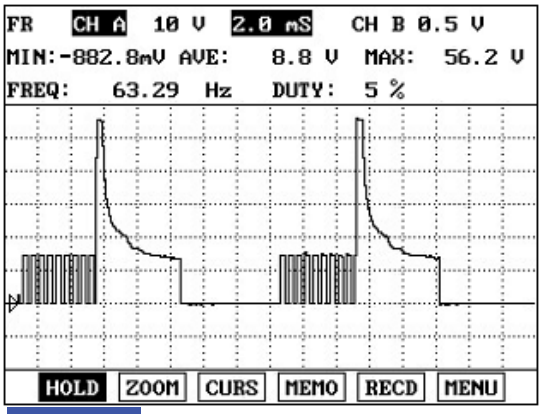

FIG.1)

FIG.1) : "N" → "D"

EKBF118A

MONITOR SCANTOOL DATA EFBBD1ED

1. Connect scantool to data link connector(DLC)
2. Engine "ON".
3. Monitor the "UD SOL. VALVE" parameter on the scantool.
4. Shift gear at each position.

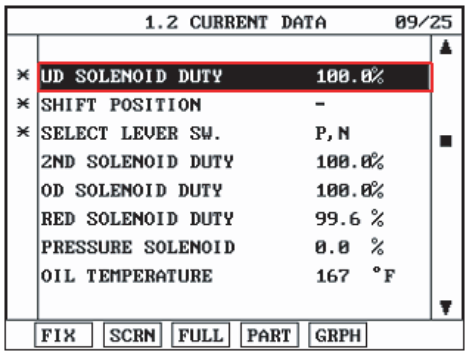

FIG.1)

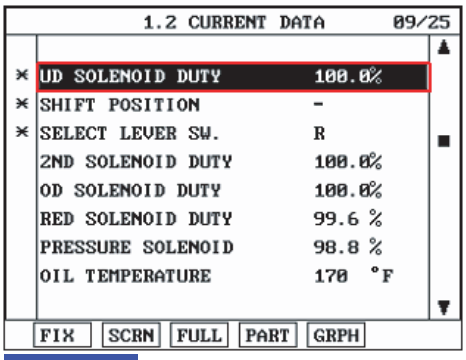

FIG.2)

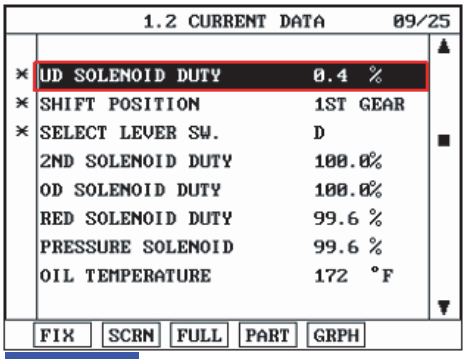

FIG.3)

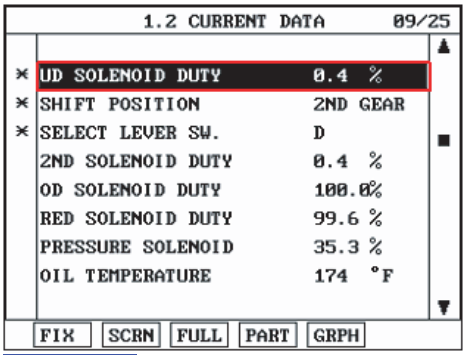

FIG.4)

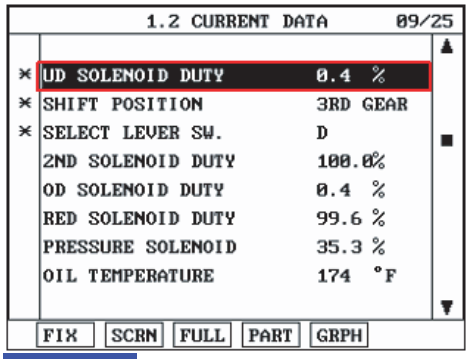

FIG.5)

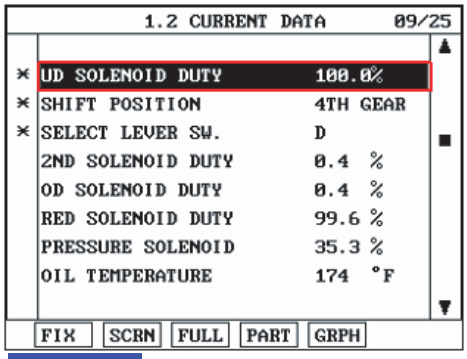

FIG.6)

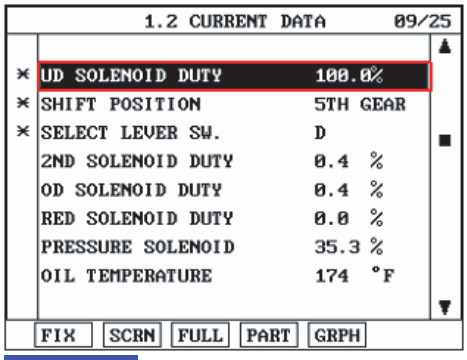

FIG.7)

FIG. 1) P,N
FIG. 2) "R"
FIG. 3) "D 1st" gear
FIG. 4) "2nd" gear
FIG. 5) "3rd" gear
FIG. 6) "4th" gear
FIG. 7) "5th" gear

LKKG209F

5. Does "UD SOLENOID DUTY " follow the reference data?

YES

▶ Fault is intermittent caused by poor contact in the sensor's and/or TCM(PCM)'s connector or was repaired and TCM(PCM) memory was not cleared. Thoroughly check connectors for looseness, poor connection, bending, corrosion, contamination, deterioration or damage. Repair or replace as necessary and go to "Verification of vehicle repair" procedure.

NO

▶ Go to "Terminal & connector inspection" procedure.

TERMINAL & CONNECTOR INSPECTION E2752FCE

Refer to DTC P0743.

POWER SUPPLY CIRCUIT INSPECTION E33A3FB4

1. Disconnect "A/T SOLENOID VALVE" connector.
2. Measure voltage between terminal "5" of the sensor harness connector and chassis ground.
3. Engine OFF → ON.

Specification: 12V is measured only for approx. 0.5sec

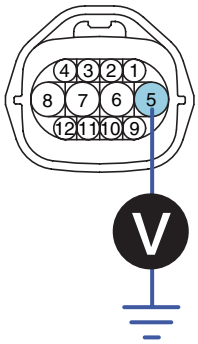

3. UD solenoid valve
4. 2ND solenoid valve
5. A/T battery
6. A/T battery
7. VF solenoid valve(+)
8. VF solenoid valve(-)
9. DCC solenoid valve
10.RED solenoid valve
11. LR solenoid valve
12. OD solenoide valve

SCMAT6375L

4. Is voltage within specifications?

YES

▶ Go to "Signal circuit inspection" procedure.

NO

▶ Check that A/T-20A fuse in engine room junction is installed or not blown.
▶ Check for open in harness. Repair as necessary and go to "Verification of vehicle repair" procedure.

SIGNAL CIRCUIT INSPECTION EE5DB907

1. Check signal circuit open inspection

   1) Ignition "OFF".

   2) Disconnect "A/T SOLENOID VALVE" connector and "PCM/TCM" connector.
   Measure resistance between terminal "3" of the ATM SOLENOID VALVE harness connector and terminal "1" of the PCM/TCM harness connector.

Specification: approx. 0 Ω

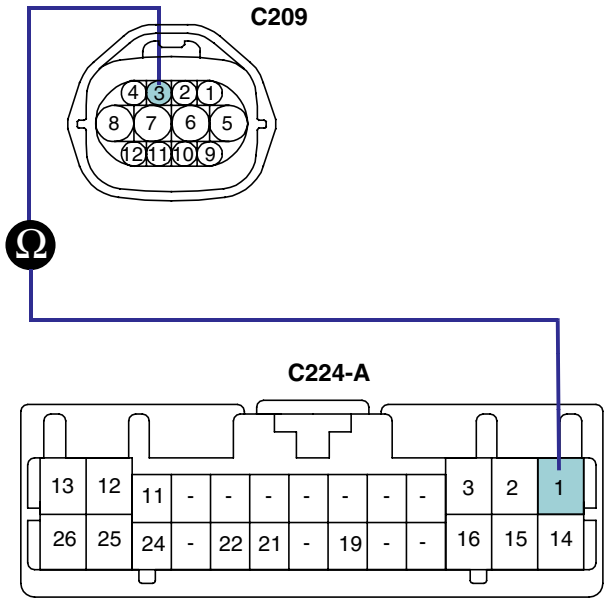

3. UD solenoid valve
4. 2ND solenoid valve
5. A/T battery
6. A/T battery
7. VF solenoid valve(+)
8. VF solenoid valve(-)
9. DCC solenoid valve
10. RED solenoid valve
11. LR solenoid valve
12. OD solenoid valve

01. UD solenoid valve control
14. OD solenoid valve control
15. DCC solenoid valve control
16. 2ND solenoid valve control
22. VF solenoid valve(-)

SCMAT6376L

   3) Is resistance within specifications?

YES

▶ Go to "Check signal circuit short inspection" procedure.

NO

▶ Check for open in harness. Repair as necessary and go to "Verification of vehicle repair" procedure.

2. Check signal circuit short inspection

   1) Ignition "OFF".

   2) Disconnect "A/T SOLENOID VALVE" connector and "PCM/TCM" connector.

   3) Measure resistance between terminal "3" of the ATM SOLENOID VALVE harness and chassis ground.

Specification: Infinite

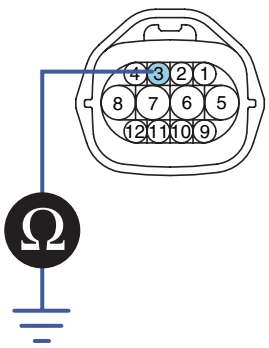

3. UD solenoid valve
4. 2ND solenoid valve
5. A/T battery
6. A/T battery
7. VF solenoid valve(+)
8. VF solenoid valve(-)
9. DCC solenoid valve
10.RED solenoid valve
11. LR solenoid valve
12. OD solenoide valve

SCMAT6377L

4) Is resistance within specifications?

YES

▶ Go to "Component inspection" procedure.

NO

▶ Check for short to ground in harness. Repair as necessary and go to "Verification of vehicle repair" procedure.

COMPONENT INSPECTION E5C5CD3A

1. CHECK SOLENOID VALVE

1) Ignition "OFF".

2) Disconnect "A/T SOLENOID VALVE" connector.

3) Measure resistance between terminal "3" and terminal "5" of the ATM SOLENOID VALVE harness connector.

Specification: Approximately 2.7~3.4 Ω [20°C(68°F)]

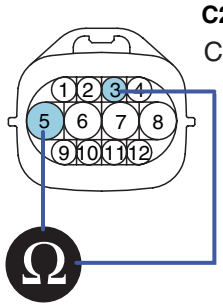

3. UD solenoid valve
4. 2ND solenoid valve
5. A/T battery
6. A/T battery
7. VF solenoid valve(+)
8. VF solenoid valve(-)
9. DCC solenoid valve
10.RED solenoid valve
11. LR solenoid valve
12. OD solenoide valve

SCMAT6378L

4) Is resistance within specification?

YES

▶ Go to "CHECK PCM/TCM" as below.

NO

▶ Replace UD SOLENOID VALVE as necessary and go to "Verification of vehicle repair" procedure.

2. CHECK PCM/TCM

1) Connect scantool to data link connector(DLC).

2) Ignition "ON" & Engine "OFF".

3) Select ATM solenoid valve actuator test and operate actuator test.

4) Can you hear operating sound for UD SOLENOID VALVE actuator testing function?

YES

▶ Go to "Verification of vehicle repair" procedure.

NO

▶ Replace PCM/TCM as necessary and go to "Verification of vehicle repair" procedure.

ACTUATOR TEST CONDITION

1. IG SWITCH ON
2. TRANSAXLE RANGE SWITCH is normal
3. P RANGE
4. Vehicle Speed 0mph(0km/h)
5. Throttle position sensor < 1V
6. IDLE SWITCH ON
7. ENGINE RPM 0

VERIFICATION OF VEHICLE REPAIR E66AC01F

Refer to DTC P0743.

DTC P0760 SHIFT CONTROL SOLENOID VALVE C CIRCUIT MALFUNCTION

COMPONENT LOCATION E7A70B21

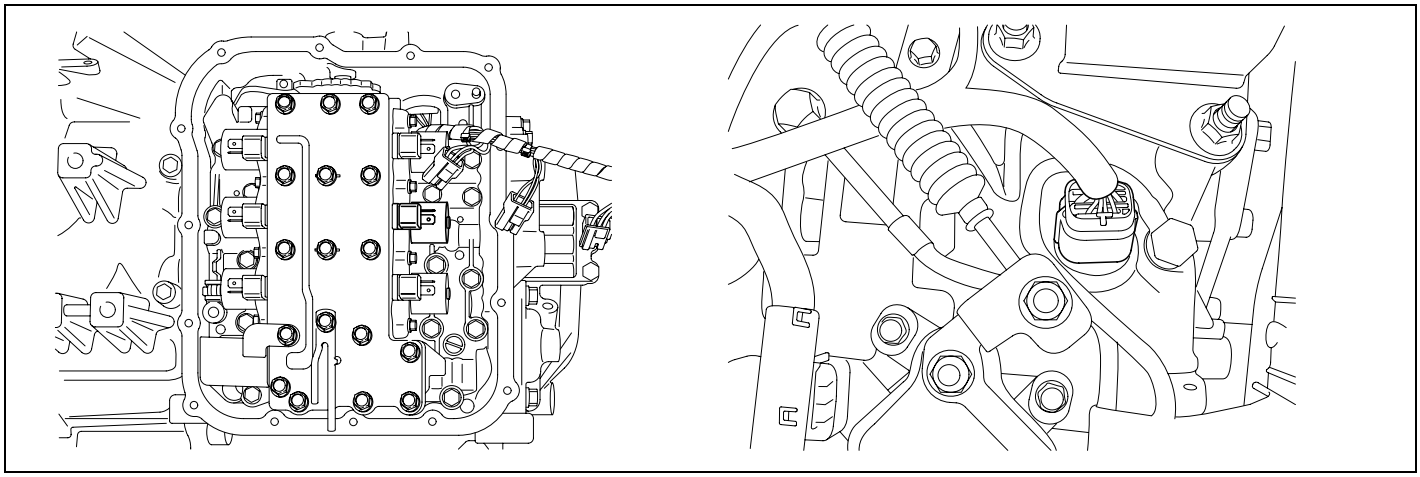

AKKF119F

GENERAL DESCRIPTION EACB5813

The Automatic transmission changes the gear position of the transmission by utilizing a combination of clutches and brakes, which are controlled by solenoid valves. This automatic transmission consists of a: LR (Low and Reverse Brake), 2ND (2nd Brake), UD (Under Drive Clutch), OD (Over Drive Clutch), REV (Reverse Clutch), and a RED (Reduction Brake, only for 5 speed transmissions).
The 2ND Brake is engaged in the 2nd gear and 4th gear positions.

DTC DESCRIPTION EDF0F0FD

The TCM checks the Under Drive Clutch Control Signal by monitoring the feedback signal from the solenoid valve drive circuit. If an unexpected signal is monitored, (For example, high voltage is detected when low voltage is expected or low voltage is detected when high voltage is expected) the TCM judges that 2nd Brake drive control solenoid circuit is malfunctioning and sets this code.

DTC DETECTING CONDITION EBFA32F7

Item	Detecting Condition	Possible cause
DTC Strategy	• Check voltage range	• Open or short in circuit • Faulty 2ND SOLENOID VALVE • Faulty PCM/TCM
Enable Conditions	• Not being control for "N-D or N-R" • Voltage of AT relay ≥ 10V • Not Fail Safe Status • IG "ON"	
Threshold value	• Out of available voltage range	
Diagnostic Time	• more than 320 ms	
Fail Safe	• Locked in 3 rd gear.(Control relay off)	

SPECIFICATION E4C4B2BD

Refer to DTC P0743.

SIGNAL WAVEFORM ECB8FD2E

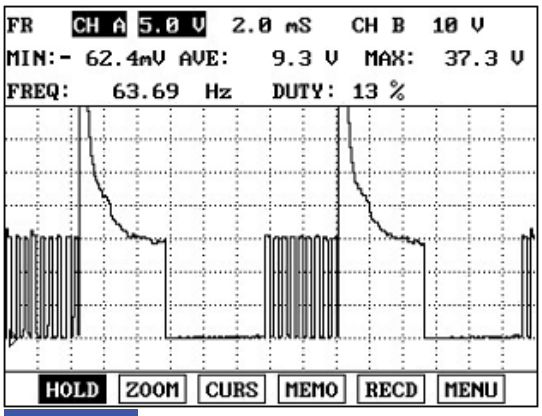

FIG.1)

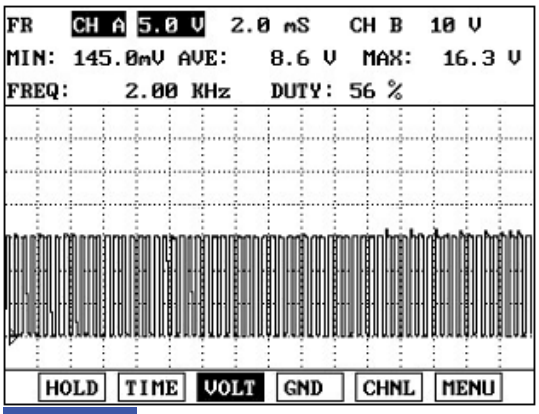

FIG.2)

FIG. 1) "2ND" gear → "1st" gear
FIG. 2) "P & N" Range

EKBF119A

MONITOR SCANTOOL DATA EBFBD6DA

1. Connect scantool to data link connector(DLC).
2. Engine "ON".
3. Monitor the "2nd SOL. VALVE" parameter on the scantool.
4. Shift gear at each position.

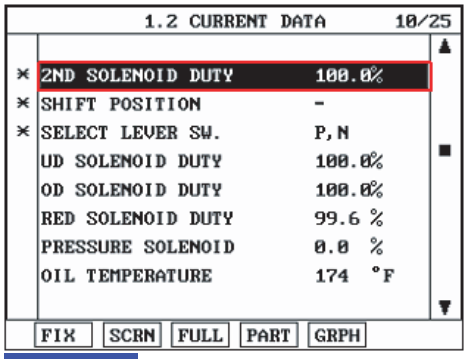

FIG.1)

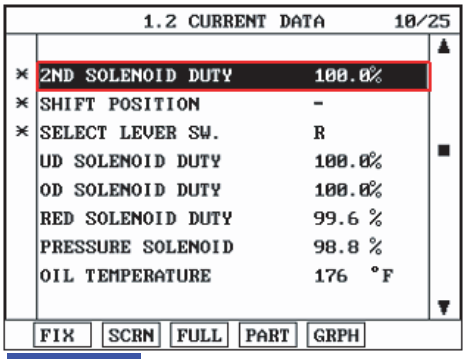

FIG.2)

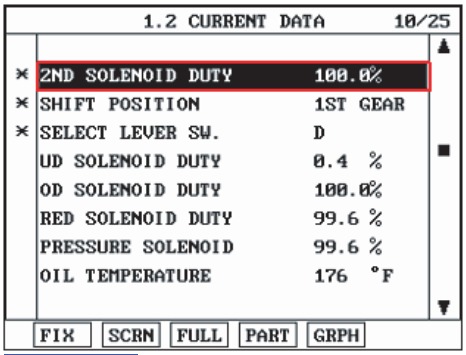

FIG.3)

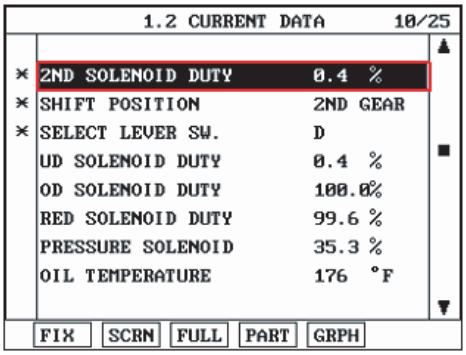

FIG.4)

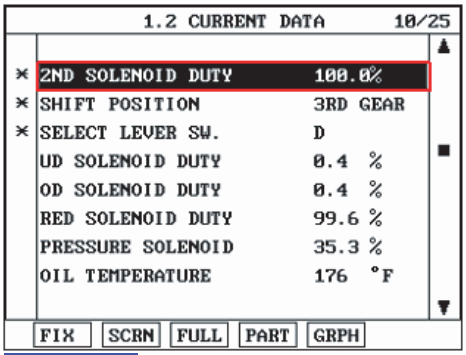

FIG.5)

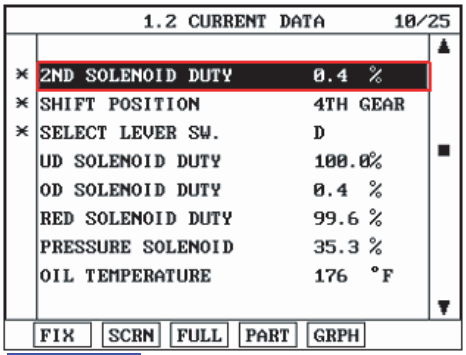

FIG.6)

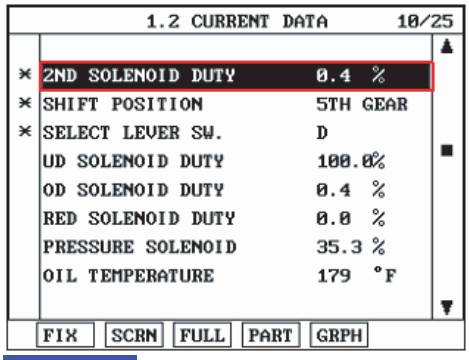

FIG.7)

FIG. 1) P,N
FIG. 2) "R"
FIG. 3) "D 1st" gear
FIG. 4) "2nd" gear
FIG. 5) "3rd" gear
FIG. 6) "4th" gear
FIG. 7) "5th" gear

LKKG209G

5. Does "2nd SOLENOID DUTY " follow the reference data?

YES

▶ Fault is intermittent caused by poor contact in the sensor's and/or TCM(PCM)'s connector or was repaired and TCM(PCM) memory was not cleared. Thoroughly check connectors for looseness, poor connection, bending, corrosion, contamination, deterioration or damage. Repair or replace as necessary and go to "Verification of vehicle repair" procedure.

NO

▶ Go to "Terminal & connector inspection " procedure.

TERMINAL & CONNECTOR INSPECTION EF32EB6C

Refer to DTC P0743.

POWER SUPPLY CIRCUIT INSPECTION ED96171A

1. Disconnect "A/T SOLENOID VALVE" connector.
2. Measure voltage between terminal "5" of the sensor harness connector and chassis ground.
3. Engine OFF → ON.

Specification: 12V is measured only for approx. 0.5sec

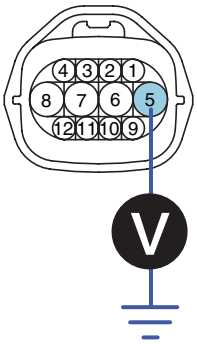

3. UD solenoid valve
4. 2ND solenoid valve
5. A/T battery
6. A/T battery
7. VF solenoid valve(+)
8. VF solenoid valve(-)
9. DCC solenoid valve
10.RED solenoid valve
11. LR solenoid valve
12. OD solenoide valve

SCMAT6375L

4. Is voltage within specifications?

YES

▶ Go to "Signal circuit inspection" procedure.

NO

▶ Check that A/T-20A fuse in engine room junction is installed or not blown.
▶ Check for open in harness. Repair as necessary and go to "Verification of vehicle repair" procedure.

SIGNAL CIRCUIT INSPECTION EB1BAC90

1. Check signal circuit open inspection

   1) Ignition "OFF".

   2) Disconnect "A/T SOLENOID VALVE" connector and "PCM" connector.
   Measure resistance between terminal "4" of the ATM SOLENOID VALVE harness connector and terminal "16" of the PCM/TCM harness connector.

Specification: approx. 0 Ω

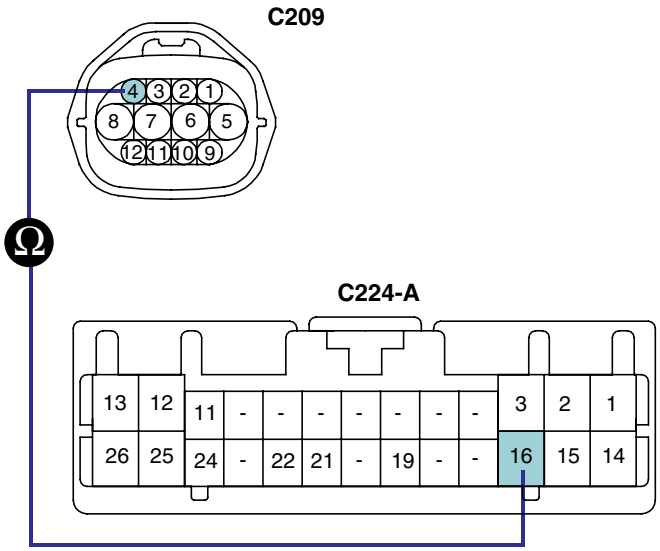

3. UD solenoid valve
4. 2ND solenoid valve
5. A/T battery
6. A/T battery
7. VF solenoid valve(+)
8. VF solenoid valve(-)
9. DCC solenoid valve
10. RED solenoid valve
11. LR solenoid valve
12. OD solenoid valve

01. UD solenoid valve control
14. OD solenoid valve control
15. DCC solenoid valve control
16. 2ND solenoid valve control
22. VF solenoid valve(-)

SCMAT6381L

   3) Is resistance within specifications?

YES

▶ Go to "Check signal circuit short inspection" procedure.

NO

▶ Check for open in harness. Repair as necessary and go to "Verification of vehicle repair" procedure.

2. Check signal circuit short inspection

   1) Ignition "OFF".

   2) Disconnect "A/T SOLENOID VALVE" connector and "PCM/TCM" connector.

   3) Measure resistance between terminal "4" of the ATM SOLENOID VALVE harness and chassis ground.

Specification: Infinite

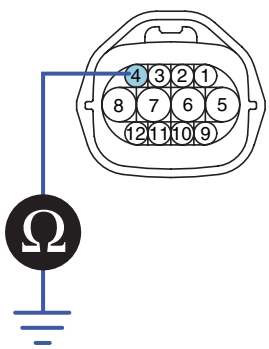

3. UD solenoid valve
4. 2ND solenoid valve
5. A/T battery
6. A/T battery
7. VF solenoid valve(+)
8. VF solenoid valve(-)
9. DCC solenoid valve
10.RED solenoid valve
11. LR solenoid valve
12. OD solenoide valve

SCMAT6382L

4) Is resistance within specifications?

YES

▶ Go to "Component inspection" procedure.

NO

▶ Check for short to ground in harness. Repair as necessary and go to "Verification of vehicle repair" procedure.

COMPONENT INSPECTION E0E382D1

1. CHECK SOLENOID VALVE

1) Ignition "OFF".

2) Disconnect "A/T SOLENOID VALVE" connector.

3) Measure resistance between terminal "4" and terminal "5" of the ATM SOLENOID VALVE harness connector.

Specification: Approximately 2.7~3.4 Ω [20°C(68°F)]

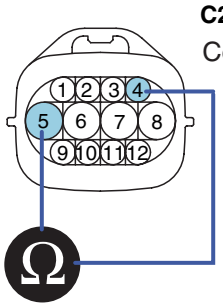

3. UD solenoid valve
4. 2ND solenoid valve
5. A/T battery
6. A/T battery
7. VF solenoid valve(+)
8. VF solenoid valve(-)
9. DCC solenoid valve
10.RED solenoid valve
11. LR solenoid valve
12. OD solenoide valve

SCMAT6383L

4) Is resistance within specification?

YES

▶ Go to "CHECK PCM/TCM" as below.

NO

▶ Replace 2nd SOLENOID VALVE as necessary and go to "Verification of vehicle repair" procedure.

2. CHECK PCM/TCM

   1) Connect scantool to data link connector(DLC).

   2) Ignition "ON" & Engine "OFF".

   3) Select A/T solenoid valve actuator test and operate actuator test.

   4) Can you hear operating sound for 2nd SOLENOID VALVE actuator testing function?

   YES

   ▶ Go to "Verification of vehicle repair" procedure.

   NO

   ▶ Replace PCM/TCM as necessary and go to "Verification of vehicle repair" procedure.

   ACTUATOR TEST CONDITION
   1. IG SWITCH ON
   2. TRANSAXLE RANGE SWITCH is normal
   3. P RANGE
   4. Vehicle Speed 0mph(0km/h)
   5. Throttle position sensor < 1V
   6. IDLE SWITCH ON
   7. ENGINE RPM 0

VERIFICATION OF VEHICLE REPAIR E2D079D3

Refer to DTC P0743.

DTC P0765 SHIFT CONTROL SOLENOID VALVE D CIRCUIT MALFUNCTION

COMPONENT LOCATION EB6A2FBF

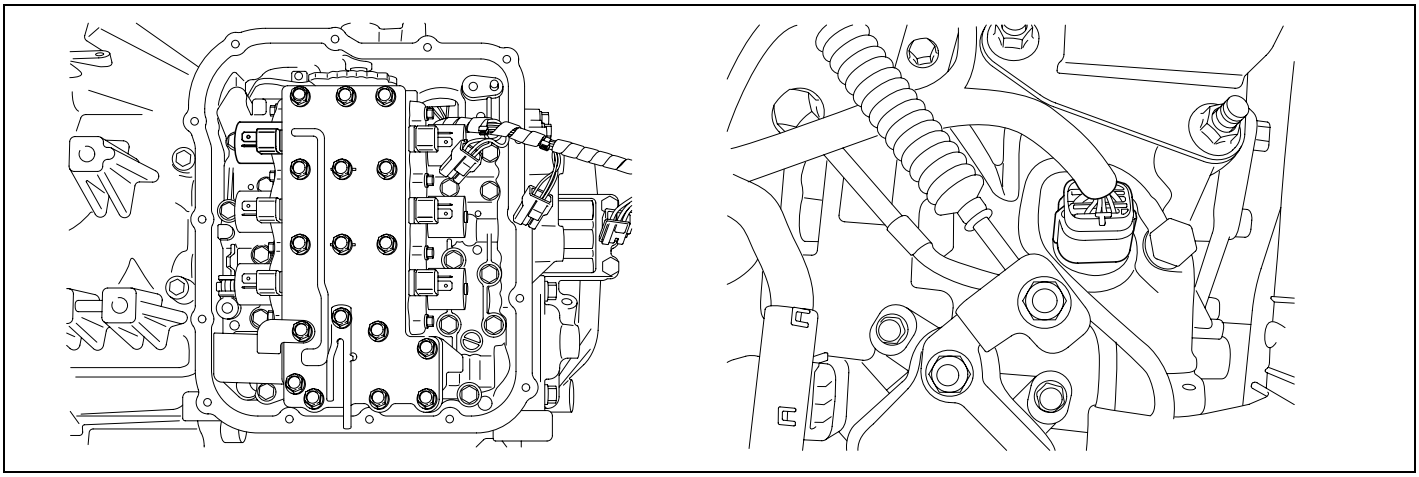

AKKF120Z

GENERAL DESCRIPTION E95FCDFF

The Automatic transmission changes the gear position of the transmission by utilizing a combination of clutches and brakes, which are controlled by solenoid valves. This automatic transmission consists of a: LR (Low and Reverse Brake), 2ND (2nd Brake), UD (Under Drive Clutch), OD (Over Drive Clutch), REV (Reverse Clutch), and a RED (Reduction Brake, only for 5 speed transmissions).
The OD Clutch is engaged in the 3rd gear and 4th gear positions.

DTC DESCRIPTION E03C0BFC

The TCM checks the Under Drive Clutch Control Signal by monitoring the feedback signal from the solenoid valve drive circuit. If an unexpected signal is monitored (for example, high voltage is detected when low voltage is expected or low voltage is detected when high voltage is expected), the TCM judges that the OVER DRIVE CLUTCH drive control solenoid circuit is malfunctioning and sets this code.

DTC DETECTING CONDITION EA2CE5E2

Item	Detecting Condition	Possible cause
DTC Strategy	• Check voltage range	• Open or short in circuit • Faulty OD SOLENOID VALVE • Faulty PCM/TCM
Enable Conditions	• Not being control for "N-D or N-R" • Voltage of AT relay ≥ 10V • Not Fail Safe Status • IG "ON"	
Threshold value	• Out of available voltage range	
Diagnostic Time	• more than 320 ms	
Fail Safe	• Locked in 3 rd gear.(Control relay off)	

SPECIFICATION E0AE1686

Refer to DTC P0743.

SIGNAL WAVEFORM ECFDEE4F

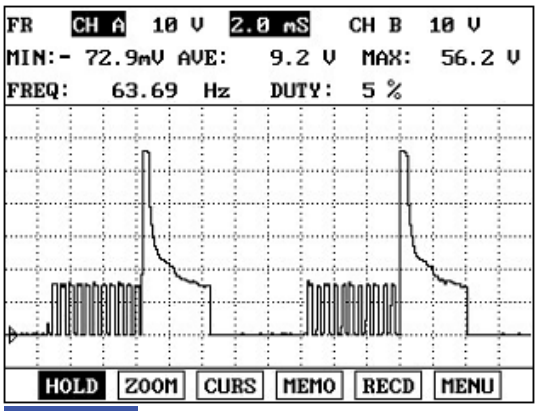

FIG.1)

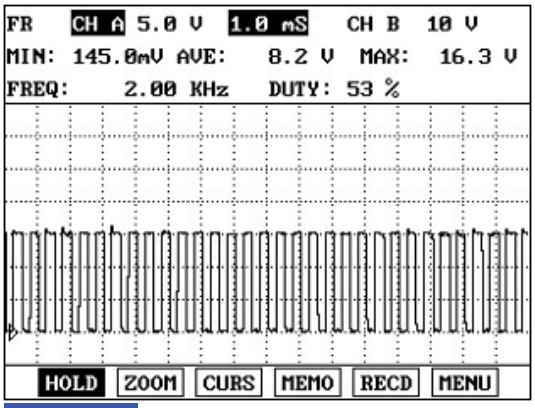

FIG.2)

FIG. 1) "3rd" gear → "2nd" gear
FIG. 2) "P & N" Range

EKBF120A

MONITOR SCANTOOL DATA EC923FED

1. Connect scantool to data link connector(DLC).
2. Engine "ON".
3. Monitor the "OD SOL. VALVE" parameter on the scantool.
4. Shift gear at each position.

Specification: 2nd gear → 0.0%, 3nd gear → 100%

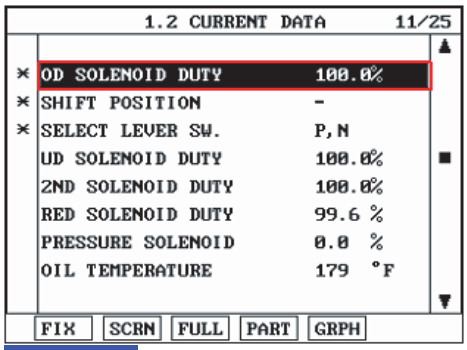

FIG.1)

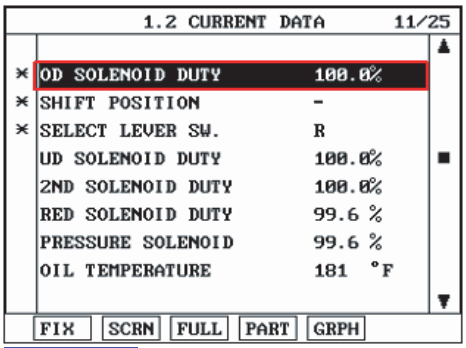

FIG.2)

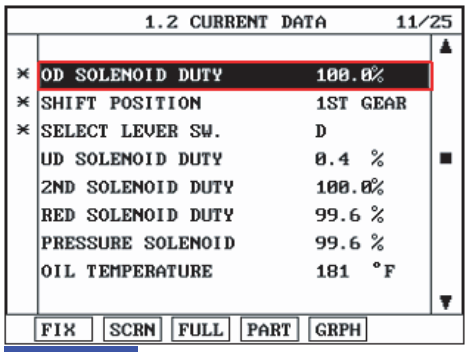

FIG.3)

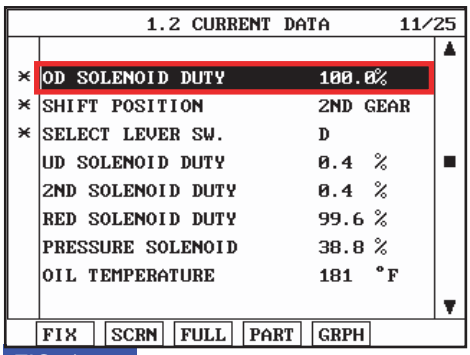

FIG.4)

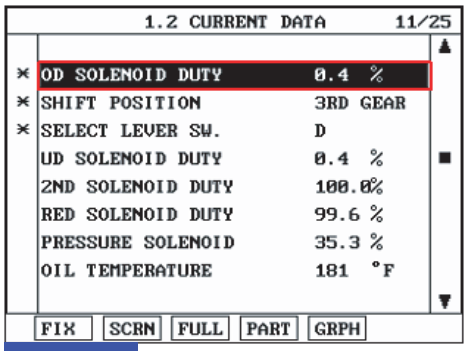

FIG.5)

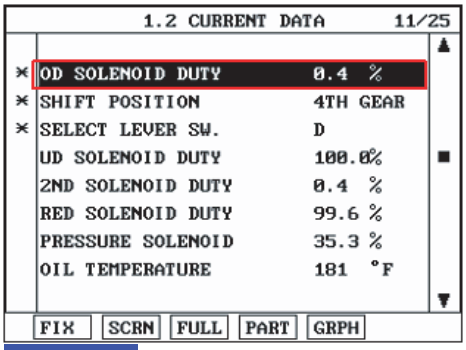

FIG.6)

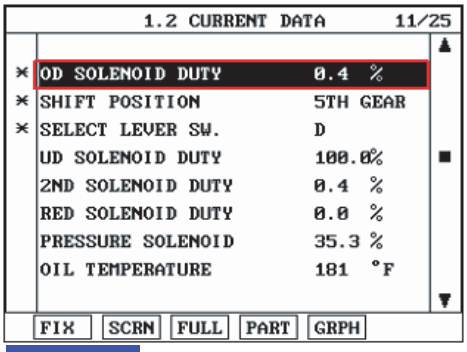

FIG.7)

FIG. 1) P,N
FIG. 2) "R"
FIG. 3) "D 1st" gear
FIG. 4) "2nd" gear
FIG. 5) "3rd" gear
FIG. 6) "4th" gear
FIG. 7) "5th" gear

LKKG209H

5. Does "OD SOLENOID DUTY " follow the reference data?

YES

▶ Fault is intermittent caused by poor contact in the sensor's and/or TCM(PCM)'s connector or was repaired and TCM(PCM) memory was not cleared. Thoroughly check connectors for looseness, poor connection, bending, corrosion, contamination, deterioration or damage. Repair or replace as necessary and go to "Verification of vehicle repair" procedure.

NO

▶ Go to "Terminal & connector inspection " procedure.

TERMINAL & CONNECTOR INSPECTION E438324B

Refer to DTC P0743.

POWER SUPPLY CIRCUIT INSPECTION E4F67AE3

1. Disconnect "A/T SOLENOID VALVE" connector.
2. Measure voltage between terminal "5" of the sensor harness connector and chassis ground.
3. Engine OFF → ON.

Specification: 12V is measured only for approx. 0.5sec

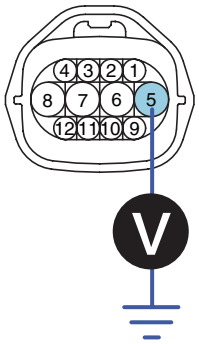

3. UD solenoid valve
4. 2ND solenoid valve
5. A/T battery
6. A/T battery
7. VF solenoid valve(+)
8. VF solenoid valve(-)
9. DCC solenoid valve
10.RED solenoid valve
11. LR solenoid valve
12. OD solenoide valve

SCMAT6375L

4. Is voltage within specifications?

YES

▶ Go to "Signal circuit inspection" procedure.

NO

▶ Check that A/T-20A fuse in engine room junction is installed or not blown.
▶ Check for open in harness. Repair as necessary and go to "Verification of vehicle repair" procedure.

SIGNAL CIRCUIT INSPECTION E6ACE15D

1. Check signal circuit open inspection

   1) Ignition "OFF".

   2) Disconnect "A/T SOLENOID VALVE" connector and "PCM/TCM" connector.
   Measure resistance between terminal "12" of the ATM SOLENOID VALVE harness connector and terminal "14" of the PCM/TCM harness connector.

Specification: approx. 0 Ω

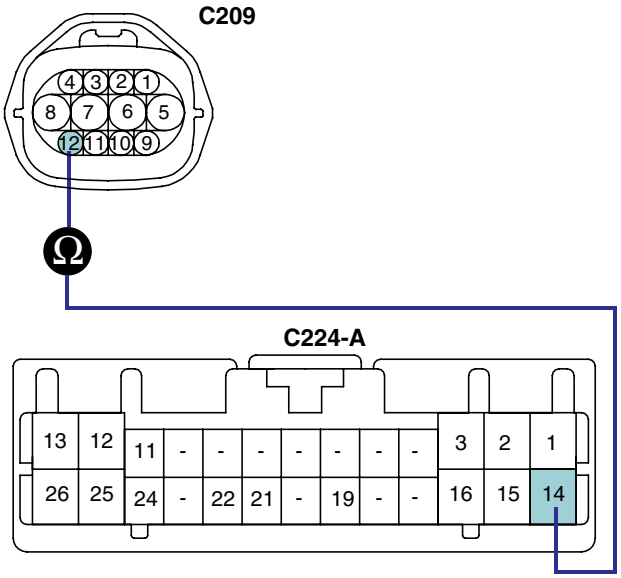

3. UD solenoid valve
4. 2ND solenoid valve
5. A/T battery
6. A/T battery
7. VF solenoid valve(+)
8. VF solenoid valve(-)
9. DCC solenoid valve
10. RED solenoid valve
11. LR solenoid valve
12. OD solenoid valve

01. UD solenoid valve control
14. OD solenoid valve control
15. DCC solenoid valve control
16. 2ND solenoid valve control
22. VF solenoid valve(-)

SCMAT6385L

   3) Is resistance within specifications?

   YES

   ▶ Go to "Check signal circuit short inspection" procedure.

   NO

   ▶ Check for open in harness. Repair as necessary and go to "Verification of vehicle repair" procedure.

2. Check signal circuit short inspection

   1) Ignition "OFF".

   2) Disconnect "A/T SOLENOID VALVE" connector and "PCM/TCM" connector.

   3) Measure resistance between terminal "12" of the ATM SOLENOID VALVE harness and chassis ground.

Specification: Infinite

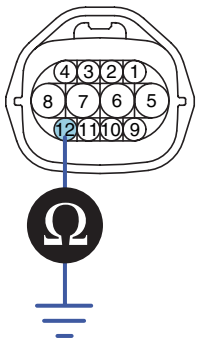

3. UD solenoid valve
4. 2ND solenoid valve
5. A/T battery
6. A/T battery
7. VF solenoid valve(+)
8. VF solenoid valve(-)
9. DCC solenoid valve
10.RED solenoid valve
11. LR solenoid valve
12. OD solenoid valve

SCMAT6386L

4) Is resistance within specifications?

YES

▶ Go to "Component inspection" procedure.

NO

▶ Check for short to ground in harness. Repair as necessary and go to "Verification of vehicle repair" procedure.

COMPONENT INSPECTION E5452827

1. CHECK SOLENOID VALVE

1) Ignition "OFF".

2) Disconnect "A/T SOLENOID VALVE" connector.

3) Measure resistance between terminal "5" and terminal "12" of the ATM SOLENOID VALVE harness connector.

Specification: Approximately 2.7~3.4 Ω [20°C(68°F)]

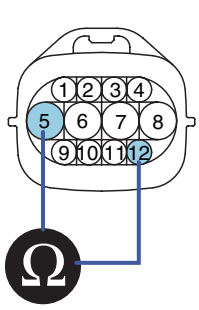

3. UD solenoid valve
4. 2ND solenoid valve
5. A/T battery
6. A/T battery
7. VF solenoid valve(+)
8. VF solenoid valve(-)
9. DCC solenoid valve
10.RED solenoid valve
11. LR solenoid valve
12. OD solenoid valve

SCMAT6387L

4) Is resistance within specification?

YES

▶ Go to "CHECK PCM/TCM" as below.

NO

▶ Replace OD SOLENOID VALVE as necessary and go to "Verification of vehicle repair" procedure.

2. CHECK PCM/TCM

1) Connect scantool to data link connector(DLC).

2) Ignition "ON" & Engine "OFF".

3) Select A/T solenoid valve actuator test and operate actuator test.

4) Can you hear operating sound for OD SOLENOID VALVE actuator testing function?

YES

▶ Go to "Verification of vehicle repair" procedure.

NO

▶ Replace PCM/TCM and go to "Verification of vehicle repair" procedure.

ACTUATOR TEST CONDITION

1. IG SWITCH ON
2. TRANSAXLE RANGE SWITCH is normal
3. P RANGE
4. Vehicle Speed 0mph(0km/h)
5. Throttle position sensor < 1V
6. IDLE SWITCH ON
7. ENGINE RPM 0

VERIFICATION OF VEHICLE REPAIR E1B3F5DA

Refer to DTC P0743.

DTC P0770 SHIFT CONTROL SOLENOID VALVE E CIRCUIT MALFUNCTION

COMPONENT LOCATION EE8DD590

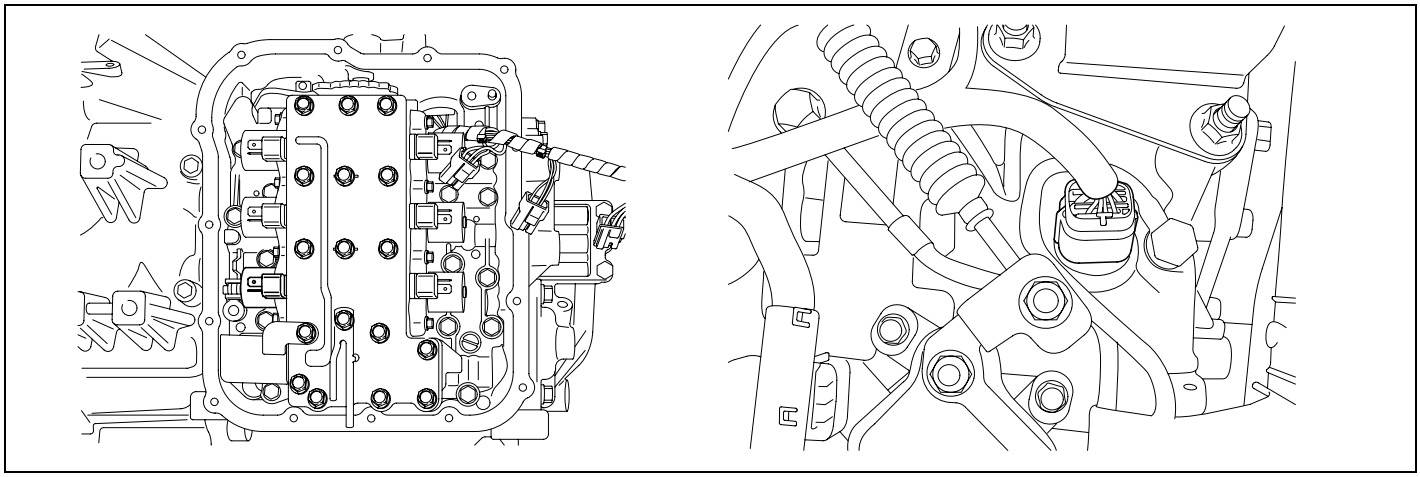

AKKF120K

GENERAL DESCRIPTION E85EDBFC

The Automatic transmission changes the gear position of the transmission by utilizing a combination of clutches and brakes, which are controlled by solenoid valves. This automatic transmission consists of a: LR (Low and Reverse Brake), 2ND (2nd Brake), UD (Under Drive Clutch), OD (Over Drive Clutch), REV (Reverse Clutch), and a RED (Reduction Brake, only for 5 speed transmissions).
The RED Brake is engaged in the 1st, 2nd, 3rd gear and reverse gear positions.

DTC DESCRIPTION E74450E8

The TCM checks the Reduction Control Signal by monitoring the feedback signal from the solenoid valve drive circuit. If an unexpected signal is monitored (for example, high voltage is detected when low voltage is expected, or low voltage is detected when high voltage is expected), the TCM judges that the Reduction control solenoid circuit is malfunctioning and sets this code.

DTC DETECTING CONDITION E083D2CD

Item	Detecting Condition	Possible cause
DTC Strategy	• Check voltage range	• Open or short in circuit • Faulty RED SOLENOID VALVE • Faulty PCM/TCM
Enable Conditions	• Not being control for "N-D or N-R" • Voltage of AT relay ≥ 10V • Not Fail Safe Status • IG "ON"	
Threshold value	• Out of available voltage range	
Diagnostic Time	• more than 320 ms	
Fail Safe	• Locked in 3 rd gear.(Control relay off)	

SPECIFICATION E4C50EBE

Refer to DTC P0743.

SIGNAL WAVEFORM EFF854FE

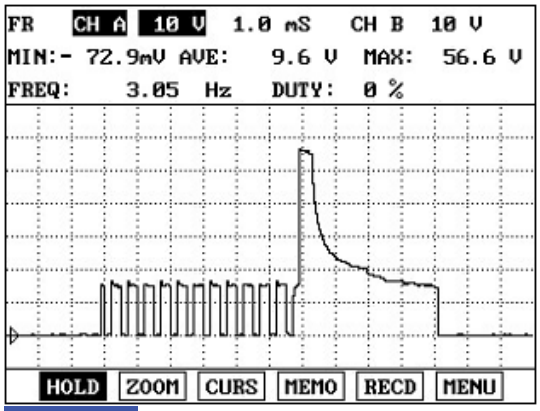

FIG.1)

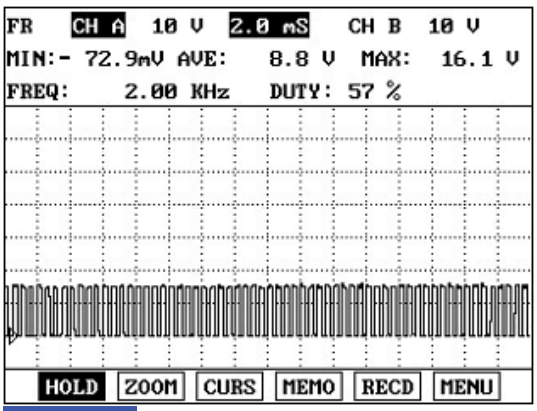

FIG.2)

FIG. 1) "5TH" gear → "4TH" gear
FIG. 2) "P & N" Range

EKBF121A

MONITOR SCANTOOL DATA E9E7C945

1. Connect scantool to data link connector(DLC).
2. Engine "ON".
3. Monitor the "RED SOL. VALVE" parameter on the scantool.
4. Shift gear at each position.

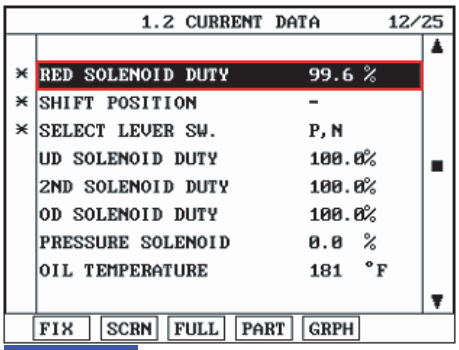

FIG.1)

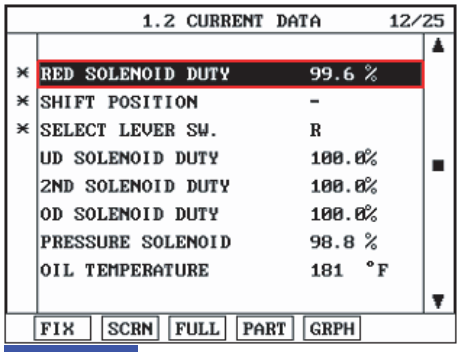

FIG.2)

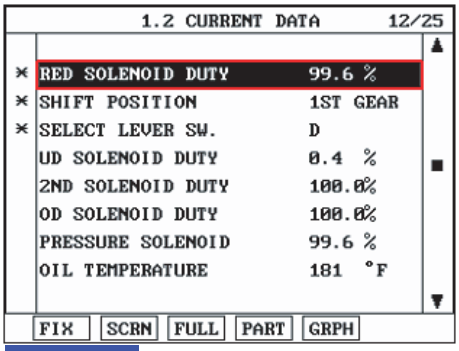

FIG.3)

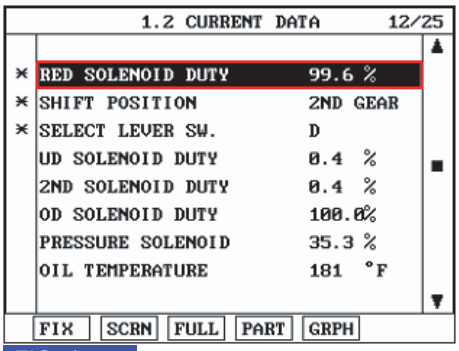

FIG.4)

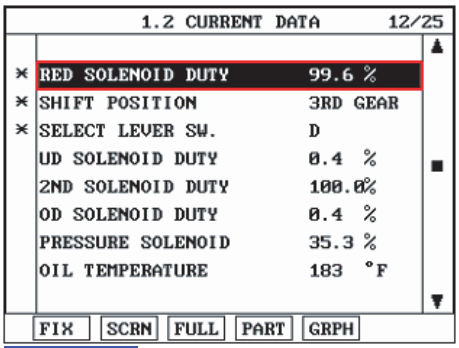

FIG.5)

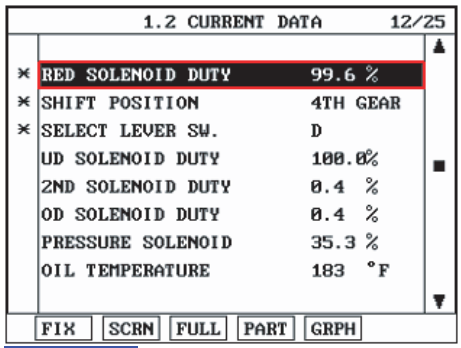

FIG.6)

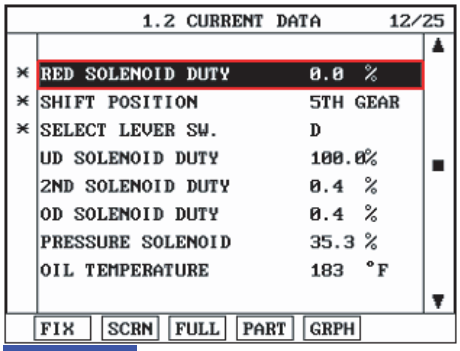

FIG.7)

FIG. 1) P,N
FIG. 2) "R"
FIG. 3) "D 1st" gear
FIG. 4) "2nd" gear
FIG. 5) "3rd" gear
FIG. 6) "4th" gear
FIG. 7) "5th" gear

5. Does "RED SOLENOID DUTY " follow the reference data?

YES

▶ Fault is intermittent caused by poor contact in the sensor's and/or TCM(PCM)'s connector or was repaired and TCM(PCM) memory was not cleared. Thoroughly check connectors for looseness, poor connection, bending, corrosion, contamination, deterioration or damage. Repair or replace as necessary and go to "Verification of vehicle repair" procedure.

NO

▶ Go to "Terminal & connector inspection " procedure.

TERMINAL & CONNECTOR INSPECTION E8A77B5F

Refer to DTC P0743.

POWER SUPPLY CIRCUIT INSPECTION EE460A0B

1. Disconnect "A/T SOLENOID VALVE" connector.
2. Measure voltage between terminal "6" of the sensor harness connector and chassis ground.
3. Engine OFF → ON.

Specification: 12V is measured only for approx. 0.5sec

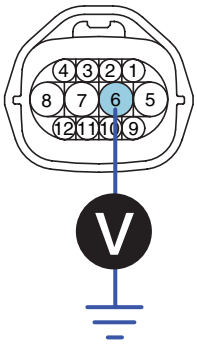

3. UD solenoid valve
4. 2ND solenoid valve
5. A/T battery
6. A/T battery
7. VF solenoid valve(-)
8. VF solenoid valve(+)
9. DCC solenoid valve
10.RED solenoid valve
11. LR solenoid valve
12. OD solenoide valve

SCMAT6361L

4. Is voltage within specifications?

YES

▶ Go to "Signal circuit inspection" procedure.

NO

▶ Check that A/T-20A fuse in engine room junction is installed or not blown.
▶ Check for open in harness. Repair as necessary and go to "Verification of vehicle repair" procedure.

SIGNAL CIRCUIT INSPECTION E40039FE

1. Check signal circuit open inspection

   1) Ignition "OFF".

   2) Disconnect "A/T SOLENOID VALVE" connector and "PCM/TCM" connector.
   Measure resistance between terminal "10" of the ATM SOLENOID VALVE harness connector and terminal "1" of the PCM/TCM harness connector.

Specification: approx. 0 Ω

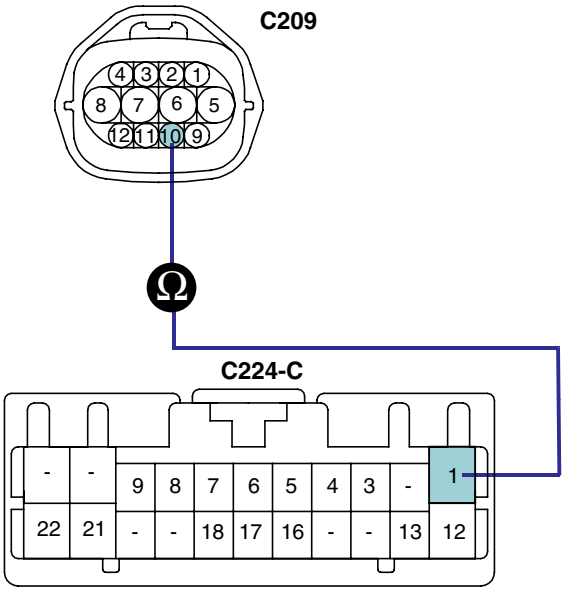

3. UD solenoid valve
4. 2ND solenoid valve
5. A/T battery
6. A/T battery
7. VF solenoid valve(+)
8. VF solenoid valve(-)
9. DCC solenoid valve
10.RED solenoid valve
11. LR solenoid valve
12. OD solenoid valve

1.RED solenoid valve
12.LR solenoid valve

SCMAT6391L

   3) Is resistance within specifications?

YES

▶ Go to "Check signal circuit short inspection" procedure.

NO

▶ Check for open in harness. Repair as necessary and go to "Verification of vehicle repair" procedure.

2. Check signal circuit short inspection

   1) Ignition "OFF".

   2) Disconnect "A/T SOLENOID VALVE" connector and "PCM/TCM" connector.

   3) Measure resistance between terminal "10" of the ATM SOLENOID VALVE harness and chassis ground.

Specification: Infinite

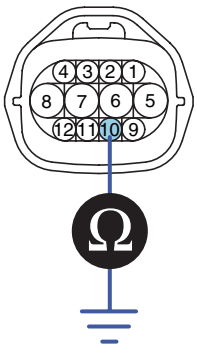

3. UD solenoid valve
4. 2ND solenoid valve
5. A/T battery
6. A/T battery
7. VF solenoid valve(+)
8. VF solenoid valve(-)
9. DCC solenoid valve
10. RED solenoid valve
11. LR solenoid valve
12. OD solenoide valve

SCMAT6392L

4) Is resistance within specifications?

YES

▶ Go to "Component inspection" procedure.

NO

▶ Check for short to ground in harness. Repair as necessary and go to "Verification of vehicle repair" procedure.

COMPONENT INSPECTION E3792D36

1. CHECK SOLENOID VALVE

1) Ignition "OFF".

2) Disconnect "A/T SOLENOID VALVE" connector.

3) Measure resistance between terminal "6" and terminal "10" of the ATM SOLENOID VALVE harness connector.

Specification: Approximately 2.7~3.4 Ω [20°C(68°F)]

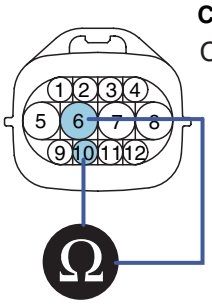

3. UD solenoid valve
4. 2ND solenoid valve
5. A/T battery
6. A/T battery
7. VF solenoid valve(+)
8. VF solenoid valve(-)
9. DCC solenoid valve
10. RED solenoid valve
11. LR solenoid valve
12. OD solenoide valve

SCMAT6393L

4) Is resistance within specification?

YES

▶ Go to "CHECK PCM/TCM" as below.

NO

▶ Replace RED SOLENOID VALVE as necessary and go to "Verification of vehicle repair" procedure.

2. CHECK PCM/TCM

   1) Connect scantool to data link connector(DLC).

   2) Ignition "ON" & Engine "OFF".

   3) Select A/T solenoid valve actuator test and operate actuator test.

   4) Can you hear operating sound for RED SOLENOID VALVE actuator testing function?

   YES

   ▶ Go to "Verification of vehicle repair" procedure.

   NO

   ▶ Replace PCM/TCM as necessary and go to "Verification of vehicle repair" procedure.

   ACTUATOR TEST CONDITION
   1. IG SWITCH ON
   2. TRANSAXLE RANGE SWITCH is normal
   3. P RANGE
   4. Vehicle Speed 0mph(0km/h)
   5. Throttle position sensor < 1V
   6. IDLE SWITCH ON
   7. ENGINE RPM 0

VERIFICATION OF VEHICLE REPAIR E65205D0

Refer to DTC P0743.

DTC P0885 A/T RELAY CIRCUIT MALFUNCTION

COMPONENT LOCATION E2FECFF8

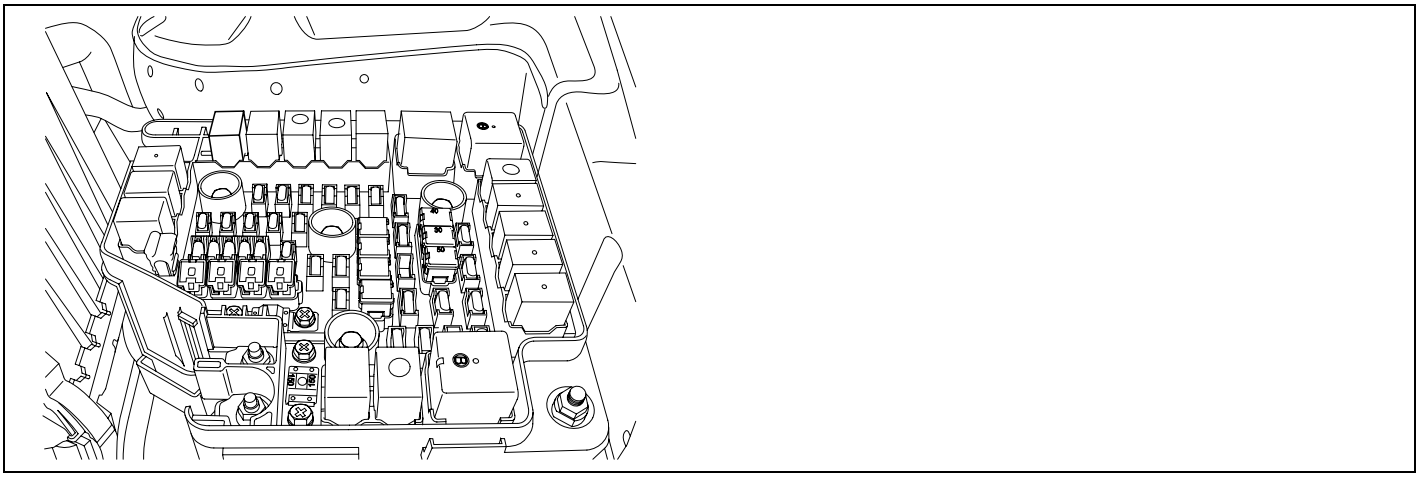

SCMAT6305D

GENERAL DESCRIPTION E879B263

The HIVEC Automatic Transmission supplies the power to the solenoid valves by way of a control relay. When the TCM sets the relay to ON, the relay operates and the battery power is supplied to all the solenoid valves. When the TCM sets the relay to OFF, all solenoid valve power is shut off and the transmission is held in the 3rd gear position. (Fail Safe Mode).

DTC DESCRIPTION E9ED9E9C

The TCM checks the A/T control relay signal by monitoring the control signal. If, after the ignition key is turned on, a voltage value that is out of specification is detected the TCM sets this code.

DTC DETECTING CONDITION E14898D7

Item	Detecting Condition	Possible cause
DTC Strategy	• Check voltage range	• Open or short in circuit • Faulty A/T control relay • Faulty PCM/TCM
Enable Conditions	• Voltage of Battery > 9V • Time after TCM turns on > 0.5sec • Voltage of A/T Relay > 9V • Not Fail Safe Status • IG "ON"	
Threshold value	• Voltage < 7V	
Diagnostic Time	• more than 0.1sec	
Fail Safe	• Locked in 3 rd gear.(control relay off)	

MONITOR SCANTOOL DATA EDBCA4E3

1. Connect scantool to data link connector(DLC).
2. Ignition "ON" & Engine "OFF".
3. Monitor the "A/T CON. RELAY VOLT" parameter on the scantool.

Specification : Approx. B+

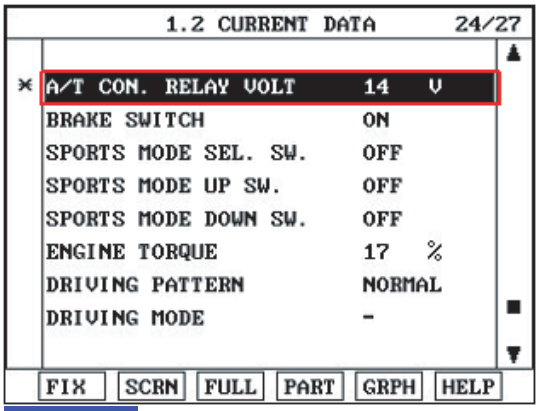

FIG.1)

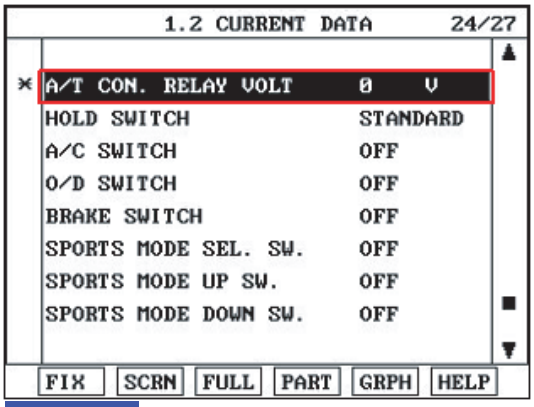

FIG.2)

FIG. 1) Normal status for "A/T RELAY"
FIG. 2) Open status for "A/T RELAY"

EKBF122A

4. Is A/T RELAY VOLT within specifications?

YES

▶ Fault is intermittent caused by poor contact in the sensor's and/or TCM(PCM)'s connector or was repaired and TCM(PCM) memory was not cleared. Thoroughly check connectors for looseness, poor connection, bending, corrosion, contamination, deterioration or damage. Repair or replace as necessary and go to "Verification of Vehicle Repair" procedure.

NO

▶ Go to "Terminal & Connector Inspection" procedure.

TERMINAL & CONNECTOR INSPECTION E145F8AD

1. Many malfunctions in the electrical system are caused by poor harness and terminal condition. Faults can also be caused by interference from other electrical systems, and mechanical or chemical damage.
2. Thoroughly check connectors for looseness, poor connection, bending, corrosion, contamination, deterioration, or damage.
3. Has a problem been found?

YES

▶ Repair as necessary and then go to "Verification of Vehicle Repair" procedure.

NO

▶ Go to "Power circuit inspection" procedure.

POWER SUPPLY CIRCUIT INSPECTION EC39BCBE

1. Ignition "ON" & Engine "OFF".
2. Disconnect the "A/T CONTROL RELAY" connector.
3. Measure the voltage between terminal "1" of the "A/T CONTROL RELAY" harness connector and chassis ground.

Specification : Approx. B+

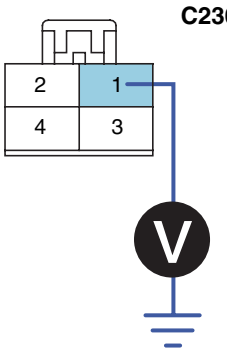

1.Battery
2.Ground
3.Battery Voltage
(Supplying Power to solenoid valve)
4.A/T control relay

SCMAT6401D

4. Is voltage within specifications?

YES

▶ Go to "Signal circuit inspection" procedure.

NO

▶ Check that A/T-20A Fuse in engine room junction is installed or not blown.
▶ Check for Open in harness. Repair as necessary and Go to "Verification of Vehicle Repair" procedure.

SIGNAL CIRCUIT INSPECTION ECBB472C

1. CHECK A/T control relay harness

   1) Ignition "OFF".

   2) Disconnect the "A/T CONTROL RELAY" connector.

   3) Measure the voltage between terminal "4" of the "A/T CONTROL RELAY" harness connector and chassis ground.

   4) Engine OFF → ON.

Specification: 12V is measured only for approx. 0.5sec

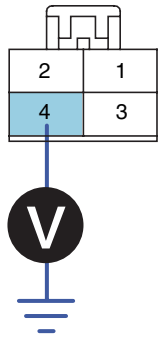

1.Battery
2.Ground
3.Battery Voltage
(Supplying Power to solenoid valve)
4.A/T control relay

SCMAT6402D

   5) Is voltage within specifications?

YES

▶ Go to "Check Supplying Power to solenoid valve" procedure.

NO

▶ Check for open in harness. Repair as necessary and Go to "Verification of Vehicle Repair" procedure.
▶ If signal circuit is OK, Substitute with a known-good PCM/TCM and check for proper operation. If the problem is corrected, replace PCM/TCM and then go to "Verification of Vehicle Repair" procedure.

2. CHECK Supplying Power to solenoid valve harness

   1) Ignition "OFF".

   2) Disconnect the "A/T CONTROL RELAY" and PCM/TCM connector.
   Measure the resistance between terminal "3" of the "A/T CONTROL RELAY" harness connector and terminal "2,3" of the PCM/TCM harness connector.

Specification : Approx. 0 Ω

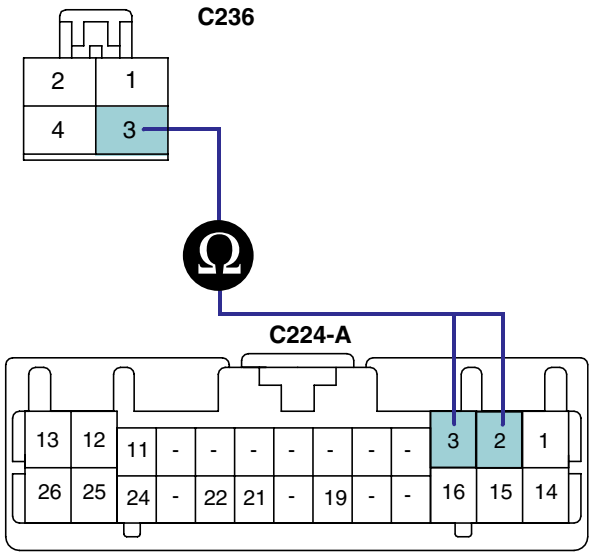

1.Battery
2.Ground
3.Battery Voltage
(Supplying Power to solenoid valve)
4.A/T control relay

2.Battery Voltage
3.Battery Voltage

SCMAT6403D

3) Is resistance within specifications?

YES

▶ Go to "Ground circuit inspection" procedure.

NO

▶ Check that A/T-20A Fuse in engine room junction is installed or not blown.
▶ Check for open in harness. Repair as necessary and Go to "Verification of Vehicle Repair" procedure.

GROUND CIRCUIT INSPECTION E8CC970F

1. Ignition "OFF".
2. Connect the "A/T CONTROL RELAY" connector.
3. Measure the resistance between terminal "2" of the "A/T CONTROL RELAY" harness connector and chassis ground.

Specification : Approx. 0 Ω

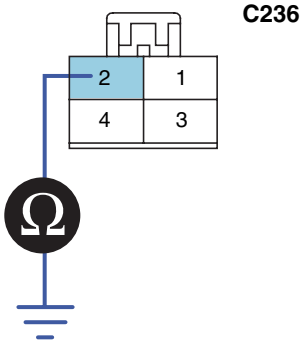

1.Battery
2.Ground
3.Battery Voltage
(Supplying Power to solenoid valve)
4.A/T control relay

SCMAT6404D

4. Is resistance within specifications?

YES

▶ Go to "Component inspection" procedure.

NO

▶ Check for open in harness. Repair as necessary and Go to "Verification of Vehicle Repair" procedure.

COMPONENT INSPECTION E49EFEFE

1. Ignition "OFF".
2. Remove "A/T CONTROL RELAY".
3. Measure the resistance between each terminal of the sensor.

Specification:

Item	Terminal No	
Resistance	1(red) - 3(black)	INFINITE
	2(black) - 4(red)	
supply(B+) to number 4 and supply (B-) to number 2	1(red) - 3(black)	0Ω

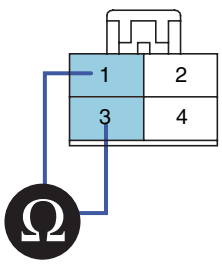

1.Battery
2.Ground
3.Battery Voltage
(Supplying Power to solenoid valve)
4.A/T control relay

SCMAT6405D

4. Is resistance with in specifications?

YES

▶ Thoroughly check connectors for looseness, poor connection, bending, corrosion, contamination, deterioration, or damage. Repair or replace as necessary and then go to "Verification of Vehicle Repair" procedure.

NO

▶ Replace ATM CONTROL RELAY and then go to "Verification of Vehicle Repair" procedure.

VERIFICATION OF VEHICLE REPAIR ED2CF808

After a repair, it is essential to verify that the fault has been corrected.

1. Connect scantool and select "Diagnostic Trouble Codes(DTCs)" mode.
2. Using a scantool, Clear DTC.
3. Operate the vehicle within DTC Enable conditions in General information.
4. Are any DTCs present ?

YES

▶ Go to the applicable troubleshooting procedure.

NO

▶ System performing to specification at this time.

DTC U0001 CAN COMMUNICATION MALFUNCTION

COMPONENT LOCATION EA761FDF

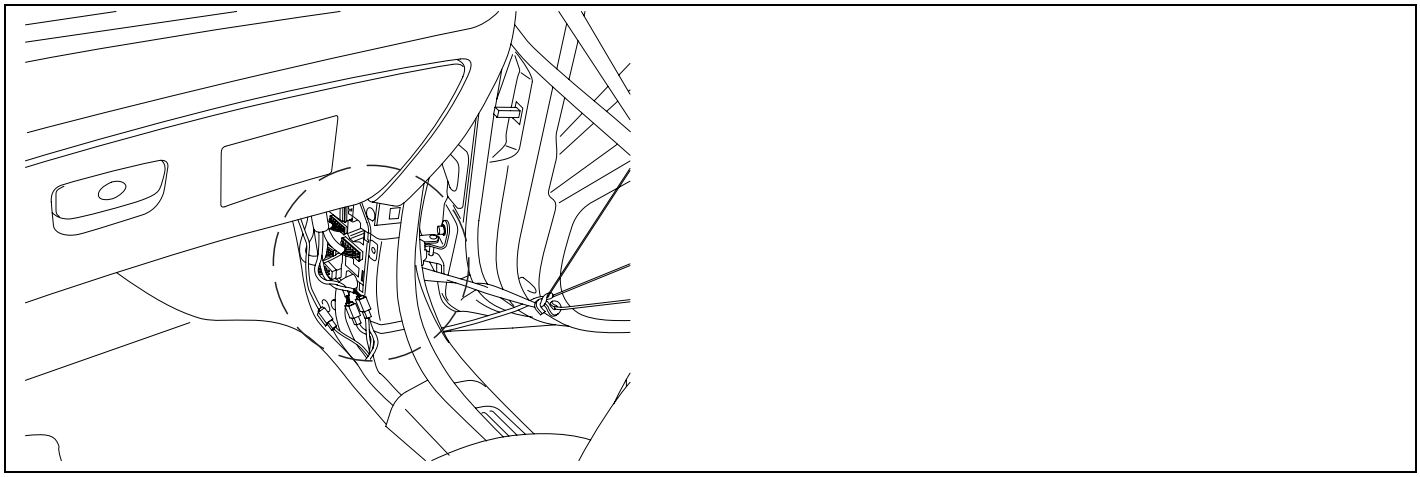

SCMAT6306D

GENERAL DESCRIPTION EBB0AD30

The TCM can either receive data from the Engine Control Module or ABS control module, or it can send data to the ECM and ABSCM by using CAN communication. The CAN communicaton is one of the vehicle communications method, which is now widely used to transfer the vehicle data.

DTC DESCRIPTION E03977FB

When the TCM cannot read the data from the ECM through the CAN-BUS line, the TCM sets this code.
CAN-BUS circuit malfunctioning or ECM can be a posssible cause of this DTC.

DTC DETECTING CONDITION EDF2BE4D

Item	Detecting Condition	Possible cause
DTC Strategy	• Check voltage range	• Open or Short in CAN communication harness • Faulty ECM • Faulty TCM
Enable Conditions	• Not Fail Safe Status • IG "ON" • Ne ≥ 100rpm	
Threshold value	• Receive a message "BUS OFF" from CAN MI-COM	
Diagnostic Time		
Fail Safe	• INTELLIGENT SHIFT and is inhibited • Learning for oil pressure control is inhibited • Torque Retard requirement is inhibited • Direct connection control of TCC is inhibited	

SIGNAL WAVEFORM E59EC1CB

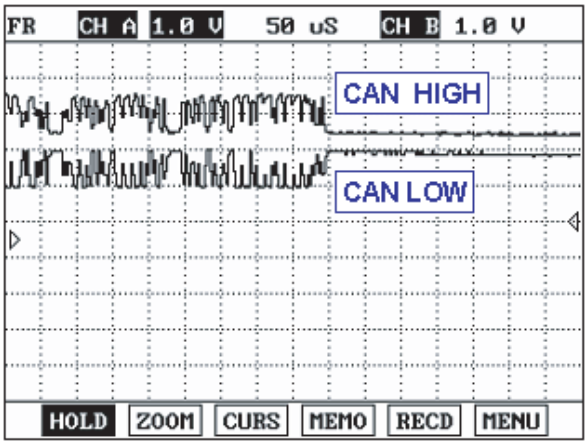

LKKG115A

MONITOR SCANTOOL DATA ED1236B5

1. Connect scantool to data link connector(DLC).
2. Engine "ON".
3. Monitor the "CAN COMMUNICATION SERVICE DATA (ENGINE RPM, VEHICLE SPEED SENSOR, THROTTLE P. SENSOR)" parameters on the scantool.

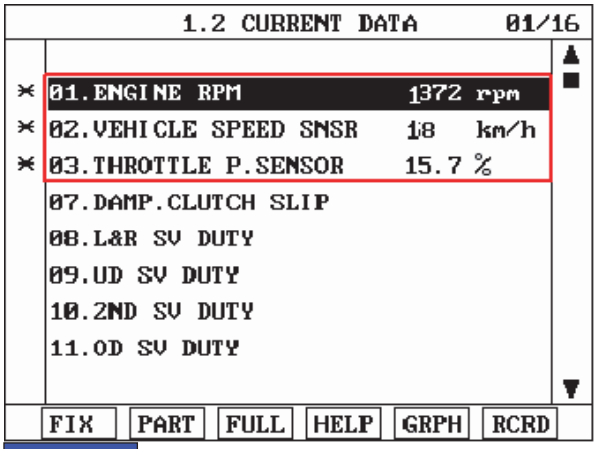

FIG.1)

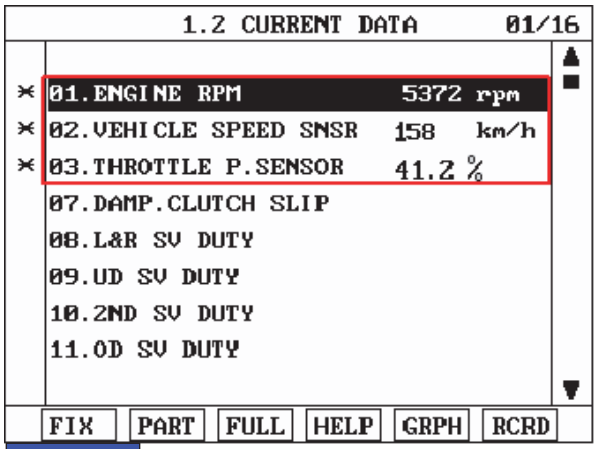

FIG.2)

FIG.1) Low-RPM

FIG.2) High-RPM

LKKG115B

4. Does "CAN BUS LINE DATA " follow the reference data?

YES

▶ Fault is intermittent caused by poor contact in the sensor's and/or TCM(PCM)'s connector or was repaired and TCM(PCM) memory was not cleared. Thoroughly check connectors for looseness, poor connection, bending, corrosion, contamination, deterioration or damage. Repair or replace as necessary and go to "Verification of Vehicle Repair" procedure .

NO

▶ Go to "Terminal & Connector Inspection" procedure.

TERMINAL & CONNECTOR INSPECTION EF5197C6

1. Many malfunctions in the electrical system are caused by poor harness and terminals. Faults can also be caused by interference from other electrical systems, and mechanical or chemical damage.
2. Thoroughly check connectors for looseness, poor connection, bending, corrosion, contamination, deterioration, or damage.
3. Has a problem been found?

YES

▶ Repair as necessary and then go to "Verification of Vehicle Repair" procedure .

NO

▶ Go to "Signal circuit inspection" procedure .

SIGNAL CIRCUIT INSPECTION E123A3DB

1. Ignition "ON" & Engine "OFF".
2. Disconnect the "TCM" and "ABS ECM" connector.
3. Measure Resistence between terminal 3 and 4 of the TCM harness connector.

Specification : Approx. 120 ± 10 Ω

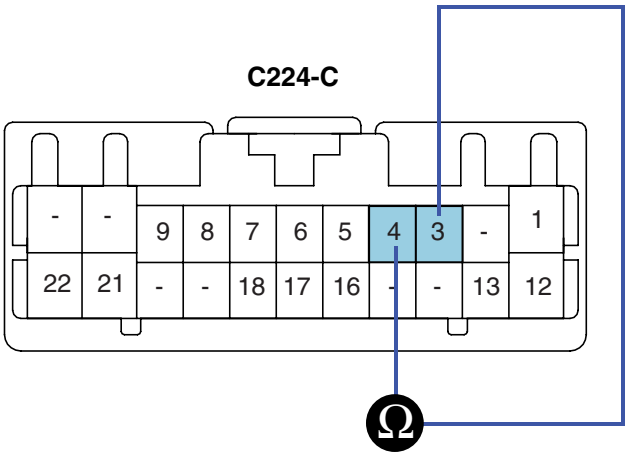

SCMAT6411L

4. Is measured resistance within specifications?

YES

▶ Substitute with a known-good PCM/TCM and check for proper operation. If the problem is corrected, replace PCM/TCM as necessary and then go to "Verification of Vehicle Repair" procedure.

NO

▶ Check connectors for looseness, poor connection, bending, corrosion, contamination, deterioration or damage of ECM.and then Repair or replace Resistance for CAN communication as necessary and go to "Verification of Vehicle Repair" procedure .

VERIFICATION OF VEHICLE REPAIR E9FE64EC

After a repair, it is essential to verify that the fault has been corrected.

1. Connect scan tool and select "Diagnostic Trouble Codes(DTCs)" mode.
2. Using a scantool, Clear DTC.
3. Operate the vehicle within DTC Enable conditions in General information.
4. Are any DTCs present?

YES

▶ Go to the applicable troubleshooting procedure.

NO

▶ System performing to specification at this time.

DTC U0100 CAN MI-COM OR CIRCUIT MAL.

COMPONENT LOCATION ECCDDB76

Refer to DTC U0001.

GENERAL DESCRIPTION EC72F81B

Refer to DTC U0001.

DTC DESCRIPTION E328681E

Refer to DTC U0001.

DTC DETECTING CONDITION EDCB1F3F

Item	Detecting Condition	Possible cause
DTC Strategy	• Check voltage range	• Open or Short in CAN communication harness • Faulty ECM • Faulty TCM
Enable Conditions	• Not Fail Safe Status • IG "ON" • Ne ≥ 100rpm	
Threshold value	• Receive a message "BUS OFF" from CAN MI-COM	
Diagnostic Time	• More than 1.5 sec	
Fail Safe	• INTELLIGENT SHIFT and is inhibited • learning for oil pressure control is inhibited • Torque Retard requirement is inhibited • direct connection control of TCC is inhibited	

SIGNAL WAVEFORM E59B3434

Refer to DTC U0001.

MONITOR SCANTOOL DATA EFAF8C87

1. Connect scantool to data link connector(DLC).
2. Engine "ON".
3. Monitor the "CAN COMMUNICATION SERVICE DATA (ENGINE RPM, VEHICLE SPEED SENSOR, THROTTLE P. SENSOR)" parameters on the scantool.

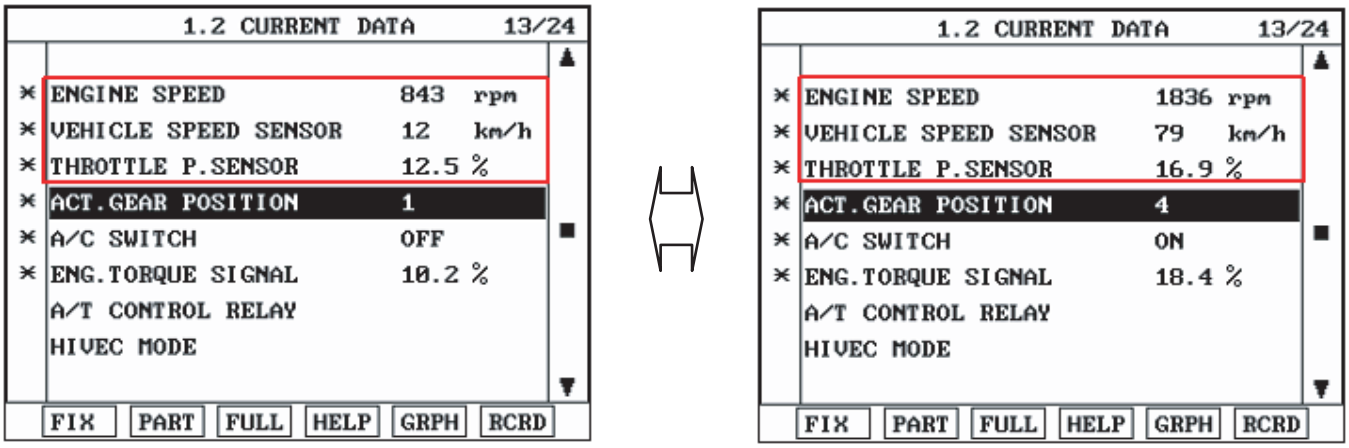

LKKG115D

4. Does "CAN BUS LINE DATA " follow the reference data?

YES

▶ Fault is intermittent caused by poor contact in the sensor's and/or TCM(PCM)'s connector or was repaired and TCM(PCM) memory was not cleared. Thoroughly check connectors for looseness, poor connection, bending, corrosion, contamination, deterioration or damage.Repair or replace as necessary and go to "Verification of Vehicle Repair" procedure.

NO

▶ Go to "Terminal & Connector Inspection" procedure.

TERMINAL & CONNECTOR INSPECTION EEE2E73F

Refer to DTC U0001.

SIGNAL CIRCUIT INSPECTION EEB48E26

Refer to DTC U0001.

VERIFICATION OF VEHICLE REPAIR E85CE21D

Refer to DTC U0001.

AUTOMATIC TRANSAXLE

COMPONENTS (1) E8DDBB36

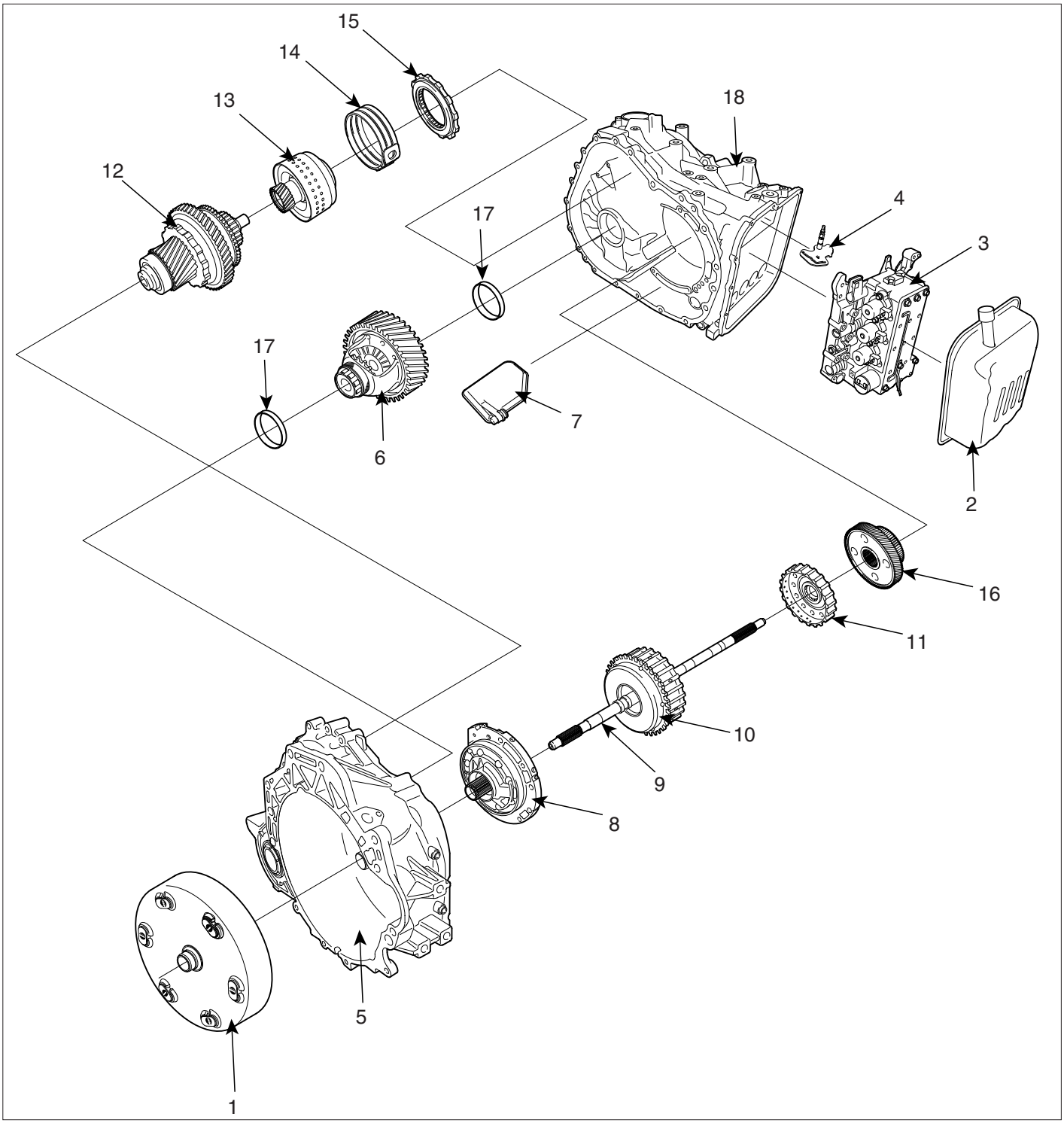

1. Torque converter
2. Valve body cover
3. Valve body assembly
4. Manual control shaft assembly
5. Converter housing
6. Differential assembly
7. Main oil filter
8. Oil pump
9. Input shaft
10. Underdrive clutch assembly
11. Underdrive clutch hub
12. Direct planetary carrier assembly
13. Direct clutch assembly
14. Reduction brake band
15. One way clutch
16. Transfer drive gear
17. Differential bearing case
18. Transaxle case

LKKG001A

COMPONENTS (2)

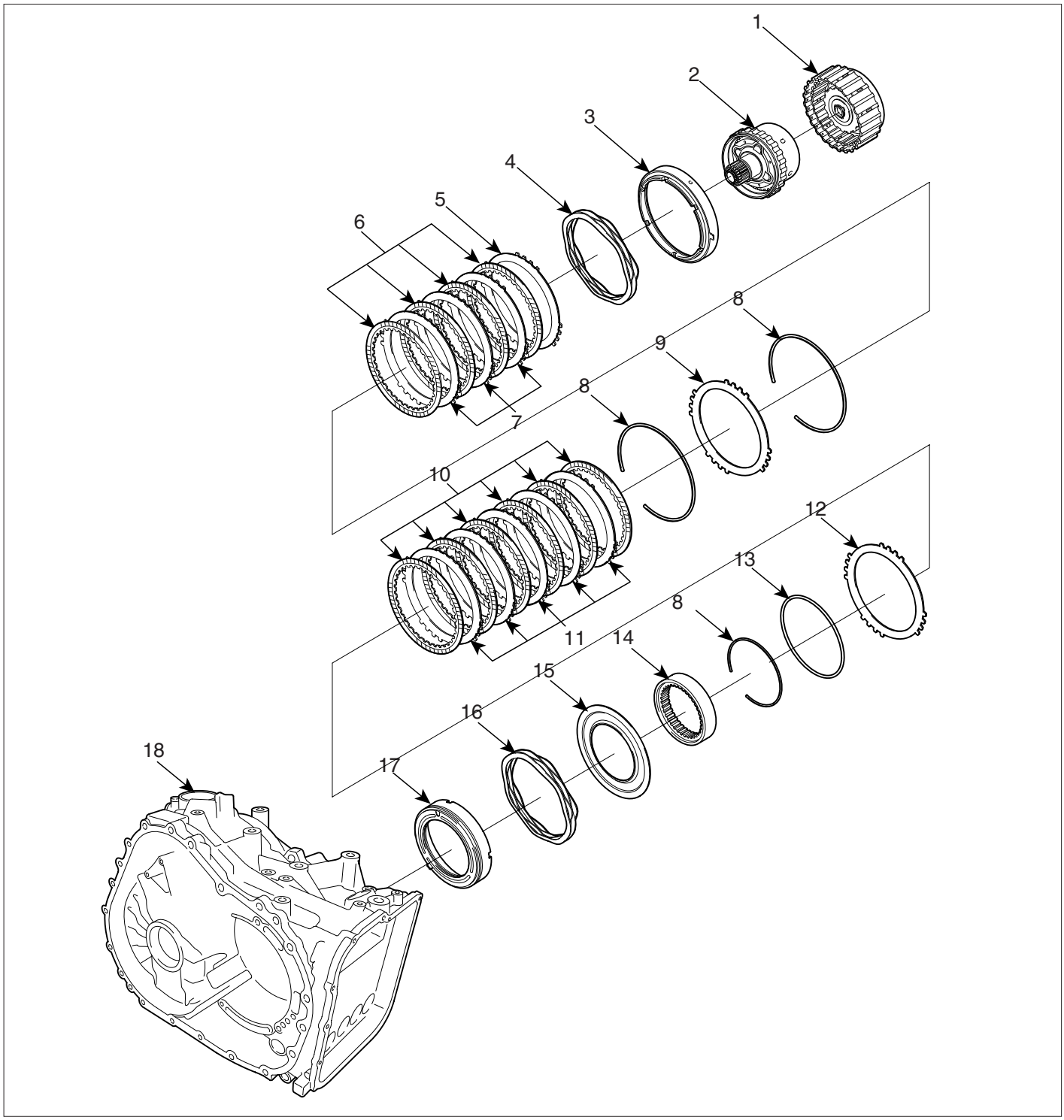

1. Reverse sun gear
2. Planetary gear assembly
3. 2nd brake retainer
4. 2nd brake return spring
5. 2nd brake pressure plate
6. 2nd brake discs
7. 2nd brake plates
8. Snap ring
9. Brake reaction plate
10. Brake discs
11. Brake plates
12. Low&Reverse brake pressure plate
13. Wave spring
14. Oneway clutch inner race
15. Brake spring retainer
16. Low&Reverse brake return spring
17. Low&Reverse brake piston
18. Transaxle case

LKKG001B

REMOVAL EFF4FD42

CAUTION

- ***Use a cover not to damage the vehicle surface.***
- ***Disconnect connectors carefully not to be damaged.***

NOTE

- *Mark wires or hoses for identification.*

1. Remove the inter cooler and the engine cover. (see EM group)
2. Remove the battery (A).

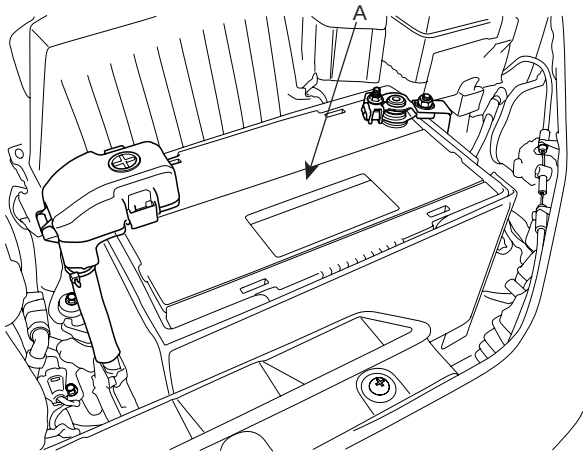

SCMAT6001D

3. Disconnect the AFS connector (A).

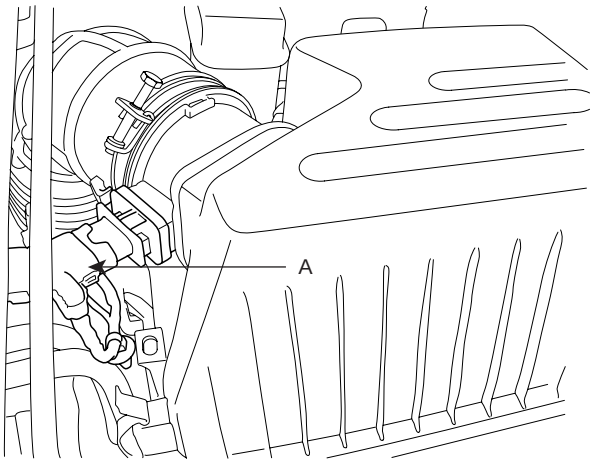

SCMMT6002D

4. Remove the air cleaner upper cover (B) by loosening the clamp bolt (A) and the clips.

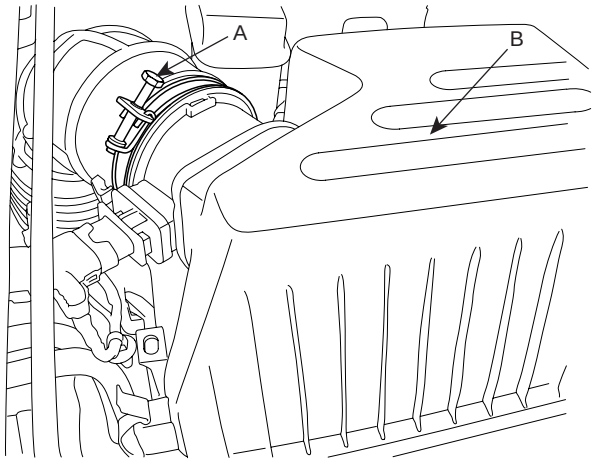

SCMMT6060D

5. Remove the air cleaner lower part (B) by removing the two mounting bolts (A).

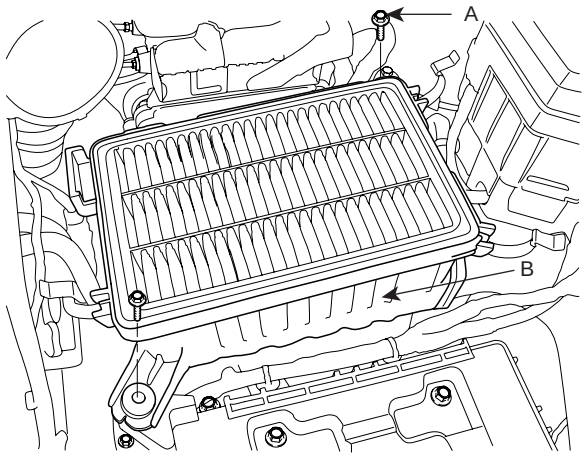

SCMMT6004D

6. Remove the battery tray (B) by removing the four mounting bolts (A).

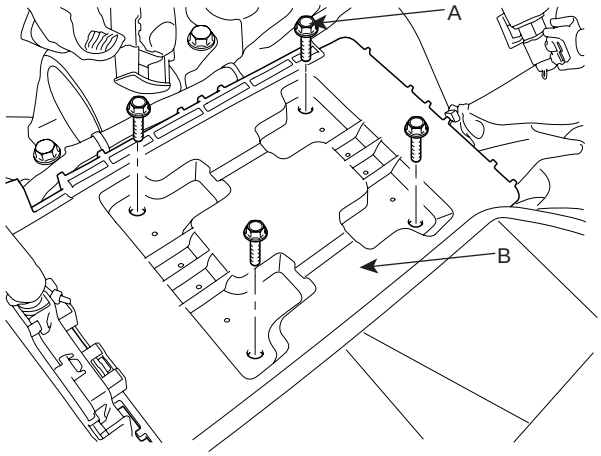

SCMAT6006D

7. Disconnect the transaxle wire harness connectors.

1) Remove the inhibiter switch connector (A).

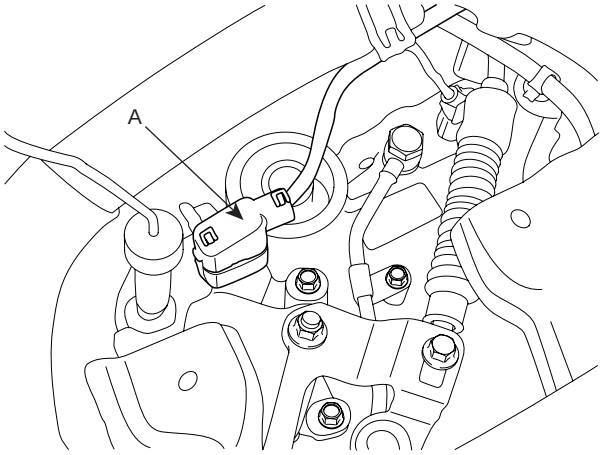

SCMAT6007D

2) Remove the solenoid valve connector (A).

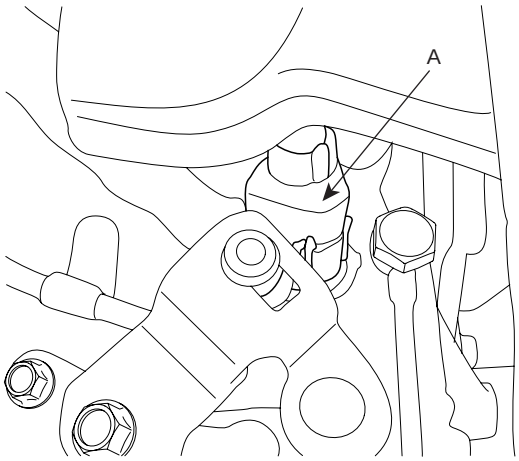

SCMAT6008D

3) Remove the input speed sensor connector (A).

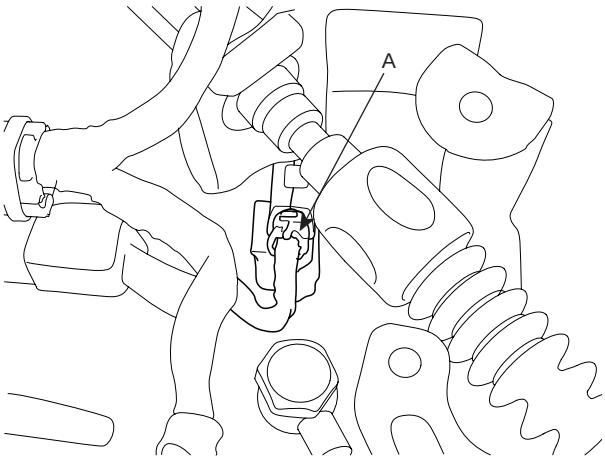

SCMAT6009D

4) Remove the output speed sensor connector (A).

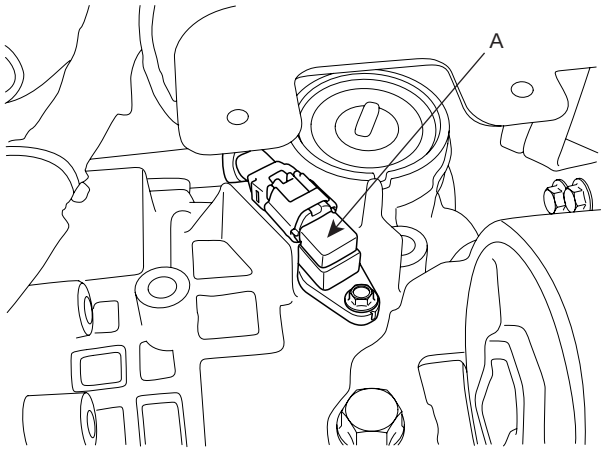

SCMAT6010D

5) Remove the vehicle speed sensor connector (A).

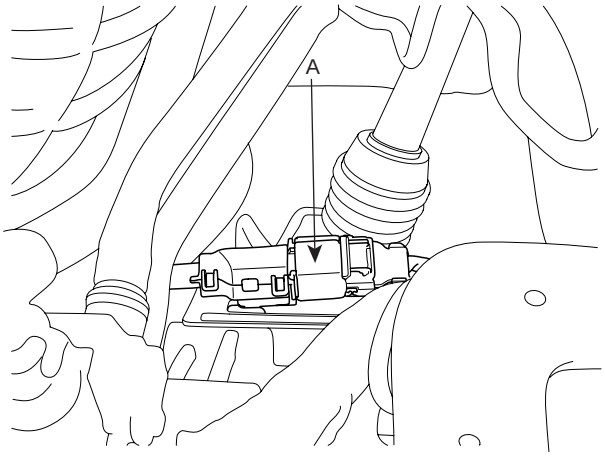

SCMAT6011D

8. Remove the control cable assembly(C) by removing the nut (A) and clip (B).

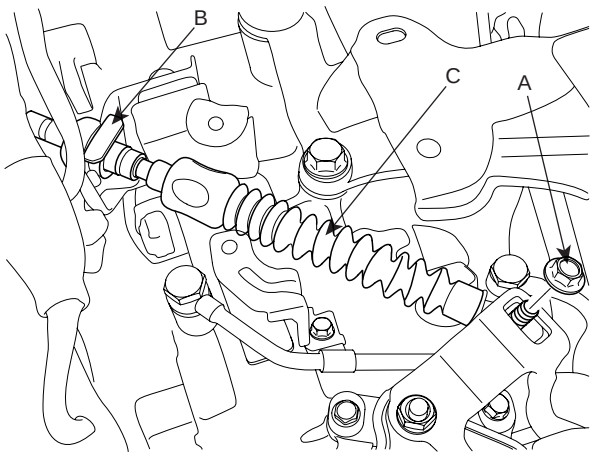

SCMAT6012D

9. Disconnect the transaxle oil cooler hoses (B) from the tubes by loosening the clamps (A).

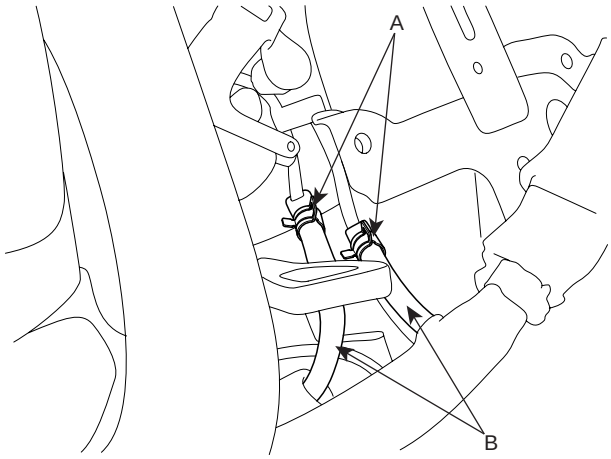

SCMAT6013D

10. Remove the transaxle mounting bolts (A).

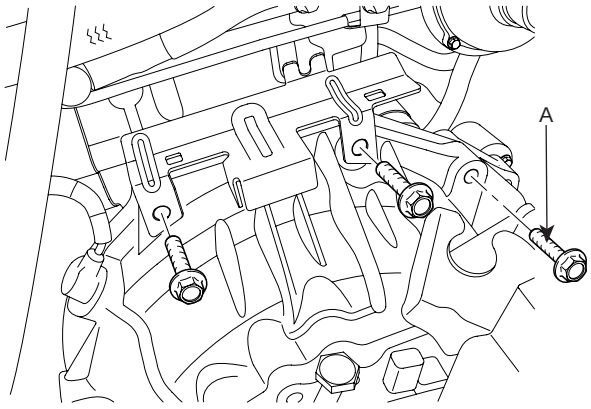

AKKF002O

11. Remove the starter motor by disconnecting the connector. (see EE group)

12. Using the SST(09200-38001), hold the engine and transaxle assembly safely.

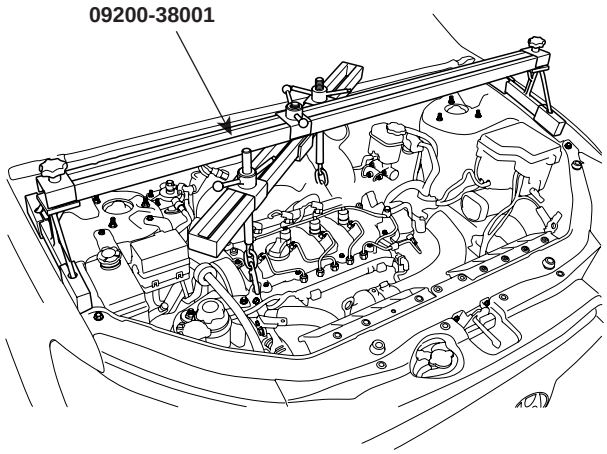

SCMAT6014D

13. Remove the transaxle insulator mounting bolts (A).

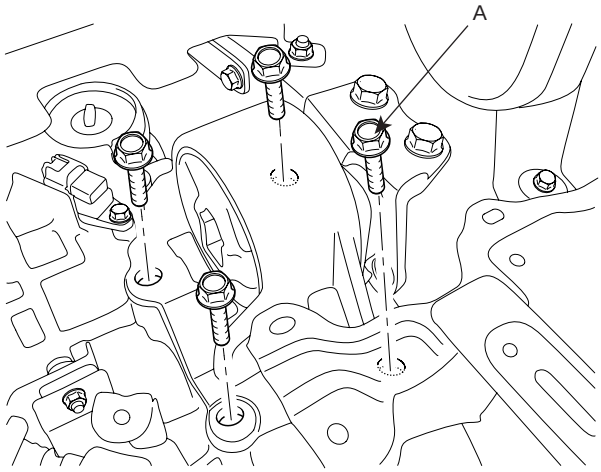

SCMAT6015D

14. Remove the front wheels. (see SS group)

15. Lift up the vehicle.

16. Remove the power steering column joint bolt and the EPS connector. (see ST group)

17. Remove the under cover (A).

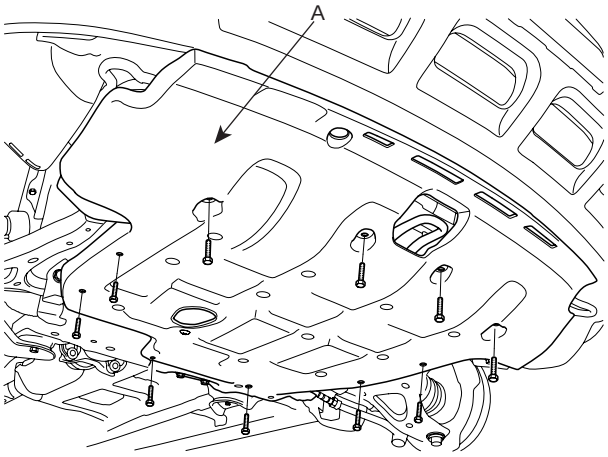

SCMAT6016D

18. Drain the transaxle fluid.

19. Drain power steering fluid through the return tube (A). (see ST group)

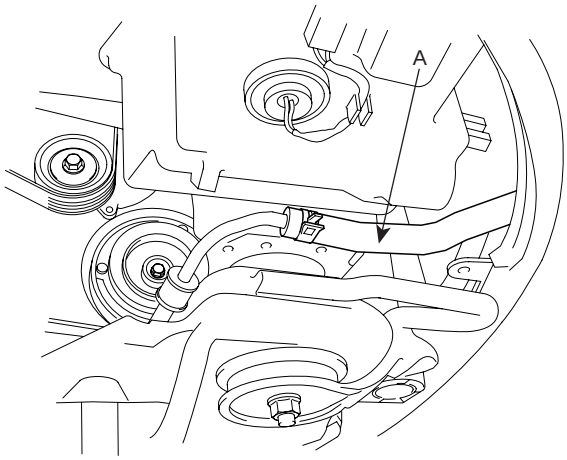

SCMAT6010L

20. Disconnect the power steering pressure tube (A) from the power steering oil pump.

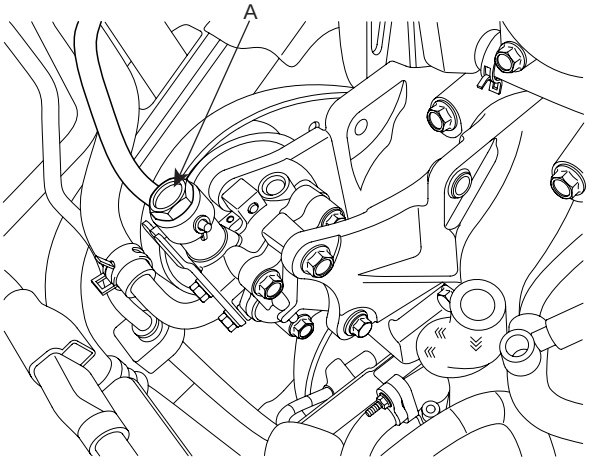

SCMAT6018D

21. Disconnect the lower arm, the tie rod end ball joint, the stabilizer bar link from the front knuckle. (see SS group)

22. Remove the roll stopper mounting bolts.

23. Remove the mounting bolts from the sub frame by supporting the sub frame with a jack. (see SS group)

24. Remove drive shaft from transaxle. (see DS group).

25. Install a jack for supporting the transaxle assembly.

26. In case of 4WD, remove the transfer case assembly. (see MT group's 'Transfer case')

27. Remove the drive plate bolts (A) and the transaxle lower mounting bolts (B-4EA).

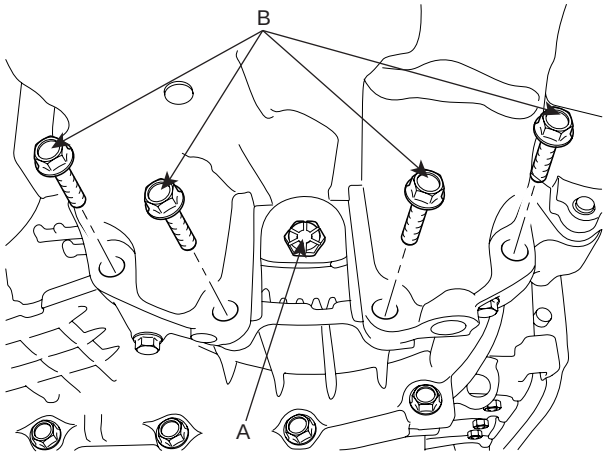

SCMAT6019D

28. Lifting the vehicle up and lowering the jack slowly, remove the transaxle assembly.

INSTALLATION E02F548D

Installation is in the reverse order of removal.
Perform the following :

- Adjust the shift cable.
- Refill the transaxle with fluid.
- Refill the radiator with engine coolant.
- Bleed air from the cooling system with the heater valve open.
- Clean the battery posts and cable terminals with sandpaper, assemble them, and apply grease to prevent corrosion.

1. Lowering the vehicle or lifting up a jack, install the transaxle assembly.

2. Tighten the transaxle lower mounting bolts (B-4EA).

TORQUE:
65~85 Nm(6.5~8.5 kgf.m, 47.0~61.5 lb-ft)

3. Install the drive plate bolts (A) by turning the timing gear.

TORQUE:
46~53 Nm(4.6~5.3 kgf.m, 33.3~38.3 lb-ft)

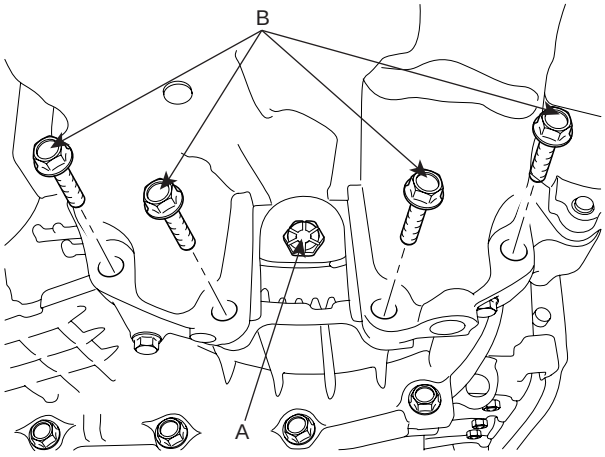

SCMAT6019D

4. In case of 4WD, install the transfer case assembly. (see MT group's 'Transfer case')

5. After removing a jack, insert the drive shafts. (see DS group)

6. Install the sub frame. (see SS group).

7. Tighten the roll stopper mounting bolts.

TORQUE:
90~110 Nm(9~11 kgf.m, 65.1~79.5 lb-ft)

8. Connect the lower arm, the tie rod end ball joint, the stabilizer bar link to the front knuckle. (see SS group)

9. Install the under cover (A).

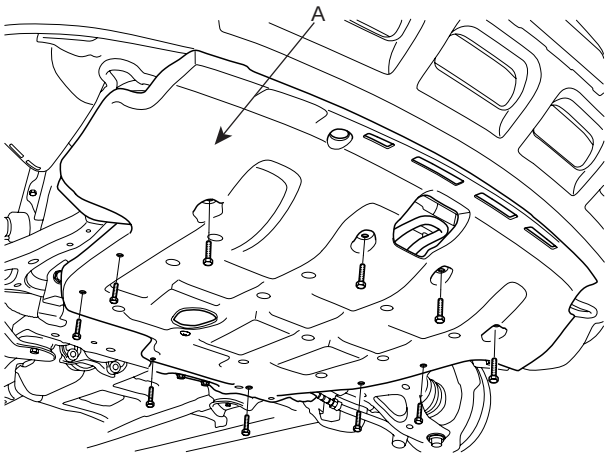

SCMAT6016D

10. Install the steering column joint bolt and the EPS connector. (see ST group)

11. Connect the return tube(A) with a clamp. (see ST group)

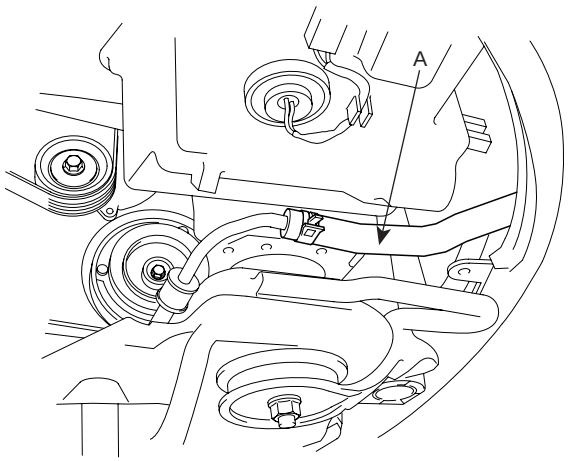

SCMAT6010L

12. Install the front wheels and tires.

13. Tighten the transaxle insulator mounting bolt (A).

TORQUE:
90~110 Nm(9~11 kgf.m, 65.1~79.5 lb-ft)

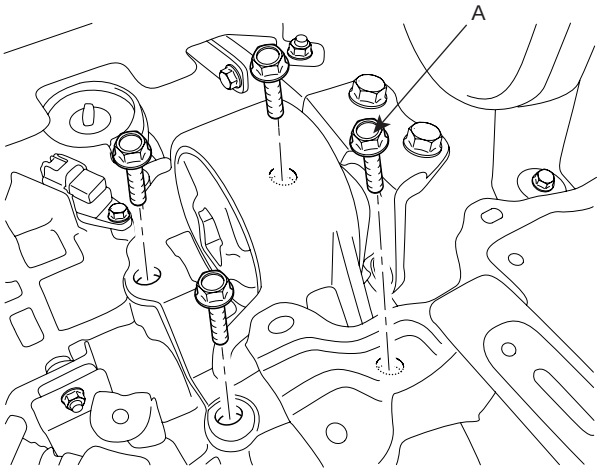

SCMAT6015D

14. Tighten the transaxle mounting bolts (A).

TORQUE:
43~55 Nm(4.3~5.5 kgf.m, 31.1 ~ 39.7 lb-ft)

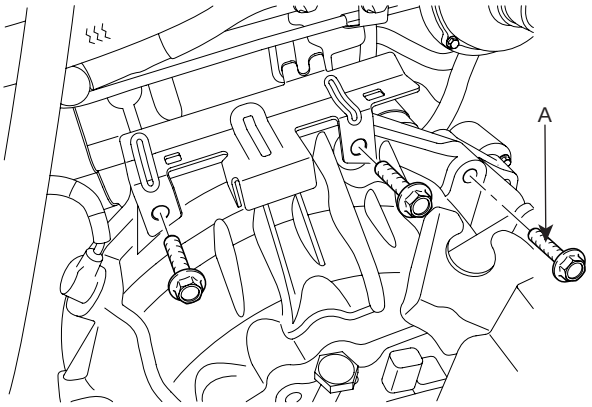

AKKF002O

15. Remove the SST (09200-38001) holding the engine and transaxle assembly.

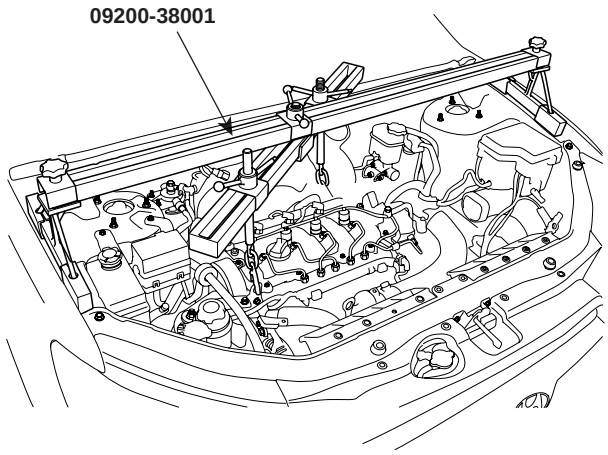

SCMAT6014D

16. Install the starter motor. (see EE group).

TORQUE:
65~85 Nm(6.5~8.5 kgf.m, 47.0~61.5 lb-ft)

17. Connect the power steering pressure tube (A) to the power steering oil pump.

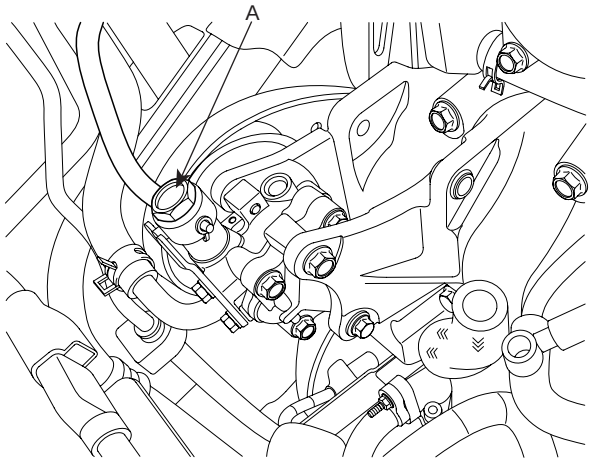

SCMAT6018D

18. Connect the transaxle oil cooler hoses (A) to the tubes by fastening the clamps (B).

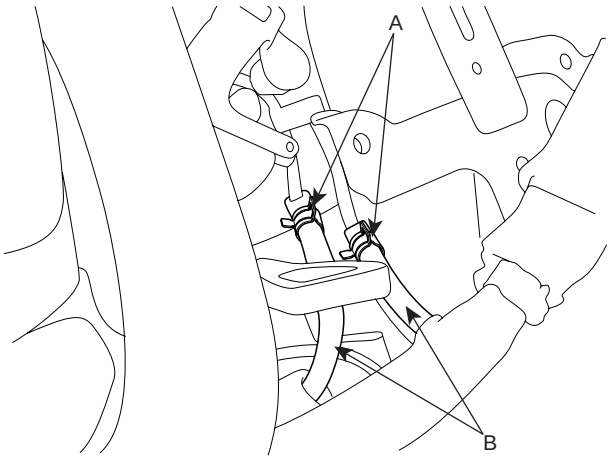

SCMAT6013D

19. Install the control cable assembly(C) by tightening the nut (A) and clip (B).

TORQUE:
10~14 Nm(1.0~1.4 kgf.m, 7.2~10.1 lb-ft)

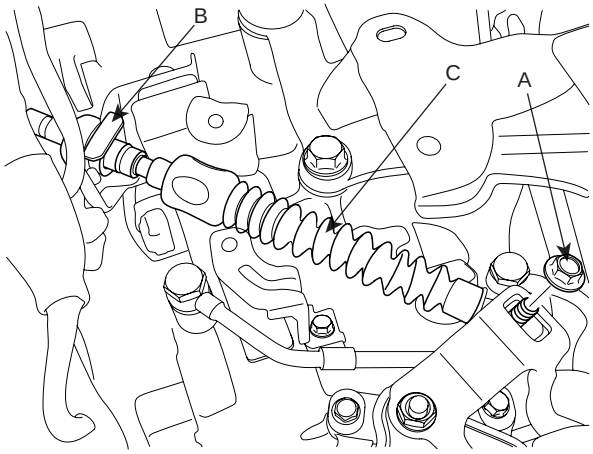

SCMAT6012D

20. Connect the transaxle wire harness connectors.

1) Install the inhibiter switch connector (A).

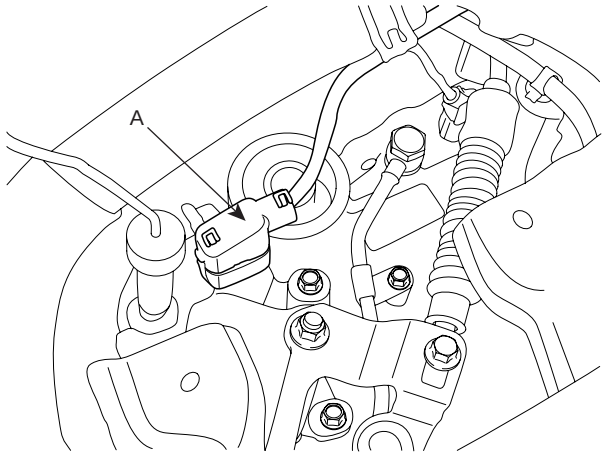

SCMAT6007D

2) Install the solenoid valve connector (A).

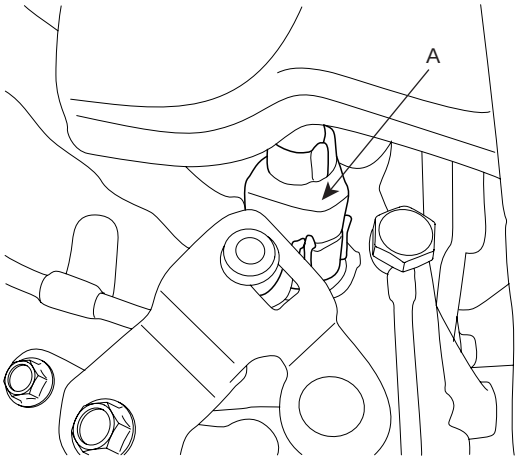

SCMAT6008D

3) Install the input speed sensor connector (A).

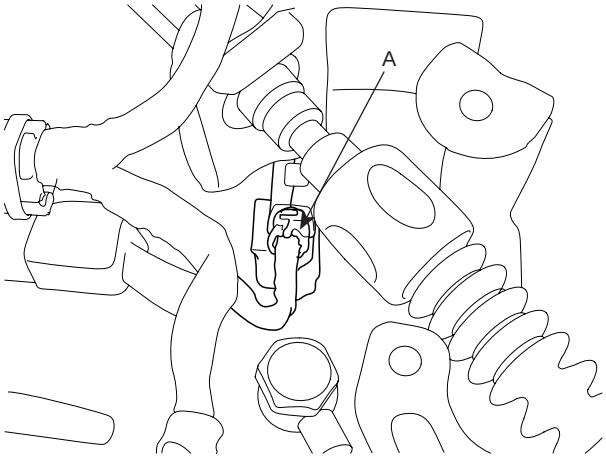

SCMAT6009D

4) Install the output speed sensor connector (A).

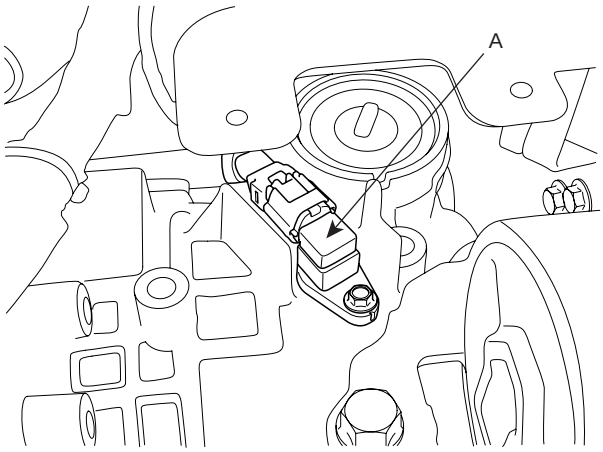

SCMAT6010D

5) Install the vehicle speed sensor connector (A).

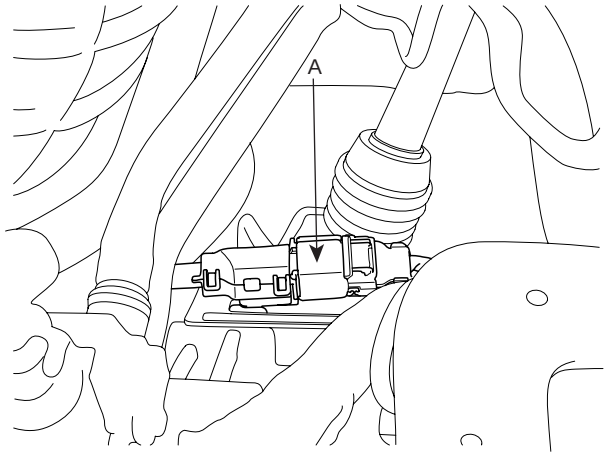

SCMAT6011D

21. Install the battery tray (B) by tightening the four mounting bolts (A).

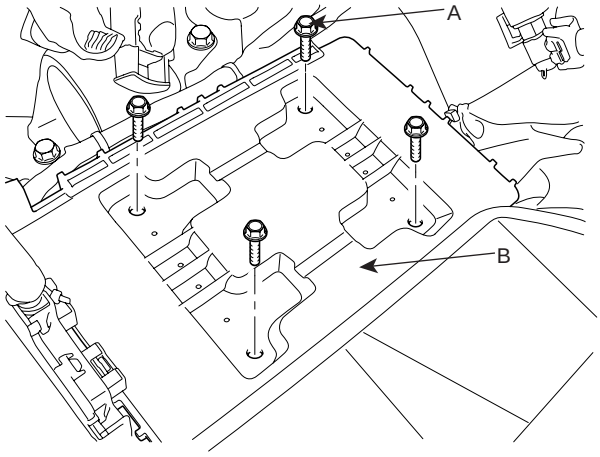

SCMAT6006D

22. Install the air cleaner lower part (B) by installing the two mounting bolts (A).

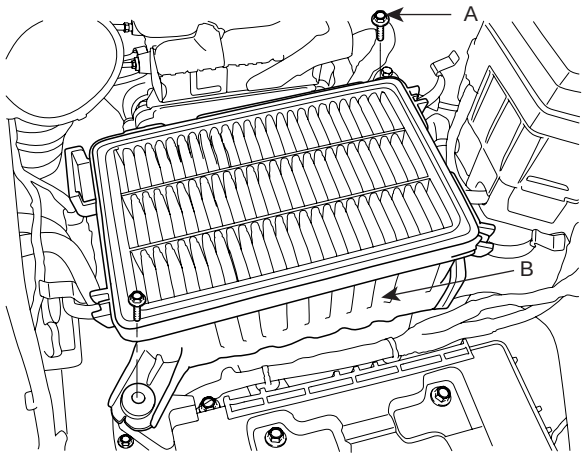

SCMMT6004D

23. Install the air cleaner upper cover (B) by fastening the clamp bolt (A) and the clips.

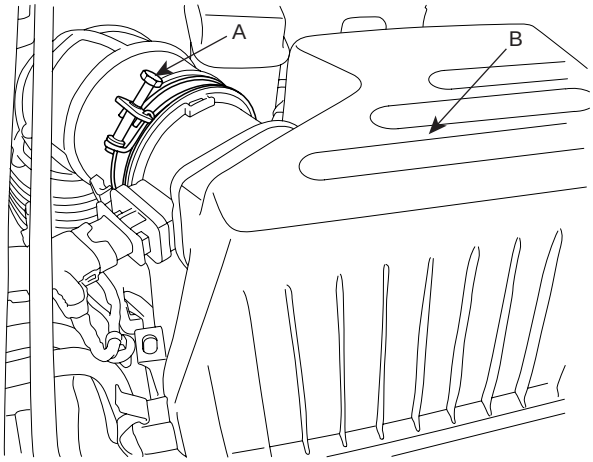

SCMMT6060D

24. Connect the AFS connector (A).

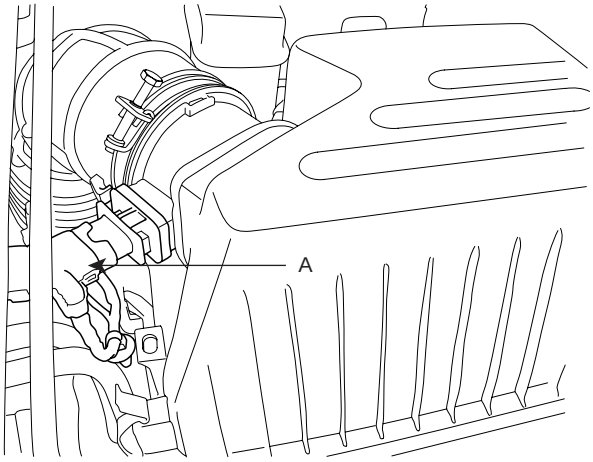

SCMMT6002D

25. Install the battery (A).

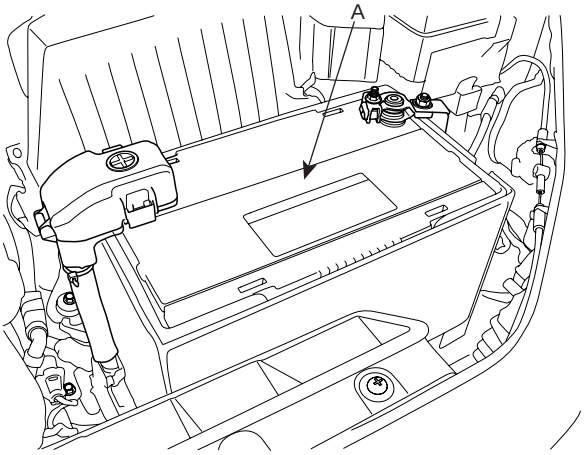

SCMAT6001D

26. Refill the transaxle fluid. (see 'Service adjustment procedure')

27. Refill the power steering fluid. (see 'ST' group)

CAUTION

After installing the inter cooler assembly, bleed the air in the system.

28. Install the engine cover and the inter cooler assembly. (see 'EM' group)

NOTE

When replacing the automatic transaxle, reset the automatic transaxle's values by using the High- Scan Pro.

a. Connect the Hi-Scan Pro connector to the data link connector under the crash pad and power cable to the cigar jack under the center facia.
b. Turn the ignition switch on and power on the Hi-Scan Pro.
c. Select the vehicle's name.
d. Select 'AUTOMATIC TRANSAXLE'.

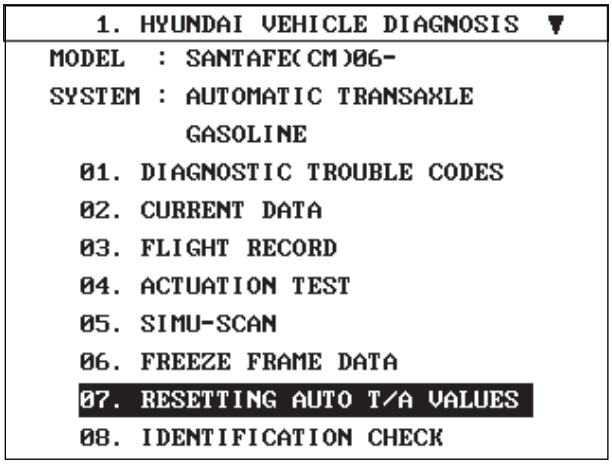

SCMAT6511L

e. Select 'RESETTING AUTO T/A VALUES' and perform the procedure.

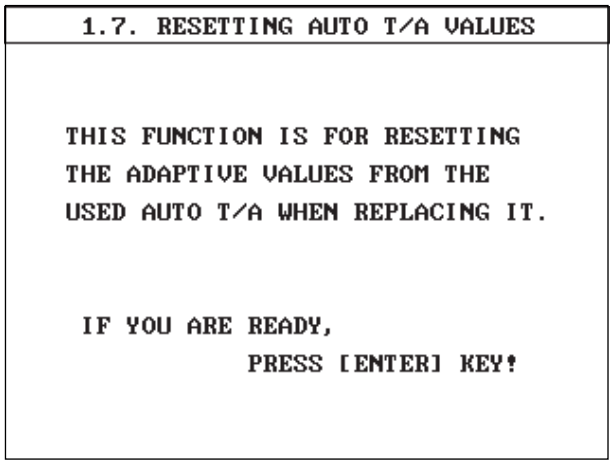

SCMAT6512L

f. Perform the procedure by pressing F1 (REST).

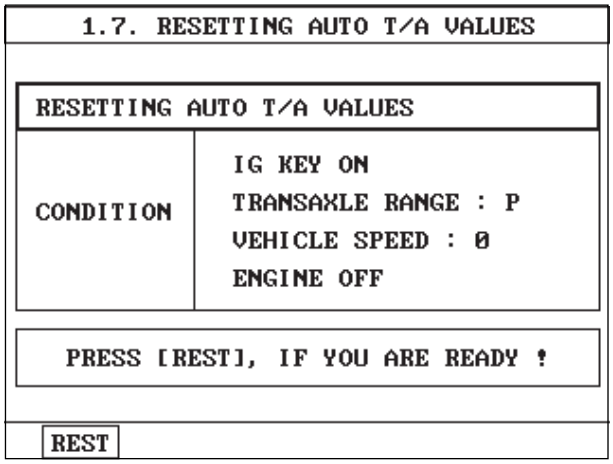

SCMAT6513L

AUTOMATIC TRANSAXLE CONTROL SYSTEM

SOLENOID VALVE

DESCRIPTION E2DBB4CE

TCM calculates the best condition using the information from all kinds of sensors. If the solenoid valve receives the information on the oil pressure, the solenoid valve actuates according to the driving signal. All kinds of regulators in the valve body are controlled to change the oil passage and also the line pressure is controlled by TCM.

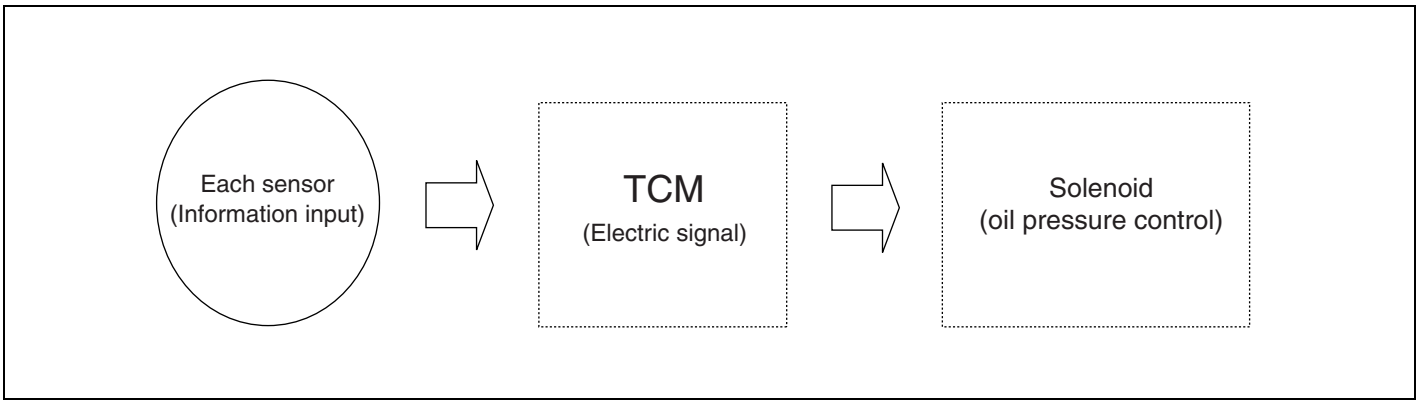

BKGF017A

● **PWM (Pluse Width Modulation) SOLENOID VALVE**

Structure and functions

PWM solenoid valve is composed of five solenoid valves and the oil capacity in the solenoid valve is changed by the electric duty value of TCM. The oil pressure of the valve body and the torque converter engages or disengages the damper clutch. The solenoid valves send the operating oil pressure to the clutches and brakes at the each range and also control the strength and weakness of oil pressure to reduce the shock when shifting the range.

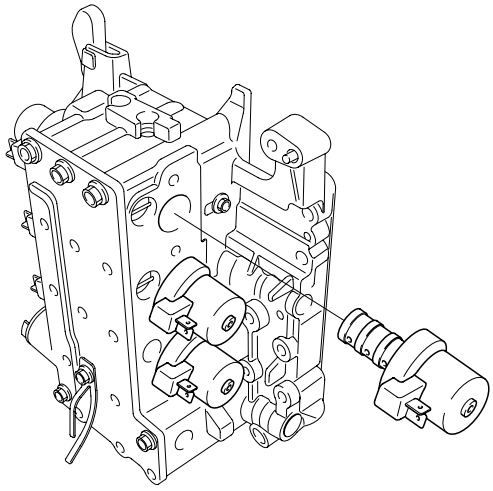

<PWM Solenoid valve>

SCMAT6002L

C209

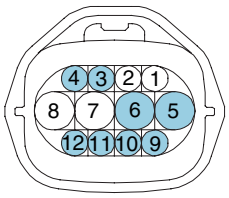

1.Fluid temperature sensor
2.Fluid temperature sensor ground
3.UD Solenoid valve
4.2ND Solenoid valve
5.A/T battery
6.A/T battery
7.A/T battery
8.VF Solenoid valve ground
9.DCC Solenoid valve
10.RED Solenoid valve
11.LR Solenoid valve
12.OD Solenoid valve

SCMAT6001L

PWM (PLUSE WIDTH MODULATION) SOLENOID

Range	PWM solenoid valve				
	PCSV-A (SCSV-B)	PCSV-B (SCSV-C)	PCSV-C (SCSV-D)	PCSV-D (TCC SV)	ON, OFF (SCSV-A)
N, P	OFF	ON	ON	OFF	ON
1st	ON	ON	OFF	OFF	ON
2nd	ON	OFF	OFF	ON	OFF
3rd	OFF	ON	OFF	ON	OFF
4th	OFF	OFF	ON	ON	OFF
Reverse	OFF	OFF	ON	OFF	ON
LOW	OFF	ON	OFF	OFF	ON

PWM (PLUSE WIDTH MODULATION) SOLENOID VALVE CONTROL FEATURE

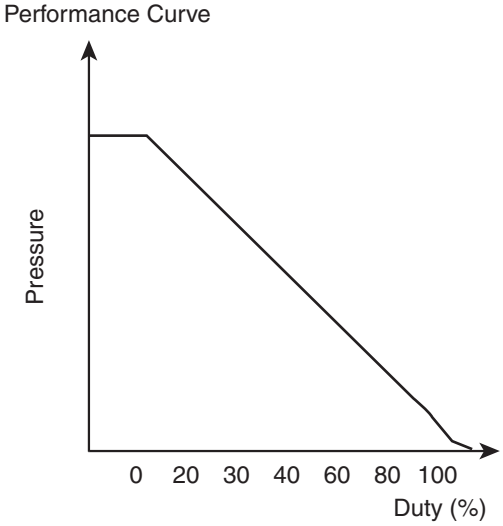

<PWM Solenoid valve performance curve>

BKGF017D

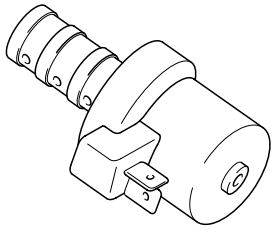

<PWM Solenoid valve form>

SCMAT6003L

PWM solenoid valve is controlled linearly according to the duty ratio.

Item	Contents
Type	3way & Normal High
Input resistance	12V
Coil resistance	3.2±0.2Ω
Pulse	50HZ

REMOVAL E91C4C3C

1. Remove the battery terminal.
2. Lift the vehicle.
3. Remove the splash shield.
4. Loosen the drain plug and drain the transaxle oil.
5. Remove the valve body cover.
6. Disconnect the solenoid valve connectors.
7. Remove the solenoid valve(B-6EA) by removing the supporting bracket(A).

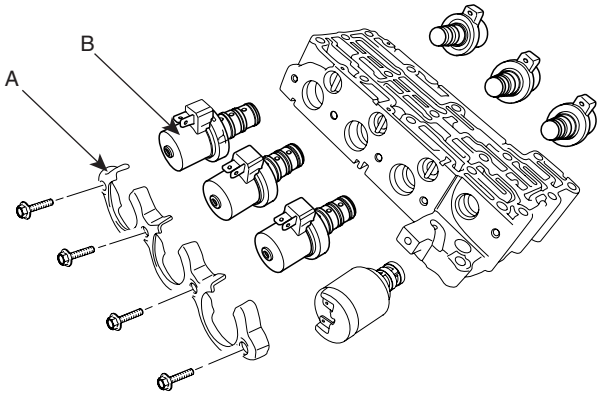

SCMAT6033D

INSTALLATION EFD8F825

1. Install the solenoid valve(B-6EA) and the supporting bracket(A).

   CAUTION

   Apply the ATF oil or White Vaseline to the O-ring not to be damaged.

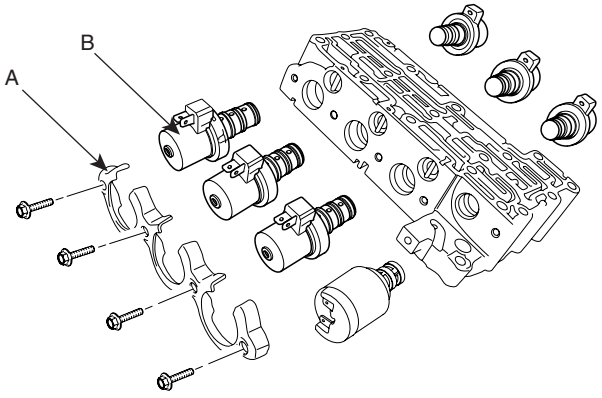

SCMAT6033D

2. Connect the solenoid valve connector.

   CAUTION

   When connecting the solenoid valve connector, check the connector for rust, dirt, or oil, then re-connect it.

3. Continue to apply liquid gasket at application points at the valve body cover with Ø2.5mm (0.098in) thickness.

Liquid gasket Part name : Threebond 1281B

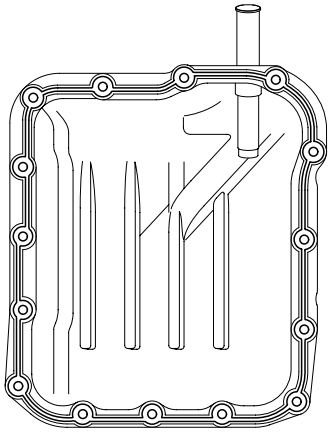

SCMAT6052D

4. Tighten the mounting bolt with the specified torque after installing the valve body cover.

TORQUE : 10~12Nm(1.0~1.2kgf.m, 7~8lb-ft)

5. Install the drain plug and refill the transaxle fluid.

TORQUE : 35~45Nm(3.5~4.5kgf.m, 25~32lb-ft)

6. Install the splash shield.
7. Lower the vehicle and install the battery terminal.

VFS(VARIABLE FORCE SOLENOID) VALVE

DESCRIPTION E9FA1D98

VFS valve controls the regulator valve and varies the line pressure from 4.5bar to 10.5bar according to the throttle open angle and the shift range. The holder is installed on the upper side of the case and the filter is installed to the two places on the holder outside to prevent in the strange material from flowing in the VFS.

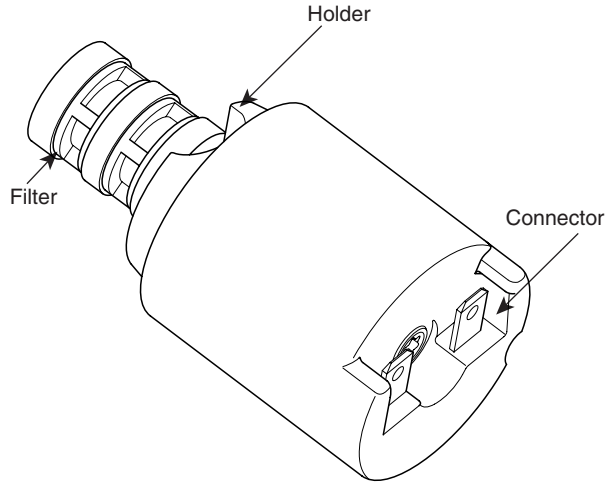

<VFS assembly >

SCMAT6011L

PWM solenoid valve is controlled linearly according to the current value.

Item	Contents
type	3way & Normal High
Input resistance	12V
Coil resistance	3.5 ± 0.2 Ω
Operating current	0 ~ 1200 mA
Pulse	50HZ



1.Fluid temperature sensor
2.Fluid temperature sensor ground
3.UD Solenoid valve
4.2ND Solenoid valve
5.A/T battery
6.A/T battery
7.A/T battery
8.VF Solenoid valve ground
9.DCC Solenoid valve
10.RED Solenoid valve
11.LR Solenoid valve
12.OD Solenoid valve

SCMAT6009L

VFS (VARIABLE FORCE SOLENOID) VALVE CONTROL FEATURE

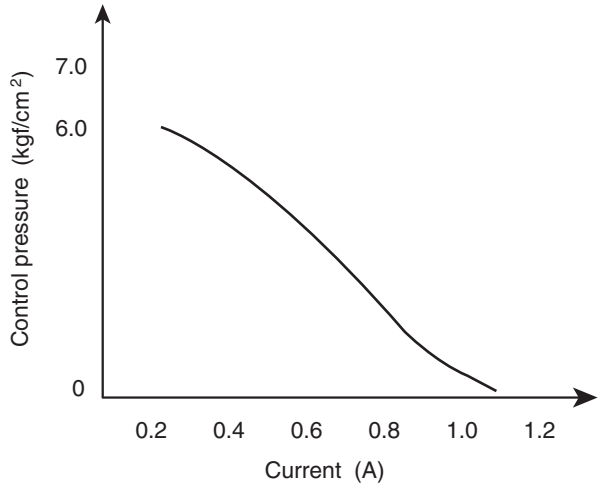

<VFS Solenoid valve performance curve>

BKGF018B

REMOVAL EEEA3EC8

1. Remove the battery terminal.
2. Lift the vehicle.
3. Remove the splash shield.
4. Loosen the drain plug and drain the transaxle oil.
5. Remove the valve body cover.
6. Remove the VFS reservoir(A).

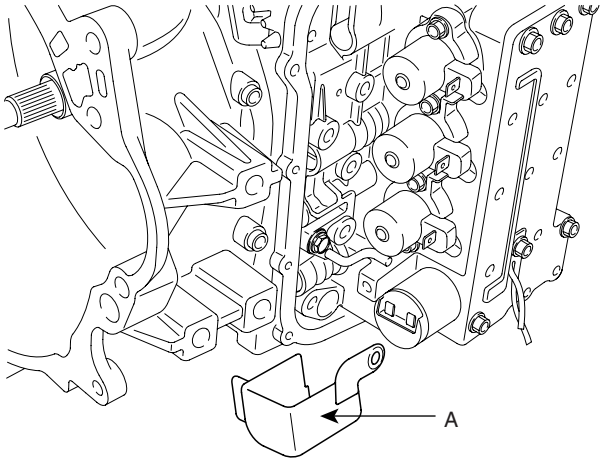

SCMAT6034D

7. Disconnect the VFS solenoid valve connector.
8. Remove the solenoid valve assembly(A).

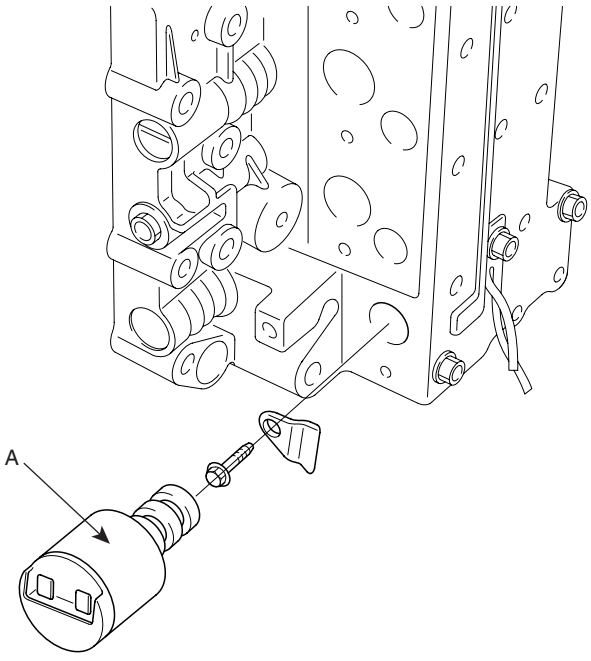

KKCF009D

INSTALLATION E31C8972

1. Install the solenoid valve(A).

CAUTION

Apply the ATF oil or White Vaseline to the O-ring not to be damaged.

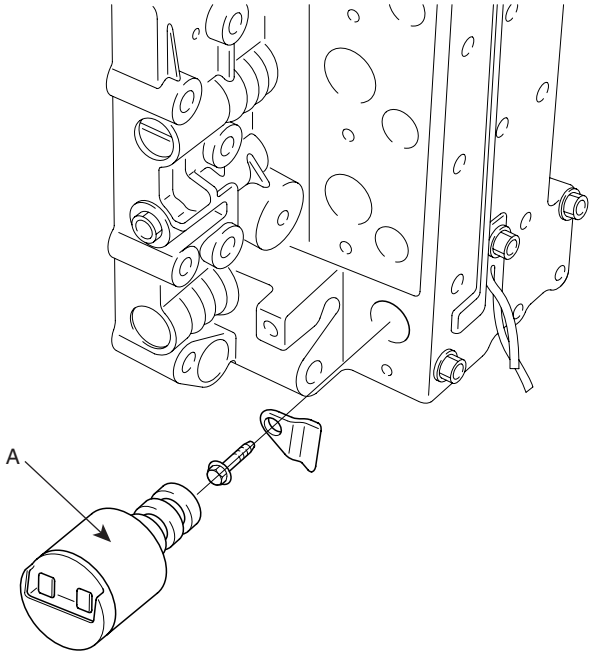

KKCF009D

2. Connect the solenoid valve connector to the valve body.

CAUTION

When connecting the solenoid valve connector, check the connector for rust, dirt, or oil, then re-connect it.

3. Install the VFS reservoir(A).

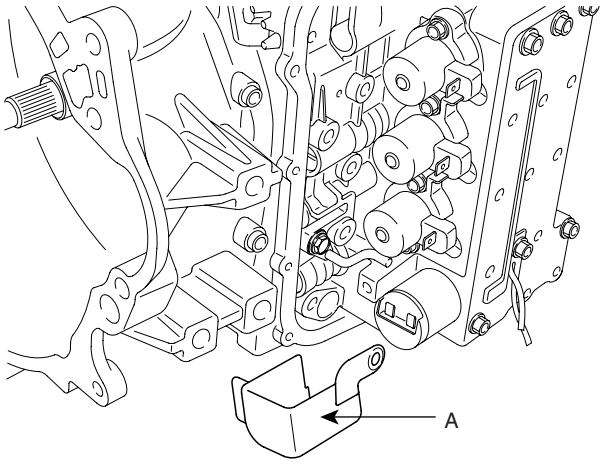

SCMAT6034D

4. Continue to apply liquid gasket at application points at the valve body cover with Ø2.5mm (0.098in) thickness.

Liquid gasket Part name : Threebond 1281B

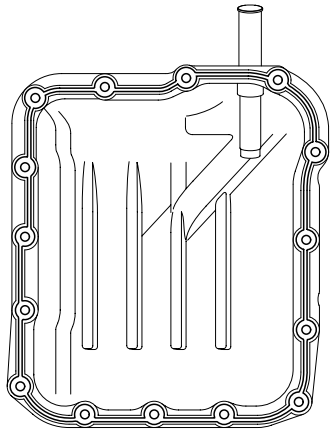

SCMAT6052D

5. Tighten the mounting bolt with the specified torque after installing the valve body cover.

TORQUE : 10~12Nm(1.0~1.2kgf.m, 7~8lb-ft)

6. Install the drain plug and refill the transaxle fluid.

TORQUE : 35~45Nm(3.5~4.5kgf.m, 25~32lb-ft)

7. Install the splash shield.

8. Lower the vehicle and install the battery terminal.

INPUT SPEED SENSOR

DESCRIPTION EBD4BF9F

Sensor type	1. Type : HALL SENSOR 2. Operating voltage : DC 12V 3. Current consumption : 22mA (Max)
Function	1. Input shaft speed sensor: Detect the input shaft rotation at the OD & REV retainer side to control oil pressure when shifting. 2. Feedback control, clutch-clutch control, damper clutch control, shift range control, incorrect ratio control and sensor trouble detection signal.
Connector	**C242** 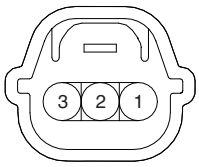 1. Ground 2. Power source 3. Input SCMAT6004L

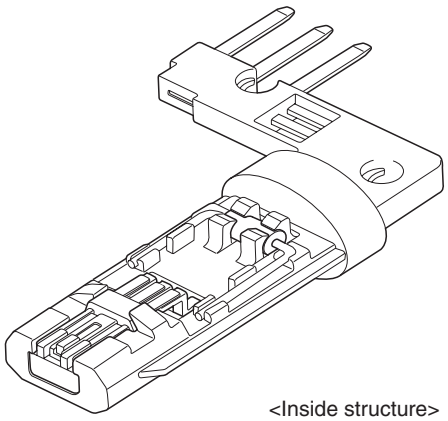

<Inside structure>

BKGF012B

Item	Inspection item	Standard value
Air gap	Input shaft speed sensor	0.05in(1.3mm)
Sensor resistance	Input shaft speed sensor	Over 4 MΩ
Output voltage	HIGH	Over 4.8V
	LOW	Below 0.8V

REMOVAL EED7E4CB

1. Remove the battery terminal.
2. Remove the battery and battery tray.
3. Remove the air cleaner assembly. (see the automatic transaxle-Removal/ installation procedures)
4. Remove the input shaft speed sensor connector.
5. Remove the input shaft speed sensor(A).

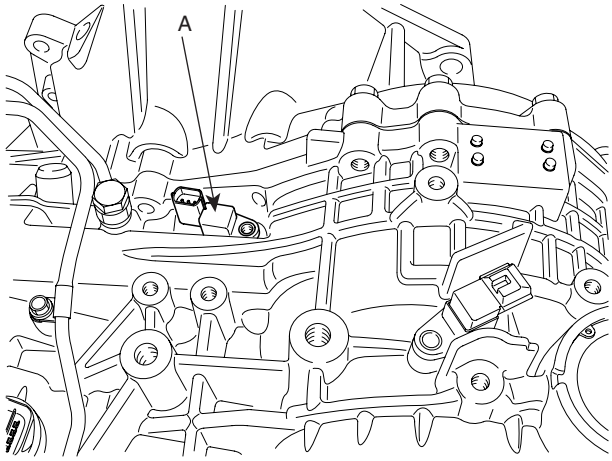

SCMAT6037D

INSTALLATION EE7CFF15

1. Install the new O-ring to the input shaft speed sensor.
2. Install the input shaft speed sensor.

TORQUE: 10~12Nm(1.0~1.2kgf.m, 7~8lb-ft)

CAUTION

While installing the input shaft speed sensor, do not allow dust or other foreign particles to enter the transaxle.

3. Check the connector for dust, dirt, or oil, and then connect the connector securely.
4. Installation is the reverse of removal.

OUTPUT SPEED SENSOR

DESCRIPTION EE59F1CD

Sensor type	1. Type : HALL SENSOR 2. Output voltage : DC 12V 3. Current consumption : 22mA (Max)
Function	1. Output shaft speed sensor : Detect the output shaft rpm(T/F DRIVE GEAR RPM) at the T/F drive gear 2. Feedback control, clutch-clutch control, damper clutch control, shift range control, incorrect ratio control and sensor trouble detection signal.
Connector	**C243** 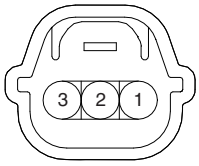 1. Ground 2. Power source 3. Input SCMAT6005L

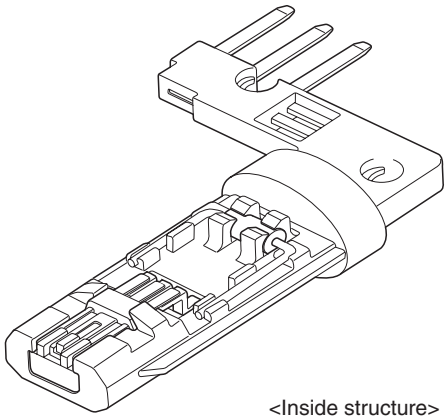

<Inside structure>

BKGF012B

Item	Inspection item	Standard value
Air gap	Output shaft speed sensor	0.05in(1.3mm)
Sensor resistance	Output shaft speed sensor	Over 4 MΩ
Output voltage	HIGH	Over 4.8V
	LOW	Below 0.8V

REMOVAL E2D1DE7E

1. Remove the battery terminal.
2. Remove the battery and battery tray.
3. Remove the air cleaner assembly. (see the automatic transaxle- Removal/ installation procedures)
4. Remove the output shaft speed sensor connector.
5. Remove the output shaft speed sensor(A).

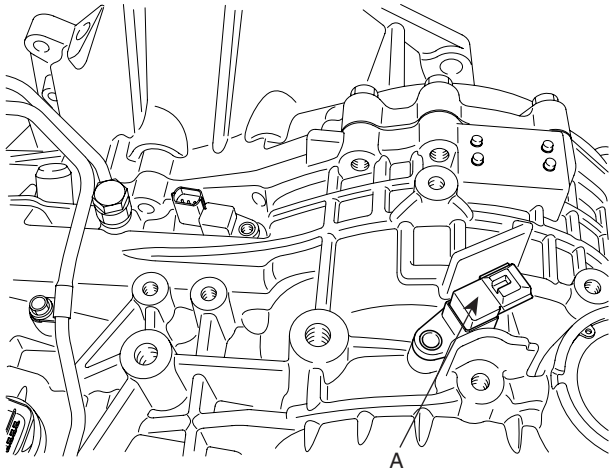

SCMAT6039D

INSTALLATION EDDDA414

1. Install the new O-ring to the output shaft speed sensor.
2. Remove the output shaft speed sensor.

TORQUE:
10~12Nm(1.0~1.2kgf.m, 7~8lb-ft)

CAUTION

While installing the output shaft speed sensor, do not allow dust or other foreign particles to enter the transaxle.

3. Check the connector for dust, dirt, or oil, then connect the connector securel.
4. Installation is the reverse of removal.

TRANSAXLE OIL TEMPERATURE SENSOR

DESCRIPTION E7EEEEF5

Sensor type	1. Type : Thermister 2. Use available temperature :-40~160°C(-40~320°F)
Function and feature	1. Detect the temperature of ATF through the thermistor which is exposed outside. 2. When shifting the range, it is used as the oil pressure control information.
Connector	C209  **1.Fluid temperature sensor** **2.Fluid temperature sensor ground** 3.UD Solenoid valve 4.2ND Solenoid valve 5.A/T battery 6.A/T battery 7.A/T battery 8.VF Solenoid valve ground 9.DCC Solenoid valve 10.RED Solenoid valve 11.LR Solenoid valve 12.OD Solenoid valve SCMAT6006L

Temp.[°C(°F)]	Resistance (KΩ)	Voltage (V)	Temp.[°C(°F)]	Resistance (KΩ)	Voltage (V)
-40(-40)	140.5	4.447	80(176)	1.085	0.932
-20(-4)	47.95	4.207	100(212)	0.63	0.591
0(32)	18.6	3.725	120(248)	0.385	0.381
20(68)	8.05	2.996	140(284)	0.25	0.255
40(104)	3.85	2.176	160(320)	0.16	0.166
60(140)	1.975	1.453			

REMOVAL E7B2DE5B

1. Remove the battery terminal.
2. Lift the vehicle.
3. Remove the splash shield.
4. Loosen the drain plug and drain the transaxle oil.
5. Remove the valve body cover.
6. Disconnect the oil temperature sensor connector and remove the sensor(A) from the valve body.

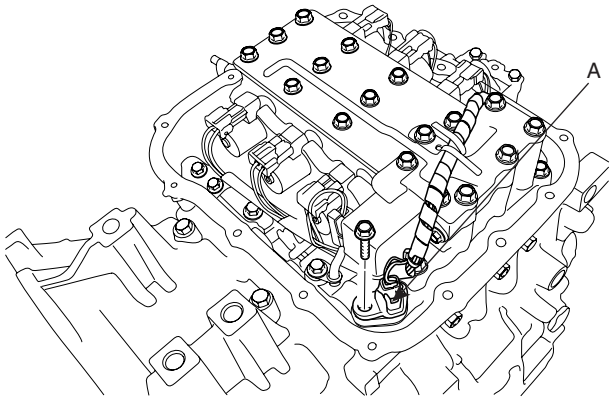

SCMAT6042D

INSTALLATION E8C2FBA3

1. Install the oil temperature sensor(A) and connect the sensor connector.

   CAUTION

   When connecting the oil temperature connector, check the connector for rust, dirt, or oil, then reconnect it.

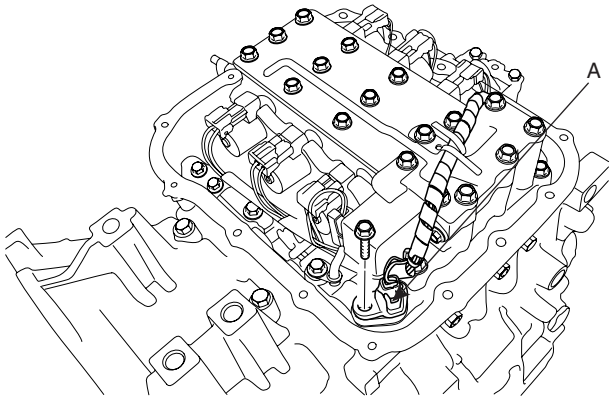

SCMAT6042D

2. Continue to apply liquid gasket at application points at the valve body cover with Ø0.098in(2.5mm) thickness.

Liquid gasket Part name : Threebond 1281B

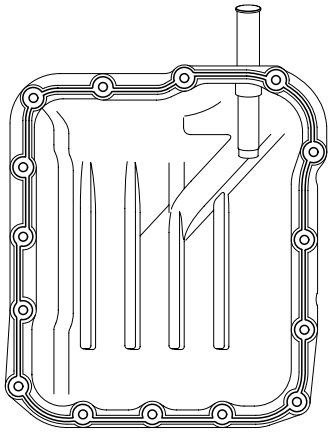

SCMAT6052D

3. Tighten the mounting bolt with the specified torque after installing the valve body cover.

TORQUE: 10~12Nm(1.0~1.2kgf.m, 7~8lb-ft)

4. Install the drain plug.

TORQUE : 35~45Nm(3.5~4.5kgf.m, 25~32lb-ft)

5. Installation is the reverse of the removal.

TRANSAXLE RANGE (TR) SWITCH

DESCRIPTION E3E6B37C

Sensor tyep	1. Type : ROTARY 2. Available temperature range : -40~150°C(-40~320°F) 3. TORQUE : 10~12Nm(1.0~1.2kgf.m, 7~8lb-ft)
Function	Detect the position of select lever through the contact switch. It makes starting possible in "P" and "N".

C208

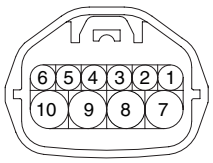

1. D range
3. P range
4. N range
7. R range
8. Power supply IG1
9. Start circuit
10. Start circuit

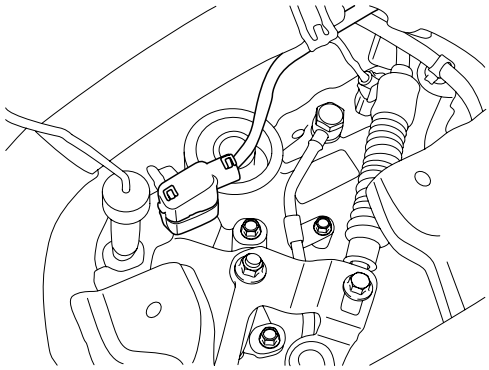

<Installation location>

SCMAT6007L

Terminal No. / Shift lever	P	R	N	D	3	2	L
1				●			
2						●	
3	●						
4			●				
5					●		●
6							
7		●					
8	●	●	●	●	●	●	●
9	●		●				
10	●		●				

SCMAT6008L

REMOVAL E0EF8ADF

1. Remove the battery terminal.
2. Remove the battery and battery tray.
3. Remove the air cleaner assembly(Refer to the automatic transaxle-Removal/installation procedures).
4. Disconnect the inhibitor switch connector(A).

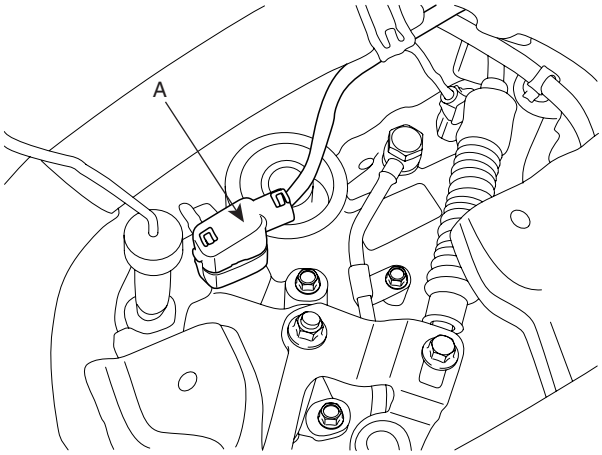

SCMAT6045D

5. Remove the control cable(A) from the manual control lever.

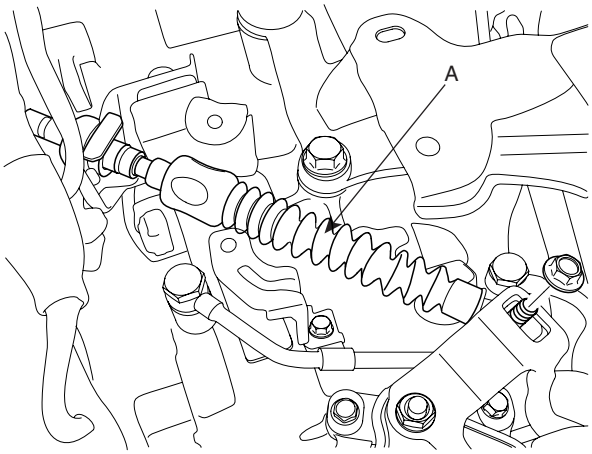

SCMAT6046D

6. Remove the inhibitor switch(A) and manual control lever(B).

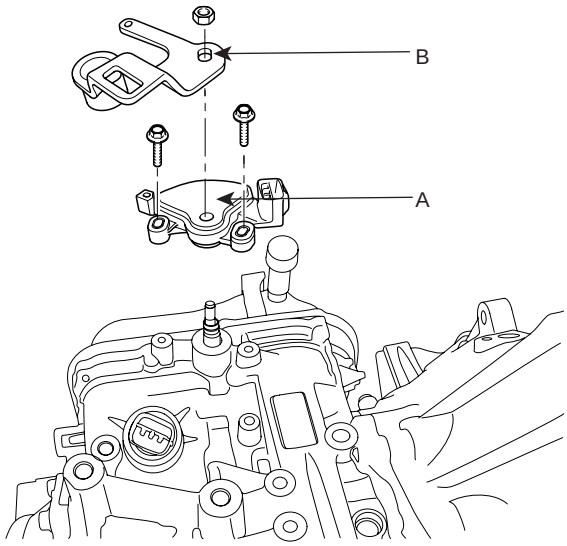

SCMAT6047D

INSTALLATION E38D55AE

1. Set the inhibitor switch to the "N" position.
2. Set the inhibitor switch control shaft to the "N" position.
3. Install the inhibitor switch and manual control lever.

TORQUE
Shaft nut: 17~21Nm(1.7~2.1kgf.m, 12~15lb-ft)
Bolt(2EA): 10~12Nm(1.0~1.2kgf.m, 7~8lb-ft)

4. Install the control cable to the manual control lever.
5. Connect the inhibitor switch connector.
6. Installation is the reverse of the removal.
7. Turn the ignition switch ON after installation.
   Move the shift lever from "P" range to "L" range, and verify that the A/T gear position indicator follows the transaxle range switch.

Driveshaft and Axle

GENERAL

FRONT AXLE
- FRONT HUB / KNUCKLE

DRIVESHAFT
- FRONT DRIVESHAFT ASSEMBLY
- FRONT DRIVESHAFT(PTJ-BJ TYPE)
- FRONT DRIVESHAFT (SFJ-BJ TYPE)

REAR AXLE
- REAR HUB / CARRIER

REAR DRIVESHAFT ASSEMBLY
- REAR DRIVESHAFT (DOJ-BJ TYPE)

PROPELLER SHAFT ASSEMBLY
- PROPELLER SHAFT

DIFFERENTIAL CARRIER ASSEMBLY
- DIFFERENTIAL CARRIER (4WD)

GENERAL

SPECIFICATION EDA421A7

Items			Inner side	Outer side
Front driveshaft	Diesel 2.2 M/T 2WD/4WD, Diesel 2.2 A/T 2WD/4WD, Gasoline 2.7 A/T 2WD	Joint type	PTJ	BJ
		Max. permissible angle	21°	46°
	Gasoline 2.7 A/T 4WD, Gasoline 2.7 M/T 2WD/4WD	Joint type	SFJ	BJ
		Max. permissible angle	21°	46°
Rear driveshaft		Joint type	DOJ	BJ
		Max. permissible angle	22°	46°
Differential		Oil type	Hypoid gear oil (API GL-5, SAE 75W/90)	
		Oil capacity (L)	About 0.9	
		Reduction gear type	Hypoid gear	
		Reduction gear ratio	3.818	
		Final drive gear backlash mm(in.)	0.10 ~ 0.15 (0.0039 ~ 0.0059)	
		Differential gear backlash mm(in.)	0 ~ 0.05 (0 ~ 0.0020)	

BJ : Birfield Joint
DOJ : Double Offset Joint
PTJ : Pillow journal Tri-pot Joint
SFJ : Shudderless Free-ring Joint

TIGHTENING TORQUE

Items		Nm	Kgf-m	lb-ft
Front	Wheel nut	88.3~107.9	9~11	65.1~79.6
	Driveshaft castle nut	196.1~255.0	20~26	144.7~188.1
	Strut assembly lower mounting bolt	152.0~171.6	15.5~17.5	112.1~126.6
	Inner shaft bearing bracket bolt	49.0~68.6	5~7	36.2~50.6
	Brake caliper mounting bolt	78.5~98.1	8~10	57.9~72.3
	Wheel speed sensor mounting bolt	6.9~10.8	0.7~1.1	5.1~8.0
	Brake disc mounting screw	4.9~5.9	0.5~0.6	3.6~4.3
	Hub assembly mounting bolt	78.5~98.1	8~10	57.9~72.3
	Lower arm ball joint mounting bolt	98.1~117.7	10~12	72.3~86.8
	Tie rod end ball joint mounting nut	23.5~33.3	2.4~3.4	17.4~24.6
Rear	Wheel nut	88.3~107.9	9~11	65.1~79.6
	Driveshaft castle nut	196.1~255.0	20~26	144.7~188.1
	Shock absorber upper mounting bolt	137.3~156.9	14~16	101.3~115.7
	Shock absorber lower mounting nut	98.1~117.7	10~12	72.3~86.8
	Brake caliper mounting bolt	63.7~73.5	6.5~7.5	47.0~54.2
	Wheel speed sensor mounting bolt	6.9~10.8	0.7~1.1	5.1~8.0
	Brake disc mounting screw	4.9~5.9	0.5~0.6	3.6~4.3
	Hub assembly mounting bolt	78.5~88.3	8~9	57.9~65.1
	Upper arm ball joint mounting nut	78.5~88.3	8~9	57.9~65.1
	Lower arm mounting bolt	137.3~156.9	14~16	101.3~115.7
	Assist arm ball joint mounting nut	98.1~117.7	10~12	72.3~86.8
	Trailing arm mounting bolt	137.3~156.9	14~16	101.3~115.7
Propeller shaft	Front propeller shaft mounting bolt	49.0~68.6	5~7	36.2~50.6
	Propeller shaft center bearing bracket mounting bolt	39.2~49.0	4~5	28.9~36.2
	Rear propeller shaft mounting bolt	49.0~68.6	5~7	36.2~50.6
Differential	Rear differential mounting bolt	68.6~88.3	7~9	50.6~65.1
	Differential cover mounting bolt	39.2~49.0	4~5	28.9~36.2

CAUTION

Replace self-locking nuts with new ones after removal.

LUBRICANTS E905F5BE

Items			Lubricants	Quantity
Front driveshaft	Diesel 2.2 M/T 2WD/4WD, Diesel 2.2 A/T 2WD/4WD, Gasoline 2.7 A/T 2WD	BJ	ROLLUBE BJ	155 ± 10g
		PTJ	MX13KT	220 ± 10g
	Gasoline 2.7 A/T 4WD, Gasoline 2.7 M/T 2WD/4WD	BJ	ROLLUBE BJ	155 ± 10g
		SFJ	STAMINA 0233B	220 ± 10g
Rear driveshaft		BJ	ROLLUBE BJ	110 ± 6g
		DOJ	Amblygon TA10/2A	100 ± 6g

SPECIAL TOOLS EA6CFD5D

Tool(Number and Name)	Illustration	Use
09495-33000 Puller	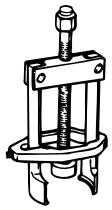 D9533000	Removal of spider assembly from a drive shaft.
09517-43101 Working base	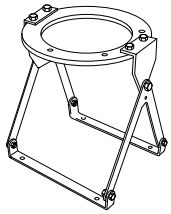 E1743101	Support for the differential carrier
09517-43500 Adapter	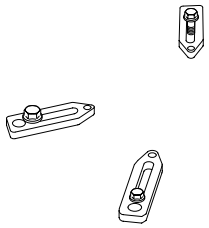 E1743500	Support for the differential carrier (Use with 09517-43101)
09495-3K000 Band installer	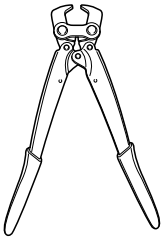 KINF500C	Installation of ear type boot band

09568-34000 Ball joint remover	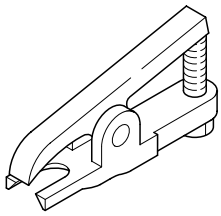 E6834000	Removal of the rear upper arm ball joint
09568-4A000 Ball joint remover	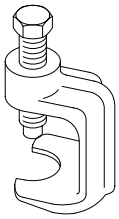 KPRE103I	Removal of the front lower arm and tie rod end ball joint

TROUBLESHOOTING E9DF00E5

Trouble Symptom	Probable cause	Remedy
Vehicle pulls to one side	Scoring of driveshaft ball joint	Replace
	Wear, rattle or scoring of wheel bearing	Replace
	Defective front suspension and steering	Adjustment or Replace
Vibartion	Wear, damage or bending of driveshaft	Replace
	Driveshaft rattle and hub serration	Replace
	Wear, rattle or scratching of wheel bearing	Replace
Shimmy	Defective wheel balance	Adjustment or Replace
	Defective front suspension and steering	Adjustment or Replace
Excessive noise	Wear, damage or bending of driveshaft	Replace
	Rattle of driveshaft and worn hub splines	Replace
	Wear, rattle or scoring of wheel bearing	Replace
	Loose hub nut	Adjustment or Replace
	Defective front suspension and steering	Adjustment or Replace

FRONT AXLE

FRONT HUB / KNUCKLE

COMPONENT LOCATION EB2E0DEC

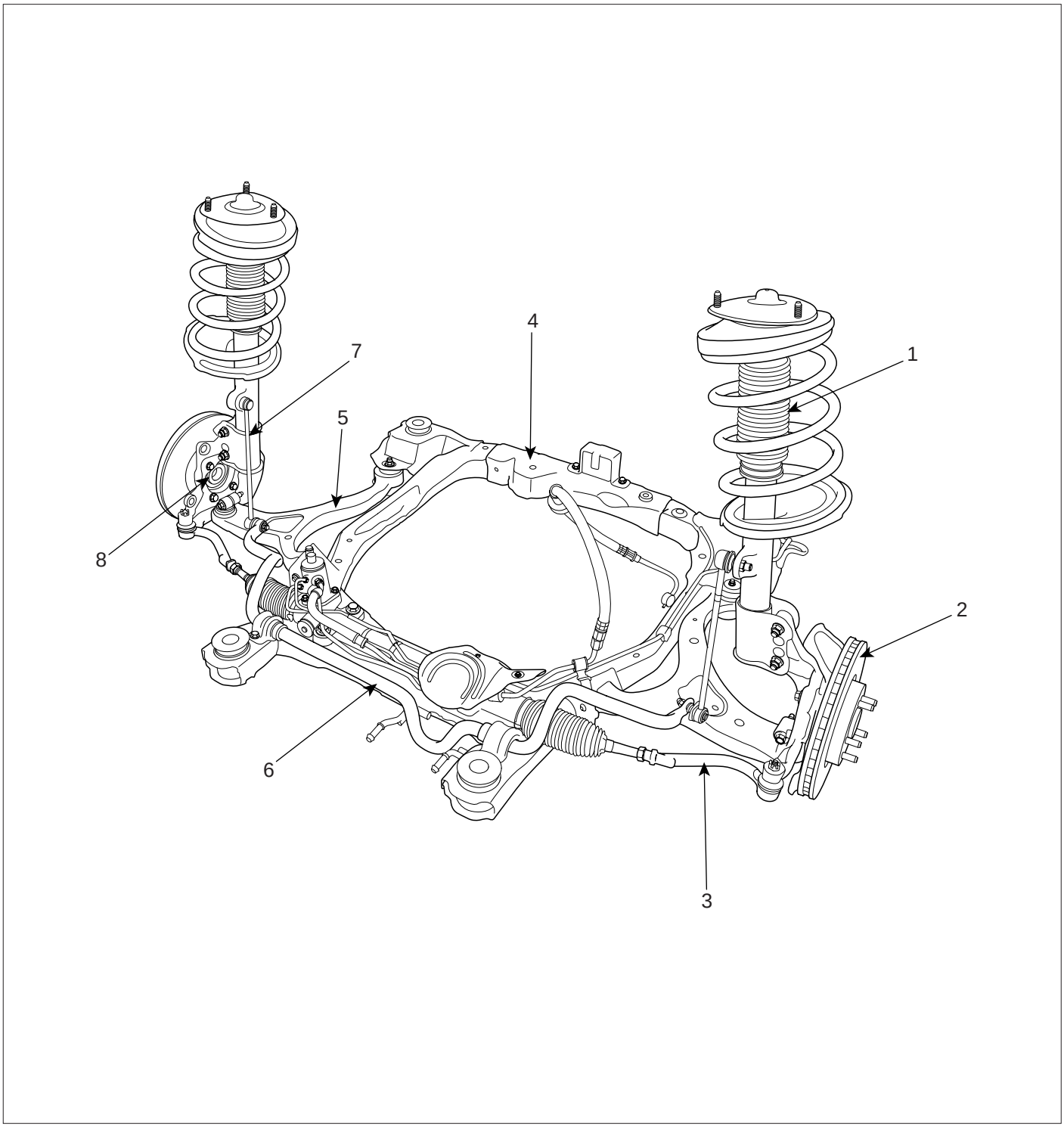

1. Front strut assembly
2. Front disc
3. Tie rod end assembly
4. Front subframe
5. Front lower arm
6. Front stabilizer bar assembly
7. Front stabilizer link assembly
8. Front knuckle assembly

SCMDS6500L

COMPONENTS E72B2FAD

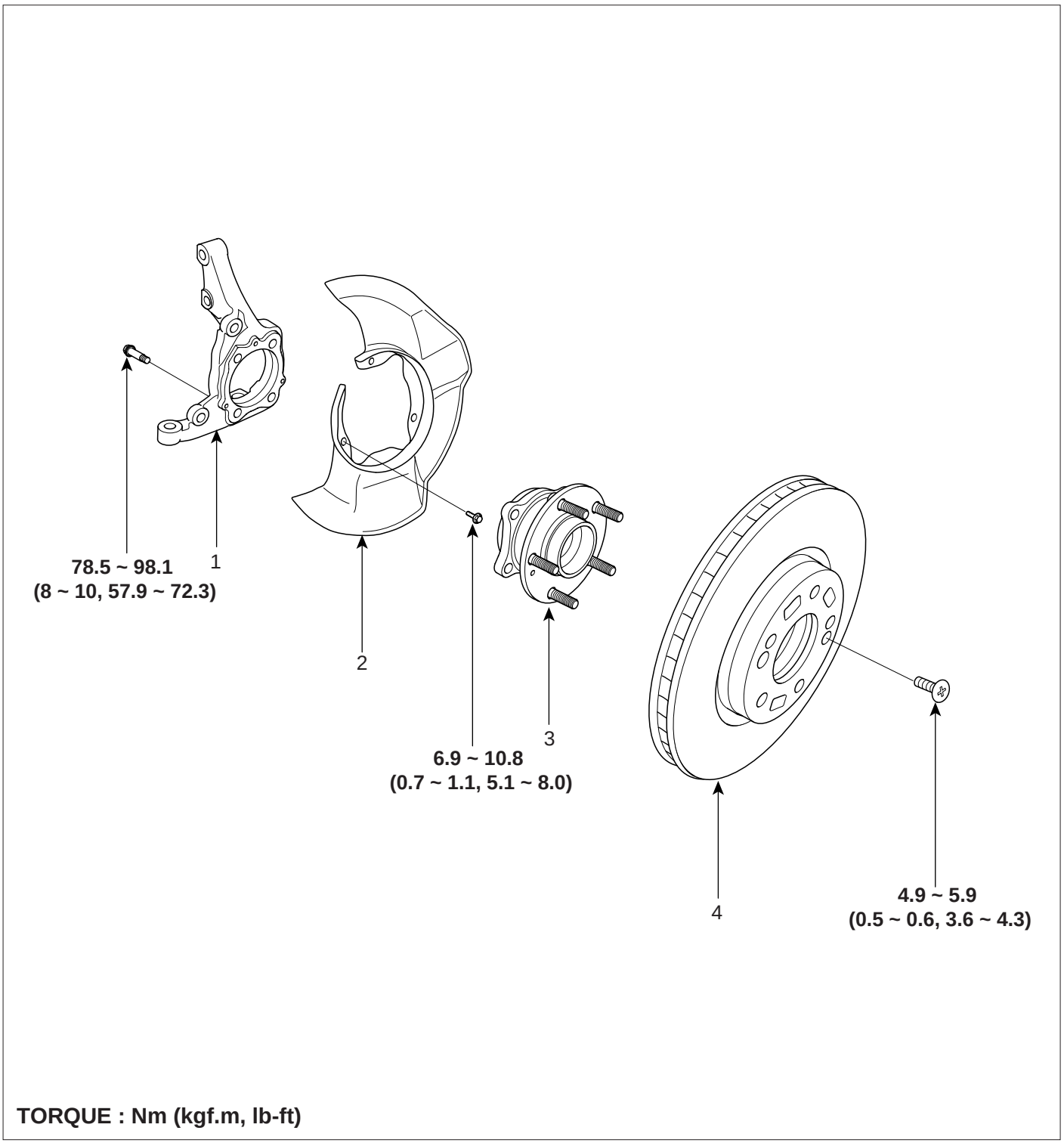

1. Knuckle
2. Dust cover
3. Hub assembly
4. Brake disc

SCMDS6501L

REMOVAL E53ADA59

1. Loosen the wheel nuts slightly.
   Raise the vehicle, and make sure it is securely supported.

2. Remove the front wheel and tire (A) from the front hub (B).

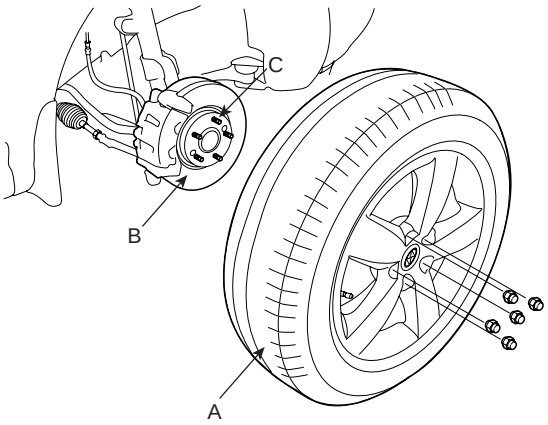

SCMDS6003D

CAUTION

Be careful not to damage to the hub bolts (C) when removing the front wheel and tire (A).

3. Remove the split pin (A), then remove castle nut (B) and washer (C) from the front hub under applying the brake.

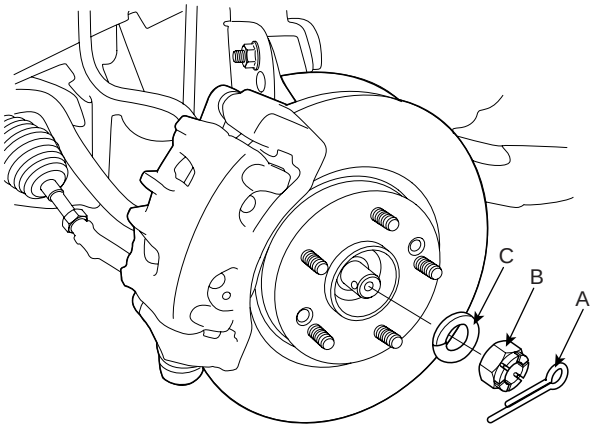

SCMDS6004D

4. Remove the brake caliper mounting bolts (A), and then place the brake caliper assembly (B) with wire.

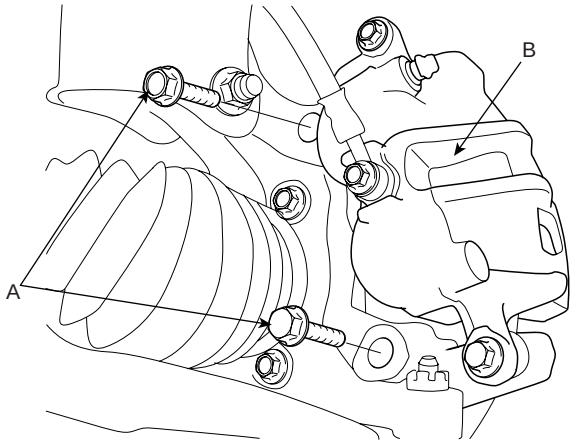

SCMDS6005D

5. Remove the tie rod end ball joint from the knuckle.

   1) Remove the split pin (A).

   2) Remove the castle nut (B).

   3) Disconnect the ball joint (C) from knuckle (D) using the special tool (09568-4A000).

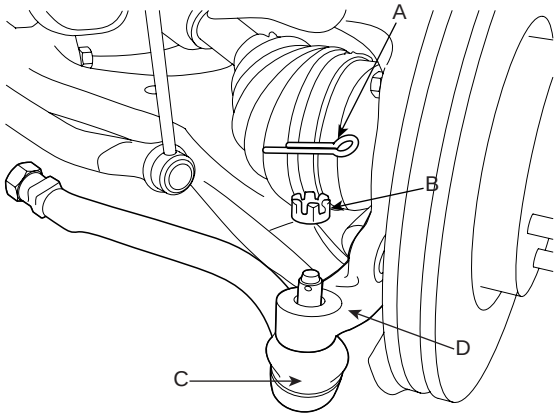

SCMDS6006D

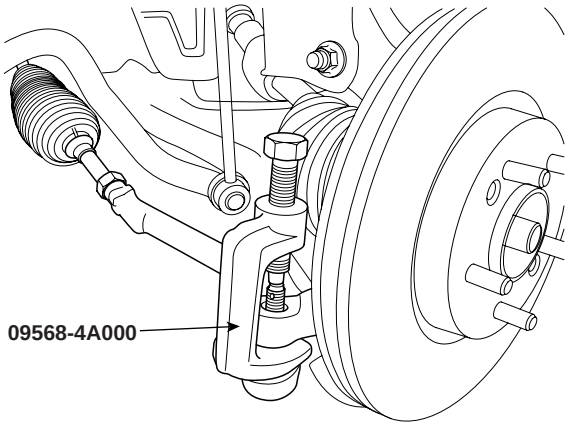

SCMDS6007D

CAUTION

Apply a few drops of oil to the special tool. (Boot contact part)

6. Remove the wheel speed sensor (B), the strut lower mounting bolt (C) and the lower arm mounting bolt (D) from the knuckle (A).

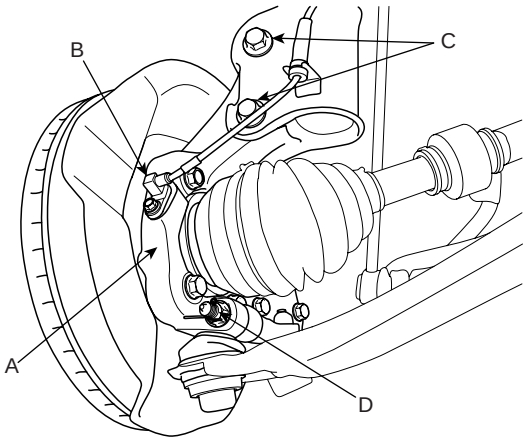

SCMDS6008D

7. Remove the hub and knuckle assembly.

CAUTION

Be careful not to damage the boot and rotor teeth.

DISASSEMBLY E57FBCCD

1. Remove the brake disc (B) from the knuckle assembly (A).

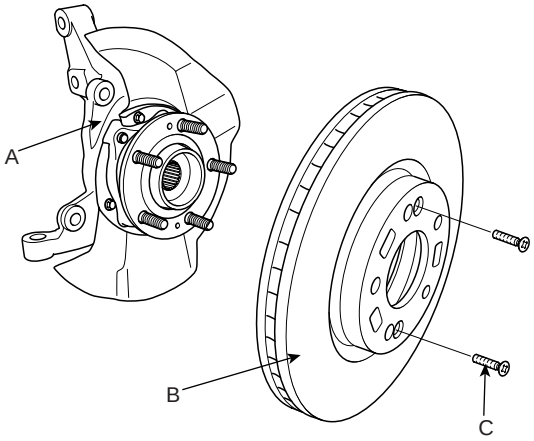

SCMDS6009D

2. Remove the hub assembly mounting bolts (B) from the knuckle (A).

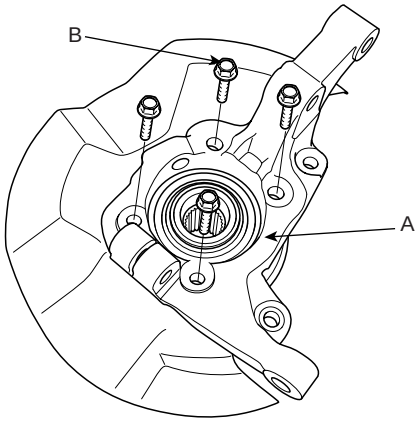

SCMDS6010D

3. Remove the hub assembly (C) and the dust cover (B) from the knuckle (A).

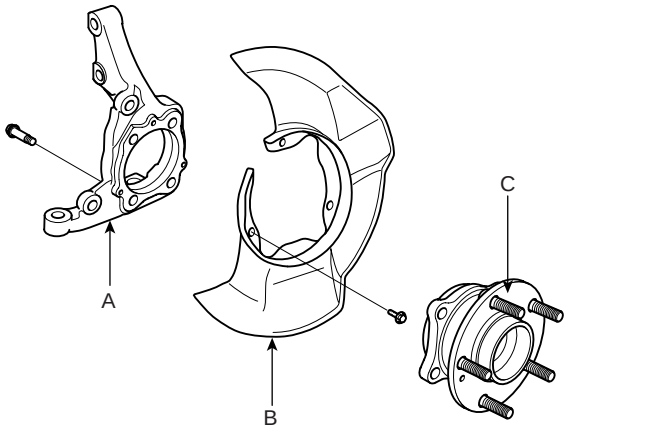

SCMDS6501D

CAUTION

Do not disassemble the hub assembly.

INSPECTION EDD59A61

1. Check the hub for cracks and the splines for wear.
2. Check the brake disc for scoring and damage.
3. Check the knuckle for cracks.
4. Check the bearing for cracks or damage.

REASSEMBLY E0EE0855

1. Install the dust cover (B) to the knuckle (A) and then tighten the mounting bolt (C).

Tightening torque Nm (kgf-m, lb-ft) :
6.9~10.8 (0.7~1.1, 5.1~8.0)

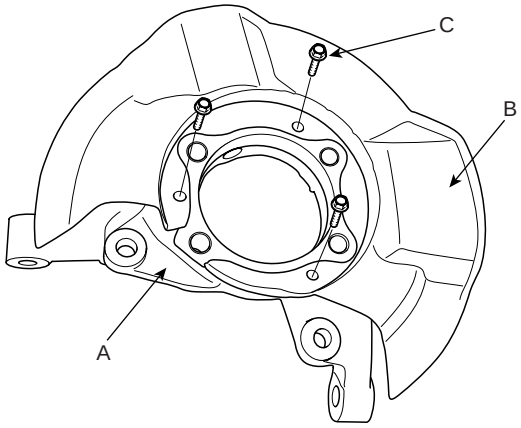

SCMDS6011D

2. Install the hub assembly to the knuckle (A) and then tighten the mounting bolt (B).

Tightening torque Nm (kgf-m, lb-ft) :
78.5~98.1 (8~10, 57.9~72.3)

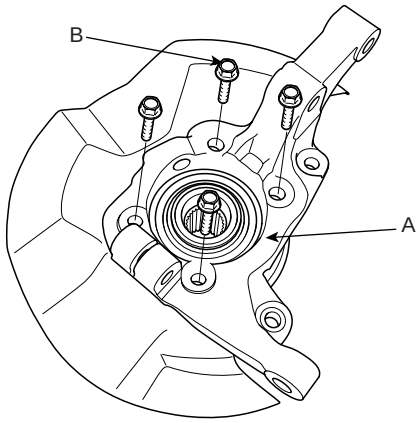

SCMDS6010D

3. Install the brake disc (B) to the knuckle assembly (A).

Tightening torque Nm (kgf-m, lb-ft) :
Screw(C): 4.9~5.9 (0.5~0.6, 3.6~4.3)

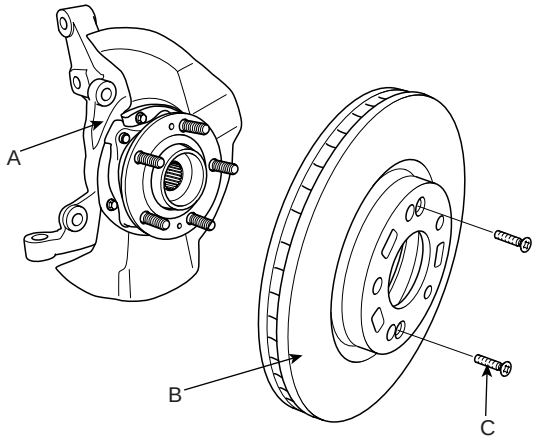

SCMDS6009D

INSTALLATION E7AFB226

1. Install the hub and knuckle assembly.

2. Install the wheel speed sensor (B), the strut lower mounting bolt (C) and the lower arm mounting bolt (D) from the knuckle (A).

Tightening torque Nm (kgf-m, lb-ft) :
Wheel speed sensor (B):
6.9~10.8 (0.7~1.1, 5.1~8.0)
Bolts (C): 152.0~171.6 (15.5~17.5, 112.1~126.6)
Bolt (D) : 98.1~117.7 (10~12, 72.3~86.8)

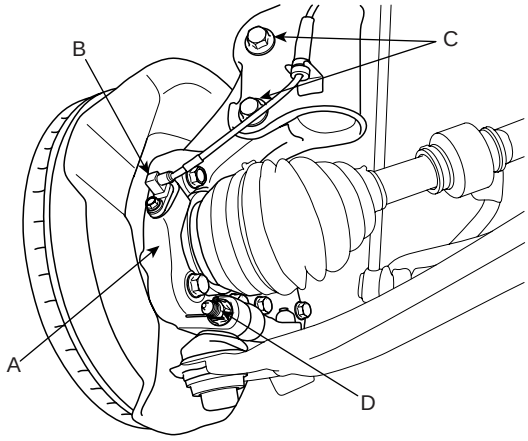

SCMDS6008D

3. Install the tie rod end ball joint (C) to the knuckle (D).

4. Install the castle nut (B) and the split pin (A).

Tightening torque Nm (kgf-m, lb-ft) :
23.5~33.3 (2.4~3.4, 17.4~24.6)

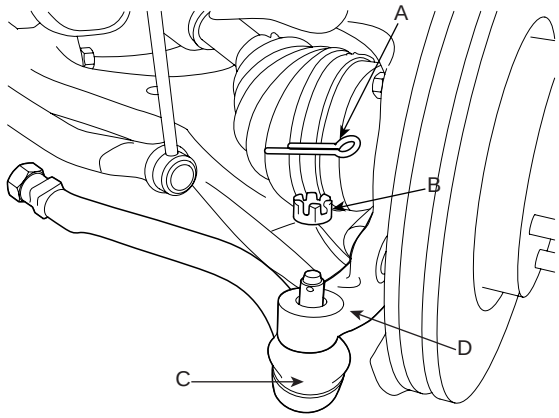

SCMDS6006D

5. Install the brake caliper (B) and then tighten the mounting bolts (A).

Tightening torque Nm (kgf-m, lb-ft) :
78.5~98.1 (8~10, 57.9~72.3)

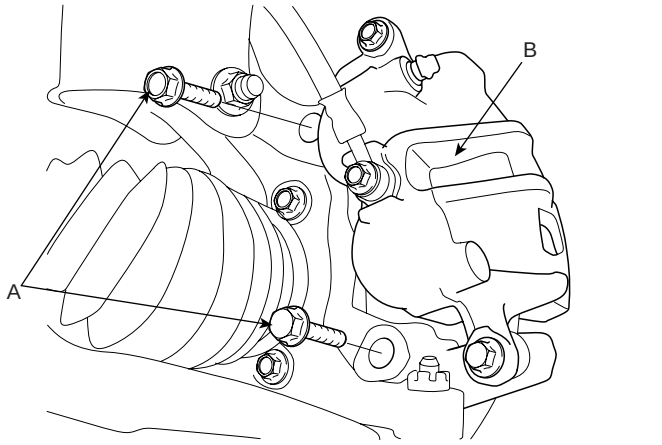

SCMDS6005D

6. Install the washer (C), castle nut (B) and split pin (A) to the front hub assembly.

Tightening torque Nm (kgf-m, lb-ft) :
196.1~255.0 (20~26, 144.7~188.1)

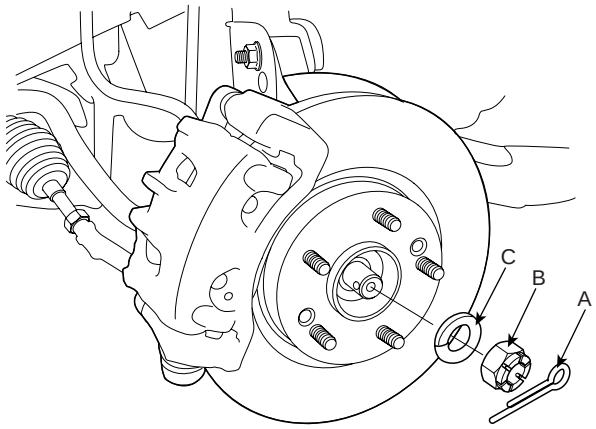

SCMDS6004D

CAUTION

The washer (B) should be assembled with convex surface outward when installing the castle nut(A) and split pin (C).

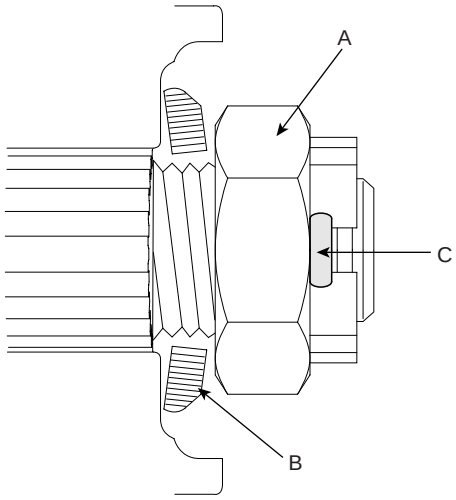

EIKD010A

7. Install the wheel and tire (A) to the front hub (B).

Tightening torque Nm (kgf-m, lb-ft) :
88.3~107.9 (9~11, 65.1~79.6)

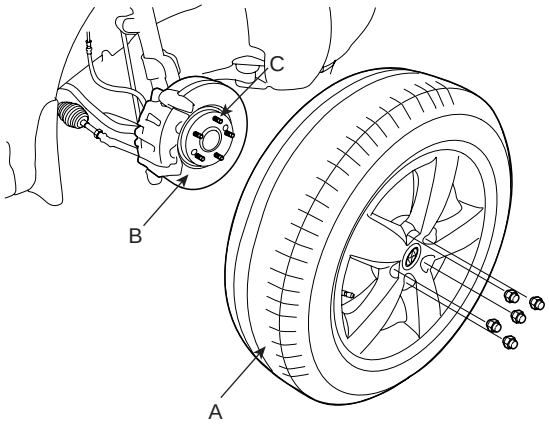

SCMDS6003D

CAUTION

Be careful not to damage the hub bolts (C) when installing the front wheel and tire (A).

DRIVESHAFT

FRONT DRIVESHAFT ASSEMBLY

COMPONENT E2AF3468

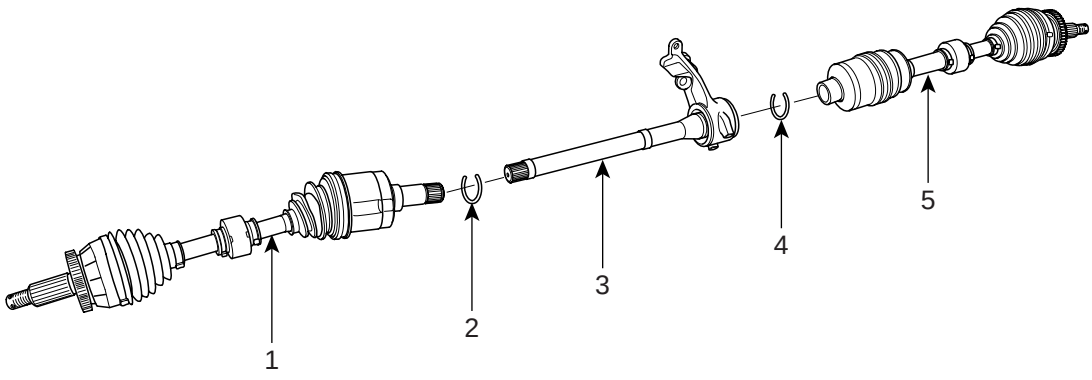

1. Driveshaft (LH)
2. Circlip
3. Inner shaft bearing bracket assembly
4. Circlip
5. Driveshaft (RH)

SCMDS6502L

REMOVAL E705BCB8

1. Loosen the wheel nuts slightly.
   Raise the vehicle, and make sure it is securely supported.

2. Remove the front wheel and tire (A) from the front hub (B).

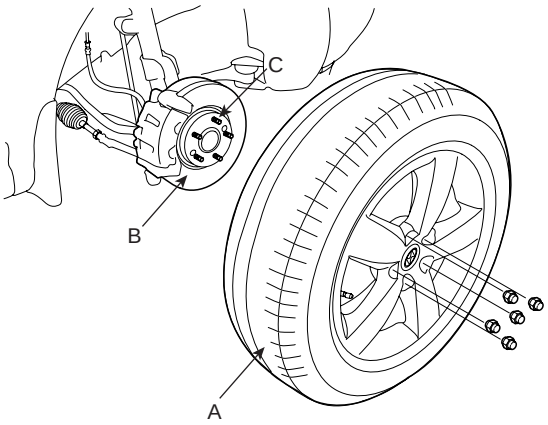

SCMDS6003D

CAUTION

Be careful not to damage to the hub bolts (C) when removing the front wheel and tire (A).

3. Remove the split pin (A), then remove castle nut (B) and washer (C) from the front hub under applying the brake.

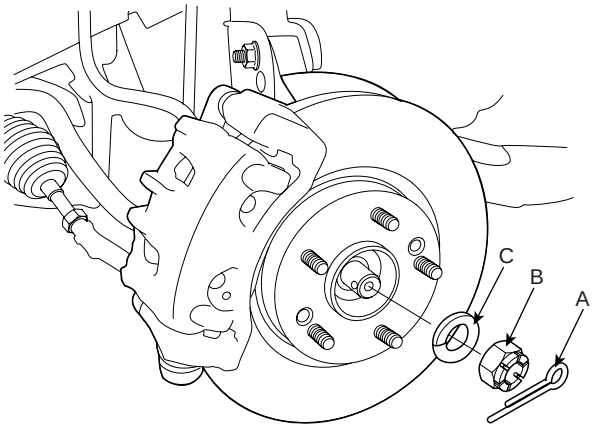

SCMDS6004D

4. Remove the brake caliper mounting bolts (A), and then place the brake caliper assembly (B) with wire.

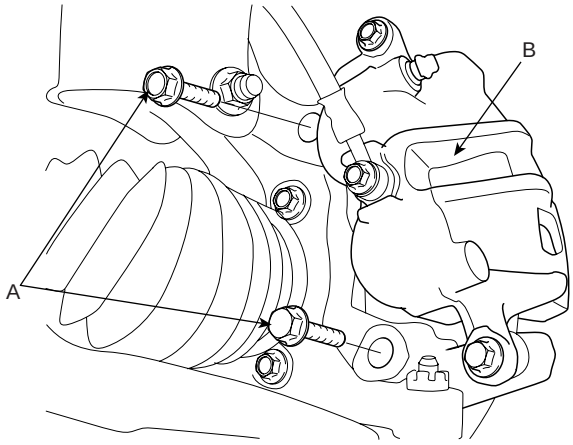

SCMDS6005D

5. Remove the tie rod end ball joint from the knuckle.

   1) Remove the split pin (A).

   2) Remove the castle nut (B).

   3) Disconnect the ball joint (C) from knuckle (D) using the special tool (09568-4A000).

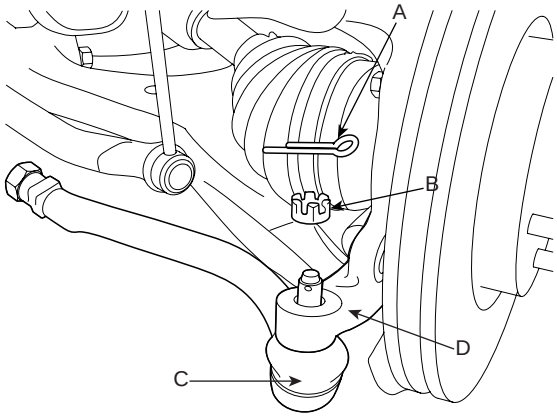

SCMDS6006D

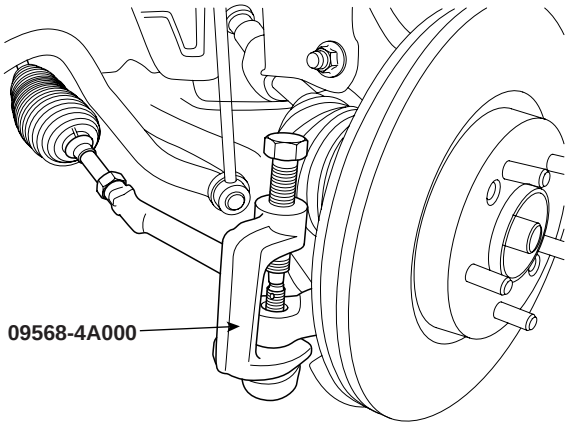

SCMDS6007D

CAUTION

Apply a few drops of oil to the special tool. (Boot contact part)

6. Remove the split pin and the lower arm mounting bolt (B) from the knuckle (A).

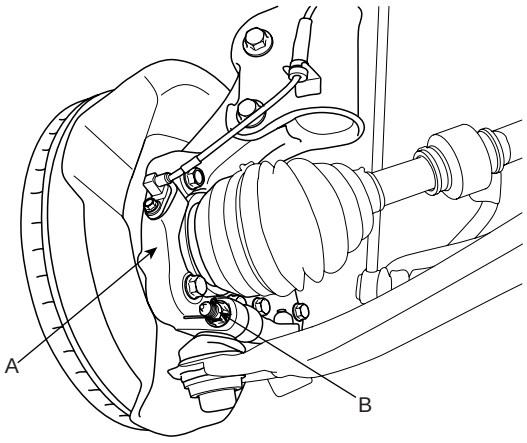

SCMDS6051D

7. Using a plastic hammer (A), disconnect driveshaft (C) from the axle hub (B).

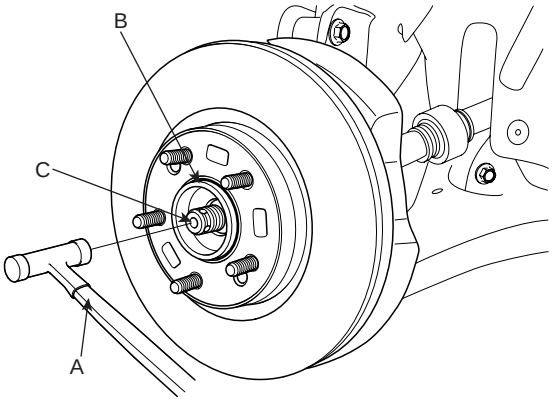

SCMDS6040D

8. Push the axle hub (A) outward and separate the driveshaft (B) from the axle hub (A).

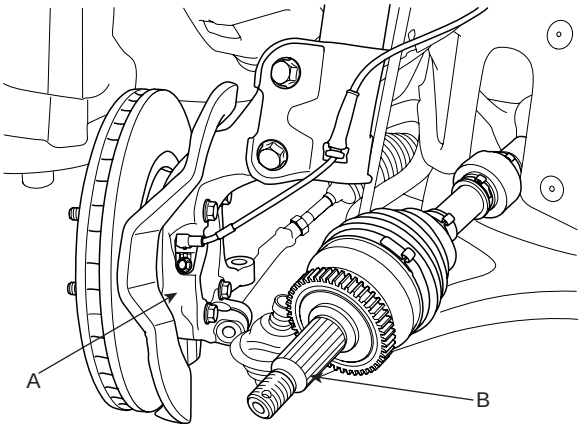

SCMDS6012D

9. Remove the dust cover (A). (RH side)

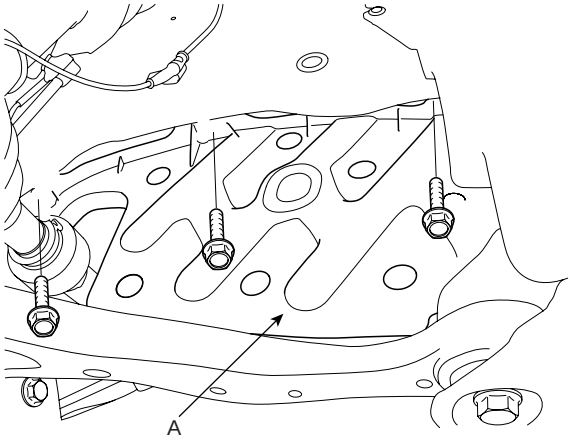

SCMDS6013D

10. Remove the mounting bolts of inner shaft bearing bracket assembly (A).

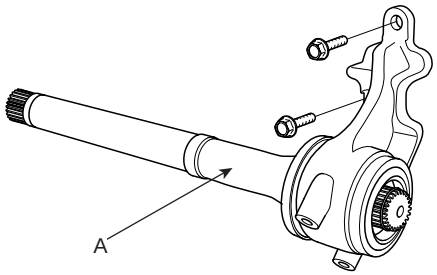

SCMDS6015D

11. Insert a pry bar (A) between the transaxle case (B) and joint case (C), and separate the driveshaft (D) from the transaxle case.

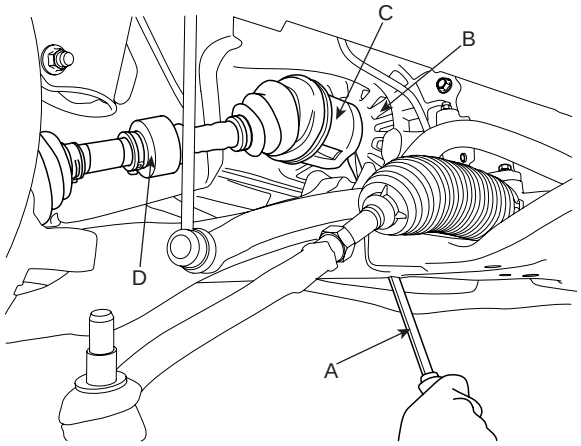

SCMDS6016D

CAUTION

- ***Use a pry bar (A) being careful not to damage the transaxle and joint.***
- ***Do not insert the pry bar (A) too deep, as this may cause damage to the oil seal.***
- ***Do not pull the driveshaft by excessive force it may cause components inside the joint kit to dislodge resulting in a torn boot or a damaged bearing.***
- ***Plug the hole of the transaxle case with the oil seal cap to prevent contamination.***
- ***Support the driveshaft properly.***
- ***Replace the retainer ring whenever the driveshaft is removed from the transaxle case.***

INSPECTION EDCDABC7

1. Check the driveshaft boots for damage and deterioration.
2. Check the ball joint for wear and damage.
3. Check the splines for wear and damage.
4. Check the dynamic damper for cracks, wear and position.

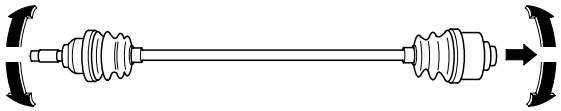

EIKD019A

5. Check the driveshaft for cracks and wears.

INSTALLATION ED821A44

1. Apply gear oil on the oil seal contacting surface (B) of transaxle case and the driveshaft splines (A).

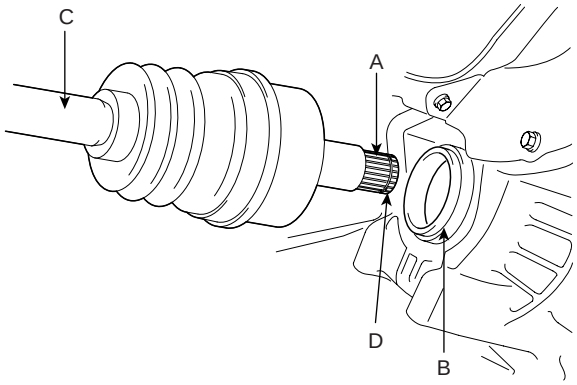

SCMDS6502D

2. Before installing the driveshaft (C), set the opening side of the circlip (D) facing downward.

3. After installation, check that the driveshaft (C) cannot be removed by hand.

4. Install the inner shaft bearing bracket assembly (A) and then tighten the mounting bolts.

Tightening torque Nm (kgf-m, lb-ft) :
49.0~68.6 (5~7, 36.2~50.6)

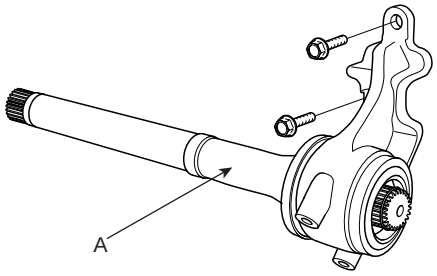

SCMDS6015D

5. Install the dust cover (A). (RH side)

Tightening torque Nm (kgf-m, lb-ft) :
7.8~11.8 (0.8~1.2, 5.8~8.7)

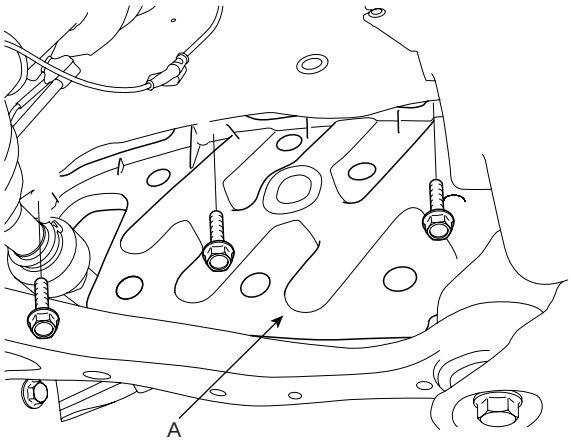

SCMDS6013D

6. Install the driveshaft to the axle hub.

7. Install the lower arm mounting bolt (B) and the split pin to the knuckle (A).

Tightening torque Nm (kgf-m, lb-ft) :
98.1~117.7 (10~12, 72.3~86.8)

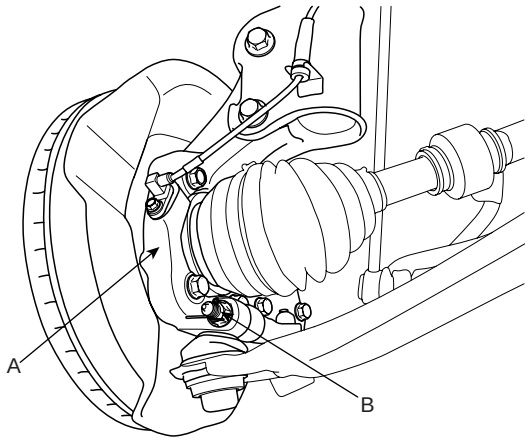

SCMDS6051D

8. Install the tie rod end ball joint (C) to the knuckle (D).

9. Install the castle nut (B) and the split pin (A).

Tightening torque Nm (kgf-m, lb-ft) :
23.5~33.3 (2.4~3.4, 17.4~24.6)

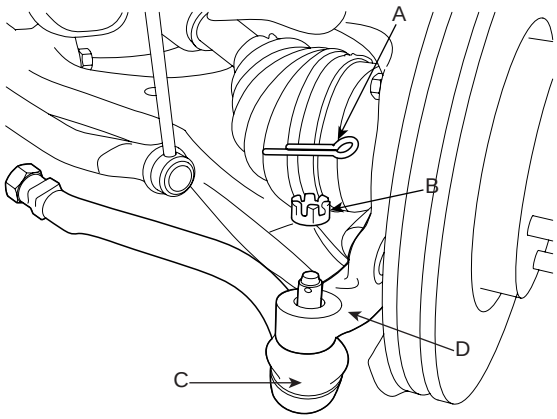

SCMDS6006D

10. Install the brake caliper (B) and then tighten the mounting bolts (A).

Tightening torque Nm (kgf-m, lb-ft) :
78.5~98.1 (8~10, 57.9~72.3)

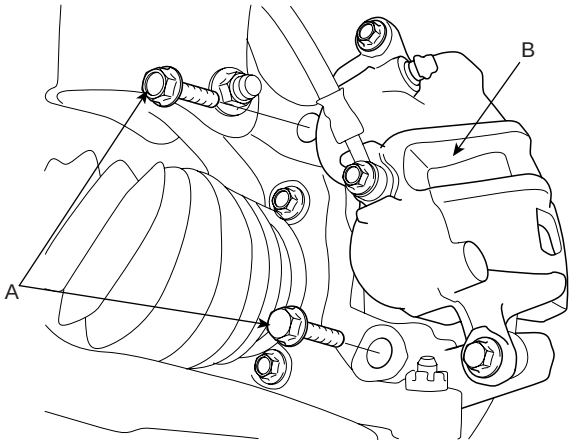

SCMDS6005D

11. Install the washer (C), castle nut (B) and split pin (A) to the front hub assembly.

Tightening torque Nm (kgf-m, lb-ft) :
196.1~255.0 (20~26, 144.7~188.1)

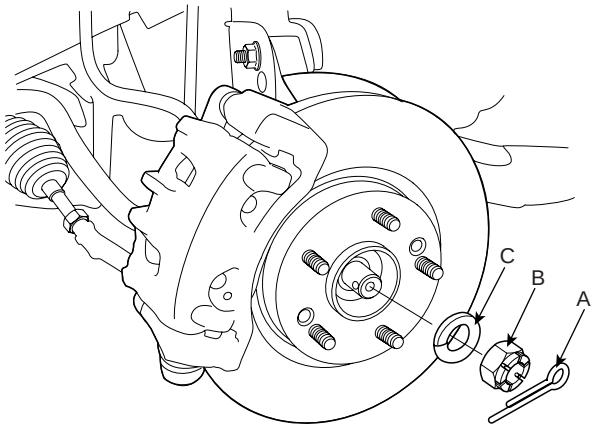

SCMDS6004D

CAUTION

The washer (B) should be assembled with convex surface outward when installing the castle nut (A) and split pin (C).

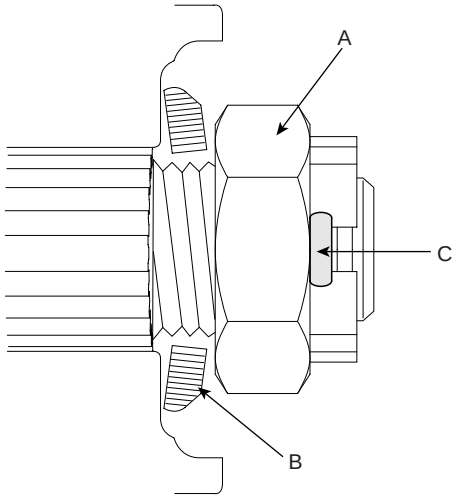

EIKD010A

12. Install the wheel and tire (A) to the front hub (B).

Tightening torque Nm (kgf-m, lb-ft) :
88.3~107.9 (9~11, 65.1~79.6)

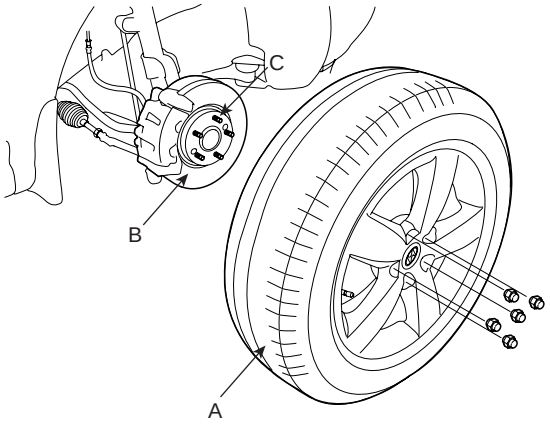

SCMDS6003D

CAUTION

Be careful not to damage the hub bolts (C) when installing the front wheel and tire (A).

FRONT DRIVESHAFT (PTJ-BJ TYPE)

COMPONENT E91015BA

[LH]

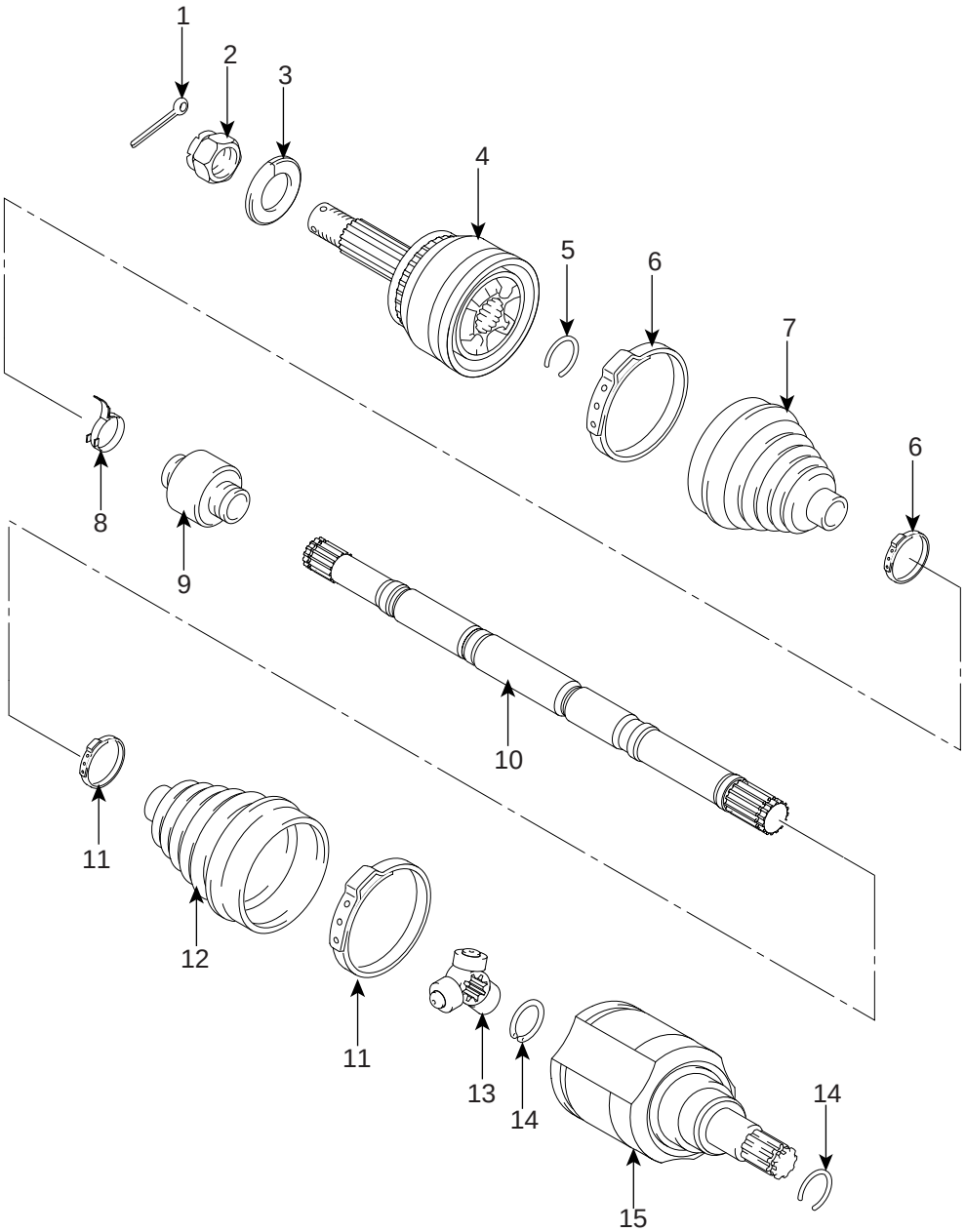

1. Split pin
2. Castle nut
3. Washer
4. BJ assembly
5. Clip A
6. BJ boot band
7. BJ boot
8. Dynamic damper band
9. Dynamic damper
10. Shaft
11. PTJ boot band
12. PTJ boot
13. Trunion assembly
14. Circlip
15. PTJ assembly

SCMDS6503L

[RH]

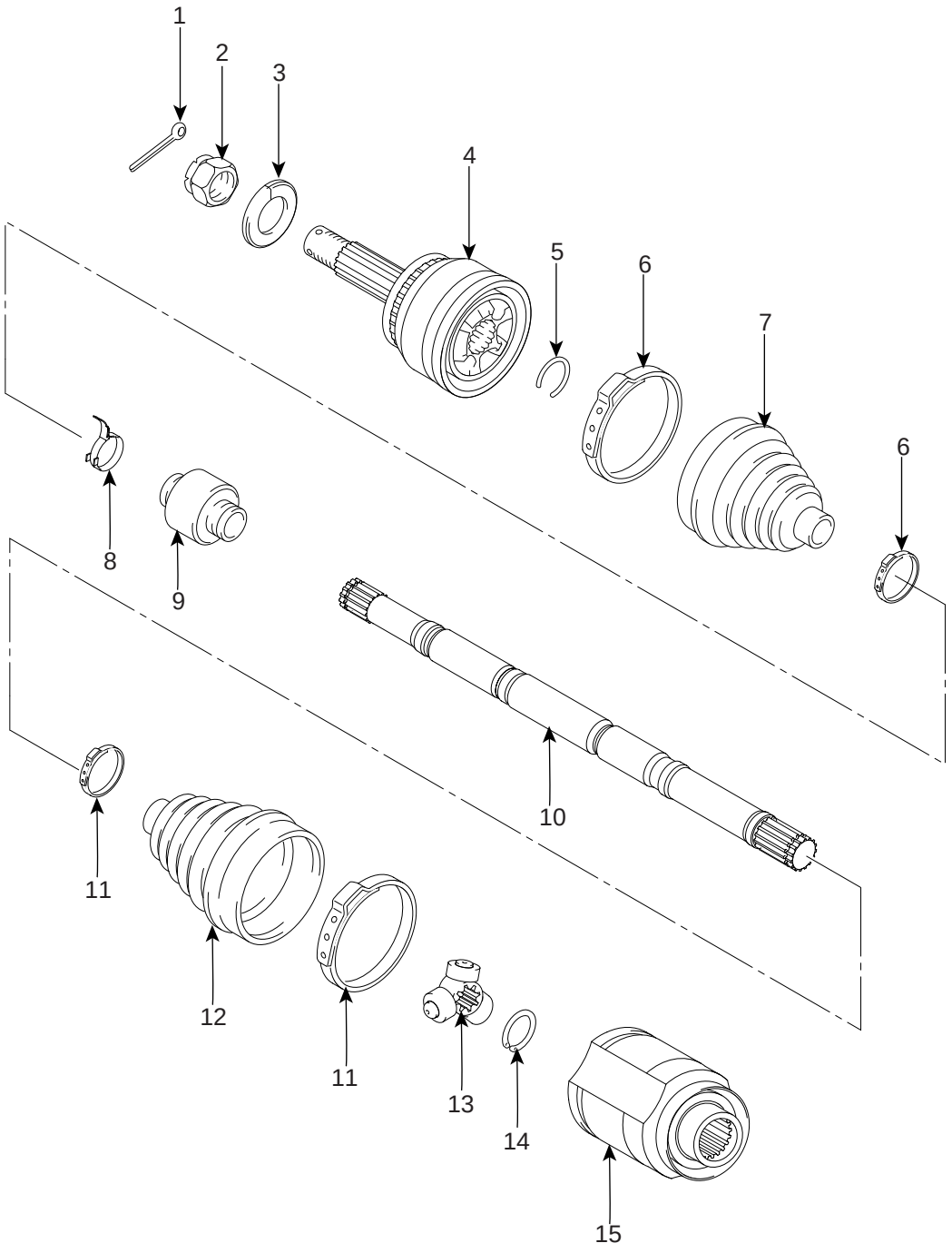

1. Split pin
2. Castle nut
3. Washer
4. BJ assembly
5. Clip A
6. BJ boot band
7. BJ boot
8. Dynamic damper band
9. Dynamic damper
10. Shaft
11. PTJ boot band
12. PTJ boot
13. Trunion assembly
14. Circlip
15. PTJ assembly

SCMDS6504L

DISASSEMBLY E7560CE9

CAUTION

- ***Do not disassemble the BJ assembly.***
- ***Special grease must be applied to the driveshaft joint. Do not substitute with another type of grease.***
- ***The boot band should be replaced with a new one.***

1. Remove the circlip (B) from driveshaft splines (A) of the transaxle side PTJ case.

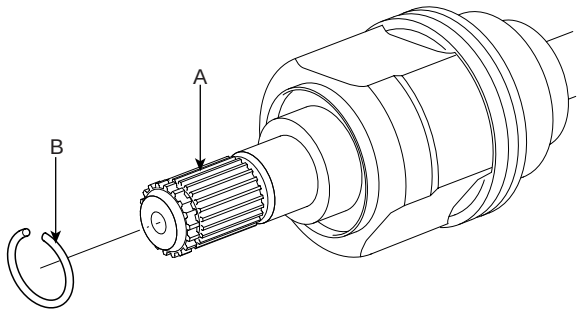

KXDDE07A

2. Remove the both boot clamps from the transaxle side PTJ case.

   1) Using a flat-tipped (-) screwdriver, remove the both clamps of the transaxle side.

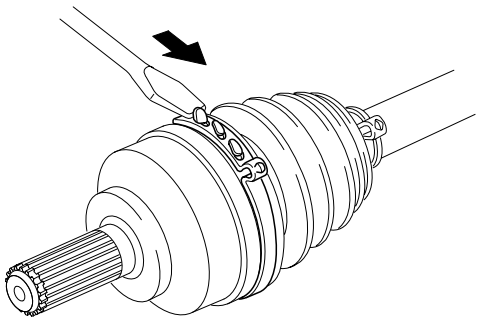

SCMDS6515D

3. Pull out the boot from the transaxle side joint(PTJ).
4. Remove the clip (C) from the PTJ case (B).
5. While dividing joint(PTJ) boot (A) of the transaxle side, wipe the grease in PTJ case (B) and collect them respectively.

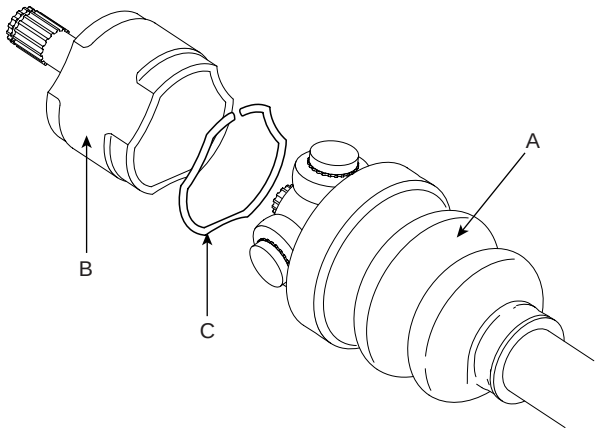

SCMDS6505D

CAUTION

- ***Be careful not to damage the boot.***
- ***According to below the illustrated, put marks (D) on roller of trunion assembly (A), PTJ case (B) and spline part (C), for providing assembly.***

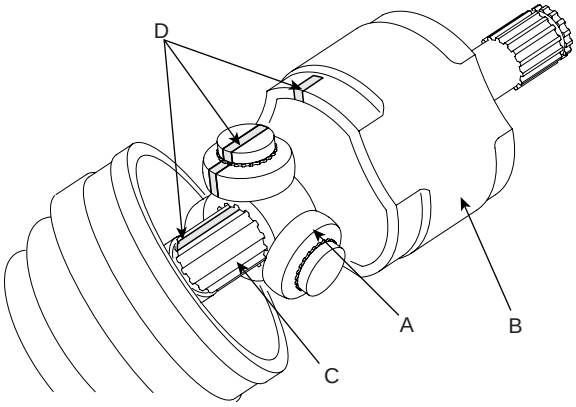

KXDDE11A

6. Using a snap ring plier or flat-tipped (-) screwdriver, remove the circlip (A).

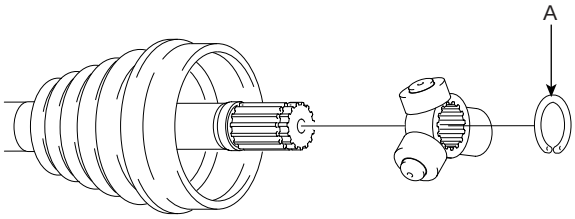

KXDDE12A

7. Remove the trunion assembly (B) from the driveshaft (A) using the special tool (09495-33000).

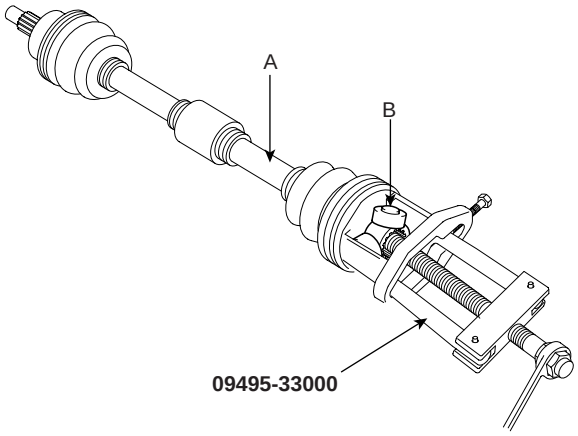

KXDDE13A

8. Clean the trunion assembly.

9. Remove the boot (A) of the transaxle side joint(PTJ).

CAUTION

For reusing the boot (A), wrap tape (B) around the driveshaft splines (C) to protect the boot (A).

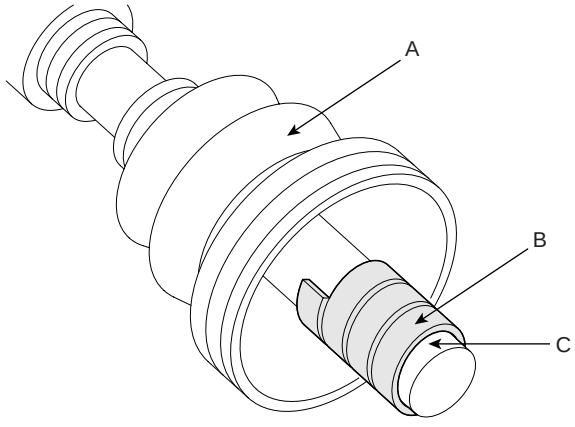

KXDDE14A

10. Using a plier or flat-tipped (-) screwdriver, remove the both side of clamp (B) of the dynamic damper (A).

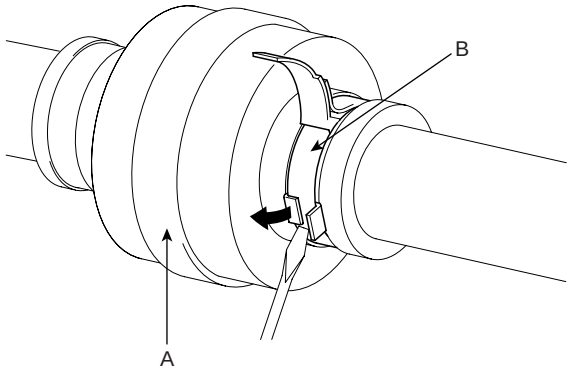

KIQE150A

11. Fix the driveshaft (A) with a vice (B) as illustrated.

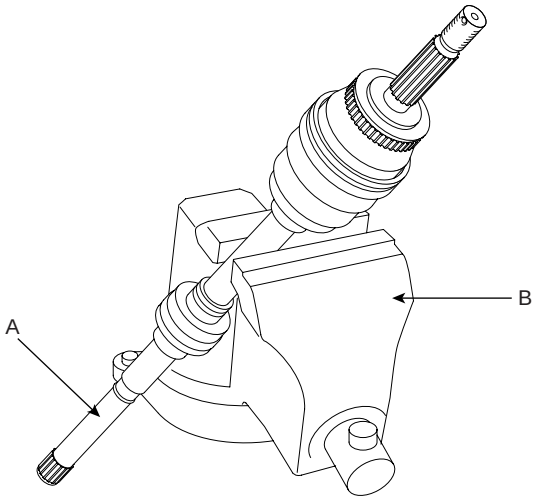

KXDDE16A

12. Apply soap powder on the shaft to prevent being damaged between the shaft spline and the dynamic damper when the dynamic damper is removed.

13. Saperate the dynamic damper (A) from the shaft (B) carefully.

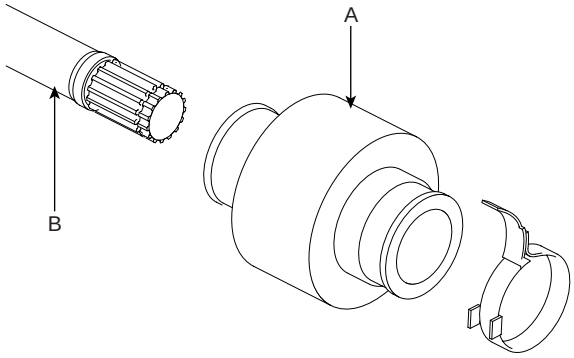

KIQE150B

14. Using a plier or flat-tipped (-) screwdriver, remove the clamp on the side of wheel.

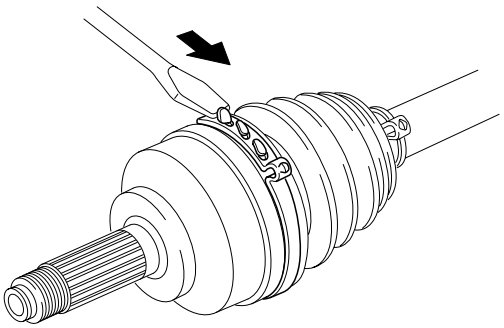

EIRF003H

15. Pull out the joint(BJ) on the side of wheel into the transaxle direction.
    Be carefull not to damage the boot.

INSPECTION EAF5A003

1. Check the driveshaft spline for wear or damage.

2. Check that there is no water or foreign material in the BJ.

3. Check the trunion assembly for roller rotation, wear or corrosion.

4. Check the groove inside the PTJ case for wear or corrosion.

5. Check the dynamic damper for damage or cracks.

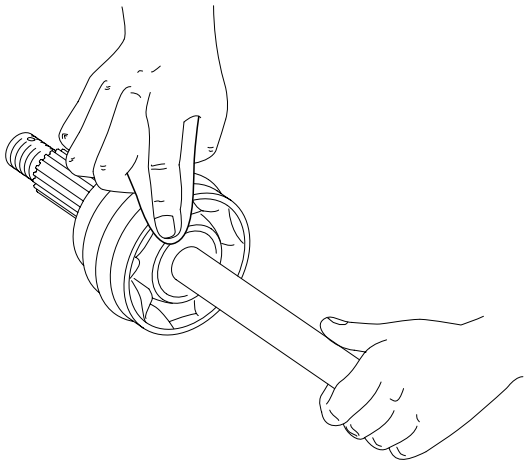

EIKD025B

REASSEMBLY E1C350AF

1. Wrap tape around the driveshaft splines (PTJ. side) to prevent damage to the boots.
2. Apply grease to the driveshaft and install the BJ boots.
3. Install the bands to both BJ boots.

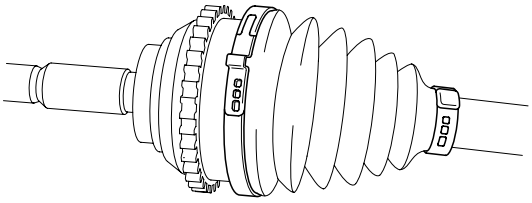

EIRF003I

4. Using the SST(09495-3K000), secure the boot bands.

Clearance (A) : 2.0 mm (0.079 in.) or less

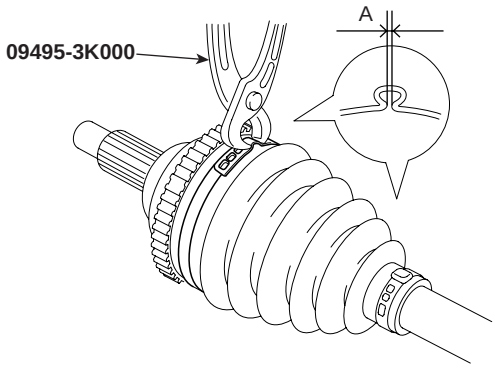

AILG500L

5. To reassemble the dynamic damper (A), keeping the shaft (B) in the straight, tighten the dynamic damper (A) with dynamic damper band (C), as the illustration.

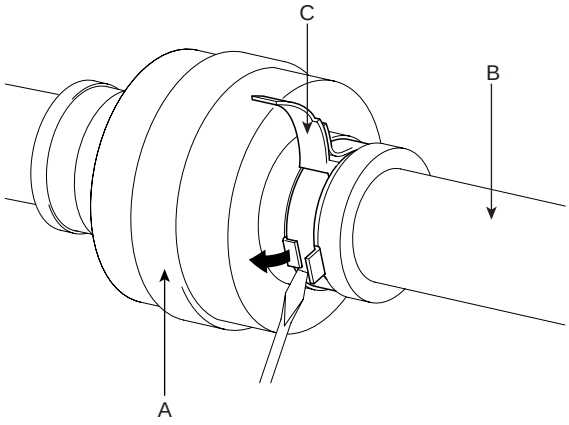

KIQE151A

6. Install the PTJ boot bands and PTJ boot.
7. Install the trunion assembly (A) and the circlip (E) to the spline (C) on the driveshaft.
   At this time align the marks (D) each other.

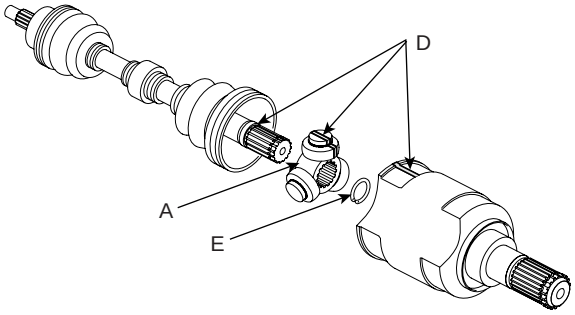

KXDDE20A

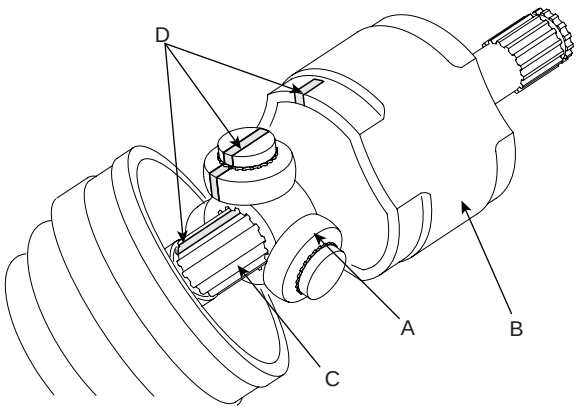

KXDDE11A

8. Install the clip to the PTJ case (B).
9. Add the specified grease to the PTJ as mush as wiped away at inspection.
10. Install the PTJ boots.
11. Install the bands to both PTJ boots.

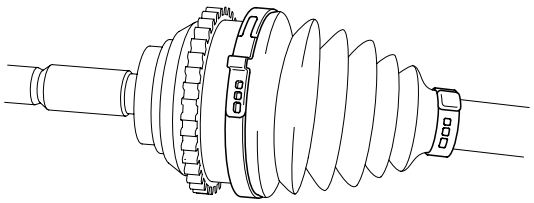

EIRF003I

12. Using the SST(09495-3K000), secure the boot bands.

Clearance (A) : 2.0 mm (0.079 in.) or less

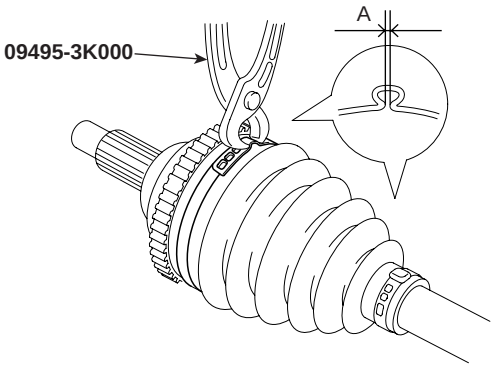

AILG500L

13. To control the air in the PTJ boot, keep the specified distance between the boot bands when they are tightened.

Distance (A)	LH side	RH side
Diesel 2.2 M/T 2WD/4WD (mm(in))	514.2 +26.8 -22.1 (20.24 +1.06 -0.87)	537.2 +26.8 -22.1 (21.15 +1.06 -0.87)
Diesel 2.2 A/T 2WD/4WD (mm(in))	524.2 +26.8 -22.1 (20.64 +1.06 -0.87)	
Gasoline 2.7 A/T 2WD (mm(in))	534.2 +26.8 -22.1 (21.03 +1.06 -0.87)	

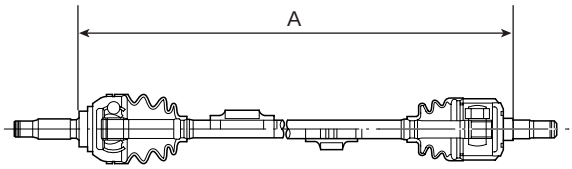

EIKD022A

FRONT DRIVESHAFT (SFJ-BJ TYPE)

COMPONENT EA567BE1

[LH]

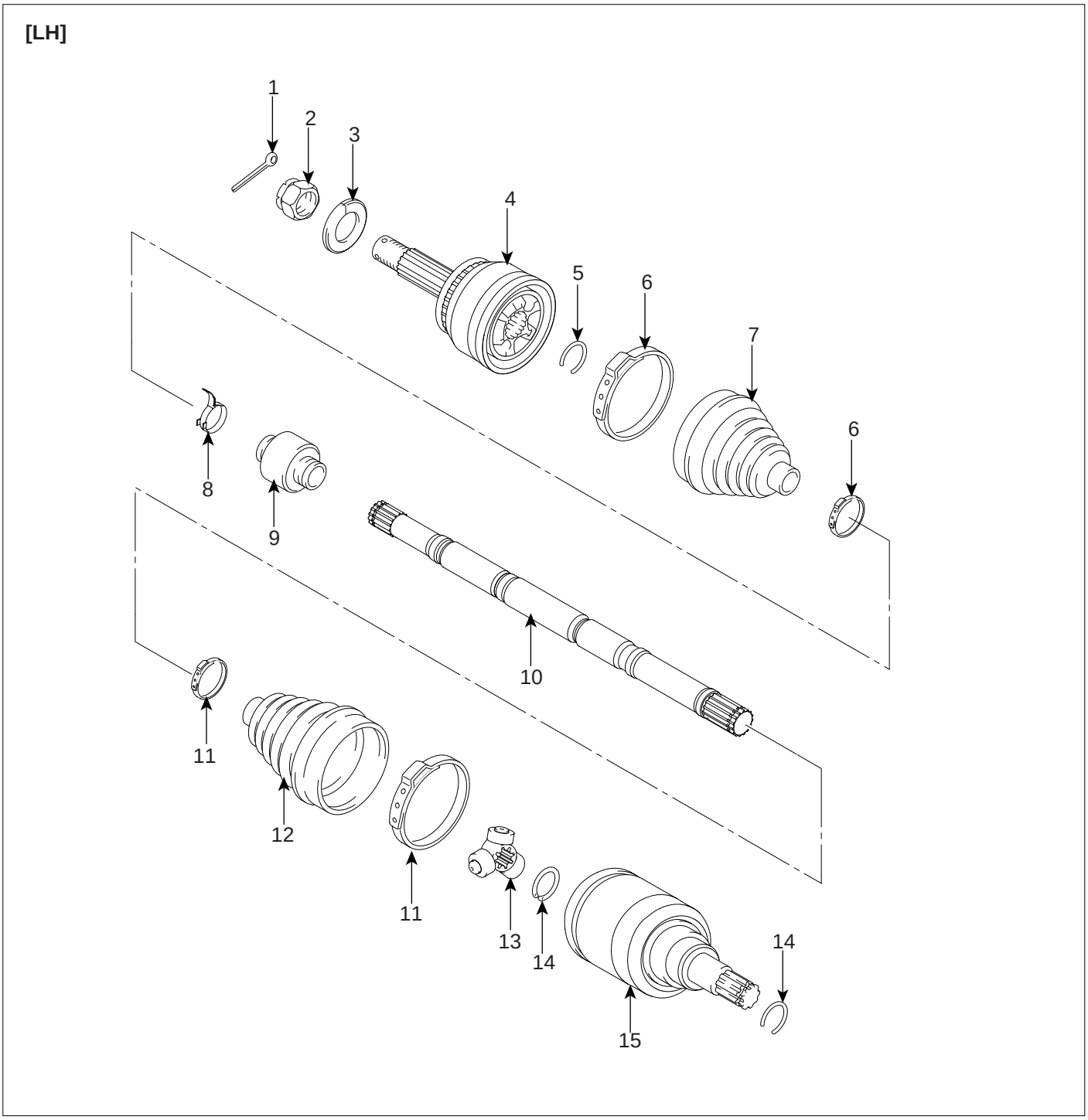

1. Split pin
2. Castle nut
3. Washer
4. BJ assembly
5. Clip A
6. BJ boot band
7. BJ boot
8. Dynamic damper band
9. Dynamic damper
10. Shaft
11. SFJ boot band
12. SFJ boot
13. Trunion assembly
14. Circlip
15. SFJ assembly

SCMDS6505L

[RH]

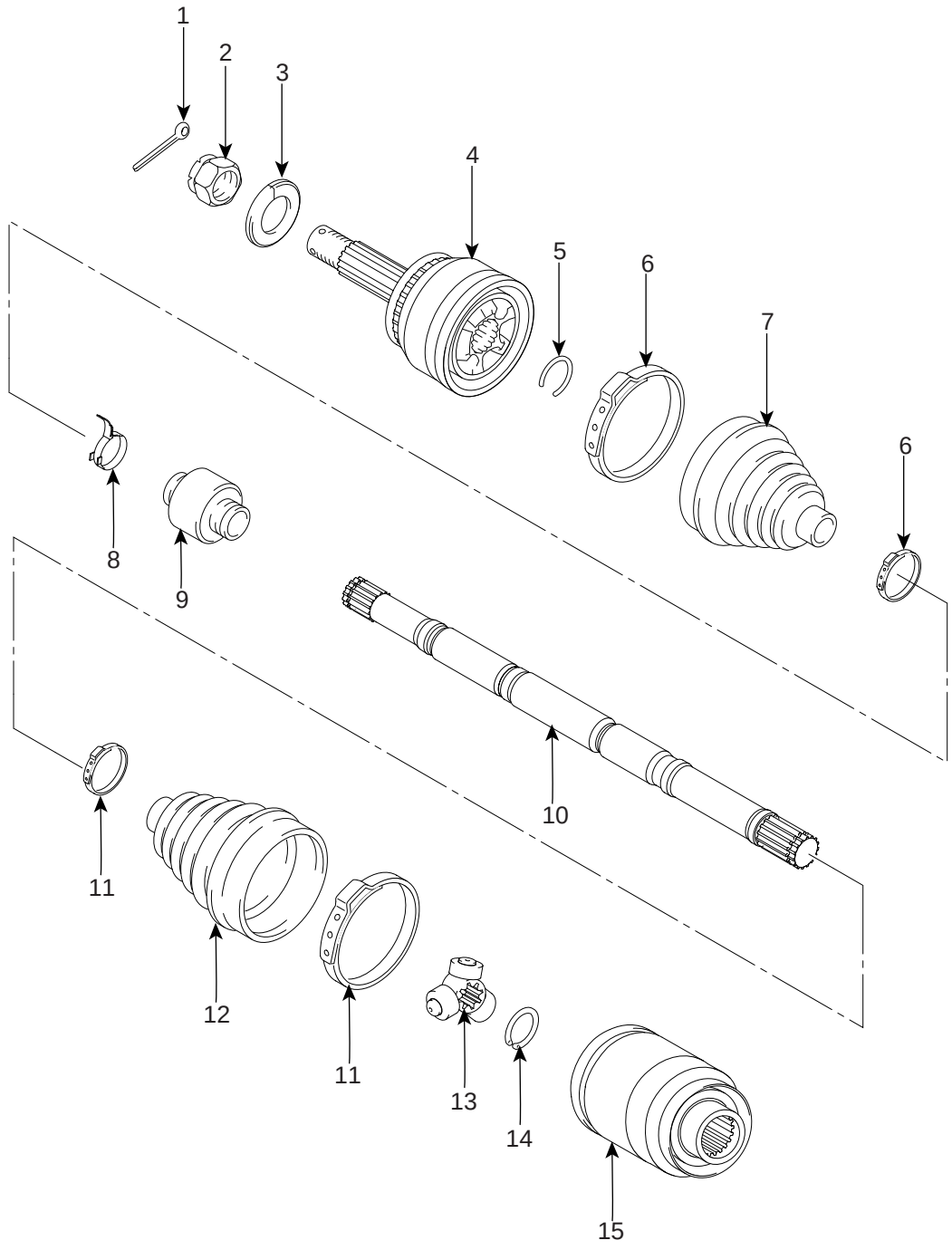

1. Split pin
2. Castle nut
3. Washer
4. BJ assembly
5. Clip A
6. BJ boot band
7. BJ boot
8. Dynamic damper band
9. Dynamic damper
10. Shaft
11. SFJ boot band
12. SFJ boot
13. Trunion assembly
14. Circlip
15. SFJ assembly

SCMDS6506L

DISASSEMBLY EEC521AB

CAUTION

- ***Do not disassemble the BJ assembly.***
- ***Special grease must be applied to the driveshaft joint. Do not substitute with another type of grease.***
- ***The boot band should be replaced with a new one.***

1. Remove the circlip (B) from driveshaft splines (A) of the transaxle side SFJ case.

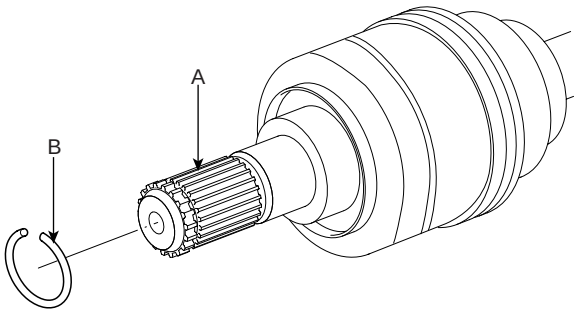

SCMDS6507L

2. Remove the both boot clamps from the transaxle side SFJ case.

   1) Using a flat-tipped (-) screwdriver, remove the both clamps of the transaxle side.

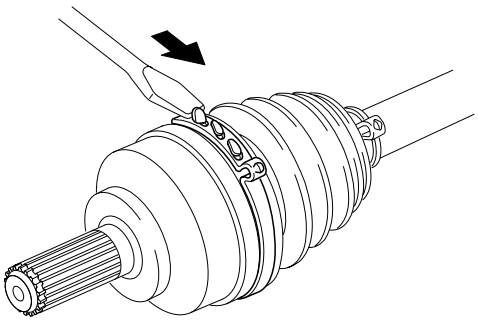

SCMDS6515D

3. Pull out the boot from the transaxle side joint(SFJ).
4. Remove the clip (C) from the SFJ case (B).
5. While dividing joint(SFJ) boot (A) of the transaxle side, wipe the grease in PTJ case (B) and collect them respectively.

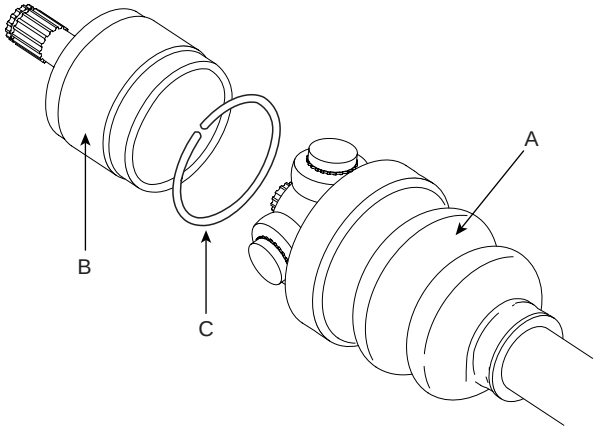

SCMDS6508L

CAUTION

- ***Be careful not to damage the boot.***
- ***According to below the illustrated, put marks (D) on roller of trunion assembly (A), SFJ case (B) and spline part (C), for providing assembly.***

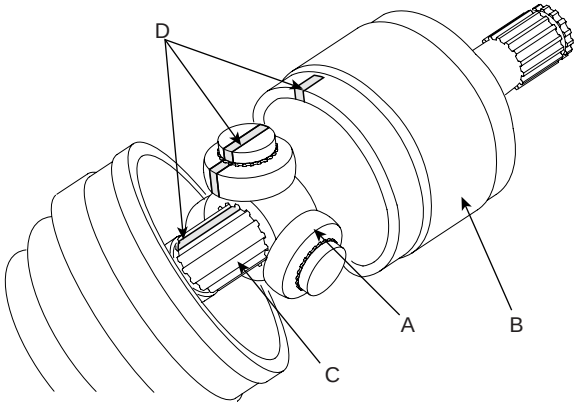

SCMDS6509L

6. Using a snap ring plier or flat-tipped (-) screwdriver, remove the circlip (A).

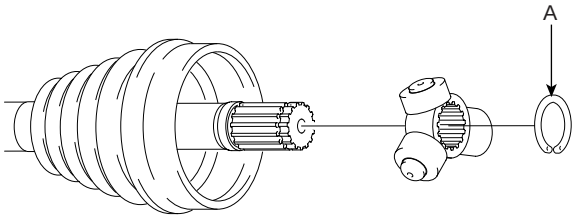

KXDDE12A

7. Remove the trunion assembly (B) from the driveshaft (A) using the special tool (09495-33000).

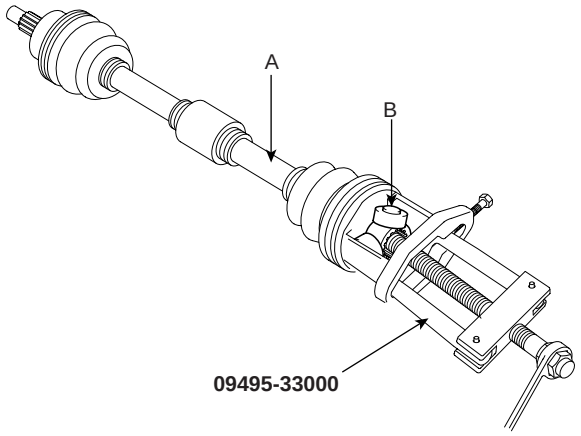

KXDDE13A

8. Clean the trunion assembly.

9. Remove the boot (A) of the transaxle side joint(SFJ).

CAUTION

For reusing the boot (A), wrap tape (B) around the driveshaft splines (C) to protect the boot(A).

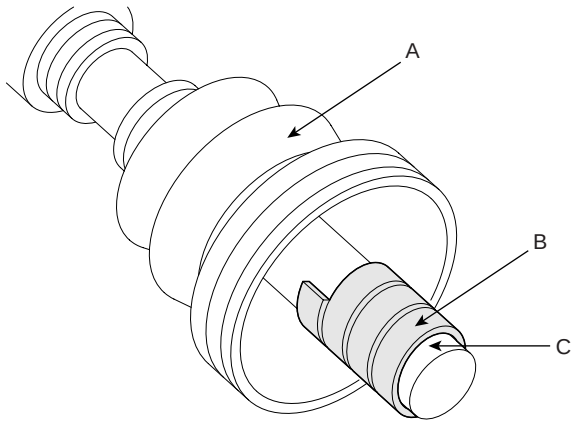

KXDDE14A

10. Using a plier or flat-tipped (-) screwdriver, remove the both side of clamp (B) of the dynamic damper (A).

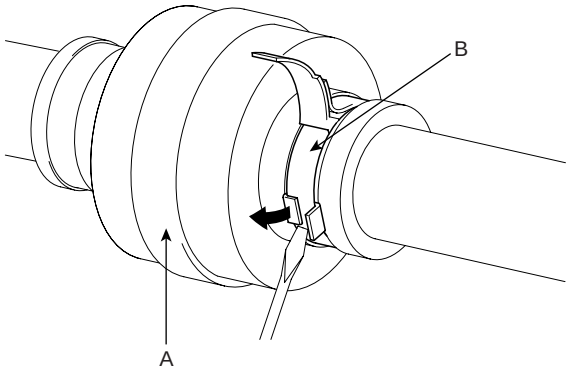

KIQE150A

11. Fix the driveshaft (A) with a vice (B) as illustrated.

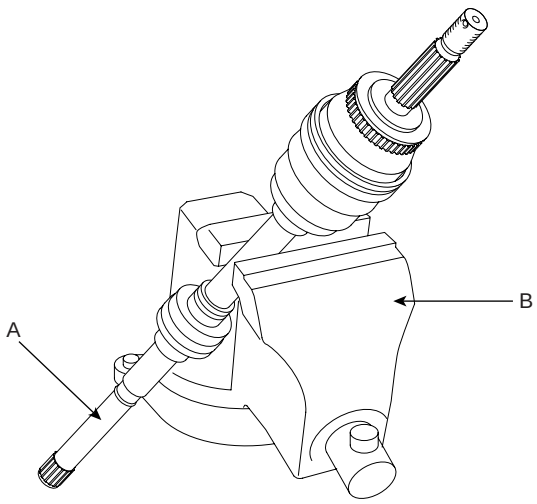

KXDDE16A

12. Apply soap powder on the shaft to prevent being damaged between the shaft spline and the dynamic damper when the dynamic damper is removed.

13. Saperate the dynamic damper (A) from the shaft (B) carefully.

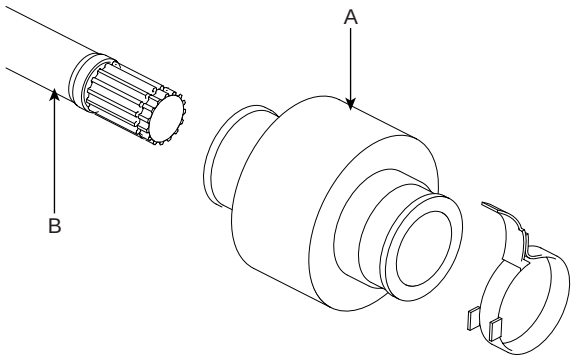

KIQE150B

14. Using a plier or flat-tipped (-) screwdriver, remove the clamp on the side of wheel.

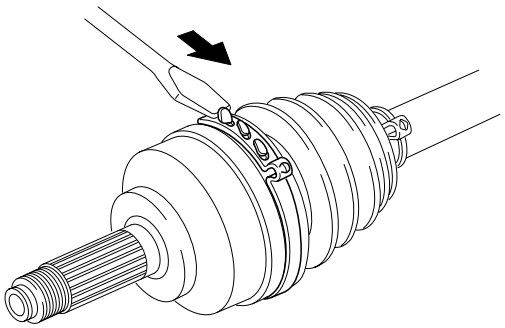

EIRF003H

15. Pull out the joint(BJ) on the side of wheel into the transaxle direction.
    Be carefull not to damage the boot.

INSPECTION E47AE75F

1. Check the driveshaft spline for wear or damage.

2. Check that there is no water or foreign material in the BJ.

3. Check the trunion assembly for roller rotation, wear or corrosion.

4. Check the groove inside the SFJ case for wear or corrosion.

5. Check the dynamic damper for damage or cracks.

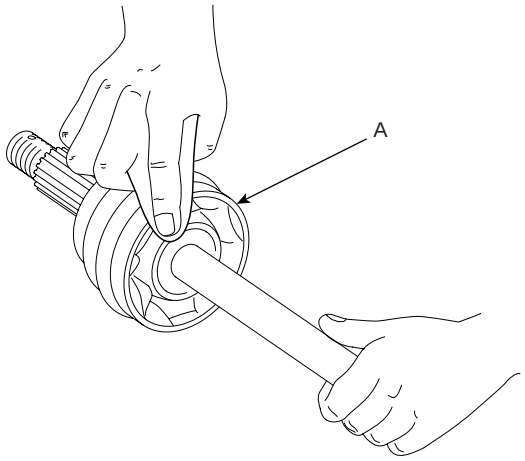

EIKD025A

REASSEMBLY E3E68C07

1. Wrap tape around the driveshaft splines (SFJ. side) to prevent damage to the boots.
2. Apply grease to the driveshaft and install the BJ boots.
3. Install the bands to both BJ boots.

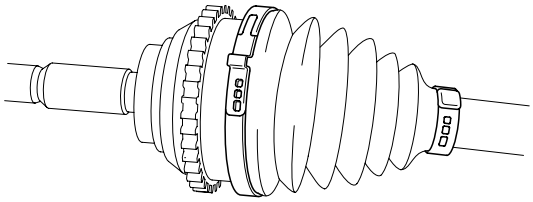

EIRF003I

4. Using the SST(09495-3K000), secure the boot bands.

Clearance (A) : 2.0 mm (0.079 in.) or less

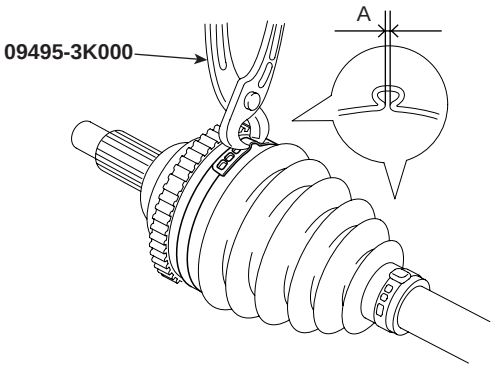

AILG500L

5. To reassemble the dynamic damper (A), keeping the shaft (B) in the straight, tighten the dynamic damper (A) with dynamic damper band (C), as the illustration.

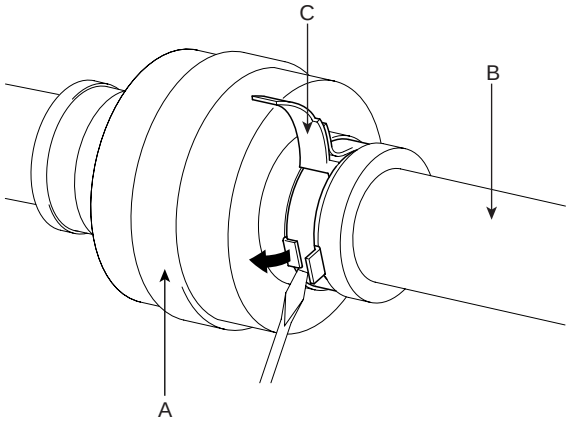

KIQE151A

6. Install the SFJ boot bands and SFJ boot.
7. Install the trunion assembly (A) and the circlip (E) to the spline (C) on the drivershaft.
   At this time align the marks (D) each other.

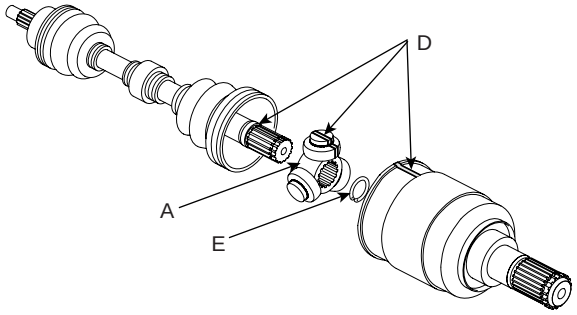

SCMDS6510L

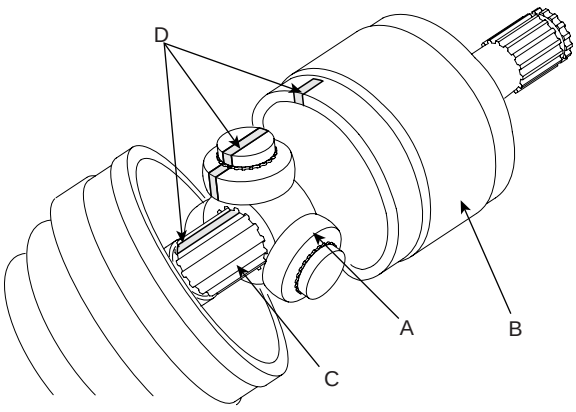

SCMDS6509L

8. Install the clip to the SFJ case (B).
9. Add the specified grease to the SFJ as mush as wiped away at inspection.
10. Install the SFJ boots.
11. Install the bands to both SFJ boots.

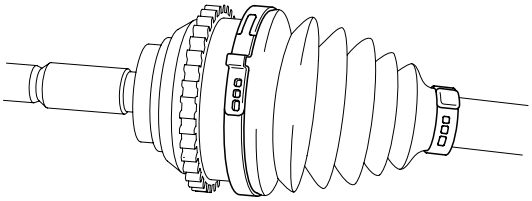

EIRF003I

12. Using the SST(09495-3K000), secure the boot bands.

Clearance (A) : 2.0 mm (0.079 in.) or less

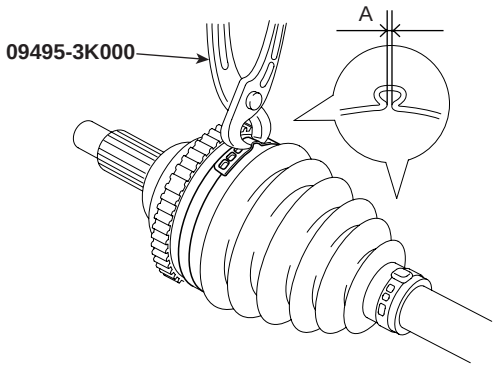

AILG500L

13. To control the air in the SFJ boot, keep the specified distance between the boot bands when they are tightened.

Distance (A)	LH side	RH side
Gasoline 2.7 M/T 2WD/4WD (mm(in))	533.2 ±23.9 (20.99 ±094)	539.0 ±23.9 (21.22 ±0.94)
Gasoline 2.7 A/T 4WD (mm(in))	533.2 ±23.9 (20.99 ±094)	

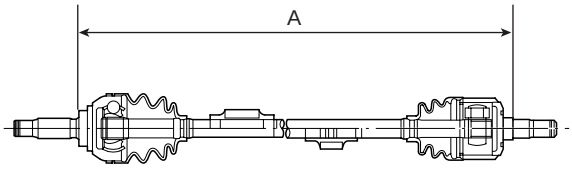

EIKD022A

REAR AXLE

REAR HUB / CARRIER

COMPONENT LOCATION E8D6A197

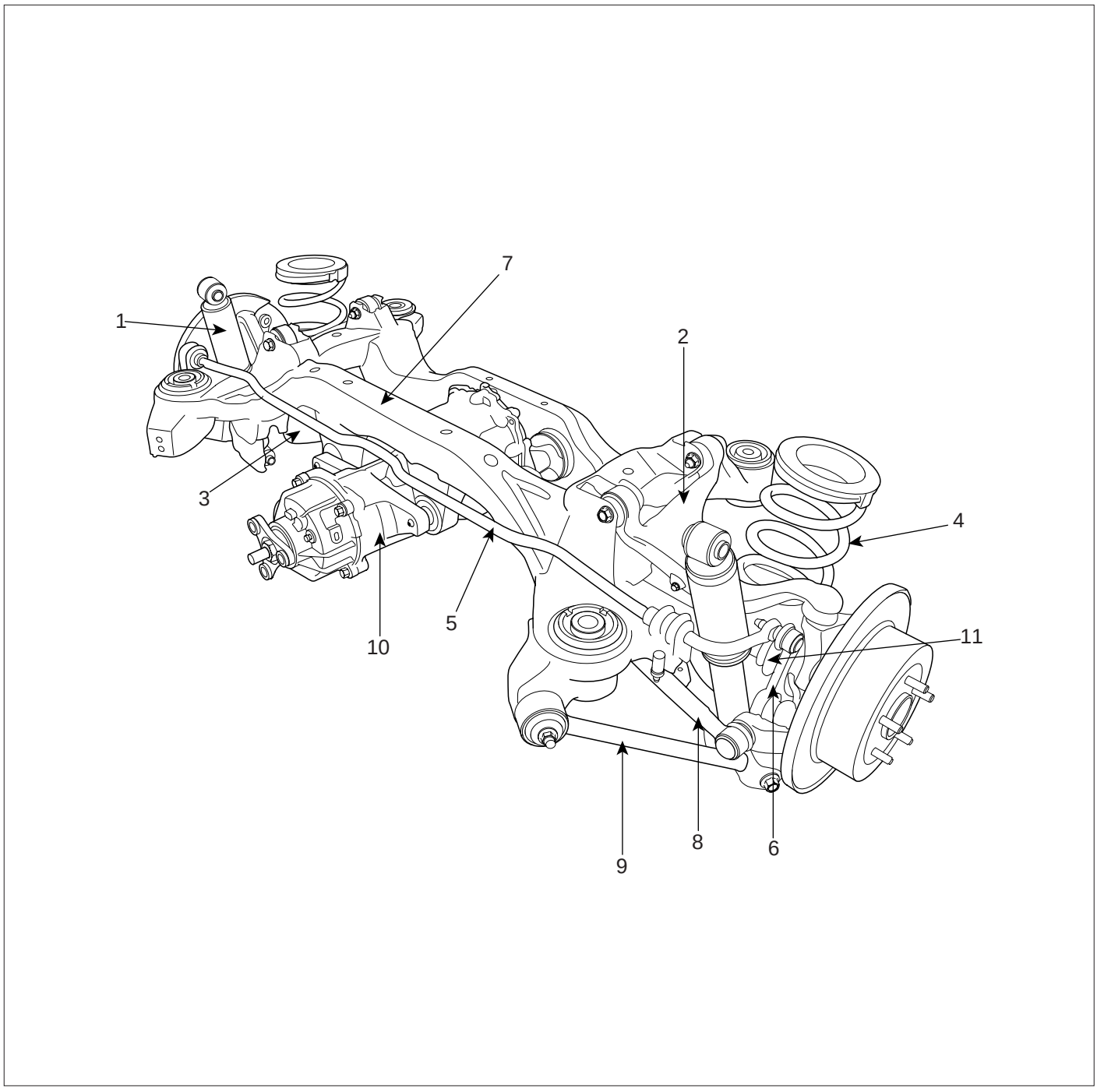

1. Rear shock absorber assembly
2. Rear upper arm
3. Rear lower arm
4. Rear coil spring
5. Rear stabilizer bar assembly
6. Rear stabilizer link assembly
7. Rear cross member
8. Rear assist arm
9. Trailing arm
10. Differential Carrier (4WD)
11. Drive shaft (4WD)

SCMDS6512L

COMPONENT E5AB35F5

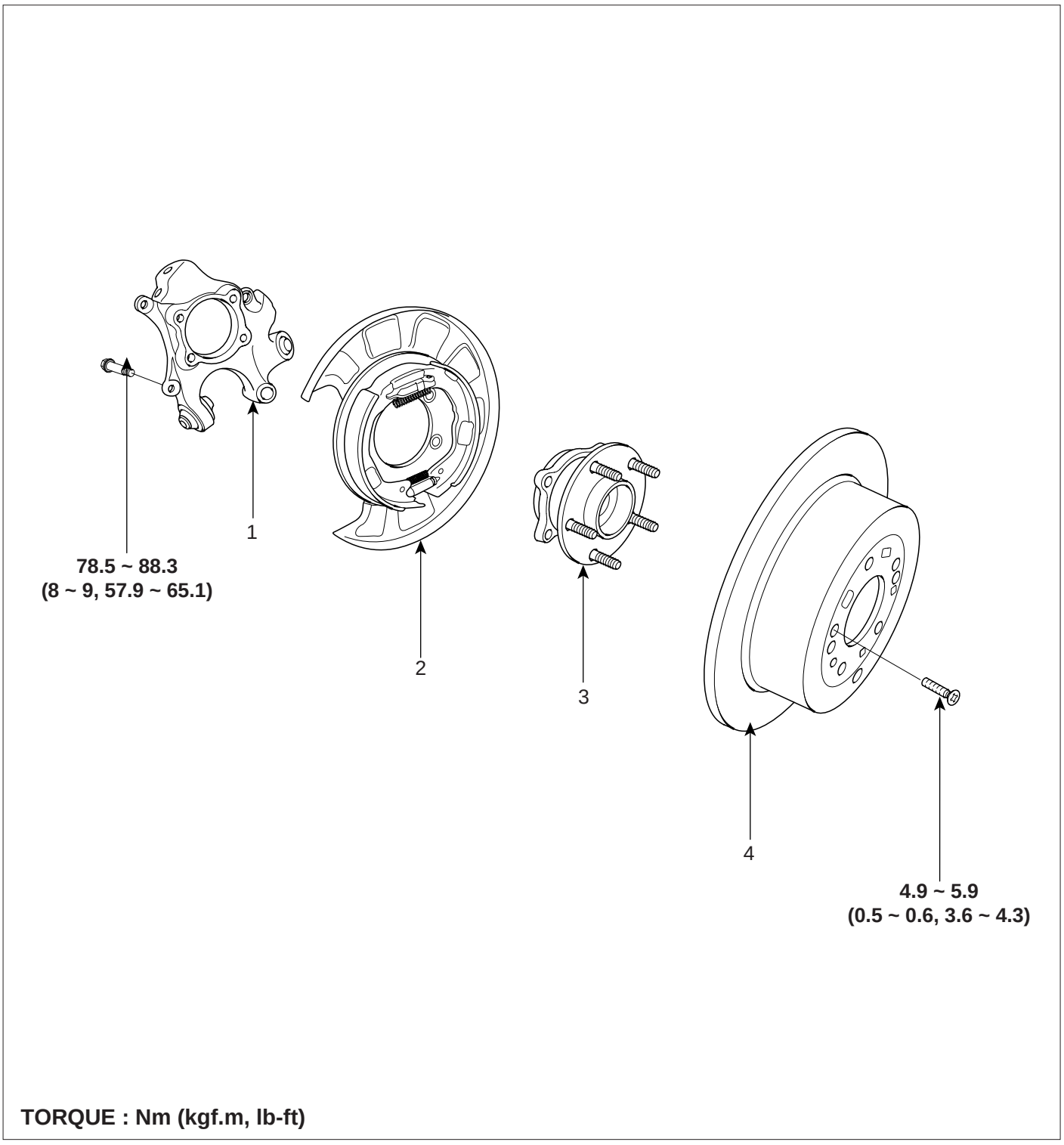

1. Rear carrier assembly
2. Parking brake assembly
3. Rear hub assembly
4. Rear brake disc

SCMDS6513L

REMOVAL EB310E4E

1. Loosen the wheel nuts slightly.
   Raise the vehicle, and make sure it is securely supported.

2. Remove the rear wheel and tire (A) from the rear hub (B).

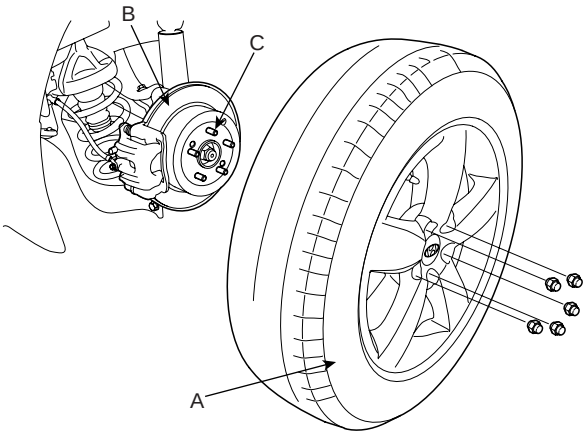

SCMDS6019D

CAUTION

Be careful not to damage to the hub bolts (C) when removing the rear wheel and tire (A).

3. Remove the split pin (A), then remove castle nut (B) and washer (C) from the front hub under applying the brake.

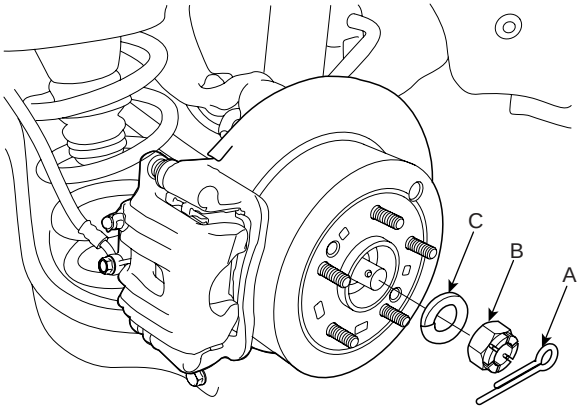

SCMDS6020D

4. Remove the mounting bolt (B) of the rear lower arm(A) and the rear carrier, while supporting the lower arm (A) with a jack as shown in the illustration. Loosen the mounting bolt (C) of the cross member and the rear lower arm.

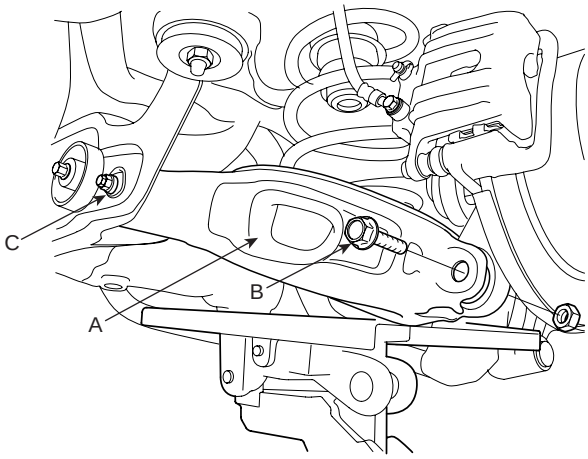

SCMDS6021D

5. Remove the spring (A), the upper pad (B) and the lower pad (C).

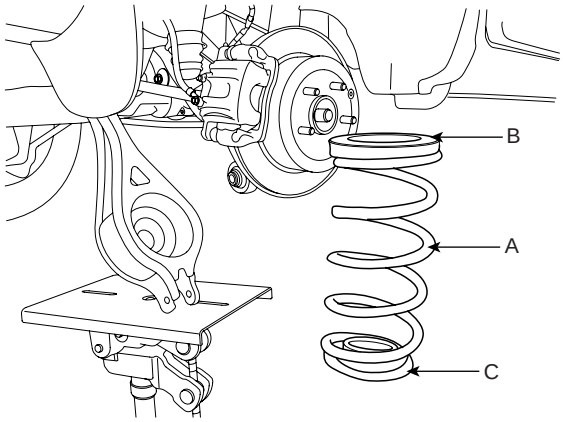

SCMDS6022D

6. Remove the rear shock absorber (A).

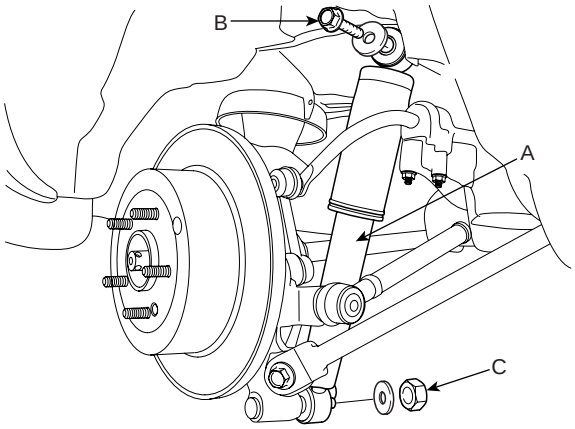

SCMDS6023D

7. Remove the assist arm (A) and the trailing arm (B) from the rear axle carrier.

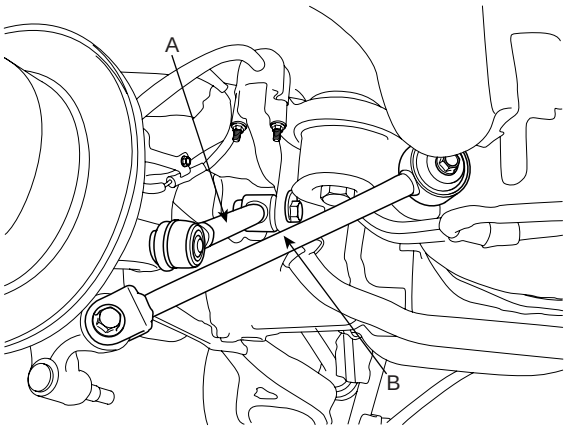

SCMDS6024D

NOTE

Remove the rear assist arm ball joint by using the special tool(09568-4A000).

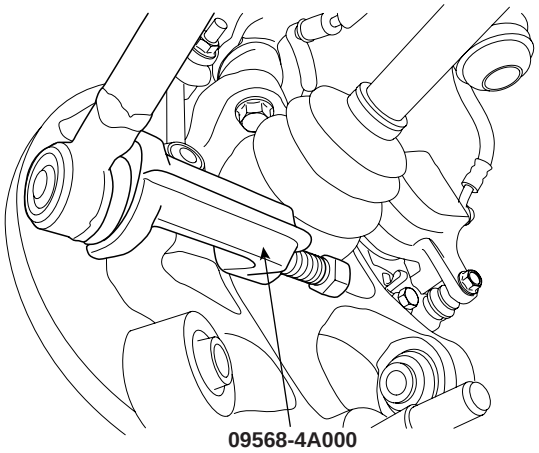

SCMDS6518L

8. Remove the rear stabilizer link (A) from the rear axle carrier.

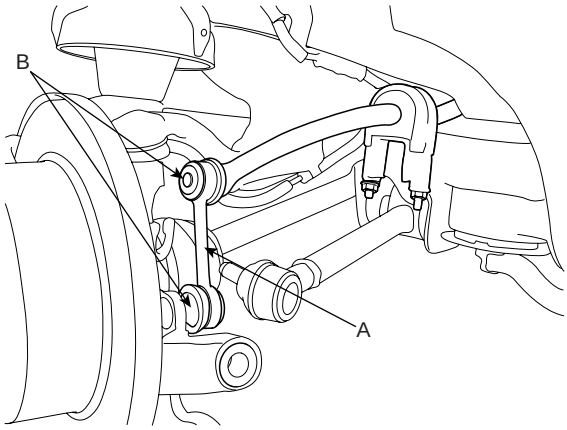

SCMDS6026D

9. Remove the brake caliper mounting bolts (A), and then place the brake caliper assembly (B) with wire as shown in the illustration.

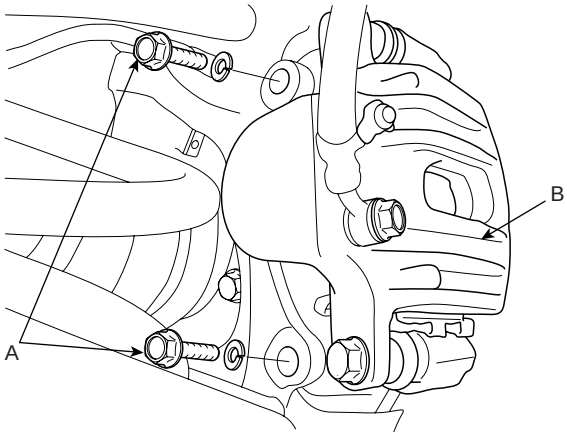

SCMDS6027D

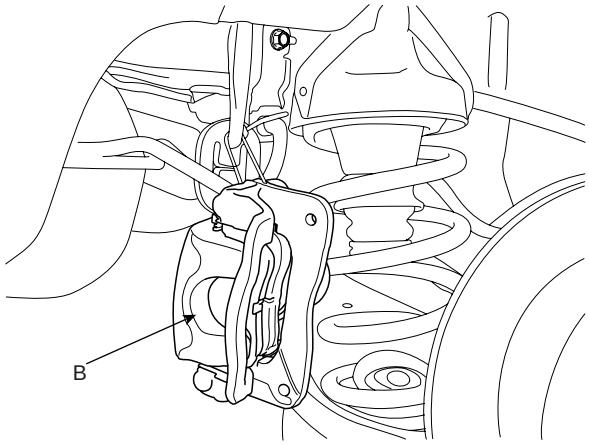

SCMDS6028D

10. Remove the wheel speed sensor (A) and the parking brake cable (B) from the rear axle carrier.

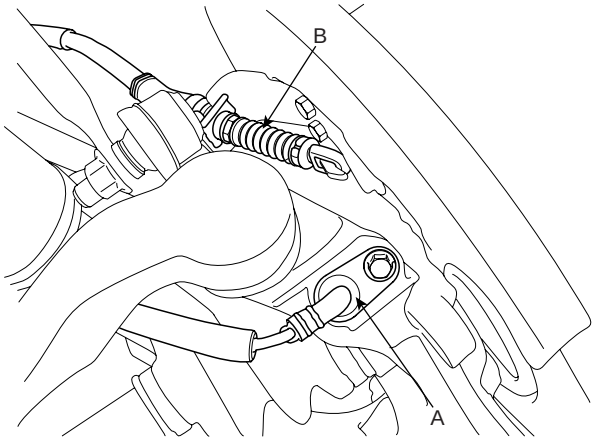

SCMDS6029D

11. Remove the split pin (A) and the castle nut (B) from the rear upper arm ball joint (C), and then remove the rear upper arm ball joint (C) by using the special tool(09568-34000).

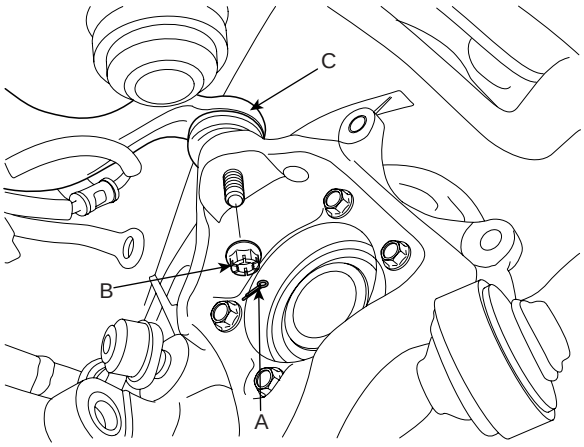

SCMDS6030D

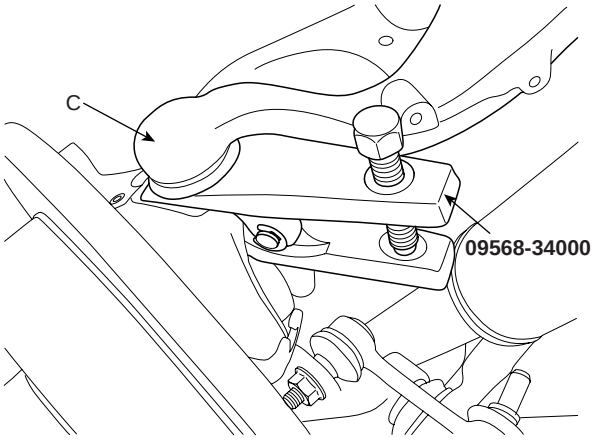

SCMDS6031D

12. Remove the rear axle carrier assembly.

DISASSEMBLY E17753C8

1. Remove the brake disc from the rear axle carrier assembly.

2. Remove the hub assembly mounting bolts (B) from the rear axle carrier (A).

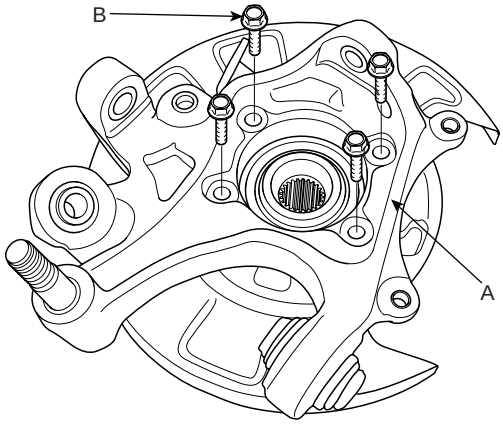

SCMDS6032D

3. Remove the hub assembly (C) and the parking brake assembly (B) from the rear axle carrier (A).

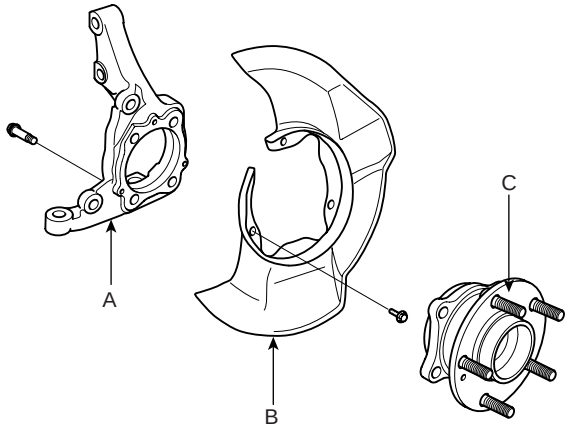

SCMDS6501D

CAUTION

Do not disassemble the hub assembly.

INSPECTION E1DDE79F

1. Check the hub for cracks and the splines for wear.

2. Check the brake disc for scoring and damage.

3. Check the rear axle carrier for cracks

4. Check the bearing for cracks or damage.

REASSEMBLY EB2FA7EF

1. Install the parking brake assembly (B) and the hub assembly (C) to the rear axle carrier (A).

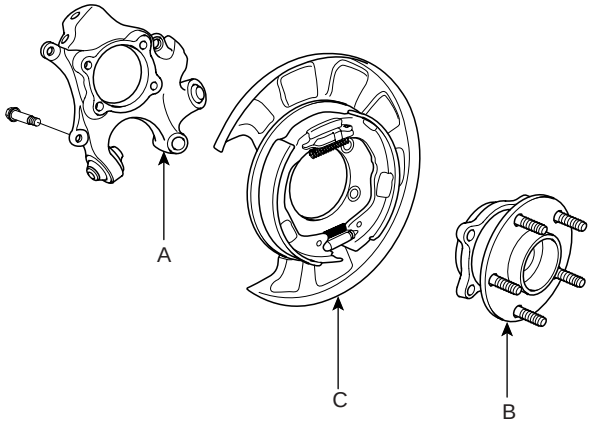

SCMDS6506D

2. Install the hub assembly to the rear axle carrier (A) and then tighten the mounting bolt (B).

Tightening torque Nm (kgf-m, lb-ft) :
78.5~88.3 (8~9, 57.9~65.1)

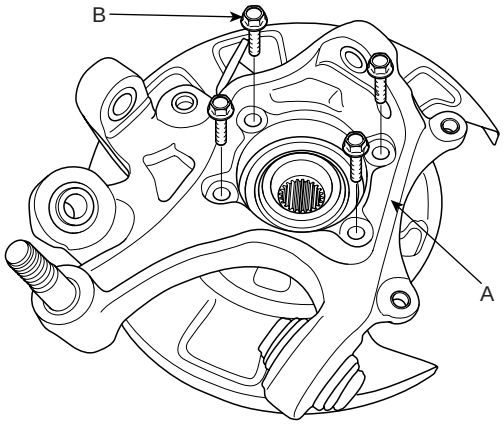

SCMDS6032D

3. Install the brake disc to the rear axle carrier assembly.

Tightening torque Nm (kgf-m, lb-ft) :
Screw: 4.9~5.9 (0.5~0.6, 3.6~4.3)

INSTALLATION E3ABD444

1. Install the rear axle carrier assembly.

2. Install the split pin (A) and the castle nut (B) to the rear upper arm ball joint (C).

Tightening torque Nm (kgf-m, lb-ft) :
78.5~88.3 (8.0~9.0, 57.9~65.1)

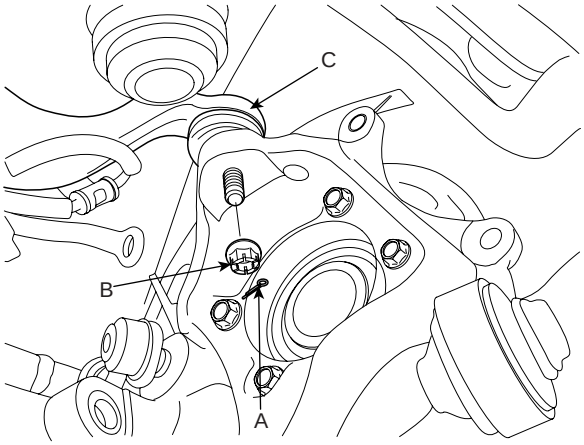

SCMDS6030D

3. Install the wheel speed sensor (A) and the parking brake cable (B) to the rear axle carrier.

Tightening torque Nm (kgf-m, lb-ft) :
Wheel speed sensor (A) :
6.9~10.8 (0.7~1.1, 5.1~8.0)

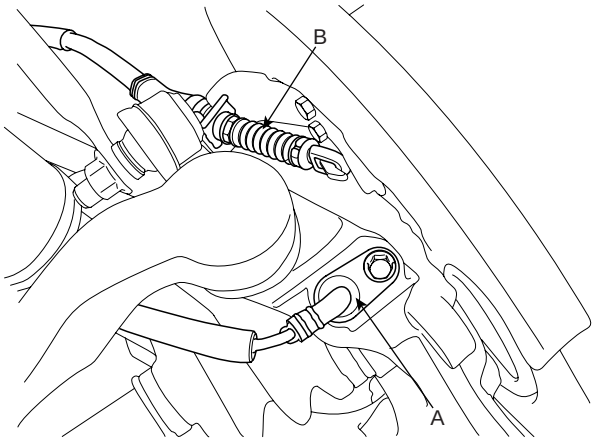

SCMDS6029D

4. Install the brake caliper (B), then tighten the brake caliper mounting bolts (A).

Tightening torque Nm (kgf-m, lb-ft) :
63.7~73.5 (6.5~7.5, 47.0~54.2)

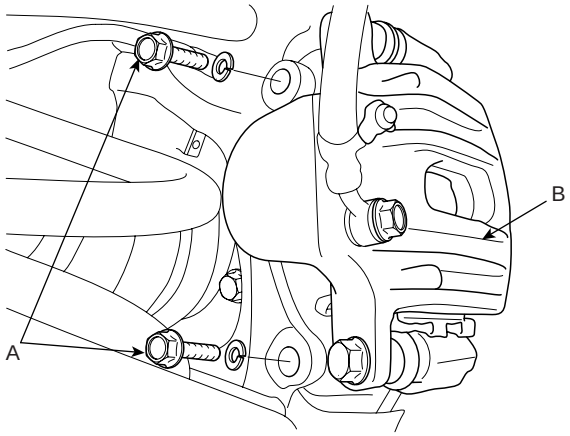

SCMDS6027D

5. Install the rear stabilizer link (A) from the rear axle carrier.

Tightening torque Nm (kgf-m, lb-ft) :
Nut(B) : 58.8~78.5 (6.0~8.0, 43.4~57.9)

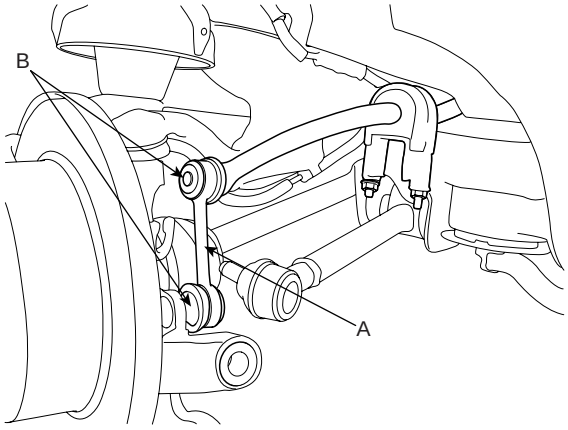

SCMDS6026D

6. Install the assist arm (A) and the trailing arm (B) to the rear axle carrier.

Tightening torque Nm (kgf-m, lb-ft) :
Bolt (C) : 137.3~156.9 (14~16, 101.3~115.7)
Nut (D) : 98.1~117.7 (10~12, 72.3~86.8)
Nut (E) : 137.3~156.9 (14~16, 101.3~115.7)
Bolt (F) : 137.3~156.9 (14~16, 101.3~115.7)

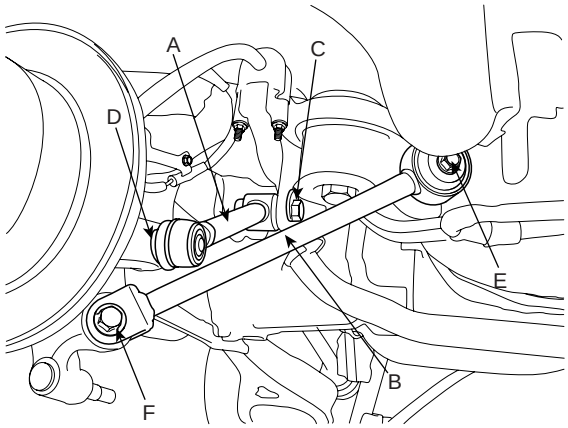

SCMDS6052D

NOTE

After checking the distance(453±10mm(17.83 ±0.39in)) between the wheel housing garnish(A) and the hub assembly(B) as shown in the illustration, tighten the mounting bolts and nuts of rear chassis part with specified torque.

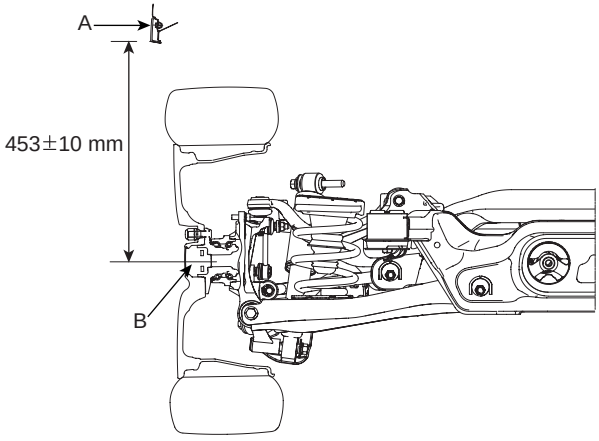

SCMDS6513D

7. Install the rear shock absorber (A).

Tightening torque Nm (kgf-m, lb-ft) :
Bolt (B) : 137.3~156.9 (14~16, 101.3~115.7)
Nut (C) : 98.1~117.7 (10.0~12.0, 72.3~86.8)

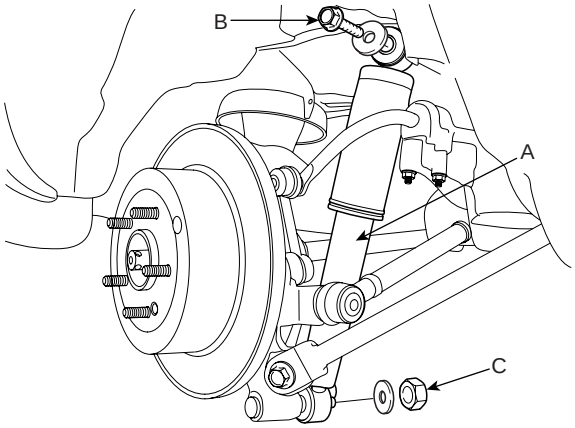

SCMDS6023D

8. Install the spring (A), the upper pad (B) and the lower pad (C).

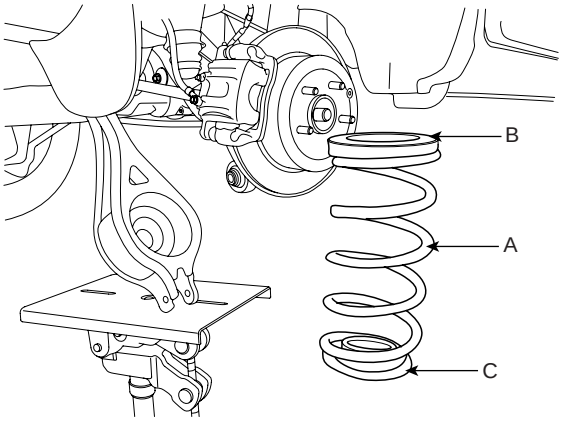

SCMDS6022D

9. Install the mounting bolt (B) of the rear lower arm(A) and the rear carrier with a specified torque, while supporting the lower arm (A) with a jack as shown in the illustration. Tighten the mounting bolt (C) of the cross member and the rear lower arm with a specified torque.

Tightening torque Nm (kgf-m, lb-ft) :
Bolt (B) : 137.3~156.9 (14~16, 101.3~115.7)
Nut (C) : 137.3~156.9 (14~16, 101.3~115.7)

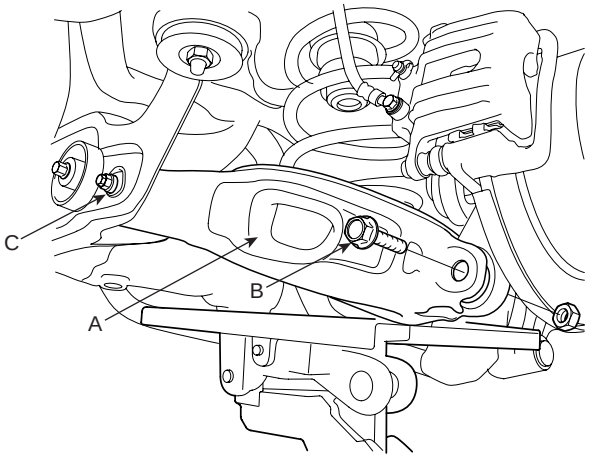

SCMDS6021D

10. Install the washer (C), castle nut (B) and split pin (A) to the rear hub assembly.

Tightening torque Nm (kgf-m, lb-ft) :
196.1~255.0 (20~26, 144.7~188.1)

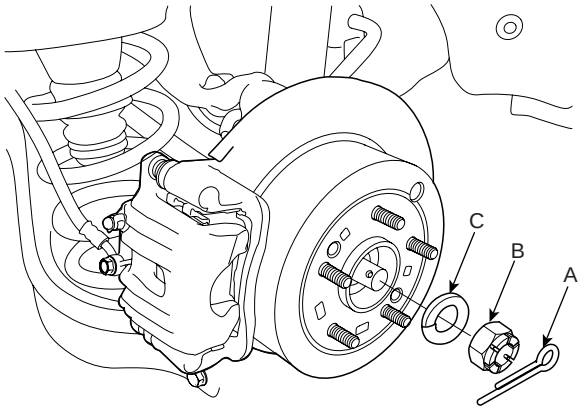

SCMDS6020D

CAUTION

The washer (B) should be assembled with convex surface outward when installing the castle nut (A) and split pin (C).

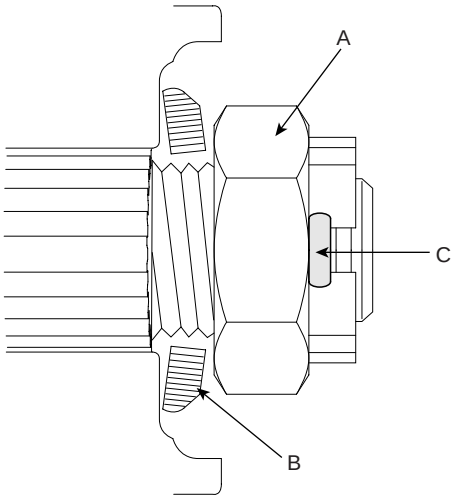

EIKD010A

11. Install the wheel and tire (A) to the rear hub (B).

Tightening torque Nm (kgf-m, lb-ft) :
88.3~107.9 (9~11, 65.1~79.6)

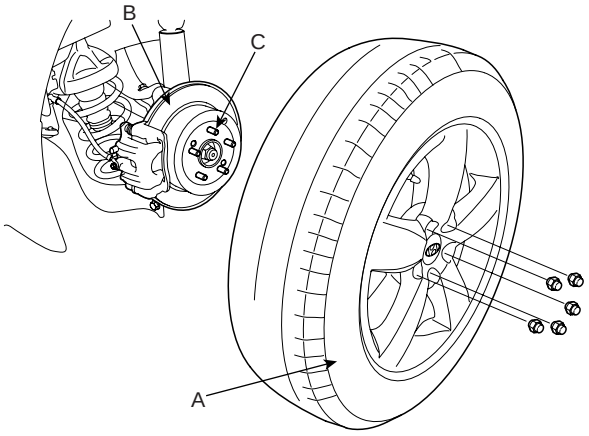

SCMDS6019D

CAUTION

Be careful not to damage the hub bolts (C) when installing the rear wheel and tire (A).

REAR DRIVESHAFT ASSEMBLY

REAR DRIVESHAFT (DOJ-BJ TYPE)

COMPONENT LOCATION EDFAFE3C

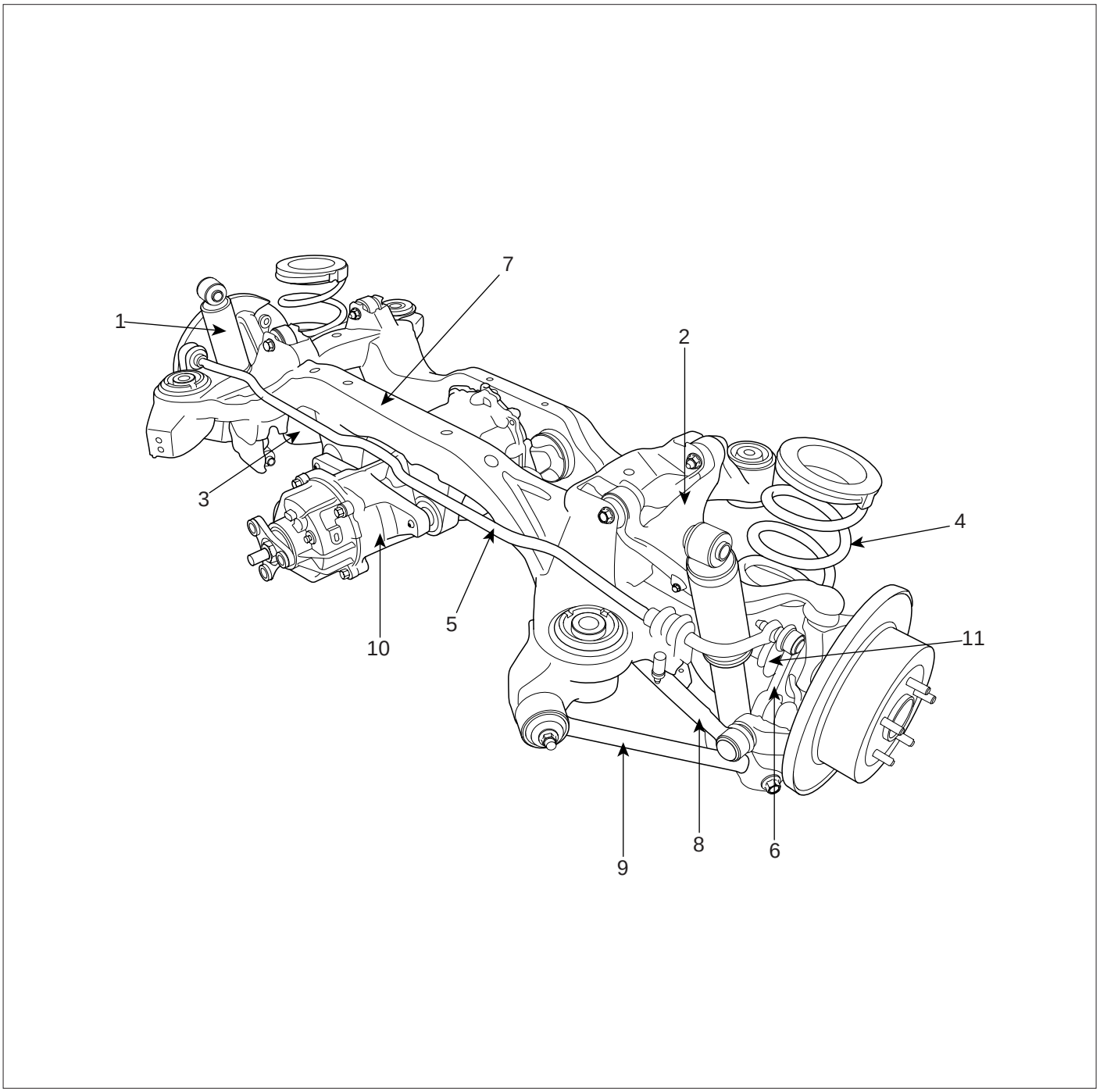

1. Rear shock absorber assembly
2. Rear upper arm
3. Rear lower arm
4. Rear coil spring
5. Rear stabilizer bar assembly
6. Rear stabilizer link assembly
7. Rear cross member
8. Rear assist arm
9. Trailing arm
10. Differential Carrier (4WD)
11. Drive shaft (4WD)

SCMDS6514L

COMPONENT EABF6AAD

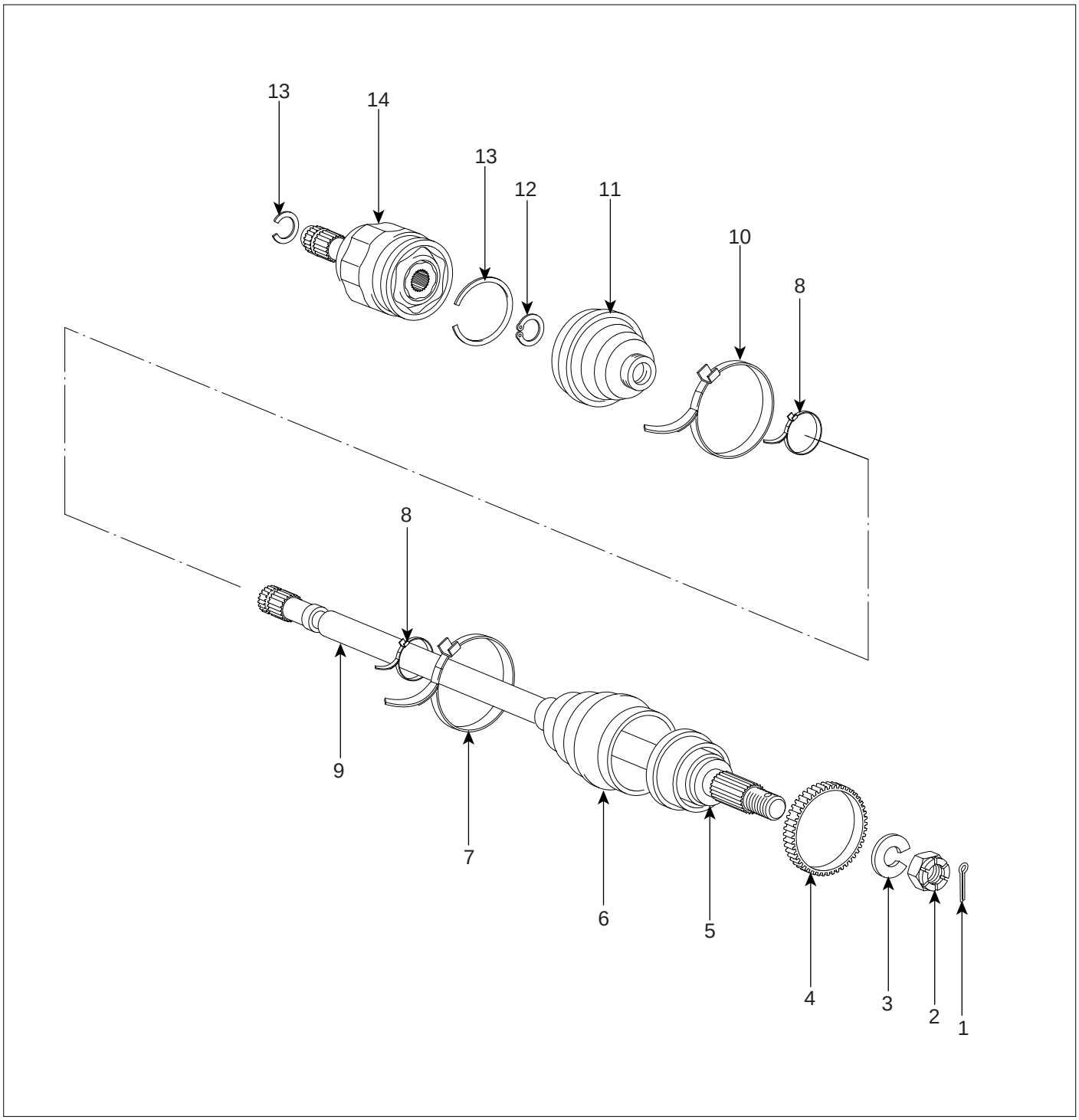

1. Split pin
2. Castle nut
3. Washer
4. Dust cover & Tone wheel
5. BJ assembly
6. BJ boot
7. BJ boot big part band
8. Boot small part band
9. Shaft
10. DOJ boot big part band
11. DOJ boot
12. Snap ling
13. Circlip
14. DOJ assembly

SCMDS6515L

REMOVAL EDC3BEEB

1. Loosen the wheel nuts slightly.
   Raise the vehicle, and make sure it is securely supported.

2. Remove the rear wheel and tire (A) from the rear hub (B).

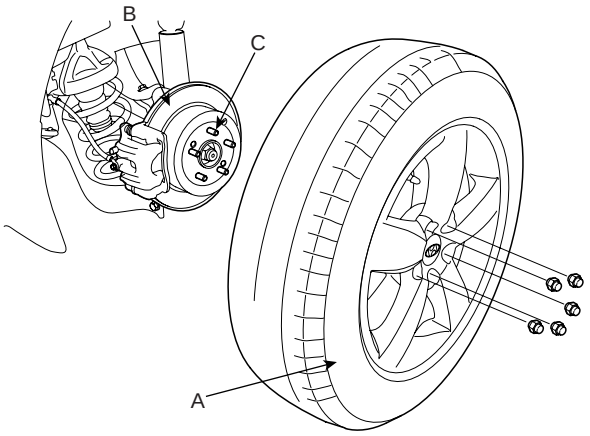

SCMDS6019D

CAUTION

Be careful not to damage to the hub bolts (C) when removing the rear wheel and tire (A).

3. Remove the split pin (A), then remove castle nut (B) and washer (C) from the front hub under applying the brake.

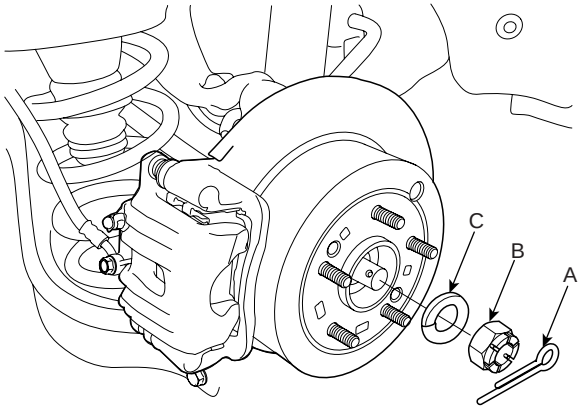

SCMDS6020D

4. Remove the mounting bolt (B) of the rear lower arm (A) and the rear carrier, while supporting the lower arm (A) with a jack as shown in the illustration. Loosen the mounting bolt (C) of the cross member and the rear lower arm.

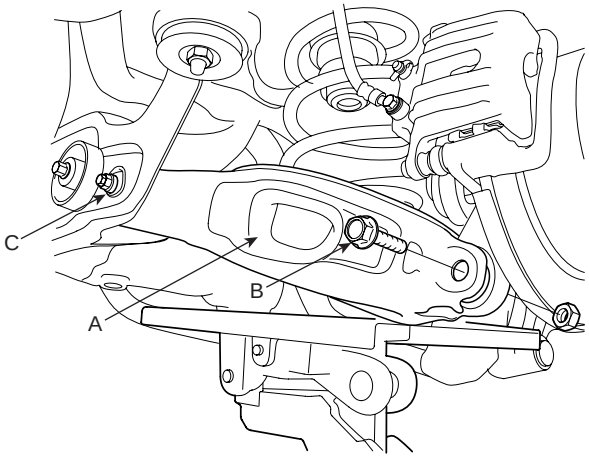

SCMDS6021D

5. Remove the spring (A), the upper pad (B) and the lower pad (C).

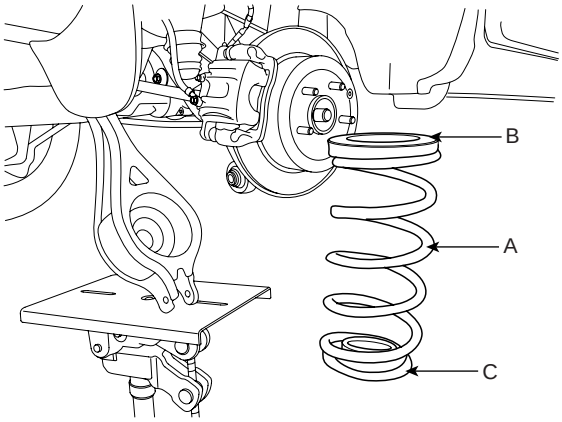

SCMDS6022D

6. Remove the rear shock absorber (A).

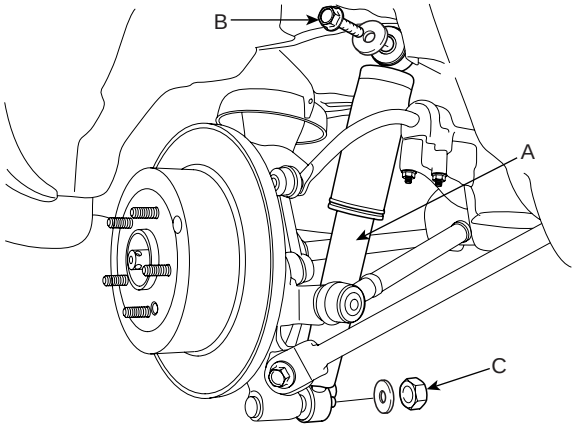

SCMDS6023D

7. Remove the assist arm (A) and the trailing arm (B) from the rear axle carrier.

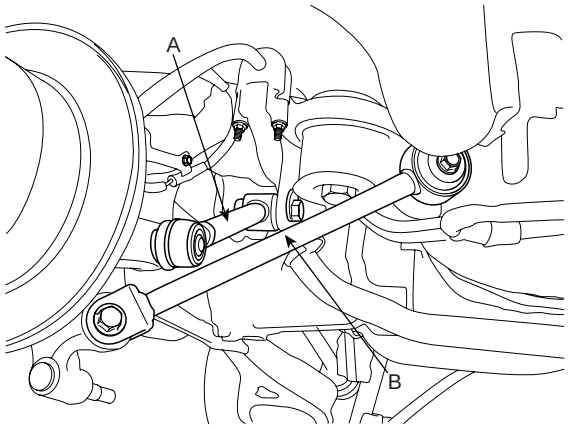

SCMDS6024D

NOTE

Remove the rear assist arm ball joint by using the special tool(09568-4A000).

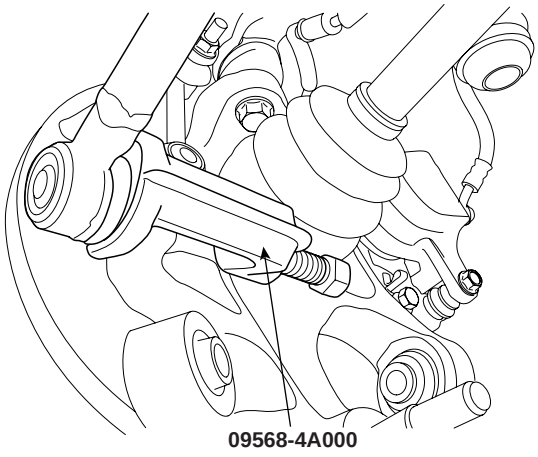

SCMDS6518L

8. Remove the rear stabilizer link (A) from the rear axle carrier.

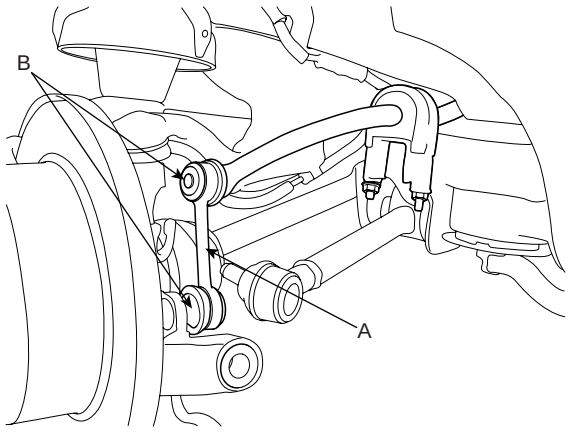

SCMDS6026D

9. Push the rear axle carrier (A) outward and separate the driveshaft (B) from the axle hub (A).

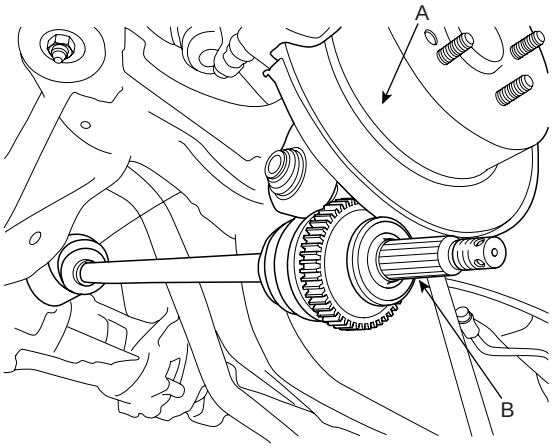

SCMDS6033D

10. Insert a pry bar (A) between the differential case (B) and joint case (C), and separate the driveshaft (D) from the differential case.

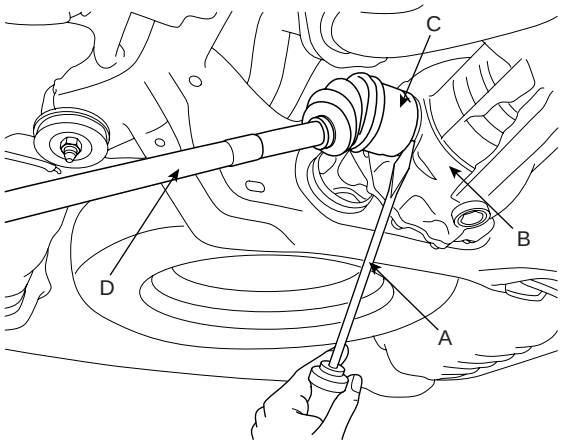

SCMDS6034D

CAUTION

- ***Use a pry bar (A) being careful not to damage the differential and joint.***
- ***Do not insert the pry bar (A) too deep, as this may cause damage to the oil seal.***
- ***Do not pull the driveshaft by excessive force it may cause components inside the joint kit to dislodge resulting in a torn boot or a damaged bearing.***
- ***Plug the hole of the differential case with the oil seal cap to prevent contamination.***
- ***Support the driveshaft properly.***
- ***Replace the retainer ring whenever the driveshaft is removed from the differential case.***

INSPECTION EDB34AB6

1. Check the driveshaft boots for damage and deterioration.
2. Check the ball joint for wear and damage.
3. Check the splines for wear and damage.
4. Check the dynamic damper for cracks, wear and position.

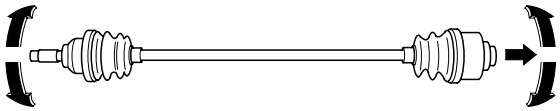

EIKD019A

5. Check the driveshaft for cracks and wears.

DISASSEMBLY E6EE31E3

CAUTION

- ***Do not disassemble the BJ assembly.***
- ***Special grease must be applied to the driveshaft joint. Do not substitute with another type of grease.***
- ***The boot band should be replaced with a new one.***

1. Remove the DOJ boot bands and pull the DOJ boot from the DOJ outer race.
   1) Using a plier or flat-tipped (-) screwdriver, remove the DOJ boot bands of differential side from the driveshaft.
   2) Remove BJ boot bands of wheel side in the same way of DOJ boot bands removal procedure.

CAUTION

Be careful not to damage the boot.

2. Remove the circlip (B) with a flat-tipped (-) screwdriver (A).

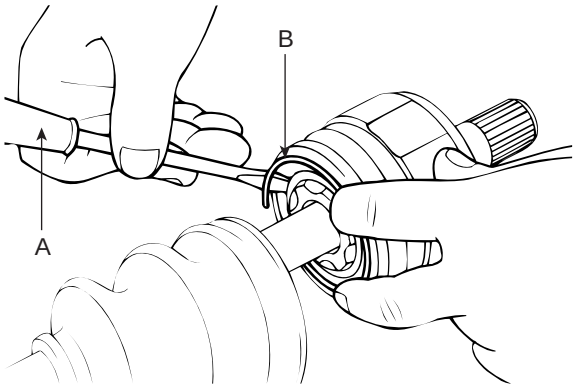

KIKD251B

3. Pull out the driveshaft from the DOJ outer race.

4. Remove the snap ring (A) and take out the inner race (B), cage (C) and balls (D) as an assembly.

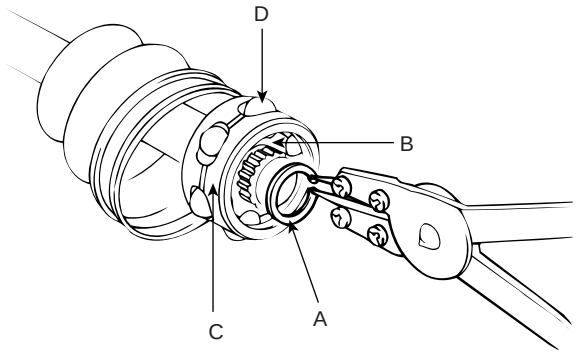

KIKD251C

5. Clean the inner race, cage and balls without disassembling.

6. Remove the BJ boot bands and pull out the DOJ boot and BJ boot.

CAUTION

If the boot (A) is to be reused, wrap tape (B) around the driveshaft splines (C) to protect the boot (A).

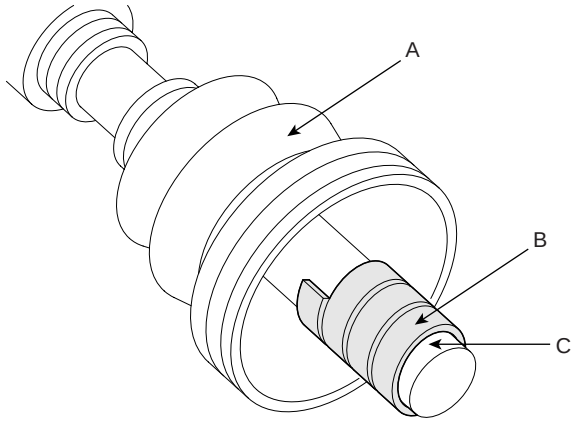

KXDDE14A

INSPECTION E9A3C35A

1. Check the DOJ outer race, inner race, cage and balls for rust or damage.

2. Check splines for wear.

3. Check for water, foreign matter, or rust in the BJ boot.

CAUTION

When the BJ assembly (A) is to be reused, do not wipe away the grease. Check that there are no foreign substances in the grease. If necessary, clean the BJ assembly (A) and replace grease.

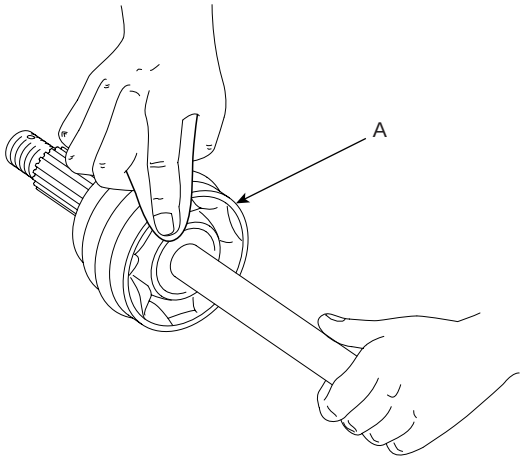

EIKD025A

REASSEMBLY E57EA4AD

1. Wrap tape around the driveshaft splines (DOJ side) to prevent damage to the boots.
2. Apply grease to the driveshaft and install the boots.
3. Apply the specified grease to the inner race (A) and cage (B). Install the cage (B) so that it is offset on the race as shown.

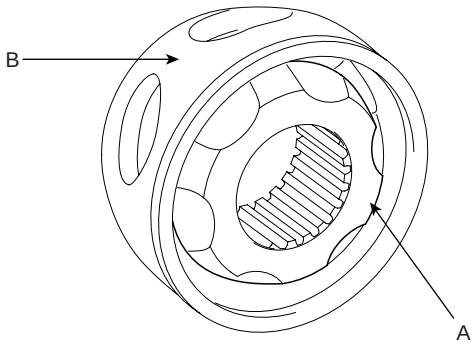

EIKD023A

4. Apply the specified grease to the cage and fit the balls into the cage.
5. Position the chamfered side (A) as shown in the illustration. Install the inner race on the driveshaft (B), and then the snap ring.

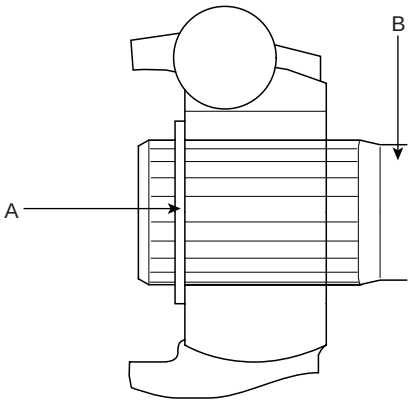

EIKD020A

6. Apply the specified grease to the outer race and install the BJ outer race onto the driveshaft.
7. Apply the specified grease into the DOJ boot and install the boot with a clip.
8. Tighten the DOJ boot bands.
9. Add the specified grease to the BJ as much as wiped away at inspection.
10. Install the boots.
11. Tighten the BJ boot bands.
12. To control the air in the DOJ boot, keep the specified distance between the boot bands when they are tightened.

Distance(A) (mm(in)): 686.8 +22.7 -14.4 (27.04 +0.89 -0.57)

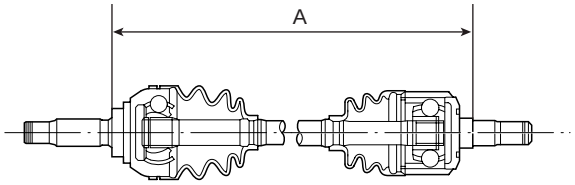

EIKD021A

INSTALLATION EDA39BCD

1. Apply gear oil on the oil seal contacting surface of differential case (B) and the driveshaft (A) splines.

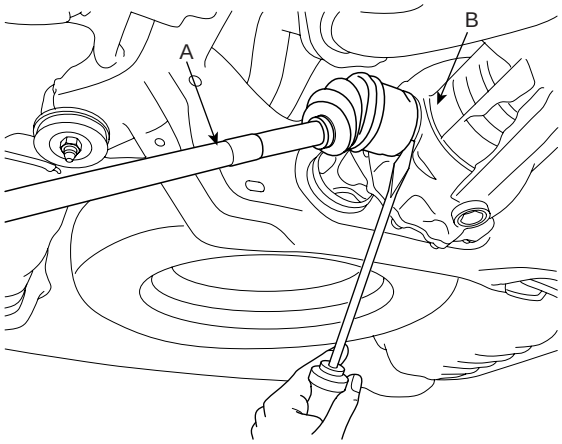

SCMDS6053D

2. Before installing the driveshaft(A), set the opening side of the circlip facing downward.
3. After installation, check that the driveshaft (A) cannot be removed by hand.
4. Install the driveshaft to the rear axle carrier assembly.
5. Install the rear stabilizer link (A) from the rear axle carrier.

Tightening torque Nm (kgf-m, lb-ft) :
Nut(B) : 58.8~78.5 (6.0~8.0, 43.4~57.9)

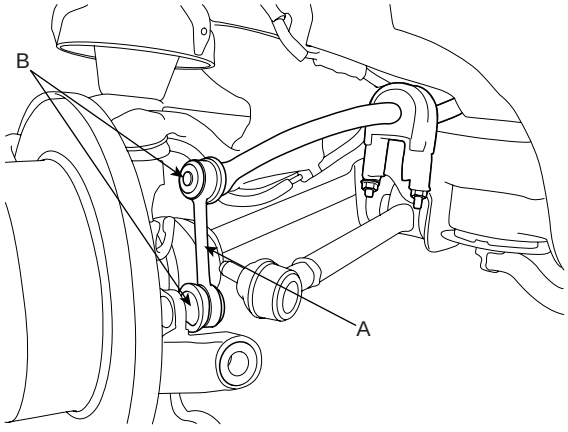

SCMDS6026D

6. Install the assist arm (A) and the trailing arm (B) to the rear axle carrier.

Tightening torque Nm (kgf-m, lb-ft) :
Bolt (C) : 137.3~156.9 (14~16, 101.3~115.7)
Nut (D) : 98.1~117.7 (10~12, 72.3~86.8)
Nut (E) : 137.3~156.9 (14~16, 101.3~115.7)
Bol t(F) : 137.3~156.9 (14~16, 101.3~115.7)

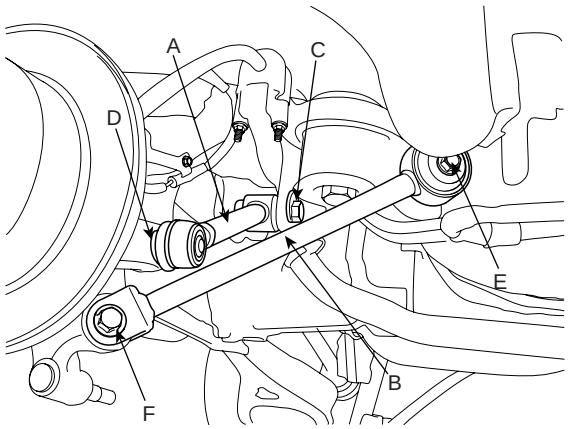

SCMDS6052D

NOTE

After checking the distance(453±10mm(17.83 ±0.39in)) between the wheel housing garnish(A) and the hub assembly(B) as shown in the illustration, tighten the mounting bolts and nuts of rear chassis part with specified torque.

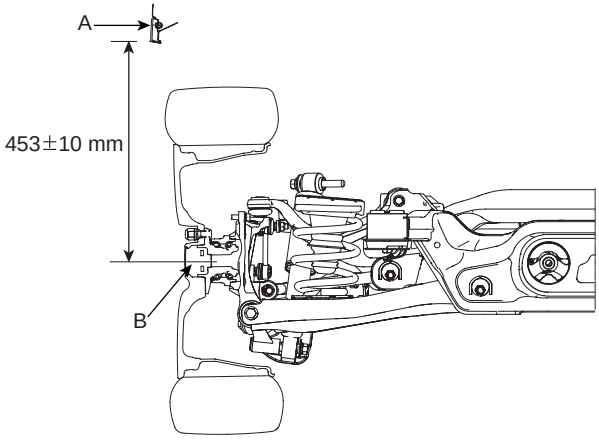

SCMDS6513D

7. Install the rear shock absorber (A).

Tightening torque Nm (kgf-m, lb-ft) :
Bolt (B) : 137.3~156.9 (14~16, 101.3~115.7)
Nut (C) : 98.1~117.7 (10.0~12.0, 72.3~86.8)

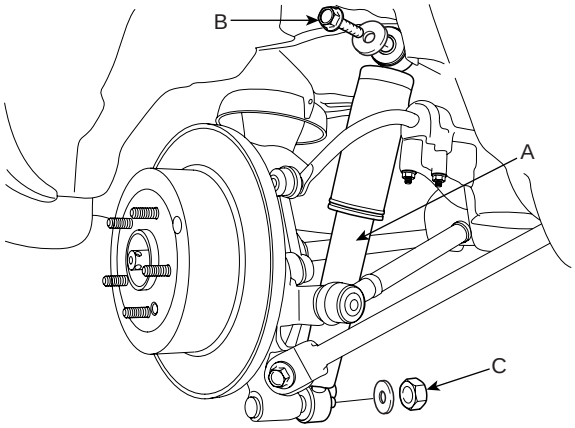

SCMDS6023D

8. Install the spring (A), the upper pad (B) and the lower pad (C).

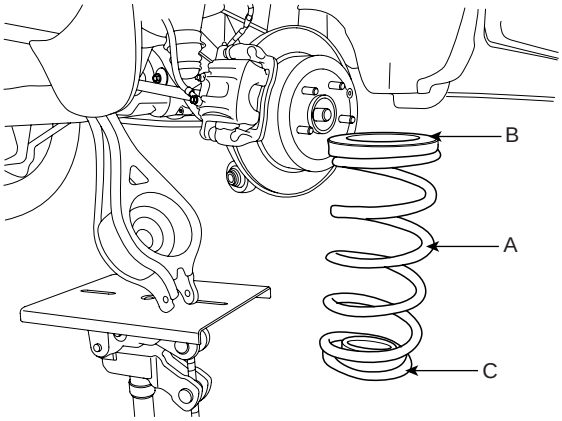

SCMDS6022D

9. Install the mounting bolt (B) of the rear lower arm (A) and the rear carrier with a specified torque, while supporting the lower arm (A) with a jack as shown in the illustration. Tighten the mounting bolt (C) of the cross member and the rear lower arm with a specified torque.

Tightening torque Nm (kgf-m, lb-ft) :
Bolt (B) : 137.3~156.9 (14~16, 101.3~115.7)
Nut (C) : 137.3~156.9 (14~16, 101.3~115.7)

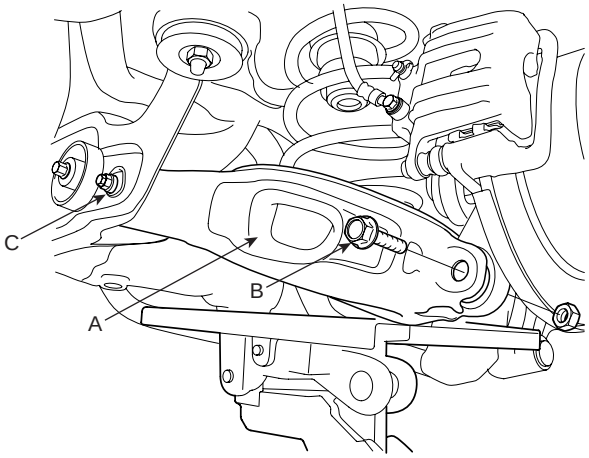

SCMDS6021D

10. Install the washer (C), castle nut (B) and split pin (A) to the rear hub assembly.

Tightening torque Nm (kgf-m, lb-ft) :
196.1~255.0 (20~26, 144.7~188.1)

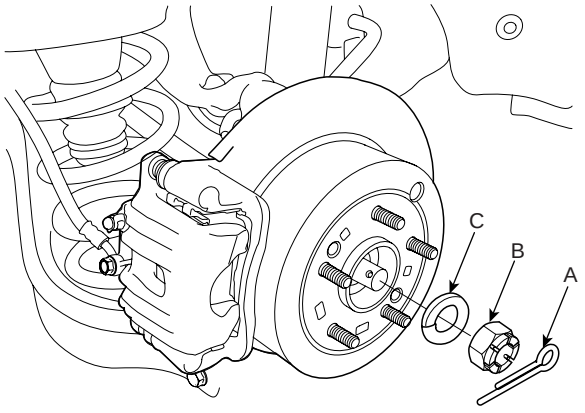

SCMDS6020D

CAUTION

The washer (B) should be assembled with convex surface outward when installing the castle nut (A) and split pin (C).

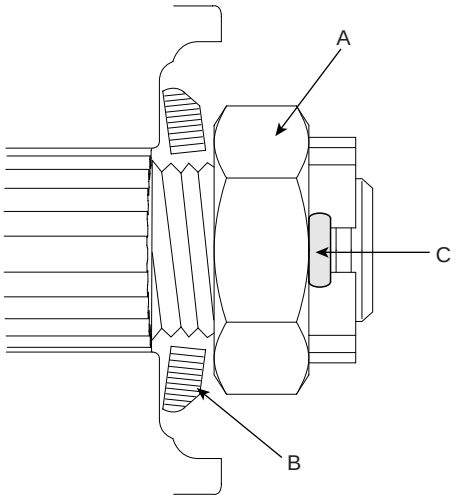

EIKD010A

11. Install the wheel and tire (A) to the rear hub (B).

Tightening torque Nm (kgf-m, lb-ft) :
88.3~107.9 (9~11, 65.1~79.6)

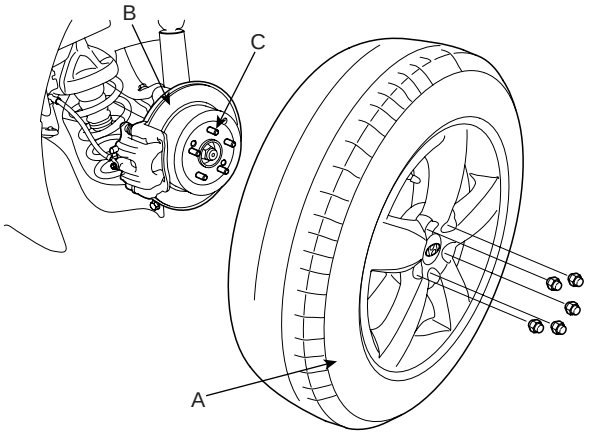

SCMDS6019D

CAUTION

Be careful not to damage the hub bolts (C) when installing the rear wheel and tire (A).

PROPELLER SHAFT ASSEMBLY

PROPELLER SHAFT

COMPONENT EAD08B0F

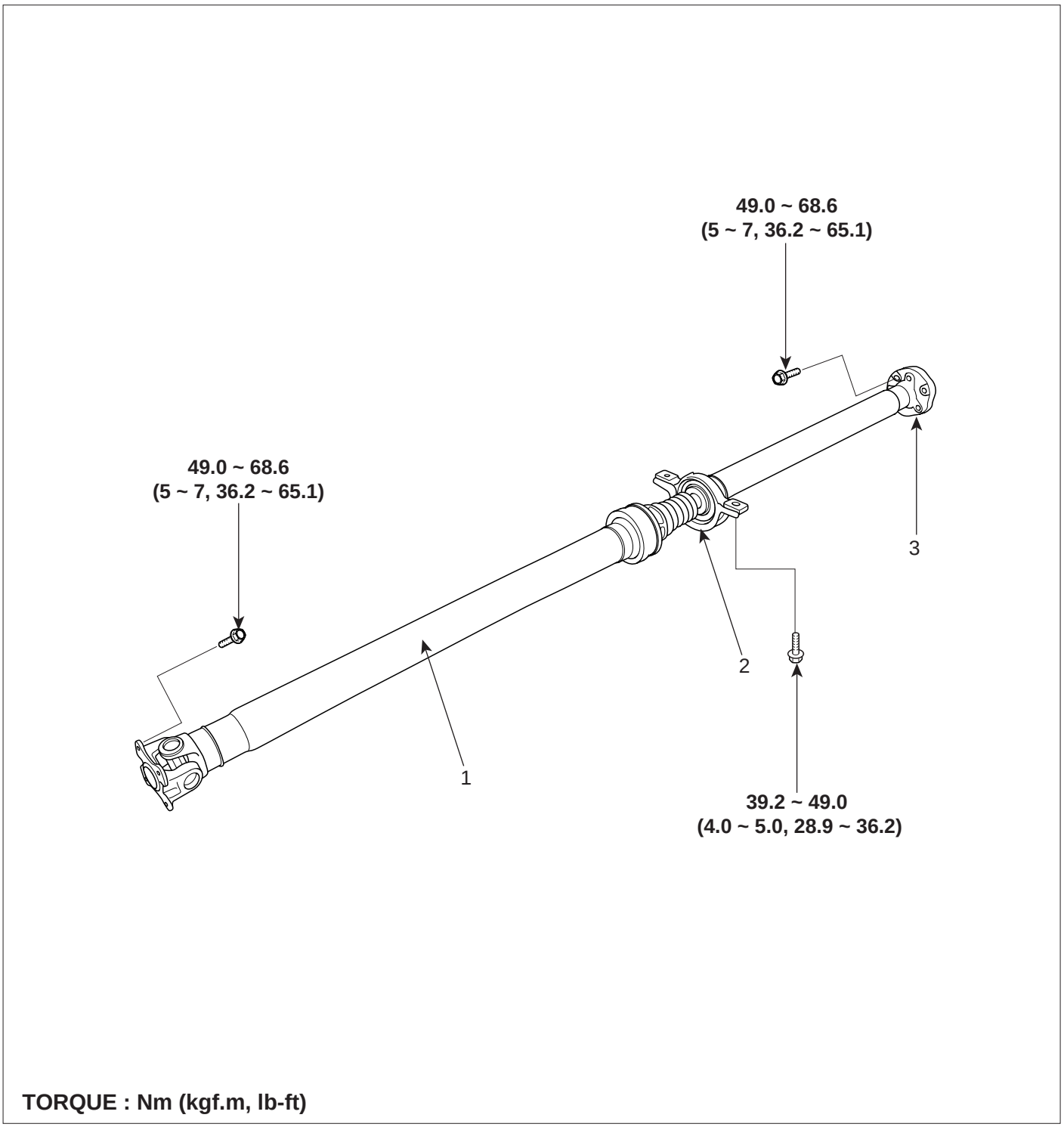

1. Front propeller shaft
2. Center bearing bracket
3. Rear propeller shaft

INSPECTION EDBA5EEC

CV JOINT AND BOOTS

1. Shift the transaxle to Neutral.
2. Raise the vehicle off the ground, and support it with safety stands in the proper locations.
3. Check the center bearing (A) for excessives play or rattle and rubber for rent. If the center bearing (A) has excessive play or rattle and rubber has rent, replace the propeller shaft assembly.

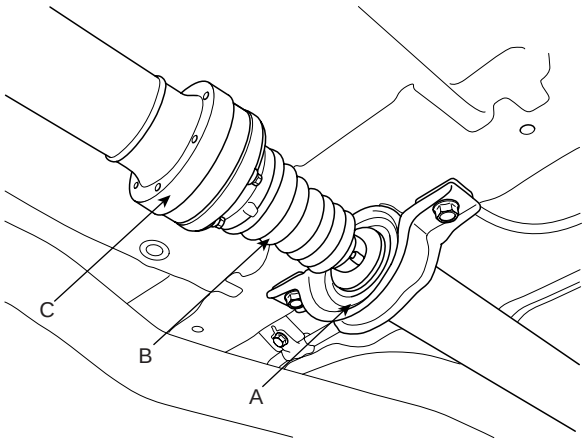

SCMDS6036D

4. Check the CV joint boot (B) for damage and deterioration. If the boot is damaged or deteriored, replace the propeller shaft assembly.
5. Check the CV joint (C) for excessive play or rattle. If the CV joint have excessive play or rattle, replace the propeller shaft assembly.

PROPELLER SHAFT RUNOUT

1. Install a dial indicator with its needle on the center of front propeller shaft or rear propeller shaft.
2. Turn the propeller shaft slowly and check the runout. Repeat this procedure for the other propeller shaft.

Front Propeller Shaft Runout : 0.3mm (0.012in.)

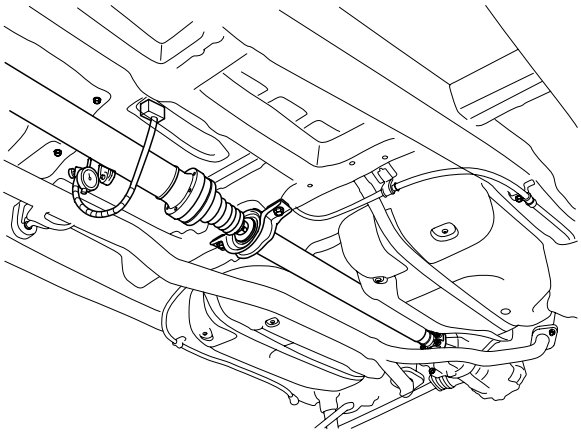

SCMDS6037D

Rear Propeller Shaft Runout : 0.3mm (0.012in.)

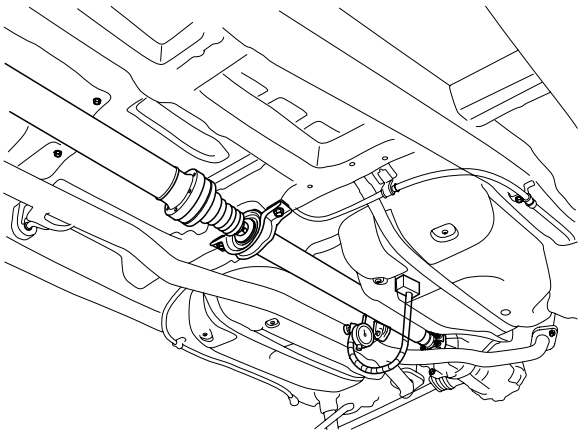

SCMDS6055D

3. If the runout on either propeller shaft exceeds the service limit, replace the propeller shaft assembly.

REMOVAL EC587D0E

1. After making a match mark (C) on the rubber coupling (A) and rear differential companion (B), remove the propeller shaft mounting bolts (D).

Tightening torque Nm (kgf-m, lb-ft) :
49.0~68.6 (5~7, 36.2~50.6)

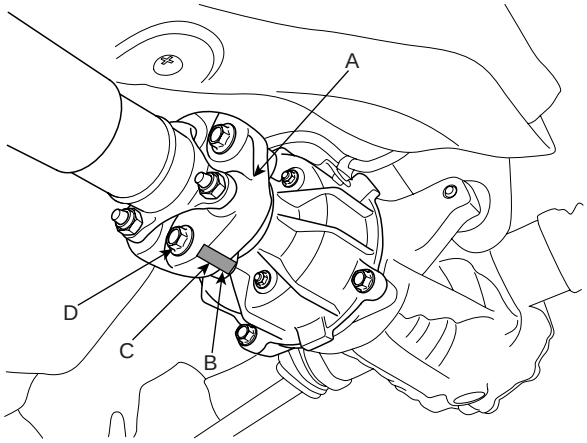

SCMDS6038D

2. Remove the center bearing bracket (A) mounting bolts (B).

Tightening torque Nm (kgf-m, lb-ft) :
39.2~49.0 (4~5, 28.9~36.2)

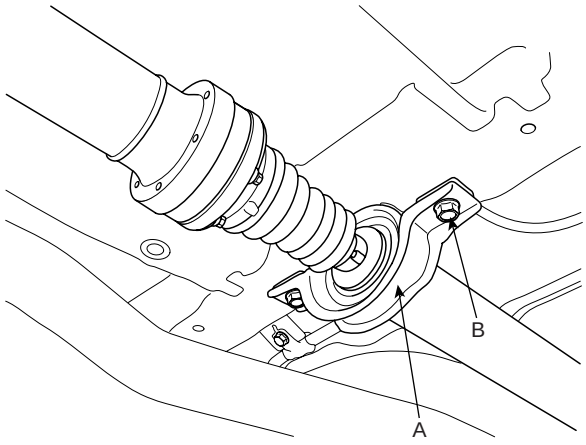

SCMDS6054D

3. After making a match mark (C) on the flange yoke (A) and transaxle companion (B), remove the propeller shaft mounting bolts (D).

Tightening torque Nm (kgf-m, lb-ft) :
49.0~68.6 (5~7, 36.2~50.6)

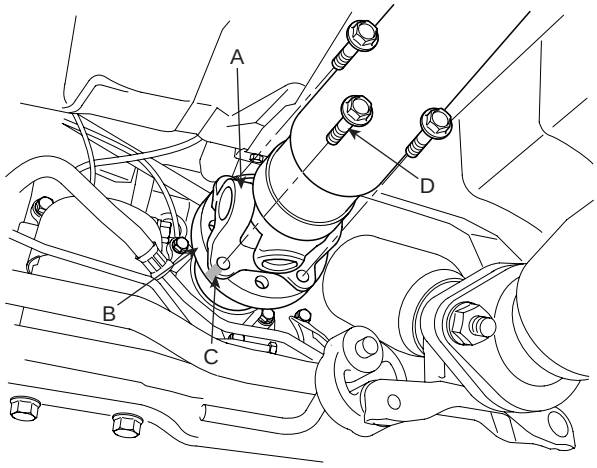

SCMDS6510D

CAUTION

Use the hexagonal wrench to prevent damage of bolt head when removing bolts (D).

4. Installation is the reverse of the removal procedures

DIFFERENTIAL CARRIER ASSEMBLY

DIFFERENTIAL CARRIER (4WD)

COMPONENT E7DDEA5A

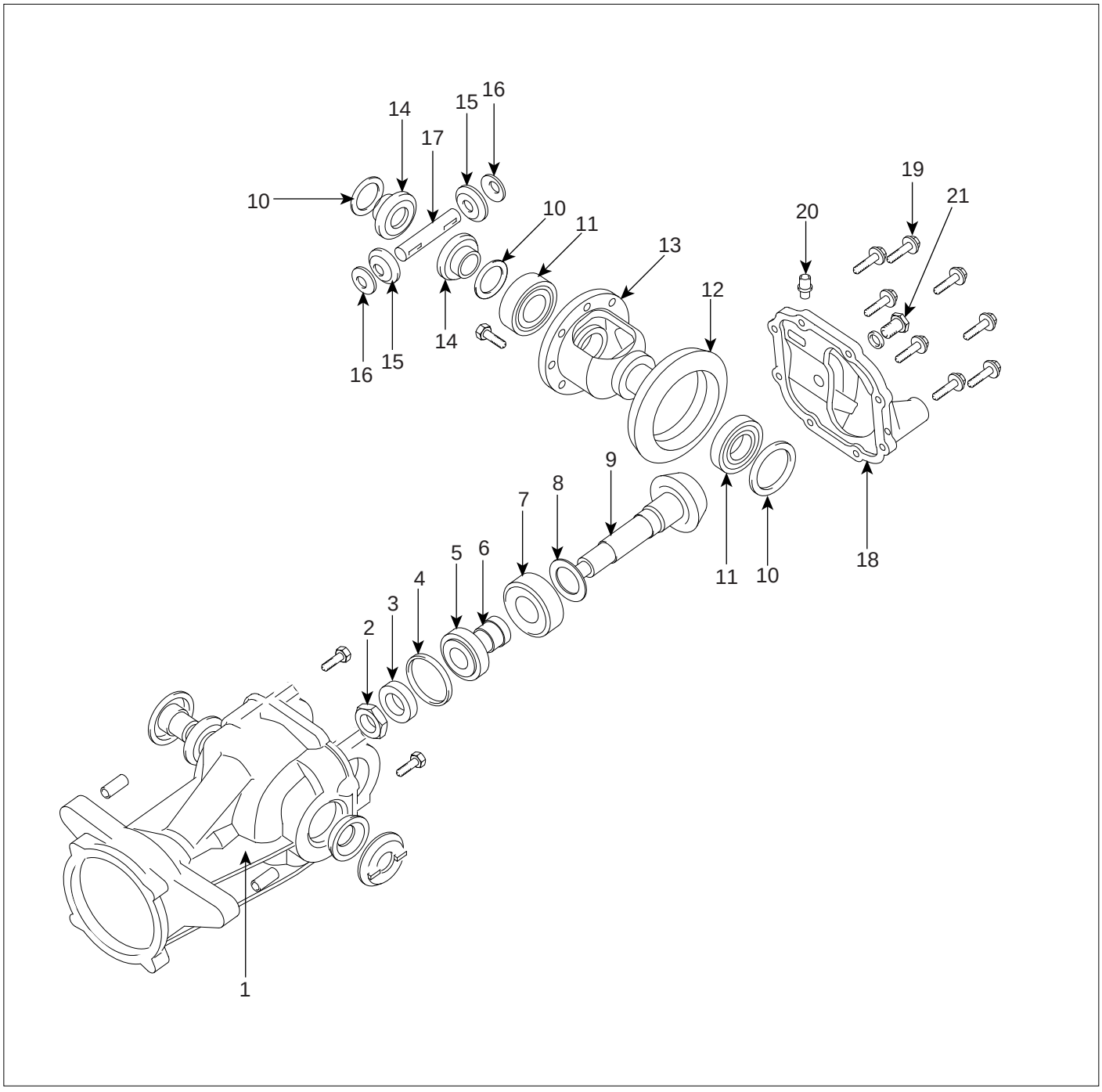

1. Differential carrier
2. Pinion locking nut
3. Oil seal guide
4. Pinion oil seal
5. Outer pinion beaing
6. Pinion bearing spacer
7. Inner pinion bearing
8. Inner bearing adjust shim
9. Drive gear
10. Oil seal
11. Differential side bearing
12. Ring gear
13. Differential
14. Cam side gear
15. Pinion gear
16. Thrust washer
17. Differential pinion shaft
18. Differential cover
19. Differential cover mounting bolts
20. Breather
21. Filler plug

SCMDS6517L

REMOVAL EE8D3F42

1. Drain the differential gear oil.
2. Remove the rear drive shaft.
3. Remove the propeller shaft.
4. Support the differential assembly (A) with the jack (B).

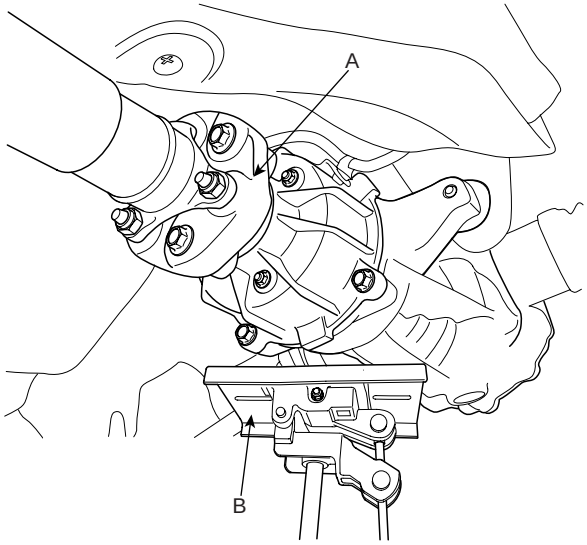

SCMDS6056D

5. Disconnect the coupling control connector (A).

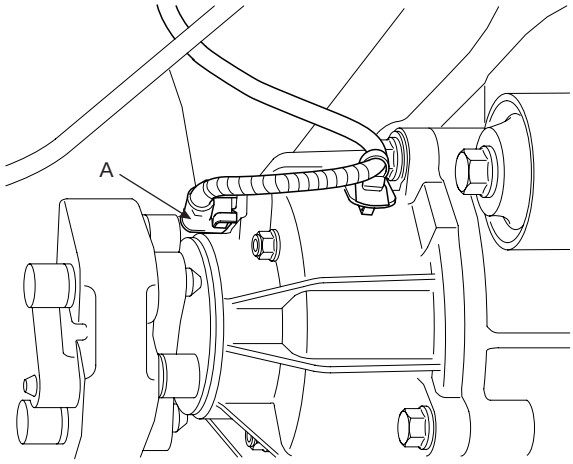

KIQE600B

6. After loosen the differential mounting bolts (A), and remove the differential (B).

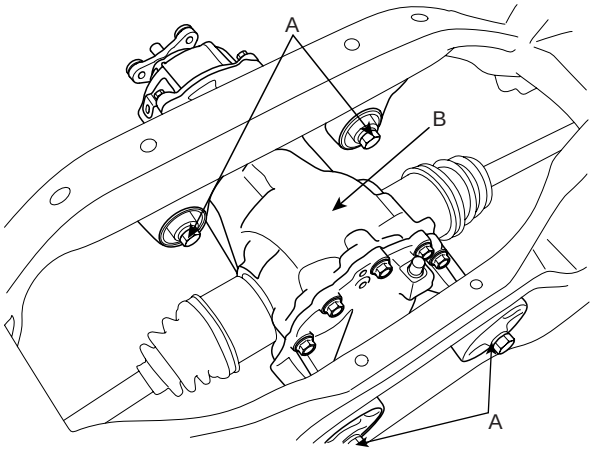

SCMDS6039D

7. After loosen the cover bolts (A), and remove the differential cover (B).

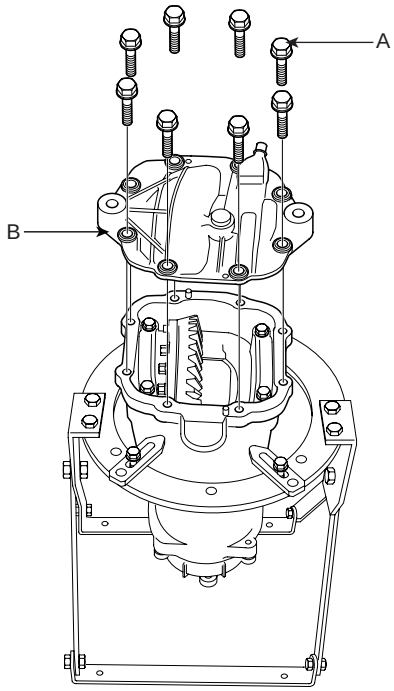

SCMDS6514D

INSPECTION E92AFA1B

Install the differential carrier assembly(A) with the special tools(09517-43101 & 09517-43500).Then carry out the following inspection.

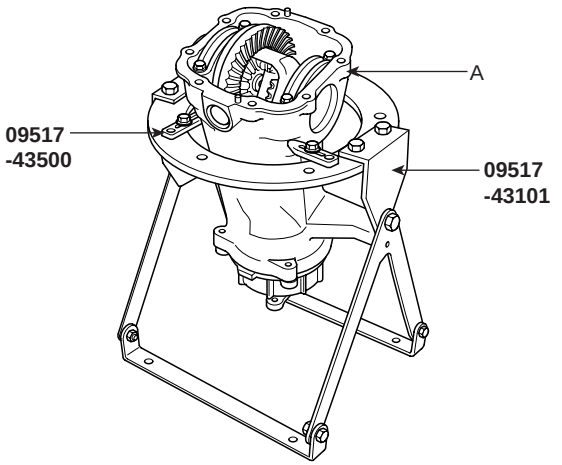

KIQE610A

1. Check the final drive gear backlash by the following procedure.

   1) Place the drive pinion and move the drive gear to check backlash is within the standard range.

   NOTE

   Measure at 4 points on the gear periphery.

Standard value :
0.10 ~ 0.15mm (0.0039 ~ 0.0059in.)

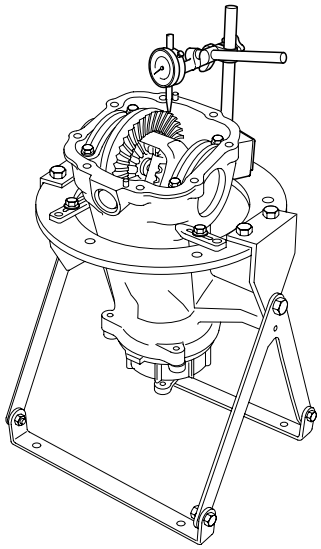

KIQE610B

2. Check the drive gear back-face lash by the following procedure.

   1) Place a dial gauge on the back-face of the drive gear and measure the runout.

Limit : 0.05 mm (0.002 in)

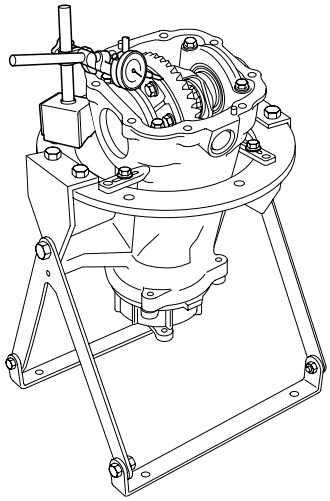

KIQE610C

   2) If the runout is beyond the limit, check that there are no foreign substances between the drive gear and differential case and, that the bolts fixing the drive gear are not loose.

3. Check the differential carrier backlash by the following procedure.

   1) Fix the side gear with a wedge so it cannot move and measure the differential gear backlash with a dial indicator on the pinion gear.

Standard value :
0 ~ 0.05 mm (0 ~ 0.002 in)

NOTE

Take the measurements at two places on the pinion gear.

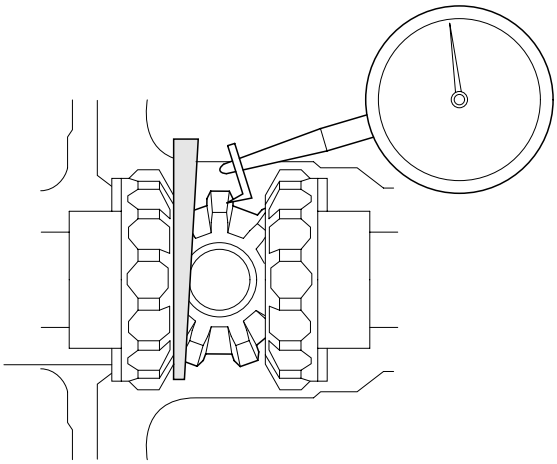

KISE610E

   2) If the backlash exceeds the limit, adjust using side bearing spacers.

NOTE

If adjustment is impossible, replace the side gear and pinion gear as a set.

4. Check the tooth contact of the final drive gear by the following procedure.

   1) Apply the same amount of machine blue slightly to both surfaces of the drive gear teeth.

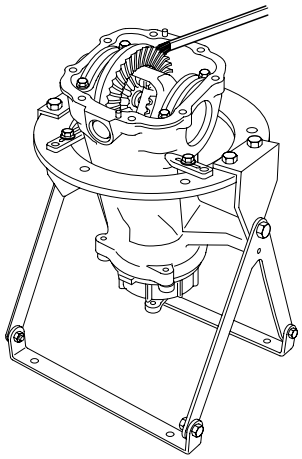

KIQE610D

   2) Insert a brass rod between the differential carrier and the differential case, and then rotate the companion flange by hand (once in the normal direction, and then once in the reverse direction) while applying a load to the drive gear so that some torque (approximately 25~30Nm) is applied to the drive pinion.

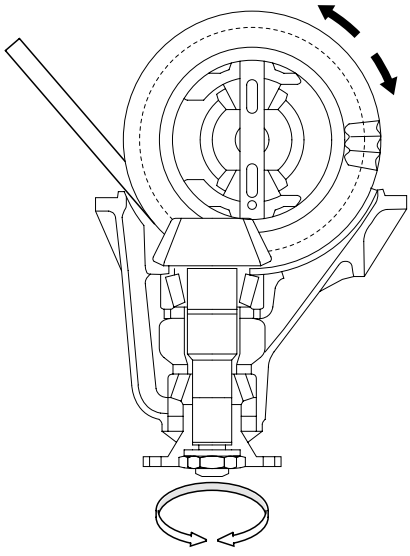

KISE610G

CAUTION

If the drive gear is rotated too much, the tooth contact pattern will become unclear and difficult to check.

3) Check the tooth contact pattern.

<table>
<tr><th>Tooth contact</th><th>Contact state</th><th colspan="2">Solution</th></tr>
<tr><td>Standard contact</td><td>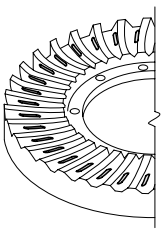
KISE610H</td><td></td><td></td></tr>
<tr><td>1. Heal contact</td><td>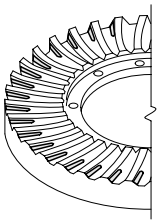
KISE650A</td><td rowspan="2">Increase the thickness of the pinion height adjusting shim, and position the drive pinion closer to the center of the drive gear.

Also, for backlash adjustment, reposition the drive gear further from the drive pinion.</td><td rowspan="2">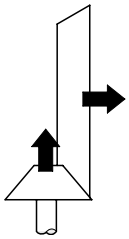
KISE630A</td></tr>
<tr><td>2. Face contact</td><td>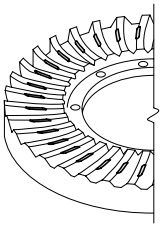
KISE650B</td></tr>
<tr><td>3. Toe contact</td><td>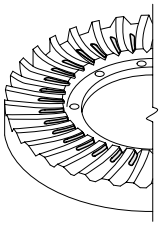
KISE650C</td><td rowspan="2">Decrease the thickness of the pinion height adjusting shim, and position the drive pinion further from the center of the drive gear.

Also, for backlash adjustment, reposition the drive gear closer to the drive pinion.</td><td rowspan="2">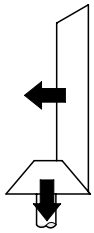
KISE630B</td></tr>
<tr><td>4. Flank contact</td><td>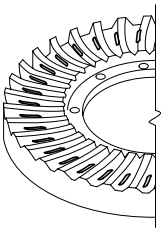
KISE650D</td></tr>
</table>

NOTE

- *Tooth contact pattern is a method for judging the result of the adjustment of drive pinion height and final drive gear backlash. The adjustment of drive pinion height and final drive gear backlash should be repeated until the tooth contact patterns are similar to the standard tooth contact pattern.*
- *When you cannot obtain a correct pattern, the drive gear and drive pinion have exceeded their limits. Both gears should be replaced as a set.*

5. Check the oil leaks and the lip part for chew or wear.
6. Check the bearings for wear or discoloration.
7. Check the gear carrier for cracks.
8. Check the drive pinion and drive gear for wear or cracks.
9. Check the side gears, pinion gears and pinion shaft for wear or damage.
10. Check the side gear spline for wear or damage.

INSTALLATION E3E9CFB5

1. After apply liquid gasket, install the differential cover (B), and install the mounting bolts (A).

Tightening torque Nm (kgf-m, lb-ft) :
39.2~49.0 (4~5, 28.9~36.2)

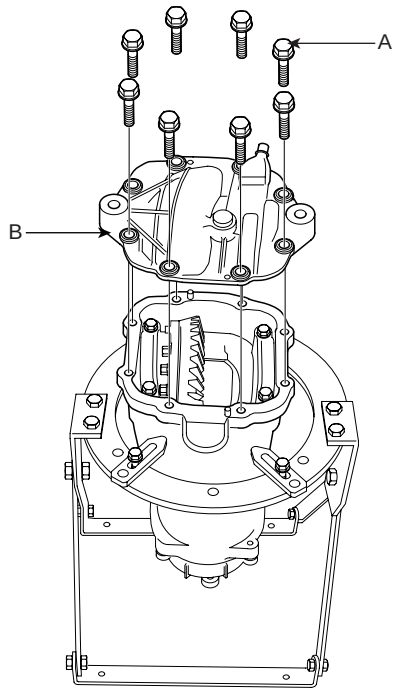

SCMDS6514D

2. After install the differential (B), and install the mounting bolts (A).

Tightening torque Nm (kgf-m, lb-ft) :
68.6~88.3 (7~9, 50.6~65.1)

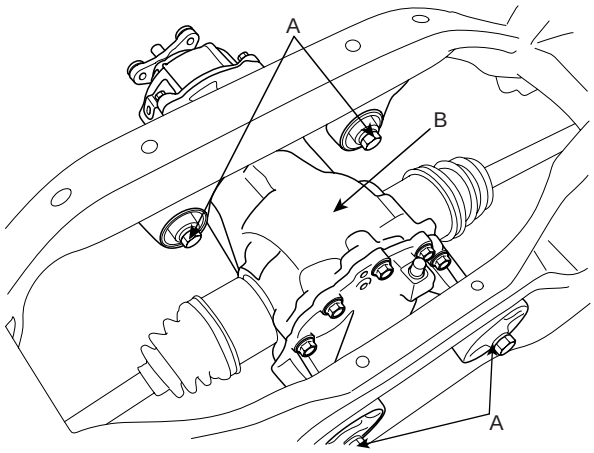

SCMDS6039D

3. Using the transaxle jack (B), install the differential assembly (A).

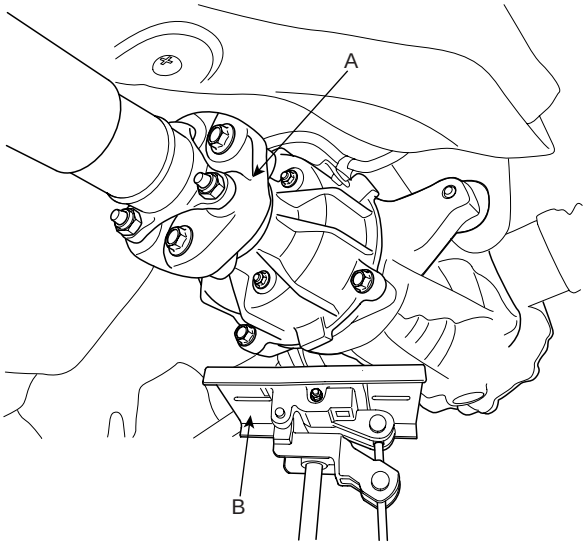

SCMDS6056D

4. Connect the coupling control connector (A).

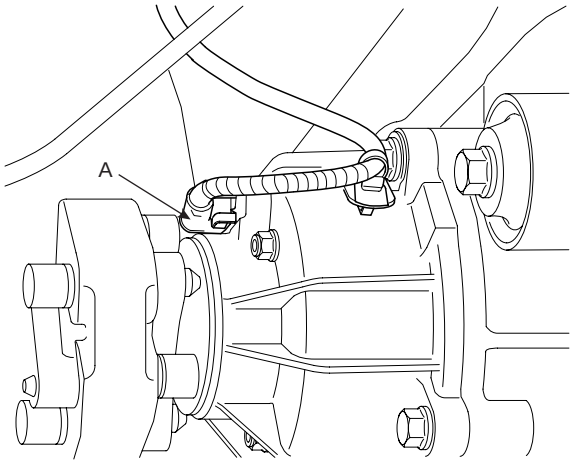

KIQE600B

5. Install the propeller shaft.

6. Install the rear drive shaft.

7. Fill the gear oil.

Specified lubricant: Hypoid gear oil (API GL-5, SAE 75W/90) Oil quantity : Fill the reservoir to the plug hold (About 0.9 L)

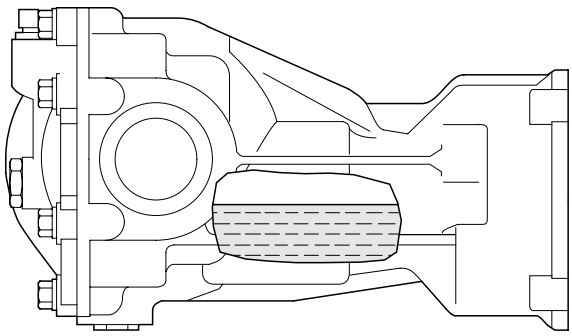

KIQE640A

Suspension System

GENERAL

FRONT SUSPENSION SYSTEM
- FRONT STRUT ASSEMBLY
- FRONT LOWER ARM
- FRONT STABILIZER BAR

REAR SUSPENSION SYSTEM
- REAR SHOCK ABSORBER
- REAR UPPER ARM
- REAR LOWER ARM
- REAR ASSIST ARM
- TRAILING ARM
- REAR STABILIZER BAR

TIRES／WHEELS
- WHEEL
- TIRE

GENERAL

SPECIFICATIONS EBB7B67D

FRONT SUSPENSION SYSTEM

Items					Specification
Type					Macpherson strut
Shock Absorber	Type				Gas
	Stroke mm(in)				161(6.34)
	Expansion mm(in)				585.0±3 (23.03±0.12)
	Compression mm(in)				424.0 +3, -Free (16.69 +0.12, -Free)
	I.D. Color				Red
	Damping force (Piston speed : 0.3 m/s)			Expansion N(kgf, lb)	1363±196 (139±20, 306±44)
				Compression N(kgf, lb)	794±147 (81±15, 179±33)
Spring	Diesel 2.2	2WD	MT	Free height mm(in)	375.4 (14.78)
				I.D. Color	Yellow - Blue
			AT	Free height mm(in)	380.8 (14.99)
				I.D. Color	Yellow - Sky blue
		4WD	MT	Free height mm(in)	380.8 (14.99)
				I.D. Color	Yellow - Sky blue
			AT	Free height mm(in)	386.2 (15.20)
				I.D. Color	Yellow - Pink
	Gasoline 2.7	2WD	MT	Free height mm(in)	364.6 (14.35)
				I.D. Color	Yellow - Violet
			AT	Free height mm(in)	-
				I.D. Color	-
		4WD	MT	Free height mm(in)	370.0 (14.57)
				I.D. Color	Yellow - Yellow
			AT	Free height mm(in)	375.4 (14.78)
				I.D. Color	Yellow - Blue

REAR SUSPENSION SYSTEM

Items				Specification
Type				Multi link
Shock Absorber	Type			Gas
	Stroke mm(in)			144 (5.67)
	Expansion mm(in)			436.0±3 (17.17±0.12)
	Compression mm(in)			292.0 +3, -Free (11.50 +0.12, -Free)
	I.D. Color			Red
	Damping force (Piston speed : 0.3 m/s)		Expansion N(kgf, lb)	1442±206 (147±21, 324±46)
			Compression N(kgf, lb)	520±98 (53±10, 117±22)
Shock Absorber (Self levelizer)	Type			Gas
	Stroke mm(in)			142 (5.59)
	Expansion mm(in)			436.0±3 (17.17±0.12)
	Compression mm(in)			294.0 +3, -Free (11.57 +0.12, -Free)
	I.D. Color			Yellow
	Damping force (Piston speed : 0.3 m/s)		Expansion N(kgf, lb)	1785±255 (182±26, 401±57)
			Compression N(kgf, lb)	412±88 (42±9, 93±20)
Spring	2WD	5 Passenger	Free height mm(in)	291.9 (11.49)
			I.D. Color	Pink - Sky blue
		7 Passenger	Free height mm(in)	295.9 (11.65)
			I.D. Color	Pink - Pink
		7 Passenger Self levelizer	Free height mm(in)	293.8 (11.57)
			I.D. Color	Blue - White
	4WD	5 Passenger	Free height mm(in)	299.9 (11.81)
			I.D. Color	Pink -White
		7 Passenger	Free height mm(in)	303.9 (11.96)
			I.D. Color	Pink -Yellow
		7 Passenger Self levelizer	Free height mm(in)	304.9 (12.00)
			I.D. Color	Blue -Pink

WHEELS AND TIRES

Items		Specification	
Tire Size		235/70 R16	
		235/65 R17	
		235/60 R18	
		T 165/90 R17 (Temporary)	
Wheel size	Aluminium	7.0J X 16	
		7.0J X 17	
		7.0J X 18	
		4T X 17 (Temporary)	
Tire Pressure		Front	Rear
	235/70 R16	206 (2.1, 30)	206 (2.1, 30)
	235/65 R17	206 (2.1, 30)	206 (2.1, 30)
	235/60 R18	206 (2.1, 30)	206 (2.1, 30)
	T 165/90 R17 (Temporary)	412 (4.2, 60)	412 (4.2, 60)

WHEEL ALIGNMENT

Items		Front	Rear
Camber		-30′ ± 30′	-1° ± 30′
Caster	to Ground	4° 25′ ± 30′	-
	to Body	4° 48′ ± 30′	-
Toe-in mm(in)		0 ± 2	2 ± 2
King pin angle		12° 59′ ± 30′	-
Tread mm(in)		1615	1619

TIGHTENING TORQUE

FRONT SUSPENSION

Items	Nm	Kgf-m	lb-ft
Front wheel nut	88.3 ~ 107.9	9 ~ 11	65.1 ~ 79.6
Front strut assembly mounting nut (to body)	44.1 ~ 58.8	4.5 ~ 6.0	32.5 ~ 43.4
Front strut assembly mounting bolt (to knuckle)	152.0 ~ 171.6	15.5 ~ 17.5	112.1 ~ 126.6
Front strut assembly self-locking nut	58.8 ~ 68.6	6 ~ 7	43.4 ~ 50.6
Front lower arm ball joint mounting bolt (to knuckle)	98.1 ~ 117.7	10 ~ 12	72.3 ~ 86.8
Front lower arm bushing(A) mounting bolt (to subframe)	137.3 ~ 156.9	14 ~ 16	101.3 ~ 115.7
Front lower arm bushing(G) mounting bolt (to subframe)	137.3 ~ 156.9	14 ~ 16	101.3 ~ 115.7
Front stabilizer link nut (to strut assembly)	98.1 ~ 117.7	10 ~ 12	72.3 ~ 86.8
Front stabilizer bar bracket mounting bolt (to Subframe)	49.0 ~ 63.7	5.0 ~ 6.5	36.2 ~ 47.0
Front stabilizer link self-locking nut	98.1 ~ 117.7	10 ~ 12	72.3 ~ 86.8
Front subframe mounting bolt (to body)	137.3 ~ 156.9	14 ~ 16	101.3 ~ 115.7
Front subframe bracket mounting bolt (to body)	68.6 ~ 88.3	7 ~ 9	50.6 ~ 65.1

REAR SUSPENSION

Items	Nm	Kgf-m	lb-ft
Rear wheel nut	88.3 ~ 107.9	9 ~ 11	65.1 ~ 79.6
Rear shock absorber mounting bolt (to body)	137.3 ~ 156.9	14 ~ 16	101.3 ~ 115.7
Rear shock absorber nut (to rear carrier)	98.1 ~ 117.7	10 ~ 12	72.3 ~ 86.8
Rear upper arm ball joint nut (to rear carrier)	78.5 ~ 88.3	8 ~ 9	57.9 ~ 65.1
Rear upper arm mounting bolt (to cross member)	98.1 ~ 117.7	10 ~ 12	72.3 ~ 86.8
Rear lower arm mounting bolt (to rear carrier)	137.3 ~ 156.9	14 ~ 16	101.3 ~ 115.7
Rear lower arm mounting nut (to cross member)	137.3 ~ 156.9	14 ~ 16	101.3 ~ 115.7
Rear assist arm ball joint nut (to rear carrier)	98.1 ~ 117.7	10 ~ 12	72.3 ~ 86.8
Rear assist arm mounting nut (to cross member)	137.3 ~ 156.9	14 ~ 16	101.3 ~ 115.7
Trailing arm mounting bolt (to cross member)	137.3 ~ 156.9	14 ~ 16	101.3 ~ 115.7
Trailing arm mounting bolt (to rear carrier)	137.3 ~ 156.9	14 ~ 16	101.3 ~ 115.7
Rear stabilizer bar bracket mounting bolt (to cross member)	44.1 ~ 53.9	4.5 ~ 5.5	32.5 ~ 39.8
Rear stabilizer link self-locking nut	58.8 ~ 78.5	6 ~ 8	43.4 ~ 57.9

CAUTION

Replace the self-locking nuts with new ones after removal.

SPECIAL SERVICE TOOLS E806DEFC

Tool (Number and Name)	Illustration	Use
09546-26000 Strut spring compressor	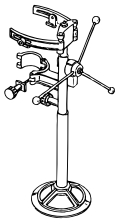 E4626000	Compression of the coil spring
09568-34000 Ball joint remover	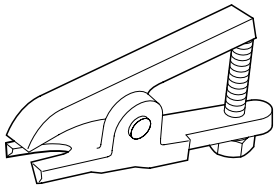 E6834000	Removal of Ball joint (Rear upper arm)
09568-4A000 Ball joint remover	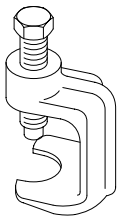 KPRE103I	Removal of Ball joint (Front upper arm/lower arm)

TROUBLESHOOTING E8AA80CE

VEHICLE INSPECTION

To assist the service advisor and the technician, check the suspension and wheel/tire condition with the questions listed below by filling them. It serves as a place to record information as well as data from the testing to be carried out. To begin a successful diagnosis, fill out the questions.

WHEEL/TIRE CHECK :

Tire Pressure Check **Yes/No**

Balance Check **Yes / No**

Maximum Runout Allowed :

Wheel : Radial _____ Lateral _____

Tire : Radial _____ Lateral _____

Measured Runout :

Tire/Wheel	Radial :	LF _____	LR _____	RF _____	RR _____
	Lateral :	LF _____	LR _____	RF _____	RR _____
Wheel Only	Radial :	LF _____	LR _____	RF _____	RR _____
	Lateral :	LF _____	LR _____	RF _____	RR _____

SUSPENSION INSPECTION :

Concerns Shimmy ☐ Clunk ☐ Squeak ☐ Harshness ☐

Suspension Bushing : Loose ☐ Worn ☐ Missing ☐ OK ☐

Front stabilizer ☐ Rear stabilizer (sway bar) ☐ Rear trailing arm ☐

Front lower arm ☐ Rear suspension front ☐ Rear suspension rear arm ☐

Other _____

Suspension/Components : Loose Worn Missing OK

Ball Joint ☐ Shock absorbers F/R ☐ Springs F/R ☐ The rod ends/sleeve ☐

BHKG500C

SYMPTOM CHART

Symptom	Suspect Area	Remedy
Squeak or grunt-noise from the front suspension, occurs more in cold ambient temperatures - more noticeable over rough roads or when turning	Front stabilizer bar	Under these conditions, the noise is acceptable.
Clunk - noise from the front suspension, occurs in and out of turns	Loose front struts or shocks	Inspect for loose nuts or bolts. Tighten to specifications.
Clunk - noise from the rear suspension, occurs when shifting from reverse to drive	Loose rear suspension components	Inspect for loose or damaged rear suspension components. Repair or install new components as necessary.
Click or pop - noise from the front suspension - more noticeable over rough roads or over bumps	Worn or damaged ball joints	Install new lower arm as necessary.
Click or pop - noise occurs when vehicle is turning	Worn or damaged ball joints	Install new lower arm as necessary.
Click or snap - occurs when accelerating around a corner	Damaged or worn Birfield joint	Repair or install a new Birfield joint as necessary. See DS group - driveshaft.
Front suspension noise - A squeak, creak, or rattle noise - occurs mostly over bumps or rough roads	Steering components Loose or bent front struts or shock absorbers Damaged spring or spring mounts Damaged or worn arm bushings Worn or damaged stabilizer bar bushing or links	Go to detailed test A.
Groaning or grinding - noise from the front strut, occurs when driving on bumpy roads or turning the vehicle	Uneven seating surface between the insulator and panel by the burrs around the strut insulator mounting bolts and the insulator bolts mounting holes	Repair or install a new parts as necessary.
Rear suspension noise - a squeak, creak or rattle noise - occurs mostly over bumps or rough roads	Loose or bent rear shock absorbers Damaged spring or spring mounts Damaged or worn control arm bushings	Go to detailed test B.
Shudder - occurs during acceleration from a slow speed or stop	Rear axle assembly mis-positioned Damaged or worn front suspension components	Check the axle mounts and rear suspension for damage or wear. Repair as necessary. Check for a loose stabilizer bar, damaged or loose strut/strut bushings or loose or worn ball joints. Inspect the steering linkage for wear or damage. Repair or Install new components as necessary.
Shimmy - most noticeable on coast/deceleration - also hard steering condition	Excessive positive caster	Check the caster alignment angle. Correct as necessary.

Symptom	Suspect Area	Remedy
Tire noise - hum/moan at constant speeds	Abnormal wear patterns	Spin the tire and Check for tire wear. Install a new tire as necessary. Inspect for damaged/worn suspension components. Perform wheel alignment.
Tire noise - noise tone lowers as the vehicle speed is lowered	Out-of-balance tire	Balance the tire and road test. Install a new tire as necessary.
Tire noise - ticking noise, change with speed	Nail puncture or stone in tire tread	Inspect the tire. Repair or replace as necessary.
Wheel and tire - vibration and noise concern is directly related to vehicle speed and is not affected by acceleration, coasting or decelerating	Damaged or worn tire	Go to detailed test C.
Tire wobble or shudder - occurs at lower speeds	Damaged wheel bearings	Spin the tire and check for abnormal wheel bearing play or roughness. Adjust or Install new wheel bearings as necessary. See DS group - front/rear axle.
	Damaged wheel	Inspect the wheel for damage. Install a new wheel as necessary.
	Damaged or worn suspension components	Inspect the suspension components for wear or damage. Repair as necessary.
	Loosen wheel nuts	Check the wheel nuts. Tighten to specification.
	Damaged or uneven tire wear	Spin the tire and Check for abnormal tire wear or damage. Install a new tire as necessary.
Tire shimmy or shake - occurs at lower speeds	Wheel/tire out of balance	Check for wheel balance.
	Uneven tire wear	Check for abnormal tire wear. Install a new tire as necessary.
	Excessive radial runout of wheel or tire	Perform a radial runout test of the wheel and tire. Install a new tire as necessary.
	Worn or damaged wheel studs or elongate stud holes	Inspect the wheel studs and wheels. Install new components as necessary.
	Excessive lateral runout of the wheel or tire	Perform a lateral runout test of the wheel and tire. Check the wheel, tire and hub. Repair or Install new components as necessary.
	Foreign materal between the brake disc and hub.	Clean the mounting surfaces of the brake disc and hub. See DS group - front/rear axle.

Symptom	Suspect Area	Remedy
High speed shake or shimmy - occurs at high speeds	Excessive wheel hub runout Damaged or worn tires Damaged or worn wheel bearings Worn or damaged suspension or steering linkage Brake disc or drum imbalance	Go to detailed test D.
Drift left or right	Tires Steering linkage Alignment Base brake system	Go to detailed test E.
Steering wheel	Alignment Steering linkage Front lower arm ball joint	Go to detailed test F.
Tracks incorrectly	Rear suspension Caster	Go to detailed test G.
Rough ride	Front strut and spring assembly Rear shock absorber and spring assembly	Go to detailed test H.
Excessive noise	Front or rear stabilizer bar components Springs Suspension components Shock absorbers	Go to detailed test I.
Incorrect tire wear	Tire or unbalanced wheels Tire inflation Strut Alignment	Go to detailed test J.
Vibration	Wheel/tire Front wheel driveshaft(s) Steering system Strut and spring assembly Spring and strut mounting Front lower arm ball joint Front lower arm mounting bolt bushing Stabilizer bar bushings Wheel hubs and bearing Rear suspension arms and bushings	Go to detailed test K.
Vehicle leans	Tire/wheel Vehicle load Suspension components Incorrect ride height	Inflate tires to specification. Redistribute the load as necessary. Visually inspect the suspention system. Correct the ride height as necessary.
Poor steering returnability	High knuckle rotating torque Alignment	Go to detailed test E.

DETAILED TEST A : FRONT SUSPENSION NOISE

CONDITIONS	DETAILS/RESULTS/ACTIONS
A1 ROAD TEST THE VEHICLE	
	1. Test drive the vehicle. 2. During the road test, drive the vehicle over a rough road. Determine from which area/component the noise is originating. ● Is there a squeak, creak or rattle noise ? ⇒ **YES** Go to **A2.** ⇒ **NO** The suspension system is OK. Conduct a diagnosis on other suspect systems.
A2 INSPECT THE STEERING SYSTEM	
	1. Check the steering system for wear or damage. Perform a steering linkage test. Inspect the tire wear pattern. ● Are the steering components worn or damaged ? ⇒ **YES** Repair the steering system. Install new components as necessary. Test the system for normal operation. ⇒ **NO** Go to **A3.**
A3 FRONT SHOCK ABSORBER/STRUT CHECK	
	1. Check the front shock absorbers/strut mounts for loose bolts or nuts. 2. Check the front shock absorbers/struts for damage. Perform a shock absorber check. ● Are the front shock absorbers/struts loose or damaged ? ⇒ **YES** Tighten to specifications if loose. Install new front shock absorbers/struts if damaged. Test the system for normal operation. ⇒ **NO** Go to **A4.**
A4 CHECK THE FRONT SPRINGS	
	Check the front spring and front spring mounts/brackets for wear or damage. ● Are the front springs or spring mounts/brackets worn or damaged ? ⇒ **YES** Repair or Install new components as necessary. Test the system for normal operation. ⇒ **NO** Go to **A5.**

CONDITIONS	DETAILS/RESULTS/ACTIONS
A5 CHECK THE STABILIZER BAR	
	1. Check the stabilizer bar bushings and links for damage or wear. 2. Check the stabilizer bar for damage. 3. Check for loose or damaged stabilizer brackets. ● Are the stabilizer bar/track bar components loose, worn or damaged ? ⇒ **YES** Repair or Install new components as necessary. Test the system for normal operation. ⇒ **NO** Suspension system is OK. Conduct diagnosis on other suspect systems.

DETAILED TEST B : REAR SUSPENSION NOISE

CONDITIONS	DETAILS/RESULTS/ACTIONS
B1 ROAD TEST THE VEHICLE	
	1. Test drive the vehicle. 2. During the road test, drive the vehicle over a rough road. Determine from which area/component the noise is originating. ● Is there a squeak, creak or rattle noise ? ⇒ **YES** Go to **B2.** ⇒ **NO** The suspension system is OK. Conduct a diagnosis on other suspect systems.
B2 REAR SHOCK ABSORBER/STRUT CHECK	
	1. Raise and support the vehicle. See GI group - lift support point. 2. Check the rear shock absorber/strut mounts for loose bolts or nuts. 3. Check the rear shock absorbers/strut for damage. Perform a shock absorber check. ● Are the rear shock absorbers/struts loose or damaged ? ⇒ **YES** Tighten to specifications if loose. Install new rear shock absorbers/struts if damaged. Test the system for normal operation. ⇒ **NO** Go to **B3.**
B3 CHECK THE REAR SPRINGS	
	Check the rear springs and rear spring mounts/brackets for wear or damage. ● Are the rear springs or spring mounts/brackets worn or damaged ? ⇒ **YES** Repair or Install new components as necessary. Test the system for normal operation. ⇒ **NO** Go to **B4.**

CONDITIONS	DETAILS/RESULTS/ACTIONS
B4 CHECK THE TRAILING ARMS	
	1. Inspect the trailing arm bushings for wear or damage. Check for loose trailing arm bolts. 2. Inspect for twisted or bent trailing arms. ● Are the trailing arms loose, damaged or worn ? ⇒ **YES** Repair or Install new components as necessary. Test the system for normal operation. ⇒ **NO** Suspension system is OK. Conduct diagnosis on other suspect systems.

DETAILED TEST C : WHEEL AND TIRE

CONDITIONS	DETAILS/RESULTS/ACTIONS
C1 ROAD TEST THE VEHICLE	
	NOTE *Wheel or tire vibrations felt in the steering wheel are most likely related to the front wheel or tire. Vibration felt through the seat are most likely related to the rear wheel or tire. This may not always be true, but it can help to isolate the problem to the front or rear of the vehicle.* *Test drive the vehicle at different speed ranges.* During the road test, if the vibration can be eliminated by placing the vehicle in neutral or is affected by the speed of the engine, the cause is not the wheels or tires. ● Is there a vibration and noise ? ⇒ **YES** Go to **C2.** ⇒ **NO** The wheel and tires are OK. Conduct a diagnosis on other suspect systems.
C2 CHECK THE FRONT WHEEL BEARINGS	
	Check the front wheel bearings. Refer to Wheel Bearing Check (See DS group - front axle). ● Are the wheel bearings OK ? ⇒ **YES** Go to **C3.** ⇒ **NO** Inspect the wheel bearings. Adjust or Repair as necessary. Test the system for normal operation.

CONDITIONS	DETAILS/RESULTS/ACTIONS
C3 INSPECT THE TIRES	
	1. Check the tires for missing weights. 2. Check the wheels for damage. 3. Inspect the tire wear pattern. ● Do the tires have an abnormal wear pattern ? ⇒ **YES** Correct the condition that caused the abnormal wear. Install new tire(s). Test the system for normal operation. ⇒ **NO** Go to **C4.**
C4 TIRE ROTATION DIAGNOSIS	
	1. Spin the tires slowly and watch for signs of lateral runout. 2. Spin the tires slowly and watch for signs of radial runout. ● Are there signs of visual runout ? ⇒ **YES** Go to **C5.** ⇒ **NO** Check the wheel and tire balance. Correct as necessary. Test the system for normal operation.
C5 RADIAL RUNOUT CHECK ON THE TIRE	
	Measure the radial runout of the wheel and tire assembly. A typical specification for total radial runout is 1.15mm (0.059 inch). ● Is the radial runout within specifications ? ⇒ **YES** Go to **C8.** ⇒ **NO** Go to **C6.**
C6 RADIAL RUNOUT CHECK ON THE WHEEL	
	Measure the radial runout of the wheel. A typical specification for total radial runout is 1.14mm (0.045 inch.). ● Is the radial runout within specifications ? ⇒ **YES** Install a new tire. Test the system for normal operation. ⇒ **NO** Go to **C7.**

CONDITIONS	DETAILS/RESULTS/ACTIONS
C7 CHECK THE HUB/BRAKE DISC OR DRUM PILOT RUNOUT OR BOLT CIRCLE RUNOUT	
	Measure the pilot or bolt circle runout. A typical specification for radial runout is : ● pilot runout - less than 0.15mm (0.006 inch.) ● bolt circle runout - less than 0.38 mm (0.015 inch.) ● Is the radial runout within specification ? ⇒ **YES** Install a new wheel. Test the system for normal operation. ⇒ **NO** Repair or Install new components as necessary.
C8 LATERAL RUNOUT CHECK ON THE TIRE	
	Measure the lateral runout of the wheel and tire assembly. A typical specification for total lateral runout is 2.5mm (0.098 inch). ● Is the lateral runout within specifications ? ⇒ **YES** Wheel and tires are OK. Conduct diagnosis on other suspect systems. ⇒ **NO** Go to **C9.**
C9 LATERAL RUNOUT CHECK ON THE WHEEL	
	Measure the lateral runout of the wheel. A typical specification for total radial runout is 1.2mm (0.047 inch.) ● Is the lateral runout within specifications ? ⇒ **YES** Install a new tire. Test the system for normal operation. ⇒ **NO** Go to **C10.**
C10 CHECK THE FLANGE FACE LATERAL RUNOUT	
	Measure the flange face lateral runout. A typical specification for lateral runout is : ● hub/brake disc - less than 0.13mm (0.005 inch) ● Is the lateral runout within specifications ? ⇒ **YES** Install a new wheel. Test the system for normal operation. ⇒ **NO** Repair or Install new components as necessary.

DETAILED TEST D : HIGH SPEED SHAKE OR SHIMMY

CONDITIONS	DETAILS/RESULTS/ACTIONS
D1 CHECK FOR FRONT WHEEL BEARING ROUGHNESS	
	1. Raise and support the front end of the vehicle so that the front wheel and tire assemblies can spin. See GI group - lift support point. 2. Spin the front tires by hand. ● Do the wheel bearings feel rough ? ⇒ **YES** Inspect the wheel bearings. Repair as necessary. Test the system for normal operation. ⇒ **NO** Go to **D2.**
D2 CHECK THE END PLAY OF THE FRONT WHEEL BEARINGS	
	Check the end play of the front wheel bearings. ● Is the end play OK ? ⇒ **YES** Go to **D3.** ⇒ **NO** Adjust or Repair as necessary. Test the system for normal operation.
D3 MEASURE THE LATERAL RUNOUT AND THE RADIAL RUNOUT OF THE FRONT WHEELS ON THE VEHICLE	
	Measure the lateral runout and the radial runout of the front wheels on the vehicle. Go to detailed test C. ● Are the measurements within specifications ? ⇒ **YES** Go to **D4.** ⇒ **NO** Install new wheels as necessary and Balance the assembly. Test the system for normal operation.
D4 MEASURE THE LATERAL RUNOUT OF THE FRONT TIRES ON THE VEHICLE	
	Measure the lateral runout of the front tires on the vehicle. Go to detailed test C. ● Is the runout within specifications ? ⇒ **YES** Go to **D5.** ⇒ **NO** Install new tires as necessary and Balance the assembly. Test the system for normal operation.

CONDITIONS	DETAILS/RESULTS/ACTIONS
D5 MEASURE THE RADIAL RUNOUT OF THE FRONT TIRES ON THE VEHICLE	
	Measure the radial runout of the front tires on the vehicle. Go to detailed test C. ● Is the runout within specifications ? ⇒ **YES** Balance the front wheel and tire assemblies. If any tire cannot be balanced, Install a new tire. Test the system for normal operation. ⇒ **NO** Go to **D6.**
D6 MATCH MOUNT THE TIRE AND WHEEL ASSEMBLY	
	Mark the high runout location on the tire and also on the wheel. Break the assembly down and rotate the tire 180 degrees (halfway around) on the wheel. Inflate the tire and measure the radial runout. ● Is the runout within specifications ? ⇒ **YES** Balance the assembly. Test the system for normal operation. ⇒ **NO** If the high spot is not within 101.6mm (4 inches) of the first high spot on the tire, Go to **D7.**
D7 MEASURE THE WHEEL FLANGE RUNOUT	
	Dismount the tire and mount the wheel on a wheel balancer. Measure the runout on both wheel flanges. Go to detailed test C ● Is the runout within specifications ? ⇒ **YES** Locate and Mark the low spot on the wheel. Install the tire, matching the high spot on the tire with the low spot on the wheel. Balance the assembly. Test the system for normal operation. If the condition persists, Go to **D8.** ⇒ **NO** Install a new wheel. Check the runout on the new wheel. If the new wheel is within limits, locate and Mark the low spot. Install the tire, matching the high spot on the tire with the low spot on the wheel. Balance the assembly. Test the system for normal operation. If the condition persists, Go to **D8.**
D8 CHECK FOR VIBRATION FROM THE FRONT OF THE VEHICLE	
	Spin the front wheel and tire assemblies with a wheel balancer while the vehicle is raised on a hoist. Feel for vibration in the front fender or while seated in the vehicle. ● Is the vibration present ? ⇒ **YES** Substitute known good wheel and tire assemblies as necessary. Test the system for normal operation. ⇒ **NO** Check the driveline components. Test the system for normal operation.

DETAILED TEST E : DRIFT LEFT OR RIGHT

CONDITIONS	DETAILS/RESULTS/ACTIONS
E1 CHECK THE TIRES	
	Inspect the tires for excessive wear or damage. ● Are the tires excessively worn or damaged ? ⇒ **YES** Install new tires. ⇒ **NO** Go to **E2.**
E2 CHECK THE STEERING LINKAGE	
	1. Raise and support the vehicle. 2. Check the steering components for indications of excessive wear or damage. See ST group - specification. ● Is there an indication of excessive wear or damage ? ⇒ **YES** Repair or Install new components as necessary. ⇒ **NO** Go to **E3.**
E3 CHECK THE VEHICLE ALIGNMENT	
	1. Place the vehicle on an alignment rack. Check the vehicle alignmnt. ● Is the alignment within specification ? ⇒ **YES** Go to **E4.** ⇒ **NO** Adjust the alignment as necessary.
E4 BRAKE DRAG DIAGNOSIS	
	Apply the brakes while driving. ● Does drift or pull occur when the brakes are applied ? ⇒ **YES** See BR group - specification. ⇒ **NO** If the steering wheel is in the center, the vehicle is OK. If the steering wheel is off-center, Go to Detailed Test **F.**

DETAILED TEST F : STEERING WHEEL OFF-CENTER

CONDITIONS	DETAILS/RESULTS/ACTIONS
F1 CHECK THE CLEAR VISION	
	Place the vehicle on an alignment rack. ● Is the clear vision within specification ? ⇒ **YES** Go to **F2.** ⇒ **NO** Adjust the clear vision to specification.
F2 INSPECT THE STEERING COMPONENTS	
	1. Raise and support the vehicle. 2. Inspect the steering components for excessive wear or damage. See ST group - specification. ● Are the steering components excessively worn or damaged ? ⇒ **YES** Repair or Install new components as necessary. ⇒ **NO** If it tracks corectly, vehicle is OK. If it tracks incorrectly, Go to Detailed Test **G.**

DETAILED TEST G : TRACKS INCORRECTLY

CONDITIONS	DETAILS/RESULTS/ACTIONS
G1 CHECK THE CASTER	
	Place the vehicle on an alignment rack. ● Is the caster within specification ? ⇒ **YES** Go to **G2.** ⇒**NO** Replace bent or damaged parts.
G2 CHECK THE REAR SUSPENSION	
	1. Measure the vehicle wheel base for LH and RH. 2. Compare the measurements. ● Are the measurements the same ? ⇒ **YES** If the ride is smooth, vehicle is OK. If the ride is rough, Go to Detailed Test**H.** ⇒ **NO** Inspect the rear suspension components for wear or damage. Repair or Install new components as necessary.

DETAILED TEST H : ROUGH RIDE

CONDITIONS	DETAILS/RESULTS/ACTIONS
H1 CHECK THE FRONT SHOCK ABSORBER	
	1. Raise support the vehicle. 2. Inspect the front shock absorber for oil leaks or damage. ● Are the tires excessively worn or damaged ? ⇒ **YES** Install new front shock absorbers. ⇒ **NO** Go to **H2.**
H2 CHECK THE REAR SHOCK ABSORBERS	
	Inspect the rear shock absorbers for oil leaks or damage. ● Are the rear shock absorbers leaking ? ⇒ **YES** Install new rear shock absorbers. ⇒ **NO** The vehicle is OK. Go to **TROUBLESHOOTING.**

DETAILED TEST I : EXCESSIVE NOISE

CONDITIONS	DETAILS/RESULTS/ACTIONS
I1 INSPECT THE SUSPENSION	
	1. Raise and support the vehicle. 2. Inspect the shock absorber mounting bolts. ● Are the mounting bolts loose or broken ? ⇒ **YES** Tighten or Install new shock absorber mounting bolts. ⇒ **NO** Go to **I2.**
I2 INSPECT THE SPRING AND TORSION BARS	
	Inspect the springs and stabilizer bars for damage. ● Are the spring or stabilizer bars damaged ? ⇒ **YES** Install new spring and/or stabilizer bars. ⇒ **NO** Go to **I3.**
I3 INSPECT THE FRONT SUSPENSION	
	Inspect the front suspension components for excessive wear or damage. ● Are the front suspension components worn or damaged ? ⇒ **YES** Install new front suspension components. ⇒ **NO** The vehicle is OK. Go to **TROUBLESHOOTING.**

DETAILED TEST J : INCORRECT TIRE WEAR

CONDITIONS	DETAILS/RESULTS/ACTIONS
J1 INSPECT THE TIRES	
	1. Raise and support the vehicle. 2. Inspect the tires for uneven wear on the inner or outer shoulder. ● Is there uneven tire wear ? ⇒ **YES** Align the vehicle. Install new tires if badly worn. ⇒ **NO** Go to **J2.**
J2 UNEVEN TIRE WEAR	
	Inspect the tires for a feathering pattern. ● Do the tires have a feathering pattern ? ⇒ **YES** Align the vehicle. Install new tires if badly worn. ⇒ **NO** Go to **J3.**
J3 CHECK FOR CUPPED TIRE	
	Inspect the tires for cupping or dishing. ● Are the tires cupped or dished ? ⇒ **YES** Balance and Rotate the tires. ⇒ **NO** The vehicle is OK. Go to **TROUBLESHOOTING.**

DETAILED TEST K : VIBRATION

CONDITIONS	DETAILS/RESULTS/ACTIONS
K1 ROAD TEST	
	Accelerate the vehicle to the speed at which the customer indicated the vibration occured. ● Is the vibration present ? ⇒ **YES** Go to **K2.** ⇒ **NO** The vehicle is OK. Go to **TROUBLESHOOTING.**
K2 INSPECT THE TIRES	
	1. Raise and support the vehicle with a frame contact hoist. 2. Inspect the tires for extreme wear or damage, cupping, or flat spots. ● Are the tires OK ? ⇒ **YES** Go to **K3.** ⇒ **NO** Check the suspension components for misalignment, abnormal wear, or damage that may have contributed to the tire wear. Correct the suspension concerns and Install new tires.
K3 INSPECT THE WHEEL BEARINGS	
	Spin the tires by hand to check for wheel bearing rougness. ● Is the front wheel bearing OK ? ⇒ **YES** Go to **K4.** ⇒ **NO** Install new front wheel bearings as necessary. See Ds group - front axle.
K4 TIRE/WHEEL BALANCE	
	Check the tire/wheel balance. ● Are the tires balanced ? ⇒ **YES** Go to **K5.** ⇒ **NO** Balance the tires and wheels as necessary.

DETAILED TEST K : VIBRATION

K5 MEASURE THE RUNOUTS	
	For each wheel position measure, locate and mark the following items. - High point of the tire/wheel assembly total radial runout - High point of the wheel radial runout - High point of the wheel lateral runout ● Are the runouts as specified ? ⇒ **YES** Go to **K7.** ⇒ **NO** Go to **K6.**
K6 SUBSTITUTE THE WHEELS AND TIRE	
	1. Substitute a known good set of wheels and tires. 2. Perform a road test. 3. If the vehicle still exhibits a shake or vibration, note the vehicle speed and/or engine rpm which it occurs. ● Is the vibration felt ? ⇒ **YES** Engine/transmission imbalance. See the specification of TR group, EM group, FL group and EC group. ⇒ **NO** Install the original tire/wheel assemblies one by one, Road testing at each step until the damaged tire(s)/wheel(s) as necessary. Test the system for normal operation.

Wheel /tire noise, vibration and harshness concerns are directly related to vehicle speed and are not generally affected by acceleration, coasting or decelerating. Also, out-of-balance wheel and tires can vibrate at more than one speed. A vibration that is affected by the engine rpm, or is eliminated by placing the transmission in Neutral is not related to the tire and wheel. As a general rule, tire and wheel vibrations felt in the steering wheel are related to the front tire and wheel assemblies. Vibrations felt in the seat or floor are related to the rear tire and wheel assemblies. This can initially isolate a concern to the front or rear.

Careful attention must be paid to the tire and wheels. There are several symptoms that can be caused by damaged or worn tire and wheels. Perform a careful visual inspection of the tires and wheel assemblies. Spin the tires slowly and watch for signs of lateral or radial runout. Refer to the tire wear chart to determine the tire wear conditions and actions

WHEEL AND TIRE DIAGNOSIS

Rapid wear at the center	Rapid wear at both shoulders	Wear at one shoulder
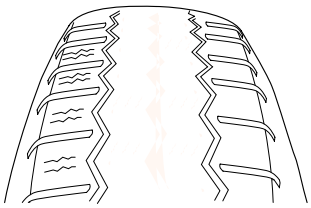 AHIE002A	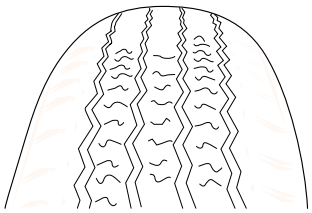 AHIE002B	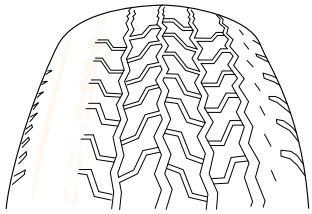 AHIE002C
• Center-tread down to fabric due to excessive over inflated tires • Lack of rotation • Excessive toe on drive wheels • Heavy acceleration on drive	• Under-inflated tires • Worn suspension components • Excessive cornering speeds • Lack of rotation	• Toe adjustment out of specification • Camber out of specification • Damaged strut • Damaged lower arm
Partial wear	**Feathered edge**	**Wear pattern**
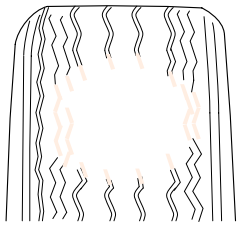 AHIE002D	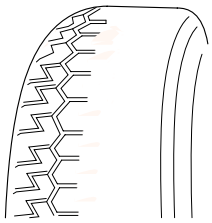 AHIE002F	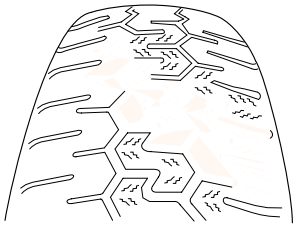 AHIE002G
• Caused by irregular burrs on brake drums	• Toe adjustment out of specification • Damaged or worn tie rods • Damaged knuckle	• Excessive toe on non-drive wheels • Lack of rotation

FRONT SUSPENSION SYSTEM

COMPONENTS EAC2BB36

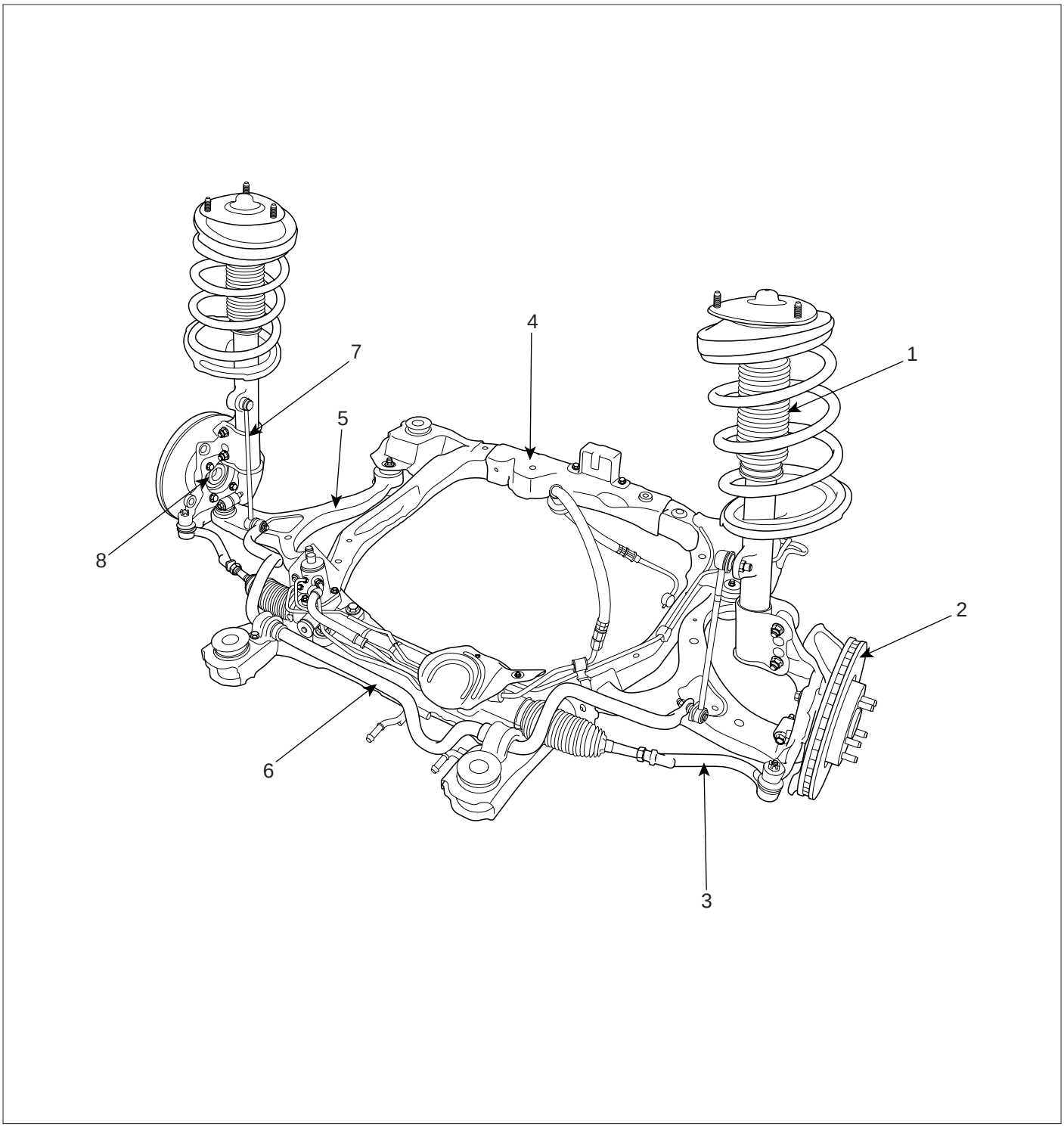

1. Front strut assembly
2. Front disc
3. Tie rod end assembly
4. Front subframe
5. Front lower arm
6. Front stabilizer bar assembly
7. Front stabilizer link assembly
8. Front knuckle assembly

SCMSS6500L

FRONT STRUT ASSEMBLY

COMPONENTS E41E65D1

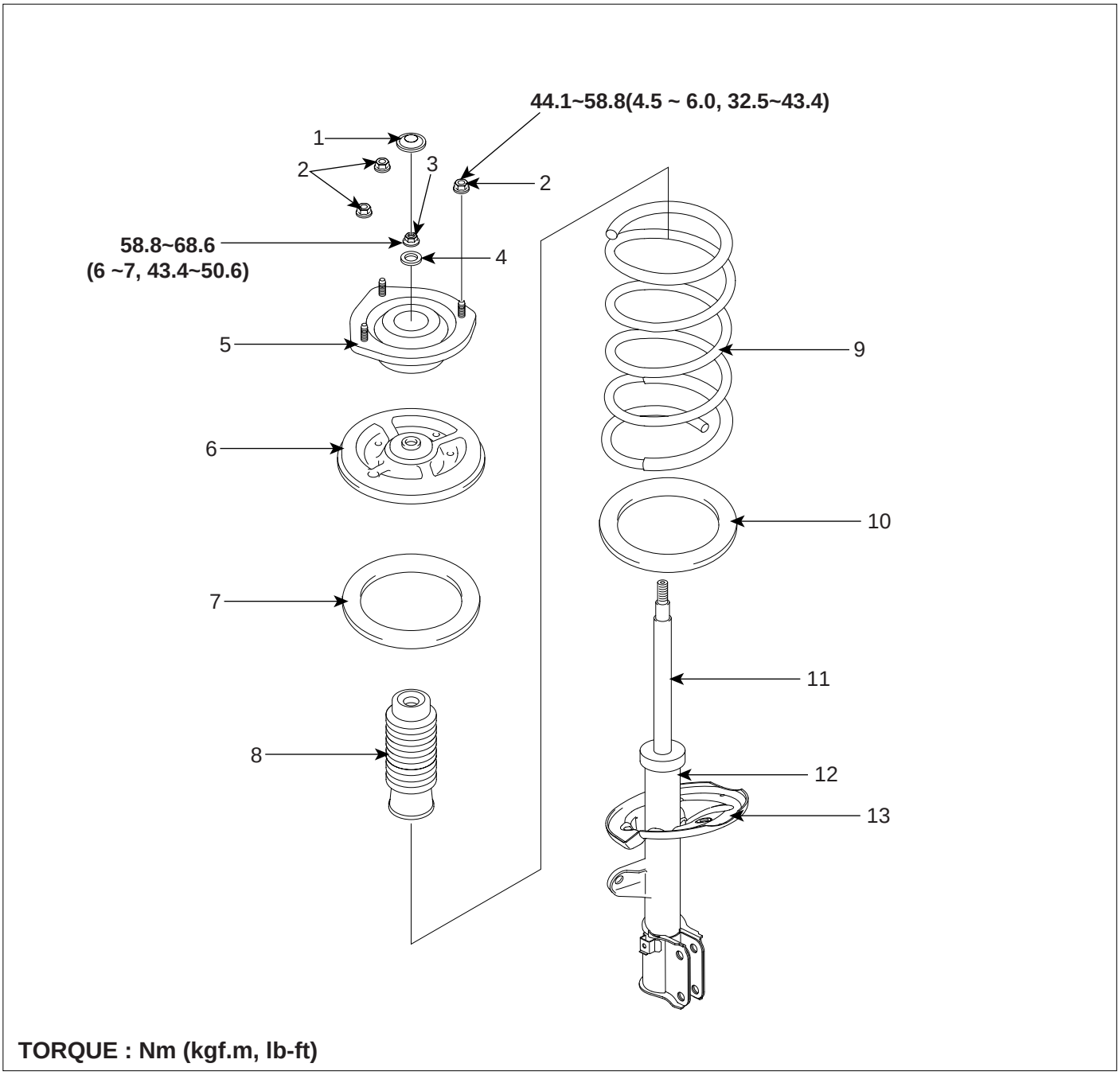

TORQUE : Nm (kgf.m, lb-ft)

1. Dust cover
2. Upper mounting nut
3. Self-locking nut
4. Spacer
5. Insulator
6. Spring upper seat
7. Spring upper pad
8. Strut dust cover and bumper rubber
9. Coil spring
10. Spring lower pad
11. Piston rod
12. Strut assembly
13. Spring lower seat

SCMSS6501L

REMOVAL EDC68431

1. Loosen the wheel nuts slightly.
   Raise the vehicle, and make sure it is securely supported.

2. Remove the front wheel and tire (A) from the front hub (B).

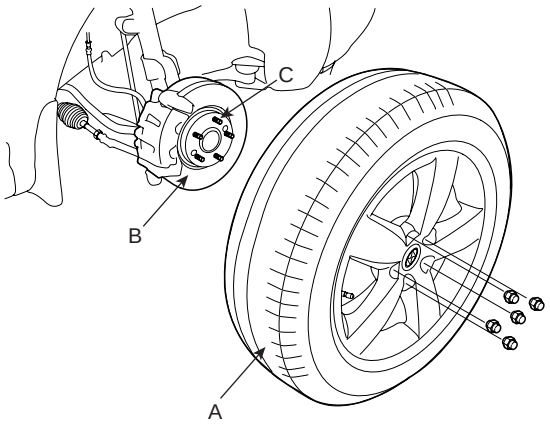

SCMSS6502D

CAUTION

Be careful not to damage to the hub bolts (C) when removing the front wheel and tire (A).

3. Remove the front stabilizer link (A) from the strut assembly.

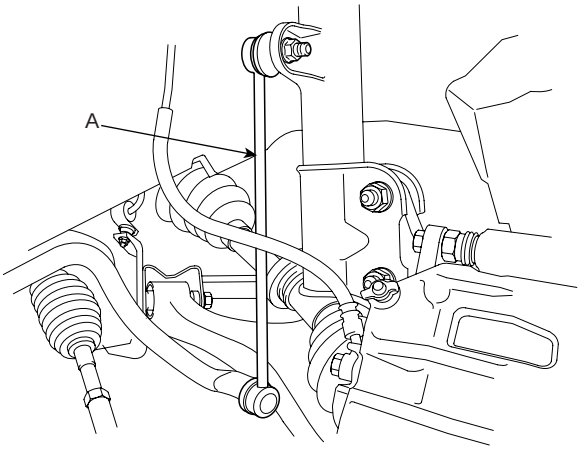

SCMSS6503D

4. Remove the strut upper mounting nuts (A).

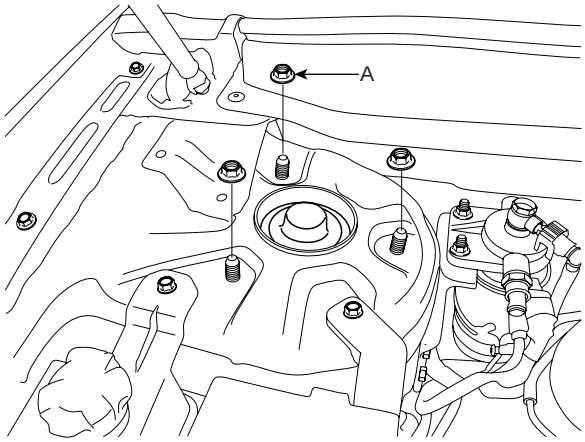

SCMSS6001D

5. Remove the wheel speed sensor cable (A) and strut lower mounting bolts (B), then remove the strut assembly.

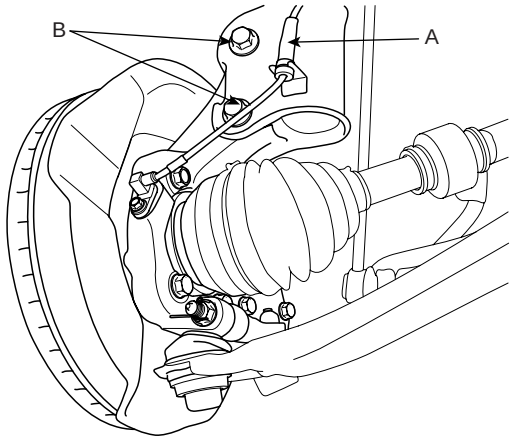

SCMSS6030D

DISASSEMBLY ECD04DAF

1. Remove the dust cover (A).

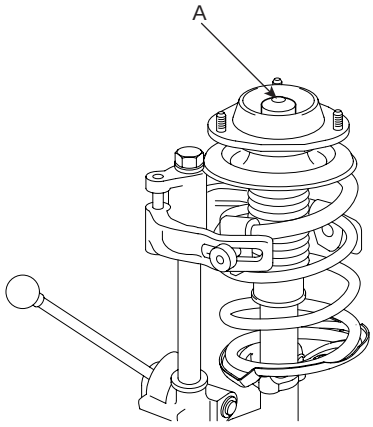

SCMSS6525D

2. Using the special tool (09546-26000), compress the coil spring (A).

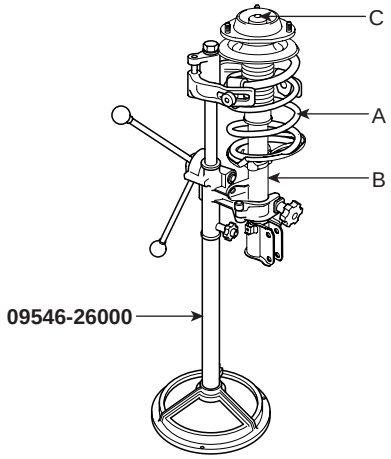

KHQE110C

3. Remove the self-locking nut (C) from the strut assembly(B).

4. Remove the insulator, spring seat, coil spring and dust cover from the strut assembly.

INSPECTION E1755BFA

1. Check the strut insulator for wear or damage.

2. Check rubber parts for damage or deterioration.

3. Compress and extend the piston rod (A) and check that there is no abnormal resistance or unusual sound during operation.

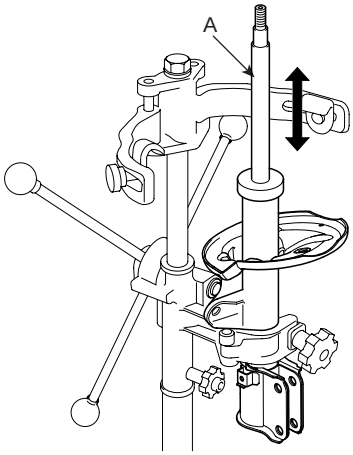

KHQE120A

DISPOSAL

1. Fully extend the piston rod.

2. Drill a hole on the A section to remove gas from the cylinder.

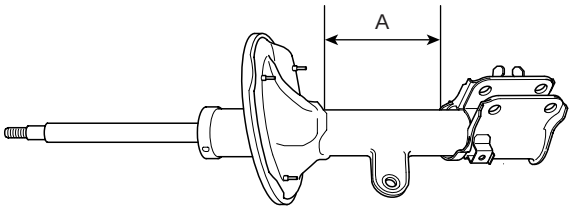

KHQE121A

CAUTION

The gas coming out is harmless, but be careful of chips that may fly when drilling.
Be sure to wear safety goggles or eye protection when performing this task.

REASSEMBLY EEA17FEF

1. Install the spring lower pad (D) so that the protrusions(A) fit in the holes (C) in the spring lower seat (B).

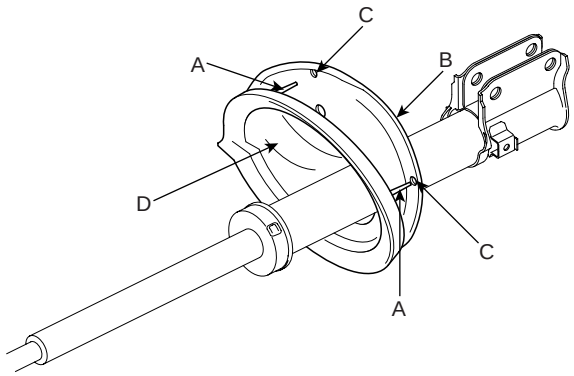

KHQE130A

2. Compress coil spring using special tool (09546-26000). Install compressed coil spring into shock absorber.

NOTE

a. Indicated identification color marks on the coil spring. Pay attention to identification mark and then install them.

b. Install the coil spring with the identification mark directed toward the knuckle.

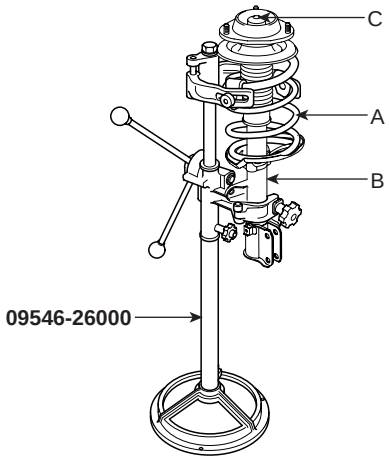

KHQE110C

3. After fully extending the piston rod, install the spring upper seat and insulator assembly.

4. After seating the upper and lower ends of the coil spring (A) in the upper and lower spring seat grooves (B) correctly, tighten new self-locking nut temporarily.

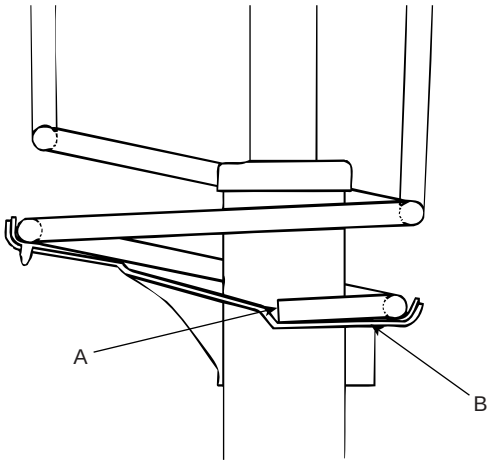

KSMSS44B

5. Remove the special tool (09546-26000).

6. Tighten the self-locking nut to the specified torque.

Tightening torque Nm (kgf-m, lb-ft) :
58.8~68.6 (6~7, 43.4~50.6)

INSTALLATION E16F245F

1. Install the strut assembly and then tighten the strut upper mounting nuts (A).

Tightening torque Nm (kgf-m, lb-ft) :
44.1~58.8 (4.5~6.0, 32.5~43.4)

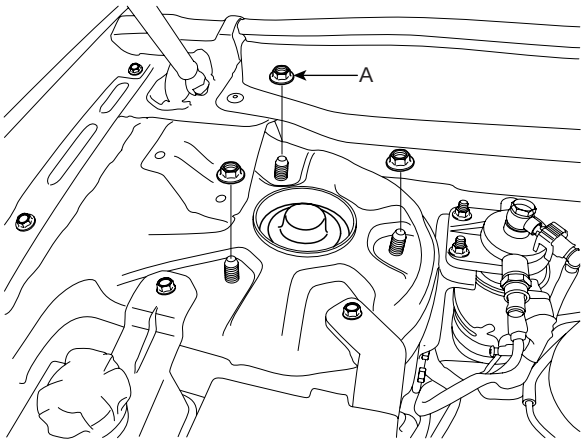

SCMSS6001D

2. Install the wheel speed sensor cable(A) and strut lower mounting bolts(B).

Tightening torque Nm (kgf-m, lb-ft) :
Bolt(B) : 152.0~171.6 (15.5~17.5, 112.1~126.6)

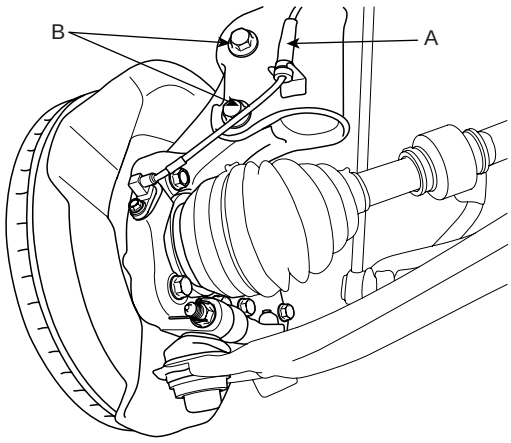

SCMSS6030D

3. Install the front stabilizer link (A) to the strut assembly.

Tightening torque Nm (kgf-m, lb-ft) :
Nut(B) : 98.1~117.7 (10.0~12.0, 72.3~86.8)

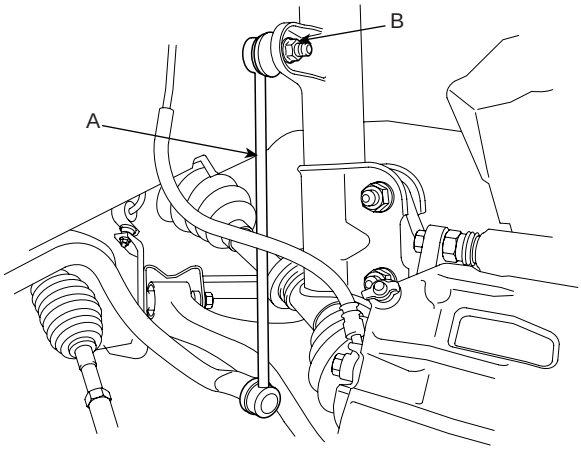

SCMSS6504D

4. Install the wheel and tire (A) to the front hub (B).

Tightening torque Nm (kgf-m, lb-ft) :
88.3~107.9 (9~11, 65.1~79.6)

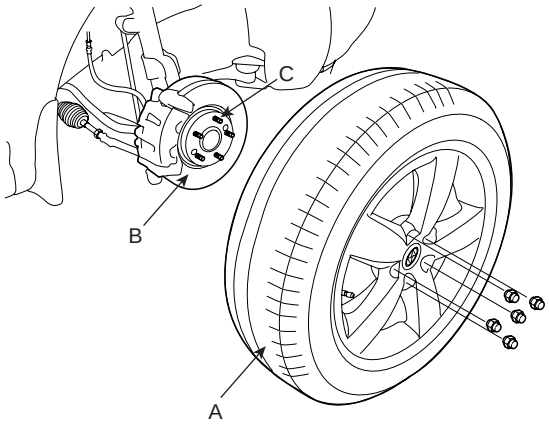

SCMSS6502D

CAUTION

Be careful not to damage the hub bolts (C) when installing the front wheel and tire (A).

FRONT LOWER ARM

COMPONENT EA0C06AB

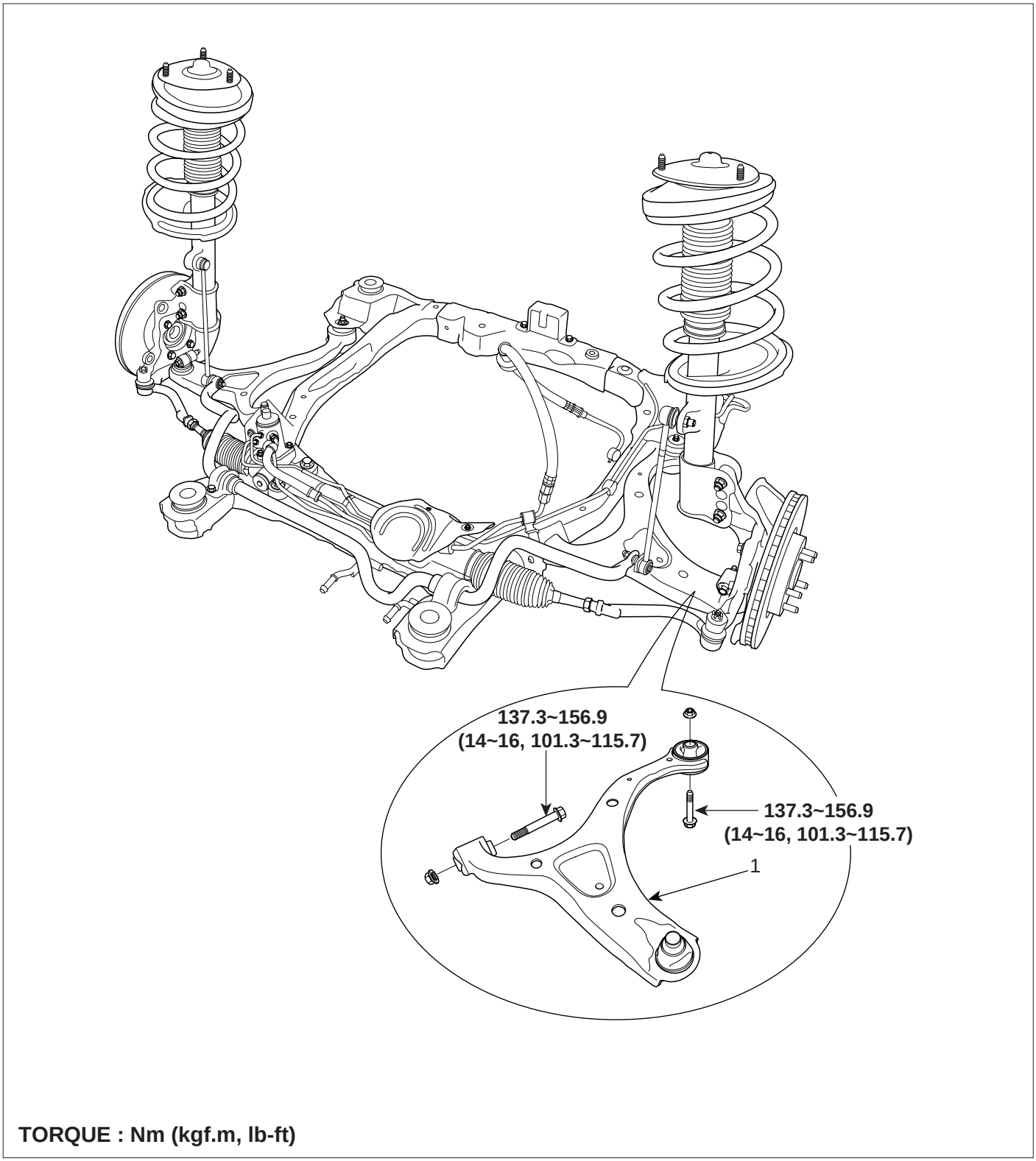

TORQUE : Nm (kgf.m, lb-ft)

1. Front lower arm

SCMSS6502L

REMOVAL E1F461EA

1. Loosen the wheel nuts slightly.
   Raise the vehicle, and make sure it is securely supported.

2. Remove the front wheel and tire (A) from the front hub (B).

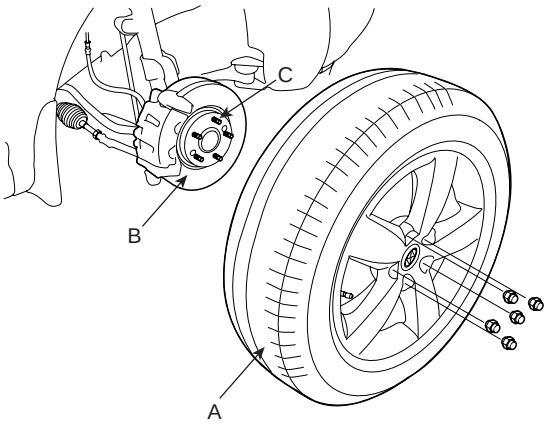

SCMSS6502D

CAUTION

Be careful not to damage to the hub bolts (C) when removing the front wheel and tire (A).

3. Remove the split pin and front lower arm mounting bolt (B) from the knuckle (A).

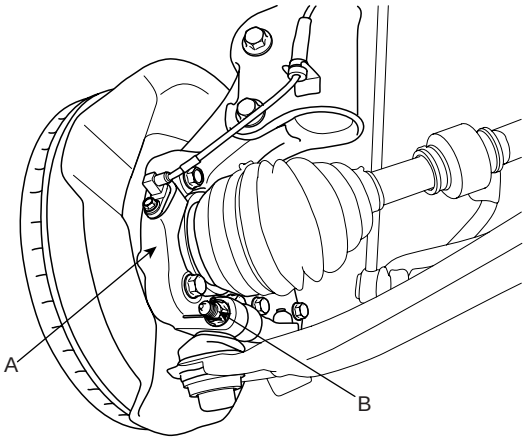

SCMSS6505D

4. Remove the lower arm mounting bolts (A,B) and then remove the lower arm.

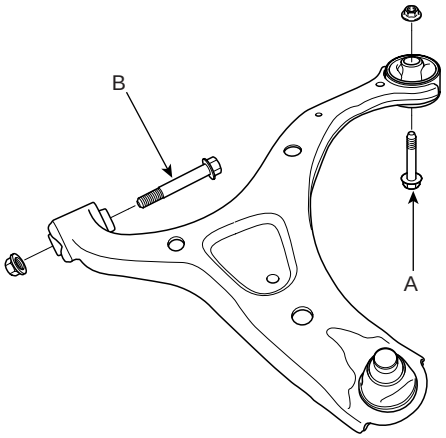

SCMSS6002D

CAUTION

If the bush is excessive worn and damaged, replace the lower arm assembly.

INSPECTION ECA7D9CF

1. Check the bushing for wear and deterioration.
2. Check the lower arm for bending or breakage.
3. Check the ball joint dust cover for cracks.
4. Check all bolts.

INSTALLATION EFFDBA92

1. Install the lower arm and then tighten the lower arm mounting bolts (A, B).

Tightening torque Nm (kgf-m, lb-ft) :
Bolt(A) : 137.3~156.9 (14~16, 101.3~115.7)
Bolt(B) : 137.3~156.9 (14~16, 101.3~115.7)

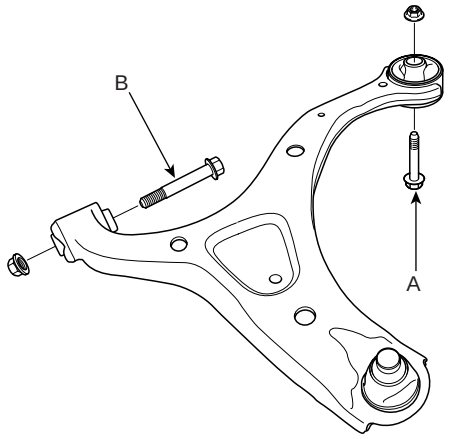

SCMSS6002D

2. Install the split pin and front lower arm mounting bolt (B) to the knuckle (A).

Tightening torque Nm (kgf-m, lb-ft) :
98.1~117.7 (10.0~12.0, 72.3~86.8)

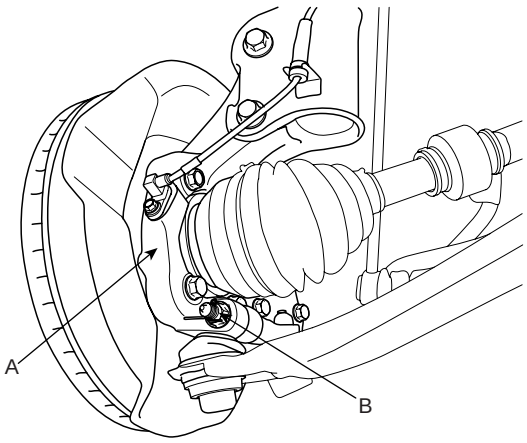

SCMSS6505D

3. Install the wheel and tire (A) to the front hub (B).

Tightening torque Nm (kgf-m, lb-ft) :
88.3~107.9 (9~11, 65.1~79.6)

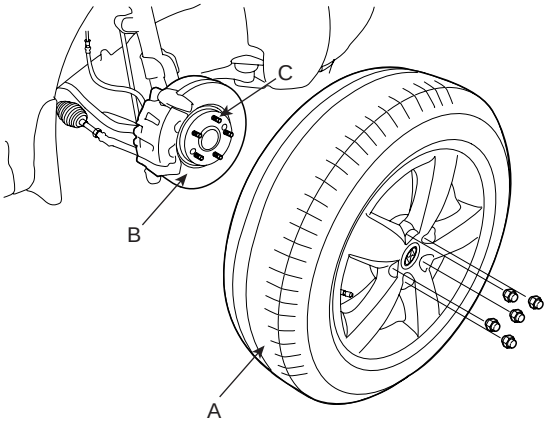

SCMSS6502D

CAUTION

Be careful not to damage the hub bolts(C) when installing the front wheel and tire (A).

FRONT STABILIZER BAR

COMPONENT EA57CFB0

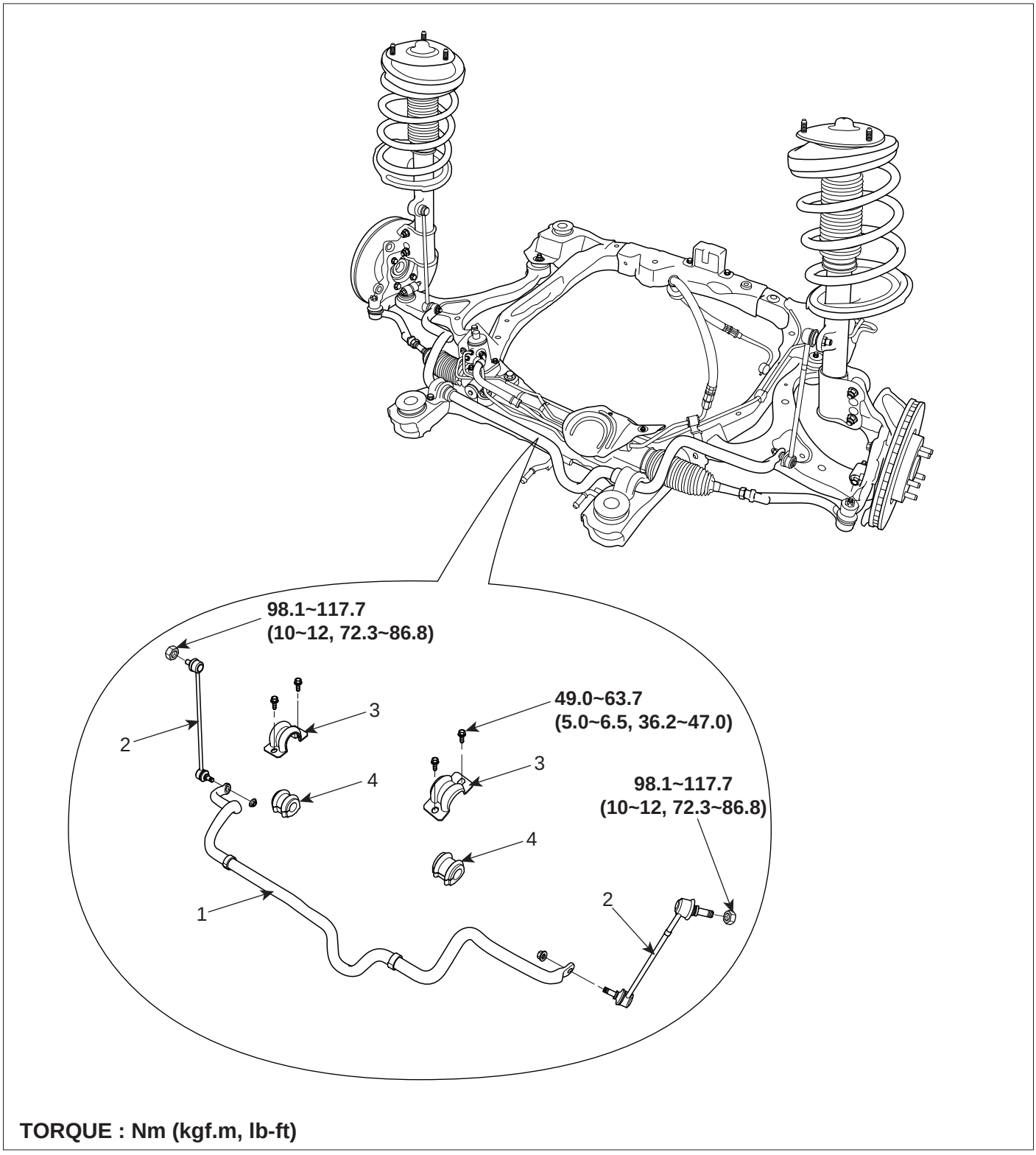

1. Front stabilizer bar
2. Front stabilizer link
3. Front stabilizer bar bracket
4. Front stabilizer bushing

SCMSS6503L

REMOVAL EBD7E8CF

1. Loosen the wheel nuts slightly.
   Raise the vehicle, and make sure it is securely supported.

2. Remove the front wheel and tire (A) from the front hub (B).

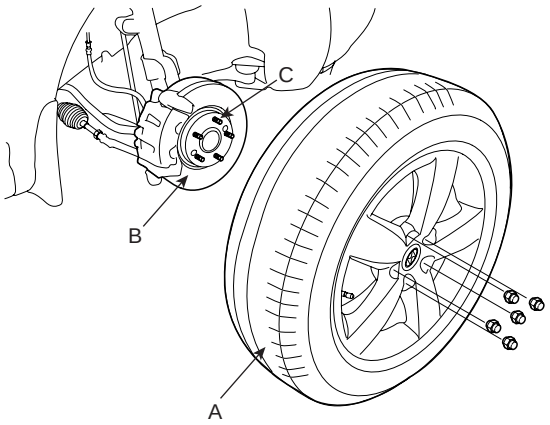

SCMSS6502D

CAUTION

Be careful not to damage to the hub bolts (C) when removing the front wheel and tire (A).

3. Remove the front stabilizer link (A) from the strut assembly.

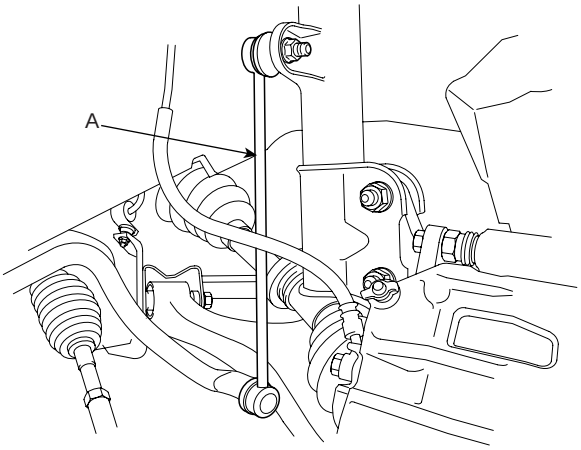

SCMSS6503D

4. Remove the split pin and front lower arm mounting bolt (B) from the knuckle (A).

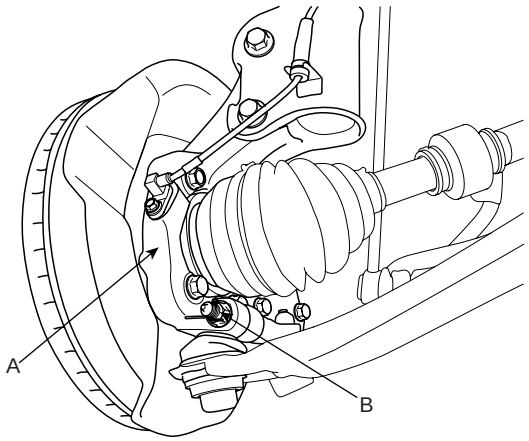

SCMSS6505D

5. Remove the under cover (A).

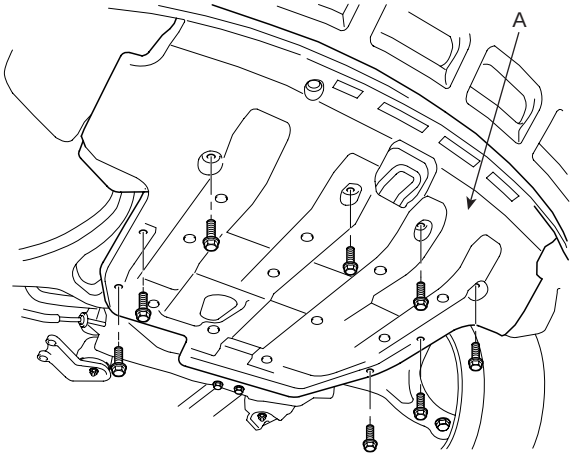

SCMSS6506D

6. Remove the connecting bolt (A) between the steering universal joint assembly and the pinion shaft.

7. Disconnect the EPS connector (B).

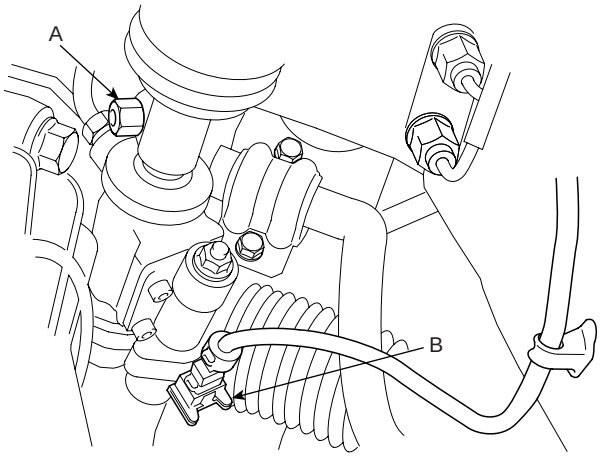

SCMSS6507D

8. Remove the front muffler (A).

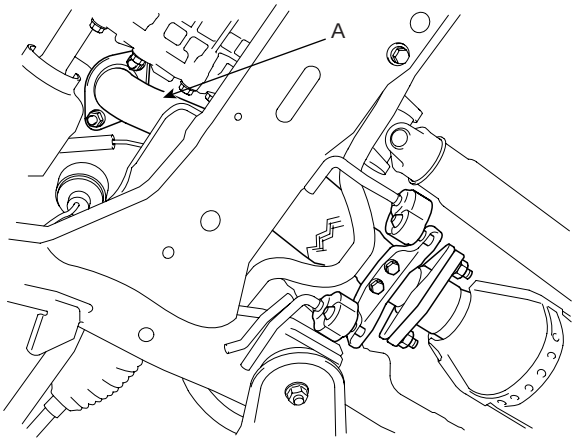

SCMSS6508D

9. Remove the front roll stopper mounting bolts (A).

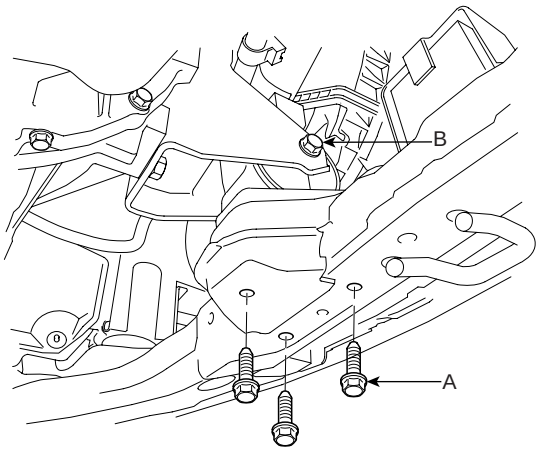

SCMSS6509D

10. Remove the rear roll stopper mounting bolts (A).

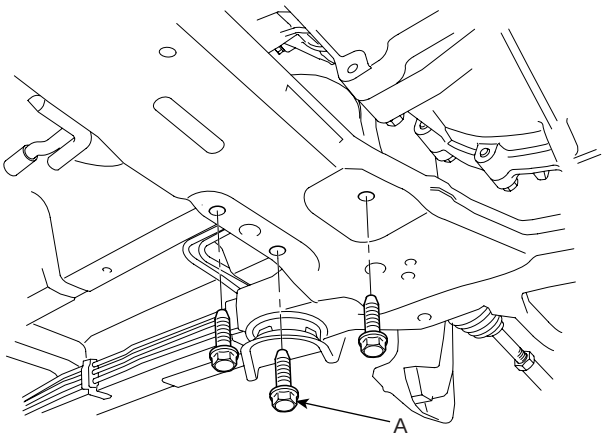

SCMSS6510D

11. Remove the sub frame stay mounting bolts (A), nuts (B) and the sub frame mounting bolts (C) by supporting it with a jack.

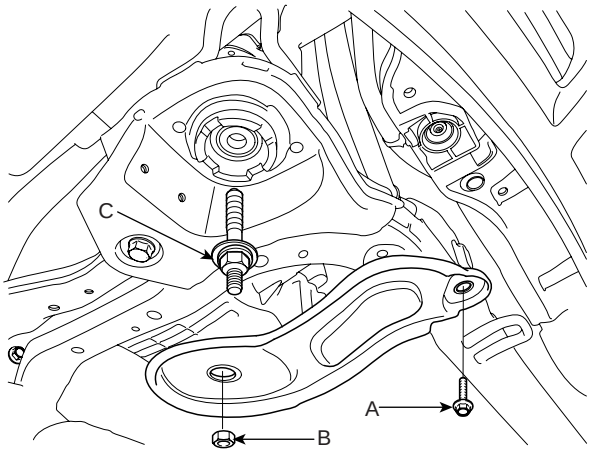

SCMSS6004D

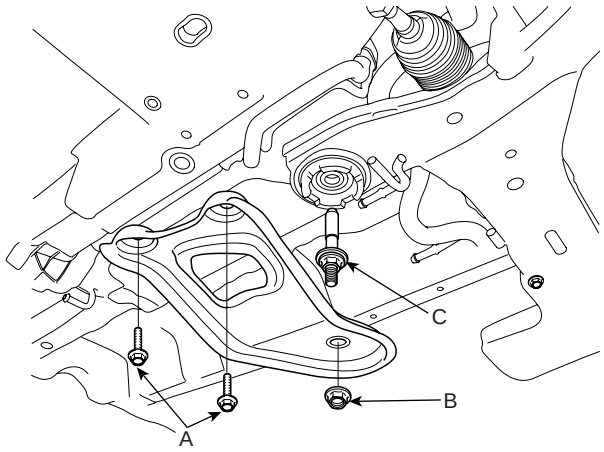

SCMSS6005D

12. Remove the sub frame (A).

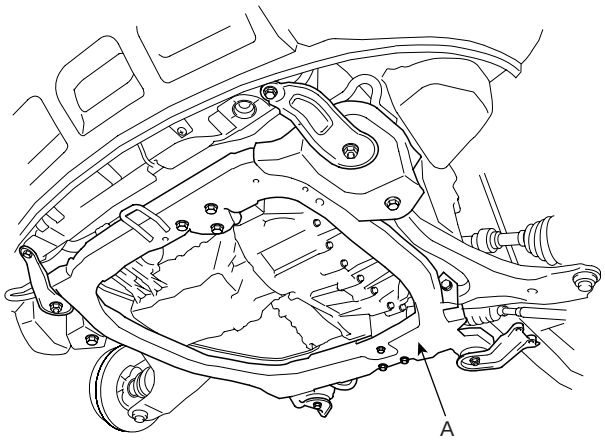

SCMSS6511D

13. Remove the stabilizer bar bracket (A) mounting bolts (B) from the sub frame.

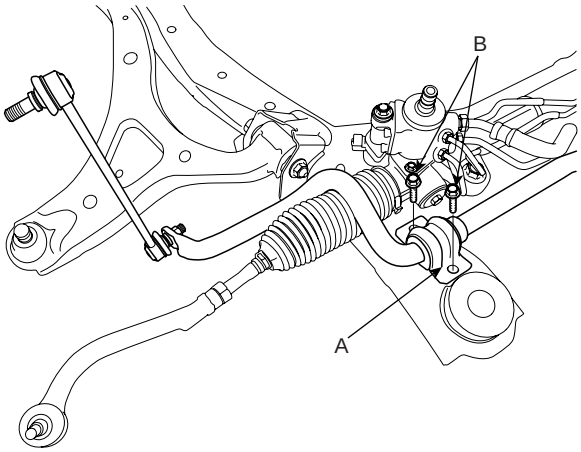

SCMSS6006D

14. Remove the stabilizer bar.

INSPECTION EEE538DD

1. Check the bushing for wear and deterioration.
2. Check the stabilizer bar for bending or breakage.
3. Check the ball joint dust cover for cracks.
4. Check all bolts.

INSTALLATION E2DAFBCB

1. Install the bushing (B) on the stabilizer bar (A).

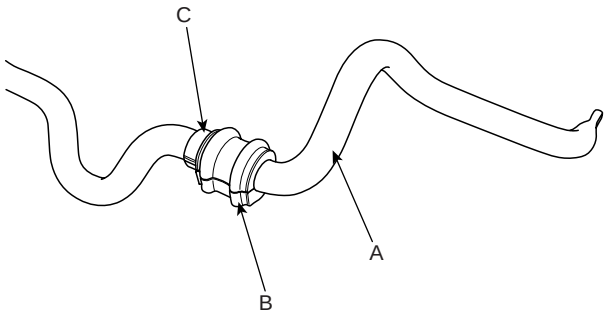

SCMSS6007D

NOTE

Bring clamp (C) of stabilizer bar (A) into contact with bushing (B).

2. Install the bracket on the bushing (B).
3. Install the stabilizer bar to the sub frame.
4. Install the stabilizer bar bracket (A) mounting bolts (B).

Tightening torque Nm (kgf-m, lb-ft) :
Bolt(B) : 49.0~63.7 (5.0~6.5, 36.2~47.0)

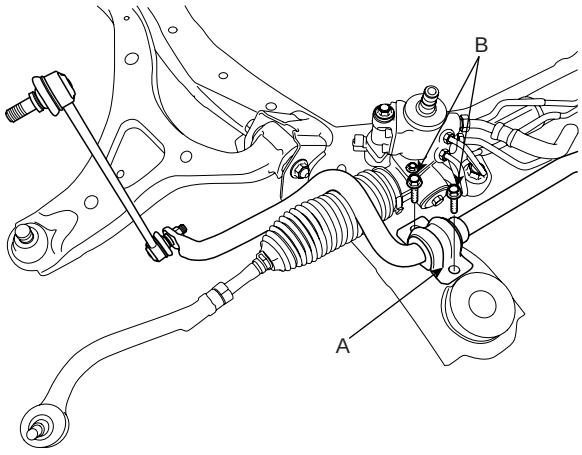

SCMSS6006D

5. Install the sub frame (A) by supporting it with a jack.

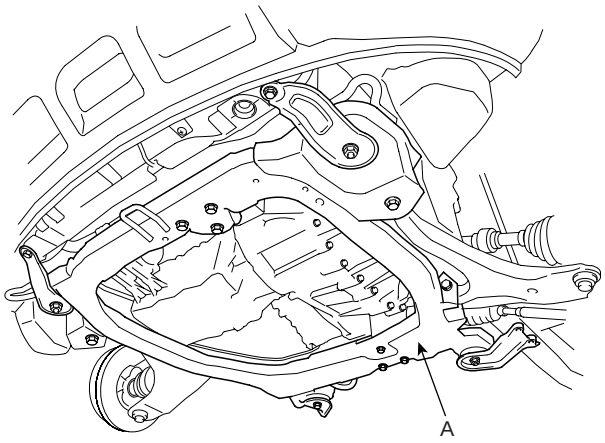

SCMSS6511D

6. Install the sub frame stay mounting bolts(A), nuts(B) and the sub frame mounting bolts(C).

Tightening torque Nm (kgf-m, lb-ft) :
Bolt(A) : 68.6~88.3 (7.0~9.0, 50.6~65.1)
Nut(B) : 68.6~88.3 (7.0~9.0, 50.6~65.1)
Bolt(C) : 137.3~156.9 (14~16, 101.3~115.7)

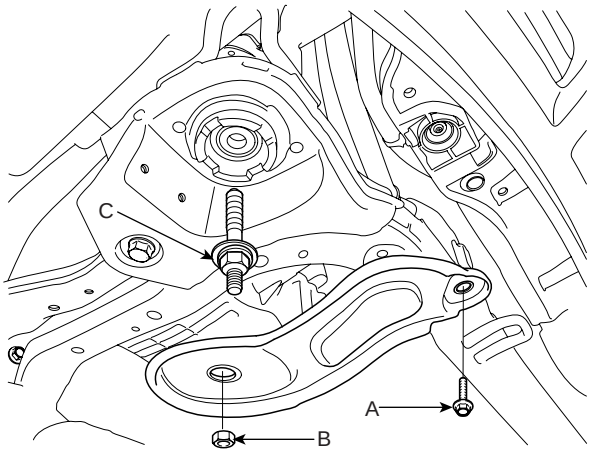

SCMSS6004D

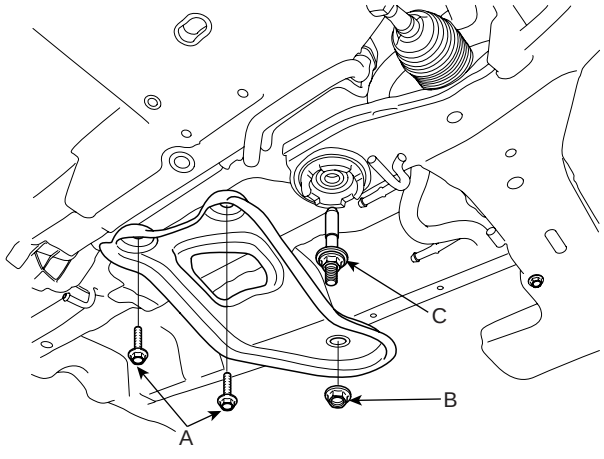

SCMSS6005D

7. Install the front roll stopper mounting bolts (A).

Tightening torque Nm (kgf-m, lb-ft) :
Bolt(A) : 49.0~63.7 (5.0~6.5, 36.2~47.0)
Bolt(B) : 78.5~98.1 (8.0~10.0, 57.9~72.3)

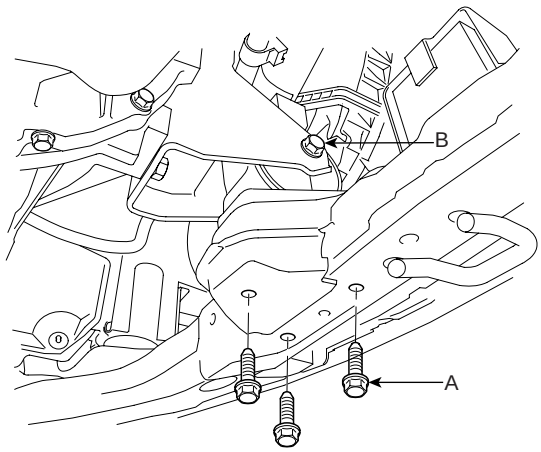

SCMSS6509D

8. Install the rear roll stopper mounting bolts (A).

Tightening torque Nm (kgf-m, lb-ft) :
Bolt(A) : 49.0~63.7 (5.0~6.5, 36.2~47.0)

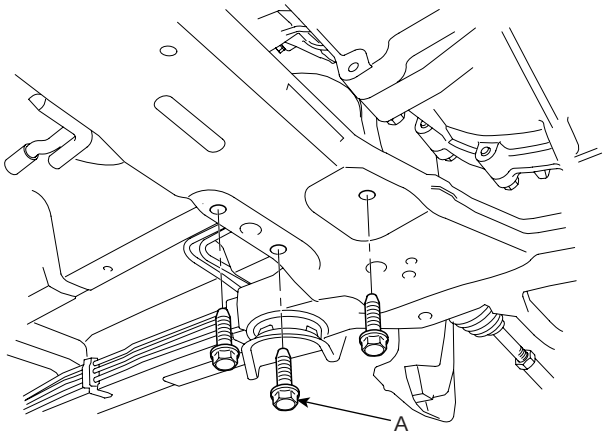

SCMSS6510D

9. Install the front muffler (A).

Tightening torque Nm (kgf-m, lb-ft) :
39.2~58.8 (4.0~6.0, 28.9~43.4)

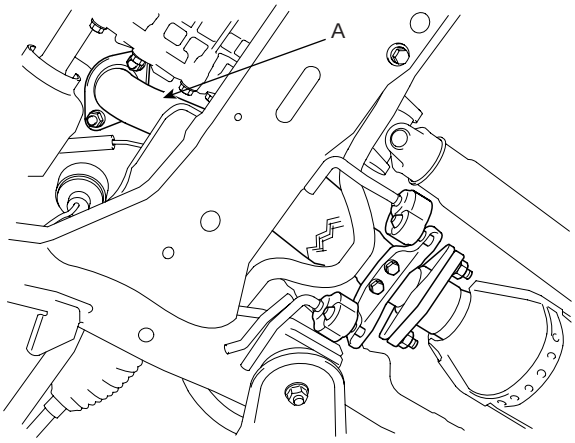

SCMSS6508D

10. Install the connecting bolt (A) between the steering universal joint assembly and the pinion shaft.

Tightening torque Nm (kgf-m, lb-ft) :
29.4~44.1 (3.0~4.5, 21.7~32.5)

11. Reconnect the EPS connector (B).

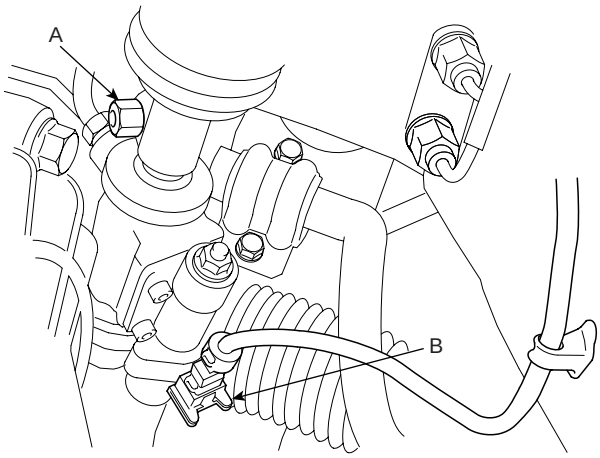

SCMSS6507D

12. Install the under cover (A).

Tightening torque Nm (kgf-m, lb-ft) :
16.7~25.5 (1.7~2.6, 12.3~18.8)

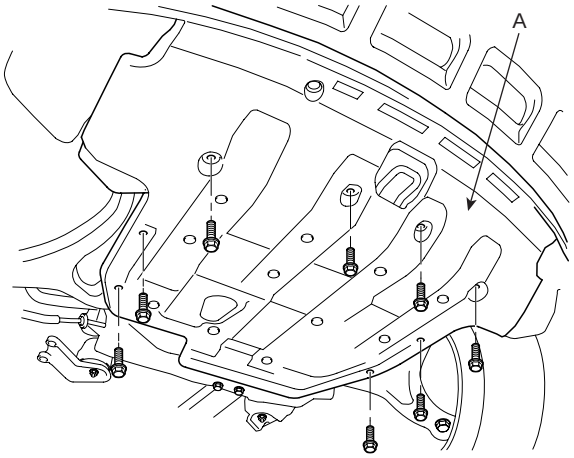

SCMSS6506D

13. Install the split pin and front lower arm mounting bolt (B) to the knuckle (A).

Tightening torque Nm (kgf-m, lb-ft) :
98.1~117.7 (10.0~12.0, 72.3~86.8)

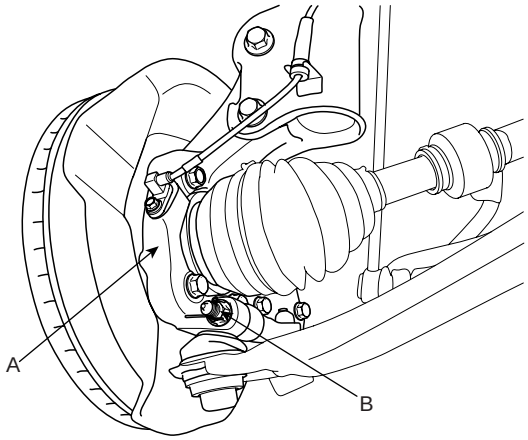

SCMSS6505D

14. Install the front stabilizer link (A) to the strut assembly.

Tightening torque Nm (kgf-m, lb-ft):
Nut(B) : 98.1~117.7 (10.0~12.0, 72.3~86.8)

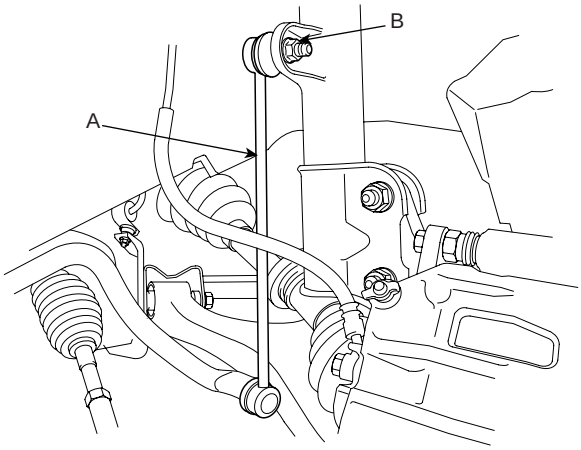

SCMSS6504D

15. Install the wheel and tire (A) to the front hub (B).

Tightening torque Nm (kgf-m, lb-ft):
88.3~107.9 (9~11, 65.1~79.6)

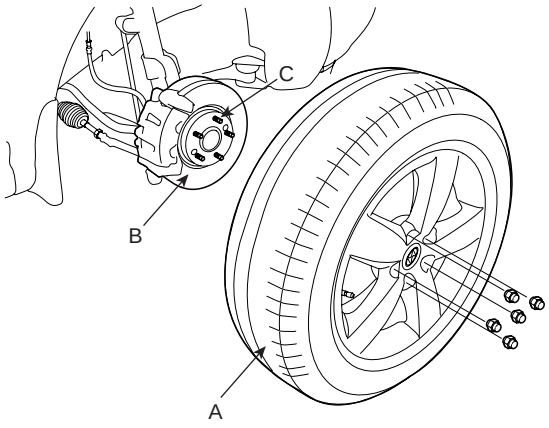

SCMSS6502D

CAUTION

Be careful not to damage the hub bolts (C) when installing the front wheel and tire (A).

REAR SUSPENSION SYSTEM

COMPONENT E0ADC96A

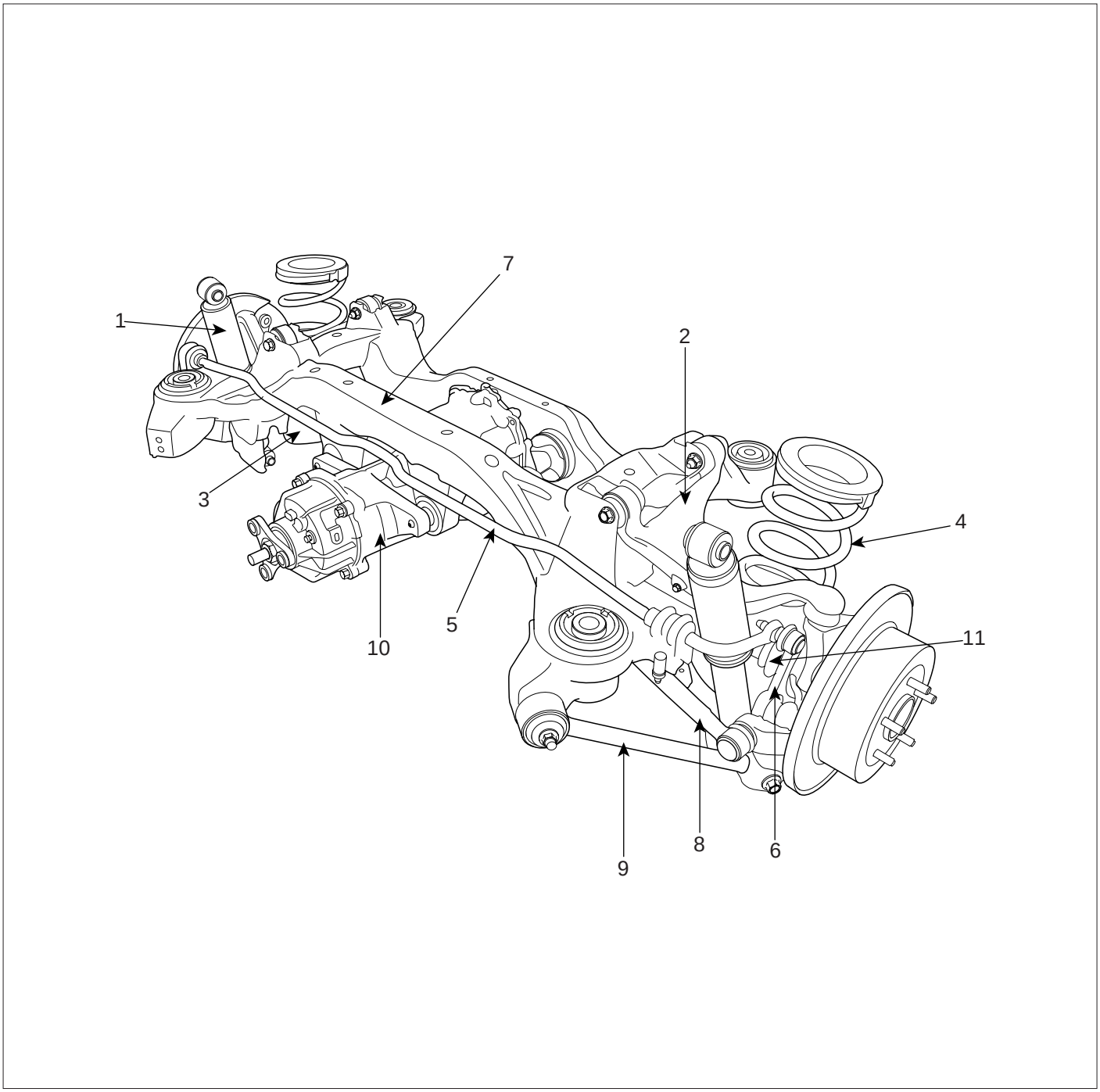

1. Rear shock absorber assembly
2. Rear upper arm
3. Rear lower arm
4. Rear coil spring
5. Rear stabilizer bar assembly
6. Rear stabilizer link assembly
7. Rear cross member
8. Rear assist arm
9. Trailing arm
10. Differential Carrier (4WD)
11. Drive shaft (4WD)

SCMSS6504L

REAR SHOCK ABSORBER

COMPONENT EFEACBB1

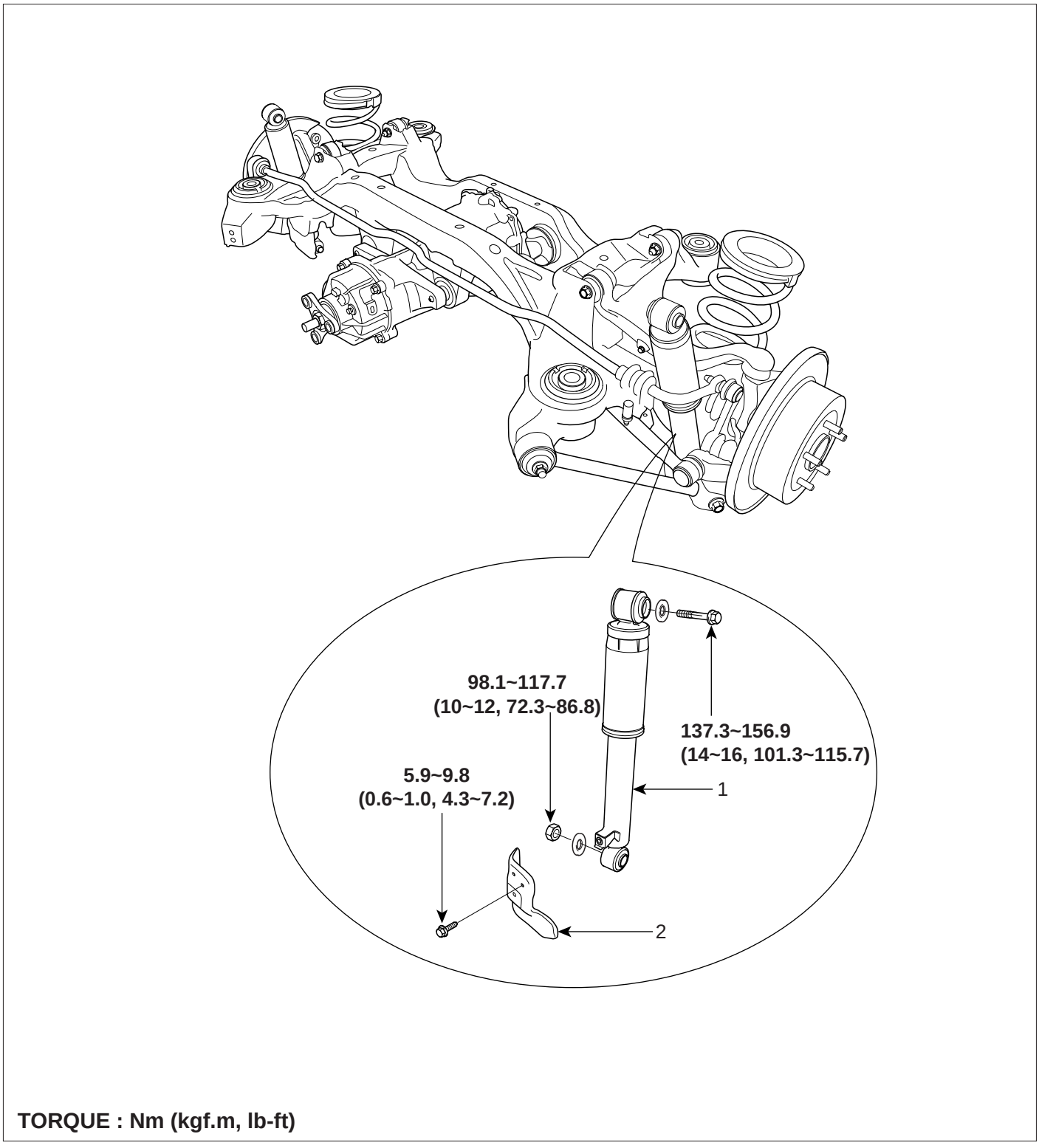

1. Rear shock absorber
2. Dust cover

SCMSS6505L

REMOVAL E01096EE

1. Loosen the wheel nuts slightly.
   Raise the vehicle, and make sure it is securely supported.

2. Remove the rear wheel and tire (A) from the rear hub (B).

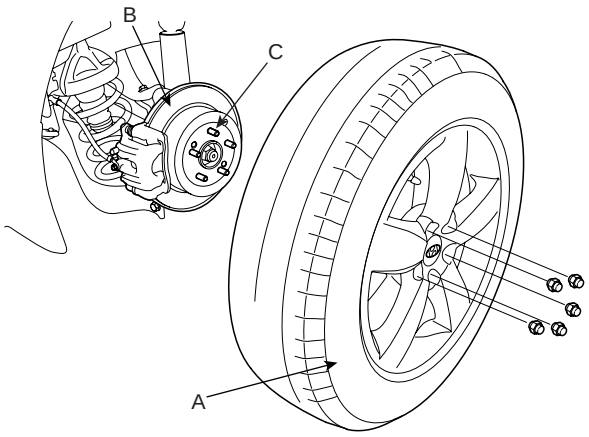

SCMSS6512D

CAUTION

Be careful not to damage to the hub bolts (C) when removing the rear wheel and tire (A).

3. Support the rear lower arm with a jack as shown in the illustration.

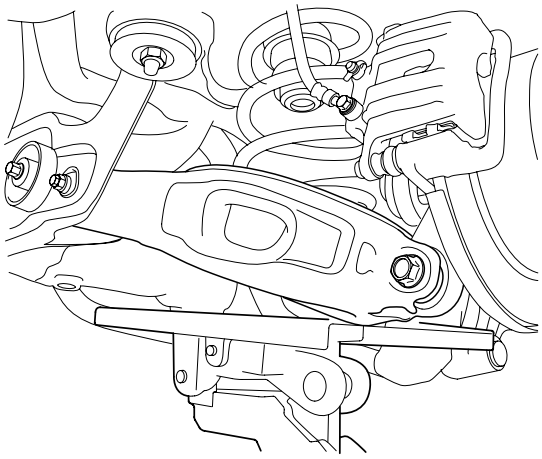

SCMSS6526D

4. Remove the rear shock absorber(A).

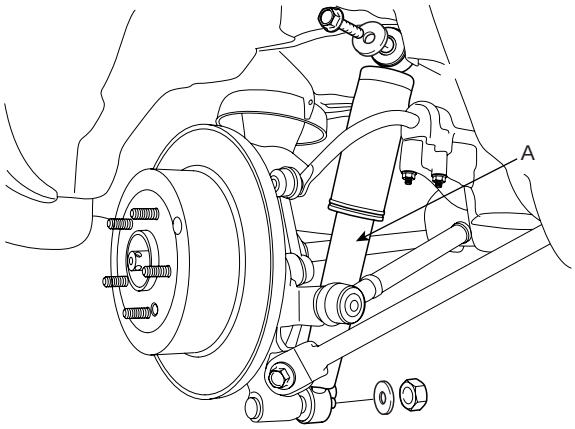

SCMSS6514D

CAUTION

If the bush is excessive worn and damaged, replace the shock absorber assembly.

INSPECTION EFF7BFD5

1. Check the rubber parts for damage or deterioration.
2. Check the shock absorber for abnormal resistance or unusual sounds.

DISPOSAL

1. Fully extend the shock absorber rod.
2. Drill a hole to remove gas from the cylinder.

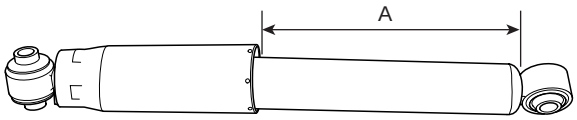

AHKF210G

CAUTION

The gas coming out is harmless, but be careful of chips that may fly up when drilling. Be sure to use face shield and safety goggles.

INSTALLATION E6FBAED1

1. Support the rear lower arm with a jack as shown in the illustration.

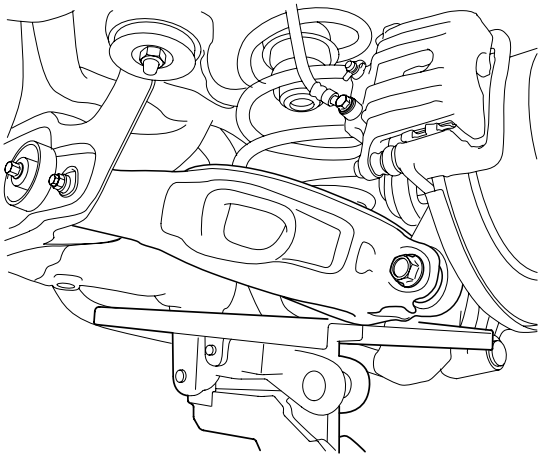

SCMSS6526D

2. Install the rear shock absorber (A).

Tightening torque Nm (kgf-m, lb-ft) :
Bolt(B) : 137.3~156.9 (14~16, 101.3~115.7)
Nut(C) : 98.1~117.7 (10.0~12.0, 72.3~86.8)

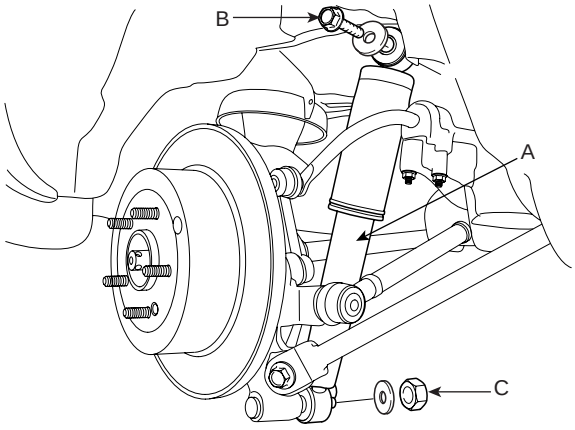

SCMSS6527D

NOTE

After checking the distance(453±10mm(17.83 ±0.39in)) between the wheel housing garnish (A) and the hub assembly (B) as shown in the illustration, tighten the mounting bolts and nuts of rear chassis part with specified torque.

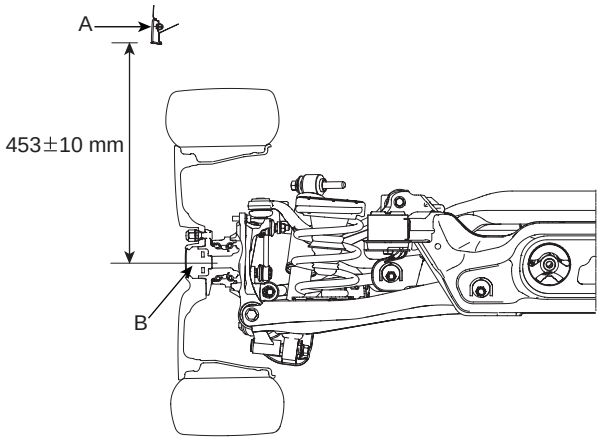

SCMSS6528D

3. Install the wheel and tire (A) to the rear hub (B).

Tightening torque Nm (kgf-m, lb-ft) :
88.3~107.9 (9~11, 65.1~79.6)

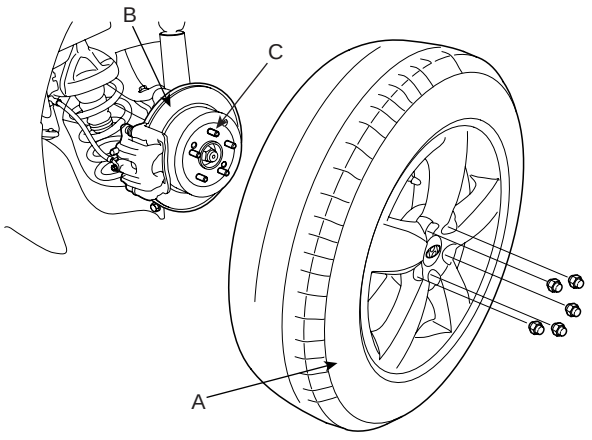

SCMSS6512D

CAUTION

Be careful not to damage the hub bolts (C) when installing the rear wheel and tire (A).

REAR UPPER ARM

COMPONENT E2E5AEF7

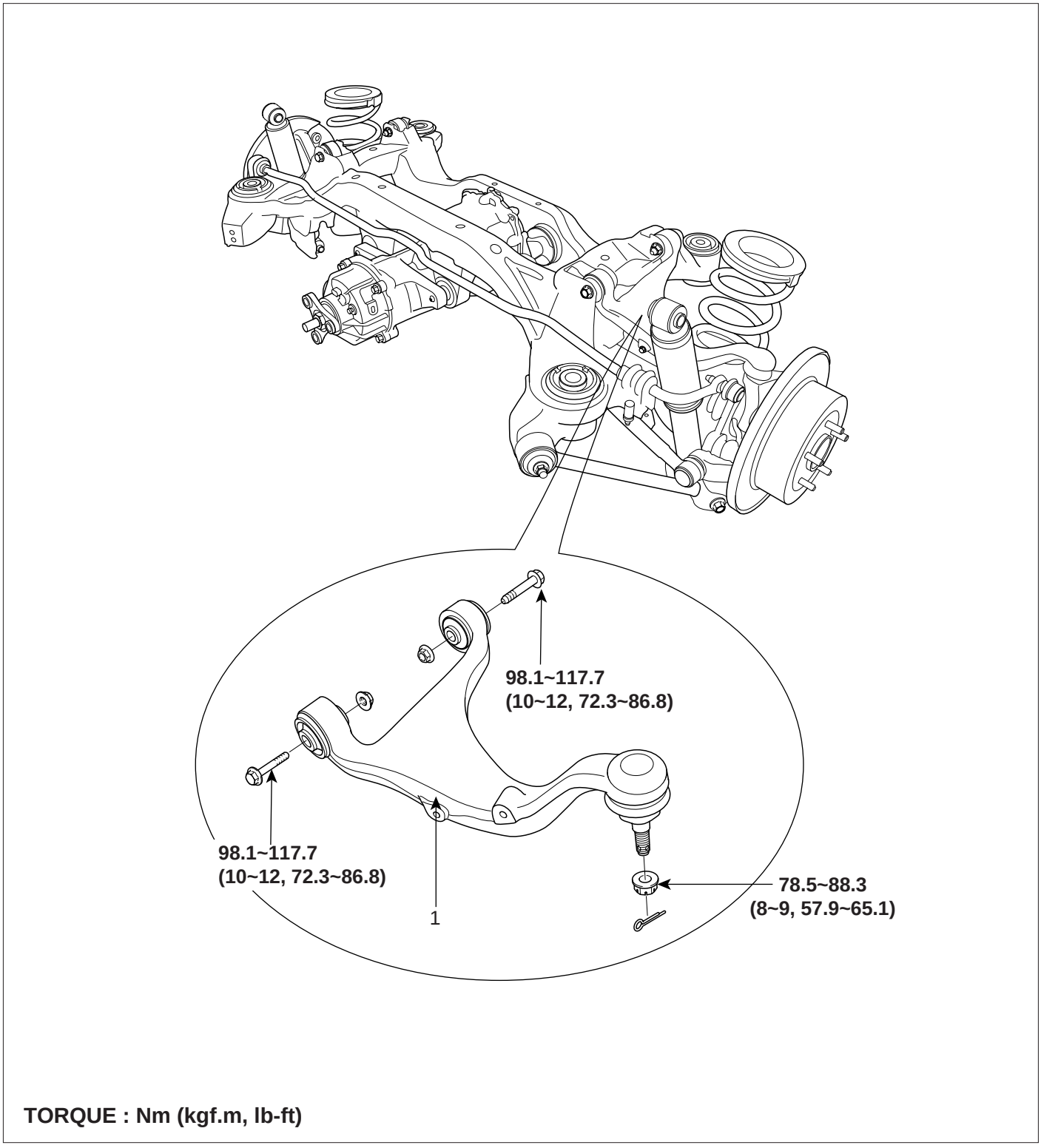

1. Rear upper arm

SCMSS6506L

REMOVAL E56EEAC8

1. Loosen the wheel nuts slightly.
   Raise the vehicle, and make sure it is securely supported.

2. Remove the rear wheel and tire (A) from the rear hub (B).

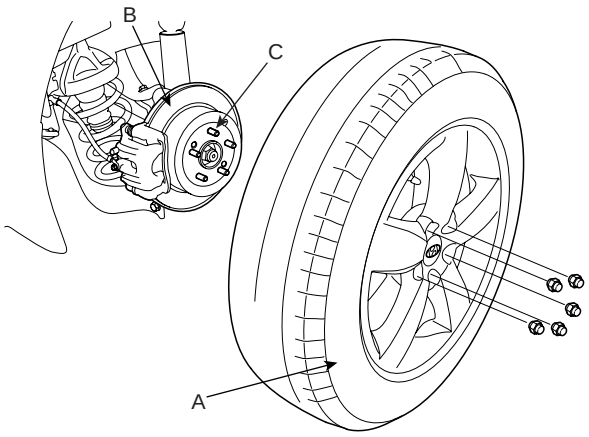

SCMSS6512D

CAUTION

Be careful not to damage to the hub bolts (C) when removing the rear wheel and tire (A).

3. Support the rear lower arm with a jack as shown in the illustration.

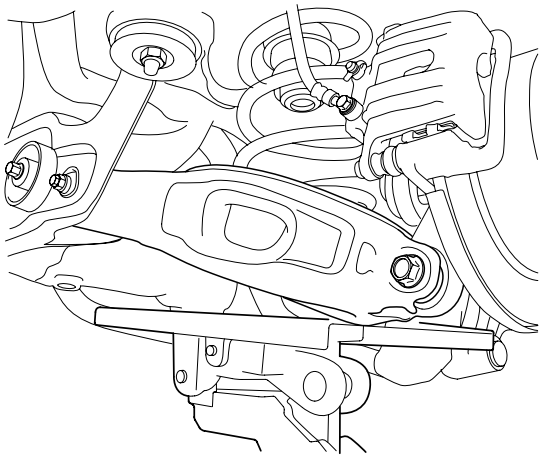

SCMSS6526D

4. Remove the rear shock absorber (A).

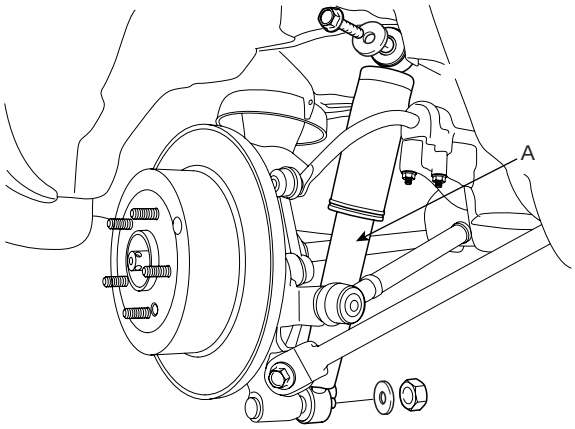

SCMSS6514D

5. Remove the brake caliper mounting bolts (A), and then place the brake caliper assembly (B) with wire as shown in the illustration.

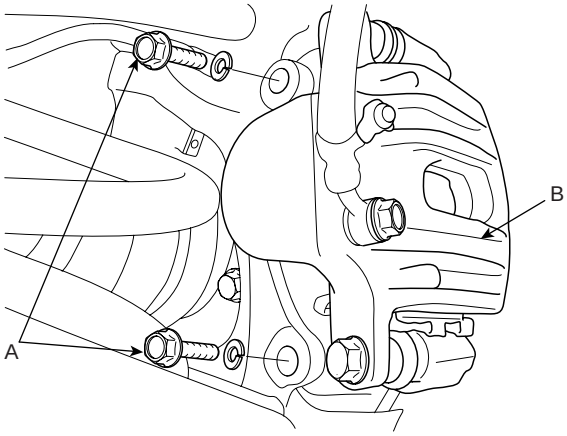

SCMSS6515D

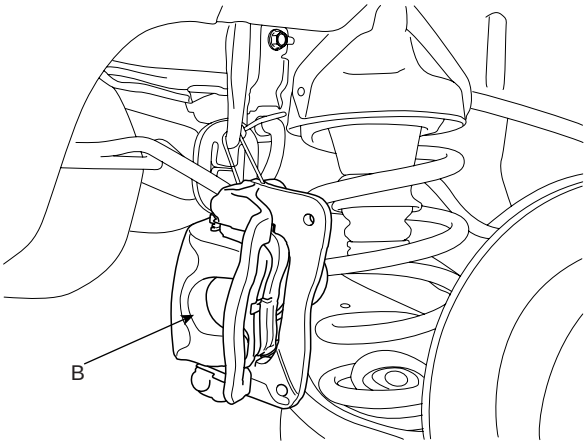

SCMSS6516D

6. Remove the wheel speed sensor (A) and the parking brake cable (B) from the rear axle carrier.

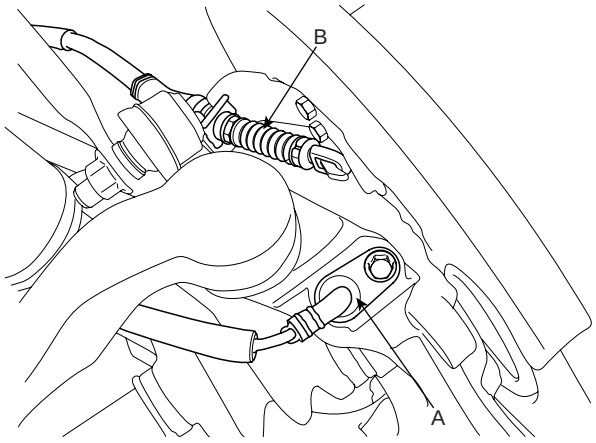

SCMSS6517D

7. After making a match mark (C) on the rubber coupling (A) and rear differential companion (B), remove the propeller shaft mounting bolts (D).

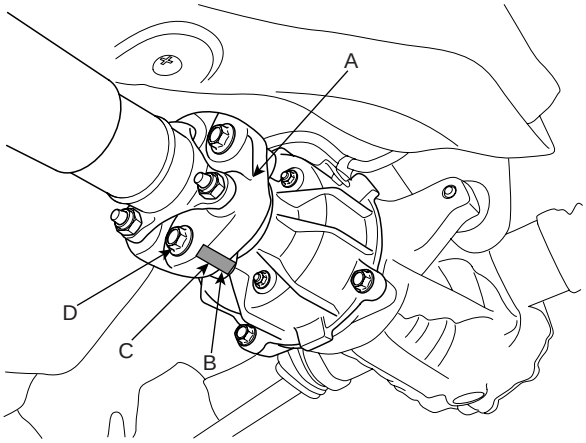

SCMSS6518D

8. Support the rear cross member assembly (A) with the jack.

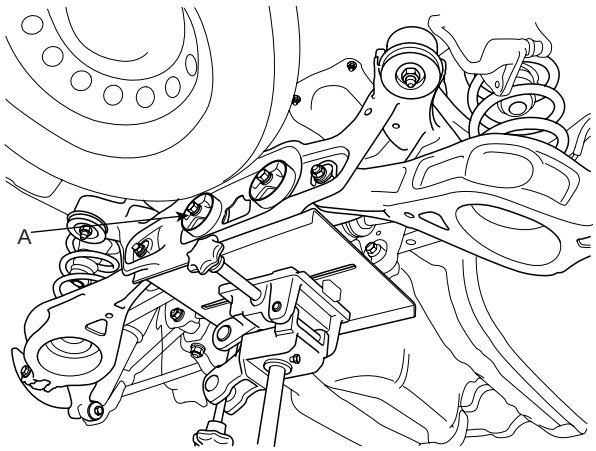

SCMSS6010D

9. Remove the rear cross member stay (A) and mounting bolt (B) and nut (C).

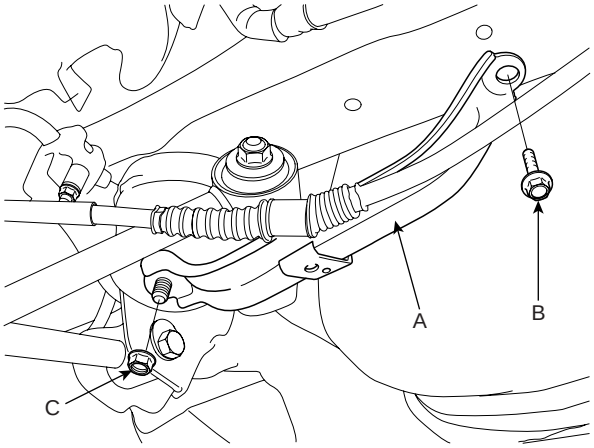

SCMSS6011D

10. Remove the rear cross member mounting bolts (A) , nuts (B) and plate (C).

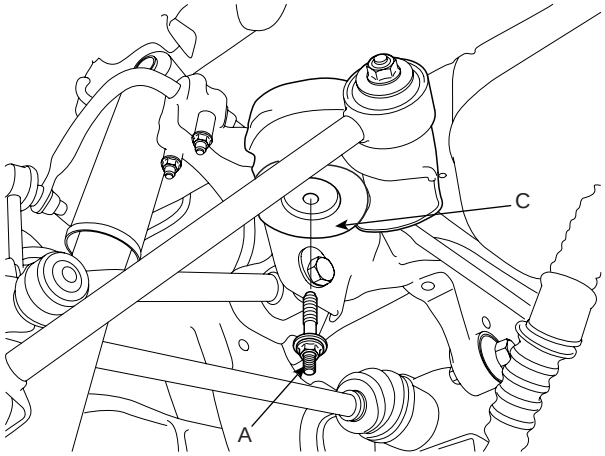

SCMSS6012D

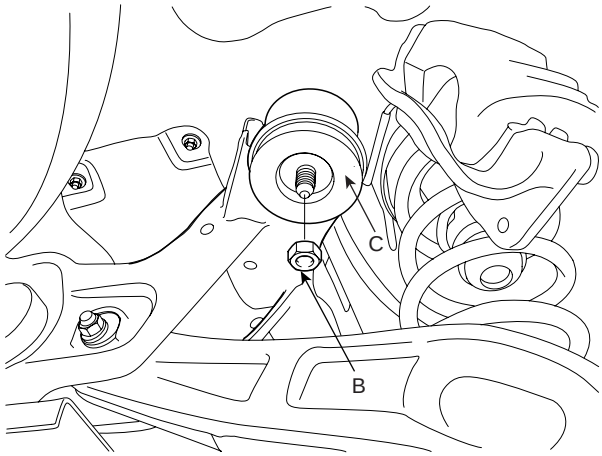

SCMSS6013D

11. Remove the rear cross member.

12. Remove the split pin (A) and the castle nut (B) from the rear upper arm ball joint (C), and then remove the rear upper arm ball joint (C) by using the special tool(09568-34000).

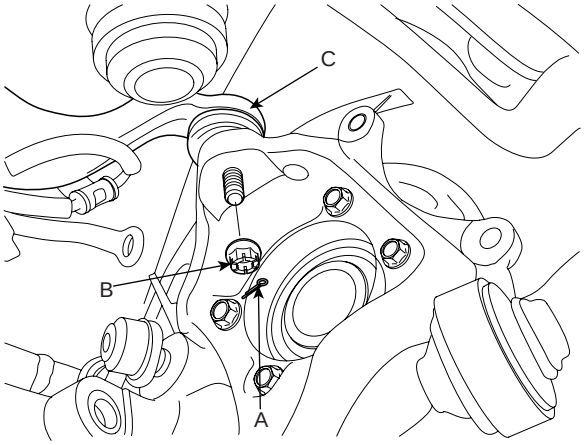

SCMSS6521D

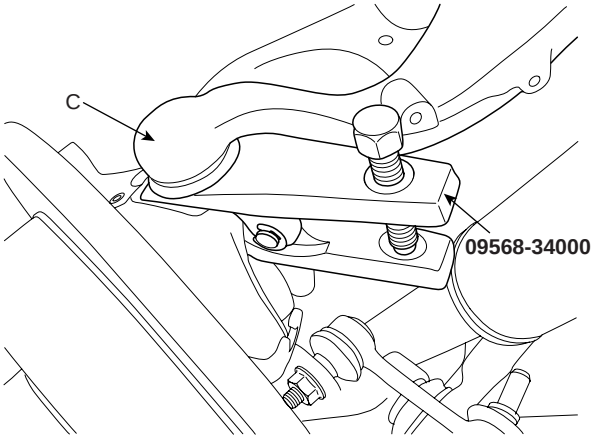

SCMSS6519D

13. Remove the mounting bolts (A) of the rear upper arm and the cross member, then remove the rear upper arm (B).

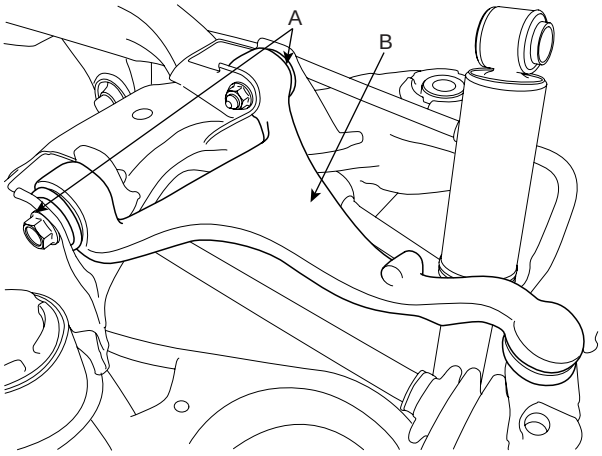

SCMSS6014D

CAUTION

If the bush is excessive worn and damaged, replace the upper arm assembly.

INSPECTION EDD1FF86

1. Check the bushing for wear and deterioration.
2. Check the rear upper arm for bending or breakage.
3. Check the ball joint dust cover for cracks.
4. Check all bolts.

INSTALLATION E163969D

1. Install the rear upper arm (B), then install the mounting bolts (A) of the rear upper arm and the cross member.

Tightening torque Nm (kgf-m, lb-ft) :
98.1~117.7 (10.0~12.0, 72.3~86.8)

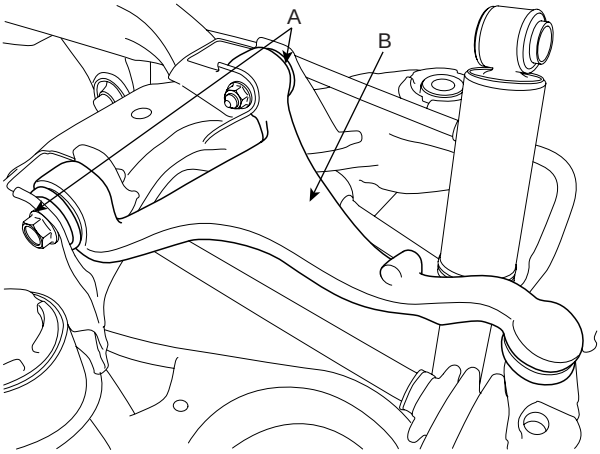

SCMSS6014D

NOTE

After checking the distance(453±10mm(17.83 ±0.39in)) between the wheel housing garnish (A) and the hub assembly (B) as shown in the illustration, tighten the mounting bolts and nuts of rear chassis part with specified torque.

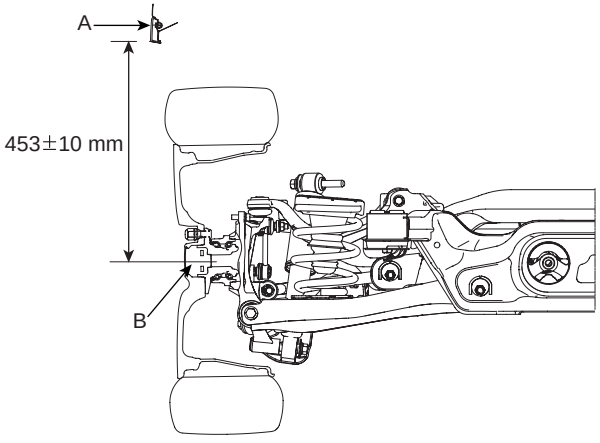

SCMSS6528D

2. Install the split pin (A) and the castle nut (B) to the rear upper arm ball joint (C).

Tightening torque Nm (kgf-m, lb-ft) :
78.5~88.3 (8.0~9.0, 57.9~65.1)

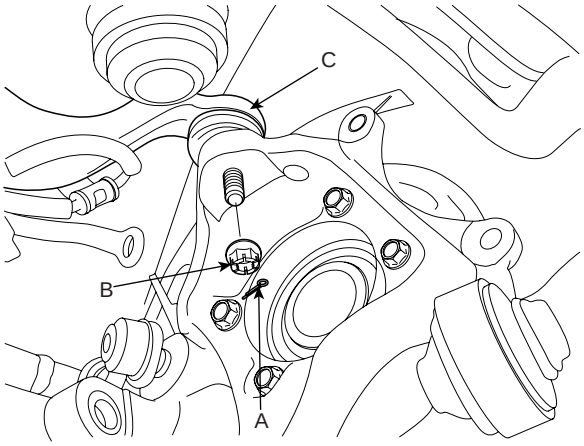

SCMSS6521D

3. Install the rear cross member.

4. Support the rear cross member assembly (A) with the jack.

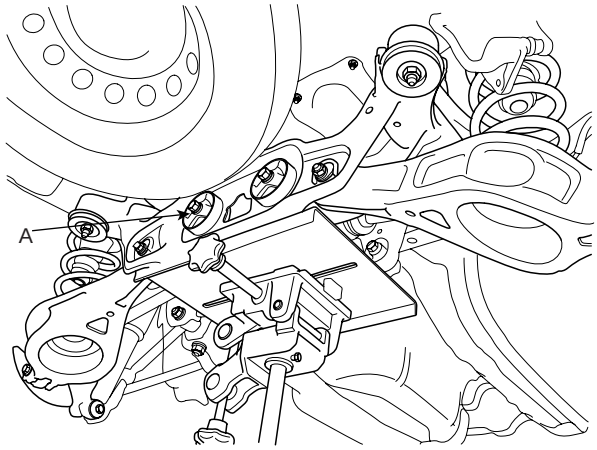

SCMSS6010D

5. Install the rear cross member mounting bolts (A), nuts (B) and plate (C).

Tightening torque Nm (kgf-m, lb-ft) :
Bolts(A) : 156.9~176.5 (16~18, 115.7~130.2)
Nuts(B) : 156.9~176.5 (16~18, 115.7~130.2)

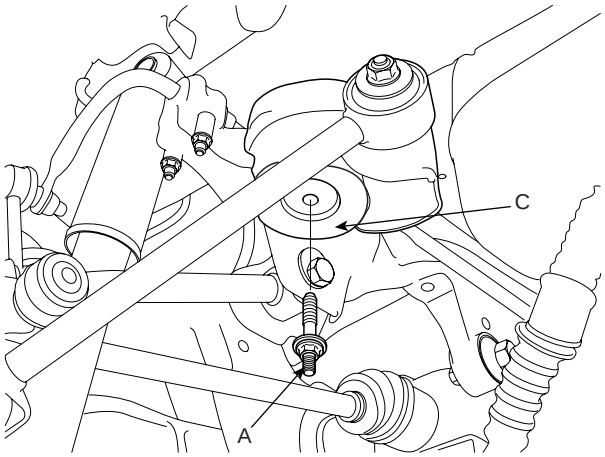

SCMSS6012D

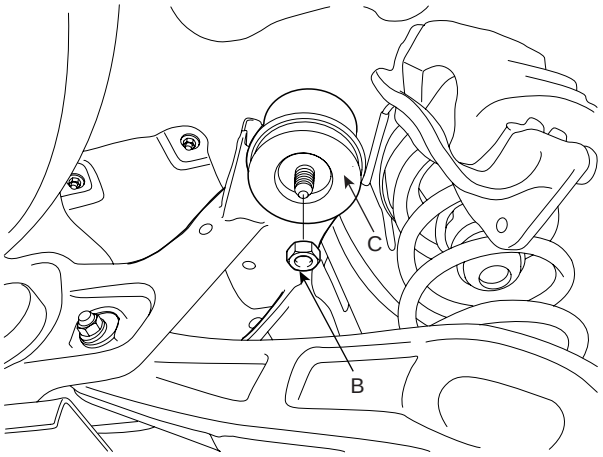

SCMSS6013D

6. Install the rear cross member stay (A) and mounting bolt (B) and nut (C).

Tightening torque Nm (kgf-m, lb-ft) :
Bolt(B) : 68.6~88.3 (7~9, 50.6~65.1)
Nut(C) : 68.6~88.3 (7~9, 50.6~65.1)

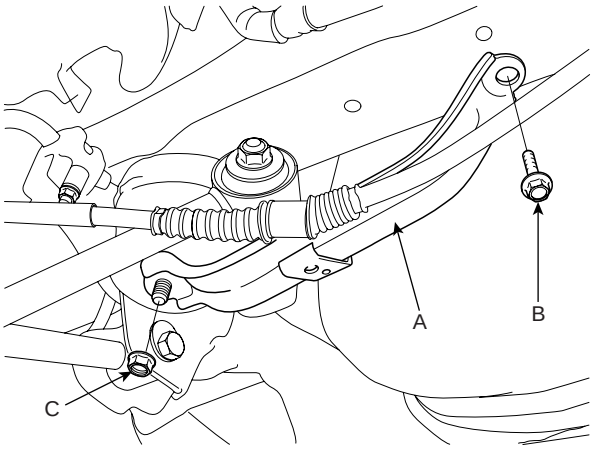

SCMSS6011D

7. After matching a match mark (C) on the rubber coupling (A) and rear differential companion (B), Install the propeller shaft mounting bolts (D).

Tightening torque Nm (kgf-m, lb-ft) :
49.0~68.6 (5~7, 36.2~50.6)

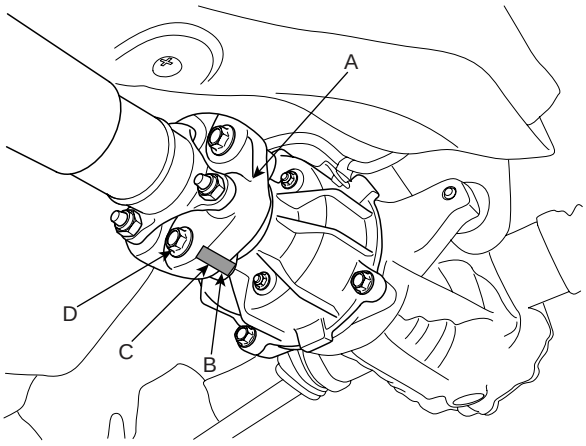

SCMSS6518D

8. Install the wheel speed sensor (A) and the parking brake cable (B) to the rear axle carrier.

Tightening torque Nm (kgf-m, lb-ft) :
Wheel speed sensor (A) :
6.9~10.8 (0.7~1.1, 5.1~8.0)

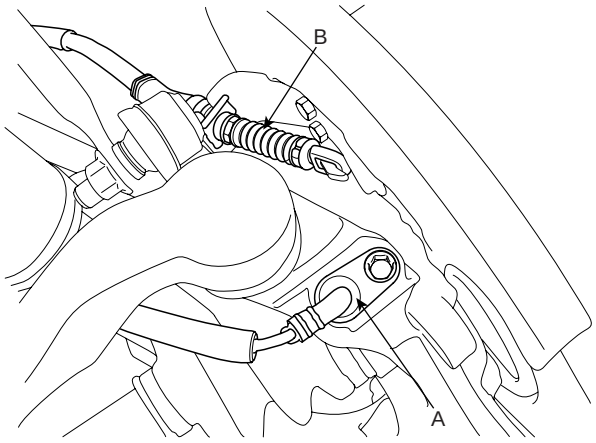

SCMSS6517D

9. Install the brake caliper (B), then tighten the brake caliper mounting bolts (A).

Tightening torque Nm (kgf-m, lb-ft) :
63.7~73.5 (6.5~7.5, 47.0~54.2)

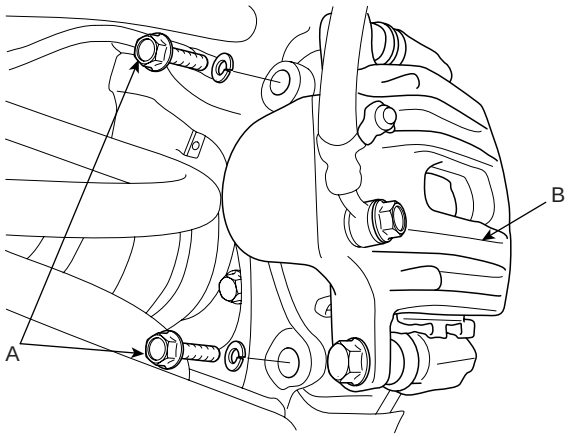

SCMSS6515D

10. Support the rear lower arm with a jack as shown in the illustration.

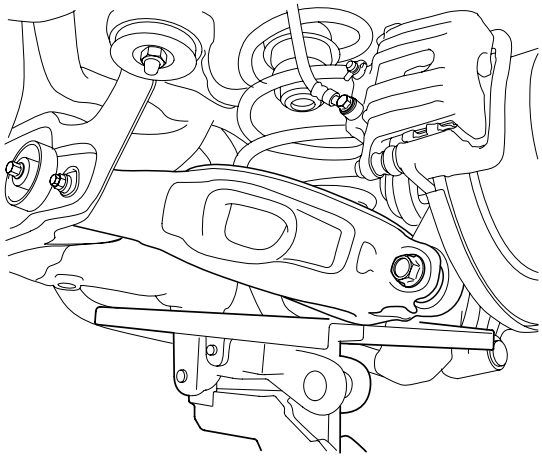

SCMSS6526D

11. Install the rear shock absorber (A).

Tightening torque Nm (kgf-m, lb-ft) :
Bolt(B) : 137.3~156.9 (14~16, 101.3~115.7)
Nut(C) : 98.1~117.7 (10.0~12.0, 72.3~86.8)

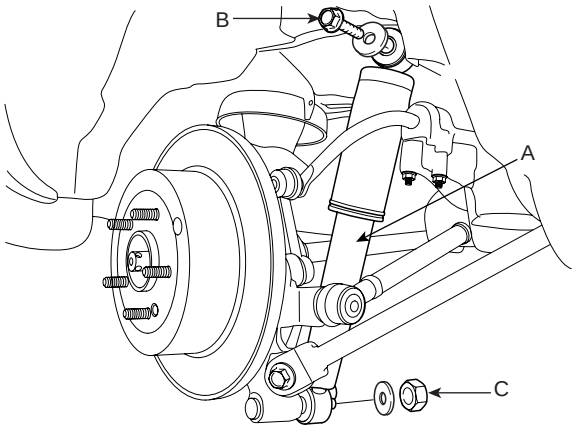

SCMSS6527D

12. Install the wheel and tire (A) to the rear hub (B).

Tightening torque Nm (kgf-m, lb-ft) :
88.3~107.9 (9~11, 65.1~79.6)

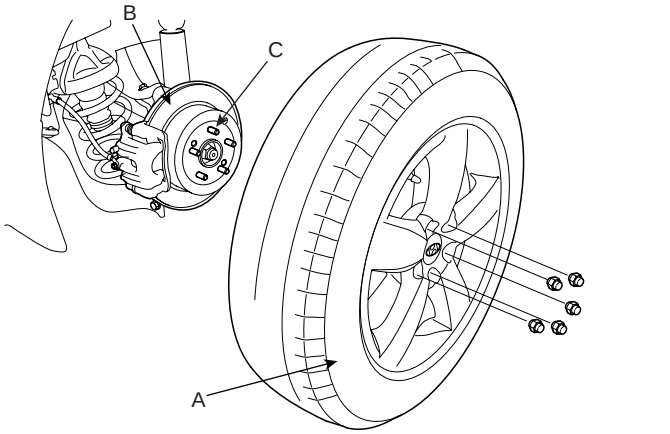

SCMSS6512D

CAUTION

Be careful not to damage the hub bolts (C) when installing the rear wheel and tire (A).

REAR LOWER ARM

COMPONENT EBAFBDF9

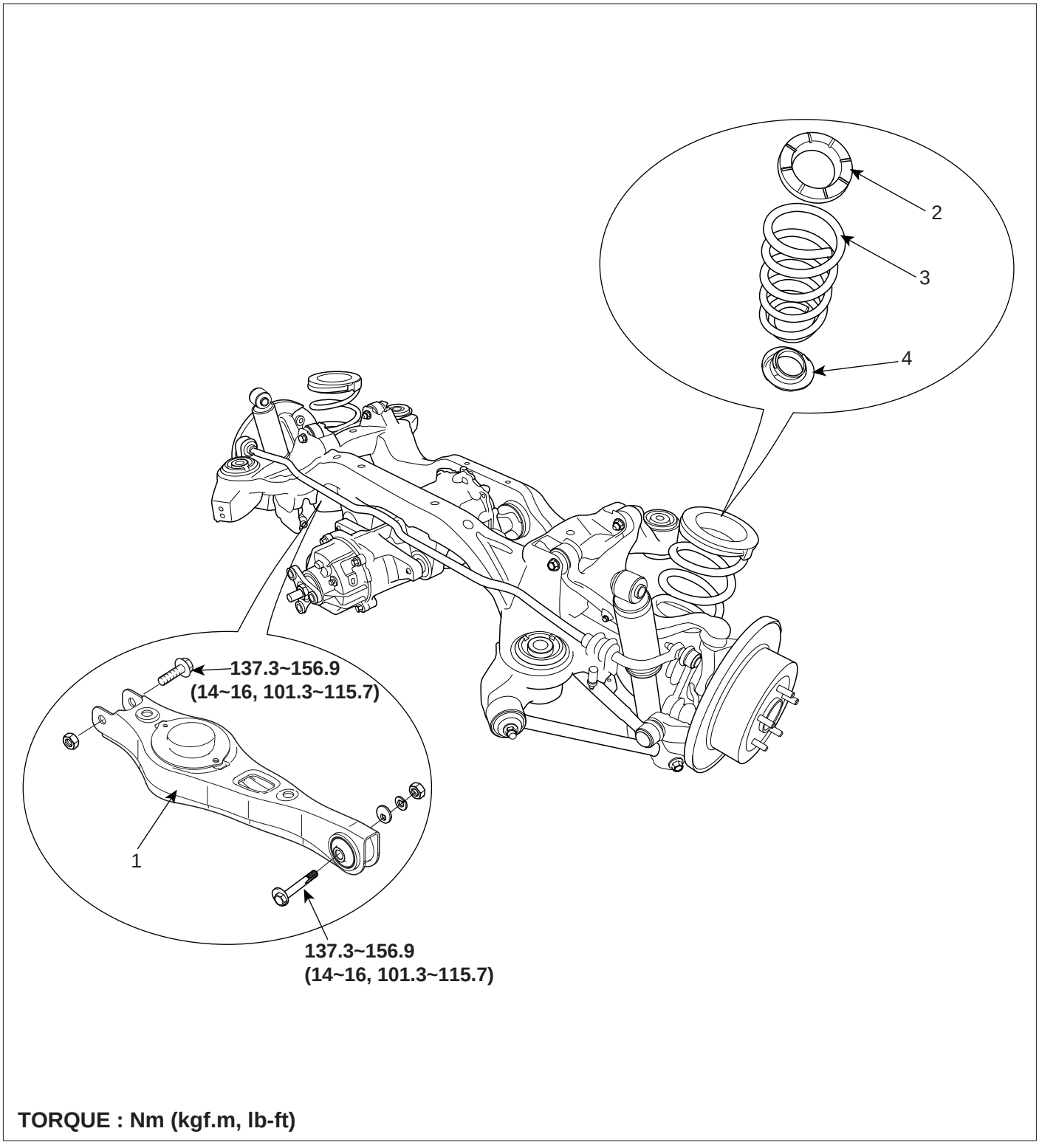

TORQUE : Nm (kgf.m, lb-ft)

1. Rear lower arm
2. Rear coil spring upper pad
3. Rear coil spring
4. Rear coil spring lower pad

SCMSS6507L

REMOVAL E9AD5A7C

1. Loosen the wheel nuts slightly.
   Raise the vehicle, and make sure it is securely supported.

2. Remove the rear wheel and tire (A) from the rear hub (B).

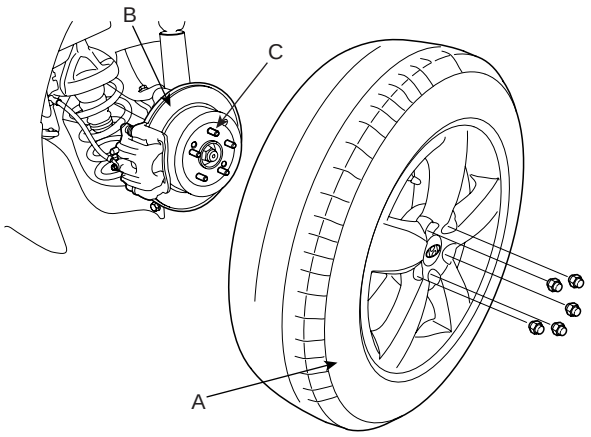

SCMSS6512D

CAUTION

Be careful not to damage to the hub bolts (C) when removing the rear wheel and tire (A).

3. Remove the mounting bolt (B) of the rear lower arm (A) and the rear carrier, while supporting the lower arm (A) with a jack as shown in the illustration. Loosen the mounting bolt (C) of the cross member and the rear lower arm.

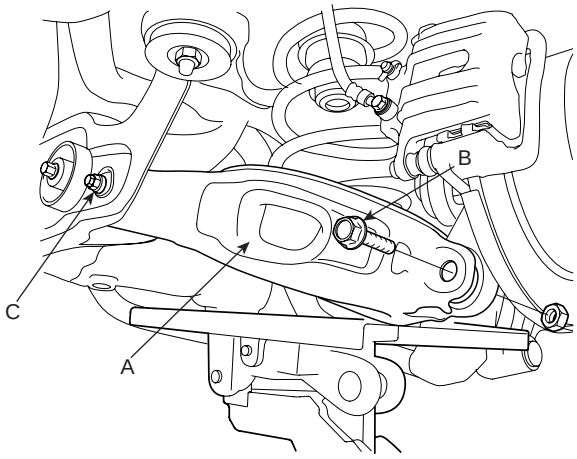

SCMSS6529D

4. Remove the spring (A), the upper pad (B) and the lower pad (C).

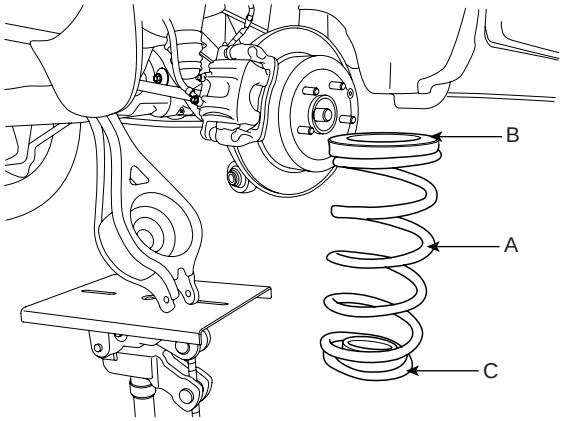

SCMSS6522D

5. Remove the lower arm.

CAUTION

If the bush is excessive worn and damaged, replace the lower arm assembly.

INSPECTION E852A9AA

REAR LOWER ARM

1. Check the bushing for wear and deterioration.
2. Check the rear lower arm for bending or breakage.
3. Check the bolts for damage.

SPRING

1. Check the spring for distortion, aging or damage.
2. Check the spring upper pad and lower pad for aging or damage.

INSTALLATION EEF25C9F

1. Pretighten the mounting bolt of the cross member and the rear lower arm.

2. Install the spring (A), the upper pad (B) and the lower pad (C).

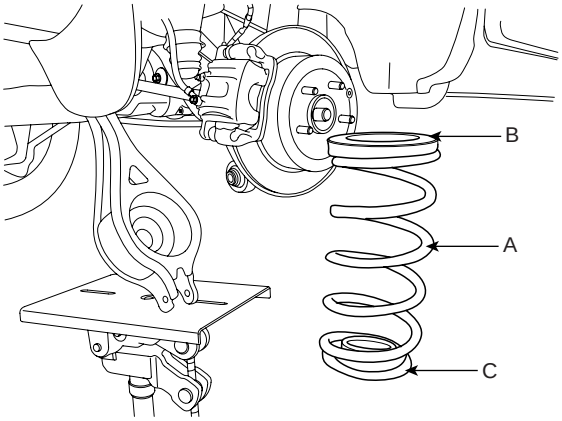

SCMSS6522D

3. Install the mounting bolt (B) of the rear lower arm (A) and the rear carrier with a specified torque, while supporting the lower arm (A) with a jack as shown in the illustration. Tighten the mounting bolt (C) of the cross member and the rear lower arm with a specified torque.

Tightening torque Nm (kgf-m, lb-ft) :
Bolt(B) : 137.3~156.9 (14~16, 101.3~115.7)
Nut(C) : 137.3~156.9 (14~16, 101.3~115.7)

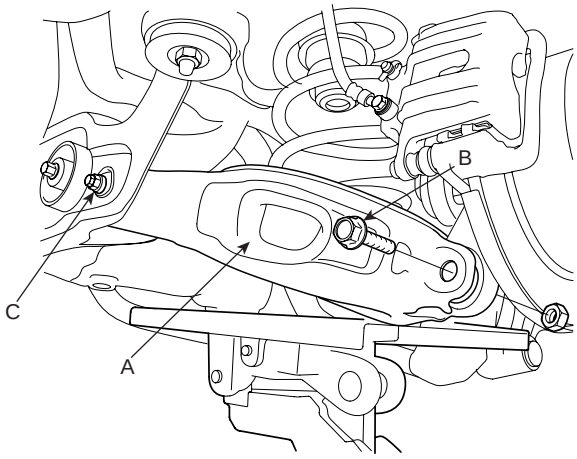

SCMSS6529D

NOTE

After checking the distance(453±10mm(17.83 ±0.39in)) between the wheel housing garnish (A) and the hub assembly (B) as shown in the illustration, tighten the mounting bolts and nuts of rear chassis part with specified torque.

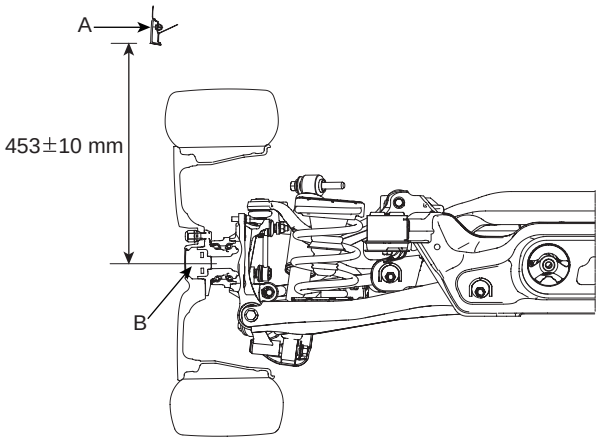

SCMSS6528D

4. Install the wheel and tire (A) to the rear hub (B).

Tightening torque Nm (kgf-m, lb-ft) :
88.3~107.9 (9~11, 65.1~79.6)

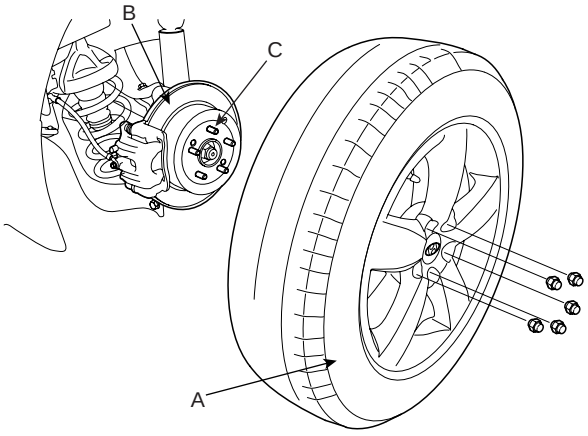

SCMSS6512D

CAUTION

Be careful not to damage the hub bolts (C) when installing the rear wheel and tire (A).

REAR ASSIST ARM

COMPONENT EBE5C437

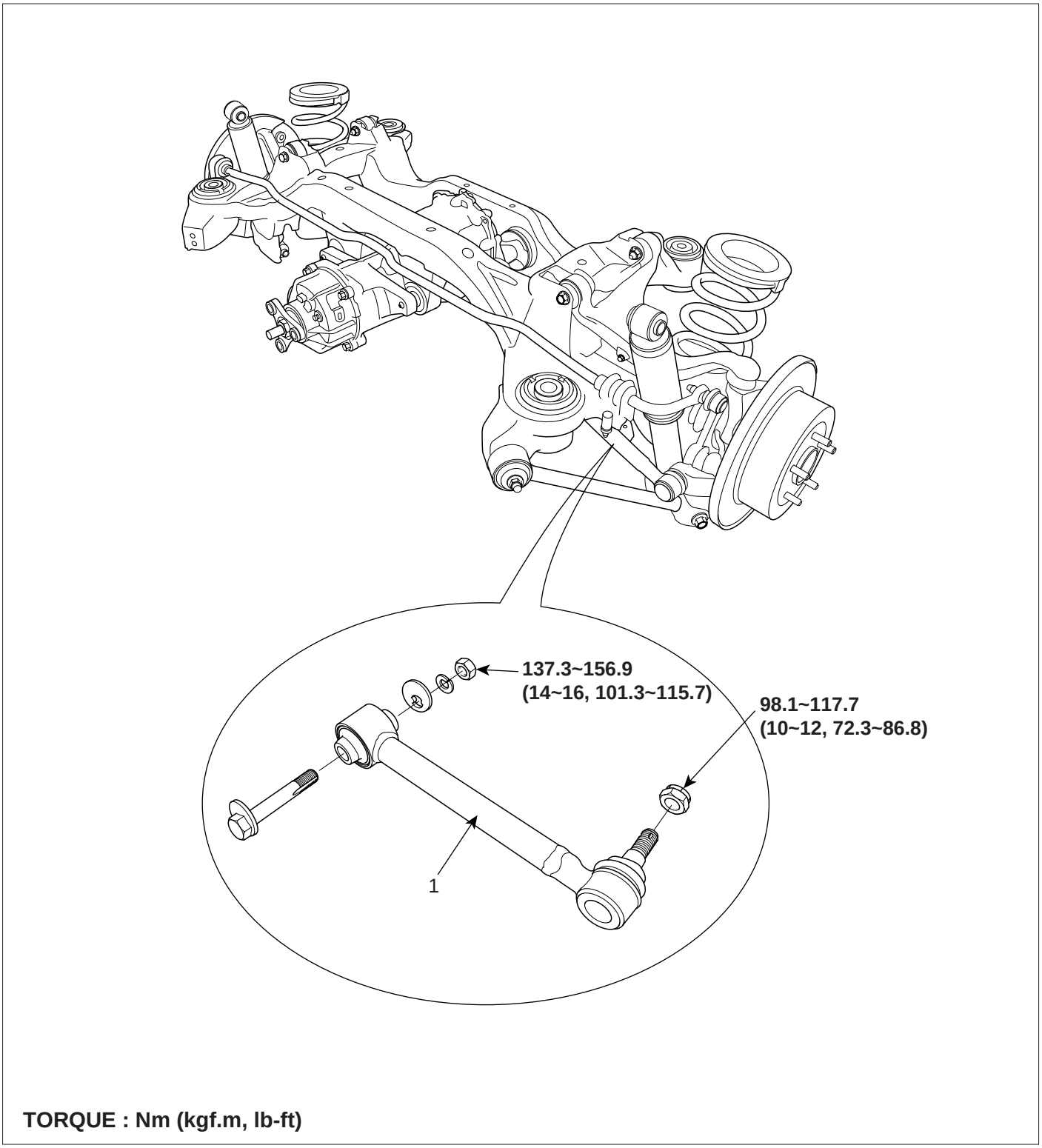

1. Rear assist arm

SCMSS6508L

REMOVAL E46DA66A

1. Loosen the wheel nuts slightly.
   Raise the vehicle, and make sure it is securely supported.

2. Remove the rear wheel and tire (A) from the rear hub (B).

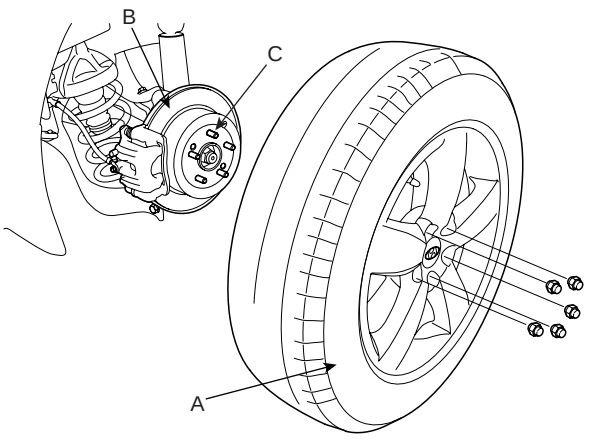

SCMSS6512D

CAUTION

Be careful not to damage to the hub bolts (C) when removing the rear wheel and tire (A).

3. Remove the assist arm (A) from the rear carrier.

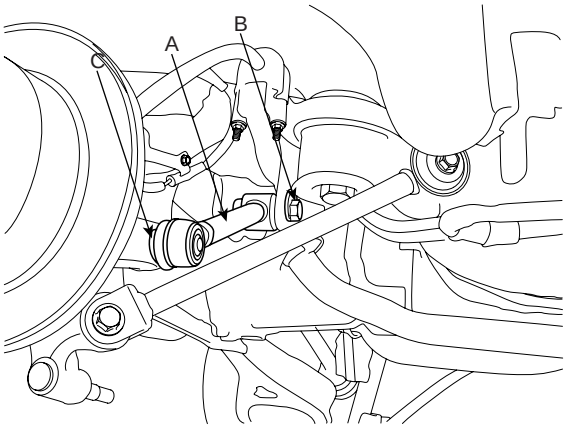

SCMSS6031D

NOTE

Remove the rear assist arm ball joint (A) by using the special tool(09568-4A000).

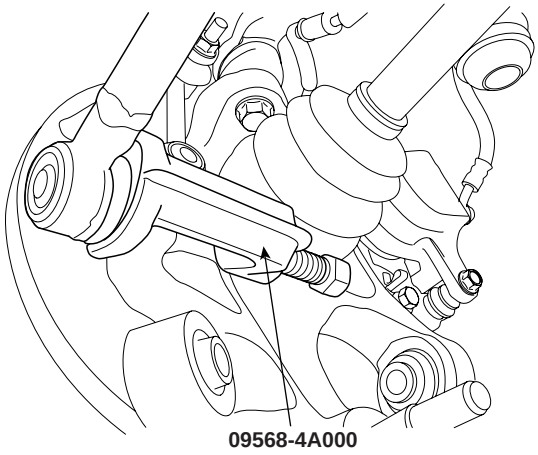

SCMSS6523D

CAUTION

If the bush is excessive worn and damaged, replace the assist arm assembly.

INSPECTION EDACAA4A

1. Check the bushing for wear and deterioration.
2. Check the rear assist arm for bending or breakage.
3. Check the ball joint dust cover for cracks.
4. Check all bolts.

INSTALLATION EC8E3BD8

1. Install the rear assist arm (A) to the rear carrier.

Tightening torque Nm (kgf-m, lb-ft) :
Bolt(B) : 137.3~156.9 (14~16, 101.3~115.7)
Nut(C) : 98.1~117.7 (10.0~12.0, 72.3~86.8)

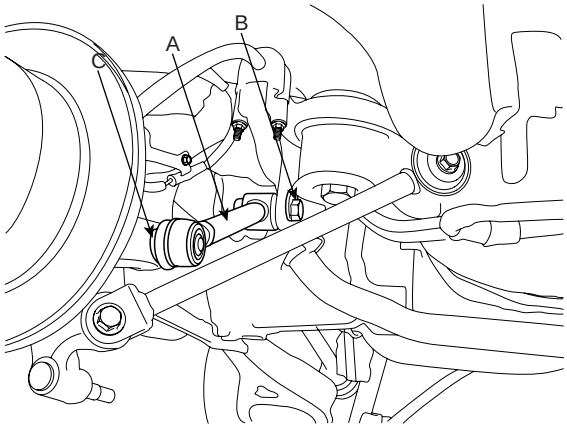

SCMSS6031D

NOTE

After checking the distance(453±10mm(17.83 ±0.39in)) between the wheel housing garnish (A) and the hub assembly (B) as shown in the illustration, tighten the mounting bolts and nuts of rear chassis part with specified torque.

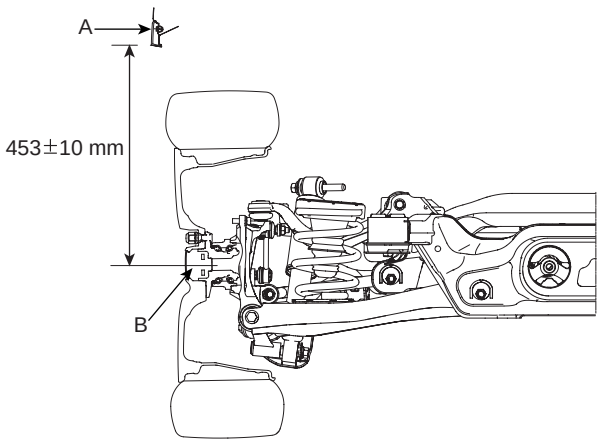

SCMSS6528D

2. Install the wheel and tire (A) to the rear hub (B).

Tightening torque Nm (kgf-m, lb-ft) :
88.3~107.9 (9~11, 65.1~79.6)

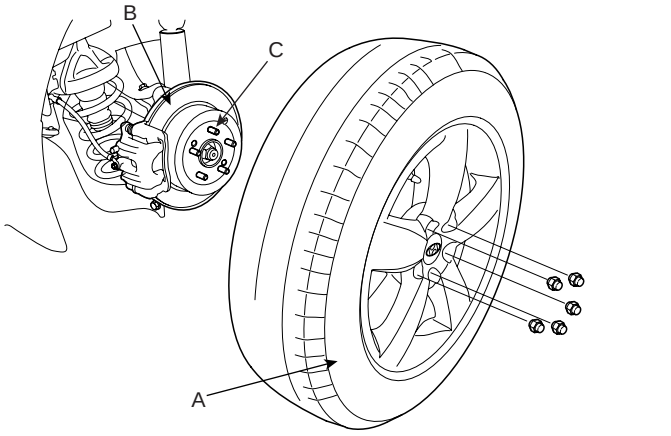

SCMSS6512D

CAUTION

Be careful not to damage the hub bolts (C) when installing the rear wheel and tire (A).

TRAILING ARM

COMPONENT E39A3EAF

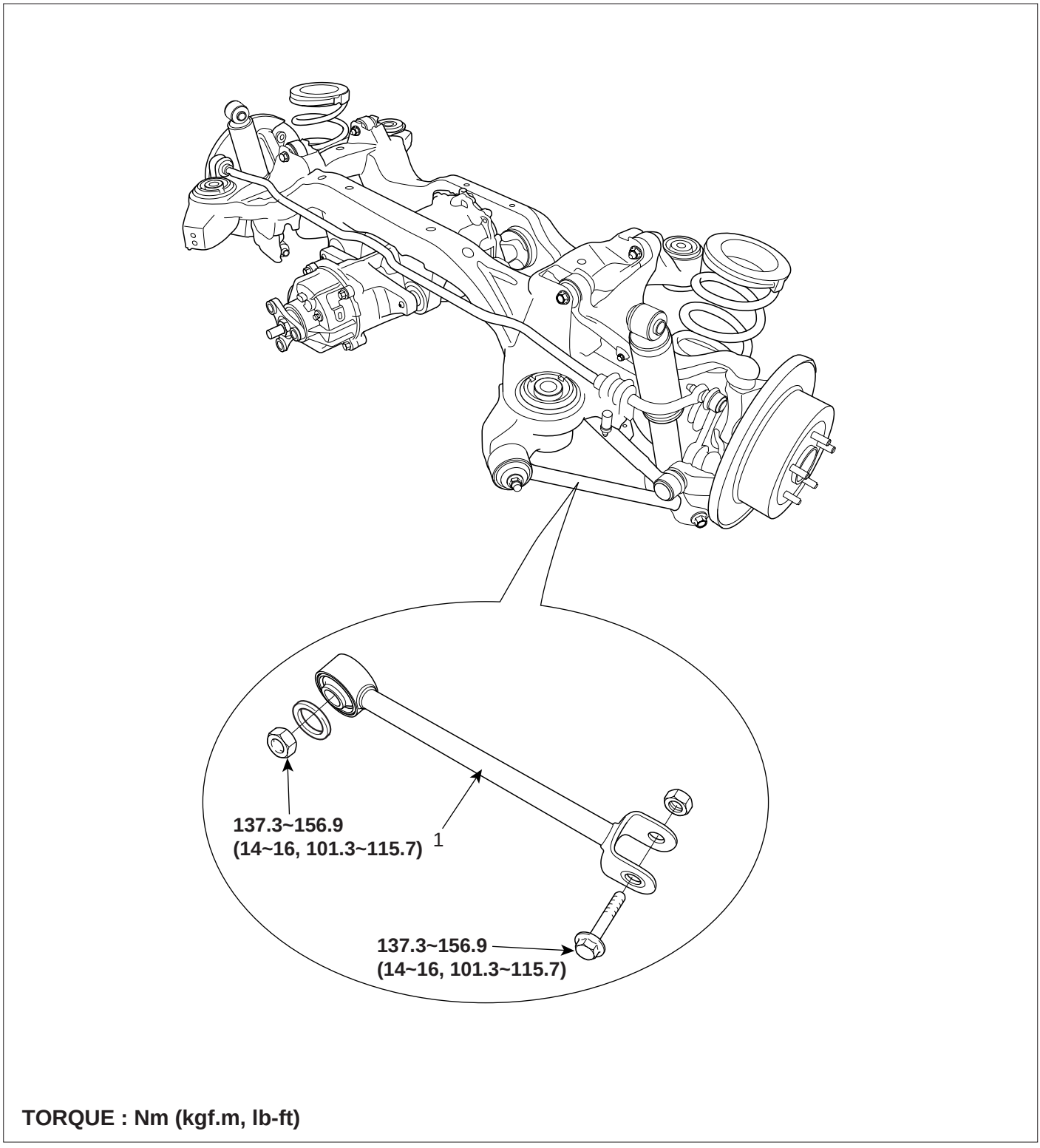

1. Rear trailing arm

SCMSS6509L

REMOVAL EBA34130

1. Loosen the wheel nuts slightly.
   Raise the vehicle, and make sure it is securely supported.
2. Remove the rear wheel and tire (A) from the rear hub (B).

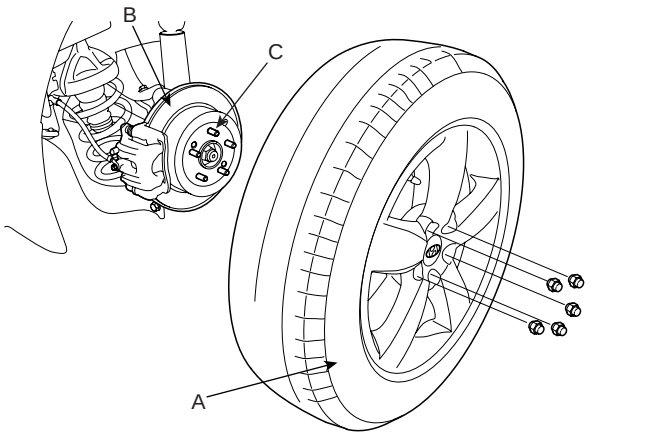

SCMSS6512D

CAUTION

Be careful not to damage to the hub bolts (C) when removing the rear wheel and tire (A).

3. Remove the trailing arm (A) from the rear carrier.

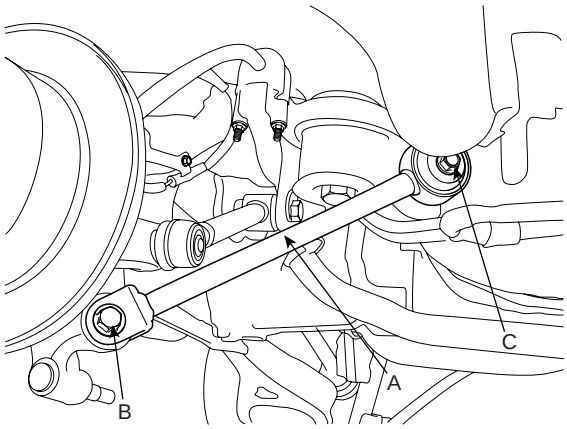

SCMSS6039D

CAUTION

If the bush is excessive worn and damaged, replace the assist arm assembly.

INSPECTION EDFCCDEE

1. Check the bushing for wear and deterioration.
2. Check the rear trailing arm for bending or breakage.
3. Check all bolts.

INSTALLATION EC498CBE

1. Install the rear trailing arm (A) to the rear carrier.

Tightening torque Nm (kgf-m, lb-ft) :
Bolt(B) : 137.3~156.9 (14~16, 101.3~115.7)
Nut(C) : 137.3~156.9 (14~16, 101.3~115.7)

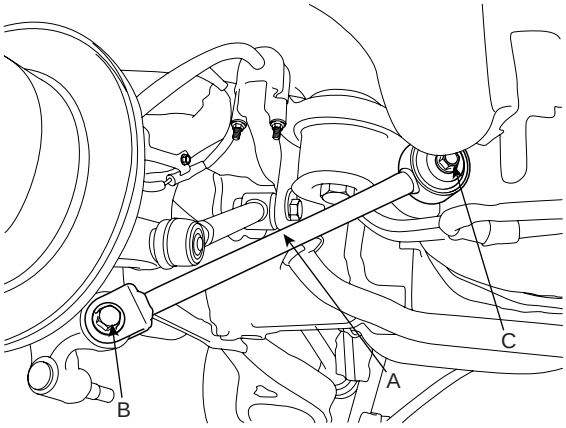

SCMSS6039D

NOTE

After checking the distance(453±10mm(17.83 ±0.39in)) between the wheel housing garnish (A) and the hub assembly (B) as shown in the illustration, tighten the mounting bolts and nuts of rear chassis part with specified torque.

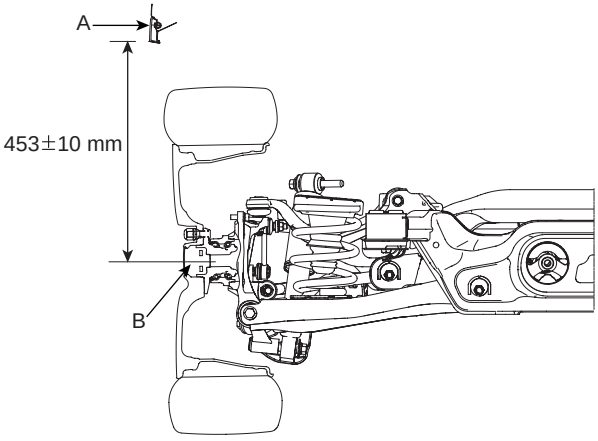

SCMSS6528D

2. Install the wheel and tire (A) to the rear hub (B).

Tightening torque Nm (kgf-m, lb-ft) :
88.3~107.9 (9~11, 65.1~79.6)

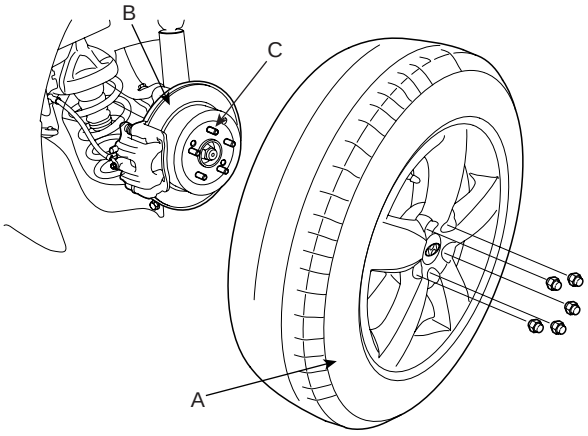

SCMSS6512D

CAUTION

Be careful not to damage the hub bolts (C) when installing the rear wheel and tire (A).

REAR STABILIZER BAR

COMPONENT E4306EFA

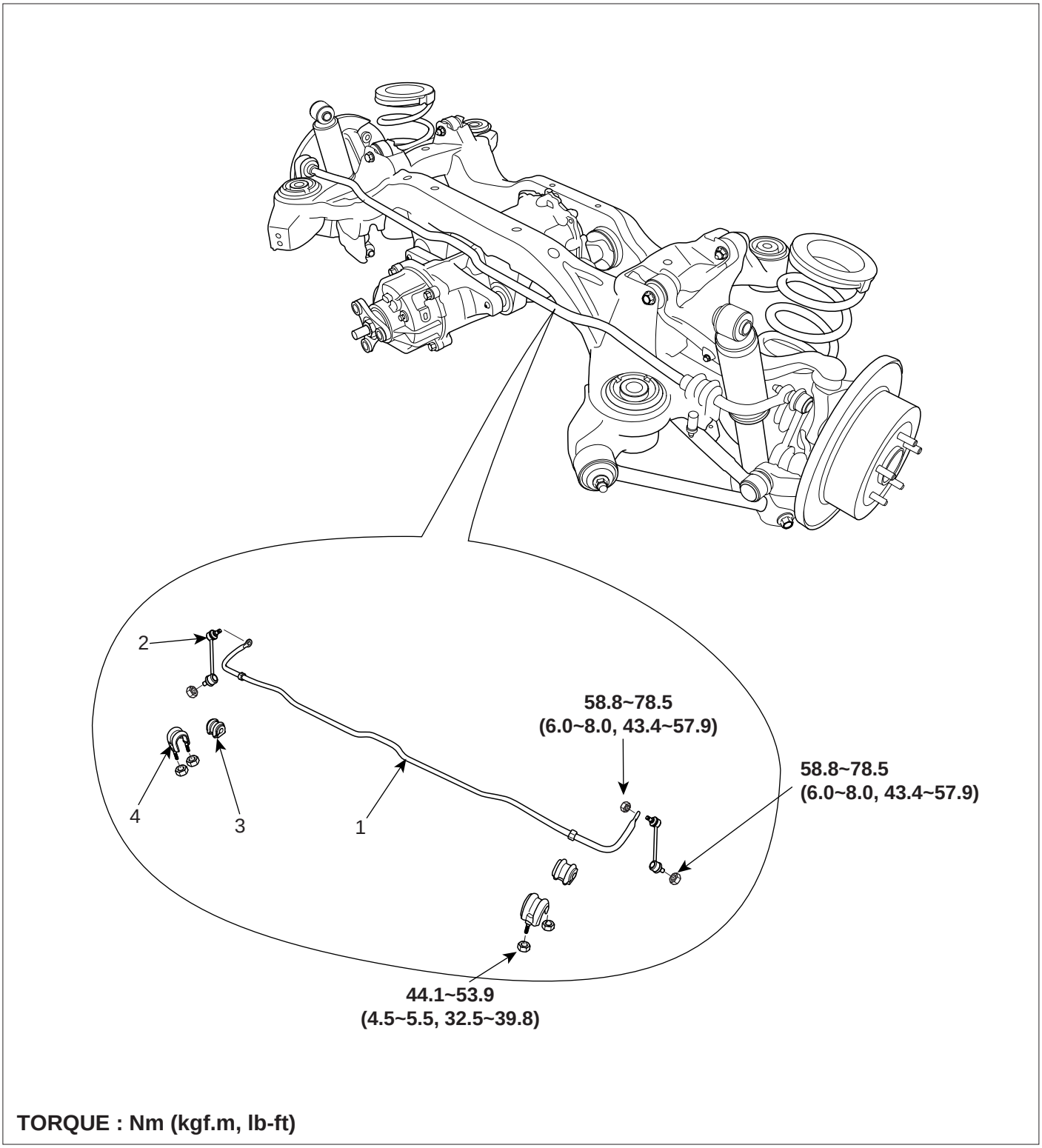

1. Rear stabilizer bar
2. Rear stabilizer link
3. Rear stabilizer bar bushing
4. Rear stabilizer bar bracket

SCMSS6510L

REMOVAL EE1591DC

1. Loosen the wheel nuts slightly.
   Raise the vehicle, and make sure it is securely supported.

2. Remove the rear wheel and tire (A) from the rear hub (B).

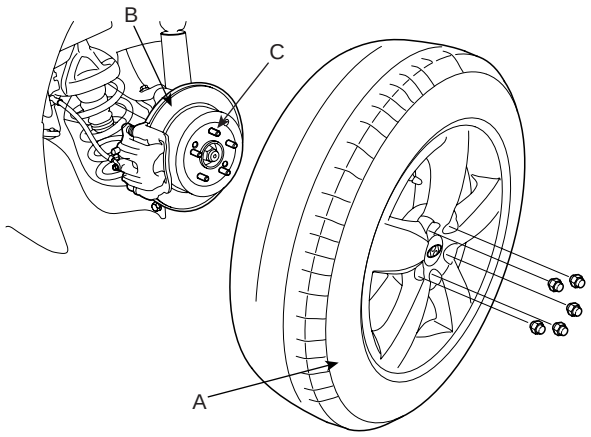

SCMSS6512D

CAUTION

Be careful not to damage to the hub bolts (C) when removing the rear wheel and tire (A).

3. Support the rear lower arm with a jack as shown in the illustration.

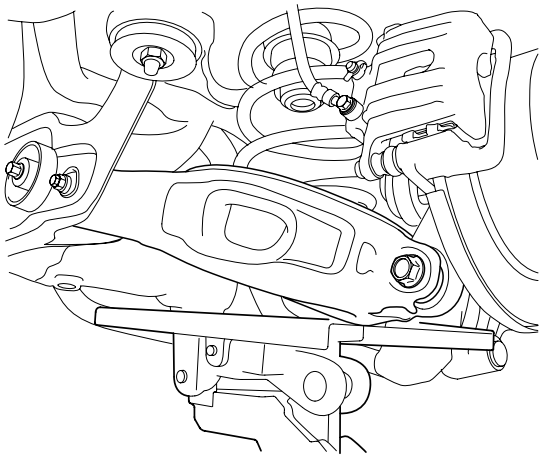

SCMSS6526D

4. Remove the rear shock absorber (A).

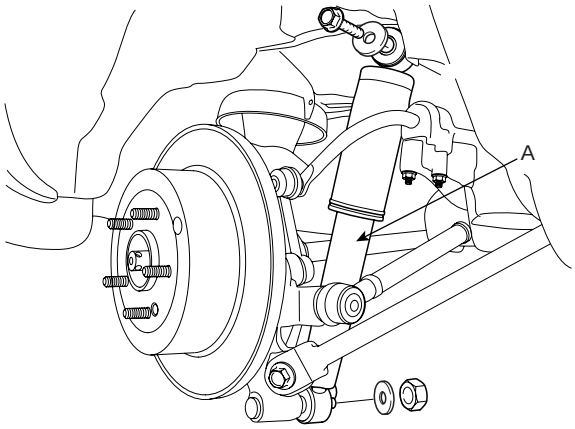

SCMSS6514D

5. Remove the brake caliper mounting bolts (A), and then place the brake caliper assembly (B) with wire as shown in the illustration.

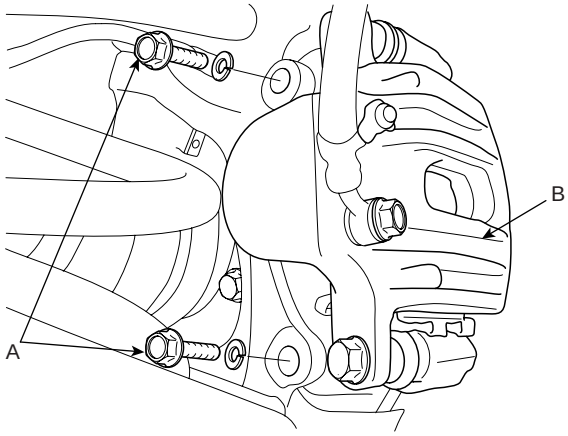

SCMSS6515D

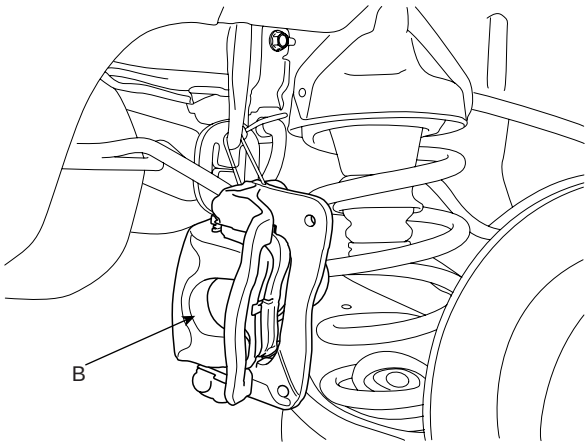

SCMSS6516D

6. Remove the wheel speed sensor (A) and the parking brake cable (B) from the rear axle carrier.

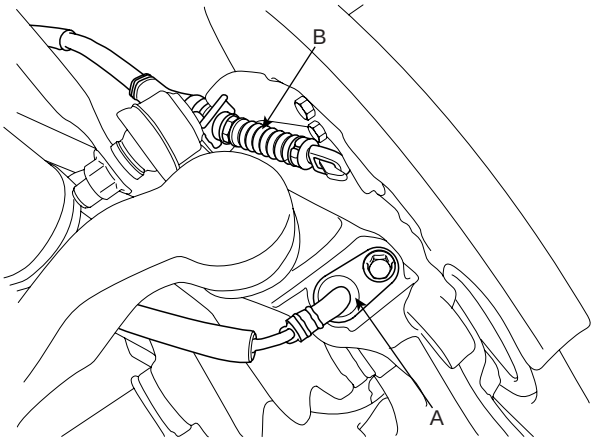

SCMSS6517D

7. After making a match mark (C) on the rubber coupling (A) and rear differential companion (B), remove the propeller shaft mounting bolts (D).

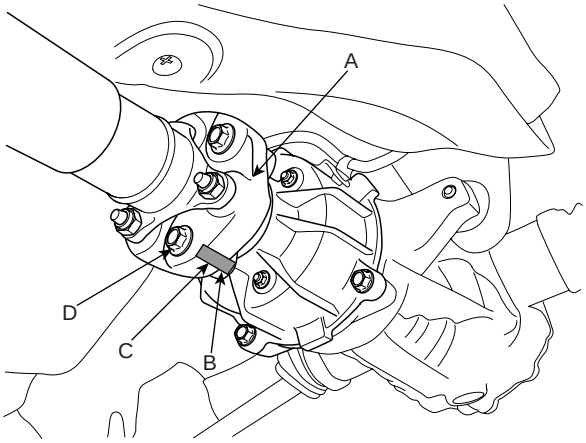

SCMSS6518D

8. Support the rear cross member assembly (A) with the jack.

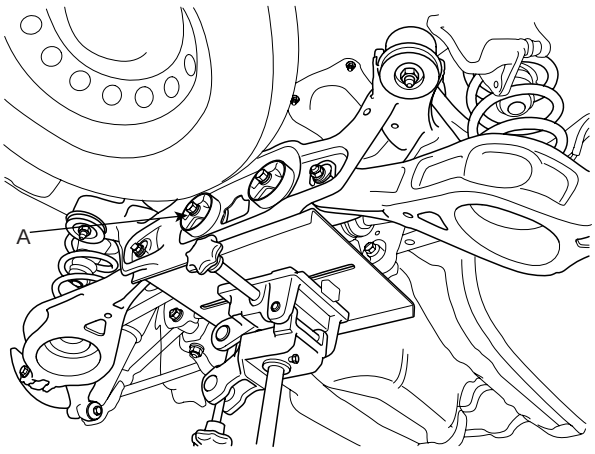

SCMSS6010D

9. Remove the rear cross member stay (A) and mounting bolt (B) and nut (C).

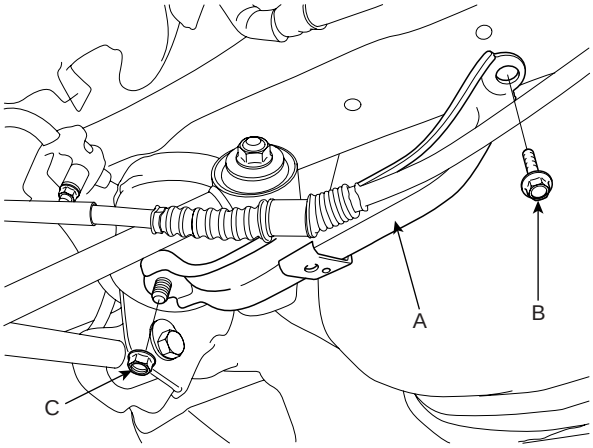

SCMSS6011D

10. Remove the rear cross member mounting bolts (A), nuts (B) and plate (C).

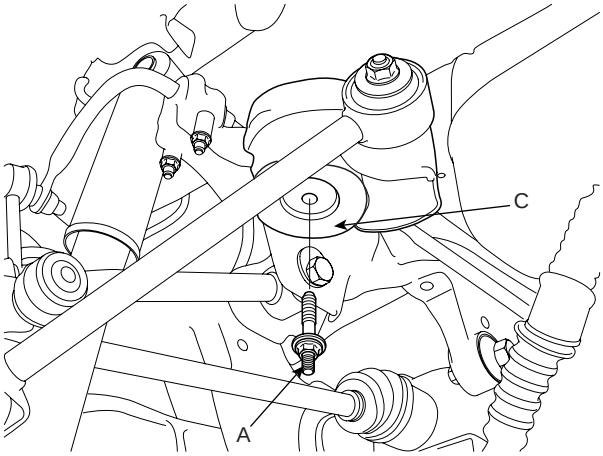

SCMSS6012D

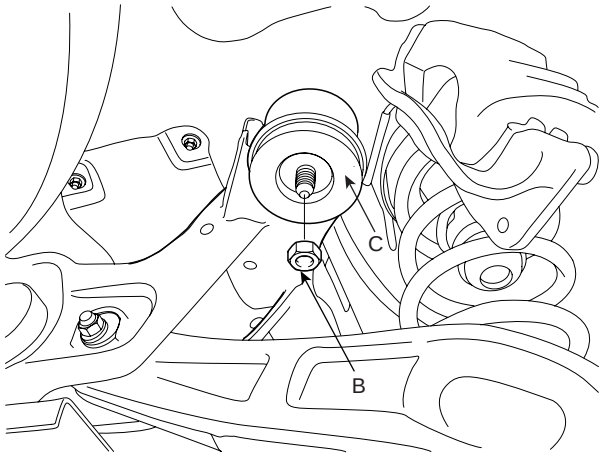

SCMSS6013D

11. Remove the rear cross member.
12. Remove the rear stabilizer bar link (A) and bracket (B).

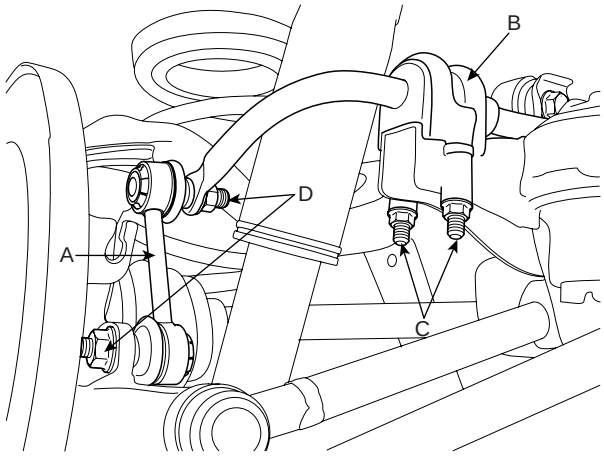

SCMSS6020D

13. Remove the rear stabilizer bar.

INSPECTION ECE1FBDC

1. Check the bushing for wear and deterioration.
2. Check the stabilizer bar for bending or breakage.
3. Check the ball joint dust cover for cracks.
4. Check all bolts.

INSTALLATION EF4C9769

1. Install the bushing (B) on the stabilizer bar (A).

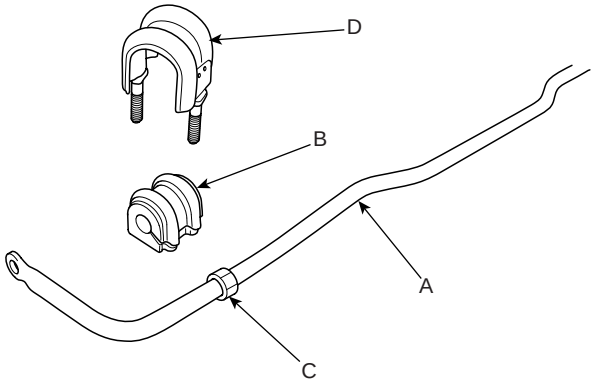

SCMSS6021D

NOTE

Bring clamp (C) of stabilizer bar (A) into contact with bushing (B).

2. Install the bracket (D) on the bushing (B).
3. Install the rear stabilizer bar to the rear cross member.
4. Install the rear stabilizer bar bracket (B) and link (A).

Tightening torque Nm (kgf-m, lb-ft) :
Nut(C) : 44.1~53.9 (4.5~5.5, 32.5~39.8)
Nut(D) : 58.8~78.5 (6.0~8.0, 43.4~57.9)

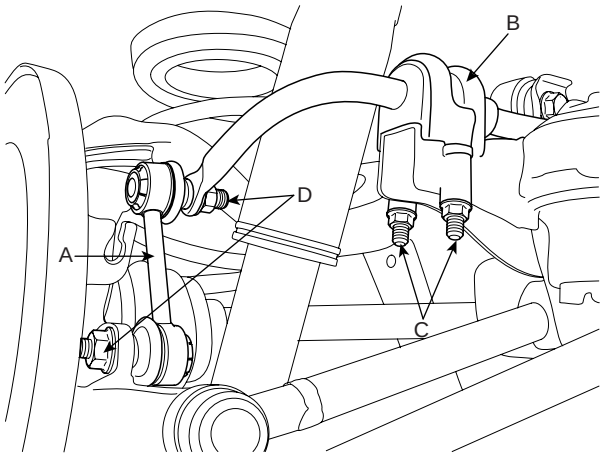

SCMSS6020D

5. Install the rear cross member.

6. Support the rear cross member assembly (A) with the jack.

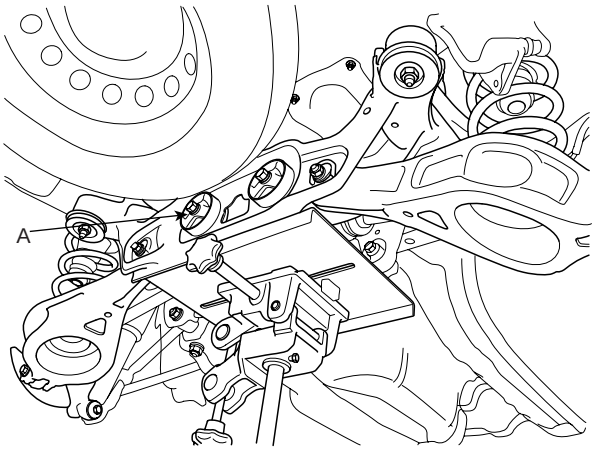

SCMSS6010D

7. Install the rear cross member mounting bolts (A), nuts (B) and plate (C).

Tightening torque Nm (kgf-m, lb-ft) :
Bolts(A) : 156.9~176.5 (16~18, 115.7~130.2)
Nuts(B) : 156.9~176.5 (16~18, 115.7~130.2)

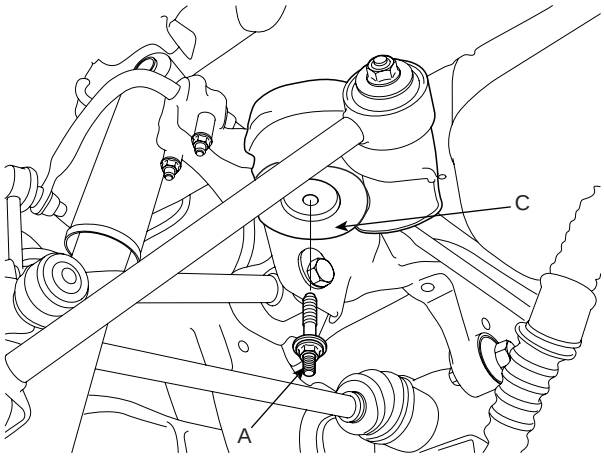

SCMSS6012D

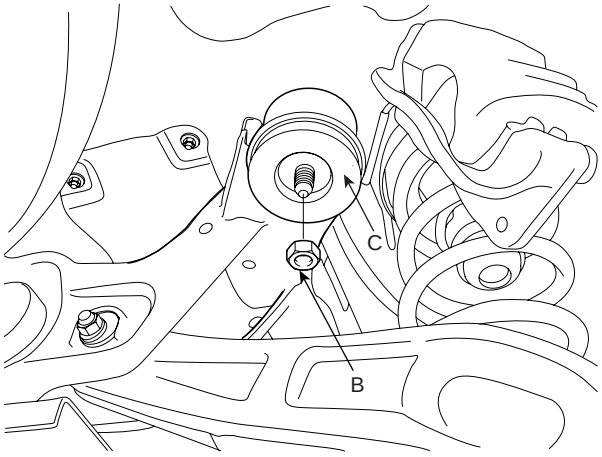

SCMSS6013D

8. Install the rear cross member stay (A) and mounting bolt (B) and nut (C).

Tightening torque Nm (kgf-m, lb-ft) :
Bolt(B) : 68.6~88.3 (7~9, 50.6~65.1)
Nut(C) : 68.6~88.3 (7~9, 50.6~65.1)

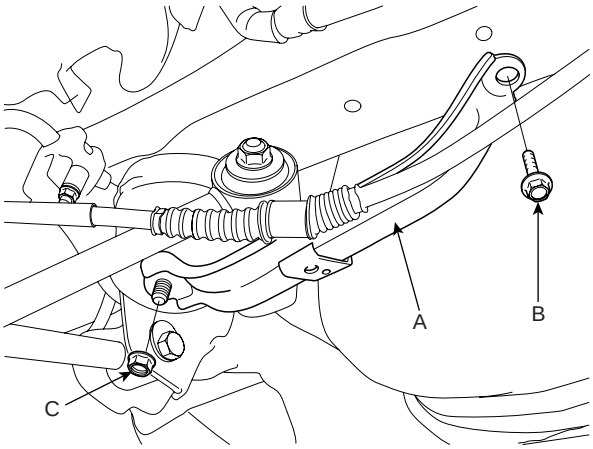

SCMSS6011D

9. After matching a match mark (C) on the rubber coupling (A) and rear differential companion (B), Install the propeller shaft mounting bolts (D).

Tightening torque Nm (kgf-m, lb-ft) :
49.0~68.6 (5~7, 36.2~50.6)

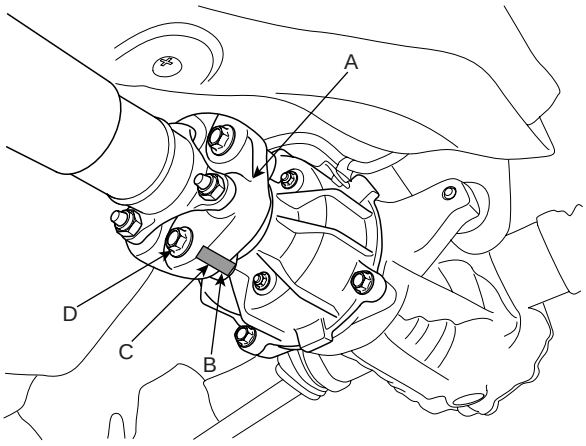

SCMSS6518D

10. Install the wheel speed sensor (A) and the parking brake cable (B) to the rear axle carrier.

Tightening torque Nm (kgf-m, lb-ft) :
Wheel speed sensor (A) :
6.9~10.8 (0.7~1.1, 5.1~8.0)

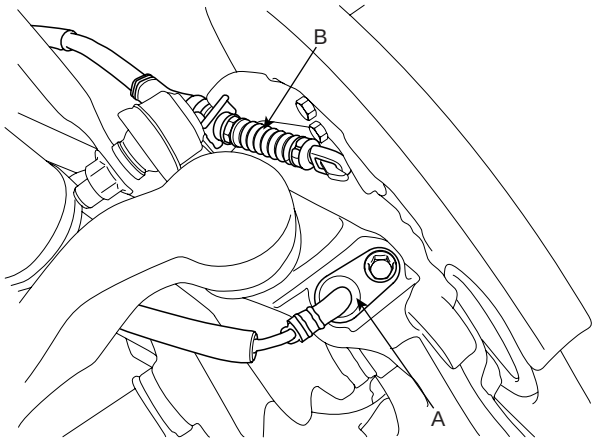

SCMSS6517D

11. Install the brake caliper (B), then tighten the brake caliper mounting bolts (A).

Tightening torque Nm (kgf-m, lb-ft) :
63.7~73.5 (6.5~7.5, 47.0~54.2)

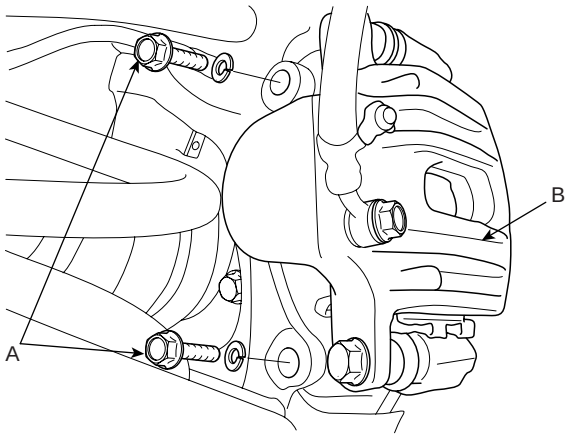

SCMSS6515D

12. Support the rear lower arm with a jack as shown in the illustration.

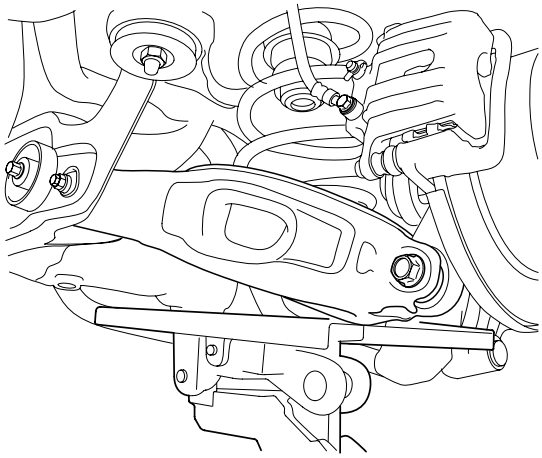

SCMSS6526D

13. Install the rear shock absorber (A).

Tightening torque Nm (kgf-m, lb-ft) :
Bolt(B) : 137.3~156.9 (14~16, 101.3~115.7)
Nut(C) : 98.1~117.7 (10.0~12.0, 72.3~86.8)

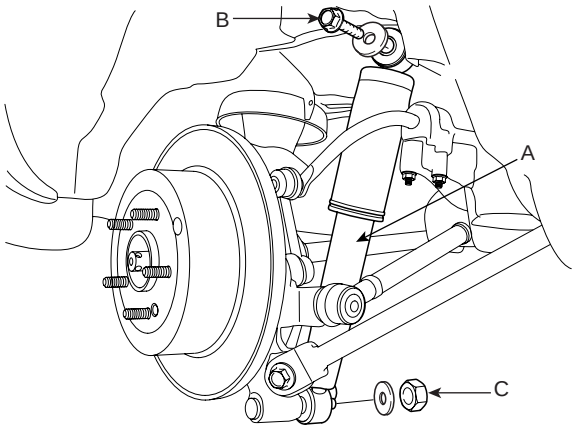

SCMSS6527D

NOTE

After checking the distance(453±10mm(17.83 ±0.39in)) between the wheel housing garnish (A) and the hub assembly (B) as shown in the illustration, tighten the mounting bolts and nuts of rear chassis part with specified torque.

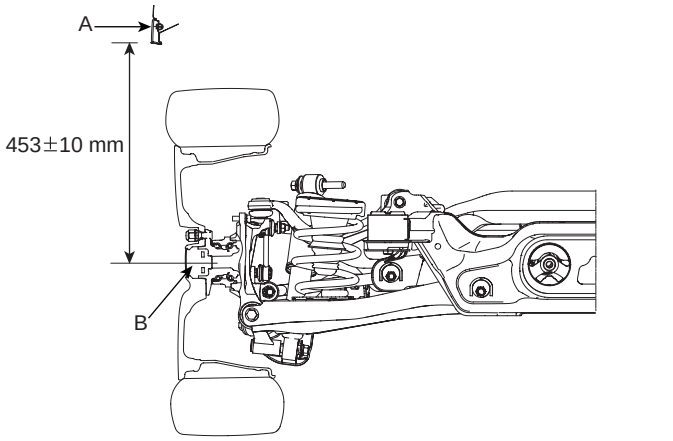

SCMSS6528D

14. Install the wheel and tire (A) to the rear hub (B).

Tightening torque Nm (kgf-m, lb-ft) :
88.3~107.9 (9~11, 65.1~79.6)

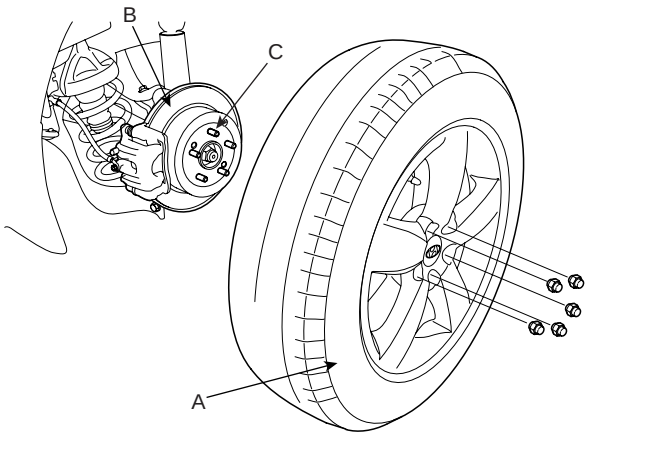

SCMSS6512D

CAUTION

Be careful not to damage the hub bolts (C) when installing the rear wheel and tire (A).

TIRES／WHEELS

WHEEL

WHEEL ALIGNMENT EDA8EF14

When using commercially available computerized four wheel alignment equipment (caster, camber, toe) to inspect the front wheel alignment, always position the car on a level surface with the front wheels facing straight ahead.
Prior to inspection, make sure that the front suspension and steering system are in normal operating condition and that the wheels and tires face straight ahead and the tires are inflated to the specified pressure.

TOE

Toe is a measurement of how much the front of the wheels are turned in or out from the straight-ahead position.

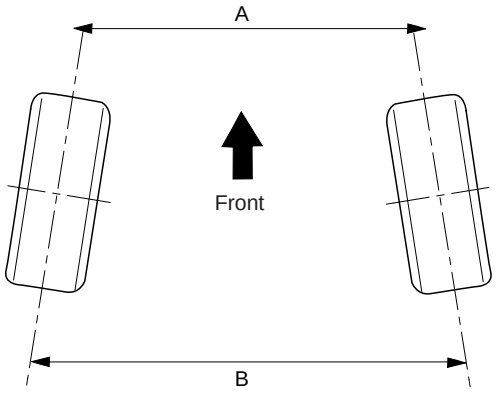

EHRF400A

Item	Description
A-B＜0	Positive (+) toe (toe in)
A-B＞0	Negative (-) toe (toe out)

When the wheels are turned in toward the front of the vehicle, toe is positive (+) (toe in). When the wheels are turned out toward the front of the vehicle, toe is negative (-) (toe out). Toe is measured in degrees, from side to side, and totaled.

TOE [FRONT]

Toe-in (B-A) is adjusted by turning the tie rod turnbuckles. Toe-in on the left front wheel can be reduced by turning the tie rod toward the rear of the car. Toe- in change is adjusted by turning the tie rods for the right and left heels simultaneously at the same amount as follows.

Standard value :
Toe-in (B-A) mm (in) : 0 ± 2 (0 ± 0.0787)

NOTE

- *Toe-in adjustment should be made by turning the right and left tie rods at the same amount.*
- *When adjusting toe-in, loosen the outer bellows clip to prevent twisting the bellows.*
- *After the adjustment, tighten the tie rod end lock nuts firmly and reinstall the bellows clip.*
- *Adjust each toe-in to be the range of ±1 mm.*

Tightening torque Nm (kgf-m, lb-ft) :
Tie rod adjusting nut (A):
49.0~53.9 (5.0~5.5, 36.2~39.8)

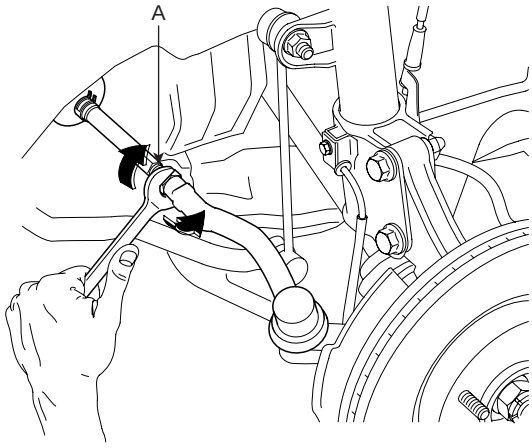

AHIE107B

TOE [REAR]

Standard value :
Toe-in (B-A) mm (in) : 2 ± 2 (0.0787 ± 0.0787)

Adjust the toe-in by turning the cambolt of the rear assist arm.

Left cambolt : Clockwise → toe- out
Right cambolt : Clockwise → toe- in
The variation of toe by a rotation of the cambolt :
About 4.3 mm (0.17 in)

CAUTION

- ***Each toe should be within 1±1 mm (0.039± 0.039 in). If the difference between right and left is not within +2mm (0.079 in), repeat adjustment.***
- ***After adjusting the cambolt, tighten the nut to the specified torque.***

Tightening torque Nm (kgf-m, lb-ft) :
137.3~156.9 (14~16, 101.3~115.7)

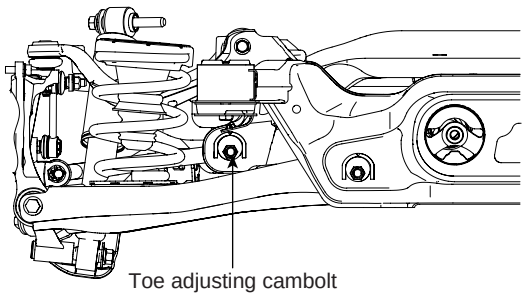

SCMSS6511L

CAMBER

Camber is the inward or outward tilting of the wheels at the top.

CAMBER [FRONT]

Standard value :
Camber angle (A) : 30´ ± 30´

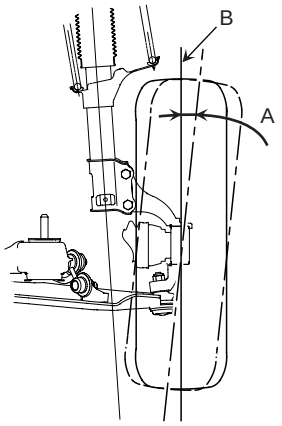

AHKF400F

Item	Description
A	Positive camber angle
B	True vertical

When the wheel tilts out at the top, then the camber is positive (+).
When the wheel tilts in at the top, then the camber is negative(-).

NOTE

Camber is pre-set at the factory and doesn't need to be adjusted. If the camber is not within the standard value, replace the bent or damaged parts.

CAMBER [REAR]

Standard value :
Camber angle (A) : -1° ± 30´
Difference between right and left angle is within 30´

Adjust the camber by turning the cambolt of the rear lower arm.

Left cambolt : Clockwise → camber(-)
Right cambolt : Clockwise →camber(+)
The variation of camber by a rotation of the cambolt : About 0°0.9´

After adjusting the cambolt, tighten the nut to the specified torque.

Tightening torque Nm (kgf-m, lb-ft) :
137.3~156.9 (14~16, 101.3~115.7)

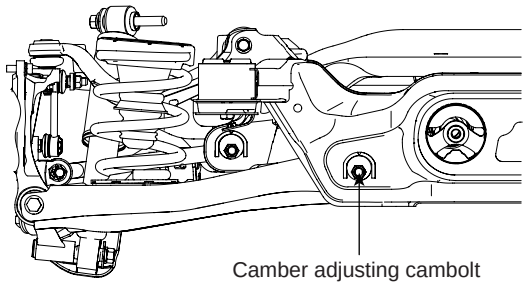

SCMSS6513L

CASTER [FRONT]

Caster is the tilting of the strut axis either forward or backward from vertical. A backward tilt is positive (+) and a forward tilt is negative (-).
Caster is pre-set at the factory and doesn't need to be adjusted. If the caster is not within the standard value, replace the bent or damaged parts.

Standard value :
Caster :
4°25´ ± 30´ (to ground)
4°48´ ± 30´ (to body)

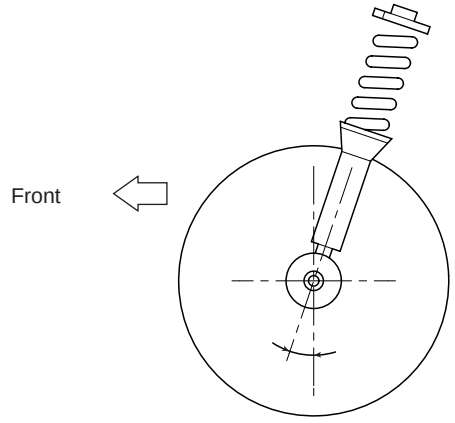

SCMSS6514L

NOTE

- *The worn loose or damaged parts of the front suspension assembly must be replaced prior to measuring front wheel alignment.*
- *Caster are pre-set to the specified value at the factory and don't need to be adjusted.*
- *If the caster are not within specifications, replace bent or damaged parts.*
- *The difference of left and right wheels about the the caster must be within the range of 0°30´.*

WHEEL NUT TIGHTENING

1. Tightening torque.

Tightening torque Nm (kgf-m, lb-ft) :
88.3~107.9 (9~11, 65.1~79.6)

CAUTION

When using an impact gun, final tightening torque should be checked using a torque wrench.

2. Tightening order.
Check the torque again after tightening the wheel nuts diagonally.

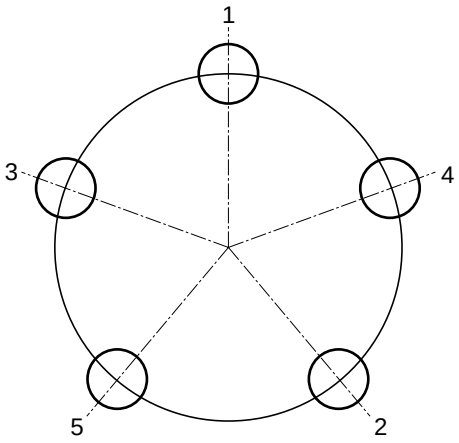

KHQE810A

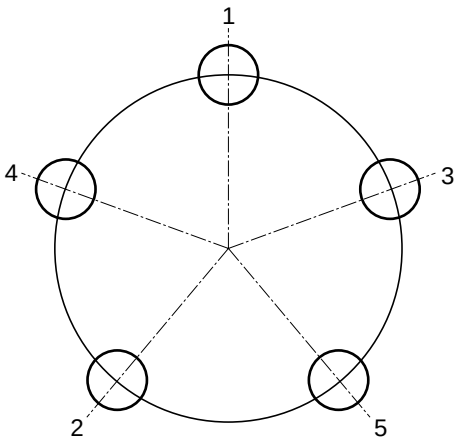

KHQE810B

WHEEL RUNOUT

1. Jack up the vehicle and support it with jack stands.
2. Measure the wheel runout with a dial indicator as illustrated.
3. Replace the wheel if the wheel runout exceeds the limit.

Limit		Radial	Axial
Runout mm(in)	Aluminium	0.3(0.012)	0.3(0.012)
	Spare	0.5(0.020)	0.5(0.020)

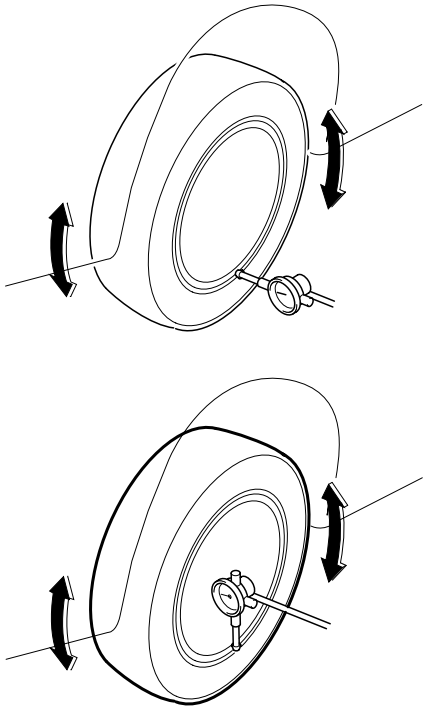

KHRE402A

TIRE

TIRE WEAR E36BFEC6

1. Measure the tread depth of the tires.

Tread depth [limit] : 1.6 mm (0.063 in)

2. If the remaining tread(A) depth is less than the limit, replace the tire.

NOTE

When the tread depth of the tires is less than 1.6 mm(0.063 in), the wear indicators (B) will appear.

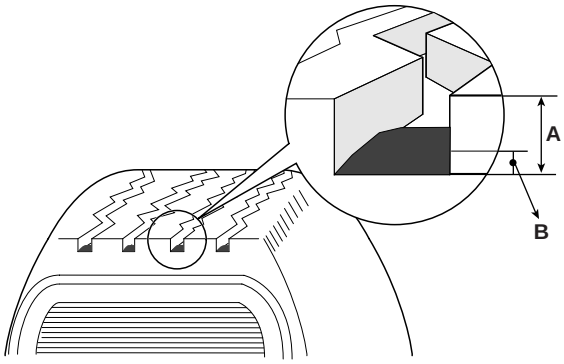

KHRE404A

TIRE ROTATION

Rotate the tires in the pattern illustrated.

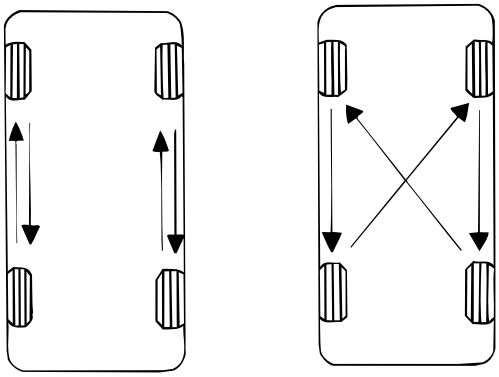

KHRE405A

CHECKING FOR PULL AND WANDER

If the steering pulls to one side, rotate the tires according to the following wheel rotation procedure.

1. Rotate the front right and front left tires, and perform a road test in order to confirm vehicle stability.

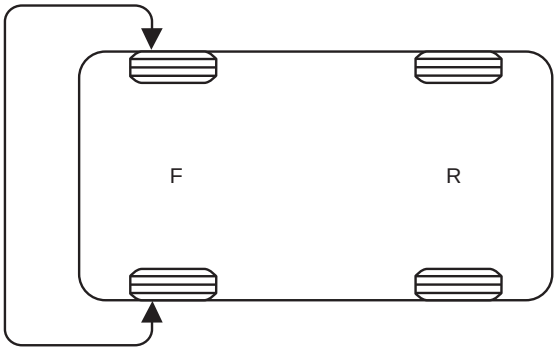

EHRF405B

2. If the steering pulls to the opposite side, rotate the front and rear tires, and perform a road test again.

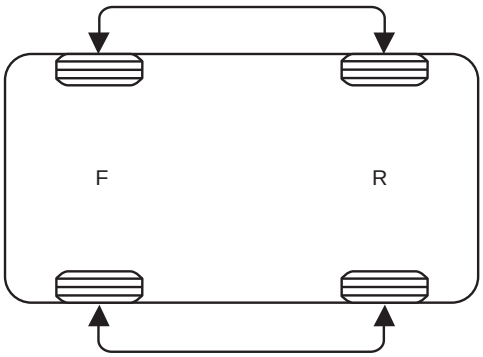

EHRF405C

3. If the steering continues to pull to one side, rotate the front right and left tires again, and perform a road test.

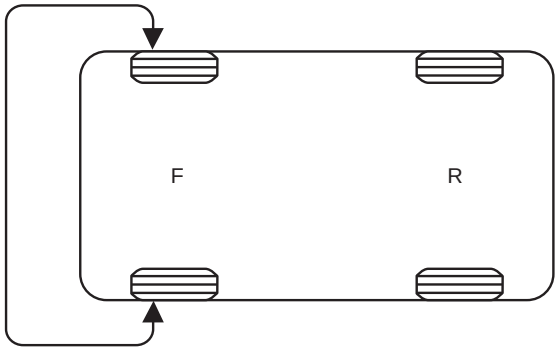

EHRF405B

4. If the steering continues to pull to the opposite side, replace the front wheels with new ones.

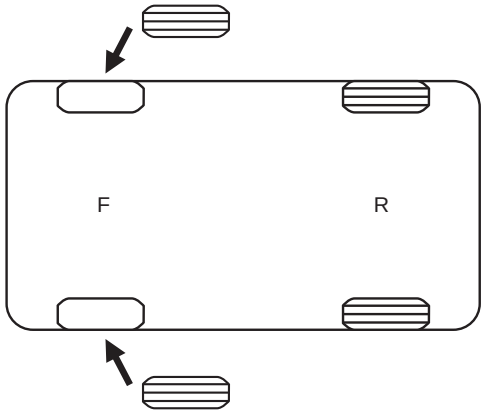

EHRF405E

Steering System

GENERAL

STEERING COLUMN & SHAFT
STEERING COLUMN／SHAFT

MECHANICAL POWER STEERING SYSTEM
POWER STEERING GEAR BOX
POWER STEERING HOSES
POWER STEERING OIL PUMP

GENERAL

GENERAL E62E77A9

Items			Specifications
Steering column/ shaft	Type		Tilt & Telescopic
Steering gear	Type		Rack & pinion
	Rack stroke		148 mm (5.83 in)
	Steering angle (Max.)	Inner	39.2°
		Outer	31.6°
Power steering pump	Type		Vane
	Diesel	Relief pressure	102 kgf/cm^2
		Discharge	8.5 cc/rev
	Gasoline	Relief pressure	97 kgf/cm^2
		Discharge	9.6 cc/rev

TIGHTENING TORQUE

Items	Nm	kgf.m	lb-ft
Hub nut	90 ~ 110	9.0 ~ 10.0	65 ~ 72
Steering wheel lock nut	40 ~ 50	4.0 ~ 5.0	29 ~ 36
Steering column mounting bolts and nut	13 ~ 18	1.3 ~ 1.8	9.4 ~ 13.0
Steering column dust cover mounting nuts	4 ~ 6	0.4 ~ 0.6	2.9 ~ 4.3
Bolt connecting steering column to universal joint	30 ~ 35	3.0 ~ 3.5	22 ~ 25
Bolt connecting universal joint to steering gear	30 ~ 35	3.0 ~ 3.5	22 ~ 25
Tie rod end castle nut	24 ~ 34	2.4 ~ 3.4	17 ~ 25
Front lower arm ball joint assembly bolts	100 ~ 120	10.0 ~ 12.0	72 ~ 87
Heat protector bolts	4 ~ 6	0.4 ~ 0.6	2.9 ~ 4.3
Steering gear box to sub-frame bolts	60 ~ 80	6.0 ~ 8.0	43 ~ 58
Power steering pump mounting bolts	17 ~ 26	1.7 ~ 2.6	12 ~ 19
Pressure tube to oil pump eye bolt	55 ~ 65	5.5 ~ 6.5	40 ~ 47
Pressure tube to valve body housing nut	12 ~ 18	1.2 ~ 1.8	9 ~ 13
Return tube to valve body housing nut	12 ~ 18	1.2 ~ 1.8	9 ~ 13
Front Stabilizer link to front strut assembly nut	100 ~ 120	10.0 ~ 12.0	72 ~ 87
Front roll stopper bolt and nut	50 ~ 65	5.0 ~ 6.5	40 ~ 47
Rear roll stopper bolt and nut	50 ~ 65	5.0 ~ 6.5	40 ~ 47
Sub-frame to body bolts	140 ~ 160	14.0 ~ 16.0	101 ~ 116
Sub-frame to body nuts	70 ~ 90	7.0 ~ 9.0	51 ~ 65
Sub-frame stay bolts	70 ~ 90	7.0 ~ 9.0	51 ~ 65

LUBRICANT E082FC29

Item	Recommended lubricant	Quantity
Steering column bearing	Multipurpose grease	As required
Rack and pinion gear	Multipurpose greas	As required
Bellows	Silicon grease	As required
Oil pump	PSF-3	As required

SPECIAL TOOLS E62CD38C

Tool (Number and Name)	Illustration	Use
09222-32100 Valve stem oil seal installer	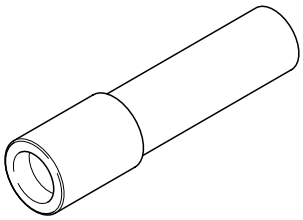 EPRF001B	Installation of the oil pump oil seal
09555-21000 Bar	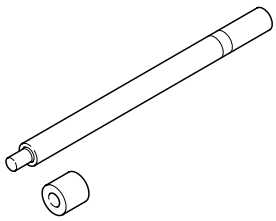 EPRF001D	Removal and installation of the oil seal (Use with 09573-33100, 09573-33000,09573-21000)
09561-11001 Steering wheel puller	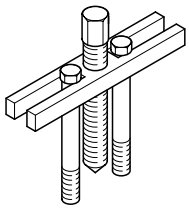 EPRF001E	Removal of steering wheel
09568-34000 Ball joint puller	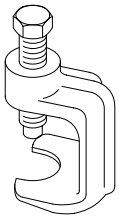 KPRE103I	Separation of the tie rod end bail joint

Tool (Number and Name)	Illustration	Use
09572-21000 Oil pressure gauge	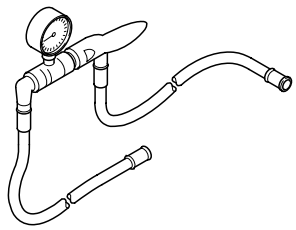 EPRF001F	Measurement of the oil pressure (Use with 09572-22100, 09572-21200)
09572-21200 Oil pressure gauge adapter	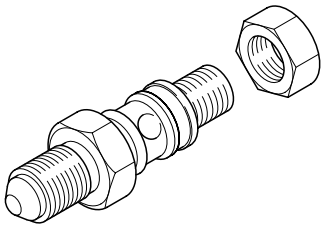 EPRF001G	Measurement of the oil pressure (Use with 09572-21000, 09572-22100)
09572-22100 Oil pressure gauge adapter	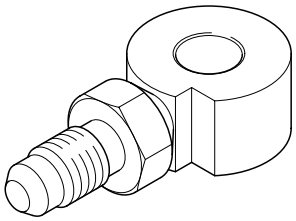 EPRF001H	Measurement of the oil pressure (Use with 09572-21000, 09572-21200)
09573-21100 Oil seal installer	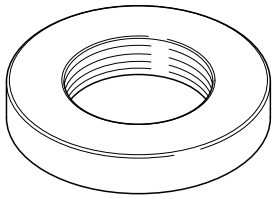 EPRF001I	Installation of the back up washer and oil seal (Use with 09753-21000,09573-33100, 09555-21000)
09573-33100 Oil seal guide	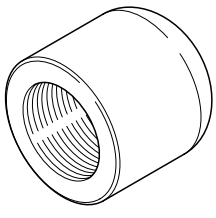 EPRF001K	Removal and installation of the oil seal (Use with 09573-21000, 09573- 33000,09555-21000)

Tool (Number and Name)	Illustration	Use
09432-21600 Braring installer	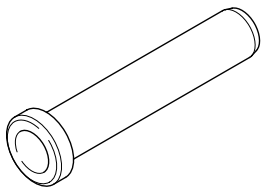 APJF001K	Installing the pinion gear bearing
09434-14200 Counter shaft bearing installer	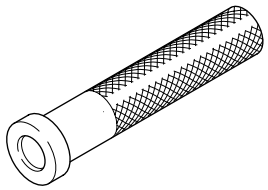 APJF001M	Installing the gear box oil seal
09565-11100 Preload socket	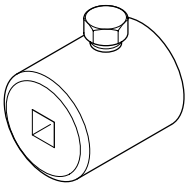 APJF001A	Measuring the pinion shaft preload

TROUBLESHOOTING E4FE78AA

Symptom	Probable cause	Remedy
Excessive play in steering	Loose yoke plug	Retighten
	Loose steering gear mounting bolts	Retighten
	Loose or worn tie rod end	Retighten or replace as necessary
Steering wheel operation is not smooth (Insufficient power assist)	V-belt slippage	Readjust
	Damaged V-belt	Replace
	Low fluid level	Replenish
	Air in the fluid	Bleed air
	Twisted or damaged hoses	Correct the routing or replace
	Insufficient oil pump pressure	Repair or replace the oil pump
	Sticky flow control valve	Replace
	Excessive internal oil pump leakage	Replace the damaged parts
	Excessive oil leaks from rack and pinion in gear box	Replace the damaged parts
	Distorted or damaged gear box or valve body seals	Replace
Steering wheel does not return properly	Excessive turning resistance of tierod end	Replace
	Yoke plug excessively tight	Adjust
	Tie rod and/or ball joint cannot turn smoothly	Replace
	Loose mounting of gear box mounting bracket Worn steering shaft joint and/or	Retighten
	Worn steering shaft joint and/or body grommet	Correct or replace
	Distorted rack	Replace
	Damaged pinion bearing	Replace
	Twisted or damaged hoses	Reposition or replace
	Damaged oil pressure control valve	Replace
	Damaged oil pump input shaft bearing	Replace
Noise	Hissing Noise in Steering Gear There is some noise with all power steering systems. One of the most common is a hissing sound when the steering wheel is turned and the car is not moving. This noise will be most evident when turning the wheel while the brakes are being applied. There is no relationship between this noise and steering performance. Do not replace the valve unless the "hissing" noise becomes extreme. A replaced valve will also make a slight noise, and is not always a solution for the condition.	

Symptom	Probable cause	Remedy
Rattling or chucking noise in the rack and pinion	Interference with hoses from vehicle body	Reposition
	Loose gear box bracket	Retighten
	Loose tie rod end and/or ball joint	Retighten
	Worn tie rod and/or ball joint	Replace
Noise in the oil pump	Low fluid level	Replenish
	Air in the fluid	Bleed air
	Loose pump mounting bolts	Retighten
	Loose yoke plug	Retighten

SERVICE ADJUSTMENT PROCEDURE E2570252

CHECKING STEERING WHEEL FREE PLAY

1. Start the engine and with the steering wheel in the straight ahead position.
2. Measure the play while turning the steering wheel to the left and right.

Standard value :
Steering wheel free play : 30 mm (1.2 in)

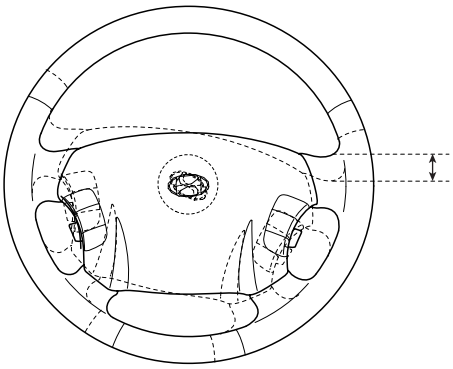

SCMST6513L

3. If the play exceeds the standard value, inspect the connection between the steering shaft and tie rod ends.

CHECKING STEERING ANGLE

1. Place the front wheel on a turning radius gauge and measure the steering angle.

STEERING ANGLE

Inner	39.2°
Outer	31.6°

2. If the measured value is not within the standard value, adjust the toe and inspect again.

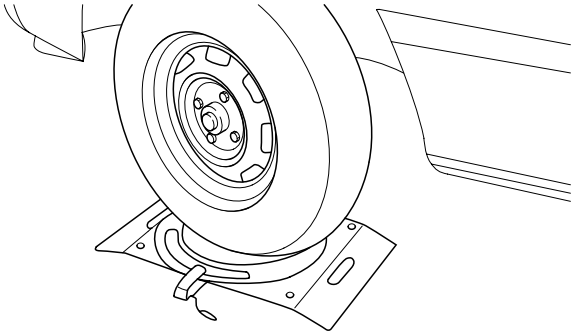

EPRF010A

CHECKING THE TIE ROD END BALL JOINT STARTING TORQUE

1. Disconnect the tie rod end from the knuckle with the special tool (09568-4A000).

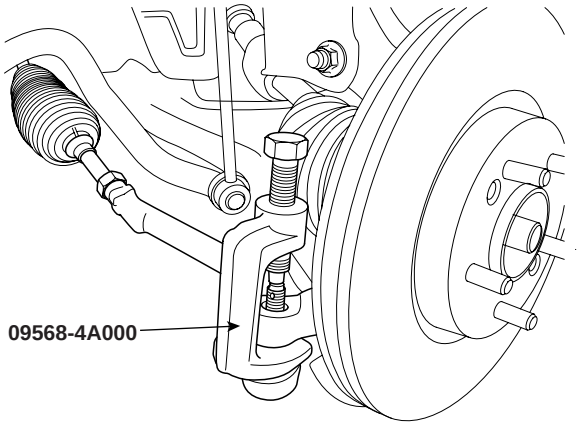

SCMST6534D

2. Shake the ball joint stud several times to check for looseness.

Tie rod end ball joint starting torque :
2.96 Nm (30 kg.cm, 2.18 lb-ft) or less

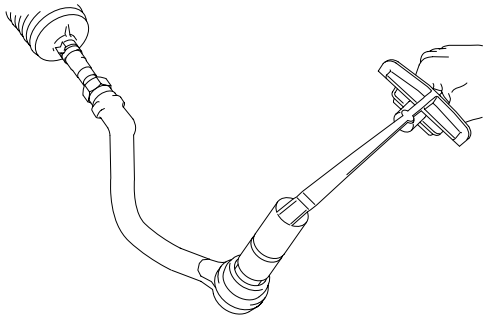

KPBF010F

3. If the starting torque exceeds the upper limit of the standard value, replace the tie rod end.

4. Even if the starting torque is below the lower limit of the standard value, check the play of the ball joint and replace if necessary.

CHECKING STEERING WHEEL RETURN

1. The force required to turn the steering wheel and the wheel return should be the same for both moderate and sharp turns.

2. When the steering wheel is turned 90˚ and held for a couple of seconds while the vehicle is being driven at 20-30 kph (12-19 mph), the steering wheel should return at least 20˚ from its central position when it is released.

NOTE

If the steering wheel is turned very quickly, steering may be momentarily difficult. This is not a malfunction because the oil pump output will be somewhat decreased.



SCMST6514L

CHECKING POWER STEERING FLUID LEVEL

1. Position the vehicle on a level surface.
2. Start the engine. With the vehicle kept stationary, turn the steering wheel several times continuously to raise the fluid temperature to 50-60°C (122-140°F).
3. With the engine at idle, turn the steering wheel fully clockwise and counter-clockwise several times.
4. Make sure that there is no foaming or cloudiness in the reservoir fluid.
5. Stop the engine and check for any difference in fluid level between a stationary and a running engine.

NOTE

1. If the fluid level varies 5 mm (0.2 in) or more, bleed the system again.
2. If the fluid level suddenly rises after stopping the engine, further bleeding is required.
3. Incomplete bleeding will produce a chattering sound in the pump and noise in the flow control valve, and lead to decreased durability of the pump.

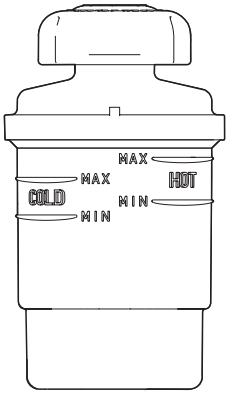

SCMST6540D

REPLACING POWER STEERING FLUID

1. Jack up the front wheels and support them with jack-stands.
2. Disconnect the return hose from the oil reservoir and plug the oil reservoir.
3. Connect a vinyl hose to the disconnected return hose, and drain the oil into a container.
4. Remove the fuel pump fuse, then start the engine and wait for the engine to stall. Next, while operating the starting motor intermittently, turn the steering wheel all the way to the left and then to the right several times to drain the fluid.
5. Connect the return hoses, then fill the oil reservoir with the specified fluid.
6. Reinstall the fuel pump fuse.
7. Start the engine. Check for oil leakage.
8. Stop the engine.
9. Bleed the system.

Power steering fluid type : PSF-3
Total quantity : Approx 1.0 liter

AIR BLEEDING

1. Remove the fuel pump fuse, then start the engine and wait for the engine to stall. Next, while operating the starting motor intermittently (for 15 ~ 20 seconds), turn the steering wheel all the way to the left and then to the right five or six times.

NOTE

1. During air bleeding, replenish the fluid supply so that the level never falls below the lower position of the filter.
2. If air bleeding is done while the vehicle is idling, the air will be broken up and absorbed into the fluid. Be sure to do the bleeding only while cranking.
3. Reinstall the fuel pump fuse, and start the engine(idling).
4. Turn the steering wheel to the left and the right until there are no air bubbles in the oil reservoir.

CAUTION

Do not hold the steering wheel turned all the way to either side for more than ten seconds.

5. Confirm that the fluid is not milky, and that the level is up to the position specified on the level gauge.
6. Confirm that there is little change in the surface of the fluid when the steering wheel is turned left and right.

CAUTION

1. If the surface of the fluid changes considerably, air bleeding should be done again.
2. If the fluid level rises suddenly when the engine is stopped, it indicates that there is still air in the system.
3. If there is air in the system, a jingling noise may be heard from the pump and the control valve may also produce unusual noises. Air in the system will shorten the life of the pump and other parts.

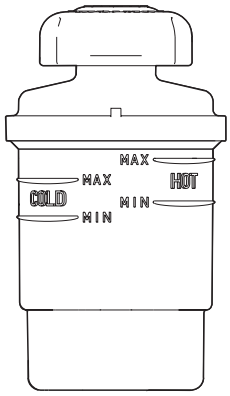

SCMST6540D

OIL PUMP PRESSURE TEST (OIL PUMP RELIEF PRESSURE)

1. Disconnect the pressure hose from the oil pump. Connect the special tool between the oil pump and pressure hose as illustrated.
2. Bleed the air, and then start the engine and turn the steering wheel several times so that the fluid temperature rises to approximately 50℃ (122℉).
3. Set the engine speed to 1,000 rpm.
4. Close the shut-off valve of the special tool and measure the fluid pressure to confirm that it is within the range.

standard vaule :
Relief pressure: 102 kgf/cm^2

CAUTION

Don' t keep the shut-off valve on the pressure gauge closed for longer than seconds.

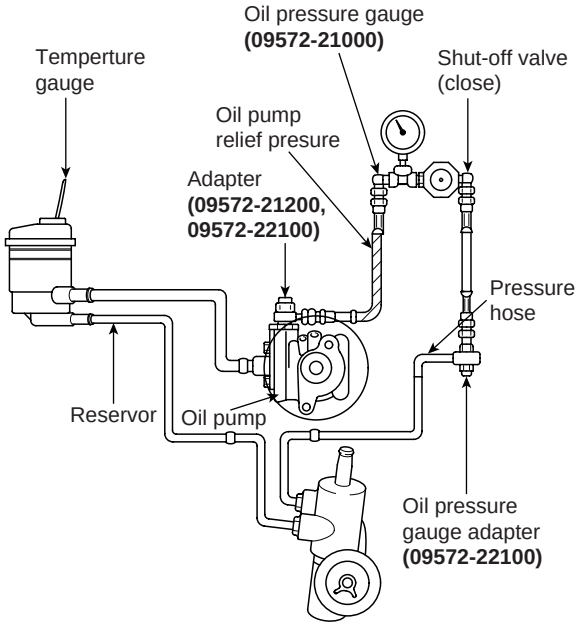

EPRF002B

5. Remove the special tools, and tighten the pressure hose to the specified torque.

Tightening Torque Nm(kgf·m, lb-ft) :
55 ~ 65(5.5 ~ 6.5, 40 ~ 47)

6. Bleed the system.

STEERING COLUMN & SHAFT

STEERING COLUMN／SHAFT

COMPONENTS E78E9120

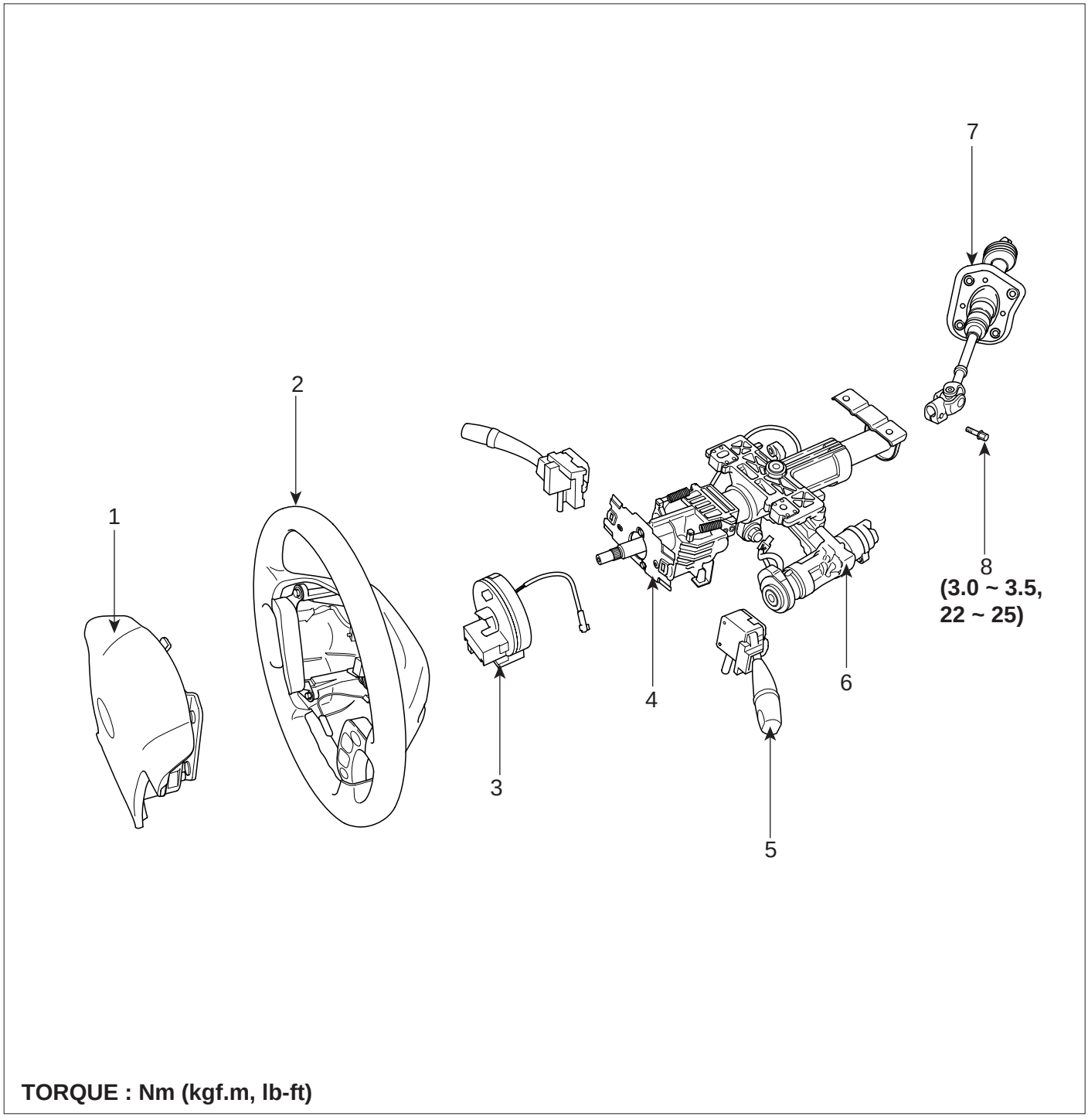

TORQUE : Nm (kgf.m, lb-ft)

1. Air bag module
2. Steering wheel
3. Clock spring
4. Steering column assembly
5. Multifunction switch
6. Key lock assembly
7. Universal joint assembly
8. Bolt

REMOVAL EFC9B4A9

1. Disconnect the negative terminal from the battery (A) and then wait for 30 seconds.

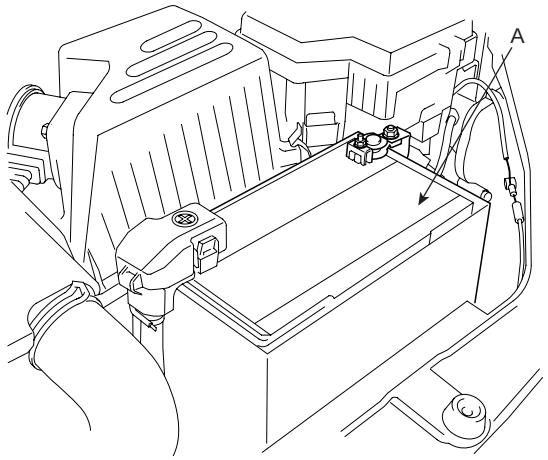

SCMST6501L

2. Loosen the bolts in the illustration.

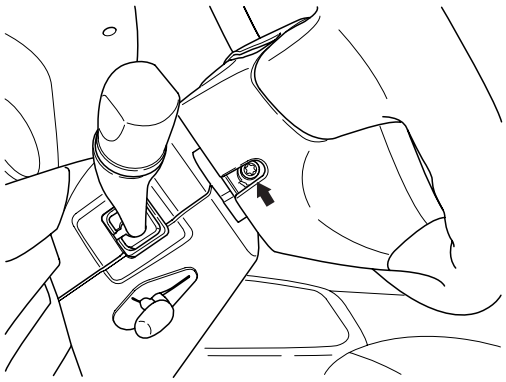

SCMST6501D

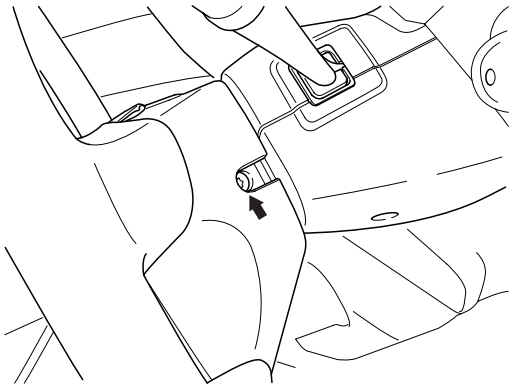

SCMST6502D

3. Disconnect the connectors (A, B) and remove the airbag module.

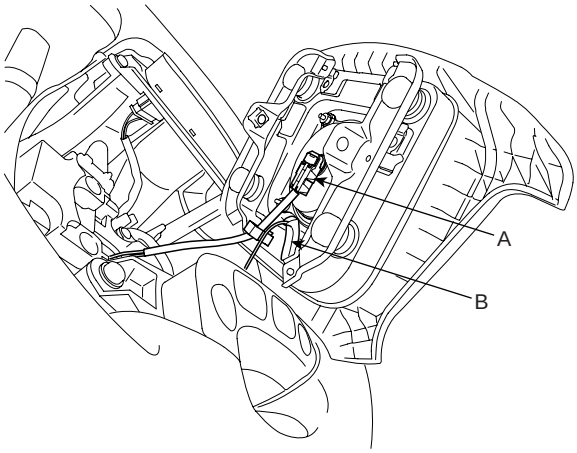

SCMST6503D

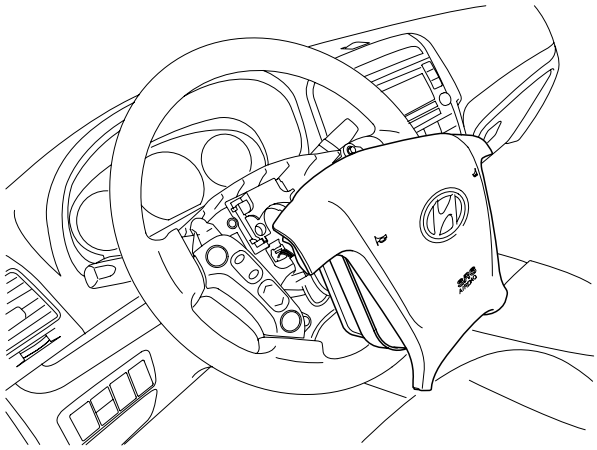

SCMST6504D

4. Disconnect the connector (A) and remove the dynamic damper (B).

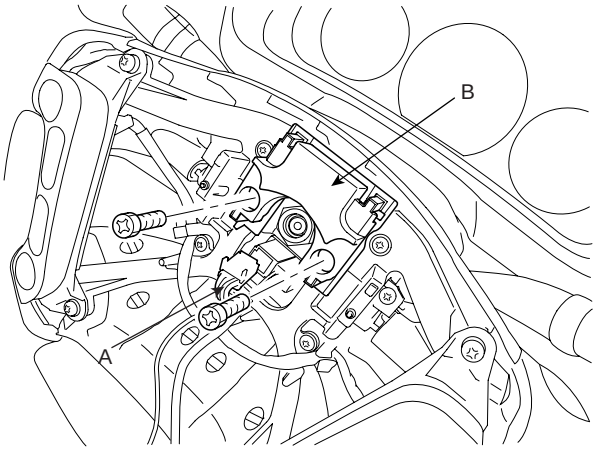

SCMST6505D

5. Remove the steering wheel lock nut.

Tightening torque Nm (kgf.m, lb-ft):
40 ~ 50 (4.0 ~ 5.0, 29 ~ 36)

6. After making the marks on the steering wheel and shaft for reinstallation, remove the steering wheel using a SST (09561-11001).

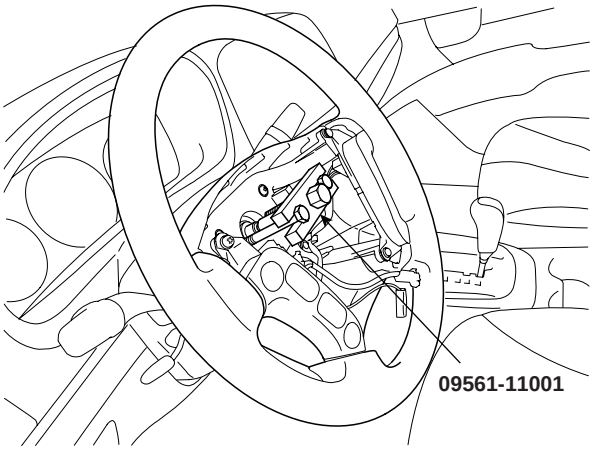

SCMST6506D

CAUTION

Do not hammer on the steering wheel to remove it; it may damage the steering column.

7. Remove the hood latch release handle (A) and the cowl side trim (B).

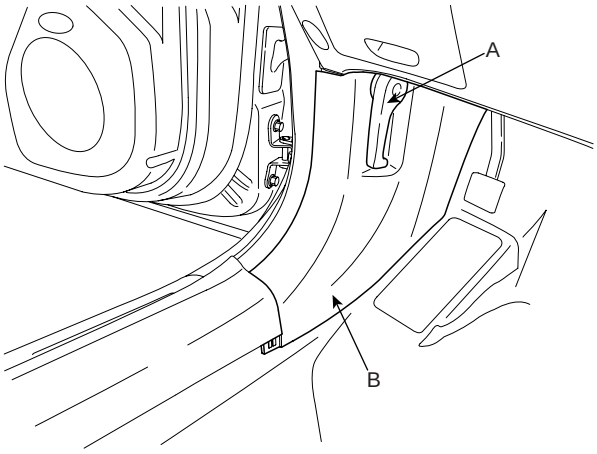

SCMST6508D

8. Loosen the lower crash pad panel mounting screws.

[LHD]

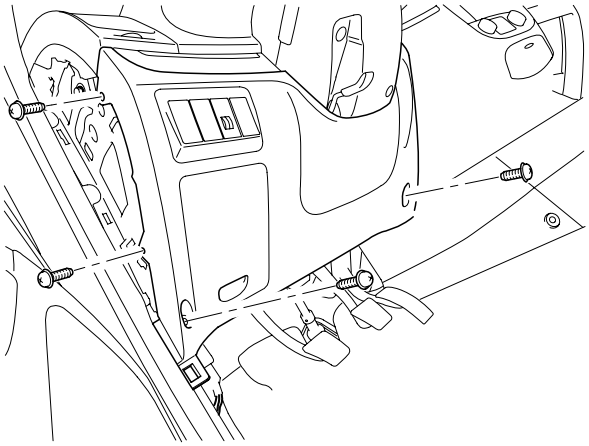

SCMST6509D

[RHD]

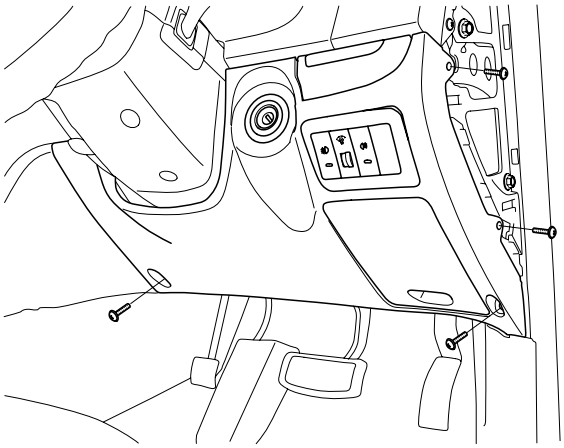

SCMST6001L

9. Disconnect the connectors from the lower crash pad and then remove the lower crash pad.

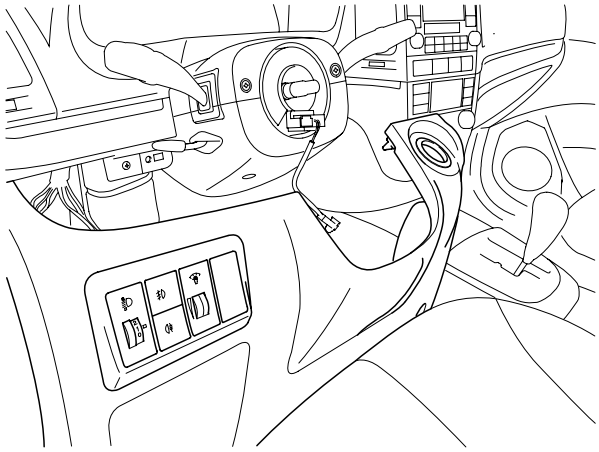

SCMST6510D

10. Remove the reinforcing panel (A).

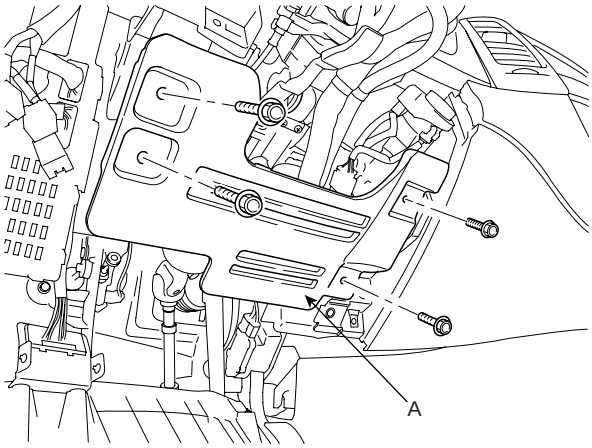

SCMST6511D

11. Loosen the screws, and then remove the steering column upper (A) and lower shrouds (B).

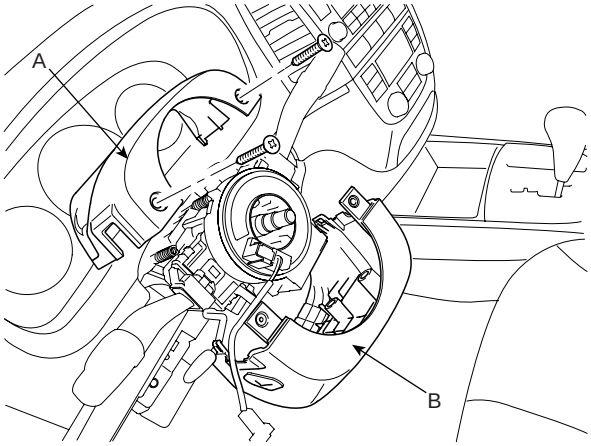

SCMST6512D

12. Disconnect the connectors from the clock spring and then remove the clock spring (A) from the steering column.

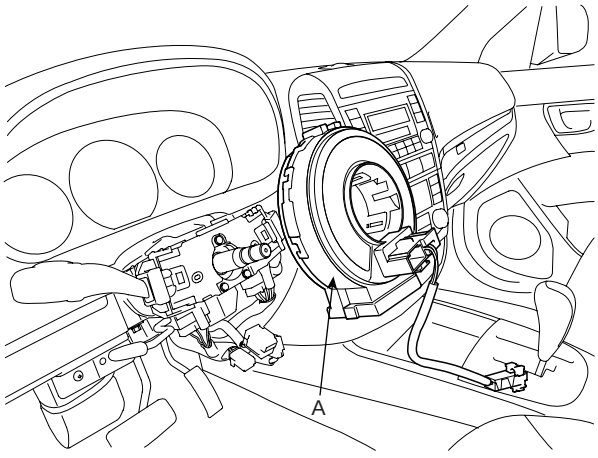

SCMST6513D

13. Remove the multifunction switch by pressing the marked portions in the illustration.

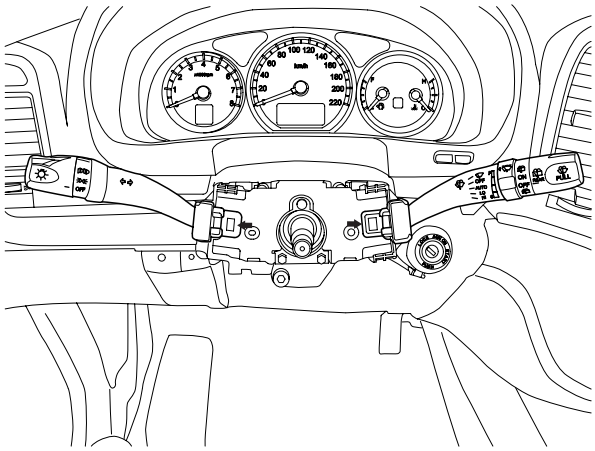

SCMST6514D

14. Loosen the bolt (A) and then disconnect the universal joint assembly from the steering gear pinion shaft.

Tightening torque Nm (kgf.m, lb-ft):
30 ~ 35 (3.0 ~ 3.5, 22 ~ 25)

[LHD]

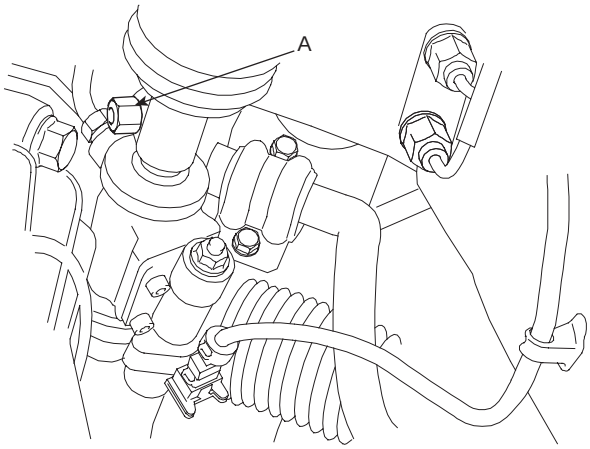

SCMST6025D

[RHD]

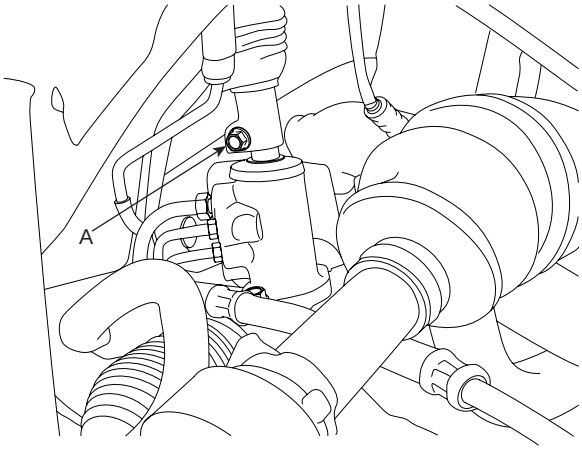

SCMST6002L

15. Loosen the dust cover mounting nuts.

Tightening torque Nm (kgf.m, lb-ft):
4 ~ 6 (0.4 ~ 0.6, 2.9 ~ 4.3)

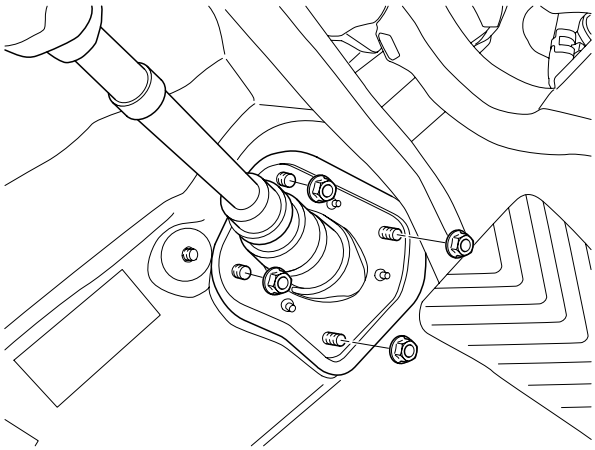

SCMST6516D

16. Disconnect the connector (A).

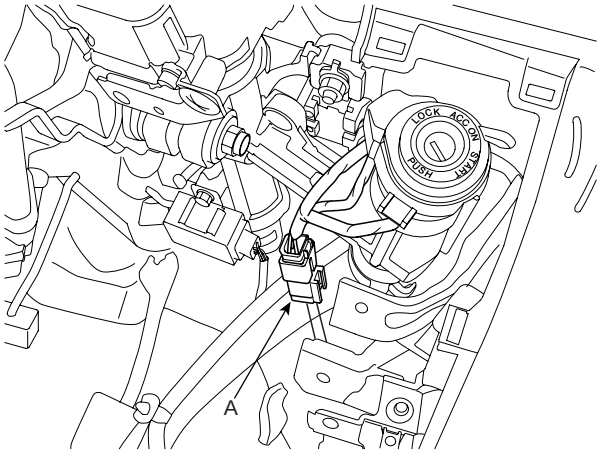

SCMST6517D

17. Disconnect the ignition switch connector (A) and then remove the steering column assembly by loosening the steering column mounting bolts and nuts.

Tightening torque Nm (kgf.m, lb-ft):
13 ~ 18 (1.3 ~ 1.8, 9.4 ~ 13.0)

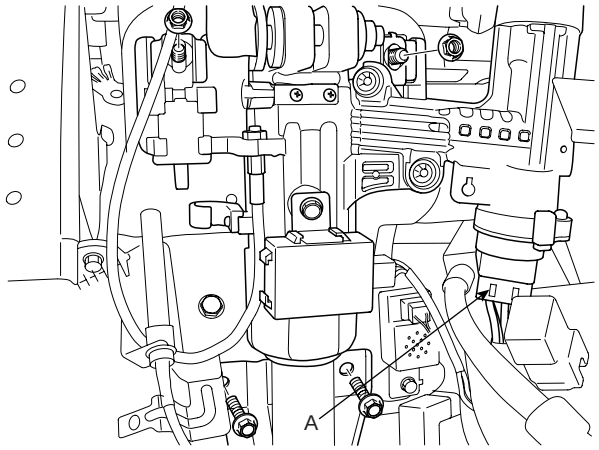

SCMST6518D

DISASSEMBLY EB23AA9D

KEY LOCK ASSEMBLY

1. Make a groove on head of the special bolt (A) by using a punch.

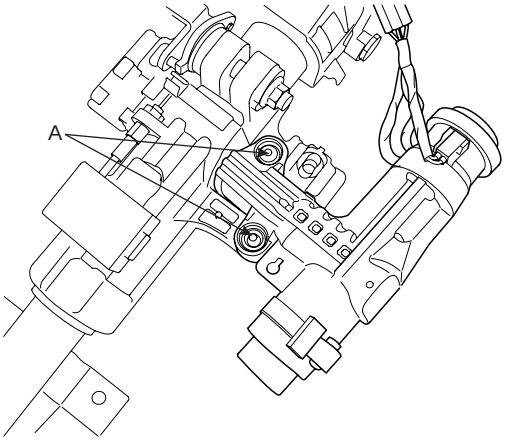

SCMST6519D

2. Remove the key lock assembly from the steering column by loosing special bolts.

3. When reassembling the key lock assembly, loosely install new special bolts to the steering column shaft.

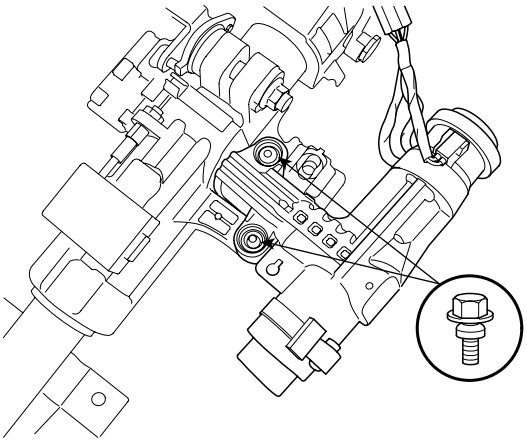

SCMST6535D

4. Tighten the special bolt until its head is cut off.

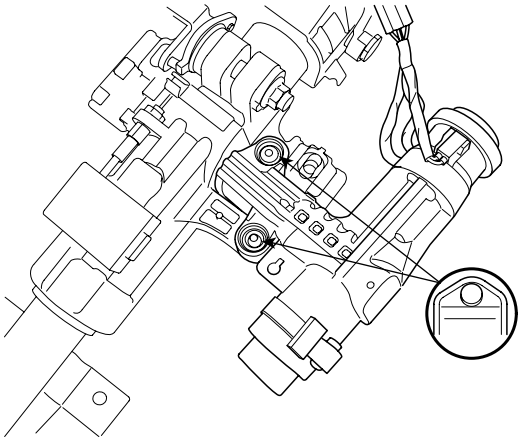

SCMST6536D

UNIVERSAL JOINT ASSEMBLY

1. Remove the universal joint assembly from the steering column assembly by loosening the bolt (A).

Tightening torque Nm (kfg.m, lb-ft):
30 ~ 35 (3.0 ~ 3.5, 22 ~ 25)

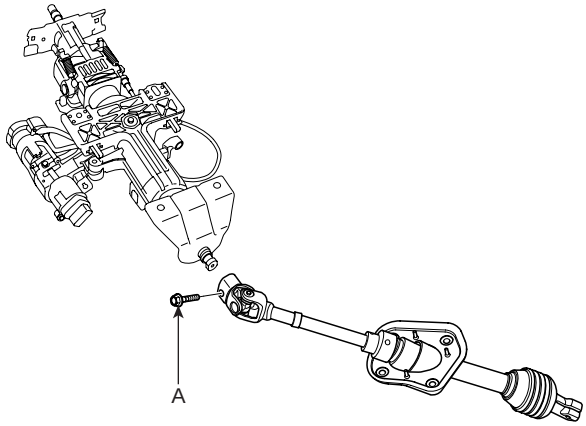

SCMST6520D

2. Reassembly is the reverse of disassembly.

INSPECTION E5B5514D

1. Check the steering column shaft for damage and deformation.
2. Check connection for play, damage and smooth operation.
3. Check the joint bearing for wear and damage.

INSTALLATION ED6CC43A

NOTE

Before installing, apply multipurpose grease to each moving parts.

1. Installation is the reverse of removal.

CAUTION

Align the marks on the steering wheel and shaft for reinstallation when installing the steering wheel.

MECHANICAL POWER STEERING SYSTEM

COMPONENTS EC107BCA

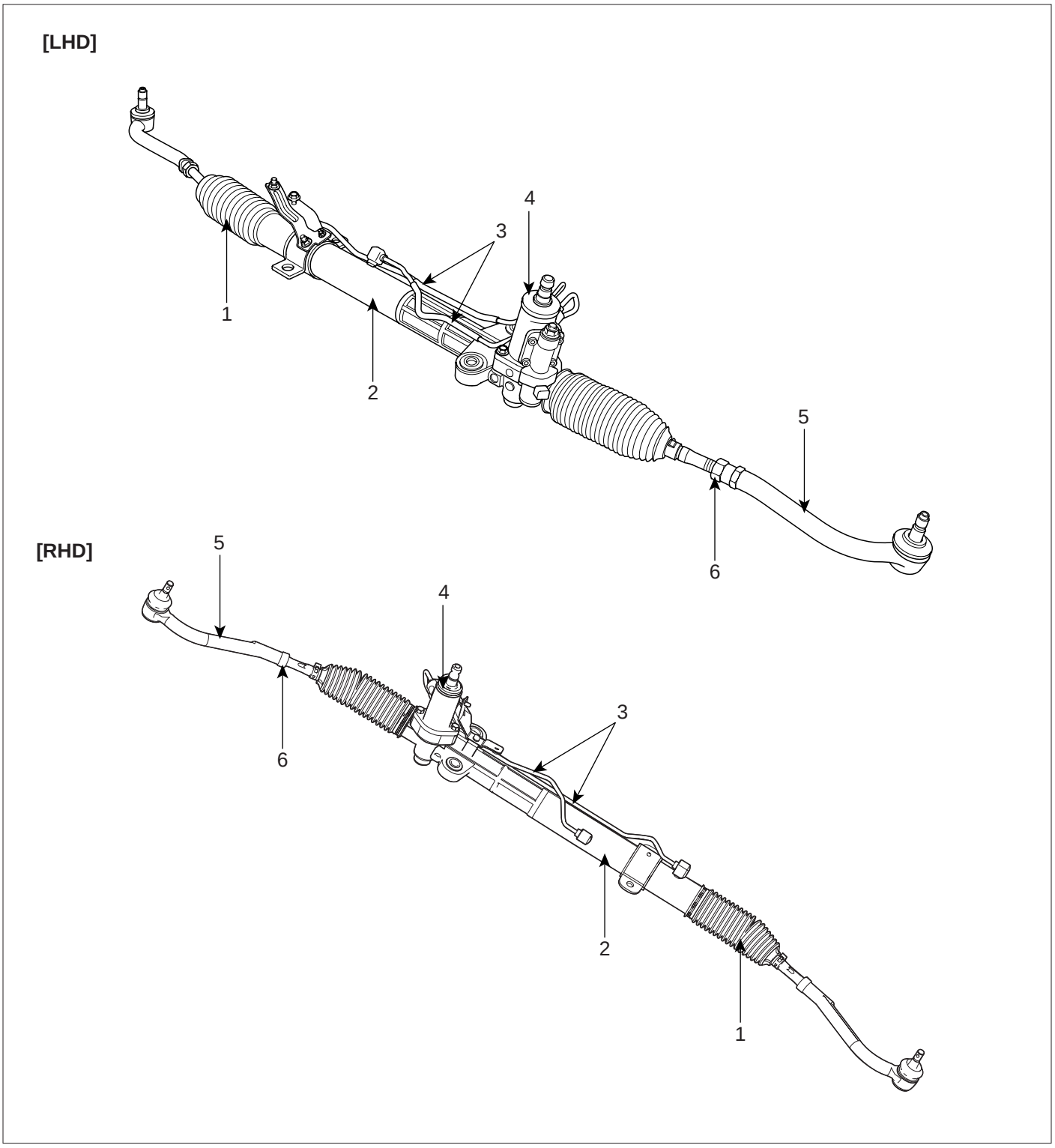

1. Bellows
2. Rack housing
3. Feed tube
4. Valve body assembly
5. Tie rod end assembly
6. Lock nut

SCMST6502L

POWER STEERING GEAR BOX

COMPONENT E95EE087

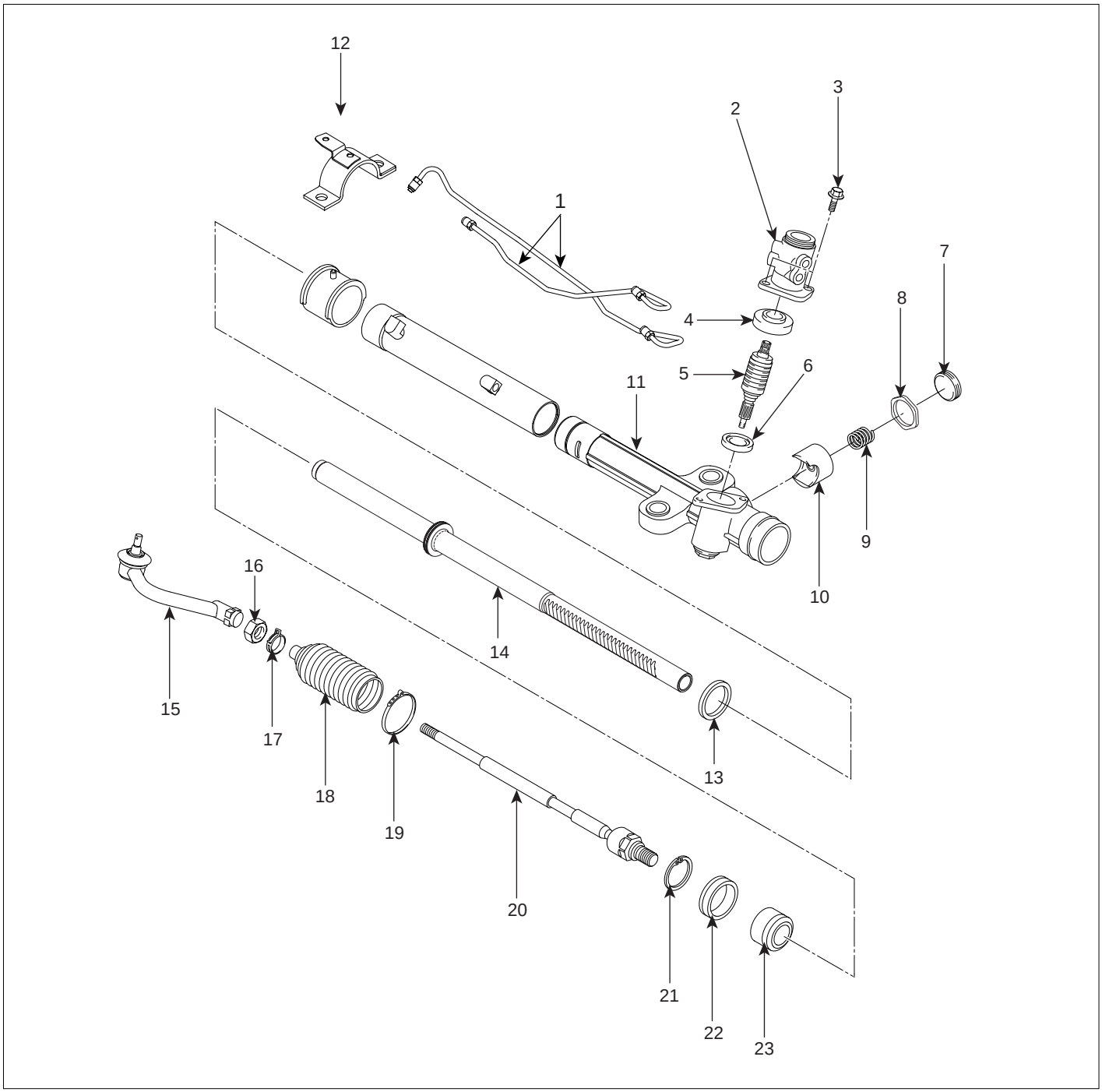

1. Feed tube
2. Valve body housing
3. Bolt
4. Oil seal
5. Pinion valve assembly
6. Oil seal
7. Yoke plug
8. Lock nut
9. Rack support spring
10. Rack support yoke
11. Rack housing
12. Power steering gear box mounting clamp
13. Oil seal
14. Rack
15. Tie rod end
16. Lock nut
17. Bellows clip
18. Bellows
19. Bellows band
20. Tie rod
21. Circlip
22. Oil seal
23. Rack stopper

SCMST6510L

REMOVAL E0BCF615

1. Remove the both front wheels.

Tightening torque Nm (kgf.m, lb-ft):
110 ~ 140 (11.0 ~ 14.0, 80 ~ 101)

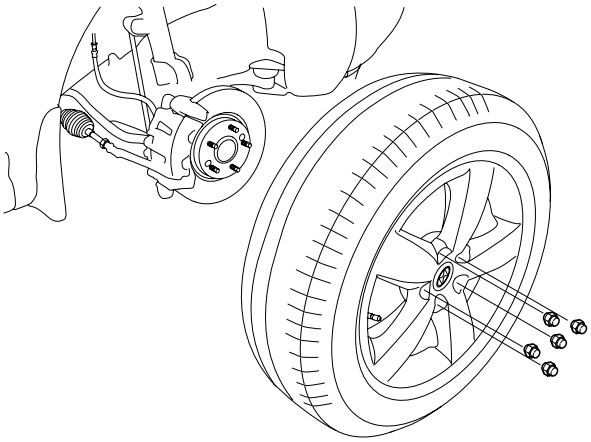

SCMST6003D

2. Drain the power steering fluid by disconnecting the return hose (A).

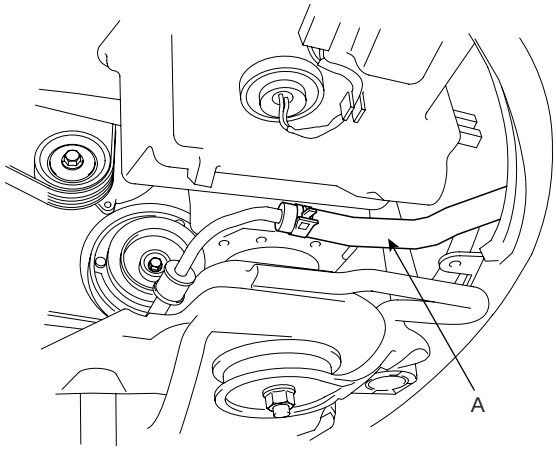

SCMST6521D

3. Disconnect the pressure tube (A) from the power steering pump by loosening the eye bolt.

Tightening torque Nm (kgf.m, lb-ft):
55 ~ 65 (5.5 ~ 6.5, 40 ~ 47)

[DIESEL]

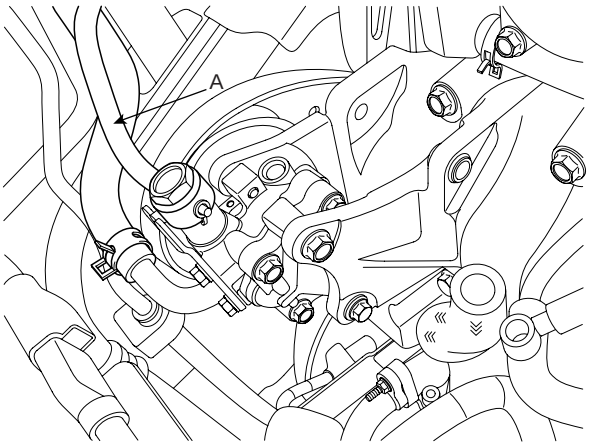

SCMST6800D

[GASOLINE]

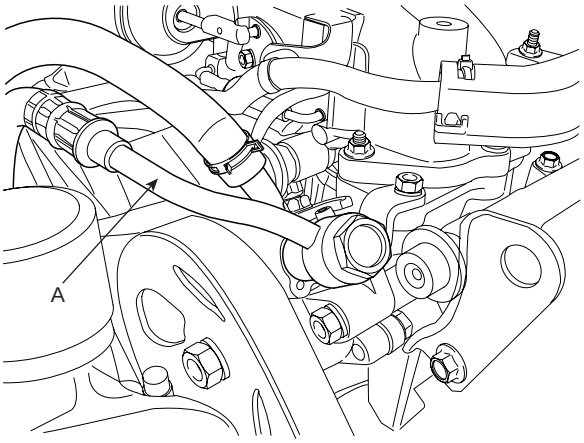

SCMST6503L

4. Disconnect the stabilizer bar link (A) from the front strut assembly.

Tightening torque Nm (kgf.m, lb-ft):
100 ~ 120 (10.0 ~ 12.0, 72 ~ 87)

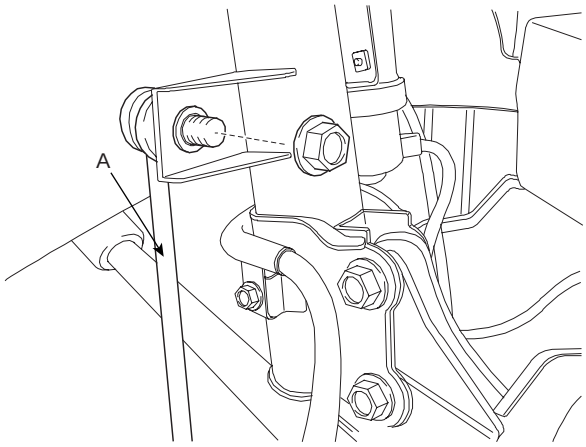

SCMST6530D

5. Remove the tie-rod end split pin (A) and castle nut (B).

Tightening torque Nm (kgf.m, lb-ft):
24 ~ 34 (2.4 ~ 3.4, 17 ~ 25)

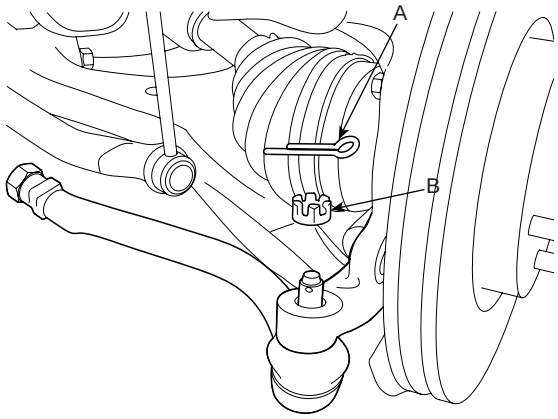

SCMST6007D

6. Disconnect the tie rod end (A) from the knuckle by using a SST (09568-4A000 or 09568-34000).

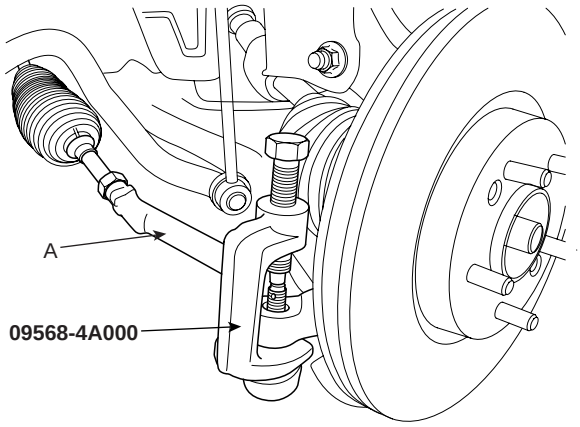

SCMST6008D

7. Remove the bolt pin and nut (A) and disconnect the lower arm (B) from the knuckle.

Tightening torque Nm (kgf.m, lb-ft):
100 ~ 120 (10.0 ~ 12.0, 72 ~ 87)

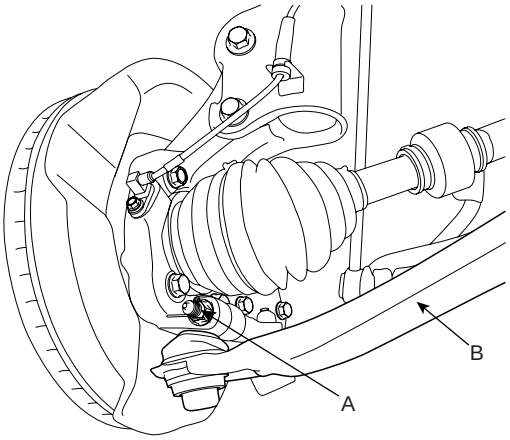

SCMST6009D

8. Repeat on the other side.

9. Remove the bolt (A) connecting steering gear pinion shaft to universal joint and the EPS solenoid connector (B).

Tightening torque Nm (kgf.m, lb-ft):
30 ~ 35 (3.0 ~ 3.5, 22 ~ 25)

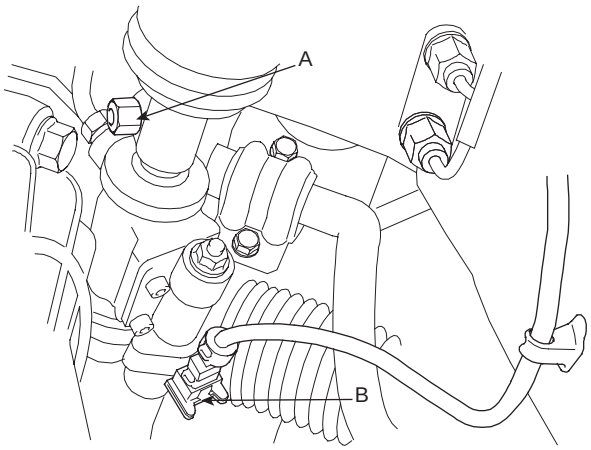

SCMST6537D

10. Remove the front and rear roll stopper bolts (A, B).

Tightening torque Nm (kgf.m, lb-ft):
50 ~ 65 (5.0 ~ 6.5, 36 ~ 47)

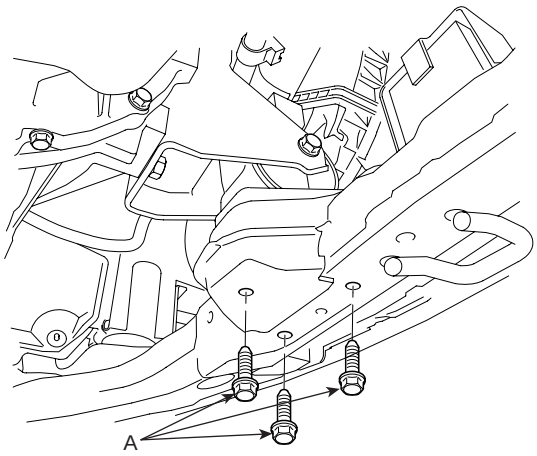

SCMST6522D

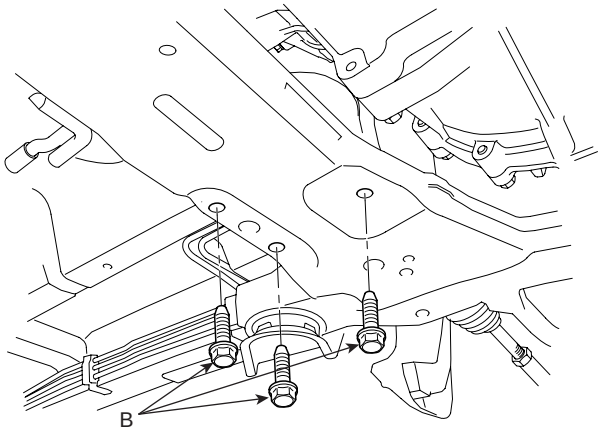

SCMST6523D

11. Remove the muffler hanger (A).

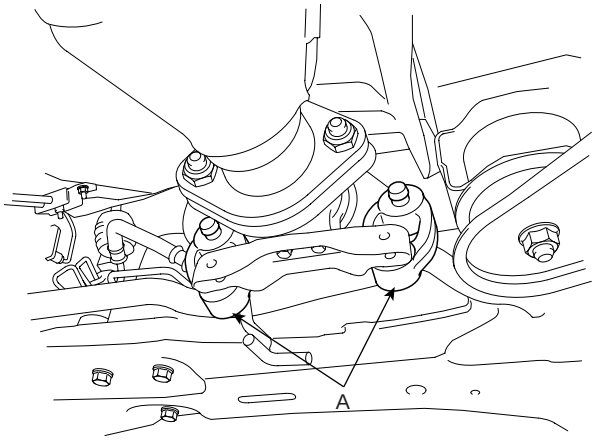

SCMST6524D

12. Remove the sub-frame (A) and stay by loosening the bolts and nuts.

Tightening torque Nm (kgf.m, lb-ft):
Sub-frame stay mounting bolts
70 ~ 90 (7.0 ~ 9.0, 51 ~ 65)
Sub-frame mounting nuts
70 ~ 90 (7.0 ~ 9.0, 51 ~ 65)
Sub-frame mounting bolts
140 ~ 160 (14.0 ~ 16.0, 101 ~ 116)

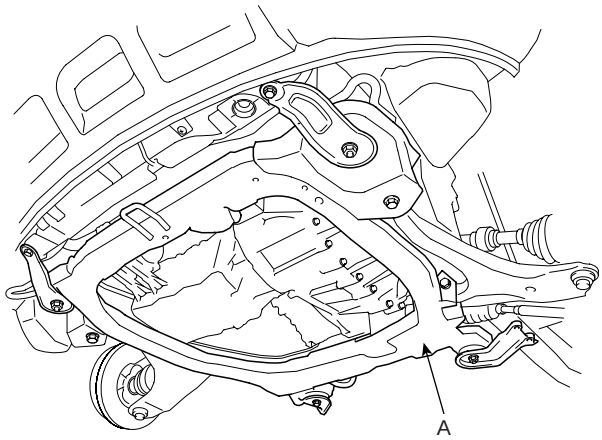

SCMST6525D

13. Remove the heat protector (A).

Tightening torque Nm (kgf.m, lb-ft):
4 ~ 6 (0.4 ~ 0.6, 2.9 ~ 4.3)

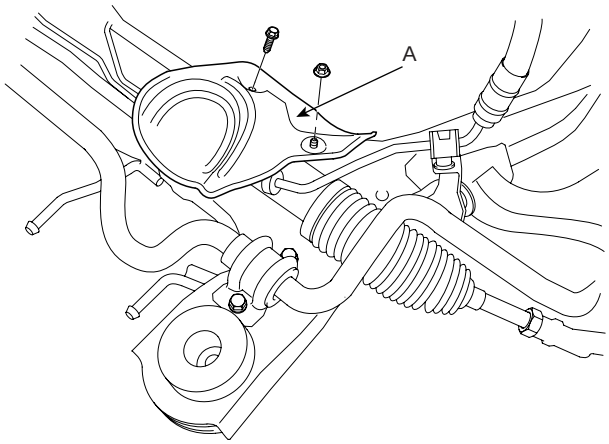

SCMST6526D

14. Disconnect the pressure tube (A) and return (B) from the valve body housing.

Tightening torque Nm (kgf.m, lb-ft):
12 ~ 18 (1.2 ~ 1.8, 9 ~ 13)

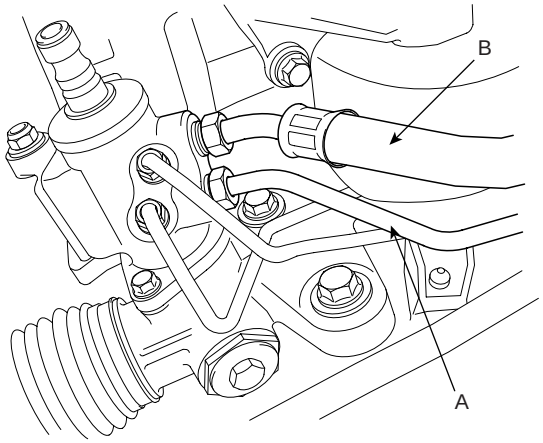

SCMST6527D

15. Remove the tube bracket bolts and nut.

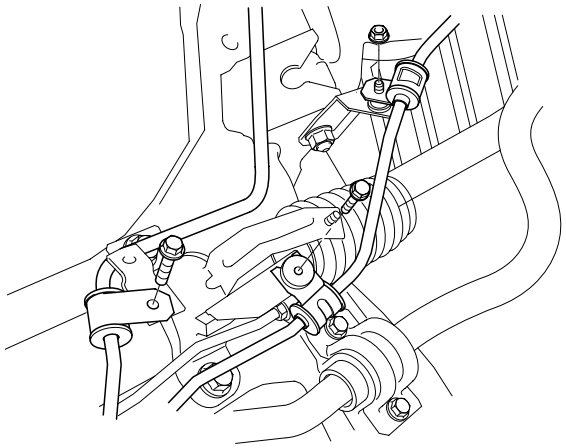

SCMST6528D

16. Remove the power steering gear box from the sub-frame by loosening the mounting bolts.

Tightening torque Nm (kgf.m, lb-ft):
60 ~ 80 (6.0 ~ 8.0, 43~58)

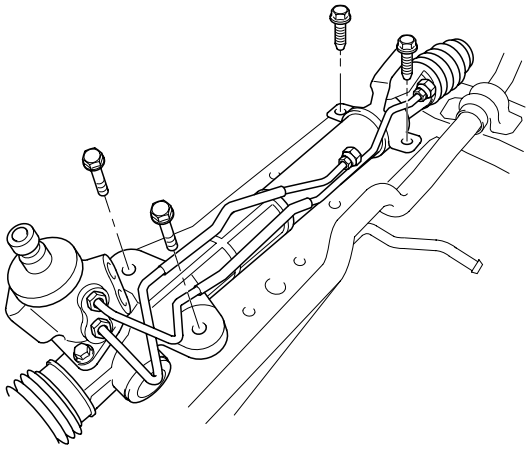

SCMST6529D

DISASSEMBLY EDB5D50E

1. Remove the tie rod end (B) from the tie rod (A).

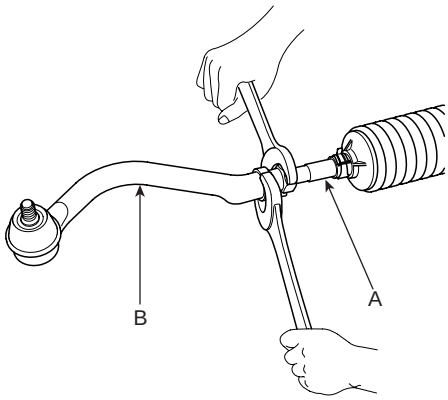

KPBF202A

2. Remove the dust cover (B) from the ball joint (A).

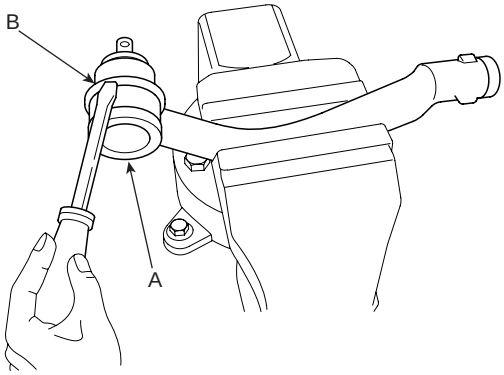

EPBF500H

3. Remove the bellows band (A).

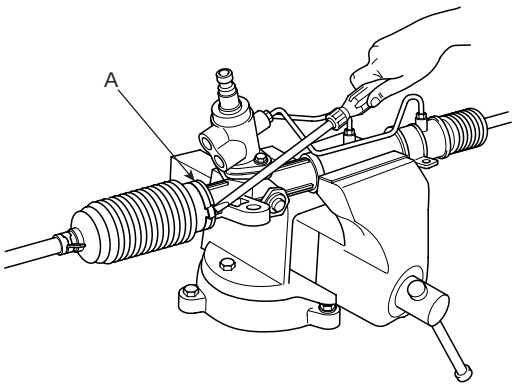

KPBF006F

4. Remove the bellows clip (A).

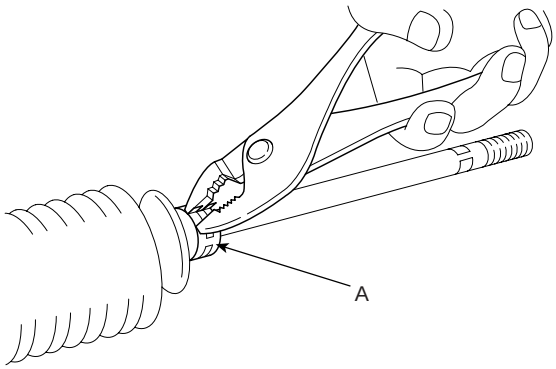

EPKE013I

5. Pull the bellows out toward the tie rod.

NOTE

Check for rust on the rack when the bellows are replaced.

6. Remove the feed tube(A) from the rack housing.

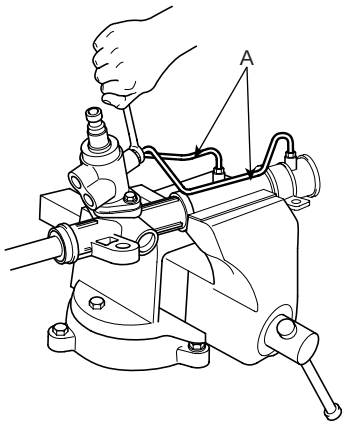

APHE006H

7. While moving the rack slowly, drain the fluid from the rack housing.

8. Unstake the tab washer (A) which fixes the tie rod (B) and rack (C) with a chisel.

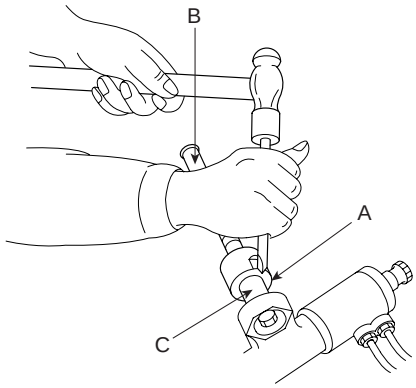

EPKE037A

9. Remove the tie rod (B) from the rack (A).

CAUTION

Remove the tie rod (B) from the rack (A), taking care not to twist the rack.

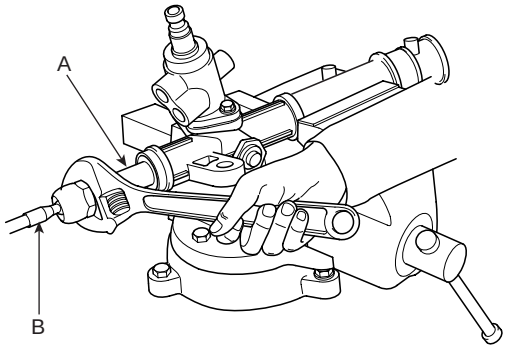

KPBF006J

10. Remove the yoke plug locking nut (A).

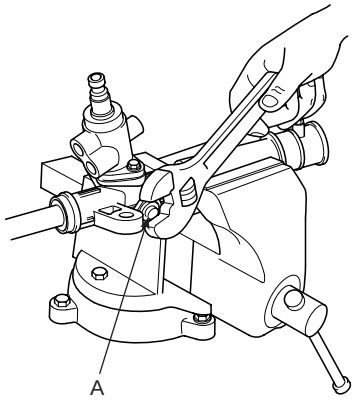

KPBF006K

11. Remove the yoke plug (B) with a 14mm socket (A).

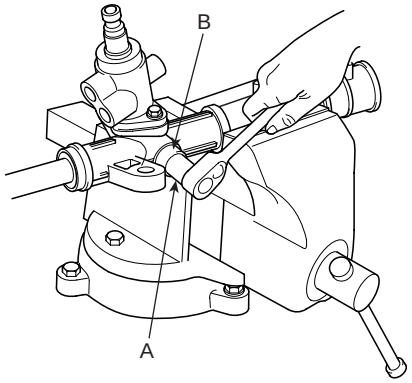

KPBF006L

12. Remove the lock nut (D), yoke plug (C), rack support spring (B) and rack support yoke (A) from the gear box.

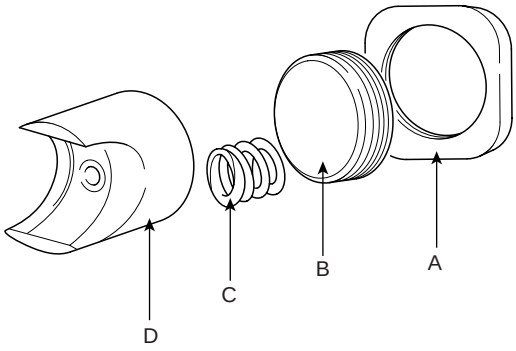

APJF005L

13. When the end of the circlip comes out of the notched-hole of the housing rack cylinder, turn the rack stopper (A) clockwise and remove the circlip.

CAUTION

Be careful not to damage the rack.

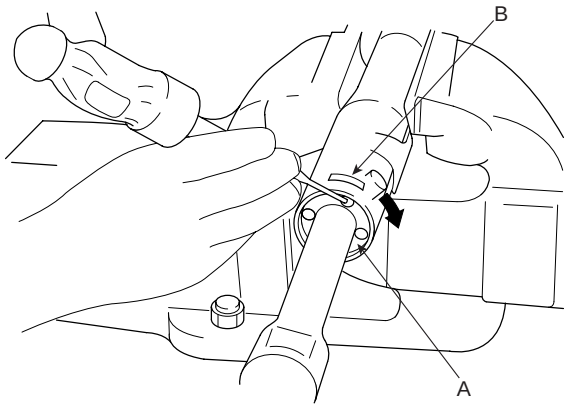

UPBG500K

14. When the end of the circlip comes out of the notched hole (A) of the housing rack cylinder, turn the rack stopper (B) counterclockwise and remove the circlip.

CAUTION

Be careful not to damage the rack.

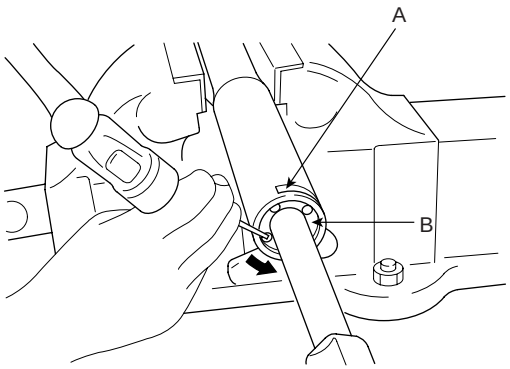

EPKE013R

15. Remove the rack bushing and rack from the rack housing.

16. Remove the O-ring(A) from the rack bushing (B).

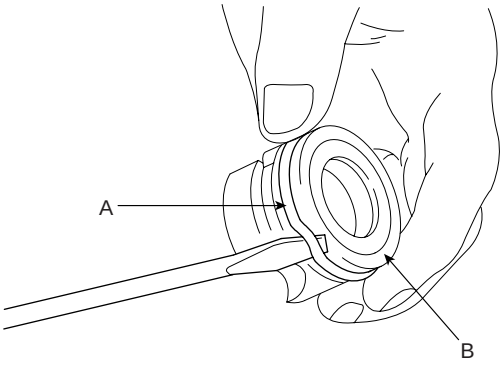

EPKE013T

17. Remove the oil seal (B) from the rack bushing (A).

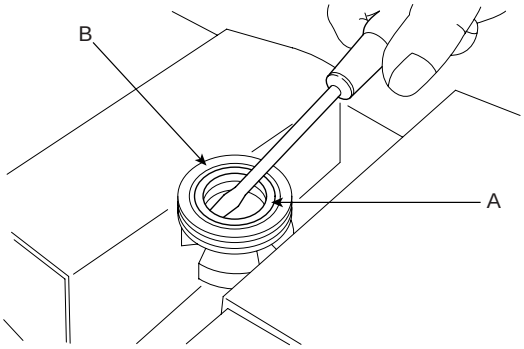

EPKE013U

18. Remove the valve body (A) from the valve body housing (B) with a soft hammer.

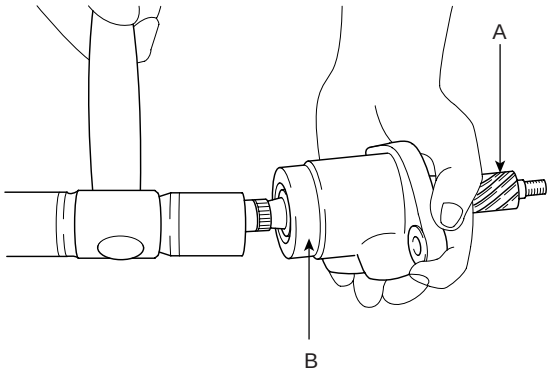

UPBG500L

19. Using the special tool, remove the oil seal and ball-bearing from the valve body housing.

20. Remove the oil seal and O-ring from the rack housing.

CAUTION

Be careful not to damage the pinion valve cylinderinside of the rack housing.

21. Using the special tool (09573-33100, 09555-21000),remove the oil seal (A) from the rack housing.

CAUTION

Be careful not to damage the rack cylinder insideof the rack housing.

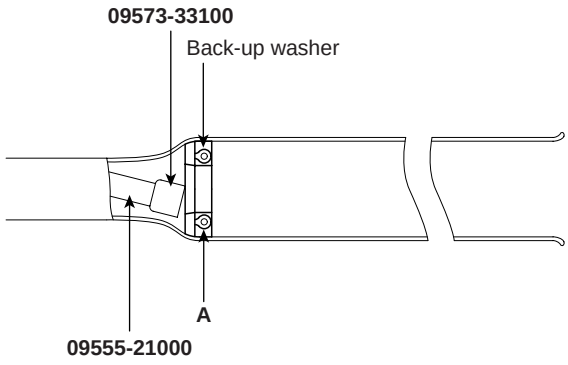

EPRF210B

INSPECTION E003BEEE

1. Rack
    1) Check for rack tooth face damage or wear.
    2) Check for oil seal contact surface damage.
    3) Check for rack bending or twisting.
    4) Check for oil seal ring damage or wear.
    5) Check for oil seal damage or wear.

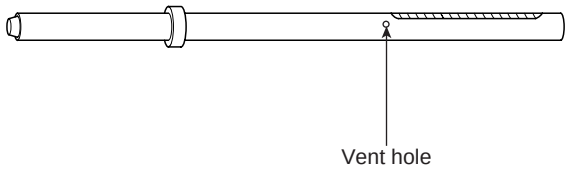

LPJF006C

2. Pinion valve
    1) Check for pinion gear tooth face damage or wear.
    2) Check for oil seal contact surface damage.
    3) Check for seal ring damage or wear.
    4) Check for oil seal damage or wear.

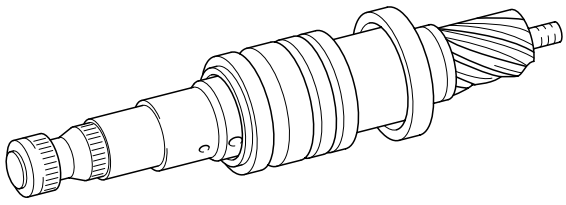

APJF013Z

3. Bearing
    1) Check for seizure or abnormal noise during abearing rotation.
    2) Check for excessive play.
    3) Check for missing needle bearing rollers.
4. Others
    1) Check for damage of the rack housing cylinder bore.
    2) Check for boot damage, cracking or aging.

REASSEMBLY E1B2884F

1. Apply the specified fluid to the entire surface of the rack oil seal.

Recommended fluid : PSF-3

2. Install the backup washer and oil seal (A) to the specified position in the rack housing.

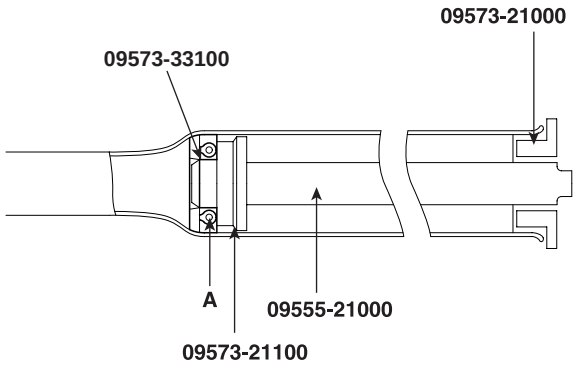

KPBF007F

3. Apply the specified fluid to the entire surface of the rack bushing oil seal.

Recommended fluid : PSF-3

4. Install the oil seal (A) in the rack bushing (B).

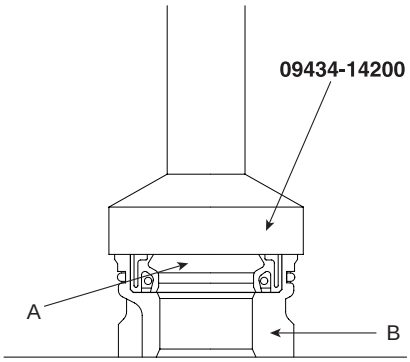

EPKE230B

5. Apply the specified fluid to the entire surface of the O-ring and install it in the rack bushing.

6. Apply the specified grease to the rack teeth.

Recommended grease Multipurpose grease SAE J310a NLGI No.2

NOTE

Do not plug the vent hole(A) in the rack with grease.

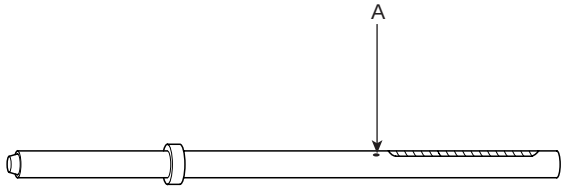

APJF014E

7. Insert the rack(A) into the rack housing(B) and install the rack bushing(C).

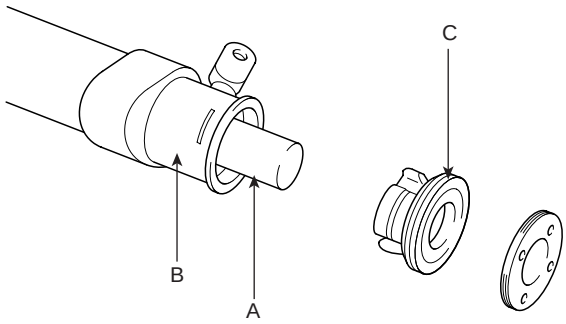

UPBG500M

8. Push in the rack stopper (A) until the circlip groove of the rack stopper is aligned with the notched hole of the rack housing. Then, install the circlip while turning the rack stopper.

CAUTION

The circlip should not be visible through the notched hole of the rack housing.

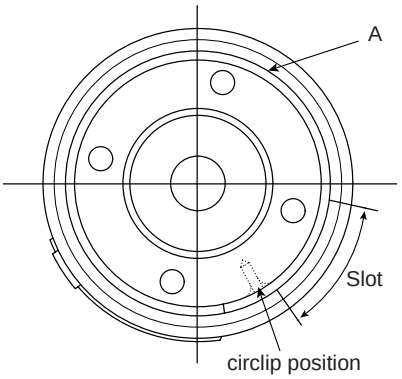

EPBF500C

9. Using special Tool (09432-21600), install the oil seal and the ball bearing in the valve body (A).

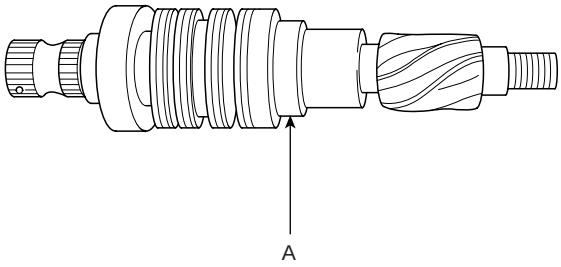

EPKE230E

10. After applying the specified fluid and grease to the pinion valve assembly (A), install it in the rack housing assembly.

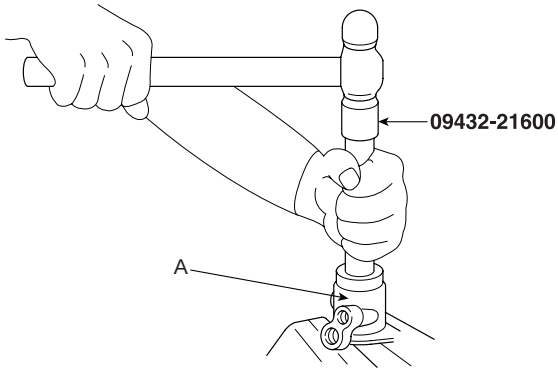

APGE008G

11. After applying the specified fluid to the oil seal, install it in the rack housing and fix the valve body assembly(A) and O-ring in the gear box(B).

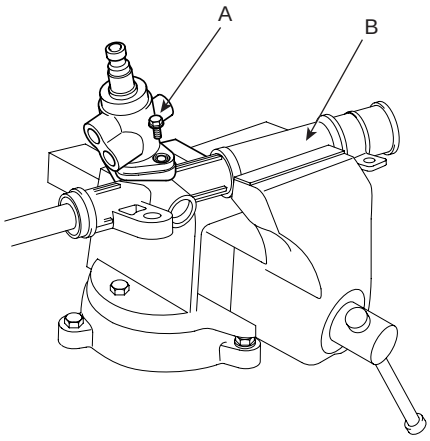

APHE007F

12. Install the rack support yoke (A), rack supportspring (B), yoke plug (C) and lock nut (D) in the ordershown in the illustration. Apply semi-drying sealantto the threaded section of the yoke plug before installation.

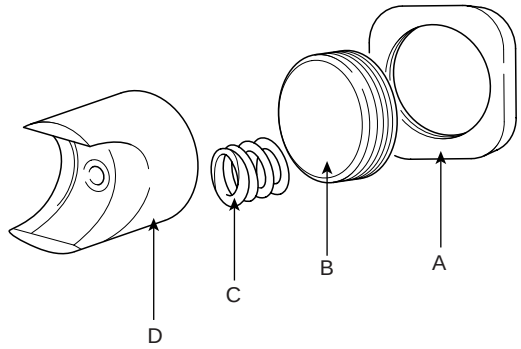

APJF005L

13. With the rack placed in the center position, attach the yoke plug to the rack housing. Tighten the yoke plug to 12 Nm (120 kg·cm, 8.9 lb·ft), with a 14mm socket (A). Loosen the yoke plug approximately from 30° to 60° and tighten the yoke nut to the specified torque.

Tightening Torque Nm(kgf·m, lb-ft) :
50 ~ 70(5 ~ 7, 37 ~ 52)

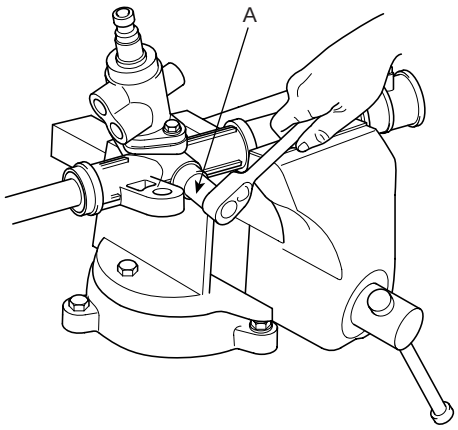

APHE007I

14. Tighten the feed tube (A) to the specified torque and install the mounting rubber using adhesive.

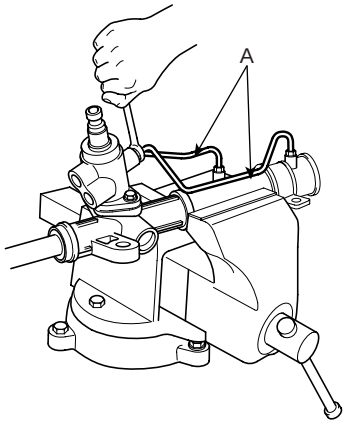

APHE006H

15. Apply the specified grease to the bellows mounting position (fitting groove) of the tie rod.

Recommended grease : Silicone grease

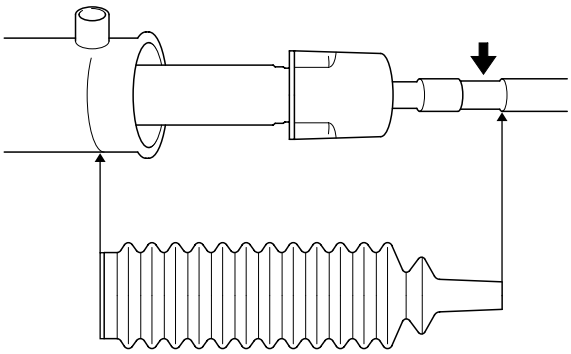

APGE008C

16. Install the new attaching band to the bellows.

NOTE

When the bellows are installed, a new band must be used.

17. Install the bellows in position, taking care not to twist it.

18. Fill the dust cover inner side and lip with the specified grease, and fix the dust cover in position with the clipring attached in the groove of the tie rod end.

Recommended grease A : POLY LUB GLY 801K or equivalent B : SHOWA SUNLIGHT MB2 or equivalent Dust cover inner side and lip : THREE BOND

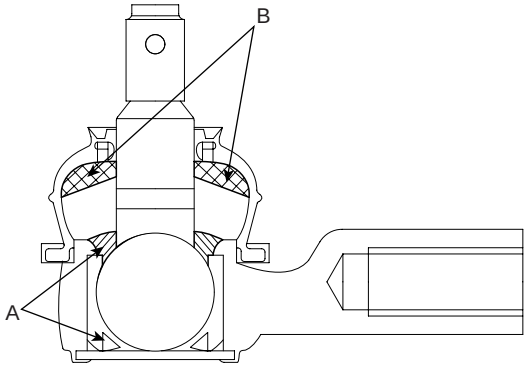

EPKE043A

19. Install the tie rod end (B) to the tie rod (A).

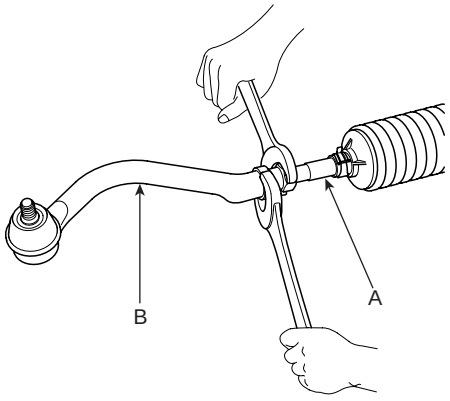

KPBF202A

INSTALLATION ECBE4BC2

1. Installation is the reverse of removal.

NOTE

Be sure to connect between a tube and a hose as shown in the illustration.

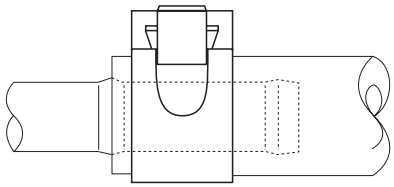

LPLG500J

2. Add the power steering oil.
3. After installation, bleed the power steering system. (Refer to the air bleeding in ST group)
4. Adjust the wheel alignment. (Refer to SS group)

POWER STEERING HOSES

COMPONENTS E332082E

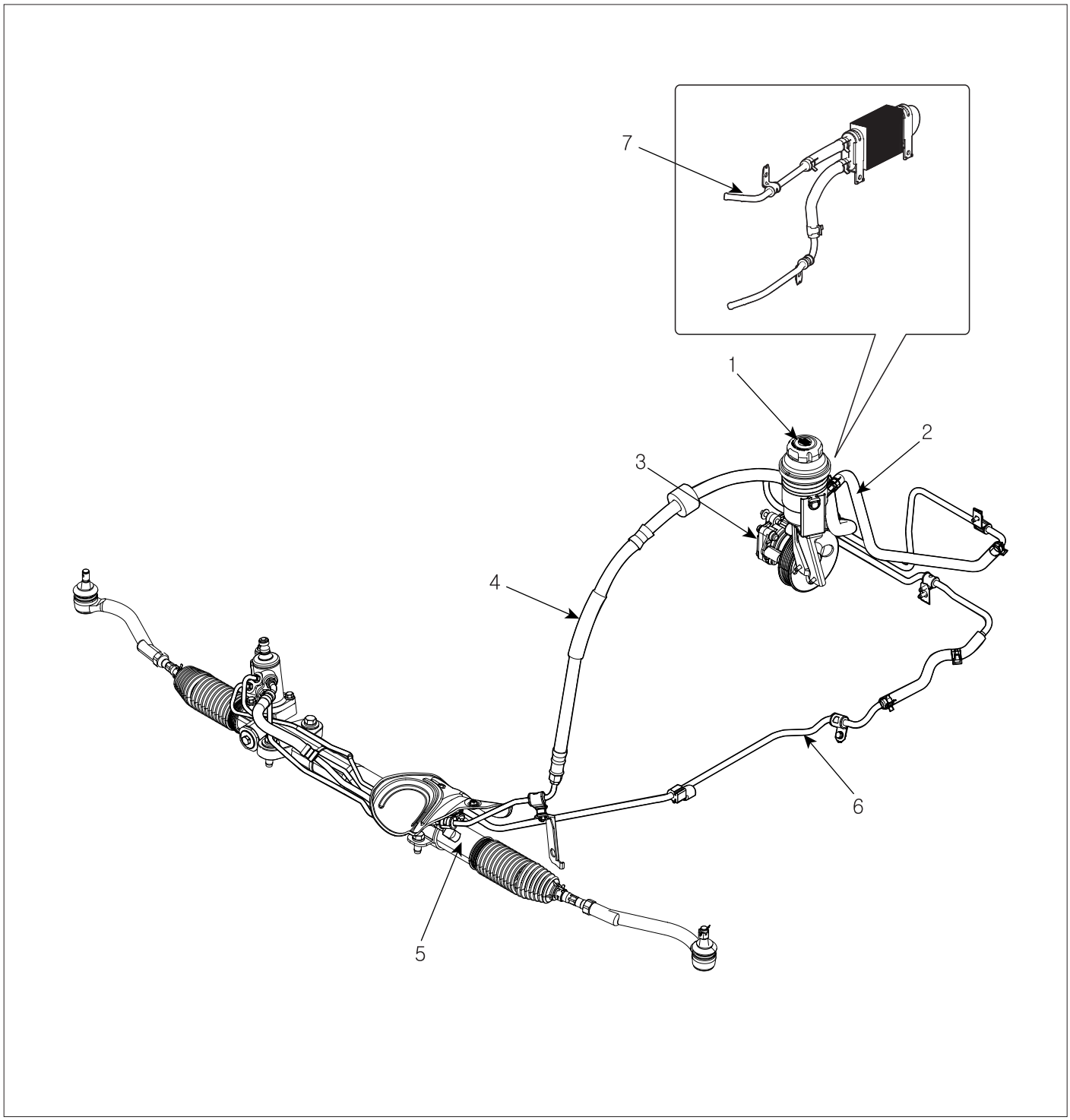

1. Power steering oil reservior
2. Suction hose
3. Power steering oil pump
4. Pressure tube
5. Power steering geat box
6. Return tube
7. Oil cooler (Gasoline only)

SCMST6511L

REMOVAL E8F174D6

1. Drain the power steering fluid by disconnecting return hose (A).

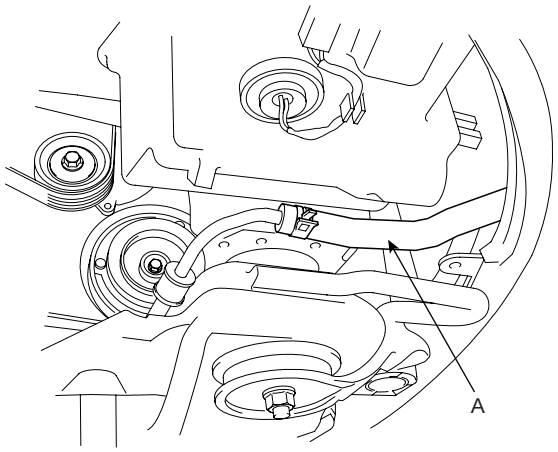

SCMST6521D

2. Disconnect the pressure tube (A) and suction hose (B) from the power steering oil pump.

Tightening torque Nm (kgf.m, lb-ft):
55 ~ 65 (4.5 ~ 5.5, 40 ~ 47)

[DIESEL]

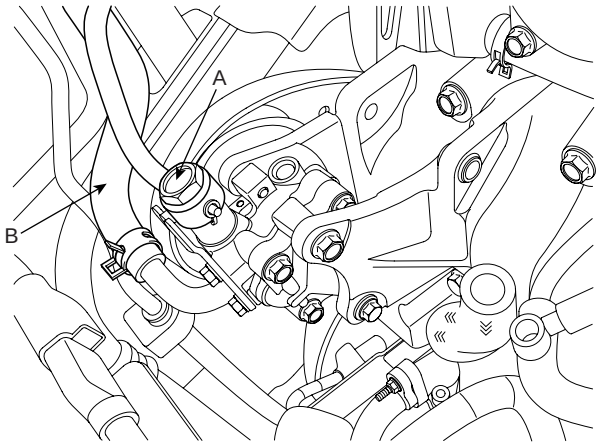

SCMST6538D

[GASOLINE]

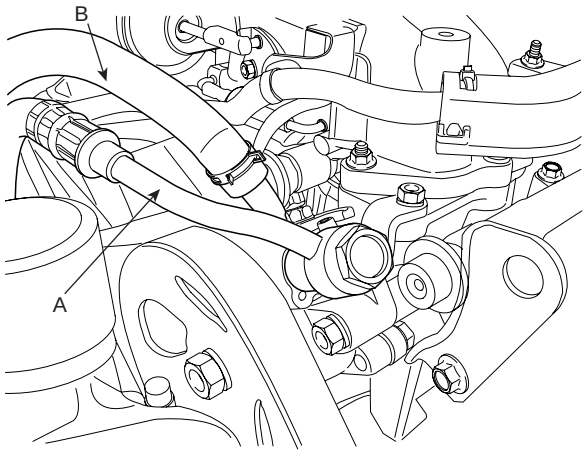

SCMST6504L

3. Disconnect the pressure tube (A) and return tube (B) from the valve body housing.

Tightening torque Nm (kgf.m, lb-ft):
12 ~ 18 (1.2 ~ 1.8, 9 ~ 13)

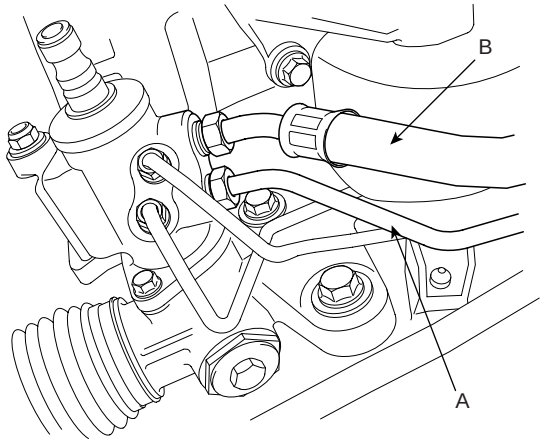

SCMST6527D

4. Loosen the pressure and return tube bracket bolts and nut.

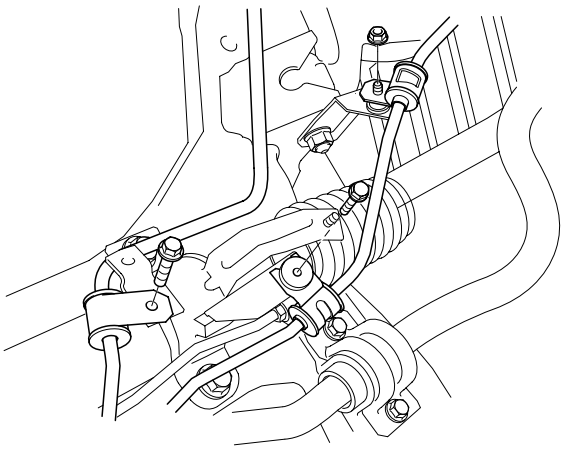

SCMST6528D

5. Remove the return tube bracket bolts.

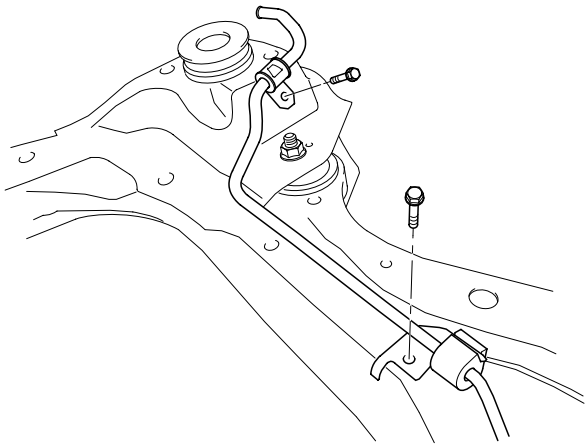

SCMST6531D

6. Remove the front bumper and then loosen the cooler tube bracket bolts.

[DIESEL]

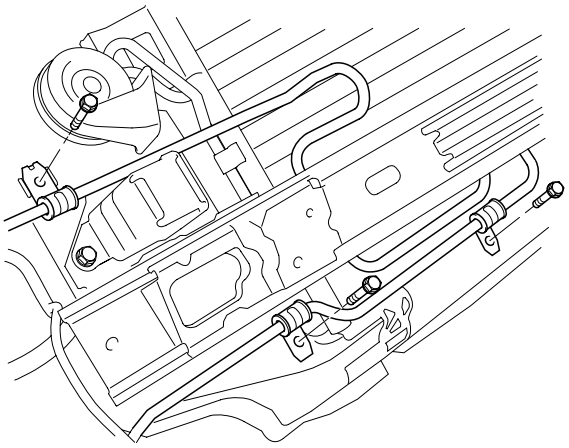

SCMST6505L

[GASOLINE]

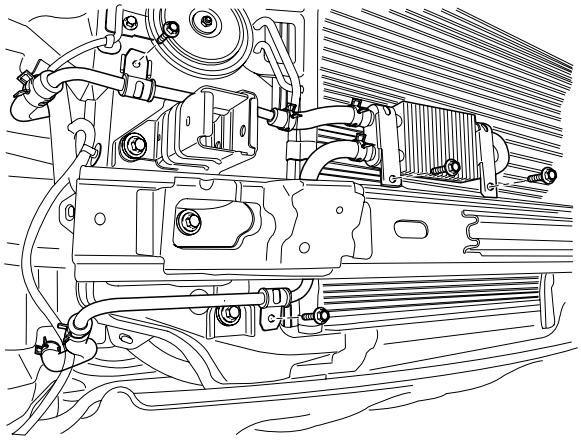

SCMST6512L

7. Remove the power steering hose tubes.

INSTALLATION E6EEDC80

1. Installation is the reverse of removal.

NOTE

Be sure to connect between a tube and a hose as shown in the illustration.

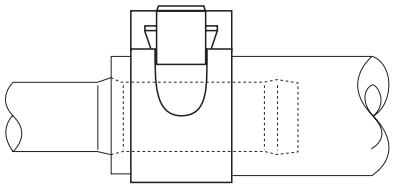

LPLG500J

CAUTION

The pressure tube does not twist and come in contact with other components.

2. Add the power steering oil.

3. After installation, bleed the power steering system. (Refer to air bleeding in ST group)

POWER STEERING OIL PUMP

COMPONENTS E5FCB3BF

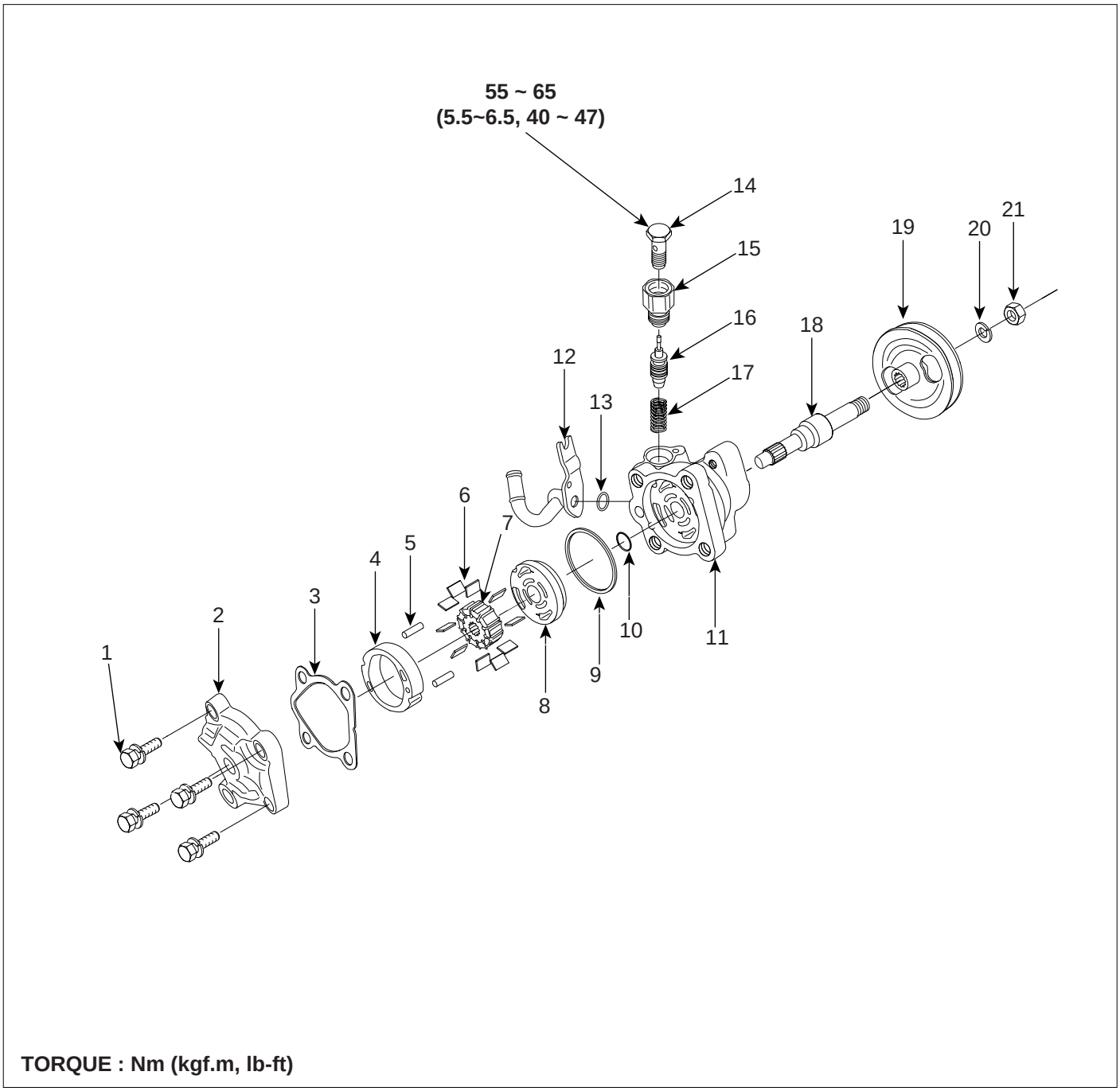

1. Bolt
2. Oil pump cover assembly
3. Gasket
4. Cam ring
5. Lock pin
6. Vane
7. Rotor
8. Side plate
9. O-ring(Inner)
10. O-ring(Outer)
11. Front housing
12. Suction pipe
13. O-ring
14. Bolt
15. Connector
16. Flow control valve
17. Flow control spring
18. Shaft
19. Pulley
20. Washer
21. Nut

LPLG500U

REMOVAL EA4F3A9F

1. Remove the intercooler assembly. (Diesel only, refer to EM group)

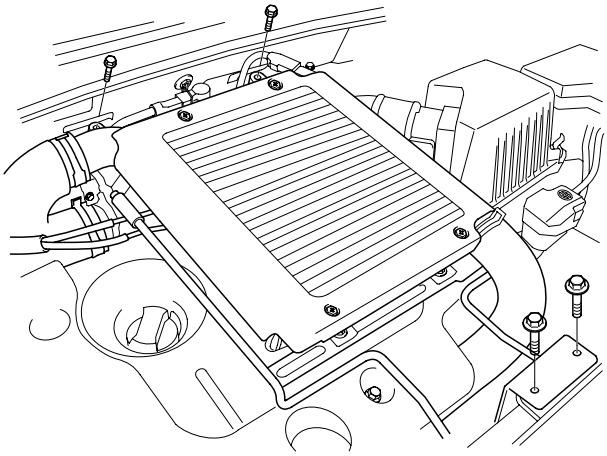

SCMST6506L

2. Remove the drive belt.
3. Remove the alternator. (Diesel only, refer to EE group)
4. Disconnect the oil pressure switch.
5. Disconnect the pressure tube (A) and suction hose (B) from the power steering pump assembly.

Tightening torque Nm (kgf-m, lb-ft):
55 ~ 65 (5.5 ~ 6.5, 40 ~ 47)

[DIESEL]

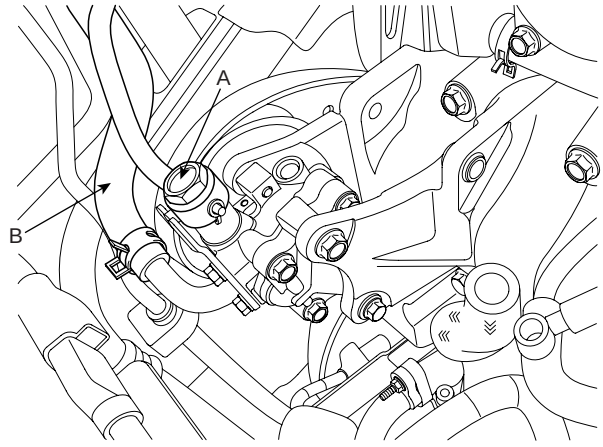

SCMST6538D

[GASOLINE]

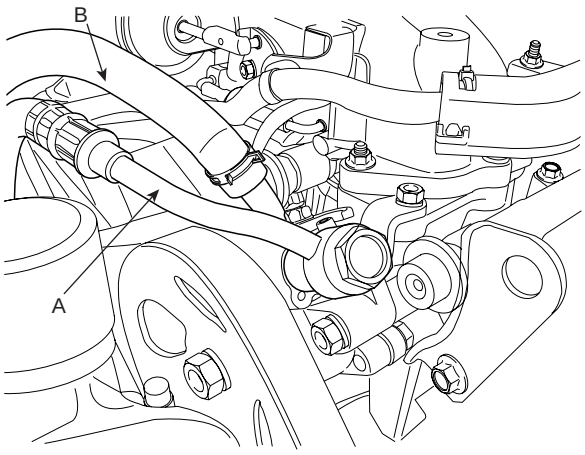

SCMST6504L

6. Loosen the power steering pump mounting bolt and nut, and then remove the power steering pump assembly from the pump bracket.

Tightening torque Nm (kgf-m, lb-ft):
17 ~ 26 (1.7 ~ 2.6, 12 ~ 19)

[DIESEL]

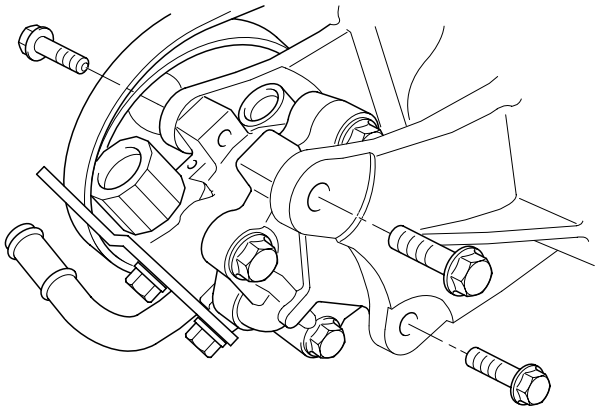

SCMST6532D

[GASOLINE]

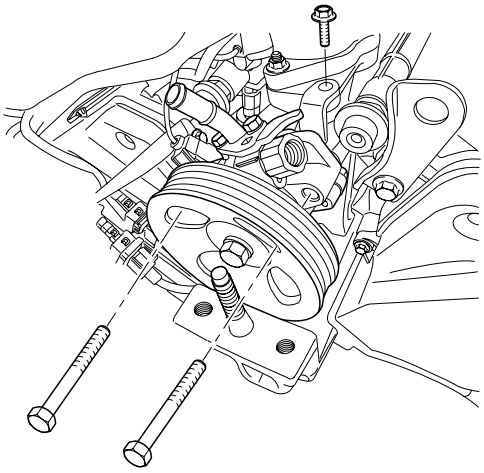

SCMST6509L

NOTE

Be careful not to spill the fluid from the power steering oil pump.

DISASSEMBLY E32DF37D

1. Remove two bolts from the oil pump body (A), and then remove the suction pipe (B) and O-ring.

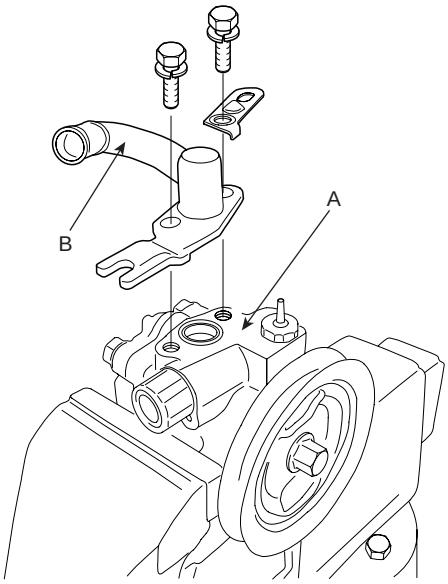

EPNG004A

2. Loosen the four bolts and remove the oil pump cover assembly (A) and the gasket.

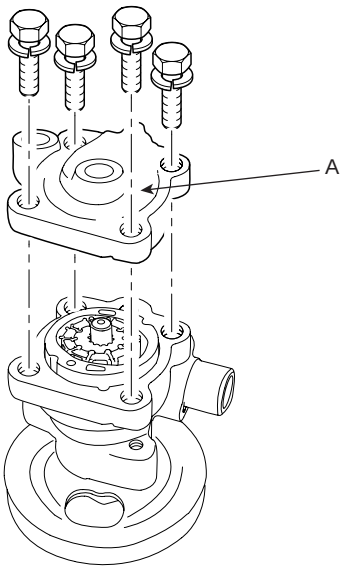

EPNG005A

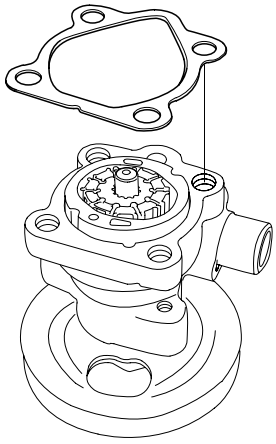

EPNG006A

3. Remove the rotor and vanes.

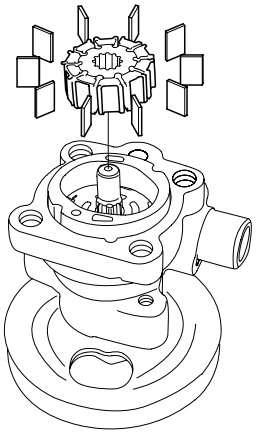

EPNG007A

4. Remove the cam ring.

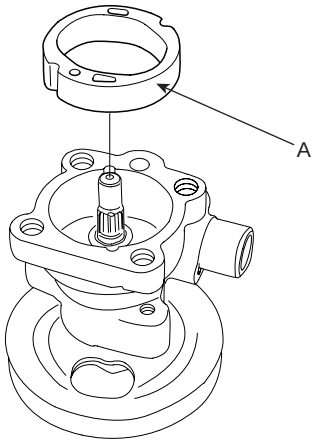

EPNG008A

5. Remove the oil pump side plate (A).

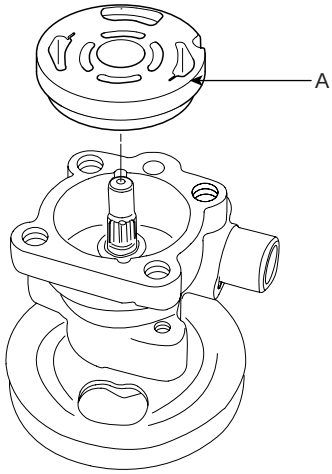

BPKG501E

6. Remove the inner and outer O-ring (A).

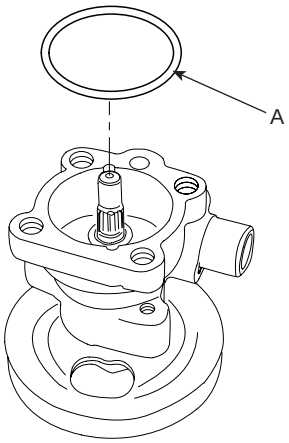

EPNG010A

NOTE

When assembling, use a new gasket and O-ring.

7. Mount the pump in a vise and remove the pulley (A) nut and the spring washer.

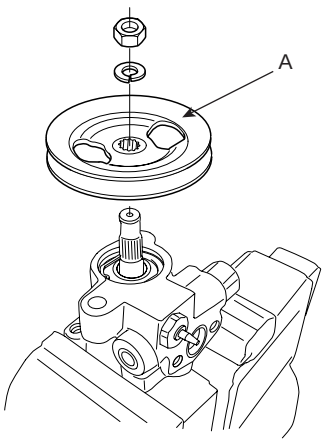

EPNG011A

8. After removing the snap ring (A) of the shaft with snap ring pliers, remove the dust spacer.

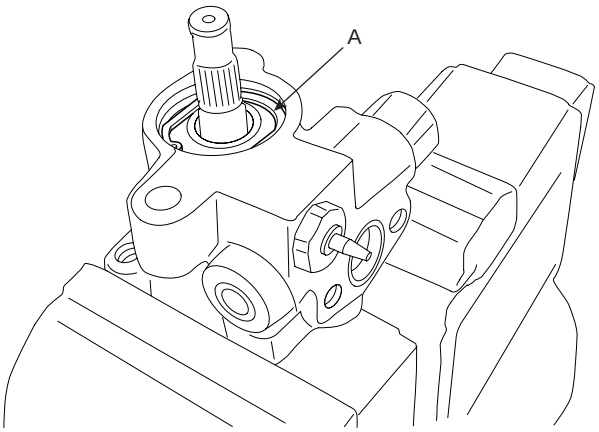

EPNG012A

9. Tap the rotor side of the shaft slightly with a plastic hammer (A) to remove the shaft (B).

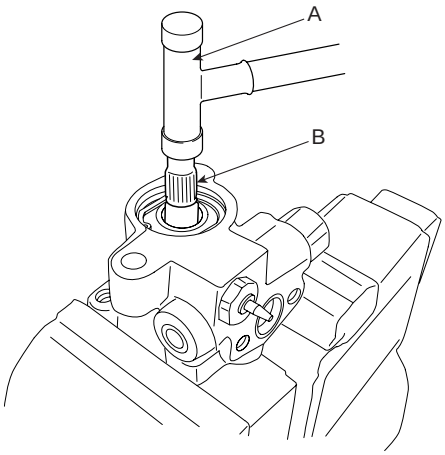

EPNG500Q

10. Remove the oil seal from the oil pump body.

NOTE

When assembling, use a new oil seal.

11. Remove the connector from the oil pump body, and take out the flow control valve (A) and the flow control spring (B).

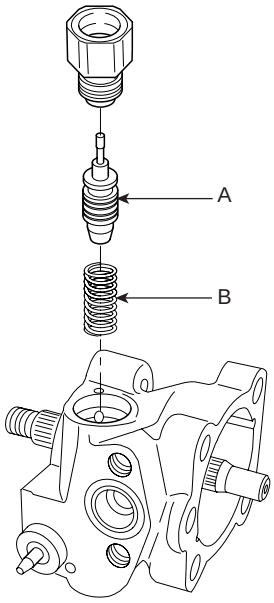

EPNG013A

12. Remove the O-ring from the connector.

CAUTION

Do not disassemble the flow control valve.

INSPECTION EBCD78DF

1. Check that the flow control valve is not bent.
2. Check the shaft for wear and damage.
3. Check the V belt for wear and deterioration.
4. Check the grooves of the rotor and vanes for stratified abrasion.
5. Check the contact surface of the cam ring and vanes for stratified abrasion.
6. Check vanes for damage.
7. Check that there is no striped wear in the side plate or contacting part between the shaft and the pump cover surface.

REASSEMBLY E52DD673

1. Install the flow control spring (B), the flow control valve (A) and the connector into the pump body.

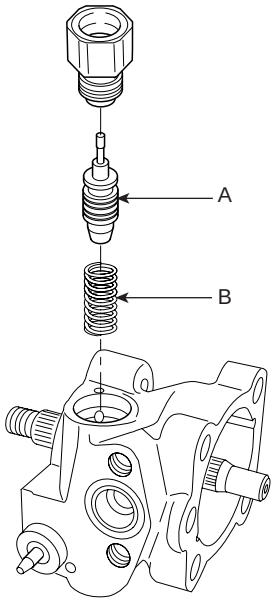

EPNG013A

2. Install the oil seal in the pump body by using the special tool (09222-32100).

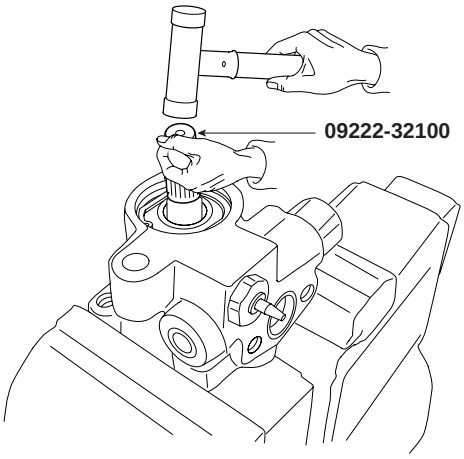

EPNG500R

3. After inserting the shaft assembly into the pump body, install the dust spacer and snap ring (A).

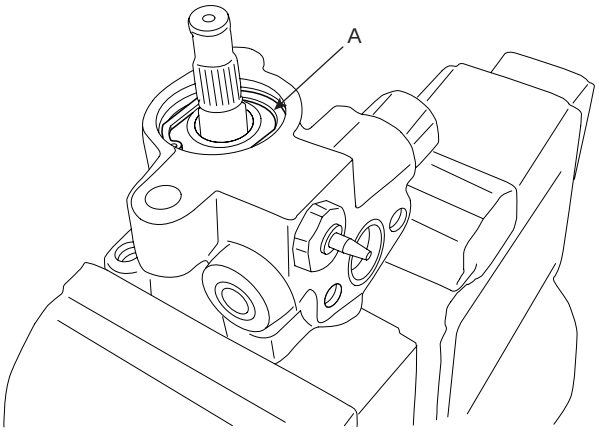

EPNG012A

4. Install the pump pulley(A).

Tightening torque :
55 ~ 69 Nm (5.5 ~ 6.9 kgf·m, 39.8 ~ 49.9 lb-ft)

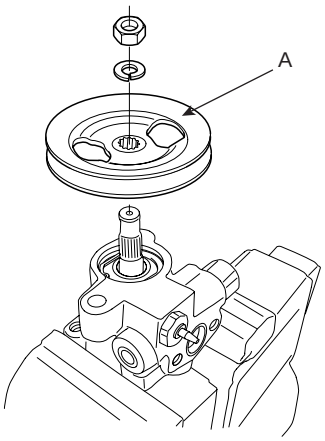

EPNG011A

5. Install the inner O-ring and outer O-ring (A).

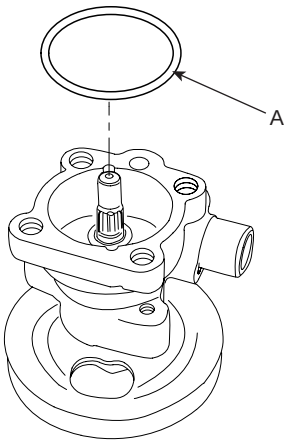

EPNG010A

6. Install the oil pump side plate (A).

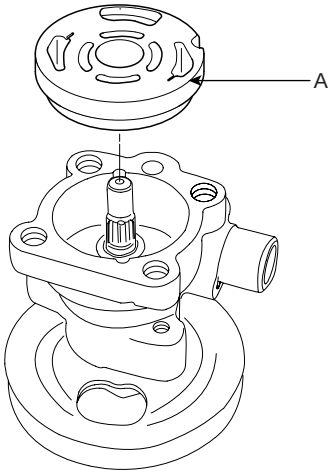

BPKG501E

7. After inserting the lock pin into the groove of the front housing, install the camring (A) attending to the direction.

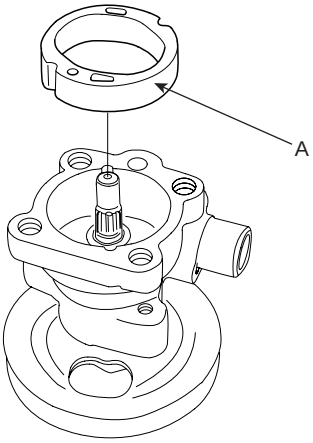

EPNG008A

8. Install the rotor and the vanes.

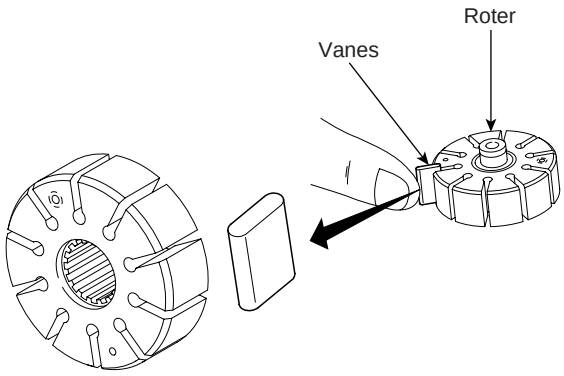

EPRF401D

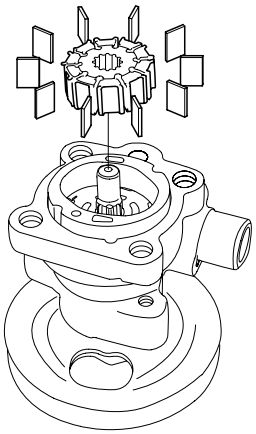

EPNG007A

9. Install the gasket and oil pump cover assembly (A).

Tightening torque Nm (kgf-m, lb-ft):
15.3 ~ 20.2 (1.56 ~ 2.04, 11.3 ~ 14.9)

10. Install the O-ring (A) and the suction pipe mounting bolt.

Tightening torque Nm (kgf-m, lb-ft):
13.6 ~ 18.4 (1.36 ~ 1.84, 9.84 ~ 13.3)

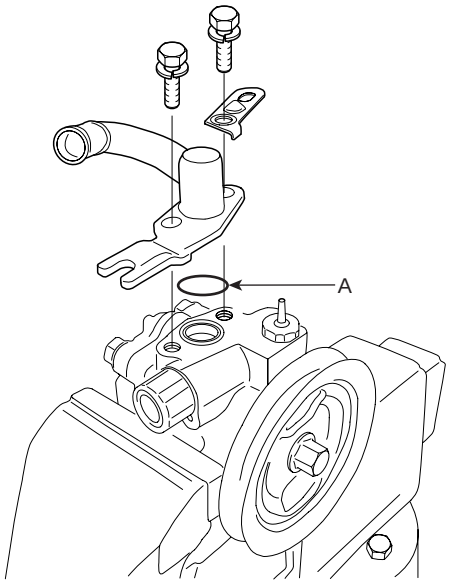

EPNG500S

INSTALLATION EA9BFCE7

1. Installation is the reverse of removal.

NOTE

Be sure to connect between a tube and a hose as shown in the illustration.

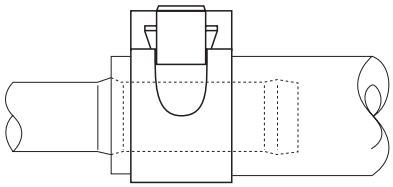

LPLG500J

CAUTION

The pressure tube does not twist and come in contact with other components.

2. Add the power steering fluid.
3. Bleed the power steering system. (Refer to the air bleeding in ST-group)
4. Check the oil pump pressure. (Refer to the oil pump pressure test in ST-group)

Brake System

GENERAL

BRAKE SYSTEM
- BRAKE BOOSTER
- MASTER CYLINDER
- BRAKE LINE
- BRAKE PEDAL
- FRONT DISC BRAKE
- REAR DISC BRAKE

PARKING BRAKE SYSTEM
- PARKING BRAKE

ABS (ANTI-LOCK BRAKE SYSTEM)
- ANTI-LOCK BRAKING SYSTEM CONTROL MODULE
- FRONT WHEEL SPEED SENSOR
- REAR WHEEL SPEED SENSOR

EBD (ELECTRONIC BRAKE-FORCE DISTRIBUTION)

ESP/ESC SYSTEM
- YAW-RATE SENSOR AND G-SENSOR
- ESP/ESC SWITCH
- STEERING WHEEL ANGLE SPEED SENSOR

GENERAL

SPECIFICATIONS E7815AD4

Item		Specification
Master cylinder	Type	Tandem
	Cylinder I.D.	26.99 mm (1.063 in)
	Piston stroke	31 mm (1.22 in)
	Fluid level switch	Provided
Brake booster	Type	9" + 10" Tandem
	Boosting ratio	9: 1
Front brake	Type	Ventilated disc
	Disc O.D.	298 mm (11.73 in)
		325 mm (12.80 in)
	Caliper piston	Double
Rear brake	Type	Solid disc
	Disc O.D.	302 mm (11.89 in)
	Caliper piston	Single
Parking brake	Type	DIH (Drum in hat)
	Drum I.D.	190 mm (7.48 in)
Brake fluid		DOT 3

NOTE

O.D. : Outer Diameter
I.D. : Inner Diameter

SPECIFICATION (ABS)

Part	Item		Standard value	Remark
HECU(Hydraulic and Electronic Control Unit)	System		4 channel 4 sensor (Solenoid)	·ABS system:ABS & EBD control
	Type		Motor, valve relay intergrated type	
	Operating voltage		8 V ~ 16 V(DC)	
	Operating temperature		-40 ~ 120 °C (-40 ~ 248 °F)	
Warning lamp	Operating voltage		12 V	·ABS W/L:ABS failure ·Brake W/L:Parking, brake oil, EBD failure
	Current consumption		80 mA	
Acitve wheel speed sensor	Supply voltage		DC 4.5 ~ 2.0 V	
	Operating temperature		-40 ~ 150 °C	
	Output current low		5.9 ~ 8.4 mA	Typ.7 mA
	Output current High		11.8 ~ 16.8 mA	Typ.14 mA
	Frequency range		1 ~ 2500 HZ	
	Air gap	Front	0.15 ~ 1.5 mm	Typ.0.7 mm
		Rear	0.2 ~ 1.2 mm	Typ.0.7 mm
	Tone wheel		48 teeth	
	Output duty		30~70 %	

SPECIFICATION(VDC)

Part	Item		Standard Value	Remark
HECU(Hydraulic and Electronic Control Unit)	System		4 channel 4 sensor(Solenoid)	·Total control (ABS, EBD, TCS, ESP)
	Type		Motor, valve relay intergrated type	
	Operating voltage		8 V ~ 16 V(DC)	
	Operating temperature		-40 ~ 120 °C(-40 ~ 248 °F)	
Warning lamp	Operating voltage		12 V	·ESP Operating Lamp ·ESP Warning Lamp
	Current consumption		80 mA	
Active wheel speed sensor	Supply voltage		DC 4.5 ~ 20V	
	Operating temperature		-40 ~ 150 °C	
	Output current low		5.9 ~ 8.4 mA	
	Output current high		11.8 ~ 16.8 mA	
	Tone wheel		48 teeth	
	Frequency range		1 ~ 2500 HZ	
	Airgap	Front	0.15 ~ 1.5 mm	Typ. 0.7 mm
		Rear	0.2 ~ 1.2 mm	Typ. 0.7 mm
Steering Wheel Angle Sensor	Operating Voltage		8V ~ 16 V	
	Current Consumption		Max 150 mA	
	Operating Angular velocity		Max ± 780 °/sec	
Yaw-rate & Lateral G sensor	Operating Voltage		8 V ~ 16 V	
	Current Consumption		Max. 120 mA	
	Output Voltage high		4.35 V~ 4.65 V	Typ. 4.5 V
	Output Voltage low		0.35 ~ 0.65 V	Typ. 0.5 V
	Yaw Sensor Operating Range		±100 ° /s	
	G Sensor Operating Range		±1.8 G	
	Reference voltage output		2.464 ~ 2.536 V	Typ. 2.5 V

SERVICE STANDARD

Items	Standard vale
Brake pedal height	214 mm (8.43 in)
Brake pedal stroke	122 mm (4.8 in)
Stop lamp clearance	0.5 ~ 1.0 mm (0.02 ~ 0.04 in)
Brake pedal free play	3 ~ 8 mm (0.12 ~ 0.31 in)
Front brake disc thickness	28 mm (1.10 in)
Front brake disc pad thickness	10.5 mm (0.41 in)
Rear brake disc thickness	11 mm (0.43 in)
Rear brake disc pad thickness	10 mm (0.39 in)

TIGHTENING TORQUE

Items	Nm	kgf.m	lb-ft
Hub nut	88.3 ~ 107.9	9.0 ~ 11.0	65.1 ~ 79.6
Master cylinder to brake booster	7.8 ~ 11.8	0.8 ~ 1.2	5.8 ~ 8.7
Brake booster mounting nuts	12.7 ~ 15.7	1.3 ~ 1.6	9.4 ~ 11.6
Air bleeding screw	6.7 ~ 12.7	0.7 ~ 1.3	5.1 ~ 9.4
Brake tube flare nuts	12.7 ~ 16.7	1.3 ~ 1.7	9.4 ~ 12.3
Front caliper guide rod bolts	21.6 ~ 31.4	2.2 ~ 3.2	15.9 ~ 23.1
Rear caliper guide rod bolts	21.6 ~ 31.4	2.2 ~ 3.2	15.9 ~ 23.1
Front caliper assembly to knuckle	78.5 ~ 98.1	8.0 ~ 10.0	57.9 ~ 72.3
Rear caliper assembly to knuckle	63.7 ~ 73.5	6.5 ~ 7.5	47.0 ~ 54.2
Brake hose to caliper	24.5 ~ 29.4	2.5 ~ 3.0	18.1 ~ 21.7
Brake pedal member bracket bolts	16.7 ~ 25.5	1.7 ~ 2.6	12.3 ~ 18.8
Brake pedal shaft nut	24.5 ~ 34.3	2.5 ~ 3.5	18.1 ~ 25.3
Stop lamp switch lock nut	7.8 ~ 9.8	0.8 ~ 1.0	5.8 ~ 7.2
Wheel speed sensor mounting bolt	6.9 ~ 10.8	0.7 ~ 1.1	5.0 ~ 8.0
HECU bracket bolt	16.7 ~ 25.5	1.7 ~ 2.6	12.3 ~ 18.8
HECU bracket nut	5.9 ~ 9.8	0.6 ~ 1.0	4.3 ~ 7.2
Yaw rate & G sensor mounting bolts	4.9 ~ 7.8	0.5 ~ 0.8	3.6 ~ 5.8

LUBLICANTS EC83FCB5

Items	Recommended	Quantity
Brake pedal bushing and bolt	Chassis grease	As required
Parking brake shoe and backing plate contacting surface	Heat resistance grease	As required
Caliper guide rod and boot	Grease ML 701	0.8 ~ 1.3 g

SPECIAL TOOL E4AE09C6

Tool(Number and Name)	Illustration	Use
09581-11000 Piston expander	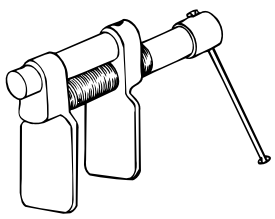 EJDA043A	Spreading the front disc brake piston

TROUBLESHOOTING E2955522

PROBLEM SYMPTOMS TABLE

Use the table below to help you find the cause of the problem. The numbers indicate the priority of the like cause of the problem. Check each part in order. If necessary, replace these parts

Symptom	Suspect Area	Reference
Lower pedal or spongy pedal	1. Brake system (Fluid leaks) 2. Brake system (Air in) 3. Piston seals (Worn or damaged) 4. Rear brake shoe clearance(Out of adjustment) 5. Master cylinder (Inoperative)	repair air·bleed replace adjust replace
Brake drag	1. Brake pedal freeplay (Minimum) 2. Parking brake lever travel (Out of adjustment) 3. Parking brake wire (Sticking) 4. Rear brake shoe clearance(Out of adjustment) 5. Pad or lining (Cracked or distorted) 6. Piston (Stuck) 7. Piston (Frozen) 8. Anchor or Return spring (Inoperative) 9. Booster system (Vacuum leaks) 10. Master cylinder (Inoperative)	adjust adjust repair adjust replace replace replace replace repair replace
Brake pull	1. Piston (Sticking) 2. Pad or lining (Oily) 3. Piston (Frozen) 4. Disc (Scored) 5. Pad or lining (Cracked or distorted)	replace replace replace replace replace
Hard pedal but brake inefficient	1. Brake system (Fluid leaks) 2. Brake system (Air in) 3. Pad or lining (Worn) 4. Pad or lining (Cracked or distorted) 5. Rear brake shoe clearance(Out of adjustment) 6. Pad or lining (Oily) 7. Pad or lining (Glazed) 8. Disc (Scored) 9. Booster system (Vacuum leaks)	repair air·bleed replace replace adjust adjust replace replace repair
Noise from brake	1. Pad or lining (Cracked or distorted) 2. Installation bolt (Loosen) 3. Disc (Scored) 4. Sliding pin (Worn) 5. Pad or lining (Dirty) 6. Pad or lining (Glazed) 7. Anchor or Return spring (Faulty) 8. Brake pad shim (Damage) 9. Shoe hold-down spring (Damage)	replace adjust replace replace clean replace replace replace replace
Brake fades	1. master cylinder	replace

Symptom	Suspect Area	Reference
Brake vibration, pulsation	1. brake booster 2. pedal free play 3. master cylinder 4. caliper 5. master cylinder cap seal 6. damaged brake lines	replace adjust replace replace replace replace
Brake Chatter	Brake chatter is usually caused by loose or worn components, or glazed or burnt linings. Rotors with hard spots can also contribute to brake chatter. Additional causes of chatter are out-of-tolerance rotors, brake lining not securely attached to the shoes, loose wheel bearings and contaminated brake lining.	

BRAKE SYSTEM

OPERATION AND LEAKAGE

CHECK EAD34DE9

CHECK ALL OF THE FOLLOWING ITEMS:

Component	Procedure
Brake Booster (A)	Check brake operation by applying the brakes during a test drive. If the brakes do not work properly, check the brake booster. Replace the brake booster as an assembly if it does not work properly or if there are signs of leakage.
Piston cup and pressure cup inspection (B)	• Check brake operation by applying the brakes. Look for damage or signs of fluid leakage. Replace the master cylinder as an assembly if the pedal does not work properly or if there is damage or signs of fluid leakage. • Check for a difference in brake pedal stroke between quick and slow brake applications. Replace the master cylinder if there is a difference in pedal stroke.
Brake hoses (C)	Look for damage or signs of fluid leakage. Replace the brake hose with a new one if it is damaged or leaking.
Caliper piston seal and piston boots (D)	Check brake operation by applying the brakes. Look for damage or signs of fluid leakage. If the pedal does not work properly, the brakes drag, or there is damage or signs of fluid leakage, disassemble and inspect the brake caliper. Replace the boots and seals with new ones whenever the brake caliper is disassembled.

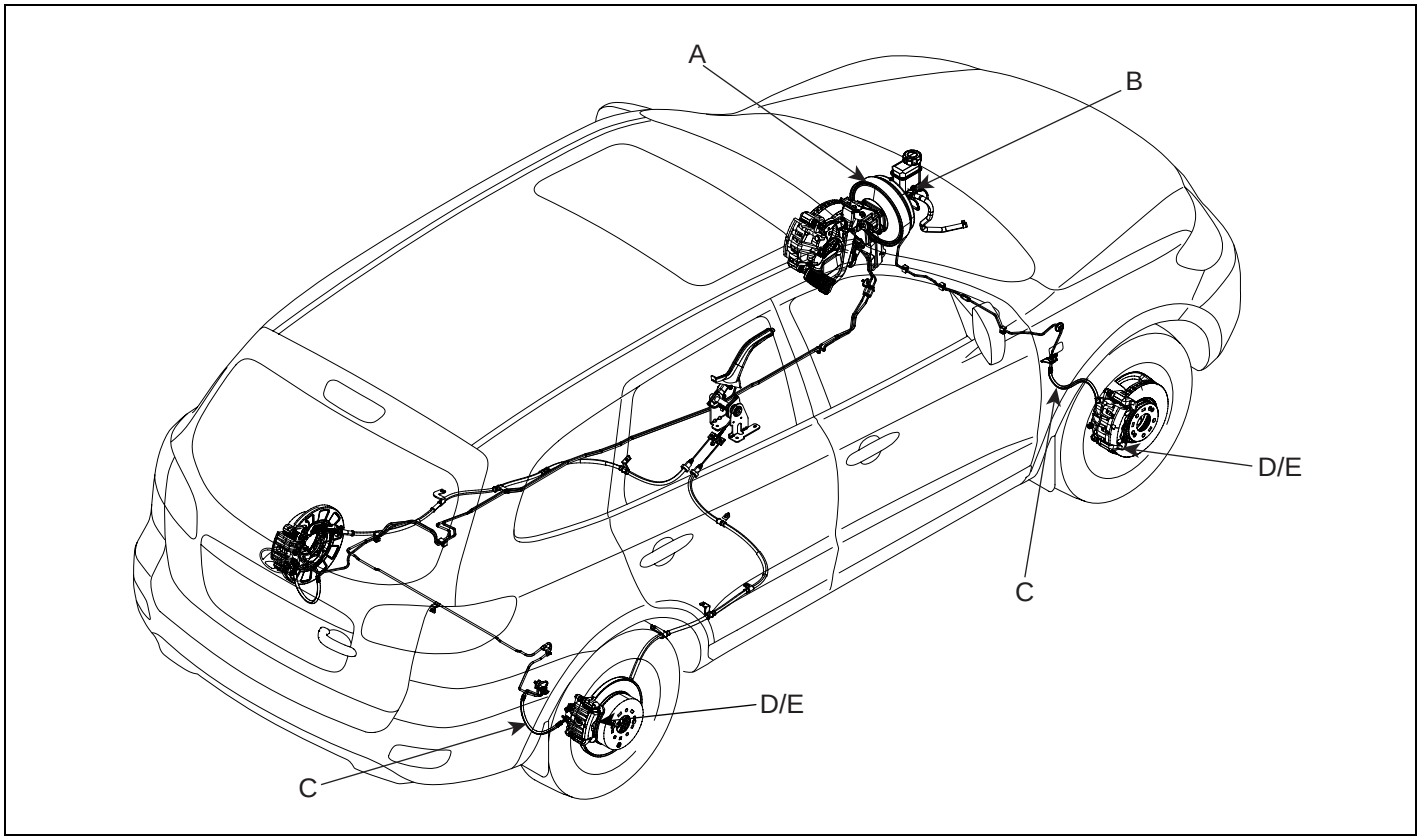

SCMBR6500D

BRAKE SYSTEM BLEEDING

CAUTION

- ***Do not reuse the drained fluid.***
- ***Always use genuine DOT 3 brake Fluid. Using a non-genuine DOT 3 brake fluid can cause corrosion and decrease the life of the system.***
- ***Make sure no dirt of other foreign matter is allowed to contaminate the brake fluid.***
- ***Do not spill brake fluid on the vehicle, it may damage the paint; if brake fluid does contact the paint, wash it off immediately with water.***
- ***The reservoir on the master cylinder must be at the MAX (upper) level mark at the start of bleeding procedure and checked after bleeding each brake caliper. Add fluid as required.***

1. Make sure the brake fluid in the reservoir is at the MAX (upper) level line.
2. Have someone slowly pump the brake pedal several times, and then apply pressure.
3. Loosen the right-rear brake bleed screw (A) to allow air to escape from the system. Then tighten the bleed screw securely.
4. Repeat the procedure for wheel in the sequence shown below unit air bubbles no longer appear in the fluid.
5. Refill the master cylinder reservoir to MAX (upper) level line.

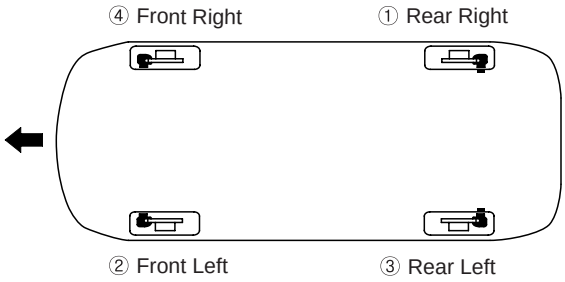

EJKE003B

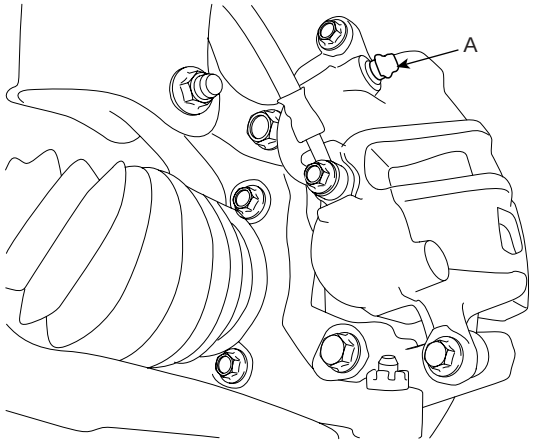

SCMBR6501D

BRAKE BOOSTER

COMPONENTS E7FFE14E

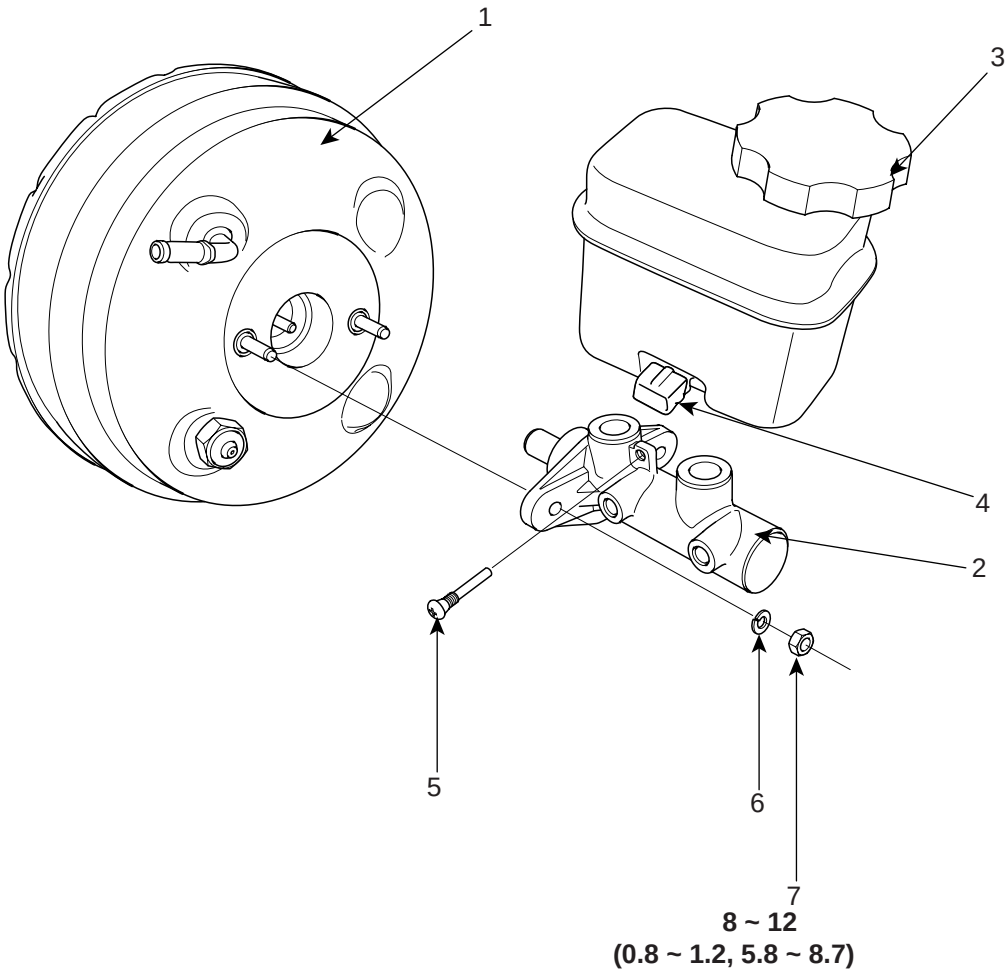

TORQUE : Nm (Kgf.m, lb-ft)

1. Brake booster
2. Master cylinder
3. Reservoir
4. Brake fluid level switch
5. Screw
6. Washer
7. Nut

SCMBR6501L

BRAKE BOOSTER OPERATING TEST EAC92E97

For simple checking of the brake booster operation, carry out the following tests

1. Run the engine for one or two minutes, and then stop it. If the pedal depresses fully the first time but gradually becomes higher when depressed succeeding times, the booster is operating properly, if the pedal height remains unchanged, thebooster is inoperative.

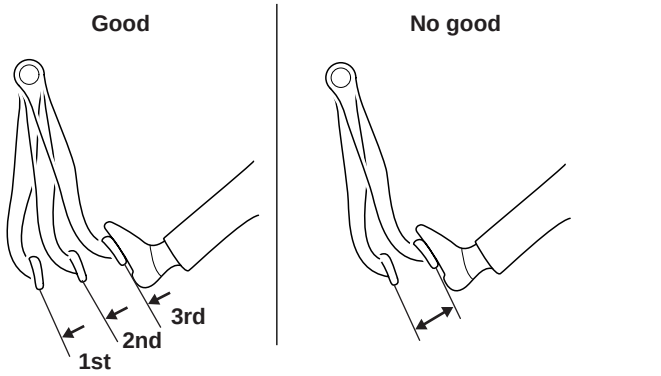

EJRF500B

2. With the engine stopped, step on the brake pedal several times.
   Then step on the brake pedal and start the engine. If the pedal moves downward slightly, the booster is in good condition. If there is no change, the booster is inoperative.

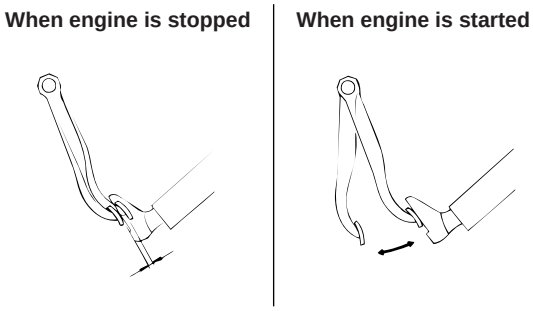

SCMBR6500L

3. With the engine running, step on the brake pedal and then stop the engine.
   Hold the pedal depressed for 30 seconds. If the pedal height does not change, the booster is in good condition, if the pedal rises, the booster is inoperative.
   If the above three tests are okay, the booster performance can be determined as good.
   Even if one of the above three tests is not okay, check the check valve, vacuum hose and booster for malfunction.

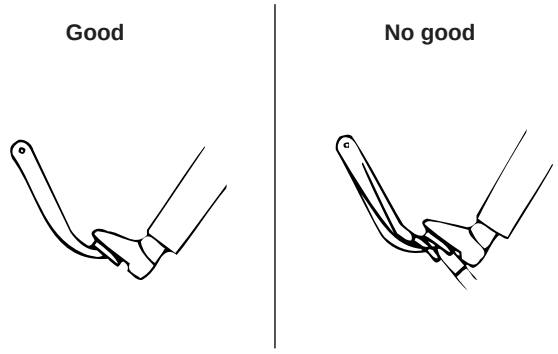

EJRF500C

REMOVAL EAB2C2A3

1. Remove the air cleaner assembly. (LHD only)

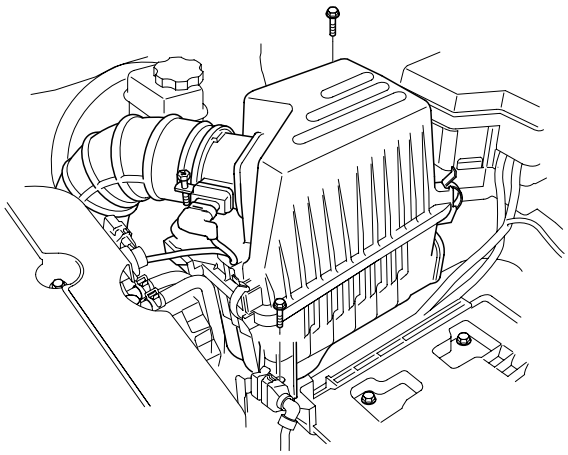

SCMBR6502D

2. Disconnect the vacuum hose (A), vacuum switch connector (B) from the brake booster.

3. Disconnect the brake fluid level switch connector (C) from the reservoir.

[LHD]

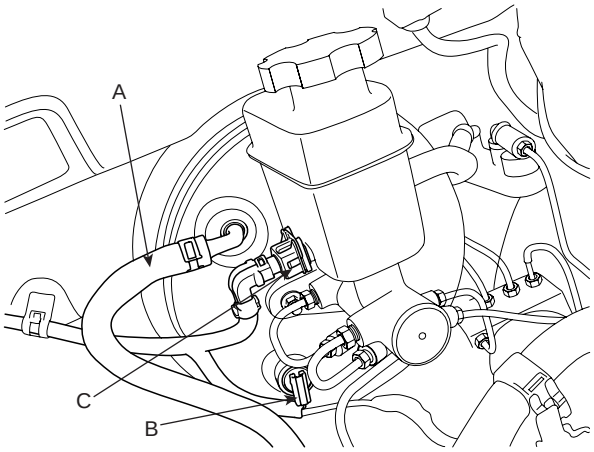

SCMBR6003D

[RHD]

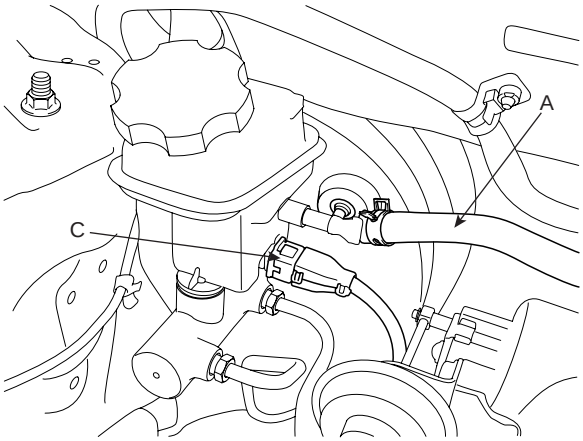

SCMBR6001L

4. Remove the master cylinder. (Refer to Master cylinder)

5. Remove the snap pin (A) and joint pin (B).

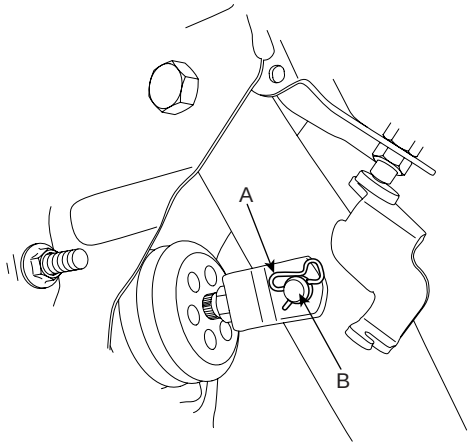

SCMBR6004D

6. Remove the brake booster by loosening the mounting nuts.

Tightening torque Nm (kgf.m, lb-ft):
13 ~ 16 (1.3 ~ 1.6, 9.4 ~ 11.6)

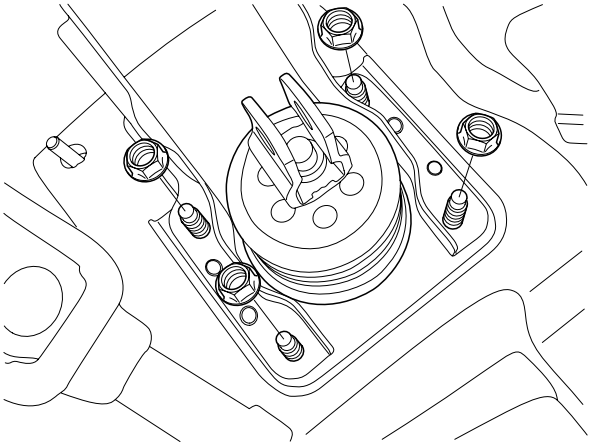

SCMBR6518L

INSPECTION E56ACBAF

1. Inspect the check valve in the vacuum hose.

CAUTION

Do not remove the check valve from the vacuum hose.

2. Check the boot for damage.

INSTALLATION E5250350

1. Installation is the reverse of removal.

CAUTION

- ***Before installing the pin, apply the grease to the joint pin.***
- ***Use a new snap pin whenever installing.***

2. After installing, bleed the brake system. (Refer to Brake system bleeding)

3. Adjust the brake pedal height and free play. (Refer to Brake pedal height and free play adjustment)

MASTER CYLINDER

COMPONENTS E599266A

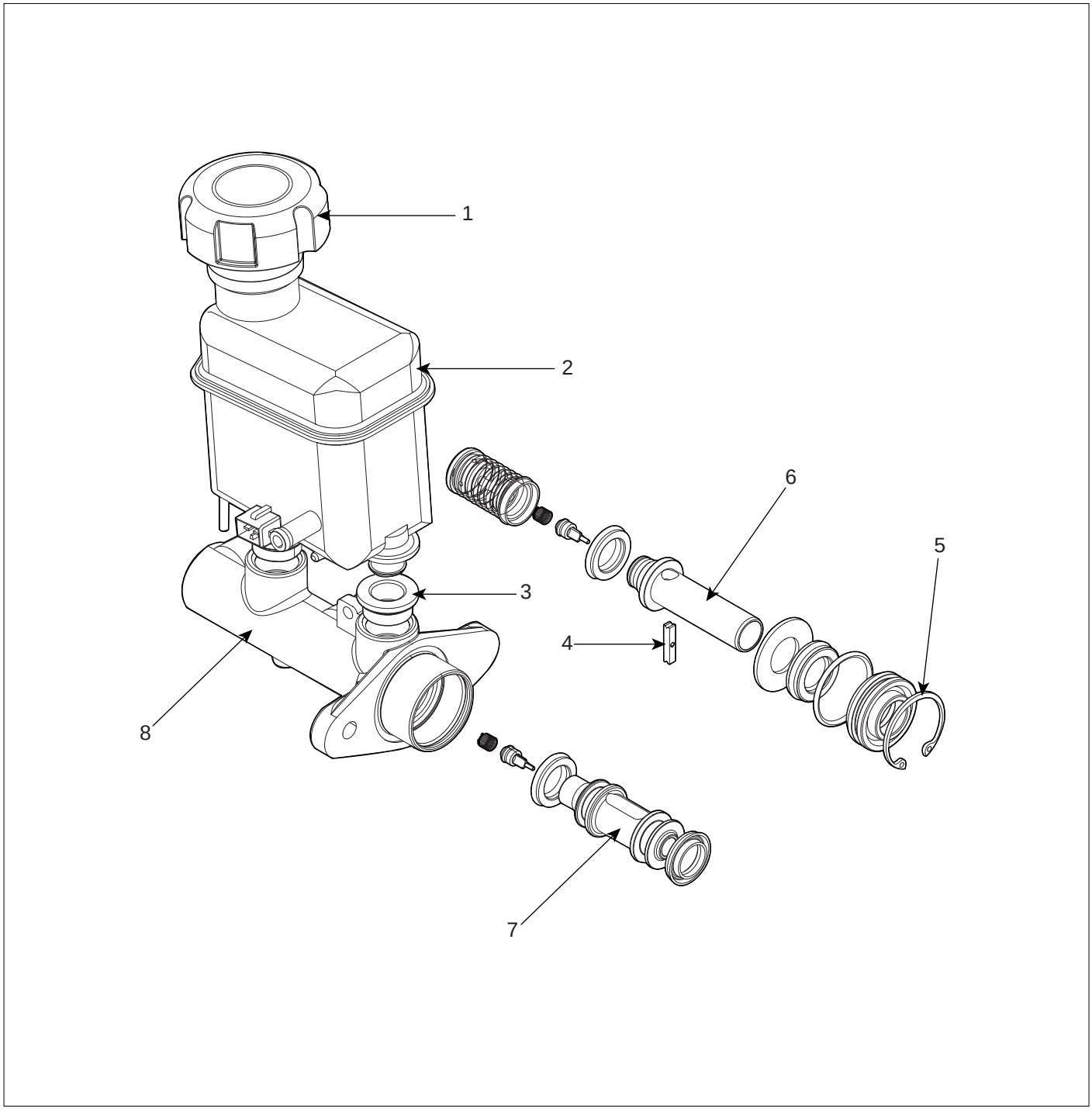

1. Reservoir cap
2. Reservoir
3. Grommet
4. Cylinder pin
5. Retainer
6. Primary piston assembly
7. Secondary piston assembly
8. Master cylinder body

SCMBR6514L

REMOVAL EB7ADF0E

1. Remove the air cleaner assembly. (LHD only)

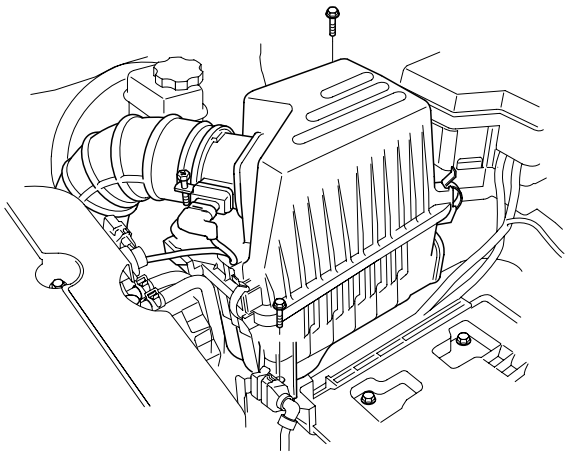

SCMBR6502D

2. Disconnect the brake fluid level switch connector (A) and hose (B) from the reservoir.

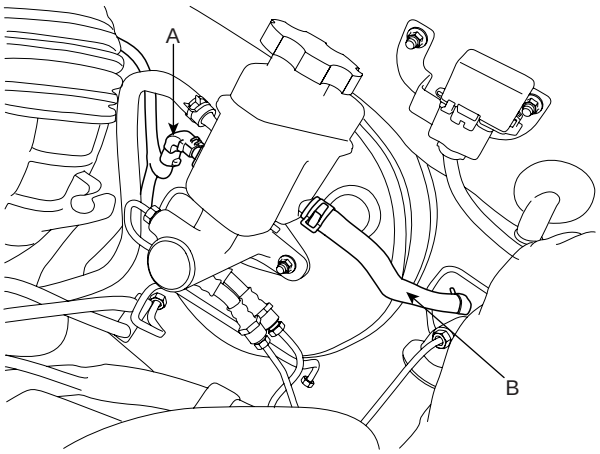

SCMBR6010D

CAUTION

- ***Do not spill brake fluid on the vehicle, it may damage the paint; if brake fluid does contact the paint, wash it off immediately with water.***

3. Disconnect the brake tube from the master cylinder by loosening the tube flare nut (A).

Tightening torque Nm (kgf.m, lb-ft):
12.7 ~ 16.7 (1.3 ~ 1.7, 9.4 ~ 12.3)

4. Remove the master cylinder from the brake booster after loosening the mounting nuts (B).

Tightening torque Nm (kgf.m, lb-ft):
7.8 ~ 11.8 (0.8 ~ 1.2, 5.8 ~ 8.7)

[LHD]

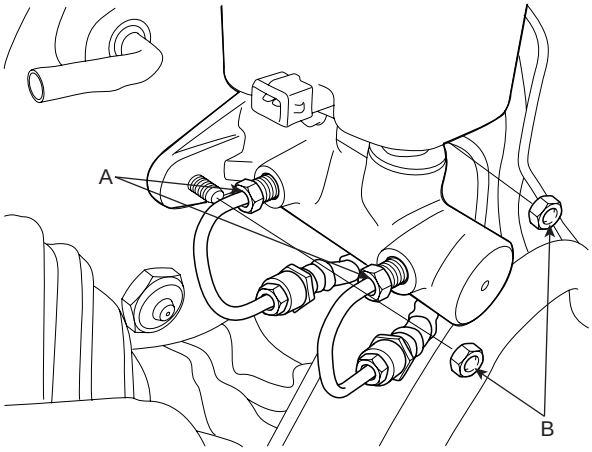

SCMBR6013D

[RHD]

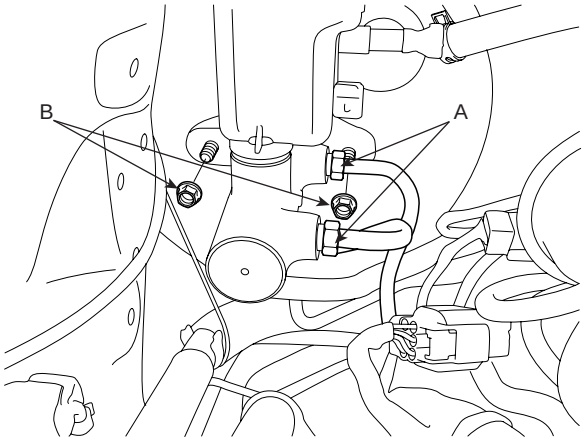

SCMBR6002L

DISASSEMBLY E5FC5E64

1. Remove the reservoir cap and drain the brake fluid into a suitable container.
2. Remove the fluid level sensor.
3. Remove the reservoir from the master cylinder, after remove mounting screw (A).

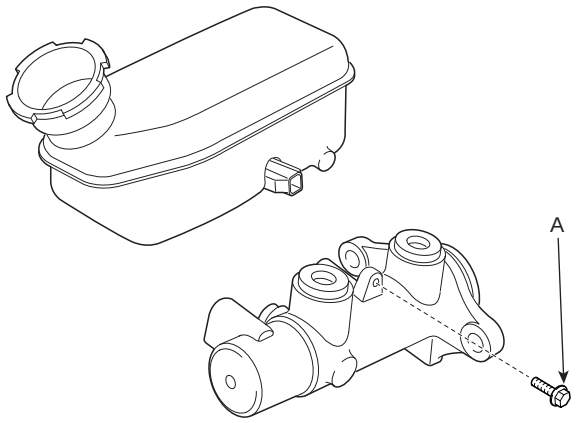

AJKF601T

4. Remove the retainer ring (A) by using the snap ring pliers.

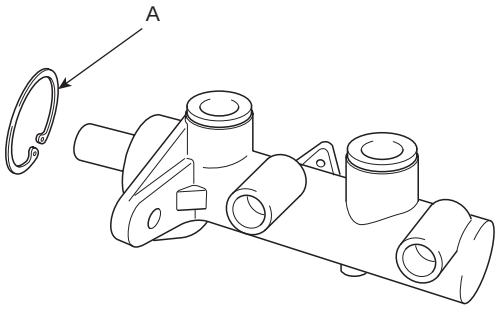

AJKF601U

5. Remove the primary piston assembly (A).
6. Remove the pin (C) with the secondary piston (B) pushed completely using a screwdriver. Remove the secondary piston assembly (B).

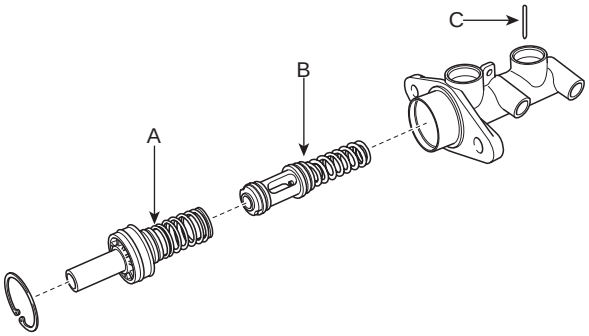

KJBF528A

NOTE

Do not disassemble the primary and secondary piston assembly.

INSPECTION EC789F5E

1. Check the master cylinder bore for rust or scratching.
2. Check the master cylinder for wear or damage. If necessary, clean or replace the cylinder.

CAUTION

- ***If the cylinder bore is damaged, replace the master cylinder assembly.***
- ***Wash the contaminated parts in alcohol.***

REASSEMBLY EF31C9AA

1. Apply genuine brake fluid to the rubber parts of the cylinder kit and grommets.
2. Carefully insert the springs and pistons in the proper direction.
3. Press the piston with a screwdriver (A) and install the cylinder pin (B).

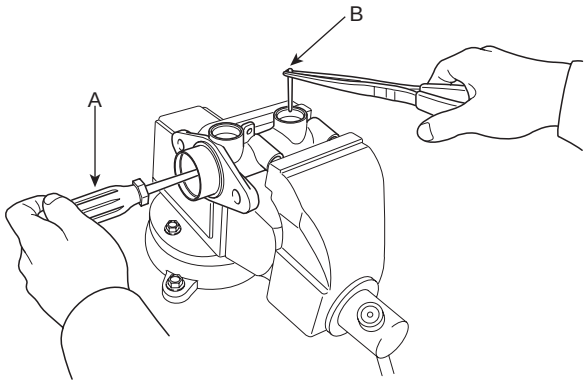

AJKF601W

4. Install the retainer ring (A) after installing primary piston assembly.

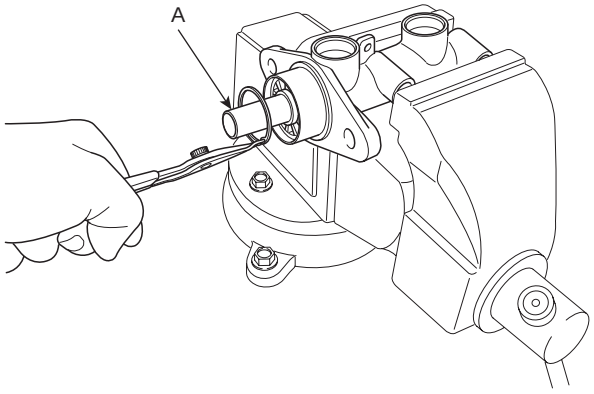

AJKF601X

5. Mount two grommets.
6. Install the reservoir on the cylinder.

INSTALLATION E805C2AD

1. Installation is the reverse of removal.
2. After installation, bleed the brake system. (Refer to Brake system bleeding)

BRAKE LINE

COMPONENTS E68C5CAF

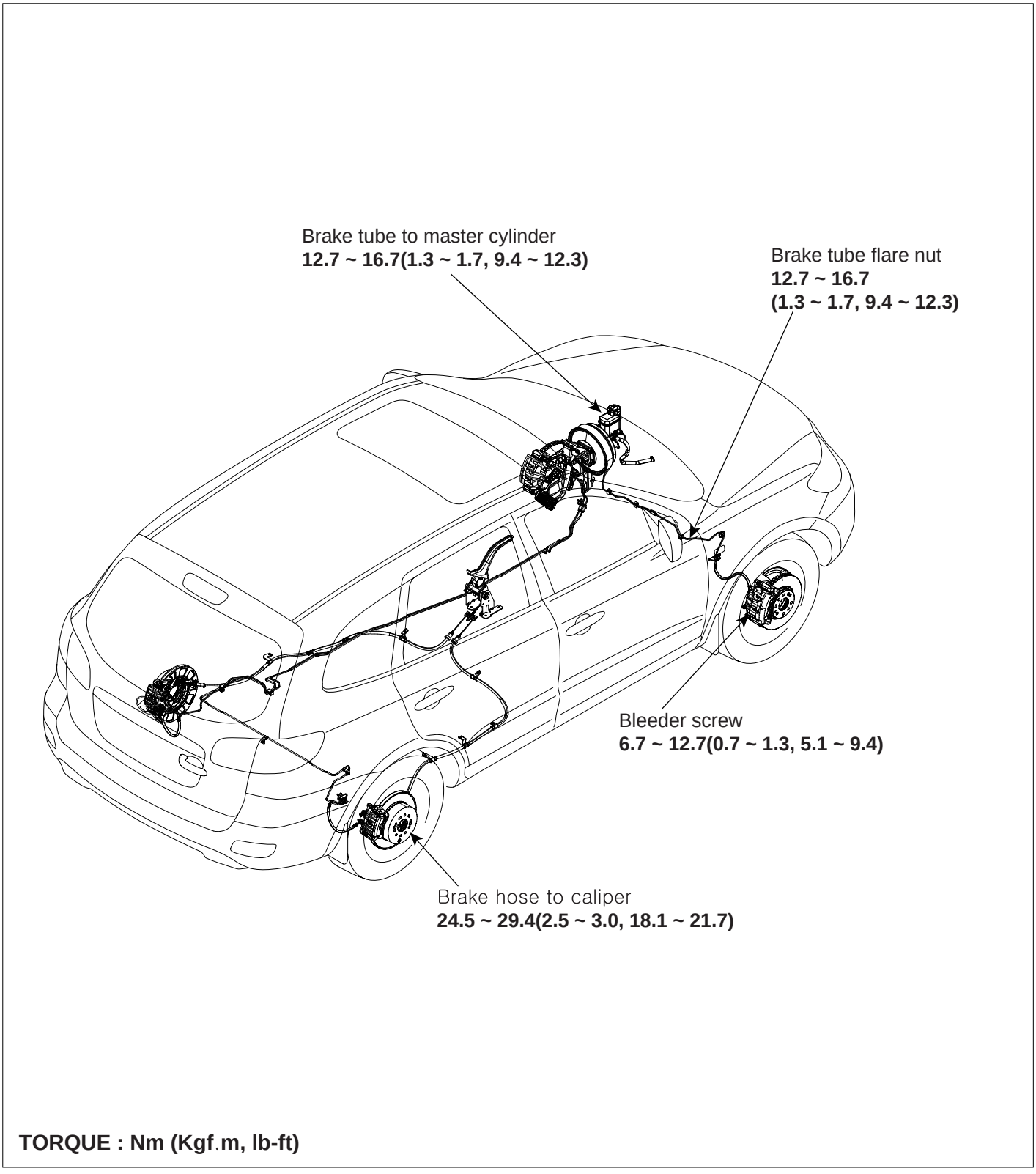

TORQUE : Nm (Kgf.m, lb-ft)

SCMBR6502L

REMOVAL E42B33E0

1. Remove the wheel & tire.
2. Remove the brake hose clip (A).

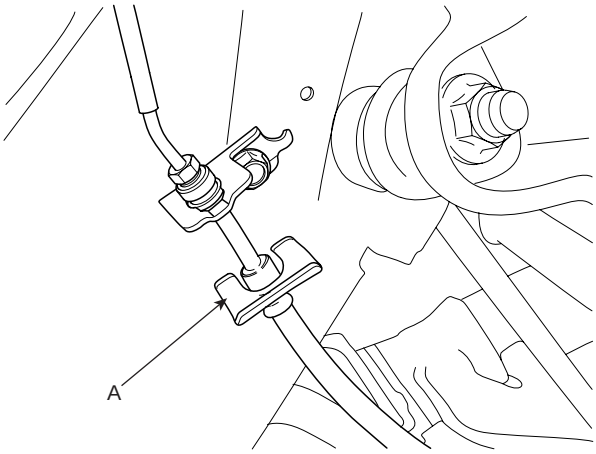

SCMBR6006D

3. Disconnect the brake tube by loosening the tube flare nut (A).

Tightening torque Nm (kgf.m, lb-ft):
12.7 ~ 16.7 (1.3 ~ 1.7, 9.4 ~ 12.3)

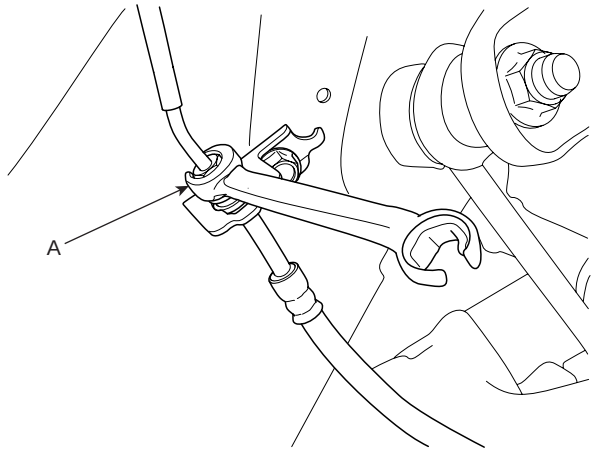

SCMBR6007D

4. Disconnect the brake hose (A) from the brake caliper by loosening the bolt.

Tightening torque Nm (kgf.m, lb-ft):
16.7 ~ 25.5 (1.6 ~ 2.6, 12.3 ~ 18.8)

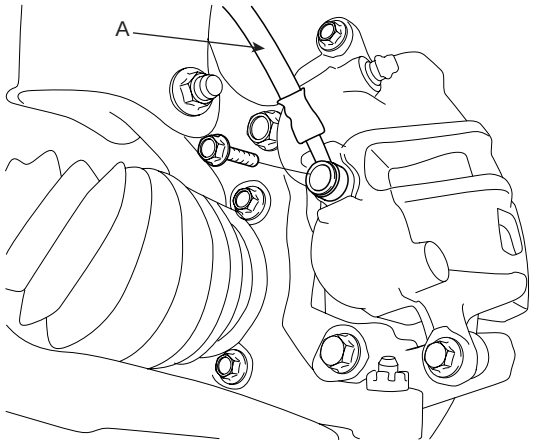

SCMBR6503L

INSPECTION EF20AC0C

1. Check the brake tubes for cracks, crimps and corrosion.
2. Check the brake hoses for cracks, damage and fluid leakage.
3. Check the brake tube flare nuts for damage and fluid leakage.

INSTALLATION EA6DDCBA

1. Installation is the reverse of removal.

CAUTION

Use a new washer (A) whenever installing.

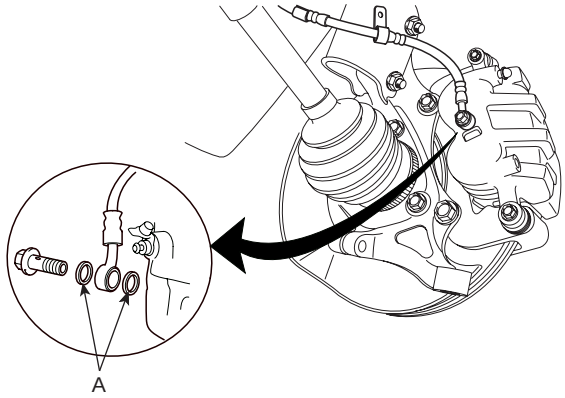

SCMBR6529D

2. After installation, bleed the brake system (Refer to Brake system bleeding)

BRAKE PEDAL

COMPONENTS E7AB27B0

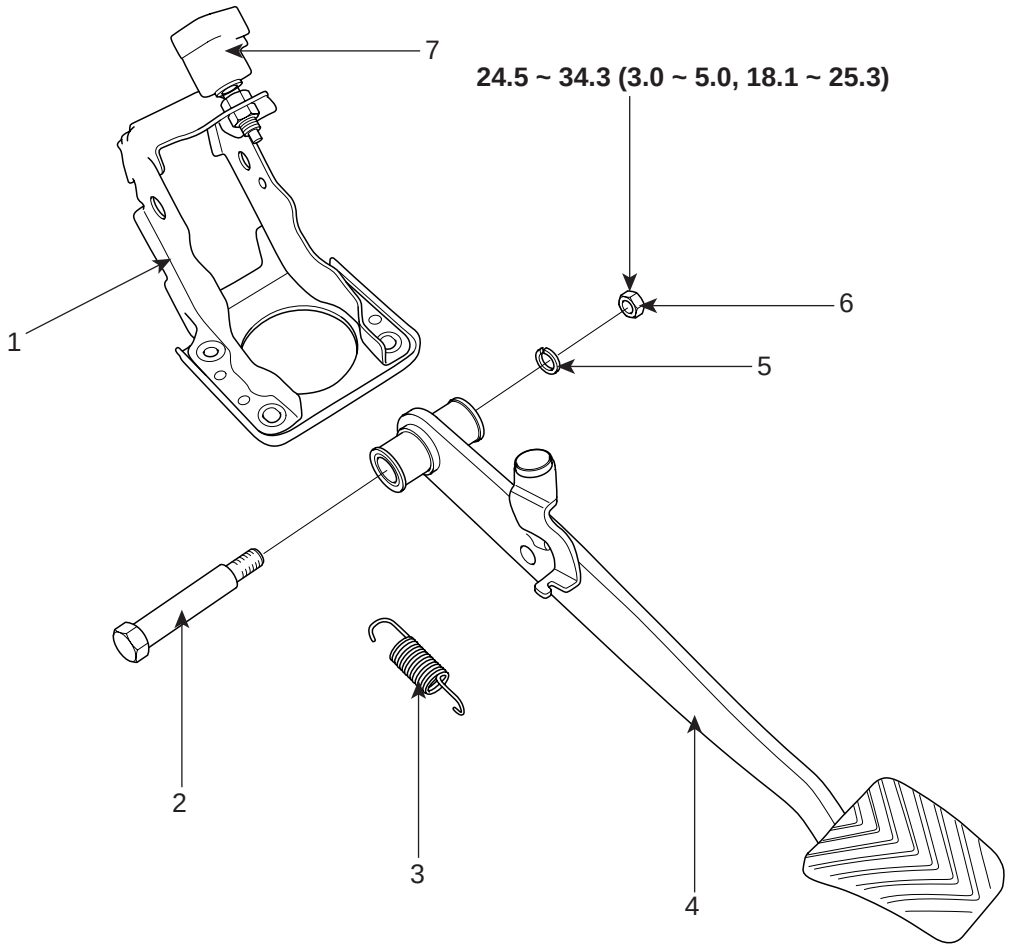

TORQUE : Nm (Kgf.m, lb-ft)

1. Brake pedal member assembly
2. Joint bolt
3. Return spring
4. Brake pedal assembly
5. Washer
6. Nut
7. Stop lamp switch

SCMBR6504L

BRAKE PEDAL HEIGHT AND FREE PLAY ADJUSTMENT EDC2DCA6

1. Disconnect the stop lamp switch (A) connector and loosen the stop lamp switch lock nut.

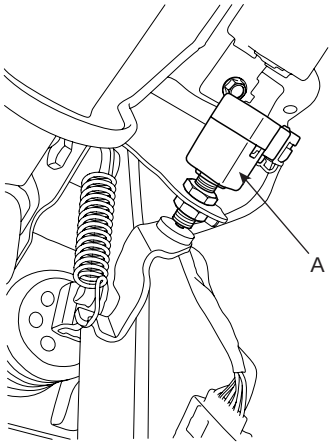

SCMBR6505L

2. Adjust the brake pedal height (A) as illustration below.

Pedal height: 214 mm (8.43 in)

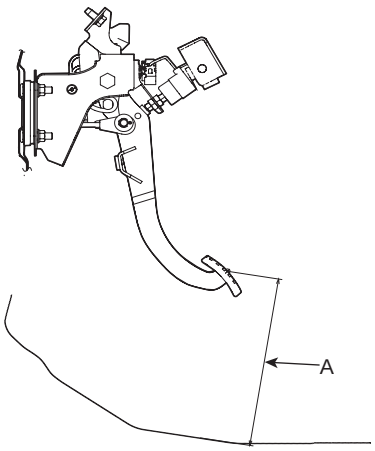

SCMBR6505D

3. Adjust the stop lamp switch clearance and brake pedal free play.

Stop lamp clearance: 0.5 ~ 1.0 mm (0.02 ~ 0.04 in) Pedal free play: 3.0 ~ 8.0 mm (0.12 ~ 0.31)

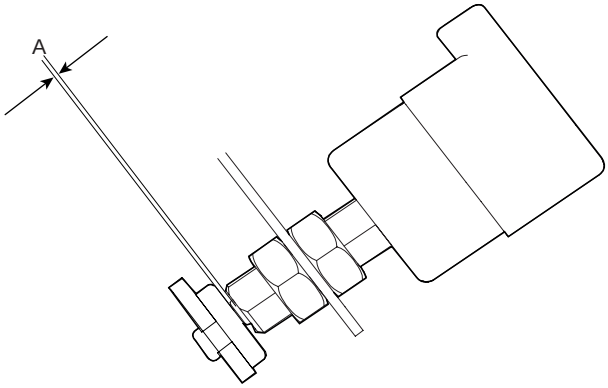

SCMBR6506D

NOTE

Adjust the brake pedal free play using the stop lamp switch lock nut.

REMOVAL EBEEEAD2

1. Remove the lower crash pad.

[LHD]

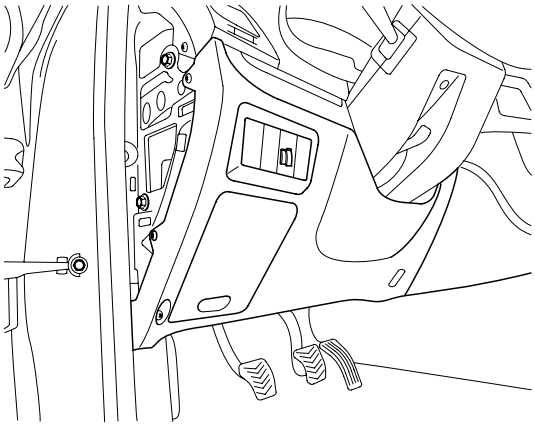

SCMBR6507D

[RHD]

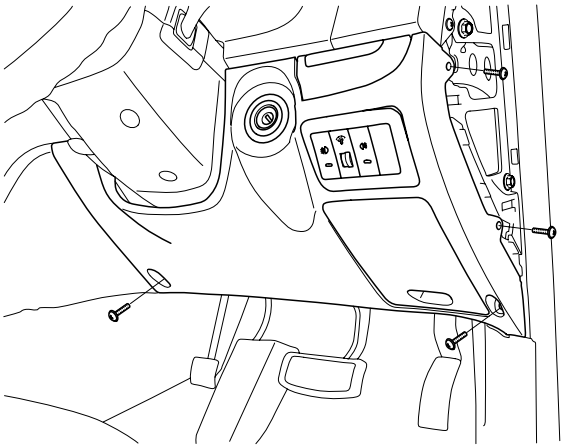

SCMST6001L

2. Disconnect the stop lamp switch (A) connector.

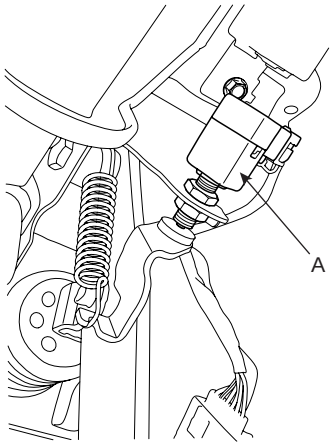

SCMBR6505L

3. Remove the snap pin (A) and joint pin (B).

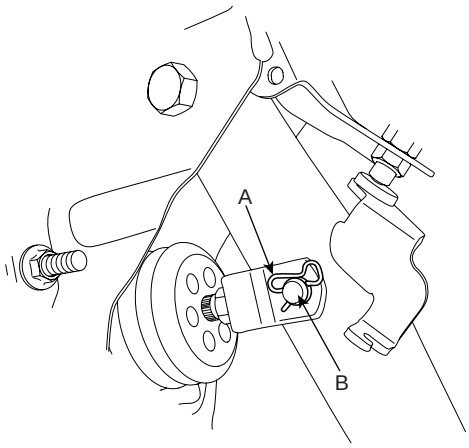

SCMBR6004D

4. Remove the brake pedal by loosen the joint bolt and nut.

Tightening torque Nm (kgf.m, lb-ft):
24.5 ~ 34.3 (2.5 ~ 3.5, 18.1 ~ 25.3)

INSTALLATION ED9EC71E

1. Installation is the reverse of removal.

CAUTION

- ***Before installing the pin, apply the grease to the joint pin.***
- ***Use a new snap pin whenever installing.***

2. Check the brake pedal operation.

FRONT DISC BRAKE

COMPONENTS EAE6F9EB

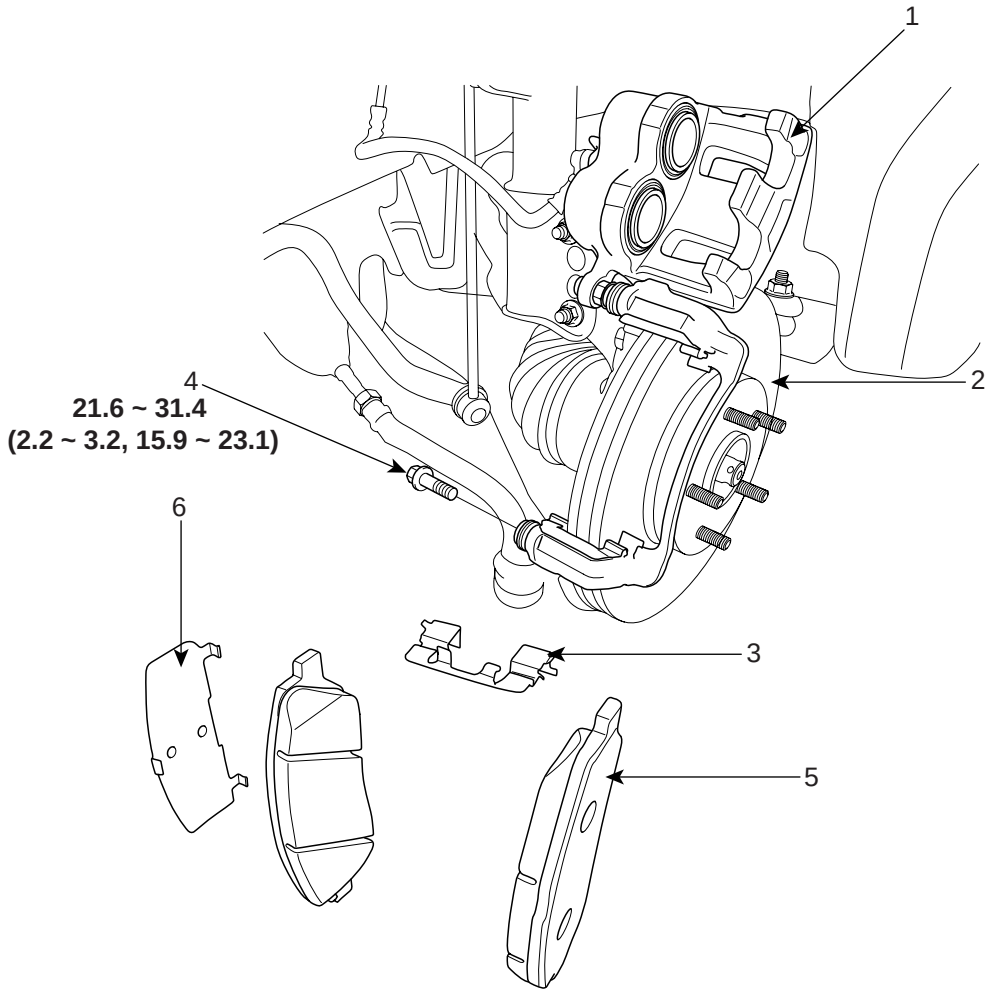

TORQUE : Nm (Kgf.m, lb-ft)

1. Brake caliper assembly
2. Brake disc
3. Pad retainer
4. Guide rod bolt
5. Brake pad
6. Pad shim

SCMBR6507L

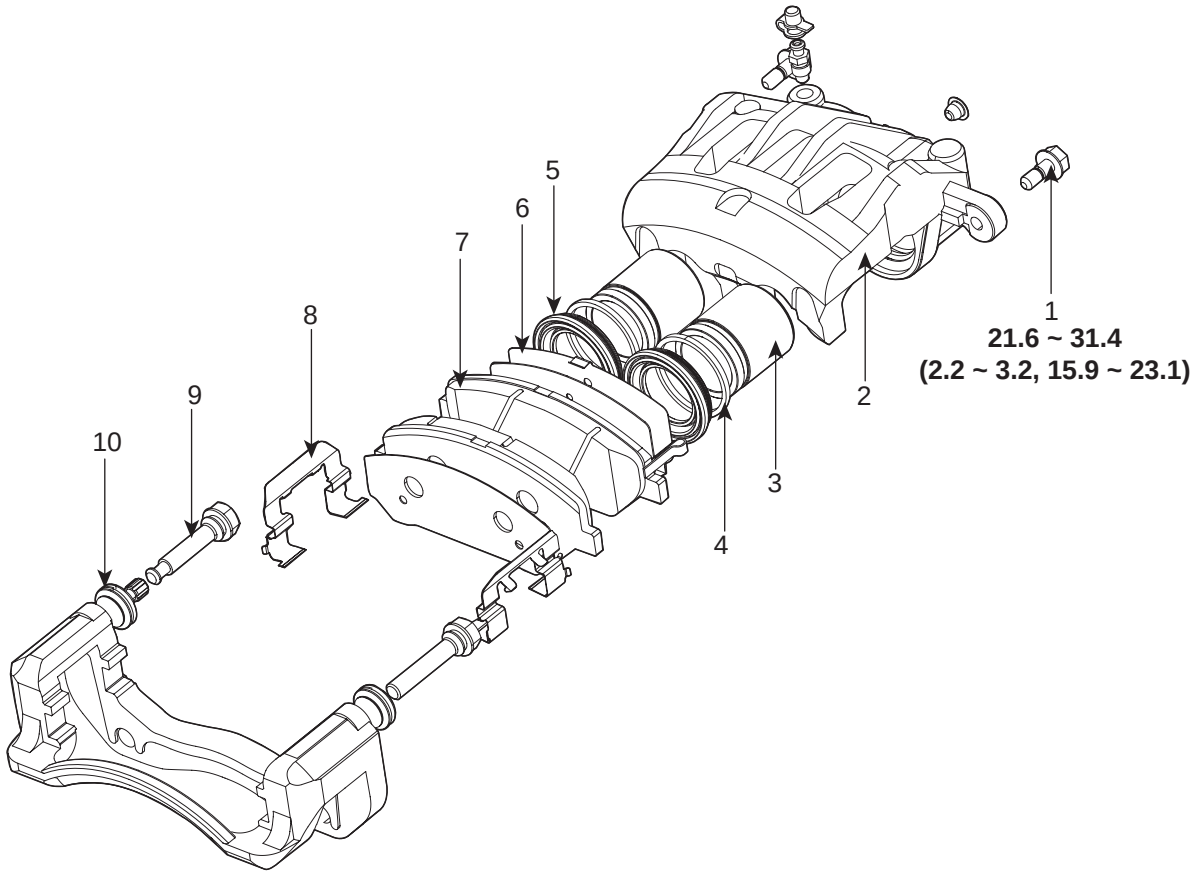

TORQUE : Nm (Kgf.m, lb-ft)

1. Guide rod bolt
2. Caliper body
3. Piston
4. Piston seal
5. Piston boot
6. Pad shim
7. Brake pad
8. Pad retainer
9. Guide rod
10. Boot

SCMBR6508L

REMOVAL EBAEE8FD

1. Remove the front wheel & tire.

Tightening torque Nm (kgf.m, lb-ft):
88.3 ~ 107.9 (9.0 ~ 11.0, 65.1 ~ 79.6)

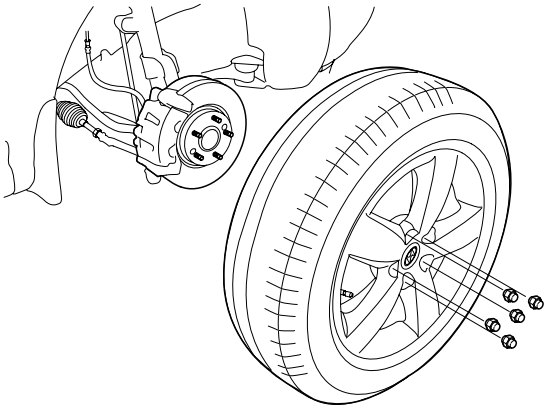

SCMBR6532D

2. Remove the split pin (A) and castle nut (B).

Tightening torque Nm (kgf.m, lb-ft):
200 ~ 260 (20 ~ 26, 145 ~ 188)

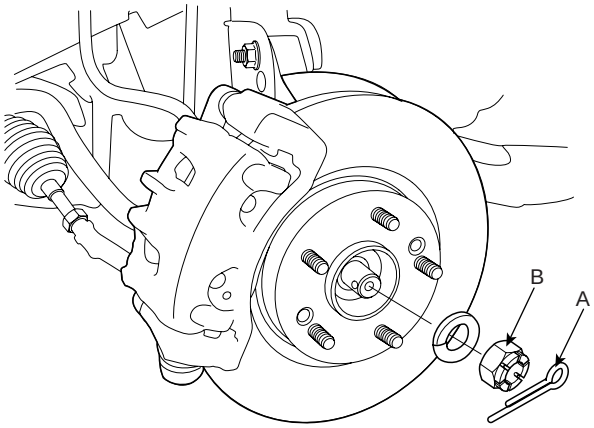

SCMBR6508D

3. Loosen the hose eye-bolt (A) and caliper mounting bolts, then remove the front caliper assembly (B).

Tightening torque Nm (kgf.m, lb-ft):
Brake hose to caliper:
24.5 ~ 29.4 (2.5 ~ 3.0, 18.1 ~ 21.7)
Caliper assembly to knuckle:
78.5 ~ 98.1 (8.0 ~ 10.0, 57.9 ~ 72.3)

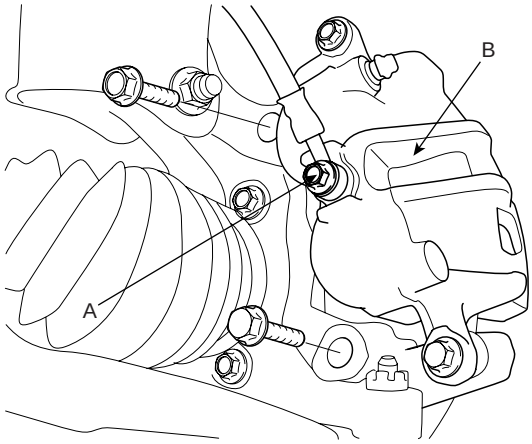

SCMBR6510D

4. Remove the front brake disc by loosening the screws (A).

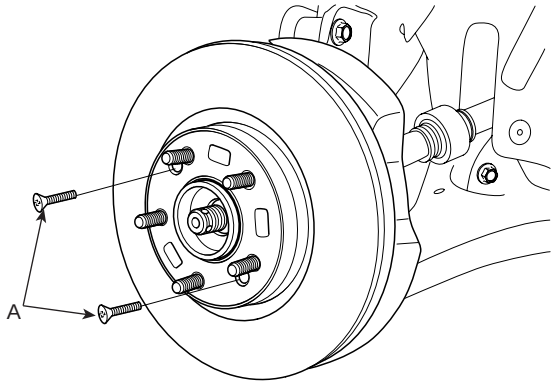

SCMBR6511D

REPLACEMENT E05B87CC

FRONT BRAKE PADS

1. Loosen the guide rod bolt (A) and pivot the caliper (B) up out of the way.

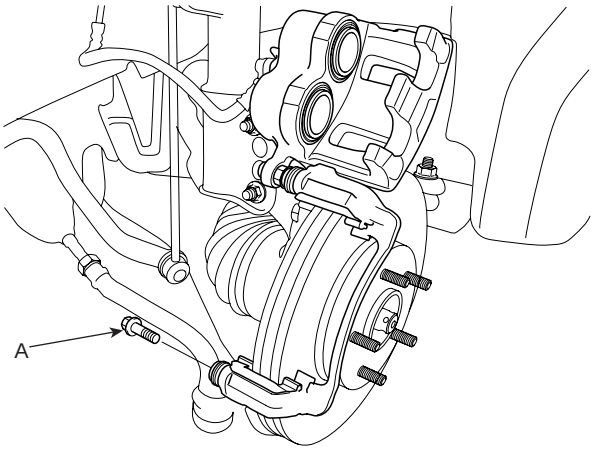

SCMBR6509L

2. Replace shims (A), pad retainers (B), and brake pads (C).

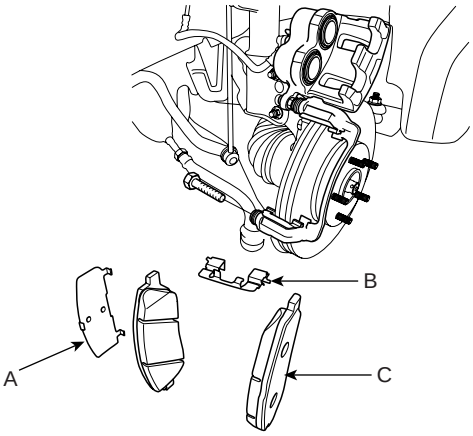

SCMBR6512D

3. Push the piston in the cylinder using a SST (09581-11000)

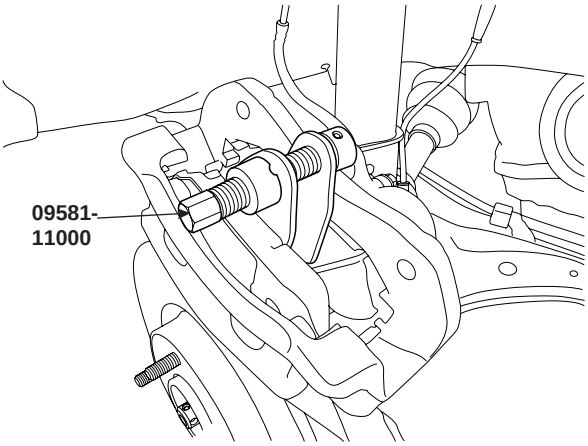

SCMBR6012D

4. Pivot the caliper down and tighten the guide rod bolt.

Tightening torque Nm (kgf.m, lb-ft):
21.6 ~ 31.4 (2.2 ~ 3.2, 15.9 ~ 23.1)

INSPECTION E3C5F70B

1. Check the brake pads for wear and fade.
2. Check the brake disc for damage and cracks.
3. Check the thickness of the brake disc and run-out using a micrometer and a dial gauge on the part dotted line in the illustration below.

Brake disc thickness
Standard: 28 mm (1.10 in)
Service limit: 26 mm (1.02 in)
Deviation: Less than 0.01 mm (0.00039 in)
Run-out
Standard: 0.03 mm (0.00118 in) or less

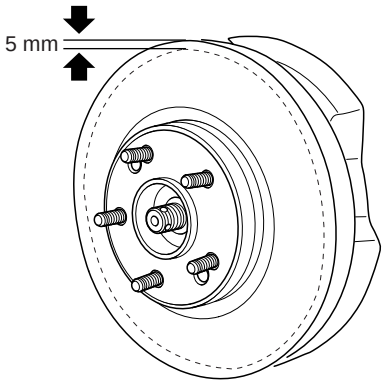

SCMBR6510L

INSTALLATION E87EEEBC

1. Installation is the reverse of removal.
2. Use a SST (09581-11000) when installing the brake caliper assembly.

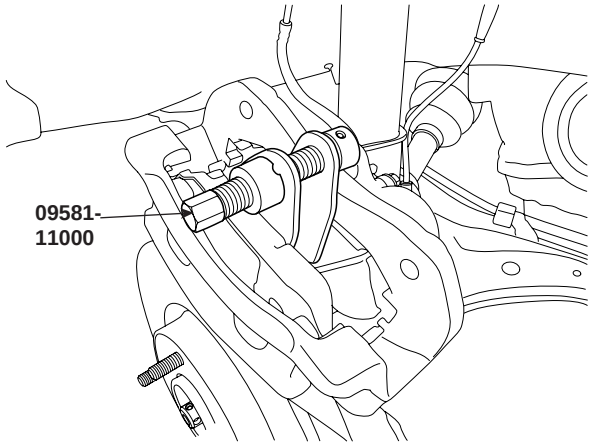

SCMBR6012D

3. After installation, bleed the brake system. (Refer to Brake system bleeding)

REAR DISC BRAKE

COMPONENTS E419477E

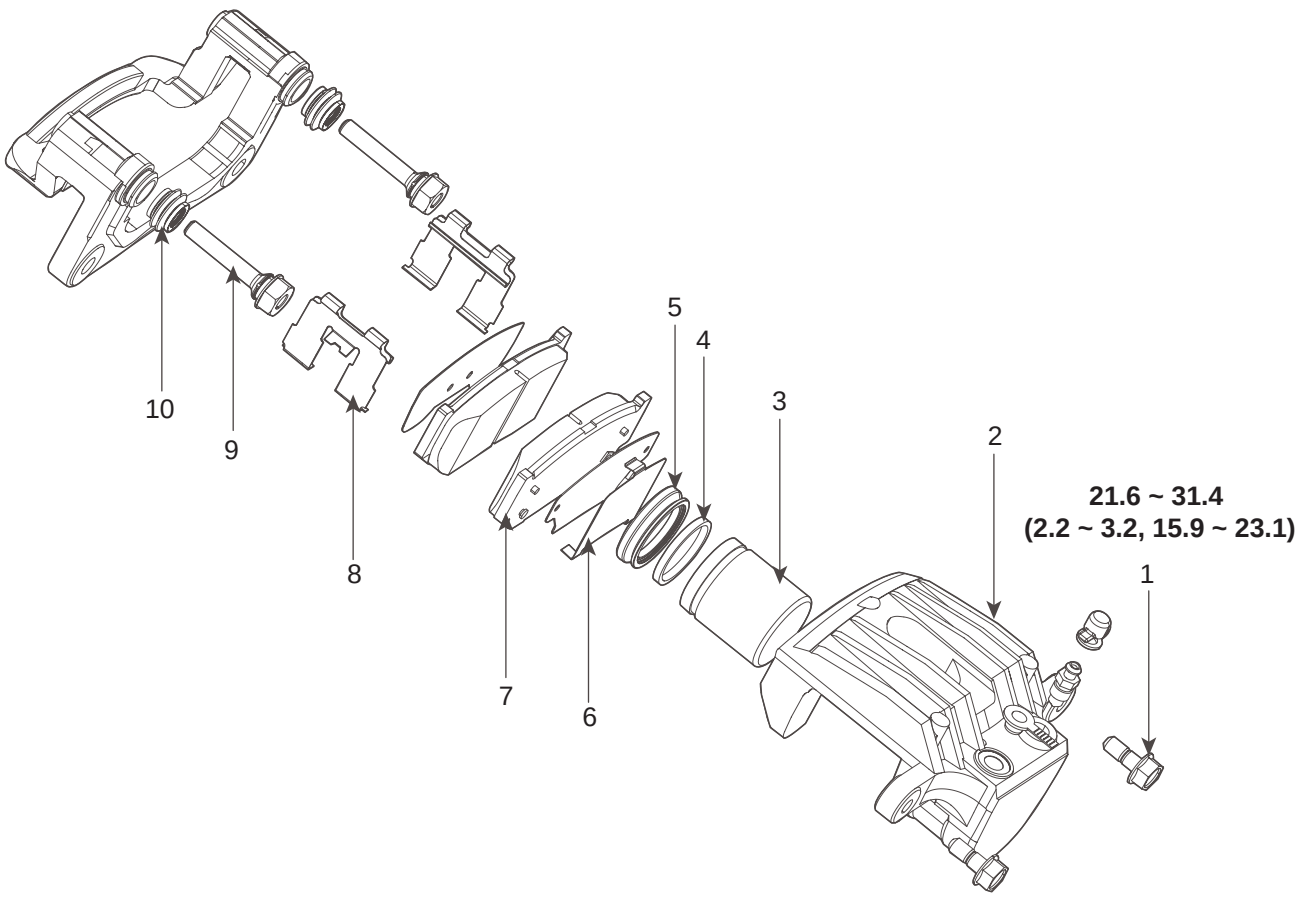

TORQUE : Nm (Kgf.m, lb-ft)

1. Guide rod bolt
2. Caliper body
3. Piston
4. Piston seal
5. Piston boot
6. Pad shim
7. Brake pad
8. Pad retainer
9. Guide rod
10. Boot

SCMBR6511L

REMOVAL EECEE93C

1. Remove the rear wheel & tire.

Tightening torque Nm (kgf.m, lb-ft):
88.3 ~ 107.9 (9.0 ~ 11.0, 65.1 ~ 79.6)

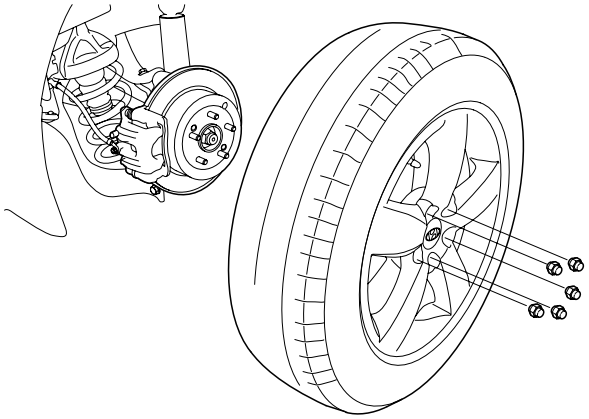

SCMBR6513D

2. Remove the split pin (A) and castle nut (B).

Tightening torque Nm (kgf.m, lb-ft):
200 ~ 260 (20 ~ 26, 145 ~ 188)

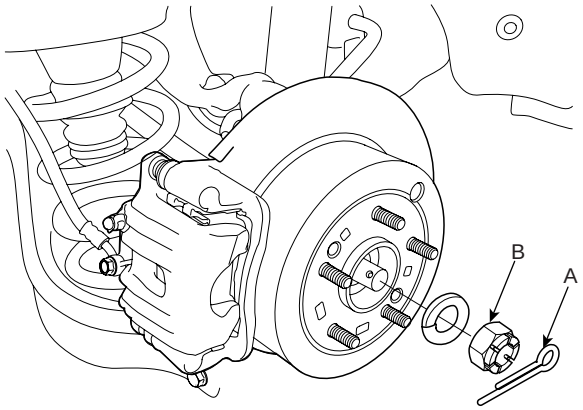

SCMBR6514D

3. Loosen the hose eye-bolt (A) and caliper mounting bolts, then remove the rear caliper assembly.

Tightening torque Nm (kgf.m, lb-ft):
Brake hose to caliper:
24.5 ~ 29.4 (2.5 ~ 3.0, 18.1 ~ 21.7)
Caliper assembly to carrier:
78.5 ~ 98.1 (8.0 ~ 10.0, 57.9 ~ 72.3)

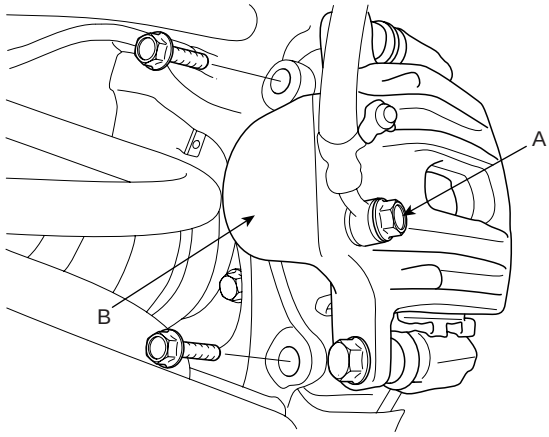

SCMBR6515D

4. Remove the rear brake disc by loosening the screws (A).

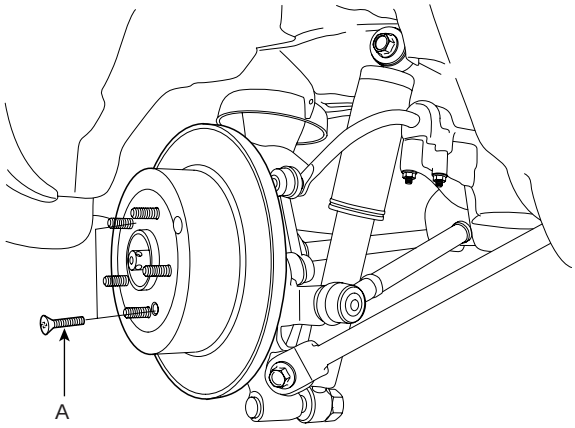

SCMBR6516D

REPLACEMENT E3FC22C7

REAR BRAKE PADS

1. Loosen the guide rod bolt (A) and pivot the caliper up out of the way.

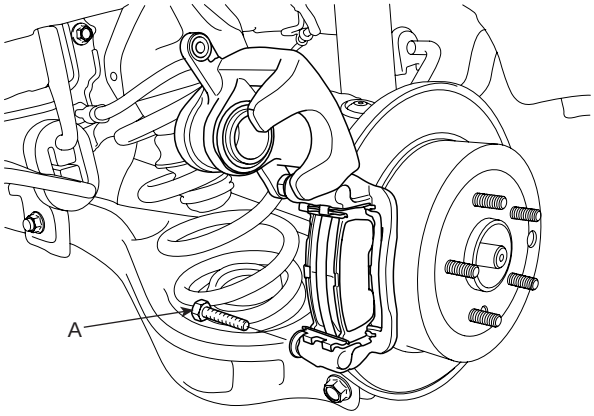

SCMBR6517D

2. Replace shims (A), pad retainers (B), and brake pads (C).

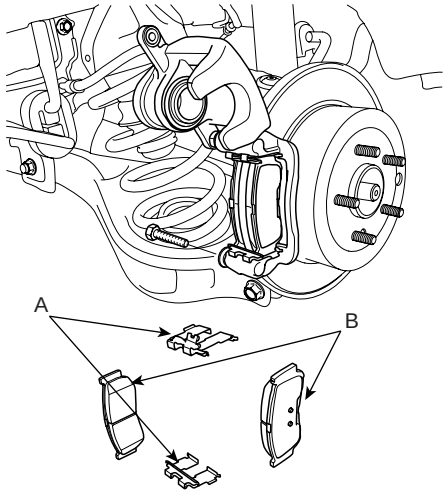

SCMBR6518D

3. Push the piston in the cylinder using a SST (09581-11000)

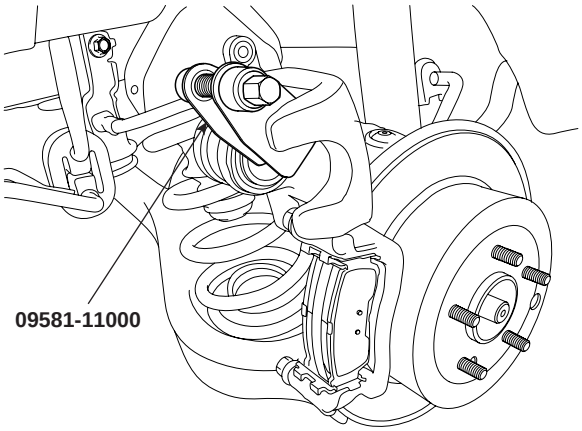

SCMBR6519D

4. Pivot the caliper dwon and tighten the guide rod bolt.

Tightening torque Nm (kgf.m, lb-ft):
21.6 ~ 31.4 (2.2 ~ 3.2, 15.9 ~ 23.1)

INSPECTION EE4792FD

1. Check the brake pads for wear and fade.
2. Check the brake disc for damage and cracks.
3. Check the thickness of the brake disc and run-out using a micrometer and a dial gauge on the part dotted line in the illustration below.

Brake disc thickness
Standard: 11 mm (0.43 in)
Service limit: 9.4 mm (0.37 in)
Deviation: less than 0.01 mm (0.00039 in)
Run-out
Standard: 0.03 mm (0.00118 in) or less

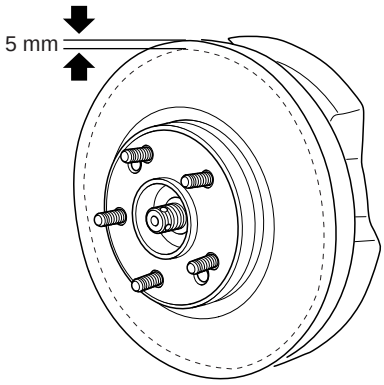

SCMBR6510L

INSTALLATION E6402430

1. Installation is the reverse of removal.
2. Use a SST (09581-11000) when installing the brake caliper assembly.

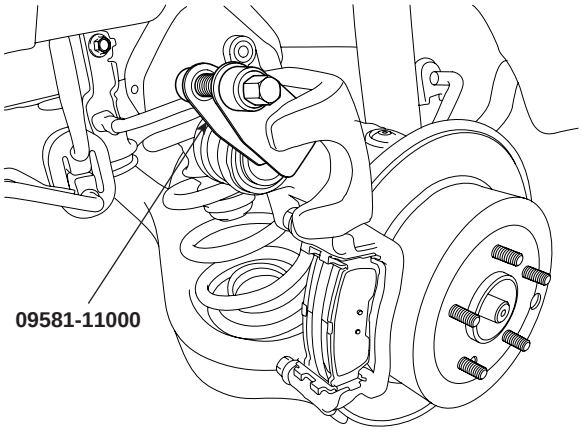

SCMBR6519D

3. After installation, bleed the brake system. (Refer to Brake system bleeding)

PARKING BRAKE SYSTEM

PARKING BRAKE

COMPONENTS EA606AC8

[Hand type]

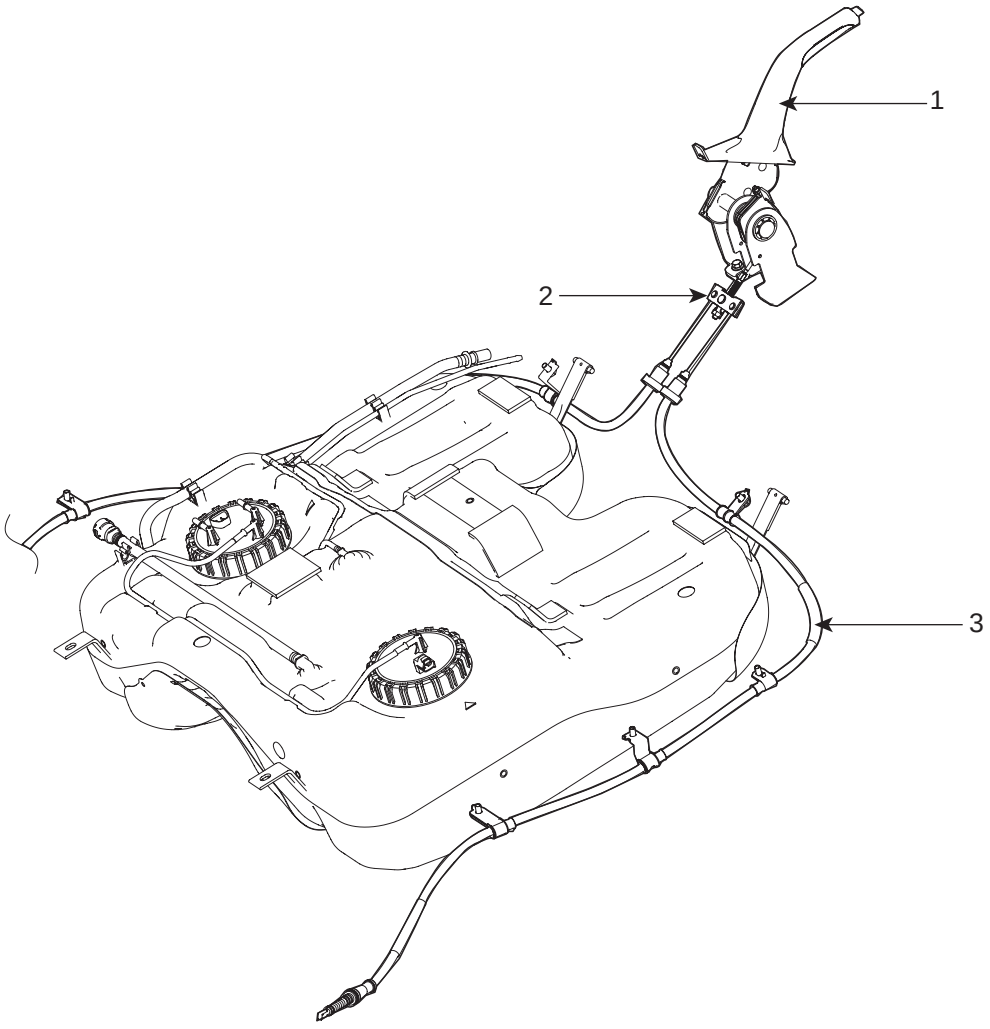

1. Parking brake lever assembly
2. Equalizer assembly
3. Parking brake cable

[Foot type]

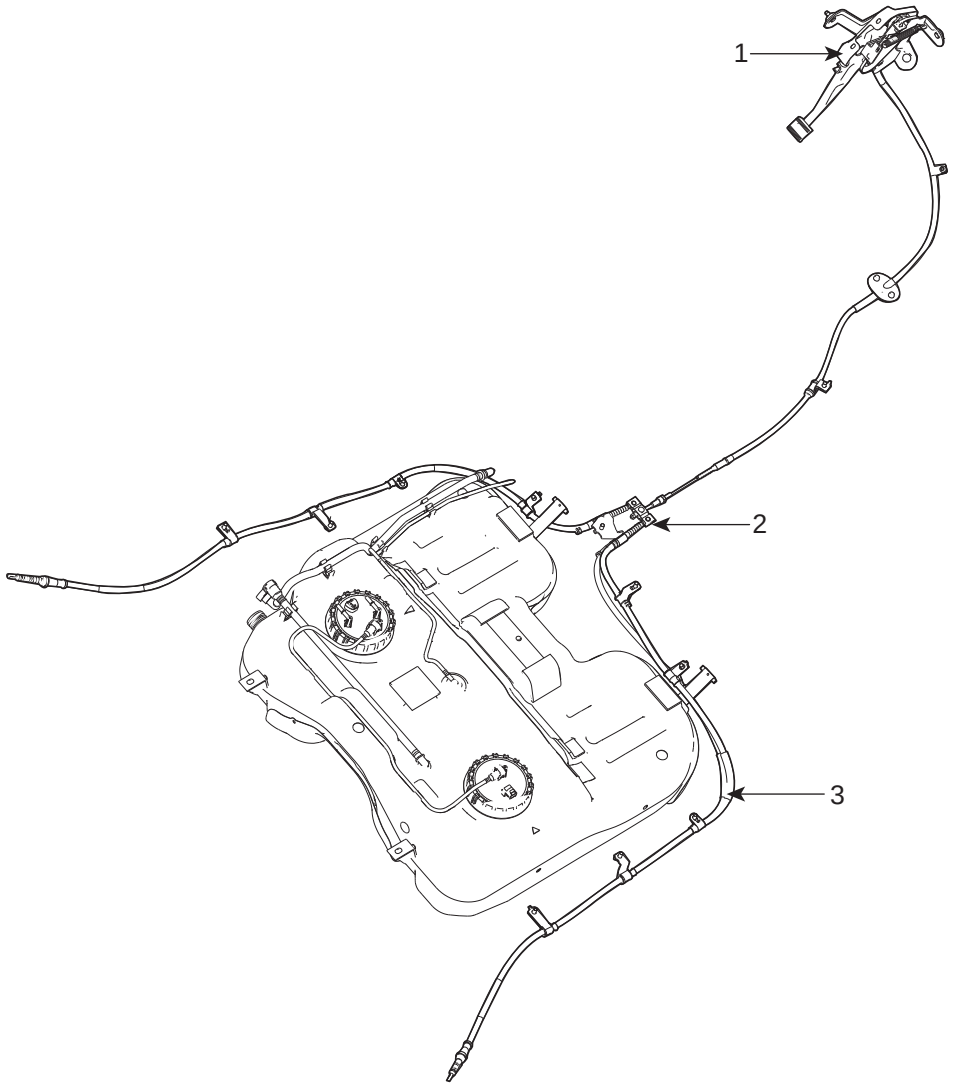

1. Parking brake pedal assembly
2. Equalizer assembly
3. Parking brake cable

SCMBR6513L

REMOVAL E0DB93BC

HAND TYPE

1. Release the parking brake lever thoroughly.
2. Remove the console. (Refer to BD group)

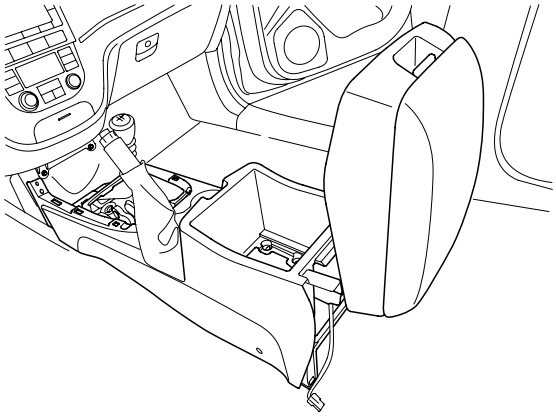

SCMBR6527D

3. Disconnect the parking brake cable (B) from the equalizer assembly (A).

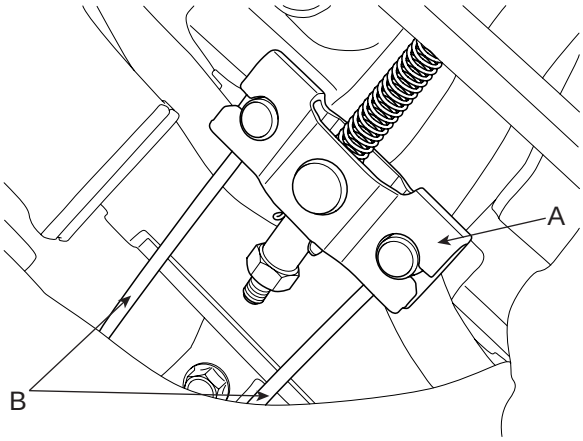

SCMBR6519L

4. Disconnect the parking brake switch connector (A).
5. Remove the parking brake lever assembly by loosening the mounting bolts.

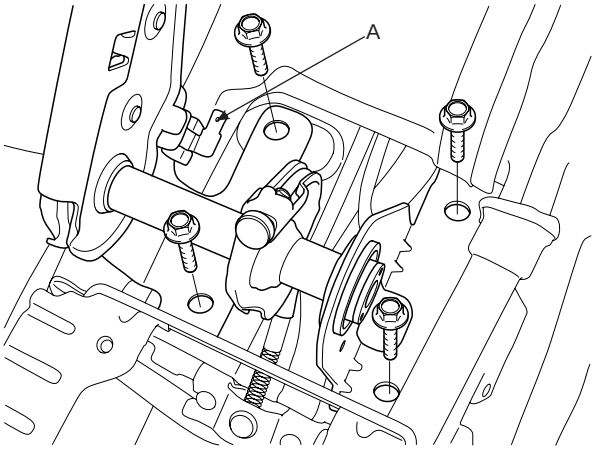

SCMBR6531D

6. Remove the rear wheel & tire.
7. Remove the rear brake caliper and disc.
8. Disconnect the brake cable (A) from the parking brake assembly.

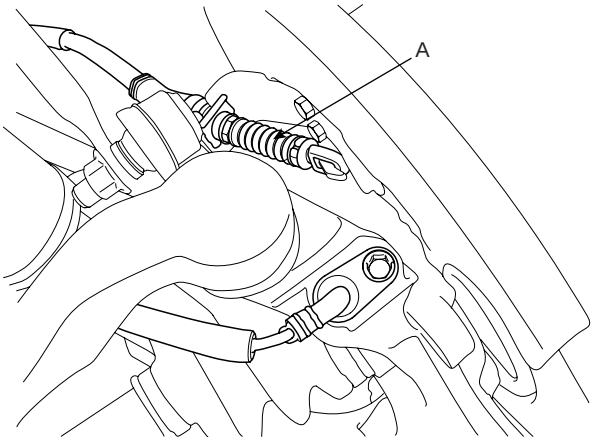

SCMBR6591L

9. Loosen all of the cable guide bracket bolts. (Refer to Parking brake components)

10. Remove the both of brake shoes holder (A) and pin (B).

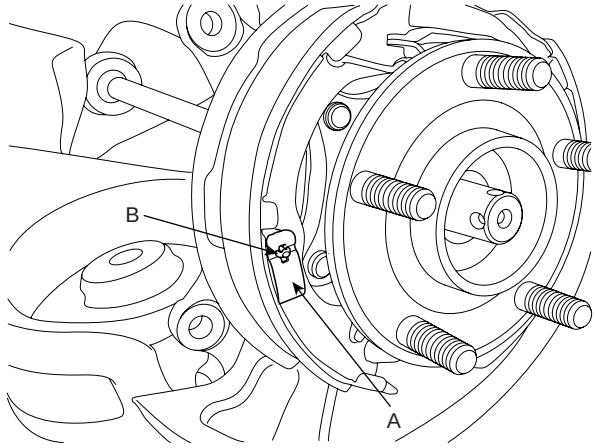

SCMBR6520L

11. Remove the upper spring (A) and strut (B).

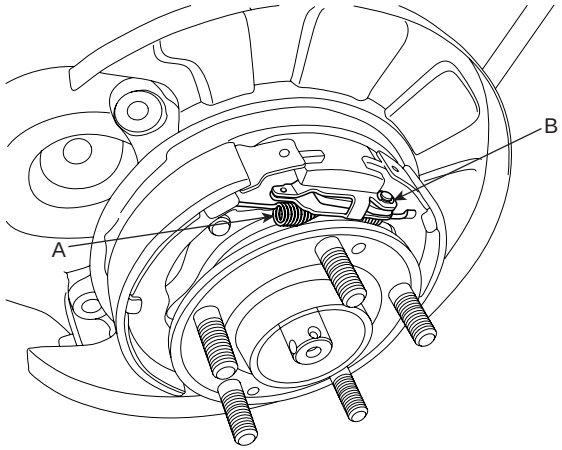

SCMBR6521L

12. Remove the lower spring (A), adjuster assembly (B), and brake shoes.

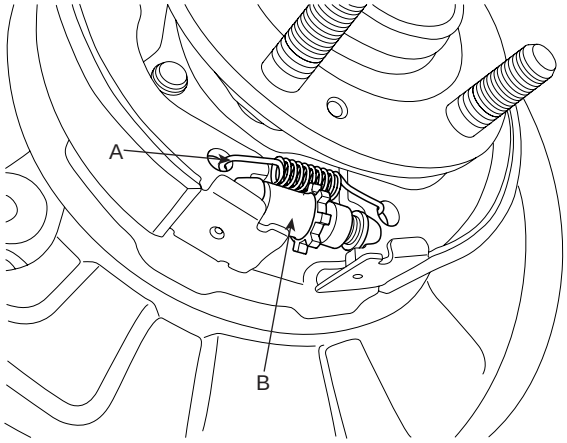

SCMBR6522L

FOOT TYPE

1. Release the parking brake pedal thoroughly.
2. Remove the lower crash pad.

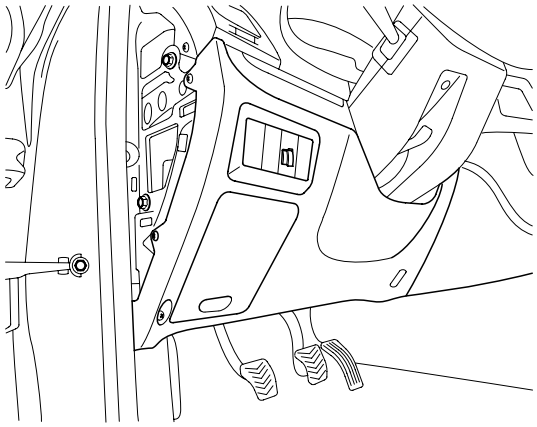

SCMBR6507D

3. Remove the parking brake cable fixing clips (A), then disconnect the cable from the parking brake pedal.

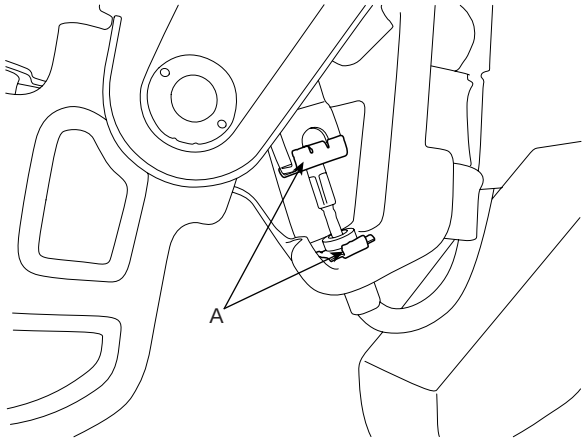

SCMBR6004L

4. Disconnect the parking brake switch connector (A).

5. Remove the parking brake pedal assembly by loosening the mounting bolts.

[LHD]

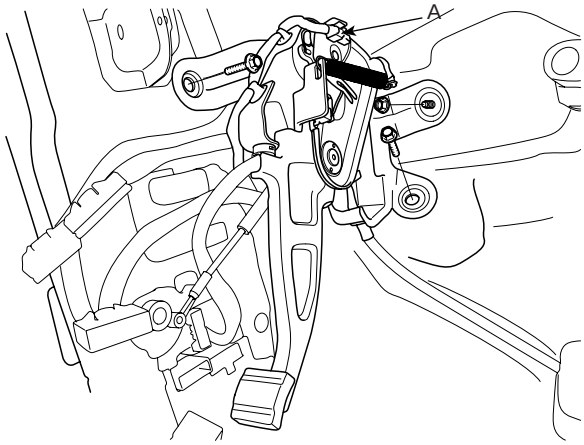

SCMBR6523L

[RHD]

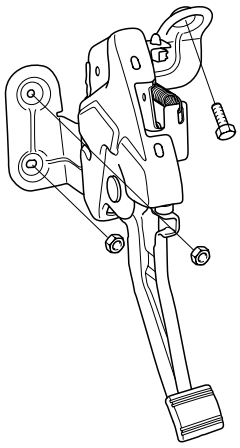

SCMBR6003L

6. Remove the rear wheel & tire.

7. Remove the rear brake caliper and disc.

8. Disconnect the brake cable (A) from the parking brake assembly.

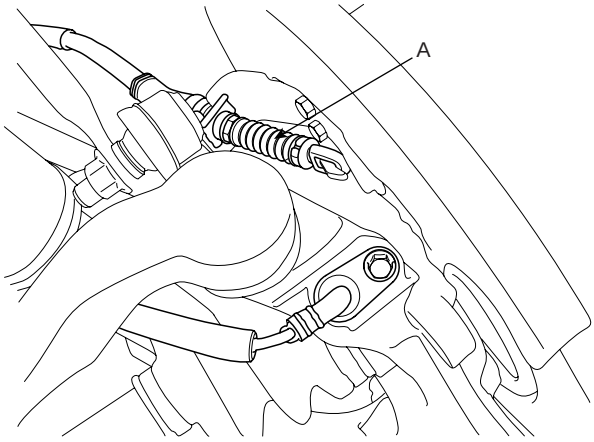

SCMBR6591L

9. Loosen all of the cable guide bracket bolts. (Refer to Parking brake components)

10. Remove the both of brake shoes holder (A) and pin (B).

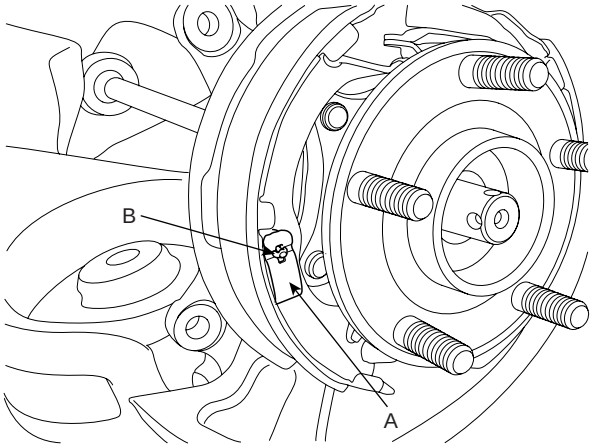

SCMBR6520L

11. Remove the upper spring (A) and strut (B).

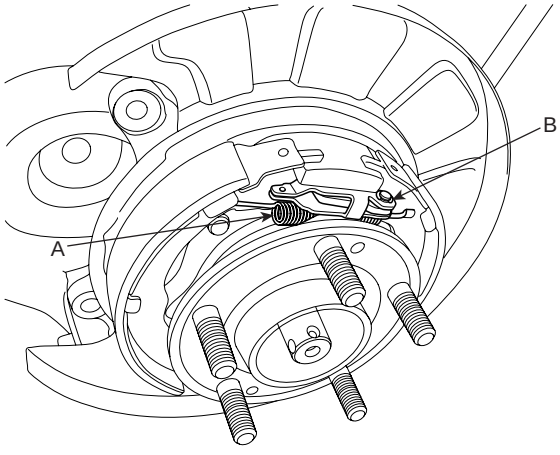

SCMBR6521L

12. Remove the lower spring (A), adjuster assembly (B), and brake shoes.

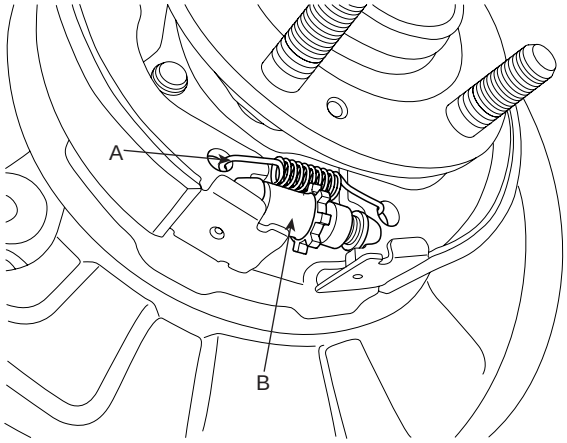

SCMBR6522L

INSTALLATION E5D71E0E

1. Installation is the reverse of removal.
2. After installation, adjust the parking brake.

ADJUSTMENT ECCEE4F6

PARKING BRAKE SHOE CLEARANCE ADJUSTMENT

1. Remove the rear wheel & tire.
2. Remove the plug from the rear brake disc.
3. Rotate adjuster assembly (A) downward until it can not be rotate by using a screw driver.

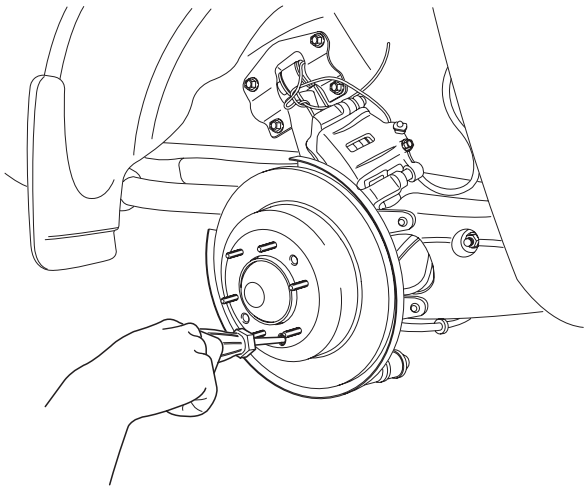

SCMBR6533D

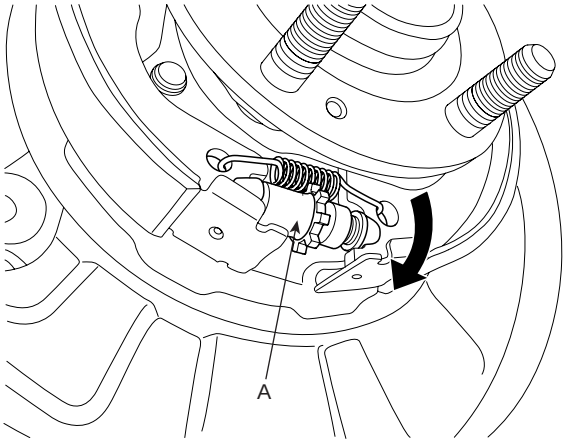

SCMBR6534D

4. Rotate the adjust assembly by 5 notches in the opposite direction.
5. Install the plug to rear brake disc.
6. Install the rear wheel & tire.

PARKING BRAKE CABLE ADJUSTMENT

CAUTION

Parking brake cable adjustment must be carried out after adjusting rear shoe.

HAND TYPE

1. Operate the parking brake lever through a full stoke over 3 times for setting the cables.
2. The travel must be between 6 ~ 7 notches when applying a force of approx. 20kgf (196N, 44.1lb) at 40mm (1.57in) from the end of lever assembly by adjusting nut (A) of equalizer.

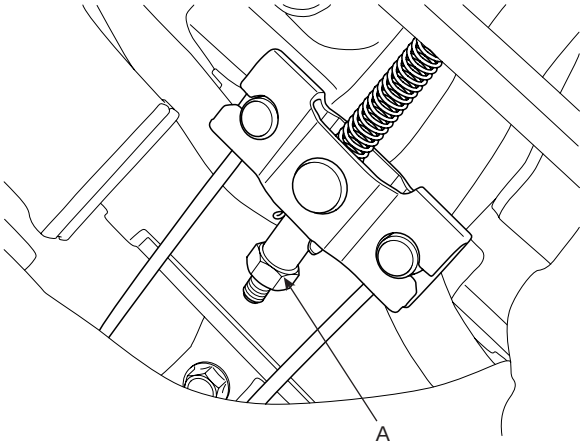

SCMBR6516L

3. The parking brake indicator lamp must be OFF when lever assembly is released, and ON when operating by 1 notch.

FOOT TYPE

4. Operate the parking brake pedal through a full stroke over 3 times for setting the cables.
5. Adjust the adjusting nut (A) for parking brake pedal stroke 130 ~ 140mm when operating effort is approx. 30kgf (294N, 66lb).

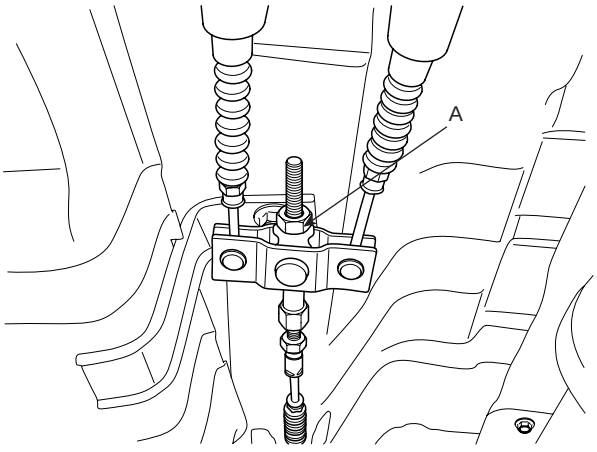

SCMBR6517L

ABS (ANTI-LOCK BRAKE SYSTEM)

COMPONENTS E0AFF9C6

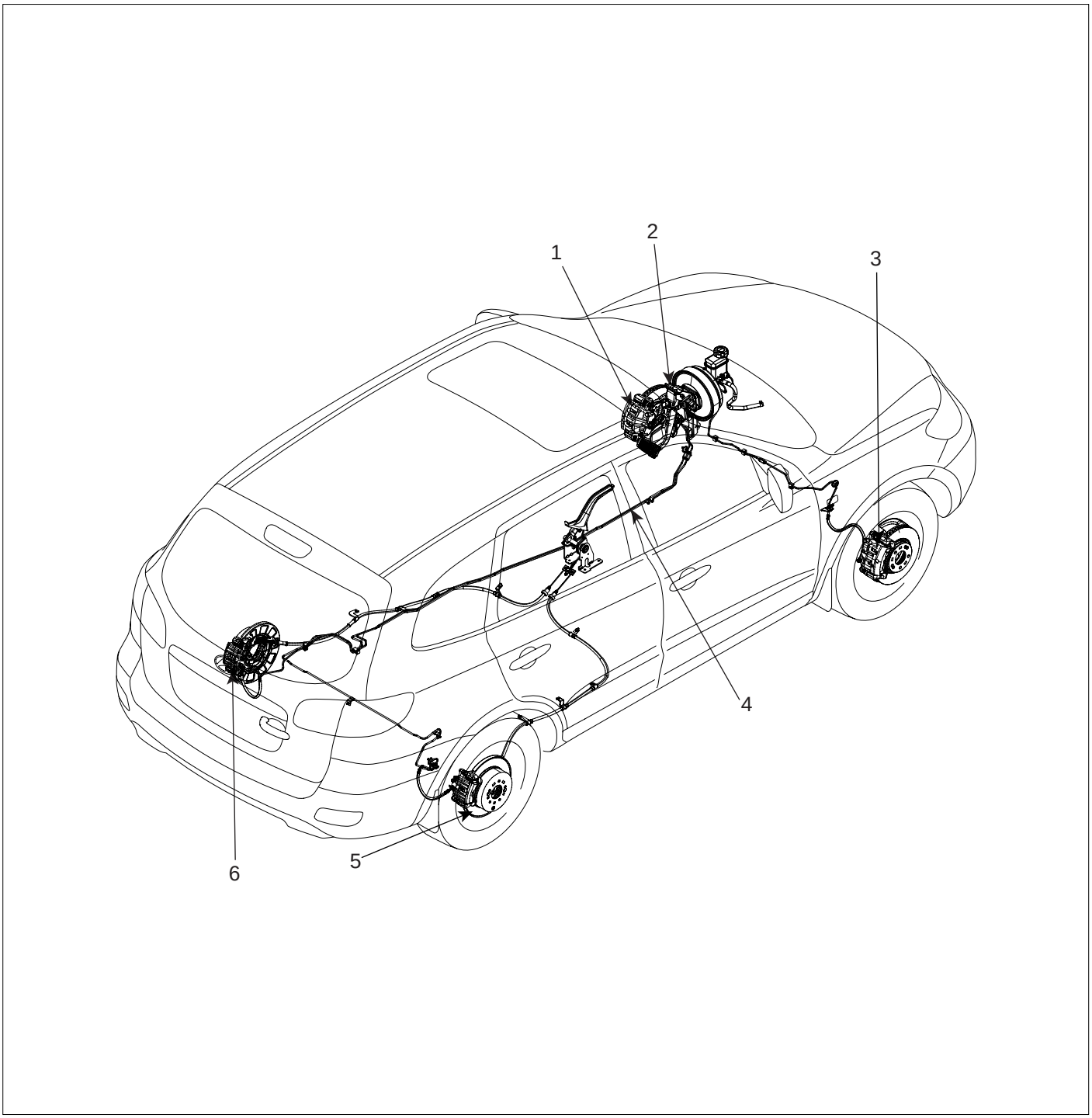

1. Front left wheel speed sensor
2. ABS control module(HECU)
3. Front right wheel speed sensor
4. Hydrauric line
5. Rear right wheel speed sensor
6. Rear left wheel speed sensor

SCMBR6524L

DESCRIPTION E1BC04B1

This specification applies to HCU(Hydraulic Control Unit) and ECU(Electronic Control Unit) of the HECU.(Hydraulic and Electronic Control Unit)
This specification is for the wiring design and installation of ABS/TCS/ESC ECU.
This unit has the functions as follows.

- Input of signal from Pressure sensor, Steering angle sensor, Yaw & Lateral G sensor, the wheel speed sensors attached to each wheel.
- Control of braking force / traction force/ yaw moment.
- Failsafe function.
- Self diagnosis function.
- Interface with the external diagnosis tester.

Installation position : engine compartment

- Brake tube length from Master cylinder port to HECU inlet port should be max. 1m
- The position should not be close to the engine block and not lower than the wheel.

OPERATION

The ECU shall be put into operation by switching on the operating voltage (IGN).
On completion of the initialization phase, the ECU shall be ready for operation.
In the operating condition, the ECU shall be ready, within the specified limits (voltage and temperature), to process the signals offered by the various sensors and switches in accordance with the control algorithm defined by the software and to control the hydraulic and electrical actuators.

WHEEL SENSOR SIGNAL PROCESSING

The ECU shall receive wheel speed signal from the four active wheel sensors.
The wheel signals are converted to voltage signal by the signal conditioning circuit after receiving current signal from active wheel sensors and given as input to the MCU.

SOLENOID VALVE CONTROL

When one side of the valve coil is connected to the positive voltage that is provided through the valve relay and the other side is connected to the ground by the semiconductor circuit, the solenoid valve goes into operation.
The electrical function of the coils are always monitored by the valve test pulse under normal operation conditions.

VOLTAGE LIMITS

- Overvoltage
  When overvoltage is detected(above 16.8 V), the ECU switches off the valve relay and shuts down the system.
  When voltage is returned to operating range, the system goes back to the normal condition after the initialization phase.
- Undervoltage
  In the event of undervoltage(below 9.3 V), ABS control shall be inhibited and the warning lamp shall be turned on.
  When voltage is returned to operating range, the warning lamp is switched off and ECU returns to normal operating mode.

PUMP MOTOR CHECKING

The ECU performs a pump motor test at a speed of 15km/h once after IGN is switched on.

DIAGNOSTIC INTERFACE

Failures detected by the ECU are encoded on the ECU, stored in a EEPROM and read out by diagnostic equipment when the ignition switch is turned on.
The diagnosis interface can also be used for testing the ECU during production of the ECU and for actuating the HCU (Air-bleeding line or Roll and Brake Test line).

WARNING LAMP MODULE

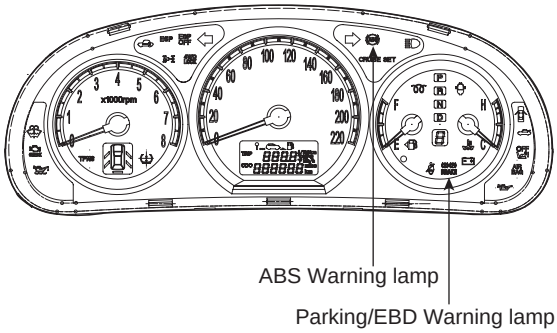

SCMBR6525L

1. ABS WARNING LAMP MODULE
   The active ABS warning lamp module indicates the selftest and failure status of the ABS.The ABS warning lamp shall be on:
   - During the initialization phase after IGN ON. (continuously 3 seconds).
   - In the event of inhibition of ABS functions by failure.
   - During diagnostic mode.
   - When the ECU Connector is seperated from ECU.

2. PARKING/EBD WARNING LAMP MODULE
   The active EBD warning lamp module indicates the selftest and failure status of the EBD.However, in case the Parking Brake Switch is turned on, the EBD warning lamp is always turned on regardless of EBD functions.The EBD warning lamp shall be on:
   - During the initialization phase after IGN ON. (continuously 3 seconds).
   - When the Parking Brake Switch is ON or brake fluid level is low.
   - When the EBD function is out of order.
   - During diagnostic mode.
   - When the ECU Connector is seperated from ECU.

ABS CONTROL EE8C9C94

1. NORMAL BRAKING without ABS

	Inlet valve(EV)	Outlet valve(AV)	Pump motor
Operation	Open	Close	OFF

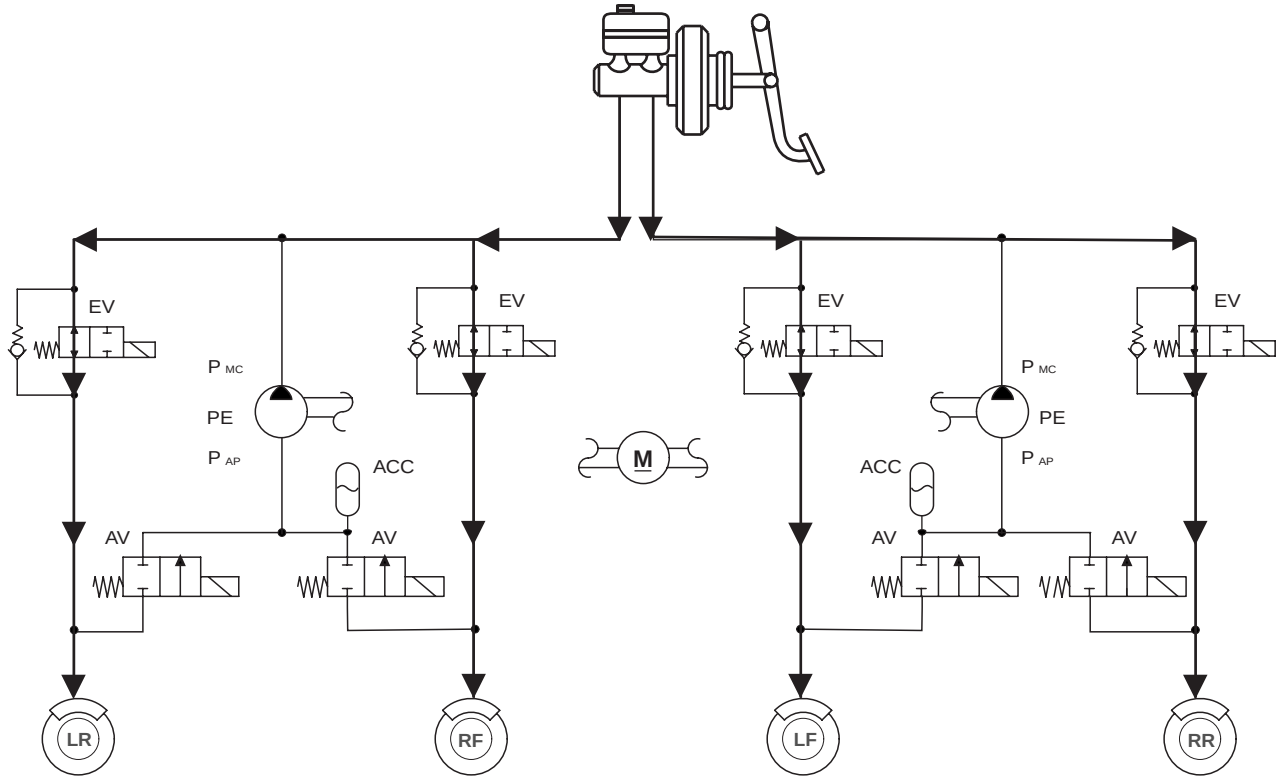

KJRE501E

NOTE

EV : Inlet Valve
AV : Outlet Valve
LR : Rear left wheel
RF : Front right wheel
LF : Front left wheel
RR : Rear right wheel
PE : Pump motor

2. DECREASE MODE

	Inlet valve(EV)	Outlet valve(AV)	Pump motor
Operation	Close	Open	ON(Motor speed control)

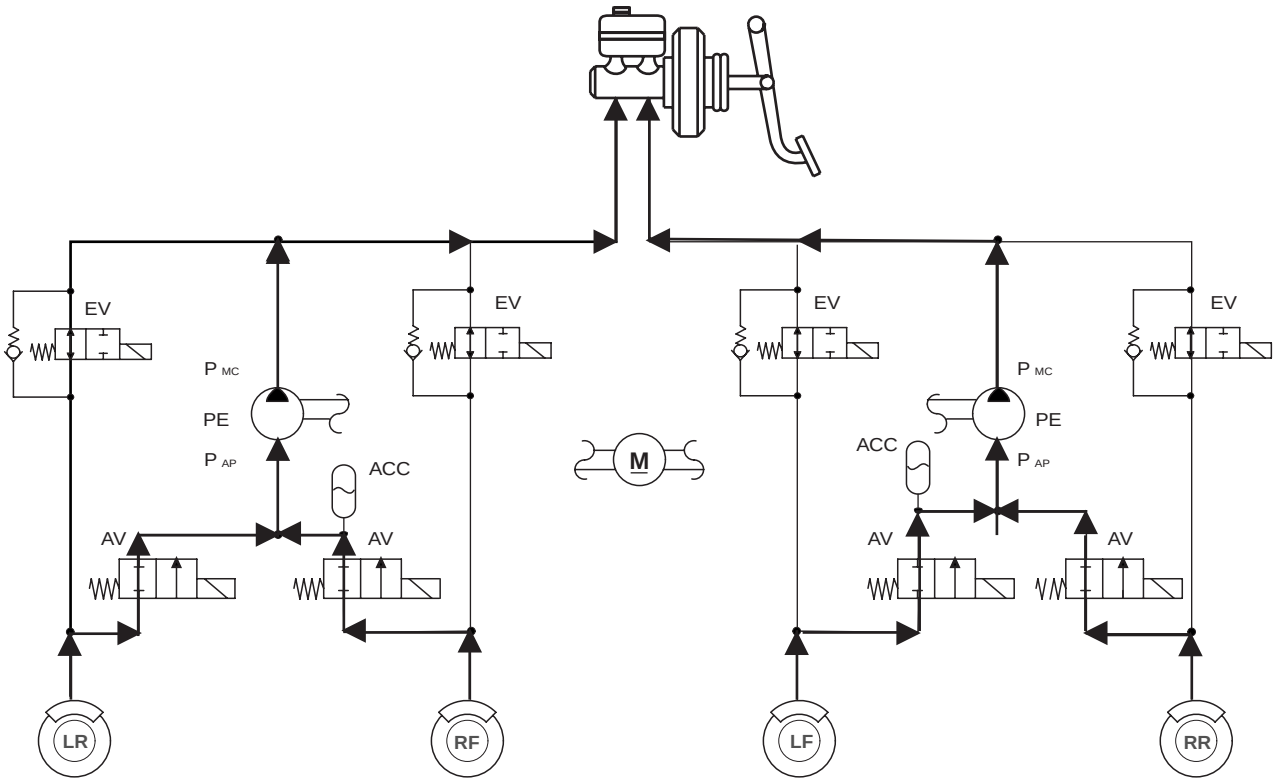

KJRE501F

NOTE

EV : Inlet Valve
AV : Outlet Valve
LR : Rear left wheel
RF : Front right wheel
LF : Front left wheel
RR : Rear right wheel
PE : Pump motor

3. HOLD MODE

	Inlet valve(EV)	Outlet valve(AV)	Pump motor
Operation	Close	Close	OFF

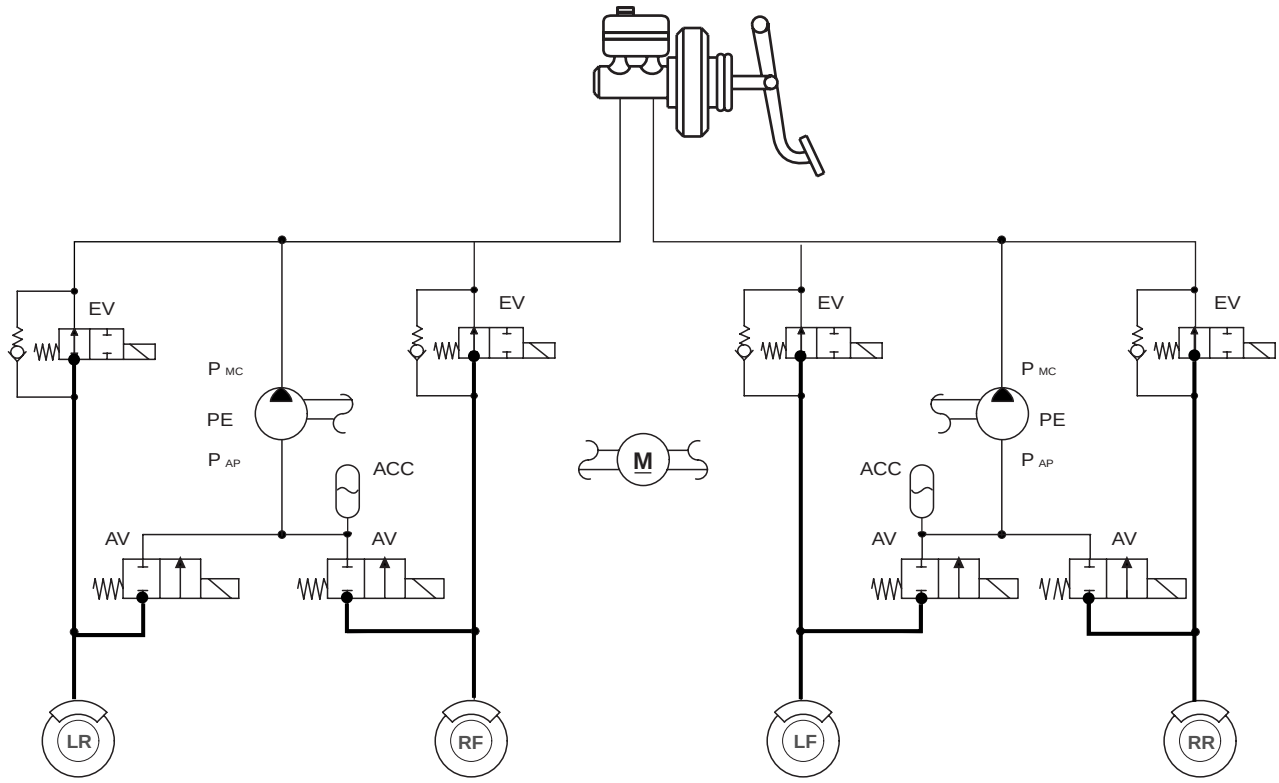

KJRE501G

NOTE

EV : Inlet Valve
AV : Outlet Valve
LR : Rear left wheel
RF : Front right wheel
LF : Front left wheel
RR : Rear right wheel
PE : Pump motor

4. INCREASE MODE

	Inlet valve(EV)	Outlet valve(AV)	Pump motor
Operation	Open	Close	OFF

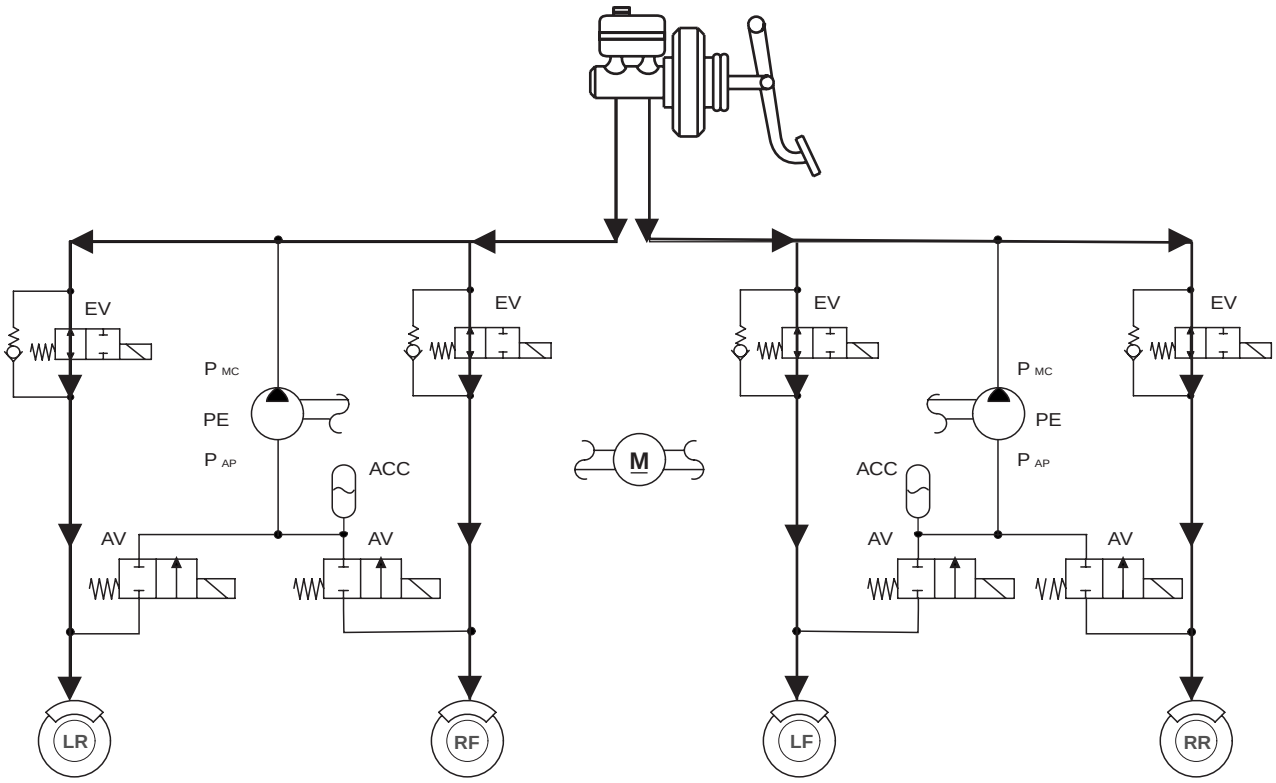

KJRE501H

NOTE

EV : Inlet Valve
AV : Outlet Valve
LR : Rear left wheel
RF : Front right wheel
LF : Front left wheel
RR : Rear right wheel
PE : Pump motor

ABS CIRCUIT DIAGRAM(1) E9FD9505

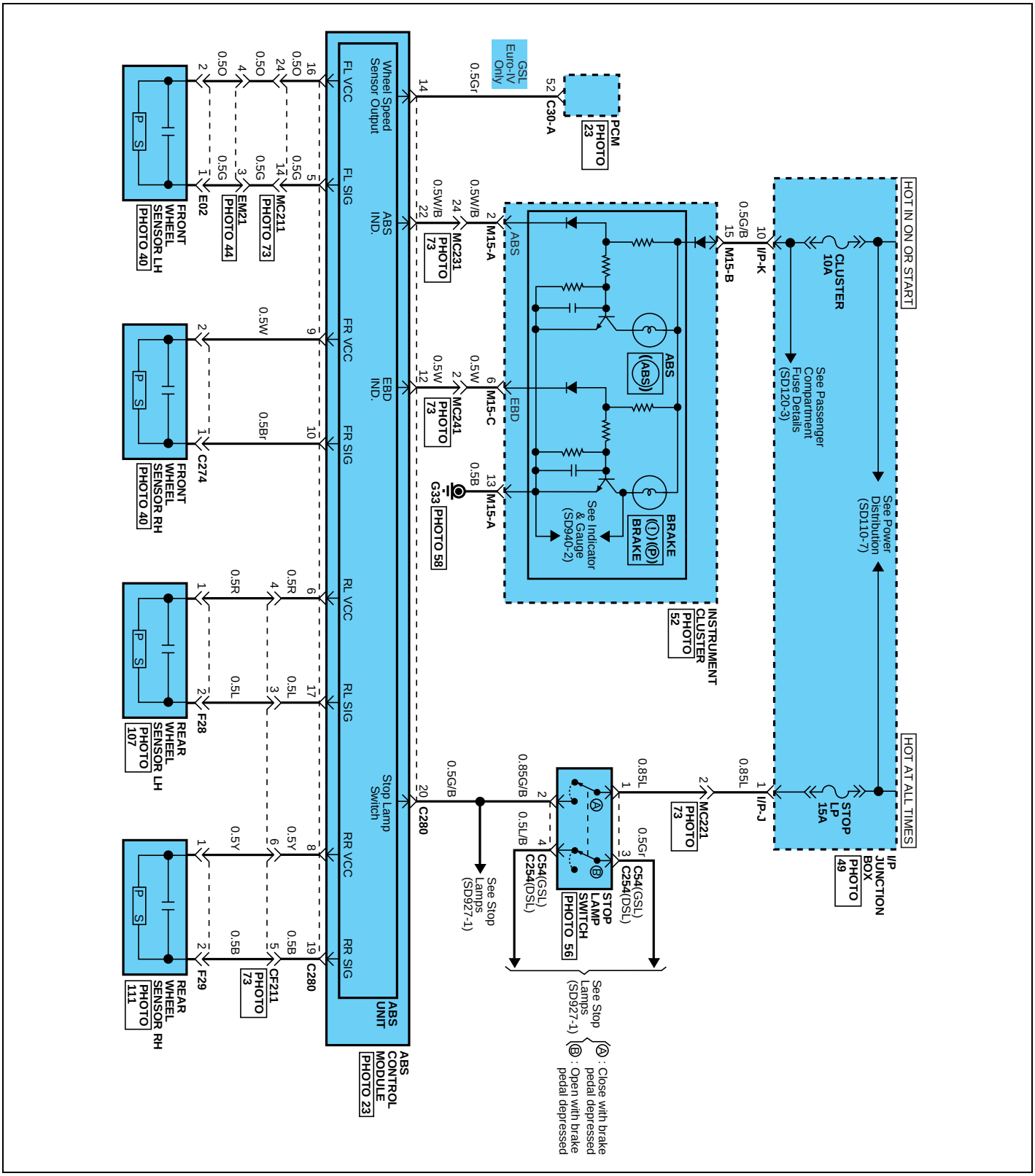

SCMBR6526L

ABS CIRCUIT DIAGRAM(2)

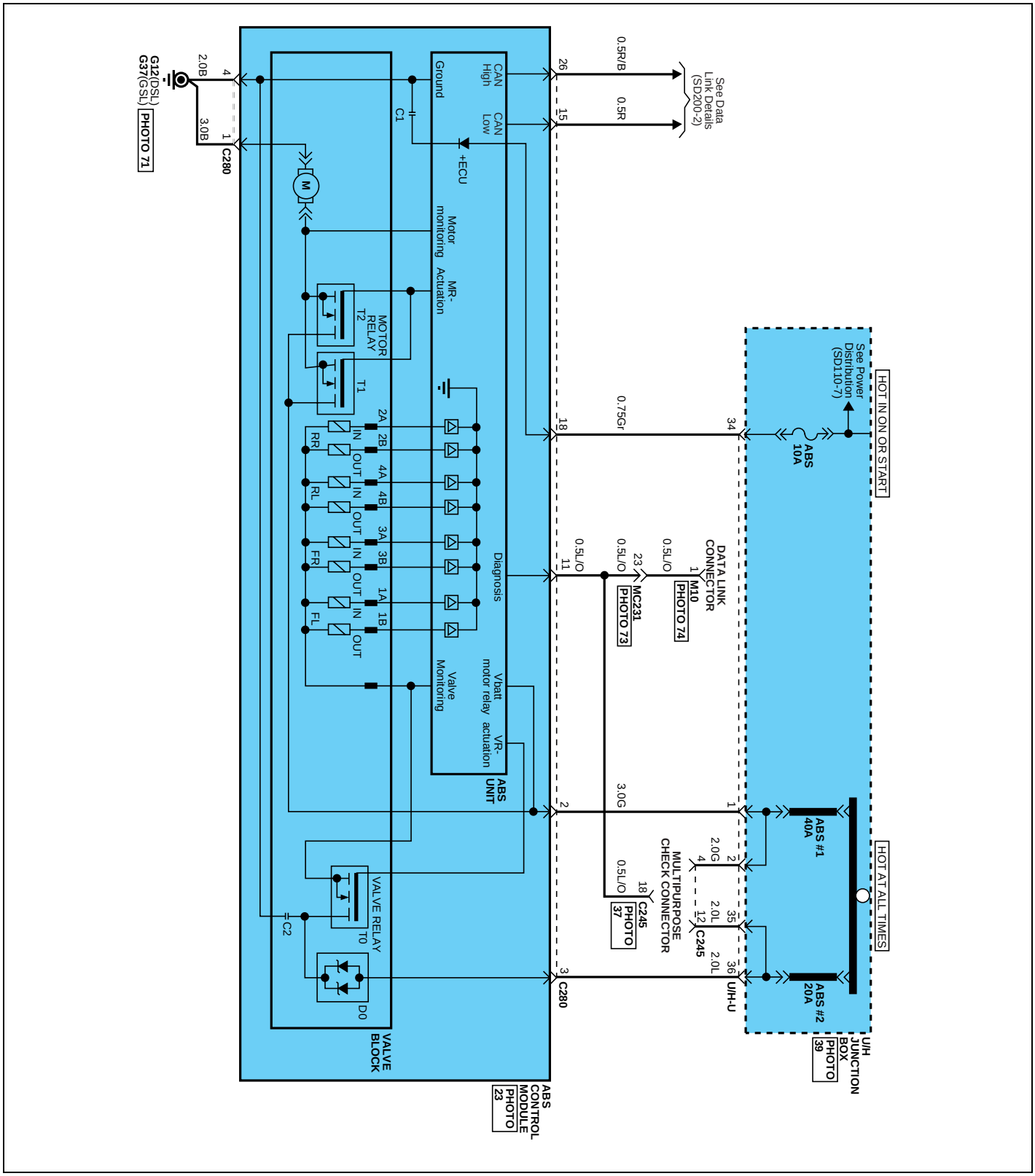

SCMBR6527L

ECU CONNECTOR
INPUT/OUTPUT(ABS) E5DD1467

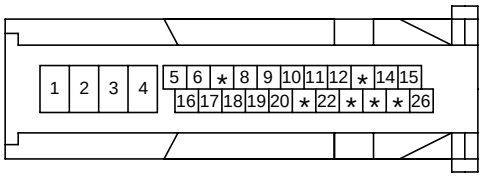

C280 (GSL)

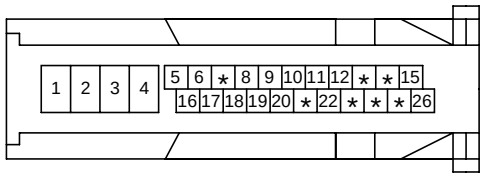

C280(DSL)

SCMBR6528L

Wire No.	Designation	Current		max.permissible wire resistance R_L (mΩ)	min.leakage resistance R_P (kΩ)
		max	min		
1	Ground for recirculation pump	20~39 A	10 A	10	
4	Ground for solenoid valves and ECU	5~15 A	2.5 A	10	
2	Voltage supply for pump motor	20~39 A	10 A	10	200
3	Voltage supply for solenoid valves	5~15 A	2 A	10	200
18	Voltage for hybrid ECU	1 A	500 mA	60	200
5,10,17,19	signal wheel speed sensor FL, FR, RL,RR	6 mA	16 mA	250	200 to ground 1.5M to bat
16,9,6,8	Voltage supply for the active wheel speed sensor FL,FR, RL, RR	6 mA	16 mA	250	200 to ground 1.5M to bat
11	Diagnostic wire K	6 mA	3 mA	250	200
22	ABS-warning lamp actuation	30 mA	5 mA	250	200
12	EBD-warning lamp actuation	30 mA	5 mA	250	200
20	brake light switch	10 mA	5 mA	250	200
15	CAN Low	30 mA	20 mA	250	200
26	CAN High	30 mA	20 mA	250	200

ABS HECU CONNECTOR

Connector terminal		Specification	Condition
Number	Description		
1	Ground for recirculation pump	Current range: Min.10A Max.20~39A	Always
4	Ground for solenoid valves and ECU	Current range: Min.2.5A Max.5~15A	Always
2	Voltage supply for pump motor	Battery voltage	Always
3	Voltage supply for solenoid valves		
16	Voltage supply for the active wheel speed sensor FL,FR, RL, RR	Battery voltage	IG ON
9			
6			
8			
5	signal wheel speed sensor FL, FR, RL,RR	Voltage(High) : 0.89~1.26 V Voltage (Low) : 0.44~0.63 V	On driving
10			
17			
19			
11	Diagnostic wire K	Voltage (High) ≥ 0.8 * IG ON Voltage (Low) ≤ 0.2 * IG ON	On SCAN TOOL communication
18	Voltage for hybrid ECU	Battery voltage	KEY ON/OFF
20	Brake light switch	Voltage (High) ≥ 0.8 * IG ON Voltage (Low) ≤ 0.3 * IG ON	BRAKE ON/OFF

SENSOR OUTPUT ON SCAN TOOL(ABS)

	Description	Abbreviation	Unit	Remarks
1	Vehicle speed sensor	VEH. SPD	Km/h	
2	Battery voltage	BATT. VOL	V	
3	FL Wheel speed sensor	FL WHEEL	Km/h	
4	FR Wheel speed sensor	FR WHEEL	Km/h	
5	RL Wheel speed sensor	RL WHEEL	Km/h	
6	RR Wheel speed sensor	RR WHEEL	Km/h	
7	ABS Warning lamp	ABS LAMP	-	
8	EBD Warning lamp	EBD LAMP	-	
9	Brake Lamp	B/LAMP	-	
10	Pump relay state	PUMP RLY	-	
11	Valve relay state	VALVE RLY	-	
12	Motor	MOTOR	-	
13	Front Left valve(IN)	FL INLET	-	
14	Front Right valve (IN)	FR INLET	-	
15	Rear Left valve (IN)	RL INLET	-	
16	Rear Right valve (IN)	RR INLET	-	
17	Front Left valve (OUT)	FL OUTLET	-	
18	Front Right valve (OUT)	FR OUTLET	-	
19	Rear Left valve(OUT)	RL OUTLET	-	
20	Rear Right valve (OUT)	RR OUTLET	-	

STANDARD FLOW OF DIAGNOSTIC TROUBLESHOOTING E53ECDC7

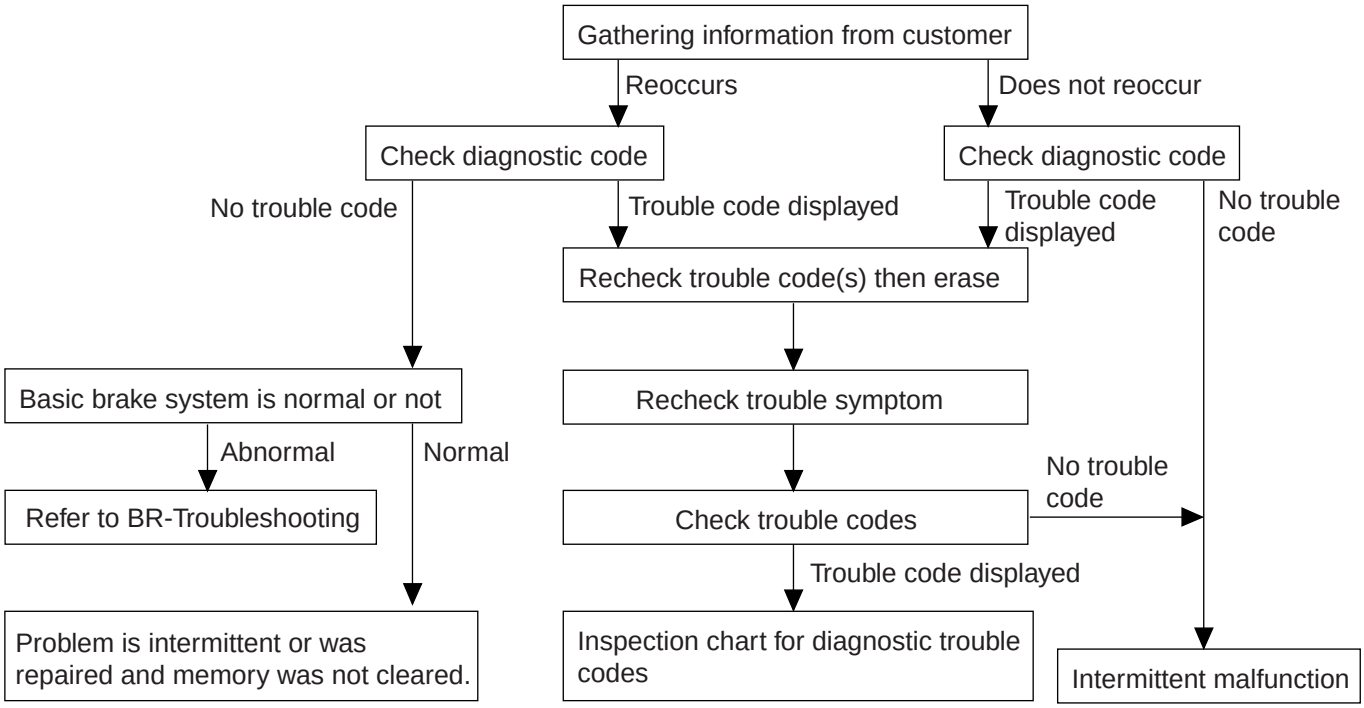

*** Using the customer problem analysis check sheet for reference, ask the customer as much detail as possible about the problem.**

EJKB055A

NOTES WITH REGARD TO DIAGNOSIS

The phenomena listed in the following table are not abnormal.

Phenomenon	Explanation
System check sound	When starting the engine, a thudding sound can sometimes be heard coming from inside the engine compartment. This is because the system operation check is being performed.
ABS operation sound	1. Sound of the motor inside the ABS hydraulic unit operation (whine). 2. Sound is generated along with vibration of the brake pedal (scraping). 3. When ABS operates, sound is generated from the vehicle chassis due to repeated brake application and release (Thump : suspension; squeak: tires)
ABS operation (Long braking distance)	For road surfaces such as snow-covered and gravel roads, the braking distance for vehicles with ABS can sometimes be longer than that for other vehicles. Accordingly, advise the customer to drive safely on such roads by lowering the vehicle speed.
Diagnosis detection conditions can vary depending on the diagnosis code. When checking the trouble symptom after the diagnosis code has been erased, ensure that the requirements listed in "Comment" are met.	

SCAN TOOL (PRO) CHECK

1. Turn the ignition switch OFF.
2. Connector the Scan tool to the 16P data link connector located the driver's side kick panel.

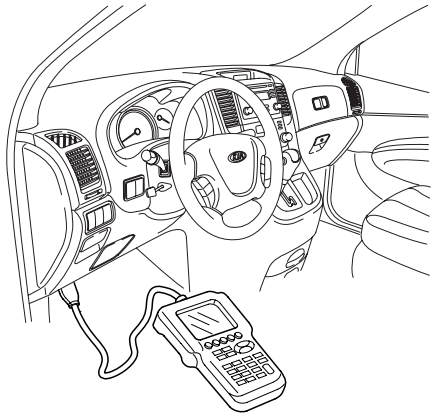

ARKF500A

3. Turn the ignition switch ON.
4. Check for DTC using the Scan tool
5. After completion trouble of the repair or correction of the problem, erase the stored fault codes using the scan tool.
6. Disconnect the Scan tool from the 16P data link connector.

ABS CHECK SHEET

ABS Check Sheet

Inspector's Name _____

Customer's Name		**Registration No.**	
		Registration Year	/ /
		VIN.	
Date Vehicle Brought In	/ /	**Odometer**	Km Miles

Date the Problem First Occurred	/ /
Frequency of Occurence of Problem	☐ Continuous ☐ Intermittent (times a day)

Symptoms	☐ ABS does not operate.	
	☐ ABS does not operate efficiently.	☐ Intermittent (times a day)
	ABS Warning Light Abnormal	☐ Remains ON ☐ Does not light up

Diagnostic Trouble Code Check	**1st Time**	☐ Normal Code	☐ Malfunction Code (Code)
	2nd Time	☐ Normal Code	☐ Malfunction Code (Code)

EJDA017A

PROBLEM SYMPTOMS TABLE

If a normal code is displayed during the DTC check but the problem still occurs, check the circuits for each problem symptom in the order given in the table below and proceed to the relevant troubleshooting page.

Symptom	Suspect Area	See page
ABS does not operate.	Only when 1. -4. are all normal and the problem is still occurring, replace the HECU. 1. Check the DTC reconfirming that the normal code is output. 2. Power source circuit. 3. Speed sensor circuit. 4. Check the hydraulic circuit for leakage.	BR - 56
ABS does not operate intermittently.	Only when 1. -4. are all normal and the problem is still occurring, replace the ABS actuator assembly. 1. Check the DTC reconfirming that the system is operating to specifications. 2. Wheel speed sensor circuit. 3. Stop lamp switch circuit. 4. Check the hydraulic circuit for leakage.	BR - 58
Communication with Scan tool is not possible. (Communication with any system is not possible)	1. Power source circuit 2. Diagnosis line	BR - 59
Communication with Scan tool is not possible. (Communication with ABS only is not possible)	1. Power source circuit 2. Diagnosis line 3. HECU	BR - 60
When ignition key is turned ON (engine OFF), the ABS warning lamp does not light up.	1. ABS warning lamp circuit 2. HECU	BR - 61
Even after the engine is started, the ABS warning lamp remains ON.	1. ABS warning lamp circuit 2. HECU	BR - 62

CAUTION

During ABS operation, the brake pedal may vibrate or may not be able to be depressed. Such phenomena are due to intermittent changes in hydraulic pressure inside the brake line to prevent the wheels from locking and is not an abnormality.

ABS Does Not Operate.

EJBF505T

DETECTING CONDITION

Trouble Symptoms	Possible Cause
Brake operation varies depending on driving conditions and road surface conditions, so diagnosis can be difficult.However if a normal DTC is displayed, check the following probable cause. When the problem is still occurring, replace the ABS control module.	- Inoperative power source circuit - Inoperative wheel speed sensor circuit - Inoperative hydraulic circuit for leakage - Inoperative HECU

INSPECTION PROCEDURES

DTC INSPECTION

1. Connect the Scan Tool with the data link connector and turn the ignition switch ON.
2. Verify that the system is operating to specifications. Is the system operating to specifications?

NO

▶ Check the power source circuit.

YES

▶ Erase the DTC and recheck using Scan Tool.

CHECK THE POWER SOURCE CIRCUIT.

1. Disconnect the connector from the ABS control module.
2. Turn the ignition switch ON, measure the voltage between terminal 18 of the ABS control module harness side connector and body ground.

Specification: approximately B+

Is the voltage within specification?

YES

▶ Check the ground circuit.

NO

▶ Check the harness or connector between the fuse (10A) in the engine compartment junction block and the ABS control module. Repair if necessary.

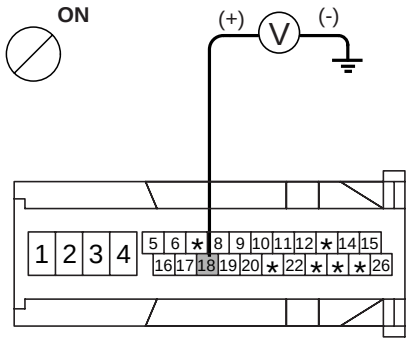

EJRF702O

CHECK THE GROUND CIRCUIT.

1. Disconnect the connector from the ABS control module.
2. Check for continuity between terminals 1,4 of the ABS control module harness side connector and ground point.
   Is there continuity?

YES

▶ Check the wheel speed sensor circuit.

NO

▶ Repair an open in the wire and ground point.

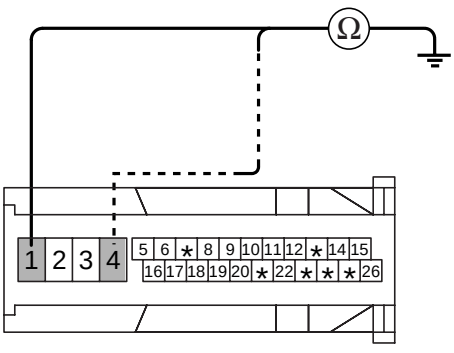

EJRF702P

CHECK THE WHEEL SPEED SENSOR CIRCUIT.

Refer to the DTC troubleshooting procedures.
Is the system operating to specifications?

YES

▶ Check the hydraulic circuit for leakage.

NO

▶ Repair or replace the wheel speed sensor.

CHECK THE HYDRAULIC CIRCUIT FOR LEAKAGE.

Refer to the hydraulic lines.
Inspect leakage of the hydraulic lines.
Is the system operating to specifications?

YES

▶ The problem is still occurring, replace the ABS control module.

NO

▶ Replace the leaking hydraulic lines.

ABS Does Not Operate (Intermittently).

BJKG500R

DETECTING CONDITION

Trouble Symptoms	Possible Cause
Brake operation varies depending on driving conditions and road surface conditions, so diagnosis can be difficult.However if a normal DTC is displayed, check the following probable cause. When the problem is still occurring, replace the ABS control module.	- Inoperative power source circuit - Inoperative wheel speed sensor circuit - Inoperative hydraulic circuit for leakage - Inoperative HECU

INSPECTION PROCEDURES

DTC INSPECTION

1. Connect the Scan Tool with the data link connector and turn the ignition switch ON.
2. Verify that the system is operating to specifications. Is the system operating to specifications?

NO

▶ Check the wheel speed sensor circuit.

YES

▶ Erase the DTC and recheck using Scan Tool.

CHECK THE WHEEL SPEED SENSOR CIRCUIT.

Refer to the DTC troubleshooting procedures.
Is the system operating to specifications?

YES

▶ Check the stop lamp switch circuit.

NO

▶ Repair or replace the wheel speed sensor.

CHECK THE STOP LAMP SWITCH CIRCUIT.

1. Check that stop lamp lights up when brake pedal is depressed and turns off when brake pedal is released.
2. Measure the voltage between terminal 20 of the ABS control module harness side connector and body ground when brake pedal is depressed.

Specification: approximately B+

Is the voltage within specification?

YES

▶ Check the hydraulic circuit for leakage.

NO

▶ Repair the stop lamp switch. Repair an open in the wire between the ABS control module and the stop lamp switch.

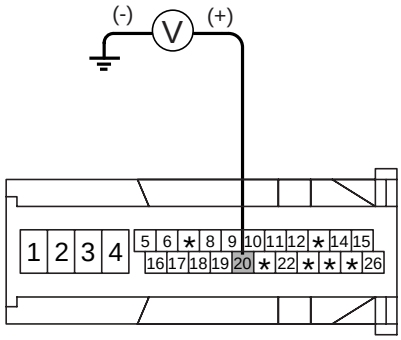

EJRF702Q

CHECK THE HYDRAULIC CIRCUIT FOR LEAKAGE.

Refer to the hydraulic lines.
Inspect leakage of the hydraulic lines.
Is the system operating to specifications?

YES

▶ The problem is still occurring, replace the ABS control module.

NO

▶ Replace the leaking hydraulic lines.

Communication with Scan-Tool is not possible.
(Communication with any system is not possible)

BJKG500S

DETECTING CONDITION

Trouble Symptoms	Possible Cause
Possible malfunction in the power supply system (including ground) for the diagnosis line.	- An open in the wire - Poor ground - Inoperative power source circuit

INSPECTION PROCEDURES

CHECK THE POWER SUPPLY CIRCUIT FOR THE DIAGNOSIS

Measure the voltage between terminal 9 of the data link connector and body ground.

Specification: approximately B+

Is voltage within specification?

YES

▶ Check the ground circuit for the diagnosis.

NO

▶ Repair an open in the wire. Check and replace fuse (15A) from the engine compartment junction block.

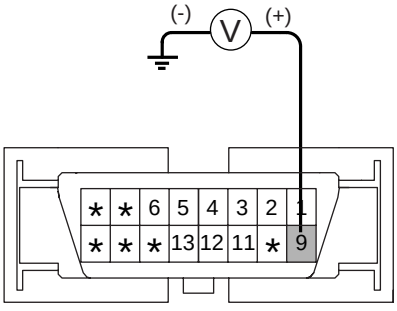

SCMBR6529L

CHECK THE GROUND CIRCUIT FOR THE DIAGNOSIS

Check for continuity between terminal 5 of the data link connector and body ground.
Is there continuity?

NO

▶ Repair an open in the wire between terminal 5 of the data link connector and ground point.

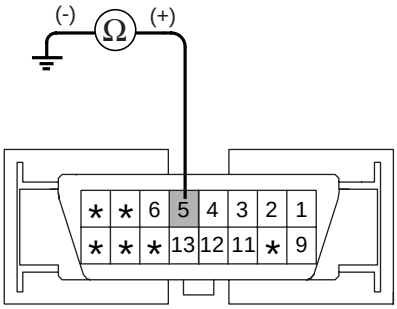

SCMBR6530L

Communication with Scan Tool is not possible.
(Communication with ABS only is not possible)

BJKG500T

DETECTING CONDITION

Trouble Symptoms	Possible Cause
When communication with Scan Tool is not possible, the cause may be probably an open in the HECU power circuit or an open in the diagnosis output circuit.	- An open in the wire - Inoperative HECU - Inoperative power source circuit

INSPECTION PROCEDURES

CHECK FOR CONTINUITY IN THE DIAGNOSIS LINE

1. Disconnect the connector from the ABS control module.
2. Check for continuity between terminals 11 of the ABS control module connector and 1 of the data link connector.
   Is there continuity?

YES

▶ Check the power source of ABS control module.

NO

▶ Repair an open in the wire.

CHECK THE POWER SOURCE OF ABS CONTROL MODULE

1. Disconnect the connector from the ABS control module.
2. Turn the ignition switch ON, measure the voltage between terminal 18 of the ABS control module harness side connector and body ground.

Specification: approximately B+

Is voltage within specification?

YES

▶ Check for poor ground.

NO

▶ Check the harness or connector between the fuse (10A) in the engine compartment junction block and the ABS control module.Repair if necessary.

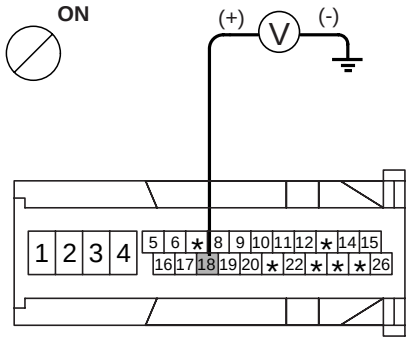

EJRF702O

CHECK FOR POOR GROUND

Check for continuity between terminal 5 of the data link connector and ground point.

YES

▶ Replace the ABS control module and recheck.

NO

▶ Repair an open in the wire or poor ground.

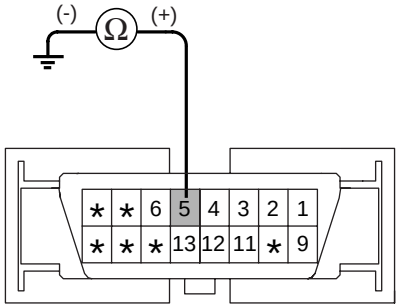

SCMBR6530L

When Ignition Key Is Turned ON (engine OFF), The ABS Warning Lamp Does Not Light Up.

EJBF505X

DETECTING CONDITION

Trouble Symptoms	Possible Cause
When current flows in the HECU the ABS warning lamp turns from ON to OFF as the initial check.Therefore if the lamp does not light up, the cause may be an open in the lamp power supply circuit, a blown bulb, an open in the both circuits between the ABS warning lamp and the HECU, and the inoperative HECU.	- Inoperative ABS warning lamp bulb - Blown No.2 fuse (10A) in the engine compartment junction block - Inoperative ABS warning lamp module - Inoperative HECU

INSPECTION PROCEDURES

PROBLEM VERIFICATION

Disconnect the connector from the ABS control module and turn the ignition switch ON.
Does the ABS warning lamp light up?

YES

▶ It is normal. Recheck the ABS control module.

NO

▶ Check the power source for the ABS warning lamp.

CHECK THE POWER SOURCE FOR THE ABS WARNING LAMP

1. Disconnect the instrument cluster connector and turn the ignition switch ON.
2. Measure the voltage between terminal 8 of the cluster harness side connector and body ground.

Specification: approximately B+

Is voltage within specification?

YES

▶ Repair bulb or instrument cluster assembly.

NO

▶ Check for blown fuse.

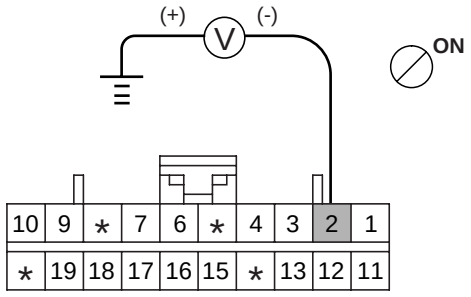

SCMBR6531L

CHECK FOR BLOWN FUSE

Check continuity of fuse (10A) from the engine compartment junction block.
Is there continuity?

YES

▶ Repair an open in the wire between ABS fuse and 1 of cluster connector.

NO

▶ Replace the blown fuse.

Even After The Engine Is Started, The ABS Warning Lamp Remains ON.

EJBF505Y

DETECTING CONDITION

Trouble Symptoms	Possible Cause
If the HECU detects trouble, it lights the ABS warning lamp while at the same time prohibiting ABS control. At this time, the HECU records a DTC in memory.Even though the normal code is output, the ABS warning lamp remains ON, then the cause may be probably an open or short in the ABS warning lamp circuit.	- An open in the wire - Inoperative instrument cluster assembly - Inoperative ABS warning lamp module - Inoperative HECU

INSPECTION PROCEDURES

CHECK DTC OUTPUT.

1. Connect the Scan Tool to the 16P data link connector located behind the driver's side kick panel.
2. Check the DTC output using Scan Tool.
   Is DTC output?

YES

▶ Repair circuit indicated by code output.

NO

▶ Check instrument cluster.

CHECK INSTRUMENT CLUSTER

Disconnect the cluster connector and turn the ignition switch ON.
Does the ABS warning lamp remains ON?

YES

▶ Replace the instrument cluster.

NO

▶ Check for open the wire.

CHECK FOR OPEN IN THE WIRE

Check for continuity in the wire between cluster and ABS control module.
Is there continuity?

YES

▶ Replace the ABS control module and recheck.

NO

▶ Repair an open in the wire between cluster and ABS control module.

BLEEDING OF BRAKE SYSTEM

This procedure should be followed to ensure adequate bleeding of air and filling of the ABS unit, brake lines and master cylinder with brake fluid.

1. Remove the reservoir cap and fill the brake reservoir with brake fluid.

   CAUTION

   If there is any brake fluid on any painted surface, wash it off immediately.

   NOTE

   When pressure bleeding, do not depress the brake pedal.
   Recommended fluid..... DOT3

2. Connect a clear plastic tube to the brake caliper bleeder plug and insert the other end of the tube into a half filled clear plastic bottle.

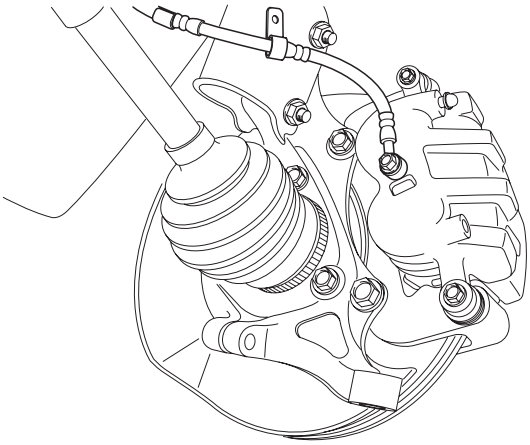

AJKF603S

3. Connect the scan tool to the data link connector located underneath the dash panel.

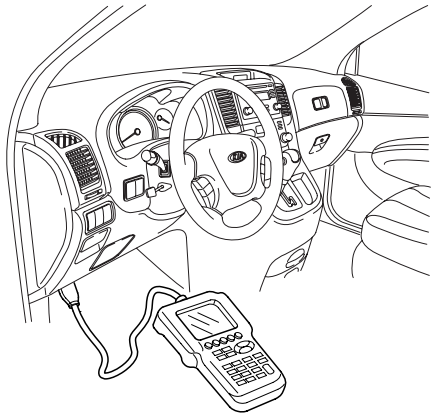

ARKF500A

4. Select and operate according to the instructions on the scan tool screen.

   CAUTION

   You must obey the maximum operating time of the ABS motor with the scan tool to prevent the motor pump from burning.

   1) Select Hyundai vehicle diagnosis.

   2) Select vehicle name.

   3) Select Anti-Lock Brake system.

   4) Select air bleeding mode.

   5) Press "YES" to operate motor pump and solenoid valve.

1.6 AIR BLEEDING MODE	
ABS AIR BLEEDING STATUS	
01. SOLENOID VALVE STATUS	CLOSE
02. MOTOR PUMP STATUS	OFF
DO YOU WANT TO START ?	
(PRESS [YES] KEY)	

EJDA014F

   6) Wait 60 sec. before operating the air bleeding again. (If not, you may damage the motor.)

1.6 AIR BLEEDING MODE	
ABS AIR BLEEDING STATUS	
01. SOLENOID VALVE STATUS	OPEN
02. MOTOR PUMP STATUS	ON
TIME : AUTOMATIC COUNT (1-60 SEC.)	

EJDA014G

5. Pump the brake pedal several times, and then loosen the bleeder screw until fluid starts to run out without bubbles. Then close the bleeder screw.

6. Repeat step 5 until there are no more bubbles in the fluid for each wheel.

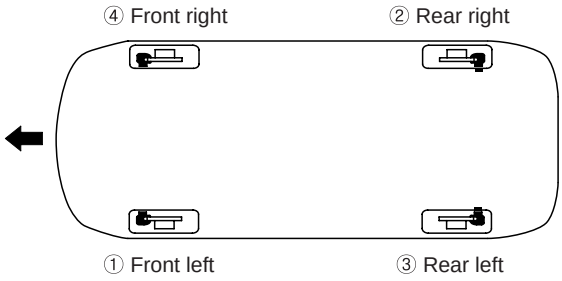

EJRF702W

7. Tighten the bleeder screw.

Bleed screw tightening torque: 7~1 3 Nm (0.7 ~1.3 kgf·m, 5.1 ~ 9.4 lb-ft)

DIAGNOSTIC TROUBLE CODE CHART(DTC)

● : MIL ON ○ : MIL OFF

DTC CODE	Trouble description	Warning lamp condition			Etc.	SEE PAGE
		EBD	ABS	ESP		
C1101	Battery voltage high	●	●	●		BR - 67
C1102	Battery voltage low	○/●	●	●		BR - 72
C1200	Wheel speed sensor front-LH open/short	○/●	●	●		BR - 76
C1201	Wheel speed sensor front-LH range / performance / intermittent	○/●	●	●		BR - 82
C1202	Wheel speed sensor front-LH invalid/no signal	○/●	●	●		BR - 86
C1203	Wheel speed sensor front-RH open/short	○/●	●	●		BR - 76
C1204	Wheel speed sensor front-RH range / performance / intermittent	○/●	●	●		BR - 82
C1205	Wheel speed sensor front-RH invalid/no signal	○/●	●	●		BR - 86
C1206	Wheel speed sensor rear-LH open/short	○/●	●	●		BR - 76
C1207	Wheel speed sensor rear-LH range / performance / intermittent	○/●	●	●		BR - 82
C1208	Wheel speed sensor rear-LH invalid/no signal	○/●	●	●		BR - 86
C1209	Wheel speed sensor rear-RH open/short	○/●	●	●		BR - 76
C1210	Wheel speed sensor rear-RH range / performance / intermittent	○/●	●	●		BR - 82
C1211	Wheel speed sensor rear-RH invalid/no signal	○/●	●	●		BR - 86
C1213	Wheel speed frequency error	○/●	●	●		BR - 91
C1235	Primary pressure sensor - electrical	○	●	●	ESP only	BR - 95
C1237	Pressure sensor - other	○	●	●	ESP only	BR - 99
C1260	Steering angle sensor - signal	○	○	●	ESP only	BR - 100
C1261	Steering angle sensor not calibrated	○	○	●	ESP only	BR - 107
C1282	Yaw rate & lateral G sensor - electrical	○	○	●	ESP only	BR - 110
C1283	Yaw rate & lateral G sensor - signal	○	○	●	ESP only	BR - 117
C1503	ESP switch error	○	○	●	ESP only	BR - 121
C1513	Brake switch error	○	●	●	ESP only	BR - 125
C1604	ECU hardware error	●	●	●		BR - 131
C1605	CAN hardware error	○	○	●	ESP only	BR - 132
C1611	CAN time-out EMS	○	○	●	ESP only	BR - 133
C1612	ECU(brake system) hardware error	○	○	●	ESP only	BR - 135

DTC CODE	Trouble description	Warning lamp condition			Etc.	SEE PAGE
		EBD	ABS	ESP		
C1616	CAN bus off ESP	○	○	●	ESP only	BR - 137
C1623	CAN time-out SAS	○	○	●	ESP only	BR - 143
C1625	CAN time-out ESP	○	○	●	ESP only	BR - 150
C1626	Implausible Control	○	●	●	ESP only	BR - 151
C1702	Variant Coding	●	●	●	ESP only	BR - 152
C2112	Valve relay error	○/●	●	●		BR - 154
C2308	Front-LH Valve error (Inlet valve)	●	●	●		BR - 157
C2312	Front-LH Valve error (Outlet valve)	●	●	●		BR - 161
C2316	Front-RH Valve error (Inlet valve)	●	●	●		BR - 157
C2320	Front-RH Valve error (Outlet valve)	●	●	●		BR - 161
C2324	Rear-LH Valve error (Inlet valve)	●	●	●		BR - 157
C2328	Rear-LH Valve error (Outlet valve)	●	●	●		BR - 161
C2332	Rear-RH Valve error (Inlet valve)	●	●	●		BR - 157
C2336	Rear-RH Valve error (Outlet valve)	●	●	●		BR - 161
C2366	USV1 error	●	●	●	ESP only	BR - 163
C2370	USV2 error	●	●	●	ESP only	BR - 163
C2372	HSV1 error	●	●	●	ESP only	BR - 163
C2374	HSV2 error	●	●	●	ESP only	BR - 163
C2402	Motor electrical	●	●	●		BR - 165

DTC C1101 BATTERY VOLTAGE HIGH

COMPONENT LOCATION EA52FC74

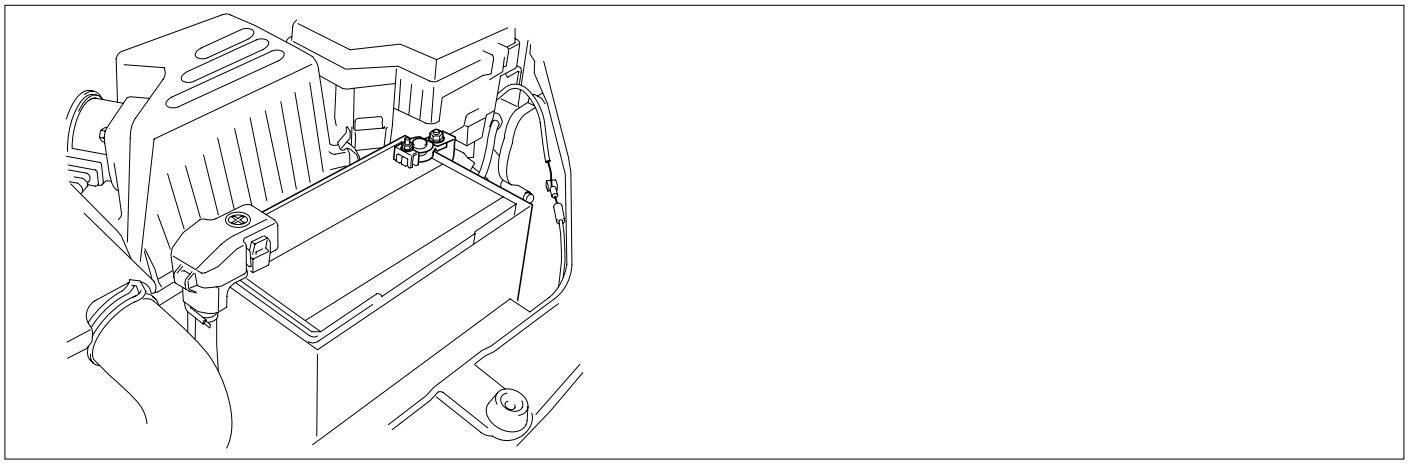

SCMBR6544D

GENERAL DESCRIPTION EA8D3933

The ABS ECU(Electronic Control Unit) checks the battery voltage and alternator output voltage to determine, as a safety issue, whether the ABS system can operate normally or not. The normal battery voltage range is essential for controlling the ABS system as intended.

DTC DESCRIPTION ED2E3597

The ABS ECU monitors battery voltage and alternator output voltage by reading the value of voltage. When the voltage is higher than the expected normal value, this code is set, and the ABS/EBD/ESP functions are prohibited. If the voltage recovers, to within normal operating ranges, then the controller returns to normal operation as well.

DTC DETECTING CONDITION EC14AE66

Item	Detecting Condition	Possible cause
DTC Strategy	• Battery Voltage Monitoring	• Poor connection in power supply circuit (IGN+) • Inoperative Alternator • Inoperative HECU
Monitoring Period	• Continuous (Over voltage faults will be always stored.)	
Enable Conditions	• When Vign is higher than 16.8 V. - If the voltage is recovered to 16.7 V, the controller returns to normal state. - The monitored supply voltage is filtered and limited to a rise time of 4 volts per second.	
Fail Safe	• The ABS/EBD/ESP functions are inhibited. - The proper function of valves and return pump is not guaranteed. • The ABS/EBD/ESP warning lamps are activated. • The supply voltage to wheel speed sensor is interrupted.	

MONITOR SCANTOOL DATA E8F74786

1. Connect scantool to Data Link Connector(DLC)
2. Engine "ON".
3. Monitor the "BATTERY VOLTAGE" parameter on the scantool.

Specification : Approx. Below. 16.7 V

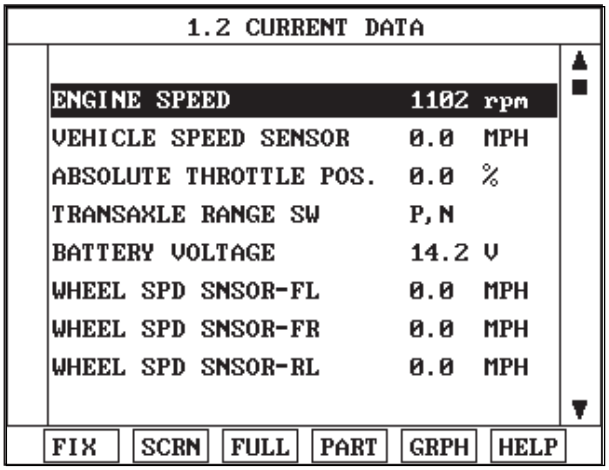

Fig1

Fig 1) Test Condition : Ignition "ON" & Engine "ON" Normal Data

SCMBR6532L

4. Is parameter displayed within specifications?

YES

▶ Fault is intermittent caused by poor connection in power harness (IGN+) and/or HECU's connector or was repaired and HECU memory was not cleared. Thoroughly check connectors for looseness, poor connection, bending, corrosion, contamination, deterioration, or damage. Repair or replace as necessary and then go to "Verification Of Vehicle Repair" procedure.

NO

▶ Go to "W/Harness Inspection" procedure.

TERMINAL & CONNECTOR INSPECTION E41C0980

1. Many malfunctions in the electrical system are caused by poor harness(es) and terminals condition. Faults can also be caused by interference from other electrical systems, and mechanical or chemical damage.

2. Thoroughly check connectors for looseness, poor connection, bending, corrosion, contamination, deterioration, or damage.

3. Has a problem been found?

YES

▶ Repair as necessary and then go to "Verification Of Vehicle Repair" procedure.

NO

▶ Confirm the DTC status at another system to be able to confirm C1101 or DTC code ralated to over voltage.
▶ If there isn't C1101 code at another system, Go to "Power Circuit Inspection" procedure.
▶ If there is C1101 or DTC code ralated to over voltage at another system, Go to "Alternator Output Voltage Inspection" procedure.

ALTERNATOR OUTPUT VOLTAGE INSPECTION

1. Engine "ON".

2. Measure voltage between the battery terminal(+) and the battery terminal(-) with maintaining ENG RPM 2,500RPM (idle). over 2 minutes.

Specification : Below. 16.7 V

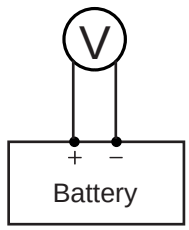

1. Battery Terminal(+)
2. Battery Terminal(-)

SCMBR6533L

3. Is the measured voltage within specifications?

YES

▶ Go to "Power Circuit Inspection" procedure.

NO

▶ Check that the tension of driving velt, ENG RPM, fuse, terminal of battery, all terminals of alternator are in good condition and check for damaged harness and poor connection between alternator and battery. If OK repair or replace alternator and then go to "Verification Of Vehicle Repair" procedure.

POWER SUPPLY CIRCUIT INSPECTION E2C172E4

1. Engine "ON".
2. Measure voltage between the battery terminal(+) and terminal "28" of the HECU harness connector.

Specification : Approx. below 0.2 V

<C281>

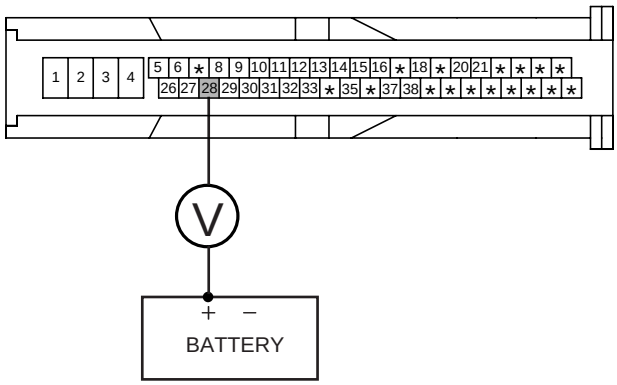

<ABS>
18. IGNITION(+)

<ESP>
28. IGNITION(+)

SCMBR6534L

3. Is the measured voltage within specifications?

YES

▶ Go to "Ground Circuit Inspection" procedure.

NO

▶ Check for damaged harness and poor connection between the battery terminal(+) and terminal "28" of the HEC Uharness connector. Repair as necessary and then go to "Verification Of Vehicle Repair" procedure.

GROUND CIRCUIT INSPECTION E03AF84C

1. Ignition "OFF".
2. Disconnect HECU connector.
3. Measure resistance between terminal "4" of the HECU harness connector and chassis ground.

Specification : Approx. below 1 Ω

<C281>

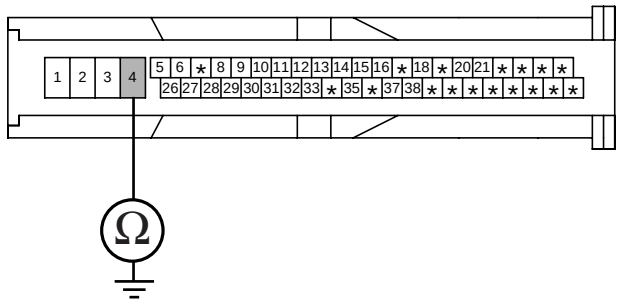

4. Ground

SCMBR6535L

4. Is the measured resistance within specifications?

YES

▶ Substitute with a known-good HECU and check for proper operation. If problem is corrected, replace HECU and then go to "Verification Of Vehicle Repair" procedure.

NO

▶ Check for damaged harness and poor connection between terminal "4" of the HECU harness connector and chassis ground. Repair as necessary and then go to "Verification Of Vehicle Repair" procedure.

VERIFICATION OF VEHICLE REPAIR E91923EB

After a repair, it is essential to verify that the fault has been corrected.

1. Connect scantool and select "Diagnostic Trouble Codes (DTCs)" mode
2. Using a scantool, Clear DTC.
3. Operate the vehicle within DTC Detecting Condition in General Information
4. Are any DTCs present?

YES

▶ Go to the applicable troubleshooting procedure.

NO

▶ System performing to specification at this time.

DTC C1102 BATTERY VOLTAGE LOW

COMPONENT LOCATION EB61E615

Refer to DTC C1101.

GENERAL DESCRIPTION E3922A1D

Refer to DTC C1101.

DTC DESCRIPTION E63054CB

The ABS ECU monitors the battery voltage and alternator output voltage by reading the value of voltage. When the voltage is lower than the expected normal value, this code is set. The ABS/ESP functions are prohibited and the EBD function is allowed on LOW VOLTAGE CONDITION, the ABS/EBD/ESP functions are prohibited on UNDER VOLTAGE CONDITION. If the voltage recovers, to within normal operating ranges, then the controller returns to normal operations as well

DTC DETECTING CONDITION EE4B7682

Item		Detecting Condition	Possible cause
DTC Strategy		• Battery Voltage Monitoring	• Poor connection in power supply circuit (IGN+) • Inoperative HECU
Monitoring Period		• Continuous (Under voltage faults are only entered in the EEPROM if the vehicle speed is > 6 km/h.)	
Case1 (Low voltage)	Enable Conditions	• When Vign is lower than 9.3 V outside ABS/ESP control. • When Vign is lower than 9.2 V inside ABS/ESP control. - If IGN voltage is recovered to 9.6 V, the system recovers to normal state. - The monitored supply voltage is filtered and limited to a rise time of 4 volts per second.	
	Fail Safe	• The ABS/ESP functions are inhibited. • The ABS/ESP warning lamps are activated.	
Case2 (Under voltage)	Enable Conditions	• When Vign is lower than 7.7 V. - If IGN voltage is recovered to 7.8V, the system recovers to normal state. - The monitored supply voltage is filtered and limited to a rise time of 4 volts per second.	
	Fail Safe	• The ABS/EBD/ESP functions are inhibited. • The ABS/EBD/ESP warning lamps are activated.	

MONITOR SCANTOOL DATA EBFD375A

1. Connect scantool to Data Link Connector(DLC)
2. Engine "ON".
3. Monitor the "BATTERY VOLTAGE" parameter on the scantool.

Specification : Above. 9.6 V

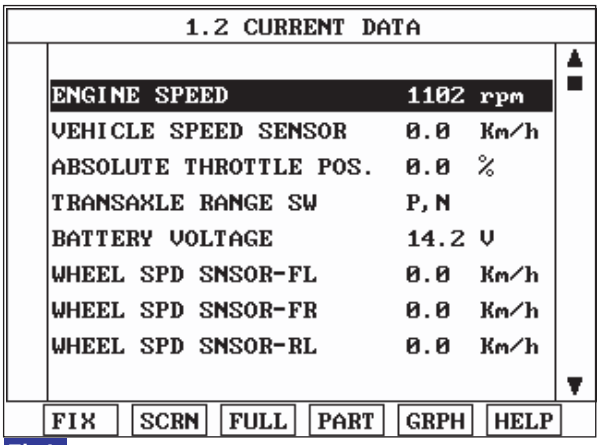

Fig1

Fig 1) Test Condition : Ignition "ON" & Engine "ON". Normal Data

SCMBR6536L

4. Is parameter displayed within specifications?

YES

▶ Fault is intermittent caused by poor connection in power harness (IGN+) and/or HECU's connector or was repaired and HECU memory was not cleared. Thoroughly check connectors for looseness, poor connection, bending, corrosion, contamination, deterioration, or damage. Repair or replace as necessary and then go to "Verification Of Vehicle Repair" procedure

NO

▶ Go to "W/Harness Inspection" procedure.

TERMINAL & CONNECTOR INSPECTION E0E76E90

1. Many malfunctions in the electrical system are caused poor harness(es) and terminals condition. Faults can also be caused by interference from other electrical systems, and mechanical or chemical damage.
2. Thoroughly check connectors for looseness, poor connection, bending, corrosion, contamination, deterioration, or damage.
3. Has a problem been found?

YES

▶ Repair as necessary and then go to "Verification Of Vehicle Repair" procedure.

NO

▶ Go to "Alternator Output Voltage" procedure.

ALTERNATOR OUTPUT VOLTAGE INSPECTION

1. Engine "ON".
2. Measure voltage between the battery terminal(+) and the battery terminal(-) with maintaining ENG RPM 2,500RPM (idle) over 2 minutes.

Specification : Above. 9.6 V

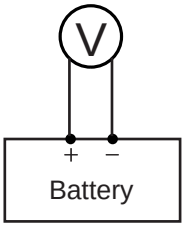

1. Battery Terminal(+)
2. Battery Terminal(-)

SCMBR6533L

3. Is the measured voltage within specifications?

YES

▶ Go to "Power Circuit Inspection" procedure.

NO

▶ Check that the tension of driving velt, ENG RPM, fuse, terminal of battery, all terminals of alternator are in good condition and check for damaged harness and poor connection between alternator and battery. If OK repair or replace alternator and then go to "Verification Of Vehicle Repair" procedure.

POWER CIRCUIT INSPECTION E7186C63

1. Ignition "OFF".
2. Disconnect HECU connector.
3. Ignition "ON" & Engine "OFF".
4. Measure voltage between terminal "28" of the HECU harness connector and chassis ground.

Specification : Approx. B+

<C281>

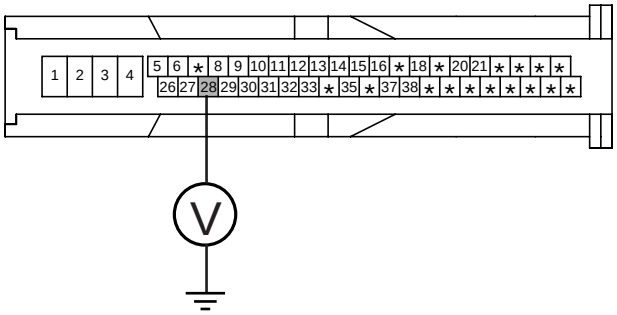

<ABS>
18. IGNITION(+)

<ESP>
28. IGNITION(+)

SCMBR6537L

5. Is the measured voltage within specifications?

YES

▶ Go to "Ground Circuit Inspection" procedure.

NO

▶ Check for damaged harness and poor connection between the battery terminal(+) and terminal "28" of the HECU harness connector. Check for open or blown 10A ABS fuse referring to "Circuit Diagram". Repair as necessary and then go to "Verification Of Vehicle Repair" procedure.

GROUND CIRCUIT INSPECTION ED5D60D9

Refer to DTC C1101.

VERIFICATION OF VEHICLE REPAIR EC8DB117

Refer to DTC C1101.

DTC C1200 FL WHEEL SPEED SENSOR-OPEN/SHORT
DTC C1203 FR WHEEL SPEED SENSOR-OPEN/SHORT
DTC C1206 RL WHEEL SPEED SENSOR-OPEN/SHORT
DTC C1209 RR WHEEL SPEED SENSOR-OPEN/SHORT

COMPONENT LOCATION EF3C984D

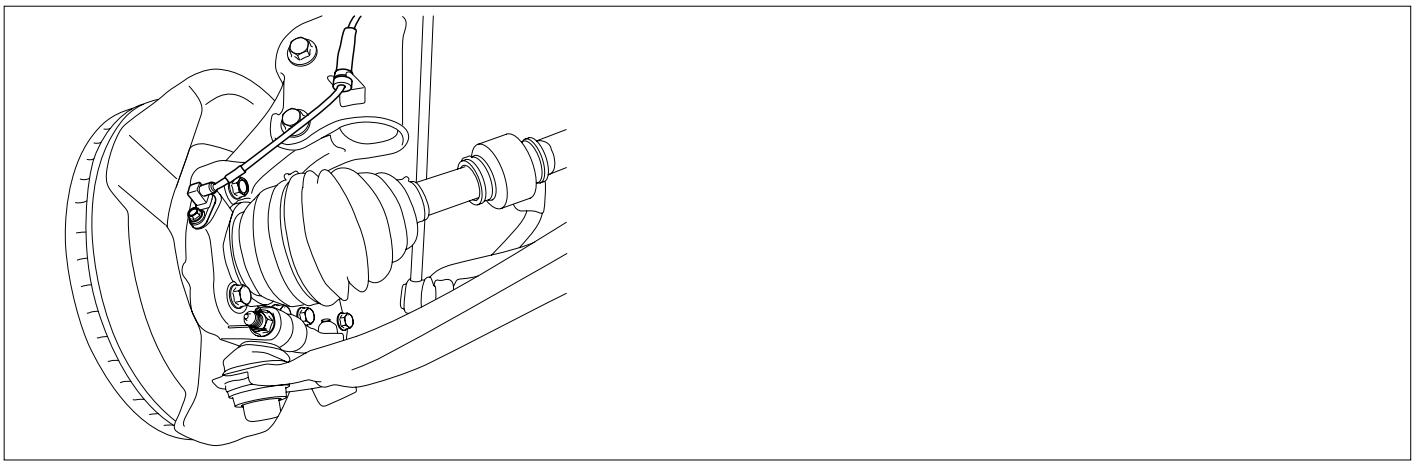

SCMBR6547D

GENERAL DESCRIPTION EF598248

The wheel speed sensor is the essential component the ABS ECU uses to calculate vehicle speed and to determine whether wheel lock occurs. For example, rear wheel speed signal is used as a referecnce value, for vehicle speed, in front wheel drive vehicles, and if a difference between front and rear wheel speed occurs, then ABS control is performed. Wheel speed sensor is active hall-sensor type and good at temperature and noise charariteristic. Digital waveform is produced as tone wheel rotate according as hall sensor principle. Frequency of duty waveform is changed in proportion to rotation of tone wheel and HECU calculate vehicle speed by this frequency.

DTC DESCRIPTION E3A8CED9

The ABS ECU monitors the wheel speed sensor circuit continuously. A direct current is supplied in the wheel-speed sensor by a power source in the input amplifier of the control unit. If the WSS circuit is broken, in that case a fault is detected by detecting abnormal input current. HECU cuts off the voltage supply to wheel sensor channel which had a fault and prevent vehicle's damage due to super heated harness. If one or more defects has detected, DTC code of defected wheel will be stored. Mutual short between sensors is detected by executing self diagnosis successively at corresponding wheel when ignition ON. Warning lamp is turned OFF unless additional faults are detected when the IG KEY is turned ON again.

DTC DETECTING CONDITION EA7455B1

<table>
<tr><th colspan="2">Item</th><th>Detecting Condition</th><th>Possible cause</th></tr>
<tr><td colspan="2">DTC Strategy</td><td>• Voltage monitoring</td><td rowspan="7">• Open or short of Wheel speed sensor circuit
• Inoperative Wheel speed sensor
• Inoperative HECU</td></tr>
<tr><td rowspan="2">Case1</td><td>Monitoring Period</td><td>• Once after power up.</td></tr>
<tr><td>Enable Conditions</td><td>• Shorts between WSS lines and shorts to UZ can be detected by switching single WSS channels in sequence. If there is an error after end of test, a failure is recognized.</td></tr>
<tr><td rowspan="2">Case2</td><td>Monitoring Period</td><td>• Continuous</td></tr>
<tr><td>Enable Conditions</td><td>• When the sensor current levels are out of permissible range(LOW : 7 mA, HIGH : 14 mA) for 200 ms.</td></tr>
<tr><td colspan="2">Fail Safe</td><td>• Sensor failure outside of the ABS control cycle
1) Only one wheel failure : Only the ABS/ESP functions are inhibited. The ABS/ESC warning lamps are activated and the EBD warning lamp is not activated.
2) Two wheels failure : Only the ABS/ESP functions are inhibited. The ABS/ESP warning lamps are activated and the EBD warning lamp is not activated.
3) More than 3 wheels failure :System down. The ABS/EBD/ESP functions are inhibited. The ABS/EBD/ESP warning lamps are activated.

• Sensor failure inside the ABS control cycle
1) One front wheel failure : Inhibit the ABS/ESP control. Pressure is increased on a front wheel, Pressure is decreased on a rear wheel. After the ABS/ESP control, the ABS/ESP functions are inhibited. The ABS/ESP warning lamps are activated and the EBD warning lamp is not activated.
2) Two wheels failure : Inhibit the ABS/ESP control. Pressure is increased on a front wheel, Pressure is decreased on a rear wheel. After the ABS/ESP control, the ABS/ESP functions are inhibited. The ABS/ESP warning lamps are activated and the EBD warning lamp is not activated.
3) More than 3 wheels failure : System down. The ABS/EBD/ESP functions are inhibited. The ABS/EBD/ESP warning lamps are activated.</td></tr>
</table>

MONITOR SCANTOOL DATA E81CC041

1. Engine "ON".
2. Connect scantool to Data Link Connector(DLC).
3. Start and drive vehicle in gear and maintain vehicle speed at or above 10 km/h(6 mph)
4. Monitor the "Wheel speed sensor" parameter on the Scantool.

Specification : Compare with another parameters related to wheel speed sensor. If it is the same as another parameters, it is in normal condition.

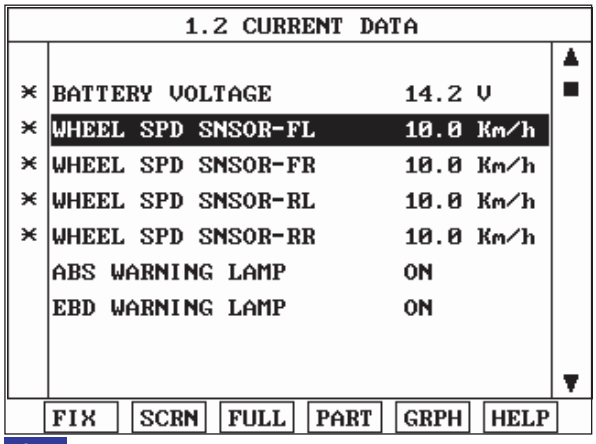

Fig1

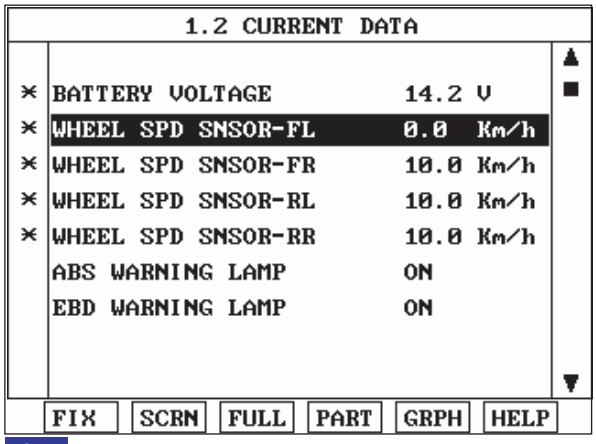

Fig2

Fig 1) Test Condition : Test Condition : Drive vehicle at a speed of 10km/h or more. (6mph or more) Normal Data
Fig 2) Test Condition : Drive vehicle at a speed of 10km/h or more. (6mph or more) Abnormal Data (Open)

SCMBR6538L

5. Is parameter displayed within specifications?

YES

▶ Fault is intermittent caused by poor connection in wheel speed sensor harness and/or HECU's connector or was repaired and HECU memory was not cleared. Thoroughly check connectors for looseness, poor connection, bending, corrosion, contamination, deterioration, or damage. Repair or replace as necessary and then go to "Verification Of Vehicle Repair" procedure.

NO

▶ Go to "W/Harness Inspection" procedure.

TERMINAL & CONNECTOR INSPECTION E3D7980A

1. Many malfunctions in the electrical system are caused by poor harness(es) and terminals. Faults can also be caused by interference from other electrical systems, and mechanical or chemical damage.
2. Thoroughly check connectors for looseness, poor connection, bending, corrosion, contamination, deterioration, or damage.
3. Has a problem been found?

YES

▶ Repair as necessary and then go to "Verification Of Vehicle Repair" procedure.

NO

▶ Go to "Power Circuit Inspection" procedure.

POWER SUPPLY CIRCUIT INSPECTION E08856A2

1. Ignition "ON".
2. Measure voltage between terminal (1) of the wheel speed sensor harness connector and chassis ground.

Specification : Approx. B+

<E02>

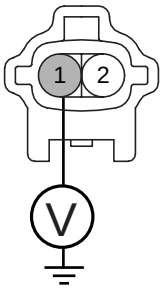

1. Wheel speed sensor(+)
2. Wheel speed sensor(-)

SCMBR6539L

3. Is the measured voltage within specifications?

YES

▶ Go to "Signal Circuit Inspection" procedure.

NO

▶ Check for open or short to GND in wheel speed sensor harness(FL) between terminal "1" of the wheel speed sensor(FL) harness connector and terminal of the HECU harness connector. Repair as necessary and then go to "Verification Of Vehicle Repair" procedure.
▶ If OK, Substitute with a known-good HECU and check for proper operation. If problem is corrected, replace HECU and then go to "Verification Of Vehicle Repair" procedure.

DTC	LOCATION	HECU harness connector (Power supply)	
		ABS	ESP
DTC C1200	Front Left	16	26
DTC C1203	Front Right	9	9
DTC C1206	Rear Left	6	6
DTC C1209	Rear Right	8	8

SIGNAL CIRCUIT INSPECTION E7F06691

1. Lift the vehicle.
2. Ignition "ON".
3. Turn the wheel with hand.
4. Measure waveform between terminal of the HECU harness connector and chassis ground.

Specification : Approx. High : 1.05 V , Low : 0.525 V

<E66>

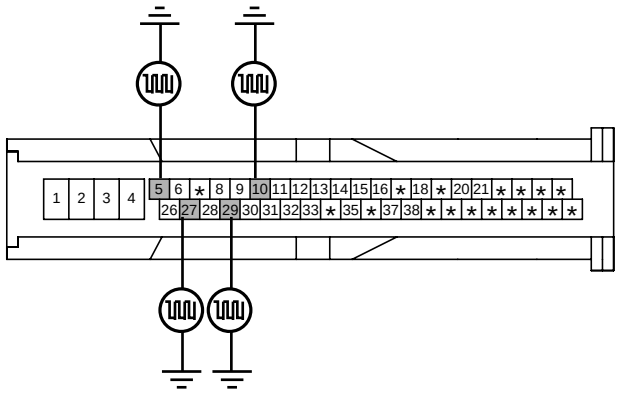

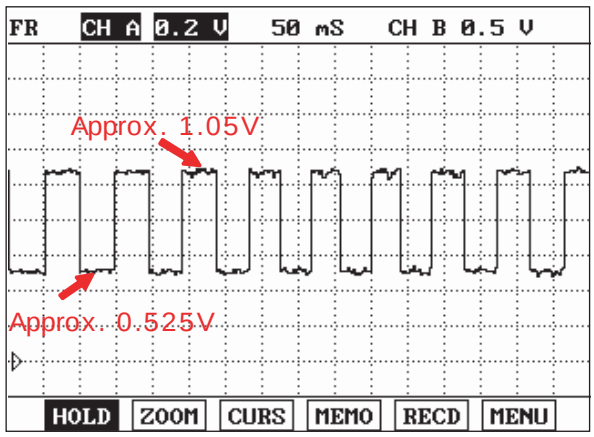

SCMBR6540L

DTC	LOCATION	HECU harness connector (Signal)	
		ABS	ESP
DTC C1200	Front Left	5	5
DTC C1203	Front Right	10	10
DTC C1206	Rear Left	17	27
DTC C1209	Rear Right	19	29

5. Is the measured waveform within specifications?

YES

▶ Substitute with a known-good HECU and check for proper operation. If problem is corrected, replace HECU and then go to "Verification Of Vehicle Repair" procedure.

NO

▶ Check for open or short to GND in wheel speed sensor harness(FL) between terminal "2" of the wheel speed sensor(FL) harness connector and terminal "5" of the HECU harness connector. Repair as necessary and then go to "Verification Of Vehicle Repair" procedure.
▶ If OK, Go to "Component Inspection" procedure.

COMPONENT INSPECTION E07F1542

1. Lift the vehicle.
2. Ignition "ON".
3. Turn the wheel with hand.
4. Measure waveform between terminal "1" of the wheel speed sensor harness connector and chassis ground.

Specification : Approx. High : 1.05 V , Low : 0.525 V

<E02>

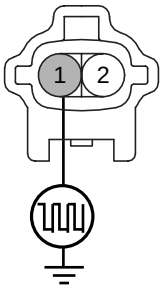

1. Wheel speed sensor (FL-)

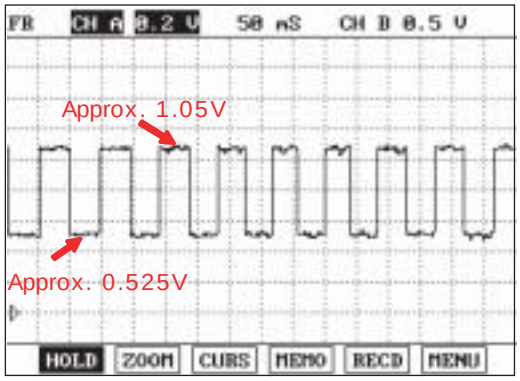

SCMBR6541L

5. Is the measured waveform within specifications?

YES

▶ Fault is intermittent caused by poor connection in wheel speed sensor harness (FL). Go to "Verification Of Vehicle Repair" procedure.

NO

▶ Substitute with a known-good Wheel speed sensor and check for proper operation. If problem is corrected, replace Wheel speed sensor and then go to "Verification Of Vehicle Repair" procedure.

VERIFICATION OF VEHICLE REPAIR EECDC592

Refer to DTC C1101.

DTC C1201 FL WHEEL SENSOR-RANGE/PERFORMANCE
DTC C1204 FR WHEEL SENSOR-RANGE/PERFORMANCE
DTC C1207 RL WHEEL SENSOR-RANGE/PERFORMANCE
DTC C1210 RR WHEEL SENSOR-RANGE/PERFORMANCE

COMPONENT LOCATION E9711C81

Refer to DTC C1200.

GENERAL DESCRIPTION E511D3E6

Refer to DTC C1200.

DTC DESCRIPTION EEC18A75

The ABS ECU monitors the wheel speed sensor signal continuously. This code is set when an abnormal signal due to air gap problem or an abnormal speed change ratio are detected at the vehicle speed between 10 km/h to 80 km/h. Warning lamp is turned OFF unless additional faults are detected when the IG KEY is turned ON again, and wheel speed is more than 12 Km/h.

DTC DETECTING CONDITION E11689A9

Item		Detecting Condition	Possible cause
DTC Strategy		• Signal monitoring	• Improper installation of wheel speed sensor • Abnormal Rotor and wheel bearing • Inoperative Wheel speed sensor • Inoperative HECU
Case1	Monitoring Period	• The monitoring is active from 10 km/h to 80 km/h and if no ABS-control is active at a front wheel and a rear wheel.	
	Enable Conditions	• Every time, if a gap in the wheel speed sensor signal occurs cyclically with one wheel rotation, a fault counter is increased by one. If the fault counter exceeds its limit of 6, a wheel specific fault is stored in the EEPROM.	
Case2	Monitoring Period	• Continuous	
	Enable Conditions	• If following interference and signal disturbance is detected, a failure is set after 10 s. non-plausible high frequency received. non-plausible high wheel acceleration. non-plausible high wheel jurk. non-plausible delta T and edges at low speed.	
Fail Safe		Refer to DTC C1200.	

MONITOR SCANTOOL DATA E9CE2C17

1. Engine "ON".
2. Connect scantool to Data Link Connector(DLC).
3. Start and drive vehicle in gear and maintain vehicle speed at or above 12 km/h(7 mph)
4. Monitor the "Wheel Speed Sensor" parameter on the Scantool.

Specification : Compare with another parameters related to wheel speed sensor. If it is the same as another parameters, it is in normal condition

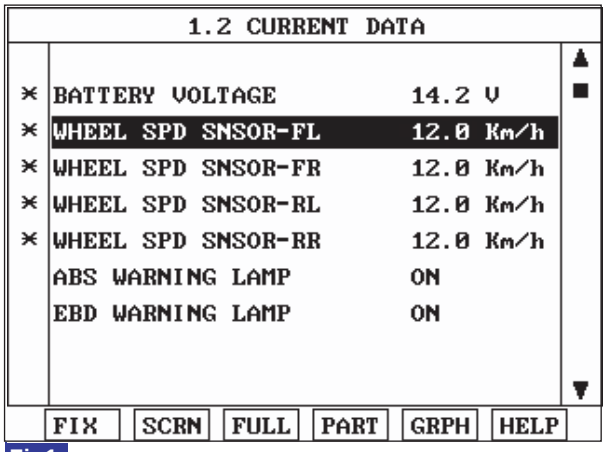

Fig1

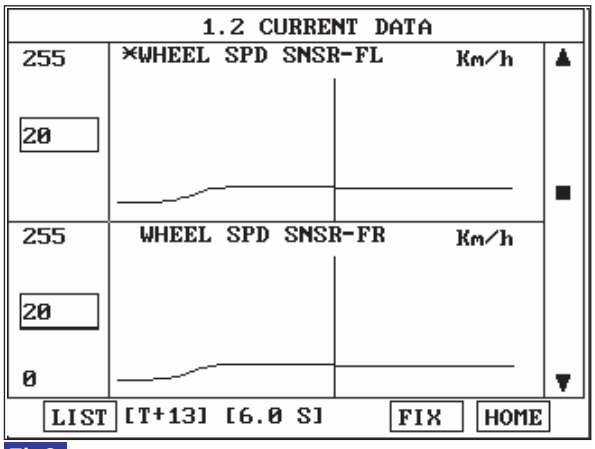

Fig2

Fig 1) Test Condition : Drive vehicle at a speed of 12 km/h or more. (7 mph or more) Normal Data
Fig 2) Test Condition : Drive vehicle at a speed of 20 km/h or more. (12 mph or more) Normal Graph

SCMBR6542L

5. Is parameter displayed within specifications?

YES

▶ Fault is intermittent caused by faulty HECU or external noise, was repaired and HECU memory was not cleared. Thoroughly check connectors for looseness, poor connection, bending, corrosion, contamination, deterioration, or damage. Repair as necessary and then go to "Verification Of Vehicle Repair" procedure.

NO

▶ Go to "Component Inspection" Procedure.

COMPONENT INSPECTION E85B1854

1. Lift the vehicle.
2. Ignition "ON".
3. Turn the wheel with hand.
4. Measure waveform between terminal "1" of the wheel speed sensor harness connector and chassis ground.

Specification : High : 1.05 V , Low : 0.525 V

<E02>

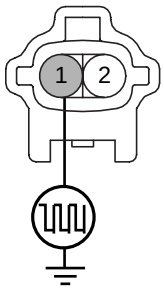

1. Wheel speed sensor (FL-)

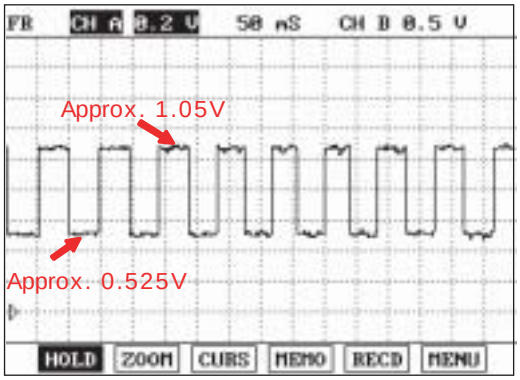

SCMBR6541L

5. Is the measured waveform within specifications?

YES

▶ Fault is intermittent caused by poor connection in wheel speed sensor harness or external noise, Thoroughly check connectors for looseness, poor connection, bending, corrosion, contamination, deterioration, or damage and external noise, an interference between harnesses. Repair or replace as necessary and then go to "Verification Of Vehicle Repair" procedure.
▶ If OK, Substitute with a known-good HECU and check for proper operation. If problem is corrected, replace HECU and then go to "Verification Of Vehicle Repair" procedure.

NO

▶ Check for improper installation of wheel speed sensor. If NG, repair as necessary and then go to "Verification Of Vehicle Repair" procedure.
▶ Check for damage of rotor teeth or wheel bearing. If NG, repair as necessary and then go to "Verification Of Vehicle Repair" procedure.
▶ Substitute with a known-good Wheel speed sensor and check for proper operation. If problem is corrected, replace Wheel speed sensor and then go to "Verification Of Vehicle Repair" procedure.

VERIFICATION OF VEHICLE REPAIR EBC95BA8

After a repair, it is essential to verify that the fault has been corrected.

1. Connect scantool and select "Diagnostic Trouble Codes (DTCs)" mode
2. Using a scantool, Clear DTC.
3. Operate the vehicle within DTC Detecting Condition in General Information.(Start and drive vehicle in gear and maintain vehicle speed at or above 12 km/h (7 mph))
4. Are any DTCs present ?

YES

▶ Go to the applicable troubleshooting procedure.

NO

▶ System performing to specification at this time.

DTC C1202 FL WHEEL SPEED SENSOR-NO SIGNAL
DTC C1205 FR WHEEL SPEED SENSOR-NO SIGNAL
DTC C1208 RL WHEEL SPEED SENSOR-NO SIGNAL
DTC C1211 RR WHEEL SPEED SENSOR-NO SIGNAL

COMPONENT LOCATION EDE1D3AF

Refer to DTC C1200.

GENERAL DESCRIPTION E10AAB5A

Refer to DTC C1200.

DTC DESCRIPTION EFD1371E

The ABS ECU monitors the wheel speed sensor signal continuously. This code is set when there is no wheel speed signals within 10 ms to 20 ms at a vehicle speed > 43.2 km/h or a deviation between sensors exceed the threshold or one or two wheels are at 2.75 km/h while the vehicle speed is at 12 km/h. Warning lamp is turned OFF unless additional faults are detected when the IG KEY is turned ON again, and wheel speed is more than 12 Km/h.

DTC DETECTING CONDITION E827615F

Item		Detecting Condition	Possible cause
DTC Strategy		• Signal monitoring	• Improper installation of wheel speed sensor • Abnormal Rotor and wheel bearing • Inoperative Wheel speed sensor • Inoperative HECU
Case1	Monitoring Period	• Continuous (only no under voltage is not detected)	
	Enable Conditions	• If one (or two) wheel are at 2.75 km/h and the other wheels are above 12 km/h for longer than 1s. • During driving, when the vehicle accelerates 18 km/h after a particular wheel speed gets to 2.75 km/h and stays there. At that time, If one (or two) wheel are at 2.75 km/h. - This monitoring is performed at the following condition. 1) At the time the vehicle is accelerated to 12 km/h 2) Once after energizing the system. 3) If the vehicle was stationary for approx. 2s. • If one (or two) wheels are under 5 km/h and the two fastest wheels have a velocity above 12 km/h for more than 20 s.	

Item		Detecting Condition	Possible cause
Case2	Monitoring Period	• Continuous (If vehicle speed > 12 m/s) - but this monitoring is disabled in the following event 1) Aquaplaning. 2) Interference. 3) Supply voltage below 7.6 or above 18 Volts	
	Enable Conditions	• No wheel speed signals within 10 ms to 20 ms at a vehicle speed > 12 m/s (43.2 km/h). - If the dynamic sensor monitor responses, the failures will be stored into failure memory immediately after a waiting period of 60 ms. - If occurs low voltage active sensors during the waiting period of 60 ms no failure is stored in the EEPROM.	
Case3	Monitoring Period	• Main Monitoring The main monitor needs additional information of the ESP-sensors and is active for a velocity > 20 km/h and no under voltage is detected. • Backup Monitoring - Continuous	
	Enable Conditions	• Main Monitoring 1) If the maximum difference of wheel speeds related to maximum wheel speed exceeds 5 %. 2) Detection filter time : - The above conditions apply for 20 s for 1 inoperative wheel speed sensor. - The above conditions apply for 40 s for 2 inoperative wheel speed sensor. • Backup Monitoring 1) If the deviation between the fastest and the slowest wheel is below 6 % related to the fastest wheel when the velocity is higher than 50 km/h. 2) When the velocity is below 50 km/h, if the deviation is an absolute value of 3 km/h. 3) Detection filter time : normally 20 s - In case of a detected curve, the threshold is increased with an additional value of 4 km/h.	
Case4	Monitoring Period	• Continuous	
	Enable Conditions	• The pulse width of wheel speed sensor is below 2 ms when vehicle speed is > 0 km/h and < 20 km/h.	

Item		Detecting Condition	Possible cause
Case 5	Monitoring Period	• Continuous	
	Enable Conditions	• Vehicle < 100 Km/h - Difference of two wheel speeds at FL to RL/RR to RR > 1.7 m/s (6 km/h). - Difference of two wheel speeds at FL to FR/RL to RR > 1.7 m/s + 1.1 m/s. - Difference of two wheel speeds at FL to RR/FR to RL > 1.7 m/s + 2.2 m/s. ※ If at least one wheel is at 1.4 m/s or lower, a wheel speed difference of adjoining wheels up to 3.3 m/s(or 3.3 m/s + 1.1 m/s) is permitted. • Vehicle > 100 Km/h - Difference of two wheel speeds at FL to RL/RR to RR > (6% × Vref). - Difference of two wheel speeds at FL to FR/RL to RR > (6% × Vref + 1.1 m/s). - Difference of two wheel speeds at FL to RR/FR to RL > (6% × Vref + 2.2 m/s). • Detection filter time - Response and detection filter time depend on the amount of the speed difference and additional conditions as shown below. 1) 18s - if fault threshold is exceeding > 1.7 m/s resp.6% 2) 9s - if fault threshold is exceeding > 3.3 m/s resp. 12% 3) If any wheel shows strong deceleration the fault detection filter time is not shorter than 18s. 4) If spinning wheel is detected the fault detection filter time is not shorter than 72s. • Fault allocation If the exact fault location can be determined the wheel specific fault will be set. This is the case if at the time of detection the faulty wheel speed is at or below 1.4 m/s. Otherwise a general wheel speed sensor generic fauly is set.	
Fail Safe		Refer to DTC C1200.	

MONITOR SCANTOOL DATA E311F0BA

1. Engine "ON".
2. Connect scantool to Data Link Connector(DLC).
3. Start and drive vehicle in gear and maintain vehicle speed at or above 50 km/h(31 mph)
4. Monitor the "Wheel Speed Sensor" parameter on the Scantool.

Specification : Compare with another parameters related to wheel speed sensor. If it is the same as another parameters, it is in normal condition.

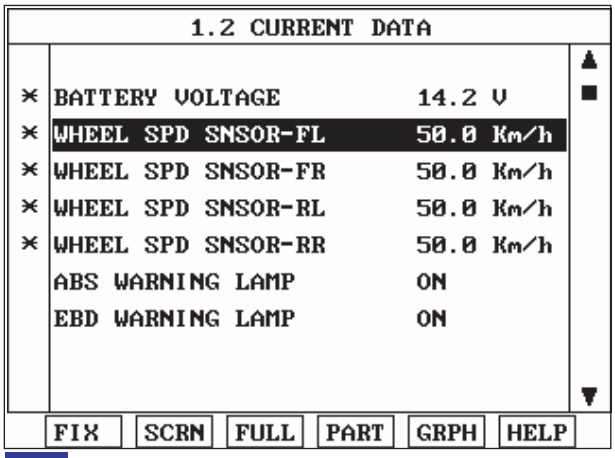

Fig1

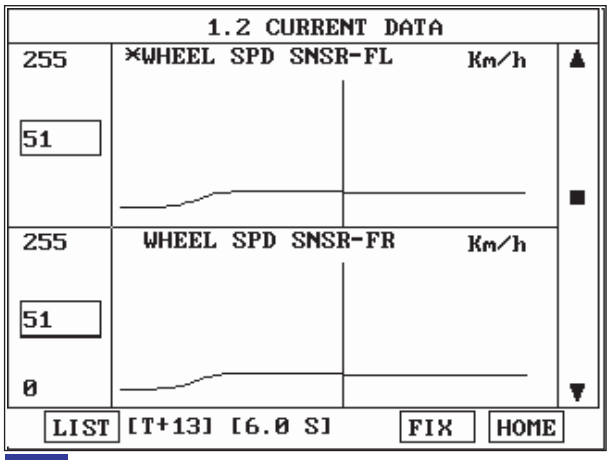

Fig2

SCMBR6543L

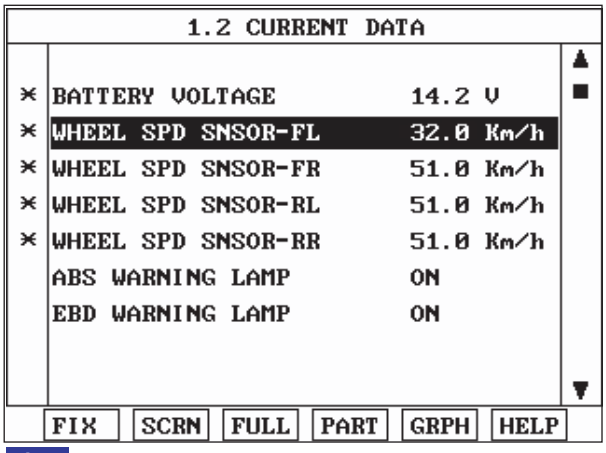

Fig3

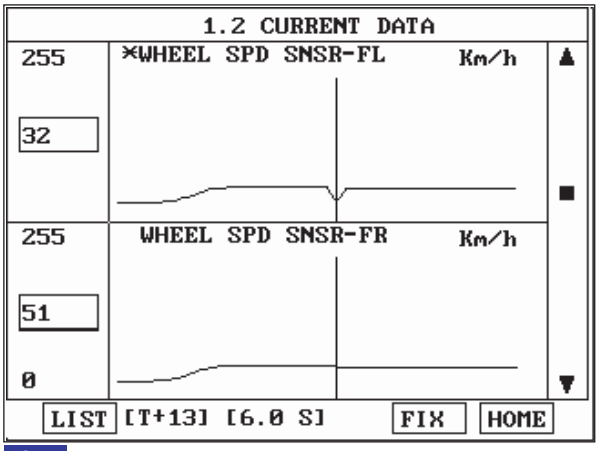

Fig4

Fig 1) Test Condition : Drive vehicle at a speed of 50 km/h or more. (31 mph or more) Normal Data
Fig 2) Test Condition : Drive vehicle at a speed of 51 km/h or more. (31 mph or more) Normal Graph
Fig 3) Test Condition : Drive vehicle at a speed of 51 km/h or more. (31 mph or more) Abnormal Data
Fig 4) Test Condition : Drive vehicle at a speed of 51 km/h or more. (31 mph or more) Abnormal Graph

SCMBR6544L

5. Is parameter displayed within specifications?

YES

▶ Fault is intermittent caused by poor connection in wheel speed sensor harness (FL), Thoroughly check connectors for looseness, poor connection, bending, corrosion, contamination, deterioration, or damage. Repair as necessary and then go to "Verification Of Vehicle Repair" procedure.

NO

▶ Go to "Component Inspection" Procedure.

COMPONENT INSPECTION ECF760AA

Refer to DTC C1201.

VERIFICATION OF VEHICLE REPAIR E5C12FB8

After a repair, it is essential to verify that the fault has been corrected.

1. Connect scantool and select "Diagnostic Trouble Codes (DTCs)" mode
2. Using a scantool, Clear DTC.
3. Operate the vehicle within DTC Detecting Condition in General Information.(Start and drive vehicle in gear and maintain vehicle speed at or above 50 km/h (31 mph))
4. Are any DTCs present ?

YES

▶ Go to the applicable troubleshooting procedure.

NO

▶ System performing to specification at this time.

DTC C1213 WHEEL SPEED FREQUENCY ERROR

COMPONENT LOCATION E8E790AC

Refer to DTC C1200.

GENERAL DESCRIPTION ECF51D36

Refer to DTC C1200.

DTC DESCRIPTION E7CF6293

The ABS ECU monitors the wheel speed sensor signal continuously. This code is set, if the speed difference with adjacent wheel is out of permissible range or the ABS control cycle is abnormal.

DTC DETECTING CONDITION E2FEC3D0

Item		Detecting Condition	Possible cause
Case 1	DTC Strategy	• Signal motorning	• Improper installation of wheel speed sensor • Abnormal Rotor and wheel bearing • Inoperative Wheel speed sensor • Inoperative HECU
	Monitoring Period	• Continous	
	Enable Conditions	• When short cut between the wheel speed sensor supply and the battery.	
	Fail Safe	• Wheel speed sensor signals are not reliable.	
Case 2	DTC Strategy	• Signal motorning	
	Monitoring Period	• Continous	
	Enable Conditions	• The monitoring reports a failure if the ABS target slip is exceeded for a time period > = 10 s at one or more wheels. - If the driver brakes or the velocity is lower than 50 km/h the detection time is enlarged to 60 s.	
	Fail Safe	• Reduced function of the ESP system	

MONITOR SCANTOOL DATA E22D3668

1. Engine "ON".
2. Connect scantool to Data Link Connector(DLC).
3. Start and drive vehicle in gear and maintain vehicle speed at or above 10 km/h(6 mph)
4. Monitor the "Wheel Speed Sensor" parameter on the Scantool.

Specification : Compare with another parameters related to wheel speed sensor. If it is the same as another parameters, it is in normal condition.

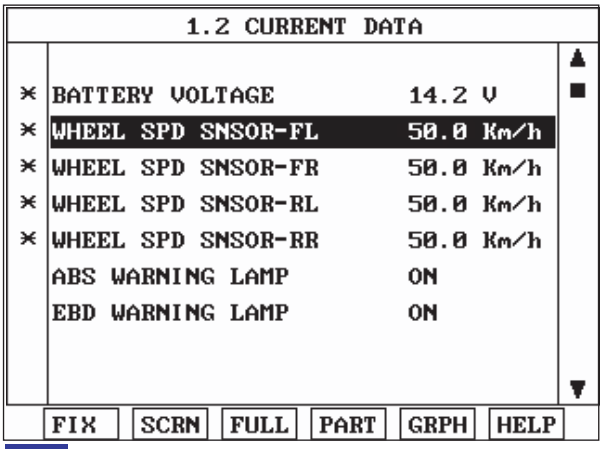

Fig1

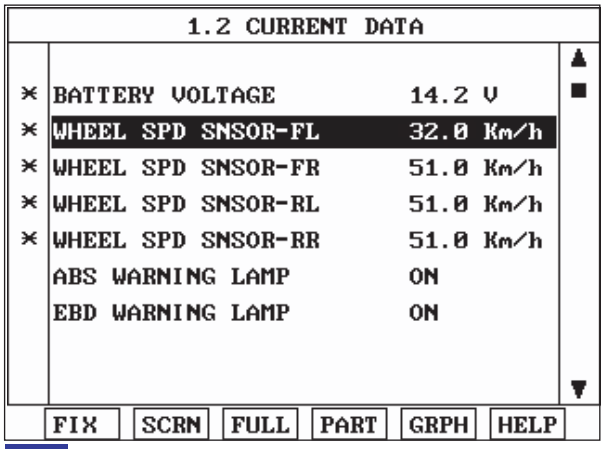

Fig2

Fig 1) Test Condition : Drive vehicle at a speed of 50 km/h or more. (31 mph or more) Normal Data
Fig 2) Test Condition : Drive vehicle at a speed of 51 km/h or more. (31 mph or more) Abnormal Data

SCMBR6545L

5. Is parameter displayed within specifications?

YES

▶ Fault is intermittent caused by poor connection in wheel speed sensor harness, Thoroughly check connectors for looseness, poor connection, bending, corrosion, contamination, deterioration, or damage. Repair as necessary and then go to "Verification Of Vehicle Repair" procedure..

NO

▶ Go to "Component Inspection" Procedure.

COMPONENT INSPECTION E7600A75

1. Lift the vehicle.
2. Ignition "ON".
3. Turn the wheel with hand.
4. Measure waveform between terminal "1,2" of the wheel speed sensor harness connector and chassis ground.

Specification :
High : 1.05 V , Low : 0.525 V
Compare waveforms of all wheel speed sensors.
If they have same waveform, it is in normal condition.

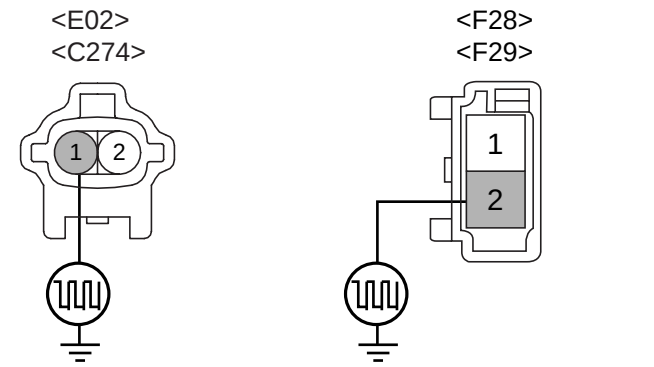

1. Wheel speed sensor (FL-) 2. Wheel speed sensor (RL-,RR-)

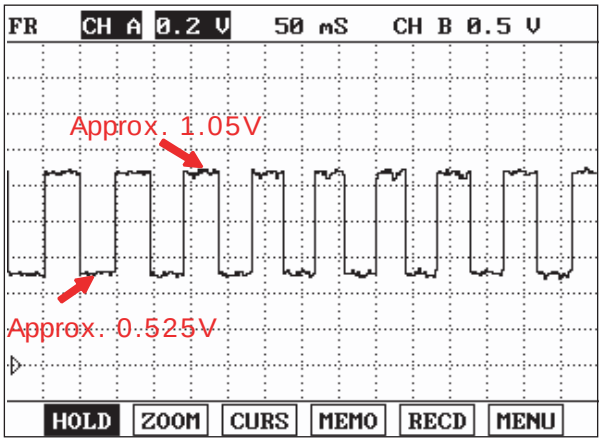

SCMBR6546L

5. Is the measured waveform within specifications?

YES

▶ Fault is intermittent caused by poor connection in wheel speed sensor harness, Thoroughly check connectors for looseness, poor connection, bending, corrosion, contamination, deterioration, or damage. Repair or replace as necessary and then go to "Verification Of Vehicle Repair" procedure.
▶ Substitute with a known-good HECU and check for proper operation. If problem is corrected, replace HECU and then go to "Verification Of Vehicle Repair" procedure.

NO

▶ Check following point at wheel speed sensor which has abnormal waveform.
▶ Check for improper installation of wheel speed sensor. If NG, repair as necessary and then go to "Verification Of Vehicle Repair" procedure.
▶ Check for damage of rotor teeth or wheel bearing. If NG, repair as necessary and then go to "Verification Of Vehicle Repair" procedure.
▶ Substitute with a known-good Wheel speed sensor and check for proper operation. If problem is corrected, replace Wheel speed sensor and then go to "Verification Of Vehicle Repair" procedure.

VERIFICATION OF VEHICLE REPAIR E7CF2DE4

After a repair, it is essential to verify that the fault has been corrected.

1. Connect scantool and select "Diagnostic Trouble Codes(DTCs)" mode
2. Using a scantool, Clear DTC.
3. Operate the vehicle within DTC Detecting Condition in General Information. (Start and drive vehicle in gear and maintain vehicle speed is approx. 50km/h or more(31mph or more))
4. Are any DTCs present ?

YES

▶ Go to the applicable troubleshooting procedure.

NO

▶ System performing to specification at this time.

DTC C1235 PRESSURE SENSOR(PRIMARY) - ELECTRICAL

COMPONENT LOCATION EE9A1785

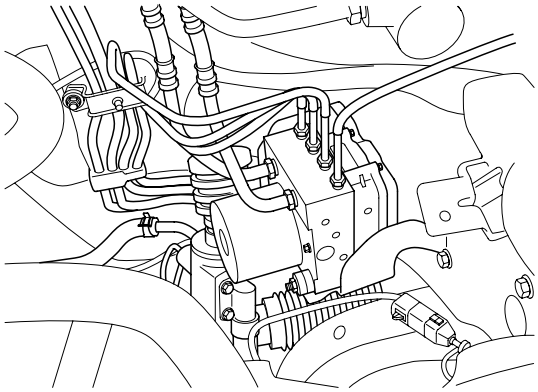

EJBF502R

GENERAL DESCRIPTION ED1866C3

The pressure sensor, installed in the HECU, sense the brake oil pressure to judge driver's brake intention when ESP is operating. If pressure of master cyclinder is applied to pressure sensor, the strain of the piezo element is changed and then the resistance of brige circuit is chanded according to changed strain. Therefore this changed resistance changes output voltage of brige circuit and output voltage changes linearly. The sensor output is a analog signal in proportion to supply voltage, and the HECU recognizes a pressure value according to signal ratio about supply voltage.

DTC DESCRIPTION E1F99F60

Each unfiltered input signal voltage is monitored to be in the range of 4.7 V < input signal voltage < 5.3 V. A failure is detected if the output signal value is out of specified range for more than 100 ms or pressure sensor self test form is out of specification during self test.

DTC DETECTING CONDITION E5CB8634

Item		Detecting Condition	Possible cause
DTC Strategy		• Voltage Monitoring	• Open or short of pressure sensor circuit • Inoperative pressure sensor • Inoperative HECU
Case 1	Monitoring Period	• Continuous	
	Enable Conditions	• A sensor supply failure is detected if Sensor Supply Voltage > 5.3 V or Sensor Supply Voltage < 4.7 V for t >= 60 ms.	
Case 2	Monitoring Period	• Continuous	
	Enable Conditions	• A Fault is set if the DSO signal is voltage of DSO > 4.7 V or voltage of DSO < 0.3V for a time t >= 100 ms. - DSO : original pressure value.	

Item		Detecting Condition	Possible cause
Case 3	Monitoring Period	• Continuous	
	Enable Conditions	• A Fault is set if the DSI signal is voltage of DSI > 4.7 V or voltage of DSI < 0.3V for a time t >= 100 ms. - DSI : inverted pressure value.	
Case 4	Monitoring Period	• Continuous	
	Enable Conditions	• A Fault is set if the voltage of DSO + DSI > 5.5V or voltage of DSO + DSI < 4.5V for a time t >= 100ms. - DSO : original pressure value. - DSI : inverted pressure value.	
Case 5	Monitoring Period	• Once during Power Up	
	Enable Conditions	• POS detects internal sensor malfunctions (sensor element, amplification, etc.). The POS is triggered if no low voltage is present and supply voltage is switched on. The test phase is divided in two 60 ms parts. DSO signal must be < 0.5 V for 30 ms. In phase 2 DSO signal must be between 1.9V and 3.1V for also 30 ms then the POS Test is passed. The test phase is divided in two 60 ms parts. DSO and DSI signal must be < 0.5 V for 30 ms. In phase 2 DSO and DSI signal must be between 1.9 V and 3.1 V for also 30 ms then the POS Test is passed. A fault is set if POS does not satisfy the above conditions - POS : Power on selftest.	
Fail Safe		• No Pressure Signal available.. • Sensor failure outside the ABS control cycle - Only the ABS/ESP functions are inhibited, allow the EBD. The ABS/ESP warning lamps are activated and the EBD warning lamp is not activated. • Sensor failure inside the ABS control cycle - Inhibit the ESP control, allow the EBD. The ESP warning lamps are activated. After the control, the ABS functions are inhibited. The ABS warning lamps are activated.	

MONITOR SCANTOOL DATA EA3E9727

1. Connect scantool to Data Link Connector(DLC).
2. Ignition "ON" & Engine "ON".
3. Press the brake pedal.
4. Monitor the "Pressure Sensor" parameter on the Scantool.

Specification : Approx. 60 bar ~150 bar (There are difference in displayed parameter according to braking force)

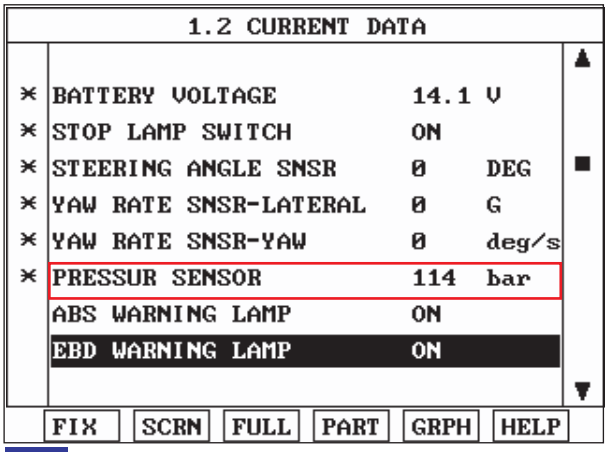

Fig1

Fig 1) Test Condition : Ignition "ON" & Engine "ON" Normal data (There are difference in displayed parameter according to braking force)

EJBF502S

5. Whenever brake pedal is pushed down, is the pressure sensor's scantool data changed?

YES

▶ Fault is caused by having been repaired and HECU memory was not cleared. Clear the DTC and then go to "Verification Of Vehicle Repair" procedure.

NO

▶ Go to "Component Inspection" procedure.

COMPONENT INSPECTION E1DC2E13

1. Ignition "OFF".
2. Ignition "ON".
3. Connect scantool and select "Diagnostic Trouble Codes (DTCs)" mode.
4. Using a scantool, Clear DTC.
5. Select "Diagnostic Trouble Codes (DTCs)" mode again.
6. Are any DTCs present ?

YES

▶ Substitute with a known-good HECU and check for proper operation. If problem is corrected, replace HECU and then go to "Verification Of Vehicle Repair" procedure.

NO

▶ Fault is intermittent caused by faulty HECU or was repaired and HECU memory was not cleared. go to "Verification Of Vehicle Repair" procedure.

VERIFICATION OF VEHICLE REPAIR EB07C6B9

Refer to DTC C1101.

DTC C1237 PRESSURE SENSOR - OTHER

COMPONENT LOCATION E5C4A680

Refer to DTC C1235.

GENERAL DESCRIPTION ECEA85DD

Refer to DTC C1235.

DTC DESCRIPTION EB4647FA

With the driver torque demand and the lateral acceleration a driver braking demand is calculated. Unless the pump motor is opreating or there is a brake signal, The offset compensation is executed. A failure is detected if offset value exceeded ±15 bar.

DTC DETECTING CONDITION E6FCF23F

Item	Detecting Condition	Possible cause
DTC Strategy	• Voltage Monitoring	• Open or short of pressure sensor circuit • Inoperative pressure sensor • Inoperative HECU
Monitoring Period	• After Pressure sensor initialization. • No under voltage • No pumps are running. • No BLS-signal is set.	
Enable Conditions	• The pressure sensor-offset value must be in the range of ± 15 bar. A failure is detected if this range is exceeded.	
Fail Safe	• Reduced function caused by inoperative pressure sensor signal. • Sensor failure outside the ABS control cycle - Only the ABS/ESP functions are inhibited, allow the EBD. The ABS/ESP warning lamps are activated and the EBD	

MONITOR SCANTOOL DATA ECBE89B1

Refer to DTC C1235.

COMPONENT INSPECTION E1A41FFE

Refer to DTC C1235.

VERIFICATION OF VEHICLE REPAIR E6D7E347

Refer to DTC C1101.

DTC C1260 STEERING ANGLE SENSOR - SIGNAL

COMPONENT LOCATION E581E002

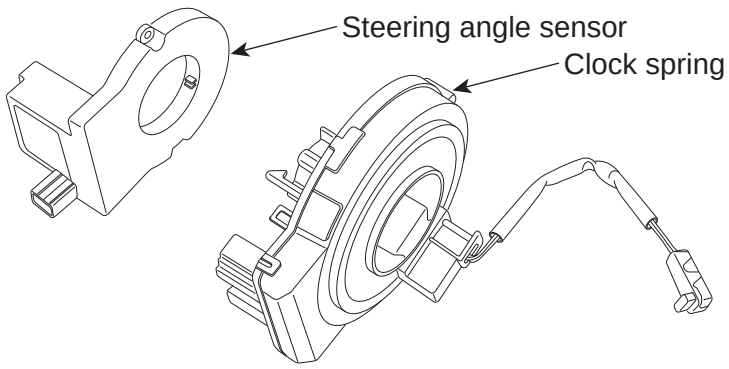

EJBF502V

GENERAL DESCRIPTION E13280AC

The Steering angle sensor(SAS) is joined to the multi function switch and uses a CAN communication. The SAS is used to determine turning direction and speed of the steering wheel. The HECU uses the signals from the SAS when performing ESP-related calculations.

DTC DESCRIPTION E9756B8F

If the SAS signal is different from calculated value by yaw-rate sensor and wheel speed sensor, mechanically impossible SAS signal is detected, there is a difference between SAS signal and driving condition of the vehicle calculated from yaw-rate sensor and lateral G sensor, a failure is detected.

DTC DETECTING CONDITION E0CC8DDA

Item		Detecting Condition	Possible cause
DTC Strategy		• Signal Monitoring	• Open or short of steering angle sensor circuit • Inoperative steering angle sensor • Inoperative HECU
Case 1	Monitoring Period	• Continuous	
	Enable Conditions	• During normal driving conditions the long time filtered driving direction is straight ahead. The long time filtered SAS-value is equivalent to the offset. If the offset value exceeds a threshold of approximately 15 deg a SAS-fault is determined. Failure detection time depends on the driving distance, vehicle speed and on the amount of failed SAS signal. Within 30 km of symmetrical driving the calculated offset corresponds to the sensor offset.	

Item		Detecting Condition	Possible cause
Case 2	Monitoring Period	• Continous (If the following conditions are satisfied) 1) After SAS-initialization and vehicle reference speed > 1.4 m/s (5 km/h) 2) No under voltage 3) At least one SAS-message was sent in the current 20 ms-cycle.	
	Enable Conditions	• A SAS-gradient-failure is set, if 1) Signal gradient (steering angle velocity) from one 20 ms-cycle to another is higher than 40° or 2) Change of this gradient (steering angle acceleration) is higher than 15° : | (LwInK0K1 . LwInK1K2)| > 15° and | (LwInK0K1 + LwInK1K2)| > 15° - LwInK0K1 : Difference of the SAS-signal between the current 20 ms-cycle and the last 20 ms-cycle. - LwInK1K2 : Difference of the SAS-signal between the last 20 ms-cycle and 20 ms-cycle before.	
Case 3	Monitoring Period	• Continuous (After initialization and no under voltage detected)	
	Enable Conditions	• If value is higher than 665° + 90° tolerance for more than 300 ms a fault is determined.	
Case 4	Monitoring Period	• Continuous (during driving)	
	Enable Conditions	• Based on a vehicle model a reference SAS signal is build. The difference between measured SAS signal and SAS signal calculated from yaw-rate sensor signal is evaluated for fault detection. Dependent on the driving conditions failures in size of [10 + 60 m/s / vehicle reference speed] deg at steering angle are recognized within 400 ~ 4800 ms through three possible recognition paths: 1) Curve Branch (lateral G > 2 m/s^2 and left and right curve driving) 2) Stability Branch (no large wheel speed differences and stable acceleration) 3) Straight ahead Branch (lateral G < 0.5 m/s^2 and yaw rate < 2 deg/s). The recognition time depends on the active branch (the time is shorter in a relation 1):2):3)-4:2:1) and the value of the permissible time threshold dependent on the deviation between the compared signals (small deviation → long detection time, large deviation → small detection time).	

Item		Detecting Condition	Possible cause
Case 5	Monitoring Period	• Initialization once in every ignition cycle. • The monitoring is active until a reset by a change in the SAS signal or until a right and left cornering can be recognized.	
	Enable Conditions	• If there is no change in the signal, but a right and left cornering has been recognized, a fault is determined. (lateral G > 2 m/s^2 in combination with a yaw rate > 6 °/s in both directions). - At a minimum change of e.g. 5° in the signal, the monitoring is reset.	
Case 6	Monitoring Period	• Continuous (during driving)	
	Enable Conditions	• The measured yaw rate and the yaw rates, calculated from the wheel speed sensor and SAS are compared. If the signals don't fit and forwards driving is detected, a fault is determined.	
Case 7	Monitoring Period	• Continuous (during driving)	
	Enable Conditions	• Under normal conditions, two SAS messages are sent in one 20 ms cycle, which is shown by an increase of the message counter by 2. If the message counter shows an increase higher than 3 or lower than 1 in one 20 ms-cyle, a fault is stored after 160 ms.	
Fail Safe		• Reduced controller function caused by inoperative SAS signal. ABS/EBD control is available. • The ESP warning lamp is activated.	

MONITOR SCANTOOL DATA ED418175

1. Connect scantool to Data Link Connector(DLC).
2. Ignition "ON" & Engine "ON".
3. Turn the steering wheel to the left or right.
4. Monitor the "Steering Sensor" parameters on the Scantool.

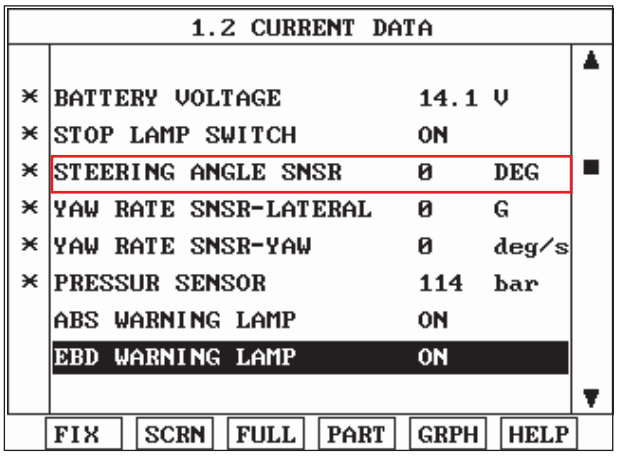

Fig1

Fig 1) Test Condition : Ignition "ON" & Engine "ON". Normal data

SCMBR6547L

5. Whenever steering wheel is turned, is the steering sensor's scantool data changed?

YES

1) Connect scantool to Data Link Connector (DLC).
2) Ignition "ON" & Engine "ON".
3) Turn the steering wheel to the full left or right position.

4) Monitor the "steering sensor" parameters on the Scantool.

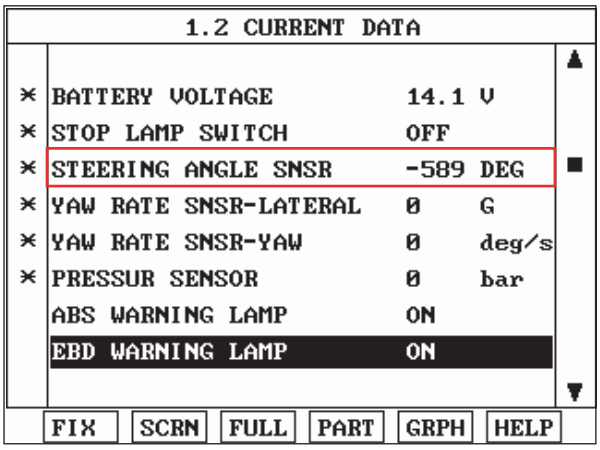

Fig2

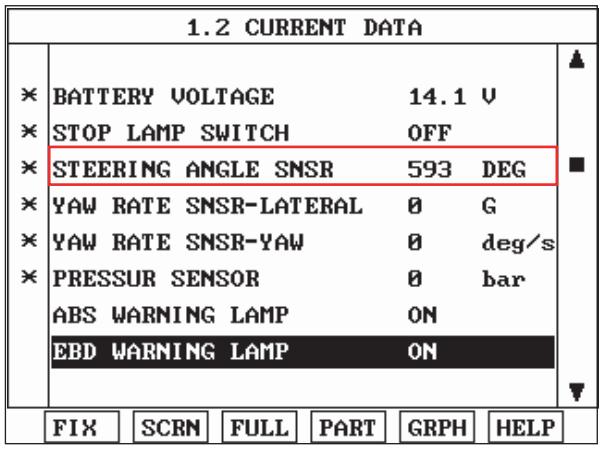

Fig3

Fig 2) Test Condition : Ignition "ON" & Engine "ON". Normal data (Right side)
Fig 3) Test Condition : Ignition "ON" & Engine "ON". Normal data (Left side)

SCMBR6548L

5) Is parameter displayed within specifications?

YES

▶ Go to "W/Harness Inspection" procedure.

NO

▶ Go to number 6. procedure.

NO

▶ Go to "W/Harness Inspection" procedure.

6. Perform steering angle sensor calibration.

1) Ignition "ON" & Engine "OFF".

2) Line up the steering wheel in a straight.

3) Connect scantool to Data Link Connector(DLC).

4) Go in Anti-Rock brake system. (figure 4).

5) Perform steering angle sensor calibration. (figure 5).

6) Go to "Compnent Inspection" Precedure.

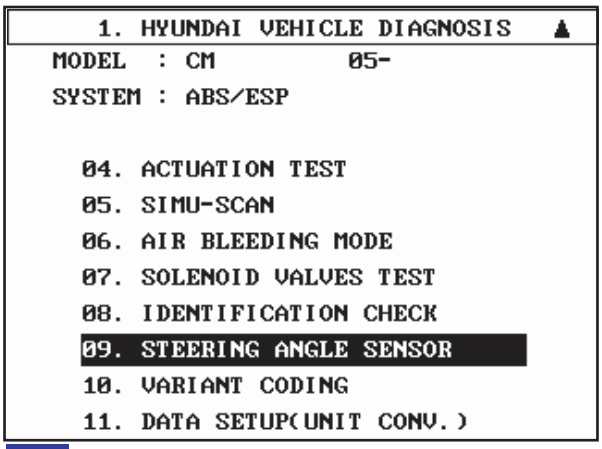

Fig4

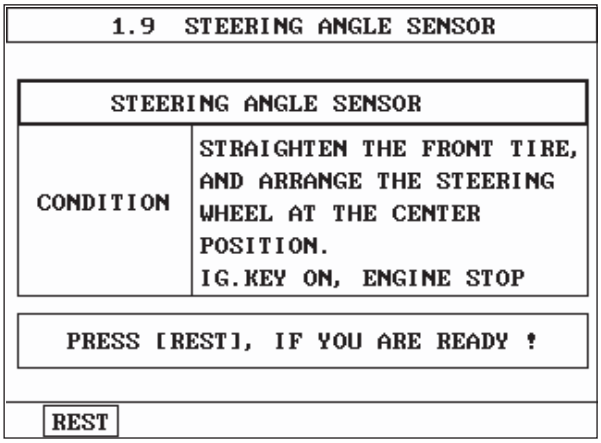

Fig5

SCMBR6549L

7. Whenever steering wheel is turned, is the steering sensor's scantool data changed HIGH/LOW?

YES

▶ Fault is intermittent caused by poor connection in steering sensor harness and/or HECU's connector or was repaired and HECU memory was not cleared. Thoroughly check connectors for looseness, poor connection, bending, corrosion, contamination, deterioration, or damage. Repair or replace as necessary and then go to "Verification of Vehicle Repair" procedure.

NO

▶ Go to "W/Harness Inspection" procedure.

TERMINAL & CONNECTOR INSPECTION E4D7980A

1. Many malfunctions in the electrical system are caused by poor harness(es) and terminals. Faults can also be caused by interference from other electrical systems, and mechanical or chemical damage.
2. Thoroughly check connectors for looseness, poor connection, bending, corrosion, contamination, deterioration, or damage.
3. Has a problem been found?

YES

▶ Repair as necessary and then go to "Verification of Vehicle Repair" procedure.

NO

▶ Go to "Component Inspection" procedure.

COMPONENT INSPECTION EEFDC04F

1. Ignition "OFF".
2. Ignition "ON".
3. Connect scantool and select "Diagnostic Trouble Codes (DTCs)" mode.
4. Using a scantool, Clear DTC.
5. Operate the vehicle within DTC Detecting Condition in General Information. (turn right and left at least 1 time)
6. Select "Diagnostic Trouble Codes (DTCs)" mode again.
7. Are any DTCs present ?

YES

1) Substitute with a known-good steering angle sensor and check for proper operation. If problem is corrected, replace sensor and then go to "Verification of Vehicle Repair" procedure.
2) Substitute with a known-good HECU and check for proper operation. If problem is corrected, replace HECU and then go to "Verification of Vehicle Repair" procedure.

NO

▶ Fault is intermittent caused by faulty HECU or was repaired and HECU memory was not cleared. go to "Verification of Vehicle Repair" procedure.

VERIFICATION OF VEHICLE REPAIR EADC54A2

Refer to DTC C1101.

DTC C1261 STEERING ANGLE SENSOR IS NOT CALIBRATED

COMPONENT LOCATION ED186D22

Refer to DTC C1260.

GENERAL DESCRIPTION E2B7726C

Refer to DTC C1260.

DTC DESCRIPTION EF8998E6

The SAS used for ESP control needs zero point adjustment because the SAS measures an absolute angle. Zero point adjustment is done by using the scantool device. If abnormal zero point adjustment is detected, a failure is recognized.

DTC DETECTING CONDITION EECD8EA0

Item	Detecting Condition	Possible cause
DTC Strategy	• Signal Monitoring	• A fail of SAS zero point adjustment • Inoperative HECU
Monitoring Period	• During SAS zero point adjustment.	
Enable Conditions	• The position of steering wheel is out of specified range (straight positon, a max. error ±5°) during SAS zero point adjustment.	
Fail Safe	• Reduced controller function caused by inoperative SAS signal. ABS/EBD control is available. • The ESP warning lamp is activated.	

MONITOR SCANTOOL DATA E94D13A2

1. Connect scantool to Data Link Connector(DLC).
2. Ignition "ON" & Engine "ON".
3. Monitor the "SAS CALIBRATED" parameters on the Scantool.

Specification : YES

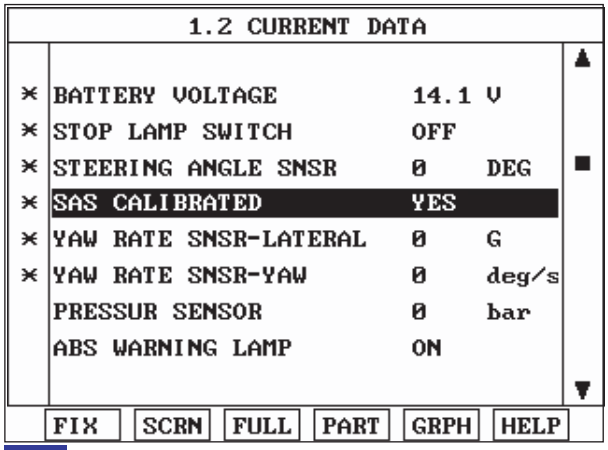

Fig1

Fig 1) SAS Calibrate normal data - YES : SAS calibrated, NO : SAS not calibrated.

SCMBR6550L

4. Is parameter displayed within specifications?

YES

▶ Fault is caused by having been repaired and HECU memory was not cleared. Clear the DTC and then go to "Verification Of Vehicle Repair" procedure.

NO

▶ Go to "Component Inspection" procedure.

COMPONENT INSPECTION EB9E8D6B

1. Line up wheels like (figure 1).
   1) Perform the wheel alignment.
   2) Line up the steering wheel in a straight.
   3) Go ahead and Go back the vehicle 2~3 times without holding steering wheel.
2. Connect scantool to Data Link Connector(DLC).
3. Go in Anti-Lock brake system. (figure 2).
4. Perform steering angle sensor calibration. (figure 3).
5. Disconnect scantool.
6. Check the condition of SAS zero point adjustment by operating the vehicle (turn right and left at least 1 time)

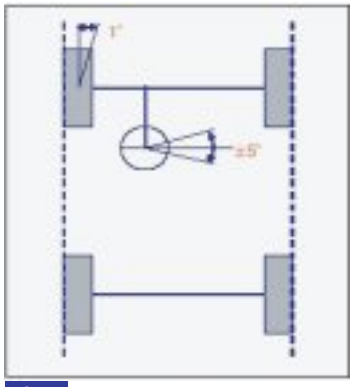

Fig1

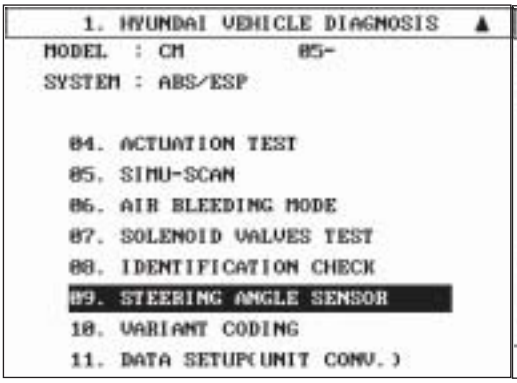

Fig2

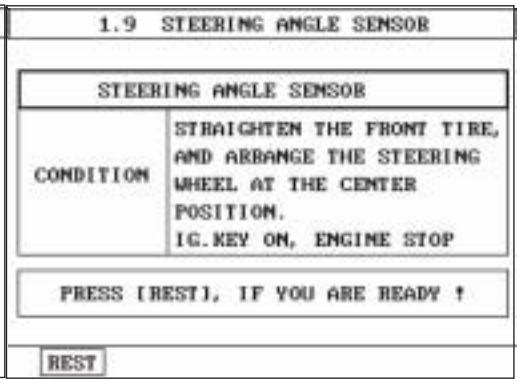

Fig3

SCMBR6551L

7. Is zero point adjustment completed?

YES

▶ Go to "Verification Of Vehicle Repair" procedure.

NO

▶ Substitute with a known-good HECU and check for proper operation. If problem is corrected, replace HECU and then go to "Verification Of Vehicle Repair" procedure.

VERIFICATION OF VEHICLE REPAIR E56C56A6

Refer to DTC C1101.

DTC C1282 YAW RATE AND LATERAL G SENSOR - ELECTRICAL

COMPONENT LOCATION ECB9896F

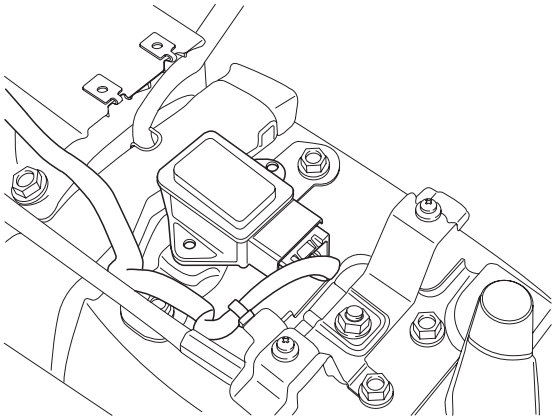

EJBF503C

GENERAL DESCRIPTION E5DF85C9

The yaw-rate and G sensor assembly is installed on the lower floor. The yaw-rate sensor detects acceleration of the vehicle around its vertical axis, while the G sensor detects lateral acceleration of the vehicle. When the vehicle is not moving, the G sensor output is approximately 2.5 V.

DTC DESCRIPTION E1B3F4C4

The HECU monitors a signal voltage of either yaw-rate sensor or lateral G sensor to detect open or short to battery or short to ground. A failure is detected if the lateral acceleration sensor or yaw rate sensor signal voltage stays in the fault range longer than 100 ms or the lateral acceleration sensor or yaw rate sensor reference voltage stays in the fault range longer than 200 ms, or the self test form is against specification during self test.

DTC DETECTING CONDITION E0485056

Item		Detecting Condition	Possible cause
Case 1	DTC Strategy	• Voltage Monitoring	• Inoperative Yaw Rate & Lateral G sensor • Open or short of Yaw Rate & Lateral G sensor • Inoperative HECU
	Monitoring Period	• Continous	
	Enable Conditions	• A line fault is detected if V[LG] < 0.3 V or V[LG] > 4.7 V for a time t >= 100ms. • A line fault is detected if V[YAW] < 0.225 V OR V[YAW] > 4.774 V for a time t >= 100 ms. • A line fault is detected if V[YAW REFERENCE] < 2.1 V OR V[YAW REFERENCE] > 2.9 V for a time t >= 200 ms.	
Case 2	DTC Strategy	• Selftest Monitoring	
	Monitoring Period	• Once after power up and no low voltage.	
	Enable Conditions	• A line fault is detected if 0.2 V < V[LG] < 0.8 V isn't continued for a time t >= 60 ms during POS (POS : power on selftest)	
Fail Safe		• Reduced controller function. • Inhibit the ESP control and ABS/EBD control is available. • The ESP warning lamps are activated.	

MONITOR SCANTOOL DATA E2DC379B

1. Connect scantool to Data Link Connector (DLC).
2. Ignition "ON".
3. Monitor the "Yaw rate sensor-lateral & Yaw rate sensor-yaw" parameter on the Scantool.

Specification : Lateral G sensor : ± 0 G, YAW rate Sensor : ± 0 deg/s

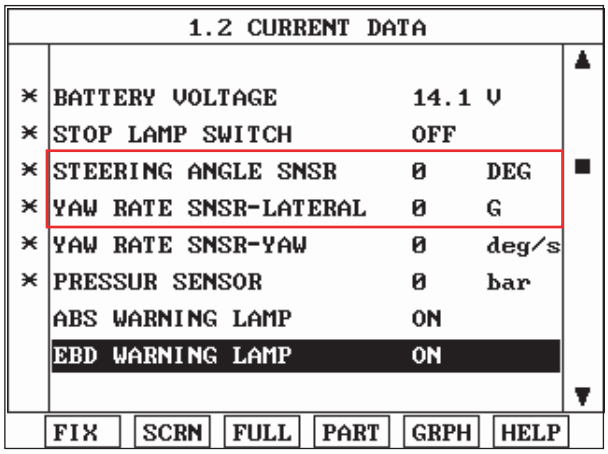

Fig1

Fig 1) Test Condition : Ignition "ON" & Engine "ON" Normal data (There are difference in displayed Normal data)

SCMBR6552L

4. Is parameter displayed within specifications?

YES

▶ Fault is intermittent caused by poor connection in Yaw Rate & Lateral G sensor harness and/or HECU's connector or was repaired and HECU memory was not cleared. Thoroughly check connectors for looseness, poor connection, bending, corrosion, contamination, deterioration, or damage. Repair or replace as necessary and then go to "Verification Of Vehicle Repair" procedure.

NO

▶ Go to "W/Harness Inspection" procedure.

TERMINAL & CONNECTOR INSPECTION EB2312B5

Refer to DTC C1200.

POWER SUPPLY CIRCUIT INSPECTION ED0FD1F0

1. Ignition "ON" & Engine "OFF".
2. Measure voltage between terminal "1" of the Yaw Rate & Lateral G sensor harness connector and chassis ground.

Specification : Approx. 5 V

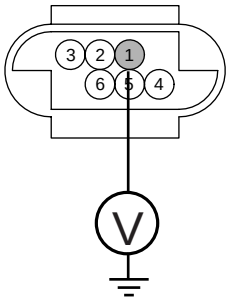

1. Battery +
2. Yaw-Rate self test line
3. Yaw-Rate reference line
4. Ground
5. Lateral G sensor signal
6. Yaw-Rate sensor signal

EJBF503E

3. Is the measured voltage within specifications?

YES

▶ Go to "Ground Circuit Inspection" procedure.

NO

▶ Check for open or short to GND in the Yaw Rate & Lateral G sensor harness between terminal "1" of the Yaw Rate & Lateral G sensor harness connector and battery +. Repair as necessary and then go to "Verification Of Vehicle Repair" procedure.

GROUND CIRCUIT INSPECTION EAEF449A

1. Ignition "OFF".
2. Disconnect Yaw Rate & Lateral G sensor connector.
3. Measure resistance between terminal "4" of the Yaw Rate & Lateral G sensor harness connector and chassis ground.

Specification : Approx. below 1Ω

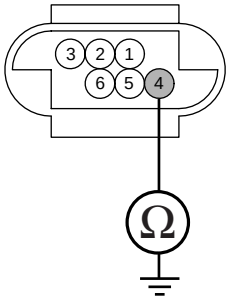

1. Battery +
2. Yaw-Rate self test line
3. Yaw-Rate reference line
4. Ground
5. Lateral G sensor signal
6. Yaw-Rate sensor signal

EJBF503F

4. Is the measured resistance within specifications?

YES

▶ Go to "Signal Circuit Inspection" procedure.

NO

▶ Check for open or short in the Yaw Rate & Lateral G sensor harness between terminal "4" of the Yaw Rate & Lateral G sensor harness connector and terminal "15" of the HECU harness connector . Repair as necessary and then go to "Verification Of Vehicle Repair" procedure.

SIGNAL CIRCUIT INSPECTION E7645762

1. Ignition "ON" & Engine "OFF".

2. Measure voltage between terminal "3,5,6" of the Yaw Rate & Lateral G sensor harness connector and chassis ground.

Specification : Approx. 2.5 V (Voltage between terminal "5, 6" of the Yaw Rate & Lateral G sensor harness connector and chassis ground.)

<C281>

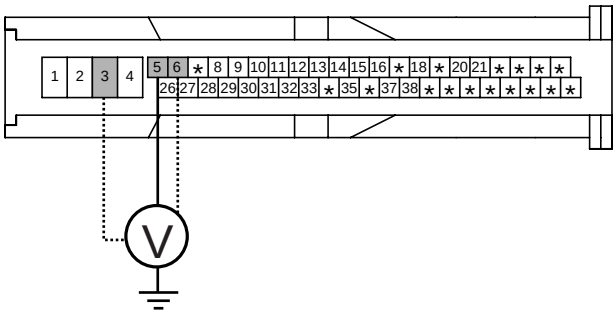

16. Yaw-Rate sensor signal
18. Yaw-Rate reference line
20. Lateral G sensor signal

SCMBR6553L

3. Is the measured voltage within specifications?

YES

▶ Go to "Self Test Circuit Inspection" procedure.

NO

▶ Check for open or short in the Yaw Rate & Lateral G sensor harness between terminal "3, 5, 6" of the Yaw Rate & Lateral G sensor harness connector and terminal "16, 18, 20" of the chassis ground. Repair as necessary and then go to "Verification Of Vehicle Repair" procedure.
▶ If OK, Go to "Component Inspection" procedure.

SELF TEST CIRCUIT INSPECTION

1. Measure waveform between terminal "2" of the Yaw Rate & Lateral G sensor harness connector and chassis ground.

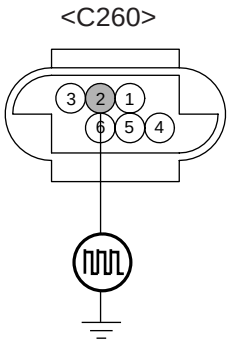

1. Battery +
2. Yaw-Rate self test line
3. Yaw-Rate reference line
4. Ground
5. Lateral G sensor signal
6. Yaw-Rate sensor signal

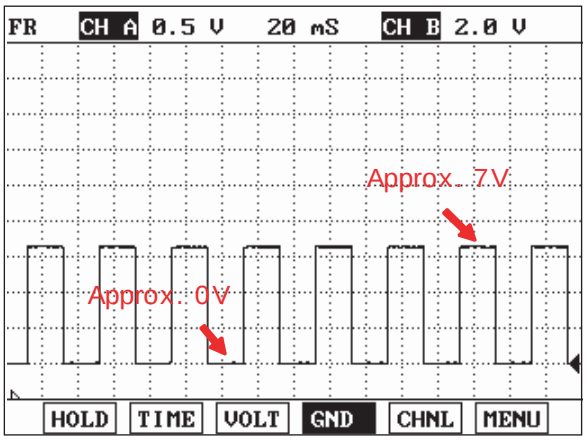

Yaw-Rate self test line - Channel B

SCMBR6554L

2. Is the measured waveform within specifications?

YES

▶ Substitute with a known-good HECU and check for proper operation. If problem is corrected, replace HECU and then go to "Verification Of Vehicle Repair" procedure.

NO

▶ Check for open or short to GND in the Yaw Rate & Lateral G sensor harness between terminal "2" of the Yaw Rate & Lateral G sensor harness connector and terminal "37" of the chassis ground. Repair as necessary and then go to "Verification Of Vehicle Repair" procedure.

COMPONENT INSPECTION E23E2E86

1. Ignition "ON" & Engine "OFF".

2. Measure voltage between terminal "3,5,6" of the Yaw Rate & Lateral G sensor harness connector and chassis ground.

Specification : Approx. 2.5V (Voltage between terminal "5, 6" of the HECU harness connector and chassis ground.)
Specification : Approx. above 2.1 V and below 2.9 V (Voltage between terminal "3" of the HECU harness connector and chassis ground.)

<C260>

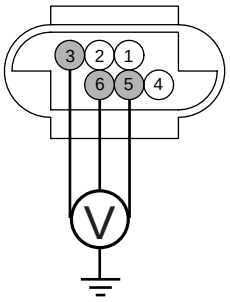

1. Battery +
2. Yaw-Rate self test line
3. Yaw-Rate reference line
4. Ground
5. Lateral G sensor signal
6. Yaw-Rate sensor signal

SCMBR6555L

3. Is the measured voltage within specifications?

YES

▶ Fault is intermittent caused by poor connection in Yaw Rate & Lateral G sensor harness. Go to "Verification Of Vehicle Repair" procedure.

NO

▶ Substitute with a known-good Yaw Rate & Lateral G sensor and check for proper operation. If problem is corrected, replace Yaw Rate & Lateral G sensor and then go to "Verification Of Vehicle Repair" procedure.

VERIFICATION OF VEHICLE REPAIR EA225D1E

Refer to DTC C1101.

DTC C1283 YAW RATE AND LATERAL G SENSOR - SIGNAL

COMPONENT LOCATION E67FB030

Refer to DTC C1282.

GENERAL DESCRIPTION EE82842A

Refer to DTC C1282.

DTC DESCRIPTION EC6257CA

A lateral acceleration reference signal is calculated from the wheel speeds, the steering angle and the yaw rate signals to observe the lateral acceleration sensor signal. The difference between the reference signal and the sensor signal is evaluated for failure detection. A yaw rate reference signal is calculated from the wheel speeds, the steering angle and the lateral acceleration signals to observe the yaw rate sensor signal. The difference between the reference signal and the sensor signal, and the gradient of the measured sensor signal is evaluated for the failure detection. If the difference between estimated value and measured value of the sensor is larger than predefined value for predefined time, the failure is recognized. Plauibility faults (signals received which fall outside of the sensor characteristics) are also recognized.

DTC DETECTING CONDITION E57CA66D

Item		Detecting Condition	Possible cause
DTC Strategy		• Signal Monitoring	• Inoperative Yaw Rate & Lateral G sensor • Open or short of Yaw Rate & Lateral G sensor • Inoperative HECU
Case 1	Monitoring Period	• Continuous (during stable driving)	
	Enable Conditions	• By building a reference lateral G from the yaw-rate sensor, wheel speed sensor and the SAS it is possible to test the lateral G Signal on plausibility. If during stable vehicle behavior an lateral G Failure larger than approximately 2.5 m/s2 occurs, the ESP controller will disregard the lateral G sensor information so that a false ESP intervention is prevented. A fault is recognized after 1.6 s during model validity. • The measured and offset compensated yaw rate signal is compared to the reference yaw rate signal calculated from yaw rate sensor, lateral G sensor, SAS and wheel speed sensor. If the measured yaw rate deviates more than 2.5 °/s plus a dynamic threshold from the reference yaw rate during model validity, a failure is recognized after 1.6 s. The dynamic threshold is between 2.5°/s and more than 5°/s. A typical value is 3°/s. - During the possibility to observe the recognition time depends on the amount of failure.	

Item		Detecting Condition	Possible cause
Case 2	Monitoring Period	• Continuous (during driving)	
	Enable Conditions	• During normal driving conditions the long time filtered driving direction is straight ahead. The long time filtered later G value is equivalent to the offset. If the offset value exceeds a threshold of approximately 2.25 m/s^2 an later G fault is determined.Failure detection time depends on the driving distance, vehicle speed and on the amount of failed later G signal. Within 30 km of symmetrical driving the calculated offset corresponds to the sensor offset.	
Case 3	Monitoring Period	• Continuous (If no under voltage is detected)	
	Enable Conditions	• A fault is detected If the lateral G is higher than 15 m/s^2 for more than 800 ms.	
Case 4	Monitoring Period	• Continuous (during standstill)	
	Enable Conditions	• If the filtered value of |lateral G| is larger than 7 m/s^2 for more than 400 m/s a fault is set.	
Case 5	Monitoring Period	• Continuous (dependent on driving situation)	
	Enable Conditions	• Standstill compensation : - The offset corresponds to the measured and filtered input value. Failure threshold 5.25 °/s. • Fast compensation (during driving if no standstill compensation could be completed): - The offset corresponds to the slightly filtered deviation between measured yaw rate and the reference yaw rate calculated from SAS, lateral G sensor and wheel speed sensor. Failure threshold is 7.5 °/s. • Long-term ("normal") compensation (during driving after successful standstill or fast offset compensation): - The offset corresponds to the strong filtered deviation between measured yaw rate and the reference yaw rate calculated from SAS, lateral G sensor and wheel speed sensor. Failure threshold is 7.5 °/s	
Case 6	Monitoring Period	• After every standstill.	
	Enable Conditions	• The measured yaw rate and the model yaw rates, calculated from the wheel speed sensor and SAS are compared. If the signals doesn.t fit and forward driving is recognized, a fault is determined.	

Item		Detecting Condition	Possible cause
Case 7	Monitoring Period	• Continuous (after initialization of the YRS and if no under voltage is detected)	
	Enable Conditions	• The yaw rate sensor BITE logic evaluates the BITE-signal by extraction of the measured yaw rate of the vehicle. The allowed range for the BITE-signal is 25 °/s ± 7 °/s. If the BITE-signal is not in the allowed range, a suspected failure bit is set after 200 ms. A failure is set within 400 ms.	
Case 8	Monitoring Period	• After YRS-initialization, no under voltage	
	Enable Conditions	• Depending on the driving conditions a signal gradient higher than 10 ~ 23 °/s / 40 ms sets a suspected failure bit after 280 ms, unless a single signal peak is recognized by a peakfilter. A failure is set, if the good check is not settled successfully after 10 s.	
Case 9	Monitoring Period	• Continuous (except spinning, use of handbrake, unsteady driving conditions or a detected under voltage)	
	Enable Conditions	• During standstill - The allowed range of the yaw rate sensor signal is ±30 °/s. Leaving this range for 5 s sets a fault. In case of driving off after the failure was present for longer than 500 ms during standstill, the fault is detected immediately. • While driving - The allowed range of the yaw rate sensor signal is ±94.75 °/s and a suspected failure bit is set, if the signal is out of this range for 500 ms. A fault is set after 1 s.	
Fail Safe		• Reduced controller function. • Inhibit the ESP control and ABS/EBD control is available. • The ESP warning lamps are activated.	

MONITOR SCANTOOL DATA ED6E8BFF

Refer to DTC C1282.

TERMINAL & CONNECTOR INSPECTION E347ECB1

Refer to DTC C1200.

SIGNAL CIRCUIT INSPECTION E70886DB

1. Ignition "ON" & Engine "OFF".

2. Measure voltage between terminal "16,18,20" of the HECU harness connector and chassis ground.

Specification : Approx. 2.5 V (Voltage between terminal "16, 20" of the HECU harness connector and chassis ground.) If the voltage of the yaw & lateral G sensor is changed within normal voltage range (approx. 0.1 ~ 4.9 V) during shaking it, it is in normal condition.
Specification : Approx. above 2.1 V and below 2.9 V (Voltage between terminal "18" of the HECU harness connector and chassis ground.)

<C281>

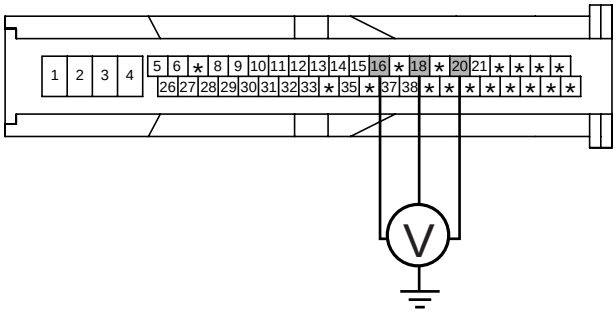

16. Yaw-Rate sensor signal
18. Yaw-Rate reference line
20. Lateral G sensor signal

SCMBR6556L

3. Is the measured voltage within specifications?

YES

▶ Substitute with a known-good HECU and check for proper operation. If problem is corrected, replace HECU and then go to "Verification Of Vehicle Repair" procedure.

NO

▶ Check for open or short in the Yaw Rate & Lateral G sensor harness between terminal "3, 5, 6" of the Yaw Rate & Lateral G sensor harness connector and terminal "16, 18, 20" of the HECU harness connector . Repair as necessary and then go to "Verification Of Vehicle Repair" procedure.
▶ If OK, Go to "Component Inspection" procedure.

COMPONENT INSPECTION EAFB8090

Refer to DTC C1282.

VERIFICATION OF VEHICLE REPAIR EDCDEEC7

Refer to DTC C1101.

DTC C1503 TCS/ESP SWITCH ERROR

COMPONENT LOCATION E1BF91AE

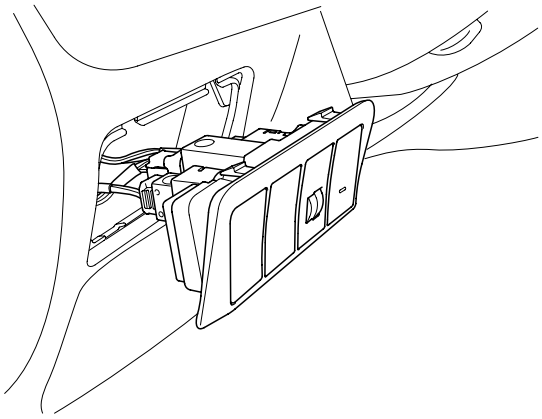

SCMBR6567D

GENERAL DESCRIPTION ED4F1C7C

Driver can inhibit the ESP control by ESC switch. When switch signal send into HECU, ESP warning lamp go ON and ESP control is stopped and if next switch signal is inputted again, ESP control is ready. This function is used for sporty driving or vehicle inspection.

DTC DESCRIPTION E53A5837

Trouble code is set when the condition that the level of ESP switch is high is continued for 60 sec. When the ESP switch failure is set there is no signal in the warning lamp and HECU inhibit the ESP control and allow the ABS/EBD control.

DTC DETECTING CONDITION E7CD022D

Item	Detecting Condition	Possible cause
DTC Strategy	• Short circuit monitoring	• Open or short ESP switch
Monitoring Period	• Continuous	
Enable Conditions	• When the ESP switch is ON for 60 sec.	
Fail Safe	• Inhibit the ESP control and allow the ABS/EBD control. • The ESP warning lamps are activated.	

MONITOR SCANTOOL DATA E3DC379B

1. Connect scantool to Data Link Connector(DLC).
2. Ignition "ON" & Engine "OFF".
3. Press the ESP SWITCH.
4. Monitor the "TCS/ESP SWITCH" parameter on the scantool.

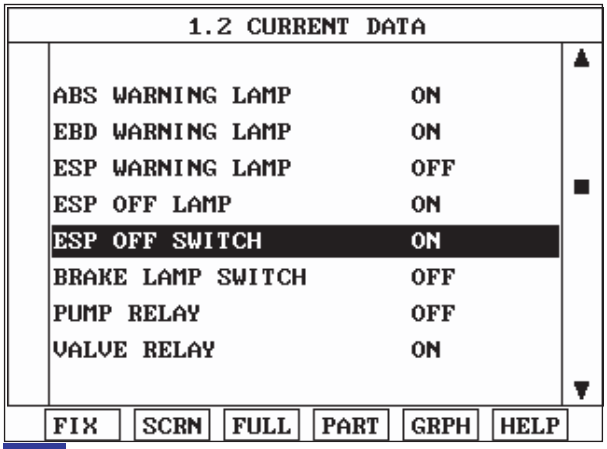

Fig1

Fig 1) Test Condition : Ignition "ON" & Engine "OFF". Normal data

SCMBR6588L

5. Whenever the switch is pushed up/down, is the esp off switch's scantool data changed ON/OFF?

YES

▶ Fault is intermittent caused by poor connection in esp switch line or was repaired and HECU memory was not cleared. Thoroughly check connectors for looseness, poor connection, bending, corrosion, contamination, deterioration, or damage. Repair or replace as necessary and then go to "Verification Of Vehicle Repair" procedure.

NO

▶ Go to "W/Harness Inspection" procedure.

TERMINAL & CONNECTOR INSPECTION E2E4D46A

1. Many malfunctions in the electrical system are caused by poor harness(es) and terminals. Faults can also be caused by interference from other electrical systems, and mechanical or chemical damage.
2. Thoroughly check connectors for looseness, poor connection, bending, corrosion, contamination, deterioration, or damage.
3. Has a problem been found?

YES

▶ Repair as necessary and then go to "Verification Of Vehicle Repair" procedure.

NO

▶ Go to "Signal Circuit Inspection" procedure.

SIGNAL CIRCUIT INSPECTION EEBC21E6

1. Ignition "ON" & Engine "OFF" & ESP Switch"ON".

2. Measure voltage between terminal "31" of the HECU harness connector and chassis ground.

Specification : Approx B+

<C281>

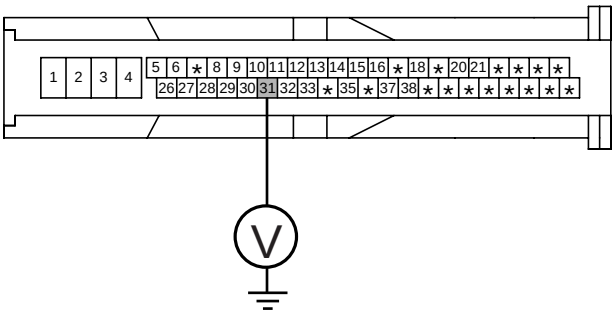

31. ESP Switch

SCMBR6557L

3. Is the measured voltage within specifications?

YES

▶ Fault is intermittent caused by open or short in ESP switch line, inoperative ESP switch or was repaired and HECU memory was not cleared. Go to the applicable troubleshooting procedure.

NO

▶ Check for damaged harness and poor connection in the power harness between the battery terminal(+) and the terminal "31" of the HECU harness connector . Check for open or blown 10 A fuse referring to "Circuit Diagram" . Repair as necessary and then go to "Verification Of vehicle Repair" procedure.
▶ If OK, Go to "Component Inspection" Procedure.

COMPONENT INSPECTION EF2CACB9

1. Ignition "ON".
2. Disconnect ESP switch connector.
3. Press the ESP switch.
4. Measure resistance between terminal "3, 4" of the ESP switch component connector and terminal "4, 5" of the ESP switch component connector.

Specification :
Approx. below 1 Ω - ESP switch is depressed. .
Approx. ∞ Ω - ESP switch is not depressed

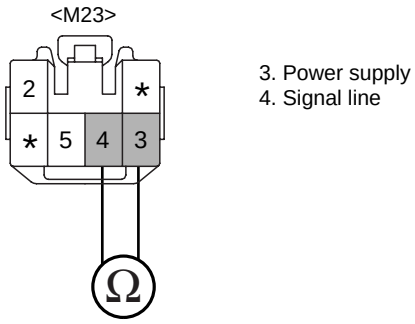

3. Power supply
4. Signal line

SCMBR6561L

5. Is the measured resistance within specifications?

YES

▶ Fault is intermittent caused by inoperative ESP switch or was repaired and HECU memory was not cleared. Go to the applicable troubleshooting procedure.

NO

▶ Substitute with a known-good ESP switch and check for proper operation. If problem is corrected, replace ESP switch and then go to "Verification Of Vehicle Repair" procedure.

VERIFICATION OF VEHICLE REPAIR EF9F4B63

Refer to DTC C1101.

DTC C1513 BRAKE SWITCH ERROR

COMPONENT LOCATION EAA84560

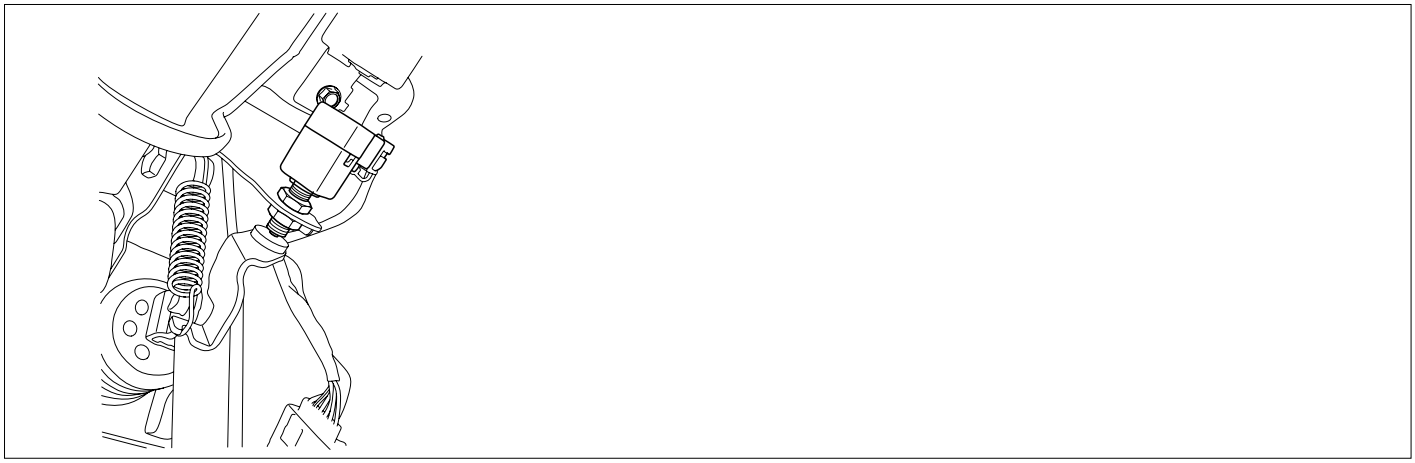

SCMBR6558L

GENERAL DESCRIPTION E97C7A58

The brake light switch indicates brake pedal status to the ABS control unit. The brake light switch which is dual switch type send brake light signal to HECU. The switch is turned on when brake is depressed. The brake light switch runs to battery voltage when brake depressed. but The brake light switch doesn't run to battery voltage when brake is not depressed. On the contrary, The brake switch is normally close type which doesn't run to battery voltage when brake depressed.

DTC DESCRIPTION E308E9E1

The brake light signal is a reference to judge driver's intention for braking and The HECU checks open or short circuit of brake light switch for normal ABS/ESP control. If an error exists, warning lamp will be turned ON.

DTC DETECTING CONDITION EC7FF7E5

		Detecting Condition	Possible cause
		• Voltage monitoring	• Open circuit in brake switch line • Inoperative brake light switch
Case 1	Monitoring Period	• Continuous (only no under voltage is not detected)	
	Enable Conditions	• If the BLS-signals is high for 60 s, while the gas pedal is stepped, with vehicle speed > 10.8 km/h, offset compensated pressure < 5 bar and no control is active, a fault is set.	
Case 2	Monitoring Period	• Continuous (only normal voltage)	
	Enable Conditions	• For redundancy reasons an additional BLSpVor-signal is created by the pressure sensor signal. If the pressure sensor is compensated, the threshold for generating the BLSpVor signal is 10 bar. If the pressure sensor is not compensated, the threshold is increased by 15 bar. If this signal is set without any hardware-BLS-signals being set for at least 1s. • If the pressure signal is higher than 80bar and not both of the hardware-BLS are set, a fault is stored after 1s.	
		• Inhibit the ESP control and ABS/EBD control is available. • The ESP warning lamps are activated.	

MONITOR SCANTOOL DATA E70AF2E4

1. Connect scantool to Data Link Connector(DLC).
2. Ignition "ON" & Engine "ON"
3. Press the brake pedal.
4. Monitor the "BRAKE SWITCH" parameter on the scantool.

Specification : Lateral G sensor : ± 0 G, YAW rate Sensor : ± 0 deg/s

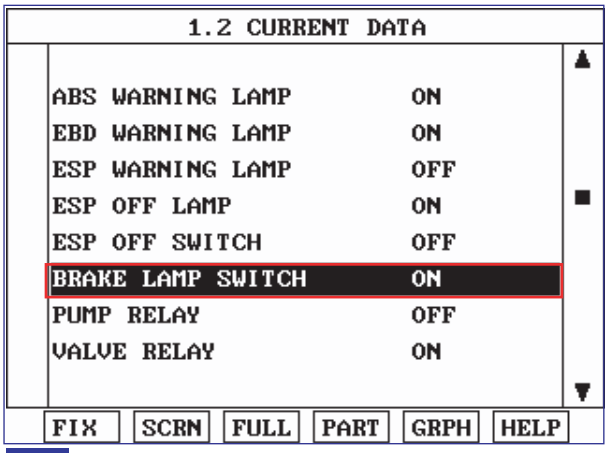

Fig1

Fig 1) Test Condition : Ignition "ON" & Engine "OFF" Normal data (There are difference in displayed Normal data

SCMBR6559L

5. Whenever brake pedal is pushed down, is the brake switch's scantool data changed ON/OFF?

YES

▶ Fault is intermittent caused by poor connection in Yaw Rate & Lateral G sensor harness and/or HECU's connector or was repaired and HECU memory was not cleared. Thoroughly check connectors for looseness, poor connection, bending, corrosion, contamination.

NO

▶ Go to "W/Harness Inspection" procedure.

TERMINAL & CONNECTOR INSPECTION E65E3A3D

1. Many malfunctions in the electrical system are caused by poor harness(es) and terminals. Faults can also be caused by interference from other electrical systems, and mechanical or chemical damage.
2. Thoroughly check connectors for looseness, poor connection, bending, corrosion, contamination, deterioration, or damage.
3. Has a problem been found?

YES

▶ Repair as necessary and then go to "Verification Of Vehicle Repair" procedure.

NO

▶ Go to "Signal Circuit Inspection (brake pedal isn't depressed)" procedure.

SIGNAL CIRCUIT INSPECTION (BRAKE PEDAL ISN'T DEPRESSED) E023A6AB

1. Ignition "ON" & Engine "OFF".
2. Don't press the brake pedal.
3. Measure voltage between the terminal "30" of the HECU harness connector and chassis ground.

Specification : Brake Light Switch - Approx. 0V

<C281>

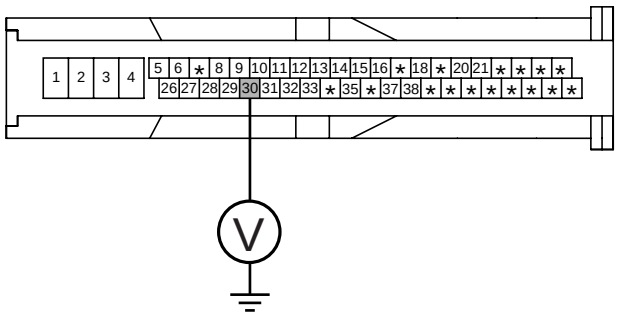

30. Brake light switch

SCMBR6589L

4. Is the measured voltage within specifications?

YES

▶ Go to "Signal Circuit Inspection (brake pedal is depressed)" procedure.

NO

▶ Check for open or blown 20A STOP, 7.5A SNSR fuse referring to "Circuit Diagram". Check for open or short to battery between the battery terminal(+) and the terminal "30" of the HECU harness connector. Repair as necessary and then go to "Verification Of Vehicle Repair" procedure.
▶ If OK, Go to "Component Inspection" Precedure.

SIGNAL CIRCUIT INSPECTION (BRAKE PEDAL IS DEPRESSED)

1. Ignition "ON" & Engine "OFF".
2. Press the brake pedal.
3. Measure voltage between the terminal "30" of the HECU harness connector and chassis ground.

Specification : Brake Light Switch - Approx. B+

<C281>

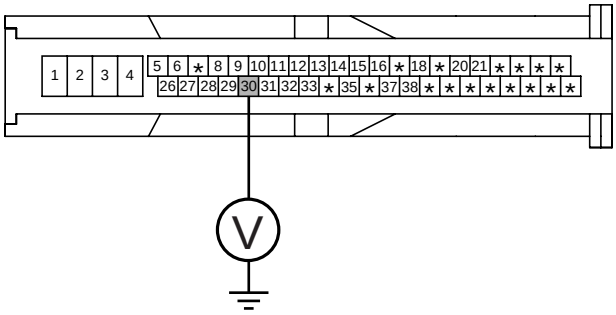

30. Brake light switch

SCMBR6590L

4. Is the measured voltage within specifications?

YES

▶ Fault is intermittent caused by open or short harness in brake light switch, faulty brake light switch or was repaired and HECU memory was not cleared. Go to "Verification Of Vehicle Repair" procedure.

NO

▶ Check for open or short to ground between the battery terminal(+) and the terminal "30" of the HECU harness connector. Repair as necessary and then go to "Verification Of Vehicle Repair" procedure.
▶ If OK, Go to "Component Inspection" Precedure.

COMPONENT INSPECTION E679EB3B

1. Ignition "OFF".
2. Disconnect brake switch connector.
3. Measure resistance between the terminal "1", "2" of the brake switch.

Resistance between the terminal "1,2" of the brake switch - ∞Ω (when the plunger is pushed down), 0Ω (when the plunger isn't pushed down).

<M254>

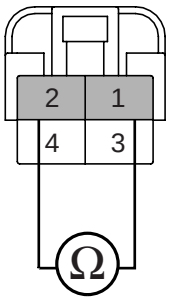

1. brake light switch signal
2. brake light switch power supply

SCMBR6562L

4. Is the measured voltage within specifications?

YES

▶ Fault is intermittent caused by open or short harness in brake light switch, faulty brake light switch or was repaired and HECU memory was not cleared. Go to "Verification Of Vehicle Repair" procedure.

NO

▶ Substitute with a known-good brake lamp switch and check for proper operation. If problem is corrected, replace brake light switch and then go to "Verification Of Vehicle Repair" procedure.

VERIFICATION OF VEHICLE REPAIR E4C6A9D0

Refer to DTC C1101.

DTC C1604 ECU HARDWARE ERROR

COMPONENT LOCATION E7E41667

Refer to DTC C1235.

GENERAL DESCRIPTION EEFC3248

The HECU is composed of an ECU (Electronic Control Unit) and a HCU(Hydraulic Control Unit) , HCU is composed of a source of hydraulic pressure and modulator valve block. Increase and decrease of hydraulic pressure is opreated by electronic motor, According to a detected signal by wheel speed sensor, The hydraulic pressure which is needed for control is supplied by pump. The HCU' function which is composed of a accumulator, return pump, solenoid valve is to increase, decrease or maintain the hydralic pressure supplied to a brake caliper by operating return pump according to HECU control signal while ABS control is active.

DTC DESCRIPTION EDAABDE6

The HECU monitors the operation of the IC components such as memory, register, A/D converter and so on. The ECU sets this code when the EEPROM data read by the master processor is different than prior data writed, or when the master/slave processor detects abnormal operation in RAM, Status Register, Interrupt, Timer, A/D converter or cycle time.

DTC DETECTING CONDITION E191019E

Item		Detecting Condition	Possible cause
DTC Strategy		• Internal monitoring	• Inoperative HECU
Case 1	Monitoring Period	• Continuous	
	Enable Conditions	• If Internal control unit failures of the master/slave processor or peripheral integrated circuits is detected.	
Case 2	Monitoring Period	• Directly after ignition on, during reading of EEPROM-values	
	Enable Conditions	• Failure is set if checksum not correct or PSW-EEPROM-Handler reported unknown failure during EEPROM-value reading. • If EEPROM reading sequence take longer then 3 s, a failure is set.	
Fail Safe		• The ABS/EBD/ESP functions are inhibited. • The ABS/EBD/ESP warning lamps are activated.	

TERMINAL & CONNECTOR INSPECTION EB2312B6

Refer to DTC C1260.

COMPONENT INSPECTION E3AF7919

Refer to DTC C1235.

VERIFICATION OF VEHICLE REPAIR EDA6B173

Refer to DTC C1101.

DTC C1605 CAN HARDWARE ERROR

COMPONENT LOCATION E42E151F

Refer to DTC C1235.

GENERAL DESCRIPTION EFD3DC76

The HECU send requirement data, such as Torque reduction, the number of fuel cut cylinders, and TCS control requests, to the PCM(ECM & TCM) through CAN bus line. The PCM(ECM) performs fuel cut functions according to requests from the HECU and retards ignition timing by torque reduction requests. The PCM(TCM) maintains current gear positions during TCS control time, in order not to increase power which causes a Kickdown shift.

DTC DESCRIPTION E54ED072

The HECU checks the CAN control module for normal TCS control, and sets this code if CAN control module malfunction is detected.

DTC DETECTING CONDITION ECBE70FD

Item	Detecting Condition	Possible cause
DTC Strategy	• CAN control module monitoring	• Inoperative HECU
Monitoring Period	• Immediate during start up	
Enable Conditions	• Faults are detected immediately if the initialization software can't have write access to the configuration registers of the CAN-controller module.	
Fail Safe	• Inhibit the ESP control and ABS/EBD control is available. Meanwhile, stop checking the ESP switch failure under the ESP control.	

TERMINAL & CONNECTOR INSPECTION EB2312B7

Refer to DTC C1260.

COMPONENT INSPECTION EE960EE5

Refer to DTC C1235.

VERIFICATION OF VEHICLE REPAIR E77708CC

Refer to DTC C1101.

DTC C1611 CAN TIME-OUT EMS

COMPONENT LOCATION EDCCC649

Refer to DTC C1235.

GENERAL DESCRIPTION E3850C33

Refer to DTC C1605.

DTC DESCRIPTION ECFFF519

The HECU checks the CAN communcation lines for normal ESP control, and sets this code if a PCM(ECM) message is not received within predefined time.

DTC DETECTING CONDITION EA602299

Item	Detecting Condition	Possible cause
DTC Strategy	• CAN massage monitoring	• Inoperative PCM(ECM) • Inoperative HECU
Monitoring Period	• Continuous	
Enable Conditions	• Faults are detected if PCM(ECM) message was not received on time by the CAN controller of HECU.	
Fail Safe	• Inhibit the ESP control and ABS/EBD control is available. Meanwhile, stop checking the ESP switch failure under the ESP control.	

TERMINAL & CONNECTOR INSPECTION EB2312B8

Refer to DTC C1260.

COMPONENT INSPECTION E511BB15

1. Ignition "OFF".
2. Ignition "ON".
3. Connect scantool and select "Diagnostic Trouble Codes (DTCs)" mode.
4. Using a scantool, Clear DTC.
5. Select "Diagnostic Trouble Codes(DTCs)" mode again.
6. Are any DTCs present?

YES

▶ Substitute with a known-good PCM(ECM) and check for proper operation. If problem is corrected, replace PCM(ECM) and then go to "Verification Of Vehicle Repair" procedure.If NG, replace HECU and then go to "Verification Of Vehicle Repair" procedure.

NO

▶ Fault is intermittent caused by faulty HECU or was repaired and HECU memory was not cleared. go to "Verification Of Vehicle Repair" procedure.

VERIFICATION OF VEHICLE REPAIR E5A708F3

Refer to DTC C1101.

DTC C1612 CAN TIME-OUT TCU

COMPONENT LOCATION E174F640

Refer to DTC C1235.

GENERAL DESCRIPTION ED93156E

Refer to DTC C1605.

DTC DESCRIPTION EC71E820

The HECU checks the CAN communcation lines for normal TCS control, and sets this code if a PCM(TCM) message is not received within predefined time.

DTC DETECTING CONDITION EE329DFE

Item	Detecting Condition	Possible cause
DTC Strategy	• CAN control module monitoring	• Inoperative PCM(TCM) • Inoperative HECU
Monitoring Period	• Continuous	
Enable Conditions	• Faults are detected if PCM(TCM) message was not received on time by the CAN controller of HECU.	
Fail Safe	• Inhibit the ESP control and ABS/EBD control is available. Meanwhile, stop checking the ESP switch failure under the ESP control.	

COMPONENT INSPECTION EED2CFB7

1. Ignition "OFF".
2. Ignition "ON".
3. Connect scantool and select "Diagnostic Trouble Codes (DTCs)" mode.
4. Using a scantool, Clear DTC.
5. Select "Diagnostic Trouble Codes(DTCs)" mode again.
6. Are any DTCs present?

YES

▶ Substitute with a known-good PCM(ECM) and check for proper operation. If problem is corrected, replace PCM(ECM) and then go to "Verification of Vehicle Repair" procedure.If NG, replace HECU and then go to "Verification of Vehicle Repair" procedure.

NO

▶ Fault is intermittent caused by faulty HECU or was repaired and HECU memory was not cleared. go to "Verification of Vehicle Repair" procedure.

TERMINAL & CONNECTOR INSPECTION EB2312B9

Refer to DTC C1260.

VERIFICATION OF VEHICLE REPAIR E2F441E9

Refer to DTC C1101.

DTC C1616 CAN BUS OFF

COMPONENT LOCATION E73AF7AC

Refer to DTC C1235.

GENERAL DESCRIPTION E776AF18

Refer to DTC C1605.

DTC DESCRIPTION EF12F92F

The HECU checks the CAN communication lines for normal TCS control, and sets this code if re-initialization is tried for 15 times in sequence without success.

DTC DETECTING CONDITION EABC4B64

Item	Detecting Condition	Possible cause
DTC Strategy	• Open or short monitoring	• Open or short circuit in CAN line • Inoperative HECU
Monitoring Period	• Continuous	
Enable Conditions	• A CAN BUS off fault is established if re-initialization is tried for 15 times in sequence without success.	
Fail Safe	• Inhibit the ESP control and ABS/EBD control is available. Meanwhile, stop checking the ESP switch failure under the ESP control.	

TERMINAL & CONNECTOR INSPECTION EF4B2AE2

Refer to DTC C1503.

SIGNAL CIRCUIT INSPECTION E023A5AB

1. Ignition "OFF".
2. Disconnet the HECU harness connector.
3. Measure resistance between terminal "14" of the HECU harness connector and terminal "35" of the HECU harness connector.

Specification : Approx. 60Ω

<C281>

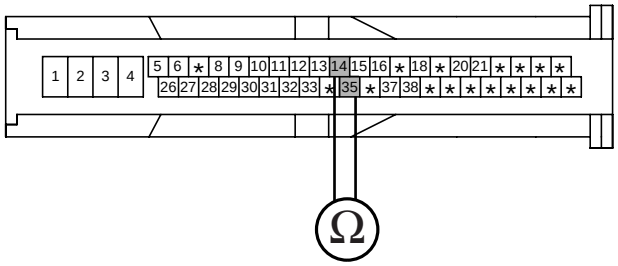

<VDC>
14. CAN (LOW)
35. CAN (HIGH)

SCMBR6563L

4. Is the measured resistance within specifications?

YES

▶ Fault is intermittent caused by open or short in CAN signal harness or was repaired and HECU memory wasnot cleared. go to "CAN Bus Short (to ground) Inspection" procedure.

NO

▶ Check for open or short in CAN signal harness between terminal "14" of the HECU harness connector and terminal "35" of the HECU harness connector. Repair as necessary and then go to "Verification Of Vehicle Repair" procedure.

CAN BUS SHORT (TO GROUND) INSPECTION

1. Ignition "OFF".
2. Disconnet the HECU harness connector.
3. Measure resistance between terminal "14, 35" of the HECU harness connector and chassis ground.

Specification : Approx. ∞ Ω

<C281>

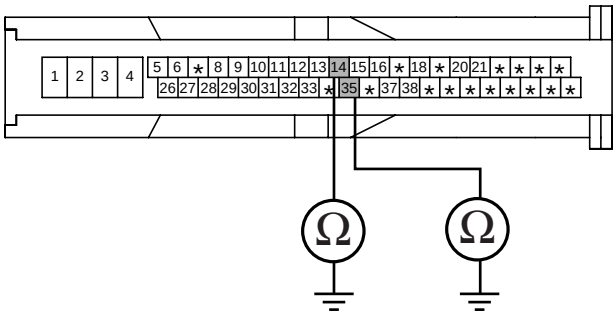

<VDC>
14. CAN (LOW)
35. CAN (HIGH)

SCMBR6564L

4. Is the measured resistance within specifications?

YES

▶ Go to "CAN Bus Short (to battery) Inspection" procedure.

NO

▶ Check for short to ground in CAN HIGH signal harness in case of abnormal resistance measured betweenterminal "35" of the HECU harness connector and chassis ground. Repair as necessary and then go to "Verification Of Vehicle Repair" procedure.
▶ Check for short to ground in CAN LOW signal harness in case of abnormal resistance measured betweenterminal "14" of the HECU harness connector and chassis ground. Repair as necessary and then go to "Verification Of Vehicle Repair" procedure.

CAN BUS SHORT (TO BATTERY) INSPECTION

1. Ignition "OFF".
2. Disconnet the HECU harness connector.
3. Measure voltage between terminal "14, 35" of the HECU harness connector and chassis ground.

Specification : Below. 0.2 V

<C281>

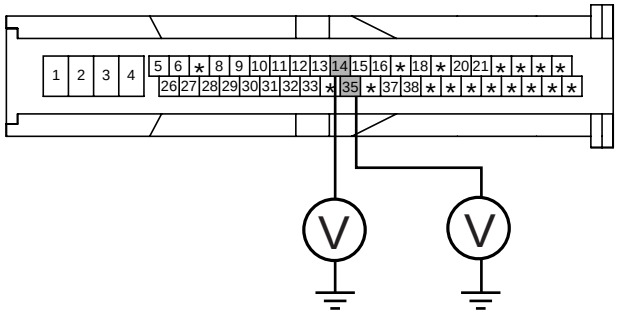

<VDC>
14. CAN (LOW)
35. CAN (HIGH)

SCMBR6565L

4. Is the measured resistance within specifications?

YES

▶ Go to "CAN Bus Short (between HIGH and LOW) Inspection" procedure.

NO

▶ Check for short to battery in CAN HIGH signal harness in case of abnormal resistance measured betweenterminal "14" of the HECU harness connector and chassis ground. Repair as necessary and then go to "Verification Of Vehicle Repair" procedure.
▶ Check for short to battery in CAN LOW signal harness in case of abnormal resistance measured betweenterminal "35" of the HECU harness connector and chassis ground. Repair as necessary and then go to "Verification Of Vehicle Repair" procedure.

CAN BUS SHORT (BETWEEN HIGH AND LOW) INSPECTION

1. Ignition "OFF".
2. Disconnet all the connetor related to CAN such as HECU, PCU, EPS, ECS harness connector.
3. Measure resistance between terminal "14, 35" of the HECU harness.

Specification : Approx. 120 Ω

<C281>

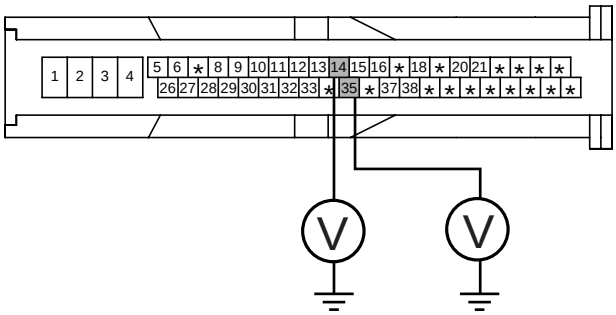

<VDC>
14. CAN (LOW)
35. CAN (HIGH)

SCMBR6565L

4. Is the measured resistance within specifications?

YES

▶ Go to "Component Inspection" procedure.

NO

▶ Check for short in CAN signal harness between terminal "14" of the HECU harness connector and terminal "35" of the HECU harness connector. Repair as necessary and then go to "Verification of vehicle Repair" procedure.

COMPONENT INSPECTION EEE71ACE

1. Ignition "OFF".
2. Ignition "ON".
3. Connect scantool and select "Diagnostic Trouble Codes (DTCs)" mode.
4. Using a scantool, Clear DTC.
5. Select "Diagnostic Trouble Codes(DTCs)" mode again.
6. Are any DTCs present?

YES

▶ Substitute with a known-good HECU and check for proper operation. If problem is corrected, replace HECU and then go to "Verification Of Vehicle Repair" procedure.

NO

▶ Fault is intermittent caused by faulty HECU or was repaired and HECU memory was not cleared. go to "Verification of Vehicle Repair" procedure.

VERIFICATION OF VEHICLE REPAIR EB1C1480

Refer to DTC C1101.

DTC C1623 CAN TIME-OUT STEERING ANGLE SENSOR

COMPONENT LOCATION E13058C2

Refer to DTC C1235.

GENERAL DESCRIPTION EABBA871

The Steering angle sensor(SAS) is joined to the multi function switch and uses a CAN communication. The SAS is used to determine turning direction and speed of the steering wheel. The HECU uses the signals from the SAS when performing ESP-related calculations.

DTC DESCRIPTION E2768D2E

The HECU checks the CAN communcation lines for normal ESP control, and sets this code if a sAS message is not received within predefined time.

DTC DETECTING CONDITION E7C4B0FD

Item	Detecting Condition	Possible cause
DTC Strategy	• CAN massage monitoring	• Inoperative SAS • Inoperative HECU • Open circuit in SAS line
Monitoring Period	• Continuous	
Enable Conditions	• Faults are detected if SAS message was not received on time by the CAN controller of HECU.	
Fail Safe	• Inhibit the ESP control and ABS/EBD control is available. Meanwhile, stop checking the ESP switch failure under the ESP control.	

TERMINAL & CONNECTOR INSPECTION E1F07986

Refer to DTC C1200.

POWER SUPPLY CIRCUIT INSPECTION ECCC0617

1. Ignition "ON".
2. Measure voltage between terminal "2" of the steering angle sensor harness connector and chassis ground.

Specification : Approx. B+

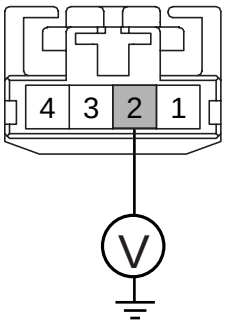

1. Steering Angle Sensor Ground
2. Steering Angle Sensor Supply
3. CAN Line (HIGH)
4. CAN Line (LOW)

EJBF504A

3. Is the measured voltage within specifications?

YES

▶ Go to "Ground Circuit Inspection" procedure.

NO

▶ Check for damaged harness and poor connection between the battery terminal(+) and terminal "2" of the steering angle sensor harness connector. Check for open or blown 10 A ABS fuse referring to "Circuit Diagram". Repair as necessary and then go to "Verification Of Vehicle Repair" procedure.

GROUND CIRCUIT INSPECTION E79BB25D

1. Ignition "OFF".
2. Disconnect SAS connector.
3. Measure resistance between terminal "1" of the steering angle sensor harness connector and chassis ground.

Specification : Approx. below 1 Ω

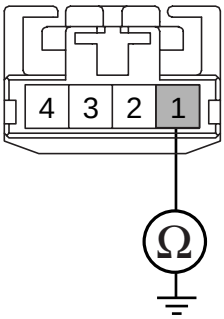

1. Steering Angle Sensor Ground
2. Steering Angle Sensor Supply
3. CAN Line (HIGH)
4. CAN Line (LOW)

EJBF504B

4. Is the measured resistance within specifications?

YES

▶ Go to "CAN Circuit Inspection" procedure.

NO

▶ Check for damaged harness and poor connection between terminal "15" of the HECU harness connector and terminal "1" of the steering angle sensor harness connector . Repair as necessary and then go to "Verification Of Vehicle Repair" procedure.

CAN CIRCUIT INSPECTION

1. Ignition "OFF".
2. Disconnect SAS connector.
3. Measure resistance between terminal "3, 4" of the steering angle sensor harness connector.

Specification : Approx. 60 Ω

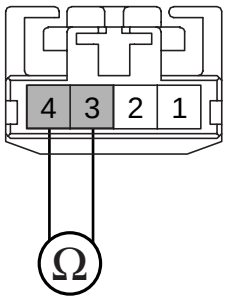

1. Steering Angle Sensor Ground
2. Steering Angle Sensor Supply
3. CAN Line (HIGH)
4. CAN Line (LOW)

EJBF504C

4. Is the measured resistance within specifications?

YES

▶ Check for improper installation of wheel speed sensor. If NG, repair as necessary and then go to "Verification Of Vehicle Repair" procedure.
▶ If OK, Go to "Component Inspection" procedure.

NO

▶ Check for damaged harness and poor connection between terminal "3, 4" of the steering angle sensor harness connector. Repair as necessary and then go to "Verification Of Vehicle Repair" procedure.

CAN BUS SHORT (TO GROUND) INSPECTION

1. Ignition "OFF".
2. Disconnet the HECU harness connector.
3. Measure resistance between terminal "3, 4" of the HECU harness connector and chassis ground.

Specification : Approx. ∞ Ω

<M38>

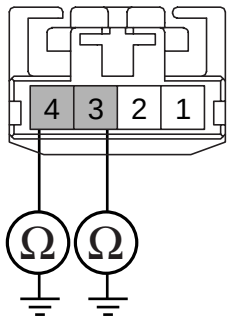

1. Steering Angle Sensor Ground
2. Steering Angle Sensor Supply
3. CAN Line (HIGH)
4. CAN Line (LOW)

SCMBR6566L

4. Is the measured resistance within specifications?

YES

▶ Go to "CAN Bus Short (between HIGH and LOW) Inspection" procedure.

NO

▶ Check for short to ground in CAN HIGH signal harness in case of abnormal resistance measured betweenterminal "3" of the HECU harness connector and chassis ground. Repair as necessary and then go to "Verification Of Vehicle Repair" procedure.
▶ Check for short to ground in CAN LOW signal harness in case of abnormal resistance measured betweenterminal "4" of the HECU harness connector and chassis ground. Repair as necessary and then go to "Verification Of Vehicle Repair" procedure.

CAN BUS SHORT (BETWEEN HIGH AND LOW) INSPECTION

1. Ignition "OFF".
2. Disconnet all the connetor related to CAN such as HECU, PCU, EPS, ECS harness connector.
3. Measure resistance between terminal "3, 4" of the HECU harness.

Specification : Approx. 120 Ω

<M38>

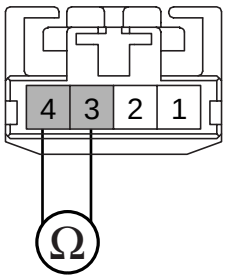

1. Steering Angle Sensor Ground
2. Steering Angle Sensor Supply
3. CAN Line (HIGH)
4. CAN Line (LOW)

SCMBR6567L

4. Is the measured resistance within specifications?

YES

▶ Go to "Component Inspection" procedure.

NO

▶ Check for short in CAN signal harness between terminal "3" of the HECU harness connector and terminal "4" of the HECU harness connector. Repair as necessary and then go to "Verification Of Vehicle Repair" procedure.

COMPONENT INSPECTION E0354D6C

1. Ignition "OFF".
2. Ignition "ON".
3. Connect scantool and select "Diagnostic Trouble Codes (DTCs)" mode.
4. Using a scantool, Clear DTC.
5. Select "Diagnostic Trouble Codes (DTCs)" mode again.
6. Are any DTCs present ?

YES

1) Substitute with a known-good steering angle sensor and check for proper operation. If problem is corrected, replace sensor and then go to "Verification Of Vehicle Repair" procedure.
2) Substitute with a known-good HECU and check for proper operation. If problem is corrected, replace HECU and then go to "Verification Of Vehicle Repair" procedure.

NO

▶ Fault is intermittent caused by poor connection in steering angle sensor harness or faulty steering angle sensor. Go to "Verification Of Vehicle Repair" procedure.

VERIFICATION OF VEHICLE REPAIR EDDB39C4

Refer to DTC C1101.

DTC C1625 CAN TIME-OUT ABS/TCS/ESP

COMPONENT LOCATION EE4D6C4A

Refer to DTC C1235.

GENERAL DESCRIPTION EA8B81C6

Refer to DTC C1605.

DTC DESCRIPTION E1AACA13

The HECU checks the CAN communcation lines for normal ESP control, and sets this code if a CAN message is not transmitted within predefined time.

DTC DETECTING CONDITION ECA90A70

Item	Detecting Condition	Possible cause
DTC Strategy	• CAN massage monitoring	• Inoperative HECU
Monitoring Period	• Continuous	
Enable Conditions	• Faults are detected if CAN message was not transmitted on time by the CAN controller of HECU.	
Fail Safe	• Inhibit the ESP control and ABS/EBD control is available. Meanwhile, stop checking the ESP switch failure under the ESP control.	

TERMINAL & CONNECTOR INSPECTION EB2312B0

Refer to DTC C1260.

COMPONENT INSPECTION ECF6F03E

Refer to DTC C1235.

VERIFICATION OF VEHICLE REPAIR E90D8919

Refer to DTC C1101.

DTC C1626 IMPLAUSIBLE CONTROL

COMPONENT LOCATION E04AB5EA

Refer to DTC C1235.

GENERAL DESCRIPTION E43144C2

The pressure sensor, installed in the HECU, sense the brake oil pressure to judge driver's brake intention when ESP is operating. If pressure of master cyclinder is applied to pressure sensor, the strain of the piezo element is changed and then the resistance of brige circuit is chanded according to changed strain. Therefore this changed resistance changes output voltage of brige circuit and output voltage changes linearly. The sensor output is a analog signal in proportion to supply voltage, and the HECU recognizes a pressure value according to signal ratio about supply voltage.

DTC DESCRIPTION ED2FA73C

Under normal conditions, the inlet valves of all four wheels are not closed during control for longer than 1.28s or If the controller requests pressure-hold or pressure-decrease for longer than 1.28s, a fault is detected. The ABS/ESP warning lamp is turned ON and the EBD warning lamp is turned OFF.

DTC DETECTING CONDITION EC18FDBE

Item		Detecting Condition	Possible cause
DTC Strategy		• Signal monitoring	• Inoperative HECU
Case 1	Monitoring Period	• Continuous	
	Enable Conditions	• If the controller requests pressure-hold or pressure-decrease for longer than 1.28 s, a fault is stored.	
Case 2	Monitoring Period	• Continuous (at vehicle reference speed > 6 m/s, no detected under voltage and a fault is not already detected)	
	Enable Conditions	• The monitoring reports a failure if continuous ESP control occurs for a time period >= 10 s.	
Fail Safe		• The ABS/ESP functions are inhibited, allow the EBD control. • The ABS/ESP warning lamps are activated.	

COMPONENT INSPECTION EF9690E7

Refer to DTC C1235.

VERIFICATION OF VEHICLE REPAIR E8F1EE76

Refer to DTC C1101.

DTC C1702 VARIANT CODING ERROR

COMPONENT LOCATION EB373A2E

Refer to DTC C1235.

GENERAL DESCRIPTION E57AFA56

There is no hardware difference of the HECU according to the vehicle's specification, just software is changed by the vehicle parameter used for ESP control. The HECU stores a classified variant code value according to the received data(a kind of engine, engine displacement, a kind of T/M). After then the HECU read a various parameter according to the stored variant value in the memory to use for the ESP control.

DTC DESCRIPTION E06AF2C9

The HECU checks the variant code after ignition. If a inappropriate variant code is detected or there is no variant code, a fault is detected.

DTC DETECTING CONDITION EA677BE2

Item	Detecting Condition	Possible cause
DTC Strategy	• Internal monitoring	• Inoperative HECU • Replacement of PCM(ECM & TCM)
Monitoring Period	• Once during startup.	
Enable Conditions	• During intialization, there is no inputed valid varient code. • No variant code stored in EEPROM. • Receieved variant code is invalid. • There is a difference between preset variant code and detected variant code.	
Fail Safe	• The ABS/EBD/ESP functions are inhibited. • The ABS/EBD/ESP warning lamps are activated.	

MONITOR SCANTOOL DATA EC715F53

VARIANT CODE

1. Check for improper installation of EMS/PCM(ECM & TCM)/ESP.
2. Connect scantool to Data Link Connector(DLC).
3. Ignition "ON".
4. Go in Anti-Lock brake system (figure 1).
5. Perform variant code.
6. Disconnect scantool.
7. Ignition "OFF" and then ignition "ON". Go to "Component Inspection"Procedure.

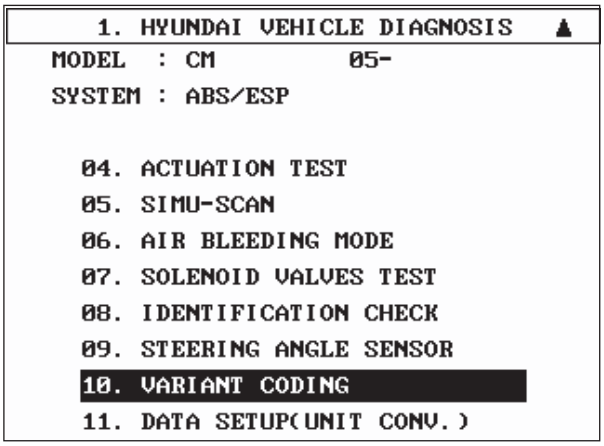

Fig1

Fig 1) Varient coding.

SCMBR6568L

COMPONENT INSPECTION EDF8867E

Refer to DTC C1235.

VERIFICATION OF VEHICLE REPAIR E894754C

Refer to DTC C1101.

DTC C2112 VALVE RELAY ERROR

COMPONENT LOCATION E17FAF5F

Refer to DTC C1235.

GENERAL DESCRIPTION E510D9AF

The HECU supplies battery power to all solenoid valves with a valve relay which is controlled by the Electronic Control UNIT(ECU). The valve relay and all solenoid valves are installed inside the HECU (Hydraulic and Electronic Control Unit).

DTC DESCRIPTION E5C5A183

The HECU monitors voltage of the valve relay to check if the HECU can perform ABS control normally. When the valve relay is switched to ON, the HECU will set this code if the solenoid drive voltage is below permissible voltage ranges for a period of time. When the valve relay is switched to OFF, the HECU sets this code if the solenoid drive voltage is over the permissible voltage range for a period of time.

DTC DETECTING CONDITION E59AFF33

Item		Detecting Condition	Possible cause
DTC Strategy		• Voltage monitoring	• Open or short in power supply circuit (IGN+) • Inoperative HECU
Case 1	Monitoring Period	• Once during startup.	
	Enable Conditions	• Watchdog and valve relay function is tested during startup.A failure is detected if the valve relay/Enable remains in off position when it is turned on and vice versa. Reason could be short to GND or UZ, interrupted lines or a inoperative output stage etc.	
Case 2	Monitoring Period	• Continuous	
	Enable Conditions	• A Fault is detected if valve relay voltage < 0.8 * battery voltage for a time 500 ms.	
Case 3	Monitoring Period	• Continuous	
	Enable Conditions	• If valve relay malfunction and supply solenoid valve short to battery or supply solenoid valve and medium or high ohmic short of valve relay (or a valve) to valve relay voltage, solenoid valve voltage or GND are detected.	
Fail Safe		• No valve actuation possible. • The ABS/EBD/ESP functions are inhibited. • The ABS/EBD/ESP warning lamps are activated.	

MONITOR ACTUATION TEST EBFD31F0

1. Connect scantool to Data Link Connector(DLC)
2. Ignition "ON" & Engine "OFF".
3. Select the "Actuation Test" mode on the scantool.
4. Inspect opearating status of all vlaves with Actuation Test.

Specification : It's normal if operating sound is heard.

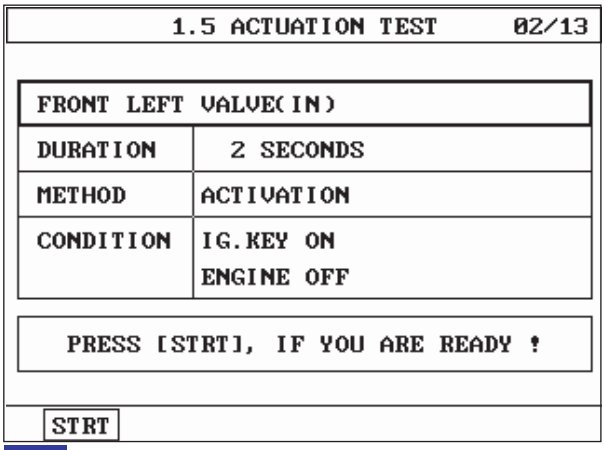

Fig1

Fig 1) Test Condition : Ignition "ON" & Engine "OFF".
Ex) Actuation Test on Front left valve(in)

SCMBR6569L

5. Do all valves operate normally?

YES

▶ Fault is intermittent caused by poor connection in power harness (ABS2) and/or HECU's connector or wasrepaired and HECU memory was not cleared. Thoroughly check connectors for looseness, poor connection, bending, corrosion, contamination, deterioration, or damage. Repair or replace as necessary and then go to "Verification Of Vehicle Repair" procedure.

NO

▶ Go to "W/Harness Inspection" procedure.

TERMINAL & CONNECTOR INSPECTION E91F6FE5

Refer to DTC C1200.

POWER SUPPLY CIRCUIT INSPECTION EB45563A

1. Ignition "OFF".
2. Disconnect HECU connector.
3. Ignition "ON".
4. Measure voltage between terminal "3" of the HECU harness connector and chassis ground.

Specification : Approx. B+

<C281 GSL>

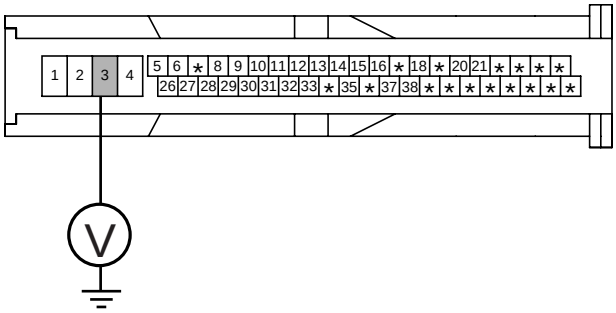

3. Battery(+)

SCMBR6570L

5. Is the measured voltage within specifications?

YES

▶ Go to "Ground Circuit Inspection" procedure.

NO

▶ Check for damaged harness and open or short to GND between the battery terminal(+) and terminal "3" of the HECU harness connector. Check for open or blown 40A ABS fuse referring to "Circuit Diagram". Repair as necessary and then go to "Verification of vehicle Repair" procedure.

GROUND CIRCUIT INSPECTION E513968B

Refer to DTC C1101.

VERIFICATION OF VEHICLE REPAIR E5E5A1F6

Refer to DTC C1101.

DTC C2308 FL INLET VALVE MALFUNCTION
DTC C2316 FR INLET VALVE MALFUNCTION
DTC C2324 RL INLET VALVE MALFUNCTION
DTC C2332 RR INLET VALVE MALFUNCTION

COMPONENT LOCATION E0DE60DF

Refer to DTC C1235.

GENERAL DESCRIPTION EFB7DCDD

The HECU is composed of an ECU (Electronic Control Unit) and an HCU(Hydraulic Control Unit), so the HECU hardware includes all solenoid valves inside the unit as well as the ECU. Solenoid valves are switched to ON, OFF by HECU when the ABS is activated. Solenoid valves function is to increase, decrease or maintain the hydralic pressure supplied to a brake caliper.

DTC DESCRIPTION ED337373

The HECU monitors the operation of the valves by checking the drive circuit of the solenid valves, and then sets this code when the unexpcted drive voltage is detected. For example, the HECU sets the DTC if the electrical feedback signal does not match the actuation signal for the corresponding valve.

DTC DETECTING CONDITION E9273E4B

Item		Detecting Condition	Possible cause
DTC Strategy		• Voltage monitoring	• Inoperative HECU
Case 1	Monitoring Period	• Continuous	
	Enable Conditions	• The electrical feedback signal does not match the actuation signal for the corresponding valve for more than 30 ms. - Current controlled valves and under voltage conditions :detection time is 80 ms	
Case 2	Monitoring Period	• Immediately after power on • every 20 s - The Test is canceled if any control, valve actuation takes place or if the Vehicle is in motion and the BLS is on.	
	Enable Conditions	• A Fault is found if UVR is not within 0.1*battery voltage $<$ valve relay voltage $<$ 0.8*battery voltage • A Fault is found if valve relay voltage $\geq$ 0.2*battery voltage. - After that all valves are switched on sequential, valve relay voltage and valve feedback is measured.	
Case 3	Monitoring Period	• The Valve and Pump motor Test is performed once after ignition on if vehicle speed is $>$= 15 km/h.	
	Enable Conditions	• The valve and pump motor test detects electrical actuation malfunction of ABS valves. The test actuates all valves in series (to detect short cuts or shunts between the valve lines). Faults are detected if there is an error during the test.	
Case 4	Monitoring Period	• The drift test executes only once during an ignition Cycle. The test is triggered if the following conditions are fulfilled : 10min after power up or end of control 1) No BLS is applied 2) Brake pressure is $<$ 10 bar 3) Vehicle speed $>$15 km/h 4) Vehicle acceleration $>$ 0.5 m/s^2 5) Supply voltage $>$ 11 volts.	
	Enable Conditions	• The drift test is executed only once during an ignition Cycle.If it detects partly shorted valve coils,almost inoperative coils or malfunction of the valve driver, a failure is recognized.	
Fail Safe		• Valve cannot be actuated or valve is incorrectly actuated. This may result in locked wheels or wheels without pressure. • ABS/EBD/ESP function is prohibited. • ABS/EBD/ESP warning lamp is turned ON.	

MONITOR ACTUATION TEST ED3E7D6C

1. Connect scantool to Data Link Connector(DLC)
2. Ignition "ON" & Engine "OFF".
3. Select the "Actuation Test" mode on the scantool.
4. Inspect opearating status of inlet valve with Actuation Test.

Specification : It's normal if operating sound is heard.

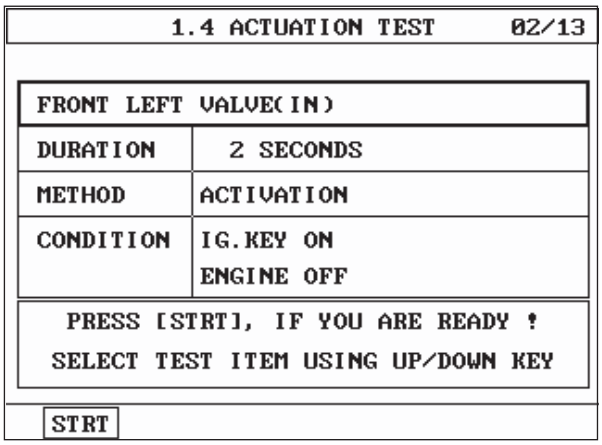

Fig1

Fig 1) Test Condition : Ignition "ON" & Engine "OFF"
Ex) Actuation Test on Front left valve(in)

EJBF504L

5. Does a inlet valve operate normally?

YES

▶ Fault is intermittent caused by inoperative valve or was repaired and HECU memory was not cleared. Go to the pplicable troubleshooting procedure.

NO

▶ Go to "W/Harness Inspection" procedure.

TERMINAL AND CONNECTOR INSPECTION EE3CAC26

1. Many malfunctions in the electrical system are caused by poor harness(es) and terminals. Faults can also be caused by interference from other electrical systems, and mechanical or chemical damage.
2. Thoroughly check connectors for looseness, poor connection, bending, corrosion, contamination, deterioration, or damage.
3. Has a problem been found?

YES

▶ Repair as necessary and then go to "Verification of Vehicle Repair" procedure.

NO

▶ Substitute with a known-good HECU and check for proper operation. If problem is corrected, replace HECU and then go to "Verification of Vehicle Repair" procedure.

VERIFICATION OF VEHICLE REPAIR E05FDCDF

Refer to DTC C1101.

DTC C2312 FL OUTLET VALVE MALFUNCTION
DTC C2320 FR OUTLET VALVE MALFUNCTION
DTC C2328 RL OUTLET VALVE MALFUNCTION
DTC C2336 RR OUTLET VALVE MALFUNCTION

COMPONENT LOCATION E17CE012

Refer to DTC C1235.

GENERAL DESCRIPTION E765168C

Refer to DTC C2308.

DTC DESCRIPTION EB63DB57

Refer to DTC C2308.

DTC DETECTING CONDITION EF1E4919

Refer to DTC C2308.

MONITOR ACTUATION TEST EF9ABF10

1. Connect scantool to Data Link Connector(DLC)
2. Ignition "ON" & Engine "OFF".
3. Select the "Actuation Test" mode on the scantool.
4. Inspect opearating status of outlet valve with Actuation Test.

Specification : It's normal if operating sound is heard.

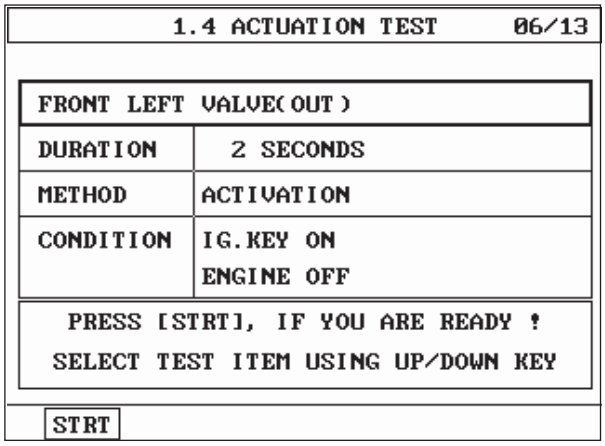

Fig1

Fig 1) Test Condition : Ignition "ON" & Engine "OFF"
Ex) Actuation Test on Front left valve(out)

SCMBR6572L

5. Does a inlet valve operate normally?

YES

▶ Fault is intermittent caused by inoperative valve or was repaired and HECU memory was not cleared. Go to the pplicable troubleshooting procedure.

NO

▶ Go to "Component Inspection" procedure.

TERMINAL AND CONNECTOR INSPECTION E3277A22

Refer to DTC C2308.

VERIFICATION OF VEHICLE REPAIR EF041650

Refer to DTC C1101.

DTC C2366 TCS VALVE PRIMARY (USV1) ERROR
DTC C2370 TCS VALVE SECONDARY (USV2) ERROR
DTC C2372 ESP VALVE 1 (HSV1) ERROR
DTC C2374 ESP VALVE 2 (HSV2) ERROR

COMPONENT LOCATION EEF8A5A9

Refer to DTC C1235.

GENERAL DESCRIPTION E0D75DC9

Refer to DTC C2308.

DTC DESCRIPTION E459C827

Refer to DTC C2308.

DTC DETECTING CONDITION E3B9D83B

Item		Detecting Condition	Possible cause
DTC Strategy		• Voltage monitoring	• Inoperative HECU
Case 1	Monitoring Period	• Once after ignition on at standstill if the BLS is off • At vehicle speed ≥ 15 km/h if the BLS is on.	
	Enable Conditions	• The test actuates all valves in series to detect shorts or shunts between the valve lines. Faults are detected if there is an error during the test.	
Case 2	Monitoring Period	• The drift test executes only once during an ignition Cycle. The test is triggered if the following conditions are fulfilled : 10 min after power up or end of control 1) No BLS is applied 2) Brake pressure is < 10 bar 3) Vehicle speed >15 km/h 4) Vehicle acceleration > 0.5 m/s^2 5) Supply voltage > 11 volts.	
	Enable Conditions	• The drift test is executed only once during an ignition Cycle.If it detects partly shorted valve coils,almost inoperative coils or malfunction of the valve driver, a failure is recognized.	
Fail Safe		• Valve cannot be actuated or valve is incorrectly actuated. This may result in locked wheels or wheels without pressure. • ABS/EBD/ESP function is prohibited. • ABS/EBD/ESP warning lamp is turned ON.	

MONITOR ACTUATION TEST EE1C235C

1. Connect scantool to Data Link Connector(DLC)
2. Ignition "ON" & Engine "OFF".
3. Select the "Actuation Test" mode on the scantool.
4. Inspect opearating status of inlet valve with Actuation Test.

Specification : It's normal if operating sound is heard.

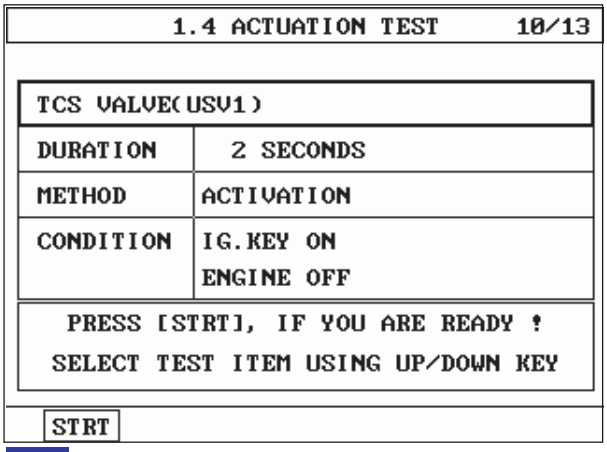

Fig1

Fig 1) Test Condition : Ignition "ON" & Engine "OFF"
Ex) Actuation Test on TCS(USV) valve #1

SCMBR6573L

5. Does a inlet valve operate normally?

YES

▶ Fault is intermittent caused by inoperative valve or was repaired and HECU memory was not cleared. Go to the pplicable troubleshooting procedure.

NO

▶ Go to "W/Harness Inspection" procedure.

TERMINAL AND CONNECTOR INSPECTION EEA1AAFD

Refer to DTC C2308.

VERIFICATION OF VEHICLE REPAIR E83A38F7

Refer to DTC C1101.

DTC C2402 MOTOR - ELECTRICAL

COMPONENT LOCATION E1D99F74

Refer to DTC C1235.

GENERAL DESCRIPTION E076365D

The HECU supplies battery power to the electric motor with a motor relay which is controlled by the Electronic Control Unit(ECU). The electric motor pump supplies hydraulic pressure to all wheel brake calipers by operating the piston inside the pump.

DTC DESCRIPTION E7B83C4C

The ABS ECU monitors the pump motor relay or fuse open, open or short in motor or motor lock and then sets this code if a malfunction is detected.

DTC DETECTING CONDITION E230FE39

Item		Detecting Condition	Possible cause
DTC Strategy		• Battery Voltage Monitoring	• Open or short of power supply circuit (ABS2) • Inoperative HECU
Case1(Motor Relay Open orMotor Short to GND)	Detect Mode	• Outside the ABS control cycle • Inside the ABS control cycle • Diagnosis mode	
	Enable Conditions	• If the motor relay is switched ON and motor voltage < (IGN voltage ? 4V±0.5V) continued for 49msec, the failure is detected.	
Case2 (Motor Lock)	Detect Mode	• Outside the ABS control cycle • Diagnosis mode	
	Enable Conditions	• After motor relay is switched OFF, VMR is measured. If the time which VMR > 1±0.1V is less than evaluation time, recheck is performed again for a maximum of three times. When VMR is not normal even on the third recheck, the controller recognizes it as failure.	
Case3(Motor Open, Motor Short to BATT)	Detect Mode	• Initial Check • Outside the ABS control cycle • Diagnosis mode • Failure mode	
	Enable Conditions	• After 1.8sec from the time that motor relay is switched OFF, VMR > 4±0.5V continued for 1.8sec, the failure is detected.	
Case4(Motor Fuse Open)	Detect Mode	• Initial Check • Outside the ABS control cycle • Inside the ABS control cycle • Diagnosis mode • Failure mode	
	Enable Conditions	• If the motor relay is switched OFF and VMRP (Motor power supply voltage) < 4±0.5V continued for 1sec, the failure is detected.	
Fail Safe		• The ABS/ESP functions are inhibited. • The ABS/ESP warning lamps are activated and the EBD warning lamp is not activated. • Motor failure during the ABS control cycle (Case 1, 4) :Inhibit the ABS/ESP control of front wheels, allow the ABS/ESP control of rear wheels, and ABS/ESP warning lamps are switched on at the end of ABS control.	

MONITOR ACTUATION TEST E7DFBFCD

1. Connect scantool to Data Link Connector(DLC)
2. Ignition "ON" & Engine "OFF".
3. Select the "Actuation Test" mode on the scantool.
4. Inspect opearating status of inlet valve with Actuation Test.

Specification : It's normal if operating sound is heard.

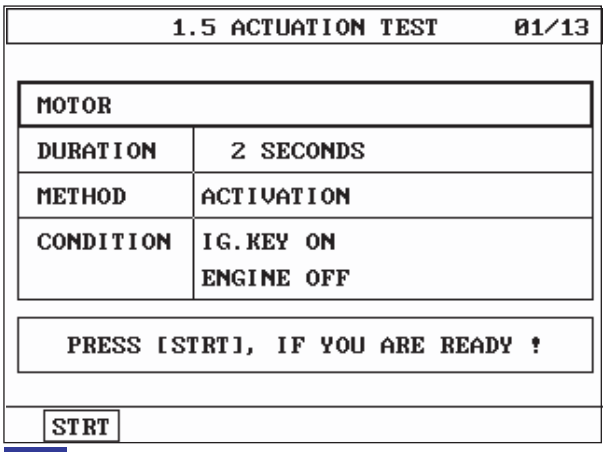

Fig1

Fig 1) Test Condition : Ignition "ON" & Engine "OFF"
Ex) Actuation Test on motor

SCMBR6574L

5. Does a inlet valve operate normally?

YES

▶ Fault is intermittent caused by poor connection in motor circuit or was repaired and HECU memory was not cleared. Thoroughly check connectors for looseness, poor connection, bending, corrosion, contamination, deterioration, or damage. Repair or replace as necessary and then go to "Verification Of Vehicle Repair" procedure.

NO

▶ Go to "W/Harness Inspection" procedure.

TERMINAL & CONNECTOR INSPECTION E60065FA

Refer to DTC C1200.

POWER SUPPLY CIRCUIT INSPECTION EDAFB067

1. Ignition "OFF".
2. Disconnect HECU connector.
3. Ignition "ON".
4. Measure voltage between terminal "2" of the HECU harness connector and chassis ground.

Specification : Approx. B+

<C281 GSL>

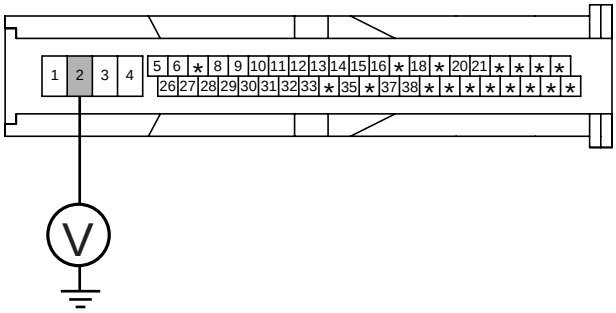

2. Battery(+)

SCMBR6575L

5. Is the measured voltage within specifications?

YES

▶ Go to "Ground Circuit Inspection" procedure.

NO

▶ Check for damaged harness and open or short to GND between the battery terminal(+) and terminal "2" of the HECU harness connector. Check for open or blown 40A ABS fuse referring to "Circuit Diagram". Repair as necessary and then go to "Verification Of vehicle Repair" procedure.

GROUND CIRCUIT INSPECTION E92788A0

1. Ignition "OFF".
2. Disconnect HECU connector.
3. Measure resistance between terminal "1" of the HECU harness connector and chassis ground.

Specification : Approx. below 1 Ω

<C281 GSL>

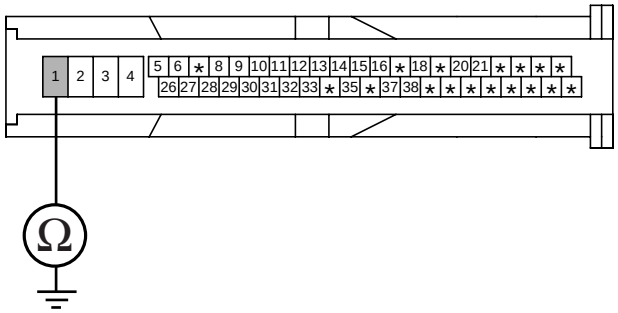

1. Ground

SCMBR6576L

4. Is the measured resistance within specifications?

YES

▶ Substitute with a known-good HECU and check for proper operation. If problem is corrected, replace HECU and then go to "Verification Of Vehicle Repair" procedure.

NO

▶ Check for damaged harness and poor connection between terminal "1" of the HECU harness connectorand chassis ground. Repair as necessary and then go to "Verification Of vehicle Repair" procedure.

VERIFICATION OF VEHICLE REPAIR E68792E0

Refer to DTC C1101.

ANTI-LOCK BRAKING SYSTEM CONTROL MODULE

COMPONENTS EDD0BBD5

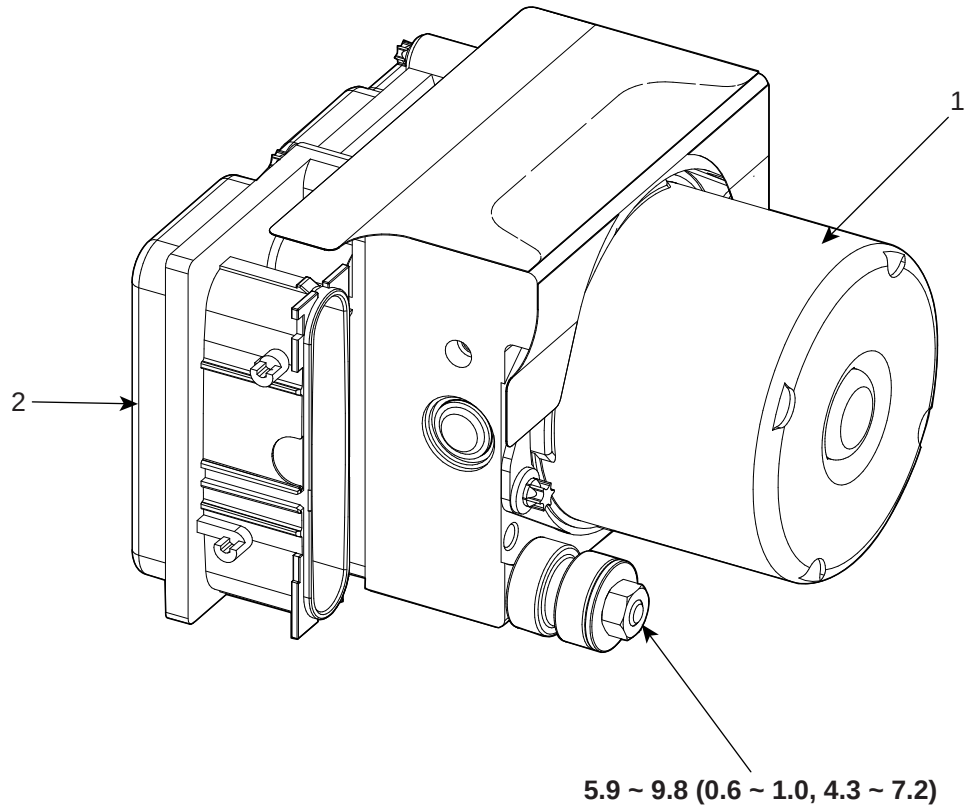

TORQUE : Nm (Kgf.m, lb-ft)

1. HCU assembly
2. ECU assembly

SCMBR6577L

REMOVAL E3FAEDF1

1. Remove the air cleaner assembly.

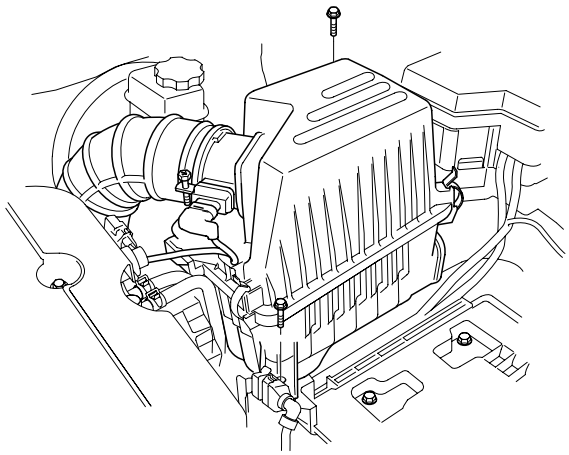

SCMBR6502D

2. Remove the ECM (Engine Control Module).

3. Disconnect the brake tubes from the HECU.

Tightening torque Nm (kgf.m, lb-ft):
5.9 ~ 9.8 (0.6 ~ 1.0, 4.3 ~ 7.2)

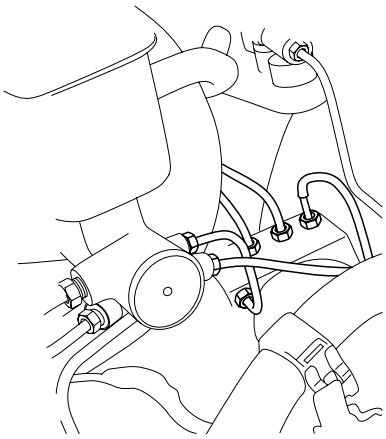

SCMBR6030D

4. Disconnect the HECU connector.

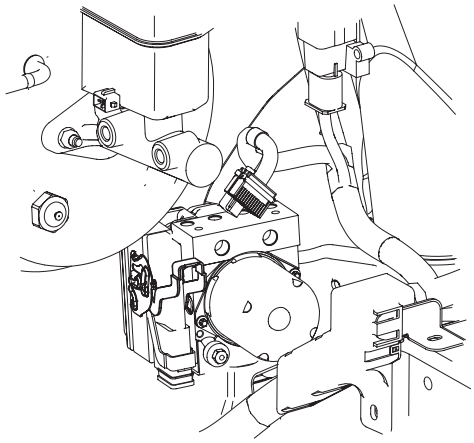

SCMBR6031D

5. Remove the HECU by loosening the bracket mounting bolts.

Tightening torque Nm (kgf.m, lb-ft):
16.7 ~ 25.5 (1.7 ~ 2.6, 12.3 ~ 18.8)

CAUTION

- ***Never attempt to disassemble the HECU.***
- ***The HECU must be protected during storage and transport, and must not be subjected to excessive shock.***

INSTALLATION ED22ACCD

1. Installation is the reverse of removal.

2. After installation, bleed the brake system. (Refer to ABS bleeding)

FRONT WHEEL SPEED SENSOR

COMPONENTS EB05B232

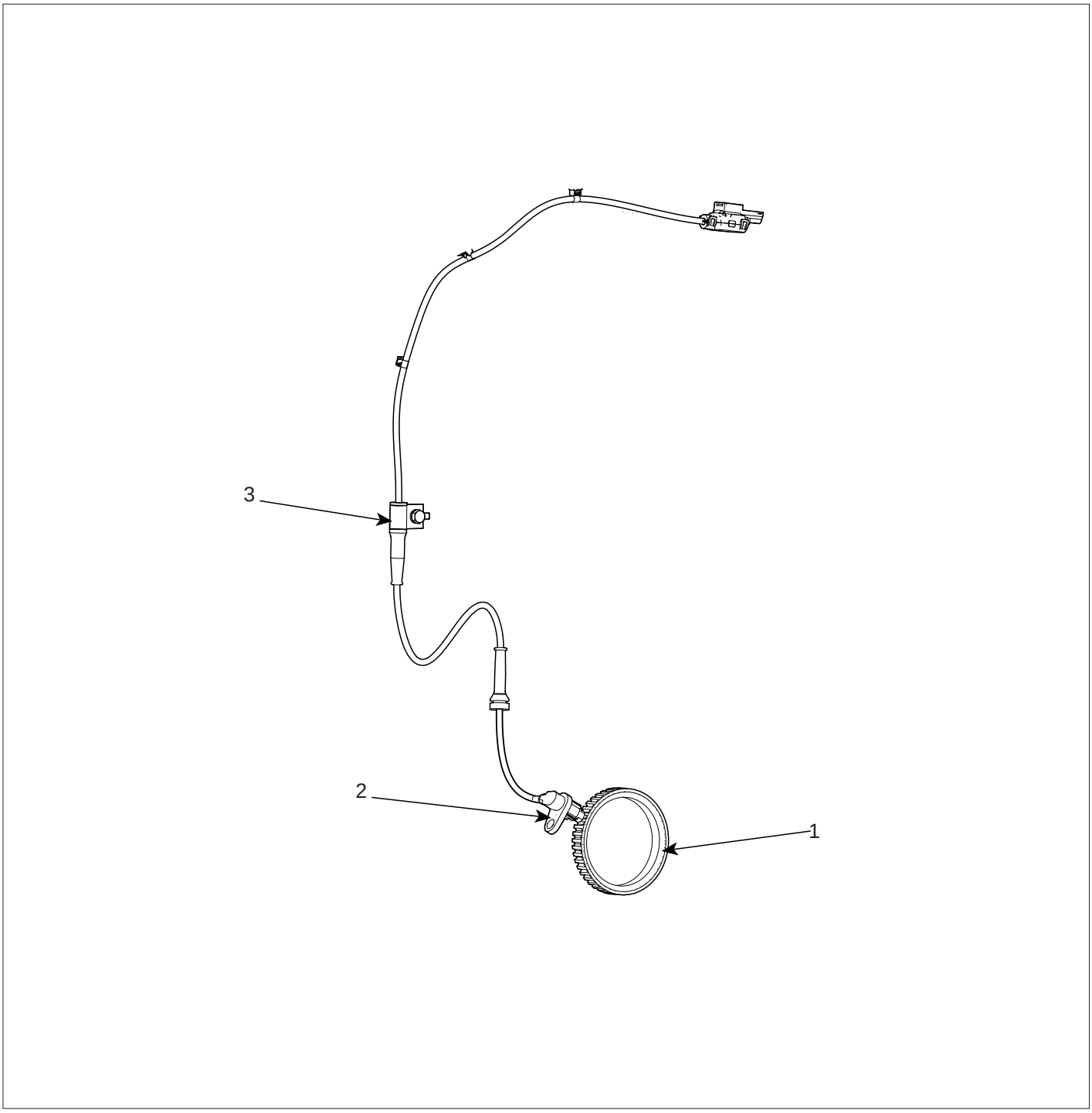

1. Tone wheel
2. Front wheel speed sensor
3. Sensor cable bracket

SCMBR6578L

INSPECTION E7C860B4

1. Measure the output voltage between the terminal of the wheel speed sensor and the body ground.

CAUTION

In order to protect the wheel speed sensor, when measuring output voltage, a 75Ω resistor must be used as shown.

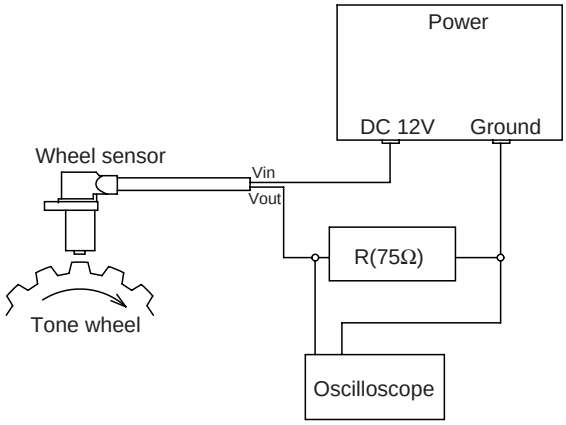

EJRF501Z

2. Compare the change of the output voltage of the wheel speed sensor to the normal change of the output voltage as shown below.

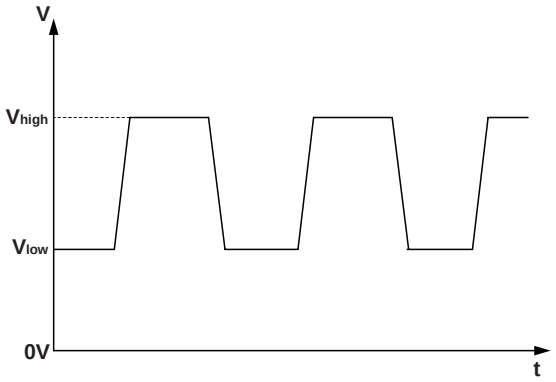

KJQE260B

- V_low : 0.44 V ~ 0.63 V
- V_high : 0.885 V ~ 1.26 V
- Frequency range : 1~2,500 Hz

REAR WHEEL SPEED SENSOR

COMPONENTS EF1FCFDB



1. Rear wheel speed sensor connector
2. Rear wheel speed sensor
3. Sensor cable bracket

SCMBR6579L

INSPECTION EC6A680F

1. Measure the output voltage between the terminal of the wheel speed sensor and the body ground.

CAUTION

In order to protect the wheel speed sensor, when measuring output voltage, a 75Ω resistor must be used as shown.

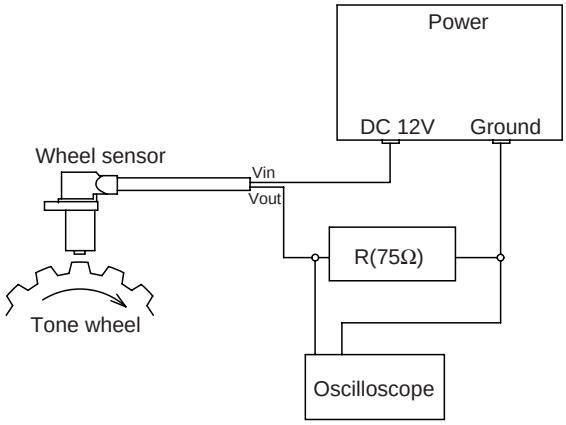

EJRF501Z

2. Compare the change of the output voltage of the wheel speed sensor to the normal change of the output voltage as shown below.

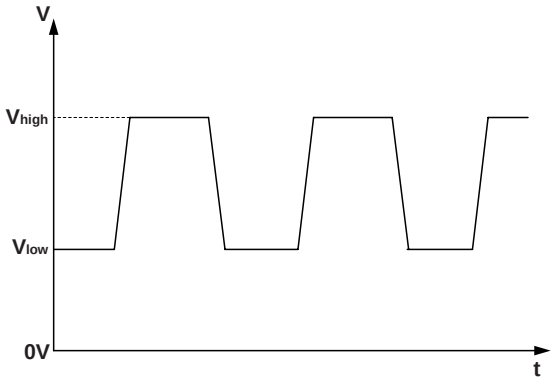

KJQE260B

- V_low : 0.44 V ~ 0.63 V
- V_high : 0.885 V ~ 1.26 V
- Frequency range : 1~2,500 Hz

EBD (ELECTRONIC BRAKE-FORCE DISTRIBUTION)

DESCRIPTION E747F93F

The EBD system (Electronic Brake force Distribution) as a sub-system of the ABS system is to control the effective adhesion utilization by the rear wheels.

It further utilizes the efficiency of highly developed ABS equipment by controlling the slip of the rear wheels in the partial braking range.

The brake force is moved even closer to the optimum and controlled electronically, thus dispensing with the need for the proportioning valve.

The proportioning valve, because of a mechanical device, has limitations to achieve an ideal brake force distribution tothe rear wheels as well as to carry out the flexible brake force distribution proportioning to the vehicle load or weight increasing. And in the event of malfunctioning, driver cannot notice whether it fails or not.

EBD controlled by the ABS Control Module, calculates the slip ratio of each wheel at all times and controls the brake pressure of the rear wheels not to exceed that of the front wheels.

If the EBD fails, the EBD warning lamp (Parking brake lamp) lights up.

ADVANTAGES

- Function improvement of the base-brake system.
- Compensation for the different friction coefficients.
- Elimination of the proportioning valve.
- Failure recognition by the warning lamp.

COMPARISON BETWEEN PROPORTIONING VALVE AND EBD

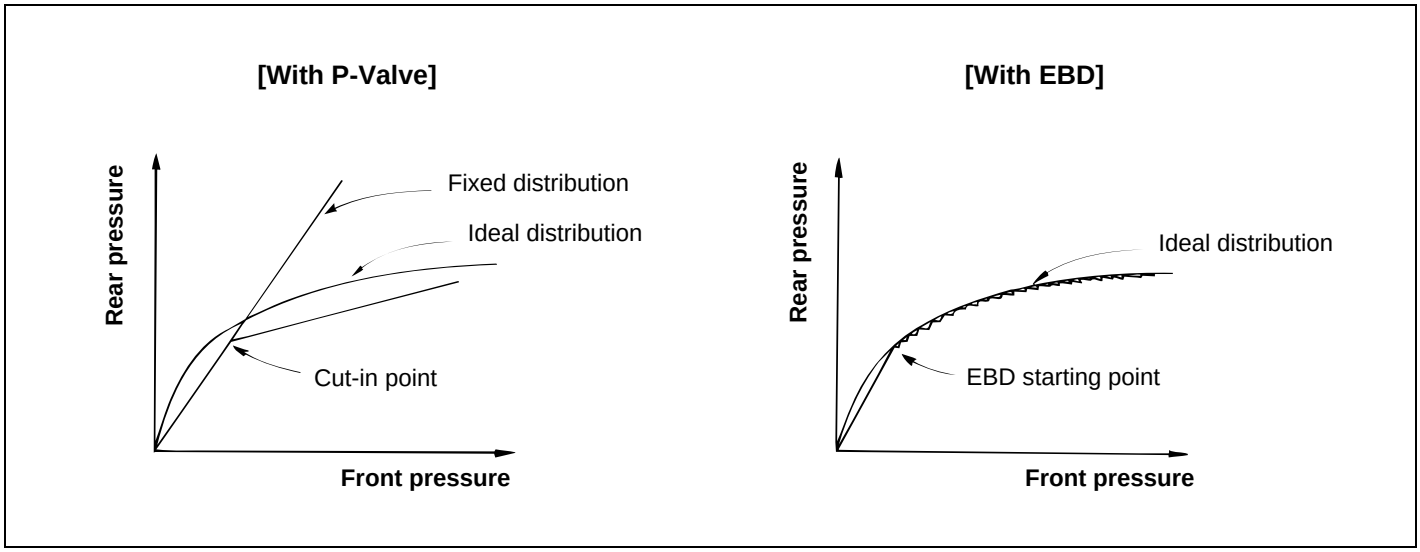

EJA0032A

ESP/ESC SYSTEM

DESCRIPTION OF ESP E1A8FE6B

Optimum driving safety now has a name : ESP, the Electronic Stability Control.

ESP recognizes critical driving conditions, such as panic reactions in dangerous situations, and stabilizes the vehicle by wheel-individual braking and engine control intervention with no needfor actuating the brake or the gas pedal.

ESP adds a further function known as Active Yaw Control (AYC) to the ABS, TCS, EBD and ESP functions. Whereas the ABS/TCS function controls wheel slip during braking and acceleration and, thus, mainly intervenes in the longitudinal dynamics of the vehicle, active yaw control stabilizes the vehicle about its vertical axis.

This is achieved by wheel individual brake intervention and adaptation of the momentary engine torque with no need for any action to be taken by the driver.

ESC essentially consists of three assemblies : the sensors, the electronic control unit and the actuators.

Of course, the stability control feature works under all driving and operating conditions. Under certain driving conditions, the ABS/TCS function can be activated simultaneously with the ESP function in response to a command by the driver.

In the event of a failure of the stability control function, the basic safety function, ABS, is still maintained.

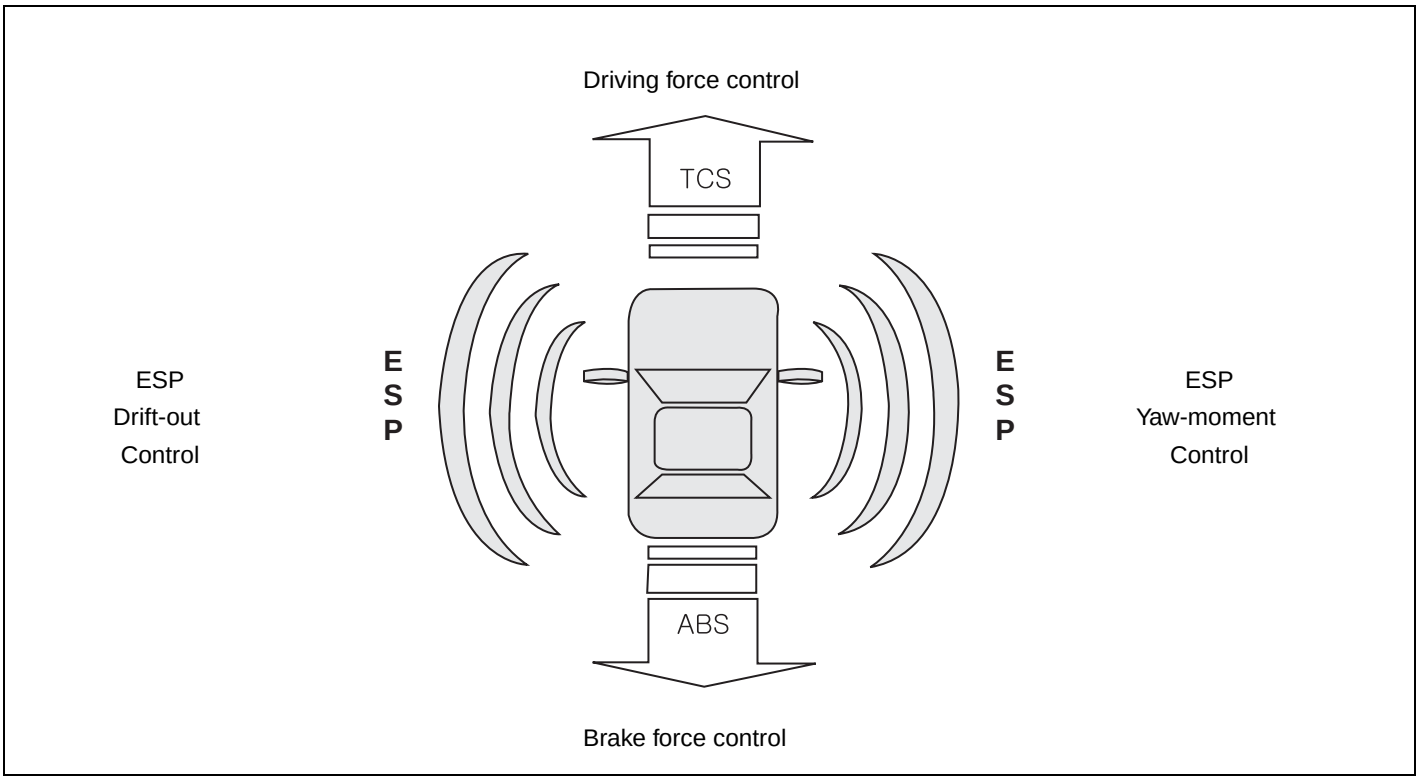

LJCD201A

DESCRIPTION OF ESP CONTROL

ESP system includes ABS/EBD, TCS and AYC (Active yaw control) function.

ABS/EBD function : The ECU changes the active sensor signal (current shift) coming from the four wheel sensors to the square waveform.By using the input of above signals, the ECU calculates the vehicle speed and the acceleration & deceleration of the four wheels.And, the ECU judges whether the ABS/EBD should be actuated or not.

TCS function prevents the wheel slip of drive direction by adding the brake pressure and engine torque reduction via CAN communication.TCS function uses the wheel speed sensor signal to determine the wheel slip as far as ABS function.

AYC function prevents unstable maneuver of the vehicle. To determine the vehicle maneuver, AYC function uses the maneuver sensor signals(Yaw Rate Sensor, Lateral Acceleration Sensor, Steering Wheel Angle Sensor).If vehicle maneuver is unstable (Over Steer or Under Steer), AYC function applies the brake pressure on certain wheel, and send engine torque reduction signal by CAN.

After the key-on, the ECU continually diagnoses the system failure. (self-diagnosis)If the system failure is detected, the ECU informs driver of the system failure through the BRAKE/ABS/ESP warning lamp. (fail-safe warning)

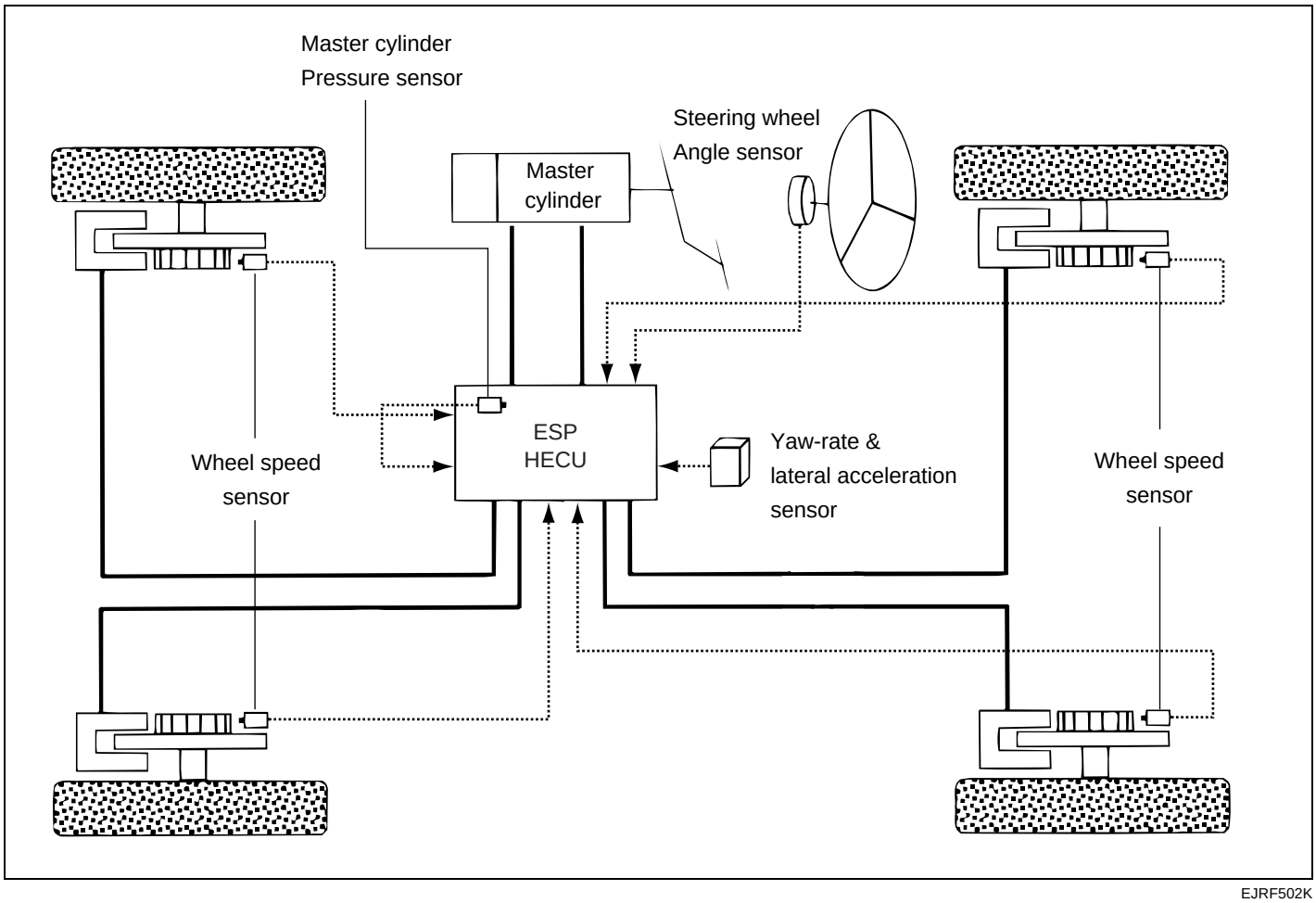

EJRF502K

VARIANT CODING

The HECU is programmed with a variant code based on the vehicle powertrain configuration. This variant code is used to determine the appropriate ESP calculations. Variant code programming should be performed whenever an HECU is replaced.

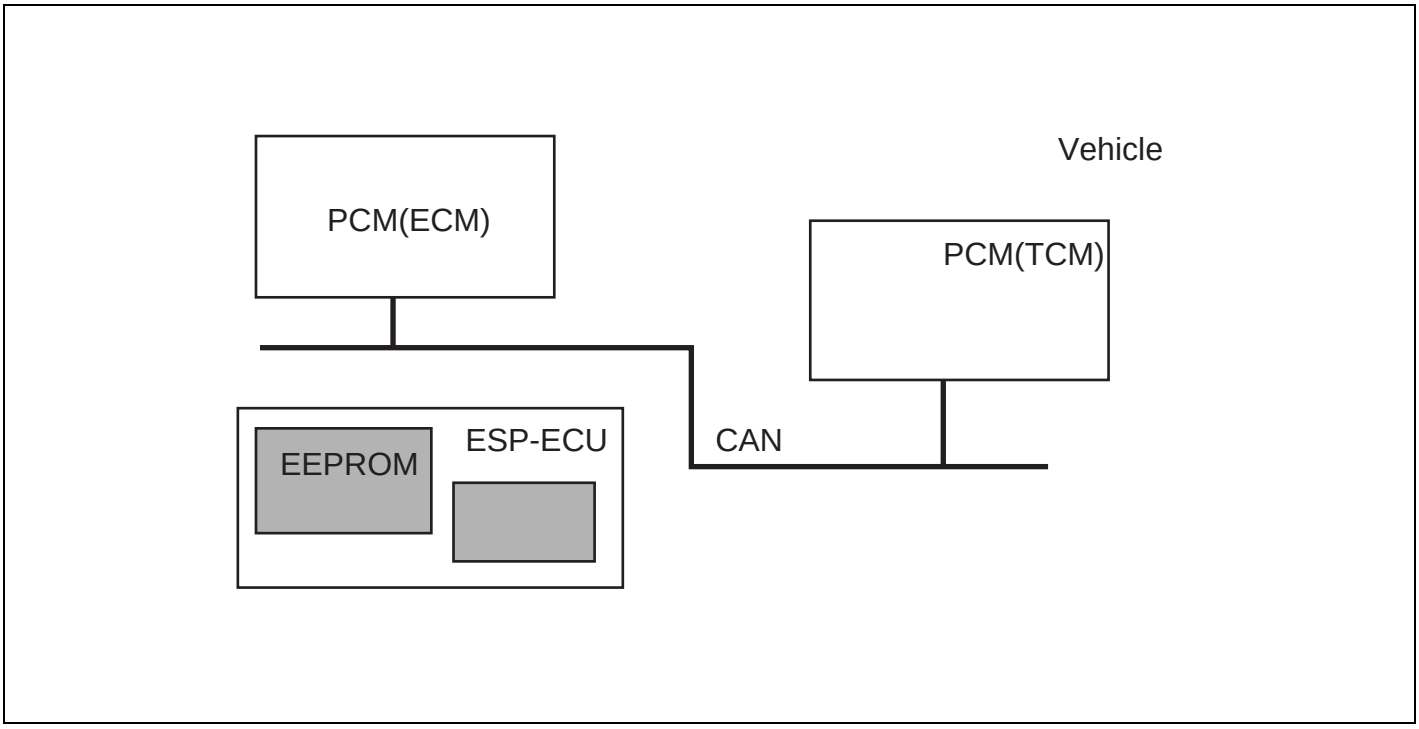

LJKG500Y

PROCEDURE OF VARIANT CODING

1. Install a PCM(ECM & TCM)/ESP normally.
2. Connect the scan tool to the data link connector located underneath the dash panel.
3. Select vehicle name.
4. Select ANTI-LOCK BRAKE SYSTEM.
5. Select the variant coding.

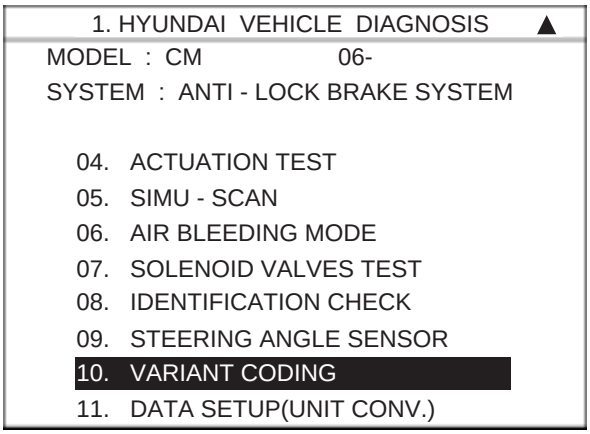

SCMBR6580L

6. Follow the next procedure according to the comment .

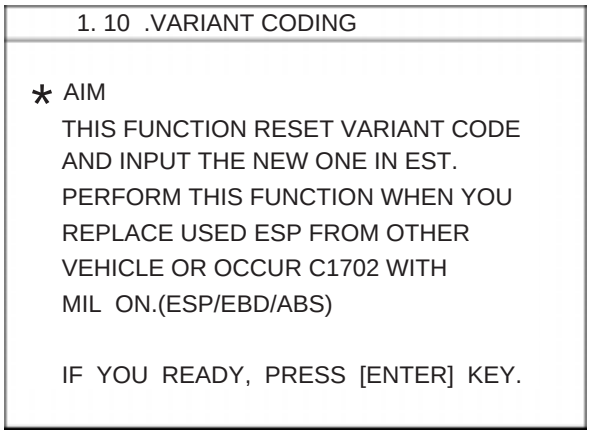

EJBF505O

7. Confirm the condition , and then push the "REST".

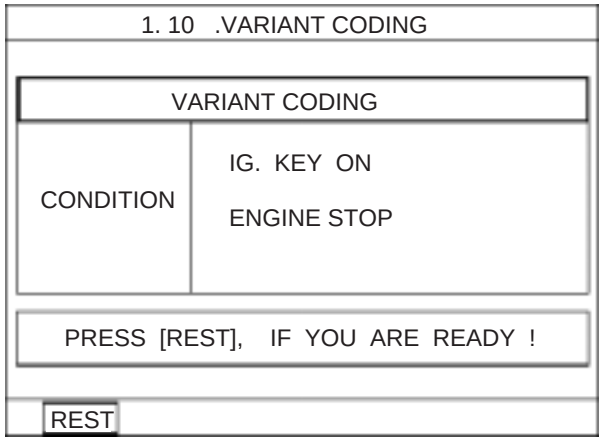

EJRF703J

8. If the procedure is finished, the screen is displayed as shown below.

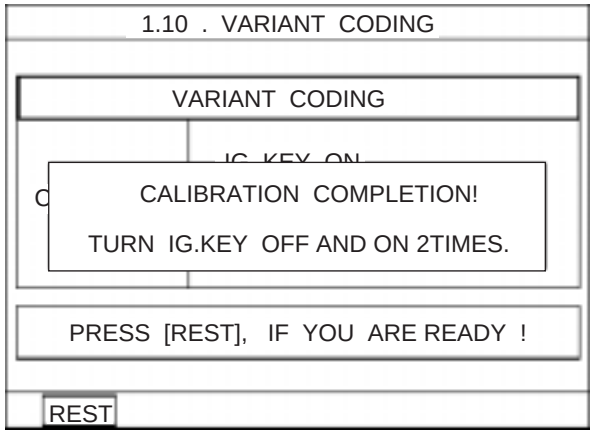

EJRF703K

9. IGN off.
10. IGN on.
11. The variant coding is completed.

CAUTION

If the warning lamp(ESP, EBD, ABS) is illuminated, follow the "Variant coding" again.

INPUT AND OUTPUT DIAGRAM

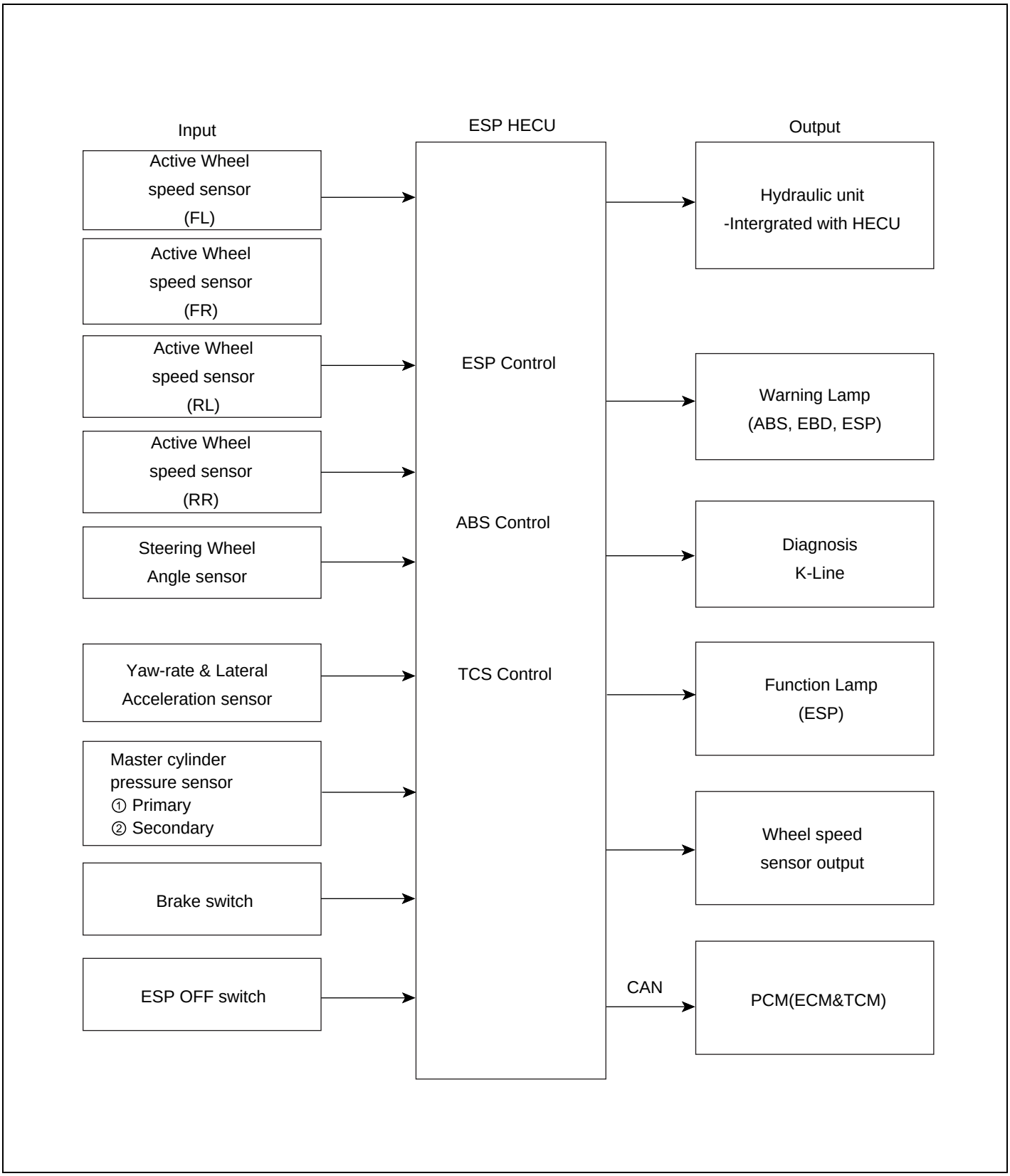

LJKG500X

ESP OPERATION MODE EA2472C6

1. STEP 1
   The ESP analyzes the intention of the driver.

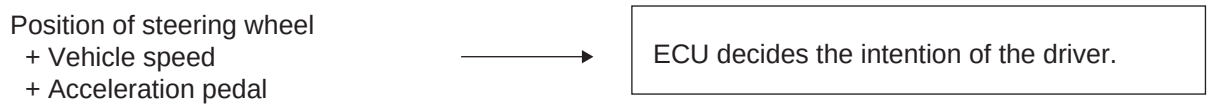

EJRF502B

2. STEP 2
   It analyzes the movement of the ESP vehicle.

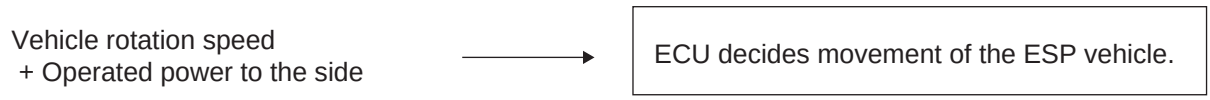

EJRF502C

3. STEP 3
   he HECU calculates the required strategy, then actuates the appropriate valves and sents torque control requests via CAN to maintain vehicle stability.

ESP OPERATION MODE

1. ESP Non-operation-Normal braking.

	Inlet valve(EV)	Outlet valve(AV)	Pilot valve(USV)	High pressure switch valve(HSV)	Pump motor
Normal braking	Open	Close	Open	Close	OFF

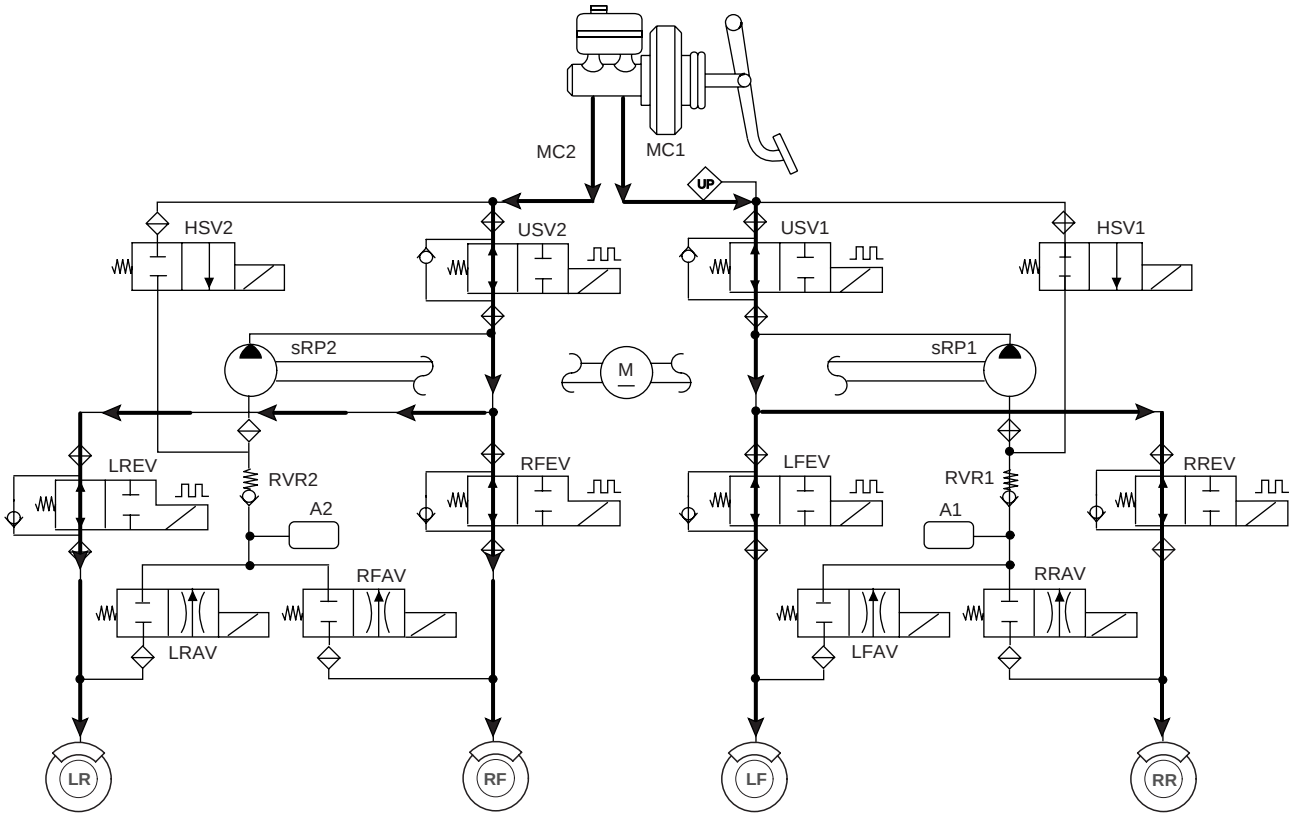

EJRF703R

NOTE

EV : Inlet Valve
AV : Outlet Valve
LR : Rear left wheel
RF : Front right wheel
LF : Front left wheel
RR : Rear right wheel
PE : Pump motor
USV : Pilot Valve
HSV : High pressure Switch Valve

2. ESP INCREASE MODE

	Inlet valve(EV)	Outlet valve(AV)	Pilot valve(USV)	High pressure switch valve(HSV)	Pump motor
Normal braking	Open	Close	Close(Partial)	Open	ON(Motor speed control)

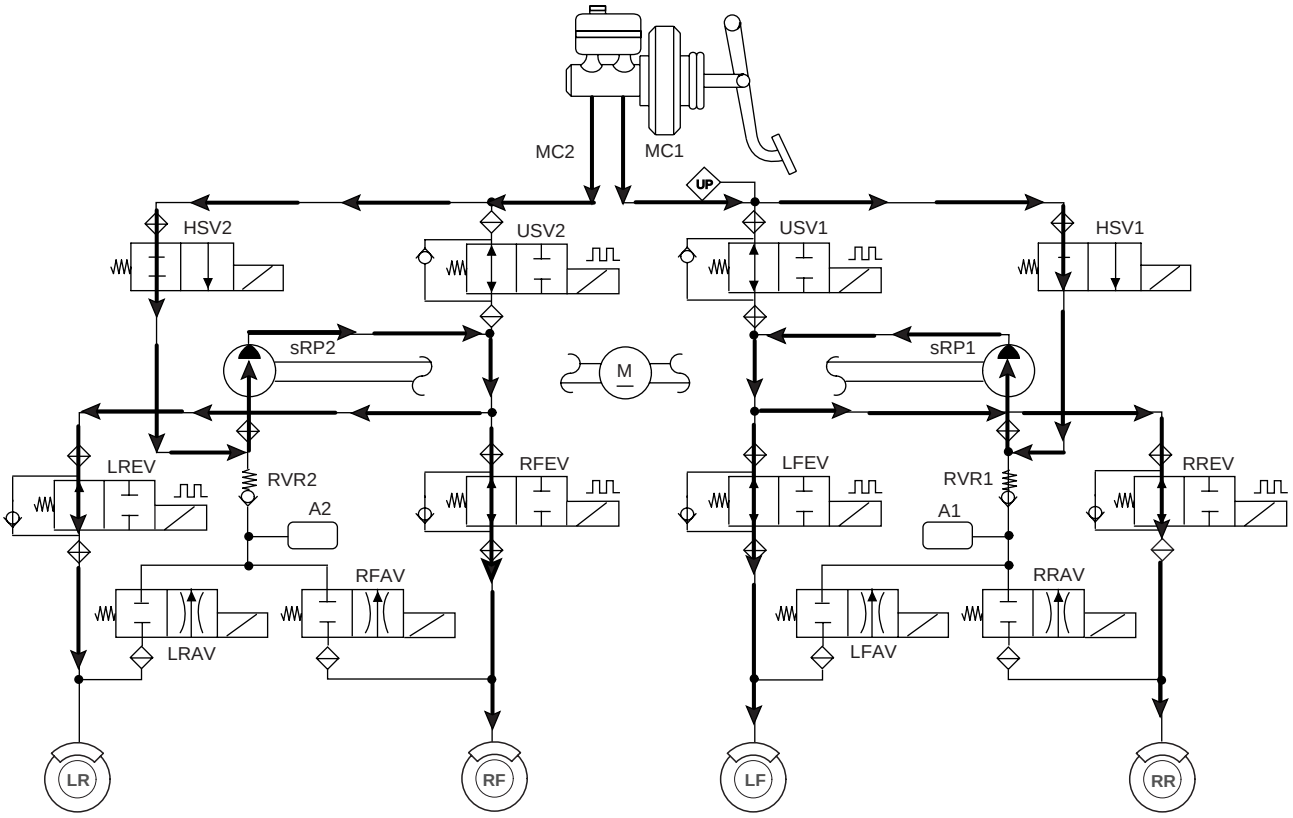

EJRF703S

NOTE

EV : Inlet Valve
AV : Outlet Valve
LR : Rear left wheel
RF : Front right wheel
LF : Front left wheel
RR : Rear right wheel
PE : Pump motor
USV : Pilot Valve
HSV : High pressure Switch Valve

3. ESP HOLD MODE (FR is only controlled.)

	Inlet valve(EV)	Outlet valve(AV)	Pilot valve(USV)	High pressure switch valve(HSV)	Pump motor
Normal braking	Close	Close	Close(Partial)	Open	ON(Motor speed low control)

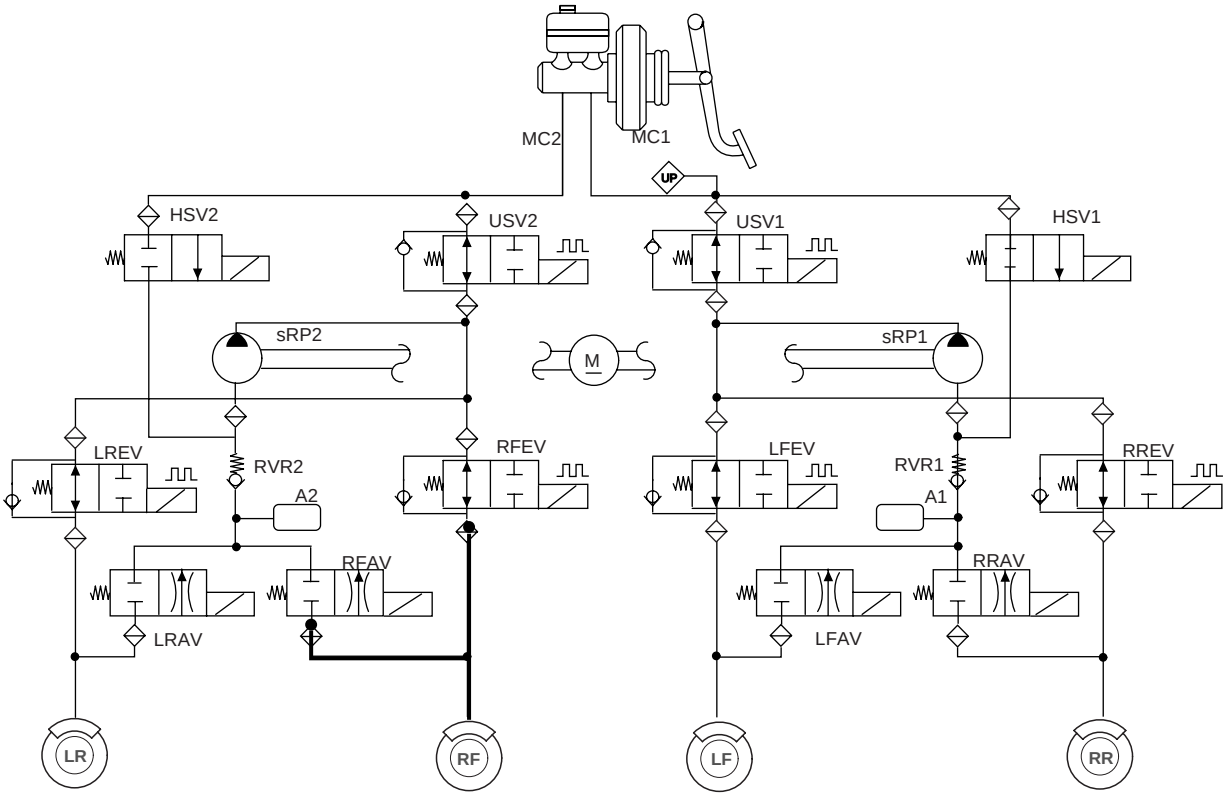

KJRE501N

NOTE

EV : Inlet Valve
AV : Outlet Valve
LR : Rear left wheel
RF : Front right wheel
LF : Front left wheel
RR : Rear right wheel
PE : Pump motor
USV : Pilot Valve
HSV : High pressure Switch Valve

4. ESP DECREASE MODE (FR is only controlled)

	Inlet valve(EV)	Outlet valve(AV)	Pilot valve(USV)	High pressure switch valve(HSV)	Pump motor
Normal braking	Close	Open	Close(Partial)	Open	ON(Motor speed low control)

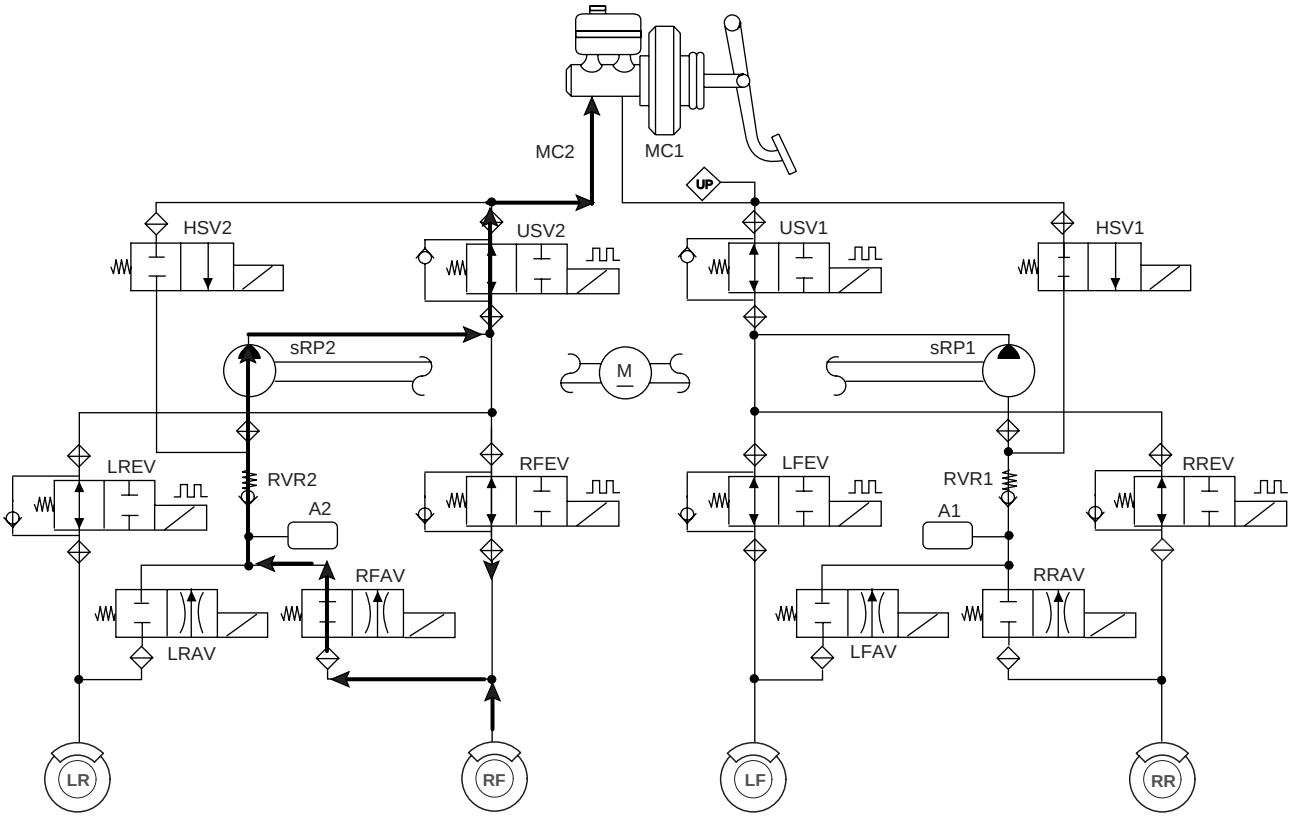

EJRF703T

NOTE

EV : Inlet Valve
AV : Outlet Valve
LR : Rear left wheel
RF : Front right wheel
LF : Front left wheel
RR : Rear right wheel
PE : Pump motor
USV : Pilot Valve
HSV : High pressure Switch Valve

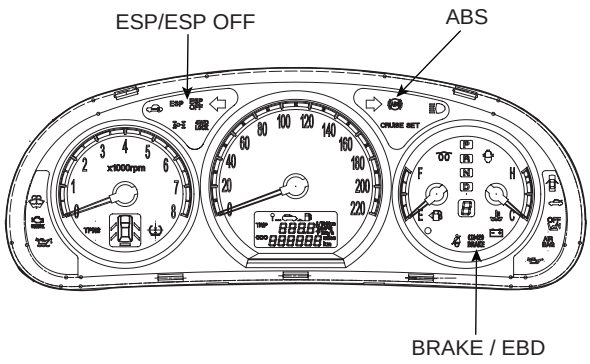

SCMBR6034D

ABS WARNING LAMP MODULE

The active ABS warning lamp module indicates the self-test and failure status of the ABS .The ABS warning lamp shall be on:

- During the initialization phase after IGN ON. (continuously 3 seconds).
- In the event of inhibition of ABS functions by failure.
- During diagnostic mode.
- When the ECU Connector is seperated from ECU.

EBD/PARKING BRAKE WARNING LAMP MODULE

The active EBD warning lamp module indicates the self-test and failure status of the EBD. However, in case the Parking Brake Switch is turned on, the EBD warning lamp is always turned on regardless of EBD functions. The EBD warning lamp shall be on:

- During the initialization phase after IGN ON. (continuously 3 seconds).
- When the Parking Brake Switch is ON or brake fluid level is low.
- When the EBD function is out of order .
- During diagnostic mode.
- When the ECU Connector is seperated from ECU.

ESP WARNING LAMP (ESP SYSTEM)

The ESP warning lamp indicates the self-test and failure status of the ESP.
The ESP warning lamp is turned on under the following conditions :

- During the initialization phase after IGN ON. (continuously 3 seconds).
- In the event of inhibition of ESP functions by failure.
- When driver turn off the ESP function by on/off switch.
- During diagnostic mode.

ESC FUNCTION LAMP (ESC SYSTEM)

The ESP function lamp indicates the self-test and operating status of the ESP.
The ESP Function lamp operates under the following conditions :

- During the initialization phase after IGN ON. (continuously 3 seconds).
- When the ESP control is operating. (Blinking - 2Hz)

ESP ON/OFF SWITCH (ESP SYSTEM)

The ESP On/Off Switch shall be used to toggle the ESP function between On/Off states based upon driver input.
The On/Off switch shall be a normally open, momentary contact switch.
Initial status of the ESP function is on and the switch is used to request an ESC status change.

COMPONENTS EED5CF6E

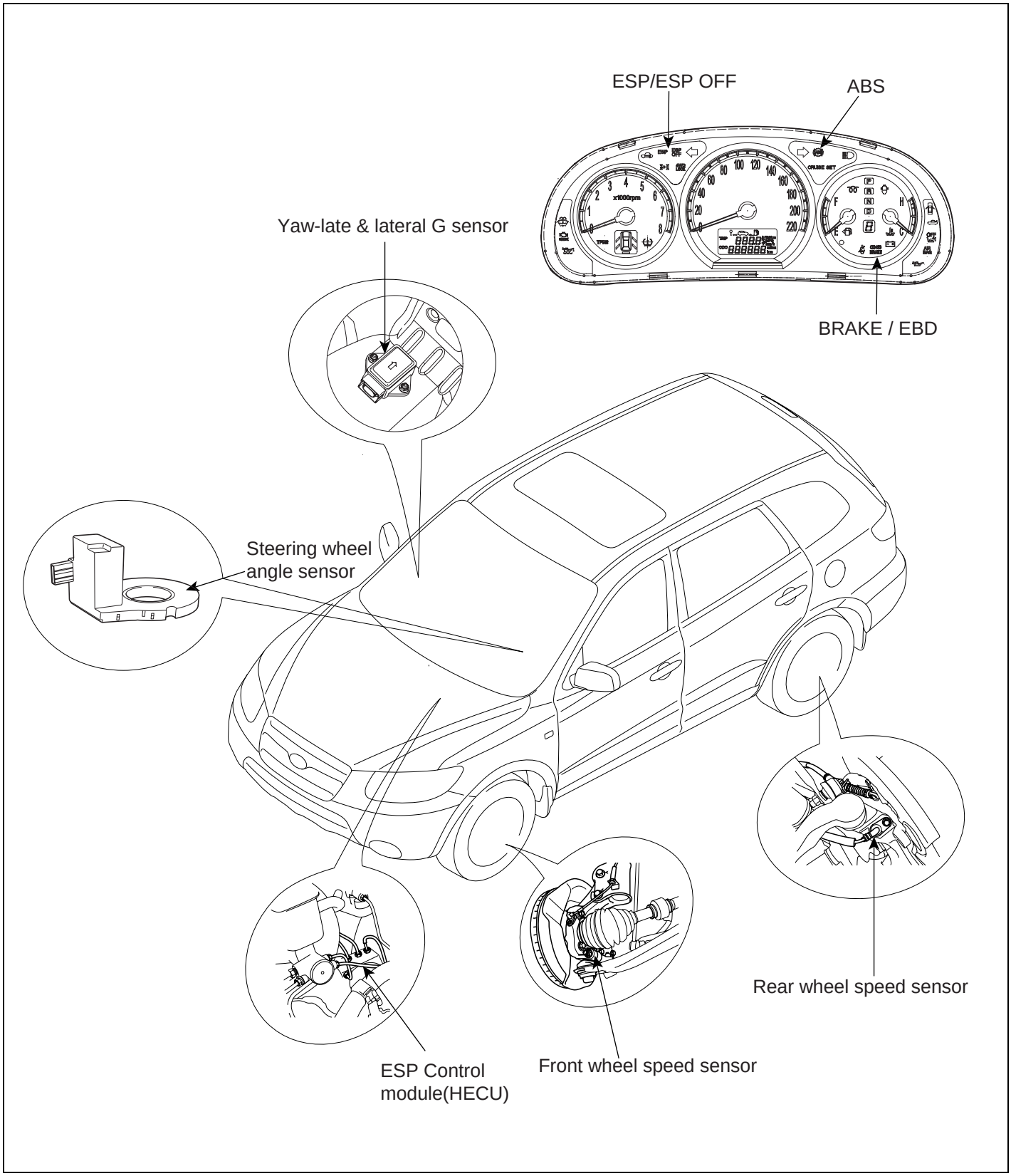

SCMBR6581L

ESP CIRCUIT DIAGRAM(1) EF9B79A4

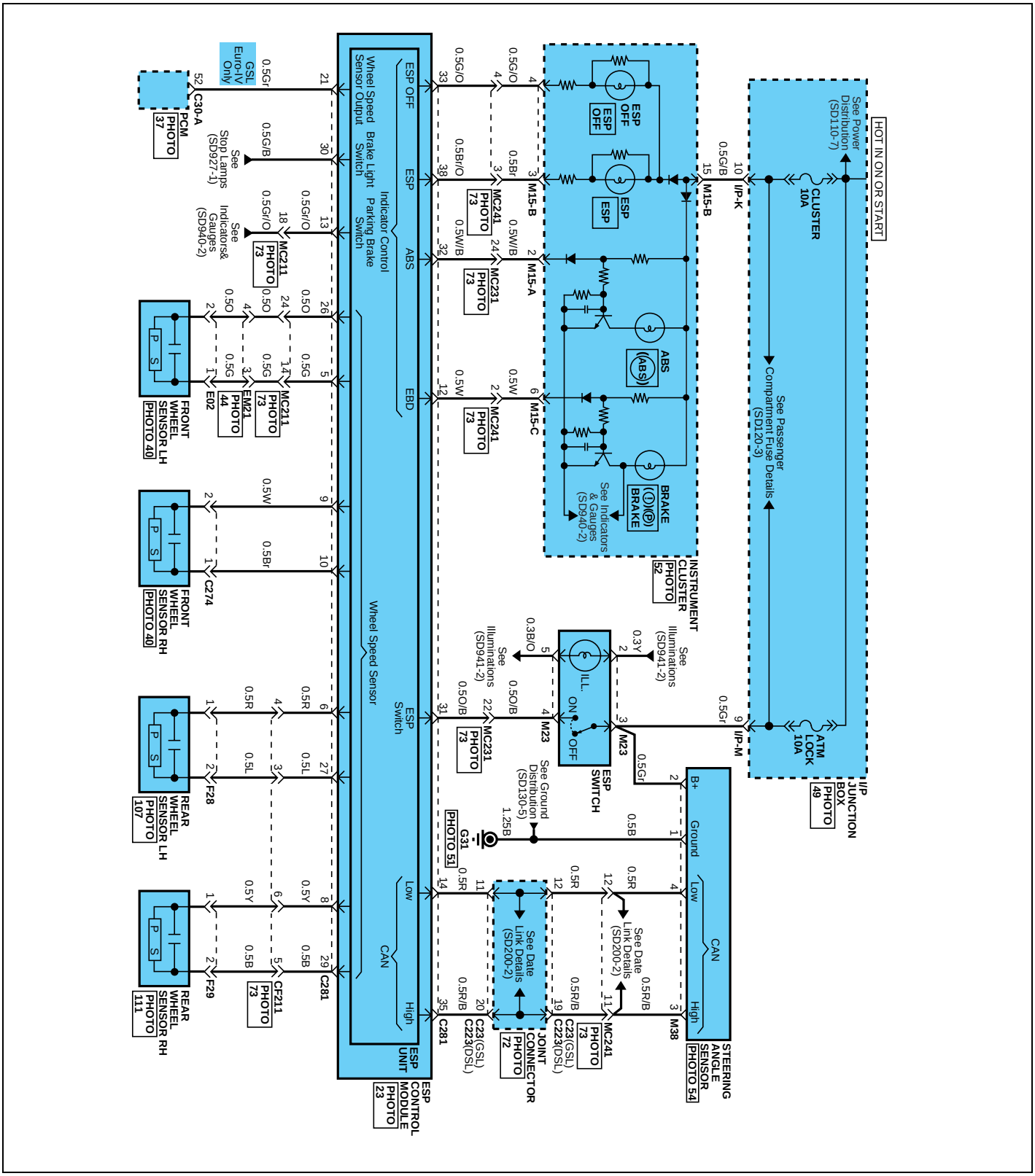

SCMBR6582L

ESP CIRCUIT DIAGRAM(2)

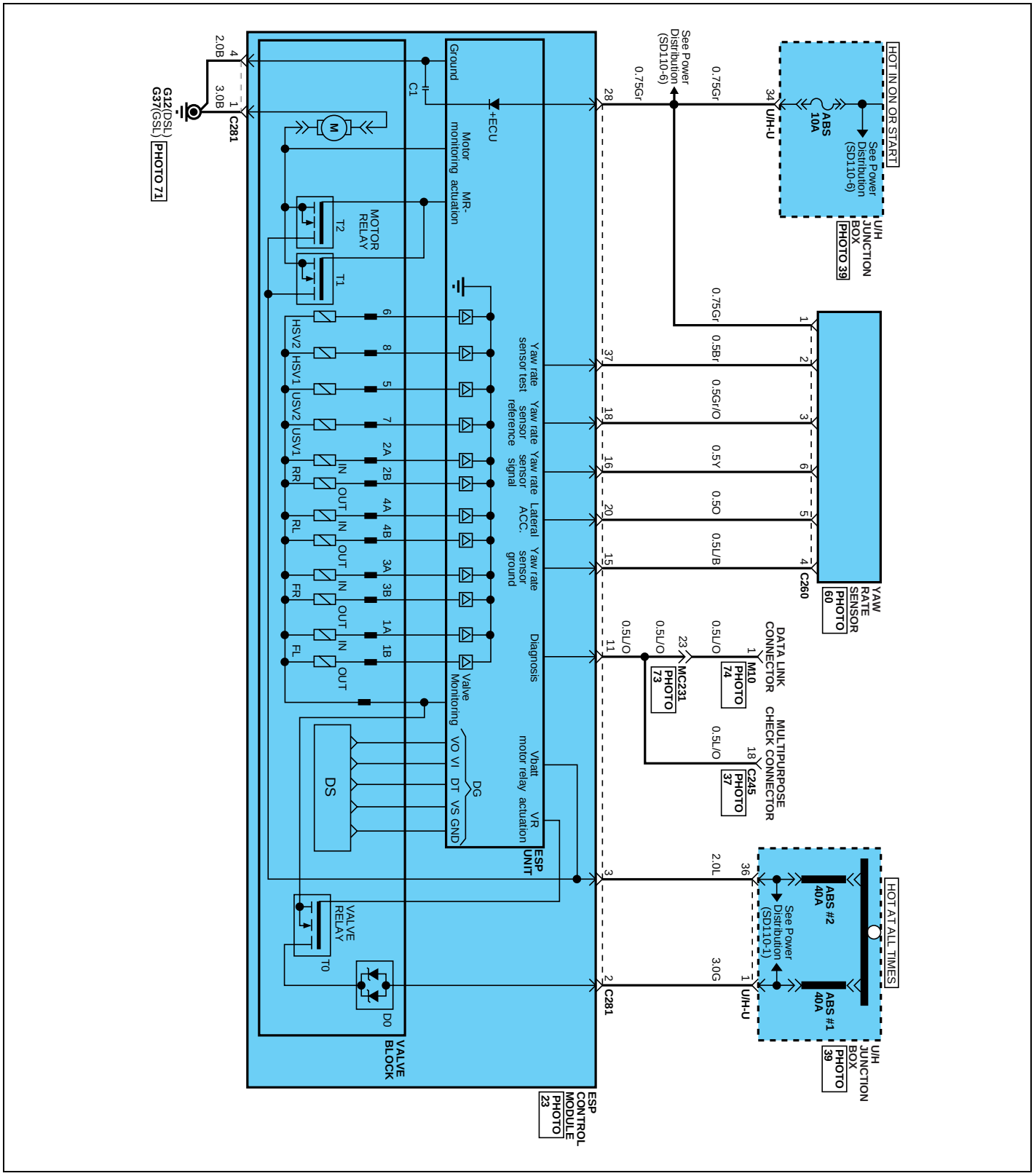

SCMBR6583L

ESP HECU CONNECTOR INPUT / OUTPUT ECE97D81

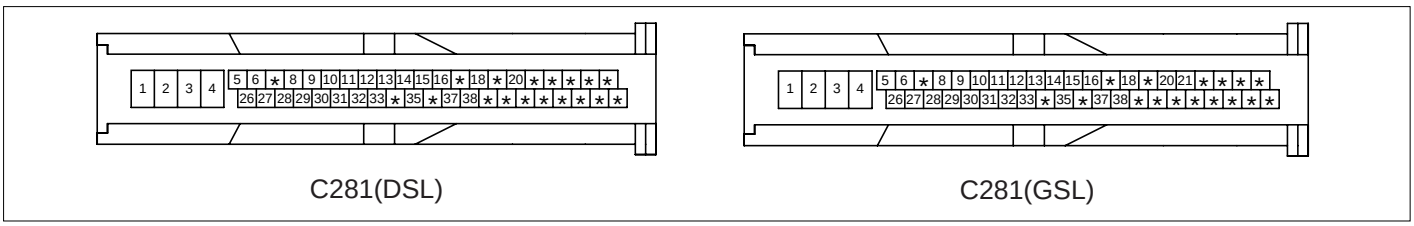

SCMBR6584L

Connector Terminal		Specifications	Conditions
No	Description		
1	Ground(Pump)	Current range : Min-10 A Max-20 ~ 39 A	Always
4	Ground(Valve,ECU)	Current range : Min-2.5 A Max-5 ~ 15 A	Always
2	Supply voltage(Pump)	Battery voltage	Always
3	Supply voltage(Valve)		
26	Wheel sensor voltage(FL)	Battery voltage	IG ON
9	Wheel sensor voltage(FR)		
6	Wheel sensor voltage(RL)		
8	Wheel sensor voltage(RR)		
5	Wheel sensor signal(FL)	Voltage(High) : 0.89~1.26 V Voltage(Low) : 0.44~0.63 V	RUNNING
10	Wheel sensor signal(FR)		
27	Wheel sensor signal(RL)		
29	Wheel sensor signal(RR)		
11	Diagnosis Input/oupput	Voltage(High) : 0.8 * IG ON more Voltage(Low) : 0.2 * IG ON lower	SCAN TOOL Communication
28	Ignition	Battery voltage	KEY ON/OFF
31	ESP Passive switch	Voltage(High) : 0.6 * IG ON more Voltage(Low) : 0.4 * IG ON lower	Switch ON/OFF
37	Yaw Rate Sensor Test	Voltage(High) : 4.1 V more Voltage(Low) : 1 V lower	IG ON
18	Yaw Rate Sensor Reference	2.464 V ~ 2.536 V	IG ON
16	Yaw Rate Sensor Signal	Offset voltage :2.5 V range : 0.35 V ~ 4.65 V(-100 ~ 100 ° /s)	IG ON
20	Acceleration Sensor Signal	Offset voltage :2.5 V range : 0.35 V ~ 4.65 V(-1.8 g ~ 1.8 g)	IG ON
15	Yaw Rate Sensor Ground	GND LEVEL	Always

Connector Terminal		Specifications	Conditions
No	Description		
35	CAN High	not communicating:2.5 ± 0.5 V communication : 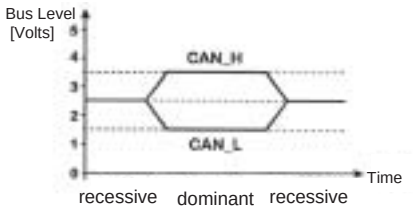 EJRF502L	IG ON
14	CAN Low		
30	BRAKE LIGHT SWITCH	voltage(High) : 0.8 * IG ON more voltage(Low) : 0.3 * IG ON lower	BRAKE ON/OFF

FAILURE DIAGNOSIS EB5415C8

1. In principle, ESP and TCS controls are prohibited in case of ABS failure.
2. When ESP or TCS fails, only the failed system control is prohibited.
3. However, when the solenoid valve relay should be turned off in case of ESP failure, refer to the ABS fail-safe.
4. Information on ABS fail-safe is identical to the fail-safe in systems where ESP is not installed.

MEMORY OF FAIL CODE

1. It keeps the code as far as the backup lamp power is connected. (O)
2. It keeps the code as long as the HCU power is on. (X)

FAILURE CHECKUP

1. Initial checkup is performed immediately after the HECU power on.
2. Valve relay checkup is performed immediately after the IG2 ON.
3. It executes the checkup all the time while the IG2 power is on.
4. Initial checkup is made in the following cases.
   1) When no failure is detected
   2) When ABS and ESP are not in control.
   3) Initial checkup is not made after ECU power on.
   4) If the vehicle speed is over 5 mph(8 km/h) when the brake lamp switch is off.
   5) When the vehicle speed is over 24.8 mph(40 km/h).
5. Though, it keeps on checkup even if the brake lamp switch is on.
6. When performing ABS or ESP control before the initial checkup, stop the initial checkup and wait for the HECU power input again.
7. Judge failure in the following cases.
   1) When the power is normal.
   2) From the point in which the vehicle speed reaches 4.9 mph(8 km/h) after HECU power on.

COUNTERMEASURES IN FAIL

1. Shut the system down and perform the following actions and wait for HECU power OFF.
2. Turn the valve relay off.
3. Do not perform any ABS/TCS/ESC functions until normal operating condition is restored.

WARNING LAMP ON

1. ABS warning lamp turns on when ABS is malfunctioning.
2. ESP operation lamp turns on when ESP is malfunctioning.

When power voltage and valve relay voltage are abnormal, input/output related failure judgment is not made.

YAW-RATE SENSOR AND G-SENSOR

DESCRIPTION E22CC1EC

1. The yaw-rate & lateral G sensor is applied for the ESP system.
2. The yaw-rate is the angular velocity, when a vehicle turns a corner, and the lateral G is the acceleration to move a vehicle out of the way when cornering.
3. The sensor is located in the crash pad lower floor on vehicle.

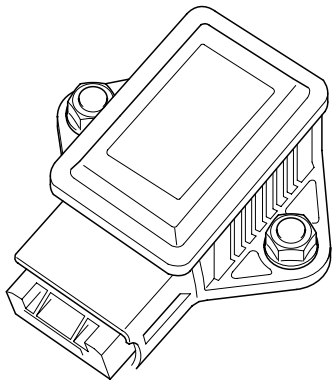

KJRE504E

SPECIFICATION

Description			Specification	Remark
Nominal supply voltage			11.5 ~ 12.5 V	
Supply voltage range			8 ~ 16 V	
Supply current			Max. 120 mA	Typ. 75 mA
Reference Voltage Output			2.464 ~ 2.536 V	Typ. 2.5 V
Operating temperature range			-40 ~ 85℃	
Yaw-late sensor	Measurement range	+w direction, left turn	Min.100 °/s	Typ. 111 °/S
		-w direction, right turn	Min.100 °/s	Typ. 111 °/S
	Non-linearity		-1 ~ 1 %	
	Offset (within life,within operating temperature)		3.75 °/S	
	Upper cut-off frequency		Min. 45 Hz	Typ. 60 Hz
Lateral G sensor	Measurement range	+y direction, left turn	Min.1.8 g	Typ. 2 g
		-y direction, right turn	Min. -1.8 g	Typ. 2 g
	Non-linearity		-4 ~ 4 %	
	Offset (within life,within operating temperature)		-0.09 ~ 0.09 g	
	Upper cut-off frequency		Min. 20 Hz	Typ. 40 Hz

OUTPUT CHARACTERISTIC

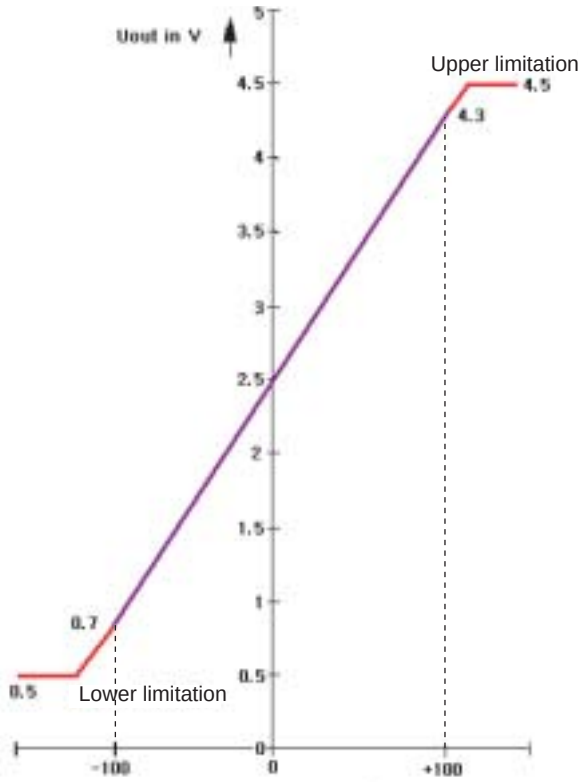

Yaw-rate w in°/s

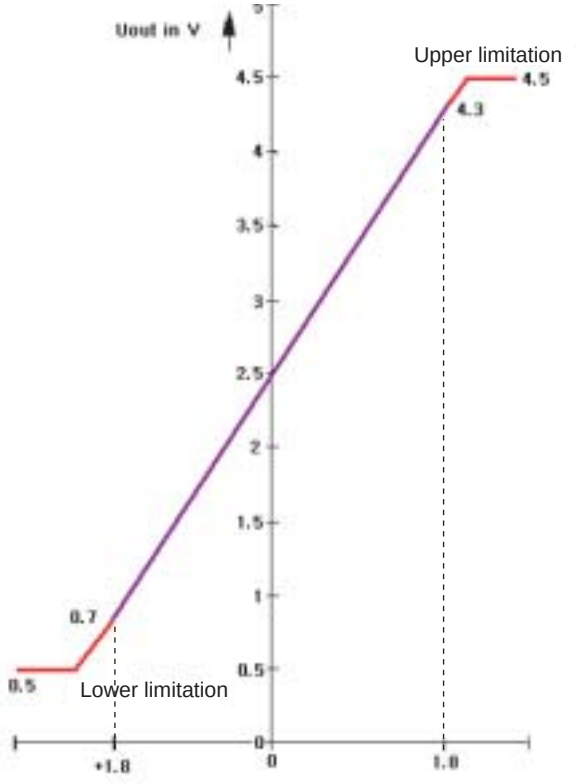

Acceleration a in g

EJRF502E

CIRCUIT DIAGRAM (YAW-RATE & LATERAL G SENSOR)

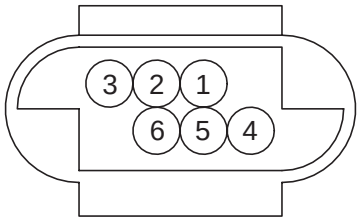

[Yaw-rate & lateral G sensor connector]

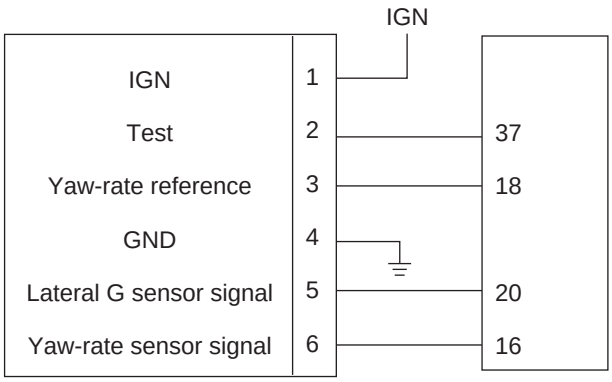

Yaw-rate & lateral G sensor ESP HECU

LJKF501B

ESP/ESC SWITCH

DESCRIPTION EA50DA4D

1. The ESP OFF switch is for the user to turn off the ESP system.
2. The ESP OFF lamp is on when ESP OFF switch is engaged.

INSPECTION ECCACCB6

1. Remove the ESP OFF switch from the switch panel on the crach pad of the driver's side.

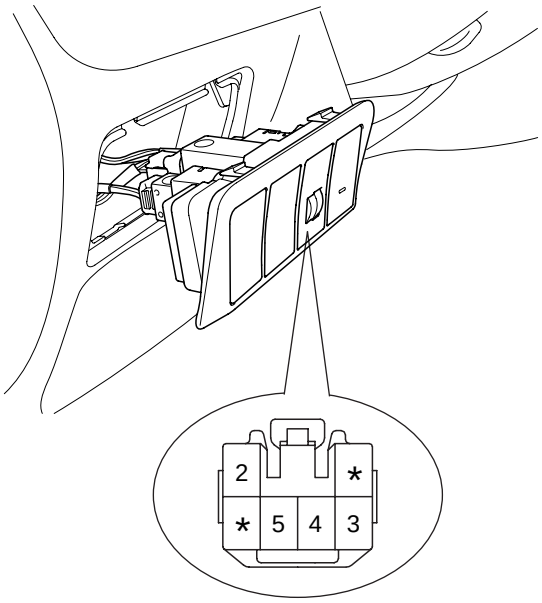

SCMBR6585L

2. Check the continuity between the switch terminals as the ESP OFF switch is engaged. (Refer to circuit diagram)

STEERING WHEEL ANGLE SPEED SENSOR

DESCRIPTION EFE7E8E2

GENERAL DATA

The steering angle speed sensor detects the angle of the steering wheel in order to which direction a user chooses.

MEASUREING PRINCIPLE

A non contact, analog angle sensor carrying out absolute measuring by the use of the Anisotropic-Magneto-Resistive effect (AMR).Measuring of the absolute angle by means of a toothed measuring gear with magnetic properties in combination with different ratios. Corresponding AMR elements that change their electrical resistance according to the magnetic field direction detect the angle position of the measuring gears.A micro-controller decodes the measured voltage signals after A/D converting with the help of a mathematical function. Output of the digital angle value and velocity via CAN-interface.

SPECIFICATION

Description		Specification
Operating voltage		8~16 V
Operating temperature		-40 ~ 85 ℃
Current consumption		Max.150 mA
Steering angle velocity		Max. ±2000 °/sec
Connection delay time		t < 200 ms
Reverse voltage		-13.5 V
Measuring range	Angle	-780 ° ~ 779 °
	Angular velocity	0~ 1016 °/s
Nonlinearity angle		-2.5 ° ~ +2.5 °
Hysteresis angle		0 ° ~ 5 °
Rotational friction torque measuring		10 °/s

CIRCUIT DIAGRAM(STEERING WHEEL SPEED ANGLE SENSOR)

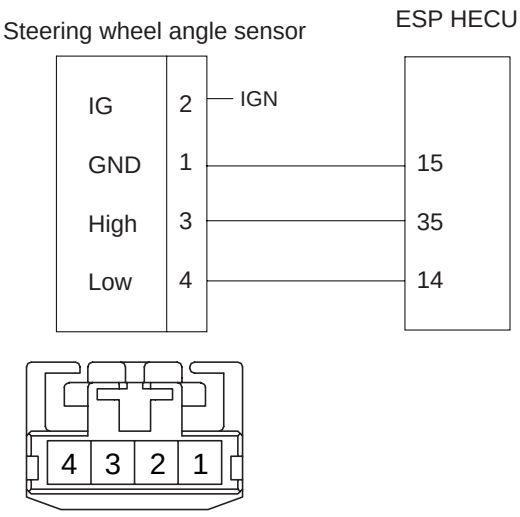

LJKF501E

STEERING ANGLE SENSOR (SAS) CALIBRATION

1. PURPOSE OF calibration
   - On vehicle control, an ESP analyzes the intention of the driver.
   - An ESP recognizes a steering angle which a driver rotates through the steering angle sensor.
   - A steering angle sensor used in ESP adjusts 0° setting of steering wheel through K-line or CAN communication.

2. STEERING ANGLE SENSOR (SAS) CALIBRATION METHOD

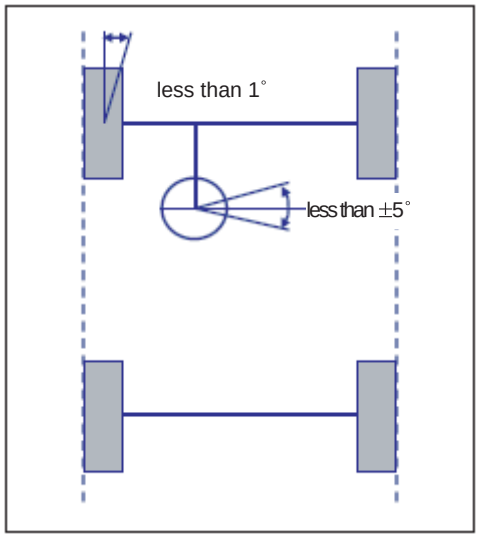

EJRF502J

1) Align the wheel to the straight line. (steering wheel < ± 5°)
ex) Perform the wheel alignment first.
Align the wheel to the straight line.
A driver moves the vehicle to the front and back about 5 meters twice or three times.

2) Connect Scan tool to the vehicle.

3) Select Brake system.

4) Select Steering angle sensor(SAS) calibration.

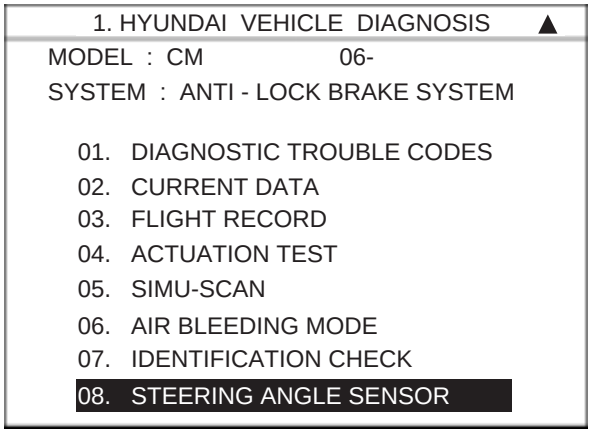

SCMBR6586L

5) Perform the Steering angle sensor(SAS) calibration.

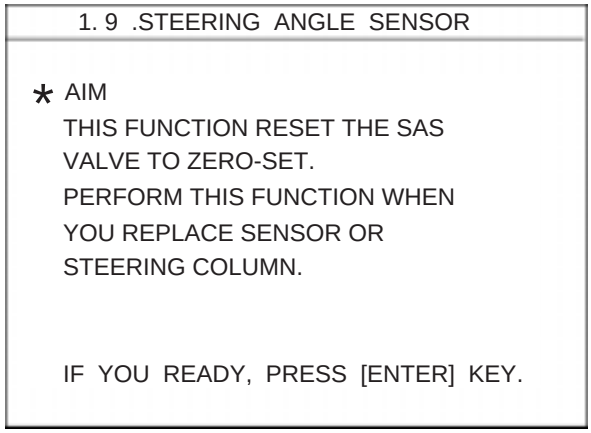

EJRF703M

6) Perform the procedure continuously.

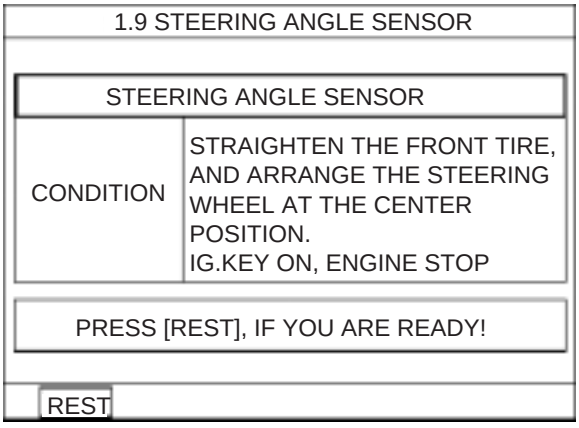

EJRF703N

7) The procedure is finished. Push the "ESC" key.

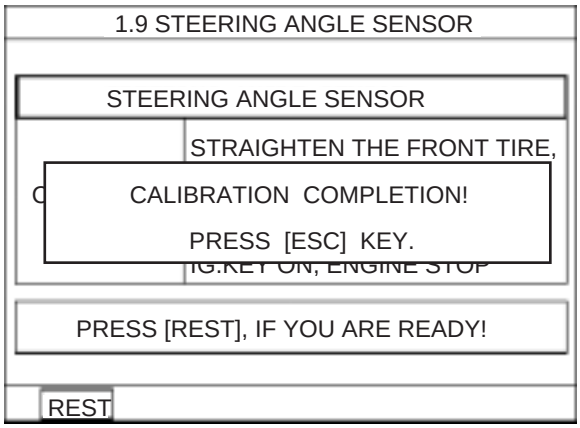

EJRF703O

8) Scanner OFF.

9) Remove the scanner from the vehicle.

10) Confirm the Steering angle sensor(SAS) calibration as driving the vehicle.(turn left once, turn right once)

Restraints

GENERAL

SUPPLEMENTAL RESTRAINTS SYSTEM CONTROL MODULE(SRSCM)
SRS CONTROL MODULE

AIR BAG MODULE (DRIVE SIDE)
AIR BAG MODULE AND CLOCK SPRING

AIR BAG MODULE (PASSENGER SIDE)
AIR BAG MODULE

AIR BAG MODULE (SIDE AIR BAG)
AIR BAG MODULE

AIR BAG MODULE (CURTAIN AIR BAG)
AIR BAG MODULE

SEAT BELT PRETENSIONER
SEAT BELT PRETENSIONER

SRS CONTROL SYSTEM
FRONT IMPACT SENSOR (FIS)
SIDE IMPACT SENSOR (SIS)

TROUBLESHOOTING

AIR BAG MODULE DISPOSAL

GENERAL

GENERAL EFAC12FD

The supplemental restraint system (SRS) is designed to supplement the seat belt to help reduce the risk or severity of injury to the driver and passenger by activating and deploying the driver, passenger, side airbag and belt pretensioner in certain frontal or side collisions.
The SRS (Airbag) consists of : a driver side airbag module located in the center of the steering wheel, which contains the folded cushion and an inflator unit ; a passenger side airbag module located in the passenger side crash pad contains the folded cushion assembled with inflator unit ; side airbag modules located in the front seat contain the folded cushion and an inflator unit ; curtain airbag modules located inside of the headliner which contains folded cushions and inflator units. The impact sensing function of the SRSCM is carried out by electronic accelerometer that continuously measure the vehicle's acceleration and delivers a corresponding signal through amplifying and filtering circuitry to the microprocessor.

SRSCM (SRS CONTROL MODULE)

SRSCM will detect front impact with front impact sensor, and side impact with side impact sensor, and determine airbag module deployment.

1. DC/DC converter: DC/DC converter in power supply unit includes up/down transformer converter, and provide ignition voltage for 2 front airbag ignition circuits and the internal operation voltage of the SRSCM. If the internal operation voltage is below critical value setting, it will perform resetting.

2. Safety sensor: Safety sensor is located in airbag ignition circuit. Safety sensor will operate airbag circuit at any deployment condition and release airbag circuit safely at normal driving condition. Safety sensor is a double contact electro-mechanical switch that will close detecting deceleration above certain criteria.

3. Back up power supply: SRSCM has separate back up power supply, that will supply deployment energy instantly in low voltage condition or upon power failure by front crash.

4. Self diagnosis: SRSCM will constantly monitor current SRS operation status and detect system failure while vehicle power supply is on, system failure may be checked with trouble codes using scan tool. (Hi-Scan)

5. Airbag warning lamp on: Upon detecting error, the module will transmit signal to SRSCM indicator lamp located at cluster. MIL lamp will indicate driver SRS error. Upon ignition key on, SRS lamp will turn on for about six seconds.

6. Trouble code registration: Upon error occurrence in system, SRSCM will store DTC corresponding to the error. DTC can be cleared only by Hi-Scan. However, if an internal fault code is logged or if a crash is recorded the fault clearing should not happen.

7. Self diagnostic connector: Data stored in SRSCM memory will be output to Hi-Scan or other external output devices through connector located below driver side crash pad.

8. Once airbag is deployed, SRSCM should not be used again but replaced.

9. SRSCM will determine whether passenger put on seat belt by the signal from built-in switch in seat belt buckle, and deploy front seat airbag at each set crash speed.

10. Side airbag deployment will be determined by SRSCM that will detect satellite sensor impact signal upon side crash, irrespective to seat belt condition.

SPECIFICATION E89D783B

Item	Resistance (Ω)
Driver Airbag (DAB)	1.4 ~ 6.2
Passenger Airbag (PAB)	1.4 ~ 6.2
Side Airbag (SAB)	1.4 ~ 6.2
Curtain Airbag (CAB)	1.4 ~ 6.2
Seat Belt Retractor Pretensioner (BPT)	1.4 ~ 6.2

TIGHTENING TORQUES EB73AFF1

Item	kgf·m	Nm	lb-ft
Driver Airbag (DAB)	0.8 ~ 1.1	7.9 ~ 10.8	5.8 ~ 8.0
Passenger Airbag (PAB)	Bolt : 1.9 ~ 2.7 Nut : 0.9 ~ 1.4	18.6 ~ 26.5 8.8 ~ 13.7	13.7 ~ 19.5 6.5 ~ 10.1
Curtain Airbag (CAB)	1.1 ~ 1.5	10.9 ~ 14.7	8.0 ~ 10.8
Side Airbag (SAB)	0.7 ~ 0.9	7.0 ~ 9.0	5.2 ~ 6.6
Seat Belt Anchor Bolt (BPT)	4.0 ~ 5.5	39.2 ~ 53.9	28.9 ~ 39.8
SRSCM Mounting Bolt	0.7 ~ 0.9	6.8 ~ 9.2	5.0 ~ 6.8
Front Impact Sensor (FIS) Mounting Bolt	0.7 ~ 0.9	6.8 ~ 9.2	5.0 ~ 6.8
Side Impact Sensor (SIS) Mounting Bolt	0.7 ~ 0.9	6.8 ~ 9.2	5.0 ~ 6.8

SPECIAL SERVICE TOOLS E37A38C8

Tool(Number and Name)	Illustration	Use
Deployment tool 0957A-34100A	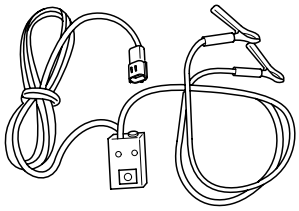 ARIE500A	Airbag deployment tool
Deployment adapter 0957A-3F100	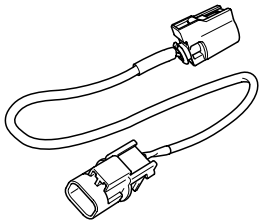 ERKD001F	Use with deployment tool. (PAB, SAB, CAB)
Deployment adapter 0957A-38500	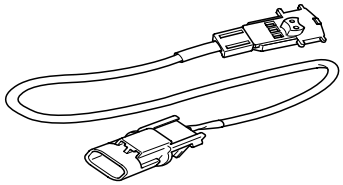 ARIE500C	Use with deployment tool. (DAB, BPT)
Dummy 0957A-38200	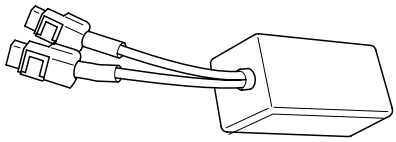 ARIE500D	Simulator to check the resistance of each wiring harness

Tool(Number and Name)	Illustration	Use
Dummy adapter 0957A-3F000	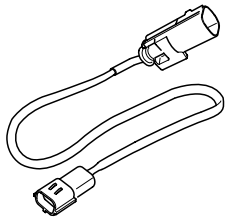 ERKD001G	Use with dummy (PAB, SAB, CAB)
Dummy adapter 0957A-2G000	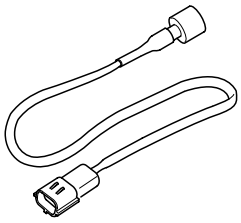 ARIE500F	Use with dummy (DAB, BPT)

DAB : Driver Airbag
PAB : Passenger Airbag
SAB : Side Airbag
CAB : Curtain Airbag
BPT : Seat Belt Retractor Pretensioner

REFERENCE SERVICE TOOLS

Tool Number	Tool Name
TRK00A	Wiring Repair Kit

*For more information of the Wiring Repair Kit, please refer to BE group - "REFERENCE SERVICE TOOLS"

PRECAUTIONS E915C2A3

GENERAL PRECAUTIONS

Please read the following precautions carefully before performing the airbag system service. Observe the instructions described in this manual, or the airbags could accidentally deploy and cause damage or injuries.

- Except when performing electrical inspections, always turn the ignition switch OFF and disconnect the negative cable from the battery, and wait at least three minutes before beginning work.

  NOTE

  The contents in the memory are not erased even if the ignition switch is turned OFF or the battery cables are disconnected from the battery.

- Use the replacement parts which are manufactured to the same standards as the original parts and quality. Do not install used SRS parts from another vehicle. Use only new parts when making SRS repairs.
- Carefully inspect any SRS part before you install it. Do not install any part that shows signs of being dropped or improperly handled, such as dents, cracks or deformation.

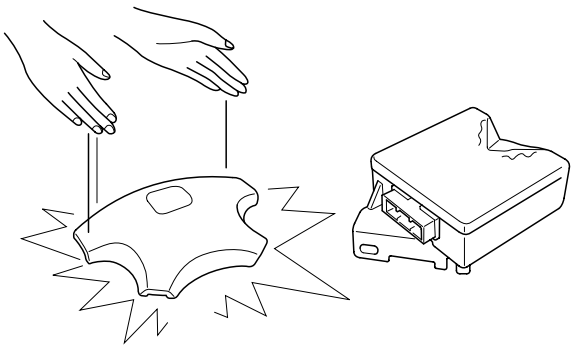

ERKD002V

- Before removing any of the SRS parts (including the disconnection of the connectors), always disconnect the SRS connector.

AIRBAG HANDLING AND STORAGE

Do not disassemble the airbags; it has no serviceable parts. Once an airbag has been deployed, it cannot be repaired or reused.

For temporary storage of the air bag during service, please observe the following precautions.

- Store the removed airbag with the pad surface up.
- Keep free from any oil, grease, detergent, or water to prevent damage to the airbag assembly.

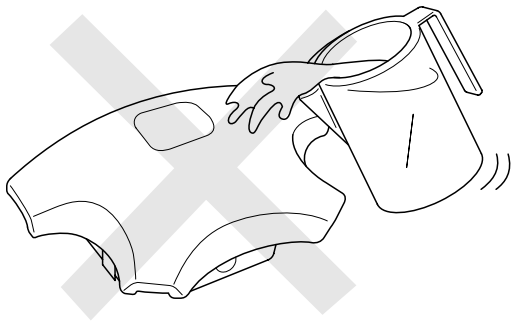

ERKD002Z

- Store the removed airbag on secure, flat surface away from any high heat source (exceeding 85°C/185°F).
- Never perform electrical inspections to the airbags, such as measuring resistance.
- Do not position yourself in front of the airbag assembly during removal, inspection, or replacement.
- Refer to the scrapping procedures for disposal of the damaged airbag.
- Be careful not to bump or impact the SRS unit or the side impact sensors whenever the ignition switch is ON, wait at least three minutes after the ignition switch is turned OFF before begin work.
- During installation or replacement, be careful not to bump (by impact wrench, hammer, etc.) the area around the SRS unit and the side impact sensor. The airbags could accidentally deploy and cause damage or injury.
- After a collision in which the airbags were deployed, replace the front airbags and the SRS unit. After a collision in which the side airbag was deployed, replace the side airbag, the front impact sensor and side impact sensor on the side where the side airbag deployed and the SRS unit. After a collision in which the airbags or the side air bags did not deploy, inspect for any damage or any deformation on the SRS unit and

the side impact sensors. If there is any damage, replace the SRS unit, the front impact sensor and/or the side impact sensors.
- Do not disassemble the SRS unit, the front impact sensor or the side impact sensors
- Turn the ignition switch OFF, disconnect the battery negative cable and wait at least three minutes before beginning installation or replacement of the SRS unit.
- Be sure the SRS unit, the front impact sensor and side impact sensors are installed securely with the mounting bolts.
- Do not spill water or oil on the SRS unit,or the front impact sensor or the side impact sensors and keep them away from dust.
- Store the SRS unit, the front impact sensor and the side impact sensors in a cool (less than 40°C/104°F) and dry (less than 80% relative humidity, no moisture) area.

WIRING PRECAUTIONS

SRS wiring can be identified by special yellow outer covering (except the SRS circuits under the front seats).
Observe the instructions described in this section.
- Never attempt to modify, splice, or repair SRS wiring. If there is an open or damage in SRS wiring, replace the harness.

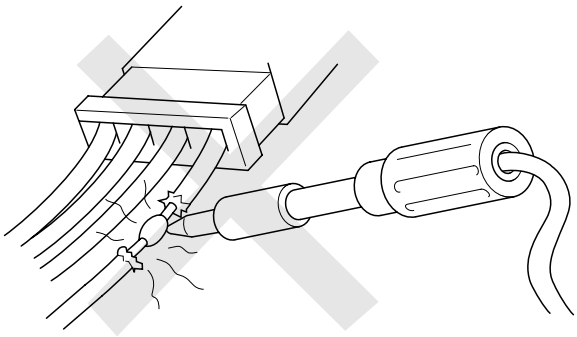

ERKD002Y

- Be sure to install the harness wires so that they are not pinched, or interfere with other parts.

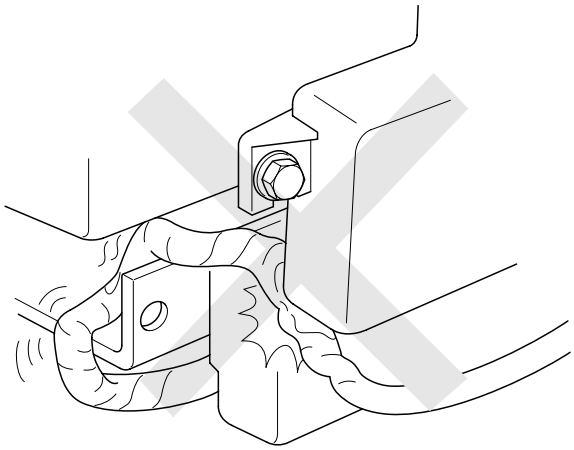

ERKD002X

- Make sure all SRS ground locations are clean, and grounds are securely fastened for optimum metal-to-metal contact. Poor grounding can cause intermittent problems that are difficult to diagnose.

PRECAUTIONS FOR ELECTRICAL INSPECTIONS

- When using electrical test equipment, insert the probe of the tester into the wire side of the connector.
  Do not insert the probe of the tester into the terminal side of the connector, and do not tamper with the connector.

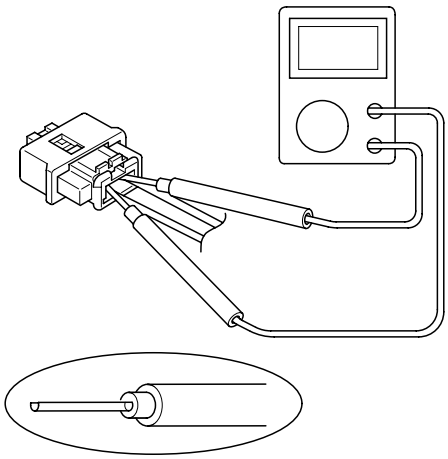

ERKD002W

- Use a u-shaped probe. Do not insert the probe forcibly.
- Use specificed service connectors for troubleshooting.

Using improper tools could cause an error in inspection due to poor metal contact.

AIRBAG CONNECTOR

DISCONNECTING

To release the lock, pull the spring-loaded sleeve (A) and the slider (B), while holding the opposite half of the connector. Pull the connector halves apart. Be sure to pull on the sleeve and not on the connector half.

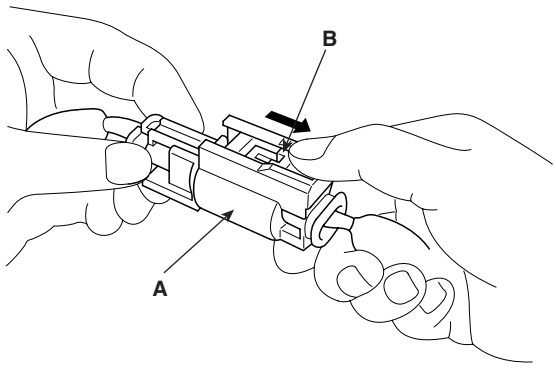

ERKD511D

CONNECTING

Hold both connector halves and press firmly until the projection (C) of the sleeve-side connector clicks to lock.

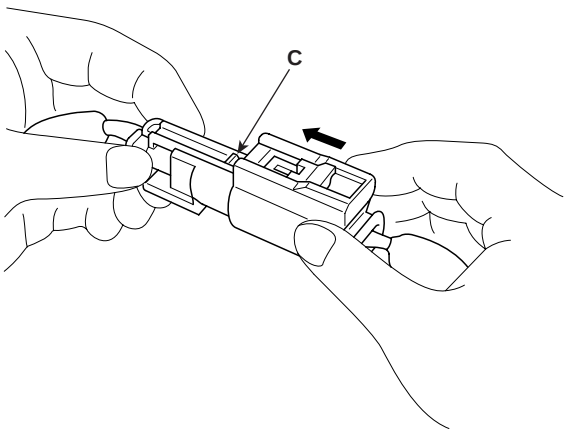

ERBF511E

WARNING LAMP ACTIVATION E2B5F9DA

WARNING LAMP BEHAVIOR AFTER IGNITION ON

As soon as the operating voltage is applied to the SRSCM ignition input, the SRSCM activates the warning lamp for a bulb check.
The lamp shall turn on for 6 seconds during the initialization phase and be turned off afterward. However, in order to indicate the driver, the warning lamp shall turn on for 6 seconds and off for one second then on continuously after the operating voltage is applied if any active fault exists.

1. Active fault or historical fault counter is greater or equal to 10

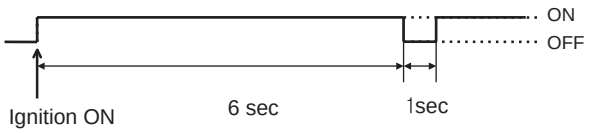

BRIF500A

2. Normal or historical fault counter is less than 10

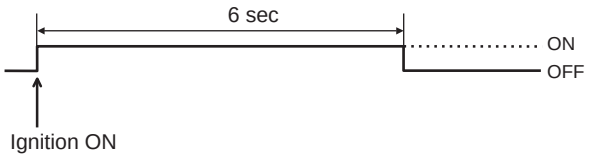

BRIF500B

SRSCM INDEPENDENT WARNING LAMP ACTIVATION

There are certain fault conditions in which the SRSCM cannot function and thus cannot control the operation of the standard warning lamp. In these cases, the standard warning lamp is directly activated by appropriate circuitry that operates independently of the SRSCM. These cases are:

1. Loss of battery supply to the SRSCM : warning lamp turned on continuously.
2. Loss of internal operating voltage : warning lamp turned on continuously.
3. Loss of Microprocessor operation : warning lamp turned on continuously.
4. SRSCM not connected : warning lamp turned on continuously through the shorting bar.

PASSENGER AIRBAG DEACTIVATION (PAD) LAMP OPERATION

The SRSCM is designed with circuitry and software to drive a PAD lamp, which is used for depowered airbag system. For the PAD indicator circuitry to function properly, both the SRSCM and PAD indicator are sourced from the same ignition line. After ignition on, the PAD indicator will be turned on for 4 seconds and off for 3 seconds during the initialization phase. Thereafter the lamp will be turned on as long as the PAD switch is in the disabled position.

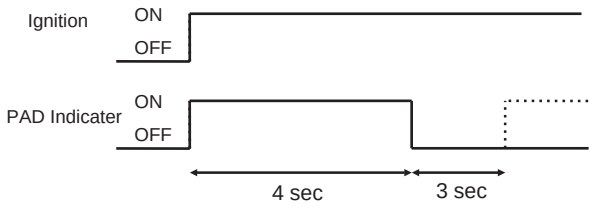

ERRF501U

PASSENGER RESTRAINTS ACTIVATION WITH PAD SWITCH

The PAD switch affects the activation of the front passenger airbag only and the switch is controlled manually. The PAD switch will be functioned as follows:

PAD Switch status	PAD Lamp	PAB
Phase-up	ON → OFF	Enabled
OFF	ON	Disabled
ON	OFF	Enabled
Fault	OFF	Enabled

COMPONENT REPLACEMENT AFTER DEPLOYMENT EA6E180C

NOTE

Before doing any SRS repairs, use the Hi-Scan Pro to check for DTCs. Refer to the Diagnostic Trouble Code list for repairing of the related DTCs.

When the front airbag(s) deployed after a collision, replace the following items.
- SRSCM
- Deployed airbag(s)
- Seat belt pretensioner(s)
- Front impact sensors
- SRS wiring harnesses
- Inspect the clock spring for heat damage. If any damage found, replace the clock spring.

When the seat belt pretensioner(s) deployed after a collision, replace the following items.
- Seat belt pretensioner(s)
- SRSCM (if B1658 detected)
- Front impact sensors
- SRS wiring harnesses

When the side/curtain airbag(s) deployed after a collision, replace the following items.
- SRSCM
- Deployed airbag(s)
- Side impact sensor(s) for the deployed side(s)
- SRS wiring harnesses

After the vehicle is completely repaired, confirm the SRS airbag system is OK.
- Turn the ignition switch ON, the SRS indicator should come on for about 6 seconds and then go off.

COMPONENTS E703CF82

[LHD]

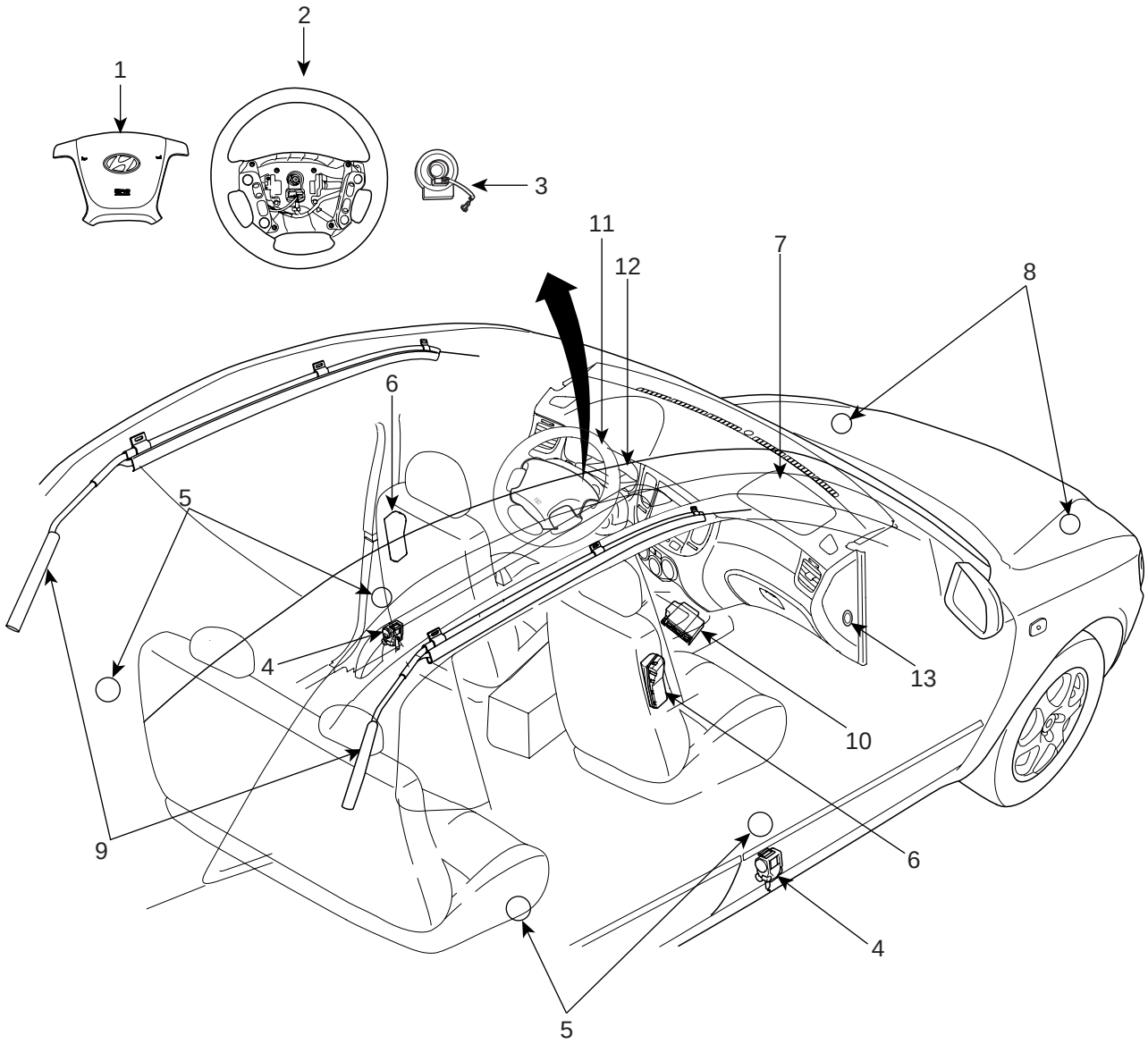

1. Driver Airbag (DAB)
2. Steering Wheel
3. Clock Spring
4. Seat Belt Pretensioner (BPT)
5. Side Impact Sensor (SIS)
6. Side Airbag (SAB)
7. Passenger Airbag (PAB)
8. Front Impact Sensor (FIS)
9. Curtain Airbag (CAB)
10. Supplemental Restraint System Control Module(SRSCM)
11. Airbag Warning Lamp
12. Passenger Airbag Deactivation (PAD) Lamp
13. PAD Switch

SCMRT6500L

[RHD]

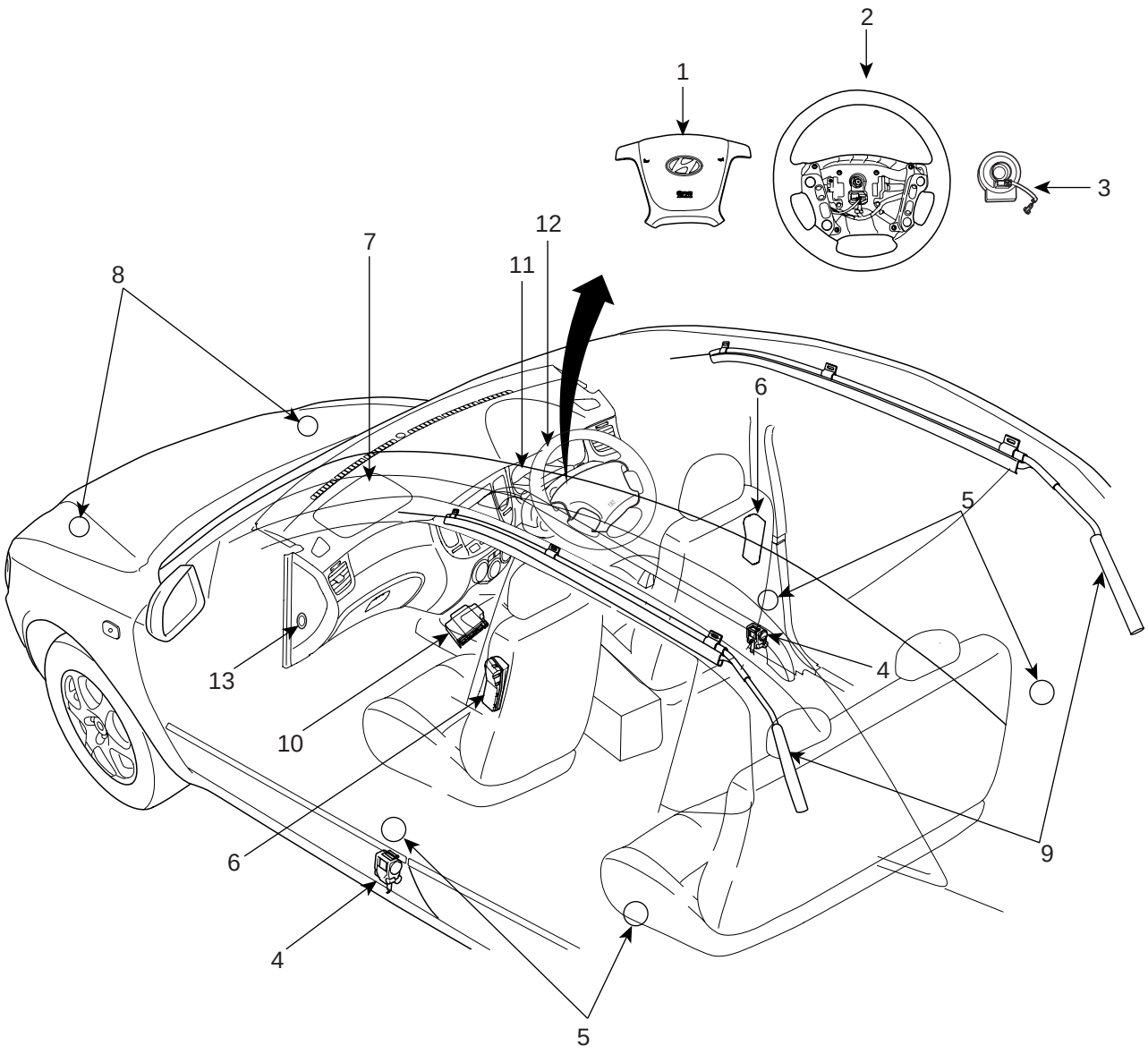

1. Driver Airbag (DAB)
2. Steering Wheel
3. Clock Spring
4. Seat Belt Pretensioner (BPT)
5. Side Impact Sensor (SIS)
6. Side Airbag (SAB)
7. Passenger Airbag (PAB)
8. Front Impact Sensor (FIS)
9. Curtain Airbag (CAB)
10. Supplemental Restraint System Control Module(SRSCM)
11. Airbag Warning Lamp
12. Passenger Airbag Deactivation (PAD) Lamp
13. PAD Switch

SCMRT6500R

COMPONENTS LOCATION

DRIVER AIRBAG (DAB) / PASSENGER AIRBAG (PAB)

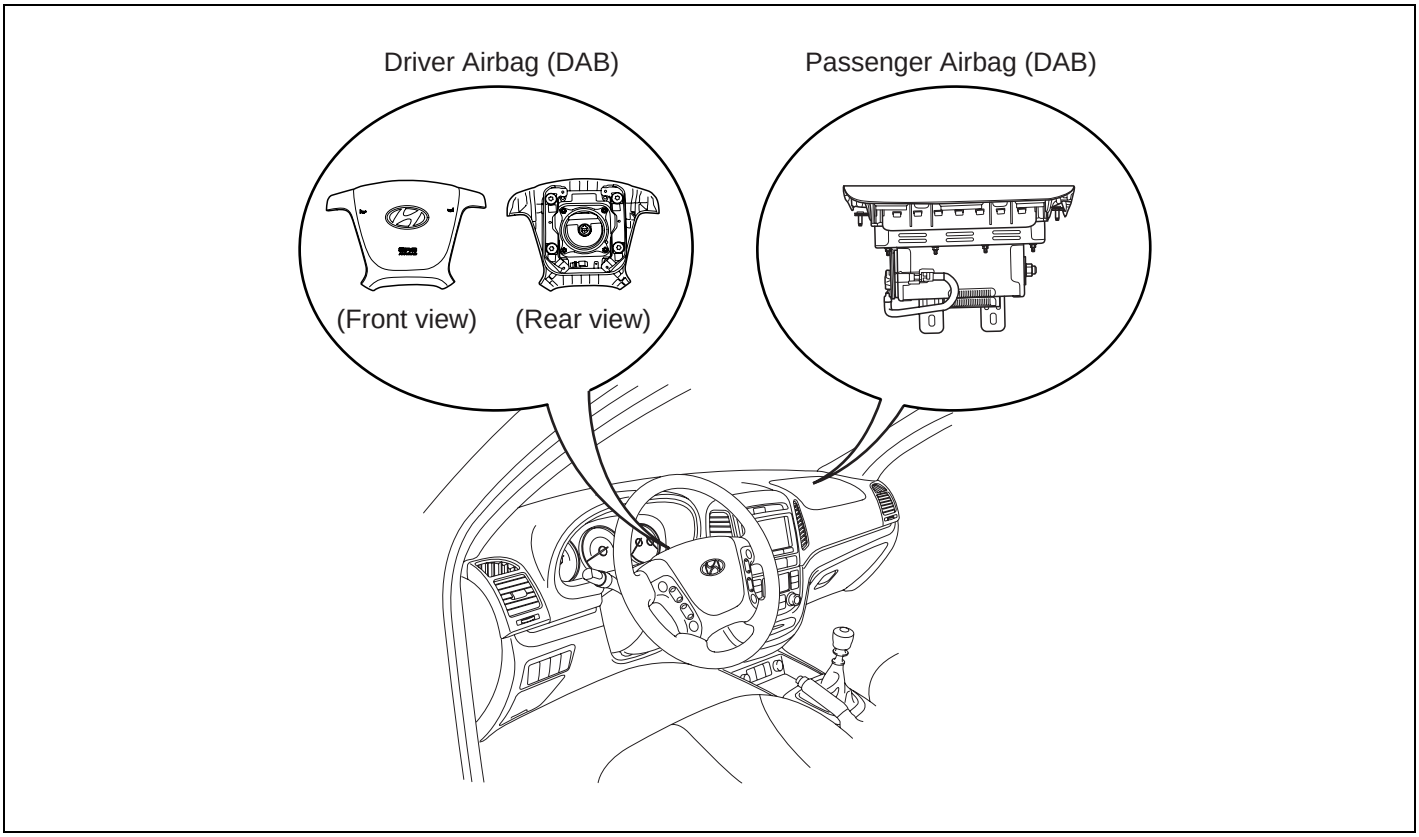

SCMRT6501L

SIDE AIRBAG (SAB)

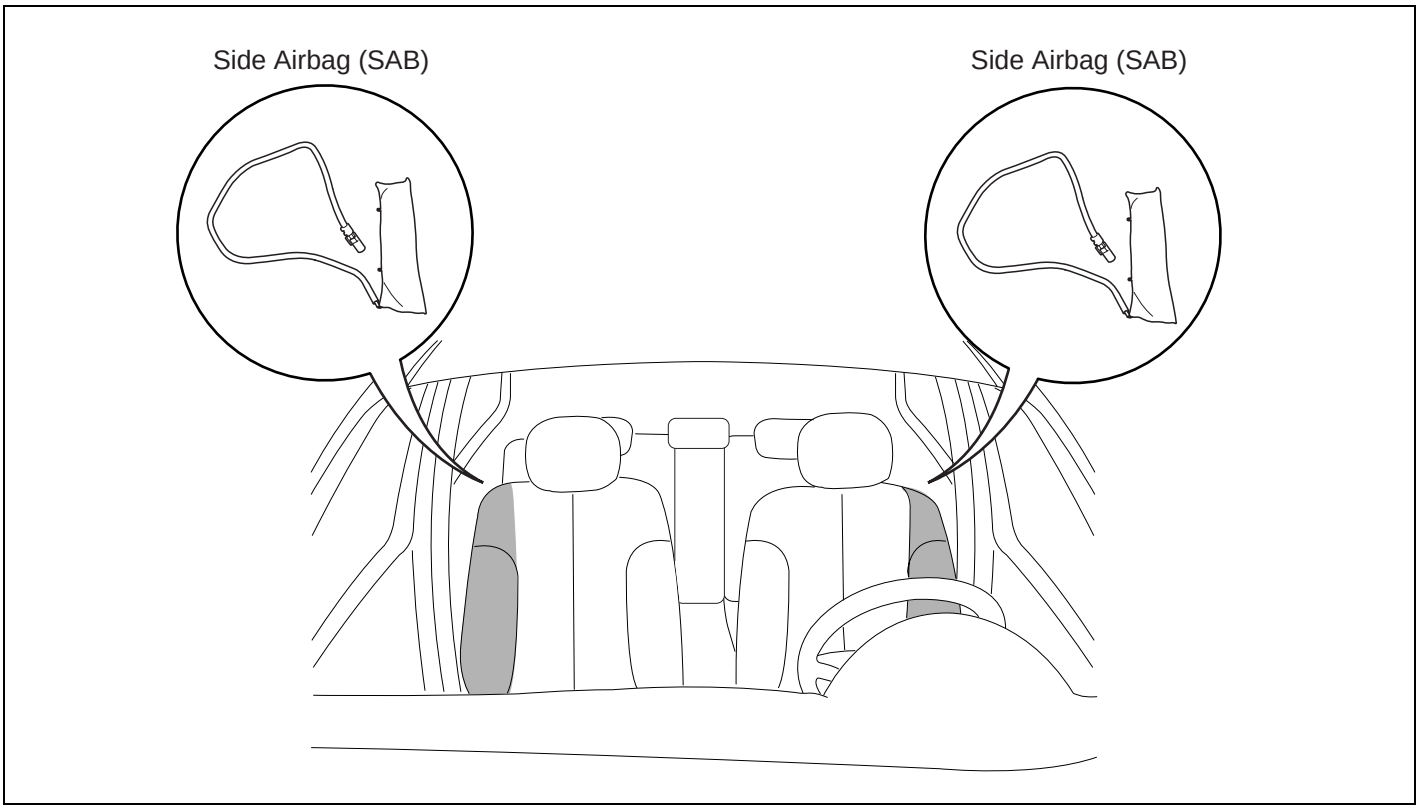

LRLG101C

CURTAIN AIRBAG (CAB)

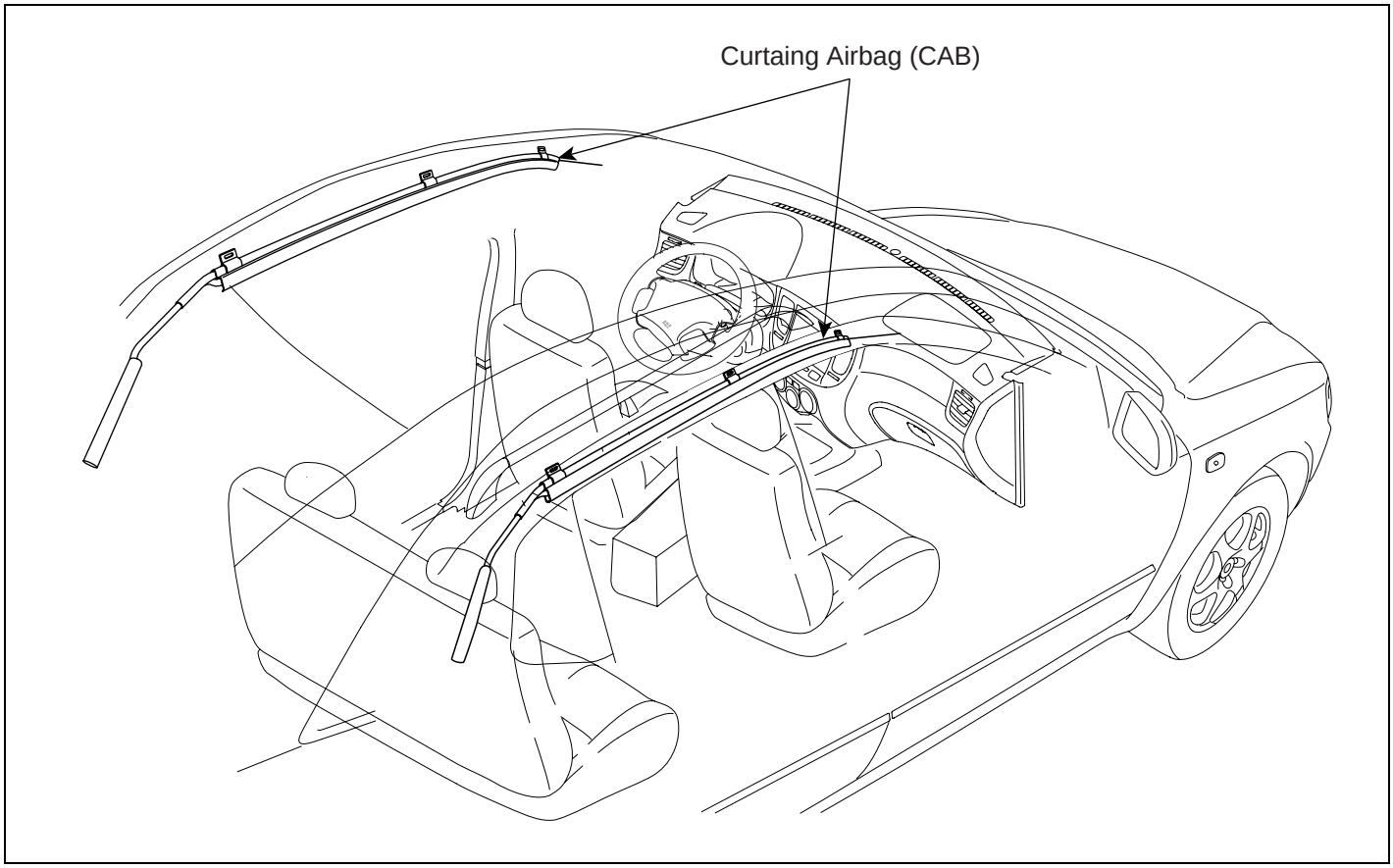

SCMRT6502L

SEAT BELT RETRACTOR PRETENSIONER (BPT)

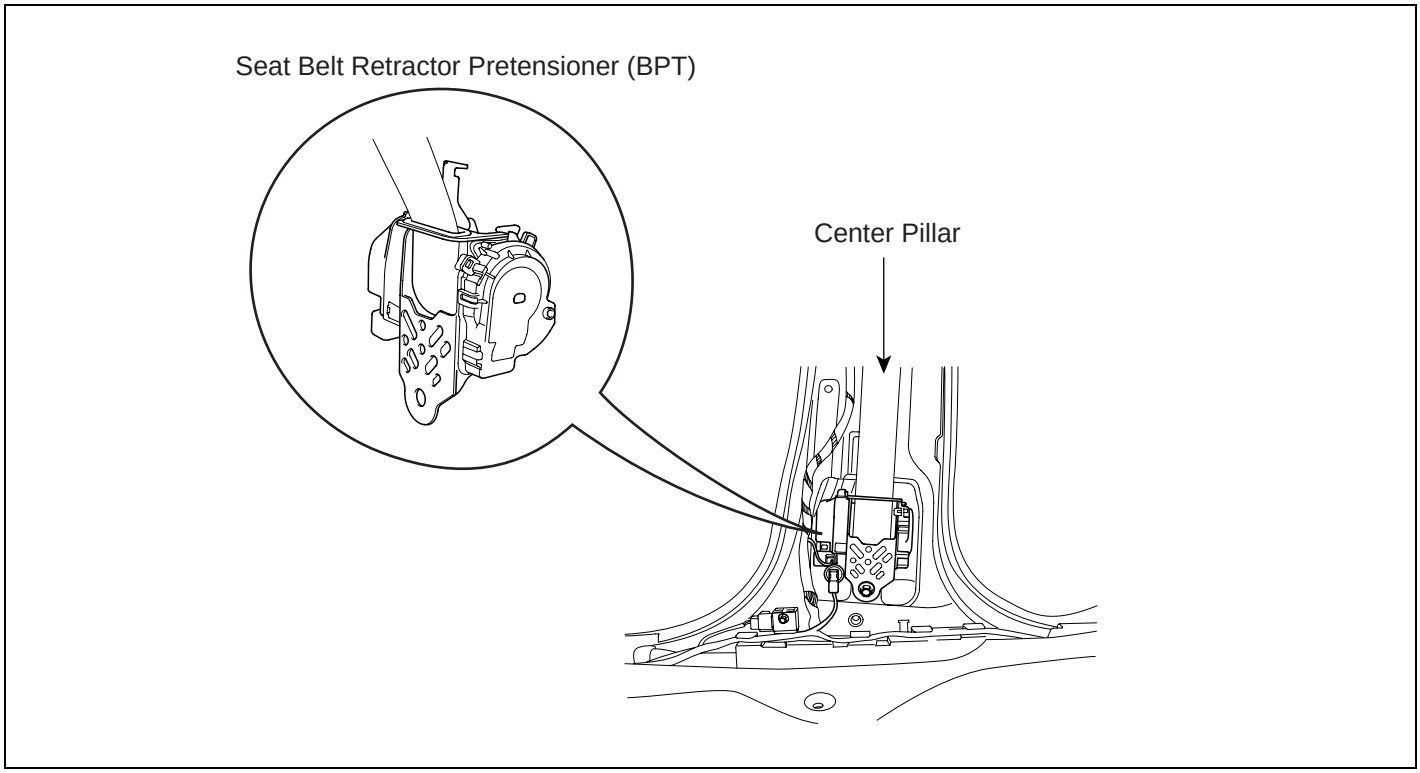

SCMRT6503L

SUPPLEMENTAL RESTRAINT SYSTEM CONTROL MODULE (SRSCM)

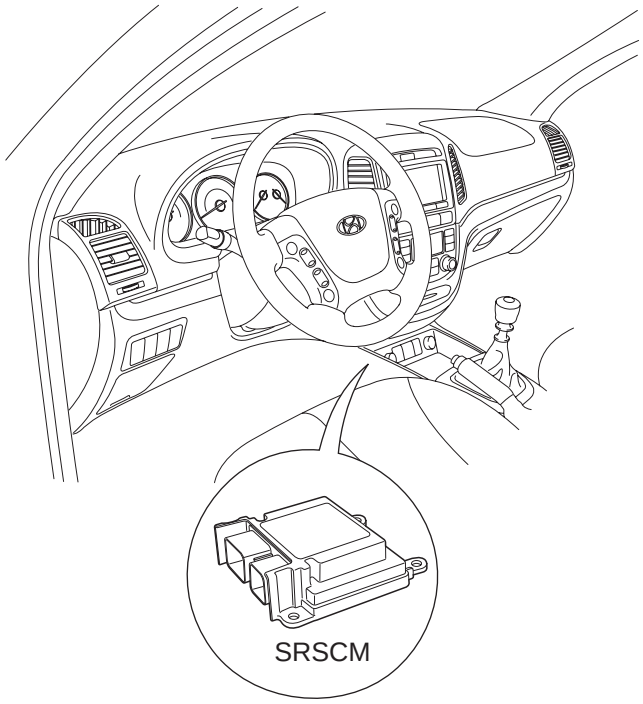

SCMRT6504L

FRONT IMPACT SENSOR (FIS)

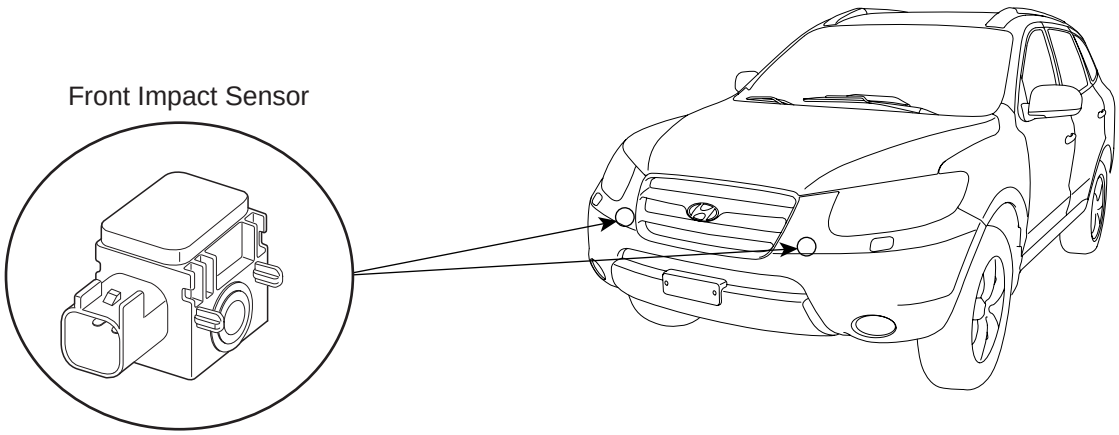

SCMRT6505L

SIDE IMPACT SENSOR (SIS)

[FRONT]

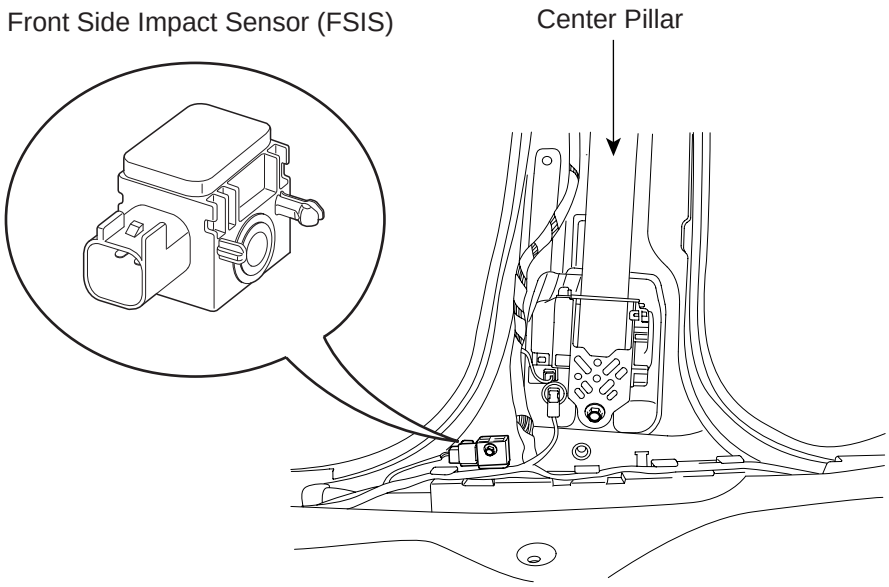

[REAR]

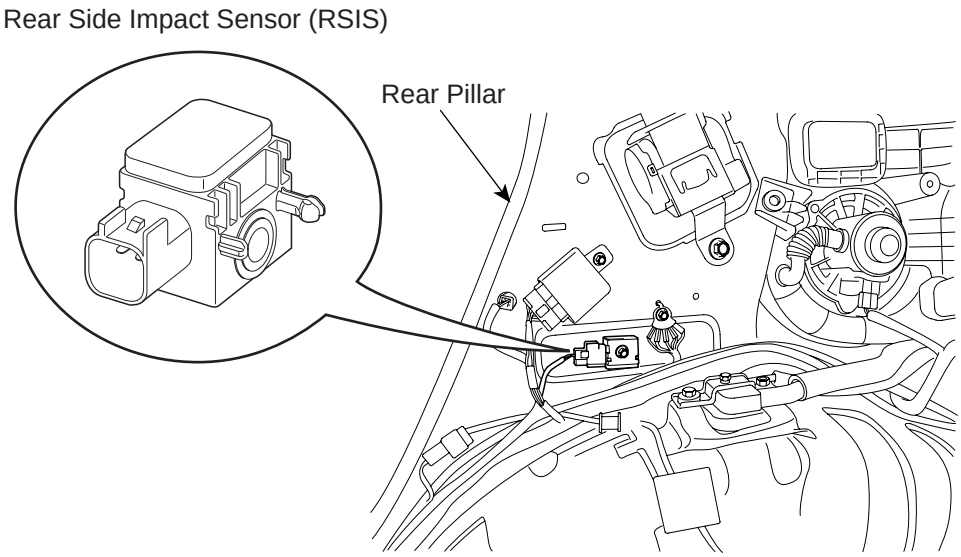

SCMRT6506L

SUPPLEMENTAL RESTRAINTS SYSTEM CONTROL MODULE(SRSCM)

SRS CONTROL MODULE

DESCRIPTION ECCF71AB

The primary purpose of the SRSCM (Supplemental Restraints System Control Module) is to discriminate between an event that warrants restraint system deployment and an event that does not. The SRSCM must decide whether to deploy the restraint system or not. After determining that pretensioners and/or airbag deployment is required, the SRSCM must supply sufficient power to the pretensioners and airbag igniters to initiate deployment. The SRSCM determines that an impact may require deployment of the pretensioners and airbags from data obtained from impact sensors and other components in conjunction with a safing function. The SRSCM will not be ready to detect a crash or to activate the restraint system devices until the signals in the SRSCM circuitry stabilize. It is possible that the SRSCM could activate the safety restraint devices in approximately 2 seconds but is guaranteed to fully function after prove-out is completed. The SRSCM must perform a diagnostic routine and light a system readiness indicator at key-on. The system must perform a continuous diagnostic routine and provide fault annunciation through a warning lamp indicator in the event of fault detection. A serial diagnostic communication interface will be used to facilitate servicing of the restraint control system.

COMPONENTS EE414878

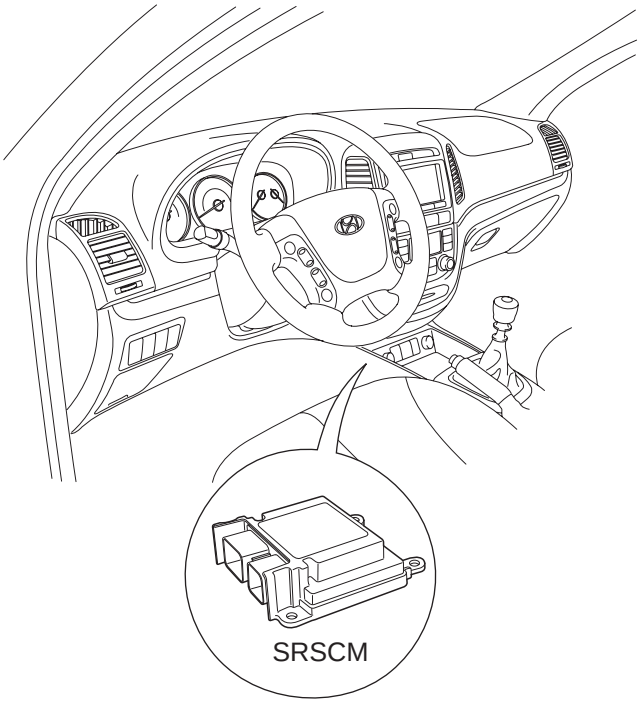

SCMRT6504L

REMOVAL E977543F

1. Disconnect the battery negative cable and wait for at least three minutes before beginning work.
2. Remove the ignition key from the vehicle.
3. Disconnect the DAB, PAB, SAB, CAB and BPT connectors.
4. Remove the floor console and heater ducts. (Refer to BD group)
5. Disconnect the SRSCM harness connector from the SRSCM.

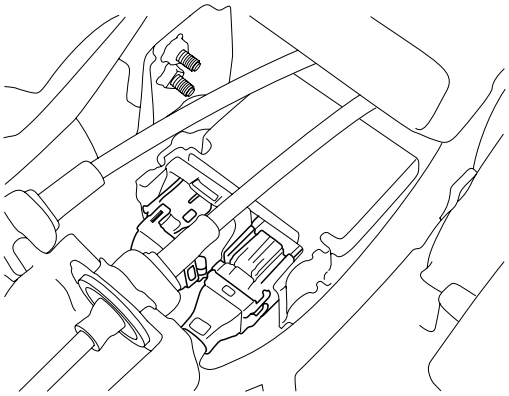

SCMRT6001D

6. Remove the SRSCM mounting bolts(4EA) from the SRSCM, then remove the SRSCM.

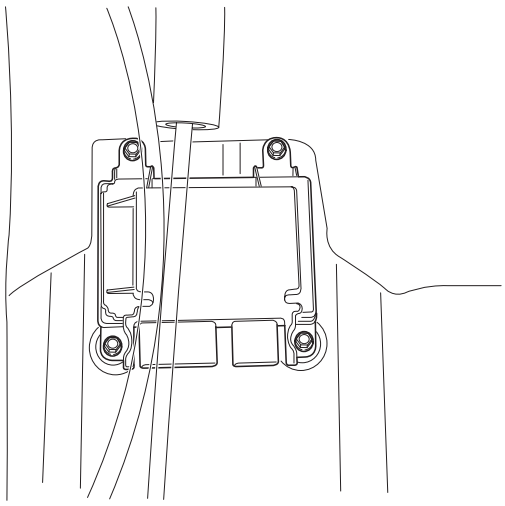

KRBF101H

INSTALLATION E507F553

1. Disconnect the battery negative cable and wait for at least three minutes before beginning work.
2. Remove the ignition key from the vehicle.
3. Install the SRSCM with the SRSCM mounting bolts.

Tightening torque (SRSCM Mounting bolt)
: 0.7 ~ 0.9 kgf.m (6.8 ~ 9.2 Nm, 5.0 ~ 6.8 lb.ft)

NOTE

Use new mounting bolts when replacing the SRSCM after a collision.

4. Connect the SRSCM harness connector.
5. Install the heater ducts and floor console. (Refer to BD group)
6. Connect the DAB, PAB, SAB, CAB and BPT connectors.
7. Reconnect the battery negative cable.
8. After installing the SRSCM, confirm proper system operation:
   - Turn the ignition switch ON; the SRS indicator light should be turned on for about six seconds and then go off.

AIR BAG MODULE (DRIVE SIDE)

AIR BAG MODULE AND CLOCK SPRING

DESCRIPTION E19698E7

Driver Airbag (DAB) is installed in steering wheel and electrically connected to SRSCM via clockspring. It protects the driver from danger by deploying a bag when frontal crash occurs. The SRSCM determines deployment of Driver Airbag (DAB).

CAUTION

Never attempt to measure the circuit resistance of the airbag module (squib) even if you are using the specified tester. If the circuit resistance is measured with a tester, accidental airbag deployment will result in serious personal injury.

COMPONENTS E0833290

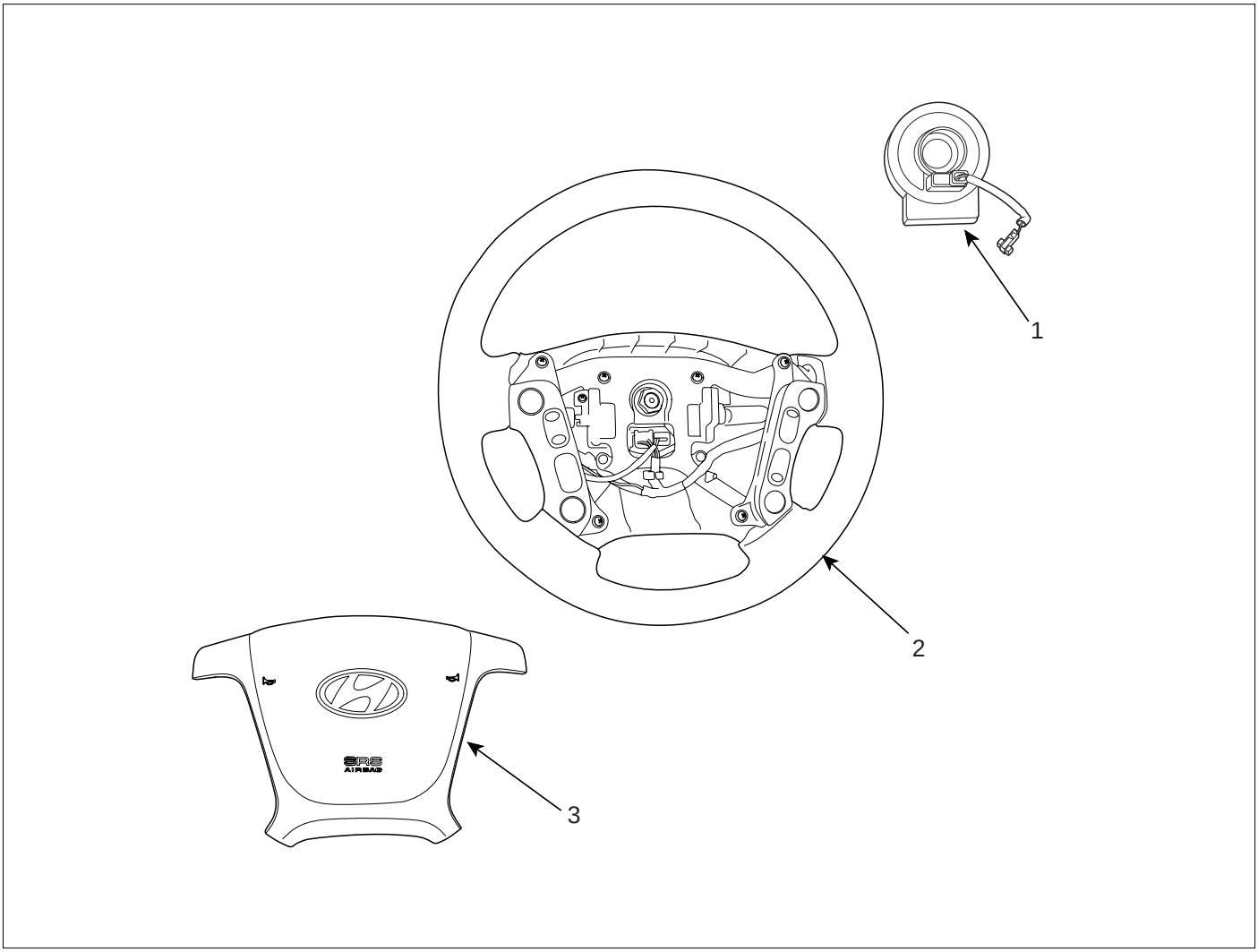

1. Clock Spring
2. Steering Wheel
3. Driver Airbag (DAB)

SCMRT6507L

REMOVAL E0450A67

1. Disconnect the battery negative cable and wait for at least three minutes before beginning work.
2. Remove the airbag module mounting bolts(2EA).

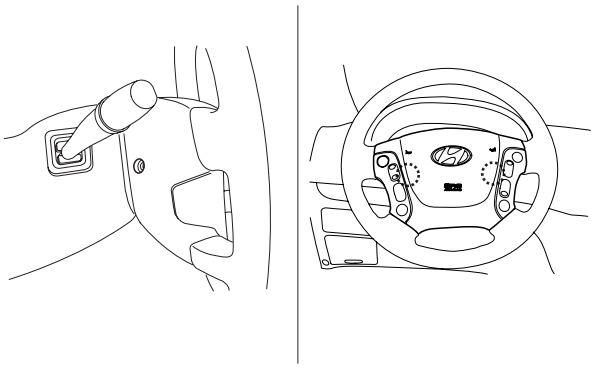

SCMRT6508D

3. Disconnect the horn connector(A).

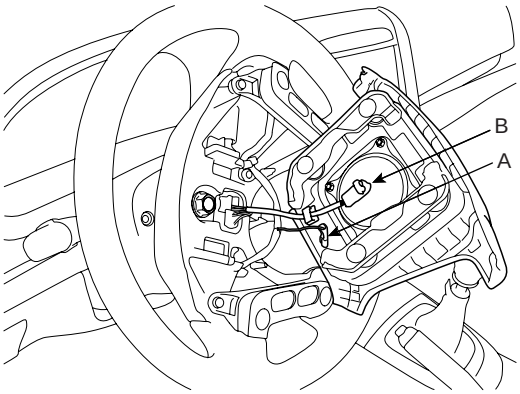

SCMRT6004D

4. Release the connector locking pin, then disconnect the driver airbag module connector(B).

CAUTION

The removed airbag module should be stored in a clean, dry place with the pad cover face up.

5. Remove the steering wheel and steering wheel column cover. (Refer to ST group)
6. Disconnect the clock spring and horn connector, then remove the clock spring.

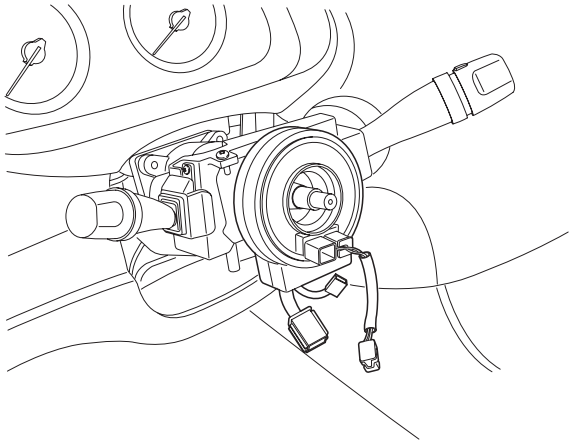

KRBF102D

INSPECTION E043119F

DRIVER AIRBAG (DAB)

If any improper parts are found during the following inspection, replace the airbag module with a new one.

CAUTION

Never attempt to measure the circuit resistance of the airbag module (squib) even if you are using the specified tester. If the circuit resistance is measured with a tester, accidental airbag deployment will result in serious personal injury.

1. Check pad cover for dents, cracks or deformities.
2. Check the airbag module for denting, cracking or deformation.
3. Check hooks and connectors for damage, terminals for deformities, and harness for binds.
4. Check airbag inflator case for dents, cracks or deformities.

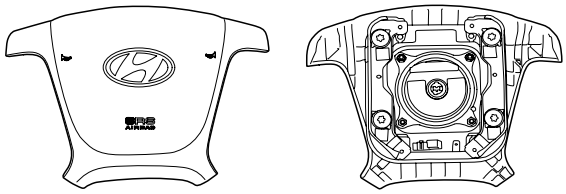

(Front view) (Rear view)

SCMRT6509L

5. Install the airbag module to the steering wheel to check for fit or alignment with the wheel.

CLOCKSPRING

1. If, as a result of the following checks, even one abnormal point is discovered, replace the clock spring with a new one.
2. Check connectors and protective tube for damage, and terminals for deformities.

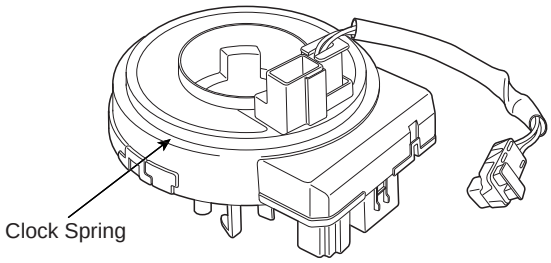

ERBF102H

INSTALLATION EE7BDA1C

1. Disconnect the battery negative cable from battery and wait for at least three minutes before beginning work.
2. Remove the ignition key from the vehicle.
3. Connect the clock spring harness connector and horn harness connector to the clock spring.
4. Set the clock spring on neutral position and after turning the front wheels to the straight-ahead position, install the clock spring.
5. Install the steering wheel column cover and the steering wheel. (Refer to ST group)
6. Connect the Driver Airbag (DAB) module connector and horn connector, then install the Driver Airbag (DAB) module on the steering wheel.
7. Secure the Driver Airbag (DAB) with the new mounting bolts.

Tightening torque (DAB Mounting Bolt)
: 0.8 ~ 1.1 kgf.m (7.9 ~ 10.8 Nm, 5.8 ~ 8.0 lb.ft)

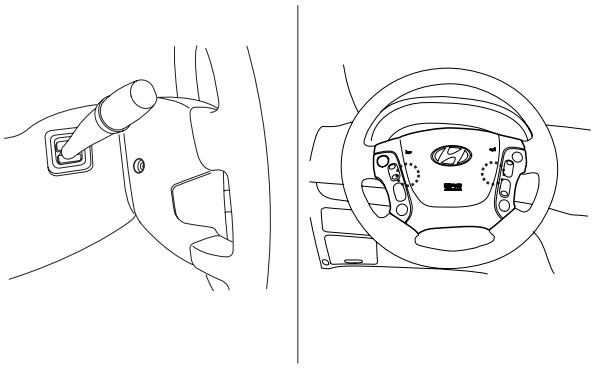

SCMRT6508D

8. Connect the battery negative cable.
9. After installing the airbag, confirm proper system operation:
   - Turn the ignition switch ON; the SRS indicator light should be turned on for about six seconds and then go off.
   - Make sure horn button works.

AIR BAG MODULE (PASSENGER SIDE)

AIR BAG MODULE

DESCRIPTION E9593A37

The passenger Airbag (PAB) is installed inside the crash pad and protects the front passenger in the event of a frontal crash. The SRSCM determines if and when to deploy the PAB.

CAUTION

Never attempt to measure the circuit resistance of the airbag module (squib) even if you are using the specified tester. If the circuit resistance is measured with a tester, accidental airbag deployment will result in serious personal injury.

COMPONENTS EF548B7A

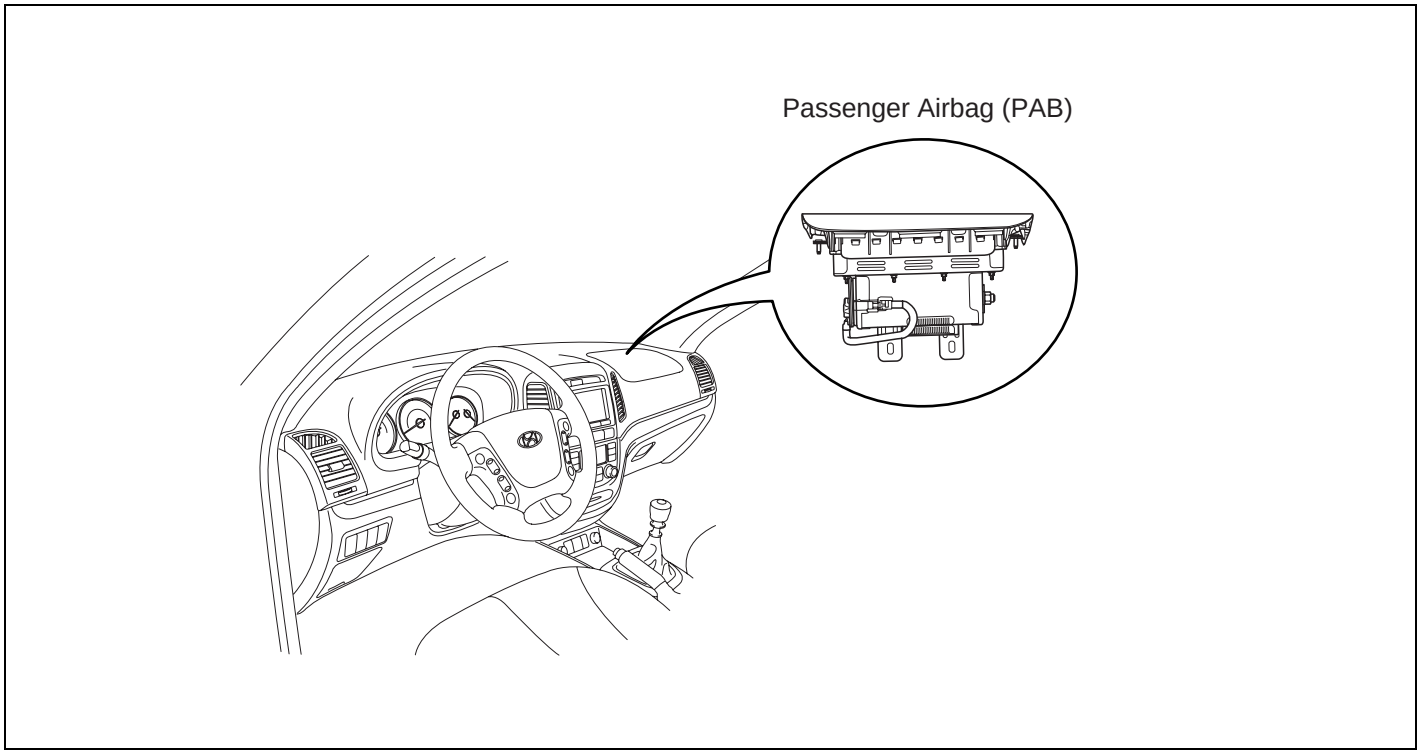

SCMRT6510L

REMOVAL E4EB22D1

1. Disconnect the battery negative cable and wait for at least three minutes before beginning work.
2. Remove the glove box. (Refer to BD group)
3. Disconnect the PAB connector and remove the PAB mounting bolts (2EA).

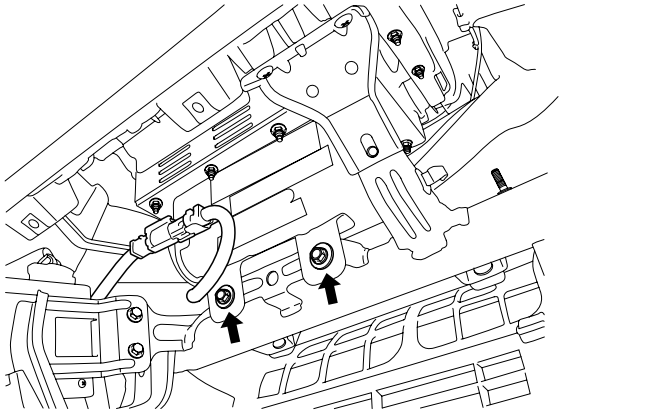

SCMRT6015D

4. Remove the crash pad. (Refer to BD group)

NOTE

If the crash pad is damaged when the PAB is deployed, replace the damaged crash pad and PAB together.

5. Remove the heater duct from the crash pad.
6. Remove the mounting nuts(4EA) from the crash pad. Then remove the passenger airbag.

CAUTION

The removed airbag module should be stored in a clean and dry place with the pad cover face up.

INSTALLATION E15B14BB

1. Disconnect the battery negative cable from battery and wait for at least three minutes before beginning work.
2. Remove the ignition key from the vehicle.
3. Place a Passenger Airbag (PAB) on the crash pad and tighten the Passenger Airbag (PAB) mounting nuts.

Tightening torque
: 0.9 ~ 1.4 kgf.m (8.8 ~ 13.7 N.m, 6.5 ~ 10.1 lb.ft)

4. Install the heater duct to the crash pad.
5. Install the crash pad. (Refer to BD group)
6. Tighten the PAB mounting bolt.

Tightening torque
: 1.9 ~ 2.7 kgf.m (18.6 ~ 26.5 N.m, 13.7 ~ 19.5 lb.ft)

7. Connect the Passenger Airbag (PAB) harness connector to the SRS main harness connector.
8. Reinstall the glove box. (Refer to BD group)
9. Reconnect the battery negative cable.
10. After installing the Passenger Airbag (PAB), confirm proper system operation:
    - Turn the ignition switch ON; the SRS indicator light should be turned on for about six seconds and then go off.

AIR BAG MODULE (SIDE AIR BAG)

AIR BAG MODULE

DESCRIPTION EE101199

The Side Airbags (SAB) are installed inside the front seat and protect the driver and front passenger from danger when side crash occurs. The SRSCM determines deployment of side airbag by using Side Impact Sensor (SIS) signal.

CAUTION

Never attempt to measure the circuit resistance of the airbag module (squib) even if you are using the specified tester. If the circuit resistance is measured with a tester, accidental airbag deployment will result in serious personal injury.

COMPONENTS E5587BEA

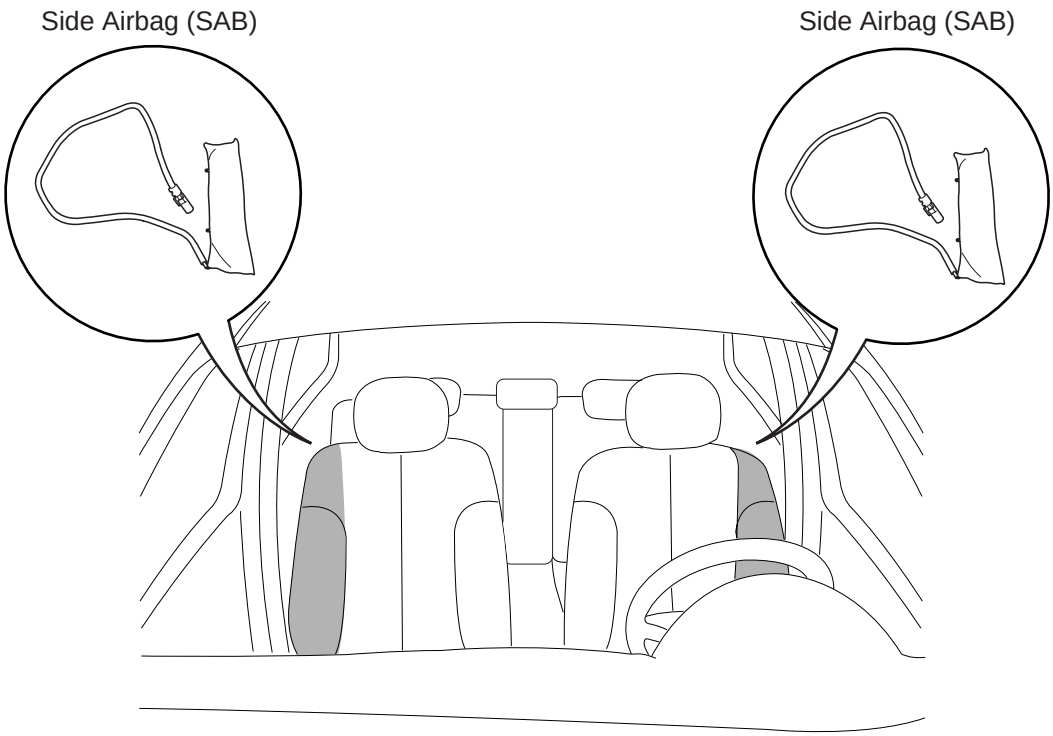

LRLG101C

REMOVAL EE264C47

1. Disconnect the battery negative cable and wait for at least 3 minutes before beginning work.
2. Remove the front seat assembly.(Refer to BD group)
3. Remove the seatback cover.(Refer to BD group)

NOTE

When the side airbag depoyed after a collision, replace the seatback as an assembly.

4. Loosen the SAB mounting nuts and remove the SAB module.

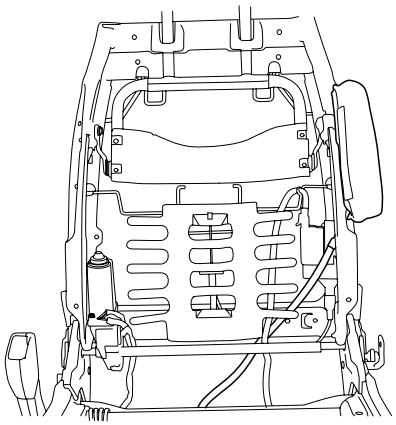

SCMRT6007D

INSTALLATION E3E8FAAD

CAUTION

Ensure that the harness is installed and routed properly to prevent damage to the wiring.

NOTE

- *Do not open the lid of the side airbag cover.*
- *Use a new mounting nuts when you replace a side airbag.*
- *Make sure that the seatback cover is installed properly. Improper installation may prevent the proper deployment.*

1. Disconnect the battery negative cable and wait for at least three minutes.
2. Remove ignition key from the vehicle.
3. Place a Side Airbag (SAB) on the seatback frame and tighten the side airbag mounting nuts.

Tightening torque : 0.7 ~ 0.9 kgf.m (7.0 ~ 9.0 Nm, 5.2 ~ 6.6 lb.ft)

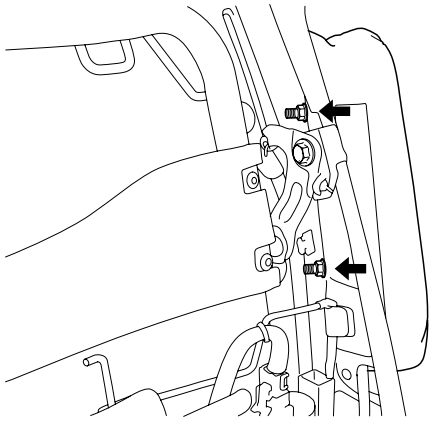

SCMRT6008D

4. Install the new seatback cover.(Refer to BD group)
5. Install the seat assembly, then connect the Side Airbag (SAB) harness connector.
6. Recline and slide the front seat forward fully, make sure the harness wires are not pinched or interfering with other parts.
7. Reconnect the battery negative cable.
8. After installing the Side Airbag (SAB), confirm proper system operation:
   - Turn the ignition switch ON; the SRS indicator light should be turned on for about six seconds and then go off.

AIR BAG MODULE (CURTAIN AIR BAG)

AIR BAG MODULE

DESCRIPTION EF7FBAD3

Curtain airbags are installed inside the headliner (LH and RH) and protect the driver and passenger from danger when side crash occurs. The SRSCM determines deployment of curtain airbag by using side impact sensor (SIS) signal.

CAUTION

Never attempt to measure the circuit resistance of the airbag module even if you are using the specified tester. If the circuit resistance is measured with a tester, accidental airbag deployment will result in serious personal injury.

COMPONENTS E4B3122F

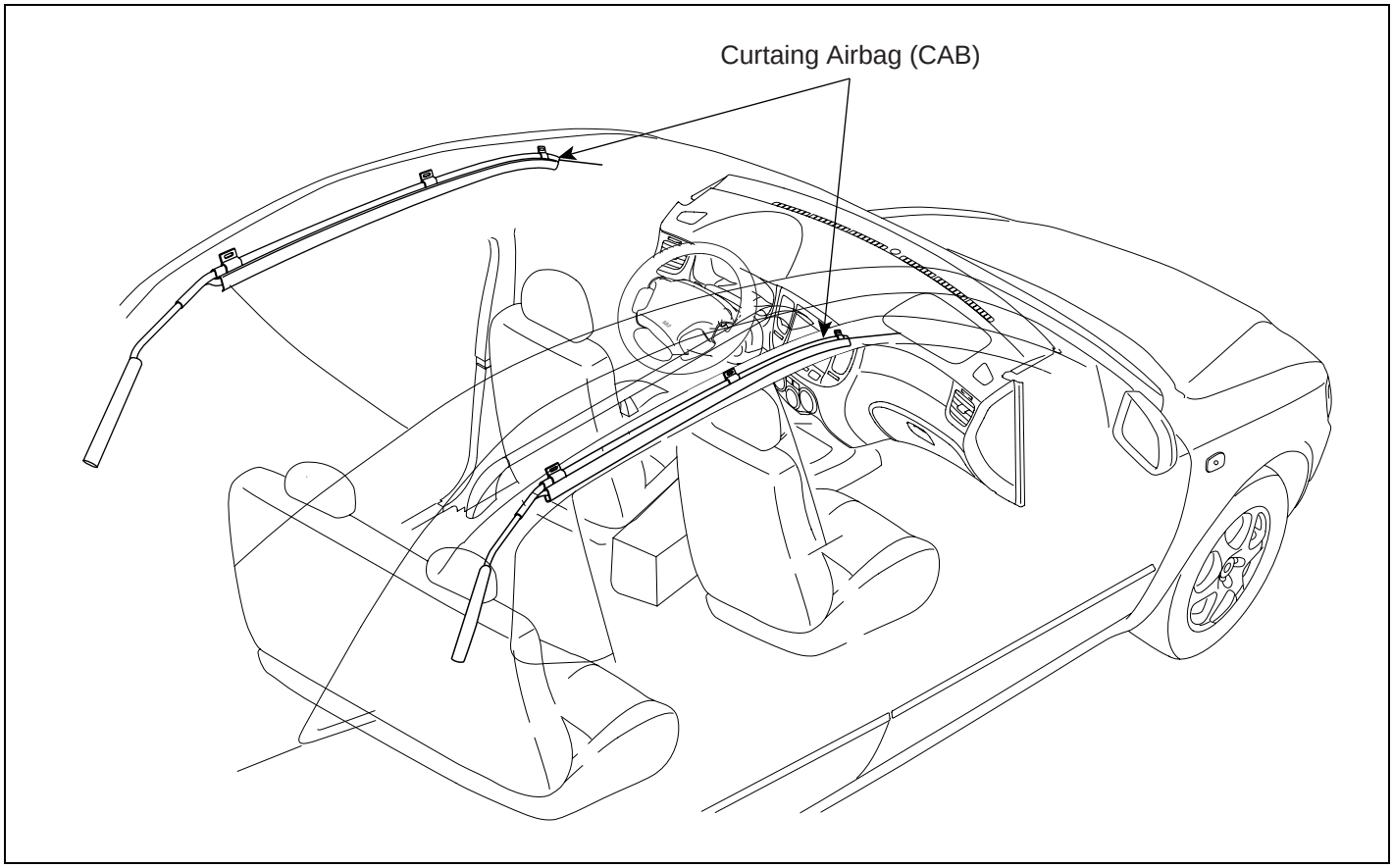

SCMRT6502L

REMOVAL E41D5D56

1. Disconnect the battery negative cable and wait for at least 3 minutes before beginning work.
2. Remove the following parts. (Refer to BD group)
   - Side trim, Roof trim
3. Disconnect the Curtain Airbag harness connector.

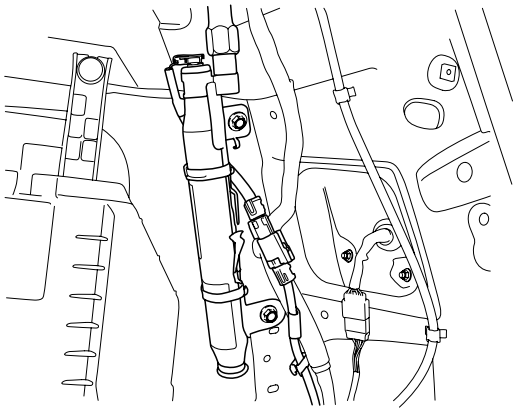

SCMRT6009D

4. After loosening the mounting bolts(10EA) remove the curtain airbag.

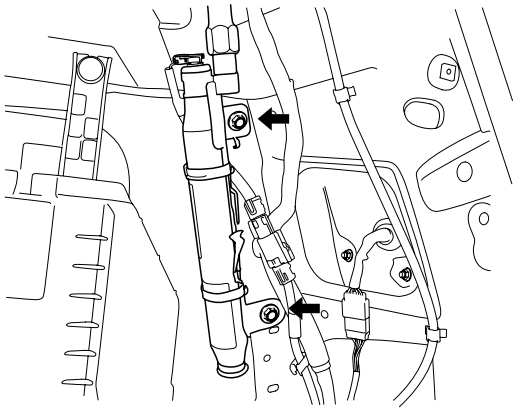

SCMRT6511D

INSTALLATION E50B5670

1. Disconnect the battery negative cable and wait for at least three minutes.
2. Remove the ignition key from the vehicle.
3. Install a Curtain Airbag (CAB) on the mounting bracket.
4. Tighten the CAB mounting bolts (10EA).

Tightening torque
: 1.1 ~ 1.5 kgf.m(10.9 ~ 14.7 Nm, 8.0 ~ 10.8 lb.ft)

CAUTION

- ***Never twist the airbag module when installing it. If the module is twisted, airbag module may operate abnormally.***

5. Connect the CAB connector.
6. Install the following parts. (Refer to BD group)
   - Side trim, Roof trim
7. Reconnect the battery negative cable.
8. After installing the Curtain Airbag (CAB), confirm proper system operation:
   - Turn the ignition switch ON; the SRS indicator light should be turned on for about six seconds and then go off.

SEAT BELT PRETENSIONER

SEAT BELT PRETENSIONER

DESCRIPTION E4167EBA

The Seat Belt Pretensioners (BPT) are installed inside Center Pillar (LH & RH). When a vehicle crashes with a certain degree of frontal impact, the pretensioner seat belt helps to reduce the severity of injury to the front seat occupants by retracting the seat belt webbing. This prevents the front occupants from thrusting forward and hitting the steering wheel or the instrument panel when the vehicle crashes.

CAUTION

Never attempt to measure the circuit resistance of the Seat Belt Pretensioner (BPT) even if you are using the specified tester. If the circuit resistance is measured with a tester, the pretensioner will be ignited accidentally. This will result in serious personal injury.

COMPONENTS E13C3CFE

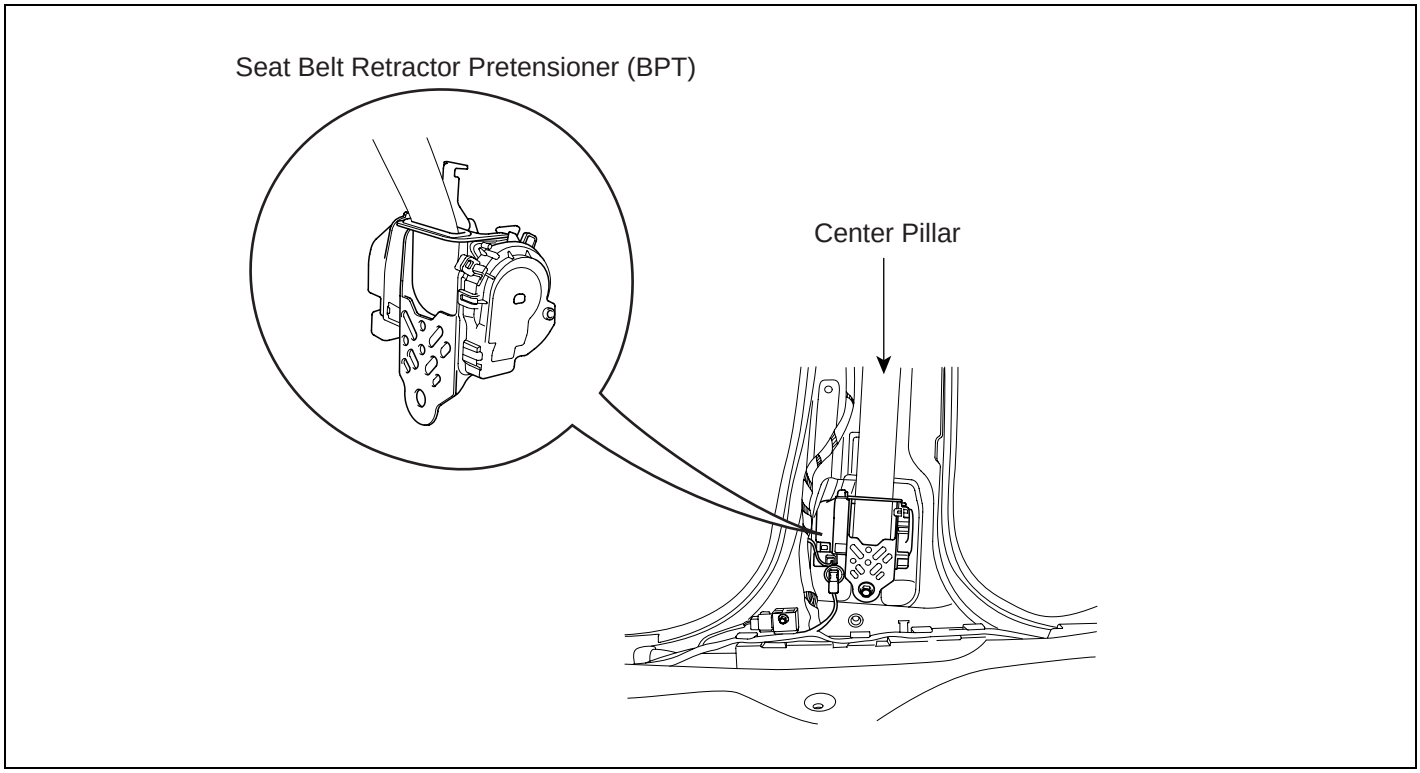

SCMRT6503L

REMOVAL E3B165BB

1. Disconnect the battery negative cable, and wait for at least three minutes before beginning work.
2. Remove the door scuff trim. (Refer to BD group)
3. Remove the center pillar trim. (Refer to BD group)
4. Remove the lower anchor bolt.
5. Remove the upper anchor bolt.
6. Disconnect the Seat Belt Pretensioner connector.
7. Loosen the Seat Belt Pretensioner mounting bolt and remove the Seat Belt Pretensioner.

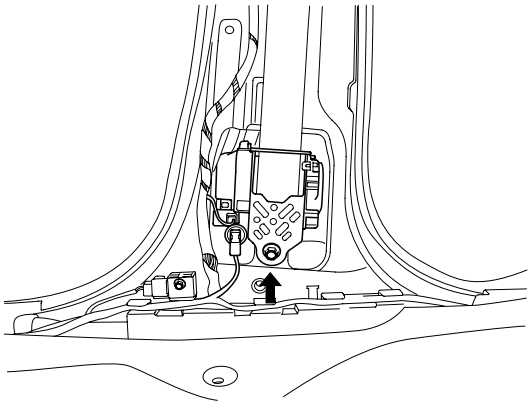

SCMRT6011D

INSTALLATION E3B35607

1. Disconnect the battery negative cable and wait for at least three minutes.
2. Remove the ignition key from the vehicle.
3. Install the Seat Belt Pretensioner (BPT) with a bolt.

Tightening torque
: 4.0 ~ 5.5 kgf.m (39.2 ~ 53.9 Nm, 28.9 ~ 39.8 lb.ft)

4. Install the upper and lower anchor bolts.

Tightening torque (Seat Belt Anchor Bolt)
: 4.0 ~ 5.5 kgf.m (39.2 ~ 53.9 Nm, 28.9 ~ 39.8 lb.ft)

5. Install the center pillar trim.
6. Install the door scuff trim.
7. Reconnect the battery negative cable.
8. After installing the Seat Belt Pretensioner (BPT), confirm proper system operation:
   - Turn the ignition switch ON; the SRS indicator light should be turned on for about six seconds and then go off.

SRS CONTROL SYSTEM

FRONT IMPACT SENSOR (FIS)

DESCRIPTION EBEE040F

The front impact sensor (FIS) is installed in the side member. They are remote sensors that detect acceleration due to a collision at its mounting location. The primary purpose of the Front Impact Sensor (FIS) is to provide an indication of a collision. The Front Impact Sensor(FIS) sends acceleration data to the SRSCM.

COMPONENTS E603A5DC

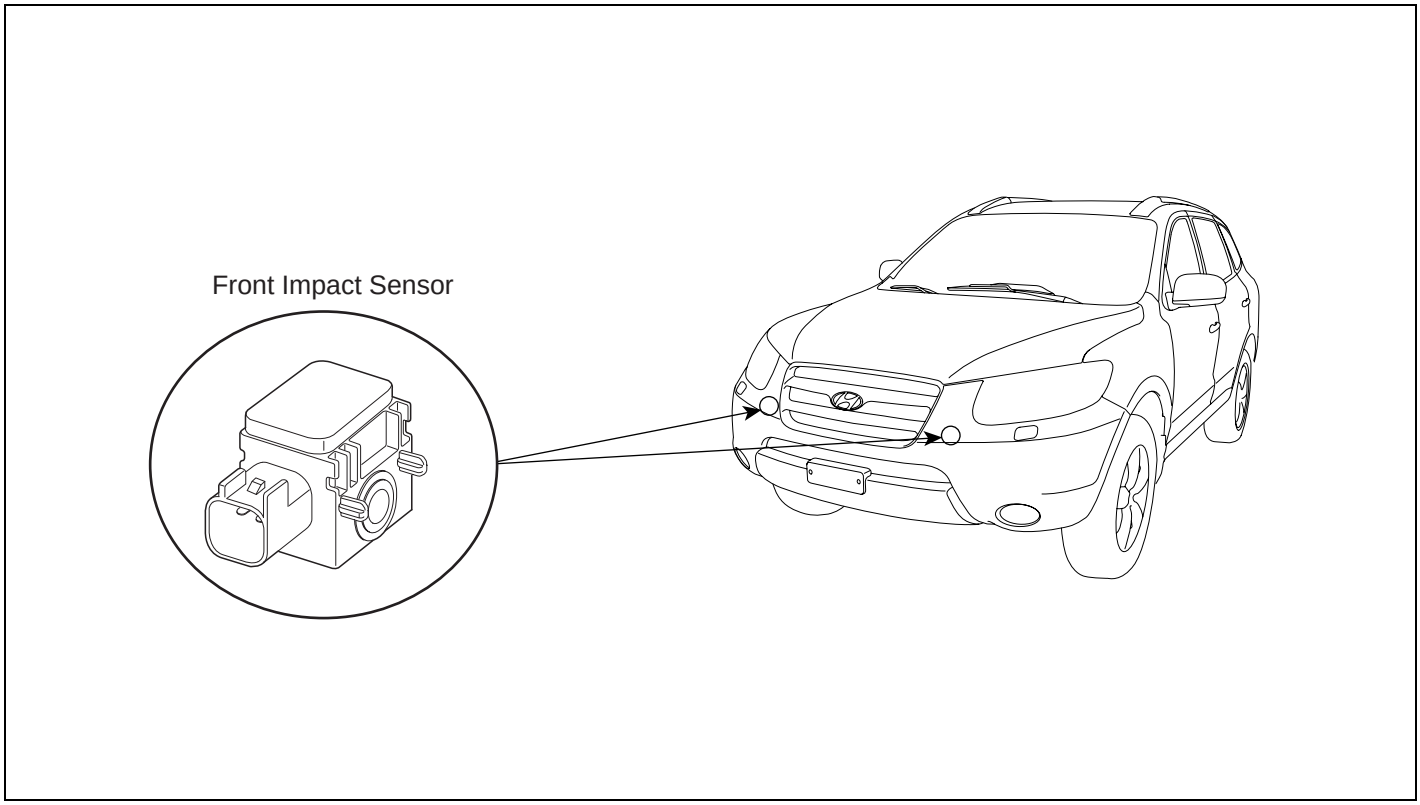

SCMRT6505L

REMOVAL EDE19F4F

CAUTION

- ***Removal of the airbag must be performed according to the precautions/ procedures described previously.***
- ***Before disconnecting the front impact sensor connector, disconnect the front airbag connector(s).***
- ***Do not turn the ignition switch ON and do not connect the battery cable while replacing the front impact sensor.***

1. Disconnect the battery negative cable, and wait for at least three minutes before beginning work.
2. Remove the Front Impact Sensor connector cover.

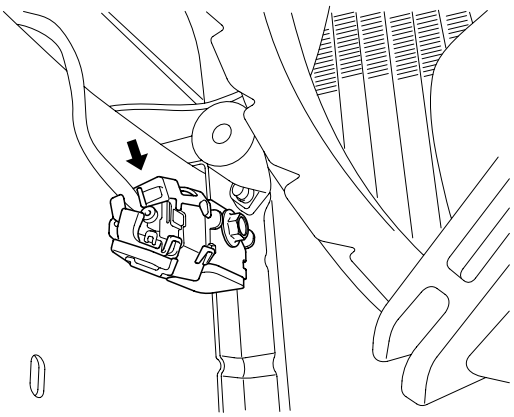

SCMRT6012D

3. Disconnect the Front Impact Sensor connector.
4. Remove the Front Impact Sensor mounting bolt.

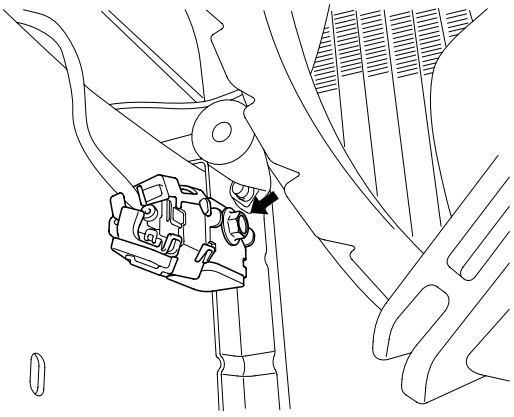

SCMRT6520D

5. Remove the Front Impact Sensor.

INSTALLATION E50C4826

CAUTION

- ***Do not turn the ignition switch ON and do not contact the battery cable while replacing the front impact sensor.***

1. Install the new Front Impact Sensor.
2. Tighten the Front Impact Sensor mounting bolt.

Tightening torque
: 0.7 ~ 0.9 kgf.m (6.8 ~ 9.2 Nm, 5.0 ~ 6.8 lb.ft)

3. Connect the Front Impact Sensor connector and install the connector cover.
4. Reconnect the battery negative cable.
5. After installing the Front Impact Sensor, confirm proper system operation: Turn the ignition switch ON the SRS indicator light should be turned on for about six seconds and then go off.

SIDE IMPACT SENSOR (SIS)

DESCRIPTION E49F823B

The Side Impact Sensor (SIS) system consists of two front SIS which are installed in the center pillar (LH and RH) and two rear SIS which are installed in the rear pillar (LH and RH). They are remote sensors that detect acceleration due to collision at their mounting locations. The primary purpose of the Side Impact Sensor (SIS) is to provide an indication of a collision. The Side Impact Sensor (SIS) sends acceleration data to the SRSCM.

COMPONENTS E86DACCB

[FRONT]

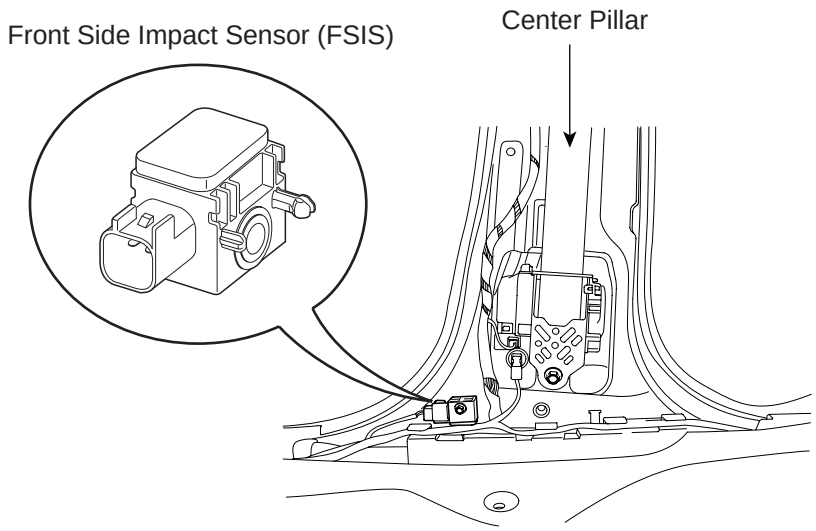

[REAR]

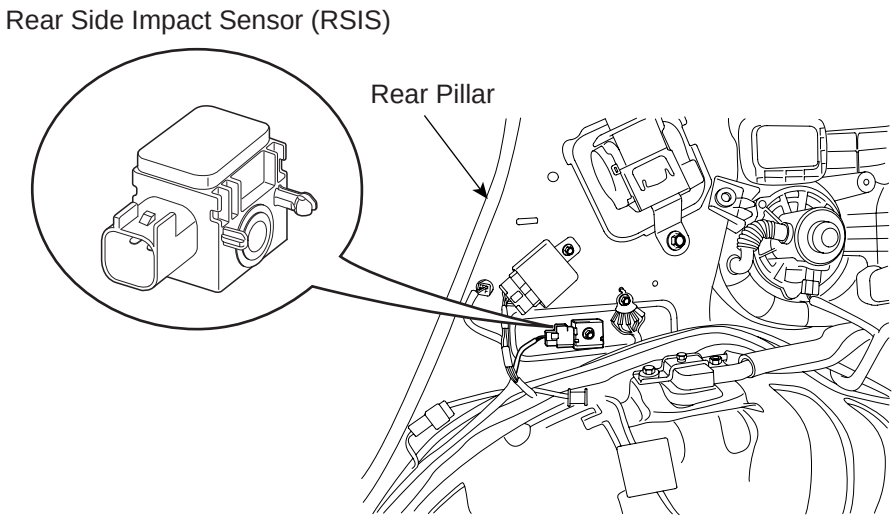

SCMRT6521L

REMOVAL E34BD0EF

FRONT SIDE IMPACT SENSOR

CAUTION

- ***Removal of the airbag must be performed according to the precautions/procedures described previously.***
- ***Before disconnecting the side impact sensor connector(s), disconnect the side airbag connector(s).***
- ***Do not turn the ignition switch ON and do not connect the battery cable while replacing the side impact sensor.***

1. Disconnect the battery negative cable, and wait for at least three minutes before beginning work.
2. Remove the door scuff trim. (Refer to BD group)
3. Remove the center pillar trim. (Refer to BD group)
4. Disconnect the Side Impact Sensor connector and remove the Side Impact Sensor mounting bolt.

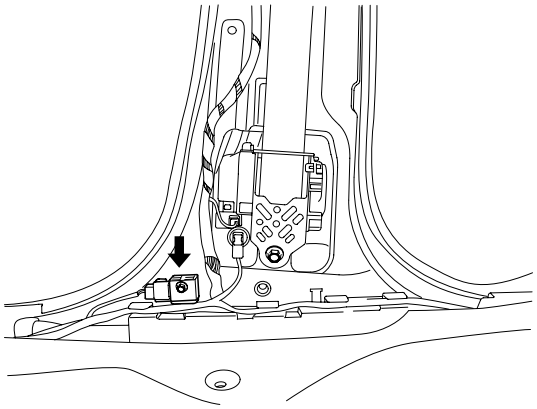

SCMRT6522D

REAR SIDE IMPACT SENSOR

1. Disconnect the battery negative cable and wait for at least three minutes before beginning work.
2. Remove the rear seat. (Refer to BD group)
3. Disconnect the side impact sensor connector.
4. Loosen the side impact sensor mounting bolt and remove the side impact sensor.

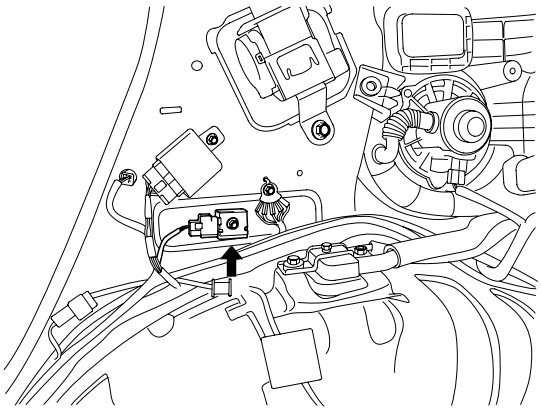

SCMRT6013D

INSTALLATION E88CF110

FRONT SIDE IMPACT SENSOR

CAUTION

- ***Do not turn the ignition switch ON and do not connect the battery cable while replacing the side impact sensor.***

1. Install the new Side Impact Sensor with the bolt then connect the SRS harness connector to the Side Impact Sensor.

Tightening torque
: 0.7 ~ 0.9 kgf.m (6.8 ~ 9.2 Nm, 5.0 ~ 6.8 lb.ft)

2. Install the center pillar trim. (Refer to BD group)
3. Install the door scuff trim. (Refer to BD group)
4. Reconnect the battery negative cable.
5. After installing the Side Impact Sensor, confirm proper system operation: Turn the ignition switch ON, the SRS indicator light should be turned on for about six seconds and then go off.

REAR SIDE IMPACT SENSOR

CAUTION

- ***Do not turn the ignition switch ON and do not connect the battery cable while replacing the side impact sensor.***

1. Install the new Side Impact Sensor with the bolt then connect the SRS harness connector to the Side Impact Sensor.

Tightening torque
: 0.7 ~ 0.9 kgf.m (6.8 ~ 9.2 Nm, 5.0 ~ 6.8 lb.ft)

2. Install the rear seat. (Refer to BD group)
3. Reconnect the battery negative cable.
4. After installing the Side Impact Sensor, confirm proper system operation: Turn the ignition switch ON, the SRS indicator light should be turned on for about six seconds and then go off.

TROUBLESHOOTING

DESCRIPTION E24ED7B0

HI-SCAN CHECK

1. Turn the ignition switch off.
2. Connect the Hi-Scan Pro connector to the data link connector located under the crash pad.

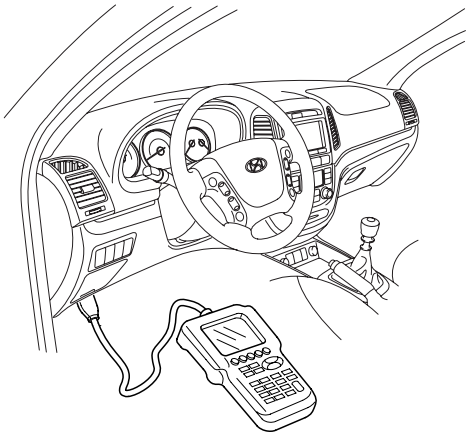

SCMRT6899D

3. Turn the ignition switch on and power on the Hi-Scan Pro.
4. Read DTCs.
5. Find and repair the trouble, and clear the DTCs using Hi-Scan Pro.
6. Disconnect the Hi-Scan Pro.

DIAGNOSTIC TROUBLESHOOTING FLOW

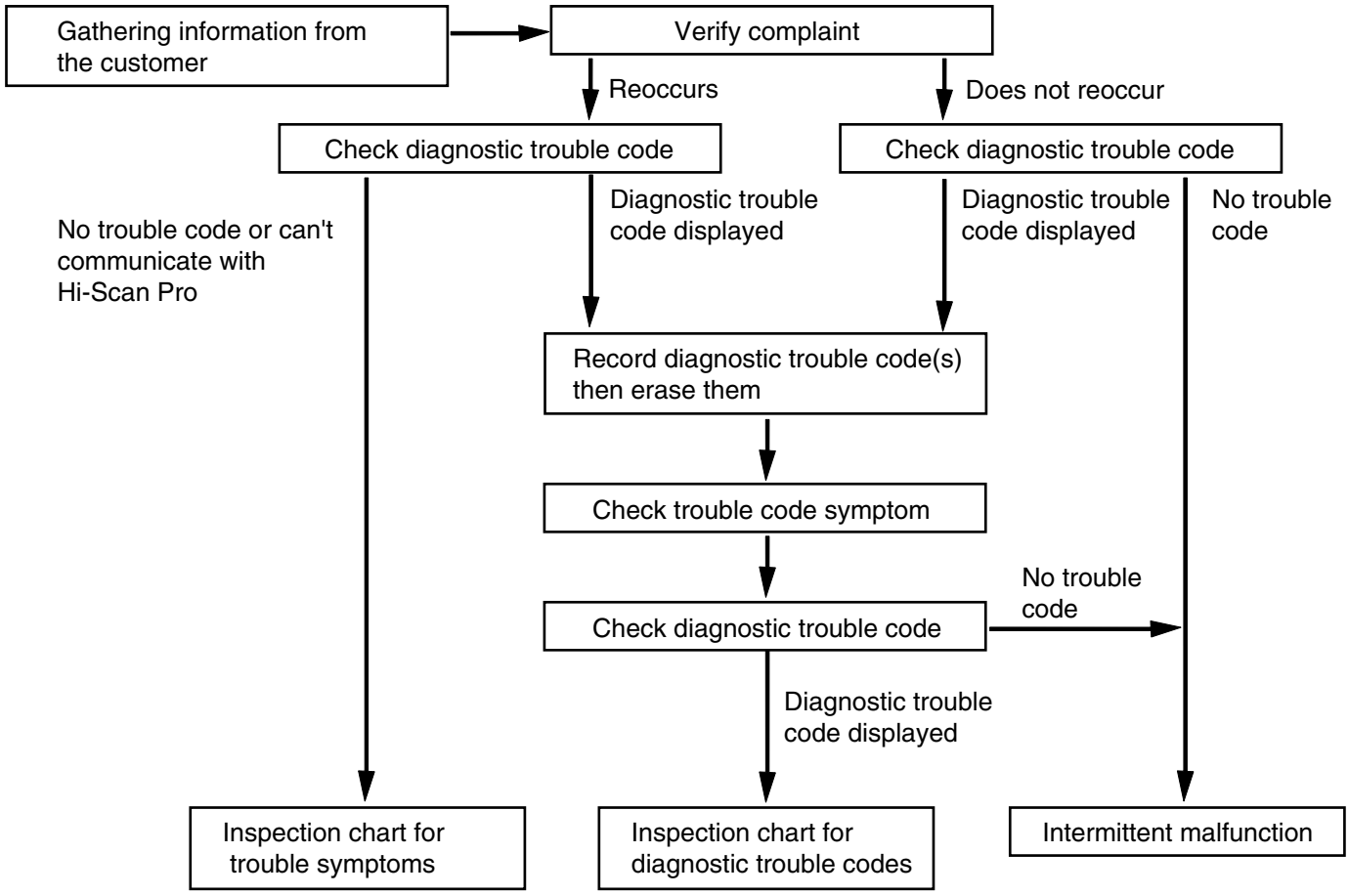

ERA9035A

TERMINAL & CONNECTOR INSPECTION

Be sure to perform "TERMINAL & CONNECTOR INSPECTION" before doing "INSPECTION PROCEDURE" for troubleshooting of each DTC.

1. Visually inspect all connectors related to the affected circuit for damage and secure connection.
2. Inspect terminals for damage and corrosion.

CAUTION

Avoid damaging connectors during the inspection process.

3. Are any problems found?

NO

▶ Go to next step (INSPECTION PROCEDURE).

YES

▶ After repairing the trouble part, check whether DTC occurs or not.

PREPARATION OF INSPECTION

Refer to the following steps while doing "INSPECTION PROCEDURE" which is described in the DTC troubleshooting section.

1. Turn the ignition switch to LOCK.
2. Disconnect the battery negative cable from the battery and wait for at least 3 minutes.
3. Remove the DAB module and disconnect the DAB connector.
4. Disconnect the connectors of the PAB, SAB, CAB, BPT, FIS and SIS.
5. Disconnect the SRSCM connector.

CHECKING OF SHORT OR OPEN CIRCUIT

Refer to the following tips for checking of short or open circuit.

1. Shorting bar is located on the upper side of pin 1 and 2 of SRSCM connector A.
2. When checking the short circuit shorting bar must be opened. Use a plastic clip to put into as a shorting bar opener for disconnecting shorting bar.
3. Use SST Dummy adapter (0957A-2G000) to measure resistance or voltage for checking of short or open circuit.
   Plug it into DAB (BPT) connector to avoid enlarging or damaging the connector pins.

CLEAR THE DTC AND CHECK THE VEHICLE AGAIN

1. Install the DAB module and connect the DAB connector.
2. Connect the connector of the PAB, SAB, CAB, BPT, FIS and SIS.
3. Connect the SRSCM connector.
4. Connect the battery negative cable to the battery.
5. Connect a Hi-Scan(Pro) to the data link connector.
6. Turn the ignition switch to ON.
7. Clear the DTC stored in the SRSCM memory with the Hi-Scan(Pro)
8. Turn the ignition switch to LOCK and wait for at least 30 seconds.
9. Turn the ignition switch to ON and wait for at least 30 seconds.
10. Check the vehicle again with the Hi-Scan(Pro).
    Does the above DTC(s) go off?

YES

▶ Problem is intermittent or was repaired and SRSCM memory was not cleared.

NO

▶ Replace the SRSCM with a new one and then check the vehicle again. At this time, if the vehicle normally operates with a new one, the fault may be the SRSCM. Replace the SRSCM.

CIRCUIT DIAGRAM E4BAAC09

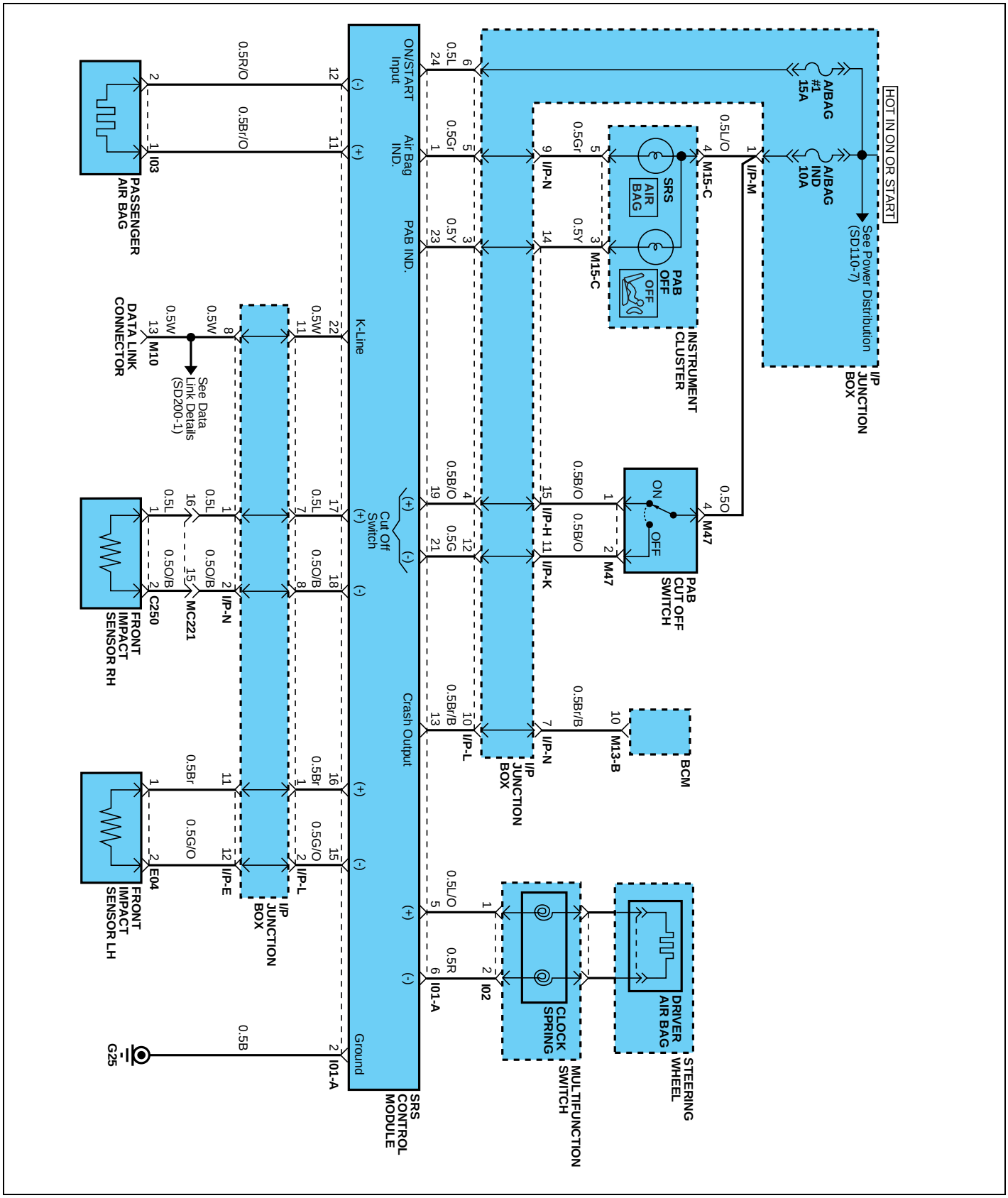

SCMRT6100L

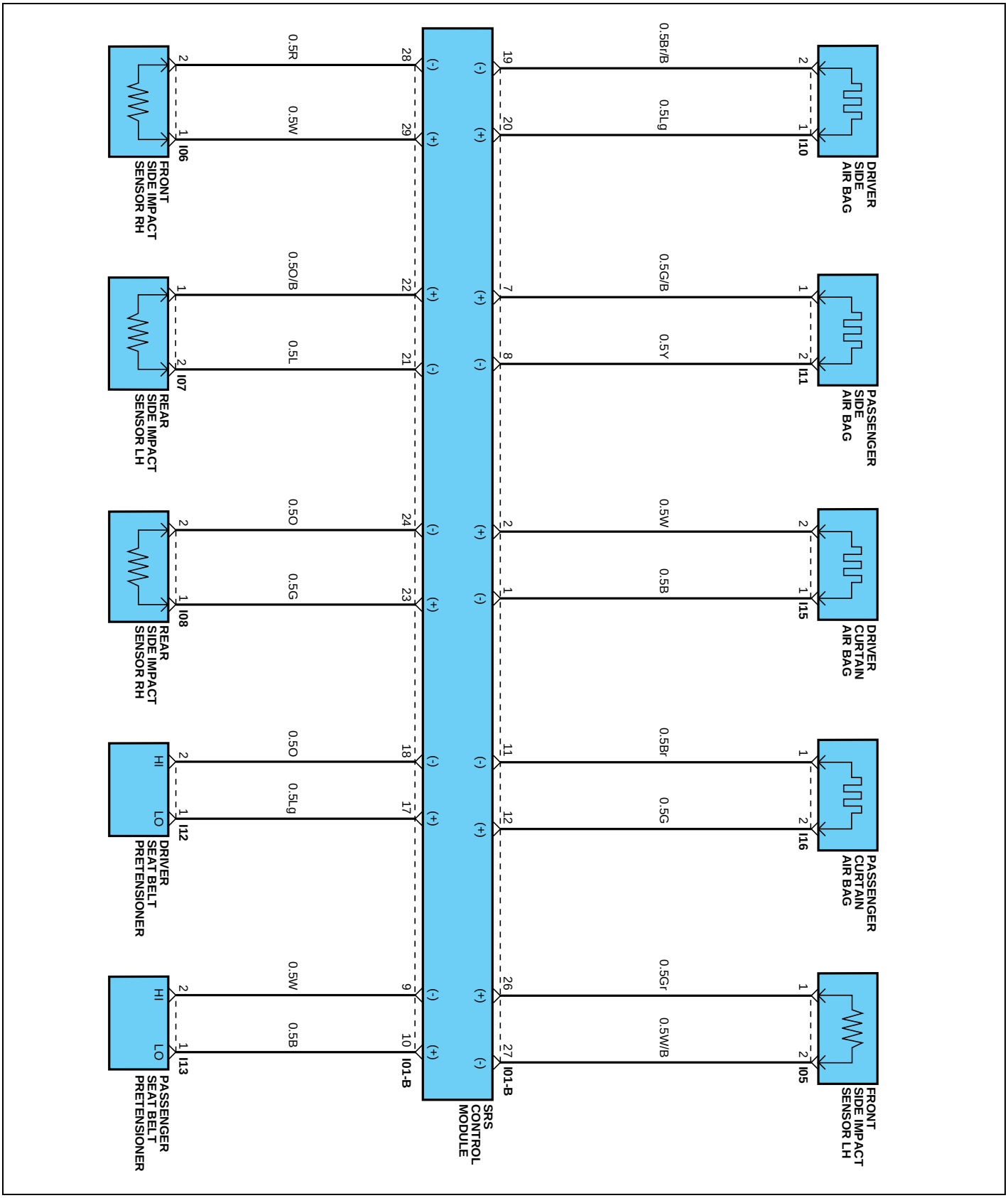
DRIVER SIDE AIR BAG
I10
2
1
0.5Br/B
0.5Lg
PASSENGER SIDE AIR BAG
I11
1
2
0.5G/B
0.5Y
DRIVER CURTAIN AIR BAG
I15
2
1
0.5W
0.5B
PASSENGER CURTAIN AIR BAG
I16
1
2
0.5Br
0.5G
FRONT SIDE IMPACT SENSOR LH
I05
1
2
0.5Gr
0.5W/B
FRONT SIDE IMPACT SENSOR RH
I06
2
1
0.5R
0.5W
REAR SIDE IMPACT SENSOR LH
I07
1
2
0.5O/B
0.5L
REAR SIDE IMPACT SENSOR RH
I08
2
1
0.5O
0.5G
DRIVER SEAT BELT PRETENSIONER
I12
HI
LO
2
1
0.5O
0.5Lg
PASSENGER SEAT BELT PRETENSIONER
I13
HI
LO
2
1
0.5W
0.5B
SRS CONTROL MODULE
I01-B
19 (-)
20 (+)
7 (+)
8 (-)
2 (+)
1 (-)
11 (-)
12 (+)
26 (+)
27 (-)
28 (-)
29 (+)
22 (+)
21 (-)
24 (-)
23 (+)
18 (-)
17 (+)
9 (-)
10 (+)

SCMRT6101L

SRSCM CONNECTOR TERMINAL E72E8805

6	5	4	3	2	1
12	11	10	9	8	7
18	17	16	15	14	13
24	23	22	21	20	19

CONNECTOR A (M71)

10	9	8	7	6	5	4	3	2	1
20	19	18	17	16	15	14	13	12	11
30	29	28	27	26	25	24	23	22	21
40	39	38	37	36	35	34	33	32	31

CONNECTOR B (A01)

Shorting bar (▭) : located on the upper side of pin 1 and 2 of SRSCM connector A
Note : For short circuit check, shorting bar must be opened. Use a plastic clip as a shorting bar opener for disconnecting shorting bar.

Pin	Function (Connector A)	Pin	Function (Connector B)
1	Airbag Warning Lamp	1	Curtain Airbag [Driver] Low
2	Ground	2	Curtain Airbag [Driver] High
3	-	3	-
4	-	4	-
5	Driver Airbag High	5	-
6	Driver Airbag Low	6	-
7	-	7	Side Airbag [Front-Passenger] High
8	-	8	Side Airbag [Front-Passenger] Low
9	-	9	Seat Belt Pretensioner [Front-Passenger] Low
10	-	10	Seat Belt Pretensioner [Front-Passenger] High
11	Passenger Airbag High	11	Curtain Airbag [Passenger] Low
12	Passenger Airbag Low	12	Curtain Airbag [Passenger] High
13	Crash Output	13	-
14	-	14	-
15	Front Impact Sensor [Driver] Low	15	-
16	Front Impact Sensor [Driver] High	16	-
17	Front Impact Sensor [Passenger] High	17	Seat Belt Pretensioner [Front-Driver] High
18	Front Impact Sensor [Passenger] Low	18	Seat Belt Pretensioner [Front-Driver] Low
19	PAD Switch High	19	Side Airbag [Front-Driver] Low
20	-	20	Side Airbag [Front-Driver] High
21	PAD Switch Low	21	Side Impact Sensor [Rear-Driver] Low
22	K-Line Diagnostic	22	Side Impact Sensor [Rear-Driver] High
23	PAD Lamp	23	Side Impact Sensor [Rear-Passenger] High
24	Ignition	24	Side Impact Sensor [Rear-Passenger] Low
		25	-
		26	Side Impact Sensor [Driver] High
		27	Side Impact Sensor [Driver] Low
		28	Side Impact Sensor [Passenger] Low
		29	Side Impact Sensor [Passenger] High
		30	-
		31	-
		32	-
		33	-
		34	-
		35	-
		36	-
		37	-
		38	-
		39	-
		40	-

DIAGNOSTIC TROUBLE CODES (DTC)

DTC	FAULT DESCRIPTION	REMARK
B1101	Battery Voltage High	RT - 43
B1102	Battery Voltage Low	RT - 43
B1326	Front Impact Sensor [Driver] Short to Ground	RT - 46
B1327	Front Impact Sensor [Driver] Short to Battery	RT - 48
B1328	Front Impact Sensor [Driver] Defect	RT - 50
B1329	Front Impact Sensor [Driver] Communication Error	RT - 50
B1330	Front Impact Sensor [Driver] Wrong ID	RT - 53
B1331	Front Impact Sensor [Passenger] Short to Ground	RT - 46
B1332	Front Impact Sensor [Passenger] Short to Battery	RT - 48
B1333	Front Impact Sensor [Passenger] Defect	RT - 50
B1334	Front Impact Sensor [Passenger] Communication Error	RT - 50
B1335	Front Impact Sensor [Passenger] Wrong ID	RT - 53
B1346	Driver Airbag Resistance Too High	RT - 54
B1347	Driver Airbag Resistance Too Low	RT - 54
B1348	Driver Airbag Circuit Short to Ground	RT - 57
B1349	Driver Airbag Circuit Short to Battery	RT - 60
B1352	Passenger Airbag Resistance Too High	RT - 63
B1353	Passenger Airbag Resistance Too Low	RT - 63
B1354	Passenger Airbag Circuit Short to Ground	RT - 66
B1355	Passenger Airbag Circuit Short to Battery	RT - 68
B1361	Seat Belt Pretensioner [Front-Driver] Resistance Too High	RT - 70
B1362	Seat Belt Pretensioner [Front-Driver] Resistance Too Low	RT - 70
B1363	Seat Belt Pretensioner [Front-Driver] Circuit Short to Ground	RT - 73
B1364	Seat Belt Pretensioner [Front-Driver] Circuit Short to Battery	RT - 75
B1367	Seat Belt Pretensioner [Front-Passenger] Resistance Too High	RT - 70
B1368	Seat Belt Pretensioner [Front-Passenger] Resistance Too Low	RT - 70
B1369	Seat Belt Pretensioner [Front-Passenger] Circuit Short to Ground	RT - 73
B1370	Seat Belt Pretensioner [Front-Passenger] Circuit Short to Battery	RT - 75
B1378	Side Airbag [Front-Driver] Resistance Too High	RT - 78
B1379	Side Airbag [Front-Driver] Resistance Too Low	RT - 78
B1380	Side Airbag [Front-Driver] Circuit Short to Ground	RT - 81
B1381	Side Airbag [Front-Driver] Circuit Short to Battery	RT - 83
B1382	Side Airbag [Front-Passenger] Resistance Too High	RT - 78
B1383	Side Airbag [Front-Passenger] Resistance Too Low	RT - 78
B1384	Side Airbag [Front-Passenger] Circuit Short to Ground	RT - 81
B1385	Side Airbag [Front-Passenger] Circuit Short to Battery	RT - 83
B1395	Squib Interconnection Fault	RT - 85

DTC	FAULT DESCRIPTION	REMARK
B1400	Side Impact Sensor [Front-Driver] Defect	RT - 86
B1401	Side Impact Sensor [Front-Driver] Short to Ground	RT - 89
B1402	Side Impact Sensor [Front-Driver] Short to Battery	RT - 91
B1403	Side Impact Sensor [Front-Passenger] Defect	RT - 86
B1404	Side Impact Sensor [Front-Passenger] Short to Ground	RT - 89
B1405	Side Impact Sensor [Front-Passenger] Short to Battery	RT - 91
B1409	Side Impact Sensor [Front-Driver] Communication Error	RT - 86
B1410	Side Impact Sensor [Front-Passenger] Communication Error	RT - 86
B1412	Side Impact Sensor [Rear-Driver] Communication Error	RT - 94
B1413	Side Impact Sensor [Rear-Passenger] Communication Error	RT - 94
B1414	Side Impact Sensor [Front-Driver] Wrong ID	RT - 97
B1415	Side Impact Sensor [Front-Passenger] Wrong ID	RT - 97
B1416	Side Impact Sensor [Rear-Driver] Wrong ID	RT - 97
B1417	Side Impact Sensor [Rear-Passenger] Wrong ID	RT - 97
B1418	Side Impact Sensor [Rear-Driver] Defect	RT - 94
B1419	Side Impact Sensor [Rear-Passenger] Defect	RT - 94
B1451	Side Impact Sensor [Rear-Driver] Short to Ground	RT - 98
B1452	Side Impact Sensor [Rear-Driver] Short to Battery	RT - 100
B1454	Side Impact Sensor [Rear-Passenger] Short to Ground	RT - 98
B1455	Side Impact Sensor [Rear-Passenger] Short to Battery	RT - 100
B1473	Curtain Airbag [Driver] Resistance Too High	RT - 102
B1474	Curtain Airbag [Driver] Resistance Too Low	RT - 102
B1475	Curtain Airbag [Driver] Circuit Short to Ground	RT - 106
B1476	Curtain Airbag [Driver] Circuit Short to Battery	RT - 108
B1477	Curtain Airbag [Passenger] Resistance Too High	RT - 102
B1478	Curtain Airbag [Passenger] Resistance Too Low	RT - 102
B1479	Curtain Airbag [Passenger] Circuit Short to Ground	RT - 106
B1480	Curtain Airbag [Passenger] Circuit Short to Battery	RT - 108
B1527	Passenger Airbag Deactivation Switch Open or Short to Battery	RT - 111
B1528	Passenger Airbag Deactivation Switch Short or Short to Ground	RT - 115
B1529	Passenger Airbag Deactivation Switch Defect	RT - 119
B1530	Passenger Airbag Deactivation Switch Instability	RT - 119
B1620	Supplemental Restraint System Control Module Internal Fault (Replace SRSCM)	RT - 123
B1650	Crash Recorded - Frontal (Replace SRSCM)	RT - 124
B1651	Crash Recorded - Driver Side (Replace SRSCM)	RT - 124
B1652	Crash Recorded - Passenger Side (Replace SRSCM)	RT - 124
B1657	Crash Recorded - Belt Pretensioner Only	RT - 124
B1658	Belt Pretensioner 6 times Deployment (Replace SRSCM)	RT - 124

DTC	FAULT DESCRIPTION	REMARK
B2500	Warning Lamp Fault	RT - 125
B2505	Passenger Airbag Deactivation Lamp Fault	RT - 129

DTC B1101 BATTERY VOLTAGE HIGH
DTC B1102 BATTERY VOLTAGE LOW

DTC DESCRIPTION E4E28840

The SRSCM sets above DTC(s) if it detects that the battery voltage of restraints system is too high or too low. When the voltage returns to normal, the SRS warning light automatically goes off and a malfunction is no longer indicated.

DTC DETECTING CONDITION E725F7D5

DTC	Condition	Probable cause
B1101	Battery Voltage > 17.0 V for 4 seconds after IG ON	• Battery • Generator • Wiring Harness • SRSCM
B1102	Battery Voltage < 8.38 V for 4 seconds after IG ON	

SCHEMATIC DIAGRAM E16BCD55

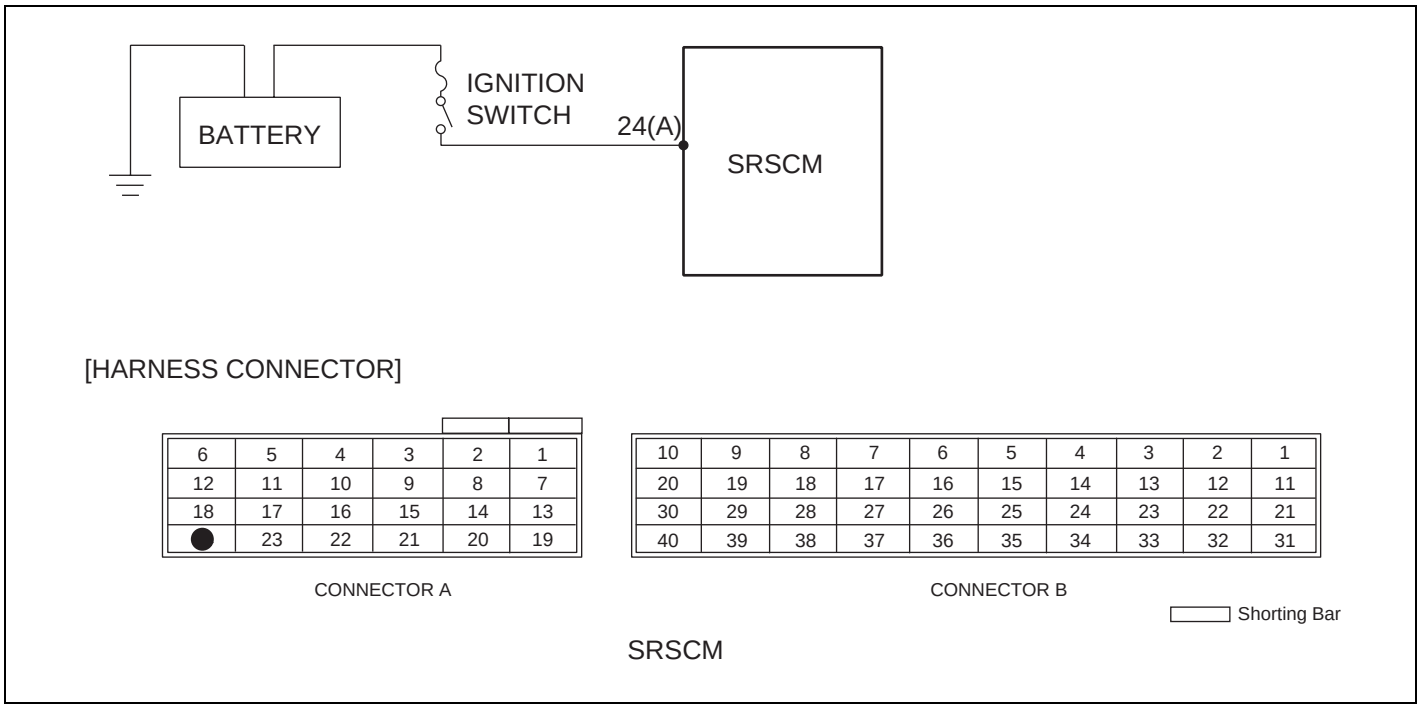

ERBF500N

SPECIFICATION E76738DA

Voltage : 8.38 ~ 17.0 V

TERMINAL & CONNECTOR INSPECTION EDA5878D

Refer to the DESCRIPTION in this TROUBLESHOOTING section. (See page RT - 36)

INSPECTION PROCEDURE E6C2A87D

1. PREPARATION
   Refer to the DESCRIPTION in this TROUBLESHOOTING section. (See page RT - 36)

2. CHECK SOURCE VOLTAGE

   1) Turn the ignition switch to ON.

   2) Measure voltage between the terminal 24(A) of SRSCM harness connector and chassis ground.

Specification (voltage) : 8.38 ~ 17.0 V

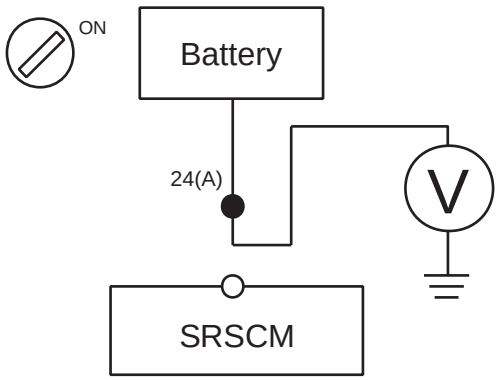

ERBF501Q

   3) Is the measured voltage within specification?

NO

▶ Check the battery.

YES

▶ Replace the SRSCM with a new one, and then check the vehicle again. At this time, if the vehicle normally operates with a new SRSCM, the fault may be the SRSCM(Replace SRSCM).

3. CHECK THE BATTERY

   1) Check the battery.
   ● Refer to "EE" group in this SERVICE MANUAL.
   Is the battery normal?

YES

▶ Check the generator.

NO

▶ Repair or replace the battery.(Refer to "EE" group in this SERVICE MANUAL)

4. CHECK GENERATOR

1) Check the generator.
● Refer to "EE" group in this SERVICE MANUAL.
Is the generator normal?

YES

▶ Check wiring harness.

NO

▶ Repair or replace the generator.(Refer to "EE" group in this SERVICE MANUAL)

5. CHECK WIRING HARNESS

1) Check the wiring harness between the battery and SRSCM.
Is the wiring harness normal?

YES

▶ Check the DTC again.

NO

▶ Repair or Replace the wiring harness.

6. CHECK THE DTC AGAIN

1) Turn the ignition switch to LOCK and wait for at least 30 seconds.

CAUTION

Check again that the battery negative cable is disconnected from the battery.

2) Install the DAB module and connect the DAB connector.

3) Connect the connectors of the PAB, SAB, CAB, BPT, FIS and SIS.

4) Connect the SRSCM connector.

5) Connect the battery negative cable to the battery.

6) Connect a Hi-Scan(Pro) to the data link connector.

7) Turn the ignition switch to ON and check the vehicle again.
Does Hi-Scan (Pro) indicate any DTC?

YES

▶ Perform the troubleshooting procedures associated with those codes.

NO

▶ Problem is intermittent or was repaired and SRSCM memory was not cleared.

DTC B1326 FRONT IMPACT SENSOR [DRIVER] SHORT TO GROUND
DTC B1331 FRONT IMPACT SENSOR [PASSENGER] SHORT TO GROUND

DTC DESCRIPTION E5EE0DD3

The detecting system for front crash consists of the SRSCM and two Front Impact Sensors (FIS). The SRSCM sets above DTC(s) if it detects short to ground on the FIS circuit.

DTC DETECTING CONDITION ED0DA1A6

DTC	Condition	Probable cause
B1326 B1331	• Short to ground between FIS and SRSCM • Front Impact Sensor(FIS) Malfunction • SRSCM Malfunction	• Short to ground on Wiring Harness • Front Impact Sensor(FIS) • SRSCM

SCHEMATIC DIAGRAM EE068E9D

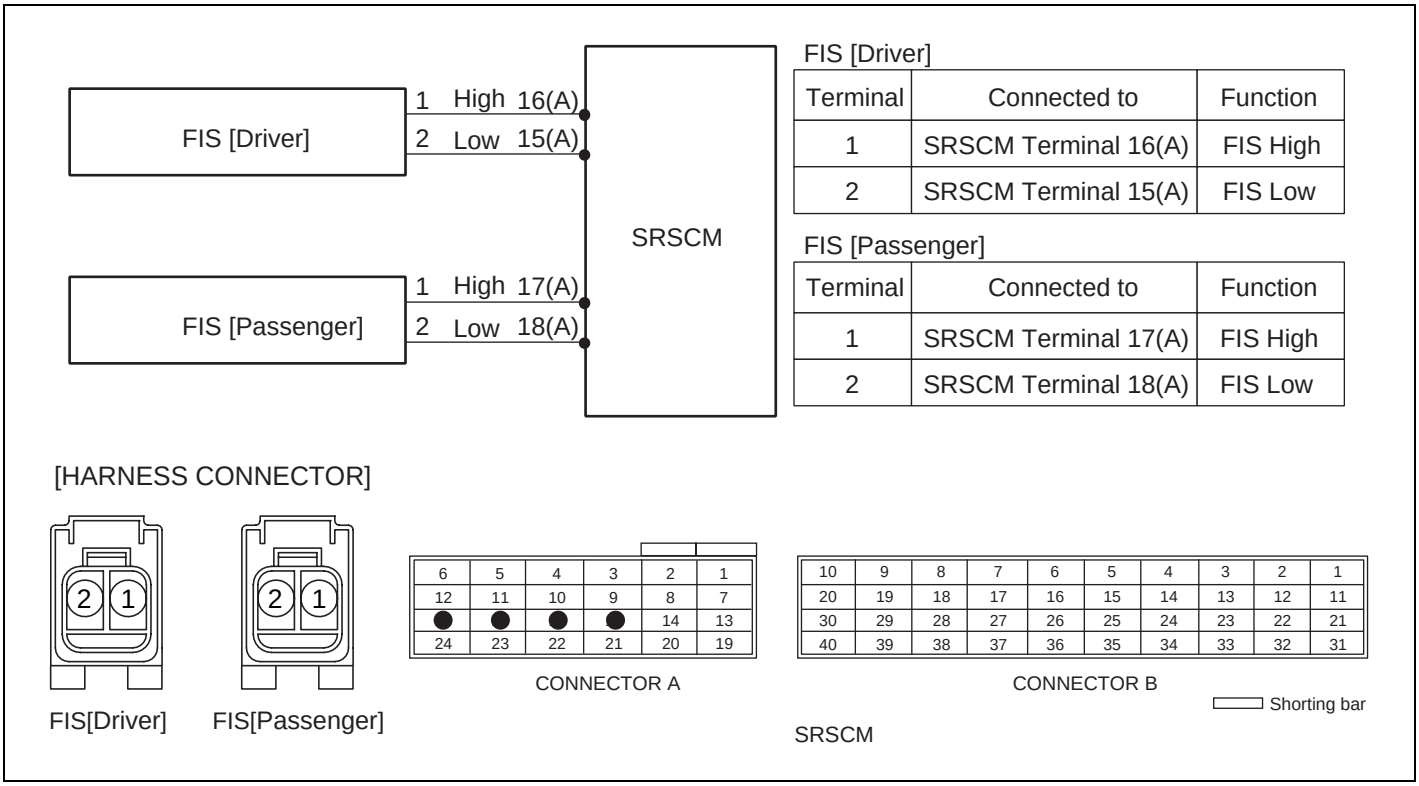

FIS [Driver]

Terminal	Connected to	Function
1	SRSCM Terminal 16(A)	FIS High
2	SRSCM Terminal 15(A)	FIS Low

FIS [Passenger]

Terminal	Connected to	Function
1	SRSCM Terminal 17(A)	FIS High
2	SRSCM Terminal 18(A)	FIS Low

SCMRT6110L

TERMINAL & CONNECTOR INSPECTION EB9AB00B

Refer to the DESCRIPTION in this TROUBLESHOOTING section. (See page RT - 36)

INSPECTION PROCEDURE EBA9DD37

1. PREPARATION
   Refer to the DESCRIPTION in this TROUBLESHOOTING section. (See page RT - 36)

2. CHECK FIS CIRCUIT

1) Measure resistance between the terminal 1 of FIS harness connector and chassis ground.

specification(resistance) : ∞ Ω

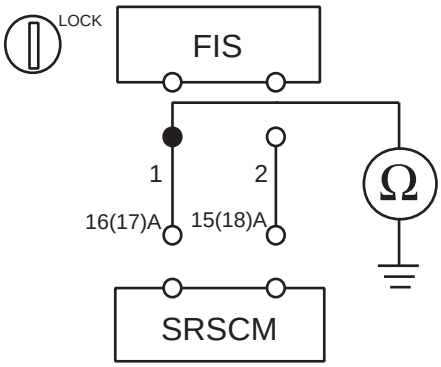

ERBF500R

2) Is the measured resistance within specification?

YES

▶ Check Front Impact Sensor.

NO

▶ Repair or replace the wiring harness between the FIS and the SRSCM.

3. CHECK FRONT IMPACT SENSOR

1) Replace the front impact sensor(FIS) with a new one.
● Refer to "Front Impact Sensor(FIS)" section in this SERVICE MANUAL.

2) Install the DAB module and connect the DAB connector.

3) Connect the connectors of the PAB, SAB, CAB, BPT, FIS and SIS.

4) Connect the SRSCM connector.

5) Connect the battery negative cable to the battery.

6) Connect a Hi-Scan(Pro) to the data link connector.

7) Turn the ignition switch to ON and check the vehicle again.
Does Hi-Scan (Pro) indicate any DTC related to FIS?

YES

▶ Go to next step.

NO

▶ Replace the Front Impact Sensor(FIS).

4. CLEAR THE DTC AND CHECK THE DTC AGAIN
Refer to the DESCRIPTION in this TROUBLESHOOTING section. (See page RT - 36)

DTC B1327 FRONT IMPACT SENSOR [DRIVER] SHORT TO BATTERY
DTC B1332 FRONT IMPACT SENSOR [PASSENGER] SHORT TO BATTERY

DTC DESCRIPTION ECF62D8B

The detecting system for front crash consists of the SRSCM and two Front Impact Sensors (FIS). The SRSCM sets above DTC(s) if it detects short to battery on the FIS circuit.

DTC DETECTING CONDITION EBBDEFA3

DTC	Condition	Probable cause
B1327 B1332	• Short to battery line between FIS and SRSCM • Front Impact Sensor(FIS) Malfunction • SRSCM Malfunction	• Short to battery line on Wiring Harness • Front Impact Sensor(FIS) • SRSCM

SCHEMATIC DIAGRAM EC734759

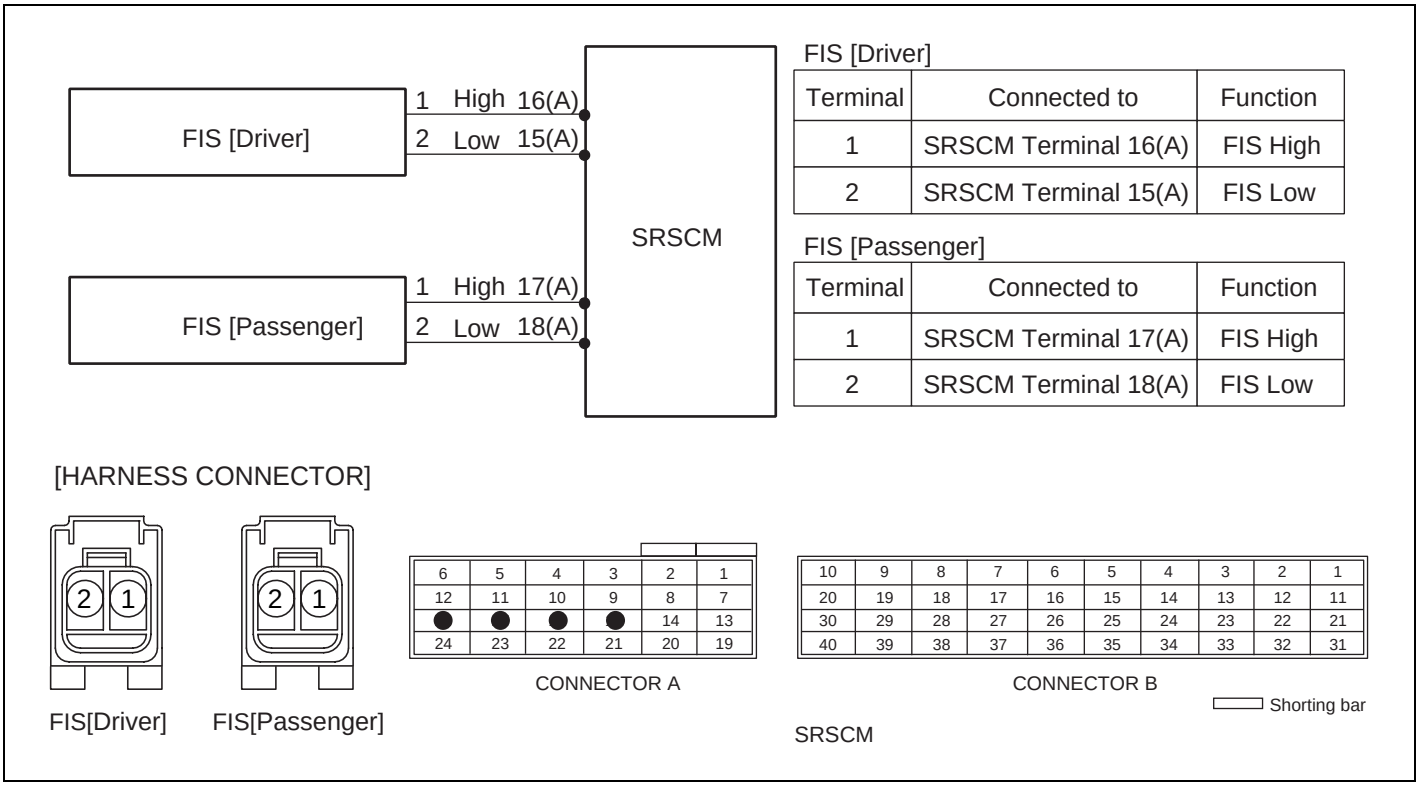

FIS [Driver]

Terminal	Connected to	Function
1	SRSCM Terminal 16(A)	FIS High
2	SRSCM Terminal 15(A)	FIS Low

FIS [Passenger]

Terminal	Connected to	Function
1	SRSCM Terminal 17(A)	FIS High
2	SRSCM Terminal 18(A)	FIS Low

SCMRT6110L

TERMINAL & CONNECTOR INSPECTION E283653D

Refer to the DESCRIPTION in this TROUBLESHOOTING section. (See page RT - 36)

INSPECTION PROCEDURE E29FB001

1. PREPARATION
   Refer to the DESCRIPTION in this TROUBLESHOOTING section. (See page RT - 36)

2. CHECK FIS CIRCUIT

1) Connect the battery negative cable to the battery.

2) Turn the ignition switch to ON.

3) Measure voltage between the terminal 1 of FIS harness connector and chassis ground.

specification(voltage) : Approximately 0 V

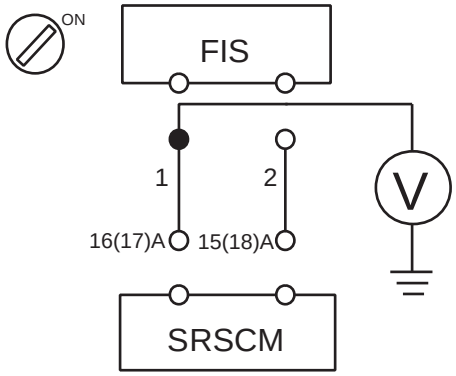

ERBF500S

4) Is the measured voltage within specification?

YES

▶ Check Front Impact Sensor.

NO

▶ Repair the short to battery line circuit on wiring harness between the FIS and the SRSCM.

3. CHECK FRONT IMPACT SENSOR

1) Replace the front impact sensor(FIS) with a new one.
● Refer to "Front Impact Sensor(FIS)" section in this SERVICE MANUAL.

2) Install the DAB module and connect the DAB connector.

3) Connect the connectors of the PAB, SAB, CAB, BPT, FIS and SIS.

4) Connect the SRSCM connector.

5) Connect the battery negative cable to the battery.

6) Connect a Hi-Scan(Pro) to the data link connector.

7) Turn the ignition switch to ON and check the vehicle again.
Does Hi-Scan (Pro) indicate any DTC related to FIS?

YES

▶ Go to next step.

NO

▶ Replace the Front Impact Sensor(FIS).

4. CLEAR THE DTC AND CHECK THE DTC AGAIN
Refer to the DESCRIPTION in this TROUBLESHOOTING section. (See page RT - 36)

DTC B1328 FRONT IMPACT SENSOR [DRIVER] DEFECT
DTC B1329 FRONT IMPACT SENSOR [DRIVER] COMMUNICATION ERROR
DTC B1333 FRONT IMPACT SENSOR [PASSENGER] DEFECT
DTC B1334 FRONT IMPACT SENSOR [PASSENGER] COMMUNICATION ERROR

DTC DESCRIPTION E3EC260A

The detecting system for front crash consists of the SRSCM and two Front Impact Sensors (FIS). The SRSCM sets above DTC(s) if it detects that any FIS is defective or there is communication error between any FIS and the SRSCM.

DTC DETECTING CONDITION E0BDC22F

DTC	Condition	Probable cause
B1328 B1329 B1333 B1334	• Open between FIS and SRSCM • Front Impact Sensor(FIS) Malfunction • SRSCM Malfunction	• Wiring Harness • Front Impact Sensor(FIS) • SRSCM

SCHEMATIC DIAGRAM E2AA4609

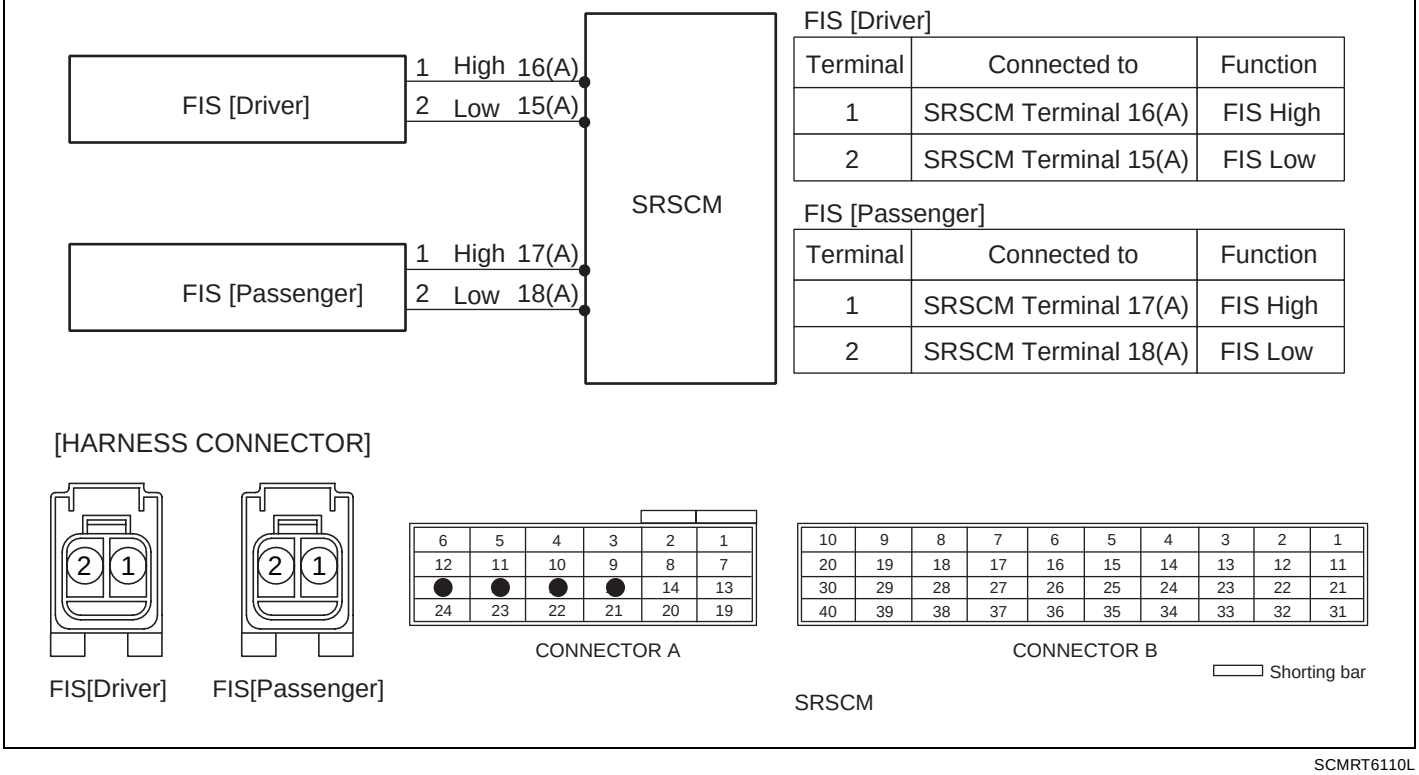

FIS [Driver]

Terminal	Connected to	Function
1	SRSCM Terminal 16(A)	FIS High
2	SRSCM Terminal 15(A)	FIS Low

FIS [Passenger]

Terminal	Connected to	Function
1	SRSCM Terminal 17(A)	FIS High
2	SRSCM Terminal 18(A)	FIS Low

SCMRT6110L

TERMINAL & CONNECTOR INSPECTION ECAC7931

Refer to the DESCRIPTION in this TROUBLESHOOTING section. (See page RT - 36)

INSPECTION PROCEDURE EB342E09

1. PREPARATION
   Refer to the DESCRIPTION in this TROUBLESHOOTING section. (See page RT - 36)

2. CHECK FIS CIRCUIT

   1) Measure resistance between the terminal 1 of FIS harness connector and the terminal 16(17) of SRSCM harness connector (A).

   2) Measure resistance between the terminal 2 of FIS harness connector and the terminal 15(18) of SRSCM harness connector (A).

Specification (resistance) : below 1 Ω

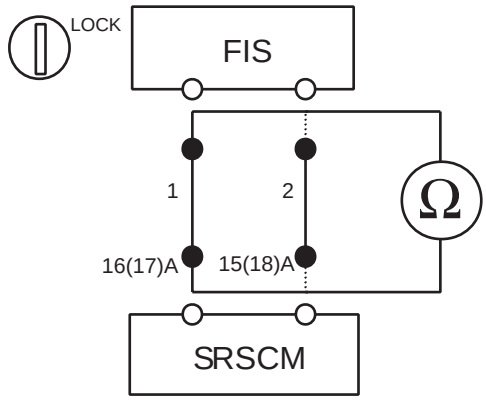

ERBF500W

   3) Is the measured resistance within specification?

YES

▶ Check Front Impact Sensor.

NO

▶ Repair or replace the wiring harness between the FIS and the SRSCM.

3. CHECK FRONT IMPACT SENSOR

   1) Replace the front impact sensor(FIS) with a new one.
   ● Refer to "Front Impact Sensor(FIS)" section in this SERVICE MANUAL.

   2) Install the DAB module and connect the DAB connector.

   3) Connect the connectors of the PAB, SAB, CAB, BPT, FIS and SIS.

   4) Connect the SRSCM connector.

   5) Connect the battery negative cable to the battery.

   6) Connect a Hi-Scan(Pro) to the data link connector.

7) Turn the ignition switch to ON and check the vehicle again.
Does Hi-Scan (Pro) indicate any DTC related to FIS?

YES

▶ Go to next step.

NO

▶ Replace the Front Impact Sensor(FIS).

4. CLEAR THE DTC AND CHECK THE VEHICLE AGAIN
Refer to the DESCRIPTION in this TROUBLESHOOTING section. (See page RT - 36)

DTC B1330 FRONT IMPACT SENSOR [DRIVER] WRONG ID
DTC B1335 FRONT IMPACT SENSOR [PASSENGER] WRONG ID

DTC DESCRIPTION ECF43815

The detecting system for front crash consists of the SRSCM and two Front Impact Sensors (FIS). The SRSCM sets above DTC(s) if it detects wrong FIS is used.

DTC DETECTING CONDITION EF87DBCC

DTC	Condition	Probable cause
B1330 B1335	• Wrong Front Impact Sensor(FIS) • SRSCM Malfunction	• Front Impact Sensor(FIS) • SRSCM

SCHEMATIC DIAGRAM E14A21C4

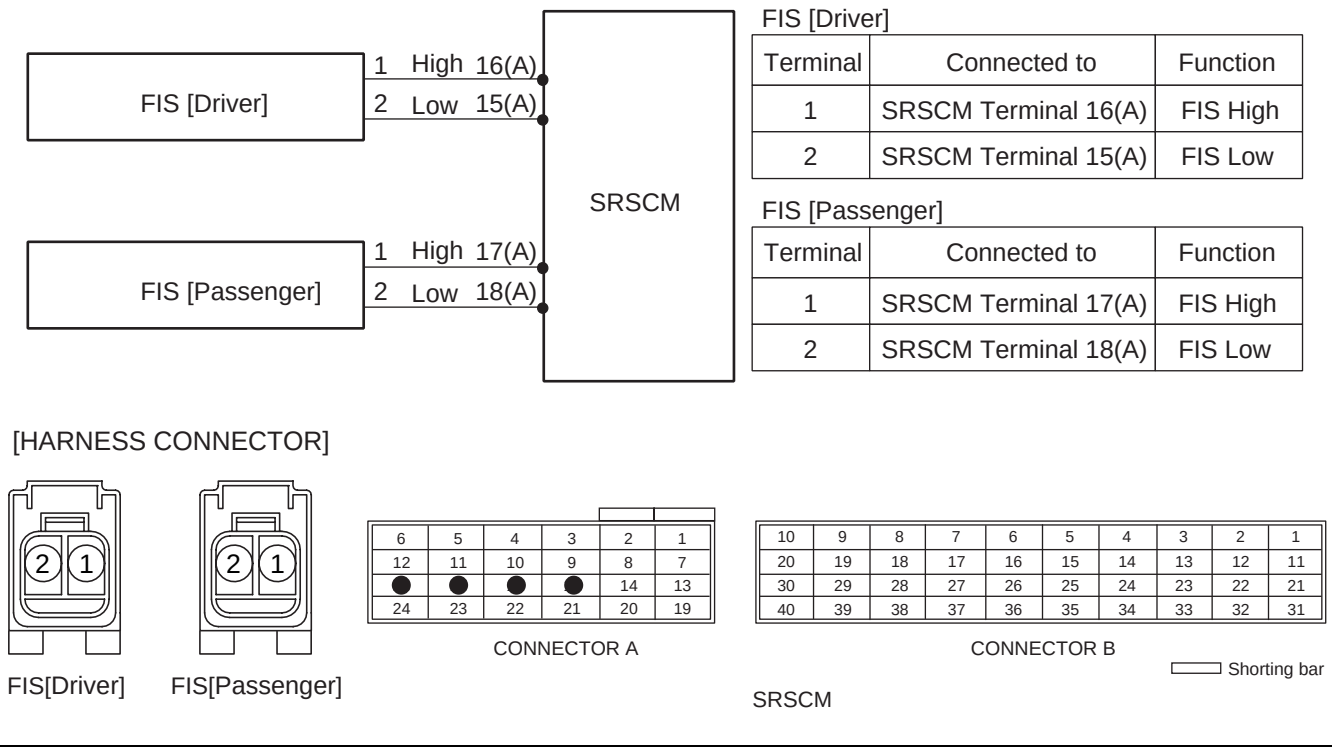

FIS [Driver]

Terminal	Connected to	Function
1	SRSCM Terminal 16(A)	FIS High
2	SRSCM Terminal 15(A)	FIS Low

FIS [Passenger]

Terminal	Connected to	Function
1	SRSCM Terminal 17(A)	FIS High
2	SRSCM Terminal 18(A)	FIS Low

SCMRT6110L

TERMINAL & CONNECTOR INSPECTION E16FA0B2

Refer to the DESCRIPTION in this TROUBLESHOOTING section. (See page RT - 36)

INSPECTION PROCEDURE E171444B

If above DTC is detected replace the Front Impact Sensor.

DTC B1346 DRIVER AIRBAG RESISTANCE TOO HIGH
DTC B1347 DRIVER AIRBAG RESISTANCE TOO LOW

DTC DESCRIPTION EFB92994

The Driver Airbag circuit consists of the SRSCM, Clockspring and the Driver Airbag (DAB). The SRSCM sets above DTC(s) if it detects that the resistance of DAB squib is too high or low.

DTC DETECTING CONDITION E7B42F6E

DTC	Condition	Probable cause
B1346 B1347	• Too high or low resistance between DAB high(+) and DAB low (-) • Driver Airbag (DAB) Malfunction • Clockspring Malfunction • SRSCM Malfunction	• Open or short circuit on wiring harness • Driver Airbag (DAB) squib • Clockspring • SRSCM

SCHEMATIC DIAGRAM E43B7579

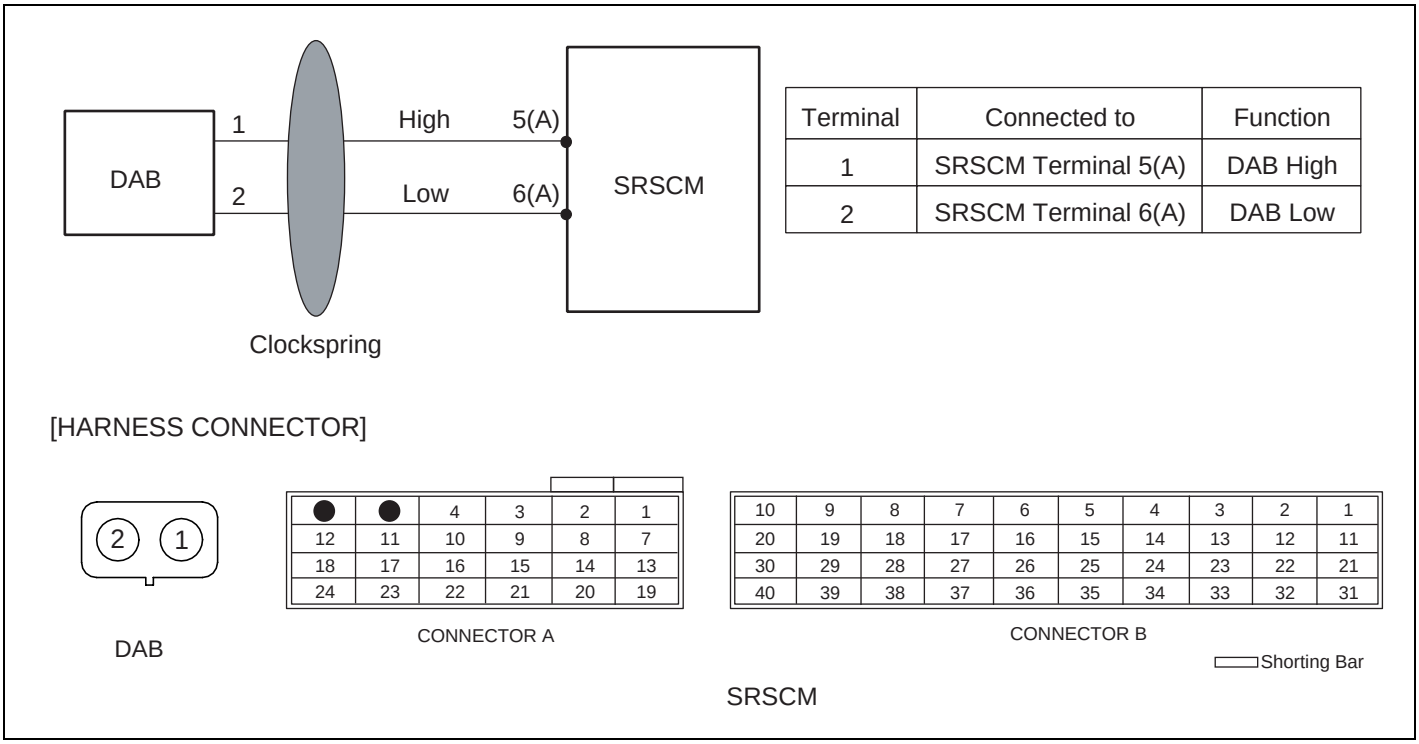

Terminal	Connected to	Function
1	SRSCM Terminal 5(A)	DAB High
2	SRSCM Terminal 6(A)	DAB Low

SCMRT6120L

SPECIFICATION E28BE0B8

DAB resistance : 1.4 ~ 6.2 Ω

TERMINAL & CONNECTOR INSPECTION E66FD84C

Refer to the DESCRIPTION in this TROUBLESHOOTING section. (See page RT - 36)

INSPECTION PROCEDURE EBC88CD3

1. PREPARATION
   Refer to the DESCRIPTION in this TROUBLESHOOTING section. (See page RT - 36)

2. CHECK DAB RESISTANCE

   CAUTION

   Never attempt to measure the circuit resistance of the airbag module(squib) even if you are using the specified tester.

   1) Connect the Dummy and the Dummy Adapter on DAB harness connector.
      ●Refer to "SPECIAL SERVICE TOOL" section in this SERVICE MANUAL for the SST No. of Dummy and Dummy Adapter.

   2) Measure resistance between the terminal 5 and 6 of SRSCM harness connector(A).

Specification (resistance) : 1.4 ~ 6.2 Ω

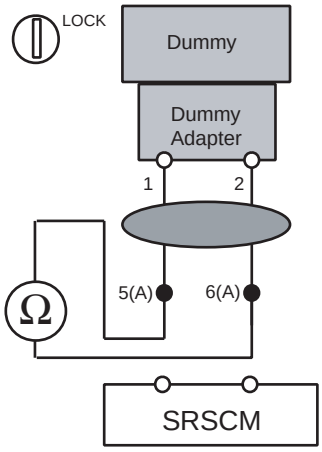

SCMRT6121L

   3) Is the measured resistance within specification?

NO

▶ Check open circuit.

YES

▶ Replace the Driver Airbag(DAB) module.

3. CHECK OPEN CIRCUIT

   1) Measure resistance between the terminal 1 of DAB harness connector and the terminal 5 of SRSCM harness connector(A).

   2) Measure resistance between the terminal 2 of DAB harness connector and the terminal 6 of SRSCM harness connector(A).

Specification (resistance) : below 1 Ω

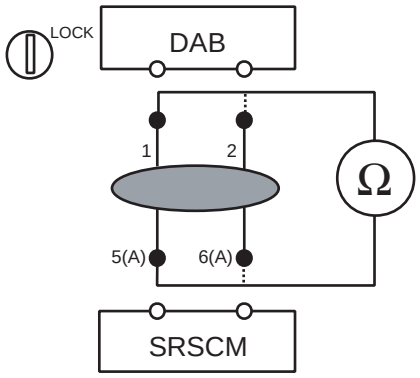

SCMRT6122L

3) Is the measured resistance within specification?

YES

▶ Check short circuit.

NO

▶ Repair or replace the wiring harness between the DAB and the clockspring or between the clockspring and the SRSCM.

4. CHECK SHORT CIRCUIT

1) Measure resistance between the terminal 1 and 2 of DAB harness connector.

Specification (resistance) : ∞ Ω

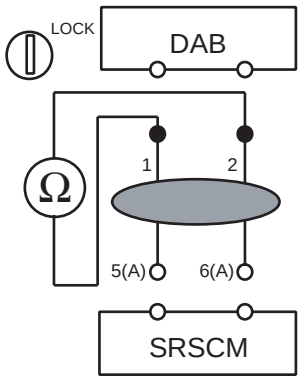

SCMRT6123L

2) Is the measured resistance within specification?

YES

▶ Go to next step.

NO

▶ Repair or replace the wiring harness between the DAB and the clockspring or between the clockspring and the SRSCM.

5. CLEAR THE DTC AND CHECK THE VEHICLE AGAIN
Refer to the DESCRIPTION in this TROUBLESHOOTING section. (See page RT - 36)

DTC B1348 DRIVER AIRBAG RESISTANCE CIRCUIT SHORT TO GROUND

DTC DESCRIPTION E8857516

The Driver Airbag circuit consists of the SRSCM, Clockspring and the Driver Airbag (DAB). The SRSCM sets above DTC(s) if it detects short to ground on the DAB circuit.

DTC DETECTING CONDITION EDEAA31B

DTC	Condition	Probable cause
B1348	• Short to ground between DAB and clockspring • Short to ground between clockspring and SRSCM • Driver Airbag (DAB) Malfunction • Clockspring Malfunction • SRSCM Malfunction	• Short to ground circuit on wiring harness • Driver Airbag (DAB) squib • Clockspring • SRSCM

SCHEMATIC DIAGRAM E7452174

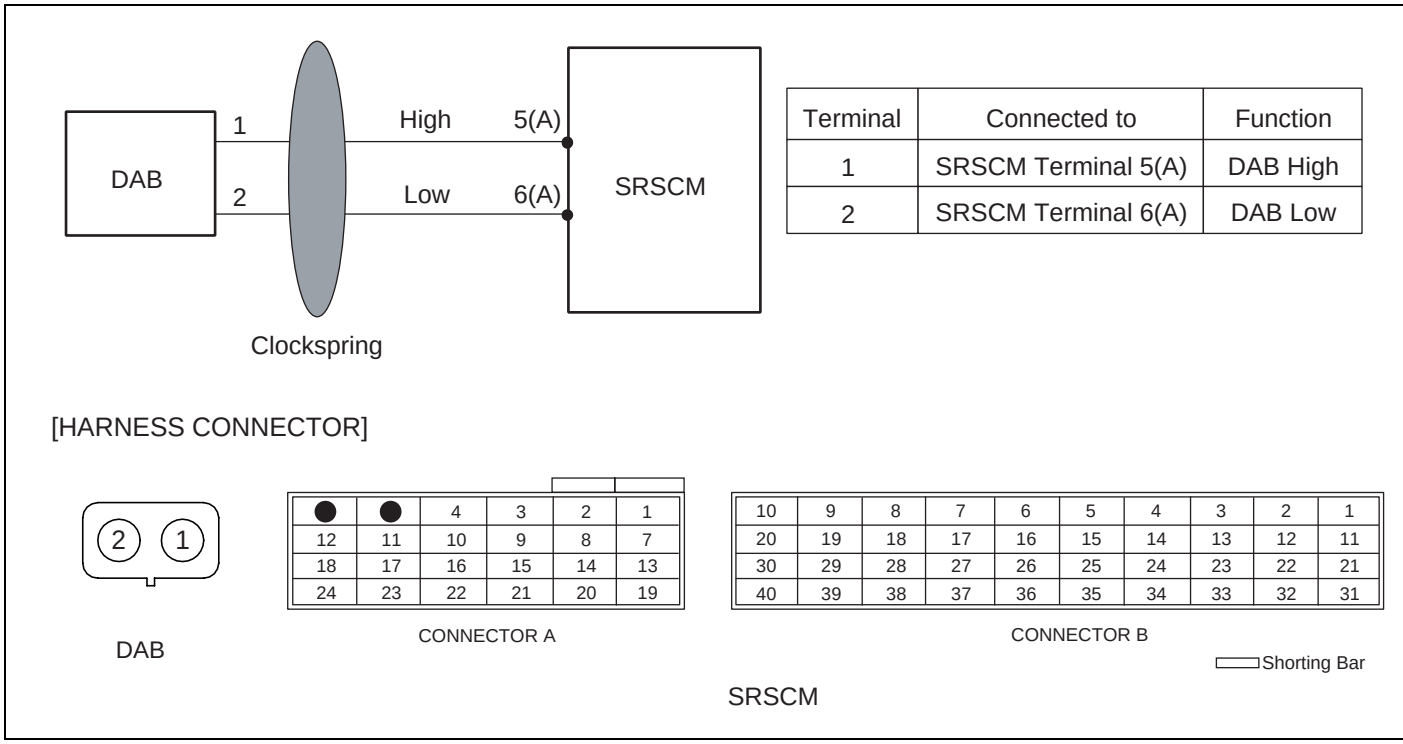

Terminal	Connected to	Function
1	SRSCM Terminal 5(A)	DAB High
2	SRSCM Terminal 6(A)	DAB Low

SCMRT6120L

TERMINAL & CONNECTOR INSPECTION EF24FC93

Refer to the DESCRIPTION in this TROUBLESHOOTING section. (See page RT - 36)

INSPECTION PROCEDURE E8231ED6

1. PREPARATION
   Refer to the DESCRIPTION in this TROUBLESHOOTING section. (See page RT - 36)

2. CHECK SHORT TO GROUND

   1) Measure resistance between the terminal 2 of DAB harness connector and chassis ground.

Specification (resistance) : infinite

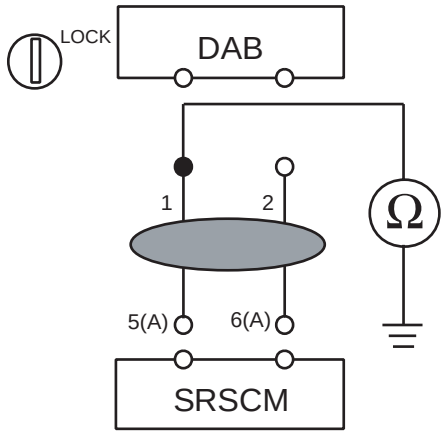

SCMRT6124L

   2) Is the measured resistance within specification?

YES

▶ Check the DAB Module.

NO

▶ Repair or replace the wiring harness between the DAB and the clockspring or between the clockspring and the SRSCM.

3. CHECK THE DAB MODULE

   1) Replace the Driver Airbag(DAB) with a new one.
      ● Refer to "Driver Airbag(DAB)" section in this SERVICE MANUAL.

   2) Install the DAB module and connect the DAB connector.

   3) Connect the connectors of the PAB, SAB, CAB, BPT, FIS and SIS.

   4) Connect the SRSCM connector.

   5) Connect the battery negative cable to the battery.

   6) Connect a Hi-Scan(Pro) to the data link connector.

7) Turn the ignition switch to ON and check the vehicle again.
Does Hi-Scan (Pro) indicate any DTC related to DAB?

YES

▶ Check the clockspring.

NO

▶ Replace the Driver Airbag(DAB).

4. CHECK THE CLOCKSPRING

1) Check the clockspring.
Is the clockspring normal?

YES

▶ Go to next step.

NO

▶ Replace the clockspring.

5. CLEAR THE DTC AND CHECK THE VEHICLE AGAIN
Refer to the DESCRIPTION in this TROUBLESHOOTING section. (See page RT - 36)

DTC B1349 DRIVER AIRBAG RESISTANCE CIRCUIT SHORT TO BATTERY

DTC DESCRIPTION EBEDC615

The Driver Airbag circuit consists of the SRSCM, Clockspring and the Driver Airbag (DAB). The SRSCM sets above DTC(s) if it detects short to battery line on the DAB circuit.

DTC DETECTING CONDITION EC4BA437

DTC	Condition	Probable cause
B1349	• Short to battery line between DAB and clockspring • Short to battery line between clockspring and SRSCM • Driver Airbag (DAB) Malfunction • Clockspring Malfunction • SRSCM Malfunction	• Short to battery line on wiring harness • Driver Airbag (DAB) squib • Clockspring • SRSCM

SCHEMATIC DIAGRAM E7DD8B59

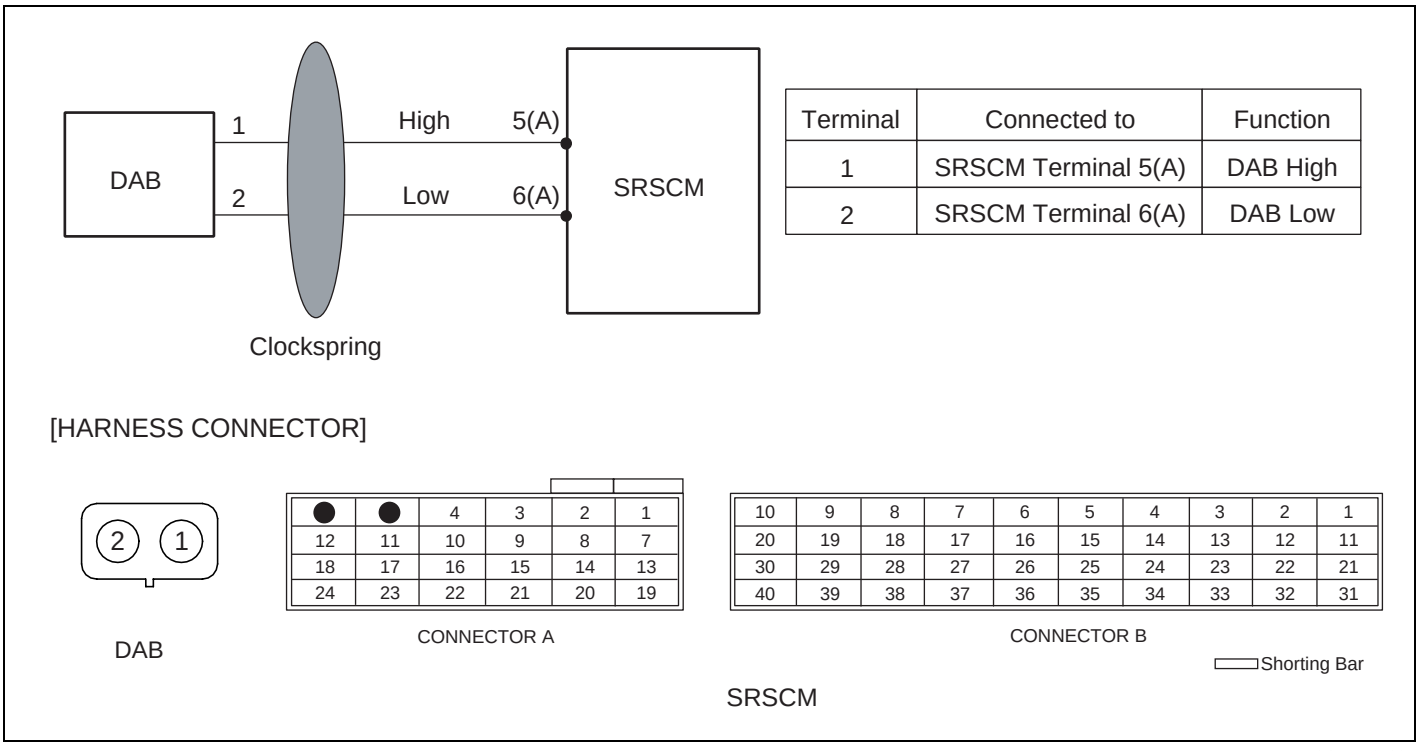

Terminal	Connected to	Function
1	SRSCM Terminal 5(A)	DAB High
2	SRSCM Terminal 6(A)	DAB Low

		4	3	2	1
12	11	10	9	8	7
18	17	16	15	14	13
24	23	22	21	20	19

10	9	8	7	6	5	4	3	2	1
20	19	18	17	16	15	14	13	12	11
30	29	28	27	26	25	24	23	22	21
40	39	38	37	36	35	34	33	32	31

SCMRT6120L

TERMINAL & CONNECTOR INSPECTION E6607887

Refer to the DESCRIPTION in this TROUBLESHOOTING section. (See page RT - 36)

INSPECTION PROCEDURE ECBB0522

1. PREPARATION
   Refer to the DESCRIPTION in this TROUBLESHOOTING section. (See page RT - 36)

2. CHECK SHORT TO BATTERY LINE

1) Connect the battery negative cable to the battery.

2) Turn the ignition switch to ON.

3) Measure voltage between the terminal 2 of DAB harness connector and chassis ground.

Specification (voltage) : Approximately 0 V

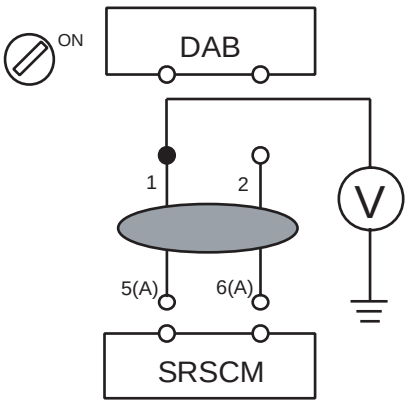

SCMRT6125L

4) Is the measured voltage within specification?

YES

▶Check the DAB module.

NO

▶ Repair or replace the wiring harness between the DAB and the clockspring or between the clockspring and the SRSCM.

3. CHECK THE DAB MODULE

1) Replace the Driver Airbag(DAB) with a new one.
● Refer to "Driver Airbag(DAB)" section in this SERVICE MANUAL.

2) Install the DAB module and connect the DAB connector.

3) Connect the connectors of the PAB, SAB, CAB, BPT, FIS and SIS.

4) Connect the SRSCM connector.

5) Connect the battery negative cable to the battery.

6) Connect a Hi-Scan(Pro) to the data link connector.

7) Turn the ignition switch to ON and check the vehicle again.
Does Hi-Scan (Pro) indicate any DTC related to DAB?

YES

▶Check the clockspring.

NO

▶Replace the Driver Airbag(DAB).

4. CHECK THE CLOCKSPRING

   1) Check the clockspring.
      Is the clockspring normal?

      YES

      ▶ Go to next step.

      NO

      ▶ Replace the clockspring.

5. CLEAR THE DTC AND CHECK THE VEHICLE AGAIN
   Refer to the DESCRIPTION in this TROUBLESHOOTING section. (See page RT - 36)

DTC B1352 PASSENGER AIRBAG RESISTANCE TOO HIGH
DTC B1353 PASSENGER AIRBAG RESISTANCE TOO LOW

DTC DESCRIPTION EFA671A4

The Passenger Airbag circuit consists of the SRSCM and the Passenger Airbag (PAB). The SRSCM sets above DTC(s) if it detects that the resistance of PAB squib is too high or low.

DTC DETECTING CONDITION E71070B2

DTC	Condition	Probable cause
B1352 B1353	• Too high or low resistance between PAB high(+) and PAB low (-) • Passenger Airbag (PAB) Malfunction • SRSCM Malfunction	• Open or short circuit on wiring harness • Passenger Airbag (PAB) squib • SRSCM

SCHEMATIC DIAGRAM E00881BB

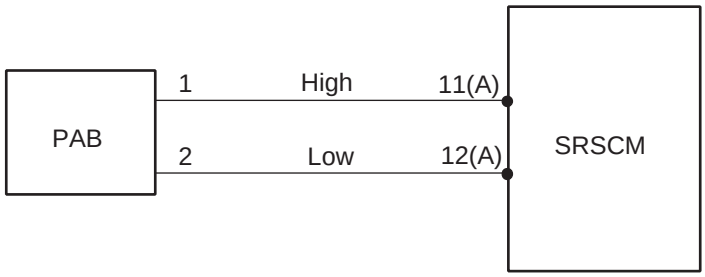

Terminal	Connected to	Function
1	SRSCM Terminal 11(A)	PAB High
2	SRSCM Terminal 12(A)	PAB Low

[HARNESS CONNECTOR]



PAB

6	5	4	3	2	1
●	●	10	9	8	7
18	17	16	15	14	13
24	23	22	21	20	19

CONNECTOR A

10	9	8	7	6	5	4	3	2	1
20	19	18	17	16	15	14	13	12	11
30	29	28	27	26	25	24	23	22	21
40	39	38	37	36	35	34	33	32	31

CONNECTOR B

Shorting Bar

SRSCM

ERBF200C

SPECIFICATION E69C3EA8

PAB resistance : 1.4 ~ 6.2 Ω

TERMINAL & CONNECTOR INSPECTION E1DCF032

Refer to the DESCRIPTION in this TROUBLESHOOTING section. (See page RT - 36)

INSPECTION PROCEDURE E8418581

1. PREPARATION
   Refer to the DESCRIPTION in this TROUBLESHOOTING section. (See page RT - 36)

2. CHECK PAB RESISTANCE

   CAUTION

   Never attempt to measure the circuit resistance of the airbag module(squib) even if you are using the specified tester.

   1) Connect the Dummy and the Dummy Adapter on PAB harness connector.
      ● Refer to "SPECIAL SERVICE TOOL" section in this SERVICE MANUAL for the SST No. of Dummy and Dummy Adapter.

   2) Measure resistance between the terminal 11 and 12 of SRSCM harness connector(A).

Specification (resistance) : 1.4 ~ 6.2 Ω

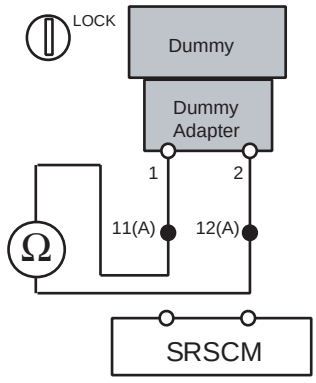

ERBF200D

   3) Is the measured resistance within specification?

   YES

   ▶ Replace the Passenger Airbag(PAB) module.

   NO

   ▶ Check open circuit.

3. CHECK OPEN CIRCUIT

   1) Measure resistance between the terminal 1 of PAB harness connector and the terminal 11 of SRSCM harness connector(A).

   2) Measure resistance between the terminal 2 of PAB harness connector and the terminal 12 of SRSCM harness connector(A).

Specification (resistance) : below 1 Ω

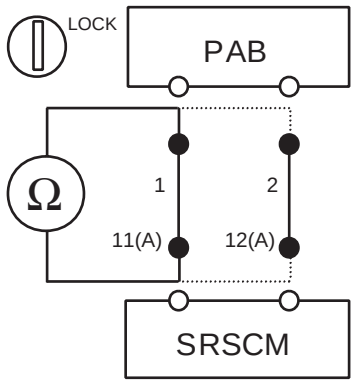

ERBF200E

3) Is the measured resistance within specification?

YES

▶ Check short circuit.

NO

▶ Repair or replace the wiring harness between the PAB and the SRSCM.

4. CHECK SHORT CIRCUIT

1) Measure resistance between the terminal 1 and 2 of PAB harness connector.

Specification (resistance) : infinite

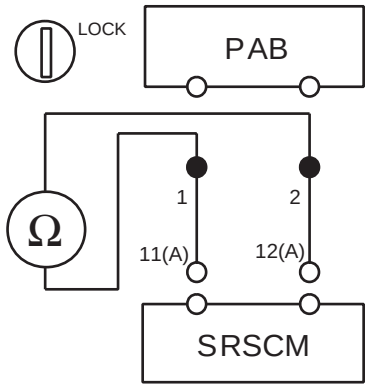

ERBF200F

2) Is the measured resistance within specification?

YES

▶ Go to next step.

NO

▶ Repair or replace the wiring harness between the PAB and the SRSCM.

5. CLEAR THE DTC AND CHECK THE VEHICLE AGAIN
Refer to the DESCRIPTION in this TROUBLESHOOTING section. (See page RT - 36)

DTC B1354 PASSENGER AIRBAG RESISTANCE CIRCUIT SHORT TO GROUND

DTC DESCRIPTION E8568D94

The Passenger Airbag circuit consists of the SRSCM and the Passenger Airbag (PAB). The SRSCM sets above DTC(s) if it detects short to ground on the PAB circuit.

DTC DETECTING CONDITION EB6C385A

DTC	Condition	Probable cause
B1354	• Short to ground between PAB module and SRSCM • Passenger Airbag (PAB) Malfunction • SRSCM Malfunction	• Short to ground on wiring harness • Passenger Airbag (PAB) squib • SRSCM

SCHEMATIC DIAGRAM E6A95081

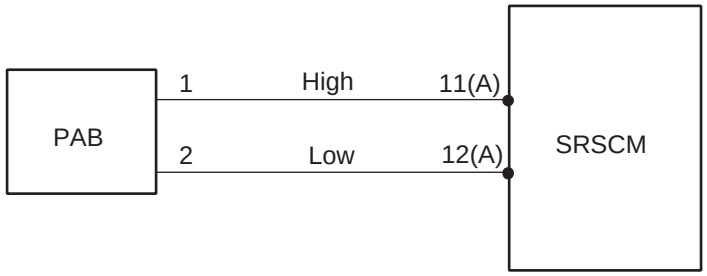

Terminal	Connected to	Function
1	SRSCM Terminal 11(A)	PAB High
2	SRSCM Terminal 12(A)	PAB Low

[HARNESS CONNECTOR]



PAB

6	5	4	3	2	1
●	●	10	9	8	7
18	17	16	15	14	13
24	23	22	21	20	19

CONNECTOR A

10	9	8	7	6	5	4	3	2	1
20	19	18	17	16	15	14	13	12	11
30	29	28	27	26	25	24	23	22	21
40	39	38	37	36	35	34	33	32	31

CONNECTOR B

Shorting Bar

SRSCM

ERBF200C

TERMINAL & CONNECTOR INSPECTION E0C1965C

Refer to the DESCRIPTION in this TROUBLESHOOTING section. (See page RT - 36)

INSPECTION PROCEDURE E8AB760A

1. PREPARATION
   Refer to the DESCRIPTION in this TROUBLESHOOTING section. (See page RT - 36)

2. CHECK SHORT TO GROUND

   1) Measure resistance between the terminal 1 of PAB harness connector and chassis ground.

Specification (resistance) : infinite

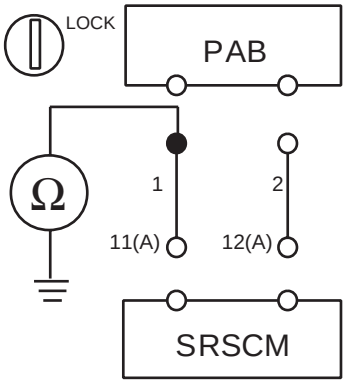

ERBF500O

2) Is the measured resistance within specification?

YES

▶ Check the PAB Module.

NO

▶ Repair or replace the wiring harness between the PAB and the SRSCM.

3. CHECK THE PAB MODULE

1) Replace the Passenger Airbag (PAB) with a new one.
● Refer to "Passenger Airbag (PAB)" section in this SERVICE MANUAL.

2) Install the DAB module and connect the DAB connector.

3) Connect the connectors of the PAB, SAB, CAB, BPT, FIS and SIS.

4) Connect the SRSCM connector.

5) Connect the battery negative cable to the battery.

6) Connect a Hi-Scan(Pro) to the data link connector.

7) Turn the ignition switch to ON and check the vehicle again.
Does Hi-Scan (Pro) indicate any DTC related to PAB?

YES

▶ Go to next step.

NO

▶ Replace PAB module.

4. CLEAR THE DTC AND CHECK THE VEHICLE AGAIN
Refer to the DESCRIPTION in this TROUBLESHOOTING section. (See page RT - 36)

DTC B1355 PASSENGER AIRBAG CIRCUIT SHORT TO BATTERY

DTC DESCRIPTION E9F54B5F

The Passenger Airbag circuit consists of the SRSCM and the Passenger Airbag (PAB). The SRSCM sets above DTC(s) if it detects short to battery line on the PAB circuit.

DTC DETECTING CONDITION E9D89E39

DTC	Condition	Probable cause
B1355	• Short to battery line between PAB and SRSCM • Passenger Airbag (PAB) Malfunction • SRSCM Malfunction	• Short to battery line circuit on wiring harness • Passenger Airbag (PAB) squib • SRSCM

SCHEMATIC DIAGRAM E2FEC588

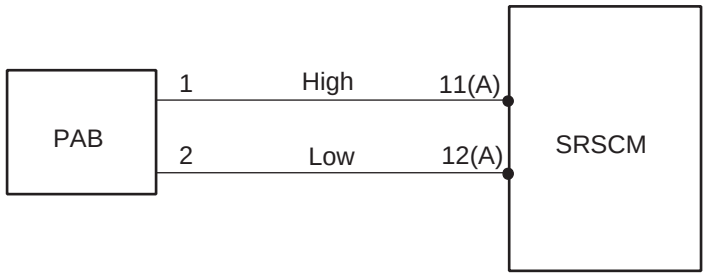

Terminal	Connected to	Function
1	SRSCM Terminal 11(A)	PAB High
2	SRSCM Terminal 12(A)	PAB Low

[HARNESS CONNECTOR]



PAB

6	5	4	3	2	1
●	●	10	9	8	7
18	17	16	15	14	13
24	23	22	21	20	19

CONNECTOR A

10	9	8	7	6	5	4	3	2	1
20	19	18	17	16	15	14	13	12	11
30	29	28	27	26	25	24	23	22	21
40	39	38	37	36	35	34	33	32	31

CONNECTOR B

Shorting Bar

SRSCM

ERBF200C

TERMINAL & CONNECTOR INSPECTION EC5A213D

Refer to the DESCRIPTION in this TROUBLESHOOTING section. (See page RT - 36)

INSPECTION PROCEDURE EBF2C8C7

1. PREPARATION
   Refer to the DESCRIPTION in this TROUBLESHOOTING section. (See page RT - 36)
2. CHECK SHORT TO BATTERY LINE
   1) Connect the battery negative cable to the battery.
   2) Turn the ignition switch to ON.
   3) Measure voltage between the terminal 1 of PAB harness connector and chassis ground.

Specification (voltage) : Approximately 0 V

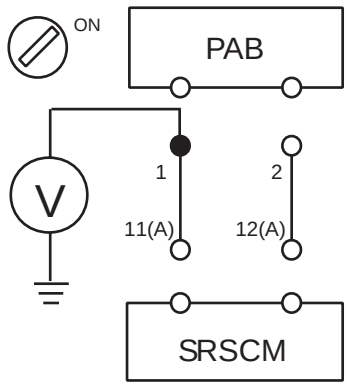

ERBF500P

4) Is the measured voltage within specification?

YES

▶ Check the PAB Module.

NO

▶ Repair the short to battery line circuit on wiring harness between the PAB and the SRSCM.

3. CHECK THE PAB MODULE

1) Replace the Passenger Airbag(PAB) with a new one.
● Refer to "Passenger Airbag(PAB)" section in this SERVICE MANUAL.

2) Install the DAB module and connect the DAB connector.

3) Connect the connectors of the PAB, SAB, CAB, BPT, FIS and SIS.

4) Connect the SRSCM connector.

5) Connect the battery negative cable to the battery.

6) Connect a Hi-Scan(Pro) to the data link connector.

7) Turn the ignition switch to ON and check the vehicle again.
Does Hi-Scan (Pro) indicate any DTC related to PAB?

YES

▶ Go to next step.

NO

▶Replace PAB module.

4. CLEAR THE DTC AND CHECK THE VEHICLE AGAIN
Refer to the DESCRIPTION in this TROUBLESHOOTING section. (See page RT - 36)

DTC B1361 SEAT BELT PRETENSIONER [FRONT-DRIVER] RESISTANCE TOO HIGH
DTC B1362 SEAT BELT PRETENSIONER [FRONT-DRIVER] RESISTANCE TOO LOW
DTC B1367 SEAT BELT PRETENSIONER [FRONT-PASSENGER] RESISTANCE TOO HIGH
DTC B1368 SEAT BELT PRETENSIONER [FRONT-PASSENGER] RESISTANCE TOO LOW

DTC DESCRIPTION E5E4C460

The Seat Belt Pretensioner circuit consists of the SRSCM and two Seat Belt Pretensioners (BPT). The SRSCM sets above DTC(s) if it detects that the resistance of BPT squib is too high or low.

DTC DETECTING CONDITION EB0714DE

DTC	Condition	Probable cause
B1361 B1362 B1367 B1368	• Too high or low resistance between BPT high(+) and BPT low (-) • Seat Belt Pretensioner (BPT) Malfunction • SRSCM Malfunction	• Open or short circuit on wiring harness • Seat Belt Pretensioner (BPT) squib • SRSCM

SCHEMATIC DIAGRAM ED9CDDE7

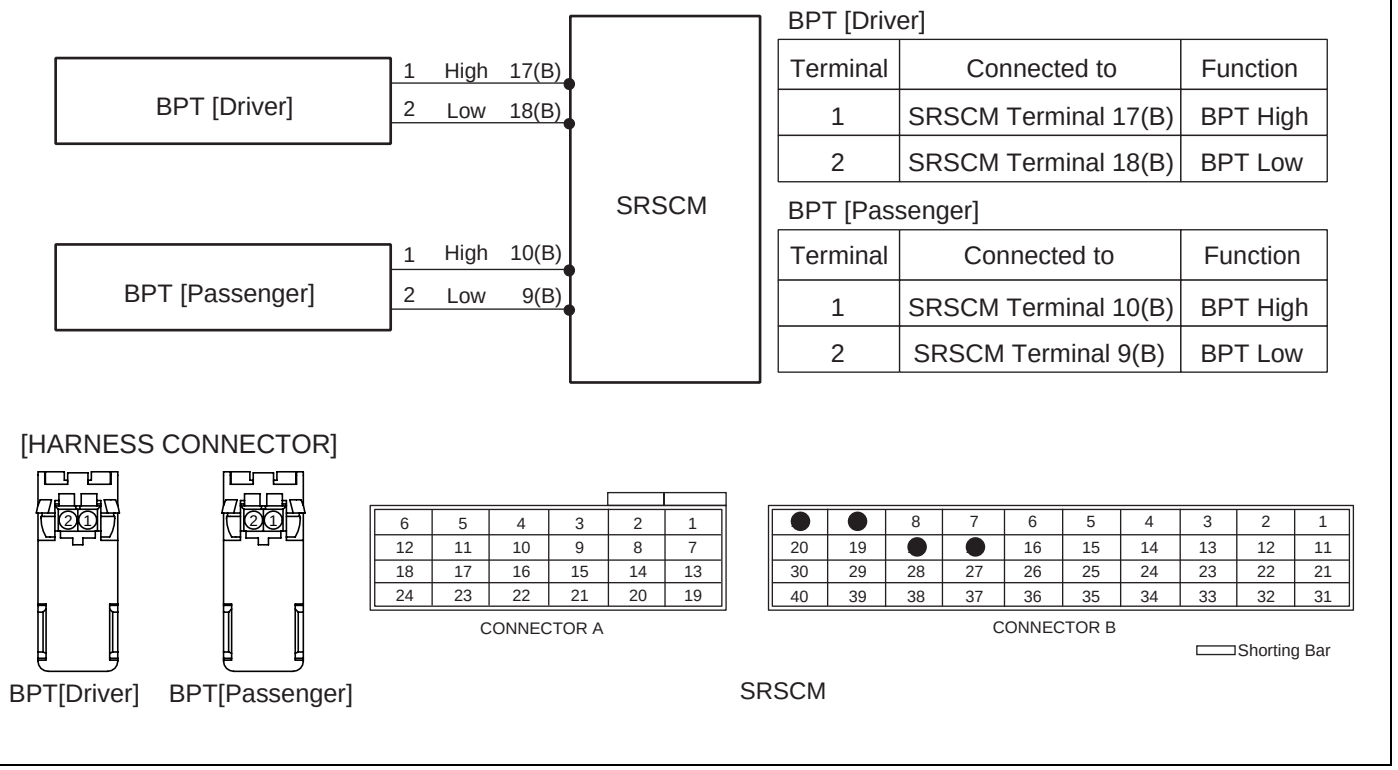

BPT [Driver]

Terminal	Connected to	Function
1	SRSCM Terminal 17(B)	BPT High
2	SRSCM Terminal 18(B)	BPT Low

BPT [Passenger]

Terminal	Connected to	Function
1	SRSCM Terminal 10(B)	BPT High
2	SRSCM Terminal 9(B)	BPT Low

SCMRT6140L

SPECIFICATION E609C78B

BPT resistance : 1.4 ~ 6.2 Ω

TERMINAL & CONNECTOR INSPECTION E26841C2

Refer to the DESCRIPTION in this TROUBLESHOOTING section. (See page RT - 36)

INSPECTION PROCEDURE E0EB316D

1. PREPARATION
   Refer to the DESCRIPTION in this TROUBLESHOOTING section. (See page RT - 36)

2. CHECK BPT RESISTANCE

   CAUTION

   Never attempt to measure the circuit resistance of the airbag module(squib) even if you are using the specified tester.

   1) Connect the Dummy and the Dummy Adapter on BPT harness connector.
      ● Refer to "SPECIAL SERVICE TOOL" section in this SERVICE MANUAL for the SST No. of Dummy and Dummy Adapter.

   2) Measure resistance between the terminal 17(10) and 18(9) of SRSCM harness connector(B).

Specification (resistance) : 1.4 ~ 6.2 Ω

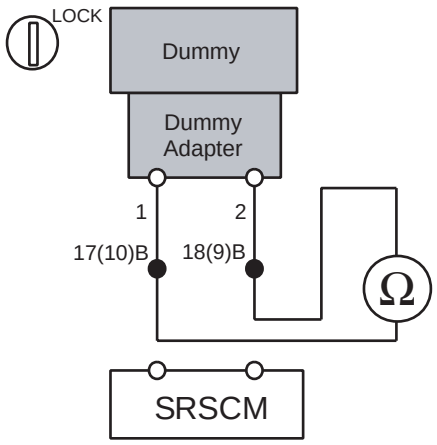

SCMRT6141L

   3) Is the measured resistance within specification?

   YES

   ▶ Replace the Seat Belt Pretensioner(BPT) module.

   NO

   ▶ Check open circuit.

3. CHECK OPEN CIRCUIT

   1) Measure resistance between the terminal 1 of BPT harness connector and the terminal 17(10) of SRSCM harness connector(B).

   2) Measure resistance between the terminal 2 of BPT harness connector and the terminal 18(9) of SRSCM harness connector(B).

Specification (resistance) : below 1 Ω

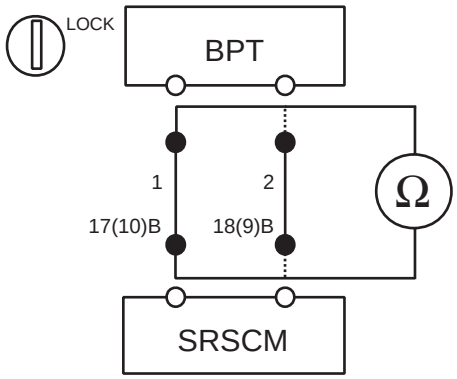

SCMRT6142D

3) Is the measured resistance within specification?

YES

▶ Check short circuit.

NO

▶ Repair or replace the wiring harness between the BPT and the SRSCM.

4. CHECK SHORT CIRCUIT

1) Measure resistance between the terminal 1 and 2 of BPT harness connector.

Specification (resistance) : infinite

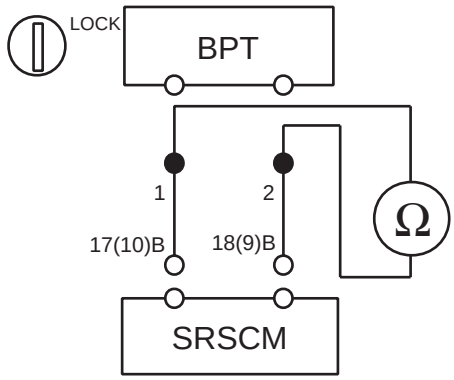

SCMRT6143D

2) Is the measured resistance within specification?

YES

▶ Go to next step.

NO

▶ Repair or replace the wiring harness between the BPT and the SRSCM.

5. CLEAR THE DTC AND CHECK THE VEHICLE AGAIN
Refer to the DESCRIPTION in this TROUBLESHOOTING section. (See page RT - 36)

DTC B1363 SEAT BELT PRETENSIONER [FRONT-DRIVER] CIRCUIT SHORT TO GROUND
DTC B1369 SEAT BELT PRETENSIONER [FRONT-PASSENGER] CIRCUIT SHORT TO GROUND

DTC DESCRIPTION E424B2CF

The Seat Belt Pretensioner consists of the SRSCM and two Seat Belt Pretensioners (BPT). The SRSCM sets above DTC(s) if it detects short to ground on the BPT circuit.

DTC DETECTING CONDITION E7DB074E

DTC	Condition	Probable cause
B1363 B1369	• Short to ground between BPT and SRSCM • Seat Belt Pretensioner (BPT) Malfunction • SRSCM Malfunction	• Short to ground circuit on wiring harness • Seat Belt Pretensioner (BPT) squib • SRSCM

SCHEMATIC DIAGRAM E0B0CB0A

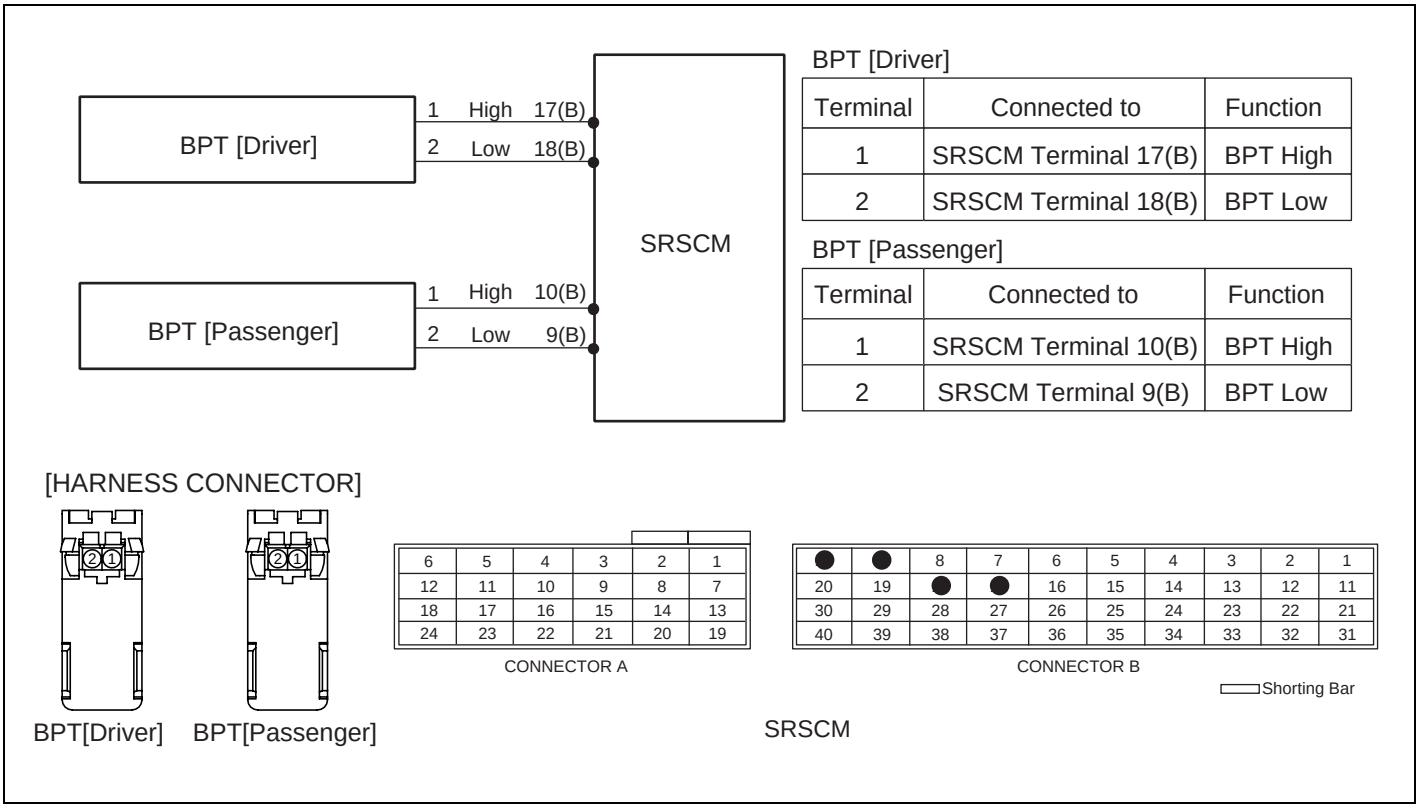

BPT [Driver]

Terminal	Connected to	Function
1	SRSCM Terminal 17(B)	BPT High
2	SRSCM Terminal 18(B)	BPT Low

BPT [Passenger]

Terminal	Connected to	Function
1	SRSCM Terminal 10(B)	BPT High
2	SRSCM Terminal 9(B)	BPT Low

SCMRT6140L

TERMINAL & CONNECTOR INSPECTION E61C7A42

Refer to the DESCRIPTION in this TROUBLESHOOTING section. (See page RT - 36)

INSPECTION PROCEDURE ED1E80E8

1. PREPARATION
   Refer to the DESCRIPTION in this TROUBLESHOOTING section. (See page RT - 36)

2. CHECK SHORT TO GROUND

1) Measure resistance between the terminal 1 of BPT harness connector and chassis ground.

Specification (resistance) : infinite

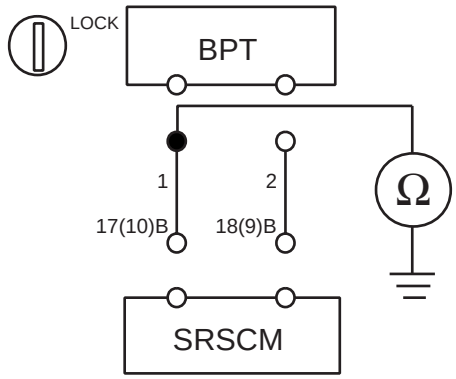

SCMRT6144D

2) Is the measured resistance within specification?

YES

▶Check the BPT Module.

NO

▶ Repair or replace the wiring harness between the BPT and the SRSCM.

3. CHECK THE BPT MODULE

1) Replace the Belt Pretensioner (BPT) with a new one.
● Refer to "Belt Pretensioner (BPT)" section in this SERVICE MANUAL.

2) Install the DAB module and connect the DAB connector.

3) Connect the connectors of the PAB, SAB, CAB, BPT, FIS and SIS.

4) Connect the SRSCM connector.

5) Connect the battery negative cable to the battery.

6) Connect a Hi-Scan(Pro) to the data link connector.

7) Turn the ignition switch to ON and check the vehicle again.
Does Hi-Scan (Pro) indicate any DTC related to Belt Pretensioner (BPT)?

YES

▶Go to next step.

NO

▶Replace BPT module.

4. CLEAR THE DTC AND CHECK THE VEHICLE AGAIN
Refer to the DESCRIPTION in this TROUBLESHOOTING section. (See page RT - 36)

DTC B1364 SEAT BELT PRETENSIONER [FRONT-DRIVER] CIRCUIT SHORT TO BATTERY
DTC B1370 SEAT BELT PRETENSIONER [FRONT-PASSENGER] CIRCUIT SHORT TO BATTERY

DTC DESCRIPTION E6196895

The Seat Belt Pretensioner consists of the SRSCM and two Seat Belt Pretensioners (BPT). The SRSCM sets above DTC(s) if it detects short to battery line on the BPT circuit.

DTC DETECTING CONDITION E31AE084

DTC	Condition	Probable cause
B1364 B1370	• Short to battery line between BPT and SRSCM • Seat Belt Pretensioner (BPT) Malfunction • SRSCM Malfunction	• Short to battery line circuit on wiring harness • Seat Belt Pretensioner (BPT) squib • SRSCM

SCHEMATIC DIAGRAM EA9BC3BC

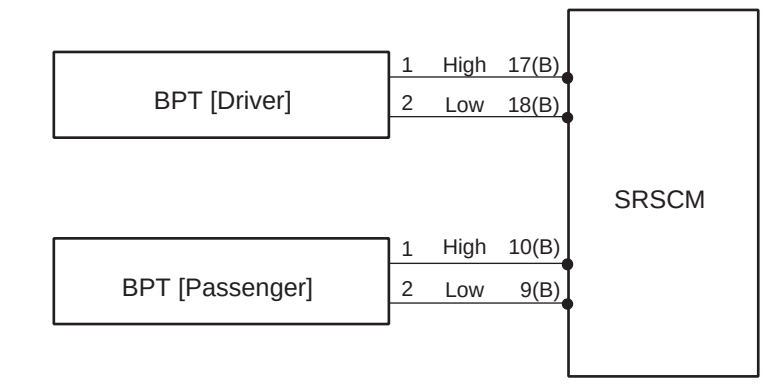

BPT [Driver]

Terminal	Connected to	Function
1	SRSCM Terminal 17(B)	BPT High
2	SRSCM Terminal 18(B)	BPT Low

BPT [Passenger]

Terminal	Connected to	Function
1	SRSCM Terminal 10(B)	BPT High
2	SRSCM Terminal 9(B)	BPT Low

[HARNESS CONNECTOR]

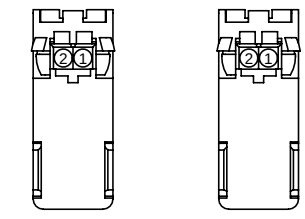

BPT[Driver] BPT[Passenger]

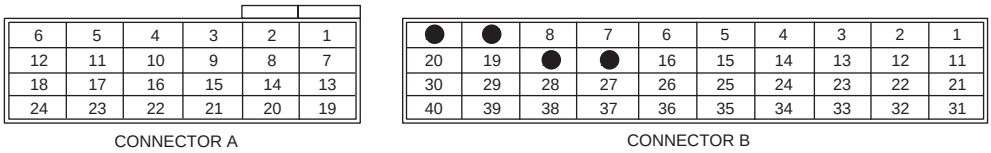

SRSCM

SCMRT6140L

TERMINAL & CONNECTOR INSPECTION EBEEE926

Refer to the DESCRIPTION in this TROUBLESHOOTING section. (See page RT - 36)

INSPECTION PROCEDURE E79D17F8

1. PREPARATION
   Refer to the DESCRIPTION in this TROUBLESHOOTING section. (See page RT - 36)

2. CHECK SHORT TO BATTERY LINE

   1) Connect the battery negative cable to the battery.

   2) Turn the ignition switch to ON.

   3) Measure voltage between the terminal 1 of BPT harness connector and chassis ground.

Specification (voltage) : Approximately 0 V

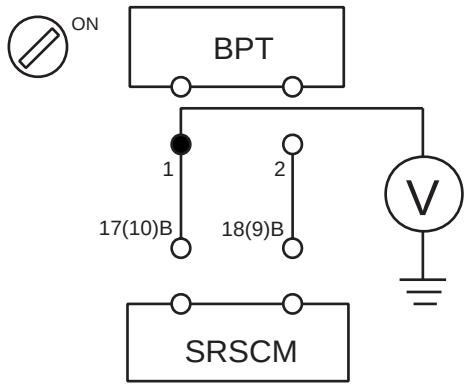

SCMRT6145D

   4) Is the measured voltage within specification?

YES

▶Check the BPT Module.

NO

▶Repair the short to battery line circuit on wiring harness between the BPT and the SRSCM.

3. CHECK THE BPT MODULE

   1) Replace the Belt Pretensioner (BPT) with a new one.
      ● Refer to "Belt Pretensioner (BPT)" section in this SERVICE MANUAL.

   2) Install the DAB module and connect the DAB connector.

   3) Connect the connectors of the PAB, SAB, CAB, BPT, FIS and SIS.

   4) Connect the SRSCM connector.

   5) Connect the battery negative cable to the battery.

   6) Connect a Hi-Scan(Pro) to the data link connector.

7) Turn the ignition switch to ON and check the vehicle again.
Does Hi-Scan (Pro) indicate any DTC related to Belt Pretensioner (BPT)?

YES

▶ Go to next step.

NO

▶ Replace BPT module.

4. CLEAR THE DTC AND CHECK THE VEHICLE AGAIN
Refer to the DESCRIPTION in this TROUBLESHOOTING section. (See page RT - 36)

DTC B1378 SIDE AIRBAG [FRONT-DRIVER] RESISTANCE TOO HIGH
DTC B1379 SIDE AIRBAG [FRONT-DRIVER] RESISTANCE TOO LOW
DTC B1382 SIDE AIRBAG [FRONT-PASSENGER] RESISTANCE TOO HIGH
DTC B1383 SIDE AIRBAG [FRONT-PASSENGER] RESISTANCE TOO LOW

DTC DESCRIPTION E7BD1E52

The Side Airbag circuit consists of the SRSCM and two Side Airbags (SAB). The SRSCM sets above DTC(s) if it detects that the resistance of SAB squib is too high or low.

DTC DETECTING CONDITION EFB0E0EA

DTC	Condition	Probable cause
B1378 B1379 B1382 B1383	• Too high or low resistance between SAB high(+) and SAB low (-) • Side Airbag (SAB) Malfunction • SRSCM Malfunction	• Open or short circuit on wiring harness • Side Airbag (SAB) squib • SRSCM

SCHEMATIC DIAGRAM EC34F93D

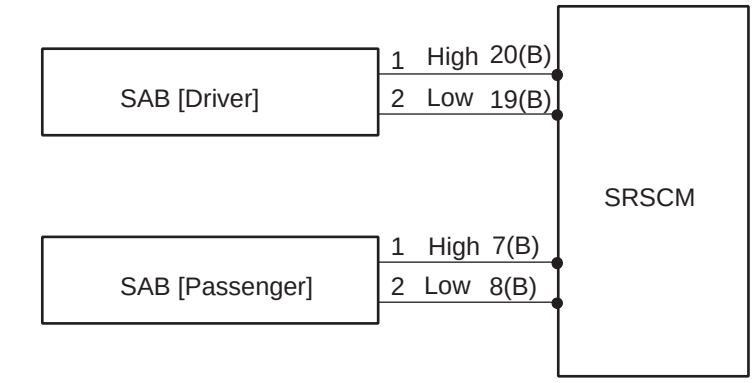

SAB [Driver]

Terminal	Connected to	Function
1	SRSCM Terminal 20(B)	SAB High
2	SRSCM Terminal 19(B)	SAB Low

SAB [Passenger]

Terminal	Connected to	Function
1	SRSCM Terminal 7(B)	SAB High
2	SRSCM Terminal 8(B)	SAB Low

[HARNESS CONNECTOR]

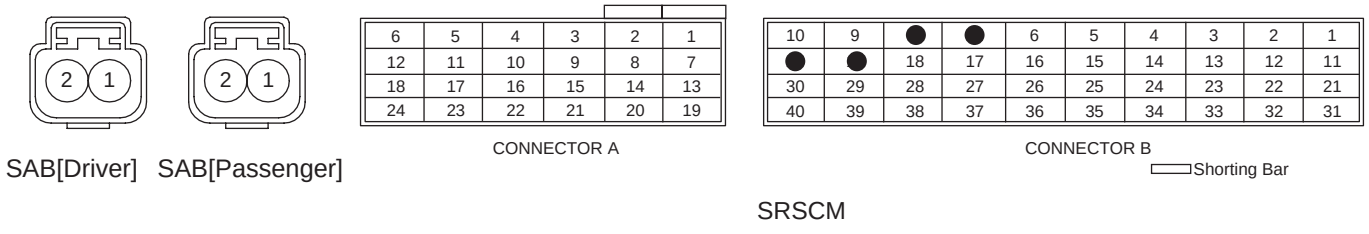

SAB[Driver] SAB[Passenger]

CONNECTOR A

CONNECTOR B

Shorting Bar

SRSCM

ERBF501S

SPECIFICATION EBEB1D00

SAB resistance : 1.4 ~ 6.2 Ω

TERMINAL & CONNECTOR INSPECTION E93C87E7

Refer to the DESCRIPTION in this TROUBLESHOOTING section. (See page RT - 36)

INSPECTION PROCEDURE EF40A750

1. PREPARATION
   Refer to the DESCRIPTION in this TROUBLESHOOTING section. (See page RT - 36)

2. CHECK SAB RESISTANCE

   CAUTION

   Never attempt to measure the circuit resistance of the airbag module(squib) even if you are using the specified tester.

   1) Connect the Dummy and the Dummy Adapter on SAB harness connector.
      ● Refer to "SPECIAL SERVICE TOOL" section in this SERVICE MANUAL for the SST No. of Dummy and Dummy Adapter.

   2) Measure resistance between the terminal 20(7) and 19(8) of SRSCM harness connector(B).

Specification (resistance) : 1.4 ~ 6.2 Ω

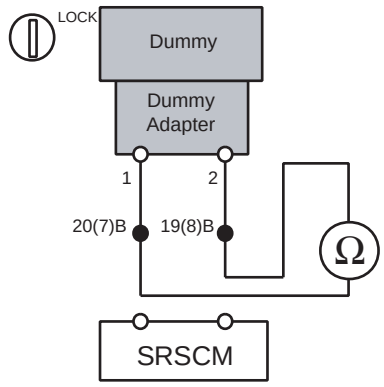

ERBF500Y

   3) Is the measured resistance within specification?

   YES

   ▶ Replace the Side Airbag(SAB) module.

   NO

   ▶ Check open circuit.

3. CHECK OPEN CIRCUIT

   1) Measure resistance between the terminal 1 of SAB harness connector and the terminal 20(7) of SRSCM harness connector(B).

   2) Measure resistance between the terminal 2 of SAB harness connector and the terminal 19(8) of SRSCM harness connector(B).

Specification (resistance) : below 1 Ω

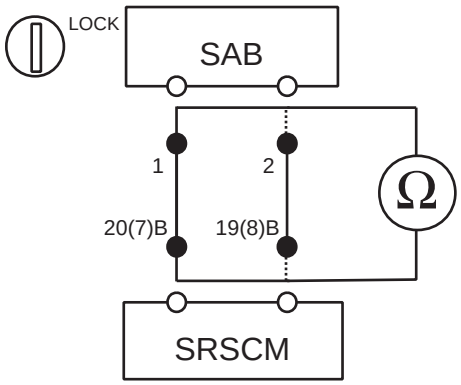

SCMRT6151D

3) Is the measured resistance within specification?

YES

▶ Check short circuit.

NO

▶ Repair or replace the wiring harness between the SAB and the SRSCM.

4. CHECK SHORT CIRCUIT

1) Measure resistance between the terminal 1 and 2 of SAB harness connector.

Specification (resistance) : infinite

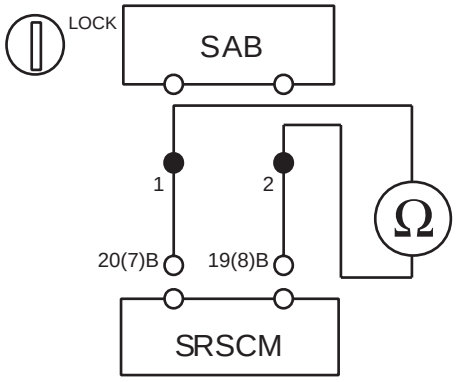

ERBF200I

2) Is the measured resistance within specification?

YES

▶ Go to next step.

NO

▶ Repair or replace the wiring harness between the SAB and the SRSCM.

5. CLEAR THE DTC AND CHECK THE VEHICLE AGAIN
Refer to the DESCRIPTION in this TROUBLESHOOTING section. (See page RT - 36)

DTC B1380 SIDE AIRBAG [FRONT-DRIVER] CIRCUIT SHORT TO GROUND
DTC B1384 SIDE AIRBAG [FRONT-PASSENGER] CIRCUIT SHORT TO GROUND

DTC DESCRIPTION E550E963

The Side Airbag circuit consists of the SRSCM and two Side Airbags (SAB). The SRSCM sets above DTC(s) if it detects short to ground on the SAB circuit.

DTC DETECTING CONDITION ED535401

DTC	Condition	Probable cause
B1380 B1384	• Short to ground between SAB and SRSCM • Side Airbag (SAB) Malfunction • SRSCM Malfunction	• Short to ground circuit on wiring harness • Side Airbag (SAB) squib • SRSCM

SCHEMATIC DIAGRAM EF684607

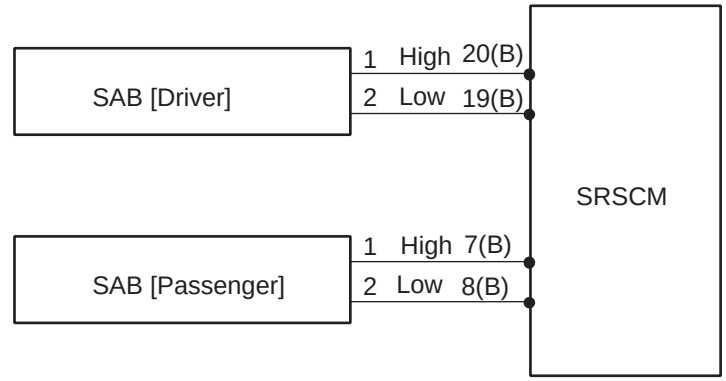

SAB [Driver]

Terminal	Connected to	Function
1	SRSCM Terminal 20(B)	SAB High
2	SRSCM Terminal 19(B)	SAB Low

SAB [Passenger]

Terminal	Connected to	Function
1	SRSCM Terminal 7(B)	SAB High
2	SRSCM Terminal 8(B)	SAB Low

[HARNESS CONNECTOR]

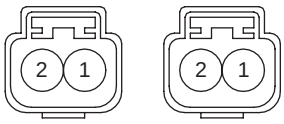

SAB[Driver] SAB[Passenger]

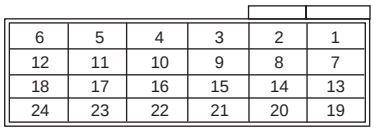

CONNECTOR A

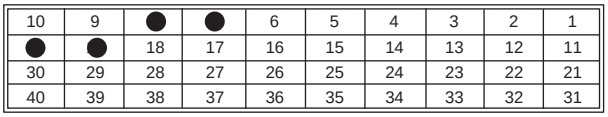

CONNECTOR B

Shorting Bar

SRSCM

ERBF501S

TERMINAL & CONNECTOR INSPECTION E894CAD8

Refer to the DESCRIPTION in this TROUBLESHOOTING section. (See page RT - 36)

INSPECTION PROCEDURE EFA29334

1. PREPARATION
   Refer to the DESCRIPTION in this TROUBLESHOOTING section. (See page RT - 36)

2. CHECK SHORT TO GROUND

1) Measure resistance between the terminal 1 of SAB harness connector and chassis ground.

Specification (resistance) : infinite

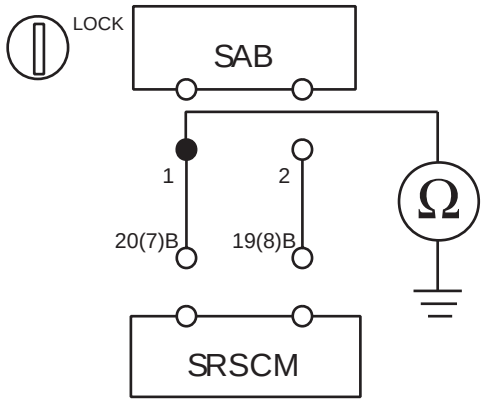

ERBF200J

2) Is the measured resistance within specification?

YES

▶ Check the SAB Module.

NO

▶ Repair or replace the wiring harness between the SAB and the SRSCM.

3. CHECK THE SAB MODULE

1) Replace the Side Airbag(SAB) with a new one.
● Refer to "Side Airbag(SAB)" section in this SERVICE MANUAL.

2) Install the DAB module and connect the DAB connector.

3) Connect the connectors of the PAB, SAB, CAB, BPT, FIS and SIS.

4) Connect the SRSCM connector.

5) Connect the battery negative cable to the battery.

6) Connect a Hi-Scan(Pro) to the data link connector.

7) Turn the ignition switch to ON and check the vehicle again.
Does Hi-Scan (Pro) indicate any DTC related to Side Airbag(SAB)?

YES

▶Go to next step.

NO

▶Replace SAB module.

4. CLEAR THE DTC AND CHECK THE VEHICLE AGAIN
Refer to the DESCRIPTION in this TROUBLESHOOTING section. (See page RT - 36)

DTC B1381 SIDE AIRBAG [FRONT-DRIVER] CIRCUIT SHORT TO BATTERY
DTC B1385 SIDE AIRBAG [FRONT-PASSENGER] CIRCUIT SHORT TO BATTERY

DTC DESCRIPTION EAB44A15

The Side Airbag circuit consists of the SRSCM and two Side Airbags (SAB). The SRSCM sets above DTC(s) if it detects short to battery line on the SAB circuit.

DTC DETECTING CONDITION E4071D8F

DTC	Condition	Probable cause
B1381 B1385	• Short to battery line between SAB and SRSCM • Side Airbag (SAB) Malfunction • SRSCM Malfunction	• Short to battery line circuit on wiring harness • Side Airbag (SAB) squib • SRSCM

SCHEMATIC DIAGRAM E478E059

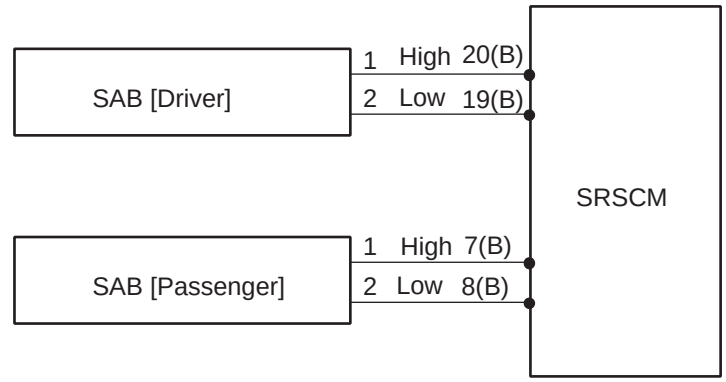

SAB [Driver]

Terminal	Connected to	Function
1	SRSCM Terminal 20(B)	SAB High
2	SRSCM Terminal 19(B)	SAB Low

SAB [Passenger]

Terminal	Connected to	Function
1	SRSCM Terminal 7(B)	SAB High
2	SRSCM Terminal 8(B)	SAB Low

[HARNESS CONNECTOR]

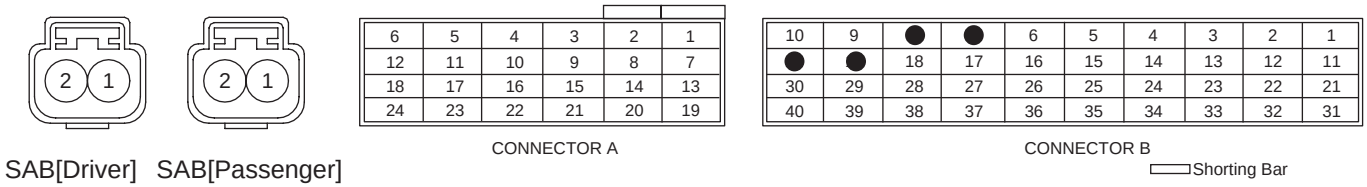

SAB[Driver] SAB[Passenger]

SRSCM

ERBF501S

TERMINAL & CONNECTOR INSPECTION EA290C2E

Refer to the DESCRIPTION in this TROUBLESHOOTING section. (See page RT - 36)

INSPECTION PROCEDURE ED4551E8

1. PREPARATION
   Refer to the DESCRIPTION in this TROUBLESHOOTING section. (See page RT - 36)

2. CHECK SHORT TO BATTERY LINE

1) Connect the battery negative cable to the battery.

2) Turn the ignition switch to ON.

3) Measure voltage between the terminal 1 of SAB harness connector and chassis ground.

Specification (voltage) : Approximately 0 V

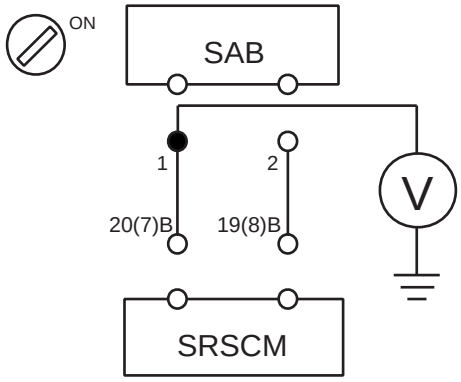

KRBF501A

4) Is the measured voltage within specification?

YES

▶ Check the SAB Module.

NO

▶ Repair the short to battery line circuit on wiring harness between the SAB and the SRSCM.

3. CHECK THE SAB MODULE

1) Replace the Side Airbag(SAB) with a new one.
● Refer to "Side Airbag(SAB)" section in this SERVICE MANUAL.

2) Install the DAB module and connect the DAB connector.

3) Connect the connectors of the PAB, SAB, CAB, BPT, FIS and SIS.

4) Connect the SRSCM connector.

5) Connect the battery negative cable to the battery.

6) Connect a Hi-Scan(Pro) to the data link connector.

7) Turn the ignition switch to ON and check the vehicle again.
Does Hi-Scan (Pro) indicate any DTC related to Side Airbag(SAB)?

YES

▶ Go to next step.

NO

▶Replace SAB module.

4. CLEAR THE DTC AND CHECK THE VEHICLE AGAIN
Refer to the DESCRIPTION in this TROUBLESHOOTING section. (See page RT - 36)

DTC B1395 FIRING LOOPS INTERCONNECTION FAULT

DTC DESCRIPTION E027D453

While start up phase, SRSCM will measure cross link of squibs. If one of them is failed during interconnection test, then SRSCM will store interconnection fault. Once the interconnection fault is detected, it remains active continuously till the fault is erased. Only one fault code is assigned for all interconnection fault.

TERMINAL & CONNECTOR INSPECTION EECD3199

Refer to the DESCRIPTION in this TROUBLESHOOTING section. (See page RT - 36)

INSPECTION PROCEDURE E0656F8A

1. PREPARATION
   Refer to the DESCRIPTION in this TROUBLESHOOTING section. (See page RT - 36)
2. CHECK SHORT CIRCUIT
   1) Measure resistance between following squibs.(DAB - PAB, DAB - SAB, DAB - CAB, DAB - BPT, PAB - SAB, PAB - CAB, PAB - BPT, SAB - PAB, SAB - CAB, SAB - BPT, CAB - BPT)

Specification (resistance) : infinite

   2) Is the measured resistance within specification?

YES

▶ Go to next step.

NO

▶ Repair or replace the wiring harness between two squibs.

3. CLEAR THE DTC AND CHECK THE VEHICLE AGAIN
   Refer to the DESCRIPTION in this TROUBLESHOOTING section. (See page RT - 36)

DTC B1400 SIDE IMPACT SENSOR [FRONT-DRIVER] DEFECT
DTC B1403 SIDE IMPACT SENSOR [FRONT-PASSENGER] DEFECT
DTC B1409 SIDE IMPACT SENSOR [FRONT-DRIVER] COMMUNICATION ERROR
DTC B1410 SIDE IMPACT SENSOR [FRONT-PASSENGER] COMMUNICATION ERROR

DTC DESCRIPTION E7C1CA1D

The detecting system for side crash consists of the SRSCM and four Side Impact Sensors (SIS). The SRSCM sets above DTC(s) if it detects that any SIS is defective or there is communication error between any SIS and the SRSCM.

DTC DETECTING CONDITION EFA2D8F7

DTC	Condition	Probable cause
B1400 B1403 B1409 B1410	• Open between SIS and SRSCM • Side Impact Sensor (SIS) Malfunction • SRSCM Malfunction	• Wiring Harness • Side Impact Sensor (SIS) • SRSCM

SCHEMATIC DIAGRAM EB8523E1

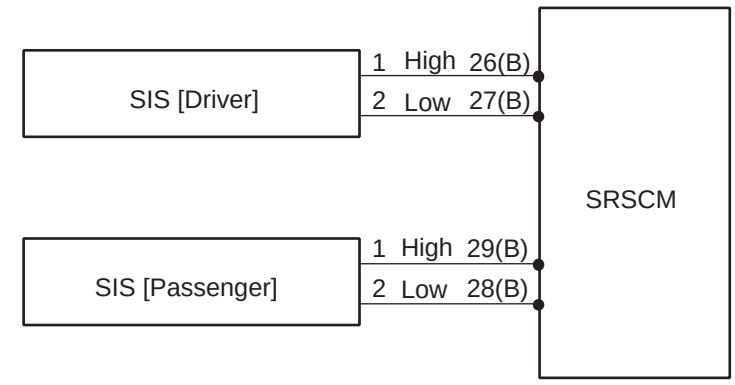

SIS [Driver]

Terminal	Connected to	Function
1	SRSCM Terminal 26(B)	SIS High
2	SRSCM Terminal 27(B)	SIS Low

SIS [Passenger]

Terminal	Connected to	Function
1	SRSCM Terminal 29(B)	SIS High
2	SRSCM Terminal 28(B)	SIS Low

[HARNESS CONNECTOR]

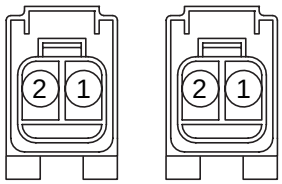

SIS[Driver] SIS[Passenger]

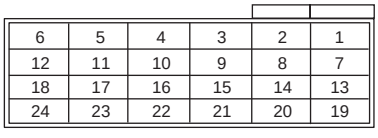

6	5	4	3	2	1
12	11	10	9	8	7
18	17	16	15	14	13
24	23	22	21	20	19

CONNECTOR A

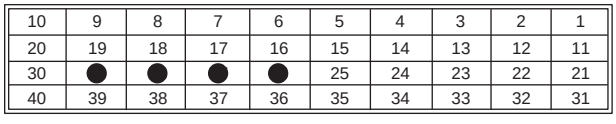

10	9	8	7	6	5	4	3	2	1
20	19	18	17	16	15	14	13	12	11
30	●	●	●	●	25	24	23	22	21
40	39	38	37	36	35	34	33	32	31

CONNECTOR B

Shorting Bar

SRSCM

SCMRT6160L

TERMINAL & CONNECTOR INSPECTION E276ABDE

Refer to the DESCRIPTION in this TROUBLESHOOTING section. (See page RT - 36)

INSPECTION PROCEDURE EE9E71F6

1. PREPARATION
   Refer to the DESCRIPTION in this TROUBLESHOOTING section. (See page RT - 36)

2. CHECK SIS CIRCUIT

   1) Measure resistance between the terminal 1 of SIS harness connector and the terminal 26(29) of SRSCM harness connector(B).

   2) Measure resistance between the terminal 2 of SIS harness connector and the terminal 27(28) of SRSCM harness connector(B).

Specification (resistance) : below 1 Ω

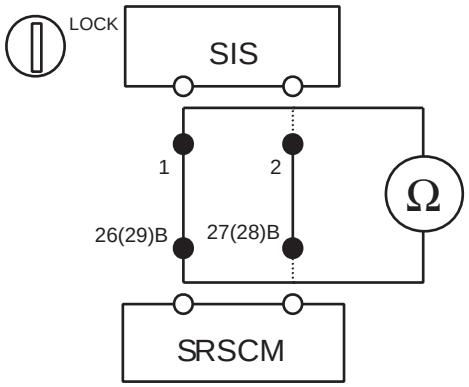

ERBF502E

   3) Is the measured resistance within specification?

   YES

   ▶ Check Side Impact Sensor.

   NO

   ▶ Repair or replace the wiring harness between the SIS and the SRSCM.

3. CHECK THE SIDE IMPACT SENSOR

   1) Replace the Side Impact Sensor(SIS) with a new one.
      ● Refer to "Side Impact Sensor(SIS)" section in this SERVICE MANUAL.

   2) Install the DAB module and connect the DAB connector.

   3) Connect the connectors of the PAB, SAB, CAB, BPT, FIS and SIS.

   4) Connect the SRSCM connector.

   5) Connect the battery negative cable to the battery.

   6) Connect a Hi-Scan(Pro) to the data link connector.

7) Turn the ignition switch to ON and check the vehicle again.
Does Hi-Scan (Pro) indicate any DTC related to Side Impact Sensor(SIS)?

YES

▶ Go to next step.

NO

▶ Replace SIS.

4. CLEAR THE DTC AND CHECK THE VEHICLE AGAIN
Refer to the DESCRIPTION in this TROUBLESHOOTING section. (See page RT - 36)

DTC B1401 SIDE IMPACT SENSOR [FRONT-DRIVER] CIRCUIT SHORT TO GROUND
DTC B1404 SIDE IMPACT SENSOR [FRONT-PASSENGER] CIRCUIT SHORT TO GROUND

DTC DESCRIPTION E97ECDA8

The detecting system for side crash consists of the SRSCM and four Side Impact Sensors (SIS). The SRSCM sets above DTC(s) if it detects short to ground on the SIS circuit.

DTC DETECTING CONDITION E0FA7544

DTC	Condition	Probable cause
B1401 B1404	• Short to ground between SIS and SRSCM • Side Impact Sensor (SIS) Malfunction • SRSCM Malfunction	• Short to ground circuit on wiring harness • Side Impact Sensor (SIS) • SRSCM

SCHEMATIC DIAGRAM EE98102E

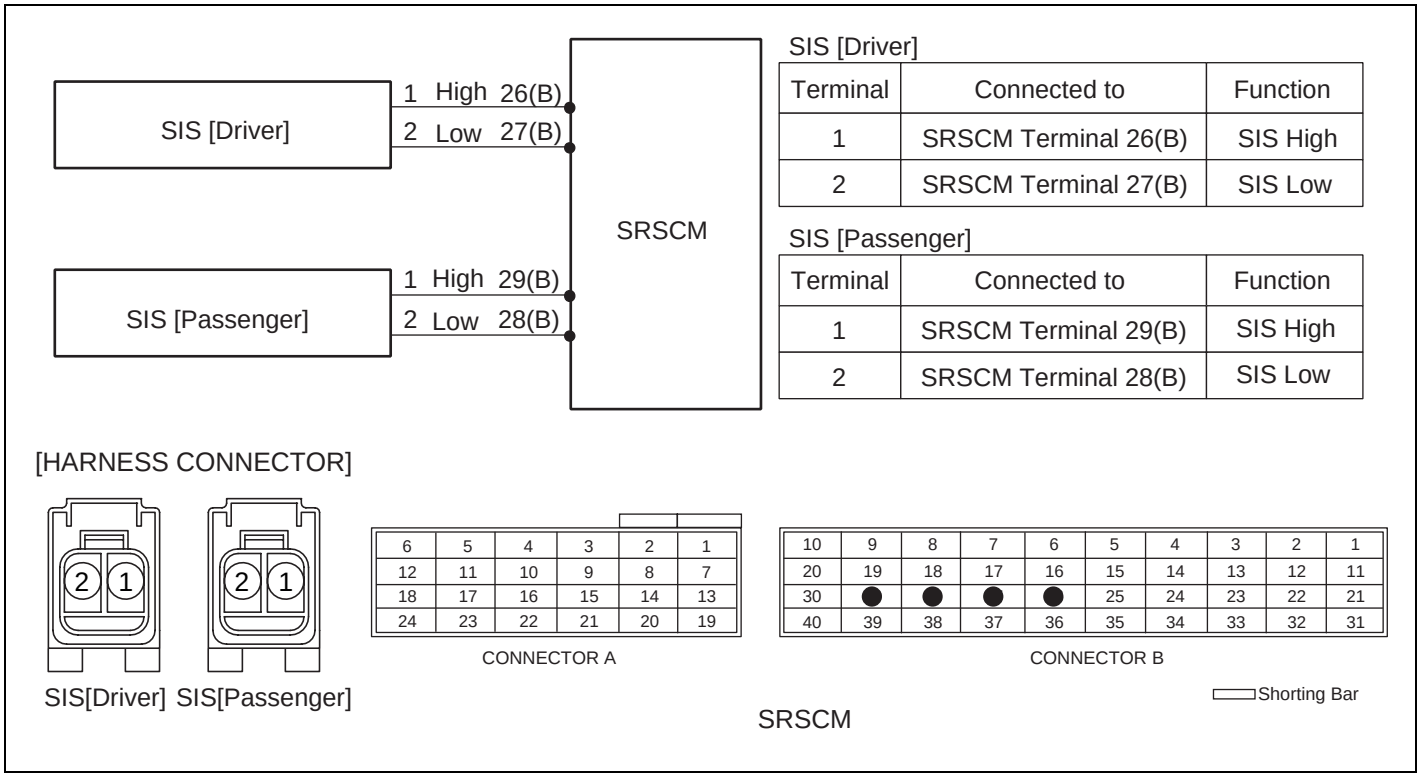

SIS [Driver]

Terminal	Connected to	Function
1	SRSCM Terminal 26(B)	SIS High
2	SRSCM Terminal 27(B)	SIS Low

SIS [Passenger]

Terminal	Connected to	Function
1	SRSCM Terminal 29(B)	SIS High
2	SRSCM Terminal 28(B)	SIS Low

SCMRT6160L

TERMINAL & CONNECTOR INSPECTION EF53CDBA

Refer to the DESCRIPTION in this TROUBLESHOOTING section. (See page RT - 36)

INSPECTION PROCEDURE E384A624

1. PREPARATION
   Refer to the DESCRIPTION in this TROUBLESHOOTING section. (See page RT - 36)

2. CHECK SHORT TO GROUND

1) Measure resistance between the terminal 1 of SIS harness connector and chassis ground.

Specification (resistance) : infinite

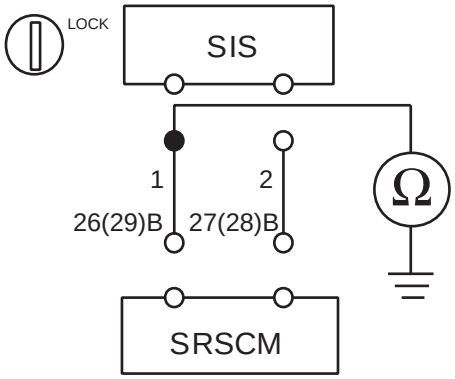

ERBF501A

2) Is the measured resistance within specification?

YES

▶ Check the SIS.

NO

▶ Repair or replace the wiring harness between the SIS and the SRSCM.

3. CHECK THE SIDE IMPACT SENSOR

1) Replace the Side Impact Sensor(SIS) with a new one.
● Refer to "Side Impact Sensor(SIS)" section in this SERVICE MANUAL.

2) Install the DAB module and connect the DAB connector.

3) Connect the connectors of the PAB, SAB, CAB, BPT, FIS and SIS.

4) Connect the SRSCM connector.

5) Connect the battery negative cable to the battery.

6) Connect a Hi-Scan(Pro) to the data link connector.

7) Turn the ignition switch to ON and check the vehicle again.
Does Hi-Scan (Pro) indicate any DTC related to Side Impact Sensor(SIS)?

YES

▶ Go to next step.

NO

▶ Replace SIS module.

4. CLEAR THE DTC AND CHECK THE VEHICLE AGAIN
Refer to the DESCRIPTION in this TROUBLESHOOTING section. (See page RT - 36)

DTC B1402 SIDE IMPACT SENSOR [FRONT-DRIVER] CIRCUIT SHORT TO BATTERY
DTC B1405 SIDE IMPACT SENSOR [FRONT-PASSENGER] CIRCUIT SHORT TO BATTERY

DTC DESCRIPTION EF82BE9A

The detecting system for side crash consists of the SRSCM and four Side Impact Sensors (SIS). The SRSCM sets above DTC(s) if it detects short to battery line on the SIS circuit.

DTC DETECTING CONDITION EE2D6B55

DTC	Condition	Probable cause
B1402 B1405	• Short to battery line between SIS and SRSCM • Side Impact Sensor (SIS) Malfunction • SRSCM Malfunction	• Short to battery line circuit on wiring harness • Side Impact Sensor (SIS) • SRSCM

SCHEMATIC DIAGRAM E01F8A57

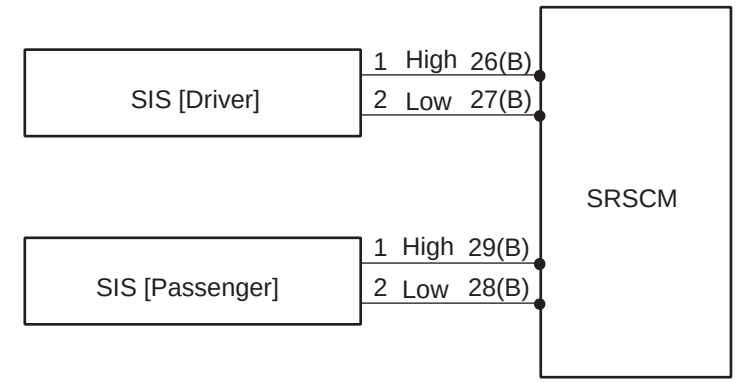

SIS [Driver]

Terminal	Connected to	Function
1	SRSCM Terminal 26(B)	SIS High
2	SRSCM Terminal 27(B)	SIS Low

SIS [Passenger]

Terminal	Connected to	Function
1	SRSCM Terminal 29(B)	SIS High
2	SRSCM Terminal 28(B)	SIS Low

[HARNESS CONNECTOR]

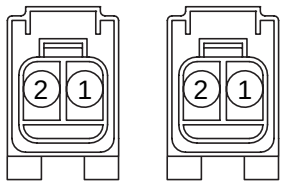

SIS[Driver] SIS[Passenger]

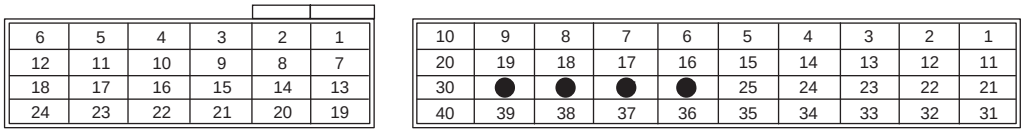

6	5	4	3	2	1
12	11	10	9	8	7
18	17	16	15	14	13
24	23	22	21	20	19

CONNECTOR A

10	9	8	7	6	5	4	3	2	1
20	19	18	17	16	15	14	13	12	11
30	●	●	●	●	25	24	23	22	21
40	39	38	37	36	35	34	33	32	31

CONNECTOR B

Shorting Bar

SRSCM

SCMRT6160L

TERMINAL & CONNECTOR INSPECTION E4FA9AB0

Refer to the DESCRIPTION in this TROUBLESHOOTING section. (See page RT - 36)

INSPECTION PROCEDURE E1FCB2A7

1. PREPARATION
   Refer to the DESCRIPTION in this TROUBLESHOOTING section. (See page RT - 36)

2. CHECK SHORT TO BATTERY LINE

   1) Connect the battery negative cable to the battery.

   2) Turn the ignition switch to ON.

   3) Measure voltage between the terminal 1 of SIS harness connector and chassis ground.

Specification(voltage) : Approximately 0V

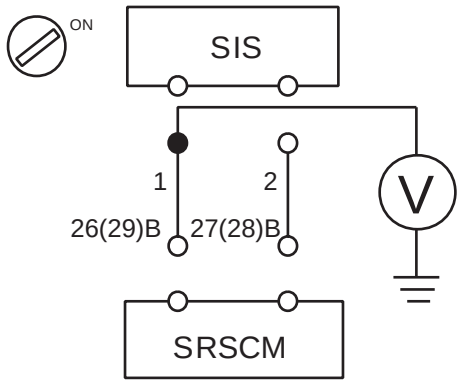

ERBF502R

   4) Is the measured voltage within specification?

YES

▶Check the SIS Module.

NO

▶Repair the short to battery line circuit on wiring harness between the SIS and the SRSCM.

3. CHECK THE SIS MODULE

   1) Replace the Side Impact Sensor(SIS) with a new one.
      ● Refer to "Side Impact Sensor(SIS)" section in this SERVICE MANUAL.

   2) Install the DAB module and connect the DAB connector.

   3) Connect the connectors of the PAB, SAB, CAB, BPT, FIS and SIS.

   4) Connect the SRSCM connector.

   5) Connect the battery negative cable to the battery.

   6) Connect a Hi-Scan(Pro) to the data link connector.

7) Turn the ignition switch to ON and check the vehicle again.
Does Hi-Scan (Pro) indicate any DTC related to Side Impact Sensor(SIS)?

YES

▶ Go to next step.

NO

▶ Replace SIS module.

4. CLEAR THE DTC AND CHECK THE VEHICLE AGAIN
Refer to the DESCRIPTION in this TROUBLESHOOTING section. (See page RT - 36)

DTC B1412 SIDE IMPACT SENSOR [REAR-DRIVER] COMMUNICATION ERROR
DTC B1413 SIDE IMPACT SENSOR [REAR-PASSENGER] COMMUNICATION ERROR
DTC B1418 SIDE IMPACT SENSOR [REAR-DRIVER] DEFECT
DTC B1419 SIDE IMPACT SENSOR [REAR-PASSENGER] DEFECT

DTC DESCRIPTION EF83DBCD

The detecting system for side crash consists of the SRSCM and four Side Impact Sensors (SIS). The SRSCM sets above DTC(s) if it detects that any SIS is defective or there is communication error between any SIS and the SRSCM.

DTC DETECTING CONDITION EEDFDB5F

DTC	Condition	Probable cause
B1412 B1413 B1418 B1419	• Open between SIS and SRSCM • Side Impact Sensor (SIS) Malfunction • SRSCM Malfunction	• Wiring Harness • Side Impact Sensor (SIS) • SRSCM

SCHEMATIC DIAGRAM E4FB645C

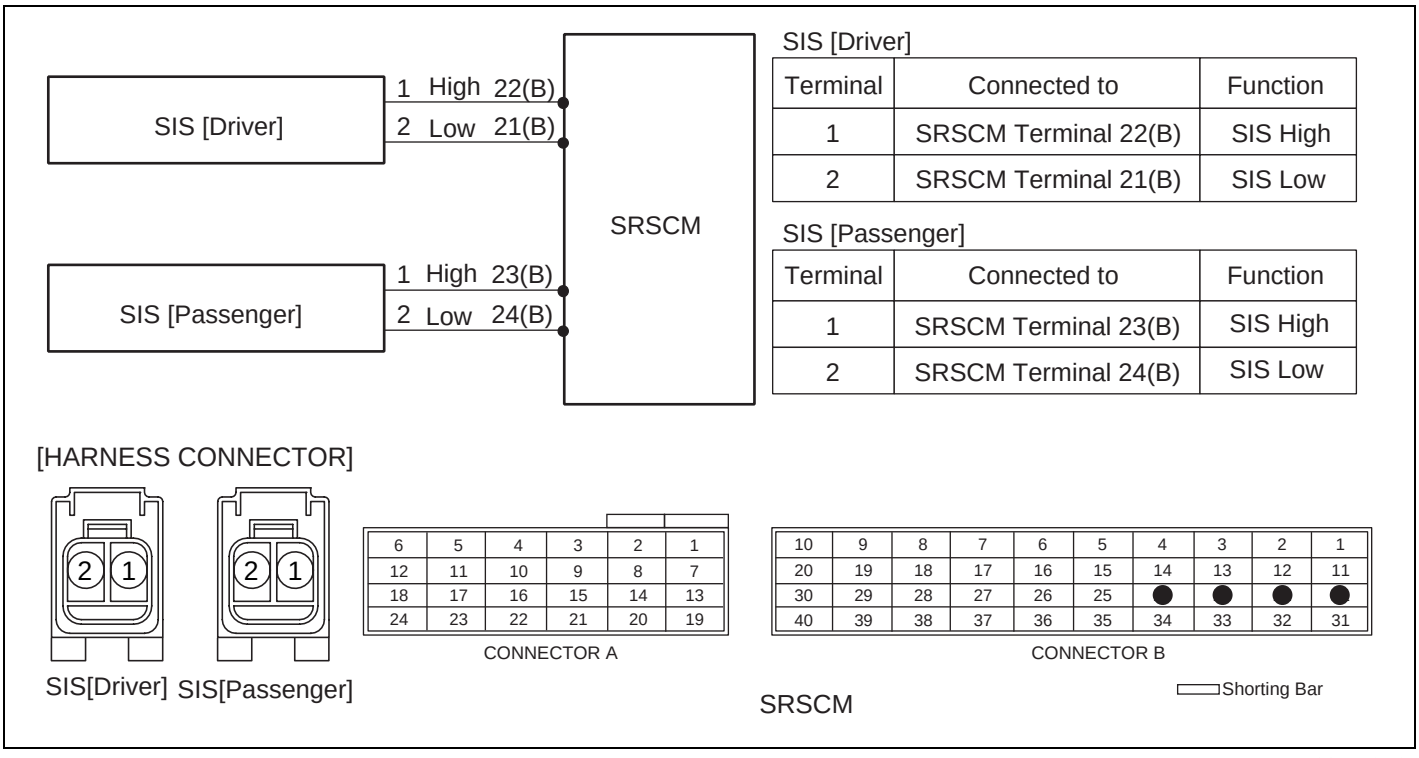

SIS [Driver]

Terminal	Connected to	Function
1	SRSCM Terminal 22(B)	SIS High
2	SRSCM Terminal 21(B)	SIS Low

SIS [Passenger]

Terminal	Connected to	Function
1	SRSCM Terminal 23(B)	SIS High
2	SRSCM Terminal 24(B)	SIS Low

6	5	4	3	2	1				
12	11	10	9	8	7				
18	17	16	15	14	13				
24	23	22	21	20	19				

CONNECTOR A

10	9	8	7	6	5	4	3	2	1
20	19	18	17	16	15	14	13	12	11
30	29	28	27	26	25	●	●	●	●
40	39	38	37	36	35	34	33	32	31

CONNECTOR B

SCMRT6170L

TERMINAL & CONNECTOR INSPECTION EFB513A5

Refer to the DESCRIPTION in this TROUBLESHOOTING section. (See page RT - 36)

INSPECTION PROCEDURE E8CCFCFC

1. PREPARATION
   Refer to the DESCRIPTION in this TROUBLESHOOTING section. (See page RT - 36)

2. CHECK SIS CIRCUIT

   1) Measure resistance between the terminal 1 of SIS harness connector and the terminal 22(23) of SRSCM harness connector(B).

   2) Measure resistance between the terminal 2 of SIS harness connector and the terminal 21(24) of SRSCM harness connector(B).

Specification (resistance) : below 1 Ω

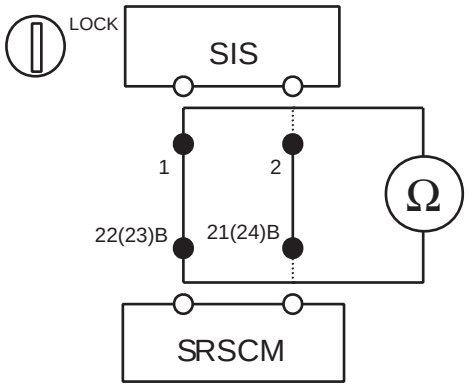

ERBF503E

   3) Is the measured resistance within specification?

   YES

   ▶ Check Side Impact Sensor.

   NO

   ▶ Repair or replace the wiring harness between the SIS and the SRSCM.

3. CHECK THE SIDE IMPACT SENSOR

   1) Replace the Side Impact Sensor(SIS) with a new one.
      ● Refer to "Side Impact Sensor(SIS)" section in this SERVICE MANUAL.

   2) Install the DAB module and connect the DAB connector.

   3) Connect the connectors of the PAB, SAB, CAB, BPT, FIS and SIS.

   4) Connect the SRSCM connector.

   5) Connect the battery negative cable to the battery.

   6) Connect a Hi-Scan(Pro) to the data link connector.

7) Turn the ignition switch to ON and check the vehicle again.
Does Hi-Scan (Pro) indicate any DTC related to Side Impact Sensor(SIS)?

YES

▶ Go to next step.

NO

▶ Replace SIS.

4. CLEAR THE DTC AND CHECK THE VEHICLE AGAIN
Refer to the DESCRIPTION in this TROUBLESHOOTING section. (See page RT - 36)

DTC B1414 SIDE IMPACT SENSOR [FRONT-DRIVER] WRONG ID
DTC B1415 SIDE IMPACT SENSOR [FRONT-PASSENGER] WRONG ID
DTC B1416 SIDE IMPACT SENSOR [REAR-DRIVER] WRONG ID
DTC B1417 SIDE IMPACT SENSOR [REAR-PASSENGER] WRONG ID

DTC DESCRIPTION E7BCC6BD

The detecting system for side crash consists of the SRSCM and four Side Impact Sensors (SIS). The SRSCM sets above DTC(s) if it detects that wrong SIS is used.

DTC DETECTING CONDITION E2A0FF8A

DTC	Condition	Probable cause
B1414 B1415 B1416 B1417	• Wrong Side Impact Sensor (SIS) • SRSCM Malfunction	• Side Impact Sensor (SIS) • SRSCM

TERMINAL & CONNECTOR INSPECTION E394EEA7

Refer to the DESCRIPTION in this TROUBLESHOOTING section. (See page RT - 36)

INSPECTION PROCEDURE E04EC6EF

If above DTC is detected replace the side impact sensor.

DTC B1451 SIDE IMPACT SENSOR [REAR-DRIVER] CIRCUIT SHORT TO GROUND
DTC B1454 SIDE IMPACT SENSOR [REAR-PASSENGER] CIRCUIT SHORT TO GROUND

DTC DESCRIPTION E2C1F3FE

The detecting system for side crash consists of the SRSCM and four Side Impact Sensors (SIS). The SRSCM sets above DTC(s) if it detects short to ground on the SIS circuit.

DTC DETECTING CONDITION EB5BE55B

DTC	Condition	Probable cause
B1451 B1454	• Short to ground between SIS and SRSCM • Side Impact Sensor (SIS) Malfunction • SRSCM Malfunction	• Short to ground circuit on wiring harness • Side Impact Sensor (SIS) • SRSCM

SCHEMATIC DIAGRAM E2866786

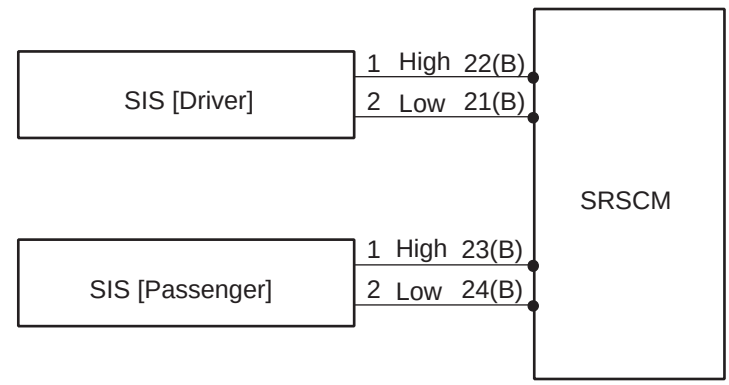

SIS [Driver]

Terminal	Connected to	Function
1	SRSCM Terminal 22(B)	SIS High
2	SRSCM Terminal 21(B)	SIS Low

SIS [Passenger]

Terminal	Connected to	Function
1	SRSCM Terminal 23(B)	SIS High
2	SRSCM Terminal 24(B)	SIS Low

[HARNESS CONNECTOR]

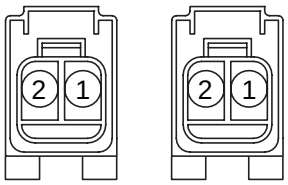

SIS[Driver] SIS[Passenger]

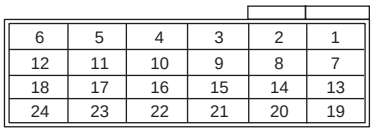

6	5	4	3	2	1
12	11	10	9	8	7
18	17	16	15	14	13
24	23	22	21	20	19

CONNECTOR A

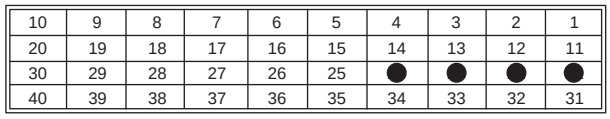

10	9	8	7	6	5	4	3	2	1
20	19	18	17	16	15	14	13	12	11
30	29	28	27	26	25	●	●	●	●
40	39	38	37	36	35	34	33	32	31

CONNECTOR B

SRSCM

Shorting Bar

SCMRT6170L

TERMINAL & CONNECTOR INSPECTION E9E88BA8

Refer to the DESCRIPTION in this TROUBLESHOOTING section. (See page RT - 36)

INSPECTION PROCEDURE E1588FE0

1. PREPARATION
   Refer to the DESCRIPTION in this TROUBLESHOOTING section. (See page RT - 36)

2. CHECK SHORT TO GROUND

1) Measure resistance between the terminal 1 of SIS harness connector and chassis ground.

Specification (resistance) : infinite

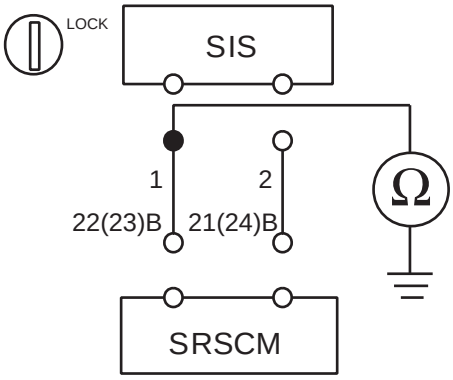

ERBF502A

2) Is the measured resistance within specification?

YES

▶ Check the SIS.

NO

▶ Repair or replace the wiring harness between the SIS and the SRSCM.

3. CHECK THE SIDE IMPACT SENSOR

1) Replace the Side Impact Sensor(SIS) with a new one.
● Refer to "Side Impact Sensor(SIS)" section in this SERVICE MANUAL.

2) Install the DAB module and connect the DAB connector.

3) Connect the connectors of the PAB, SAB, CAB, BPT, FIS and SIS.

4) Connect the SRSCM connector.

5) Connect the battery negative cable to the battery.

6) Connect a Hi-Scan(Pro) to the data link connector.

7) Turn the ignition switch to ON and check the vehicle again.
Does Hi-Scan (Pro) indicate any DTC related to Side Impact Sensor(SIS)?

YES

▶ Go to next step.

NO

▶ Replace SIS module.

4. CLEAR THE DTC AND CHECK THE VEHICLE AGAIN
Refer to the DESCRIPTION in this TROUBLESHOOTING section. (See page RT - 36)

DTC B1452 SIDE IMPACT SENSOR [REAR-DRIVER] CIRCUIT SHORT TO BATTERY
DTC B1455 SIDE IMPACT SENSOR [REAR-PASSENGER] CIRCUIT SHORT TO BATTERY

DTC DESCRIPTION EE3957BE

The detecting system for side crash consists of the SRSCM and four Side Impact Sensors (SIS). The SRSCM sets above DTC(s) if it detects short to battery line on the SIS circuit.

DTC DETECTING CONDITION EC9739E6

DTC	Condition	Probable cause
B1452 B1455	• Short to battery line between SIS and SRSCM • Side Impact Sensor (SIS) Malfunction • SRSCM Malfunction	• Short to battery line circuit on wiring harness • Side Impact Sensor (SIS) • SRSCM

SCHEMATIC DIAGRAM E076667C

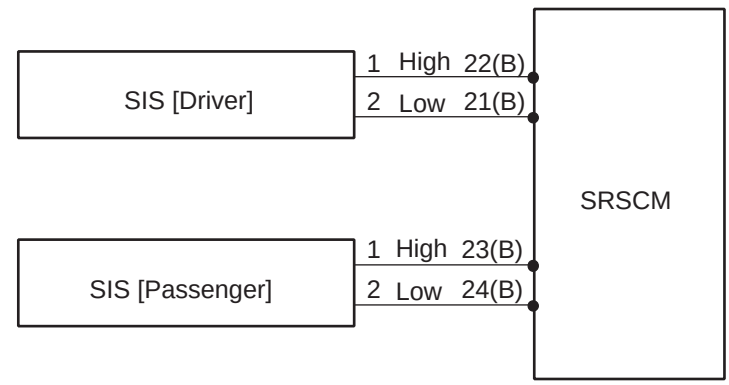

SIS [Driver]

Terminal	Connected to	Function
1	SRSCM Terminal 22(B)	SIS High
2	SRSCM Terminal 21(B)	SIS Low

SIS [Passenger]

Terminal	Connected to	Function
1	SRSCM Terminal 23(B)	SIS High
2	SRSCM Terminal 24(B)	SIS Low

[HARNESS CONNECTOR]

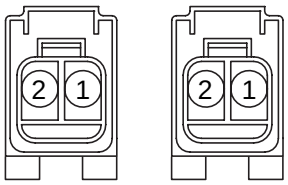

SIS[Driver] SIS[Passenger]

6	5	4	3	2	1
12	11	10	9	8	7
18	17	16	15	14	13
24	23	22	21	20	19

CONNECTOR A

10	9	8	7	6	5	4	3	2	1
20	19	18	17	16	15	14	13	12	11
30	29	28	27	26	25	●	●	●	●
40	39	38	37	36	35	34	33	32	31

CONNECTOR B

SRSCM

Shorting Bar

SCMRT6170L

TERMINAL & CONNECTOR INSPECTION E5EA384D

Refer to the DESCRIPTION in this TROUBLESHOOTING section. (See page RT - 36)

INSPECTION PROCEDURE E32EDA9C

1. PREPARATION
   Refer to the DESCRIPTION in this TROUBLESHOOTING section. (See page RT - 36)

2. CHECK SHORT TO BATTERY LINE

1) Connect the battery negative cable to the battery.

2) Turn the ignition switch to ON.

3) Measure voltage between the terminal 1 of SIS harness connector and chassis ground.

Specification (voltage) : Approximately 0V

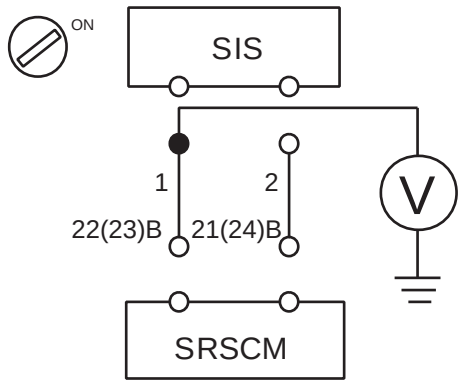

ERBF503R

4) Is the measured voltage within specification?

YES

▶ Check the SIS Module.

NO

▶ Repair the short to battery line circuit on wiring harness between the SIS and the SRSCM.

3. CHECK THE SIS MODULE

1) Replace the Side Impact Sensor(SIS) with a new one.
● Refer to "Side Impact Sensor(SIS)" section in this SERVICE MANUAL.

2) Install the DAB module and connect the DAB connector.

3) Connect the connectors of the PAB, SAB, CAB, BPT, FIS and SIS.

4) Connect the SRSCM connector.

5) Connect the battery negative cable to the battery.

6) Connect a Hi-Scan(Pro) to the data link connector.

7) Turn the ignition switch to ON and check the vehicle again.
Does Hi-Scan (Pro) indicate any DTC related to Side Impact Sensor(SIS)?

YES

▶ Go to next step.

NO

▶ Replace SIS module.

4. CLEAR THE DTC AND CHECK THE VEHICLE AGAIN
Refer to the DESCRIPTION in this TROUBLESHOOTING section. (See page RT - 36)

DTC B1473 CURTAIN AIRBAG [DRIVER] RESISTANCE TOO HIGH
DTC B1474 CURTAIN AIRBAG [DRIVER] RESISTANCE TOO LOW
DTC B1477 CURTAIN AIRBAG [PASSENGER] RESISTANCE TOO HIGH
DTC B1478 CURTAIN AIRBAG [PASSENGER] RESISTANCE TOO LOW

DTC DESCRIPTION E9E2C023

The CAB squib circuit consists of the SRSCM and two Curtain Airbags(CAB). It causes the SRS to deploy when the SRS deployment conditions are satisfied. The above DTC is recorded when the CAB resistance too high or low is detected in the CAB squib circuit.

DTC DETECTING CONDITION E71AB0A4

DTC	Condition	Probable cause
B1473 B1474 B1477 B1478	• Too high or low resistance between CAB high(+) and CAB low(-) • Curtain Airbag (CAB) Malfunction • SRSCM Malfunction	• Open or short circuit on wiring harness • Curtain Airbag (CAB) squib • SRSCM

SCHEMATIC DIAGRAM E813CB8C

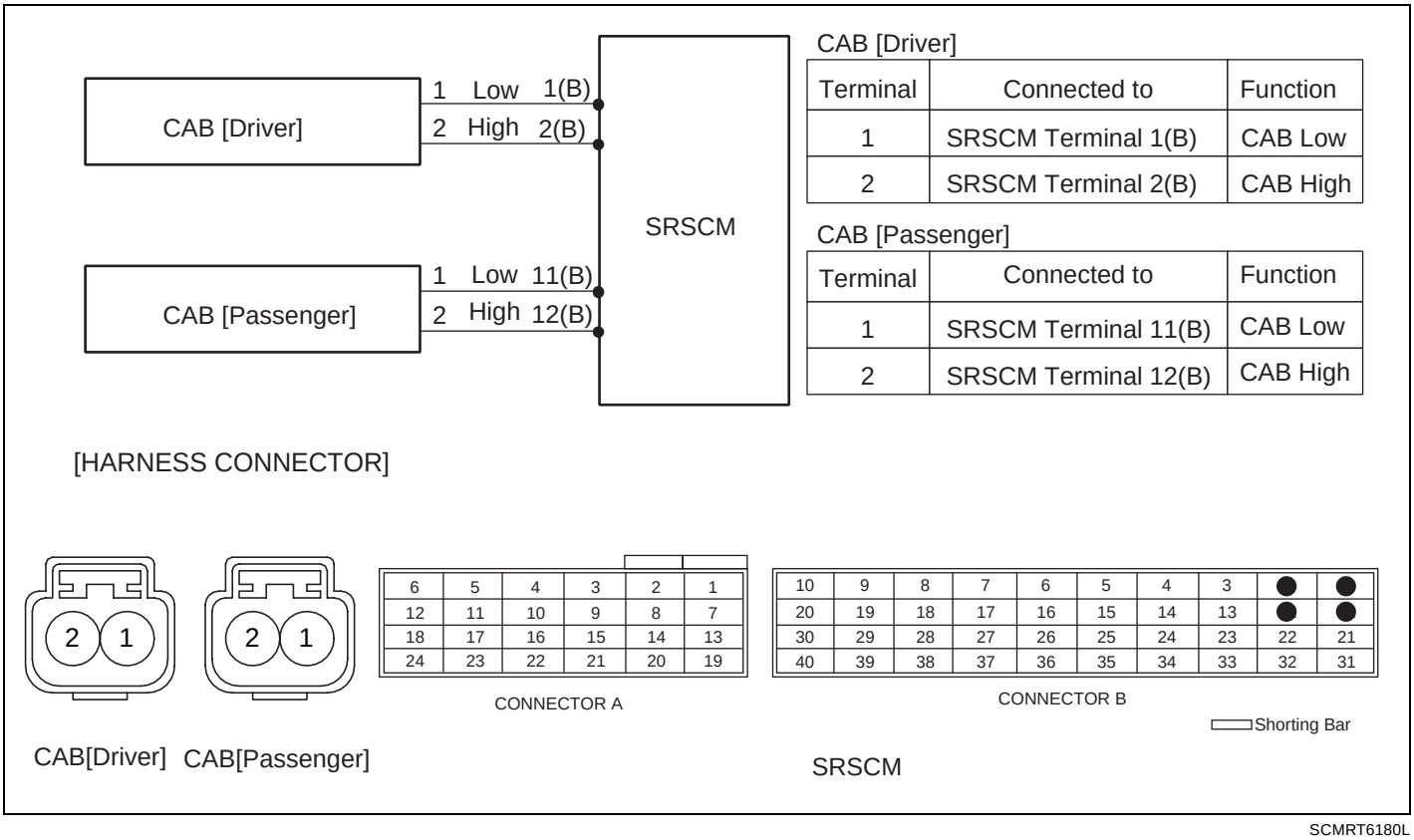

CAB [Driver]

Terminal	Connected to	Function
1	SRSCM Terminal 1(B)	CAB Low
2	SRSCM Terminal 2(B)	CAB High

CAB [Passenger]

Terminal	Connected to	Function
1	SRSCM Terminal 11(B)	CAB Low
2	SRSCM Terminal 12(B)	CAB High

SCMRT6180L

SPECIFICATION E7348974

CAB resistance : 1.4 ~ 6.2 Ω

TERMINAL & CONNECTOR INSPECTION E67565A8

Refer to the DESCRIPTION in this TROUBLESHOOTING section. (See page RT - 36)

INSPECTION PROCEDURE E0265A0E

1. PREPARATION
   Refer to the DESCRIPTION in this TROUBLESHOOTING section. (See page RT - 36)

2. CHECK CAB RESISTANCE

   CAUTION

   Never attempt to measure the circuit resistance of the airbag module(squib) even if you are using the specified tester.

   1) Connect the Dummy and the Dummy Adapter on CAB harness connector.
      ● Refer to "SPECIAL SERVICE TOOL" section in this SERVICE MANUAL for the SST No. of Dummy and Dummy Adapter.

   2) Measure resistance between the terminal 2(12) and 1(11) of SRSCM harness connector(B).

Specification (resistance) : 1.4 ~ 6.2 Ω

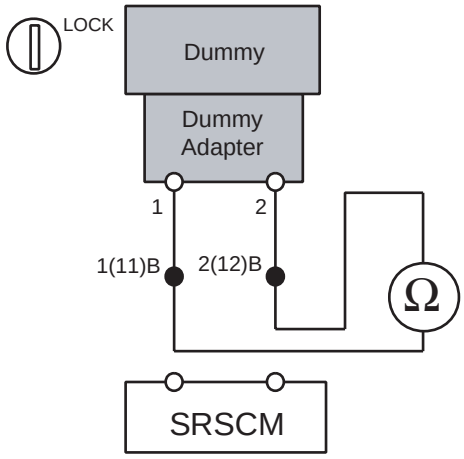

ERBF200O

   3) Is the measured resistance within specification?

   YES

   ▶ Replace the Curtain Airbag(CAB) module.

   NO

   ▶ Check open circuit.

3. CHECK OPEN CIRCUIT

1) Measure resistance between the terminal 2 of CAB harness connector and the terminal 2(12) of SRSCM harness connector(B).

2) Measure resistance between the terminal 1 of CAB harness connector and the terminal 1(11) of SRSCM harness connector(B).

Specification (resistance) : below 1 Ω

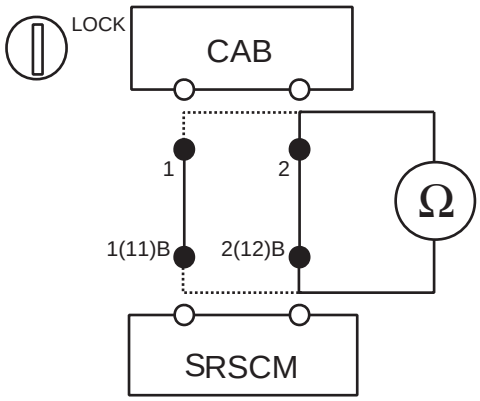

ERBF200P

3) Is the measured resistance within specification?

YES

▶ Check short circuit.

NO

▶ Repair or replace the wiring harness between the CAB and the SRSCM.

4. CHECK SHORT CIRCUIT

1) Measure resistance between the terminal 1 and 2 of CAB harness connector.

Specification (resistance) : infinite

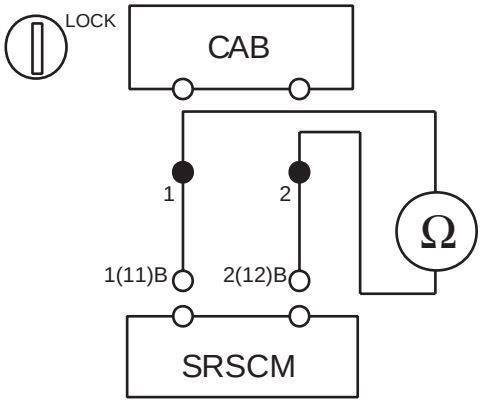

ERBF200Q

2) Is the measured resistance within specification?

YES

▶ Go to next step.

NO

▶ Repair or replace the wiring harness between the CAB and the SRSCM.

5. CLEAR THE DTC AND CHECK THE VEHICLE AGAIN
Refer to the DESCRIPTION in this TROUBLESHOOTING section. (See page RT - 36)

DTC B1475 CURTAIN AIRBAG [DRIVER] CIRCUIT SHORT TO GROUND
DTC B1479 CURTAIN AIRBAG [PASSENGER] CIRCUIT SHORT TO GROUND

DTC DESCRIPTION EF4CB9A5

The CAB squib circuit consists of the SRSCM and two Curtain Airbags (CAB). It causes the SRS to deploy when the SRS deployment conditions are satisfied. The above DTC is recorded when short to ground is detected in the CAB squib circuit.

DTC DETECTING CONDITION EAAE5911

DTC	Condition	Probable cause
B1475 B1479	• Short to ground between CAB and SRSCM • Curtain Airbag (CAB) Malfunction • SRSCM Malfunction	• Short to ground circuit on wiring harness • Curtain Airbag (CAB) squib • SRSCM

SCHEMATIC DIAGRAM E6EFB078

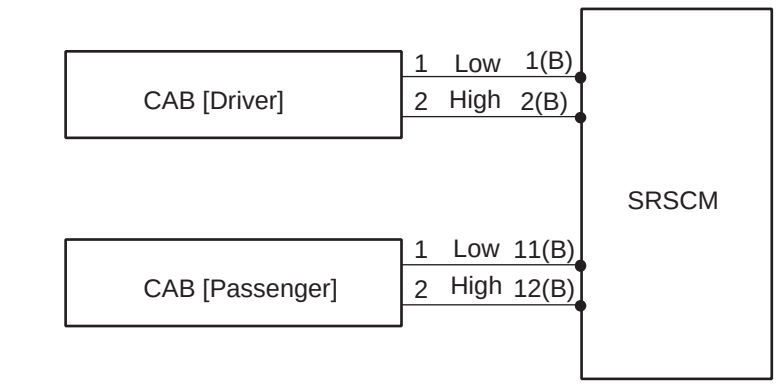

CAB [Driver]

Terminal	Connected to	Function
1	SRSCM Terminal 1(B)	CAB Low
2	SRSCM Terminal 2(B)	CAB High

CAB [Passenger]

Terminal	Connected to	Function
1	SRSCM Terminal 11(B)	CAB Low
2	SRSCM Terminal 12(B)	CAB High

[HARNESS CONNECTOR]

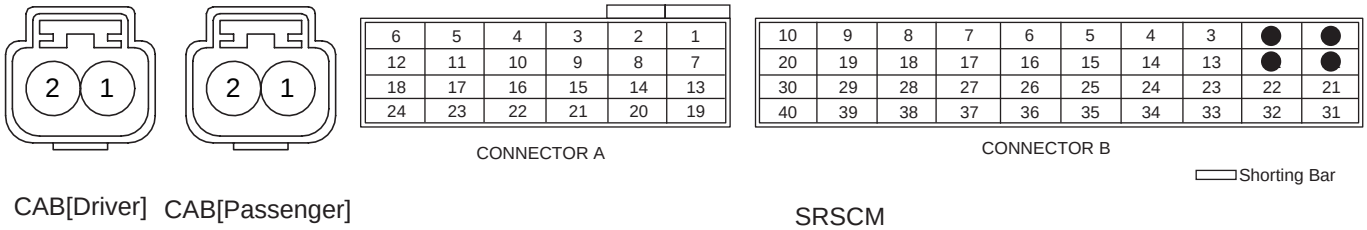

SCMRT6180L

TERMINAL & CONNECTOR INSPECTION E7200741

Refer to the DESCRIPTION in this TROUBLESHOOTING section. (See page RT - 36)

INSPECTION PROCEDURE E3A2F149

1. PREPARATION
   Refer to the DESCRIPTION in this TROUBLESHOOTING section. (See page RT - 36)

2. CHECK SHORT TO GROUND

1) Measure resistance between the terminal 2 of CAB harness connector and chassis ground.

Specification (resistance) : infinite

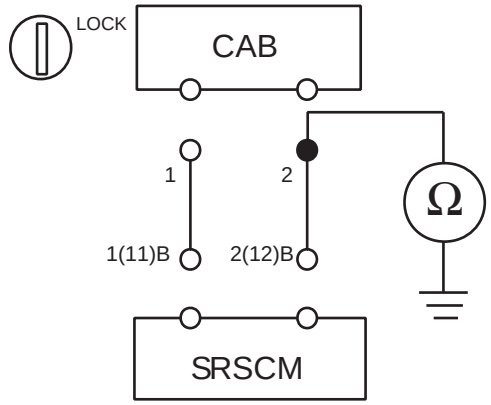

ERBF200R

2) Is the measured resistance within specification?

YES

▶ Check the CAB Module..

NO

▶ Repair or replace the wiring harness between the CAB and the SRSCM.

3. CHECK THE CAB MODULE

1) Replace the Curtain Airbag(CAB) with a new one.
● Refer to "Curtain Airbag(CAB)" section in this SERVICE MANUAL.

2) Install the DAB module and connect the DAB connector.

3) Connect the connectors of the PAB, SAB, CAB, BPT, FIS and SIS.

4) Connect the SRSCM connector.

5) Connect the battery negative cable to the battery.

6) Connect a Hi-Scan(Pro) to the data link connector.

7) Turn the ignition switch to ON and check the vehicle again.
Does Hi-Scan (Pro) indicate any DTC related to Curtain Airbag(CAB)?

YES

▶ Go to next step.

NO

▶ Replace CAB module.

4. CLEAR THE DTC AND CHECK THE VEHICLE AGAIN
Refer to the DESCRIPTION in this TROUBLESHOOTING section. (See page RT - 36)

DTC B1476 CURTAIN AIRBAG [DRIVER] CIRCUIT SHORT TO BATTERY
DTC B1480 CURTAIN AIRBAG [PASSENGER] CIRCUIT SHORT TO BATTERY

DTC DESCRIPTION E8242B75

The CAB squib circuit consists of the SRSCM and CAB. It causes the SRS to deploy when the SRS deployment conditions are satisfied. The above DTC is recorded when short to battery is detected in the CAB squib circuit.

DTC DETECTING CONDITION EC02CD65

DTC	Condition	Probable cause
B1476 B1480	• Short to battery between CAB and SRSCM • Curtain Airbag (CAB) Malfunction • SRSCM Malfunction	• Short to battery line circuit on wiring harness • Curtain Airbag (CAB) squib • SRSCM

SCHEMATIC DIAGRAM ED9E23C3

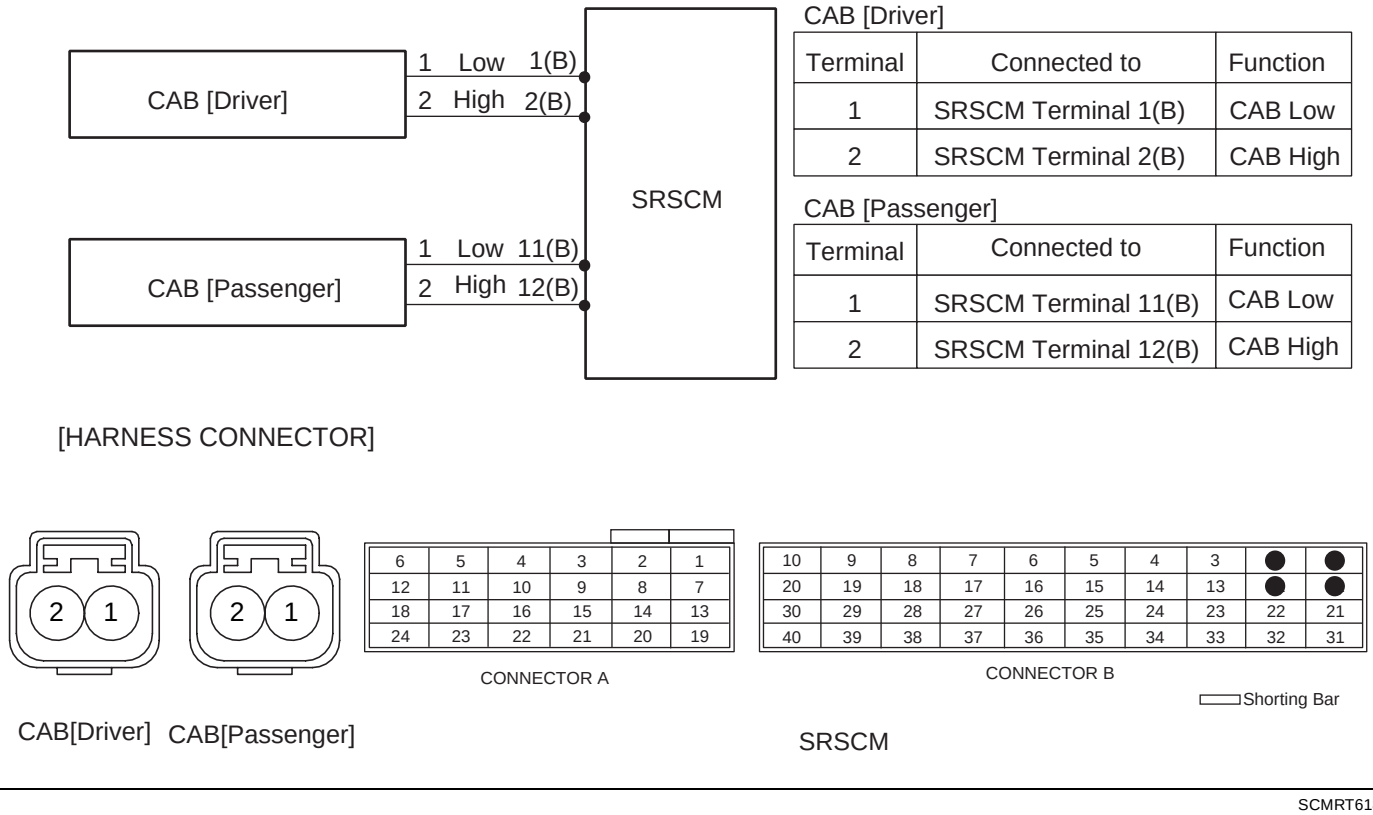

CAB [Driver]

Terminal	Connected to	Function
1	SRSCM Terminal 1(B)	CAB Low
2	SRSCM Terminal 2(B)	CAB High

CAB [Passenger]

Terminal	Connected to	Function
1	SRSCM Terminal 11(B)	CAB Low
2	SRSCM Terminal 12(B)	CAB High

SCMRT6180L

TERMINAL & CONNECTOR INSPECTION E7691A8D

Refer to the DESCRIPTION in this TROUBLESHOOTING section. (See page RT - 36)

INSPECTION PROCEDURE E8312668

1. PREPARATION
   Refer to the DESCRIPTION in this TROUBLESHOOTING section. (See page RT - 36)

2. CHECK SHORT TO BATTERY LINE

   1) Connect the battery negative cable to the battery.

   2) Turn the ignition switch to ON.

   3) Measure voltage between the terminal 2 of CAB harness connector and chassis ground.

Specification (voltage) : Approximately 0 V

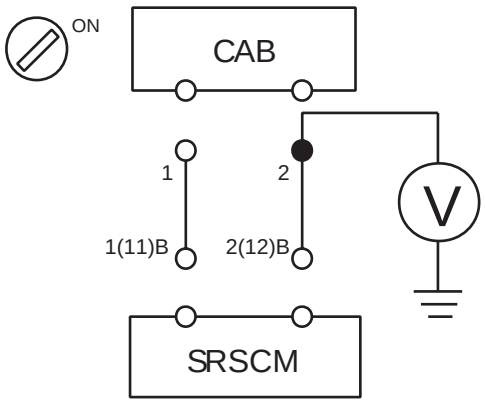

ERBF200S

   4) Is the measured voltage within specification?

YES

▶ Check the CAB Module.

NO

▶ Repair the short to battery line circuit on wiring harness between the CAB and the SRSCM.

3. CHECK THE CAB MODULE

   1) Replace the Curtain Airbag(CAB) with a new one.
   ● Refer to "Curtain Airbag(CAB)" section in this SERVICE MANUAL.

   2) Install the DAB module and connect the DAB connector.

   3) Connect the connectors of the PAB, SAB, CAB, BPT, FIS and SIS.

   4) Connect the SRSCM connector.

   5) Connect the battery negative cable to the battery.

   6) Connect a Hi-Scan(Pro) to the data link connector.

7) Turn the ignition switch to ON and check the vehicle again.
Does Hi-Scan (Pro) indicate any DTC related to Curtain Airbag(CAB)?

YES

▶ Go to next step.

NO

▶ Replace CAB module.

4. CLEAR THE DTC AND CHECK THE VEHICLE AGAIN
Refer to the DESCRIPTION in this TROUBLESHOOTING section. (See page RT - 36)

DTC B1527 PASSENGER AIRBAG DEACTIVATION SWITCH OPEN OR SHORT TO BATTERY

DTC DESCRIPTION E43745D9

The deactivation system for the passenger airbag consists of the SRSCM and the Passenger Airbag Deactivation(PAD) switch. The above DTC is recorded when PAD switch open or short to battery is detected in the PAD circuit.

DTC DETECTING CONDITION E9D133AD

DTC	Condition	Probable cause
B1527	• Short to battery line between PAD switch and SRSCM • SRSCM malfunction • PAD switch malfunction	• PAD switch • Wiring harness • SRSCM

SCHEMATIC DIAGRAM E304422C

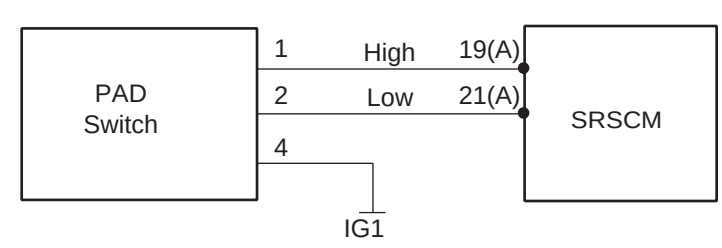

[PAD Switch]

Terminal	Connected to	Function
1	SRSCM Terminal 19(A)	PAD SW High
2	SRSCM Terminal 21(A)	PAD SW Low
4	IG1	Battery Voltage

[HARNESS CONNECTOR]

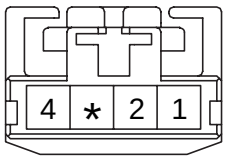

PAD SWITCH

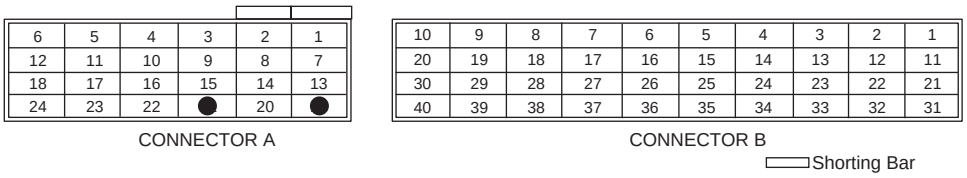

SRSCM

ERBF501T

SPECIFICATION EDC39A07

PAD Switch Status	Resistance (Ω)	Related DTC
Short to Battery	R > 1,114	B1527
ON (PAB Enabled)	728 ~ 1,567	
Defect	502 ~ 1,024	B1529
OFF (PAB Disabled)	301 ~ 706	
Short to Ground	R < 424	B1528

TERMINAL & CONNECTOR INSPECTION E83AEDAD

Refer to the DESCRIPTION in this TROUBLESHOOTING section. (See page RT - 36)

INSPECTION PROCEDURE E13F2133

1. PREPARATION
   Refer to the DESCRIPTION in this TROUBLESHOOTING section. (See page RT - 36)

2. CHECK OPEN CIRCUIT

   1) Disconnect the connector of the PAD switch.

   2) Measure resistance between the terminal 19 of the SRSCM harness connector(A) and 1 of PAD switch harness connector.

   3) Measure resistance between the terminal 21 of the SRSCM harness connector(A) and 2 of PAD switch harness connector.

Specification (resistance) : below 1 Ω

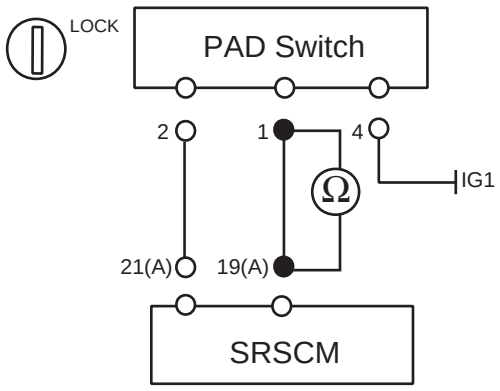

ERBF500Z

   4) Is the measured resistance within specification?

YES

▶ Check short to battery line.

NO

▶ Replace the harness between the SRSCM and the PAD switch.

3. CHECK SHORT TO BATTERY LINE

   1) Connect the battery negative cable to the battery.

   2) Turn the ignition switch to ON.

   3) Turn the ignition switch to LOCK, and wait for 30 seconds.

   4) Measure voltage between the terminal 1 of PAD switch harness connector and chassis ground.

Specification (voltage) : Approximately 0 V

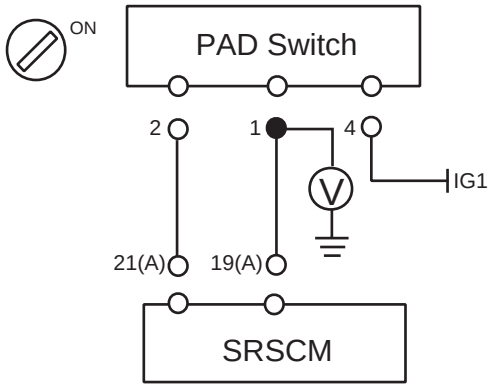

ERBF503A

5) Is the measured voltage within specification?

YES

▶ Go to next step.

NO

▶ Repair or replace the wiring harness between the PAD switch and the SRSCM.

4. CHECK THE PAD SWITCH

1) Connect the SRSCM connector.

2) Connect the PAD switch.

3) Connect the battery negative cable to the battery.

4) Turn the ignition switch to ON.

5) Measure resistance between the terminal 19 of the SRSCM harness connector(A) and 1 of PAD switch harness connector.

Specification (resistance :
PAD switch ON (Enabled positon) : 728 ~ 1,567 Ω
PAD switch OFF (Disabled positon) : 301 ~ 706 Ω

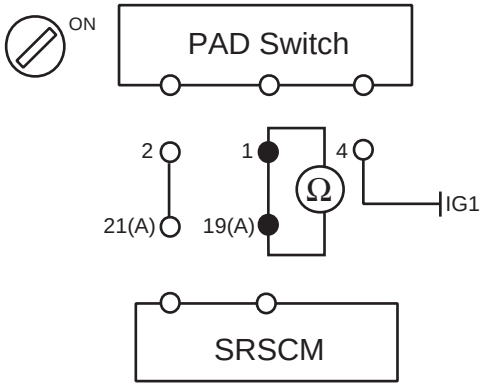

ERBF504B

6) Is the measured resistance within specification?

YES

▶ Go to next step.

NO

▶ Replace the PAD switch.

5. CLEAR THE DTC AND CHECK THE VEHICLE AGAIN
Refer to the DESCRIPTION in this TROUBLESHOOTING section. (See page RT - 36)

DTC B1528 PASSENGER AIRBAG DEACTIVATION SWITCH SHORT OR SHORT TO GROUND

DTC DESCRIPTION E8FDD9B3

The deactivation system for the passenger airbag consists of the SRSCM and the Passenger Airbag Deactivation(PAD) switch. The above DTC is recorded when PAD switch short or short to ground is detected in the PAD system circuit.

DTC DETECTING CONDITION E13549DA

DTC	Condition	Probable cause
B1528	• Short to ground between PAD switch and SRSCM • PAD switch malfunction • SRSCM malfunction	• PAD switch • Wiring harness • SRSCM

SCHEMATIC DIAGRAM E1C1B705

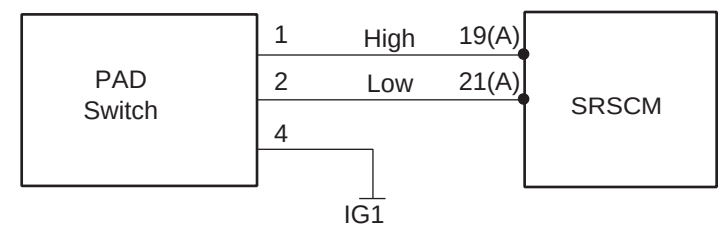

[PAD Switch]

Terminal	Connected to	Function
1	SRSCM Terminal 19(A)	PAD SW High
2	SRSCM Terminal 21(A)	PAD SW Low
4	IG1	Battery Voltage

[HARNESS CONNECTOR]

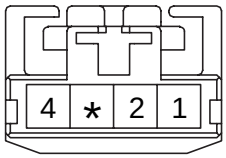

PAD SWITCH

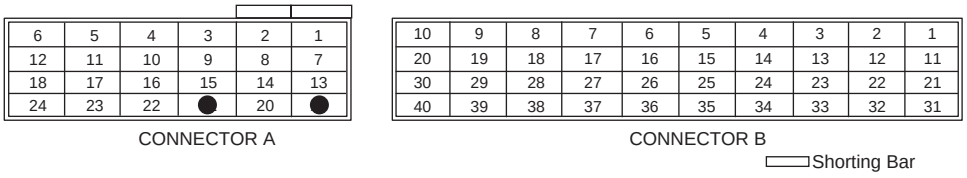

SRSCM

ERBF501T

SPECIFICATION EB1FB32A

PAD Switch Status	Resistance (Ω)	Related DTC
Short to Battery	R > 1,114	B1527
ON (PAB Enabled)	728 ~ 1,567	
Defect	502 ~ 1,024	B1529
OFF (PAB Disabled)	301 ~ 706	
Short to Ground	R < 424	B1528

TERMINAL & CONNECTOR INSPECTION E0AC4EF2

Refer to the DESCRIPTION in this TROUBLESHOOTING section. (See page RT - 36)

INSPECTION PROCEDURE EA9149BD

1. PREPARATION
   Refer to the DESCRIPTION in this TROUBLESHOOTING section. (See page RT - 36)
2. CHECK SHORT TO GROUND
   1) Disconnect the connector of the PAD switch.
   2) Measure resistance between the terminal 1 of PAD switch harness connector and chassis ground.

Specification (resistance) : infinite

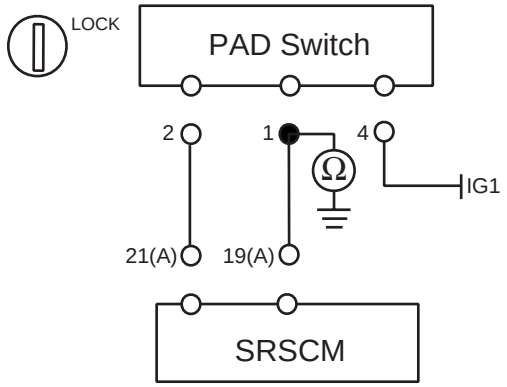

ERBF502C

   3) Is the measured resistance within specification?

YES

▶ Check short circuit.

NO

▶ Replace the harness between the SRSCM and the PAD switch.

3. CHECK SHORT CIRCUIT
   1) Measure resistance between 1 and 2 of PAD switch harness connector.
   2) Measure resistance between 1 and 4 of PAD switch harness connector.

Specification (resistance) : infinite

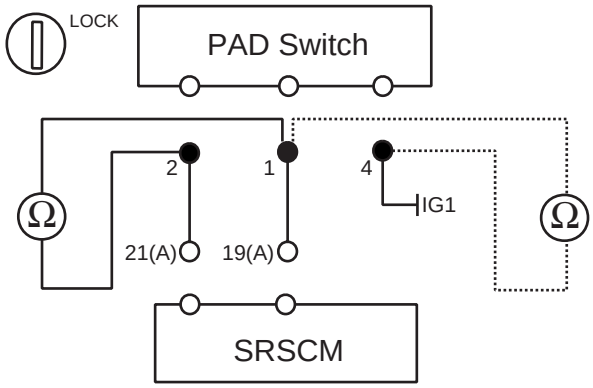

ERBF501D

3) Is the measured resistance within specification?

YES

▶ Go to next step.

NO

▶ Repair or replace the wiring harness between the PAD switch and the SRSCM.

4. CHECK THE PAD SWITCH

1) Connect the SRSCM connector.

2) Connect the PAD switch.

3) Connect the battery negative cable to the battery.

4) Turn the ignition switch to ON.

5) Measure resistance between the terminal 19 of the SRSCM harness connector(A) and 1 of PAD switch harness connector.

Specification (resistance :
PAD switch ON (Enabled positon) : 728 ~ 1,567 Ω
PAD switch OFF (Disabled positon) : 301 ~ 706 Ω

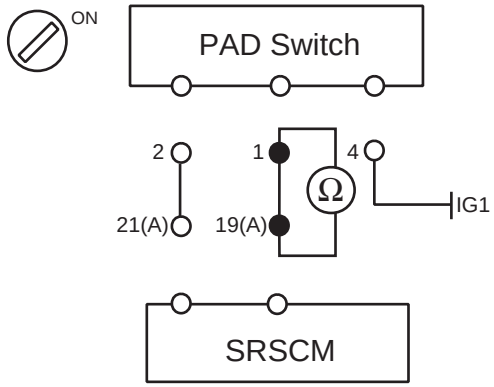

ERBF501E

6) Is the measured resistance within specification?

YES

▶ Go to next step.

NO

▶ Replace the PAD switch.

5. CLEAR THE DTC AND CHECK THE VEHICLE AGAIN
Refer to the DESCRIPTION in this TROUBLESHOOTING section. (See page RT - 36)

DTC B1529 PASSENGER AIRBAG DEACTIVATION SWITCH DEFECT
DTC B1530 PASSENGER AIRBAG DEACTIVATION SWITCH INSTABILITY

DTC DESCRIPTION E5916DC3

The deactivation system for the passenger airbag consists of the SRSCM and the Passenger Airbag Deactivation(PAD) switch. The above DTC is recorded when the defect or instability of PAD switch is detected in the PAD system circuit.

DTC DETECTING CONDITION ED364FE5

DTC	Condition	Probable cause
B1529 B1530	• PAD switch malfunction • SRSCM malfunction	• PAD switch • Wiring harness • SRSCM

SCHEMATIC DIAGRAM E2DB86D8

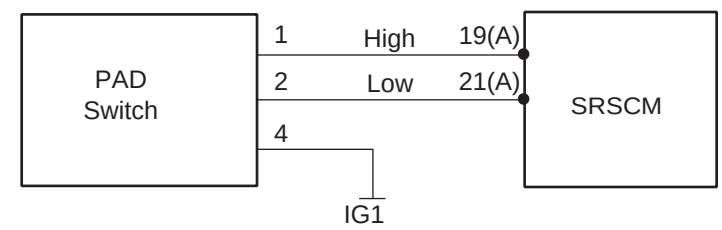

[PAD Switch]

Terminal	Connected to	Function
1	SRSCM Terminal 19(A)	PAD SW High
2	SRSCM Terminal 21(A)	PAD SW Low
4	IG1	Battery Voltage

[HARNESS CONNECTOR]

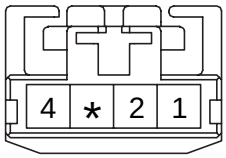

PAD SWITCH

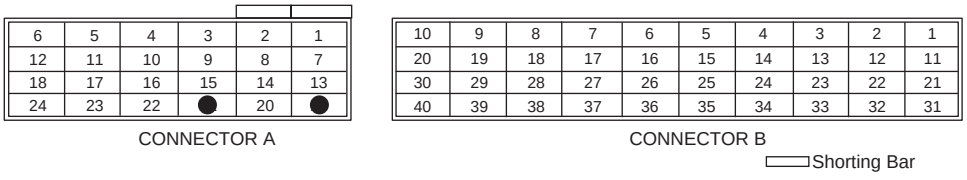

SRSCM

ERBF501T

SPECIFICATION E25793DB

PAD Switch Status	Resistance (Ω)	Related DTC
Short to Battery	R > 1,114	B1527
ON (PAB Enabled)	728 ~ 1,567	
Defect	502 ~ 1,024	B1529
OFF (PAB Disabled)	301 ~ 706	
Short to Ground	R < 424	B1528

TERMINAL & CONNECTOR INSPECTION EFC94B40

Refer to the DESCRIPTION in this TROUBLESHOOTING section. (See page RT - 36)

INSPECTION PROCEDURE E64B6D4E

1. PREPARATION
   Refer to the DESCRIPTION in this TROUBLESHOOTING section. (See page RT - 36)

2. CHECK POWER SUPPLY

   1) Connect the battery negative cable to the battery.

   2) Turn the ignition switch to ON.

   3) Measure voltage between the terminal and 4 of PAD switch harness connector and chassis ground.

Specification (voltage) : 8.38 ~ 17.0 V

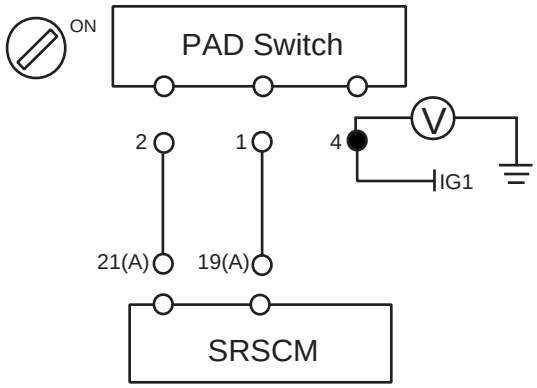

ERBF501F

   4) Is the measured voltage within specification?

YES

▶ Check ground circuit.

NO

▶Replace the harness between the battery line and the PAD switch.

3. CHECK GROUND CIRCUIT

   1) Turn the ignition switch to OFF.

   2) Disconnect the battery negative cable from the battery.

   3) Disconnect the connector of the PAD switch.

   4) Measure resistance between the terminal 2 of PAD switch harness connector and chassis ground.

Specification (resistance) : 0 Ω

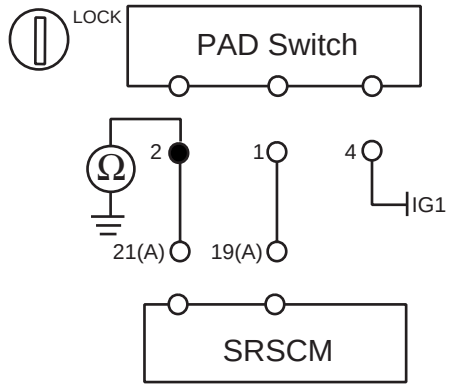

ERBF501G

5) Is the measured resistance within specification?

YES

▶ Go to next step.

NO

▶ Repair or replace the wiring harness between the PAD switch and the chassis ground.

4. CHECK THE PAD SWITCH

1) Connect the SRSCM connector.

2) Connect the PAD switch.

3) Connect the battery negative cable to the battery.

4) Turn the ignition switch to ON.

5) Measure resistance between the terminal 19 of the SRSCM harness connector(A) and 1 of PAD switch harness connector.

Specification (resistance :
PAD switch ON (Enabled positon) : 728 ~ 1,567 Ω
PAD switch OFF (Disabled positon) : 301 ~ 706 Ω

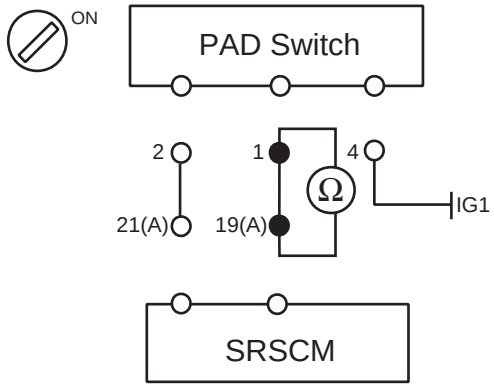

ERBF501E

6) Is the measured resistance within specification?

YES

▶ Go to next step.

NO

▶ Replace the PAD switch.

5. CLEAR THE DTC AND CHECK THE VEHICLE AGAIN
Refer to the DESCRIPTION in this TROUBLESHOOTING section. (See page RT - 36)

DTC B1620 SUPPLEMENTAL RESTRAINT SYSTEM CONTROL MODULE INTERNAL FAULT (REPLACE SRSCM)

DTC DESCRIPTION E1635E15

The Supplemental Restraint System Control Module (SRSCM) runs diagnostics to monitor the condition of its internal circuits and all external components in the restraint system. If a fault is detected in the electronic accelerometor or in the microprocessor, the SRSCM will inhibit deployment to minimize the risk of inadvertent deployments.
Once an internal fault is qualified, the internal fault is latched and warning lamp will be turned on. If an internal fault is qulified, the SRSCM must be replaced. The Hi-Scan tool can't clear an internal fault. All internal faults are DTC B1620.

DTC DETECTING CONDITION E3D215EF

DTC	Condition	Probable cause
B1620	• SRSCM internal fault : acceleration sensor, microcomputer power supply, watchdog etc	• SRSCM

INSPECTION PROCEDURE EC7B75FE

If the above mentioned DTC is confirmed it can't be cleared by Hi-Scan tool, the SRSCM should be replaced.

DTC B1650 CRASH RECORDED - FRONTAL (REPLACE SRSCM)
DTC B1651 CRASH RECORDED - DRIVER SIDE (REPLACE SRSCM)
DTC B1652 CRASH RECORDED - PASSENGER SIDE (REPLACE SRSCM)
DTC B1657 CRASH RECORDED - BELT PRETENSIONER ONLY
DTC B1658 BELT PRETENSIONER 6 TIMES DEPLOYMENT (REPLACE SRSCM)

DTC DESCRIPTION ECC9F31F

When a deployment of any restraint system for seat belt pretensioner and frontal and side air bags occurs, the crash output is activated. The purpose of this output is to signal BCM (Body Control Module) in the vehicle to unlock the vehicle doors. If a crash output is in progress, a second crash output signal will not be sent unless the first one is completed. The SRSCM doesn't perform diagnostics on the crash output function. After a frontal or side crash event is sensed and algorithm makes firing decision, above mentioned crash record is stored after squib deployment.

DTC DETECTING CONDITION E73A47D6

DTC	Condition	Probable cause
B1650 B1651 B1652 B1657 B1658	• Frontal crash • Side crash • Seat belt pretensioner only deployed	• SRSCM • Front Impact Sensor • Side Impact Sensor • Seat Belt Pretensioner

SCHEMATIC DIAGRAM E093E564

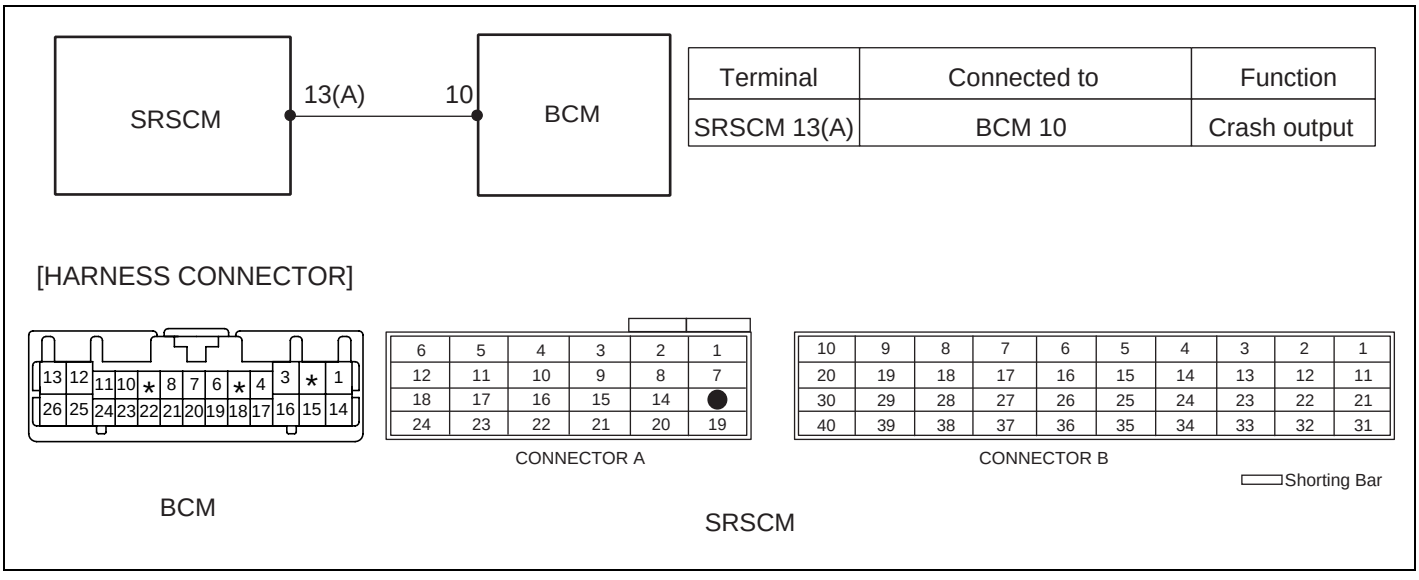

Terminal	Connected to	Function
SRSCM 13(A)	BCM 10	Crash output

SCMRT6190L

INSPECTION PROCEDURE EFDF2513

If the above mentioned DTC is confirmed it can't be cleared by Hi-Scan tool except for the B1657, and the SRSCM should be replaced. However, for the DTC B1657, Belt pretensioner only deployment, it can be erased for 5 times and the SRSCM can be reusable. If the deployment of Belt pretensioner reaches to 6 times, the SRSCM will set DTC B1658 and the SRSCM should be replaced accordingly.

DTC B2500 SRS WARNING LAMP FAILURE

DTC DESCRIPTION E94AAE61

The SRS warning lamp is located in the cluster. When the airbag system is normal, the SRS warning lamp turns on for approx. 6 seconds after the ignition switch is turned to ON, and then turns off automatically. If there is a malfunction in the airbag system, the SRS warning lamp lights up to inform the driver of the abnormality. The SRSCM shall measure the voltage at the SRS warning lamp output pin, both when the lamp is on and when the lamp is off, to detect whether the commanded state matches the actual state.

DTC DETECTING CONDITION EDEB4A4B

DTC	Condition	Probable cause
B2500	• Airbag fuse • Warning Lamp Bulb • Open between warning lamp and SRSCM • Short to ground or battery line between the warning lamp and SRSCM • SRSCM Malfunction	• Fuse • Warning lamp bulb • Wiring Harness • SRSCM

SCHEMATIC DIAGRAM E40E535F

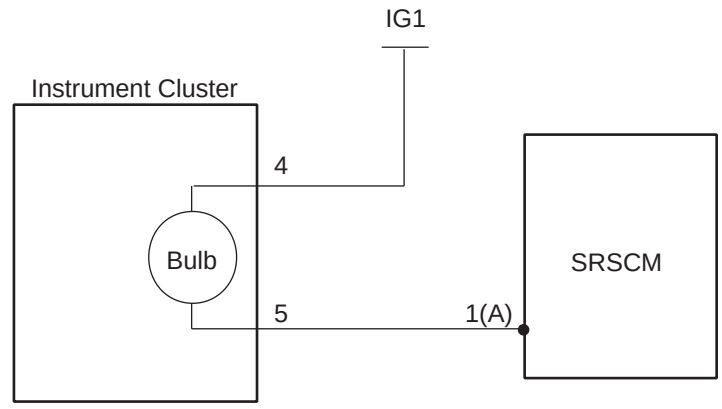

[Instrument Cluster]

Terminal	Connected to	Function
4	IG1	Battery Voltage
5	SRSCM Terminal 1(A)	Lamp Control

[HARNESS CONNECTOR]

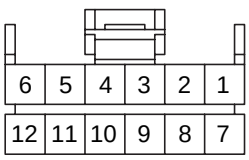

INSTRUMENT CLUSTER

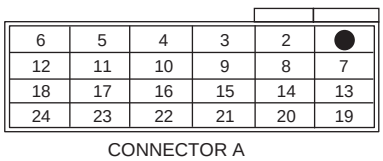

CONNECTOR A

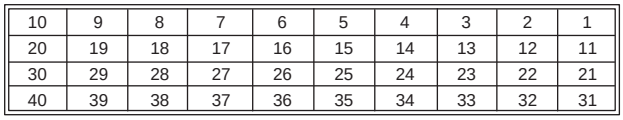

CONNECTOR B

Shorting Bar

SRSCM

SCMRT6200L

TERMINAL & CONNECTOR INSPECTION E7B1FDA3

Refer to the DESCRIPTION in this TROUBLESHOOTING section. (See page RT - 36)

INSPECTION PROCEDURE EDF952B4

1. PREPARATION
   Refer to the DESCRIPTION in this TROUBLESHOOTING section. (See page RT - 36)

2. CHECK THE FUSE

   1) Remove the airbag fuse and the airbag warning lamp fuse from junction box.

   2) Inspect the fuses. Are the fuses normal?

   YES

   ▶ Check the warning lamp bulb.

   NO

   ▶ Repair or replace the fuses.

3. CHECK THE WARNING LAMP BULB

   1) Remove the bulb from the instrument cluster.

   2) Inspect the bulb. Is the bulb normal?

   YES

   ▶Check source voltage.

   NO

   ▶ Repair or replace the bulb.

4. CHECK SOURCE VOLTAGE

   1) Connect the battery negative cable to the battery.

   2) Turn the ignition switch to ON.

   3) Measure voltage between the terminal 2 of the Instrument Cluster harness connector and chassis ground.

Specification (voltage) : 8.38 ~ 17.0 V

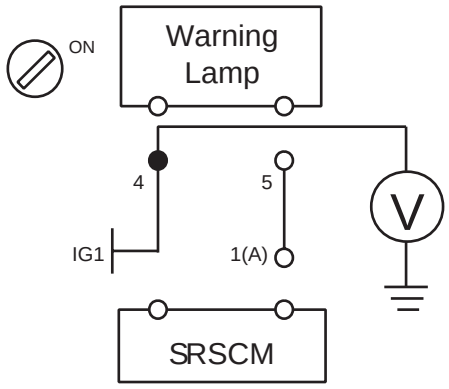

SCMRT6201L

   4) Is the measured voltage within specification?

YES

▶ Check short to battery line.

NO

▶ Repair or replace the wiring harness between ignition switch and the Warning Lamp.

5. CHECK SHORT TO BATTERY LINE

1) Measure voltage between the terminal 5 of the Instrument Cluster harness connector and chassis ground.

Specification (voltage) : Approximately 0 V

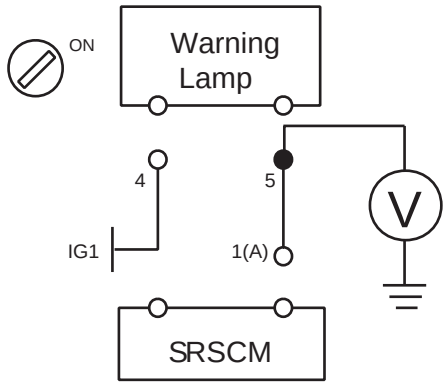

SCMRT6202L

2) Is the measured voltage within specification?

YES

▶ Check short or short to ground.

NO

▶ Repair the short to battery line circuit on wiring harness between the SRSCM and the Warning Lamp.

6. CHECK SHORT OR SHORT TO GROUND

1) Turn the ignition switch to LOCK.

2) Disconnect the battery negative cable from the battery.

3) Measure resistance between the terminal 5 of the Instrument Cluster harness connector and chassis ground.

4) Measure resistance between the terminal 4 and 5 of the Instrument Cluster harness connector.

Specification (resistance) : infinite

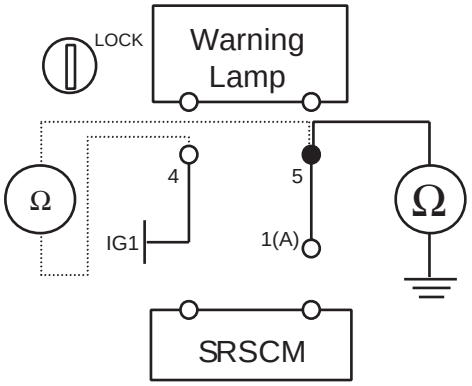

SCMRT6203L

5) Is the measured resistance within specification?

YES

▶ Check open circuit.

NO

▶ Repair the short or short to ground circuit on wiring harness between the SRSCM and the Warning Lamp.

7. CHECK OPEN CIRCUIT

1) Measure resistance between the terminal 5 of the Instrument Cluster connector and the terminal 1 of SRSCM harness connector(A).

Specification (resistance) : below 1 Ω

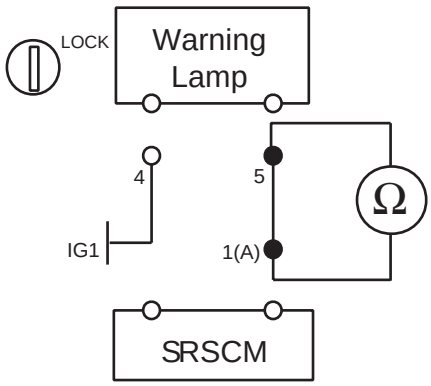

SCMRT6204L

2) Is the measured resistance within specification?

YES

▶ Go to next step.

NO

▶ Repair the open circuit on wiring harness between the SRSCM and the Warning Lamp.

8. CLEAR THE DTC AND CHECK THE VEHICLE AGAIN
Refer to the DESCRIPTION in this TROUBLESHOOTING section. (See page RT - 36)

DTC B2505 PASSENGER AIRBAG DISABLE LAMP FAILURE

DTC DESCRIPTION EB37F5CA

The SRSCM shall detect and record the following situations. And a single fault code shall be assigned as PAD Lamp Fault for all PAD lamp fault conditions. This fault code shall be set whenever either of the fault conditions is detected. If both fault conditions are not detected, the fault code shall not be detected.

1. The bulb is short, or there is a short to battery condition on the PAD lamp input connection to the SRSCM. This condition is only detectable while the PAD lamp is commanded ON. If a short to battery condition is detected, the PAD lamp shall be commanded OFF for 15 seconds to protect the circuit.

2. The bulb is open, or there is a short to ground condition. This condition is only detectable while the PAD lamp is commanded OFF. If the PAD lamp is ON and a short to ground condition is present, the SRSCM shall command the PAD lamp OFF for a maximum of 1ms during each diagnostic cycle.

DTC DETECTING CONDITION EE99B95B

DTC	Condition	Probable cause
B2505	• PAD lamp bulb open or short • Open between PAD lamp and SRSCM • Short to ground or battery line between PAD lamp and SRSCM • SRSCM malfunction	• Fuse • PAD lamp bulb • Wiring Harness • SRSCM

SCHEMATIC DIAGRAM E4BC358D

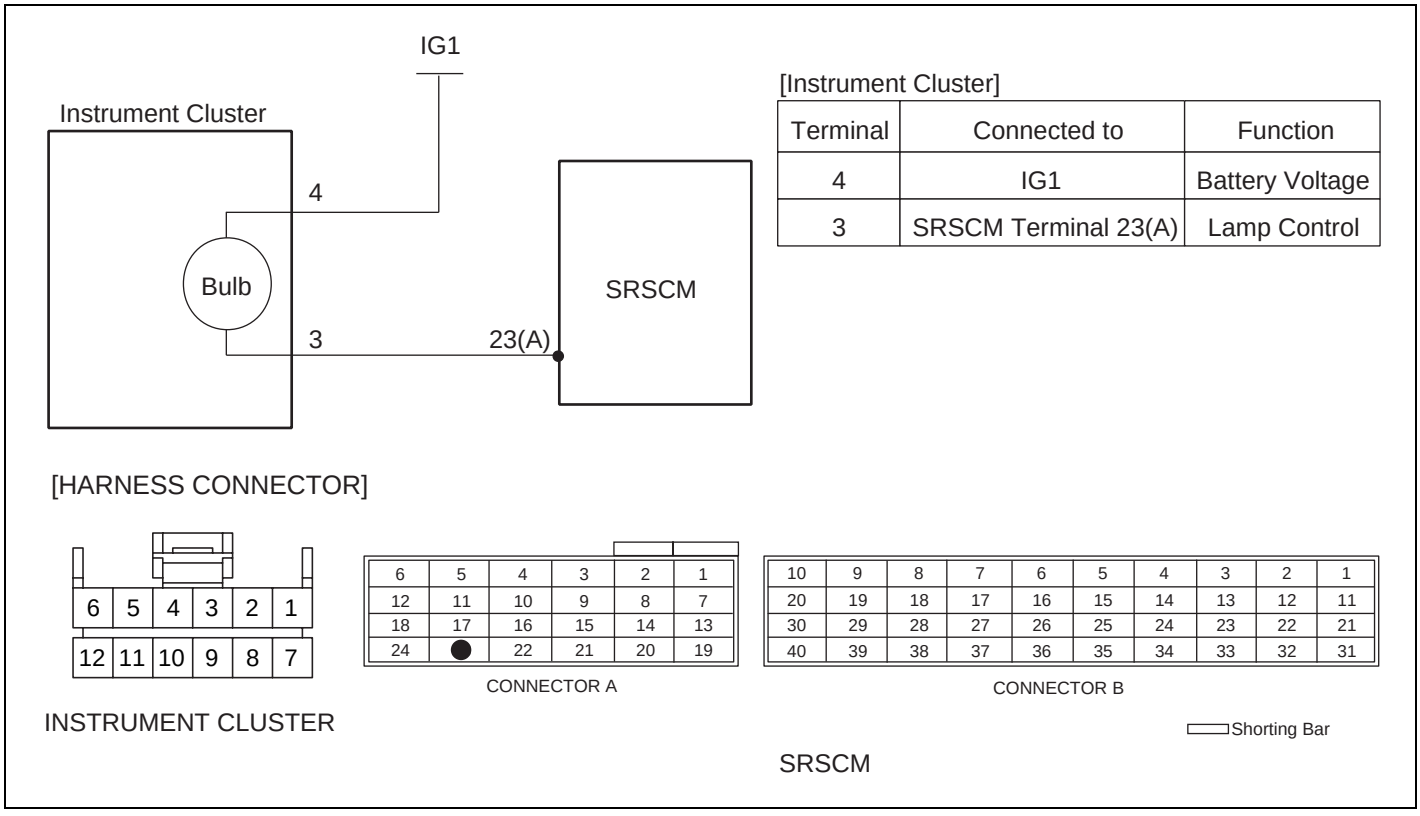

[Instrument Cluster]

Terminal	Connected to	Function
4	IG1	Battery Voltage
3	SRSCM Terminal 23(A)	Lamp Control

SCMRT6210L

TERMINAL & CONNECTOR INSPECTION E11FDFA8

Refer to the DESCRIPTION in this TROUBLESHOOTING section. (See page RT - 36)

INSPECTION PROCEDURE E83DF308

1. PREPARATION
   Refer to the DESCRIPTION in this TROUBLESHOOTING section. (See page RT - 36)
2. CHECK THE FUSE
   1) Remove the airbag fuse and the PAD lamp fuse from junction box.
   2) Inspect the fuses. Are the fuses normal?

      YES

      ▶ Check the PAD lamp bulb.

      NO

      ▶ Repair or replace the fuses.
3. CHECK THE PAD LAMP BULB
   1) Remove the bulb from the instrument cluster.
   2) Inspect the bulb. Is the bulb normal?

      YES

      ▶Check source voltage.

      NO

      ▶ Repair or replace the bulb.
4. CHECK SOURCE VOLTAGE
   1) Connect the battery negative cable to the battery.
   2) Turn the ignition switch to ON.
   3) Measure voltage between the terminal 4 of the Instrument Cluster harness connector and chassis ground.

Specification (voltage) : 8.38 ~ 17.0 V

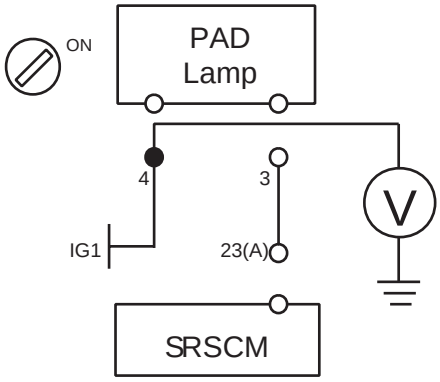

SCMRT6211L

4) Is the measured voltage within specification?

YES

▶ Check short to battery line.

NO

▶ Repair or replace the wiring harness between ignition switch and the PAD Lamp.

5. CHECK SHORT TO BATTERY LINE

1) Measure voltage between the terminal 3 of the Instrument Cluster harness connector and chassis ground.

Specification (voltage) : Approximately 0 V

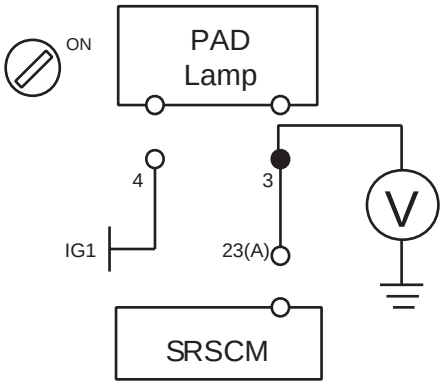

SCMRT6212L

2) Is the measured voltage within specification?

YES

▶ Check short or short to ground.

NO

▶ Repair the short to battery line circuit on wiring harness between the SRSCM and the PAD Lamp.

6. CHECK SHORT OR SHORT TO GROUND

1) Turn the ignition switch to LOCK.

2) Disconnect the battery negative cable from the battery.

3) Measure resistance between the terminal 3 of the Instrument Cluster harness connector and chassis ground.

4) Measure resistance between the terminal 4 and 3 of the Instrument Cluster harness connector.

Specification (resistance) : infinite

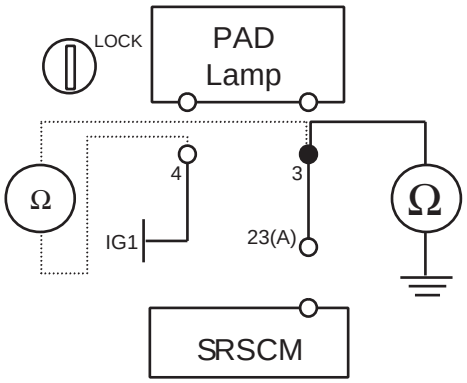

SCMRT6213L

5) Is the measured resistance within specification?

YES

▶ Check open circuit.

NO

▶ Repair the short or short to ground circuit on wiring harness between the SRSCM and the PAD Lamp.

7. CHECK OPEN CIRCUIT

1) Measure resistance between the terminal 3 of the Instrument Cluster connector and the terminal 23 of SRSCM harness connector(A).

Specification (resistance) : below 1 Ω

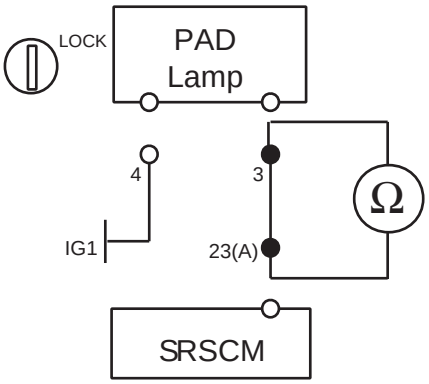

SCMRT6214L

2) Is the measured resistance within specification?

YES

▶ Go to next step.

NO

▶ Repair the open circuit on wiring harness between the SRSCM and the PAD Lamp.

8. CLEAR THE DTC AND CHECK THE VEHICLE AGAIN
Refer to the DESCRIPTION in this TROUBLESHOOTING section. (See page RT - 36)

AIR BAG MODULE DISPOSAL

AIRBAG DISPOSAL E50F62AD

SPECIAL TOOL REQUIRED

Deployment tool 0957A-34100A

Before scrapping any airbags or side airbags (including those in a whole vehicle to be scrapped), the airbags or side airbags must be deployed. If the vehicle is still within the warranty period, before deploying the airbags or side airbags, the Technical Manager must give approval and/or special instruction. Only after the airbags or side airbags have been deployed (as the result of vehicle collision, for example), can they be scrapped.
If the airbags or side airbags appear intact (not deployed), treat them with extreme caution. Follow this procedure.

DEPLOYING AIRBAGS IN THE VEHICLE

If an SRS equipped vehicle is to be entirely scrapped, its airbags or side airbags should be deployed while still in the vehicle. The airbags or side airbags should not be considered as salvageable parts and should never be installed in another vehicle.

1. Turn the ignition switch OFF, and disconnect the battery negative cable and wait at least three minutes.
2. Confirm that each airbag or side airbag is securely mounted.
3. Confirm that the special tool is functioning properly by following the check procedure.

DRIVER'S AIRBAG :

1. Remove the driver's airbag and install the SST(0957A-3F100).
2. Install the driver's airbag on the steering wheel.

FRONT PASSENGER'S AIRBAG :

1. Remove the glove box, then disconnect the 2P connector between the front passenger's airbag and SRS main harness.
2. Install the SST(0957A-3F100).

SIDE AIRBAG :

1. Disconnect the 2P connector between the side airbag and side wire harness.
2. Install the SST (0957A-3F100).

CURTAIN AIRBAG :

1. Disconnect the 2P connector between the curtain airbag and wire harness.
2. Install the SST(0957A-3F100).

SEAT BELT PRETENSIONER :

1. Disconnect the 2P connector from the seat belt pretensioner.
2. Install the SST(0957A-38500).
3. Place the deployment tool at least thirty feet (10 meters) away from the airbag.
4. Connect a 12 volt battery to the tool.
5. Push the tool's deployment switch. The airbag should deploy (deployment is both highly audible and visible: a loud noise and rapid inflation of the bag, followed by slow deflection)
6. Dispose of the complete airbag. No part of it can be reused. Place it in a sturdy plastic bag and seal it securely.



ERKD002U

DEPLOYING THE AIRBAG OUT OF THE VEHICLE

If an intact airbag has been removed from a scrapped vehicle, or has been found defective or damage during transit, storage or service, it should be deployed as follows :

1. Confirm that the special tool is functioning properly by following the check procedure.

2. Position the airbag face up, outdoors on flat ground at least thirty feet (10meters) from any obstacles or people.

DISPOSAL OF DAMAGED AIRBAG

1. If installed in a vehicle, follow the removal procedure of driver's airbag front passenger's and side airbag.

2. In all cases, make a short circuit by twisting together the two airbag inflator wires.

3. Package the airbag in exactly the same packing that the new replacement part come in.

Heating, Ventilation and Air Conditioning

GENERAL

AIR CONDITIONING SYSTEM
- COMPRESSOR OIL

A/C COMPRESSOR CONTROLS (MANUAL)
- COMPRESSOR
- CONDENSER
- A/C PRESSURE TRANSDUCER
- REFRIGERANT LINE
- EVAPORATOR TEMPERATURE SENSOR

A/C COMPRESSOR CONTROLS (FULL AUTO)
- IN CAR SENSOR
- PHOTO SENSOR
- WATER TEMPERATURE SENSOR
- AMBIENT TEMPERATURE SENSOR
- A.Q.S (AIR QUALITY SENSOR)
- HUMIDITY SENSOR

HEATER
- HEATER UNIT
- PTC (POSITIVE TEMPERATURE COEFFICIENT) HEATER
- TEMPERATURE CONTROL ACTUATOR
- MODE CONTROL ACTUATOR

REAR HEATER
- REAR HEATER UNIT
- REAR HEATER BLOWER UNIT
- REAR BLOWER RESISTER
- REAR CONTROL PANEL

BLOWER CONTROLS
- BLOWER UNIT
- BLOWER MOTOR
- BLOWER RELAY
- POWER TRANSISTOR
- A/C AIR FILTER
- INTAKE ACTUATOR

BLOWER AND A/C CONTROLS (MANUAL)
- CONTROL PANEL

BLOWER AND A/C CONTROLS (AUTOMATIC)
- CONTROL PANEL

GENERAL

SPECIFICATION E3E448F0

AIR CONDITIONER

Item		Specification	
		2.2	2.7
Compressor	Type	VS18 (Variable capacity)	
	Oil type & Capacity	FRONT ONLY	FRONT & REAR
		PAG(FD46XG)/140~160	PAG(FD46XG)/200~220
	Pulley type	6PK-TYPE	
	Displacement	180cc/rev	
Condenser	Heat rejection	19,000 - 5% kcal/hr	
A/C Pressure transducer	The method to measure the pressure	Voltage = 0.001758 * Pressure + 0.074162 [PSIA]	
Expansion valve	Type	Block	
Refrigerant	Type	R-134a	
	Capacity [oz(g)]	FRONT(ONLY) 21.64 ± 0.88 (600 ±25)	FRONT & REAR 29.98 ± 0.88 (850 ±25)

BLOWER UNIT

Item		Specification
Fresh and recirculation	Operating method	Actuator
Blower	Type	Sirocco
	Speed step	Auto + 8 speed (Automatic), 1~8speed (Manual)
	Speed control	Power transistor & High-relay(AUTO)
Air filter	Type	Particle filter

HEATER AND EVAPORATOR UNIT

Item		Specification
Heater	Type	Pin & Tube type
	Heating capacity	4,600 ± 5% kcal/hr
	Mode operating method	Actuator
	Temperature operating method	Actuator
Evaporator	Temperature control type	Evaporator temperature sensor
	A/C ON/OFF [°C (°F)]	ON : 2.1 ± 0.5 (35.78 ± 32.9), OFF: 0.5 (32.9)

TROUBLESHOOTING E907DB5D

PROBLEM SYMPTOMS TABLE

Before replacing or repairing air conditioning components, first determine if the malfunction is due to the refrigerant charge, air flow or compressor.

Use the table below to help you find the cause of the problem. The numbers indicate the priority of the likely cause of the problem. Check each part in order. If necessary, replace these parts.
After correcting the malfunction, check the complete system to ensure that performance is satisfactory.

STANDARD:

Symptom	Suspect Area	See page
No blower operation	1. Blower fuse 2. Blower relay 3. Blower motor 4. Power transistor 5. Blower speed control switch 6. Wire harness	- HA- 69 HA- 67 HA- 71 HA- 76, 79 -
No air temperature control	1. Engine coolant capacity 2. Heater control assembly	- HA- 76, 79
No compressor operation	1. Refrigerant capacity 2. A/C Fuse 3. Magnetic clutch 4. Compressor 5. A/C pressure transducer 6. A/C switch 7. Evaporator temperature sensor 8. Wire harness	HA- 3 - HA- 19 HA- 15 HA- 23 - HA- 27 -
No cool comes out	1. Refrigerant capacity 2. Refrigerant pressure 3. Drive belt 4. Magnetic clutch 5. Compressor 6. A/C pressure transducer 7. Evaporator temperature sensor 8. A/C switch 9. Heater control assembly 10. Wire harness	HA- 3 - - HA- 19 HA- 15 HA- 23 HA- 27 - HA- 76, 79 -
Insufficient cooling	1. Refrigerant capacity 2. Drive belt 3. Magnetic clutch 4. Compressor 5. Condenser 6. Expansion valve 7. Evaporator 8. Refrigerant lines 9. A/C pressure transducer 10. Heater control assembly	HA- 3 - HA- 19 HA- 15 HA- 20 HA- 48 HA- 49 HA- 25 HA- 23 HA- 76, 79
No engine idle-up when A/C switch ON	1. Engine ECM 2. Wire harness	- -
No air inlet control	1. Heater control assembly	HA- 76, 79

Symptom	Suspect Area	See page
No mode control	1. Heater control assembly 2. Mode actuator	HA- 76, 79 HA- 55
No cooling fan operation	1. Cooling fan fuse 2. Fan motor 3. Engine ECM 4. Wire harness	- - - -

SPECIAL TOOLS E527C2E1

Tool (Number and name)	Illustration	Use
09977-29000 Disc & hub assembly bolt remover	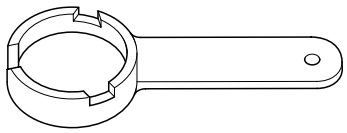 EQA9002A	Removal and installation of the disc & hub assembly bolt

AIR CONDITIONING SYSTEM

INSTRUCTIONS E3BA7FFA

WHEN HANDLING REFRIGERANT

1. R-134a liquid refrigerant is highly volatile. A drop on the skin of your hand could result in localized frostbite. When handling the refrigerant, be sure to wear gloves.

2. It is standard practice to wear goggles or glasses to protect your eyes, and gloves to protect your hands. If the refrigerant splashes into your eyes, wash them with clean water immediately.

3. The R-134a container is highly pressurized. Never leave it in a hot place, and check that the storage temperature is below 52℃ (126˚F)

4. An electronic leak detector should be used to check the system for refrigerant leakage. Bear in mind that the R-134a, upon coming into contact with flame, produces phosgene, a highly toxic gas.

5. Use only recommended the lubricant for R-134a systems. If lubricants other than the recommended one used, system failure may occur.

6. PAG lubricant absorbs moisture from the atmosphere at a rapid rate, therefore the following precautions must be observed:
   - When removing refrigerant components from a vehicle, cap immediately the components to prevent from the entry of moisture.
   - When installing refrigerant components to a vehicle, do not remove the cap until just before connecting the components.
   - Complete the connection of all refrigerant tubes and hoses without delay to prevent the A/C system from taking on moisture.
   - Use the recommended lubricant from a sealed container only.

7. If an accidental discharge in the system occurs, ventilate the work area before resuming service.

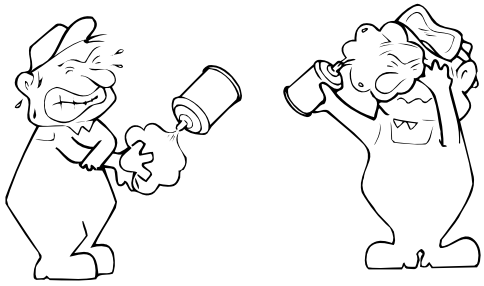

LQAC003A

WHEN REPLACING PARTS ON A/C SYSTEM

1. Never open or loosen a connection before discharging the system.

2. Seal the open fittings of components with a cap or plug immediately to prevent intrusion of moisture or dust.

3. Do not remove the sealing caps from a replacement component until it is ready to be installed.

4. Before connecting an open fitting, always install a new sealing ring. Coat the fitting and seal with refrigerant oil before making the connection.

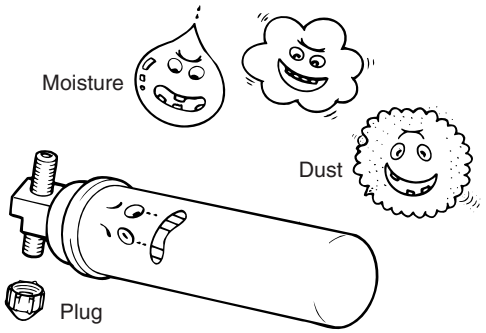

LQAC003B

WHEN INSTALLING CONNECTING PARTS

FLANGE WITH GUIDE PIN

Check the new O-ring for damage (use only the specified) and lubricate it using compressor oil. Tighten the nut to specified torque.

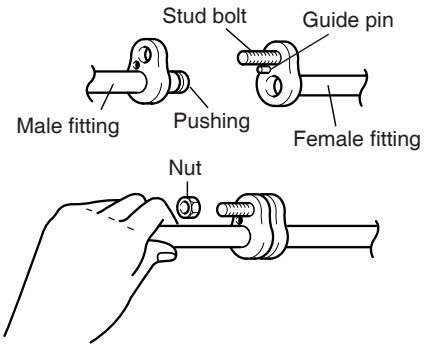

LQAC003C

Size	Tightening torque [N.m (kg.m, lbf.ft)]	
	General bolt, nut	
	4T	7T
M6	5-6 (0.5 - 0.6, 3.6 - 4.3)	9-11 (0.9 - 1.1, 6.5 - 7.9)
M8	12-14 (1.2 - 1.4, 8.7 - 10)	20 - 26 (2.0 - 2.6, 14 - 18)
M10	25 - 28) (2.5 - 2.8, 18 - 20	45 - 55 (4.5 - 5.5, 32 - 39)
Size	Flange bolt, nut	
	4T	7T
M6	5-7 (0.5 - 0.7, 3.6 - 5.0)	8-12 (0.8 - 1.2, 5.8 - 8.6)
M8	10-15 (1.0 - 1.5, 7 - 10)	19 - 28 (1.9 - 2.8, 14 - 20)
M10	21 - 31 (2.1 - 3.1, 15 - 22)	39 - 60 (3.9 - 6.0, 28 - 43)

HANDLING TUBING AND FITTINGS

The internal parts of the refrigeration system will remain in a state of chemical stability as long as pure moisture-free refrigerant and refrigerant oil are used. Abnormal amounts of dirt, moisture or air can upset the chemical stability and cause problems or serious damage.

THE FOLLOWING PRECAUTIONS MUST BE OBSERVED

1. When it is necessary to open the refrigeration system, have everything you will need to service the system ready so the system will not be left open any longer than necessary.
2. Cap or plug all lines and fittings as soon as they are opened to prevent the entrance of dirt and moisture.
3. All lines and components in parts stock should be capped or sealed until they are ready to be used.
4. Never attempt to rebind formed lines to fit. Use the correct line for the installation you are servicing.
5. All tools, including the refrigerant dispensing manifold, the gauge set manifold and test hoses, should be kept clean and dry.

REFRIGERATION CYCLE EA6E42C2

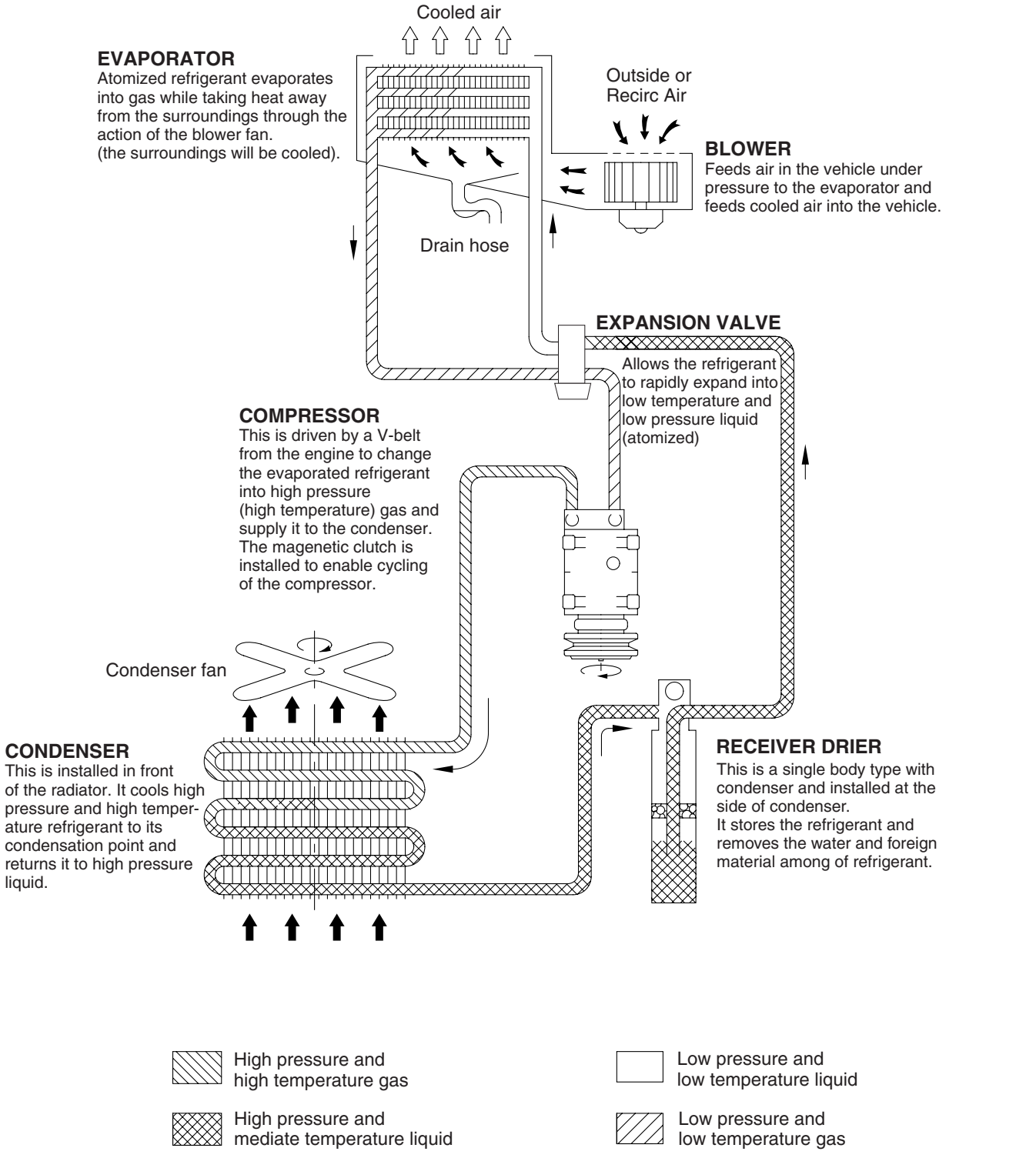

EQRF004A

REFRIGERANT SYSTEM SERVICE BASICS ECE8B818

REFRIGERANT RECOVERY

Use only service equipment that is U.L-listed and is certified to meet the requirements of SAE J2210 to remove HFC-134a(R-134a) from the air conditioning system.

CAUTION

- ***Air conditioning refrigerant or lubricant vapor can irritate your eyes, nose, or throat.***
- ***Be careful when connecting service equipment.***
- ***Do not breathe refrigerant or vapor.***

If accidental system discharge occurs, ventilate work area before resuming service.
Additional health and safety information may be obtained from the refrigerant and lubricant manufacturers.

1. Connect an R-134a refrigerant Recovery/Recycling/Charging System (A) to the high-pressure service port (B) and the low-pressure service port (C) as shown, following the equipment manufacturer's instructions.

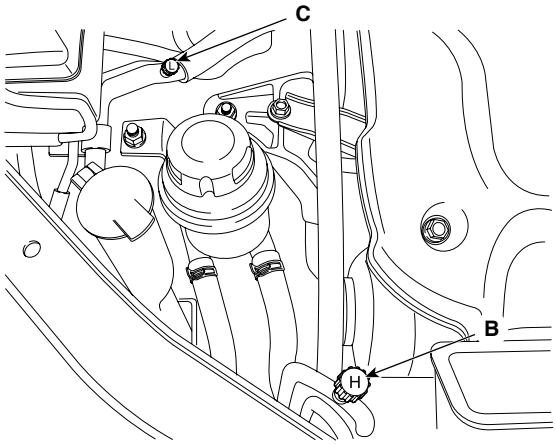

SCMHA6003D

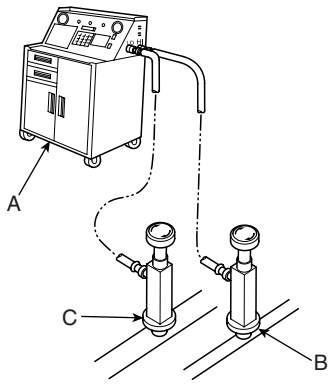

EQKE004A

2. Measure the amount of refrigerant oil removed from the A/C system after the recovery process is completed. Be sure to install the same amount of new refrigerant oil back into the A/C system before charging.

SYSTEM EVACUATION

Use only service equipment that is U.L-listed and is certified to meet the requirements of SAE J2210 to remove HFC-134a(R-134a) from the air conditioning system.

CAUTION

- ***Air conditioning refrigerant or lubricant vapor can irritate your eyes, nose, or throat.***
- ***Be careful when connecting service equipment.***
- ***Do not breathe refrigerant or vapor.***

If accidental system discharge occurs, ventilate work area before resuming service.
Additional health and safety information may be obtained from the refrigerant and lubricant manufacturers.

1. When an A/C System has been opened to the atmosphere, such as during installation or repair, it must be evacuated using an R-134a refrigerant Recovery/Recycling/Charging System. (If the system has been open for several days, the receiver/dryer should be replaced, and the system should be evacuated for several hours.)

2. Connect an R-134a refrigerant Recovery/Recycling/Charging System (A) to the high-pressure service port (B) and the low-pressure service port (C) as shown, following the equipment manufacturer's instructions.

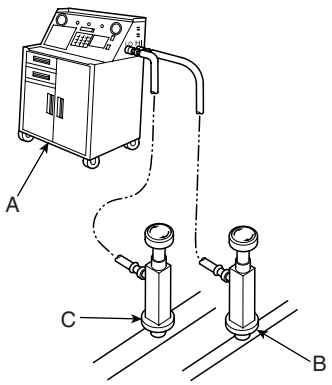

EQKE004A

3. If the low-pressure does not reach more than 93.3 kPa (700 mmHg, 27.6 in.Hg) in 10 minutes, there is probably a leak in the system. Partially charge the system, and check for leaks (see Leak Test.).

4. Remove the low pressure valve from the low-pressure service port.

SYSTEM CHARGING

Use only service equipment that is U.L-listed and is certified to meet the requirements of SAE J2210 to remove HFC-134a(R-134a) from the air conditioning system.

CAUTION

- ***Air conditioning refrigerant or lubricant vapor can irritate your eyes, nose, or throat.***
- ***Be careful when connecting service equipment.***
- ***Do not breathe refrigerant or vapor.***

If accidental system discharge occurs, ventilate work area before resuming service.
Additional health and safety information may be obtained from the refrigerant and lubricant manufacturers.

1. Connect an R-134a refrigerant Recovery/Recycling/Charging System (A) to the high-pressure service port (B) as shown, following the equipment manufacturer's instructions.

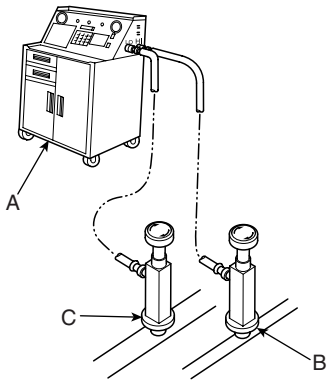

EQKE004A

2. Add the same amount of new refrigerant oil to system that was removed during recovery. Use only specified refrigerant oil. Charge the system with 29.98 ± 0.88 oz. (850 ± 25g) of R-134a refrigerant. Do not overcharge the system the compressor will be damaged.

REFRIGERANT LEAK TEST

Always conduct a leak test with an electronic leak detector whenever leakage or refrigerant is suspected and when conducting service operations which are accompanied by disassembly or loosening or connection fittings.

> ***NOTE***
>
> *In order to use the leak detector properly, read the manual supplied by the manufacturer.*

If a gas leak is detected, proceed as follows:

1. Check the torque on the connection fittings and, if too loose, tighten to the proper torque. Check for gas leakage with a leak detector (A).
2. If leakage continues even after the fitting has been tightened, discharge the refrigerant from the system, disconnect the fittings, and check their seating faces for damage. Always replace, even if the damage is slight.
3. Check the compressor oil and add oil if required.
4. Charge the system and recheck for gas leaks. If no leaks are found, evacuate and charge the system again.

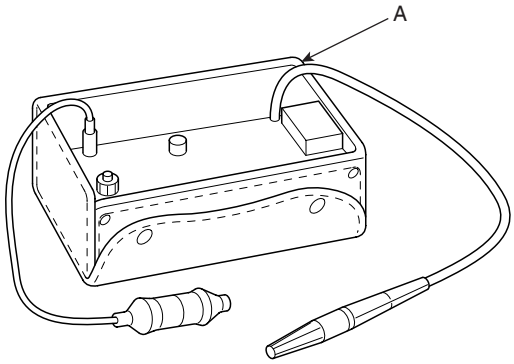

EQKE007A

COMPONENT LOCATION INDEX EEDE67DE

ENGINE ROOM

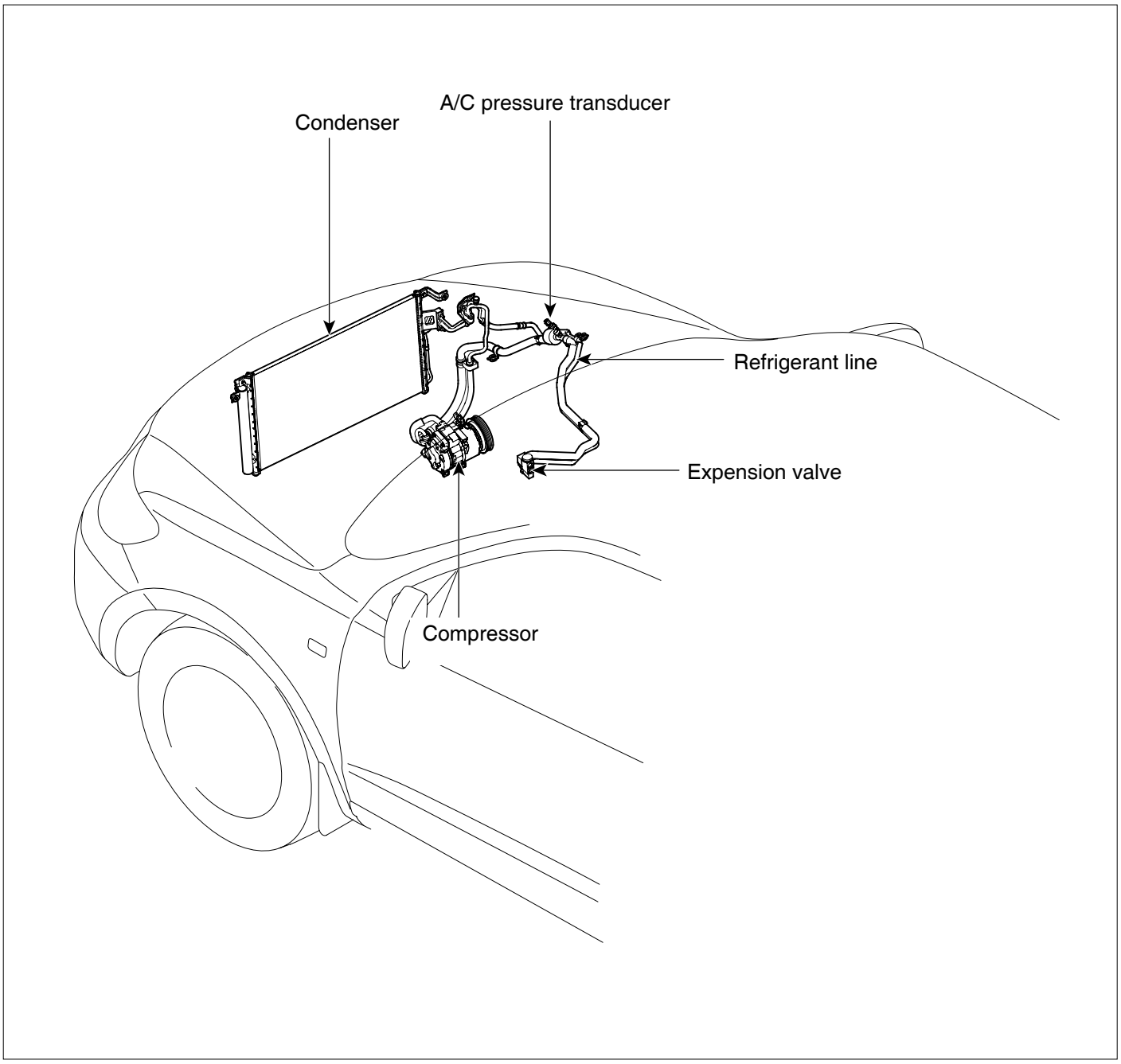

SCMHA6006L

INTERIOR

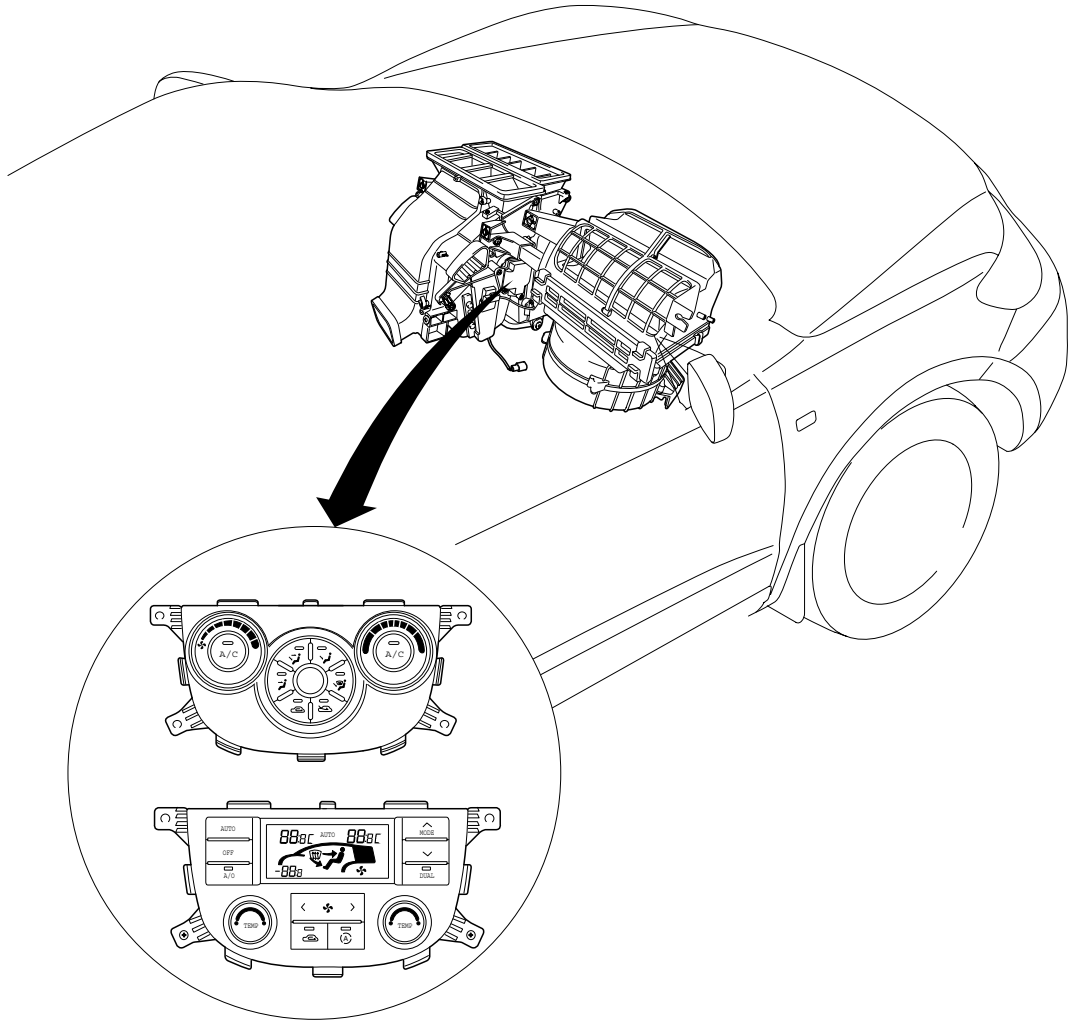

Blower and A/C controler

SCMHA6007L

COMPRESSOR OIL

INSPECTION E5FC3B3D

OIL SPECIFICATION

1. The HFC-134a system requires synthetic (PAG) compressor oil whereas the R-12 system requires mineral compressor oil. The two oils must never be mixed.
2. Compressor (PAG) oil varies according to compressor model. Be sure to use oil specified for the model of compressor.

HANDLING OF OIL

1. The oil should be free from moisture, dust, metal powder, etc.
2. Do not mix with other oil.
3. The water content in the oil increases when exposed to the air. After use, seal oil from air immediately. (HFC-134a Compressor Oil absorbs moisture very easily.)
4. The compressor oil must be stored in steel containers, not in plastic containers.

COMPRESSOR OIL CHECK

The oil used to lubricate the compressor is circulating with the refrigerant.
Whenever replacing any component of the system or a large amount of gas leakage occurs, add oil to maintain the original amount of oil.

Oil total volume in system: FRONT ONLY : 150 ± 10cc (5.07 ± 0.338 fl.oz) FRONT & REAR : 210 ± 10cc (7.1 ± 0.33 fl.oz)

OIL RETURN OPERATION

There is close affinity between the oil and the refrigerant. During normal operation, part of the oil recirculates with the refrigerant in the system. When checking the amount of oil in the system, or replacing any component of the system, the compressor must be run in advance for oil return operation. The procedure is as follows:

1. Open all the doors and the engine hood.
2. Start the engine and air conditioning switch to "ON" and set the blower motor control knob at its highest position.
3. Run the compressor for more than 20 minutes between 800 and 1,000 rpm in order to operate the system.
4. Stop the engine.

A/C COMPRESSOR CONTROLS (MANUAL)

COMPRESSOR

COMPONENT LOCATION EB6BAC26

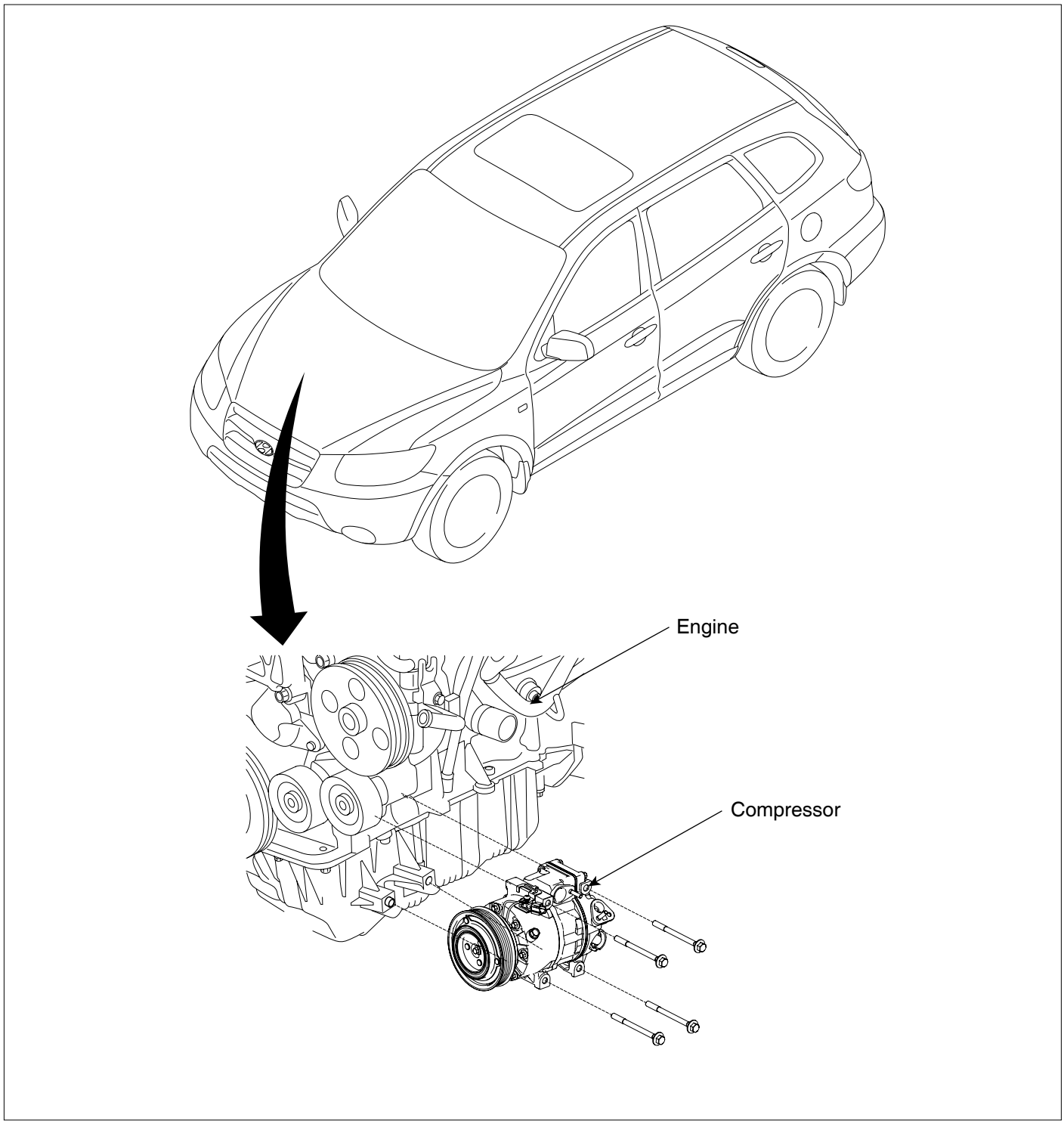

SCMHA6101L

COMPONENTS EE9B0AFF

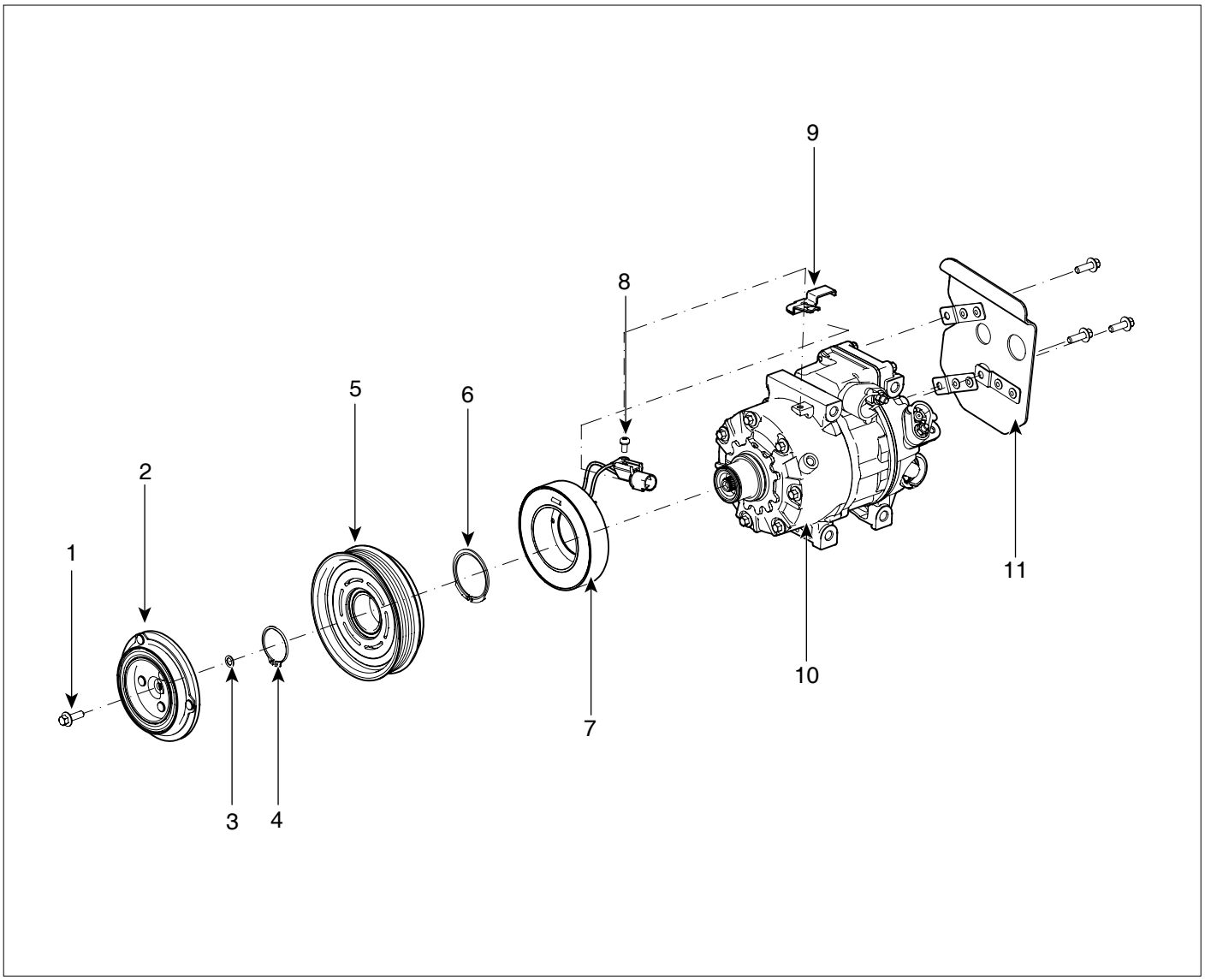

1. Bolt
2. Disc & hub assembly
3. Shim (Gap washer)
4. Retainer ring (Pulley)
5. Pulley
6. Retainer ring (Field Oil)
7. Field coil
8. Screw
9. Connector bracket
10. Compressor assembly
11. Compressor bracket

SCMHA6102L

REMOVAL E6183B77

1. If the compressor is marginally operable, run the engine at idle speed, and let the air conditioning work for a few minutes, then shut the engine off.
2. Disconnect the negative cable from the battery.
3. Recover the refrigerant with a recovery/charging station.
4. Loosen the drive belt.
5. Remove the bolts, then disconnect the suction line (A) and discharge line (B) from the compressor. Plug (C) or cap the lines immediately after disconnecting them to avoid moisture and dust contamination.

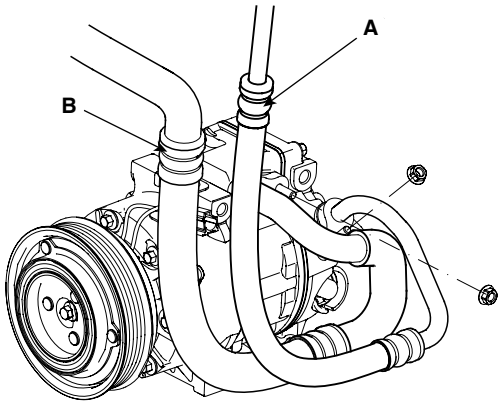

SCMHA6103D

6. Disconnect the compressor clutch connector (A), and then remove 4 mounting bolts and the compressor.

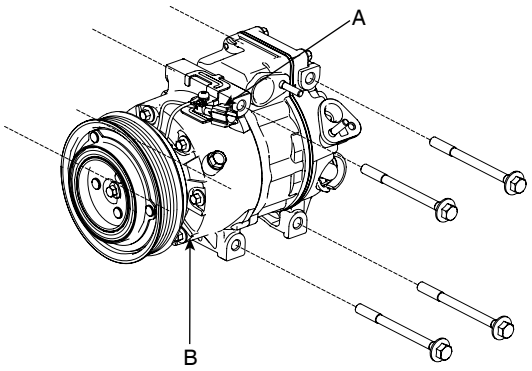

SCMHA6104D

INSTALLATION EC9BDAD4

1. Make sure of the length of compressor mounting bolts.

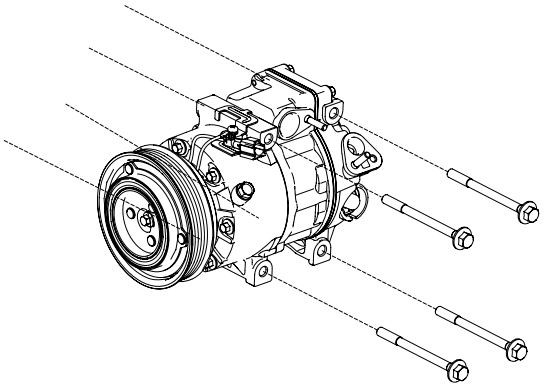

SCMHA6105D

2. Install in the reverse order of removal, and note these items.
   - If you're installing a new compressor, drain all the refrigerant oil from the removed compressor, and measure its volume, Subtract the volume of drained oil from 120cc(4.20 oz.) the result is the amount of oil you should drain from the new compressor (through the suction fitting).
   - Replace the O-rings with new ones at each fitting, and apply a thin coat of refrigerant oil before installing them. Be sure to use the right O-rings for R-134a to avoid leakage.
   - To avoid contamination, do not return the oil to the container once dispensed, and never mix it with other refrigerant oils.
   - Immediately after using the oil, replace the cap on the container and seal it to avoid moisture absorption.
   - Do not spill the refrigerant oil on the vehicle; it may damage the paint; if the refrigerant oil contacts the paint, wash it off immediately.
   - Adjust the drive belt.
   - Charge the system and test its performance.

INSPECTION EBD55AB1

1. Check the plated parts of the disc & hub assembly (A) for color changes, peeling or other damage. If there is damage, replace the clutch set.

2. Check the pulley (B) bearing play and drag by rotating the pulley by hand. Replace the clutch set with a new one if it is noisy or has excessive play/drag.

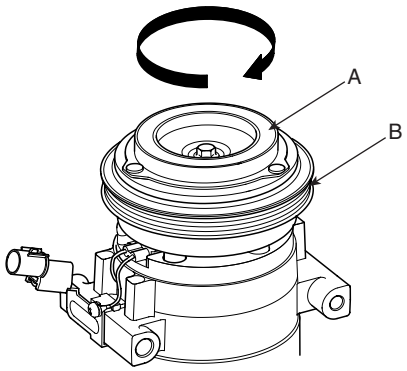

AQJF106A

3. Measure the clearance between the pulley (B) and the disc & hub assembly (A) all the way around. If the clearance is not within specified limits, remove the disc & hub assembly and add or remove shim (gap washer) as needed to increase or decrease clearance.

Clearance: 0.45 ± 0.1mm (0.018 ± 0.004 in.)

NOTE

The shims (gap washers) are available in seven thicknesses: 0.7mm, 0.8mm, 0.9mm, 1.0mm, 1.1mm, 1.2mm and 1.3mm.

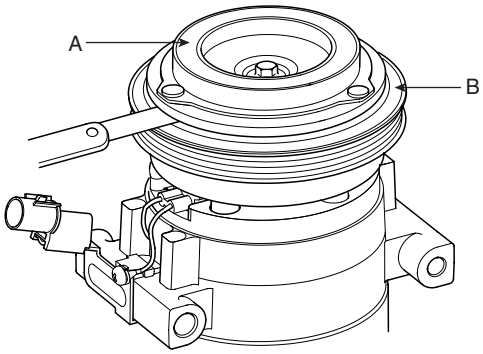

AQJF106B

4. Check operation of the magnetic clutch.Connect the compressor side terminals to the battery (+) terminal and the ground battery (-) terminal to the compressor body.
   Check the magnetic clutch operating noise to determine the condition.

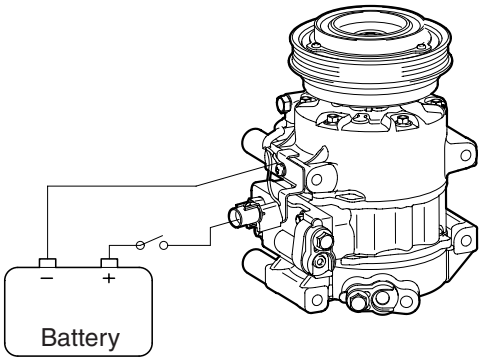

AQJF106C

DISASSEMBLY EA365562

1. Remove the center bolt (A) while holding the disc & hub assembly with a commercially available disc & hub assembly bolt remover; Special tool number 09977-29000.

TORQUE: 10~15N.m (1.02~1.53kgf.m, 7.37~11lbf.ft)

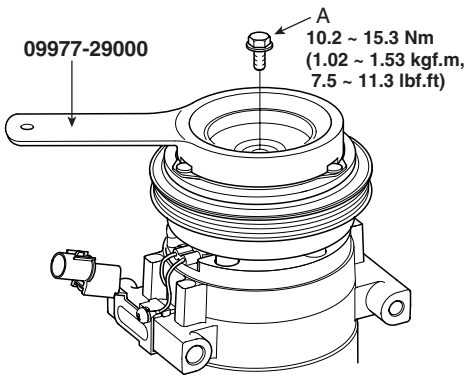

AQJF106D

2. Remove the disc & hub assembly (A) and shim (gap washer) (B), taking care not to lose the shims. If the clutch needs adjustment, increase or decrease the number and thickness of shims as necessary, then reinstall the disc & hub assembly, and recheck its clearance.

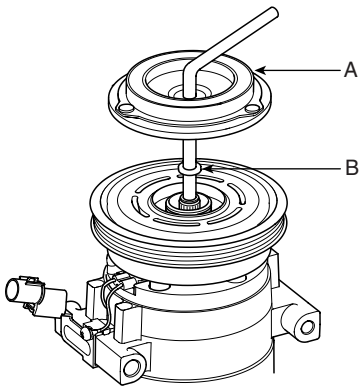

AQJF106E

3. If you removal the field coil, remove retainer ring (A) with retainer ring pliers.

NOTE

- *Be careful not to damage the pulley (B) and compressor during removal/installation.*
- *Once retainer ring (A) is removed, replace it with a new one.*

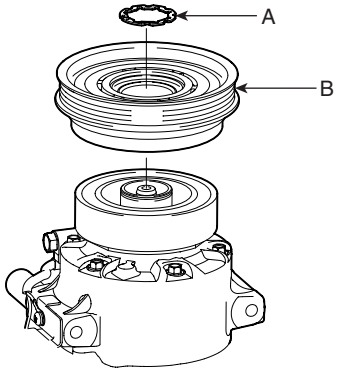

AQJF106F

4. Remove the screw (A) from the field coil ground terminal. Remove the retainer ring (B) and then remove the field coil (C) from the shaft with a puller. Be careful not to damage the coil and compressor.

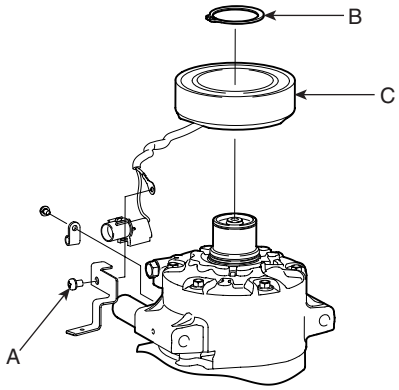

AQJF106G

5. Reassemble the compressor clutch in the reverse order of disassembly, and note these items :
   - Clean the pulley and compressor sliding surfaces with non-petroleum solvent.
   - Install new retainer rings, and make sure they are fully seated in the groove.
   - Make sure that the pulley turns smoothly after its reassembled.

CONDENSER

COMPONENT LOCATION E786D4B5

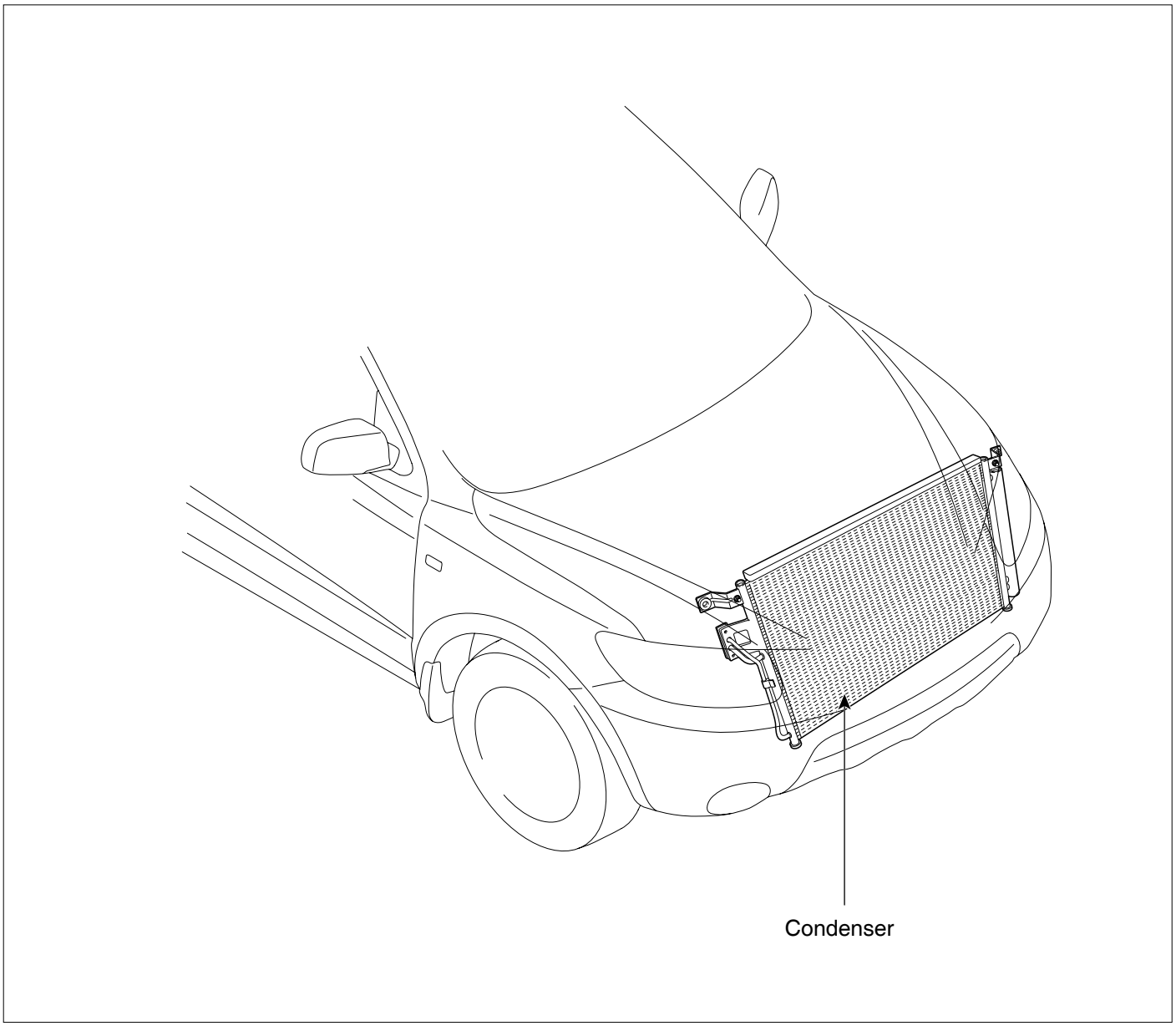

SCMHA6113L

INSPECTION E1D4D1C2

1. Check the condenser fins for clogging and damage. If clogged, clean them with water, and blow them with compressed air. If bent, gently bend them using a screwdriver or pliers.

2. Check the condenser connections for leakage, and repair or replace it, if required.

REPLACEMENT EE89F4B4

CONDENSER ASSEMBLY

1. Recover the refrigerant with a recovery/ recycling/ charging station.

2. Disconnect the negative (-) battery terminal.

3. Remove the radiator. (Refer to EM- Radiator)

4. Remove 2 bolts, and then remove the condenser (A) by lifting it up. Be careful not to damage the radiator and condenser fins when removing the condenser.

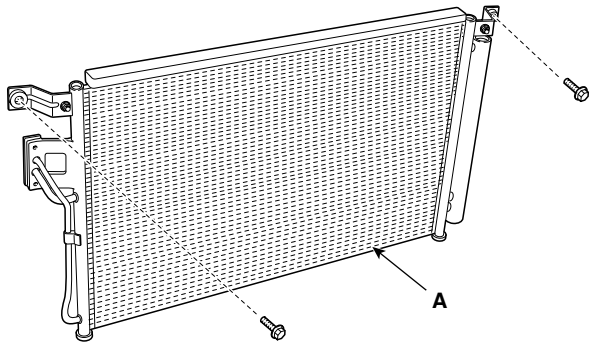

SCMHA6114L

5. Install in the reverse order of removal, and note these items :
   - If you're installing a new condenser, add refrigerant oil ND-OIL8.
   - Replace the O-rings with new ones at each fitting, and apply a thin coat of refrigerant oil before installing them. Be sure to use the right O-rings for R-134a to avoid leakage.
   - Be careful not to damage the radiator and condenser fins when installing the condenser.
   - Be sure to install the lower mount cushions of condenser securely into the holes.
   - Charge the system, and test its performance.

DESICCANT

1. Remove the condenser, and then remove the bottom cap (B) with L wrench (A) from the condenser.

TORQUE: 20~25N.m (2.0~2.5kgf-m, 14.5~18.2lb-ft)

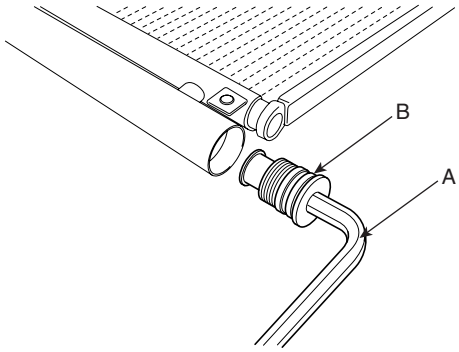

KQRE108D

2. Remove the desiccant (A) from condenser using a long nose plier. Check for crumbled desiccant and clogged bottom cap filter.

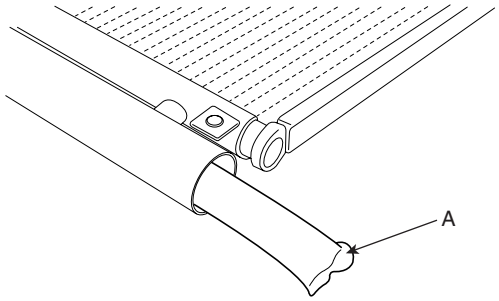

KQRE108E

3. Apply air conditioning compressor oil along the O-rings and threads of the new bottom cap.

4. Insert the new desiccant into the receiver drier tank. The desiccant must be sealed in vacuum before it is exposed to air for use.

5. Install the new bottom cap to the condenser.

NOTE

- *Always replace the desiccant and bottom cap at the same time.*
- *Replace the O-rings with new ones at each fitting, and apply a thin coat of refrigerant oil before installing them. Be sure to use the right O-rings for R-134a to avoid leakage.*
- *Be careful not to damage the radiator and condenser fins when installing the condenser.*
- *Be sure to install the lower mount cushions of condenser securely into the holes.*
- *Charge the system, and test its performance.*

A/C PRESSURE TRANSDUCER

COMPONENT LOCATION E07FA5EA

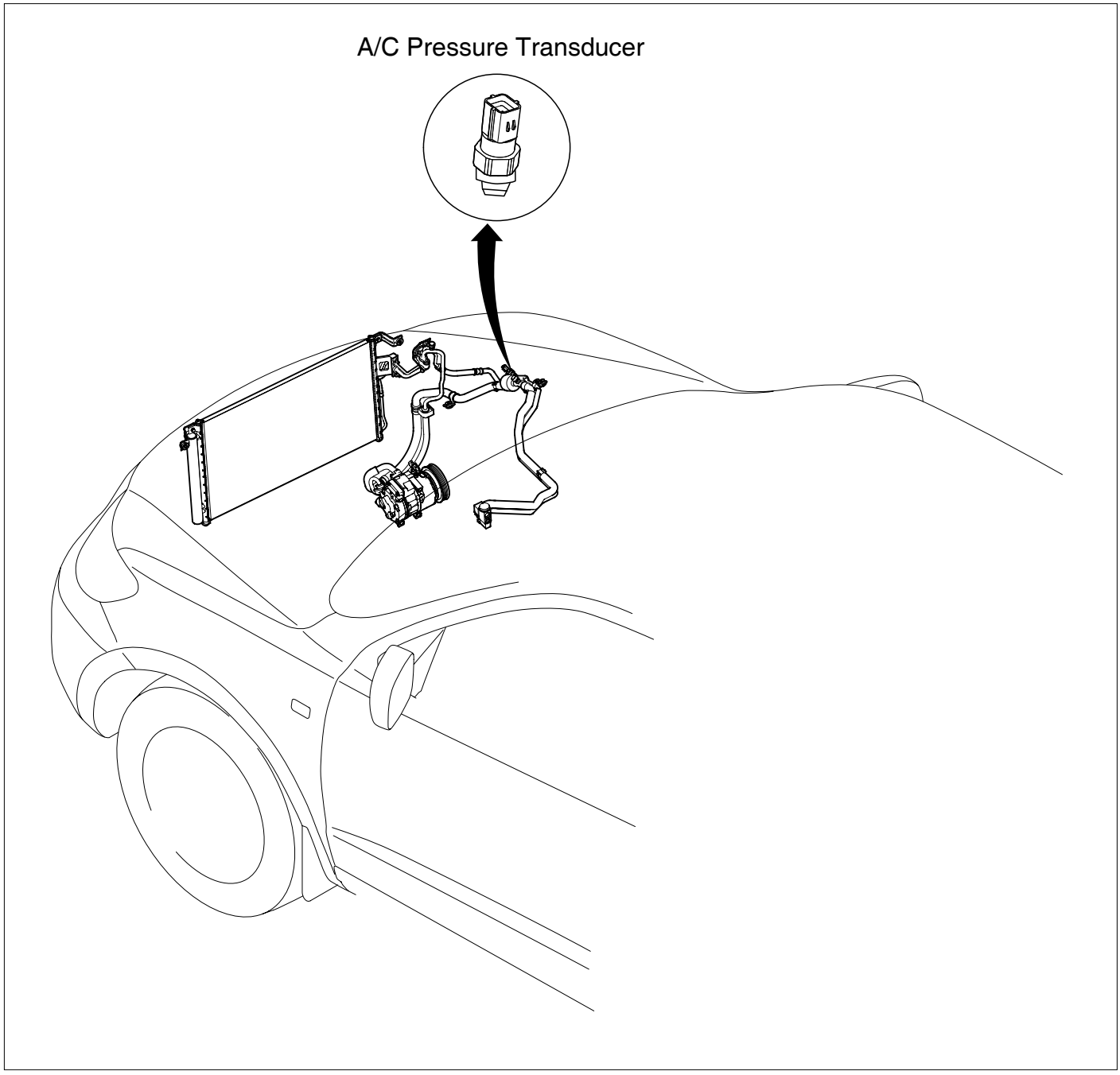

SCMHA6117L

DESCRIPTION EE9BED9D

A/C pressure transducer convert the pressure value of high pressure line into voltage value after measure it. By converted voltage value, engine ECM controls cooling fan by operating it high speed or low speed. Engine ECM stop the operation of compressor when the temperature of refrigerant line is so high or so low irregularly to optimize air conditioning system.

INSPECTION E4CA7D70

1. Measure the pressure of high pressure line by measuring voltage output between NO.1 and NO.2 terminals.

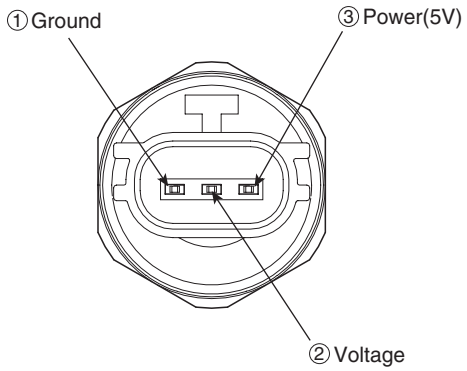

EQRF116B

2. Inspect the voltage value whether it is sufficient to be regular value or not.

Voltage = 0.025 * Pressure + 0.1 [kgf/cm²]
Voltage = 0.001758 * Pressure + 0.074162 [PSIA]

3. If the measured voltage value is not specification, replace the A/C pressure transducer.

REPLACEMENT EC52DA5D

1. Disconnect the negative (-) battery terminal.
2. Recover the refrigerant with a recovery/charging station.
3. Disconnect A/C pressure transducer connector (3P) (A).

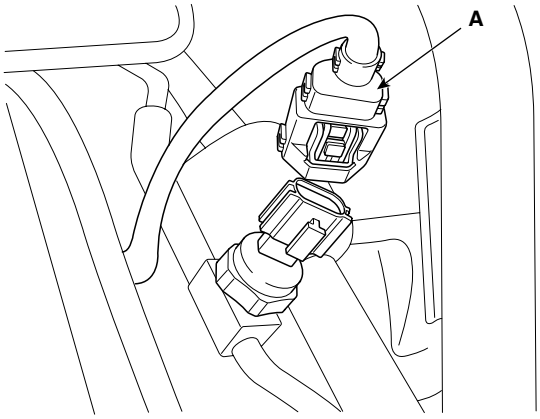

SCMHA6119L

REFRIGERANT LINE

COMPONENT LOCATION EA7DBABA

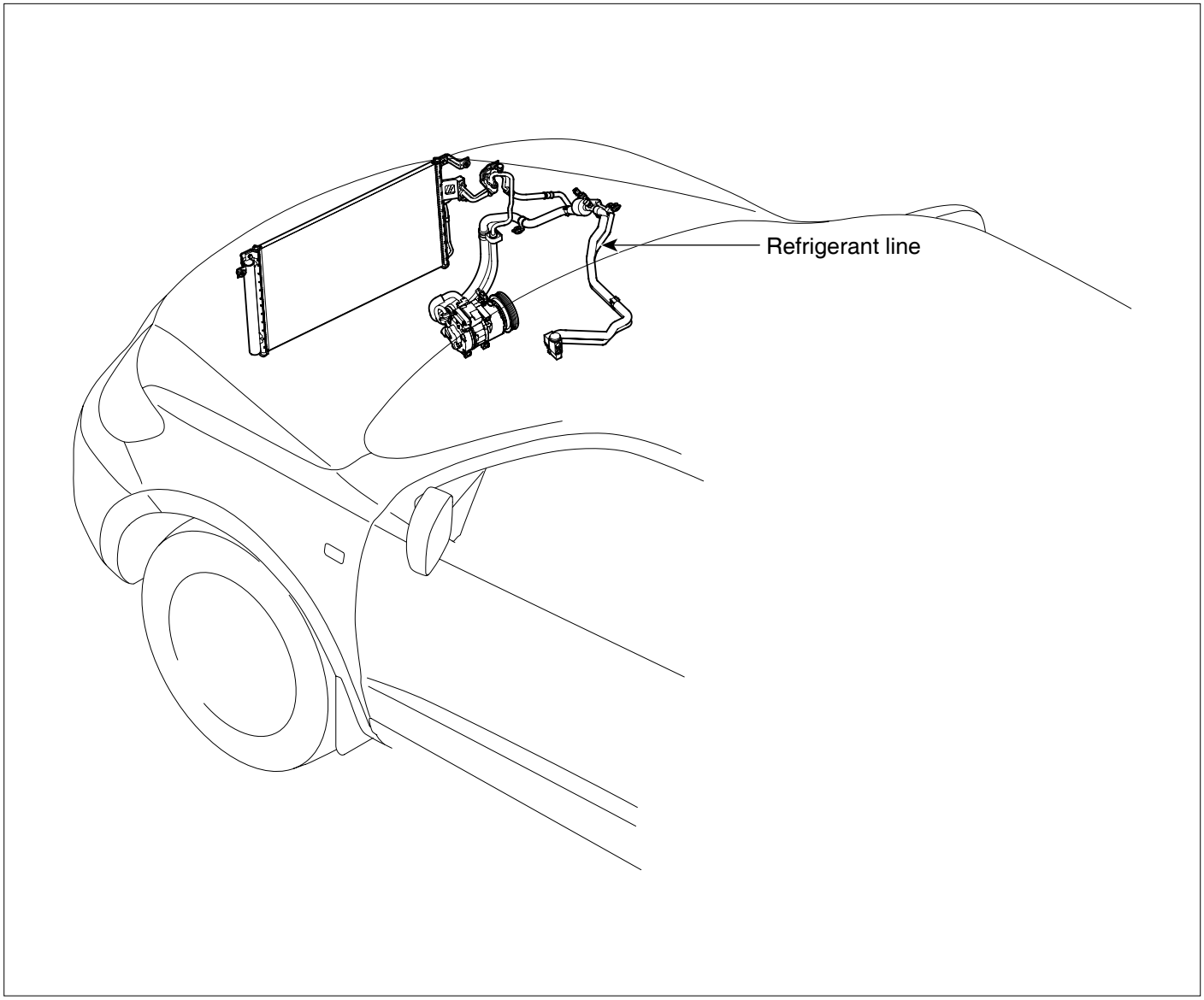

SCMHA6100L

REPLACEMENT EB1FF0FD

1. Discharge refrigerant from refrigeration system.
2. Replace faulty tube or hose.

CAUTION

Cap the open fittings immediately to keep moisture or dirt out of the system.

3. Tighten joint of bolt or nut to specified torque.

CAUTION

Connections should not be torque tighter than the specified torque.

Part tightened	N.m	Kgf.m	lbf.ft
Condenser - Discharge hose	8 ~ 12	0.8~1.2	5.8 ~ 8.7
Condenser - Liquid tube			
Compressor - Discharge hose			
Compressor - Suction hose			
Expansion valve - Evaporator			

4. Evacuate air in refrigeration system and charge system with refrigerant.

FRONT ONLY : 600 ± 25(g) (21.164 ± 0.88 [oz])
FRONT & REAR : 850 ± 25(g) (29.98 ± 0.88 [oz])

5. Inspect for leakage of refrigerant.
   Using a gas leak detector, check for leakage of refrigerant.
6. Inspect A/C operation.

EVAPORATOR TEMPERATURE SENSOR

COMPONENT LOCATION E5540B31

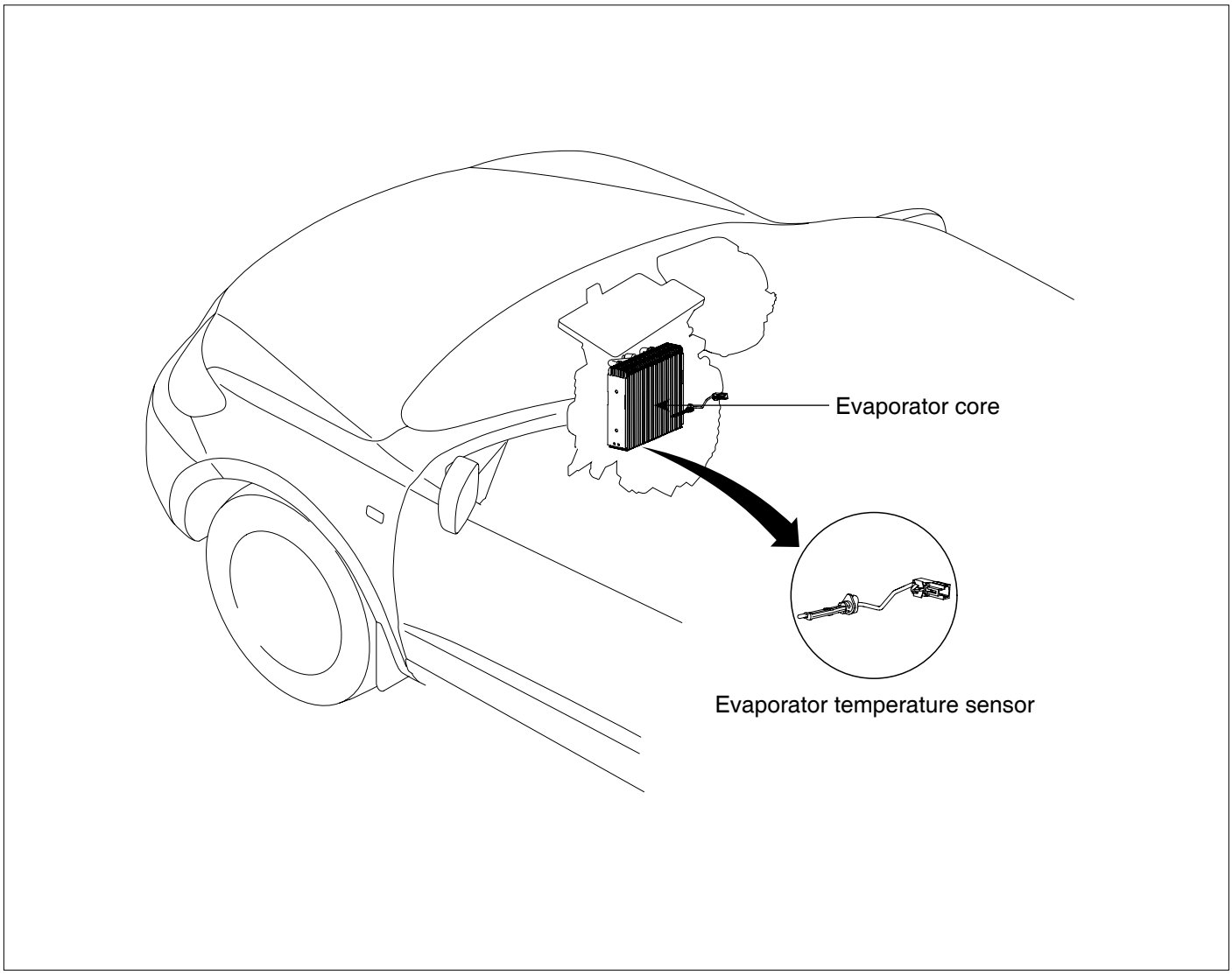

SCMHA6132L

DESCRIPTION E5F1BCCF

The evaporator temperature sensor will detect the evaporator core temperature and interrupt compressor relay power in order to prevent evaporator freezing by excessive cooling.

INSPECTION E05C43ED

1. Ignition "OFF"
2. Disconnect evaporator temperature sensor.
3. Using the multi-tester, Measure resistance between terminal "1" and "2" of evaporator temperature sensor.

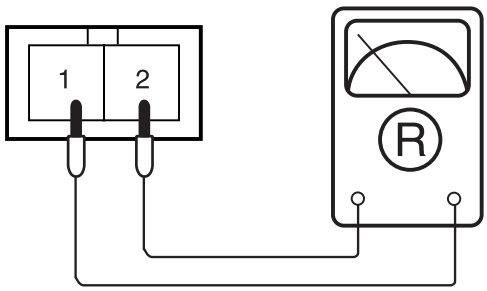

AQGE116C

SPECIFICATION

Evaporator core temperature [℃(℉)]	Resistance [KΩ]
-10(14)	13.56
-5(23)	10.37
0(32)	8.000
5(41)	6.222
10(50)	4.877
15(59)	3.851
20(68)	3.063
25(77)	2.453
30(86)	1.978
35(95)	1.605
40(104)	1.31
45(113)	1.075
50(122)	0.888

4. If the measured resistance is not specification, substitute with a known-good evaporator temperature sensor and check for proper operation.
5. If the problem is corrected, replace the evaporator temperature sensor.

REPLACEMENT E0EEFB9A

1. Disconnect the negative (-) battery terminal.
2. Remove the center lower side cover.

[LHD]

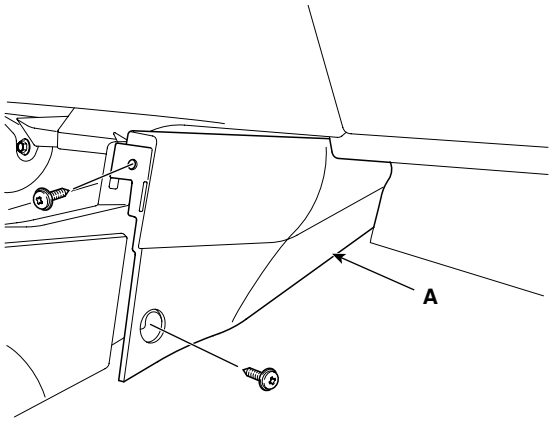

SCMHA6133L

[RHD]

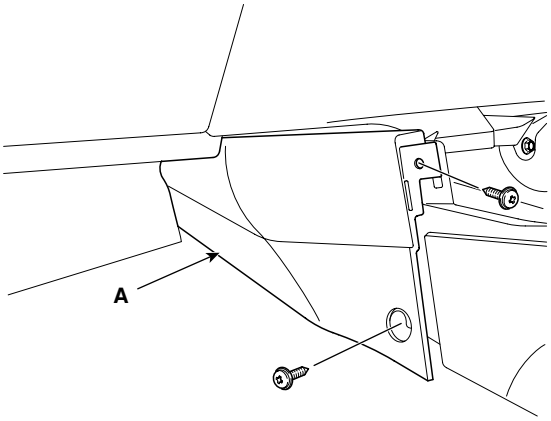

SCMHA6133R

3. Disconnect the evaporator sensor connector (A).
4. Remove the evaporator temperature sensor(B), by pulling it after rorating 90° in a counterclockwise direction.

[LHD]

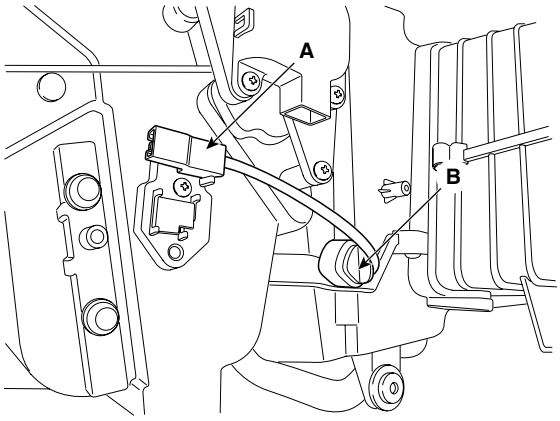

SCMHA6134D

[RHD]

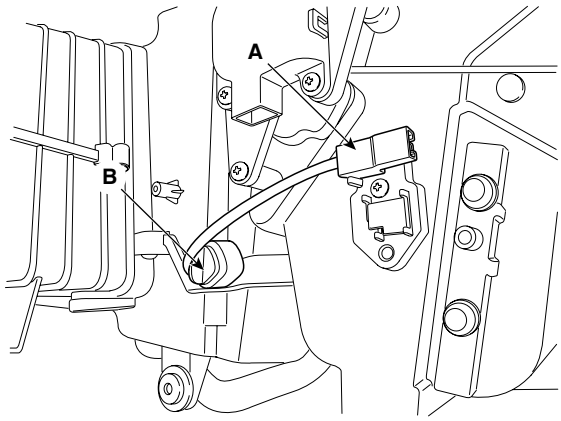

SCMHA6134R

CAUTION

Take care that evaporator core pins are not bent.

5. Installation is the reverse order of removal.

A/C COMPRESSOR CONTROLS (FULL AUTO)

IN CAR SENSOR

COMPONENT LOCATION EE1F070B

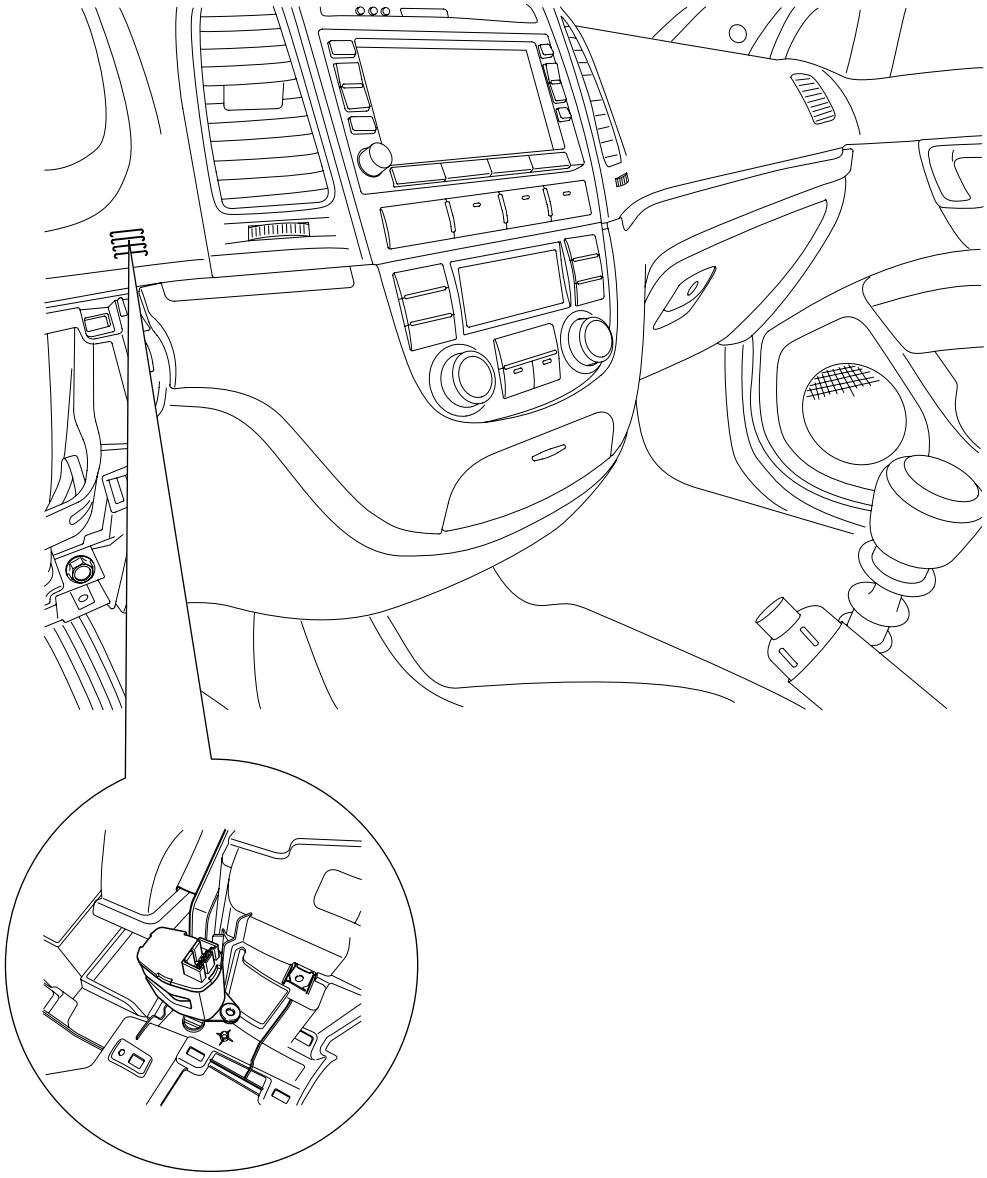

In car sensor

SCMHA6120L

DESCRIPTION EC707BB8

1. In-car air temperature sensor is located at the lower crush pad.
2. The sensor contains a thermistor which measures the temperature of the inside. The signal, decided by the resistance value which changes in accordance with perceived inside temperature, is delivered to heater control unit and according to this signal the control unit regulates incar temperature to intended value.

INSPECTION EFF90998

1. Ignition "ON"
2. Blow air with changing temperature to the in car sensor air inlet. Measure sensor resistance between 2 and 4 terminals.

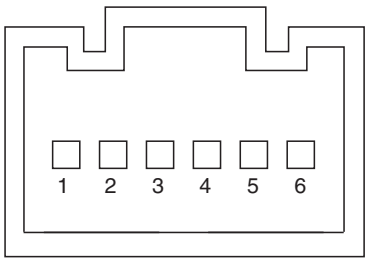

1. Motor (-)
2. Sensor ground (-)
3. Humidity sensor signal
4. In-car sensor temp.signal
5. Sensor power (+)
6. Motor (+)

EQRF201B

SPECIFICATION

Temperature [℃(°F)]	Resistance between terminals 2and 4 (kΩ)
60(140)	7.463 ± 2.6%
50(122)	10.810 ± 2.2%
35(95)	19.59 ± 1.6%
25(77)	30.00 ± 1.2%
15(59)	47.130 ± 1.7%
0(32)	97.710 ± 2.4%
-15(5)	216.1 ± 3.2%
-30(-22)	50936 ± 4.1%

NOTE

In car sensor is negative type thermistor that resistance will rise with lower temperature, and reduce with higher temperature.

REPLACEMENT EA7F2D51

1. Disconnect the negative (-) battery terminal.
2. Remove the A/C control pannel. (Refer to BD group).
3. Disconnect the connector of in-car sensor (A).Loosen the mounting 2 screws and then remove the in-car sensor (B).

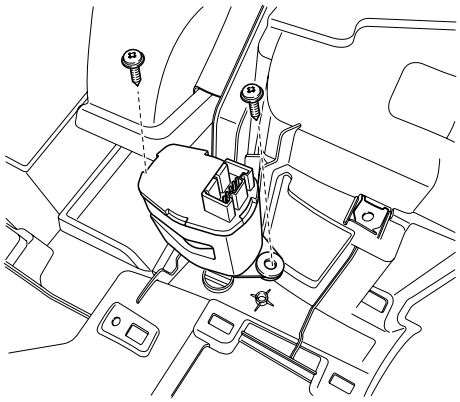

SCMHA6122D

4. Installation is the reverse order of removal.

PHOTO SENSOR

COMPONENT LOCATION EF23C30B

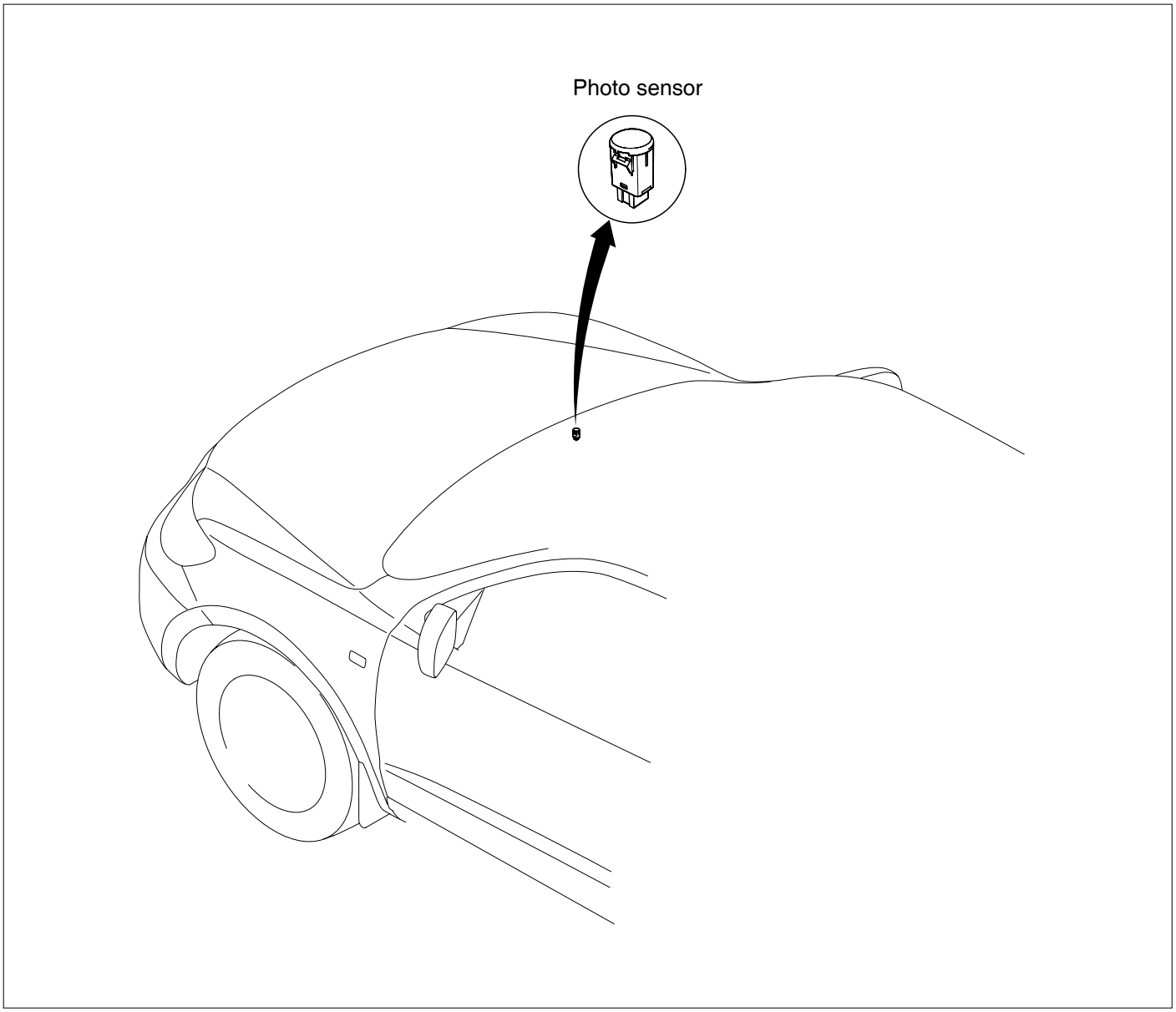

SCMHA6123L

DESCRIPTION E9E29167

1. The photo sensor (A) is located at the center of defrost nozzle.
2. The photo sensor contains a photovoltaic (sensitive to sunlight) diode. The solar radiation received by its light receiving portion, generates an electromotive force in proportion to the amount of radiation received which is transferred to the automatic temperature control module so that the solar radiation compensation will be performed.

INSPECTION E3DC5DB8

1. Ignition "ON"
2. Using the scan tool.
3. Emit intensive light toward photo sensor using a lamp, and check the output voltage change.
4. The voltage will rise with higher intensive light and reduce with lower intensive light.

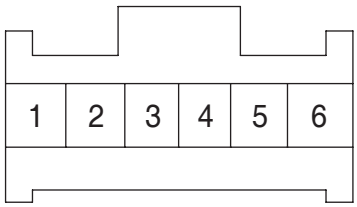

1. Ground
2. 5V (VCC)
3. Signal
4. -
5. Photo sensor (+)
6. Photo sensor (-)

LQLG202B

REPLACEMENT E6DB0564

1. Disconnect the negative (-) battery terminal.
2. With the (-) driver, remove the photo sensor (B) from the center of defrost nozzle (A).

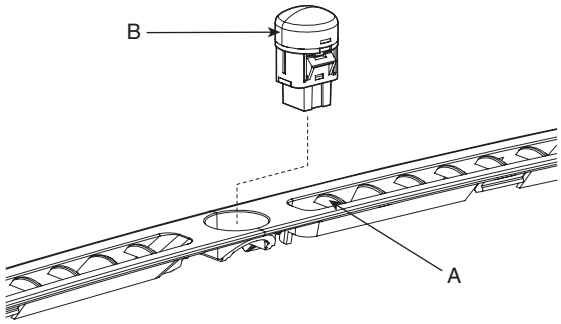

AQKF202C

3. Install in the reverse order of removal.

WATER TEMPERATURE SENSOR

COMPONENT LOCATION E4BFEDE4

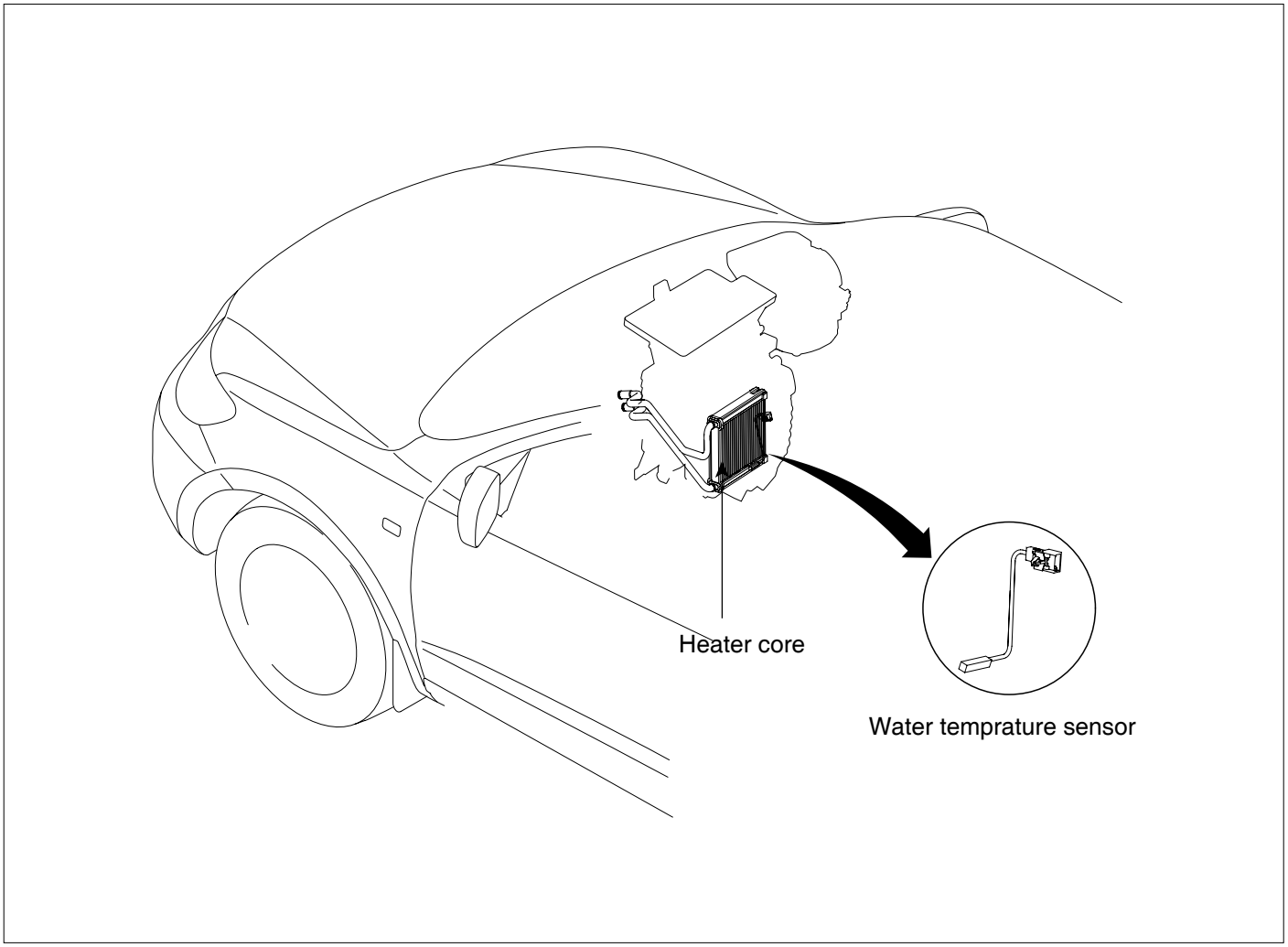

SCMHA6126L

DESCRIPTION EF9C5A75

1. Water temperature sensor is located at the heater unit.
2. It detects coolant temperature. Its signal is used for cold engine lockout control. When the driver operates the heater before the engine is warmed up, the signal from sensor causes the heater control unit to reduce blower motor speed until coolant temperature reaches the threshold value.

INSPECTION EFC0971F

1. Ignition "ON"
2. Using the multi-tester, Measure resistance between terminal "1" and "2" of water temperature sensor.

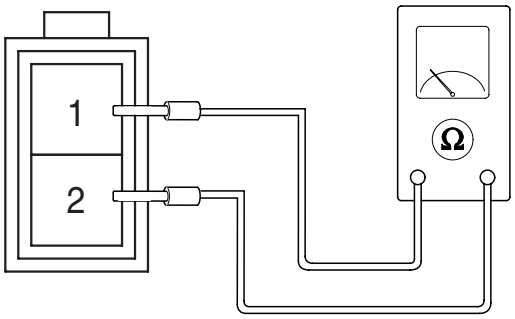

1. Water temperature sensor (+)
2. Ground (-)

EQRF203D

SPECIFICATION

Coolant temperature [℃(°F)]	Resistance (kΩ)	Voltage (V)
-10(14)	55.85 ± 3%	4.24 ± 3%
0(32)	32.91 ± 3%	3.83 ± 3%
10(50)	19.99 ± 3%	3.33 ± 3%
20(68)	12.51 ± 3%	2.78 ± 3%
30(86)	8.047 ± 3%	2.23 ± 3%
40(104)	5.311 ± 3%	1.73 ± 3%
50(122)	3.588 ± 3%	1.32 ± 3%
60(140)	2.476 ± 3%	0.99 ± 3%
70(158)	1.742 ±3%	0.74 ± 3%
80(176)	1.246 ± 3%	0.55 ± 3%

3. If the measured resistance is not specification, substitute with a known-good water temperature sensor and check for proper operation.
4. If the problem is corrected, replace the water temperature sensor.

NOTE

Negative type thermistor that resistance will rise with lower temperature, and reduce with higher temperature.

REPLACEMENT E22FAC9F

1. Disconnect the negative (-) battery terminal.
2. Remove the grove box. (Refer to BD group)
3. Disconnect the connector (A) of water temperature sensor and then remove the water temperature sensor (B) by pulling out.

[LHD]

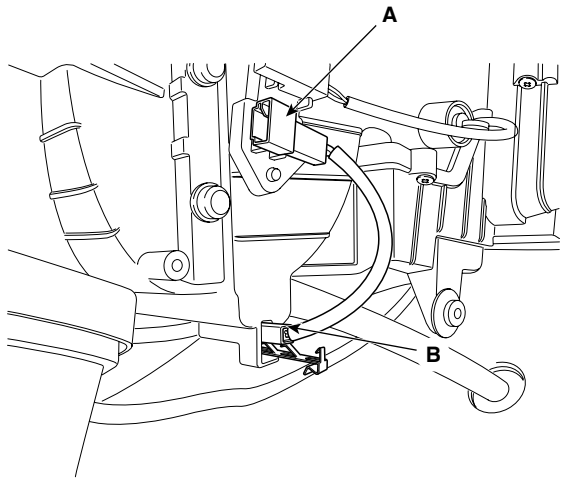

SCMHA6128D

[RHD]

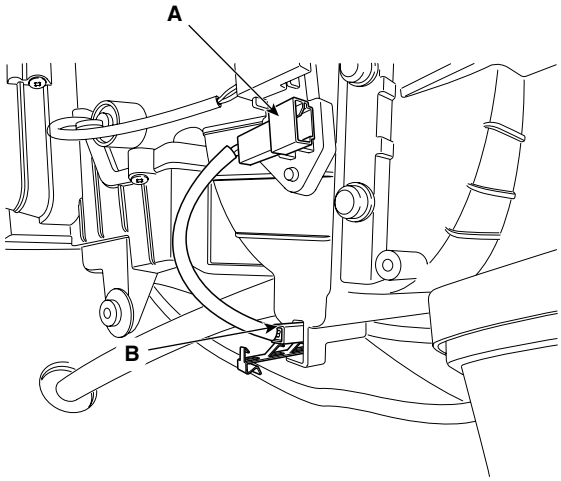

SCMHA6128R

4. Installation is the reverse order of removal.

NOTE

Take care that wire of water temperature sensor is not to be damaged

AMBIENT TEMPERATURE SENSOR

COMPONENT LOCATION E63BA10B

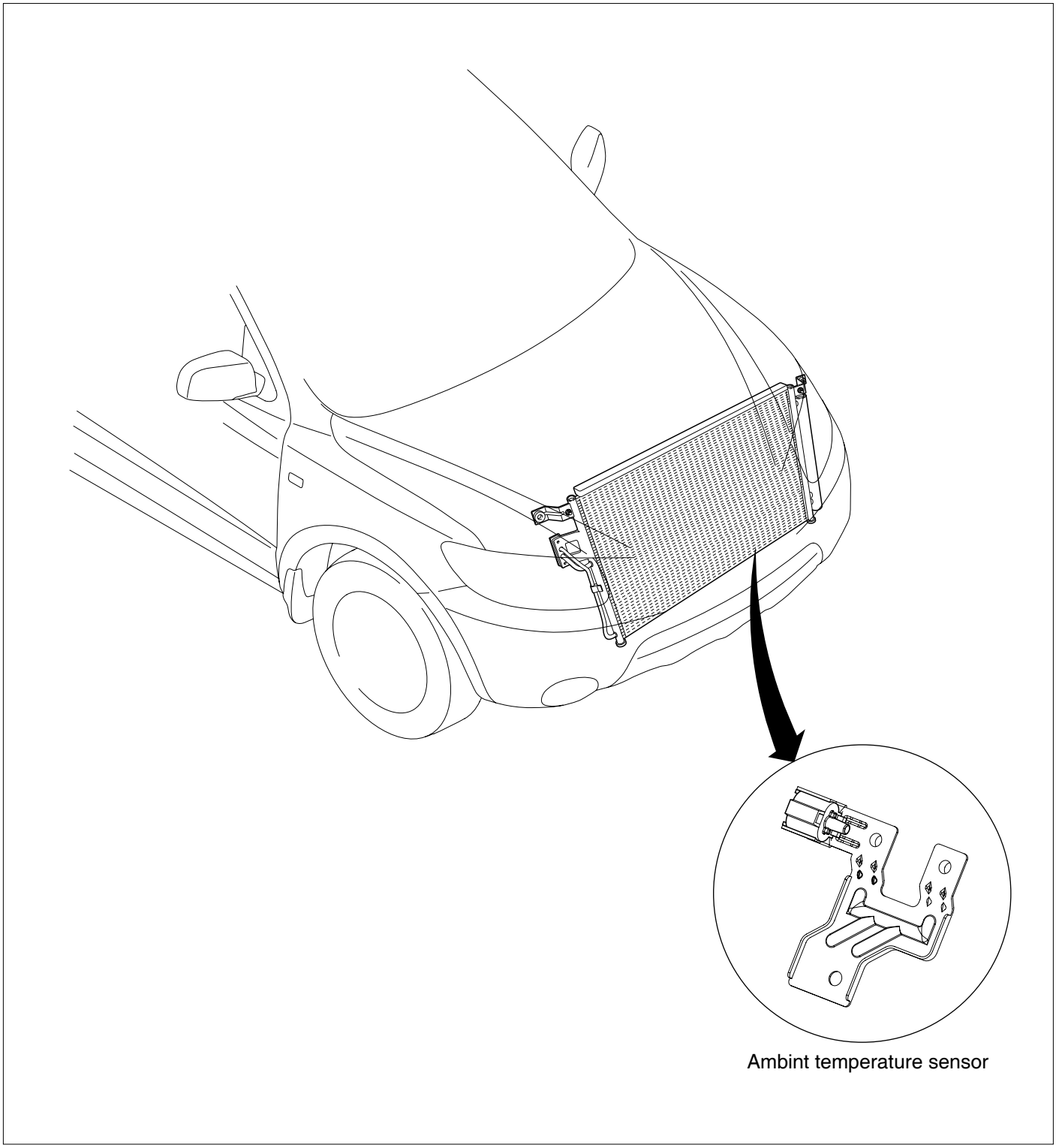

SCMHA6129L

DESCRIPTION EE9AFC97

1. The ambient temperature sensor is located at the front of the condenser and detects ambient air temperature. It is a negative type thermistor; resistance will increase with lower temperature, and decrease with higher temperatures.

2. The sensor output will be used for discharge temperature control, temperature regulation door control, blower motor level control, mix mode control and in-car humidity control.

NOTE

If the ambient temperature is below 2.0℃ (35.6°F), the A/C compressor will be stopped.
The compressor will be operated by manual operating.

INSPECTION EBCCA26E

1. Ignition "OFF"

2. Disconnect ambient temperature sensor.

3. Check the resistance of ambient temperature sensor between terminals 1 and 2 whether it is changed by changing of the ambient temperature.

SPECIFICATION

Ambient temperature [℃(°F)]	Resistance between terminals 1and 2 (kΩ)
-30(-22)	515.428
-20(-4)	287.671
-10(14)	165.981
0(32)	98.775
10(50)	60.49
20(68)	38.04
30(86)	24.729
40(104)	16.576
50(122)	11.341
60(140)	7.907

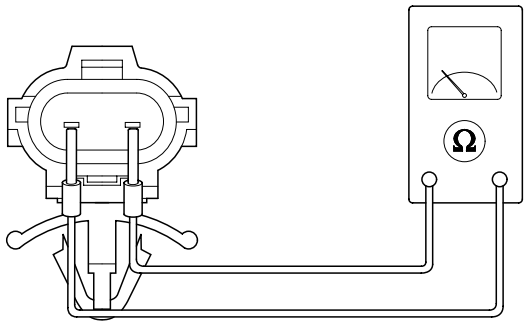

AQJF204B

4. If the measured resistance is not specification, substitute with a known-good ambient temperature sensor and check for proper operation.

5. If the problem is corrected, replace the ambient temperature sensor.

REPLACEMENT EE84B2FD

1. Disconnect the negative (-) battery terminal.
2. Remove the front bumper.
3. Remove the ambient temperature sensor (A).

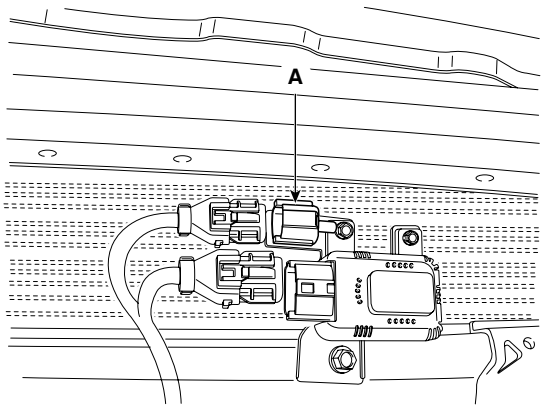

SCMHA6131D

4. Installation is the reverse order of removal.

A.Q.S (AIR QUALITY SENSOR)

COMPONENT LOCATION EF783C43

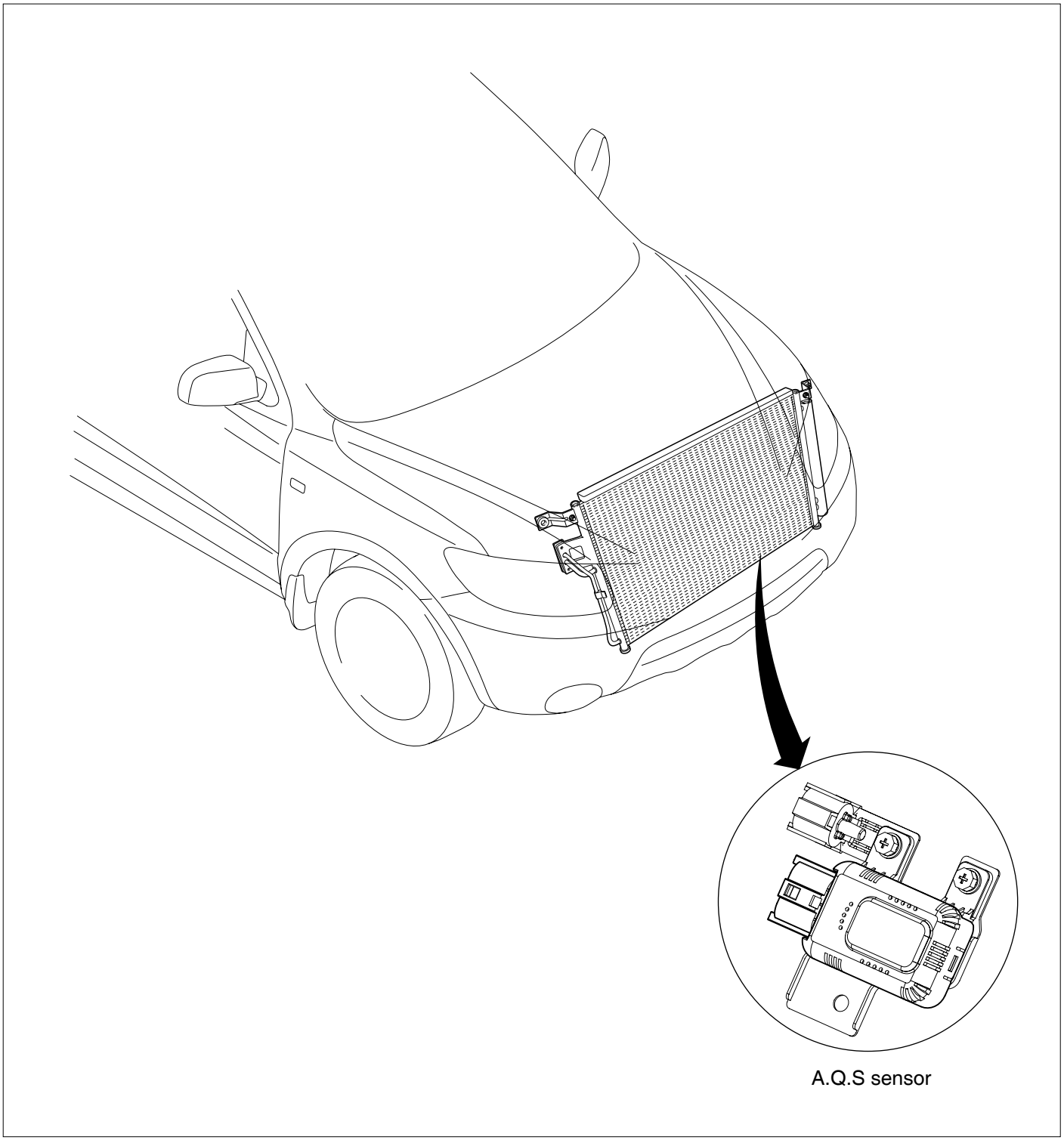

SCMHA6135L

DESCRIPTION E122A2FC

1. A.Q.S is located at center support in front of the engine radiator, and detects hazardous elements in ambient air providing output signal to control.
2. It will detect sulfurous acid gas, carbon dioxide, carbon monoxide, hydrocarbon and allergen.

INSPECTION EF4C1E6B

1. Ignition "ON"
2. Using the scan tool.
3. Check the output voltage of AQS between terminals 2 and 3.

SPECIFICATION

Condition	Output signal	Fresh/recirculation
Normal condition	4 ~ 5V	Fresh
Hazardous gas detection	0 ~ 1V	Recirculation

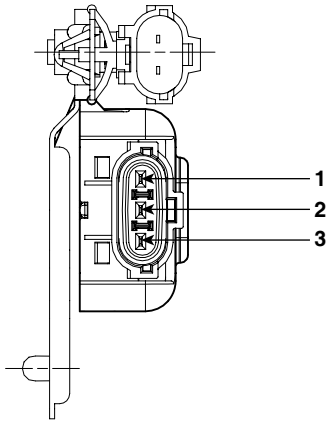

1. 12V(IGN)
2. GND
3. AQS signal

SCMHA6136L

4. AQS diagnosis and fail safe
   Detect the open of signal for 7 seconds without choosing the AQS switch when IG on.
   If 2.5V or more is detected for 3.5 seconds or more among 7 seconds, be judged the open of AQS signal. Operate as below fail safe function, while choosing AQS.
   Fail safe: Release the AQS (AQS cannot be selected), Fresh/recirculation maintains previous situation of AQS selection.

NOTE

When IG is turned ON, AQS heats for 34±5 seconds, it will output below 1.0 voltage during this time.

REPLACEMENT E4CD857C

1. Disconnect the negative (-) battery terminal.
2. Remove the front bumper.
3. Remove the AQS (B) after loosening the mounting screws (A).

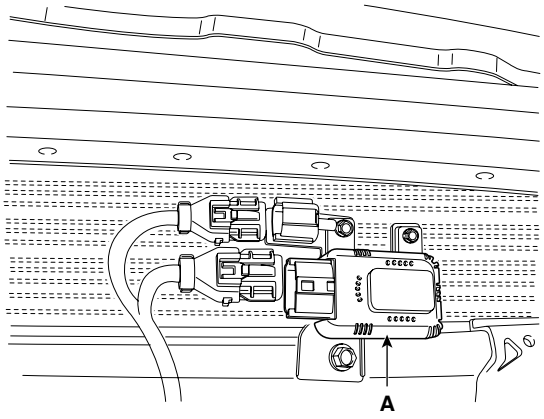

SCMHA6137D

4. Installation is the reverse order of removal.

HUMIDITY SENSOR

COMPONENT LOCATION ED4862C0

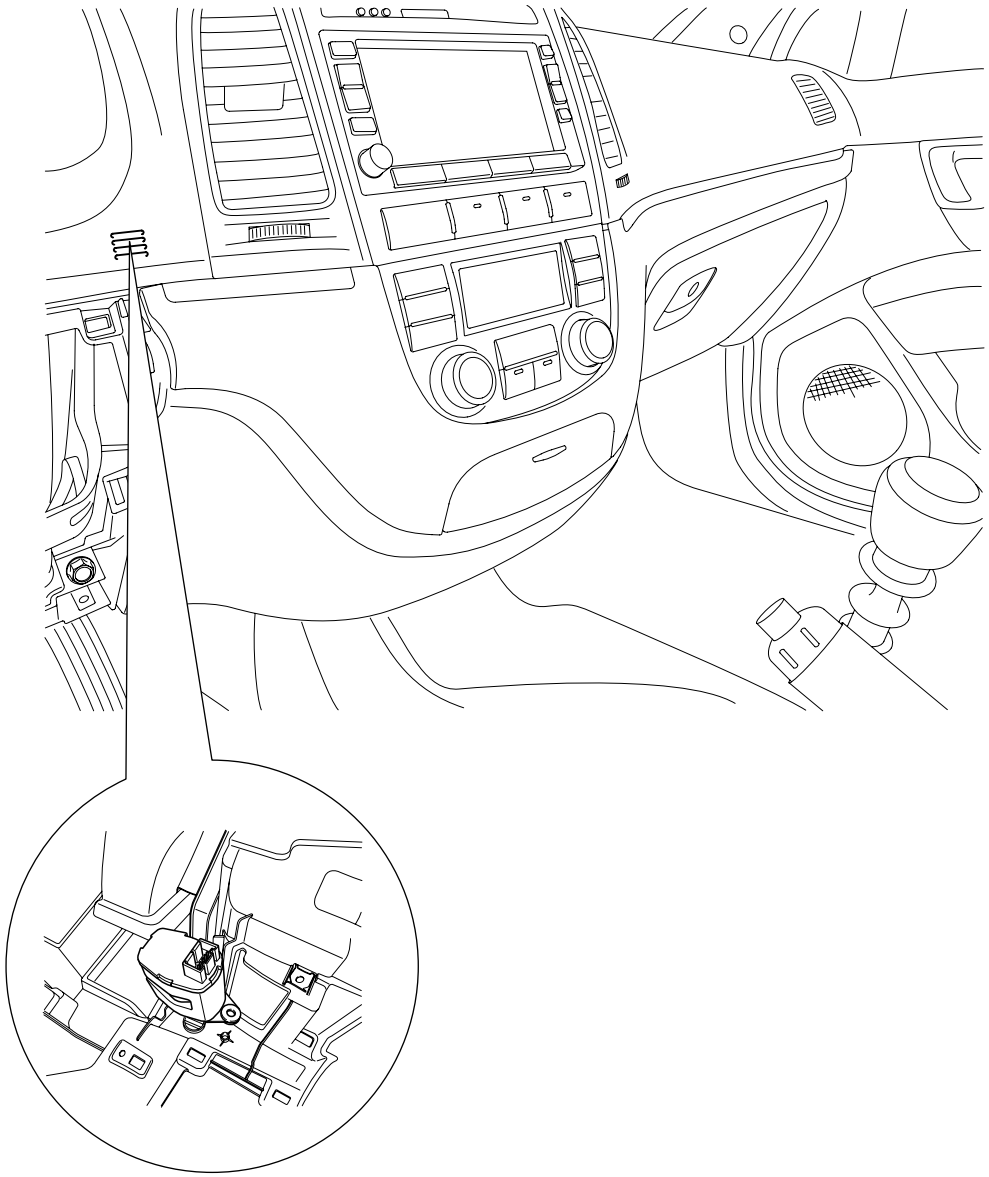

Humidity sensor

SCMHA6138L

DESCRIPTION E4A63763

1. Humidity sensor is located at the lower crush pad and detected in-car humidity for in-car humidity control.

2. If ambient air temperature or in-car humidity is outside certain range, it will turn on A/C to control in-car humidity preventing in car fogging.
   Air conditioner operation depends on ambient temperature and humidity.

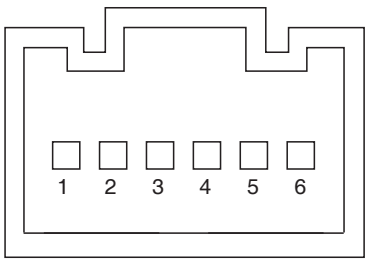

1. Motor (-)
2. Sensor (-)
3. Humidity sensor signal
4. In-car sensor temp.signal
5. Sensor (+)
6. Motor (+)

SCMHA6400L

INSPECTION ED2CFA50

1. Ignition "ON"

2. Using the scan tool.

3. Check the frequency of humidity sensor between terminals 2 and 3.

Humidity (%)	Frequency between terminals 2and 3 (Hz)
30	6976 ± 5%
50	6728 ± 5%
60	6600 ± 5%
70	6468 ± 5%
80	6330 ± 5%
90	6186 ± 5%

4. If the measured resistance is not specification, substitute with a known-good humidity sensor and check for proper operation.

5. If the problem is corrected, replace the Humidity sensor.

REPLACEMENT EF181EBC

1. Disconnect the negative (-) battery terminal.
2. Remove the crash pad. (Refer to BD- Crash pad)
3. Disconnect the humidity sensor connector.
4. Loosen 2 screws and then remove the humidity sensor (C).

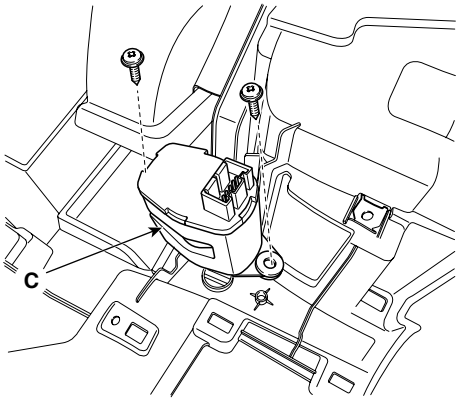

SCMHA6140D

5. Installation is the reverse order of removal.

HEATER

HEATER UNIT

COMPONENT LOCATION EDABBA22

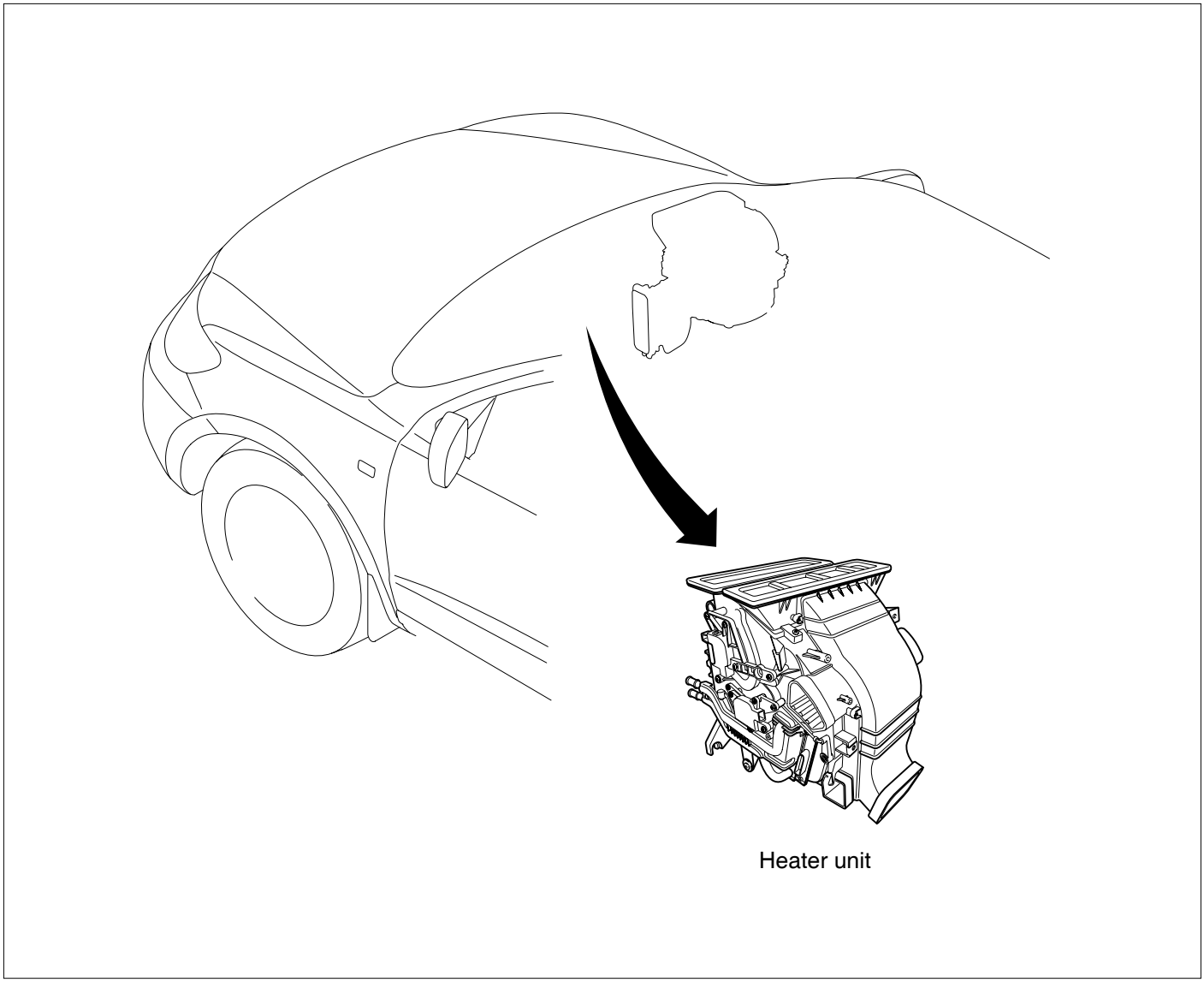

SCMHA6141L

COMPONENTS E057B840

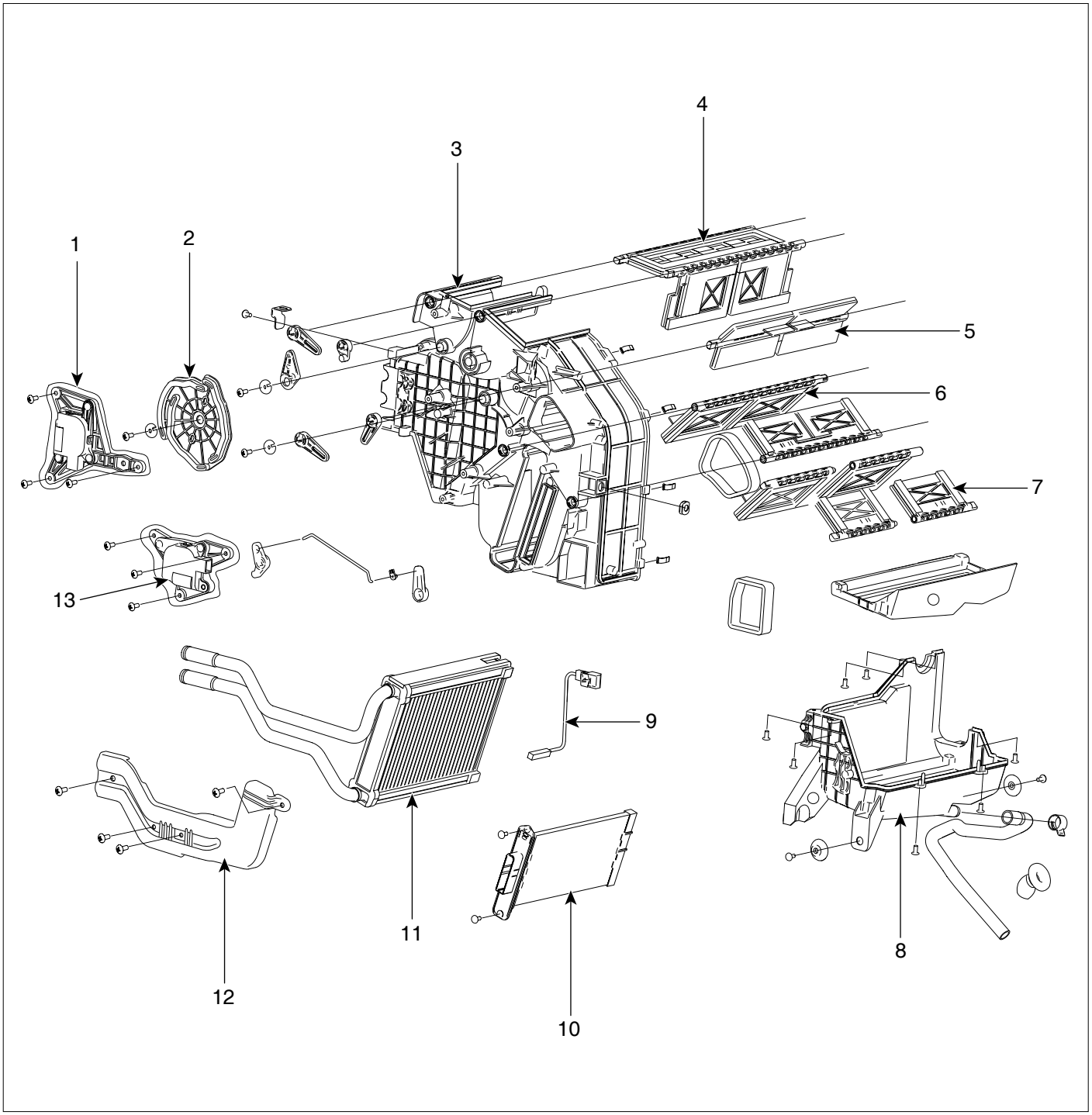

1. Mode control actuator
2. Mode cam
3. Heater & Evqporator (R)
4. Defrost door
5. Vent door
6. Temp control door (Single type)
7. Temp control door (Dual type)
8. Lower case
9. Water temperature sensor
10. PTC heater
11. Heater core cover
12. Temp control actuator

SCMHA6142L

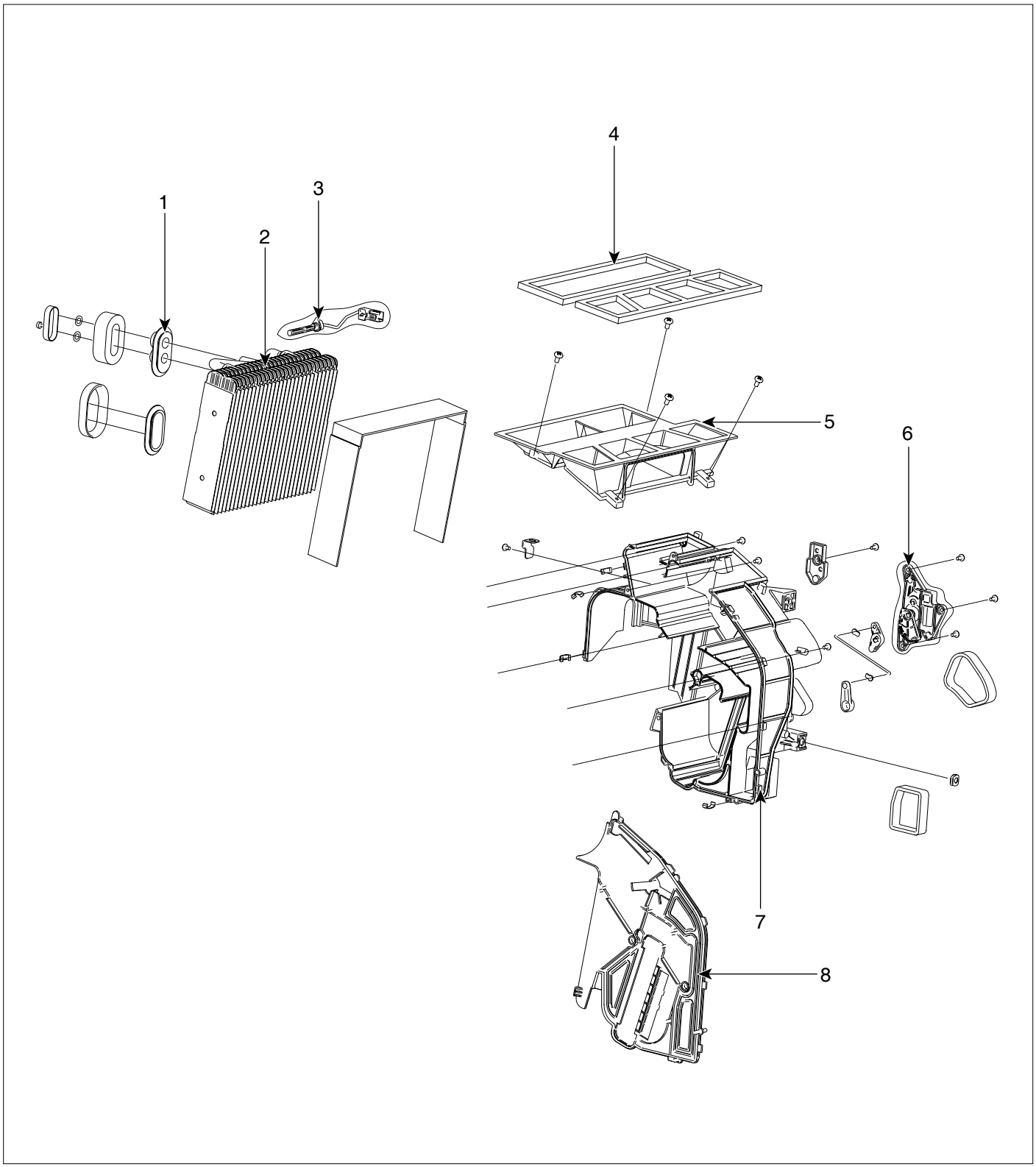

1. Evaporator case seal
2. Evaporator core
3. Evaporator temprature sensor
4. Frame duct seal
5. Heater & Evaporator opper case
6. Temp control actuator
7. Heater & Evaporator case (R)
8. Lower case

SCMHA6143L

REPLACEMENT EBA719FC

1. Disconnect the negative (-) battery terminal.
2. Recover the refrigerant with a recovery/ recycling/ charging station.
3. When the engine is cool, drain the engine coolant from the radiator.
4. Remove the bolts (A) and the expansion valve (B) from the evaporator core.
   Plug or cap the lines immediately after disconnecting them to avoid moisture and dust contamination.

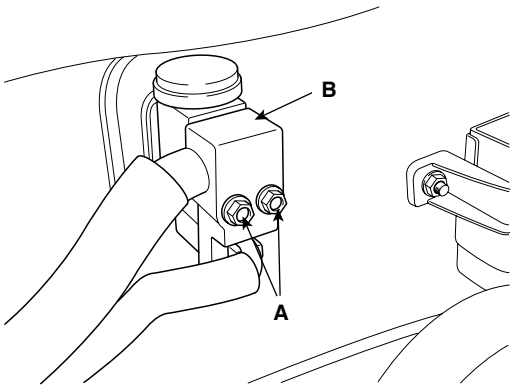

SCMHA6144D

5. Disconnect the inlet (C) and outlet (D) heater hoses from the heater unit.

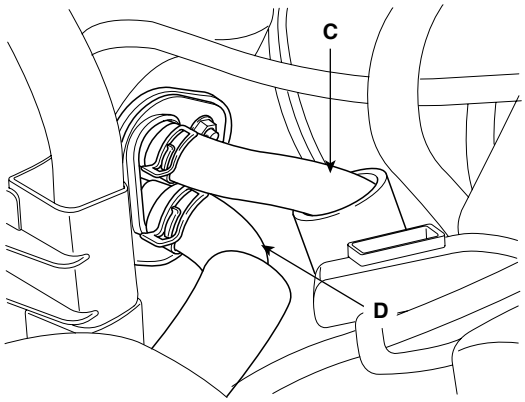

SCMHA6145D

CAUTION

Engine coolant will run out when the hoses are disconnected; drain it into a clean drip pan. Be sure not to let coolant spill on electrical parts or painted surfaces. If any coolant spills, rinse it off immediately.

6. Remove the crash pad.
7. Remove the cowl cross bar assembly.
8. Disconnect the connectors from the temperature control actuator, the mode control actuator and the evaporator temperature sensor.
9. Remove the heater & blower unit after loosening 3 mounting bolts.

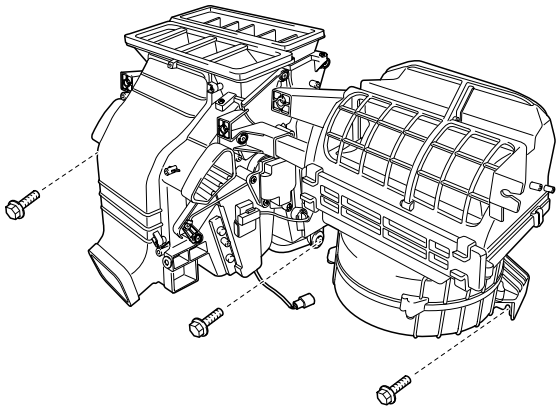

SCMHA6146D

10. Remove the blower unit (B) from heater unit after loosening 3 screws.

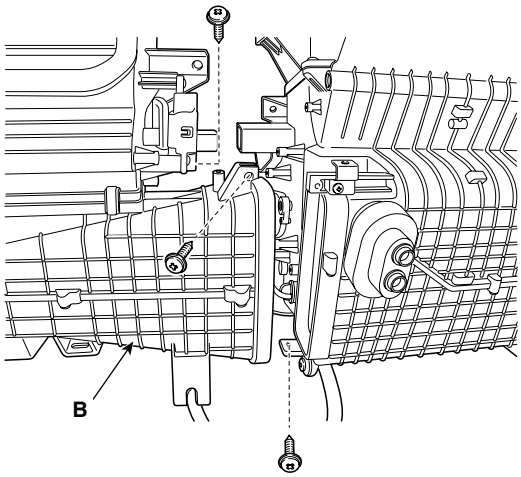

SCMHA6147D

11. Remove the self-tapping screws (A) and remove the PTC heater unit (B) or cover. (In case of PTC heater)

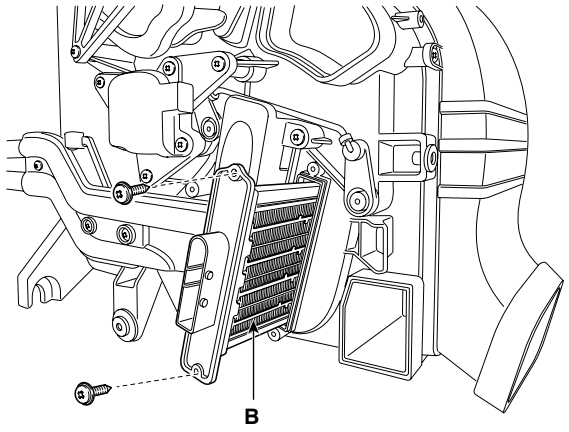

SCMHA6148D

12. Remove the water temperature sensor. (Refer to HA - Water temp sensor)

13. Remove the heater core (B) after remove the cover (A).

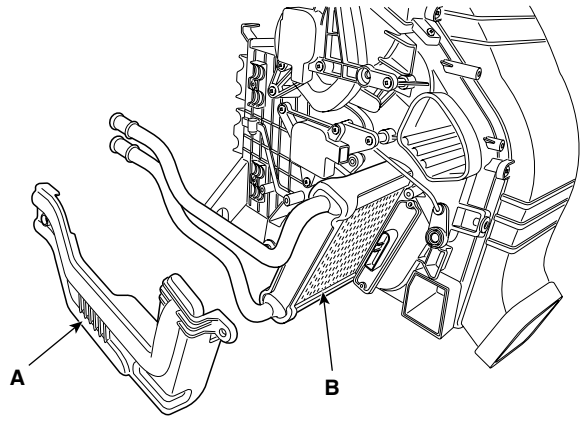

SCMHA6149D

14. Loosen a screw and then remove the heater unit cover(A).

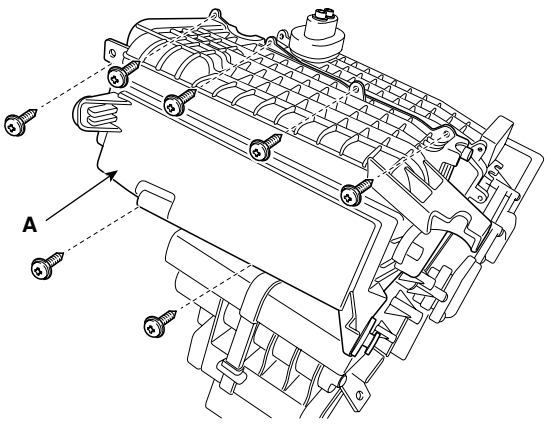

SCMHA6150D

15. Remove the evaporator core(A).

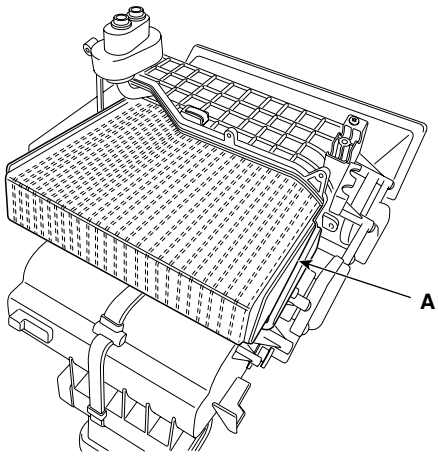

SCMHA6151D

16. Be careful that the inlet and outlet pipe are not bent during heater core removal, and pull out the heater core.

17. Install the heater core in the reverse order of removal.

18. Installation is the reverse order of removal, and note these items :
    - If you're installing a new evaporator, add refrigerant oil (ND-OIL8).
    - Replace the O-rings with new ones at each fitting, and apply a thin coat of refrigerant oil before installing them. Be sure to use the right O-rings for R-134a to avoid leakage.
    - Immediately after using the oil, replace the cap on the container, and seal it to avoid moisture absorption.
    - Do not spill the refrigerant oil on the vehicle ; it may damage the paint ; if the refrigerant oil contacts the paint, wash it off immediately
    - Apply sealant to the grommets.
    - Make sure that there is no air leakage.
    - Charge the system and test its performance.
    - Do not interchange the inlet and outlet heater hoses and install the hose clamps securely.
    - Refill the cooling system with engine coolant.

PTC (POSITIVE TEMPERATURE COEFFICIENT) HEATER

DESCRIPTION EC3EA1C9

PTC (Positive Temperature Coefficient) heater (A) is an electric heater using a PTC element as an auxiliary heating device that supplements deficiency of interior heat source in highly effective diesel engine (U engine).

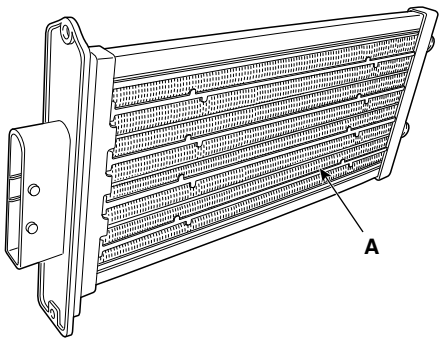

SCMHA6152D

An electric heater heats up the interior by directly heating the air that passes through the heater.
PTC = positive Temperature Coefficient
The name itself implies that the element has a proportional resistance change sensitive to temperature. PTC heater is installed at the exit or the backside of heater core.

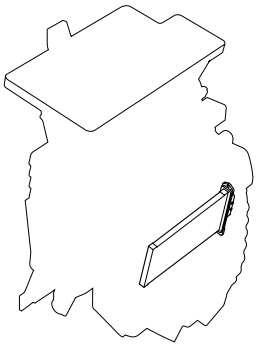

AQJF301A

OPERATION PRINCIPLE

ECM outputs a PTC on signal. Operate PTC from 1st setting to 3rd setting with an interval of 15 seconds.
Heat up the air, which passes through a heater core.

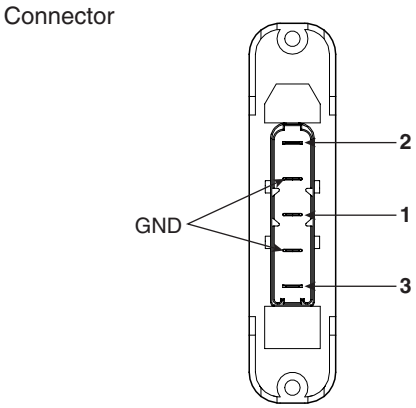

LQJF301C

OPERATION CONDITION

Judge the condition by ambient temperature is below 5°C, coolant temperature is below 70°C, and battery voltage is above 11V and engine RPM is above 700RPM.

INSPECTION EBEBB6AB

Inspect the PTC operation by confirmation logic as below.

1. Entering method
   1) Set the floor mode, maximum heating
   2) Turn off the blower switch
   3) Press the intake button more than 5 times.
   4) Indicator of entire button is flashed with an interval of 0.5 seconds continuously (Manual). Graphics of the entire LCD display switch on and off with an interval of 0.5 seconds continuously (Automatic)
   5) Confirm the PTC operation by operating the blower switch
      Manual : 1~4 step, Automatic: 1~8step.
   6) Each PTC relay is operated with an interval of 3 seconds.
   7) Execute the PTC operation by confirmation logic for 30 seconds.
2. Cancellation method
   1) Select the A/C button or intake button.
   2) IG "OFF".
   3) Cancel the logic after 30 seconds automatically.
3. If the PTC operation is not operated, substitute with a known-good PTC and check for proper operation. If the problem is corrected, replace the PTC.

REPLACEMENT EFACC0BC

1. Remove the crash pad glove box. (Refer to BD - Crash pad)
2. After loosen the PTC heater mounting serew, remove the PTC heater(A).

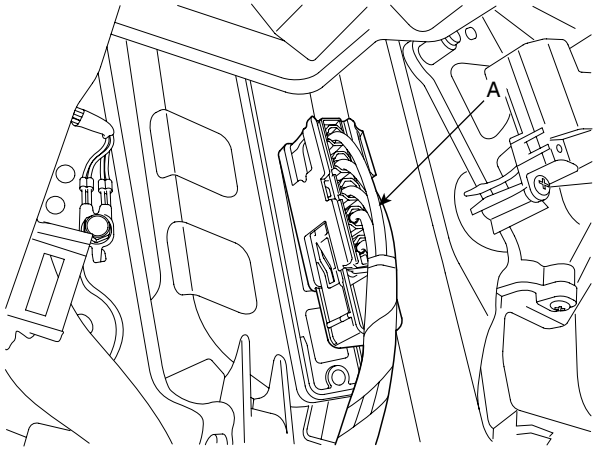

SCMHA6155D

3. Remove the PTC heatoer(A).

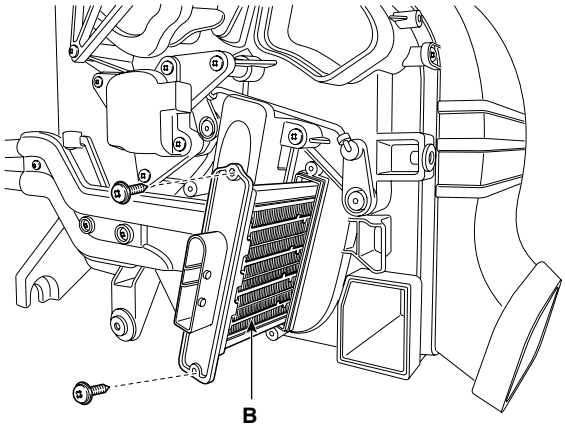

SCMHA6156D

TEMPERATURE CONTROL ACTUATOR

COMPONENT LOCATION EFC61DF9

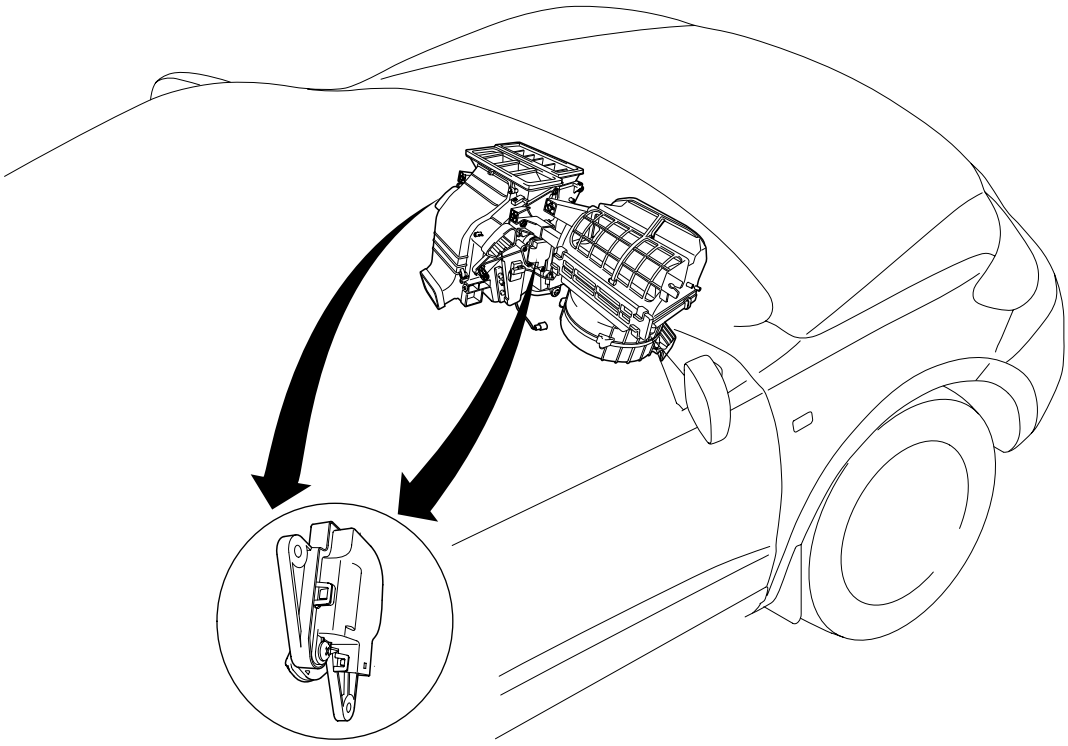

SCMHA6157L

DESCRIPTION EEB86C0E

1. Heater unit includes mode control actuator and temperature control actuator.
2. Temperature control actuator is located at the heater unit. It regulates the temperature by the procedure as follows. Signal from control unit adjusts position of temperature door by operating temperature switch and then temperature will be regulated by the hot/cold air ratio decided by position of temperature door

INSPECTION EAE4CBCC

1. Ignition "OFF"
2. Disconnect the connector of temperature control actuator.
3. Verify that the temperature control actuator operates to the hot position when connecting 12V to the terminal 3 and grounding terminal 4.
   Verify that the temperature control actuator operates to the cool position when connecting in the reverse.

[DRIVER]

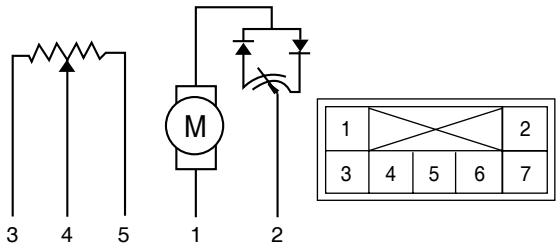

1. -
2. -
3. Cool position
4. Hot position
5. 5V (VCC)
6. Feedback signal
7. Sensor ground

SCMHA6303L

SPECIFICATION

Door position	Voltage (6-7)	Error detecting
Max. cooling	0.3 ± 0.15V	Low voltage : 0.1V or less
Max. heating	4.7 ± 0.15V	High voltage : 4.9V or more

[PASSENGER]

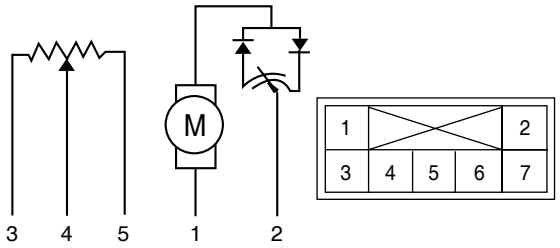

1. -
2. -
3. Hot position
4. Cool position
5. Sensor ground
6. Feedback signal
7. 5V (VCC)

SCMHA6304L

SPECIFICATION

Door position	Voltage (5-6)	Error detecting
Max. cooling	0.3 ± 0.15V	Low voltage : 0.1V or less
Max. heating	4.7 ± 0.15V	High voltage : 4.9V or more

It will feedback current position of actuator to controls.

4. If the measured voltage is not specification, substitute with a known-good temperature control actuator and check for proper operation.
5. If the problem is corrected, replace the temperature control actuator.

REPLACEMENT E8AEACEC

1. Disconnect the negative (-) battery terminal.
2. Remove the driver’ s crush pad lower panel (Refer to BD- Crash pad)
3. Disconnect the temperature control actuator connector (A) after removing the air duct.
4. Loosen the mounting screw and then remove the temperature control actuator (B).

[PASSENGER’S]

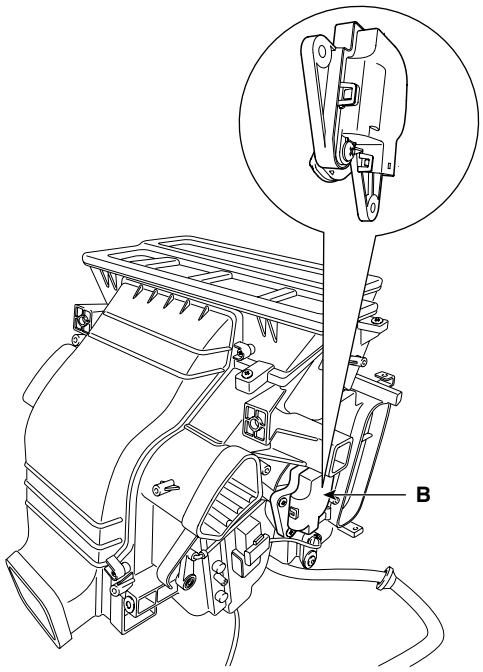

SCMHA6160D

[DRIVER’S]

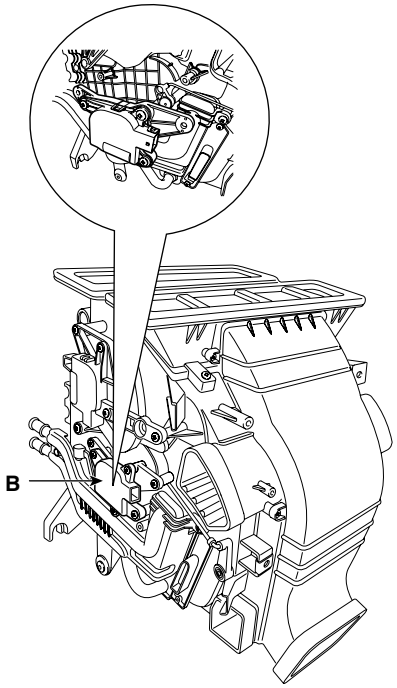

SCMHA6161D

5. Installation is the reverse order of removal.

MODE CONTROL ACTUATOR

COMPONENT LOCATION E8FDCBD7

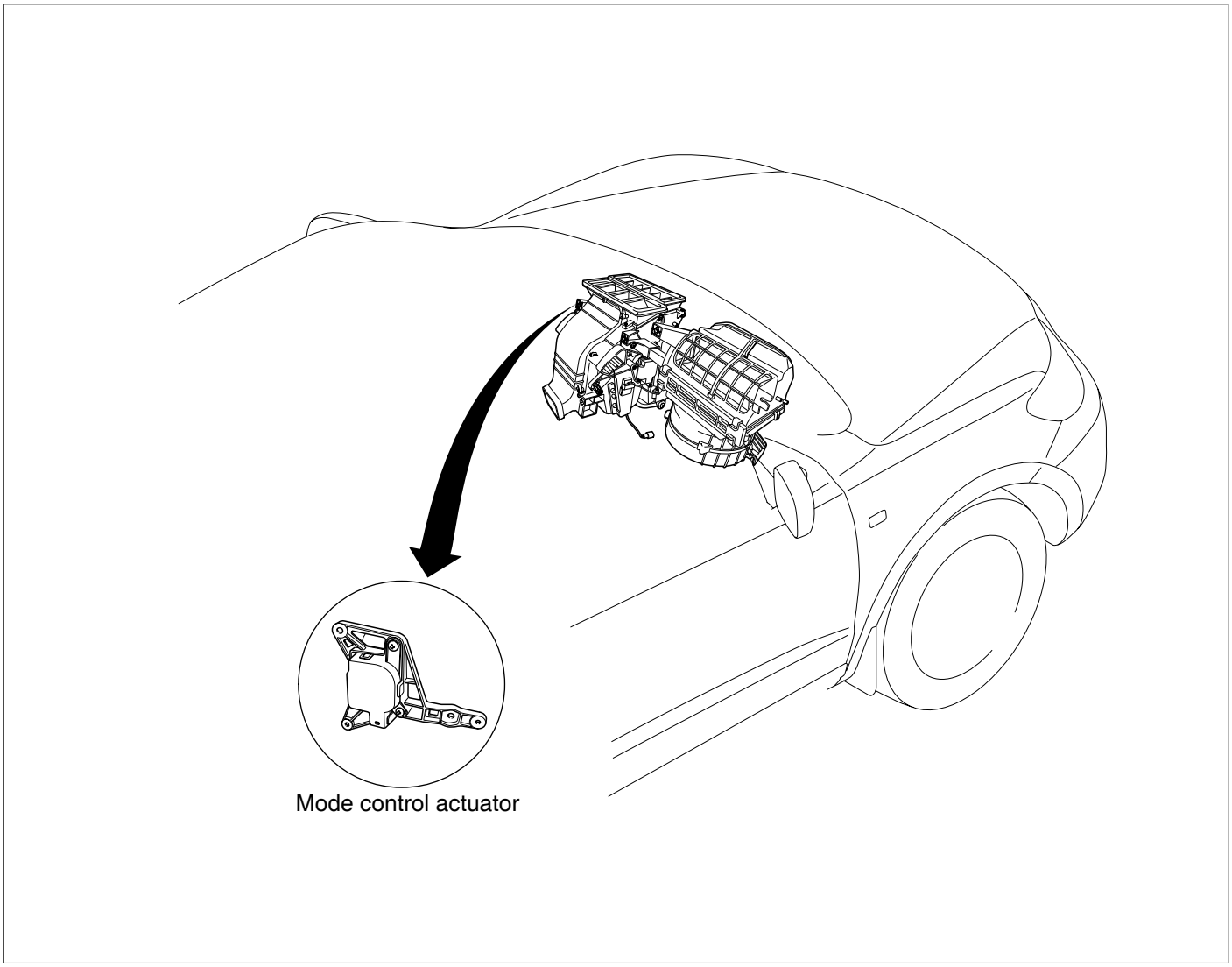

SCMHA6162L

DESCRIPTION E6DBF81F

The mode control actuator is located at the heater unit. It adjusts position of mode door by operating mode control actuator based on signal of A/C control unit. Pressing mode select switch makes the mode control actuator shift in order of vent→ B/L → floor → mix.

INSPECTION EBFACAE1

1. Ignition "OFF"
2. Disconnect the connector of mode control actuator.
3. Verify that the mode control actuator operates to the defrost mode when connecting 12V to the terminal 3 and grounding terminal 4.
4. Verify that the mode control actuator operates to the vent mode when connecting in the reverse.

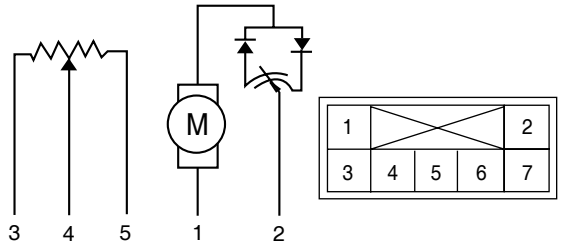

1. -
2. -
3. Defrost mode
4. Vent mode
5. Sensor ground
6. 5V (VCC)
7. Feedback signal

SCMHA6305L

5. Check the voltage between terminals 5 and 7.

Door position	Voltage (5-7)	Error detecting
Vent	0.3 ± 0.15V	Low voltage : 0.1V or less
Defrost	4.7 ± 0.15V	High voltage : 4.9V or more

It will feedback current position of actuator to controls.

6. If the measured voltage is not specification, substitute with a known-good mode control actuator and check for proper operation.
7. If the problem is corrected, replace the mode control actuator.

REPLACEMENT EA2DAD4F

1. Disconnect the negative (-) battery terminal.
2. Remove the driver' s crush pad lower panel (Refer to BD group).
3. Disconnect the temperature control actuator connector (A) after removing the air duct.
4. Loosen the mounting screw and then remove the temperature control actuator (B).

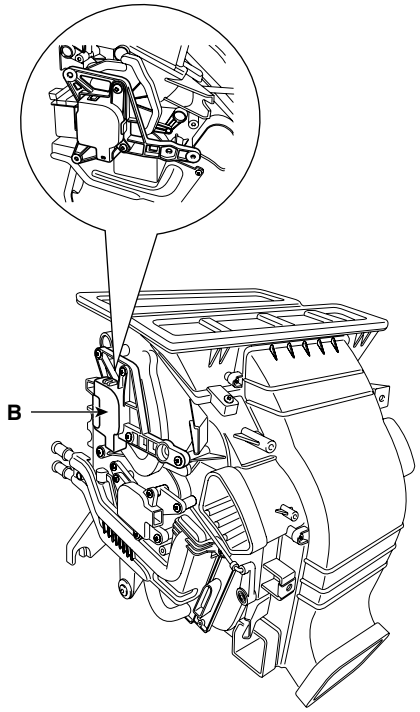

SCMHA6163D

5. Installation is the reverse order of removal.

REAR HEATER

REAR HEATER UNIT

COMPONENT LOCATION E2D30DFC

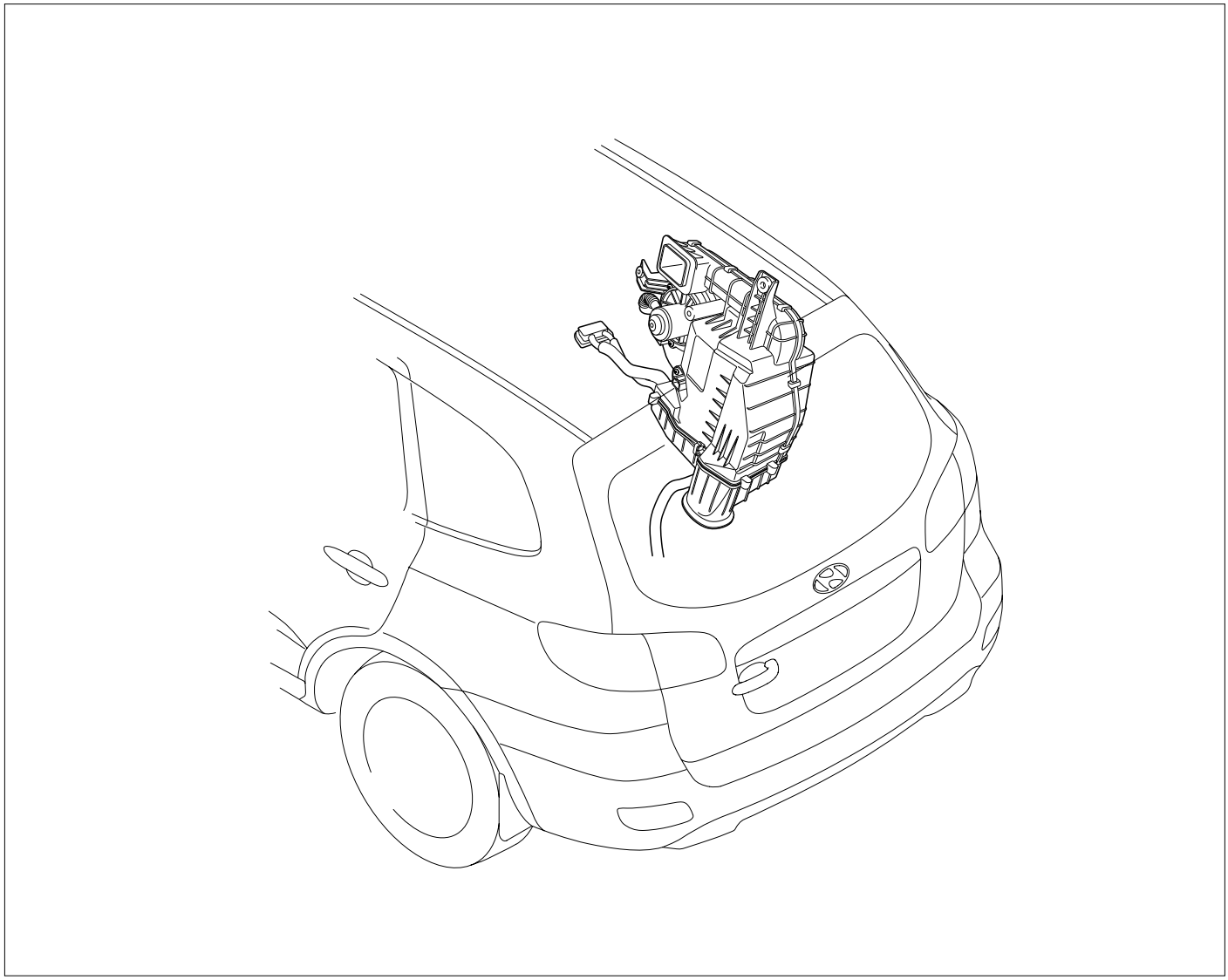

SCMHA6182D

COMPONENTS E7CCAEEB

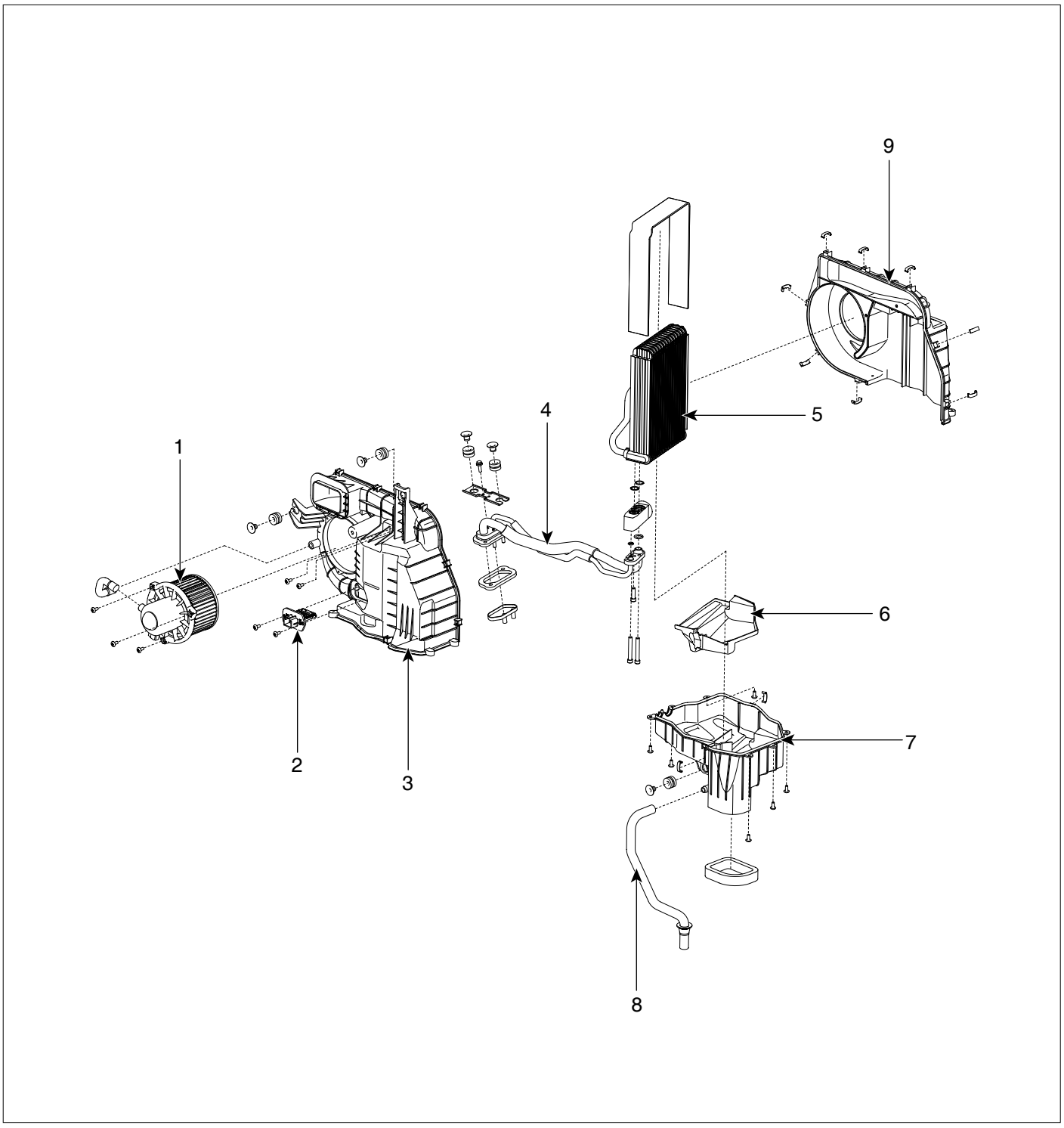

1. Rear blower motor
2. Rear blower resistor
3. Heater case (L)
4. Rear refrigerant
5. Rear evaporator core
6. Lower case seal
7. Lower case
8. Drain hose
9. Heater case (R)

SCMHA6183L

REPLACEMENT EE2F6D5B

1. Disconnect the negative(-) battery terminal.
2. Recover the refrigerant with a recover/ recycling/ charging station.
3. Remove luggage side trim.
4. Remove the rear wheel guard.
5. Loosen the refrigerant line mounting nuts.

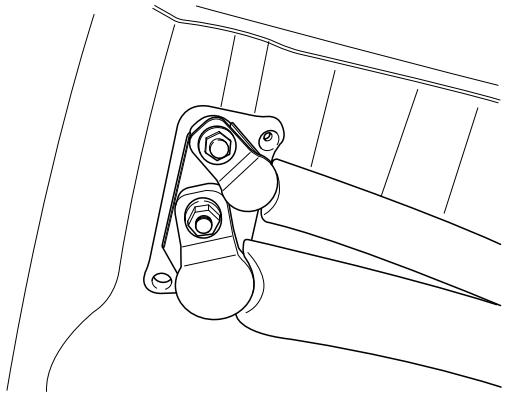

SCMHA6184D

6. Loosen the refrigerant line mounting bolts, and then remove the rear refrigerant line(A).

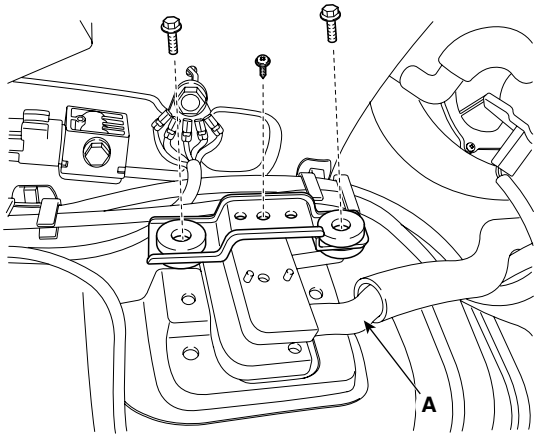

SCMHA6185L

7. Loosen the mounting bolts and then remove the rear heater unit(A).

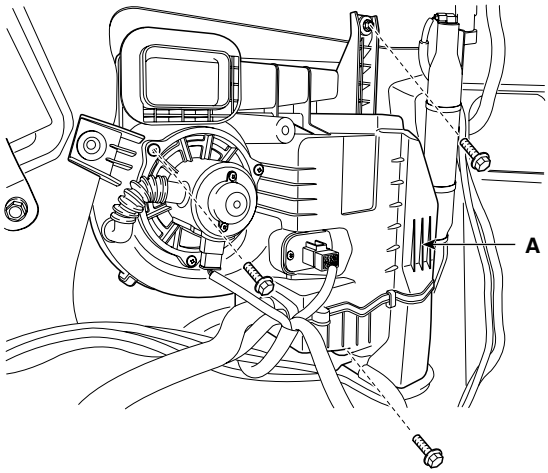

SCMHA6186D

8. Disconnect the rear evaporator core cover(A) and then remove the evaporator core(B).

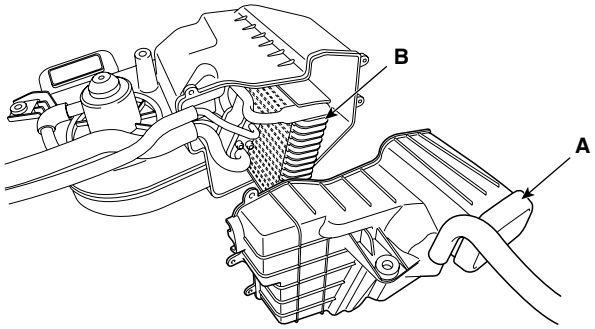

SCMHA6187D

9. Installation is the reverse order of removal.

REAR HEATER BLOWER UNIT

INSPECTION EDCD35CC

1. Connect the battery voltage and check the blower motor rotation.

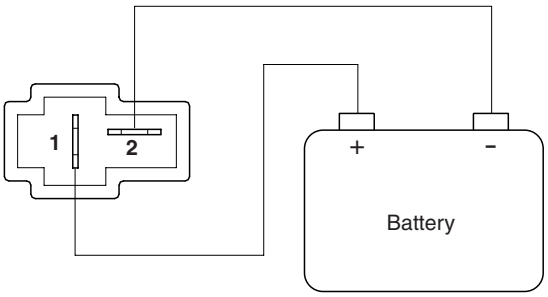

AQIE352C

2. If the blower motor voltage is not operated well, substitute with a known-good blower motor and check for proper operation.
3. If the problem is corrected, replace the blower motor.

REPLACEMENT EE4249A8

1. Disconnect the negative (-) battery terminal.
2. Remove luggage side trim. (Refer to BD- Interior trim)
3. Disconnect the connector (A) of the blower motor.
4. Remove the blower motor (B) after loosening the mounting screws.

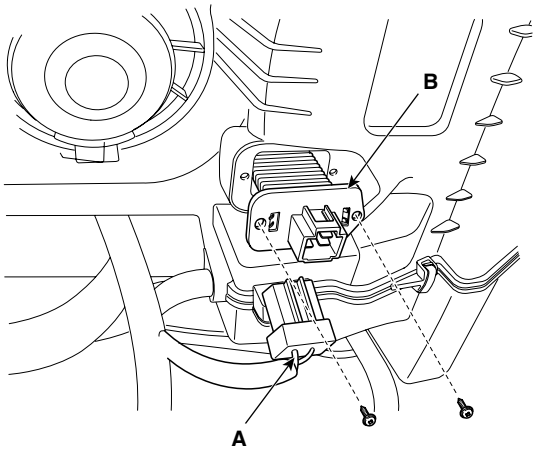

SCMHA6190L

5. Installation is the reverse order of removal.

REAR BLOWER RESISTER

INSPECTION E1A3166A

1. Measure terminal-to-terminal resistance of the blower resistor.
2. If measured resistance is not within specification, the blower resistor must be replaced. (After removing the resistor)

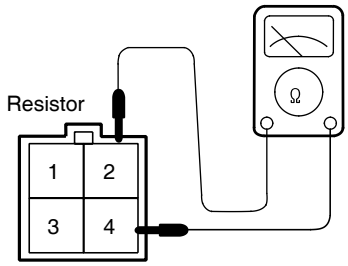

1. -
2. MH
3. LO
4. HI

SCMHA6189L

Terminal / Speed / Ohmmeter	2	3	4	Resis - tance [Ω]
	MH	LO	HI	
Measurement of resistance between each terminal	○		○	2.05 Ω ± 5%
	○	○		3.40 Ω ± 5%

SCMHA6308L

REPLACEMENT E8A1FA5F

1. Disconnect the negative (-) battery terminal.
2. Remove the luggage side trim. (Refer to BD- Interior trim)
3. Disconnect the rear blower resister connector (A).
4. Remove rear blower resister (B) after loosening the mounting screws.

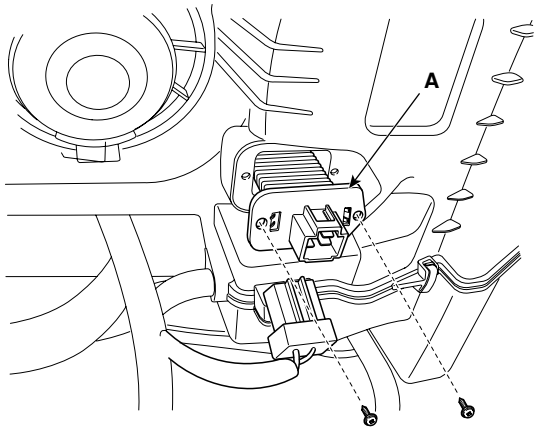

SCMHA6190D

5. Installation is the reverse order of removal.

REAR CONTROL PANEL

COMPONENTS ECAE2C68

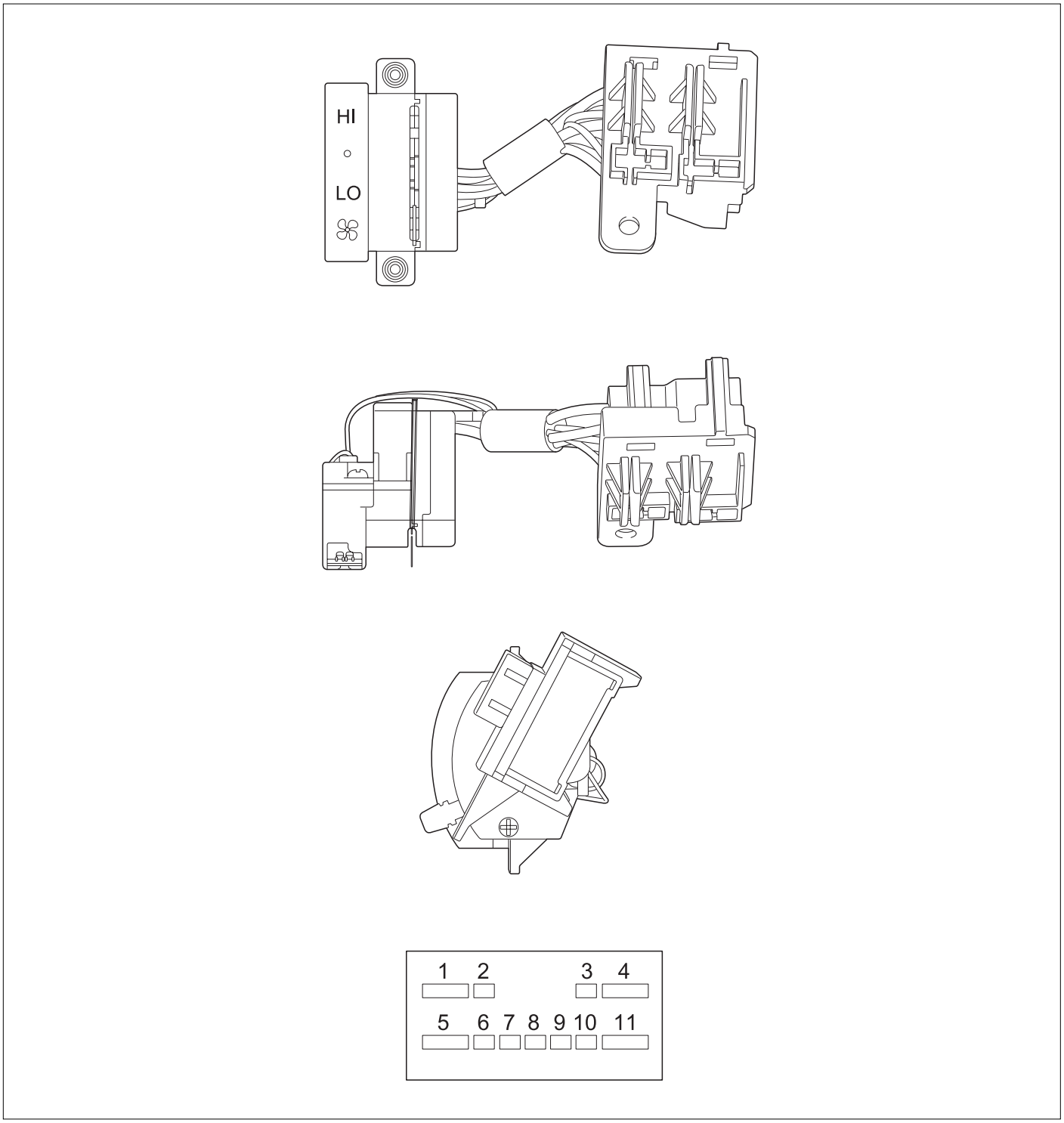

SCMHA6191D

[CONNECTOR]

PIN	
1	LOW
2	ILL(+)
3	ILL(-)
4	MIDDLE
5	HIGH
6	-
7	-
8	-
9	-
10	COMMON
11	GND

REPLACEMENT E6EEDD17

1. Remove the rear side trim. (Refer to BD- Interior Trim)
2. Loosen the mounting screw and then remove the rear blower controler(A) from the rear side trim.

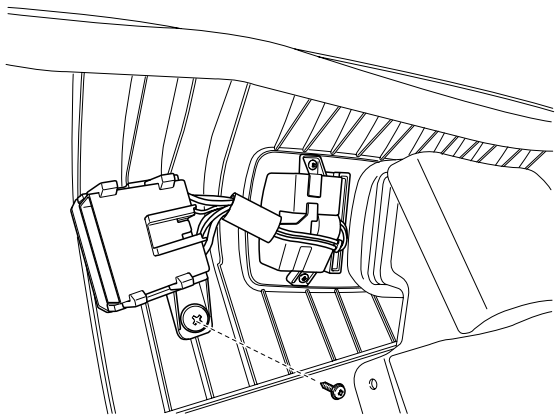

SCMHA6192D

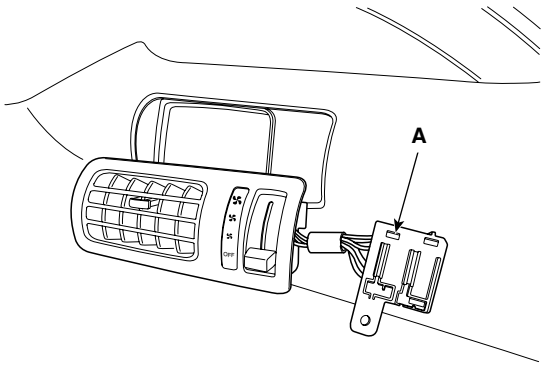

SCMHA6193L

3. Loosen the mounting screw and then remove the rear blower cintrol unit (A) from the air vant(B).

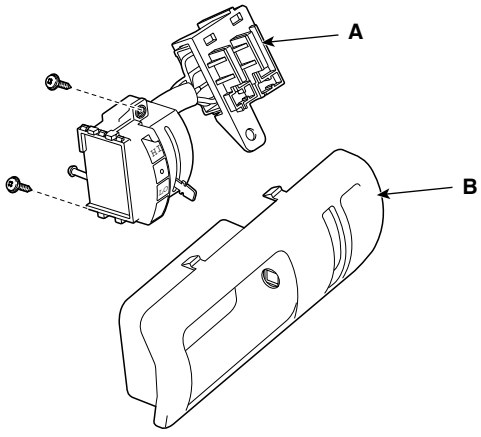

SCMHA6194L

4. Installation is the reverse order of removal.

BLOWER CONTROLS

BLOWER UNIT

COMPONENT LOCATION E59E4ACA

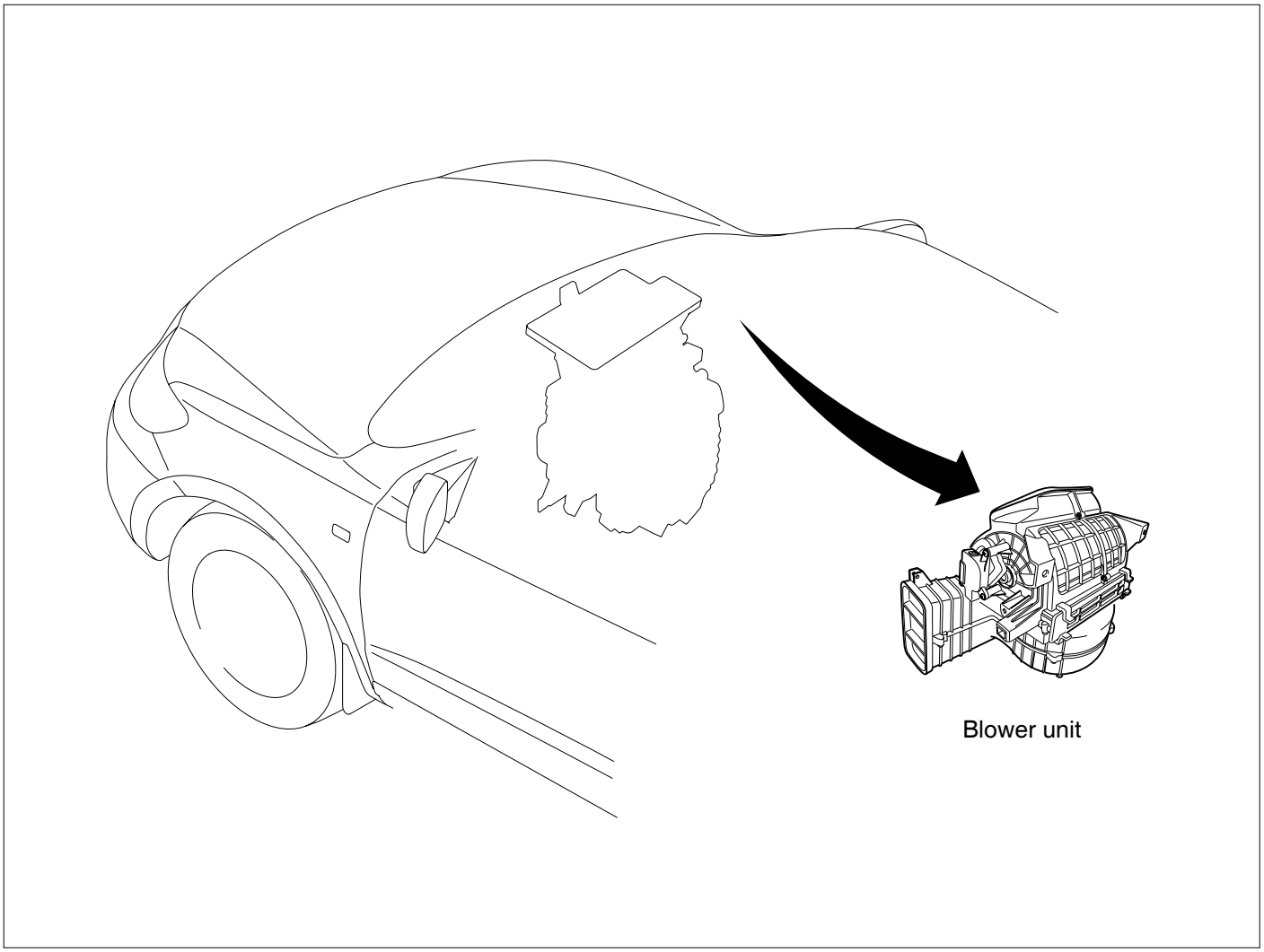

SCMHA6164L

COMPONENTS E28B595E

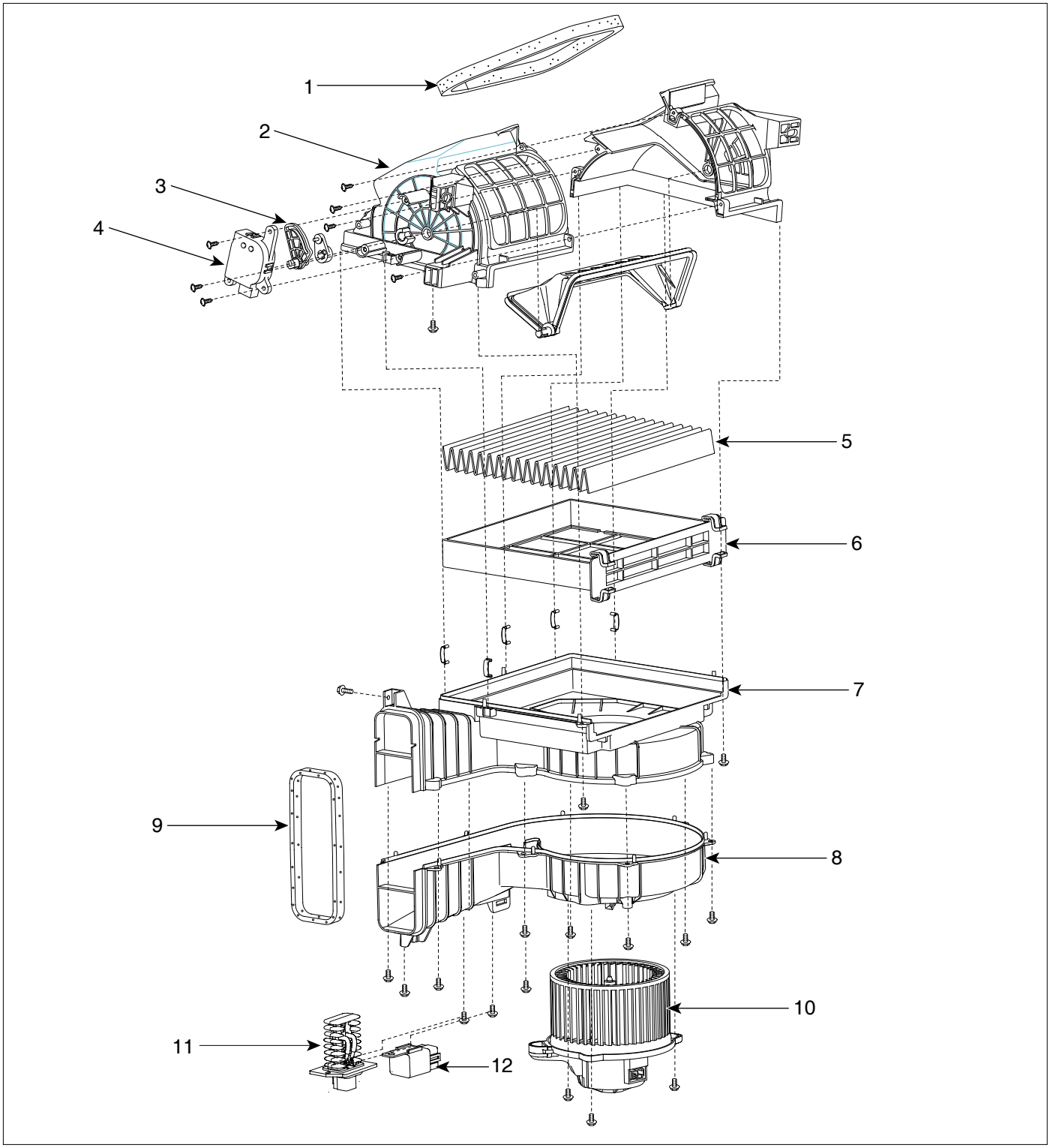

1. Rec.duct seal
2. Fresh duct case
3. Intake door assembly
4. Intake actuator
5. Air filter
6. Air filter housing
7. Blower upper case
8. Blower lower case
9. Blower seal
10. Blower motor
11. Power transistor
12. Blower relay

SCMHA6165L

REPLACEMENT E6B3309E

1. Disconnect the negative (-) battery terminal.
2. Remove the crush pad.(Refer to BD-crashpad)
3. Disconnect the connectors from the intake actuator, the blower motor and blower resister.
4. Remove the blower unit (A) from the heater unit after loosening a mounting bolt and 3 screws.

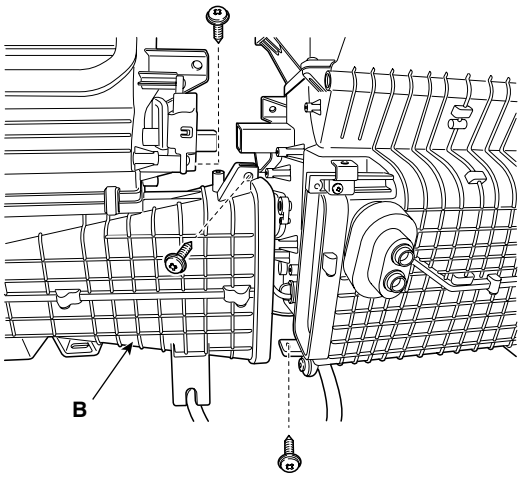

SCMHA6166D

NOTE

Make sure that there is no air leaking out of the blower and duct joints.

5. Installation is the reverse order of removal.

BLOWER MOTOR

COMPONENT LOCATION E379A6B5

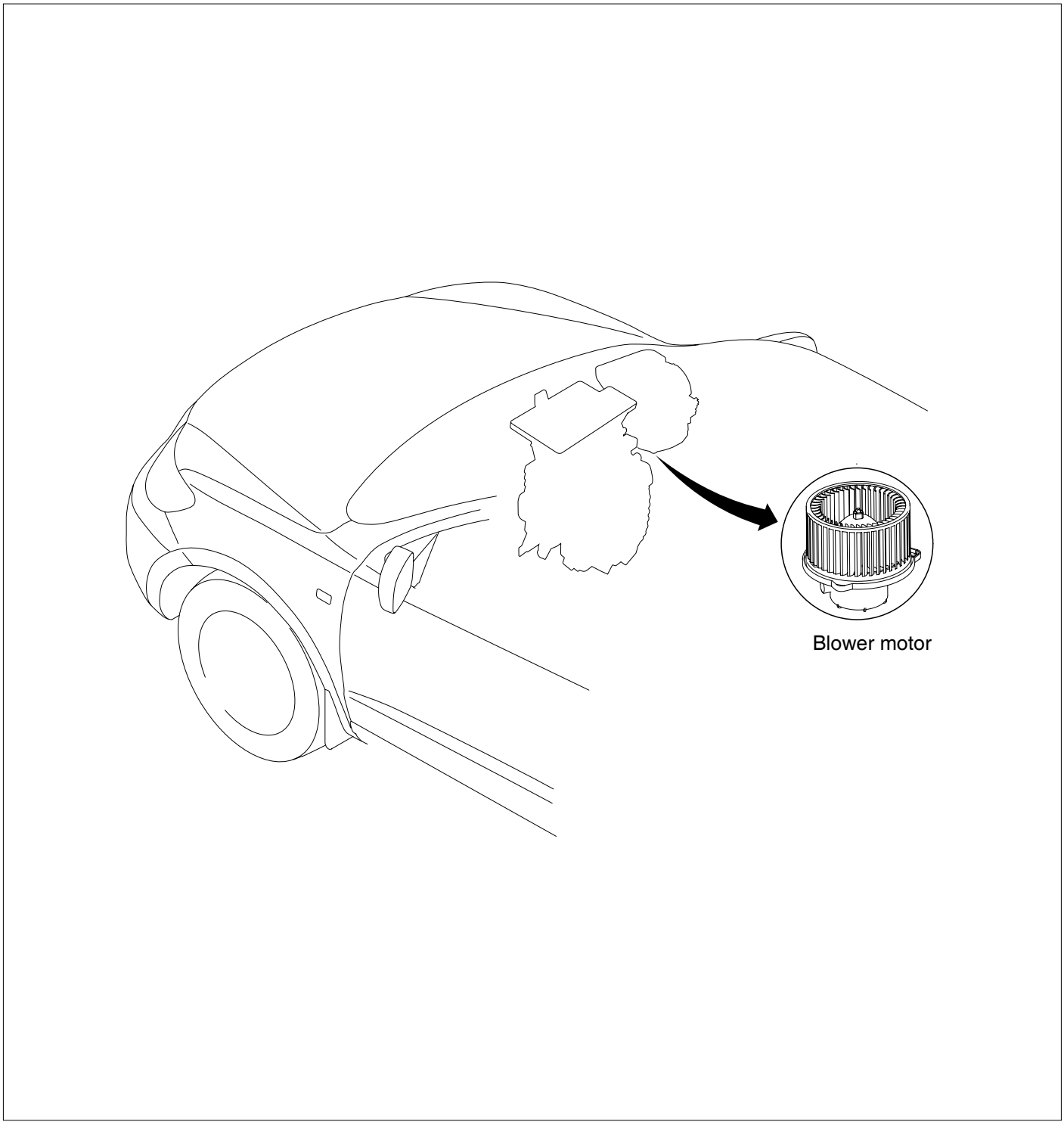

SCMHA6167L

INSPECTION EBECCB8E

1. Connect the battery voltage and check the blower motor rotation.

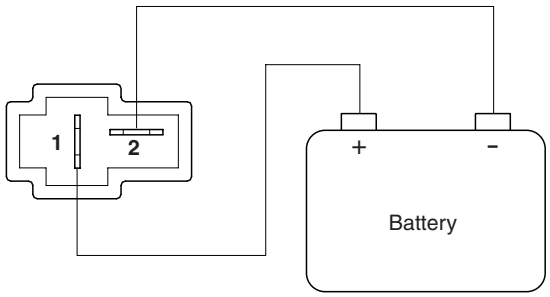

AQIE352C

2. If the blower motor voltage is not operated well, substitute with a known-good blower motor and check for proper operation.

구분	MENUAL	AUTO
1	3.8V	AUTO LO(4.5V)
2	4.9V	4.6~5.5V
3	6.1V	5.6~6.7V
4	7.2V	6.8~7.7V
5	8.3V	7.8~8.9V
6	9.5V	9.0~10.1V
7	10.6V	10.2~AUTO HI(10.6V)
8	B+	

3. If the problem is corrected, replace the blower motor.

REPLACEMENT E826820A

1. Disconnect the negative (-) battery terminal.
2. Disconnect the connector (A) of the blower motor.

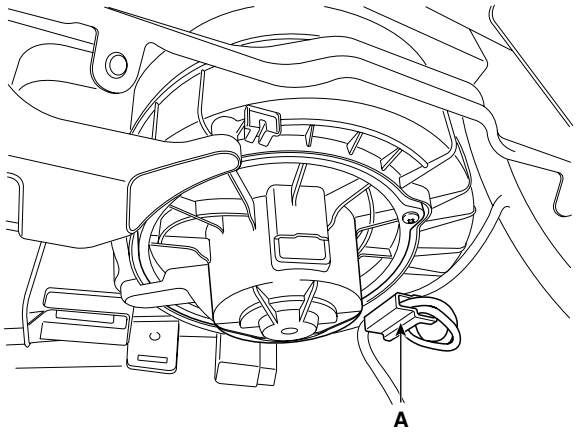

SCMHA6168D

3. Remove the blower motor (A) after loosening the mounting screws.

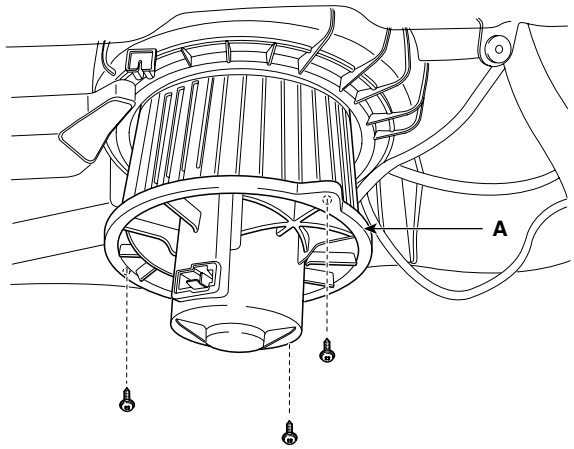

SCMHA6169D

4. Installation is the reverse order of removal.

BLOWER RELAY

COMPONENT LOCATION E217DB4E

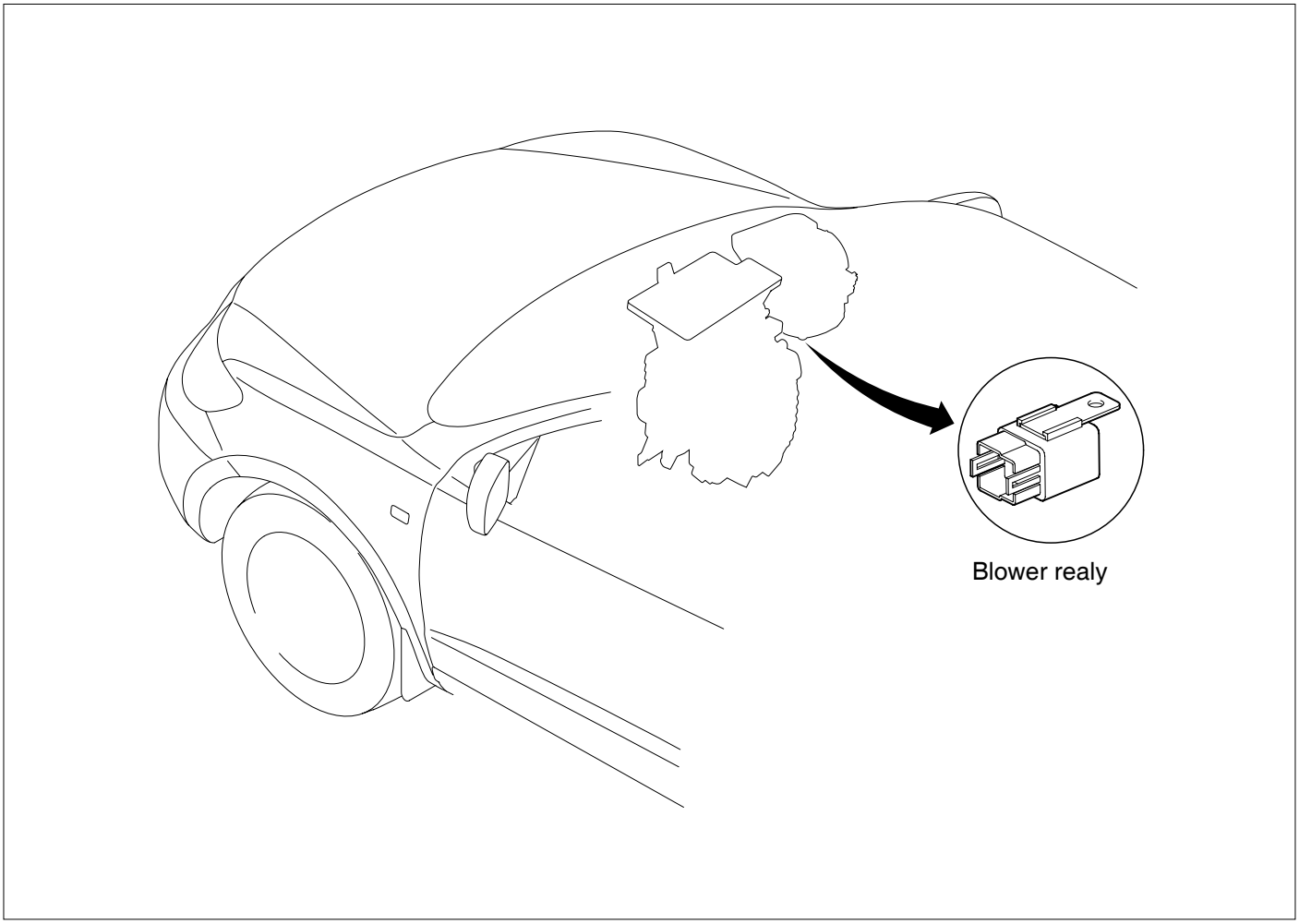

SCMHA6171L

INSPECTION E5C82BE0

1. There should be continuity between the NO.1 and NO.2 terminals when power and ground are connected to the NO.3 and NO.4 terminals.
2. There should be to no continuity btween the NO.1 and NO.2 terminals when power is disconnected.

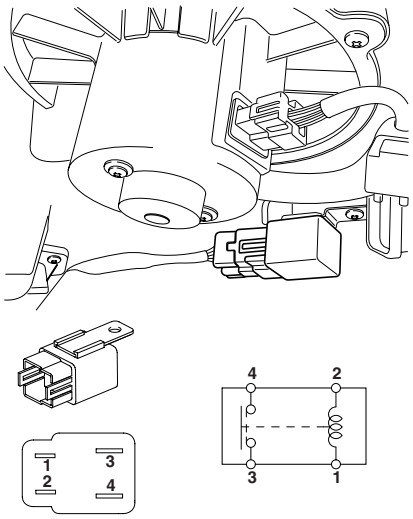

KQRE353B

Terminal / Position	3	4	1	2
Disconnected			○	○
Connected	○	○	⊕	⊖

SCMHA6401L

REPLACEMENT EDF4C010

1. Disconnect the negative (-) battery terminal.
2. Disconnect the blower realy connector(B).
3. Loosen the blower relay mounting screw and then remove the blower relay(A).

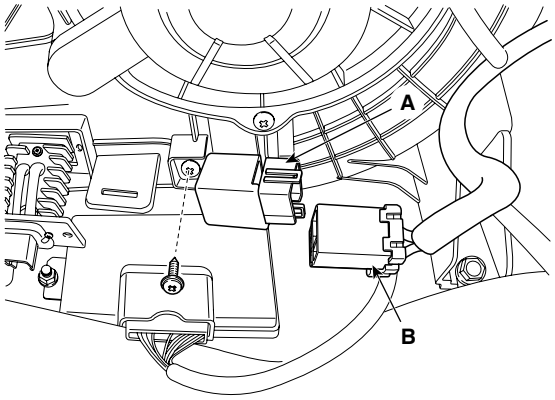

SCMHA6173L

4. Install in the reverse order of removal.

POWER TRANSISTOR

COMPONENT LOCATION E14CE3A4

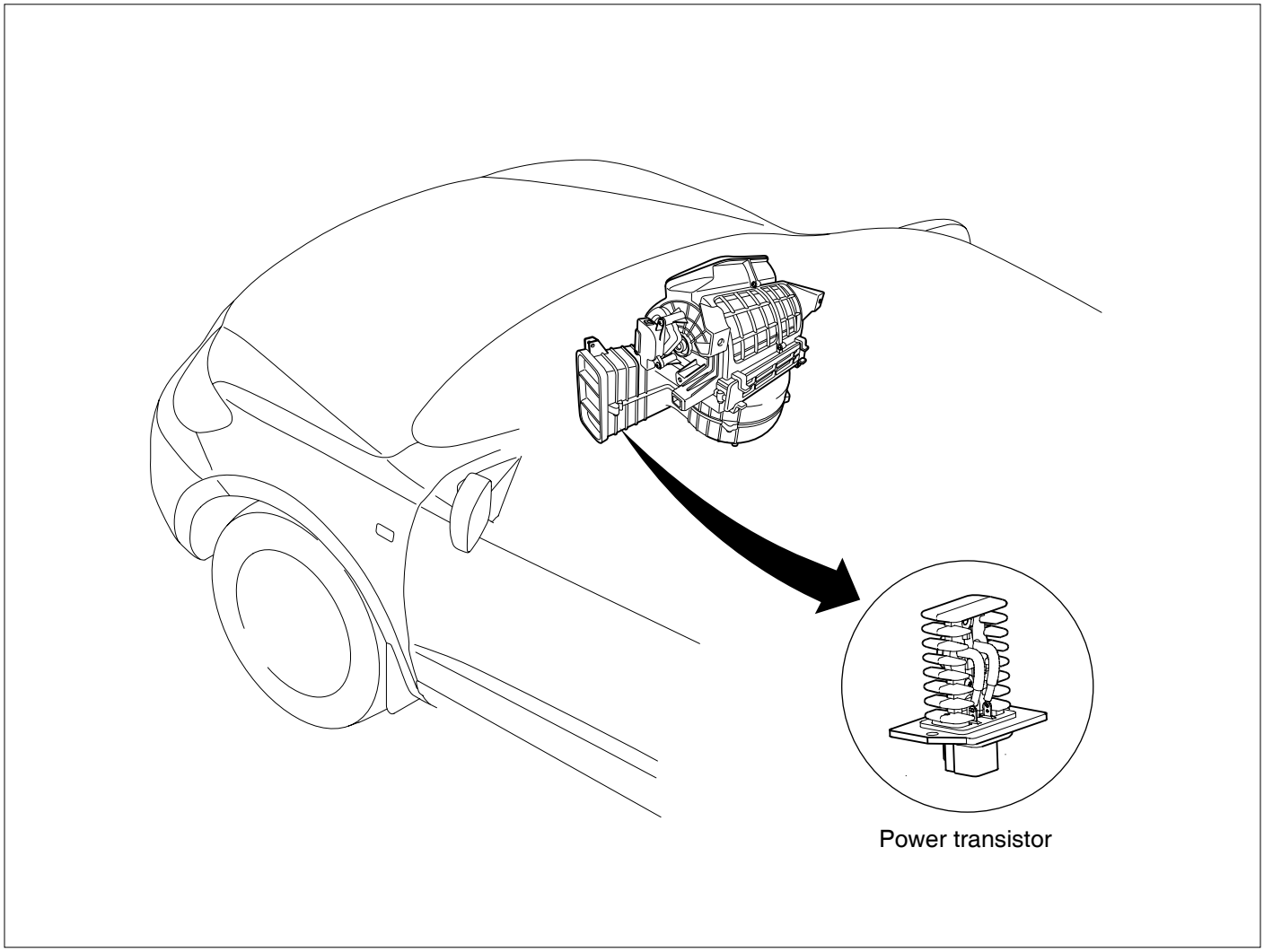

SCMHA6174L

INSPECTION ED3F315D

1. Ignition "ON"
2. Manually operate the control switch and measure the voltage of blower motor between pin 1 and 2.
3. Select the control switch to raise voltage until high speed.

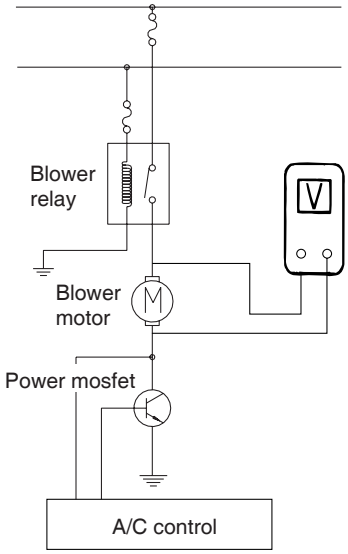

BQKF355B

[SPECIFICATION]

Fan	Motor Voltage
	Manual
First speed	3.8 ±0.5V
Second speed	4.9 ±0.5V
Third speed	6.1 ±0.5V
Fourth speed	7.2 ±0.5V
Fifth speed	8.3 ±0.5V
Sixth speed	9.5 ±0.5V
Seventh speed	10.6 ±0.5V
eighth speed	BAT(+)

*AUTO COOLING: Auto speed (4.5V~B+)
*AUTO HEATING: Auto speed (4.5V~10.5V)

4. If the measured voltage is not specification, substitute with a known-good power transister and check for proper operation.
5. If the problem is corrected, replace the power transister.

REPLACEMENT EFD2AE6E

1. Disconnect the negative (-) battery terminal.
2. Disconnect the power transister connector (A) at the connecting part between heater and blower unit.
3. Remove the power transister(B) after loosening the mounting screws.

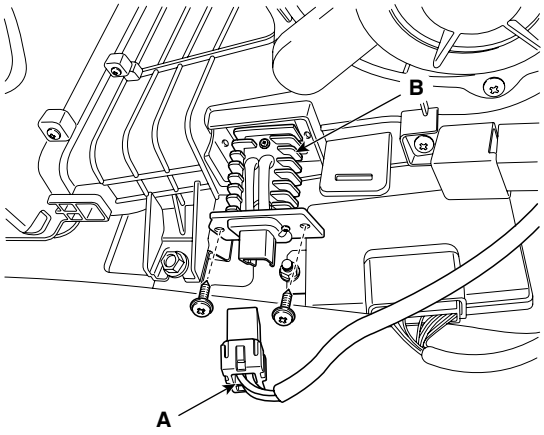

SCMHA6176L

4. Installation is the reverse order of removal.

A/C AIR FILTER

DESCRIPTION E5670FD2

This has particle filter which eliminates foreign materials and odor. The particle filter includes odor filter as well as conventional dust filter to ensure comfortable interior environment.

REPLACEMENT EA9B8207

1. Open the glove box (B).
   Lower the glove box down completely by removing the glove box stopper (A) to the glove box.

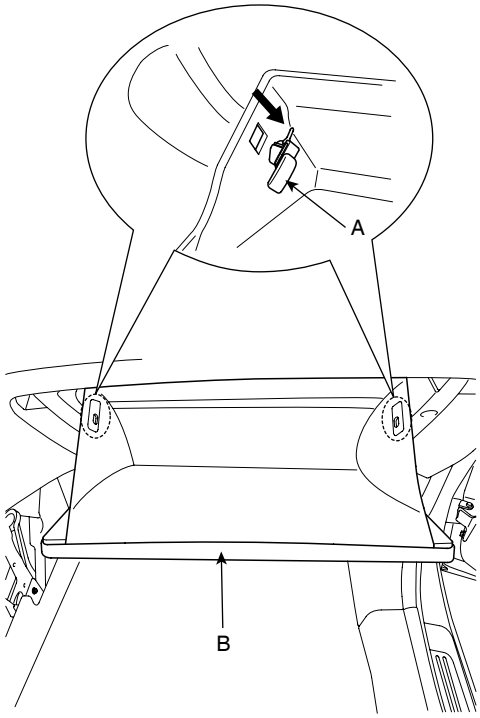

SCMHA6177L

2. Remove the glove box(B) from the left(A).

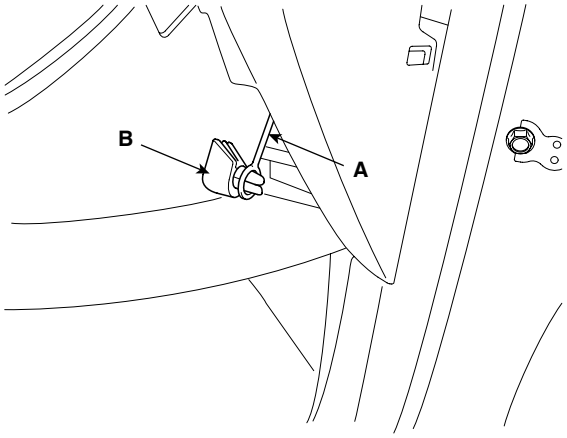

SCMHA6307D

3. Remove the filter cover (A) with pushing the knob.
4. Replace the air filter (B), install it after making sure of the direction of air filter.

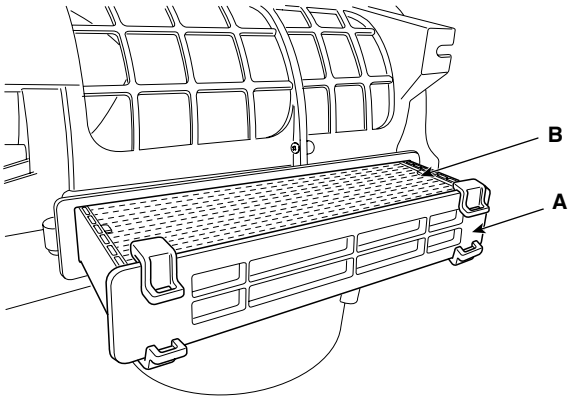

SCMHA6178D

NOTE

In case of driving in an air-polluted area or rugged terrain, check and replace the air filter as frequently as possible.

Replacement period: 15,000 km (9320 mile)

INTAKE ACTUATOR

COMPONENT LOCATION E0BBA06D

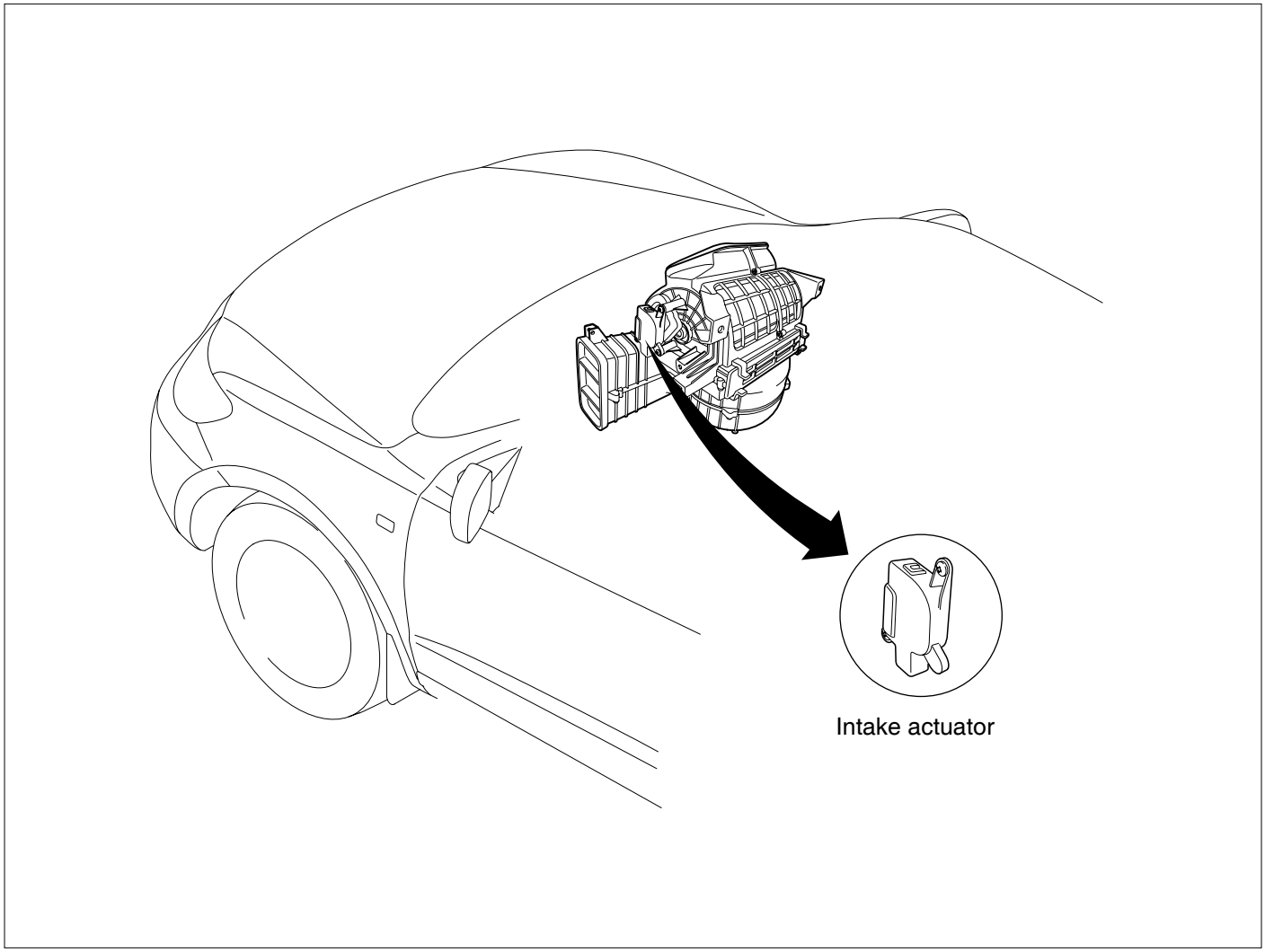

SCMHA6179L

DESCRIPTION EF5C8F9E

1. The intake actuator is located at the blower unit.
2. It regulates the intake door by signal from control unit.
3. Pressing the intake selection switch will shift between recirculation and fresh air modes.

INSPECTION EFB0F6A4

1. Ignition "OFF"
2. Disconnect the intake actuator connector.
3. Verify that the actuator operates to the recirculation position when connecting 12V to the terminal 3 and grounding terminal 4.
4. Verify that the intake actuator operates to the fresh position when connecting in the reverse.

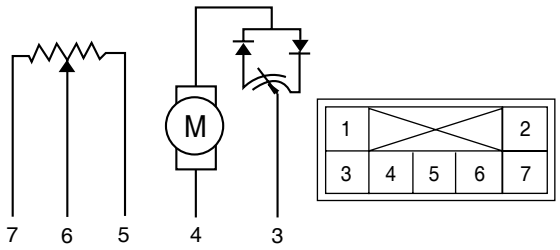

1. -
2. -
3. Rec
4. Fresh
5. Sensor ground
6. Feed back signal
7. 5V(VCC)

SCMHA6306L

5. If the intake actuator is not operated well, substitute with a known-good intake actuator and check for proper operation.
6. If the problem is corrected, replace the intake actuator.

REPLACEMENT ED7D1260

1. Disconnect the negative (-) battery terminal.
2. Remove the glove box (Refer to BD- Crach pad).
3. Disconnect the intake actuator connector.
4. Loosen the mounting screw and then remove the intake actuator (A) from the blower unit.

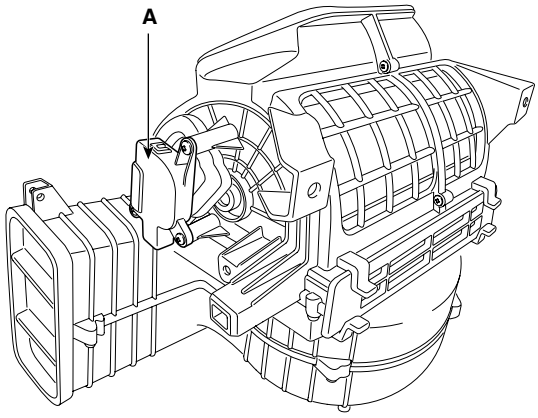

SCMHA6181L

5. Installation is the reverse order of removal.

BLOWER AND A/C CONTROLS (MANUAL)

CONTROL PANEL

COMPONENT EF62D2E9

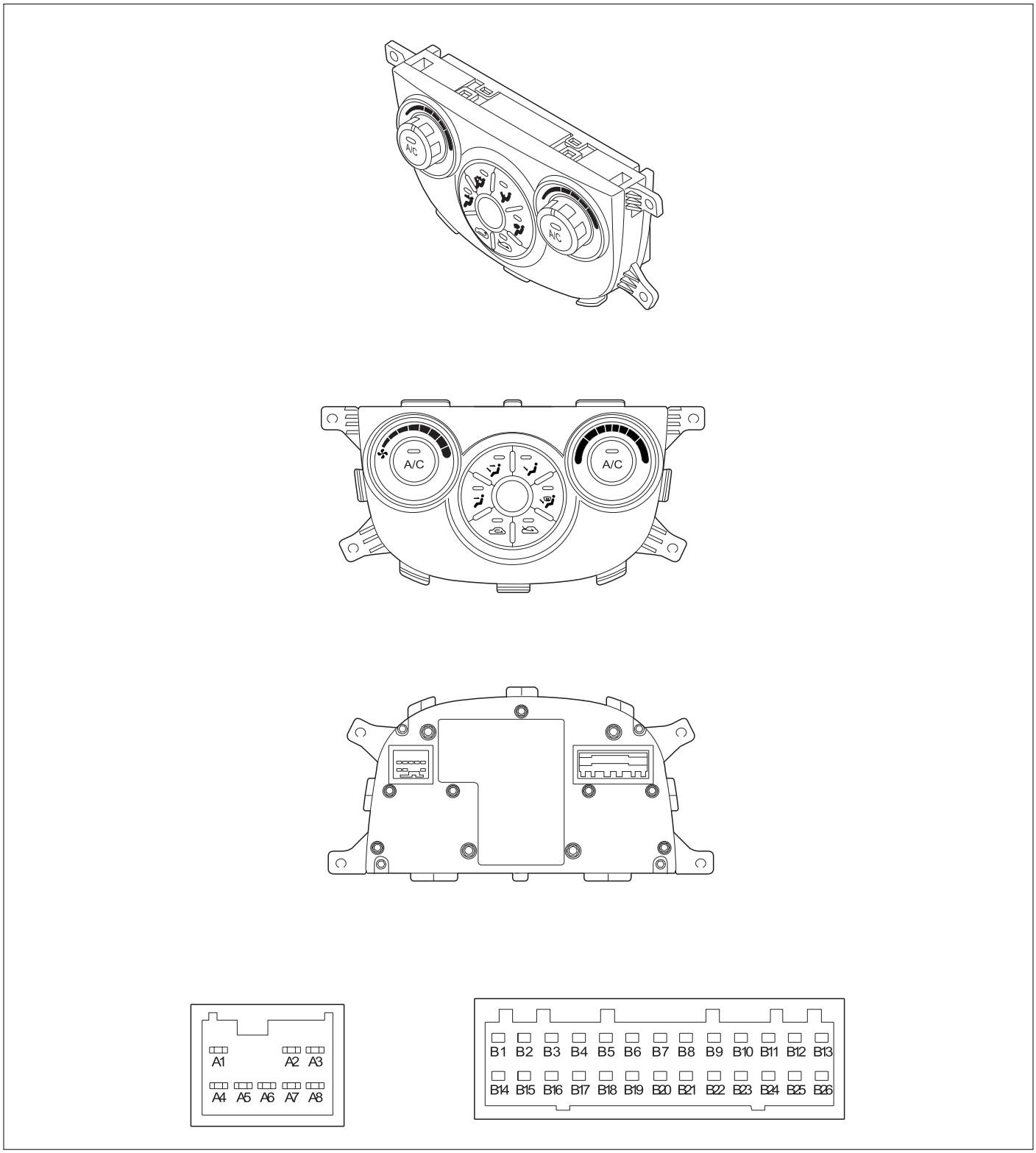

SCMHA6195D

[CONNECTOR PIN FUNCTION]

Connector	PIN NO.	Function	Connector	PIN NO.	Function
Connector (A)	1	PTC RLY2	Connector (B)	10	DEF SELECT SIGNAL
	2	PTC RLY3		11	SENSOR REF(+5V)
	3	BLOWER ON SIGNAL		12	HI SPEED RELAY
	4	PTC ON SIGNAL		13	IGN2
	5	-		14	RHEOSTAT (ILL-)
	6	-		15	POWER TR(B)
	7	-		16	POWER TR(C)
	8	-		17	TEMP ACT'R F/B
Connector (B)	1	TAIL LAMP		18	MODE ACT'R F/B
	2	BATTERY		19	INTAKE ACT'R F/B
	3	A/C OUT PUT		20	EVAP SENSOR (+)
	4	MODE ACT'R (VENT)		21	BLOWER MOTOR (+)
	5	MODE ACT'R (DEF)		22	A/C SELECT SIGNAL
	6	TEMP ACT'R (COOL)		23	DEF INDICATOR OUTPUT
	7	TEMP ACT'R (WARM)		24	SENSOR GND
	8	INTAKE ACT'R (FRE)		25	-
	9	INTAKE ACT'R (REC)		26	GND

REPLACEMENT E9AF6DF1

1. Disconnect the negative (-) battery terminal.
2. Remove the crash pad center lower garnish(A).

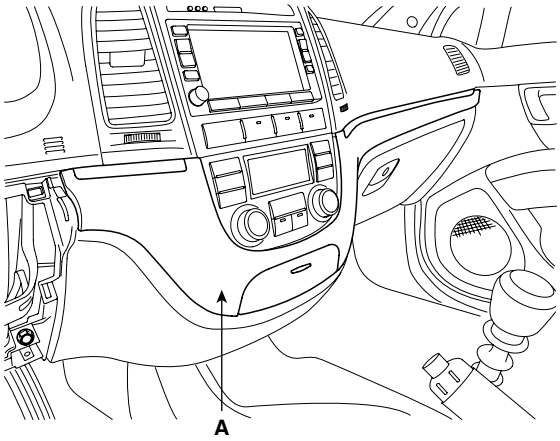

SCMHA6196D

3. Remove the heater & A/C controller (A) after loosening 4 screws.

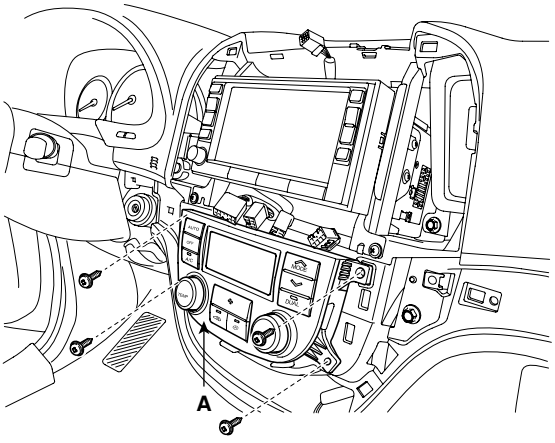

SCMHA6197D

4. Dissconnect the connector(A).

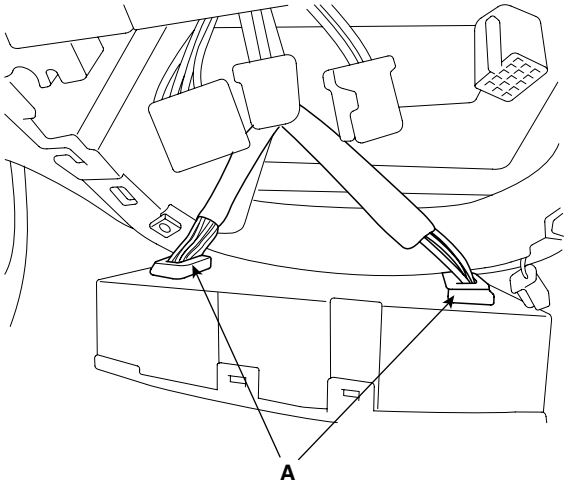

SCMHA6198D

5. Installation is the reverse order of removal.

BLOWER AND A/C CONTROLS (AUTOMATIC)

CONTROL PANEL

COMPONENT EC2C9DBE

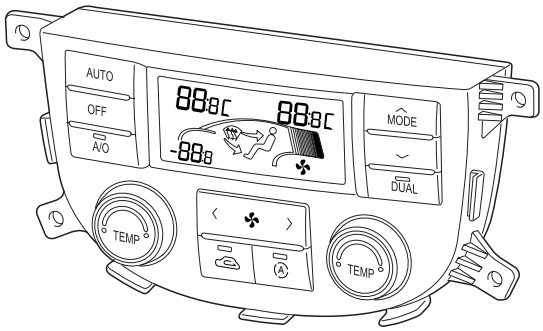

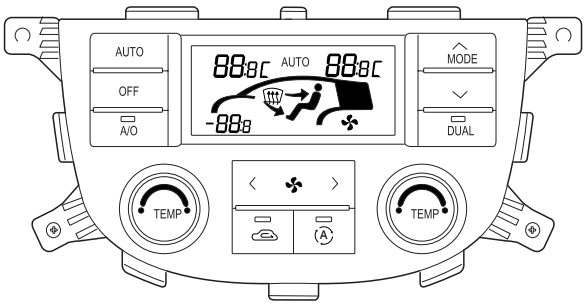

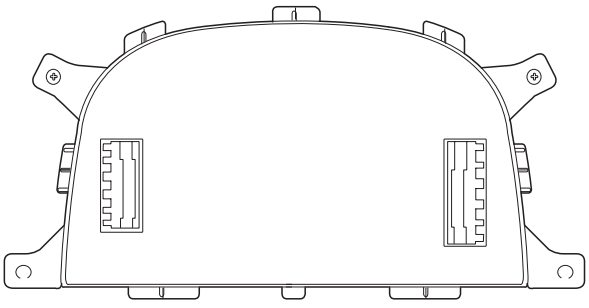

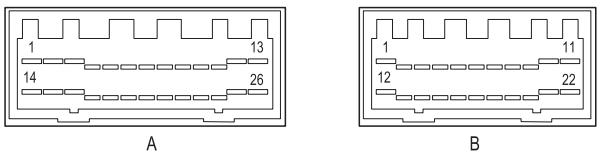

A B

SCMHA6199D

[CONNECTOR PIN FUNCTION]

Con-nec-tor	PIN NO.	Function	Con-nector	PIN NO.	Function
Con-nec-tor(A)	1	TAIL LAMP	Con-nec-tor(B)	1	SENSOR REF(+5V)
	2	BATTERY		2	AQS SIGNAL
	3	A/C OUTPUT		3	AMB SENSOR(+)
	4	A/C SELECT SIGNAL		4	HUMIDITY SENSOR(+)
	5	-		5	INCAR SENSOR(+)
	6	K-LINE		6	EVAP. SENSOR(+)
	7	-		7	WATER TEMP SENSOR(+)
	8	DEF SELECT SIGNAL		8	SENSOR REF(+5V)
	9	DEF INDCATOR OUTPUT		9	POWER TR (B)
	10	-		10	POWER TR (C)
	11	-		11	BLOWER MOTOR (+)
	12	IGN2		12	SENSOR GND
	13	IGN2		13	TEMP ACT’R DR (COOL)
	14	RHEOSTAT		14	TEMP ACT’R DR (WARM)
	15	HIGH SPEED RELAY		15	DR PHOTO (-)
	16	TEMP ACT’R PS(COOL)		16	PS PHOTO (-)
	17	TEMP ACT’R PS(WARM)		17	INCAR MOTOR (-)
	18	TEMP ACT’R PS F/B		18	TEMP ACT’R DR F/B
	19	MODE ACT’R(VENT)		19	BLOWER ON SIGNAL
	20	MODE ACT’R(DEF)		20	PTC ON SIGNAL
	21	MODE ACT’R F/B		21	PTC RLY 2
	22	INTAKE ACT’R (FRE)		22	PTC RLY 3
	23	INTAKE ACT’R (REC)			
	24	INTAKE ACT’R F/B			
	25	GND			
	26	GND			

SELFDIAGNOSIS EC1C2BC5

1. Self-diagnosis process

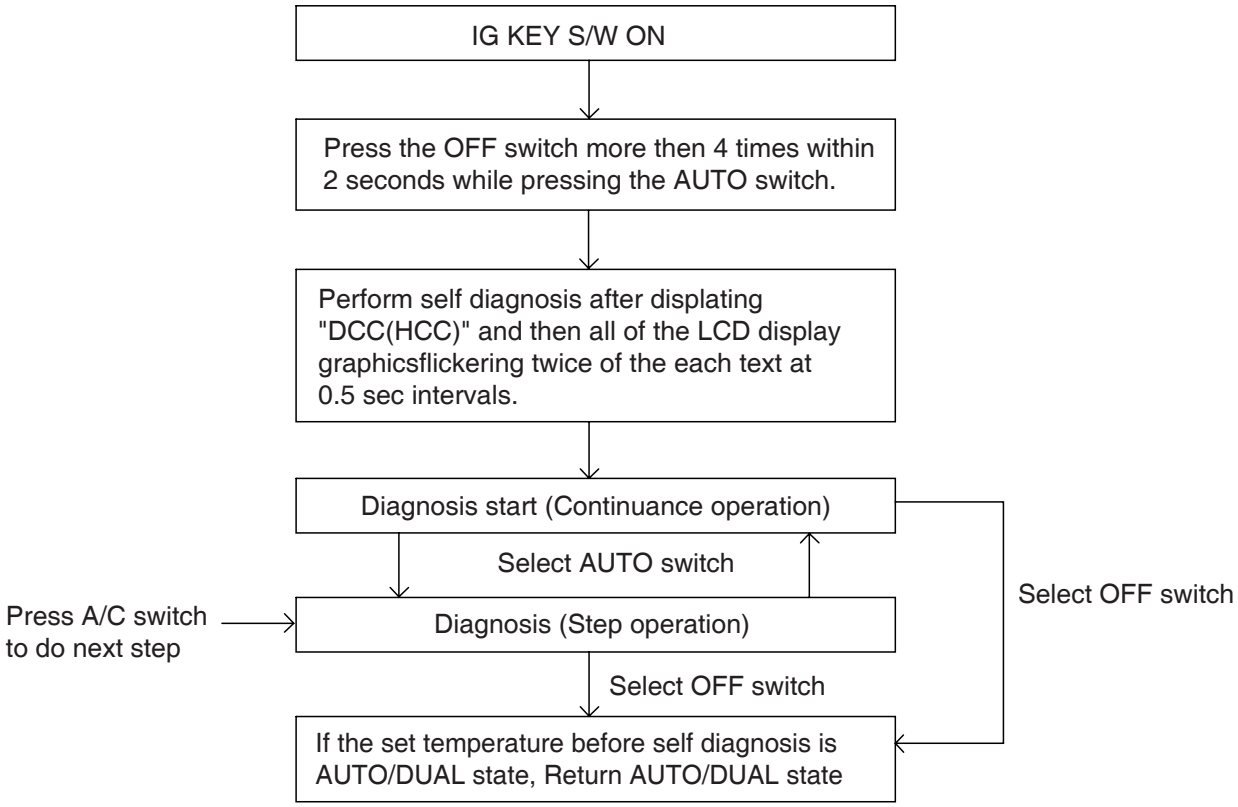

LQKG001D

2. How to read self-diagnostic code
   After the display panel flickers three times every 0.5 second, the corresponding fault code flickers on the setup temperature display panel every 0.5 second and will show two figures. Codes are displayed in numerical format

FAULT CODE

Fault code		Fail description
Control unit	DTC	
00	-	Normal
11	B1234	In-car temperature sensor open
12	B1233	In-car temperature sensor short
13	B1238	Ambient temperature sensor open
14	B1237	Ambient temperature sensor short
15	B1202	Water temperature sensor open
16	B1203	Water temperature sensor short
17	B1242	Evaporator temperature sensor open
18	B1241	Evaporator temperature sensor short
19	B1245	Temperature control actuator feed back open (Drive's)
19	B1246	Temperature control actuator feed back short (Drive's)
20	B2406	Temperature control actuator failure
21	B1249	Mode control actuator open
21	B1250	Mode control actuator short
22	B2409	Mode control actuator failure
23	B1200	Humidity sensor open
24	B1201	Humidity sensor short
25	B1208	Intake potentiometer open
25	B1209	Intake potentiometer short
26	B2408	Intake potentiometer failure
27	B1257	AQS sensor open
28	B1258	AQS sensor short
31	B1259	AQS sensor failure
32	B1204	Temperature control actuator open (Passenger's)
32	B1205	Temperature control actuator short (Passenger's)
33	B2415	Temperature control actuator failure

3. Fault code display

1) Continuance operation : DTC code is one.



BQKF500C

2) Continuance operation : DTC code is more two.

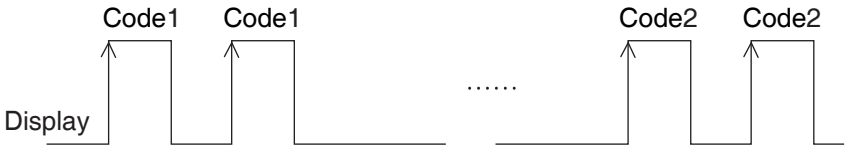

BQKF500D

3) STEP operation
A. Nomal or one fault code is same as a continuance operation.
B. DTC code os more two.

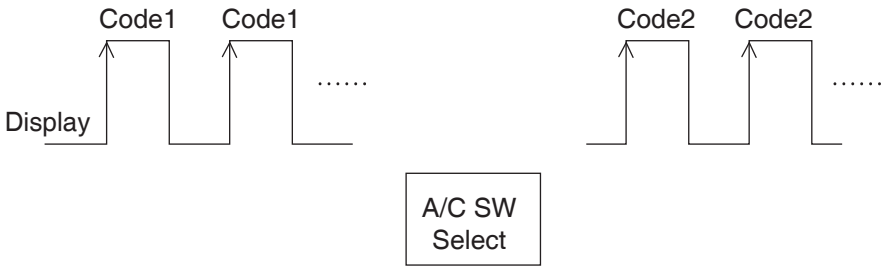

BQKF500E

4. Diagnostic procedure refer to DTC code.

5. Fail safe

   1) In-car temperature sensor: Control with the value of 25°C(77°F)

   2) Ambient temperature sensor: Control with the value of 20°C(67°F)

   3) Evaporator temperature sensor: Control with the value of -2°C(28.4°F)

   4) Humidity sensor: Control with the value of 10%

   5) Temperature sensor : Control with the value of -2°C (28.4°F)

   6) Temperature control actuator (Air mix potentiometer):
      If temperature setting 17°C-24.5°C, fix at maximum cooling position.
      If temperature setting 25°C-32°C, fix at maximum heating position.

   7) Mode control actuator (Direction potentiometer):
      Fix vent position, while selecting vent mode.
      Fix defrost position, while selecting all except vent mode.

   8) Intake control actuator :
      Fix fresh position, while selecting fresh mode.
      Fix recirculation position, while selecting recirculation mode.

   9) AQS sensor : AQS operation OFF.
      Intake position : The position before selecting AQS switch.

REPLACEMENT EEA8B2D2

1. Disconnect the negative (-) battery terminal.
2. Remove the crash pad center lower garnish(A).

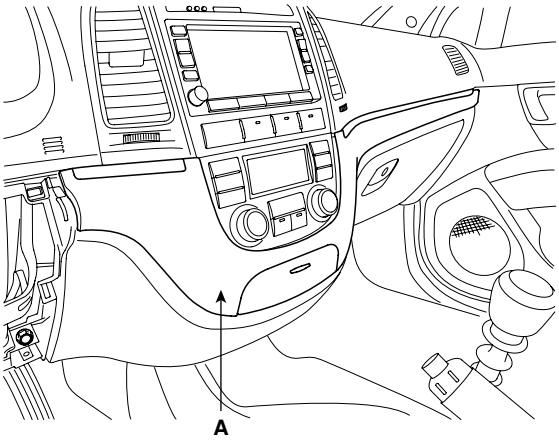

SCMHA6196D

3. Remove the heater & A/C controller (A) after loosening 4 screws.

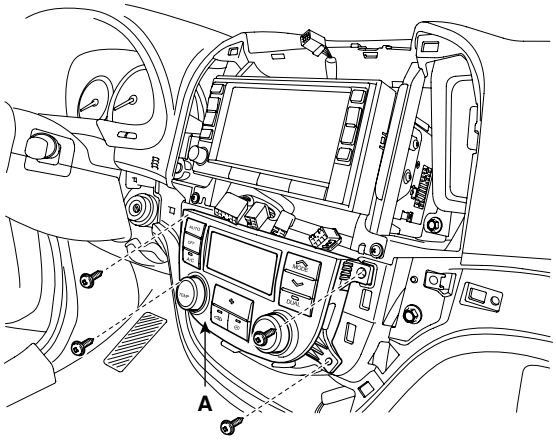

SCMHA6197D

4. Dissconnect the connector(A).

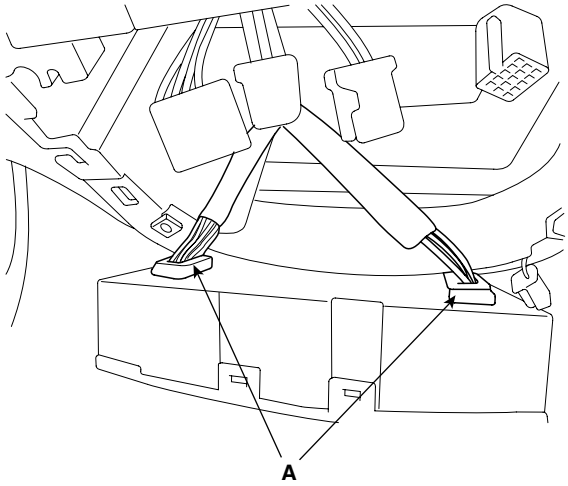

SCMHA6198D

5. Installation is the reverse order of removal.

DTC B1200 HUMIDITY SENSOR OPEN (HIGH)

COMPONENT LOCATION E55A86D0

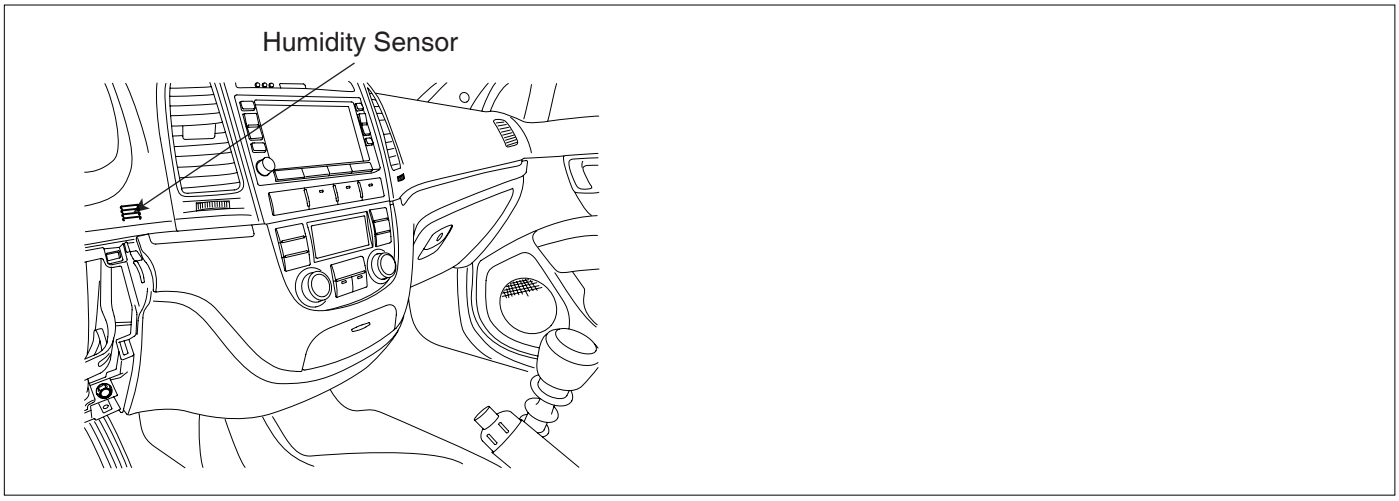

SCMHA6500L

GENERAL DESCRIPTION E813CFB8

Humidity sensor located at crush pad, detects in-car humidity for in-car humidity control. If ambient air temperature or in-car humidity is outside certain range, it will turn on A/C to control in-car humidity for preventing in-car fogging. Air conditioner operation depends on ambient temperature and humidity.

DTC DESCRIPTION E26F8FC5

The A/C controller sets DTC B1200 if there is an open circuit in humidity sensor signal harness or the measured frequency value of sensor is more than threshold value(about 7,100㎐)

DTC DETECTING CONDITION E609B0DF

Item	Detecting Condition	Possible cause
DTC Strategy	• Frequency check	• Open Circuit in signal harness • Faulty Humidity Sensor • Faulty A/C control unit
Threshold value	• > 7,100 Hz	
Detecting time	• 10msec	
FAIL SAFE	• Control with the value of 10%	

SPECIFICATION EF7B8179

Relative humidity(%)	Frequency(Hz)	Relative humidity(%)	Frequency(Hz)
20	7,100	60	6,600
30	6,976	70	6,468
40	6,853	80	6,330
50	6,728	90	6,186

MONITOR SCANTOOL DATA EA55BAF5

1. Connect scantool to data link connector(DLC).
2. Engine "ON"
3. Monitor the "Humidity Sensor" Parameter on the Scantool while drying the humidity sensor with a hair drier or heat gun adjusted to a low heat setting.

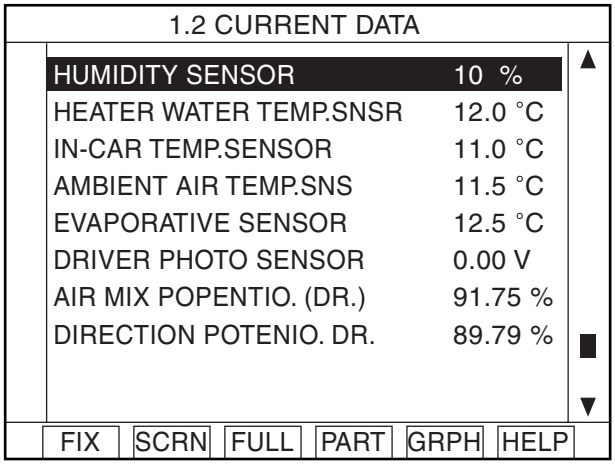

Fig. 1

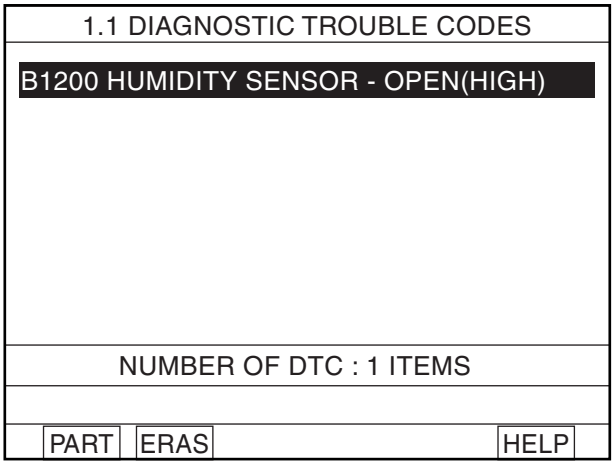

Fig. 2

Fig 1 : The current data in abnormal state.
Fig 2 : DTC B1200.

EQBF510B

4. Are the DTC B1200 present and is parameter of "Humidity Sensor" fixed?
   ※ Parameter of "Humidity Sensor" will be fixed at 10%, if there is any fault in Humidity Sensor.

YES

Go to "Inspection" procedure.

NO

Fault is intermittent caused by poor contact in the sensor's and/or A/C controller's connector or was repaired and A/C controller memory was not cleared. Thoroughly check connectors for looseness, poor connection, bending, corrosion, contamination, deterioration, or damage. Repair or replace as necessary and then go to "Verification of Vehicle Repair" procedure.

TERMINAL AND CONNECTOR INSPECTION E5F388B6

1. Many malfunctions in the electrical system are caused by poor harness and terminals.
   Faults can also be caused by interference from other electrical systems, and mechanical or chemical damage.
2. Thoroughly check connectors for looseness, poor connection, bending, corrosion, contamination, deterioration, or damage.
3. Has a problem been found?

YES

Repair as necessary and go to "Verification of Vehicle Repair" procedure.

NO

Go to "Signal circuit inspection" procedure.

SIGNAL CIRCUIT INSPECTION EE9EA63F

1. Check for open in harness.
   1) Ignition "OFF"
   2) Disconnect Humidity Sensor.
   3) Measure resistance between terminal "3" of Humidity Sensor and terminal "4" of A/C Control Unit.

Specification : Approx. 0 Ω

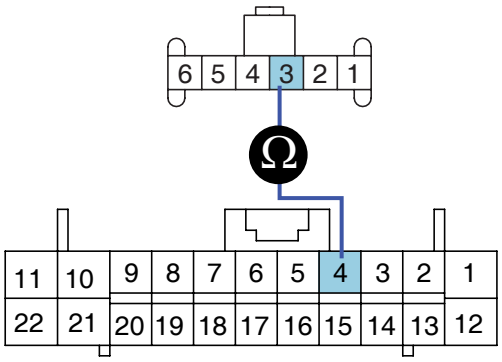

1. Motor(-)
2. Sensor ground
3. **Humidity sensor signal**
4. In-car sensor temp. signal
5. Sensor power (5V)
6. Motor(+)

SCMHA6501L

   4) Is the measured resistance within specifications?

YES

Go to "Ground circuit Inspection " procedure.

NO

Check for open in harness. Repair as necessary and go to "Verification of Vehicle Repair" procedure.

GROUND CIRCUIT INSPECTION E607AF32

1. Check for open in ground harness.
   1) Ignition "OFF"
   2) Disconnect Humidity Sensor.
   3) Measure resistance between terminal "2" of Humidity Sensor and terminal "12" of A/C Control Unit.

Specification :Approx. 0 Ω

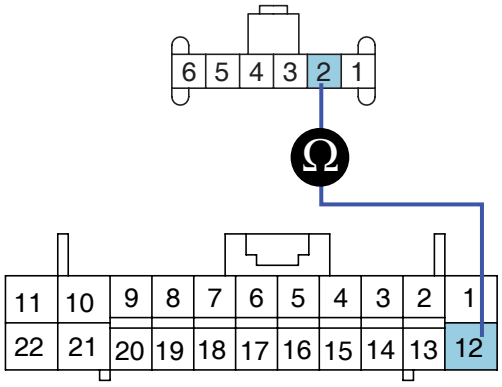

1. Motor(-)
2. **Sensor ground**
3. Humidity sensor signal
4. In-car sensor temp. signal
5. Sensor power (5V)
6. Motor(+)

SCMHA6502L

4) Is the measured resistance within specifications?

YES

Go to "Component Inspection " procedure.

NO

Check for open in ground harness. Repair as necessary and go to "Verification of Vehicle Repair" procedure.

COMPONENT INSPECTION E3A920B6

1. Check Humidity Sensor.

   1) Engine "ON"

   2) Connect Humidity Sensor.

   3) Measure Frequency between terminal "3" and "2" of Humidity sensor while increasing humidity.

Specification : Refer the specifications in fig 5.

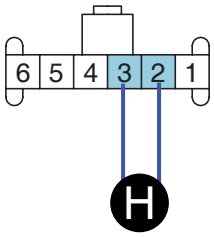

1. Motor(-)
2. **Sensor ground**
3. **Humidity sensor signal**
4. In-car sensor temp. signal
5. Sensor power (5V)
6. Motor(+)

SCMHA6503L

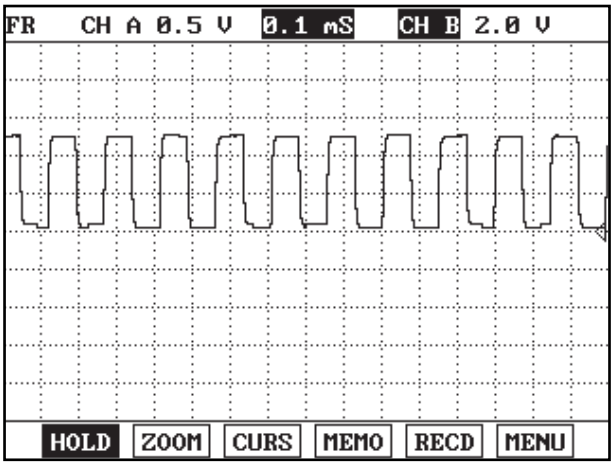

Fig. 3

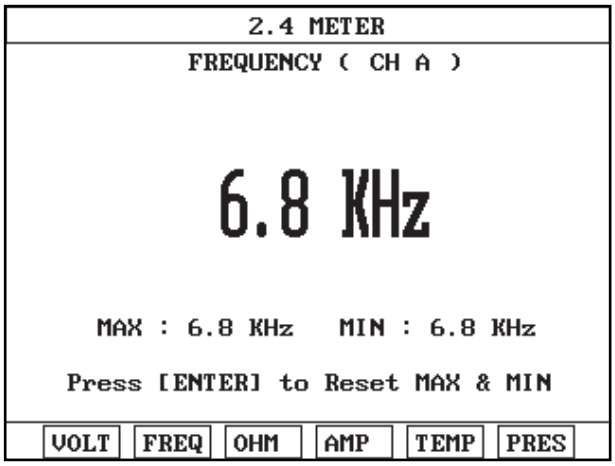

Fig. 4

Fig 3 : Signal waveform of Humidity sensor.
Fig 4 : Frequency of Humidity sensor Measured by scantool.

EQBF510F

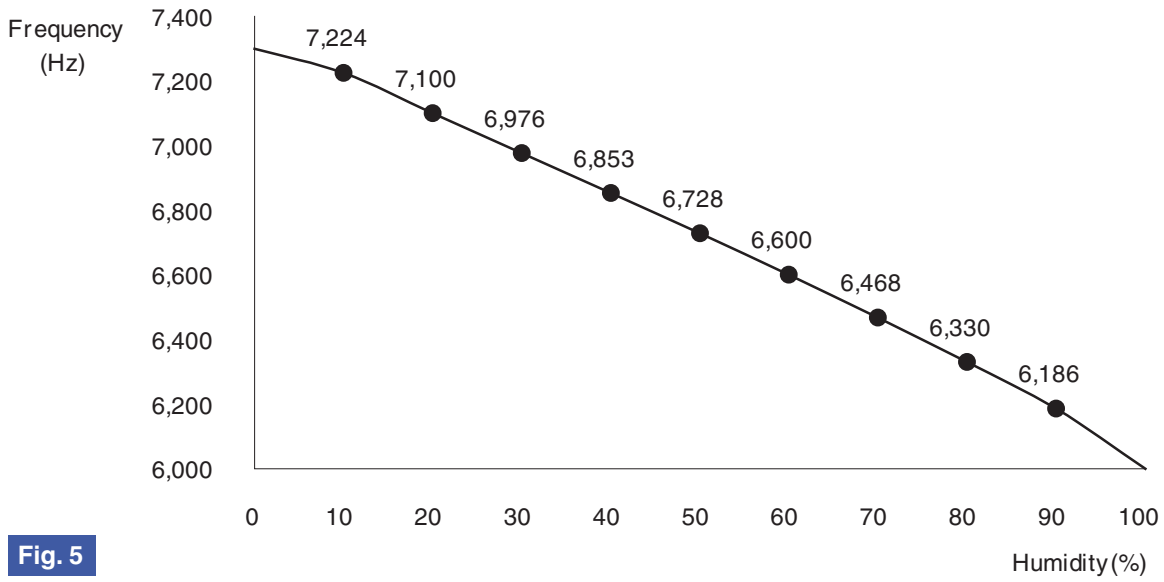

Fig. 5

Fig 5) Specifications : Frequency value of humidity sensor as a function of Relative humidity.

EQBF510Q

4) Is the measured frequency within specifications in fig 5? (tolerance limits ± 5%)

YES

Go to "Check A/C Control Unit" procedure.

NO

Substitute with a known-good Humidity sensor and check for proper operation.
If the problem is corrected, replace Humidity sensor and then go to "Verification of Vehicle Repair" procedure.

2. Check A/C Control Unit

1) Engine "ON"

2) Disconnect Humidity Sensor.

3) Measure voltage value between terminal "4" of A/C control unit and chassis ground.

Specification : 5V

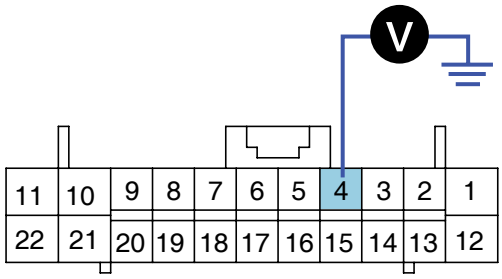

4. Humidity sensor signal

SCMHA6504L

4) Is the measured voltage within specification?

YES

Check connectors for looseness, poor connection, bending, corrosion, contamination, deterioration, or damage. Repair or replace as necessary and then go to "Verification of Vehicle Repair" procedure.

NO

Substitute with a known-good A/C Control Unit and check for proper operation.
If the problem is corrected, replace A/C Control Unit and then go to "Verification of Vehicle Repair" procedure.

VERIFICATION OF VEHICLE REPAIR E0FE9B19

After a repair, it is essential to verify that the fault has been corrected.

1. Connect scantool and select "Diagnostic Trouble Codes(DTCs)" mode and then clear DTC.
2. Operate the vehicle and monitor the DTC on the scantool.
3. Are any DTCs present?

YES

Go to the applicable troubleshooting procedure.

NO

System is performing to specification at this time.

DTC B1201 HUMIDITY SENSOR SHORT (LOW)

COMPONENT LOCATION E7DBA350

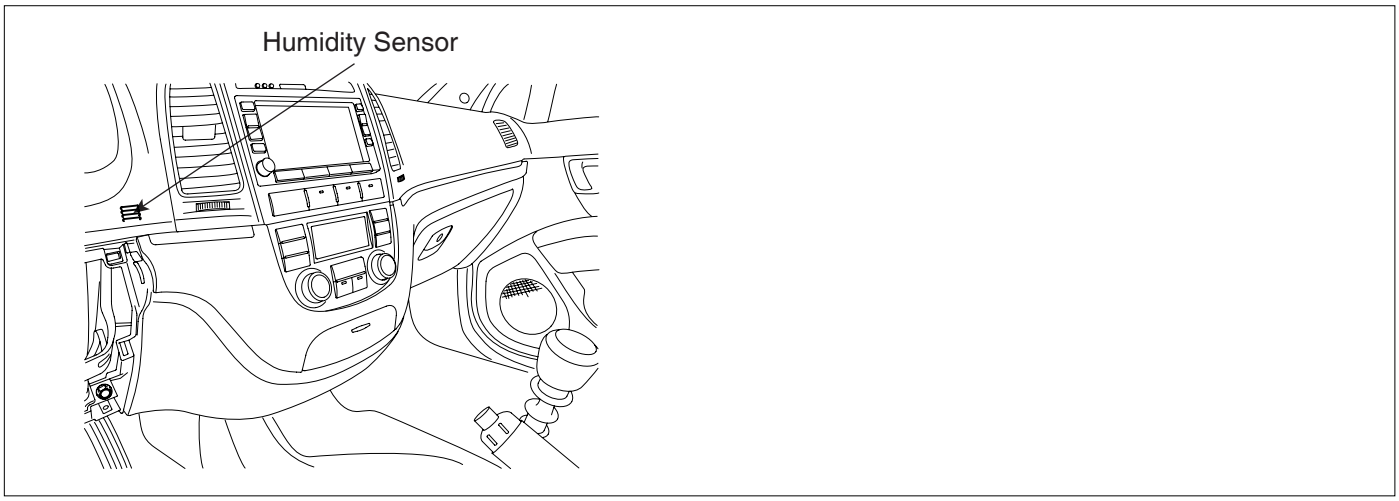

SCMHA6500L

GENERAL DESCRIPTION E40CCE08

Humidity sensor located at crush pad, detects in-car humidity for in-car humidity control. If ambient air temperature or in-car humidity is outside certain range, it will turn on A/C to control in-car humidity for preventing in-car fogging. Air conditioner operation depends on ambient temperature and humidity.

DTC DESCRIPTION ED9AB2BE

The A/C controller sets DTC B1201 if there is a short circuit in humidity sensor signal harness or the measured frequency value of sensor is less than threshold value(about 6,186㎐)

DTC DETECTING CONDITION ED9D02C4

Item	Detecting Condition	Possible cause
DTC Strategy	• Frequency check	• Open Circuit in power harness • Short Circuit in signal harnes • Faulty Humidity Sensor • Faulty A/C control unit
Threshold value	• < 6,186 Hz	
Detecting time	• 10msec	
FAIL SAFE	• Control with the value of 10%	

SPECIFICATION E39EABFF

Refer to DTC B1200.

MONITOR SCANTOOL DATA E1282110

1. Connect scantool to data link connector(DLC).
2. Engine "ON"
3. Monitor the "Humidity Sensor" Parameter on the Scantool while drying the humidity sensor with a hair drier or heat gun adjusted to a low heat setting.

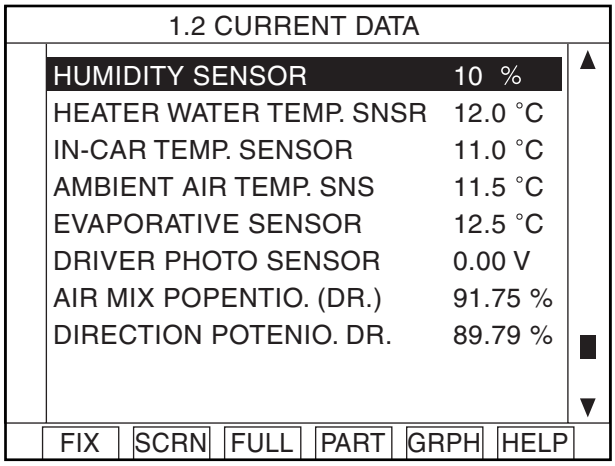

Fig. 1

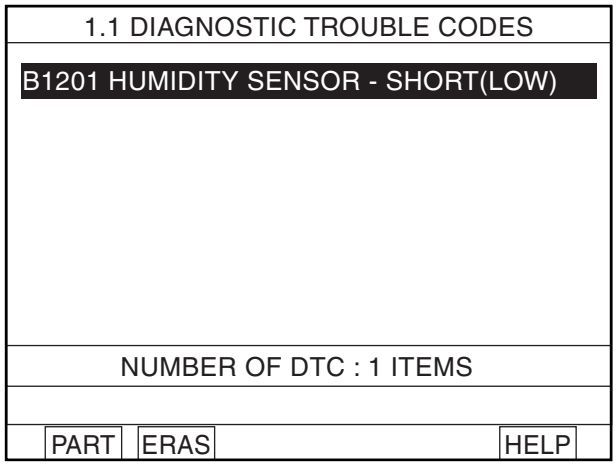

Fig. 2

Fig 1 : The current data in abnormal state.
Fig 2 : DTC B1201.

EQBF511A

4. Are the DTC B1201 present and is parameter of "Humidity Sensor" fixed?
※ Parameter of "Humidity Sensor" will be fixed at 10%, if there is any fault in Humidity Sensor.

YES

Go to "Inspection" procedure.

NO

Fault is intermittent caused by poor contact in the sensor's and/or A/C controller's connector or was repaired and A/C controller memory was not cleared. Thoroughly check connectors for looseness, poor connection, bending, corrosion, contamination, deterioration, or damage. Repair or replace as necessary and then go to "Verification of Vehicle Repair" procedure.

TERMINAL AND CONNECTOR INSPECTION E46CEF9E

Refer to DTC B1200.

SIGNAL CIRCUIT INSPECTION ECC3D1A0

1. Check for short to ground in harness.

   1) Ignition "OFF"

   2) Disconnect Humidity Sensor.

   3) Measure resistance between terminal "3" of Humidity Sensor and chassis ground.

Specification : Approx. ∞ Ω

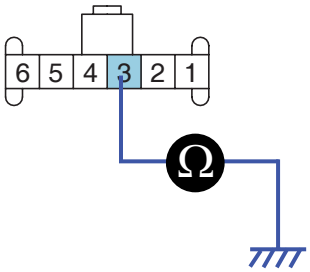

1. Motor(-)
2. Sensor ground
3. **Humidity sensor signal**
4. In-car sensor temp. signal
5. Sensor power (5V)
6. Motor(+)

SCMHA6505L

4) Is the measured resistance within specifications?

YES

Go to "Power circuit Inspection " procedure.

NO

Check for short to ground in harness. Repair as necessary and go to "Verification of Vehicle Repair" procedure.

POWER SUPPLY CIRCUIT INSPECTION ED180193

1. Check for open in power harness.

1) Ignition "ON"

2) Disconnect Humidity Sensor.

3) Measure voltage value between terminal "5" of Humidity Sensor and chassis ground.

Specification : 5V

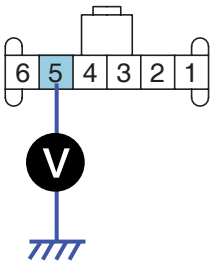

1. Motor(-)
2. Sensor ground
3. Humidity sensor signal
4. In-car sensor temp. signal
5. **Sensor power (5V)**
6. Motor(+)

SCMHA6506L

4) Is the measured voltage within specifications?

YES

Go to "Component Inspection " procedure.

NO

Check for open in power harness. Repair as necessary and go to "Verification of Vehicle Repair" procedure.

COMPONENT INSPECTION E21ABF1E

Refer to DTC B1200.

VERIFICATION OF VEHICLE REPAIR ECEB8038

Refer to DTC B1200.

DTC B1202 WATER TEMPERATURE SENSOR OPEN (HIGH)

COMPONENT LOCATION ECDA84B4

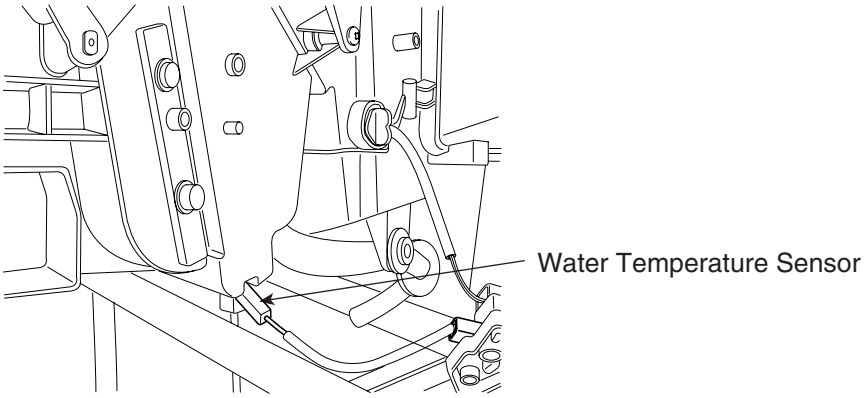

EQBF512A

GENERAL DESCRIPTION E79C5561

A water temp. sensor located at heater unit, detects coolant temperature. Its signal is used for cold engine lockout control. When the driver operates the heater before the engine is warmed up, the signal from sensor causes the heater control unit to reduce blower motor speed until coolant temperature reaches the threshold value.

DTC DESCRIPTION EFAC8202

The A/C controller sets DTC B1202 if there is an open circuit in water temp. sensor signal harness or the measured resistance value of the sensor is more than the threshold value(about 176.3kΩ)

DTC DETECTING CONDITION EDDA37B8

Item	Detecting Condition	Possible cause
DTC Strategy	• Resistance check	• Open Circuit in harness • Faulty water temp. Sensor • Faulty A/C control unit
Threshold value	• > 176.3 kΩ	
Detecting time	• 0.3 sec	
FAIL SAFE	• Control with the value of -2°C(28.4°F)	

SPECIFICATION EEDFF0BB

Temperature[°C(°F)]	Resistance(kΩ)	Temperature[°C(°F)]	Resistance(kΩ)
-30(-22)	176.3	25(77)	10
-15(5)	73.6	35(95)	6.5
0(32)	32.9	60(140)	2.5
15(59)	15.8	80(176)	1.2

MONITOR SCANTOOL DATA E23A4490

1. Connect scantool to data link connector(DLC).
2. Engine "ON"
3. Monitor the "WATER TEMP. SENSOR" Parameter on the Scantool.

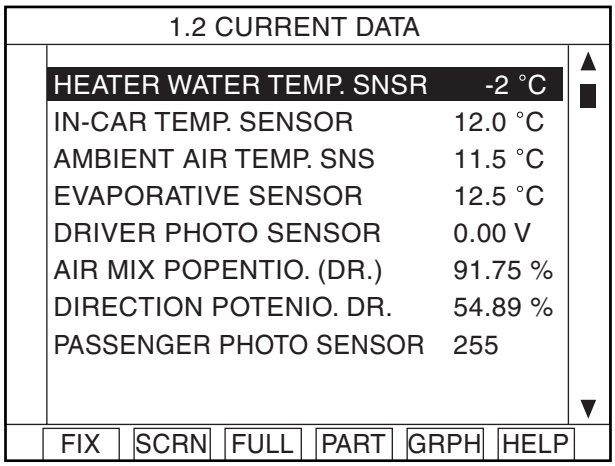

Fig. 1

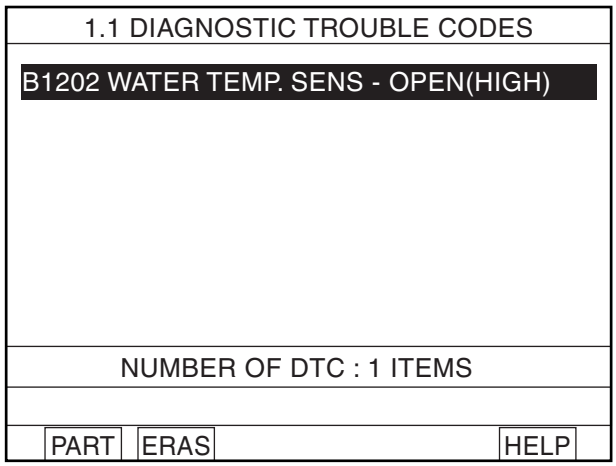

Fig. 2

Fig 1 : The current data in abnormal state.
Fig 2 : DTC B1202.

EQBF512B

4. Are the DTC B1202 present and is parameter of "WATER TEMP. SENSOR" fixed?
※ Parameter of "WATER TEMP. SENSOR" will be fixed at -2℃(28.4°F), if there is any fault in WATER TEMP. SENSOR.

YES

Go to "Inspection" procedure.

NO

Fault is intermittent caused by poor contact in the sensor's and/or A/C controller's connector or was repaired and A/C controller memory was not cleared. Thoroughly check connectors for looseness, poor connection, bending, corrosion, contamination, deterioration, or damage. Repair or replace as necessary and then go to "Verification of Vehicle Repair" procedure.

TERMINAL AND CONNECTOR INSPECTION EC92E599

1. Many malfunctions in the electrical system are caused by poor harness and terminals.
Faults can also be caused by interference from other electrical systems, and mechanical or chemical damage.
2. Thoroughly check connectors for looseness, poor connection, bending, corrosion, contamination, deterioration, or damage.
3. Has a problem been found?

YES

Repair as necessary and go to "Verification of Vehicle Repair" procedure.

NO

Go to "Signal circuit inspection" procedure.

SIGNAL CIRCUIT INSPECTION EE5CF56F

1. Check for open in harness.

   1) Ignition "OFF"

   2) Disconnect water temp. sensor.

   3) Measure resistance between terminal "1" of water temp. sensor and terminal "7" of A/C Control Unit.

Specification : Approx. 0 Ω

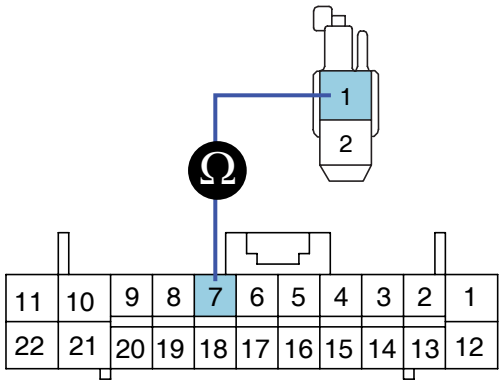

1. Water temp. sensor signal
2. Sensor ground

SCMHA6507L

   4) Is the measured resistance within specifications?

YES

Go to "Ground circuit Inspection " procedure.

NO

Check for open in harness. Repair as necessary and go to "Verification of Vehicle Repair" procedure.

GROUND CIRCUIT INSPECTION E20A6934

1. Check for open in ground harness.

   1) Ignition "OFF"

   2) Disconnect water temp. sensor.

   3) Measure resistance between terminal "2" of water temp. sensor and chassis ground.

Specification : Approx. 0 Ω

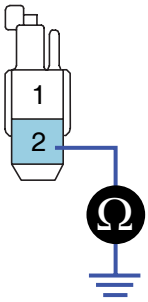

1. Water temp. sensor signal
2. Sensor ground

SCMHA6508L

4) Is the measured resistance within specifications?

YES

Go to "Component Inspection " procedure.

NO

Check for open in ground harness. Repair as necessary and go to "Verification of Vehicle Repair" procedure.

COMPONENT INSPECTION E8B1ACAD

1. Check water temp. sensor.
   1) Ignition "OFF"
   2) Disconnect water temp. sensor.
   3) Measure resistance between terminal "1" and "2" of water temp. sensor.

Specification : Refer the specifications in fig 3.

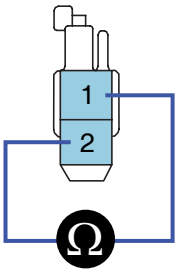

1. Water temp. sensor signal
2. Sensor ground

SCMHA6509L

4) Is the measured resistance within specifications in fig 3)? (tolerance limits ± 3%)

YES

Go to "Check A/C Control Unit" procedure.

NO

Substitute with a known-good water temp. sensor and check for proper operation.
If the problem is corrected, replace water temp. sensor and then go to "Verification of Vehicle Repair" procedure.

2. Check A/C Control Unit

1) Engine "ON"

2) Disconnect water temp. sensor.

3) Measure Voltage between terminal "7" of A/C Control Unit and chassis ground.

Specification : Approx. 5V

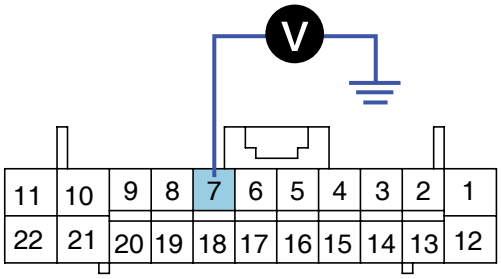

7. Water temp. sensor signal

SCMHA6510L

4) Is the measured voltage within specifications?

YES

Check connectors for looseness, poor connection, bending, corrosion, contamination, deterioration, or damage. Repair or replace as necessary and then go to "Verification of Vehicle Repair" procedure.

NO

Substitute with a known-good A/C Control Unit and check for proper operation.
If the problem is corrected, replace A/C Control Unit and then go to "Verification of Vehicle Repair" procedure.

VERIFICATION OF VEHICLE REPAIR E60A09C9

After a repair, it is essential to verify that the fault has been corrected.

1. Connect scantool and select "Diagnostic Trouble Codes(DTCs)" mode and then clear DTC.
2. Operate the vehicle and monitor the DTC on the scantool.
3. Are any DTCs present?

YES

Go to the applicable troubleshooting procedure.

NO

System is performing to specification at this time.

DTC B1203 WATER TEMPERATURE SENSOR SHORT (LOW)

COMPONENT LOCATION E0E2BC32

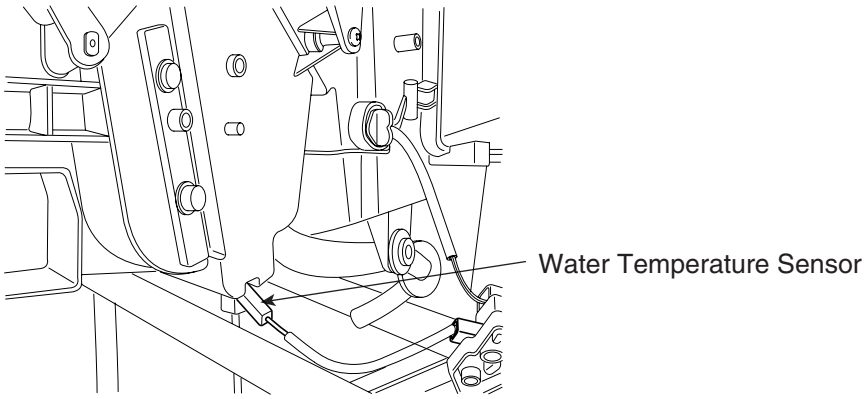

EQBF512A

GENERAL DESCRIPTION EFE4C535

A water temp. sensor located at heater unit, detects coolant temperature. Its signal is used for cold engine lockout control. When the driver operates the heater before the engine is warmed up, the signal from sensor causes the heater control unit to reduce blower motor speed until coolant temperature reaches the threshold value.

DTC DESCRIPTION EA17C85B

The A/C controller sets DTC B1203 if there is a short circuit in water temp. sensor signal harness or the measured resistance value of sensor is less than threshold value(about 1.2kΩ)

DTC DETECTING CONDITION EF2E3145

Item	Detecting Condition	Possible cause
DTC Strategy	• Resistance check	• Short circuit in harness • Faulty water temp. Sensor • Faulty A/C control unit
Threshold value	• < 1.2 kΩ	
Detecting time	• 0.3 sec	
FAIL SAFE	• Control with the value of -2°C(28.4°F)	

SPECIFICATION E6B0F9BF

Refer to DTC B1202.

MONITOR SCANTOOL DATA EADCD72B

1. Connect scantool to data link connector(DLC).
2. Engine "ON"
3. Monitor the "WATER TEMP. SENSOR" Parameter on the Scantool.

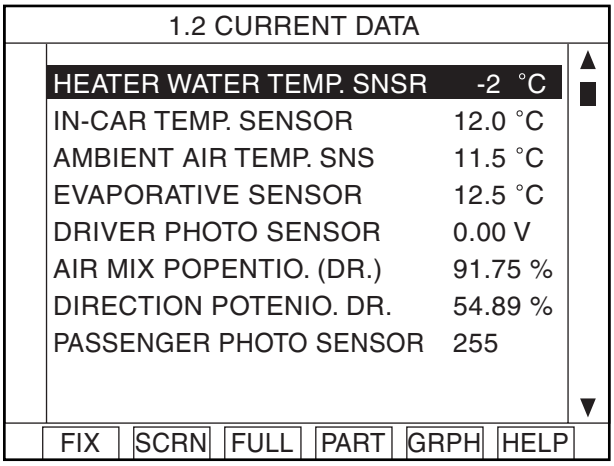

Fig. 1

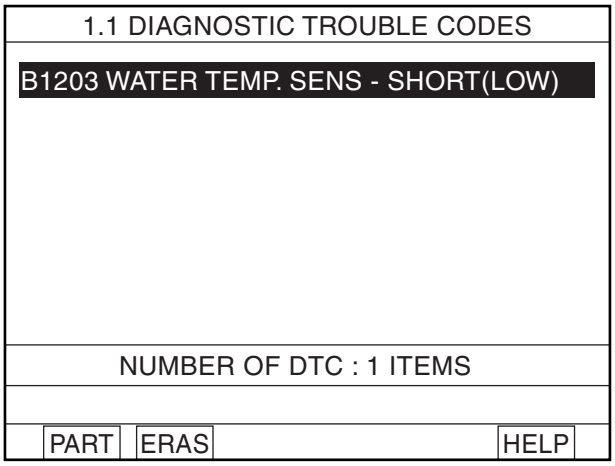

Fig. 2

Fig 1 : The current data in abnormal state.
Fig 2 : DTC B1203.

EQBF513A

4. Are the DTC B1203 present and is parameter of "WATER TEMP. SENSOR" fixed?
※ Parameter of "WATER TEMP. SENSOR" will be fixed at -2℃(28.4°F), if there is any fault in WATER TEMP. SENSOR.

YES

Go to "Inspection" procedure.

NO

Fault is intermittent caused by poor contact in the sensor's and/or A/C controller's connector or was repaired and A/C controller memory was not cleared. Thoroughly check connectors for looseness, poor connection, bending, corrosion, contamination, deterioration, or damage. Repair or replace as necessary and then go to "Verification of Vehicle Repair" procedure.

TERMINAL AND CONNECTOR INSPECTION E4A5AB7F

Refer to DTC B1202.

SIGNAL CIRCUIT INSPECTION E5290ACF

1. Check for short to ground in harness.

   1) Ignition "OFF"

   2) Disconnect water temp. sensor.

   3) Measure resistance between terminal "1" of water temp. sensor and chassis ground.

Specification : Approx. ∞Ω

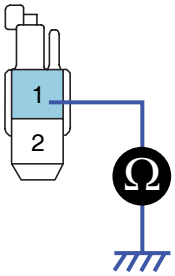

1. Water temp. sensor signal
2. Sensor ground

SCMHA6511L

4) Is the measured resistance within specifications?

YES

Go to "Component Inspection" procedure.

NO

Check for short to ground in harness. Repair as necessary and go to "Verification of Vehicle Repair" procedure.

COMPONENT INSPECTION E688EEF4

Refer to DTC B1202.

VERIFICATION OF VEHICLE REPAIR ED6AB445

Refer to DTC B1202.

DTC B1204 AIR MIX POTENTIOMETER OPEN (LOW) - PASSENGER'S

COMPONENT LOCATION ECDA6CAE

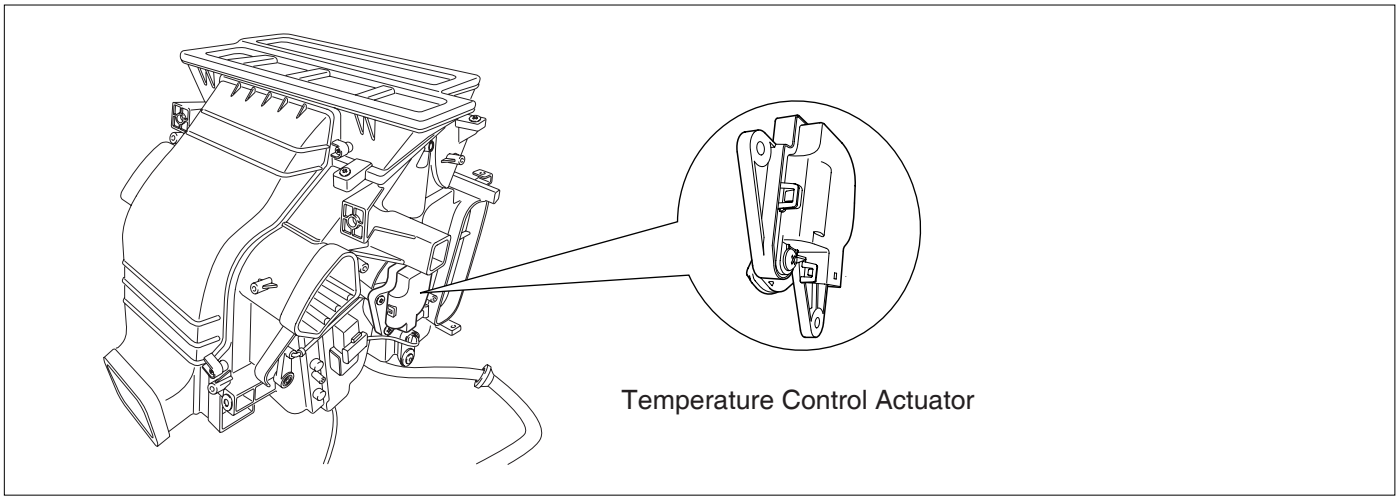

SCMHA6700L

GENERAL DESCRIPTION E6FDAF92

Temperature control actuator located at heater unit, regulates the temperature by the procedure as follows. Signal from control unit adjusts position of temp. door by operating temp. motor and then temperature will be regulated by the hot/cold air ratio decided by position of temp. door.

DTC DESCRIPTION E4F166A6

The A/C controller sets DTC B1204 if there is an open circuit or poor connection in the air mix potentiometer.

DTC DETECTING CONDITION E8DA37FC

Item	Detecting Condition	Possible cause
DTC Strategy	• Voltage check	• Poor connection of connected part • Open circuit in harness • Short circuit in harness • Faulty driver Air Mix potentiometer
Threshold value	• < 0.1V	
Detecting time	• 0.3 sec	
FAIL SAFE	• If temperature setting 17~24.5°C(63~76°F) fix at max. cooling position. • If temperature setting 25~32°C(77~90°F) fix at max. heating position.	

SPECIFICATION E927FFAF

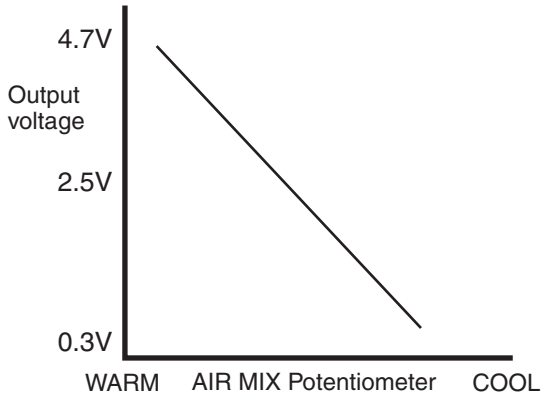

EQBF521B

MONITOR SCANTOOL DATA EF8DAA6E

1. Connect scantool to Data Link Connector(DLC).
2. Engine "ON"
3. Monitor the "Passenger's Air Mix Potentiometer" Parameter on the Scantool while operating temp. switch.

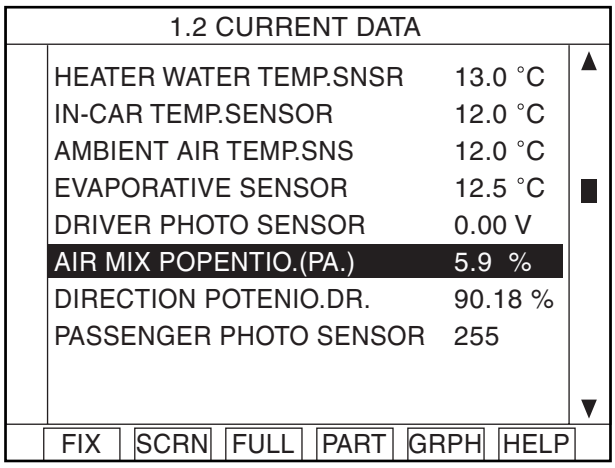

Fig. 1

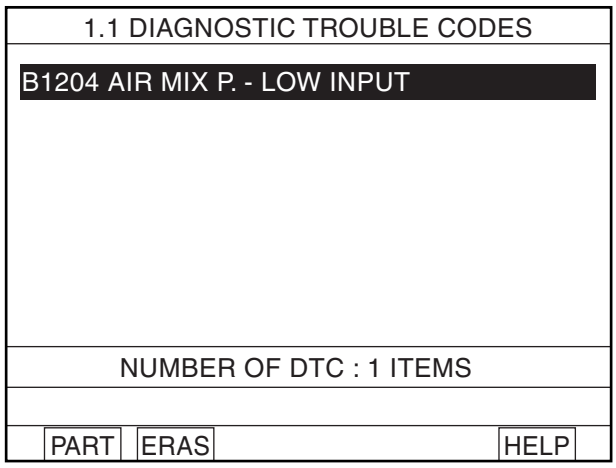

Fig. 2

Fig 1 : The current data in abnormal state.
Fig 2 : DTC B1204.

EQBF521K

4. Are the DTC B1204 present and is parameter of "Passenger's Air Mix Potentiometer" fixed?
※ Parameter of "Passenger's Air Mix Potentiometer" will be fixed at 100%(or any value above 90%), or 0% (or any value below 10%), if there is any fault in Passenger's Air Mix potentiometer.

YES

Go to "Inspection" procedure.

NO

Fault is intermittent caused by poor contact in the sensor's and/or A/C controller's connector or was repaired and A/C controller memory was not cleared. Thoroughly check connectors for looseness, poor connection, bending, corrosion, contamination, deterioration, or damage. Repair or replace as necessary and then go to "Verification of Vehicle Repair" procedure.

TERMINAL AND CONNECTOR INSPECTION E27080F9

1. Many malfunctions in the electrical system are caused by poor harness and terminals.
   Faults can also be caused by interference from other electrical systems, and mechanical or chemical damage.
2. Thoroughly check connectors for looseness, poor connection, bending, corrosion, contamination, deterioration, or damage.
3. Has a problem been found?

YES

Repair as necessary and go to "Verification of Vehicle Repair" procedure.

NO

Go to "Signal circuit inspection" procedure.

SIGNAL CIRCUIT INSPECTION EEC01ECA

1. Check for open in harness.
   1) Ignition "OFF"
   2) Disconnect Passenger's Air Mix potentiometer.
   3) Measure resistance between terminal "6" of Passenger's Air Mix Potentiometer and terminal "18" of A/C control unit.

Specification : Approx. 0 Ω

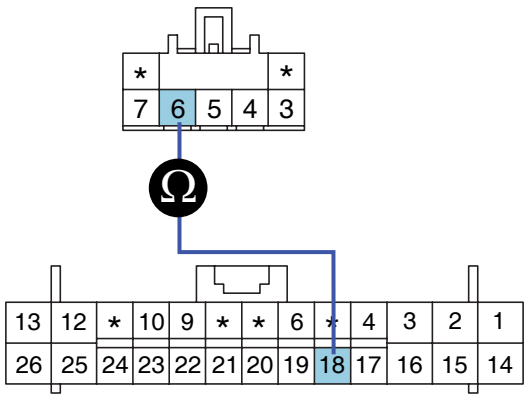

3. Motor (Warm)
4. Motor (Cool)
5. Potentiometer ground
6. **Potentiometer signal**
7. Sensor reference voltage(+5V)

SCMHA6514L

4) Is the measured resistance within specifications?

YES

Go to "Check for short to ground in harness" procedure.

NO

Check for open in signal harness. Repair as necessary and go to "Verification of Vehicle Repair" procedure.

2. Check for short to ground in harness.

1) Ignition "OFF"

2) Disconnect Passenger's Air Mix potentiometer.

3) Measure resistance between terminal "6" of Passenger's Air Mix Potentiometer and chassis ground.

Specification : Approx. ∞ Ω

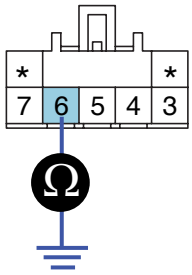

3. Motor (Warm)
4. Motor (Cool)
5. Potentiometer ground
6. Potentiometer signal
7. Sensor reference voltage(+5V)

SCMHA6515L

4) Is the measured resistance within specifications?

YES

Go to "Power circuit Inspection" procedure.

NO

Check for short to ground in signal harness. Repair as necessary and go to "Verification of Vehicle Repair" procedure.

POWER SUPPLY CIRCUIT INSPECTION EED3C936

1. Check for short or open in harness.

1) Ignition "ON"

2) Connect Passenger's Air Mix Potentiometer.

3) Measure voltage between terminal "7" of Passenger's Air Mix Potentiometer and chassis ground.

Specification : Approx. 5V

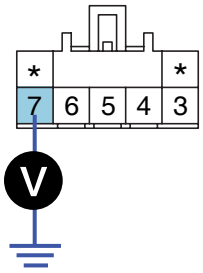

3. Motor (Warm)
4. Motor (Cool)
5. Potentiometer ground
6. Potentiometer signal
7. Sensor reference voltage(+5V)

SCMHA6516L

4) Is the measured voltage within specifications?

YES

Go to "Component inspection" procedure.

NO

Check for short or open in power harness. Repair as necessary and go to "Verification of Vehicle Repair" procedure.

COMPONENT INSPECTION E3EE5ADD

1. Check actuator motor.

1) Ignition "OFF"

2) Disconnect Passenger's Air Mix Potentiometer.

3) Verify that the temperature actuator operates to the hot position when connecting 12V to the terminal "3" and grounding terminal "4".

4) Verify that the temperature actuator operates to the cool position when the connections are reversed.

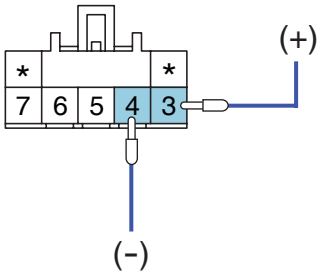

3. Motor (Warm)
4. Motor (Cool)
5. Potentiometer ground
6. Potentiometer signal
7. Sensor reference voltage(+5V)

SCMHA6517L

5) Does the actuator work properly?

YES

Go to "Check potentiometer" procedure.

NO

Substitute with a known-good actuator and check for proper operation. If the problem is corrected, replace actuator and then go to "Verification of Vehicle Repair" procedure.

2. Check potentiometer

1) Ignition "ON"

2) Connect Passenger's Air Mix potentiometer.

3) Measure voltage between terminal "5" and "6" of Passenger's Air Mix potentiometer while operating the temp. switch.

Specification : Refer the specifications in fig 3)

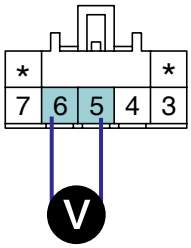

3. Motor (Warm)
4. Motor (Cool)
5. Potentiometer ground
6. Potentiometer signal
7. Sensor reference voltage(+5V)

SCMHA6518L

Door position	Voltage (5-6)	Error detecting
MAX. Cooling	0.3 ± 0.15V	Low voltage : 0.08V or less
MAX. Heating	4.7 ± 0.15V	High voltage : 4.9V or more

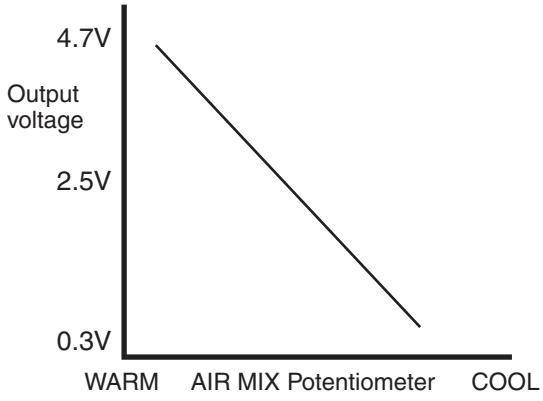

Fig. 3

Fig 3) Specifications : Voltage value of air mix potentiometer as a function of position of setting temperature.

EQBF521J

4) Is the measured voltage within specifications in fig3?

YES

Check connectors for looseness, poor connection, bending, corrosion, contamination, deterioration, or damage. Repair or replace as necessary and then go to "Verification of Vehicle Repair" procedure.

NO

Substitute with a known-good actuator and check for proper operation. If the problem is corrected, replace actuator and then go to "Verification of Vehicle Repair" procedure.

VERIFICATION OF VEHICLE REPAIR E960BEBC

After a repair, it is essential to verify that the fault has been corrected.

1. Connect scantool and select "Diagnostic Trouble Codes(DTCs)" mode and then clear DTC.
2. Operate the vehicle and monitor the DTC on the scantool.
3. Are any DTCs present?

YES

Go to the applicable troubleshooting procedure.

NO

System is performing to specification at this time.

DTC B1205 AIR MIX POTENTIOMETER SHORT (HIGH) - PASSENGER'S

COMPONENT LOCATION E3CE4D5C

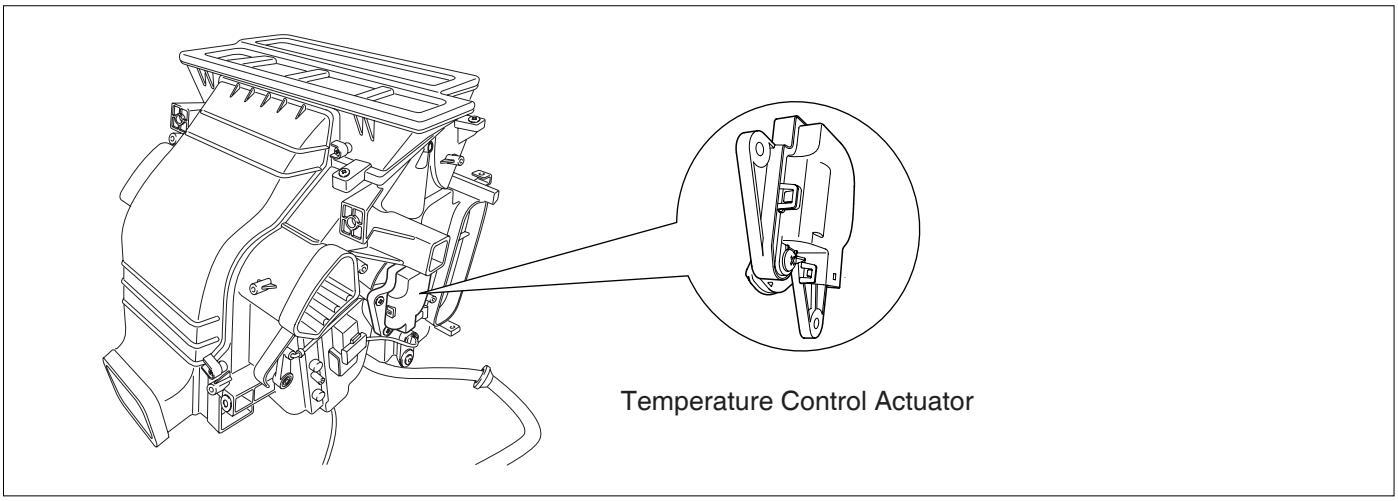

SCMHA6700L

GENERAL DESCRIPTION EBBBA148

Temperature control actuator located at heater unit, regulates the temperature by the procedure as follows. Signal from control unit adjusts position of temp. door by operating temp. motor and then temperature will be regulated by the hot/cold air ratio decided by position of temp. door.

DTC DESCRIPTION EEFEA86B

The A/C controller sets DTC B1205 if there is a short to power in the air mix potentiometer.

DTC DETECTING CONDITION E0C85E40

Item	Detecting Condition	Possible cause
DTC Strategy	• Voltage check	• Short circuit in harness • Faulty driver Air Mix potentiometer
Threshold value	• > 4.9V	
Detecting time	• 0.3 sec	
FAIL SAFE	• If temperature setting 17~24.5°C(63~76°F) fix at max. cooling position. • If temperature setting 25~32°C(77~90°F) fix at max. heating position.	

SPECIFICATION EE47778F

Refer to DTC B1204.

MONITOR SCANTOOL DATA E7CFD25C

1. Connect scantool to Data Link Connector(DLC).
2. Engine "ON"

3. Monitor the "Passenger's Air Mix Potentiometer" Parameter on the Scantool while operating temp. switch.

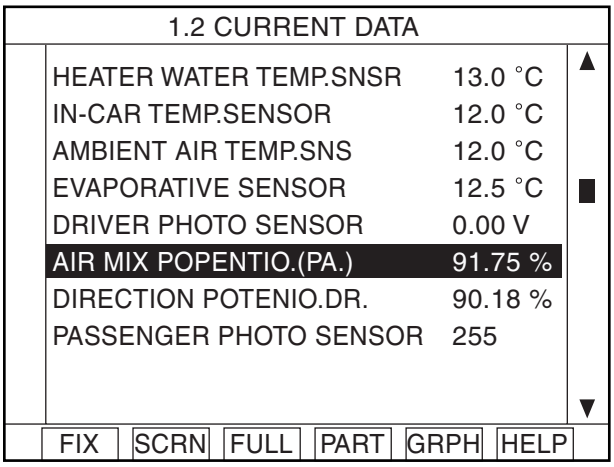

Fig. 1

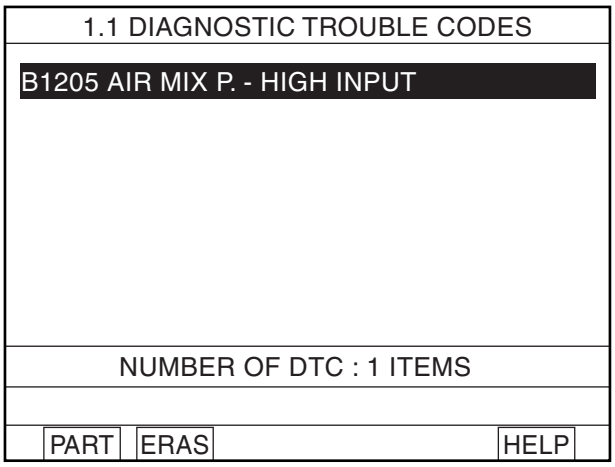

Fig. 2

Fig 1 : The current data in abnormal state.
Fig 2 : DTC B1205.

EQBF522F

4. Are the DTC B1205 present and is parameter of "Passenger's Air Mix potentiometer" fixed?
※ Parameter of "Passenger's Air Mix potentiometer" will be fixed at 100%(or any value above 90%), or 0% (or any value below 10%), if there is any fault in Passenger's Air Mix potentiometer.

YES

Go to "Inspection" procedure.

NO

Fault is intermittent caused by poor contact in the sensor's and/or A/C controller's connector or was repaired and A/C controller memory was not cleared. Thoroughly check connectors for looseness, poor connection, bending, corrosion, contamination, deterioration, or damage. Repair or replace as necessary and then go to "Verification of Vehicle Repair" procedure.

TERMINAL AND CONNECTOR INSPECTION E283B9EA

Refer to DTC B1204.

SIGNAL CIRCUIT INSPECTION E5E91EAA

1. Check for short in harness.

   1) Ignition "OFF"

   2) Disconnect Passenger's Air Mix potentiometer.

   3) Measure resistance between terminal "6" and "7" of Passenger's Air Mix potentiometer.

Specification : Approx. ∞ Ω

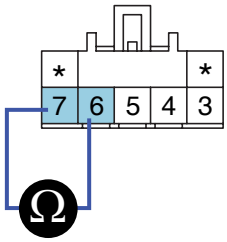

3. Motor (Warm)
4. Motor (Cool)
5. Potentiometer ground
6. Potentiometer signal
7. Sensor reference voltage(+5V)

SCMHA6519L

4) Is the measured resistance within specifications?

YES

Go to "Ground circuit Inspection" procedure.

NO

Check for short to power harness in signal harness. Repair as necessary and go to "Verification of Vehicle Repair" procedure.

GROUND CIRCUIT INSPECTION EE38C85A

1. Check for open in harness.

1) Ignition "OFF"

2) Disconnect Passenger's Air Mix Potentiometer.

3) Measure resistance between terminal "5" of Passenger's Air Mix Potentiometer and chassis ground.

Specification : Approx. 0 Ω

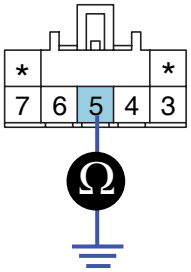

3. Motor (Warm)
4. Motor (Cool)
5. Potentiometer ground
6. Potentiometer signal
7. Sensor reference voltage(+5V)

SCMHA6520L

4) Is the measured resistance within specifications?

YES

Go to "Component Inspection" procedure.

NO

Check for open in ground harness. Repair as necessary and go to "Verification of Vehicle Repair" procedure.

COMPONENT INSPECTION EE9D88DB

Refer to DTC B1204.

VERIFICATION OF VEHICLE REPAIR ECF5DABA

Refer to DTC B1204.

DTC B1208 INTAKE POTENTIOMETER OPEN

COMPONENT LOCATION EF749215

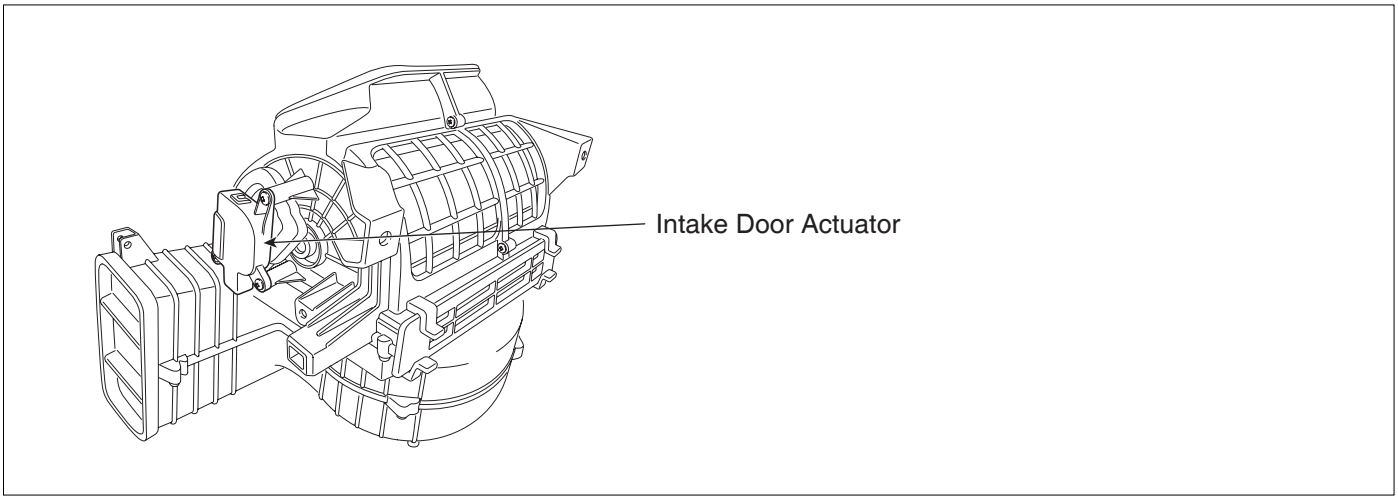

SCMHA6701L

GENERAL DESCRIPTION EA50D8D5

Intake door located at heater unit controls the inlet of car. When driver operates the intake switch, A/C controller recirculationeives mode signal from intake switch and operates intake door actuator to turn intake door to intended position. (with fresh mode signal, intake door is closed and with fresh mode signal, intake door is opened).

DTC DESCRIPTION E6782025

The A/C controller sets DTC B1208 if there is an open circuit or poor connection in the intake potentiometer.

DTC DETECTING CONDITION E0CD3E1C

Item	Detecting Condition	Possible cause
DTC Strategy	• Voltage check	• Poor connection of connected part • Open circuit in harness • Short circuit in harness • Faulty driver intake potentiometer
Threshold value	• < 0.1V	
Detecting time	• 0.3 sec	
FAIL SAFE	• If temperature setting 17~24.5°C(63~76°F) fix at max. cooling position. • Fix at fresh	

SPECIFICATION E6D66101

※ Voltage value of Intake potentiometer as a function of position of Intake door

Door position	Voltage	Threshold value
Fresh	0.3±0.15V	Voltage value & 〈 0.08V
Recirculation	4.7±0.15V	Voltage value & 〈 4.9V

MONITOR SCANTOOL DATA EBF0EE9F

1. Connect scantool to Data Link Connector(DLC).
2. Engine "ON"
3. Monitor the "Intake Potentiometer" Parameter on the Scantool while operating intake switch.

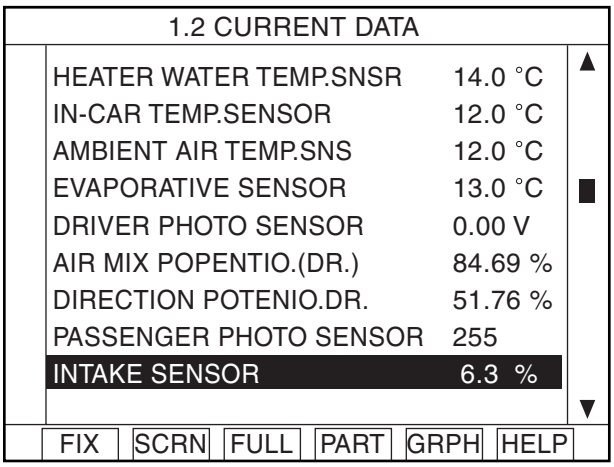

Fig. 1

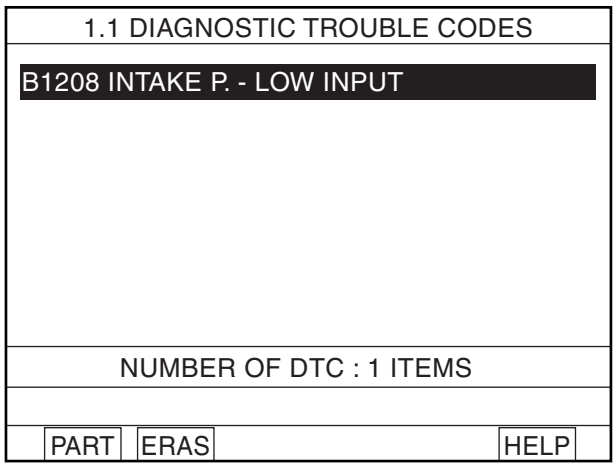

Fig. 2

Fig 1 : The current data in abnormal state.
Fig 2 : DTC B1208.

EQBF590C

4. Are the DTC B1208 present and is parameter of "Intake Potentiometer" fixed?
※ Parameter of "Intake Potentiometer" will be fixed at 100%(or any value above 90%), or 0% (or any value below 10%), if there is any fault in Intake potentiometer.

YES

Go to "Inspection" procedure.

NO

Fault is intermittent caused by poor contact in the sensor's and/or A/C controller's connector or was repaired and A/C controller memory was not cleared. Thoroughly check connectors for looseness, poor connection, bending, corrosion, contamination, deterioration, or damage. Repair or replace as necessary and then go to "Verification of Vehicle Repair" procedure.

TERMINAL AND CONNECTOR INSPECTION E0353933

1. Many malfunctions in the electrical system are caused by poor harness and terminals.
Faults can also be caused by interference from other electrical systems, and mechanical or chemical damage.
2. Thoroughly check connectors for looseness, poor connection, bending, corrosion, contamination, deterioration, or damage.
3. Has a problem been found?

YES

Repair as necessary and go to "Verification of Vehicle Repair" procedure.

NO

Go to "Signal circuit inspection" procedure.

SIGNAL CIRCUIT INSPECTION E9A2AB82

1. Check for open in harness.

   1) Ignition "OFF"

   2) Disconnect Intake potentiometer.

   3) Measure resistance between terminal "6" of Intake Potentiometer and terminal "24" of A/C control unit.

Specification : Approx. 0 Ω

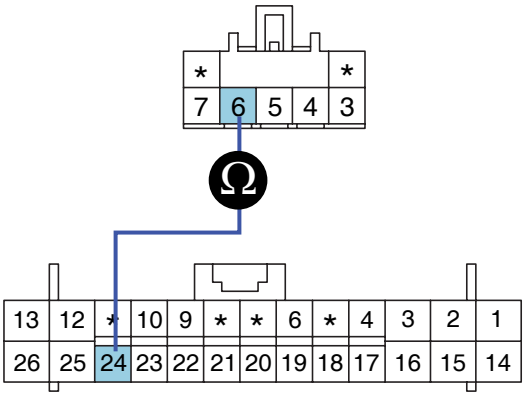

3. Motor (Rec)
4. Motor (Fre)
5. Potentiometer ground
6. **Potentiometer signal**
7. Sensor reference voltage(+5V)

SCMHA6522L

   4) Is the measured resistance within specifications?

YES

Go to "Check for short to ground in harness" procedure.

NO

Check for open in signal harness. Repair as necessary and go to "Verification of Vehicle Repair" procedure.

2. Check for short to ground in harness.

   1) Ignition "OFF"

   2) Disconnect Intake potentiometer.

   3) Measure resistance between terminal "6" of Intake Potentiometer and chassis ground.

Specification : Approx. ∞ Ω

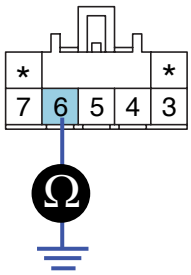

3. Motor (Rec)
4. Motor (Fre)
5. Potentiometer ground
6. Potentiometer signal
7. Sensor reference voltage(+5V)

SCMHA6523L

4) Is the measured resistance within specifications?

YES

Go to "Power circuit Inspection" procedure.

NO

Check for short to ground in signal harness. Repair as necessary and go to "Verification of Vehicle Repair" procedure.

POWER SUPPLY CIRCUIT INSPECTION E638022A

1. Check for short or open in harness.

1) Ignition "ON"

2) Connect Intake Potentiometer.

3) Measure voltage between terminal "7" of Intake Potentiometer and chassis ground.

Specification : Approx. 5V

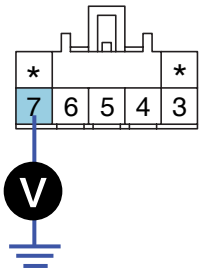

3. Motor (Rec)
4. Motor (Fre)
5. Potentiometer ground
6. Potentiometer signal
7. Sensor reference voltage(+5V)

SCMHA6524L

4) Is the measured voltage within specifications?

YES

Go to "Component inspection" procedure.

NO

Check for short or open in power harness. Repair as necessary and go to "Verification of Vehicle Repair" procedure.

COMPONENT INSPECTION E4DCDE12

1. Check actuator motor.

   1) Ignition "OFF"

   2) Disconnect Intake Potentiometer.

   3) Verify that the temperature actuator operates to the fresh position when connecting 12V to the terminal "3" and grounding terminal "4".

   4) Verify that the temperature actuator operates to the recirculation position when the connections are reversed.

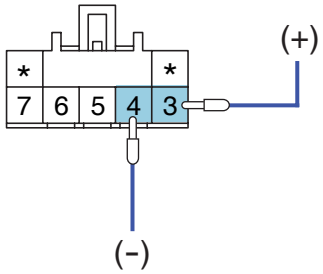

3. Motor (Rec)
4. Motor (Fre)
5. Potentiometer ground
6. Potentiometer signal
7. Sensor reference voltage(+5V)

SCMHA6525L

   5) Does the actuator work properly?

YES

Go to "Check potentiometer" procedure.

NO

Substitute with a known-good actuator and check for proper operation. If the problem is corrected, replace actuator and then go to "Verification of Vehicle Repair" procedure.

2. Check potentiometer

   1) Ignition "ON"

   2) Connect Intake potentiometer.

   3) Measure voltage between terminal "5" and "6" of Intake potentiometer while operating Intake switch.

Specification : Refer to the specifications

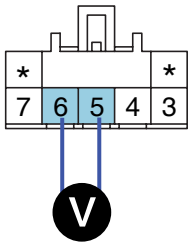

3. Motor (Rec)
4. Motor (Fre)
5. Potentiometer ground
6. Potentiometer signal
7. Sensor reference voltage(+5V)

SCMHA6526L

Door position	Voltage (5-6)	Error detecting
Fresh	0.3 ± 0.15V	Low voltage : 0.08V or less
Recirculation	4.7 ± 0.15V	High voltage : 4.9V or more

Specifications : Voltage value of Intake potentiometer as a function of position of Intake.

4) Is the measured voltage within specifications?

YES

Check connectors for looseness, poor connection, bending, corrosion, contamination, deterioration, or damage. Repair or replace as necessary and then go to "Verification of Vehicle Repair" procedure.

NO

Substitute with a known-good actuator and check for proper operation. If the problem is corrected, replace actuator and then go to "Verification of Vehicle Repair" procedure.

VERIFICATION OF VEHICLE REPAIR E5797203

After a repair, it is essential to verify that the fault has been corrected.

1. Connect scantool and select "Diagnostic Trouble Codes(DTCs)" mode and then clear DTC.
2. Operate the vehicle and monitor the DTC on the scantool.
3. Are any DTCs present?

YES

Go to the applicable troubleshooting procedure.

NO

System is performing to specification at this time.

DTC B1209 INTAKE POTENTIOMETER SHORT

COMPONENT LOCATION E093235F

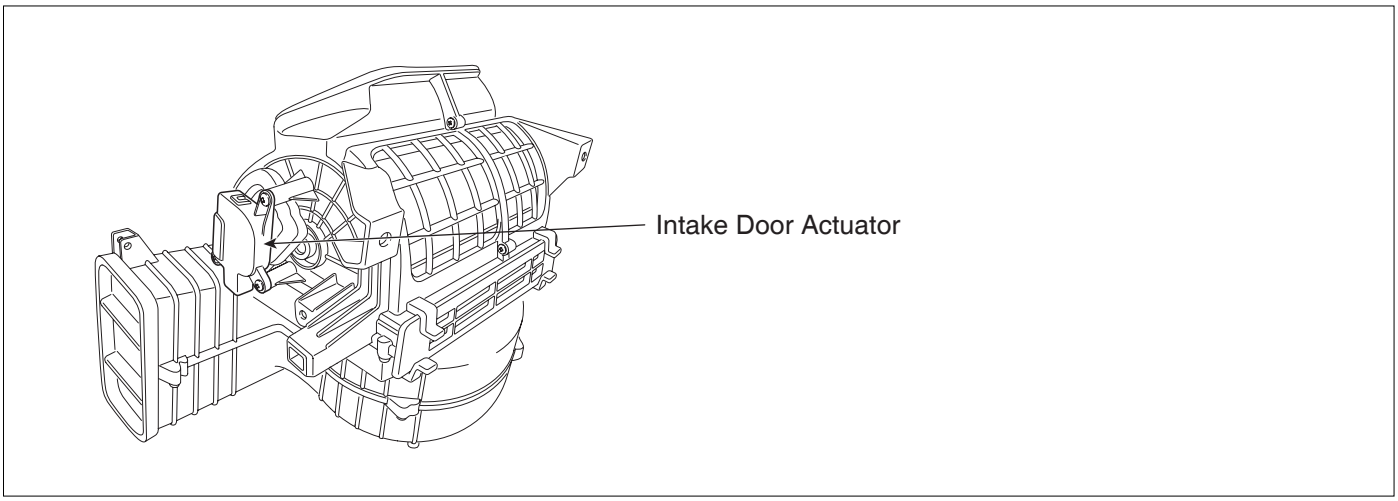

SCMHA6701L

GENERAL DESCRIPTION EE9BD028

Intake door located at heater unit controls the inlet of car. When driver operates the intake switch, A/C controller recirculationeives mode signal from intake switch and operates intake door actuator to turn intake door to intended position. (with fresh mode signal, intake door is closed and with fresh mode signal, intake door is opened).

DTC DESCRIPTION E2770B43

The A/C controller sets DTC B1209 if there is a short to power in the Intake potentiometer.

DTC DETECTING CONDITION EEE85217

Item	Detecting Condition	Possible cause
DTC Strategy	• Voltage check	• Short circuit in harness • Faulty Intake potentiometer • Open circuit in harness
Threshold value	• > 4.9V	
Detecting time	• 0.3 sec	
FAIL SAFE	• Fix at fresh	

SPECIFICATION E39D5040

Refer to DTC B1208.

MONITOR SCANTOOL DATA E43084A0

1. Connect scantool to Data Link Connector(DLC).
2. Engine "ON"
3. Monitor the "Intake Potentiometer" Parameter on the Scantool while operating Intake switch.

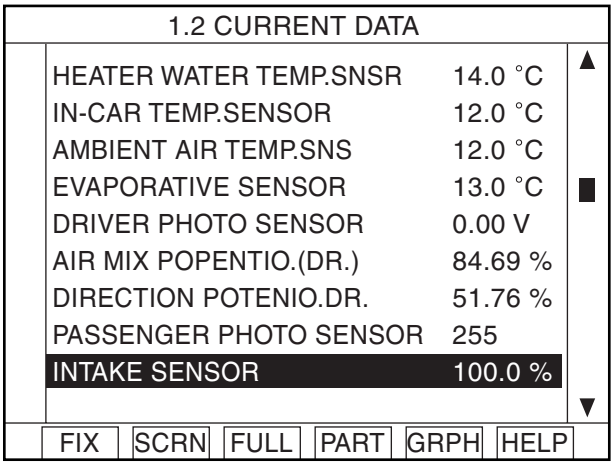

Fig. 1

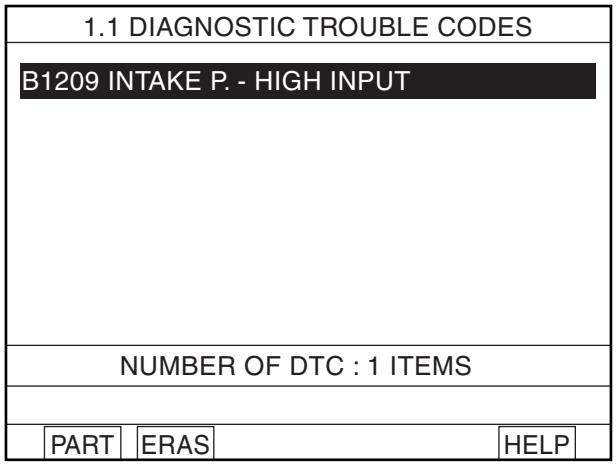

Fig. 2

Fig 1 : The current data in abnormal state.
Fig 2 : DTC B1209.

EQBF590D

4. Are the DTC B1209 present and is parameter of "Intake potentiometer" fixed?
※ Parameter of "Intake potentiometer" will be fixed at 100%(or any value above 90%), or 0% (or any value below 10%), if there is any fault in Intake potentiometer.

YES

Go to "Inspection" procedure.

NO

Fault is intermittent caused by poor contact in the sensor's and/or A/C controller's connector or was repaired and A/C controller memory was not cleared. Thoroughly check connectors for looseness, poor connection, bending, corrosion, contamination, deterioration, or damage. Repair or replace as necessary and then go to "Verification of Vehicle Repair" procedure.

TERMINAL AND CONNECTOR INSPECTION E38A07A2

Refer to DTC B1208.

SIGNAL CIRCUIT INSPECTION E7CCC554

1. Check for short in harness.
   1) Ignition "OFF"
   2) Disconnect Intake potentiometer.
   3) Measure resistance between terminal "6" and "7" of Intake potentiometer.

Specification : Approx. ∞ Ω

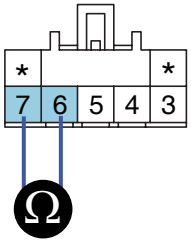

3. Motor (Rec)
4. Motor (Fre)
5. Potentiometer ground
6. Potentiometer signal
7. Sensor reference voltage(+5V)

SCMHA6527L

4) Is the measured resistance within specifications?

YES

Go to "Ground circuit Inspection" procedure.

NO

Check for short to power harness in signal harness. Repair as necessary and go to "Verification of Vehicle Repair" procedure.

GROUND CIRCUIT INSPECTION E226B4E7

1. Check for open in harness.

1) Ignition "OFF"

2) Disconnect Intake Potentiometer.

3) Measure resistance between terminal "5" of Intake Potentiometer and chassis ground.

Specification : Approx. 0 Ω

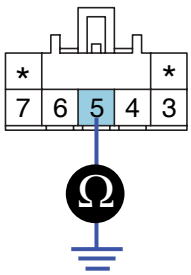

3. Motor (Rec)
4. Motor (Fre)
5. Potentiometer ground
6. Potentiometer signal
7. Sensor reference voltage(+5V)

SCMHA6528L

4) Is the measured resistance within specifications?

YES

Go to "Component Inspection" procedure.

NO

Check for open in ground harness. Repair as necessary and go to "Verification of Vehicle Repair" procedure.

COMPONENT INSPECTION EF55F62B

Refer to DTC B1208.

VERIFICATION OF VEHICLE REPAIR E43701D1

Refer to DTC B1208.

DTC B1233 IN-CAR TEMPERATURE SENSOR SHORT (LOW)

COMPONENT LOCATION EB57D004

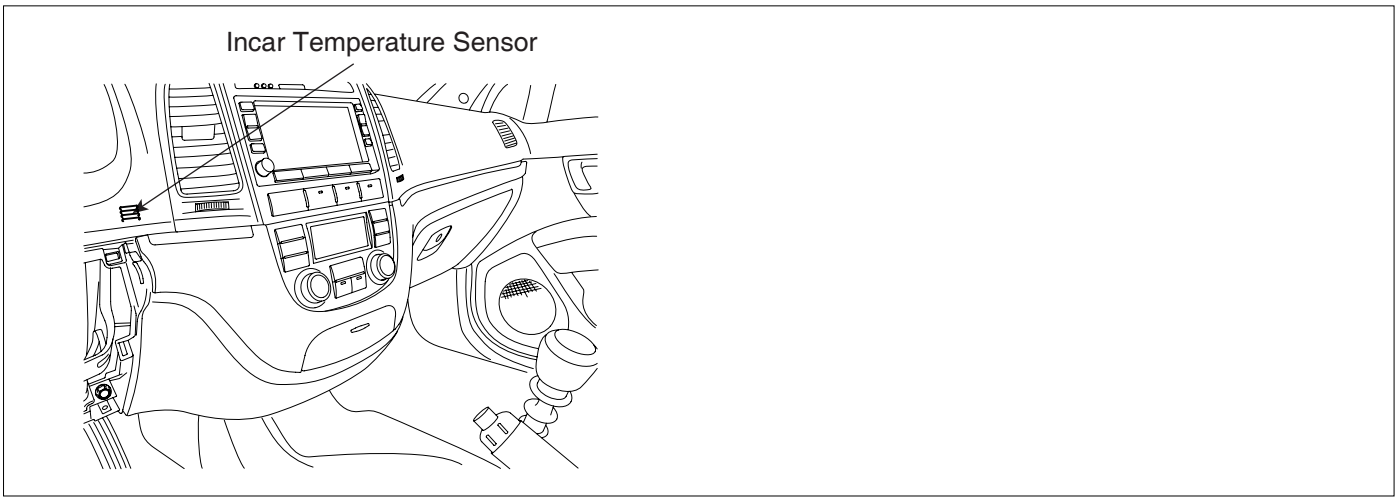

SCMHA6702L

GENERAL DESCRIPTION EC43DDF5

The incar temperature sensor located at crush pad, control unit contains a thermistor which measures the temperature of the inside. The signal, decided by the resistance value which changes in accordance with perceived inside temperature, is delivered to heater control unit and according to this signal, the control unit regulates incar temperature to intended value.

DTC DESCRIPTION EB63EFE3

The A/C controller sets DTC B1233 if there is a short circuit in incar temp. sensor signal harness or the measured resistance value of sensor is less than threshold value(about 7.46kΩ)

DTC DETECTING CONDITION E1046384

Item	Detecting Condition	Possible cause
DTC Strategy	• Resistance check	• Short circuit in harness • Faulty incar temp. Sensor • Faulty A/C control unit
Threshold value	• < 7.46 kΩ	
Detecting time	• 0.3 sec	
FAIL SAFE	• Control with the value of 25°C(77°F)	

SPECIFICATION E4823648

Temperature[°C(°F)]	Resistance(kΩ)	Temperature[°C(°F)]	Resistance(kΩ)
-30(-22)	509.57	25(77)	30
-15(5)	216.07	35(95)	15.59
0(32)	97.71	50(122)	10.81
15(59)	47.13	60(140)	7.46

MONITOR SCANTOOL DATA E2472961

1. Connect scantool to data link connector(DLC).
2. Engine "ON"
3. Monitor the "INCAR TEMP. SENSOR" Parameter on the Scantool.

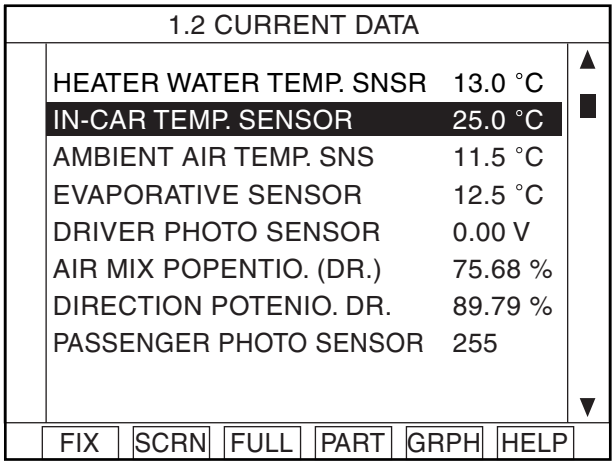

Fig. 1

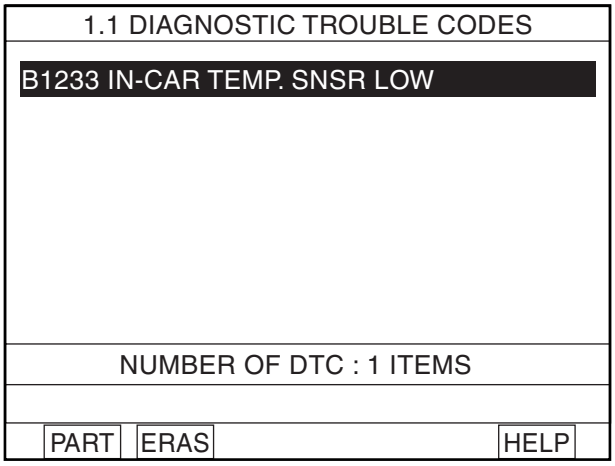

Fig. 2

Fig 1 : The current data in abnormal state.
Fig 2 : DTC B1233.

EQBF514A

4. Are the DTC B1233 present and is parameter of "INCAR TEMP. SENSOR" fixed?
   ※ Parameter of "INCAR TEMP. SENSOR" will be fixed at 25℃(77°F), if there is any fault in INCAR TEMP. SENSOR.

YES

Go to "Inspection" procedure.

NO

Fault is intermittent caused by poor contact in the sensor's and/or A/C controller's connector or was repaired and A/C controller memory was not cleared. Thoroughly check connectors for looseness, poor connection, bending, corrosion, contamination, deterioration, or damage. Repair or replace as necessary and then go to "Verification of Vehicle Repair" procedure.

TERMINAL AND CONNECTOR INSPECTION EB821E5B

1. Many malfunctions in the electrical system are caused by poor harness and terminals.
   Faults can also be caused by interference from other electrical systems, and mechanical or chemical damage.
2. Thoroughly check connectors for looseness, poor connection, bending, corrosion, contamination, deterioration, or damage.
3. Has a problem been found?

YES

Repair as necessary and go to "Verification of Vehicle Repair" procedure.

NO

Go to "Signal circuit inspection" procedure.

SIGNAL CIRCUIT INSPECTION EBF88FB5

1. Check for short to ground in harness.
   1) Ignition "OFF"
   2) Disconnect incar sensor.
   3) Measure resistance between terminal "4" of incar sensor and chassis ground.

Specification : Approx. ∞Ω

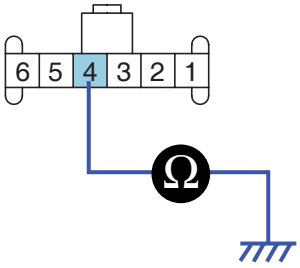

1. Motor(-)
2. Sensor ground
3. Humidity sensor signal
4. **In-car sensor temp. signal**
5. Sensor power (5V)
6. Motor(+)

SCMHA6529L

   4) Is the measured resistance within specifications?

YES

Go to "Component Inspection" procedure.

NO

Check for short to ground in harness. Repair as necessary and go to "Verification of Vehicle Repair" procedure.

COMPONENT INSPECTION E6BB9B31

1. Check incar temp. sensor.
   1) Ignition "OFF"
   2) Disconnect incar sensor.
   3) Measure resistance between terminal "4" and "2" of incar sensor.

Specification : Refer the specifications in fig 3.

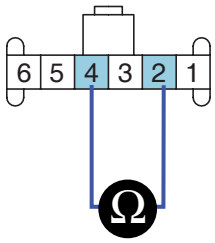

1. Motor(-)
2. **Sensor ground**
3. Humidity sensor signal
4. **In-car sensor temp. signal**
5. Sensor power (5V)
6. Motor(+)

SCMHA6530L

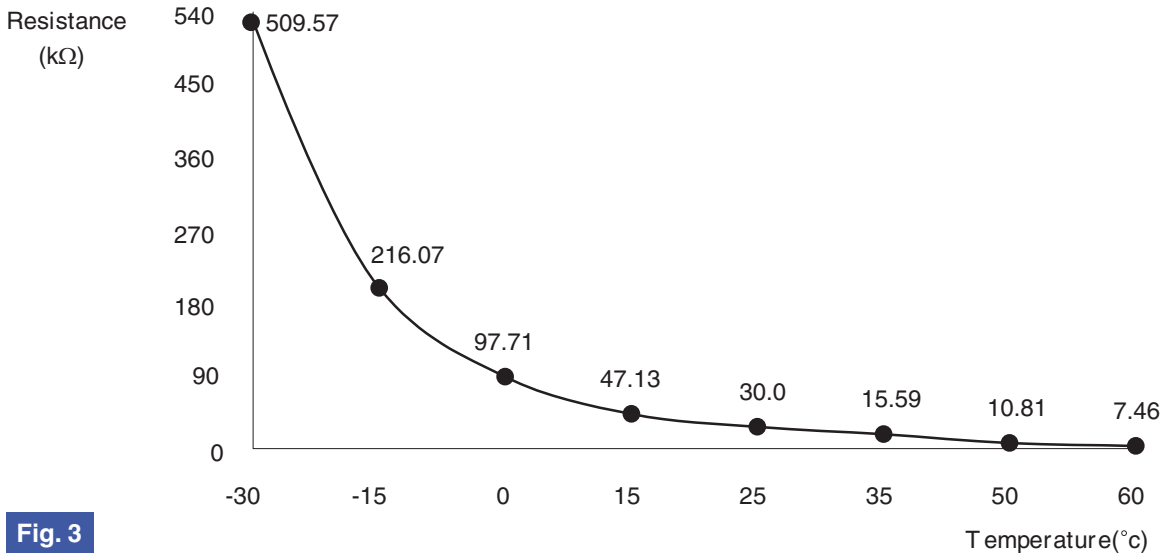

Fig. 3

Fig 3) Specifications : Resistance value of incar temp. sensor as a function of temperature.

EQBF514G

4) Is the measured resistance within specifications in fig3? (tolerance limits ± 3%)

YES

Go to "Check A/C Control Unit" procedure.

NO

Substitute with a known-good incar sensor and check for proper operation.
If the problem is corrected, replace incar sensor and then go to "Verification of Vehicle Repair" procedure.

2. Check A/C Control Unit

1) Engine "ON"

2) Disconnect incar sensor.

3) Measure Voltage between terminal "5" of A/C Control Unit and chassis ground.

Specification : Approx. 5V

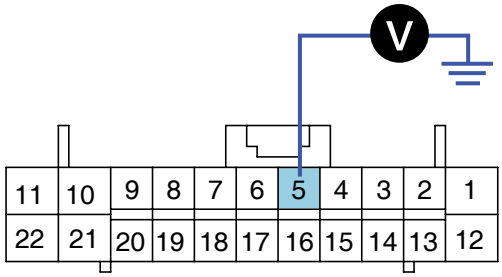

5. Incar sensor temp. signal

SCMHA6531L

4) Is the measured voltage within specifications?

YES

Check connectors for looseness, poor connection, bending, corrosion, contamination, deterioration, or damage. Repair or replace as necessary and then go to "Verification of Vehicle Repair" procedure.

NO

Substitute with a known-good A/C Control Unit and check for proper operation.
If the problem is corrected, replace A/C Control Unit and then go to "Verification of Vehicle Repair" procedure.

VERIFICATION OF VEHICLE REPAIR E5F6DCB4

After a repair, it is essential to verify that the fault has been corrected.

1. Connect scantool and select "Diagnostic Trouble Codes(DTCs)" mode and then clear DTC.
2. Operate the vehicle and monitor the DTC on the scantool.
3. Are any DTCs present?

YES

Go to the applicable troubleshooting procedure.

NO

System is performing to specification at this time.

DTC B1234 IN-CAR TEMPERATURE SENSOR OPEN (HIGH)

COMPONENT LOCATION EE9B6B17

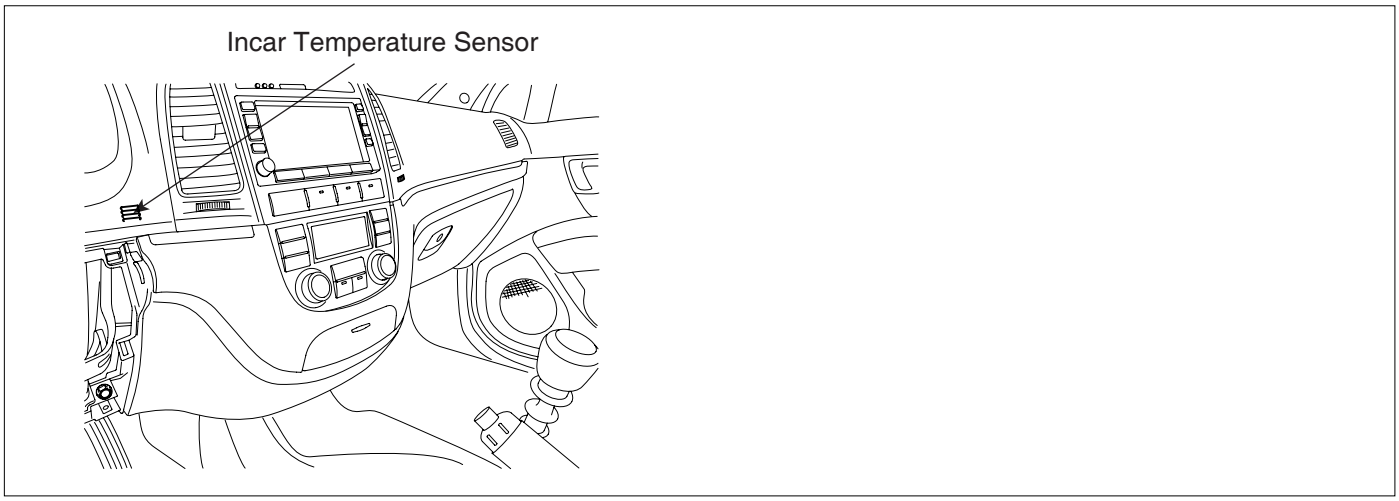

SCMHA6702L

GENERAL DESCRIPTION E9F794B3

The incar temperature sensor located at crush pad, control unit contains a thermistor which measures the temperature of the inside. The signal, decided by the resistance value which changes in accordance with perceived inside temperature, is delivered to heater control unit and according to this signal, the control unit regulates incar temperature to intended value.

DTC DESCRIPTION E11DE569

The A/C controller sets DTC B1234 if there is an open circuit in incar temp. sensor signal harness or the measured resistance value of sensor is more than threshold value(about 509.57kΩ)

DTC DETECTING CONDITION E854B0E4

Item	Detecting Condition	Possible cause
DTC Strategy	• Resistance check	• Open Circuit in harness • Faulty incar temp. Sensor • Faulty A/C control unit
Threshold value	• > 509.57 kΩ	
Detecting time	• 0.3 sec	
FAIL SAFE	• Control with the value of 25°C(77°F)	

SPECIFICATION E1AB1CCB

Refer to DTC B1233.

MONITOR SCANTOOL DATA E60EDB2F

1. Connect scantool to data link connector(DLC).
2. Engine "ON"
3. Monitor the "INCAR TEMP. SENSOR" Parameter on the Scantool.

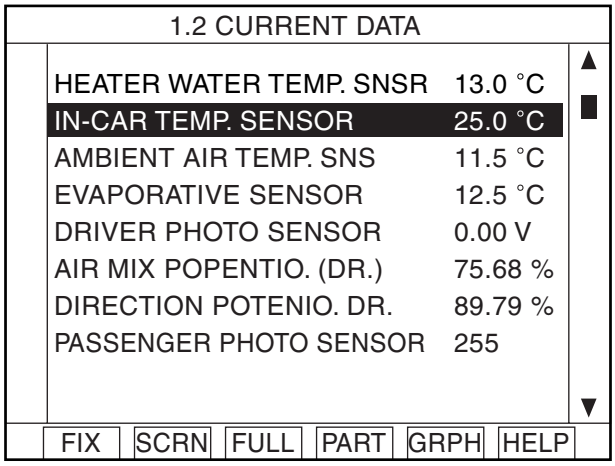

Fig. 1

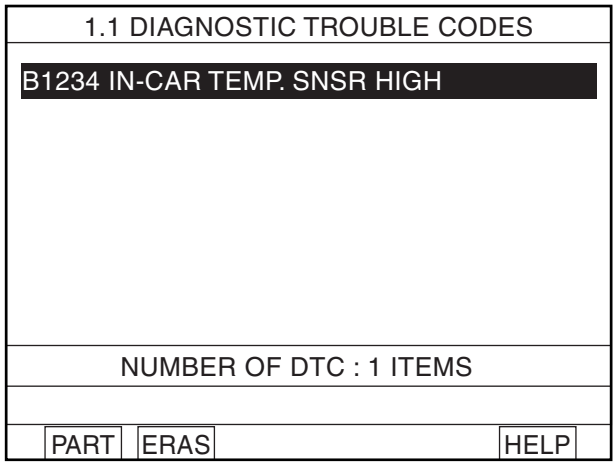

Fig. 2

Fig 1 : The current data in abnormal state.
Fig 2 : DTC B1234.

EQBF515A

4. Are the DTC B1234 present and is parameter of "INCAR TEMP. SENSOR" fixed?
※ Parameter of "INCAR TEMP. SENSOR" will be fixed at 25℃(77°F), if there is any fault in INCAR TEMP. SENSOR.

YES

Go to "Inspection" procedure.

NO

Fault is intermittent caused by poor contact in the sensor's and/or A/C controller's connector or was repaired and A/C controller memory was not cleared. Thoroughly check connectors for looseness, poor connection, bending, corrosion, contamination, deterioration, or damage. Repair or replace as necessary and then go to "Verification of Vehicle Repair" procedure.

TERMINAL AND CONNECTOR INSPECTION E941866C

Refer to DTC B1233.

SIGNAL CIRCUIT INSPECTION E1781154

1. Check for open in harness.
   1) Ignition "OFF"
   2) Disconnect incar temp. sensor.
   3) Measure resistance between terminal "4" of incar temp. sensor and terminal "5" of A/C Control Unit..

Specification : Approx. 0 Ω

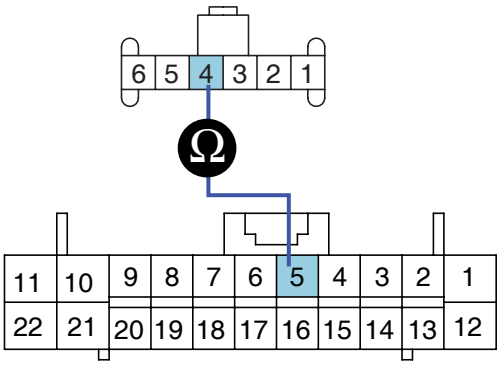

1. Motor(-)
2. Sensor ground
3. Humidity sensor signal
4. **In-car sensor temp. signal**
5. Sensor power (5V)
6. Motor(+)

SCMHA6532L

4) Is the measured resistance within specifications?

YES

Go to "Ground circuit Inspection " procedure.

NO

Check for open in harness. Repair as necessary and go to "Verification of Vehicle Repair" procedure.

GROUND CIRCUIT INSPECTION EF779270

1. Check for open in ground harness.

1) Ignition "OFF"

2) Disconnect incar temp. sensor.

3) Measure resistance between terminal "2" of incar temp. sensor and terminal "12" of A/C Control Unit.

Specification : Approx. 0 Ω

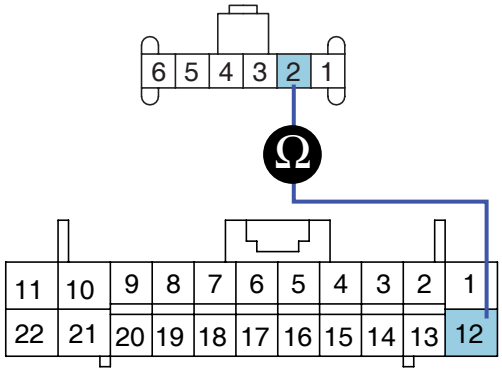

1. Motor(-)
2. **Sensor ground**
3. Humidity sensor signal
4. In-car sensor temp. signal
5. Sensor power (5V)
6. Motor(+)

SCMHA6533L

4) Is the measured resistance within specifications?

YES

Go to "Component Inspection " procedure.

NO

Check for open in ground harness. Repair as necessary and go to "Verification of Vehicle Repair" procedure.

COMPONENT INSPECTION EB9720FD

Refer to DTC B1233.

VERIFICATION OF VEHICLE REPAIR E10F3C2D

Refer to DTC B1233.

DTC B1237 AMBIENT TEMPERATURE SENSOR SHORT (LOW)

COMPONENT LOCATION ED485BBE

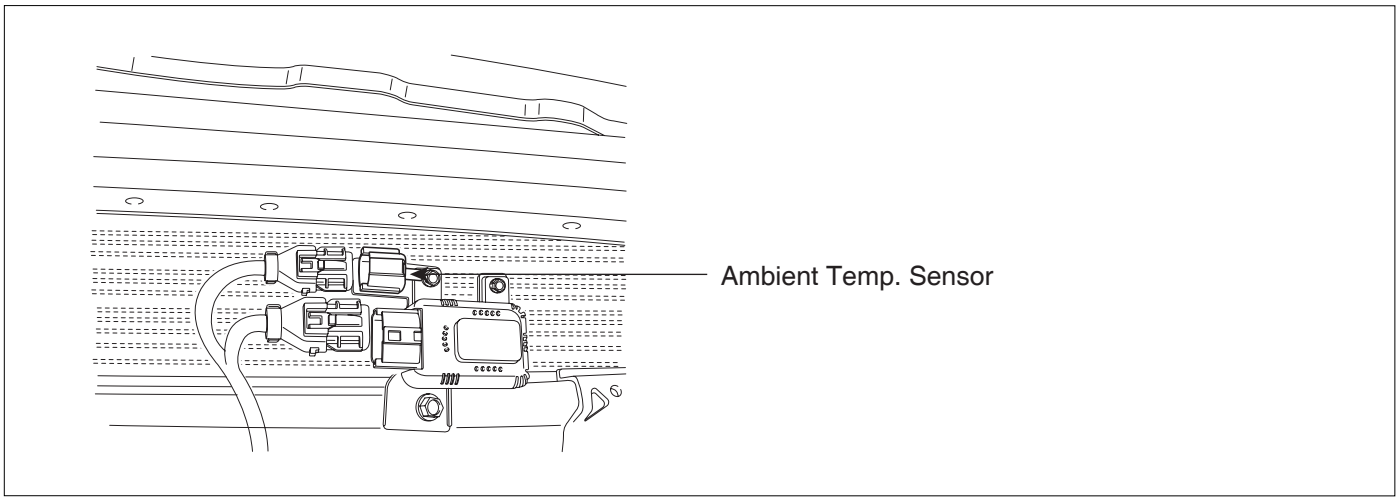

SCMHA6703L

GENERAL DESCRIPTION E2ABCF83

The ambient temperature senor located at the center stay of the condenser, detects ambient air temperature. It is a negative type thermistor whose resistance is inversely proportional to temperature. Its output is used for discharge temperature sensor, sensor fail-safe, temperature regulation door lock, blower motor level control, mix mode control and in-car humidity control.

DTC DESCRIPTION EF007347

The A/C controller sets DTC B1237 if there is a short circuit in ambient temp. sensor signal harness or the measured resistance value of sensor is less than threshold value(about 7.48kΩ)

DTC DETECTING CONDITION E76C2039

Item	Detecting Condition	Possible cause
DTC Strategy	• Resistance check	• Short circuit in harness • Faulty ambient temp. Sensor • Faulty A/C control unit
Threshold value	• < 7.48kΩ	
Detecting time	• 0.3 sec	
FAIL SAFE	• Control with the value of 20°C(68°F)	

SPECIFICATION EA51C1AC

Temperature[°C(°F)]	Resistance(kΩ)	Temperature[°C(°F)]	Resistance(kΩ)
-30(-22)	527.99	25(77)	30
-15(5)	218.21	35(95)	19.6
0(32)	97.83	50(122)	10.82
15(59)	47.12	60(140)	7.48

MONITOR SCANTOOL DATA E30FCFE7

1. Connect scantool to data link connector(DLC).

2. Engine "ON"

3. Monitor the "AMBIENT TEMP. SENSOR" Parameter on the Scantool.
   ※ Parameter of "AMBIENT TEMP. SENSOR" will be fixed at 20°C, if there is any fault in AMBIENT TEMP. SENSOR.

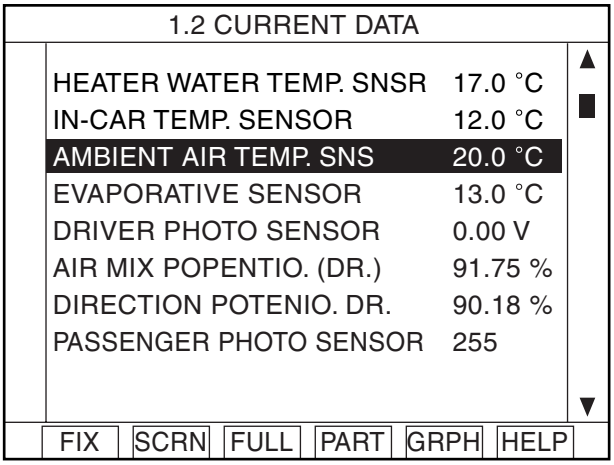

Fig. 1

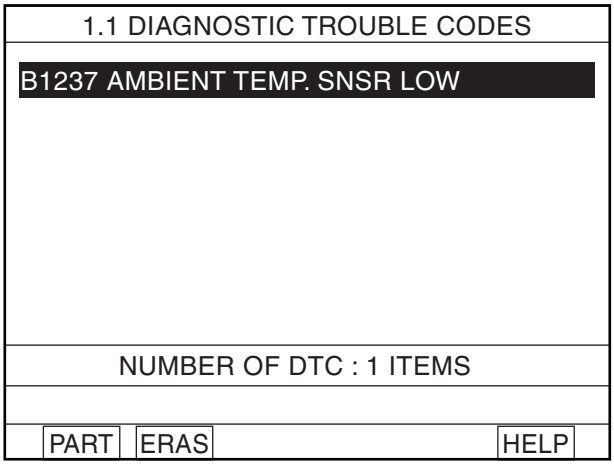

Fig. 2

Fig 1 : The current data in abnormal state.
Fig 2 : DTC B1237.

EQBF516B

4. Are the DTC B1237 present and is parameter of "AMBIENT TEMP. SENSOR" fixed?

YES

Go to "Inspection" procedure.

NO

Fault is intermittent caused by poor contact in the sensor's and/or A/C controller's connector or was repaired and A/C controller memory was not cleared. Thoroughly check connectors for looseness, poor connection, bending, corrosion, contamination, deterioration, or damage. Repair or replace as necessary and then go to "Verification of Vehicle Repair" procedure.

TERMINAL AND CONNECTOR INSPECTION E20274CA

1. Many malfunctions in the electrical system are caused by poor harness and terminals.
   Faults can also be caused by interference from other electrical systems, and mechanical or chemical damage.

2. Thoroughly check connectors for looseness, poor connection, bending, corrosion, contamination, deterioration, or damage.

3. Has a problem been found?

YES

Repair as necessary and go to "Verification of Vehicle Repair" procedure.

NO

Go to "Signal circuit inspection" procedure.

SIGNAL CIRCUIT INSPECTION EC50D358

1. Check for short to ground in harness.

   1) Ignition "OFF"

   2) Disconnect ambient temp. sensor.

   3) Measure resistance between terminal "1" of ambient temp. sensor and chassis ground.

Specification : Approx. ∞Ω

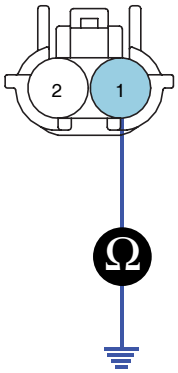

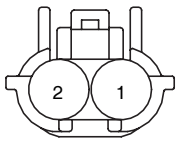

1. Ambient temp. sensor signal(+)
2. Ambient temp. sensor ground

SCMHA6534L

   4) Is the measured resistance within specifications?

YES

Go to "Component Inspection" procedure.

NO

Check for short to ground in harness. Repair as necessary and go to "Verification of Vehicle Repair" procedure.

COMPONENT INSPECTION E3B39A1B

1. Check Ambient temp. sensor.

   1) Ignition "OFF"

   2) Disconnect ambient temp. sensor.

   3) Measure resistance between terminal "1" and "2" of ambient temp. sensor.

Specification : Refer the specifications in fig 3.

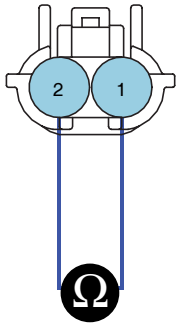

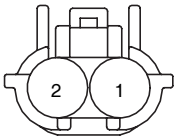

1. Ambient temp. sensor signal
2. Ambient temp. sensor ground

SCMHA6535L

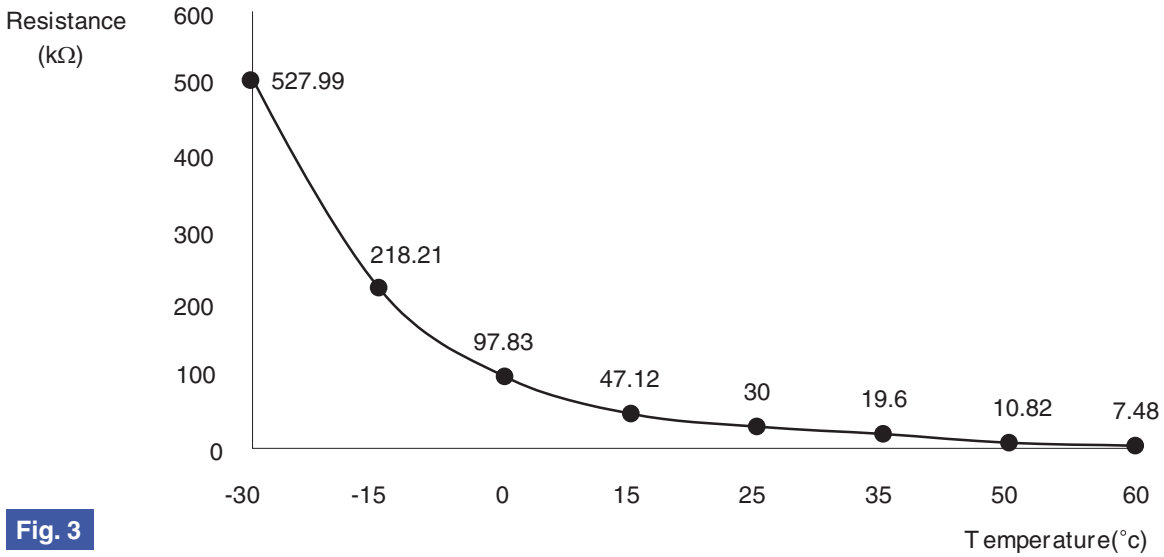

Fig. 3

Fig 3) Specifications : Resistance value of ambient temp. sensor as a function of temperature.

EQBF516F

4) Is the measured resistance within specifications in fig3? (tolerance limits ±3%)

YES

Go to "Check A/C Control Unit" procedure.

NO

Substitute with a known-good ambient temp. sensor and check for proper operation.
If the problem is corrected, replace ambient temp. sensor and then go to "Verification of Vehicle Repair" procedure.

2. Check A/C Control Unit

1) Engine "ON"

2) Disconnect ambient temp. sensor.

3) Measure voltage between terminal "3" of A/C Control Unit and chassis ground.

Specification : Approx. 5V

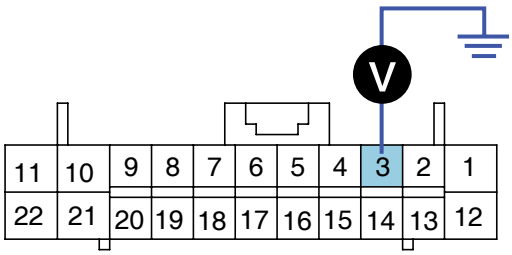

3. Ambient temp. sensor signal

SCMHA6536L

4) Is the measured voltage within specifications?

YES

Check connectors for looseness, poor connection, bending, corrosion, contamination, deterioration, or damage. Repair or replace as necessary and then go to "Verification of Vehicle Repair" procedure.

NO

Substitute with a known-good A/C Control Unit and check for proper operation.
If the problem is corrected, replace A/C Control Unit and then go to "Verification of Vehicle Repair" procedure.

VERIFICATION OF VEHICLE REPAIR EC81091E

After a repair, it is essential to verify that the fault has been corrected.

1. Connect scantool and select "Diagnostic Trouble Codes(DTCs)" mode and then clear DTC.
2. Operate the vehicle and monitor the DTC on the scantool.
3. Are any DTCs present?

YES

Go to the applicable troubleshooting procedure.

NO

System is performing to specification at this time.

DTC B1238 AMBIENT TEMPERATURE SENSOR OPEN (HIGH)

COMPONENT LOCATION EDF1649A

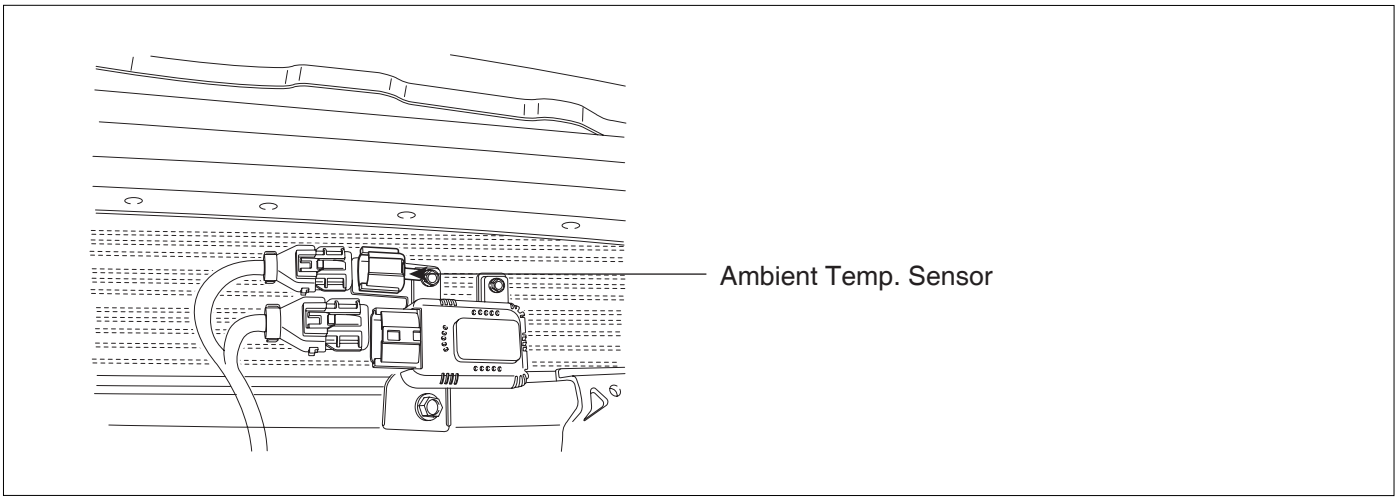

SCMHA6703L

GENERAL DESCRIPTION E4951473

The ambient temperature senor located at the center stay of the condenser, detects ambient air temperature. It is a negative type thermistor whose resistance is inversely proportional to temperature. Its output is used for discharge temperature sensor, sensor fail-safe, temperature regulation door lock, blower motor level control, mix mode control and in-car humidity control.

DTC DESCRIPTION EBEAF741

The A/C controller sets DTC B1238 if there is an open circuit in ambient temp. sensor signal harness or the measured resistance value of sensor is more than threshold value(about 527kΩ)

DTC DETECTING CONDITION ECC7468F

Item	Detecting Condition	Possible cause
DTC Strategy	• Resistance check	• Open Circuit in harness • Faulty ambient temp. Sensor • Faulty A/C control unit
Threshold value	• > 527kΩ	
Detecting time	• 0.3 sec	
FAIL SAFE	• Control with the value of 20°C(67°F)	

SPECIFICATION E611C585

Refer to DTC B1237.

MONITOR SCANTOOL DATA E1C87A66

1. Connect scantool to Data Link Connector(DLC).
2. Engine "ON"
3. Monitor the "AMBIENT TEMP. SENSOR" Parameter on the Scantool.

※ Parameter of "AMBIENT TEMP. SENSOR" will be fixed at 20℃(67°F), if there is any fault in AMBIENT TEMP. SENSOR.

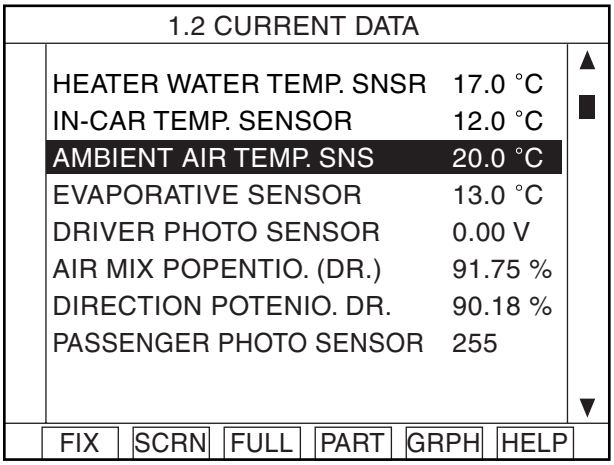

Fig. 1

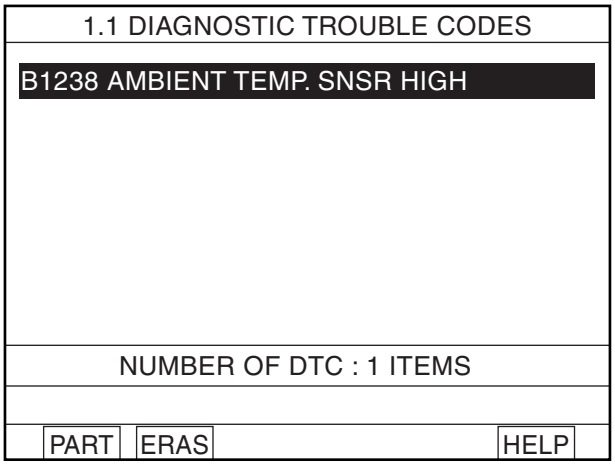

Fig. 2

Fig 1 : The current data in abnormal state.
Fig 2 : DTC B1238.

EQBF517A

4. Are the DTC B1238 present and is parameter of "AMBIENT TEMP. SENSOR" fixed?

YES

Go to "Inspection" procedure.

NO

Fault is intermittent caused by poor contact in the sensor's and/or A/C controller's connector or was repaired and A/C controller memory was not cleared. Thoroughly check connectors for looseness, poor connection, bending, corrosion, contamination, deterioration, or damage. Repair or replace as necessary and then go to "Verification of Vehicle Repair" procedure.

TERMINAL AND CONNECTOR INSPECTION E7F0FB77

Refer to DTC B1237.

SIGNAL CIRCUIT INSPECTION E124C6B6

1. Check for open in harness.
   1) Ignition "OFF"
   2) Disconnect ambient temp. sensor.
   3) Measure resistance between terminal "1" of ambient temp. sensor and terminal "3" of A/C Control Unit.

Specification : Approx. 0 Ω

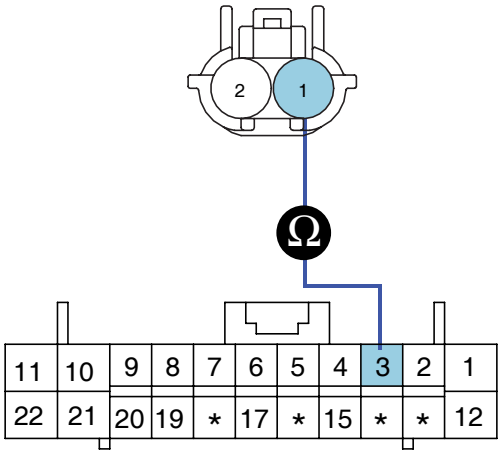

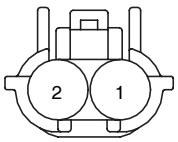

1. Ambient temp. sensor signal(+)
2. Ambient temp. sensor ground

SCMHA6537L

4) Is the measured resistance within specifications?

YES

Go to "Ground circuit Inspection " procedure.

NO

Check for open in harness. Repair as necessary and go to "Verification of Vehicle Repair" procedure.

GROUND CIRCUIT INSPECTION EA9F4A89

1. Check for open in ground harness.

1) Ignition "OFF"

2) Disconnect ambient temp. sensor.

3) Measure resistance between terminal "2" of ambient temp. sensor and chassis ground.

Specification : Approx. 0 Ω

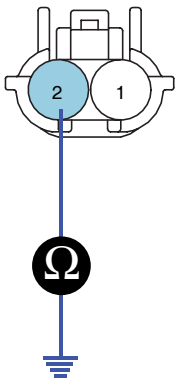

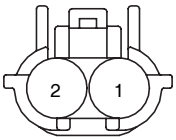

1. Ambient temp. sensor signal(+)
2. Ambient temp. sensor ground

SCMHA6538L

4) Is the measured resistance within specifications?

YES

Go to "Component Inspection " procedure.

NO

Check for open in ground harness. Repair as necessary and go to "Verification of Vehicle Repair" procedure.

COMPONENT INSPECTION E513CAB3

Refer to DTC B1237.

VERIFICATION OF VEHICLE REPAIR E58CEDF6

Refer to DTC B1237.

DTC B1241 EVAPORATOR TEMPERATURE SENSOR SHORT (LOW)

COMPONENT LOCATION E486BCF6

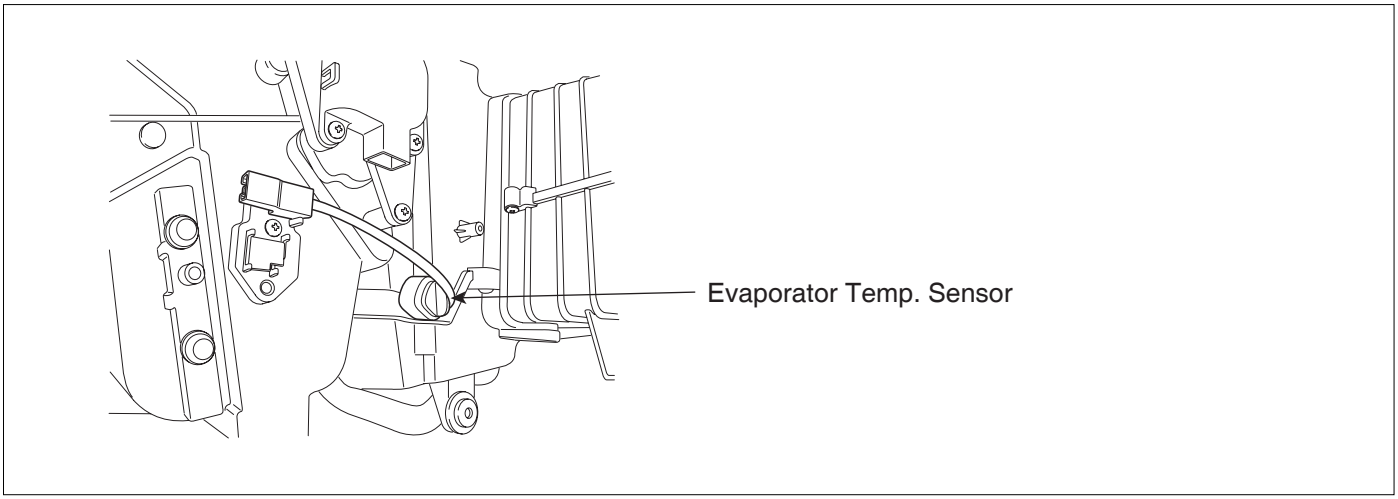

SCMHA6704L

GENERAL DESCRIPTION E8813265

The Evaporator temperature sensor located on heater unit, detects the core temperature and interrupts compressor relay power, in order to prevent evaporator freezing by excessive cooling. It is a negative type thermistor whose resistance is inversely proportional to temperature.

DTC DESCRIPTION E059C248

The A/C controller sets DTC B1241 if there is a short circuit in evaporator temp. sensor signal harness or the measured resistance value of sensor is less than threshold value(about 0.9kΩ)

DTC DETECTING CONDITION E71F012F

Item	Detecting Condition	Possible cause
DTC Strategy	• Resistance check	• Short circuit in harness • Faulty Evaporator temp. Sensor • Faulty A/C control unit
Threshold value	• < 0.9kΩ	
Detecting time	• 0.3 sec	
FAIL SAFE	• Control with the value of -2°C(28.4°F)	

SPECIFICATION E8C0ABD9

※ Resistence value of evaporator sensor as a function of temperature.

Temperature[°C(°F)]	Resistance(kΩ)	Temperature[°C(°F)]	Resistance(kΩ)
-10(14)	13.6	15(59)	3.9
0(32)	8	30(86)	2
5(41)	6.2	40(104)	1.3
10(50)	4.9	50(122)	0.9

MONITOR SCANTOOL DATA E6823FFB

1. Connect scantool to Data Link Connector(DLC).
2. Engine "ON"
3. Monitor the "EVAPORATIVE SENSOR" Parameter on the Scantool.

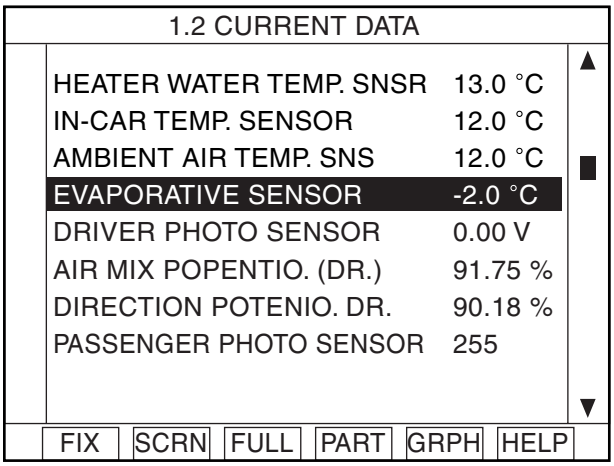

Fig. 1

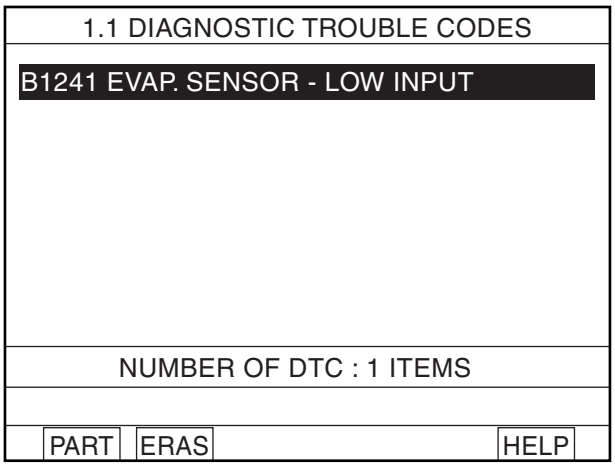

Fig. 2

Fig 1 : The current data in abnormal state.
Fig 2 : DTC B1241.

EQBF519B

4. Are the DTC B1241 present and is parameter of "EVAPORATIVE SENSOR" fixed?
※ Parameter of "EVAPORATIVE SENSOR" will be fixed at -2℃(28.4˚F), if there is any fault in EVAPORATIVE SENSOR.

YES

Go to "Inspection" procedure.

NO

Fault is intermittent caused by poor contact in the sensor's and/or A/C controller's connector or was repaired and A/C controller memory was not cleared. Thoroughly check connectors for looseness, poor connection, bending, corrosion, contamination, deterioration, or damage. Repair or replace as necessary and then go to "Verification of Vehicle Repair" procedure.

TERMINAL AND CONNECTOR INSPECTION EAF84DC8

1. Many malfunctions in the electrical system are caused by poor harness and terminals.
Faults can also be caused by interference from other electrical systems, and mechanical or chemical damage.
2. Thoroughly check connectors for looseness, poor connection, bending, corrosion, contamination, deterioration, or damage.
3. Has a problem been found?

YES

Repair as necessary and go to "Verification of Vehicle Repair" procedure.

NO

Go to "Signal circuit inspection" procedure.

SIGNAL CIRCUIT INSPECTION EAF42A6E

1. Check for short to ground in harness.
   1) Ignition "OFF"
   2) Disconnect evaporator temp. sensor.
   3) Measure resistance between terminal "1" of evaporator temp. sensor and chassis ground.

Specification : Approx. ∞Ω

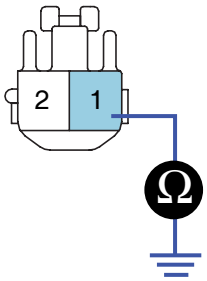

1. Evaporator temp. sensor signal
2. Evaporator temp. sensor ground

SCMHA6539L

   4) Is the measured resistance within specifications?

YES

Go to "Component Inspection" procedure.

NO

Check for short to ground in harness. Repair as necessary and go to "Verification of Vehicle Repair" procedure.

COMPONENT INSPECTION EB45B875

1. Check evaporator temp. sensor.
   1) Ignition "OFF"
   2) Disconnect evaporator temp. sensor.
   3) Measure resistance between terminal "1" and "2" of evaporator temp. sensor.

Specification : Refer the specifications in fig 3.

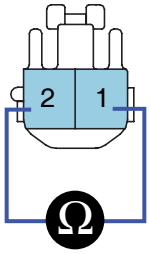

1. Evaporator temp. sensor signal
2. Evaporator temp. sensor ground

SCMHA6540L

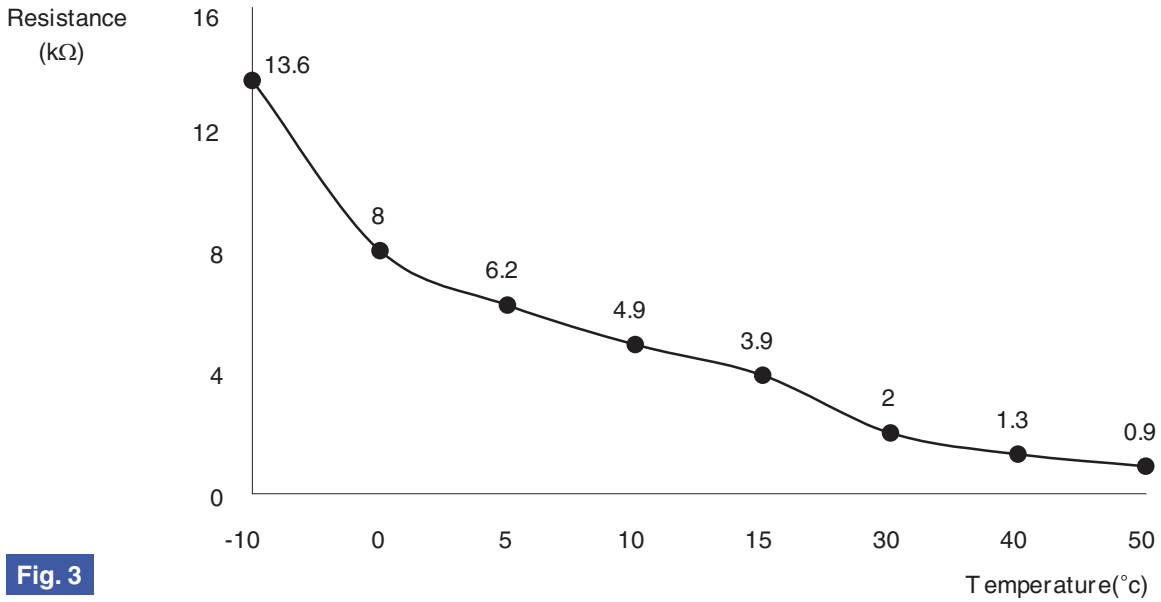

Fig. 3

Fig 3) Specifications : Resistance value of evaporator temp. sensor as a function of temperature.

EQBF519F

4) Is the measured resistance within specifications in fig3? (tolerance limits ±3%)

YES

Go to "Check A/C Control Unit" procedure.

NO

Substitute with a known-good evaporator temp. sensor and check for proper operation.
If the problem is corrected, replace evaporator temp. sensor and then go to "Verification of Vehicle Repair" procedure.

2. Check A/C Control Unit

1) Engine "ON"

2) Disconnect evaporator temp. sensor.

3) Measure voltage between terminal "6" of A/C Control Unit and chassis ground.

Specification : Approx. 5V

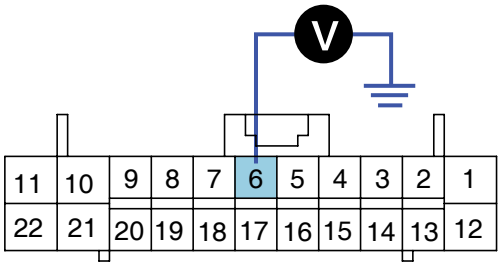

6. Evaporator temp. sensor signal

SCMHA6541L

4) Is the measured voltage within specifications?

YES

Check connectors for looseness, poor connection, bending, corrosion, contamination, deterioration, or damage. Repair or replace as necessary and then go to "Verification of Vehicle Repair" procedure.

NO

Substitute with a known-good A/C Control Unit and check for proper operation.
If the problem is corrected, replace A/C Control Unit and then go to "Verification of Vehicle Repair" procedure.

VERIFICATION OF VEHICLE REPAIR E32624E3

After a repair, it is essential to verify that the fault has been corrected.

1. Connect scantool and select "Diagnostic Trouble Codes(DTCs)" mode and then clear DTC.
2. Operate the vehicle and monitor the DTC on the scantool.
3. Are any DTCs present?

YES

Go to the applicable troubleshooting procedure.

NO

System is performing to specification at this time.

DTC B1242 EVAPORATOR TEMPERATURE SENSOR OPEN (HIGH)

COMPONENT LOCATION EB9F7C1F

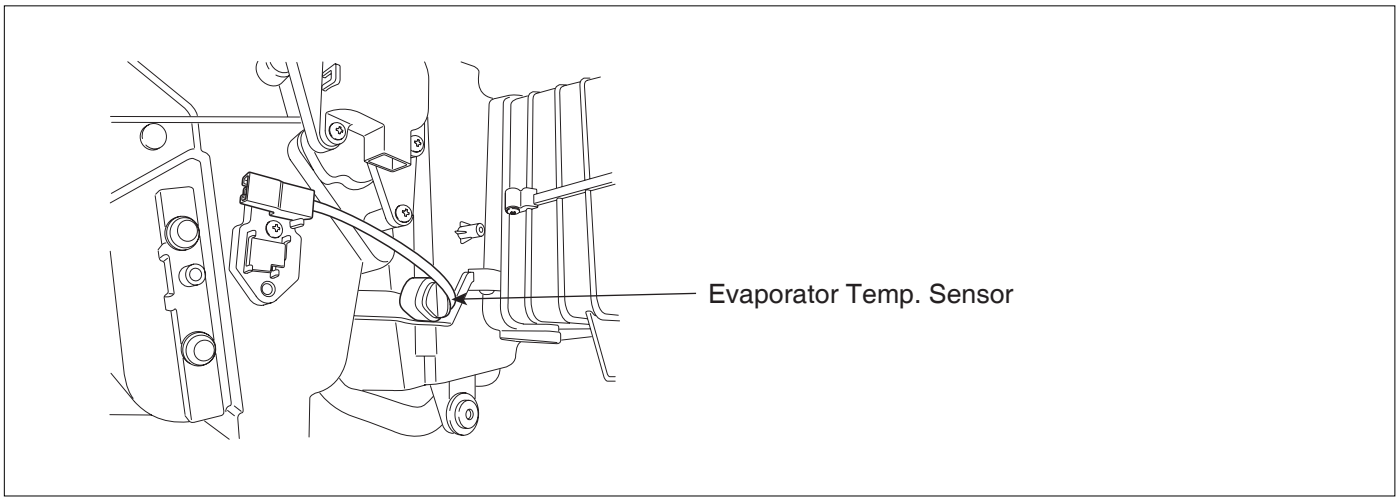

SCMHA6704L

GENERAL DESCRIPTION E073E679

The Evaporator temperature sensor located on heater unit, detects the core temperature and interrupts compressor relay power, in order to prevent evaporator freezing by excessive cooling. It is a negative type thermistor whose resistance is inversely proportional to temperature.

DTC DESCRIPTION E9354B2A

The A/C controller sets DTC B1242 if there is an open circuit in evaporator temp. sensor signal harness or the measured resistance value of sensor is more than threshold value(about 13.6kΩ)

DTC DETECTING CONDITION E61B9B78

Item	Detecting Condition	Possible cause
DTC Strategy	• Resistance check	• Open Circuit in harness • Faulty Evaporator temp. Sensor • Faulty A/C control unit
Threshold value	• > 13.6kΩ	
Detecting time	• 0.3 sec	
FAIL SAFE	• Control with the value of -2°C(28.4°F)	

SPECIFICATION E70F7716

Refer to DTC B1241.

MONITOR SCANTOOL DATA E1C7971C

1. Connect scantool to Data Link Connector(DLC).
2. Engine "ON"
3. Monitor the "EVAPORATIVE SENSOR" Parameter on the Scantool.

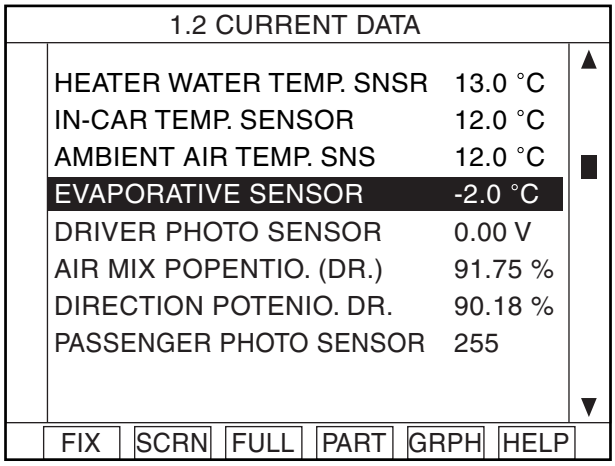

Fig. 1

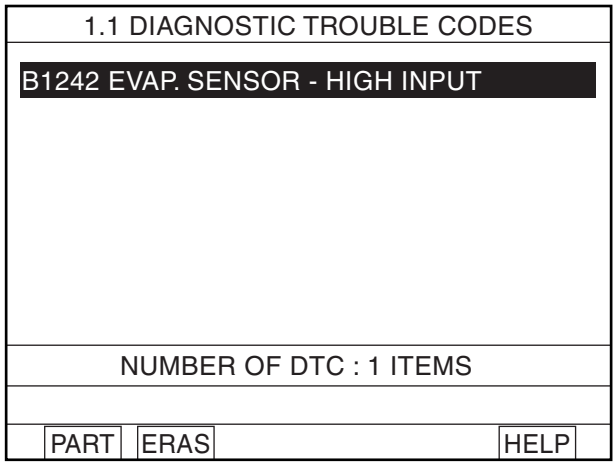

Fig. 2

Fig 1 : The current data in abnormal state.
Fig 2 : DTC B1242.

EQBF520A

4. Are the DTC B1242 present and is parameter of "EVAPORATIVE SENSOR" fixed?
※ Parameter of "EVAPORATIVE SENSOR" will be fixed at -2℃(28.4°F), if there is any fault in EVAPORATIVE SENSOR.

YES

Go to "Inspection" procedure.

NO

Fault is intermittent caused by poor contact in the sensor's and/or A/C controller's connector or was repaired and A/C controller memory was not cleared. Thoroughly check connectors for looseness, poor connection, bending, corrosion, contamination, deterioration, or damage. Repair or replace as necessary and then go to "Verification of Vehicle Repair" procedure.

TERMINAL AND CONNECTOR INSPECTION E2790250

Refer to DTC B1241.

SIGNAL CIRCUIT INSPECTION EE8145E7

1. Check for open in harness.

   1) Ignition "OFF"

   2) Disconnect evaporator temp. sensor.

   3) Measure resistance between terminal "1" of evaporator temp. sensor and terminal "6" of A/C Control Unit.

Specification : Approx. 0 Ω

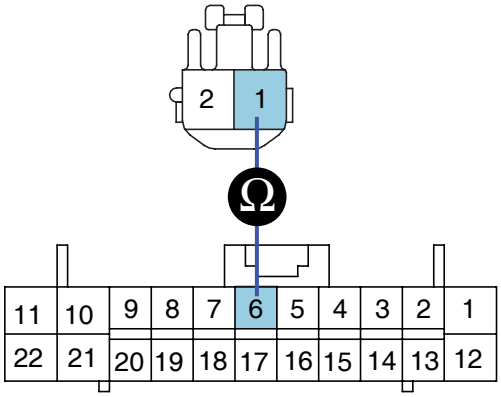

1. Evaporator temp. sensor signal
2. Evaporator temp. sensor ground

SCMHA6542L

4) Is the measured resistance within specifications?

YES

Go to "Ground circuit Inspection " procedure.

NO

Check for open in harness. Repair as necessary and go to "Verification of Vehicle Repair" procedure.

GROUND CIRCUIT INSPECTION ED7ACE72

1. Check for open in ground harness.
   1) Ignition "OFF"
   2) Disconnect evaporator temp. sensor.
   3) Measure resistance between terminal "2" of evaporator temp. sensor and chassis ground.

Specification : Approx. 0 Ω

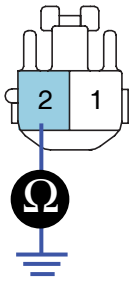

1. Evaporator temp. sensor signal
2. Evaporator temp. sensor ground

SCMHA6543L

4) Is the measured resistance within specifications?

YES

Go to "Component Inspection " procedure.

NO

Check for open in harness. Repair as necessary and go to "Verification of Vehicle Repair" procedure.

COMPONENT INSPECTION EAB63ADA

Refer to DTC B1241.

VERIFICATION OF VEHICLE REPAIR E70127E7

Refer to DTC B1241.

DTC B1245 AIR MIX POTENTIOMETER OPEN (LOW) - DRIVER

COMPONENT LOCATION E719A3CD

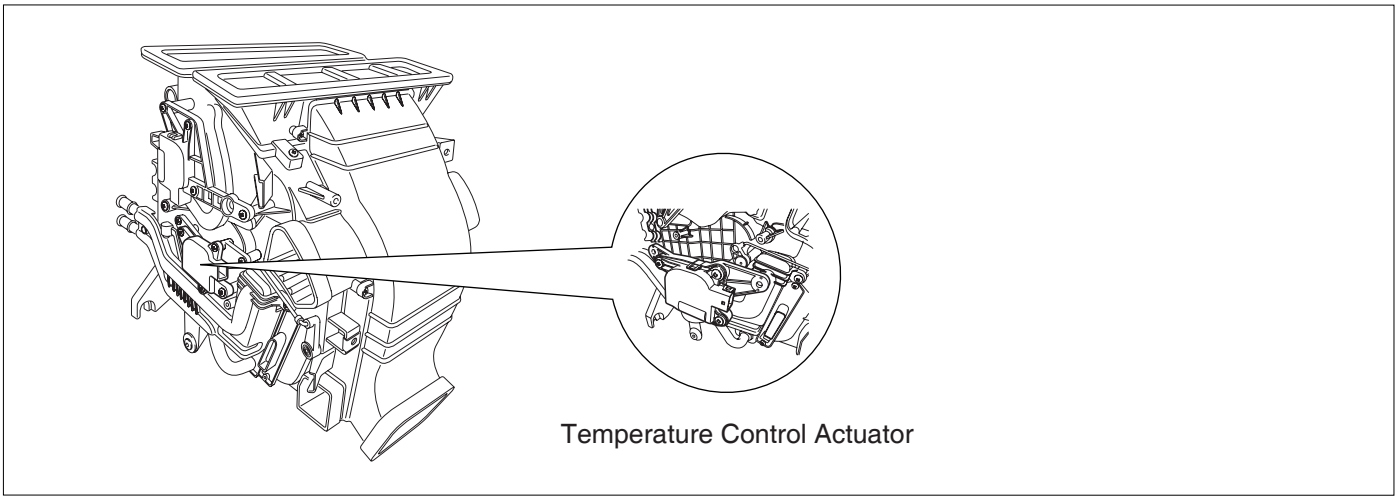

SCMHA6705L

GENERAL DESCRIPTION E1CAAD32

Temperature control actuator located at heater unit, regulates the temperature by the procedure as follows. Signal from control unit adjusts position of temp. door by operating temp. motor and then temperature will be regulated by the hot/cold air ratio decided by position of temp. door.

DTC DESCRIPTION E60167C1

The A/C controller sets DTC B1245 if there is an open circuit or poor connection in the air mix potentiometer.

DTC DETECTING CONDITION E5EC5C4F

Item	Detecting Condition	Possible cause
DTC Strategy	• Voltage check	• Poor connection of connected part • Open circuit in harness • Short circuit in harness • Faulty driver Air Mix potentiometer
Threshold value	• < 0.1V	
Detecting time	• 0.3 sec	
FAIL SAFE	• If temperature setting 17~24.5°C(63~76°F) fix at max. cooling position. • If temperature setting 25~32°C(77~90°F) fix at max. heating position.	

SPECIFICATION E0B2DE0B

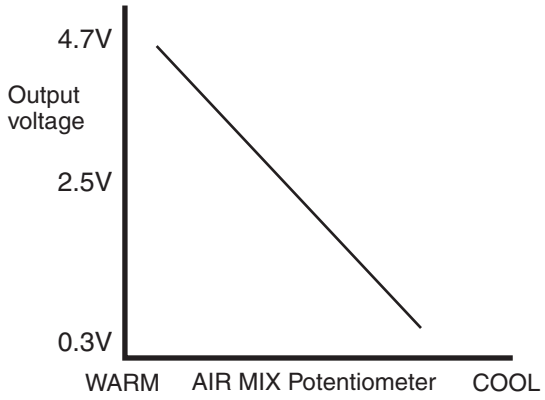

EQBF521B

MONITOR SCANTOOL DATA ED7CC1EA

1. Connect scantool to Data Link Connector(DLC).
2. Engine "ON"
3. Monitor the "Driver Air Mix Potentiometer" Parameter on the Scantool while operating temp. switch.

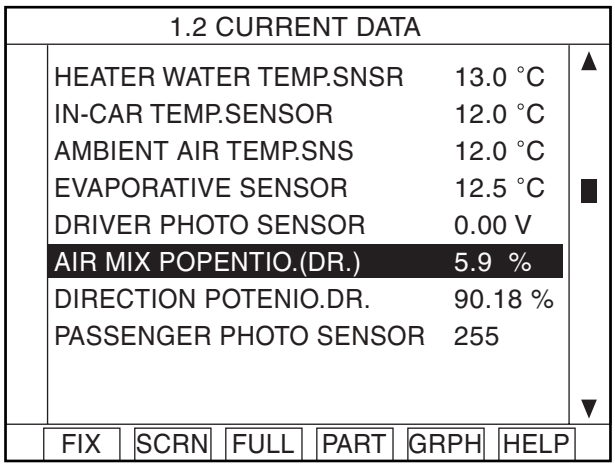

Fig. 1

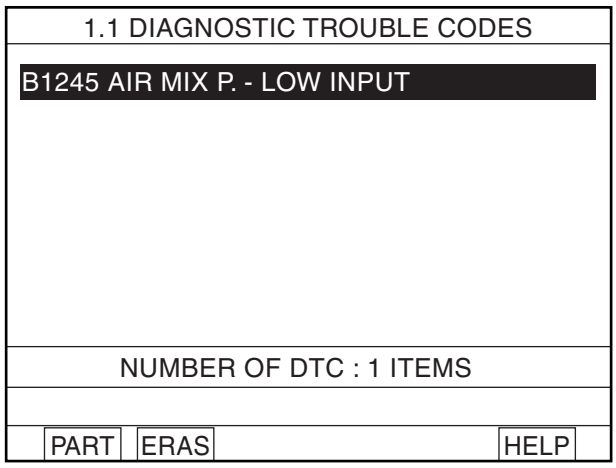

Fig. 2

Fig 1 : The current data in abnormal state.
Fig 2 : DTC B1245.

EQBF521C

4. Are the DTC B1245 present and is parameter of "Driver Air Mix Potentiometer" fixed?
※ Parameter of "Driver Air Mix Potentiometer" will be fixed at 100%(or any value above 90%), or 0% (or any value below 10%), if there is any fault in Driver Air Mix potentiometer.

YES

Go to "Inspection" procedure.

NO

Fault is intermittent caused by poor contact in the sensor's and/or A/C controller's connector or was repaired and A/C controller memory was not cleared. Thoroughly check connectors for looseness, poor connection, bending, corrosion, contamination, deterioration, or damage. Repair or replace as necessary and then go to "Verification of Vehicle Repair" procedure.

TERMINAL AND CONNECTOR INSPECTION E3032942

1. Many malfunctions in the electrical system are caused by poor harness and terminals.
   Faults can also be caused by interference from other electrical systems, and mechanical or chemical damage.
2. Thoroughly check connectors for looseness, poor connection, bending, corrosion, contamination, deterioration, or damage.
3. Has a problem been found?

YES

Repair as necessary and go to "Verification of Vehicle Repair" procedure.

NO

Go to "Signal circuit inspection" procedure.

SIGNAL CIRCUIT INSPECTION EC98F659

1. Check for open in harness.
   1) Ignition "OFF"
   2) Disconnect Driver Air Mix potentiometer.
   3) Measure resistance between terminal "6" of Driver Air Mix Potentiometer and terminal "18" of A/C control unit.

Specification : Approx. 0 Ω

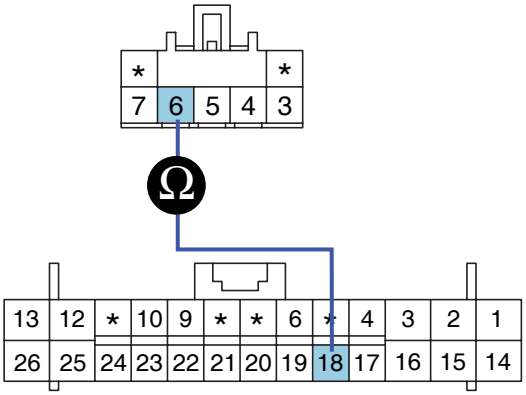

3. Motor (Cool)
4. Motor (Warm)
5. Sensor reference voltage(+5V)
6. **Potentiometer signal**
7. Potentiometer ground

SCMHA6544L

   4) Is the measured resistance within specifications?

YES

Go to "Check for short to ground in harness" procedure.

NO

Check for open in signal harness. Repair as necessary and go to "Verification of Vehicle Repair" procedure.

2. Check for short to ground in harness.

   1) Ignition "OFF"

   2) Disconnect Driver Air Mix potentiometer.

   3) Measure resistance between terminal "6" of Driver Air Mix Potentiometer and chassis ground.

Specification : Approx. ∞ Ω

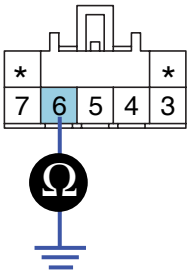

3. Motor (Cool)
4. Motor (Warm)
5. Sensor reference voltage(+5V)
6. Potentiometer signal
7. Potentiometer ground

SCMHA6545L

   4) Is the measured resistance within specifications?

YES

Go to "Power circuit Inspection" procedure.

NO

Check for short to ground in signal harness. Repair as necessary and go to "Verification of Vehicle Repair" procedure.

POWER SUPPLY CIRCUIT INSPECTION E2387022

1. Check for short or open in harness.

   1) Ignition "ON"

   2) Connect Driver Air Mix Potentiometer.

   3) Measure voltage between terminal "7" of Driver Air Mix Potentiometer and chassis ground.

Specification : Approx. 5V

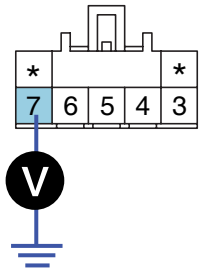

3. Motor (Cool)
4. Motor (Warm)
5. Sensor reference voltage(+5V)
6. Potentiometer signal
7. Potentiometer ground

SCMHA6546L

4) Is the measured voltage within specifications?

YES

Go to "Component inspection" procedure.

NO

Check for short or open in power harness. Repair as necessary and go to "Verification of Vehicle Repair" procedure.

COMPONENT INSPECTION EFB9A59D

1. Check actuator motor.

1) Ignition "OFF"

2) Disconnect Driver Air Mix Potentiometer.

3) Verify that the temperature actuator operates to the hot position when connecting 12V to the terminal "3" and grounding terminal "4".

4) Verify that the temperature actuator operates to the cool position when the connections are reversed.

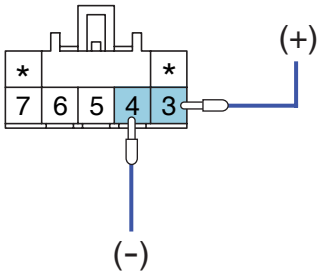

3. Motor (Cool)
4. Motor (Warm)
5. Sensor reference voltage(+5V)
6. Potentiometer signal
7. Potentiometer ground

SCMHA6547L

5) Does the actuator work properly?

YES

Go to "Check potentiometer" procedure.

NO

Substitute with a known-good actuator and check for proper operation. If the problem is corrected, replace actuator and then go to "Verification of Vehicle Repair" procedure.

2. Check potentiometer

1) Ignition "ON"

2) Connect Driver Air Mix potentiometer.

3) Measure voltage between terminal "6" and "7" of Driver Air Mix potentiometer while operating the temp. switch.

Specification : Refer the specifications in fig 3)

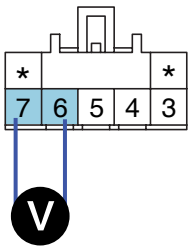

3. Motor (Cool)
4. Motor (Warm)
5. Sensor reference voltage(+5V)
6. Potentiometer signal
7. Potentiometer ground

SCMHA6548L

Door position	Voltage (6-7)	Error detecting
MAX. Cooling	0.3 ± 0.15V	Low voltage : 0.08V or less
MAX. Heating	4.7 ± 0.15V	High voltage : 4.9V or more

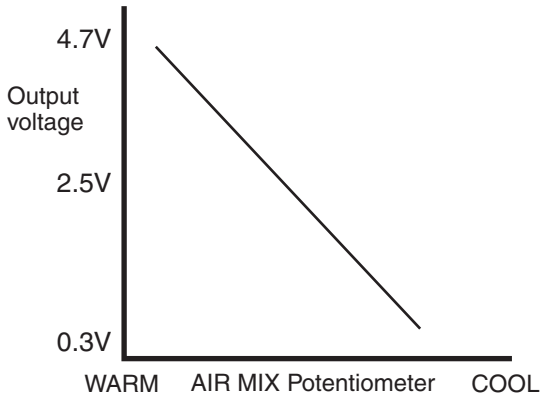

Fig. 3

Fig 3) Specifications : Voltage value of air mix potentiometer as a function of position of setting temperature.

EQBF521J

4) Is the measured voltage within specifications in fig3?

YES

Check connectors for looseness, poor connection, bending, corrosion, contamination, deterioration, or damage. Repair or replace as necessary and then go to "Verification of Vehicle Repair" procedure.

NO

Substitute with a known-good actuator and check for proper operation. If the problem is corrected, replace actuator and then go to "Verification of Vehicle Repair" procedure.

VERIFICATION OF VEHICLE REPAIR E883B840

After a repair, it is essential to verify that the fault has been corrected.

1. Connect scantool and select "Diagnostic Trouble Codes(DTCs)" mode and then clear DTC.
2. Operate the vehicle and monitor the DTC on the scantool.
3. Are any DTCs present?

YES

Go to the applicable troubleshooting procedure.

NO

System is performing to specification at this time.

DTC B1246 AIR MIX POTENTIOMETER SHORT (HIGH) - DRIVER

COMPONENT LOCATION E3948C9B

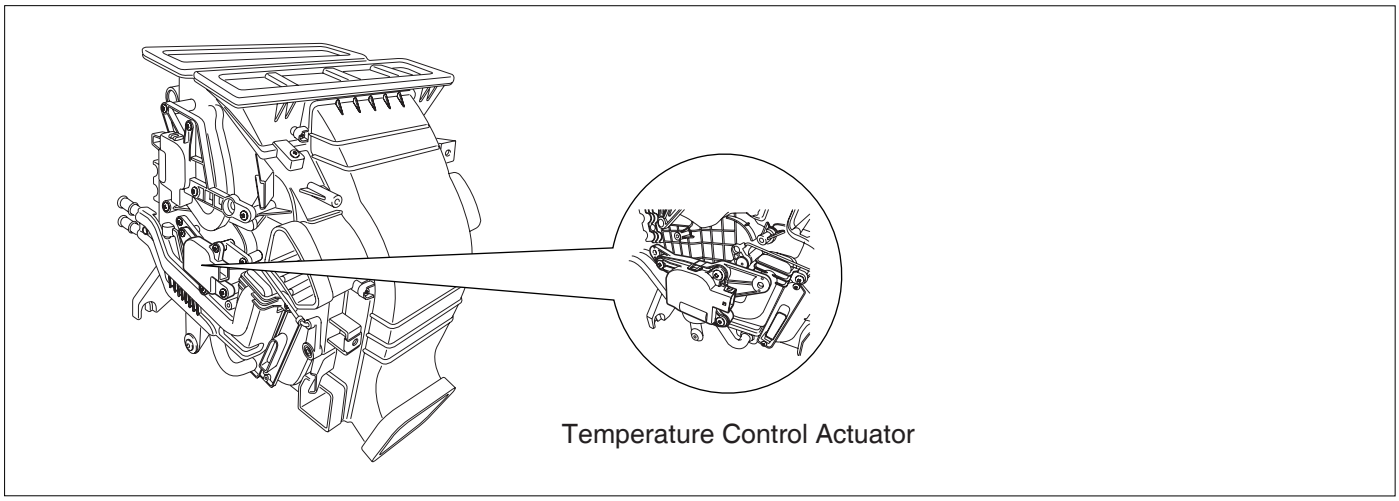

SCMHA6705L

GENERAL DESCRIPTION E8B15D5D

Temperature control actuator located at heater unit, regulates the temperature by the procedure as follows. Signal from control unit adjusts position of temp. door by operating temp. motor and then temperature will be regulated by the hot/cold air ratio decided by position of temp. door.

DTC DESCRIPTION ECABD6D9

The A/C controller sets DTC B1246 if there is a short to power in the air mix potentiometer.

DTC DETECTING CONDITION E946FDCA

Item	Detecting Condition	Possible cause
DTC Strategy	• Voltage check	• Short circuit in harness • Faulty driver Air Mix potentiometer
Threshold value	• > 4.9V	
Detecting time	• 0.3 sec	
FAIL SAFE	• If temperature setting 17~24.5°C(63~76°F) fix at max. cooling position. • If temperature setting 25~32°C(77~90°F) fix at max. heating position.	

SPECIFICATION ED6C5BE4

Refer to DTC B1245.

MONITOR SCANTOOL DATA E0F5D9A1

1. Connect scantool to Data Link Connector(DLC).
2. Engine "ON"

3. Monitor the "Driver Air Mix Potentiometer" Parameter on the Scantool while operating temp. switch.

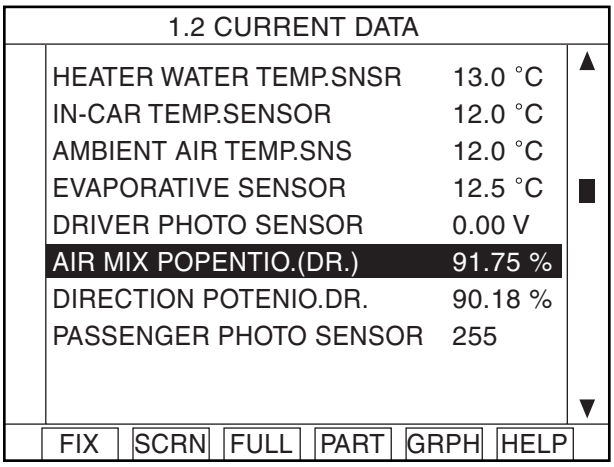

Fig. 1

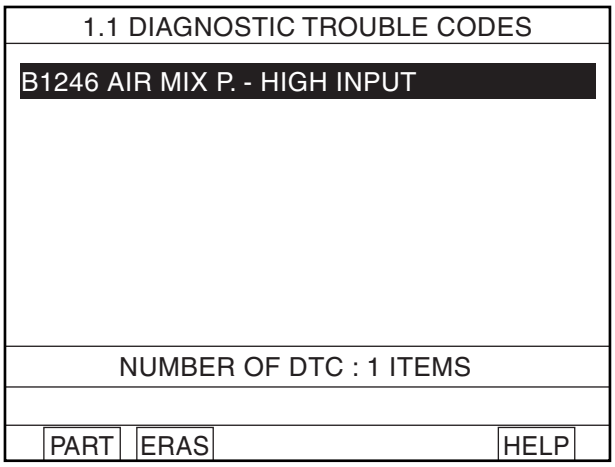

Fig. 2

Fig 1 : The current data in abnormal state.
Fig 2 : DTC B1246.

EQBF522A

4. Are the DTC B1246 present and is parameter of "Driver Air Mix potentiometer" fixed?
※ Parameter of "Driver Air Mix potentiometer" will be fixed at 100%(or any value above 90%), or 0% (or any value below 10%), if there is any fault in Driver Air Mix potentiometer.

YES

Go to "Inspection" procedure.

NO

Fault is intermittent caused by poor contact in the sensor's and/or A/C controller's connector or was repaired and A/C controller memory was not cleared. Thoroughly check connectors for looseness, poor connection, bending, corrosion, contamination, deterioration, or damage. Repair or replace as necessary and then go to "Verification of Vehicle Repair" procedure.

TERMINAL AND CONNECTOR INSPECTION EFE9FA90

Refer to DTC B1245.

SIGNAL CIRCUIT INSPECTION EC608CD7

1. Check for short in harness.

   1) Ignition "OFF"

   2) Disconnect Driver Air Mix potentiometer.

   3) Measure resistance between terminal "6" and "5" of Driver Air Mix potentiometer.

Specification : Approx. ∞ Ω

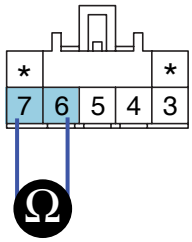

3. Motor (Cool)
4. Motor (Warm)
5. Sensor reference voltage(+5V)
6. Potentiometer signal
7. Potentiometer ground

SCMHA6549L

4) Is the measured resistance within specifications?

YES

Go to "Ground circuit Inspection" procedure.

NO

Check for short to power harness in signal harness. Repair as necessary and go to "Verification of Vehicle Repair" procedure.

GROUND CIRCUIT INSPECTION E4163DA5

1. Check for open in harness.

1) Ignition "OFF"

2) Disconnect Driver Air Mix Potentiometer.

3) Measure resistance between terminal "7" of Driver Air Mix Potentiometer and chassis ground.

Specification : Approx. 0 Ω

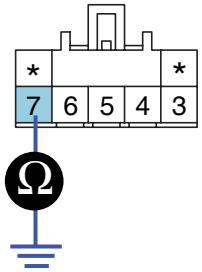

3. Motor (Cool)
4. Motor (Warm)
5. Sensor reference voltage(+5V)
6. Potentiometer signal
7. Potentiometer ground

SCMHA6550L

4) Is the measured resistance within specifications?

YES

Go to "Component Inspection" procedure.

NO

Check for open in ground harness. Repair as necessary and go to "Verification of Vehicle Repair" procedure.

COMPONENT INSPECTION E74FBEDE

Refer to DTC B1245.

VERIFICATION OF VEHICLE REPAIR EB8C6BA5

Refer to DTC B1245.

DTC B1249 DIRECTION POTENTIOMETER OPEN (LOW) - DRIVER

COMPONENT LOCATION E1A16B4D

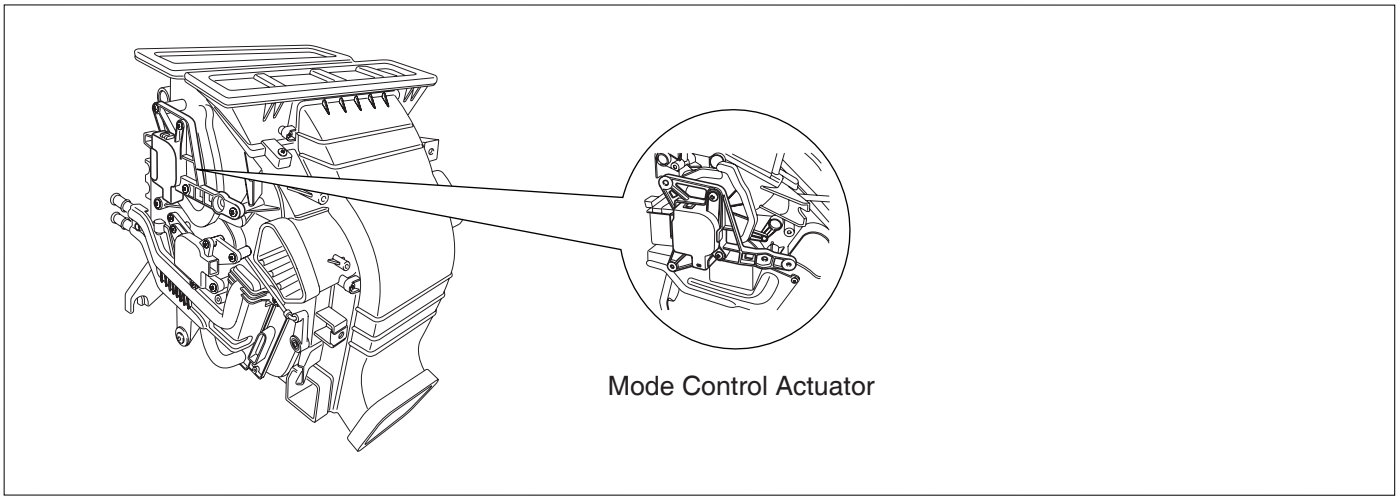

SCMHA6706L

GENERAL DESCRIPTION E25C3DBB

The mode control actuator mounted on heater unit, adjusts position of mode door by operating Direction Motor based on signal of A/C control unit. Pressing mode select switch makes the mode control actuator shift in order of vent→ B/L → floor → mix.

DTC DESCRIPTION E2F32A26

The A/C controller sets DTC B1249 if there is an open circuit or poor connection in the Direction potentiometer.

DTC DETECTING CONDITION E699D917

Item	Detecting Condition	Possible cause
DTC Strategy	• Voltage check	• Poor connection of connected part • Open circuit in harness • Short circuit in harness • Faulty driver direction potentiometer
Threshold value	• < 0.1V	
Detecting time	• 0.3 sec	
FAIL SAFE	• Fix vent position, while selecting vent mode. • Fix defrost position while selecting except vent mode.	

SPECIFICATION E0101031

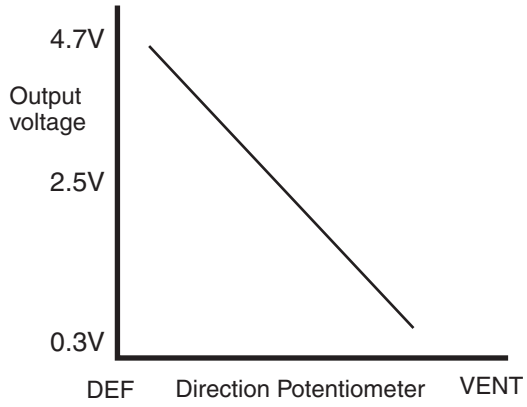

EQBF523B

MONITOR SCANTOOL DATA E63388EE

1. Connect scantool to Data Link Connector(DLC).
2. Engine "ON"
3. Monitor the "DR. DIRECTION POTENTIO." parameter on the scantool while operating mode switch.

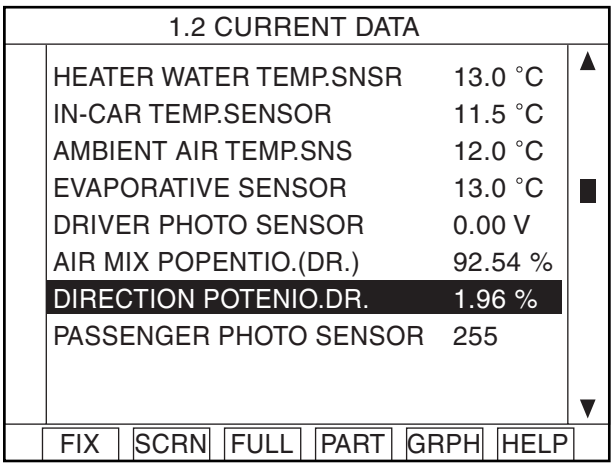

Fig. 1

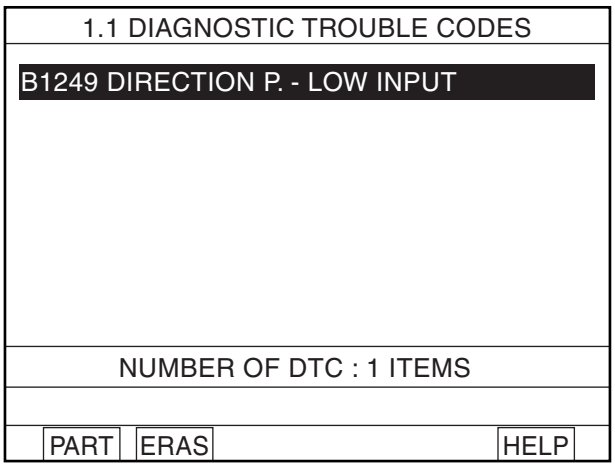

Fig. 2

Fig 1 : The current data in abnormal state.
Fig 2 : DTC B1249.

EQBF523C

4. Are the DTC B1249 present and is parameter of "DR. DIRECTION POTENTIO." fixed?
※ Parameter of "DR. DIRECTION POTENTIO." will be fixed at 100%(or any value above 90%), or 0% (or any value below 10%), if there is any fault in Driver Direction potentiometer.

YES

Go to "Inspection" procedure.

NO

Fault is intermittent caused by poor contact in the sensor's and/or A/C controller's connector or was repaired and A/C controller memory was not cleared. Thoroughly check connectors for looseness, poor connection, bending, corrosion, contamination, deterioration, or damage. Repair or replace as necessary and then go to "Verification of Vehicle Repair" procedure.

TERMINAL AND CONNECTOR INSPECTION E3E72485

1. Many malfunctions in the electrical system are caused by poor harness and terminals.
   Faults can also be caused by interference from other electrical systems, and mechanical or chemical damage.
2. Thoroughly check connectors for looseness, poor connection, bending, corrosion, contamination, deterioration, or damage.
3. Has a problem been found?

YES

Repair as necessary and go to "Verification of Vehicle Repair" procedure.

NO

Go to "Signal circuit inspection" procedure.

SIGNAL CIRCUIT INSPECTION EEDADDD6

1. Check for open in harness.
   1) Ignition "OFF"
   2) Disconnect Driver mode Actuator.
   3) Measure resistance between terminal "6" of Driver Direction potentiometer and terminal "21" of A/C control unit.

Specification : Approx. 0 Ω

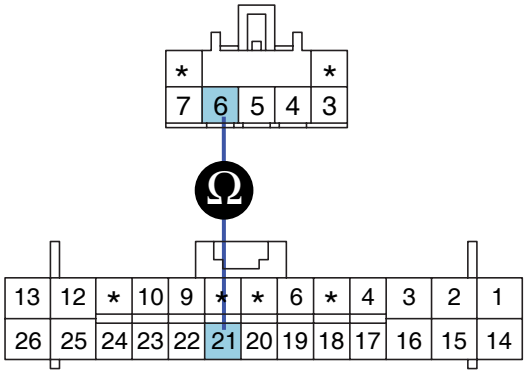

3. Motor
4. Motor
5. Potentiometer ground
6. **Potentiometer signal**
7. Sensor reference voltage(+5V)

SCMHA6551L

   4) Is the measured resistance within specifications?

YES

Go to "Check for short to ground in harness" procedure.

NO

Check for open in signal harness. Repair as necessary and go to "Verification of Vehicle Repair" procedure.

2. Check for short to ground in harness.

   1) Ignition "OFF"

   2) Disconnect Driver mode Actuator.

   3) Measure resistance between terminal "6" of Driver Direction potentiometer and chassis ground.

Specification : Approx. ∞ Ω

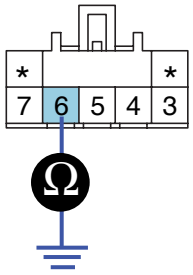

3. Motor
4. Motor
5. Potentiometer GND
6. Potentiometer signal
7. Sensor REF +5V

SCMHA6552L

   4) Is the measured resistance within specifications?

YES

Go to "Power circuit Inspection" procedure.

NO

Check for short to ground in signal harness. Repair as necessary and go to "Verification of Vehicle Repair" procedure.

POWER SUPPLY CIRCUIT INSPECTION E7CE5F7A

1. Check for short or open in harness.

   1) Ignition "ON"

   2) Connect Driver Direction potentiometer.

   3) Measure voltage between terminal "7" of Driver Direction potentiometer and chassis ground.

Specification : Approx. 5V

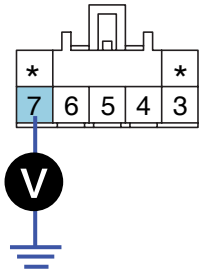

3. Motor
4. Motor
5. Potentiometer GND
6. Potentiometer signal
7. Sensor REF +5V

SCMHA6553L

4) Is the measured voltage within specifications?

YES

Go to "Component Inspection" procedure.

NO

Check for short or open in power harness. Repair as necessary and go to "Verification of Vehicle Repair" procedure.

COMPONENT INSPECTION E1CC0BF4

1. Check actuator.

1) Ignition "OFF"

2) Disconnect Driver Direction potentiometer.

3) Verify that the mode actuator operates to the vent mode when connecting 12V to the terminal "3" and grounding terminal "4".

4) Verify that the mode actuator operates to the def mode when the connections are reversed.

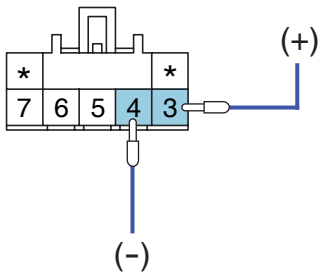

3. Motor
4. Motor
5. Potentiometer ground
6. Potentiometer signal
7. Sensor reference voltage(+5V)

SCMHA6554L

5) Does the actuator work properly?

YES

Go to "Check potentiometer" procedure.

NO

Substitute with a known-good actuator and check for proper operation. If the problem is corrected, replace actuator and then go to "Verification of Vehicle Repair" procedure.

2. Check potentiometer

1) Ignition "ON"

2) Connect Driver Direction potentiometer.

3) Measure voltage between terminal "5" and "6" of Driver Direction potentiometer as the mode switch is operated.

Specification : Refer the specifications in fig 3

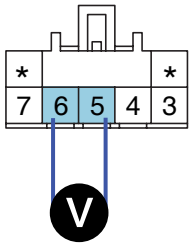

3. Motor
4. Motor
5. Potentiometer ground
6. Potentiometer signal
7. Sensor reference voltage(+5V)

SCMHA6555L

Door position	Voltage (5-6)	Error detecting
VENT	0.3 ± 0.15V	Under voltage : 0.08V or less Over voltage : 4.92V or more
BI-LEVEL(1)	1.35 ± 0.4V	
BI-LEVEL(2)	2.25 ± 0.4V	
FLOOR	3.0 ± 0.4V	
MIX	3.6 ± 0.4V	
DEF	4.7 ± 0.15V	

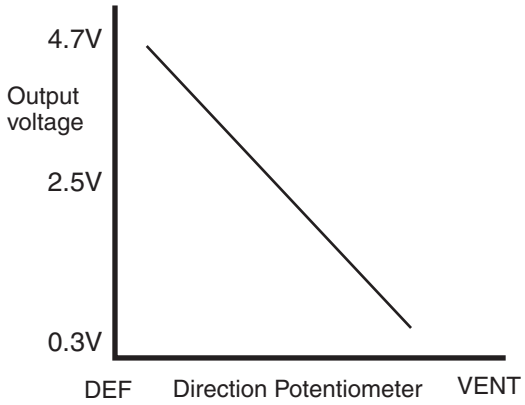

Fig. 3

Fig 3) Specifications : Voltage value as a function of position of direction potentiometer.

EQBF523J

4) Is the measured voltage within specifications in fig3?

YES

Check connectors for looseness, poor connection, bending, corrosion, contamination, deterioration, or damage. Repair or replace as necessary and then go to "Verification of Vehicle Repair" procedure.

NO

Substitute with a known-good actuator and check for proper operation. If the problem is corrected, replace actuator and then go to "Verification of Vehicle Repair" procedure.

VERIFICATION OF VEHICLE REPAIR E17B27B5

After a repair, it is essential to verify that the fault has been corrected.

1. Connect scantool and select "Diagnostic Trouble Codes(DTCs)" mode and then clear DTC.
2. Operate the vehicle and monitor the DTC on the scantool.
3. Are any DTCs present?

YES

Go to the applicable troubleshooting procedure.

NO

System is performing to specification at this time.

DTC B1250 DIRECTION POTENTIOMETER SHORT (HIGH) - DRIVER

COMPONENT LOCATION EAAF06F7

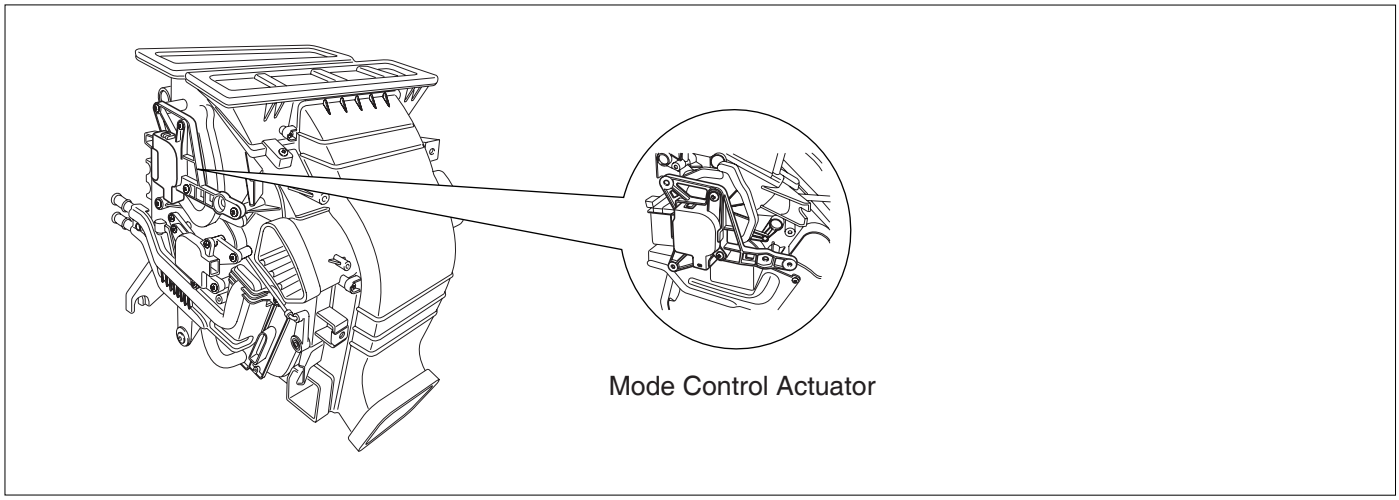

SCMHA6706L

GENERAL DESCRIPTION E42DB595

The mode control actuator mounted on heater unit, adjusts position of mode door by operating Direction Motor based on signal of A/C control unit. Pressing mode select switch makes the mode control actuator shift in order of vent→ B/L → floor → mix.

DTC DESCRIPTION E506ACD5

The A/C controller sets DTC B1250 if there is a short to power in the Direction potentiometer.

DTC DETECTING CONDITION E6521921

Item	Detecting Condition	Possible cause
DTC Strategy	• Voltage check	• Short circuit in harness • Faulty driver direction potentiometer • Open circuit in harness
Threshold value	• > 4.9V	
Detecting time	• 0.3 sec	
FAIL SAFE	• Fix vent position	

SPECIFICATION E80F0A06

Refer to DTC B1249.

MONITOR SCANTOOL DATA E6C26D12

1. Connect scantool to Data Link Connector(DLC).
2. Engine "ON"
3. Monitor the "DR. DIRECTION POTENTIO." parameter on the scantool while operating mode switch.

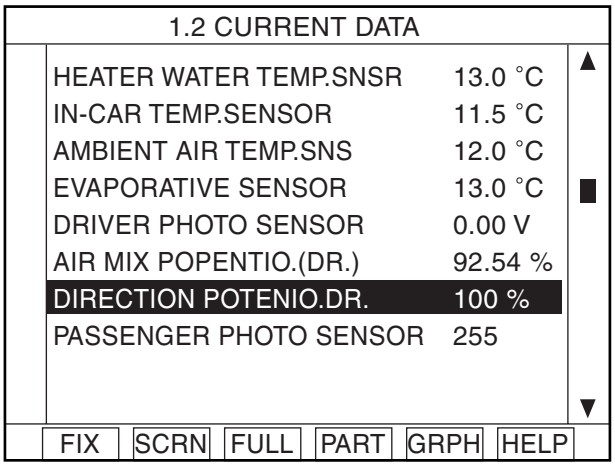

Fig. 1

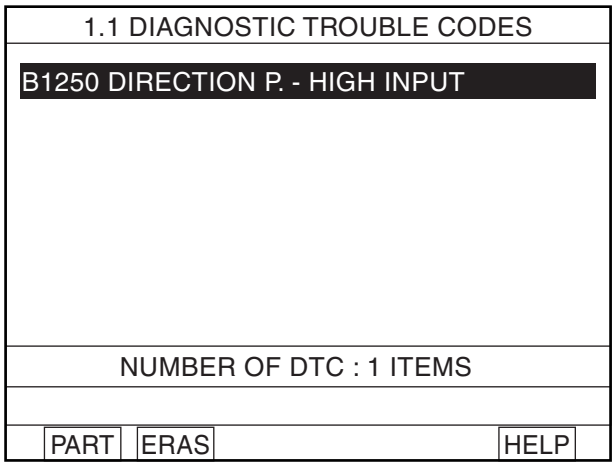

Fig. 2

Fig 1 : The current data in abnormal state.
Fig 2 : DTC B1250.

EQBF524A

4. Are the DTC B1250 present and is parameter of "DR. DIRECTION POTENTIO." fixed?
※ Parameter of "DR. DIRECTION POTENTIO." will be fixed at 100%(or any value above 90%), or 0% (or any value below 10%), if there is any fault in Driver Direction potentiometer.

YES

Go to "Inspection" procedure.

NO

Fault is intermittent caused by poor contact in the sensor's and/or A/C controller's connector or was repaired and A/C controller memory was not cleared. Thoroughly check connectors for looseness, poor connection, bending, corrosion, contamination, deterioration, or damage. Repair or replace as necessary and then go to "Verification of Vehicle Repair" procedure.

TERMINAL AND CONNECTOR INSPECTION E7C9EC9A

Refer to DTC B1249.

SIGNAL CIRCUIT INSPECTION EBA6FBEC

1. Check for short in harness.

   1) Ignition "OFF"

   2) Disconnect Driver mode Actuator.

   3) Measure resistance between terminal "6" and "7"of Driver Direction potentiometer.

Specification : Approx. ∞ Ω

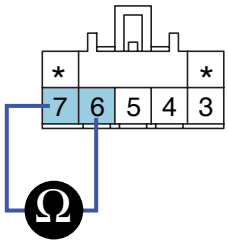

3. Motor
4. Motor
5. Potentiometer ground
6. Potentiometer signal
7. Sensor reference voltage(+5V)

SCMHA6556L

4) Is the measured resistance within specifications?

YES

Go to "Ground circuit inspection" procedure.

NO

Check for open in signal harness. Repair as necessary and go to "Verification of Vehicle Repair" procedure.

GROUND CIRCUIT INSPECTION E64B7078

1. Check for open in ground harneS.

1) Ignition "OFF"

2) Disconnect Driver mode Actuator.

3) Measure resistance between terminal "5" of evaporator sensor and chassis ground.

Specification :Approx. 0 Ω

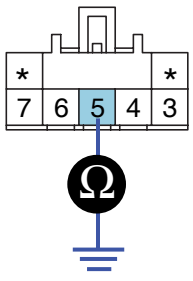

3. Motor
4. Motor
5. Potentiometer GND
6. Potentiometer signal
7. Sensor REF +5V

SCMHA6557L

4) Is the measured resistance within specifications?

YES

Go to "Component Inspection " procedure.

NO

Check for open in ground harness. Repair as necessary and go to "Verification of Vehicle Repair" procedure.

COMPONENT INSPECTION E48D945D

Refer to DTC B1249.

VERIFICATION OF VEHICLE REPAIR E41A230A

Refer to DTC B1249.

DTC B1257 AQS OPEN

COMPONENT LOCATION EF8D2F76

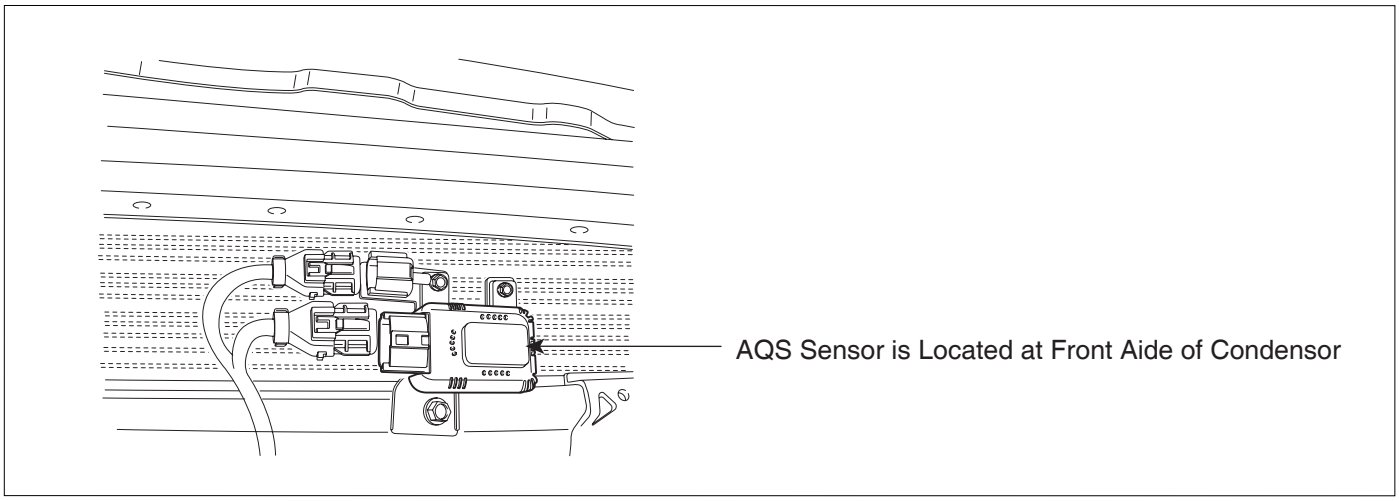

SCMHA6707L

GENERAL DESCRIPTION ED4DF3B0

AQS(Air Quality System) keeps air inside in the most suitable state for driver. In polluted area AQS detects hazardous gas and intercepts inflow automatically, Inversely, In freshsh area it allows the inflow of air to prevent the shortage of air and the accumulation of carbon dioxide. AQS sensor is located at front side of condensor and once hazardous gas is detected, it delivers the voltage signal to A/C controller for closing intake door.

DTC DESCRIPTION E12FB0BD

The A/C controller sets DTC B1257 if there is an open circuit in AQS sensor signal harness or the measured voltage value of sensor is more than threshold value.

DTC DETECTING CONDITION EB1B1045

Item	Detecting Condition	Possible cause
DTC Strategy	• Voltage check	• Open Circuit in power harness • Open circuit in ground harness • Faulty AQS Sensor • Poor connection of connected part
Threshold value	• > 4.9V	
Detecting time	• 1 sec	
FAIL SAFE	• AQS function OFF • Intake door : return to previous state	

SPECIFICATION ECC6418A

Refer to DTC B1258.

MONITOR SCANTOOL DATA EA426CBE

1. Connect scantool to Data Link Connector(DLC).
2. Engine "ON"

3. Monitor the " AQS sensor " Parameter on the Scantool. While making hazardous gas such as tobacco fumes around the AQS sensor.

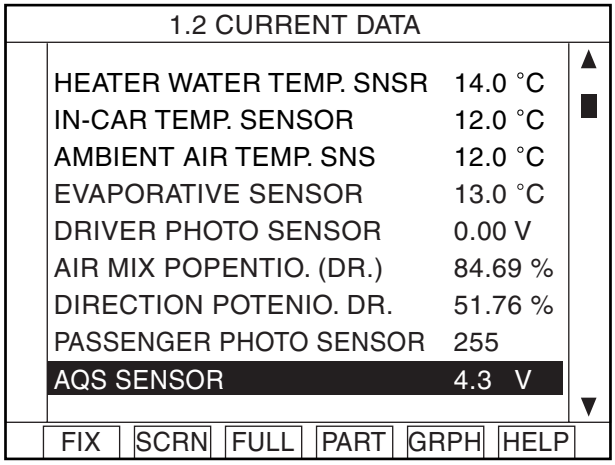

Fig. 1

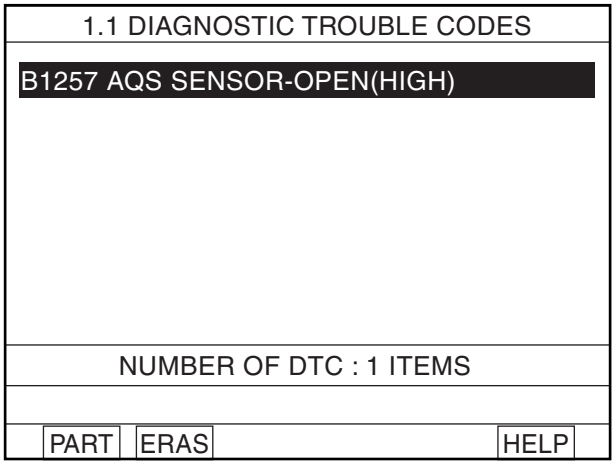

Fig. 2

Fig 1 : The current data in abnormal state.
Fig 2 : DTC B1257.

EQBF590B

4. Are the DTC B1257 present and is parameter of "AQS SENSOR" fixed?

YES

Go to "Inspection" procedure.

NO

Fault is intermittent caused by poor contact in the sensor's and/or A/C controller's connector or was repaired and A/C controller memory was not cleared. Thoroughly check connectors for looseness, poor connection, bending, corrosion, contamination, deterioration, or damage. Repair or replace as necessary and then go to "Verification of Vehicle Repair" procedure.

TERMINAL AND CONNECTOR INSPECTION E078D7E2

1. Many malfunctions in the electrical system are caused by poor harness and terminals.
Faults can also be caused by interference from other electrical systems, and mechanical or chemical damage.

2. Thoroughly check connectors for looseness, poor connection, bending, corrosion, contamination, deterioration, or damage.

3. Has a problem been found?

YES

Repair as necessary and go to "Verification of Vehicle Repair" procedure.

NO

Go to "Signal circuit inspection" procedure.

SIGNAL CIRCUIT INSPECTION EF29F40C

1. Check for open in harness.

   1) Ignition "OFF"

   2) Disconnect AQS sensor.

   3) Measure resistance between terminal "1" of AQS sensor and terminal "2" of A/C Control Unit.

Specification : Approx. 0 Ω

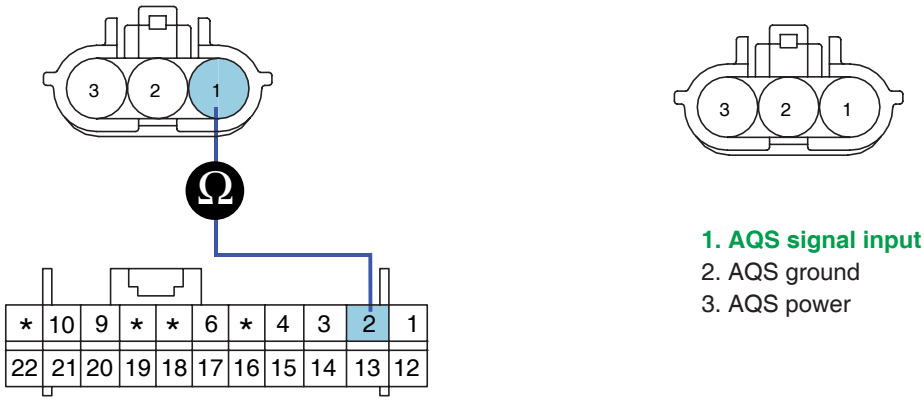

SCMHA6558L

   4) Is the measured resistance within specifications?

YES

Go to "Ground circuit Inspection " procedure.

NO

Check for open in harness. Repair as necessary and go to "Verification of Vehicle Repair" procedure.

GROUND CIRCUIT INSPECTION E60583A8

1. Check for open in ground harness.

   1) Ignition "OFF"

   2) Disconnect AQS sensor.

   3) Measure resistance between terminal "2" of AQS sensor and chassis ground.

Specification : Approx. 0 Ω



SCMHA6559L

4) Is the measured resistance within specifications?

YES

Go to "Component Inspection " procedure.

NO

Check for open in ground harness. Repair as necessary and go to "Verification of Vehicle Repair" procedure.

COMPONENT INSPECTION E0F5764B

1. Check AQS sensor.
   1) Engine "ON"
   2) Connect AQS sensor.
   3) Measure voltage between terminal "1" and "2" of AQS sensor.

Specification : Refer to the specifications.



SCMHA6560L

Operating condition	Voltage	Note
Right after IGN "ON"	2.5V ± 0.3V	preheating(35 ± 2sec)
Normal	4.3V ± 0.3V	Intake door : Fresh
Gas detected	0.9V ± 0.3V	Intake door : Recirculation

Specifications : Voltage value of AQS sensor as a function of position of operating condition.

4) Is the measured voltage within specifications?

YES

Check connectors for looseness, poor connection, bending, corrosion, contamination, deterioration, or damage. Repair or replace as necessary and then go to "Verification of Vehicle Repair" procedure.

NO

Substitute with AQS sensor and check for proper operation.
If the problem is corrected, replace AQS sensor and then go to "Verification of Vehicle Repair" procedure.

VERIFICATION OF VEHICLE REPAIR EF0A99CE

After a repair, it is essential to verify that the fault has been corrected.

1. Connect scantool and select "Diagnostic Trouble Codes(DTCs)" mode and then clear DTC.
2. Operate the vehicle and monitor the DTC on the scantool.
3. Are any DTCs present?

YES

Go to the applicable troubleshooting procedure.

NO

System is performing to specification at this time.

DTC B1258 AQS SHORT

COMPONENT LOCATION E1AE9C53

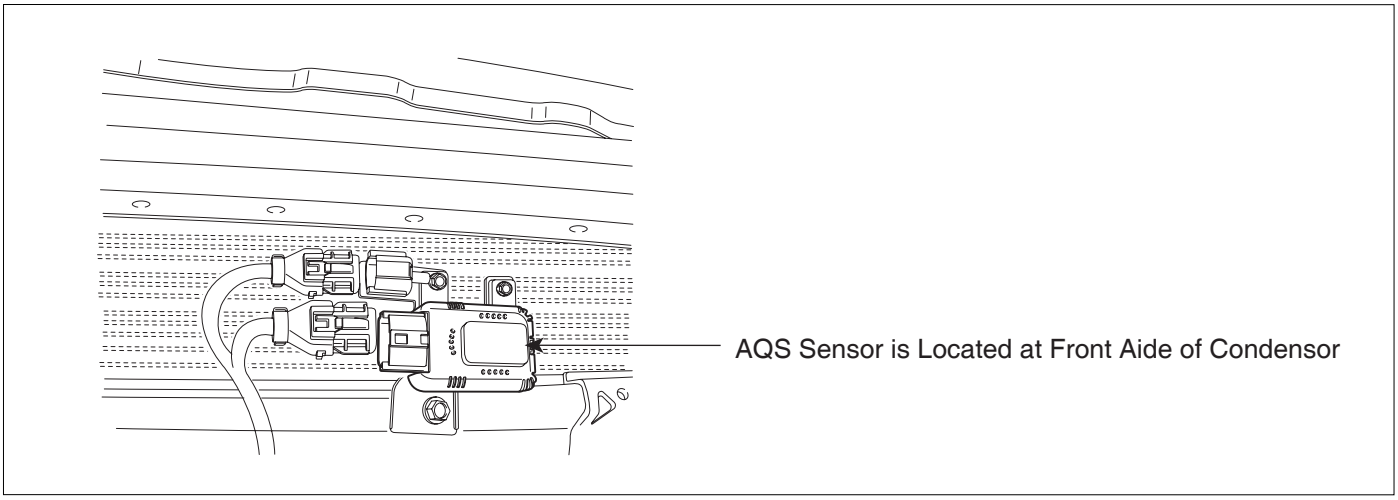

SCMHA6707L

GENERAL DESCRIPTION E78FDD65

AQS(Air Quality System) keeps air inside in the most suitable state for driver. In polluted area AQS detects hazardous gas and intercepts inflow automatically, Inversely, In freshsh area it allows the inflow of air to prevent the shortage of air and the accumulation of carbon dioxide. AQS sensor is located at front side of condensor and once hazardous gas is detected, it delivers the voltage signal to A/C controller for closing intake door.

DTC DESCRIPTION E65E21A7

The A/C controller sets DTC B1258 if there is a short circuit in AQS sensor signal harness or the measured voltage value of the sensor is less than the threshold value.

DTC DETECTING CONDITION E862F7F5

Item	Detecting Condition	Possible cause
DTC Strategy	• Voltage check	• Short circuit in harness • Faulty AQS Sensor • Fault A/C Control Unit
Threshold value	• < 0.1V	
Detecting time	• 1 sec	
FAIL SAFE	• AQS function OFF • Intake door : return to previous state	

SPECIFICATION EBC31DE0

※ Voltage value of AQS sensor as a function of position of operating condition.

Operating condition	Voltage	Note
Right after IGN "ON"	2.5V ± 0.3V	preheating(35 ± 2sec)
Normal	4.3V ± 0.3V	Intake door : Fresh
Gas detected	0.9V ± 0.3V	Intake door : Recirculation

MONITOR SCANTOOL DATA EB72B2D9

1. Connect scantool to Data Link Connector(DLC).
2. Engine "ON"
3. Monitor the "AQS sensor" Parameter on the Scantool. While making hazardous gas such as tobacco fumes around the AQS sensor.

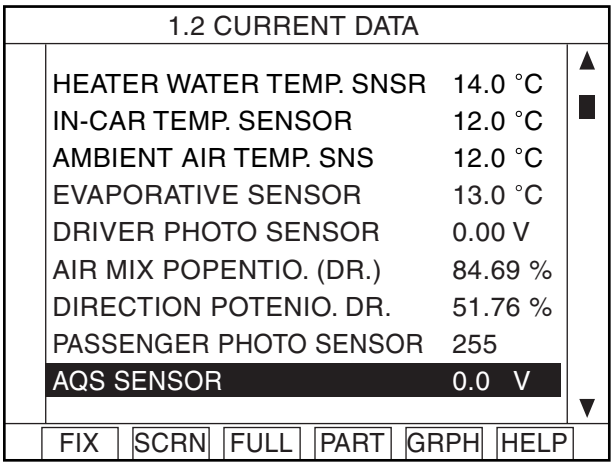

Fig. 1

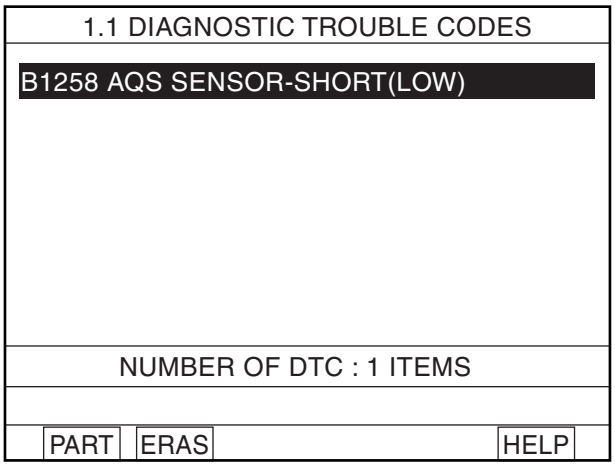

Fig. 2

Fig 1 : The current data in abnormal state.
Fig 2 : DTC B1258.

EQBF590A

4. Are the DTC B1258 present and is parameter of "AQS SENSOR" fixed?

YES

Go to "Inspection" procedure.

NO

Fault is intermittent caused by poor contact in the sensor's and/or A/C control unit's connector or was repaired and A/C control unit memory was not cleared. Thoroughly check connectors for looseness, poor connection, bending, corrosion, contamination, deterioration, or damage. Repair or replace as necessary and then go to "Verification of Vehicle Repair" procedure.

TERMINAL AND CONNECTOR INSPECTION EA2C2E51

1. Many malfunctions in the electrical system are caused by poor harness and terminals.
   Faults can also be caused by interference from other electrical systems, and mechanical or chemical damage.
2. Thoroughly check connectors for looseness, poor connection, bending, corrosion, contamination, deterioration, or damage.
3. Has a problem been found?

YES

Repair as necessary and go to "Verification of Vehicle Repair" procedure.

NO

Go to "Signal circuit inspection" procedure.

SIGNAL CIRCUIT INSPECTION E0460C72

1. Check for open in harness.

   1) Ignition "OFF"

   2) Disconnect AQS sensor.

   3) Measure resistance between terminal "1" of AQS sensor and terminal chassis ground.

Specification : Approx. 0 Ω

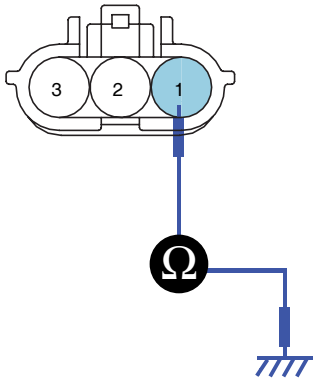

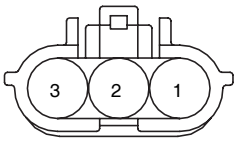

1. AQS signal input
2. AQS ground
3. AQS power

SCMHA6561L

   4) Is the measured resistance within specifications?

YES

Go to "Component inspection" procedure.

NO

Check for open in harness. Repair as necessary and go to "Verification of Vehicle Repair" procedure.

COMPONENT INSPECTION E2A85239

1. Check AQS sensor.

   1) Engine "ON"

   2) Connect AQS sensor.

   3) Measure voltage between terminal "1" and "2" of AQS sensor.

Specification : Refer the specifications.

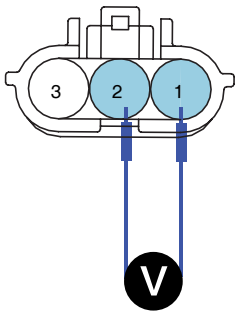

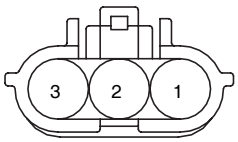

1. AQS signal input
2. AQS ground
3. AQS power

SCMHA6560L

Operating condition	Voltage	Note
Right after IGN "ON"	2.5V ± 0.3V	preheating(35 ± 2sec)
Normal	4.3V ± 0.3V	Intake door : Fresh
Gas detected	0.9V ± 0.3V	Intake door : Recirculation

Specifications : Voltage value of AQS sensor as a function of position of operating condition.

4) Is the measured voltage within specifications?

YES

Check connectors for looseness, poor connection, bending, corrosion, contamination, deterioration, or damage. Repair or replace as necessary and then go to "Verification of Vehicle Repair" procedure.

NO

Substitute with a AQS sensor and check for proper operation.
If the problem is corrected, replace AQS sensor and then go to "Verification of Vehicle Repair" procedure.

2. Check A/C Control Unit

1) Engine : "ON"

2) Disconnect AQS sensor.

3) Measure voltage between terminal "2" of A/C Control Unit and chassis ground.

Specification :Approx. 5V

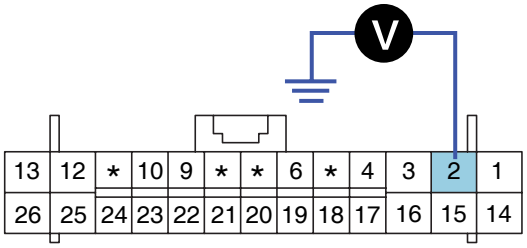

2. AQS sensor signal input

SCMHA6562L

4) Is the measured voltage within specifications?

YES

Check connectors for looseness, poor connection, bending, corrosion, contamination, deterioration, or damage. Repair or replace as necessary and then go to "Verification of Vehicle Repair" procedure.

NO

Substitute with a known-good A/C Control Unit and check for proper operation.
If the problem is correcirculationted, replace A/C Control Unit and then go to "Verification of Vehicle Repair" procedure.

VERIFICATION OF VEHICLE REPAIR E37705AF

After a repair, it is essential to verify that the fault has been corrected.

1. Connect scantool and select "Diagnostic Trouble Codes(DTCs)" mode and then clear DTC.
2. Operate the vehicle and monitor the DTC on the scantool.
3. Are any DTCs present?

YES

Go to the applicable troubleshooting procedure.

NO

System is performing to specification at this time.

DTC B1259 AQS FAILURE

COMPONENT LOCATION E898B5F4

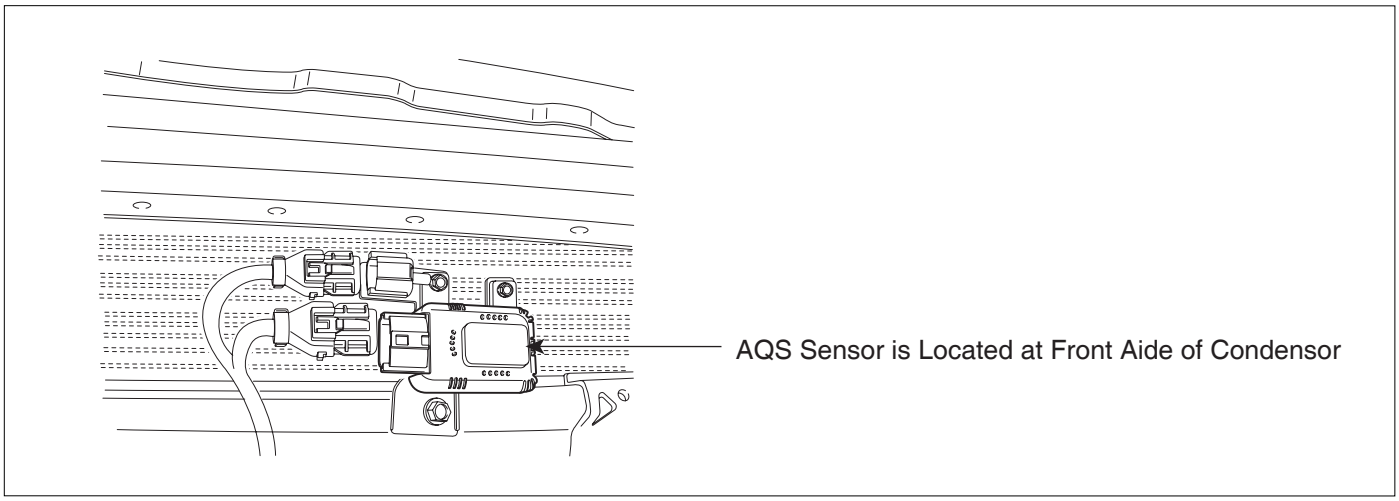

SCMHA6707L

GENERAL DESCRIPTION EB944E6D

AQS(Air Quality System) keeps air inside in the most suitable state for driver. In polluted area AQS detects hazardous gas and intercepts inflow automatically, Inversely, In freshsh area it allows the inflow of air to prevent the shortage of air and the accumulation of carbon dioxide. AQS sensor is located at front side of condensor and once hazardous gas is detected, it delivers the voltage signal to A/C controller for closing intake door.

DTC DESCRIPTION E1DFB9E8

The A/C controller sets DTC B1259 if preheating time of AQS sensor is over 40sec or signal from AQS sensor is not within specifications.

DTC DETECTING CONDITION E734CCDD

Item	Detecting Condition	Possible cause
DTC Strategy	• Voltage/time check	• Faulty AQS Sensor • Poor connection of connected part
Threshold value	• Voltage : Preheating - 2.5V±0.3V Normal - 4.3V±0.3V Gas detected - 0.9V±0.3V • Preheating time > 40sec	
Detecting time	-	
FAIL SAFE	• AQS function OFF • Intake door : return to previous state	

SPECIFICATION E441620B

Refer to DTC B1258.

MONITOR SCANTOOL DATA E226D7AB

1. Connect scantool to Data Link Connector(DLC).
2. Engine "ON"
3. Monitor the " AQS sensor " Parameter on the Scantool. While making hazardous gas such as tobacco fumes around the AQS sensor.

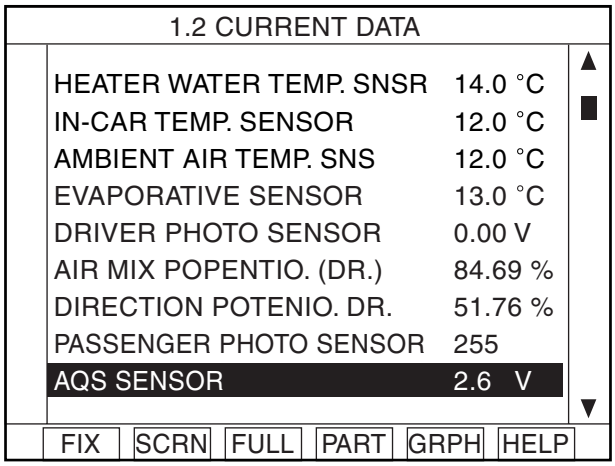

Fig. 1

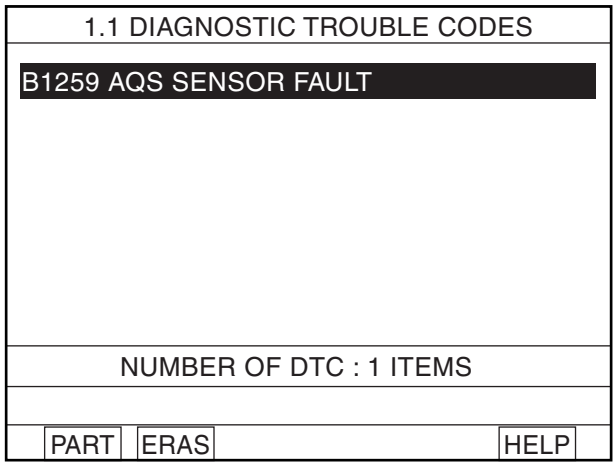

Fig. 2

Fig 1 : The current data in abnormal state.
Fig 2 : DTC B1259.

EQBF517B

4. Are the DTC B1259 present and is parameter of "AQS SENSOR" fixed?

YES

Go to "Inspection" procedure.

NO

Fault is intermittent caused by poor contact in the sensor's and/or A/C controller's connector or was repaired and A/C controller memory was not cleared. Thoroughly check connectors for looseness, poor connection, bending, corrosion, contamination, deterioration, or damage. Repair or replace as necessary and then go to "Verification of Vehicle Repair" procedure.

TERMINAL AND CONNECTOR INSPECTION EFA337DB

Refer to DTC B1258.

SIGNAL CIRCUIT INSPECTION E3C76BFD

1. Check for open in harness.
   1) Ignition "ON"
   2) Disconnect AQS sensor.
   3) Measure voltage value between terminal "3" of AQS sensor and chassis ground.

Specification : Approx. 12V



SCMHA6563L

4) Is the measured resistance within specifications?

YES

Go to "Component inspection " procedure.

NO

Check for open in harness. Repair as necessary and go to "Verification of Vehicle Repair" procedure.

COMPONENT INSPECTION E81F882D

Refer to DTC B1258.

VERIFICATION OF VEHICLE REPAIR E5CA9EEA

Refer to DTC B1258.

DTC B2406 AIR MIX MOTOR (DRIVER)

COMPONENT LOCATION EFE0376F

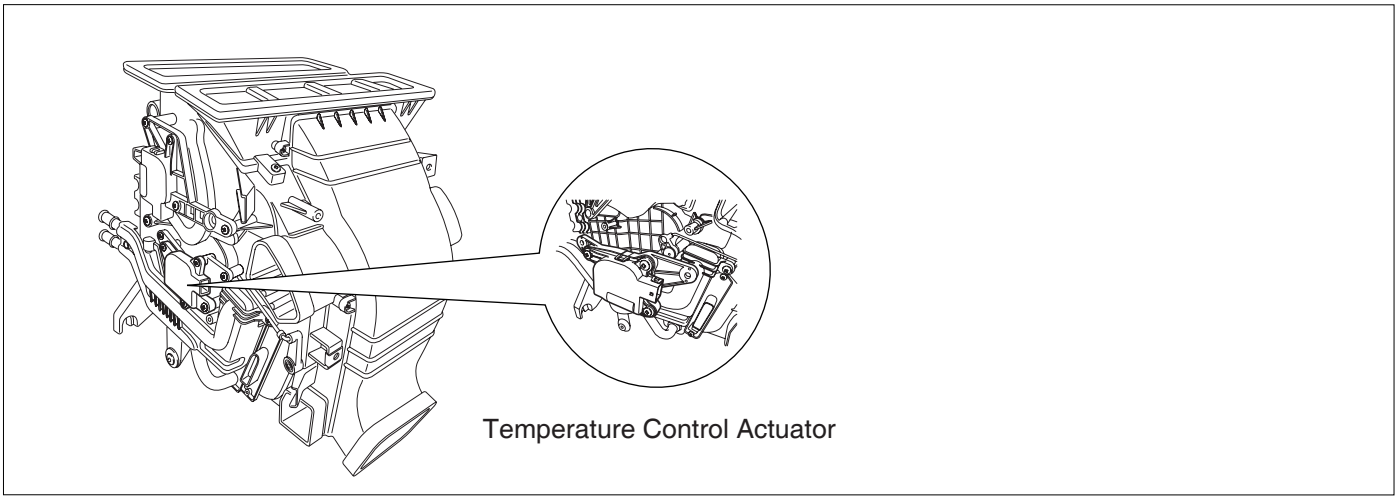

SCMHA6708L

GENERAL DESCRIPTION E64AC948

Temperature control actuator located at heater unit, regulates the temperature by the procedure as follows. Signal from control unit adjusts position of temp. door by operating temp. motor and then temperature will be regulated by the hot/cold air ratio decided by position of temp. door.

DTC DESCRIPTION E2ABFEF5

The A/C controller sets DTC B2406 if the air mix actuator doesn't move to intended position within 40sec (In this case, A/C controller try to move temp. door for 2sec. 3 times, every 20 sec. before setting DTC).

DTC DETECTING CONDITION EA8F2B90

Item	Detecting Condition	Possible cause
DTC Strategy	• Voltage check	• Poor connection of connected part • Open circuit in harness • Short circuit in harness • Faulty driver Air Mix potentiometer • Fault A/C Control Unit
Threshold value	• < 0.1V	
Detecting time	• 0.3 sec	
FAIL SAFE	-	

SPECIFICATION EC47D91F

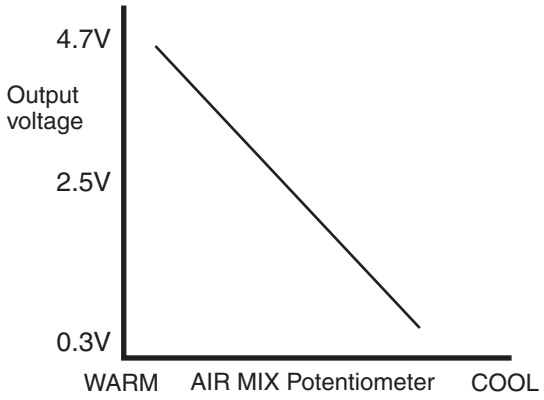

EQBF521B

MONITOR SCANTOOL DATA E41751B0

1. Connect scantool to Data Link Connector(DLC).
2. Engine "ON"
3. Monitor the "Driver Air Mix Potentiometer" Parameter on the Scantool while operating temp. switch.

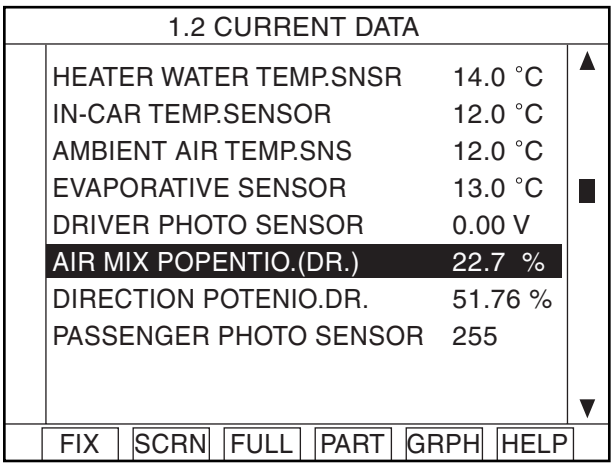

Fig. 1

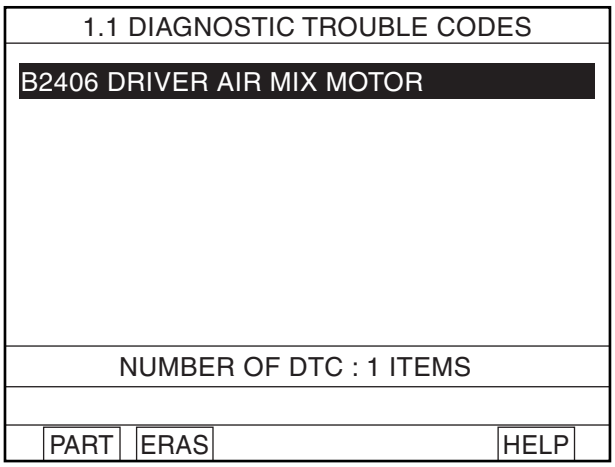

Fig. 2

Fig 1 : The current data in abnormal state.
Fig 2 : DTC B2406.

EQBF525A

4. Are the DTC B2406 present and is parameter of "Driver AIR MIX Potentiometer" fixed?
※ There is any fault in Driver AIR MIX Motor. If the parameter of "Driver AIR MIX DOOR" is 30% or less when the actuator operates to the hot position, or If the parameter is 60% and more when the actuator operates to the cold position.

YES

Go to "Inspection" procedure.

NO

Fault is intermittent caused by poor contact in the sensor's and/or A/C controller's connector or was repaired and A/C controller memory was not cleared. Thoroughly check connectors for looseness, poor connection, bending, corrosion, contamination, deterioration, or damage. Repair or replace as necessary and then go to "Verification of Vehicle Repair" procedure.

TERMINAL AND CONNECTOR INSPECTION E7F42C7B

1. Many malfunctions in the electrical system are caused by poor harness and terminals.
Faults can also be caused by interference from other electrical systems, and mechanical or chemical damage.

2. Thoroughly check connectors for looseness, poor connection, bending, corrosion, contamination, deterioration, or damage.

3. Has a problem been found?

YES

Repair as necessary and go to "Verification of Vehicle Repair" procedure.

NO

Go to "Signal circuit inspection" procedure.

SIGNAL CIRCUIT INSPECTION EAE92A03

1. Check for open in harness.

   1) Ignition "OFF"

   2) Disconnect Driver Air Mix potentiometer.

   3) Measure resistance between terminal "3,4" of Driver Air Mix Motor and terminal "15,16" of A/C control unit.

Specification : Approx. 0 Ω

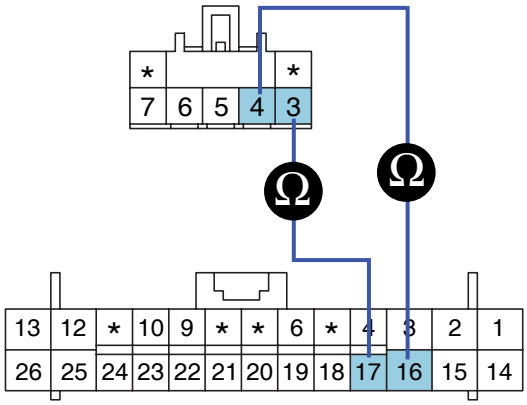

3. Motor (Cool)
4. Motor (Warm)
5. Sensor reference voltage(+5V)
6. Potentiometer signal
7. Potentiometer ground

SCMHA6564L

4) Is the measured resistance within specifications?

YES

Go to "Check for short to ground in harness" procedure.

NO

Check for open in signal harness. Repair as necessary and go to "Verification of Vehicle Repair" procedure.

2. Check for short to ground in harness.

1) Ignition "OFF"

2) Disconnect Driver Air Mix Actuator.

3) Measure resistance between terminal "3,4" of Driver Air Mix Motor and chassis ground.

Specification : Approx. ∞ Ω

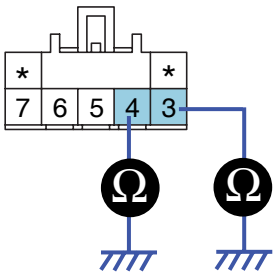

3. Motor (Cool)
4. Motor (Warm)
5. Sensor reference voltage(+5V)
6. Potentiometer signal
7. Potentiometer ground

SCMHA6565L

4) Is the measured resistance within specifications?

YES

Go to "Visual/Physical Inspection " procedure.

NO

Check for short to ground in signal harness. Repair as necessary and go to "Verification of Vehicle Repair" procedure.

VISUAL/PHYSICAL INSPECTION E991C1F7

1. Check actuator.
   ※ Check if Driver Air Mix Actuator works properly through ACTUATION TEST.

   1) Ignition : ON

   2) Connect Scantool and select " ACTUATION TEST" mode and press [F1]

1.3 ACTUATION TEST	
DRIVER AIR MIX DOOR - DRIVE 50%	
DURATION	UNTIL STOP KEY
METHOD	ACTIVATION
CONDITION	IG. KEY ON ENGINE RUNNING
PRESS [STRT], IF YOU ARE READY!	
STRT STOP	

Fig. 3

Fig 3 : Selecting "ACTUATION TEST" mode.

EQBF525D

   3) Does Driver Air Mix Actuator work properly?

   YES

   Go to "Component Inspection" procedure.

   NO

   Check connectors for looseness, poor connection, bending, corrosion, contamination, deterioration, or damage. Repair or replace as necessary and then go to "Verification of Vehicle Repair" procedure.

COMPONENT INSPECTION E076DD0D

1. Check actuator motor.

   1) Ignition "OFF"

   2) Disconnect Driver Air Mix Potentiometer.

   3) Verify that the temperature actuator operates to the hot position when connecting 12V to the terminal "3" and grounding terminal "4".

   4) Verify that the temperature actuator operates to the cool position when the connections are reversed.

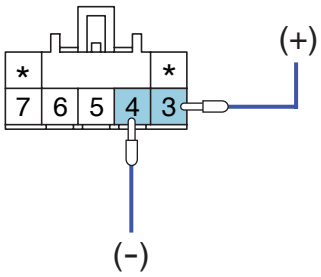

3. Motor (Cool)
4. Motor (Warm)
5. Sensor reference voltage(+5V)
6. Potentiometer signal
7. Potentiometer ground

SCMHA6566L

5) Does the actuator work properly?

YES

Go to "Check potentiometer" procedure.

NO

Substitute with a known-good actuator and check for proper operation. If the problem is corrected, replace actuator and then go to "Verification of Vehicle Repair" procedure.

2. Check potentiometer

1) Ignition "ON"

2) Connect Driver Air Mix potentiometer.

3) Measure voltage between terminal "6" and "7" of Driver Air Mix potentiometer while operating the temp. switch.

Specification : Refer the specifications in fig 3)

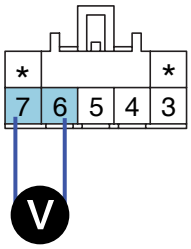

3. Motor (Cool)
4. Motor (Warm)
5. Sensor reference voltage(+5V)
6. Potentiometer signal
7. Potentiometer ground

SCMHA6567L

Door position	Voltage (6-7)	Error detecting
MAX. Cooling	0.3 ± 0.15V	Low voltage : 0.08V or less
MAX. Heating	4.7 ± 0.15V	High voltage : 4.9V or more

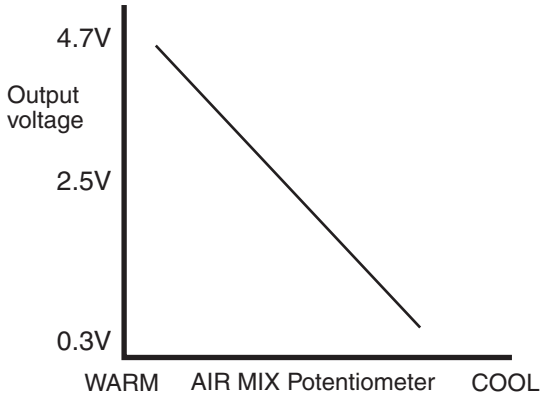

Fig. 3

Fig 3) Specifications : Voltage value of air mix potentiometer as a function of position of setting temperature.

EQBF521J

4) Is the measured voltage within specifications in fig3?

YES

Check connectors for looseness, poor connection, bending, corrosion, contamination, deterioration, or damage. Repair or replace as necessary and then go to "Verification of Vehicle Repair" procedure.

NO

Substitute with a known-good actuator and check for proper operation. If the problem is corrected, replace actuator and then go to "Verification of Vehicle Repair" procedure.

3. Check A/C Control Unit.

1) Engine "ON"

2) Connect A/C Control Unit.

3) Measure voltage between terminal "13" and "14" of A/C Control Unit while operating the temp. switch.

Specification :Approx. 12V

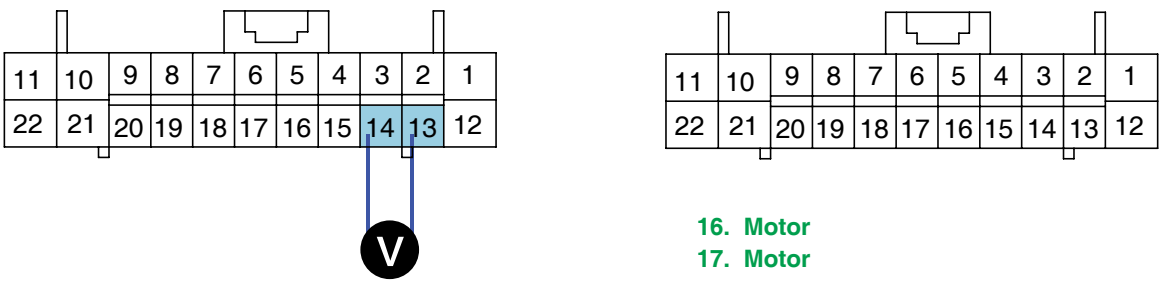

16. Motor
17. Motor

SCMHA6568L

4) Is the measured voltage within specifications?

YES

Check connectors for looseness, poor connection, bending, corrosion, contamination, deterioration, or damage. Repair or replace as necessary and then go to "Verification of Vehicle Repair" procedure.

NO

Substitute with a known-good A/C Control Unit and check for proper operation.
If the problem is corrected, replace A/C Control Unit and then go to "Verification of Vehicle Repair" procedure.

VERIFICATION OF VEHICLE REPAIR E9F02EC4

After a repair, it is essential to verify that the fault has been corrected.

1. Connect scantool and select "Diagnostic Trouble Codes(DTCs)" mode and then clear DTC.
2. Operate the vehicle and monitor the DTC on the scantool.
3. Are any DTCs present?

YES

Go to the applicable troubleshooting procedure.

NO

System is performing to specification at this time.

DTC B2408 INTAKE MOTOR FAILURE

COMPONENT LOCATION EF1AEBEF

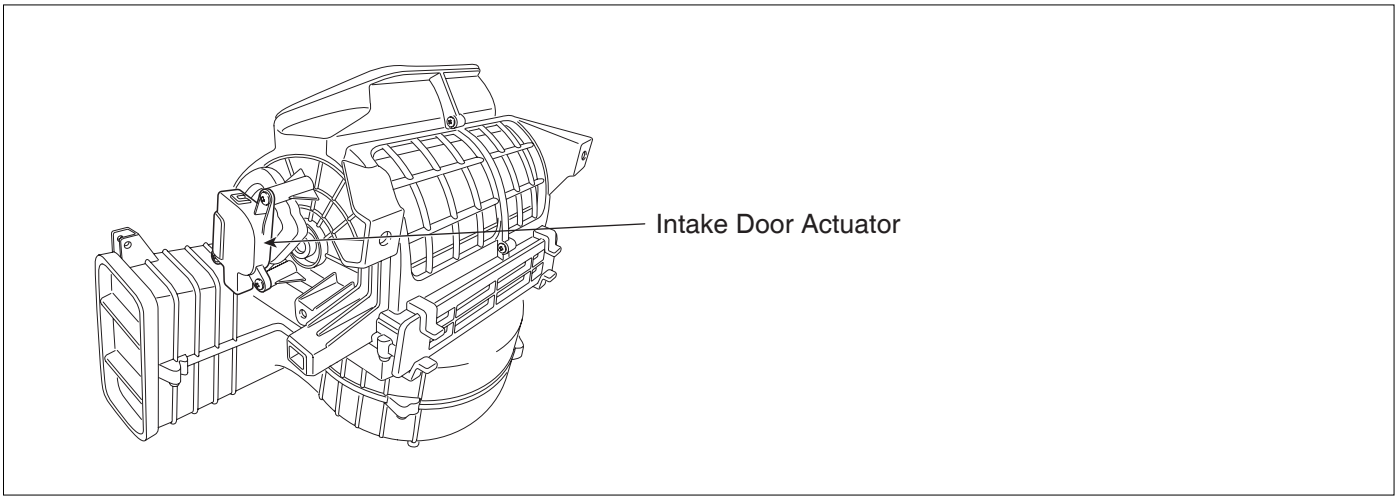

SCMHA6701L

GENERAL DESCRIPTION EBF43D13

Intake door located at heater unit controls the inlet of car. When driver operates the intake switch, A/C controller recirculationeives mode signal from intake switch and operates intake door actuator to turn intake door to intended position. (with fresh mode signal, intake door is closed and with fresh mode signal, intake door is opened.

DTC DESCRIPTION EDEFA576

The A/C controller sets DTC B2408 if the intake motor Doesn't move to intended position within 40sec(The A/C controller attempts to move the intake door for a 2 second duration at a freshquency of 3 times every 20 seconds before storing a DTC.)

DTC DETECTING CONDITION E70DC6B0

Item	Detecting Condition	Possible cause
DTC Strategy	• Voltage check	• Poor connection of connected part • Open circuit in harness • Short circuit in harness • Faulty Intake potentiometer
Threshold value	• < 0.1V	
Detecting time	• 0.3 sec	
FAIL SAFE	-	

SPECIFICATION E6B3190E

※ Voltage value of Intake potentiometer as a function of position of Intake door

Door position	Voltage	Threshold value
Fresh	0.3±0.15V	Voltage value 0.08V or less
Recirculation	4.7±0.15V	Voltage value 4.9V or more

MONITOR SCANTOOL DATA E73BFCC6

1. Connect scantool to Data Link Connector(DLC).
2. Engine "ON"
3. Monitor the "Intake Potentiometer" Parameter on the Scantool while operating Intake switch.

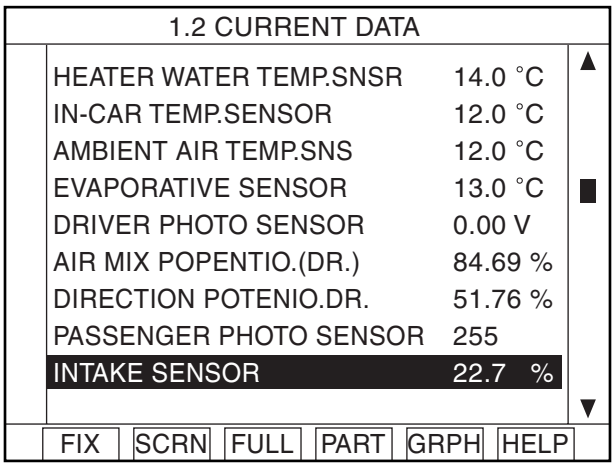

Fig. 1

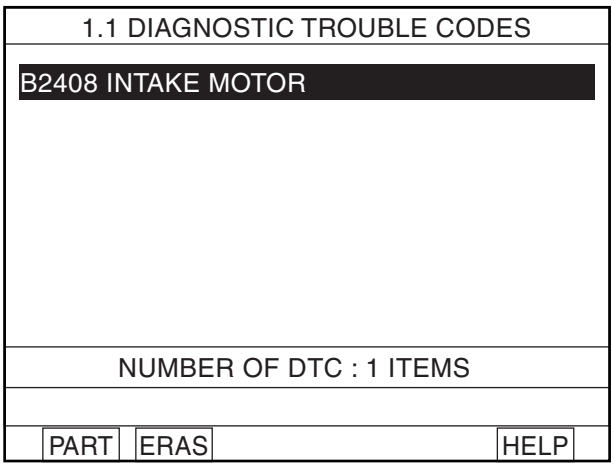

Fig. 2

Fig 1 : The current data in abnormal state.
Fig 2 : DTC B2408.

EQBF529A

4. Are the DTC B2408 present and is parameter of "Intake Potentiometer" fixed?
※ There is any fault in Intake potentiometer. If the parameter of "Intake potentiometer" is 30% or less when the actuator operates to the fresh position, or If the parameter is 60% and more when the actuator operates to the recirculation position.

YES

Go to "Inspection" procedure.

NO

Fault is intermittent caused by poor contact in the sensor's and/or A/C controller's connector or was repaired and A/C controller memory was not cleared. Thoroughly check connectors for looseness, poor connection, bending, corrosion, contamination, deterioration, or damage. Repair or replace as necessary and then go to "Verification of Vehicle Repair" procedure.

TERMINAL AND CONNECTOR INSPECTION E0CEF15E

1. Many malfunctions in the electrical system are caused by poor harness and terminals.
   Faults can also be caused by interference from other electrical systems, and mechanical or chemical damage.
2. Thoroughly check connectors for looseness, poor connection, bending, corrosion, contamination, deterioration, or damage.
3. Has a problem been found?

YES

Repair as necessary and go to "Verification of Vehicle Repair" procedure.

NO

Go to "Signal circuit inspection" procedure.

SIGNAL CIRCUIT INSPECTION E0DD314B

1. Check for open in harness.
   1) Ignition "OFF"
   2) Disconnect Intake potentiometer.
   3) Measure resistance between terminal "3,4" of Intake potentiometer and terminal "22,23" of A/C control unit.

Specification : Approx. 0 Ω

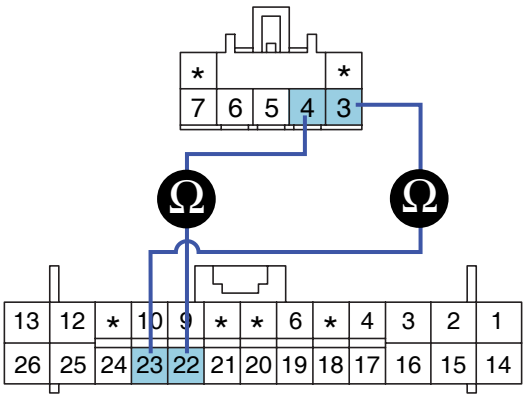

3. Motor
4. Motor
5. Potentiometer ground
6. Potentiometer signal
7. Sensor reference voltage(+5V)

SCMHA6569L

4) Is the measured resistance within specifications?

YES

Go to "Check for short to ground in harness" procedure.

NO

Check for open in signal harness. Repair as necessary and go to "Verification of Vehicle Repair" procedure.

2. Check for short to ground in harness.

   1) Ignition "OFF"

   2) Disconnect Driver Air Mix Actuator.

   3) Measure resistance between terminal "3,4" of Driver Air Mix Motor and chassis ground.

Specification : Approx. ∞ Ω

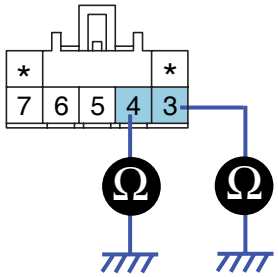

3. Motor
4. Motor
5. Potentiometer ground
6. Potentiometer signal
7. Sensor reference voltage(+5V)

SCMHA6570L

   4) Is the measured resistance within specifications?

YES

Go to "Visual/Physical Inspection " procedure.

NO

Check for short to ground in signal harness. Repair as necessary and go to "Verification of Vehicle Repair" procedure.

VISUAL/PHYSICAL INSPECTION E43EAB6A

1. Check actuator.
   ※ Check if Driver Air Mix Actuator works properly through ACTUATION TEST.

   1) Ignition : ON

   2) Connect Scantool and select " ACTUATION TEST" mode and press [F1]

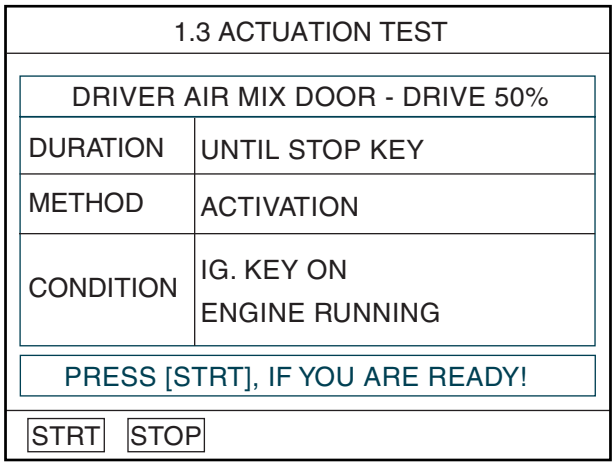

Fig. 3

Fig 3 : Selecting "ACTUATION TEST" mode.

EQBF525D

   3) Does Intake Actuator work properly?

   YES

   Go to "Component Inspection" procedure.

   NO

   Check connectors for looseness, poor connection, bending, corrosion, contamination, deterioration, or damage. Repair or replace as necessary and then go to "Verification of Vehicle Repair" procedure.

COMPONENT INSPECTION EC3D4A88

1. Check actuator motor.

   1) Ignition "OFF"

   2) Disconnect Intake Potentiometer.

   3) Verify that the temperature actuator operates to the fresh position when connecting 12V to the terminal "3" and grounding terminal "4".

   4) Verify that the temperature actuator operates to the recirculation position when the connections are reversed.

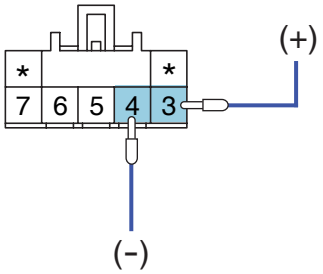

3. Motor
4. Motor
5. Potentiometer ground
6. Potentiometer signal
7. Sensor reference voltage(+5V)

SCMHA6572L

   5) Does the actuator work properly?

YES

Go to "Check potentiometer" procedure.

NO

Substitute with a known-good actuator and check for proper operation. If the problem is corrected, replace actuator and then go to "Verification of Vehicle Repair" procedure.

2. Check potentiometer

   1) Ignition "ON"

   2) Connect Intake potentiometer.

   3) Measure voltage between terminal "5" and "6" of Intake potentiometer while operating Intake switch.

Specification : Refer the specifications

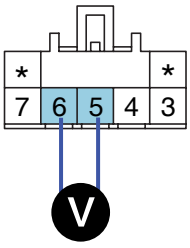

3. Motor
4. Motor
5. Potentiometer ground
6. Potentiometer signal
7. Sensor reference voltage(+5V)

SCMHA6571L

Door position	Voltage (5-6)	Error detecting
Fresh	0.3 ± 0.15V	Low voltage : 0.08V or less
Recirculation	4.7 ± 0.15V	High voltage : 4.9V or more

Specifications : Voltage value of Intake potentiometer as a function of position of Intake.

4) Is the measured voltage within specifications?

YES

Check connectors for looseness, poor connection, bending, corrosion, contamination, deterioration, or damage. Repair or replace as necessary and then go to "Verification of Vehicle Repair" procedure.

NO

Substitute with a known-good actuator and check for proper operation. If the problem is corrected, replace actuator and then go to "Verification of Vehicle Repair" procedure.

3. Check A/C Control Unit.

1) Engine "ON"

2) Connect A/C Control Unit.

3) Measure voltage between terminal "22" and "23" of A/C Control Unit while operating the Intake switch.

Specification :Approx. 12V

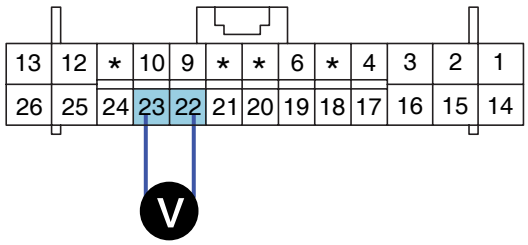

22. Motor
23. Motor

SCMHA6573L

4) Is the measured voltage within specifications?

YES

Check connectors for looseness, poor connection, bending, corrosion, contamination, deterioration, or damage. Repair or replace as necessary and then go to "Verification of Vehicle Repair" procedure.

NO

Substitute with a known-good A/C Control Unit and check for proper operation.
If the problem is corrected, replace A/C Control Unit and then go to "Verification of Vehicle Repair" procedure.

VERIFICATION OF VEHICLE REPAIR E0DD17DE

After a repair, it is essential to verify that the fault has been corrected.

1. Connect scantool and select "Diagnostic Trouble Codes(DTCs)" mode and then clear DTC.
2. Operate the vehicle and monitor the DTC on the scantool.
3. Are any DTCs present?

YES

Go to the applicable troubleshooting procedure.

NO

System is performing to specification at this time.

DTC B2409 DIRECTION CONTROL MOTOR (DRIVER)

COMPONENT LOCATION E106240B

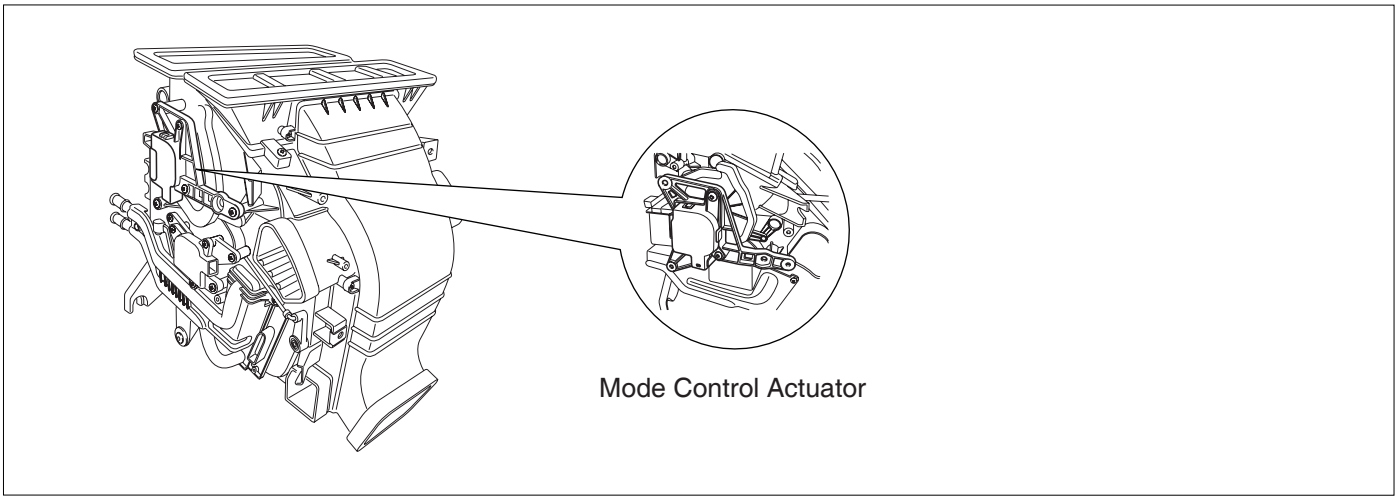

SCMHA6709L

GENERAL DESCRIPTION EF5781CF

The mode control actuator mounted on heater unit, adjusts position of mode door by operating Direction Motor based on signal of A/C control unit. Pressing mode select switch makes the mode control actuator shift in order of vent→ B/L → floor → mix.

DTC DESCRIPTION EC2E4DF8

The A/C controller sets DTC B2409 if the direction motor doesn't move to intended position within 40sec(In this case, A/C controller try to move mode door for 2sec. 3 times, every 20 sec. before setting DTC).

DTC DETECTING CONDITION EC90DC02

Item	Detecting Condition	Possible cause
DTC Strategy	• Voltage check	• Poor connection of connected part • Open circuit in harness • Short circuit in harness • Faulty driver direction potentiometer • Fault A/C Control Unit.
Threshold value	• < 0.1V	
Detecting time	• 0.3 sec	
FAIL SAFE	-	

SPECIFICATION E463272E

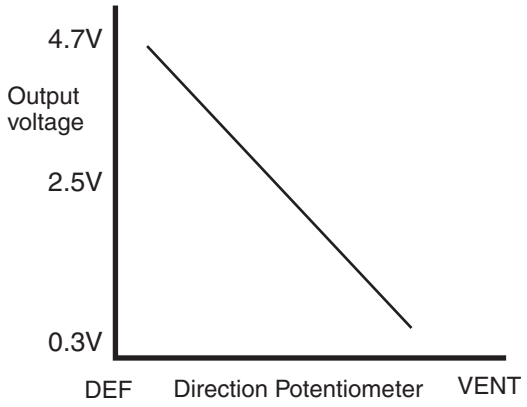

EQBF523B

MONITOR SCANTOOL DATA E65417DD

1. Connect scantool to Data Link Connector(DLC).
2. Engine "ON"
3. Monitor the "DR DIRECTION POTENTIO" parameter on the scantool while operating mode switch.

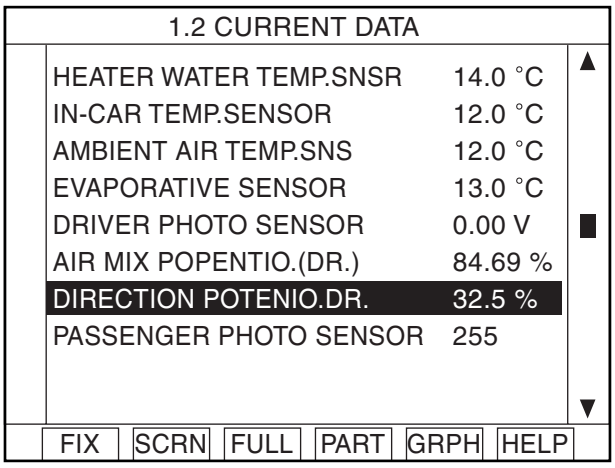

Fig. 1

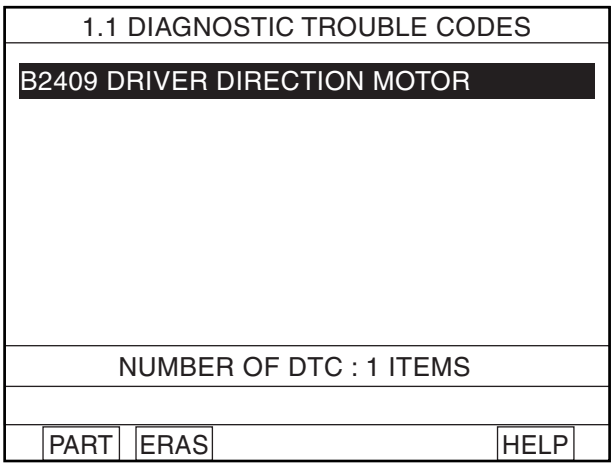

Fig. 2

Fig 1 : The current data in abnormal state.
Fig 2 : DTC B2409.

EQBF526A

4. Are the DTC B2409 present and is parameter of "Driver DIRECTION POTENTIO." fixed?
※ There is any fault in Driver Direction Motor. If the parameter of "Driver DIRECTION POTENTIO." is 10% or less on "VENT" mode, or If the parameter is 90% or more on "DEF" mode.

YES

Go to "Inspection" procedure.

NO

Fault is intermittent caused by poor contact in the sensor's and/or A/C controller's connector or was repaired and A/C controller memory was not cleared. Thoroughly check connectors for looseness, poor connection, bending, corrosion, contamination, deterioration, or damage. Repair or replace as necessary and then go to "Verification of Vehicle Repair" procedure.

TERMINAL AND CONNECTOR INSPECTION E445635C

1. Many malfunctions in the electrical system are caused by poor harness and terminals.
Faults can also be caused by interference from other electrical systems, and mechanical or chemical damage.

2. Thoroughly check connectors for looseness, poor connection, bending, corrosion, contamination, deterioration, or damage.

3. Has a problem been found?

YES

Repair as necessary and go to "Verification of Vehicle Repair" procedure.

NO

Go to "Signal circuit inspection" procedure.

SIGNAL CIRCUIT INSPECTION E1953B5C

1. Check for open in harness.

   1) Ignition "OFF"

   2) Disconnect Driver mode Actuator.

   3) Measure resistance between terminal "3,4" of Driver Direction Motor and terminal "19,20" of A/C control unit.

Specification : Approx. 0 Ω

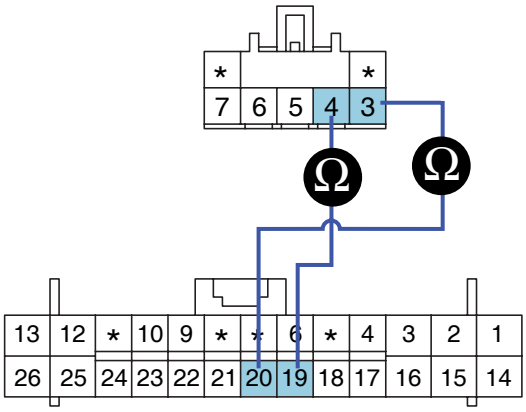

3. Motor
4. Motor
5. Potentiometer ground
6. Potentiometer signal
7. Sensor reference voltage(+5V)

SCMHA6574L

4) Is the measured resistance within specifications?

YES

Go to "Check for short to ground in harness" procedure.

NO

Check for open in signal harness. Repair as necessary and go to "Verification of Vehicle Repair" procedure.

2. Check for short to ground in harness.

1) Ignition "OFF"

2) Disconnect Driver mode Actuator.

3) Measure resistance between terminal "3,4" of Driver Direction Motor and chassis ground.

Specification : Approx. ∞ Ω

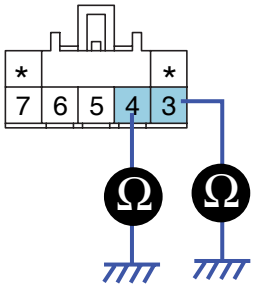

3. Motor
4. Motor
5. Potentiometer ground
6. Potentiometer signal
7. Sensor reference voltage(+5V)

SCMHA6575L

4) Is the measured resistance within specifications?

YES

Go to "Visual/Physical Inspection " procedure.

NO

Check for short to ground in signal harness. Repair as necessary and go to "Verification of Vehicle Repair" procedure.

VISUAL/PHYSICAL INSPECTION E50E56B6

1. Check actuator.
   ※ Check if Driver Direction Actuator works properly through ACTUATION TEST.

   1) Ignition : ON

   2) Connect Scantool and select " ACTUATION TEST" mode and press [F1]

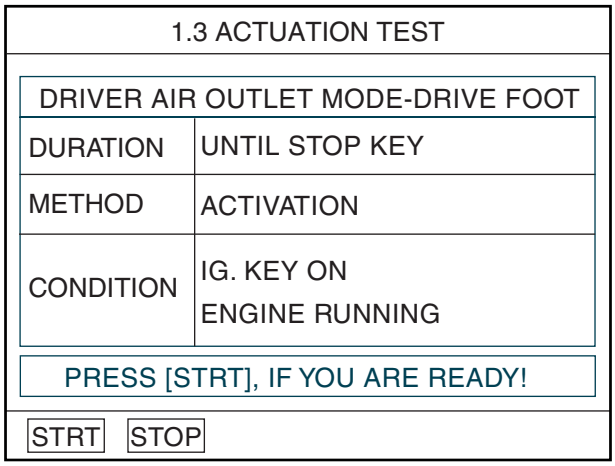

Fig. 3

Fig 3 : Selecting "ACTUATION TEST" mode.

EQBF526D

   3) Does Driver Direction Actuator work properly?

   YES

   Go to "Component Inspection" procedure.

   NO

   Check connectors for looseness, poor connection, bending, corrosion, contamination, deterioration, or damage. Repair or replace as necessary and then go to "Verification of Vehicle Repair" procedure.

COMPONENT INSPECTION E2354556

1. Check actuator.

   1) Ignition "OFF"

   2) Disconnect Driver Direction potentiometer.

   3) Verify that the mode actuator operates to the vent mode when connecting 12V to the terminal "3" and grounding terminal "4".

   4) Verify that the mode actuator operates to the def mode when the connections are reversed.

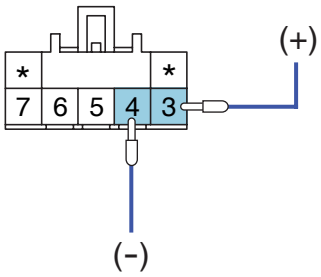

3. Motor
4. Motor
5. Potentiometer ground
6. Potentiometer signal
7. Sensor reference voltage(+5V)

SCMHA6554L

5) Does the actuator work properly?

YES

Go to "Check potentiometer" procedure.

NO

Substitute with a known-good actuator and check for proper operation. If the problem is corrected, replace actuator and then go to "Verification of Vehicle Repair" procedure.

2. Check potentiometer

1) Ignition "ON"

2) Connect Driver Direction potentiometer.

3) Measure voltage between terminal "5" and "6" of Driver Direction potentiometer as the mode switch is operated.

Specification : Refer the specifications in fig 3

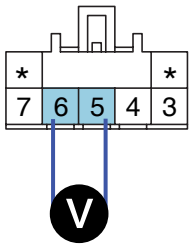

3. Motor
4. Motor
5. Potentiometer ground
6. Potentiometer signal
7. Sensor reference voltage(+5V)

SCMHA6555L

Door position	Voltage (5-6)	Error detecting
VENT	0.3 ± 0.15V	Under voltage : 0.08V or less Over voltage : 4.92V or more
BI-LEVEL(1)	1.35 ± 0.4V	
BI-LEVEL(2)	2.25 ± 0.4V	
FLOOR	3.0 ± 0.4V	
MIX	3.6 ± 0.4V	
DEF	4.7 ± 0.15V	

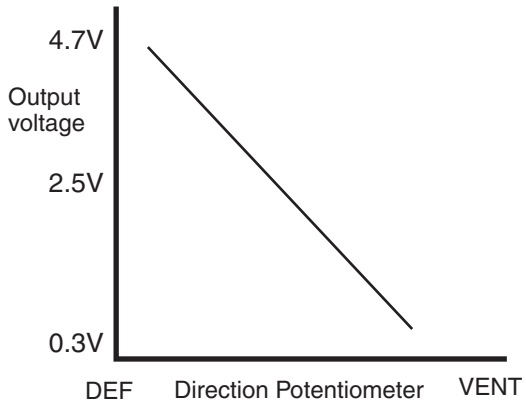

Fig. 3

Fig 3) Specifications : Voltage value as a function of position of direction potentiometer.

EQBF523J

4) Is the measured voltage within specifications in fig3?

YES

Check connectors for looseness, poor connection, bending, corrosion, contamination, deterioration, or damage. Repair or replace as necessary and then go to "Verification of Vehicle Repair" procedure.

NO

Substitute with a known-good actuator and check for proper operation. If the problem is corrected, replace actuator and then go to "Verification of Vehicle Repair" procedure.

3. Check A/C Control Unit.

1) Engine : "ON"

2) Connect A/C Control Unit.

3) Measure voltage between terminal "19" and "20" of A/C Control Unit while operating the mode switch.

Specification :Approx. 12V

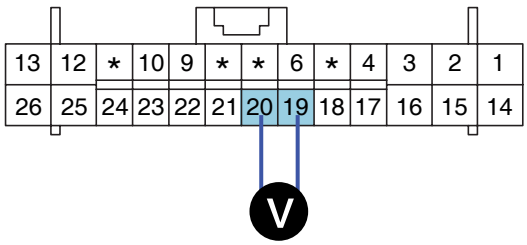

19 : Motor
20 : Motor

SCMHA6576L

4) Is the measured voltage within specifications?

YES

Check connectors for looseness, poor connection, bending, corrosion, contamination, deterioration, or damage. Repair or replace as necessary and then go to "Verification of Vehicle Repair" procedure.

NO

Substitute with a known-good A/C Control Unit and check for proper operation.
If the problem is corrected, replace A/C Control Unit and then go to "Verification of Vehicle Repair" procedure.

VERIFICATION OF VEHICLE REPAIR ED389E33

After a repair, it is essential to verify that the fault has been corrected.

1. Connect scantool and select "Diagnostic Trouble Codes(DTCs)" mode and then clear DTC.
2. Operate the vehicle and monitor the DTC on the scantool.
3. Are any DTCs present?

YES

Go to the applicable troubleshooting procedure.

NO

System is performing to specification at this time.

DTC B2415 AIR MIX MOTOR (PASSENGER)

COMPONENT LOCATION E8B6758A

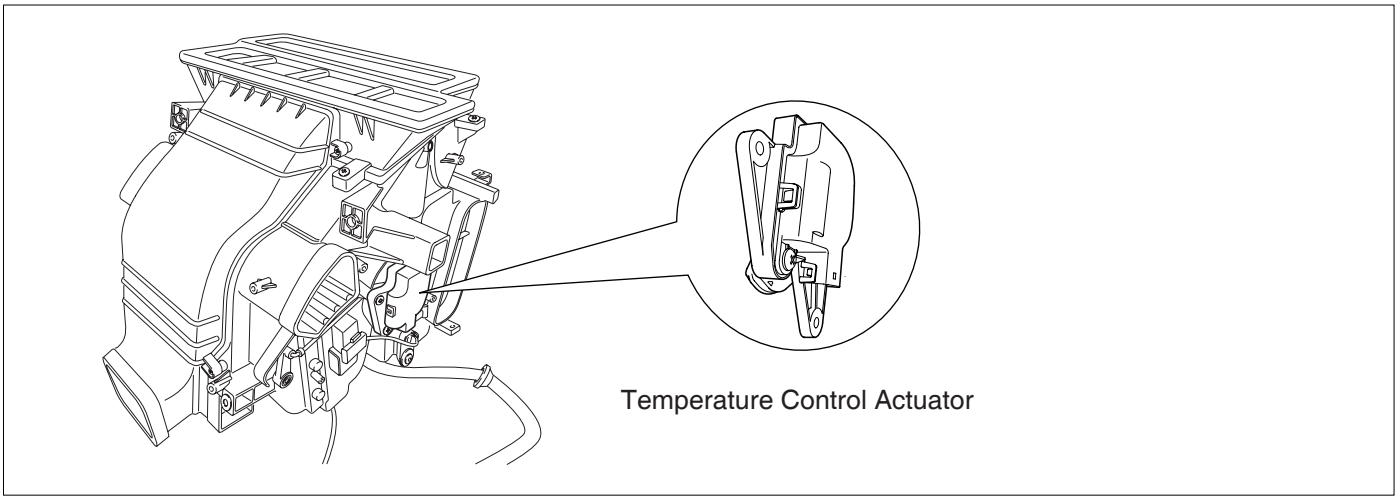

SCMHA6700L

GENERAL DESCRIPTION ECC6FEEE

Temperature control actuator located at heater unit, regulates the temperature by the procedure as follows. Signal from control unit adjusts position of temp. door by operating temp. motor and then temperature will be regulated by the hot/cold air ratio decided by position of temp. door.

DTC DESCRIPTION E9CEC9DA

The A/C controller sets DTC B2415 if the air mix actuator doesn't move to intended position within 40sec (In this case, A/C controller try to move temp. door for 2sec. 3 times, every 20 sec. before setting DTC).

DTC DETECTING CONDITION EF3351EF

Item	Detecting Condition	Possible cause
DTC Strategy	• Voltage check	• Poor connection of connected part • Open circuit in harness • Short circuit in harness • Faulty driver Air Mix potentiometer • Fault A/C Control Unit
Threshold value	• < 0.1V	
Detecting time	• 0.3 sec	
FAIL SAFE	-	

SPECIFICATION EF5771E4

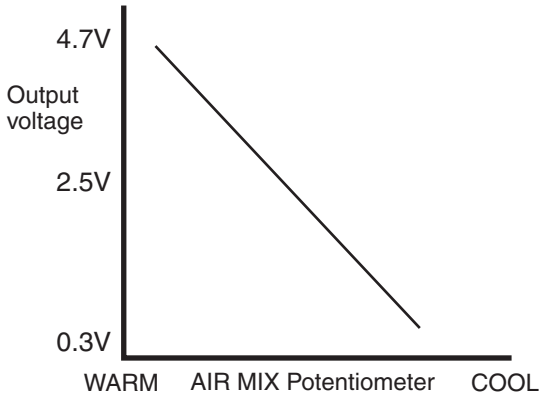

EQBF521B

MONITOR SCANTOOL DATA E080E9AB

1. Connect scantool to Data Link Connector(DLC).
2. Engine "ON"
3. Monitor the "Passenger Air Mix Potentiometer" Parameter on the Scantool while operating temp. switch.

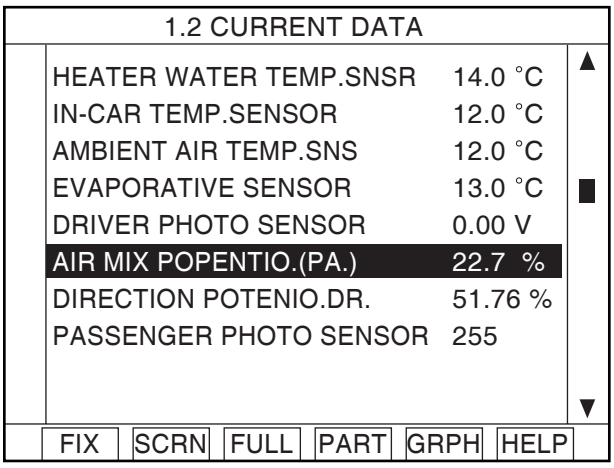

Fig. 1

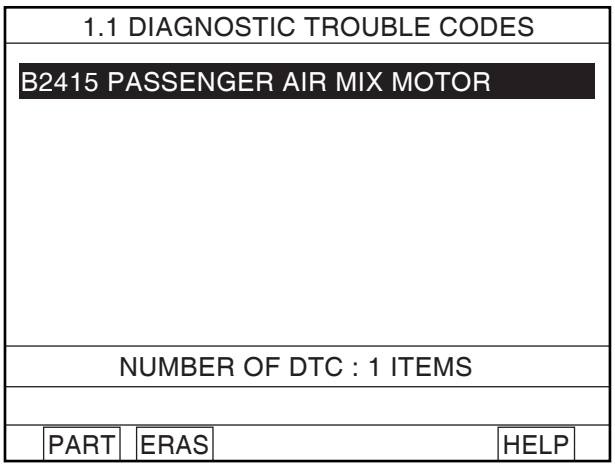

Fig. 2

Fig 1 : The current data in abnormal state.
Fig 2 : DTC B2415.

LQKG990J

4. Are the DTC B2415 present and is parameter of "Passenger AIR MIX Potentiometer" fixed?
※ There is any fault in Passenger AIR MIX Motor. If the parameter of "Passenger AIR MIX DOOR" is 30% or less when the actuator operates to the hot position, or If the parameter is 60% and more when the actuator operates to the cold position.

YES

Go to "Inspection" procedure.

NO

Fault is intermittent caused by poor contact in the sensor's and/or A/C controller's connector or was repaired and A/C controller memory was not cleared. Thoroughly check connectors for looseness, poor connection, bending, corrosion, contamination, deterioration, or damage. Repair or replace as necessary and then go to "Verification of Vehicle Repair" procedure.

TERMINAL AND CONNECTOR INSPECTION E3270973

1. Many malfunctions in the electrical system are caused by poor harness and terminals.
   Faults can also be caused by interference from other electrical systems, and mechanical or chemical damage.
2. Thoroughly check connectors for looseness, poor connection, bending, corrosion, contamination, deterioration, or damage.
3. Has a problem been found?

YES

Repair as necessary and go to "Verification of Vehicle Repair" procedure.

NO

Go to "Signal circuit inspection" procedure.

SIGNAL CIRCUIT INSPECTION E7D7A9BC

1. Check for open in harness.
   1) Ignition "OFF"
   2) Disconnect Passenger Air Mix potentiometer.
   3) Measure resistance between terminal "3,4" of Passenger Air Mix Motor and terminal "16,17" of A/C control unit.

Specification : Approx. 0 Ω

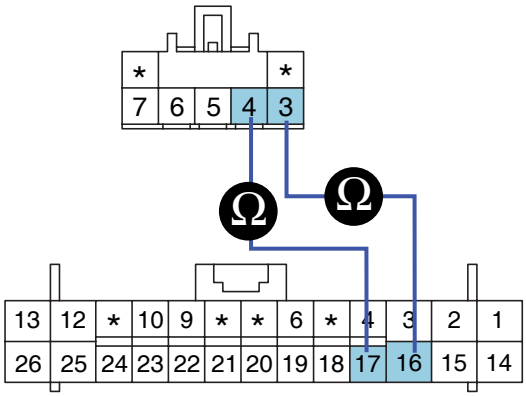

3. Motor (Warm)
4. Motor (Cool)
5. Potentiometer ground
6. Potentiometer signal
7. Sensor reference voltage(+5V)

SCMHA6710L

4) Is the measured resistance within specifications?

YES

Go to "Check for short to ground in harness" procedure.

NO

Check for open in signal harness. Repair as necessary and go to "Verification of Vehicle Repair" procedure.

2. Check for short to ground in harness.

   1) Ignition "OFF"

   2) Disconnect Passenger Air Mix Actuator.

   3) Measure resistance between terminal "3,4" of Passenger Air Mix Motor and chassis ground.

Specification : Approx. ∞ Ω

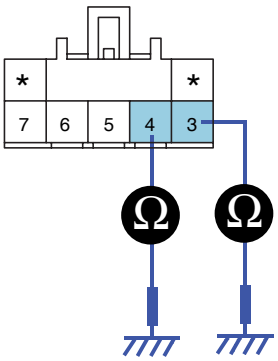

3. Motor
4. Motor
5. Potentiometer ground
6. Potentiometer signal
7. Sensor reference voltage(+5V)

SCMHA6711L

   4) Is the measured resistance within specifications?

YES

Go to "Visual/Physical Inspection " procedure.

NO

Check for short to ground in signal harness. Repair as necessary and go to "Verification of Vehicle Repair" procedure.

VISUAL/PHYSICAL INSPECTION E24C54B8

1. Check actuator.
   ※ Check if Passenger Air Mix Actuator works properly through ACTUATION TEST.

   1) Ignition : ON

   2) Connect Scantool and select " ACTUATION TEST" mode and press [F1]

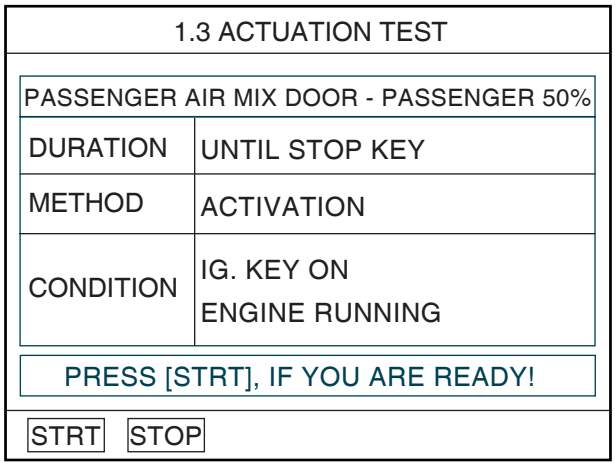

Fig. 3

Fig 3 : Selecting "ACTUATION TEST" mode.

LQKG525D

   3) Does Passenger Air Mix Actuator work properly?

   YES

   Go to "Component Inspection" procedure.

   NO

   Check connectors for looseness, poor connection, bending, corrosion, contamination, deterioration, or damage. Repair or replace as necessary and then go to "Verification of Vehicle Repair" procedure.

COMPONENT INSPECTION E760C3E3

1. Check actuator motor.

   1) Ignition "OFF"

   2) Disconnect Passenger Air Mix Potentiometer.

   3) Verify that the temperature actuator operates to the hot position when connecting 12V to the terminal "3" and grounding terminal "4".

   4) Verify that the temperature actuator operates to the cool position when the connections are reversed.

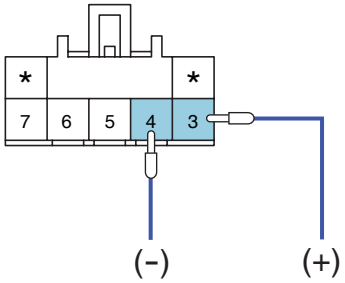

3. Motor
4. Motor
5. Potentiometer ground
6. Potentiometer signal
7. Sensor reference voltage(+5V)

SCMHA6712L

   5) Does the actuator work properly?

YES

Go to "Check potentiometer" procedure.

NO

Substitute with a known-good actuator and check for proper operation. If the problem is corrected, replace actuator and then go to "Verification of Vehicle Repair" procedure.

2. Check potentiometer

   1) Ignition "ON"

   2) Connect Passenger Air Mix potentiometer.

   3) Measure voltage between terminal "5" and "6" of Passenger Air Mix potentiometer while operating the temp. switch.

Specification : Refer the specifications in fig 3)

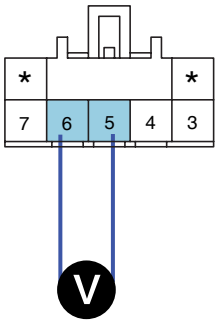

3. Motor
4. Motor
5. Potentiometer ground
6. Potentiometer signal
7. Sensor reference voltage(+5V)

SCMHA6713L

Door position	Voltage (5-6)	Error detecting
MAX. Cooling	0.3 ± 0.15V	Low voltage : 0.08V or less
MAX. Heating	4.7 ± 0.15V	High voltage :4.9V or more

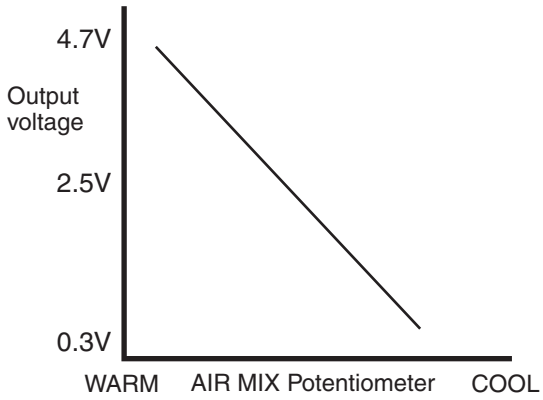

Fig. 3

Fig 3) Specifications : Voltage value of air mix potentiometer as a function of position of setting temperature.

EQBF521J

4) Is the measured voltage within specifications in fig3?

YES

Check connectors for looseness, poor connection, bending, corrosion, contamination, deterioration, or damage. Repair or replace as necessary and then go to "Verification of Vehicle Repair" procedure.

NO

Substitute with a known-good actuator and check for proper operation. If the problem is corrected, replace actuator and then go to "Verification of Vehicle Repair" procedure.

3. Check A/C Control Unit.

1) Engine "ON"

2) Connect A/C Control Unit.

3) Measure voltage between terminal "16" and "17" of A/C Control Unit while operating the temp. switch.

Specification :Approx. 12V

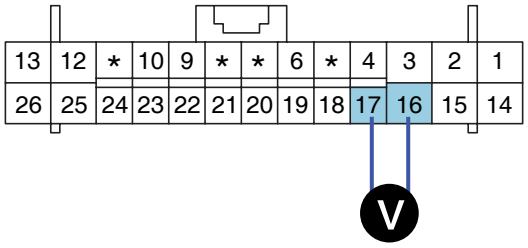

16 : Motor
17 : Motor

SCMHA6714L

4) Is the measured voltage within specifications?

YES

Check connectors for looseness, poor connection, bending, corrosion, contamination, deterioration, or damage. Repair or replace as necessary and then go to "Verification of Vehicle Repair" procedure.

NO

Substitute with a known-good A/C Control Unit and check for proper operation.
If the problem is corrected, replace A/C Control Unit and then go to "Verification of Vehicle Repair" procedure.

VERIFICATION OF VEHICLE REPAIR E9BA69FB

After a repair, it is essential to verify that the fault has been corrected.

1. Connect scantool and select "Diagnostic Trouble Codes(DTCs)" mode and then clear DTC.
2. Operate the vehicle and monitor the DTC on the scantool.
3. Are any DTCs present?

YES

Go to the applicable troubleshooting procedure.

NO

System is performing to specification at this time.

Body (Interior and Exterior)

GENERAL

EXTERIOR
- HOOD
- TAIL GATE
- FRONT DOOR
- REAR DOOR
- BODY SIDE MOLDINGS
- SUN ROOF
- MIRROR

INTERIOR
- CONSOLE
- CRASH PAD
- ROOF TRIM
- INTERIOR TRIM
- WINDSHIELD GLASS

BUMPER
- FRONT BUMPER
- REAR BUMPER

SEAT
- FRONT SEAT
- REAR SEAT
- SEAT BELT

GENERAL

SPECIFICATIONS EA377AB9

HOOD	Type	Rear hinged, gas lifter type
FRONT DOOR	Construction	Front hinged, full door construction
	Regulator system	Wire-drum type
	Locking system	Pin-fork system
REAR DOOR	Construction	Front hinged, full door construction
	Regulator system	Wire-drum type
	Locking system	Pin-fork system
TRUNK LID	Type	Inner hinged, gas lifter type
GLASS THICKNESS	Front door glass	3.5mm
	Rear door glass	3.5mm
SEAT BELTS	Front	3 point type with Emergency Locking Retractor (E.L.R)
	Rear	3 point type with Emergency Locking Retractor (E.L.R)

TIGHTENING TORQUE EE62FFD8

Items		N.m	Kgf.m	lbf.ft
Front and rear doors	Door hinge to body	21.6~26.5	2.2~2.7	15.9~19.5
	Door hinge to door	21.6~26.5	2.2~2.7	15.9~19.5
Tail gate	Tail gate hing to body	21.6~26.5	2.2~2.7	15.9~19.5
	Tail gate hing tail gate	21.6~26.5	2.2~2.7	15.9~19.5
Hood	Hood hinge to body	21.6~26.5	2.2~2.7	15.9~19.5
	Hood hinge to hood	21.6~26.5	2.2~2.7	15.9~19.5
	Hood latch to body	6.9~10.8	0.7~0.1	5.1~8.0
Seat	Front seat mounting bolts	43.1~64.7	4.4~6.6	31.8~47.7
	Front seat mounting nut	43.1~64.7	4.4~6.6	31.8~47.7
	Rear seat mounting bolts	43.1~64.7	4.4~6.6	31.8~47.7
Seat belt	Front seat belt height adjuster	39.2~53.9	4.0~5.5	28.9~39.8
	Front seat belt buckle mounting bolt	39.2~53.9	4.0~5.5	28.9~39.8
	Front seat belt anchor mounting bolt	39.2~53.9	4.0~5.5	28.9~39.8
	Front seat belt lower anchor	39.2~53.9	4.0~5.5	28.9~39.8
	Front seat belt upper anchor	39.2~53.9	4.0~5.5	28.9~39.8
	Rear seat belt anchor attaching bolt	39.2~53.9	4.0~5.5	28.9~39.8
	Rear seat belt retractor mounting bolt	39.2~53.9	4.0~5.5	28.9~39.8

SPECIAL TOOLS E1FF88E2

Tool (Number and name)	Illustration	Use
09793-21000 Door hinge adjusting wrench	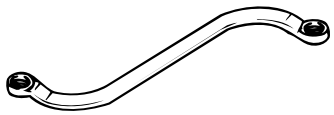 KSRE010A	Adjustment, removal and installation of the door hinge
09800-21000 Ornament remover	 KSRE010B	Trim removal
09853-31000 Headliner clip remover	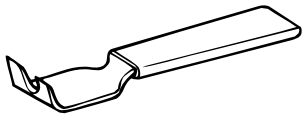 KSRE010C	Removal of the headliner clips
09861-31100 Sealant cut-out tool	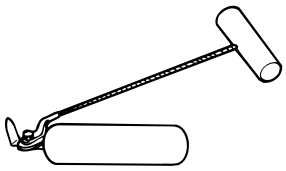 KSRE010D	Cutting the sealant of the windshield (use with 09861-31200)
09861-31200 Sealant cutting blade	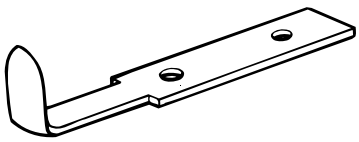 KSRE010E	Cutting the sealant of the windshield (use with 09861-31100)
09861-31300 Sealant gun	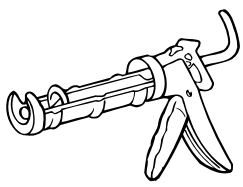 KSRE010F	Application of the sealant to the windshield

Tool (Number and name)	Illustration	Use
09861-31400 Glass holder	 KSRE010G	Removal and installation of the windshield
09861-31000 Windshield moulding remover	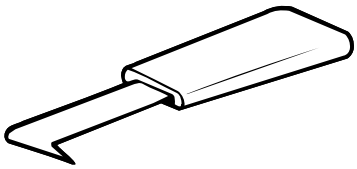 KSRE010H	Removal of the windshield moulding
09880-4F000 Hogring clip installer	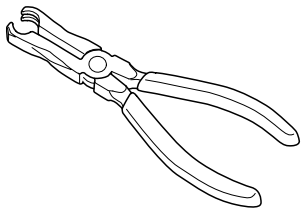 KSRE010I	Installation of the hogring clip

TROUBLESHOOTING EFFCCF9B

Symptom	Suspect Area	Remedy
Water leaks from sunroof	Dirt accumulated in drain tube	Clear dirt inside of drain
	Clogged drain tube	Blow air into drain to remove dirt
	Broken or dislocated drain tube, defective or cracked clip	Check tube installation and flange contact
	Deteriorated roof lid weatherstrip	Replace
	Excessive roof lid-to-body clearance and improperly fitted weatherstrip	Adjust
Wind noise around sunroof	Loosen or deformed deflector, gaps in body work	Retighten adjust or replace
Sunroof lid makes a noise when move	Foreign particles lodged in guide rail	Check drive cable and guide rails for foreign particles
	Loosen guide rails and lid	Retighten
Motor runs but sunroof does not move or moves only partially	Foreign particles lodged in guide rail	Check drive cable and guide rails for foreign particles
	Incorrect engagement of motor pinion with drive cable	Check for loosen motor installation and damaged pinion
	Decrease in motor‘s clutch slipping force	Adjust
	Increased sunroof sliding resistance or interference of sunroof with drive cables, weatherstrip, etc. due to mal adjustment of sunroof	Adjust or replace
Noise in motor (clutch slipping noise from motor when sunroof is fully opened or closed is not an unusual noise	Incorrect engagement of motor pinion With drive cable	Check pinion installation and Retighten motor
	Worn out or damaged motor pinion bearing	Replace motor assembly
	Worn out or deformed drive cable	Replace
Door glass fails to operate up and down	Incorrect window glass installation	Adjust position
	Damaged or faulty regulator arm or regulator	Correct or replace
Door does not open or close completely	Incorrect door installation	Adjust position
	Defective door check assembly	Correct or replace
	Door hinge requires grease	Apply grease
Hood does not open or close completely	Striker and latch not properly aligned	Adjust
	Incorrectly installed hood	Adjust
	Incorrect hood bumper height	Adjust
Water leak through windshield end rear window	Defective seal	Fill with sealant
	Defective flange	Correct

EXTERIOR

HOOD

REPLACEMENTS EA65142C

HOOD ASSEMBLY REPLACEMENT

NOTE

- *When removing and installing the hood, an assistant is necessary.*
- *Take care not to damaged the hood and body.*
- *When removing the clips, use a clip remover.*

1. Using a screwdriver (A), lift up slightly the socket clips (B) of both ends on the lifter (D), and then remove the lifter from the bracket (C).
2. After loosen the hood hinge (E) mounting bolts, remove the hood (F).
3. Installation is the reverse of removal.

NOTE

- *Make sure the hood opens properly and locks securely.*
- *Adjust the hood alignment. (See page BD- 13)*

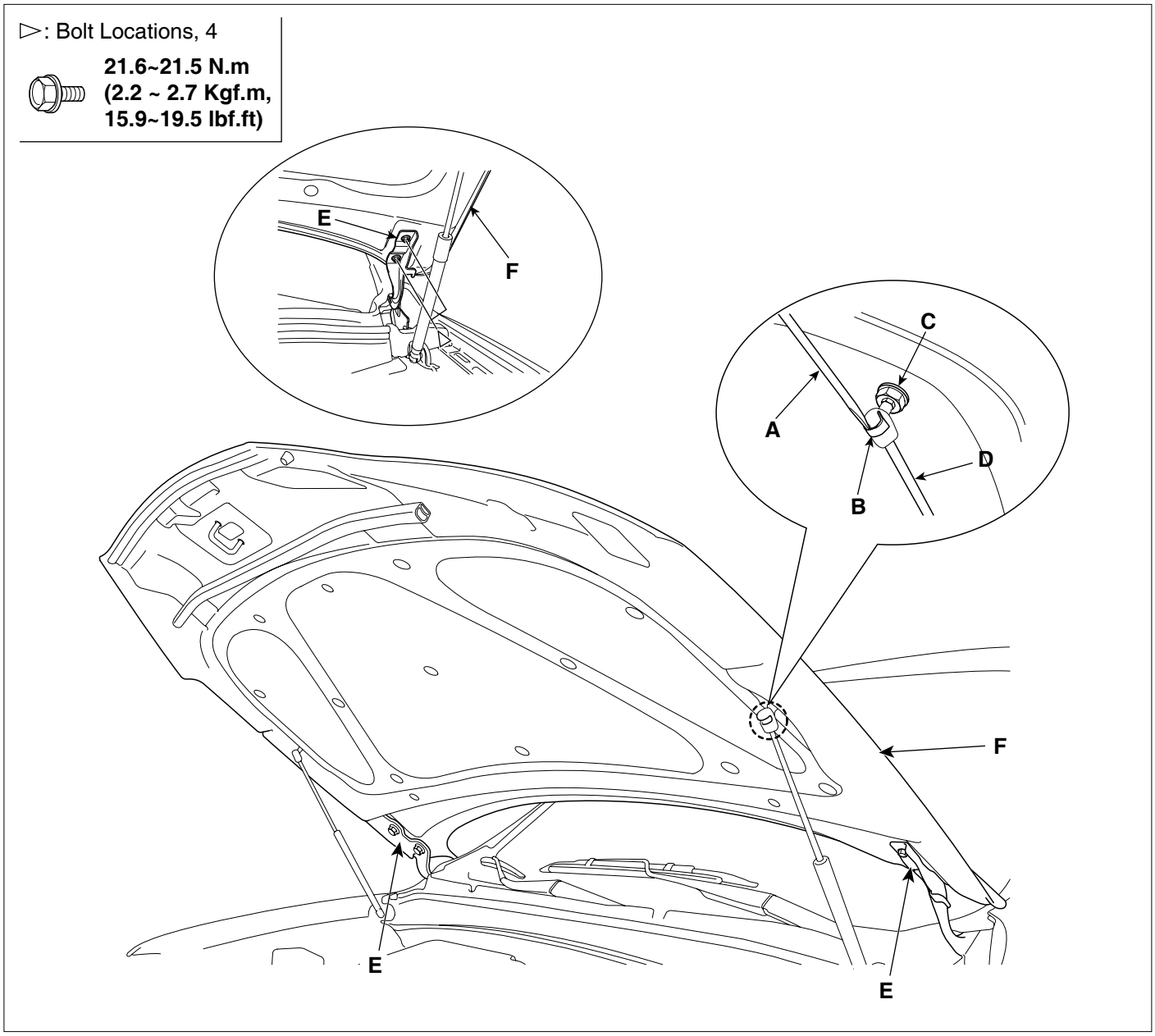

SCMBD6001L

HOOD INSULATOR REPLACEMENT

1. After loosening the mounting bolts, then remove the inter cooler duct (A).

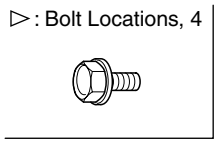

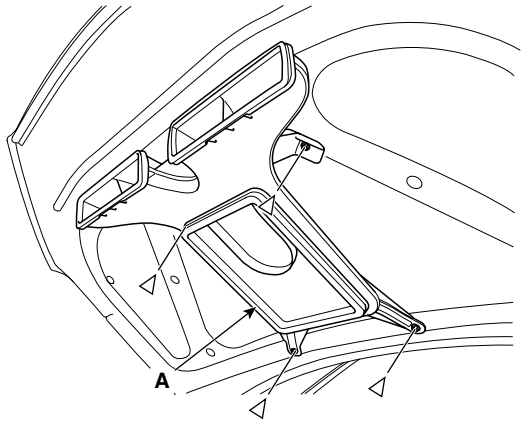

SCMBD6002L

2. Using a clip remover, detach the clips, and remove the hood insulator (A).

NOTE

- *Take care not to scratch the hood panel.*

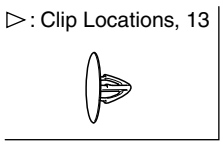

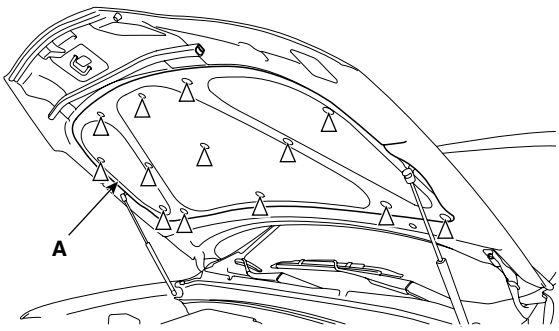

SCMBD6003L

3. Installation is the reverse of removal.

NOTE

- *Replace any damaged clips.*

HOOD SEAL WEATHERSTRIP REPLACEMENT

1. Detach the clips, then remove the hood weather-strip(A).

NOTE

- *Take care not to scratch the hood.*

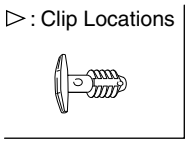

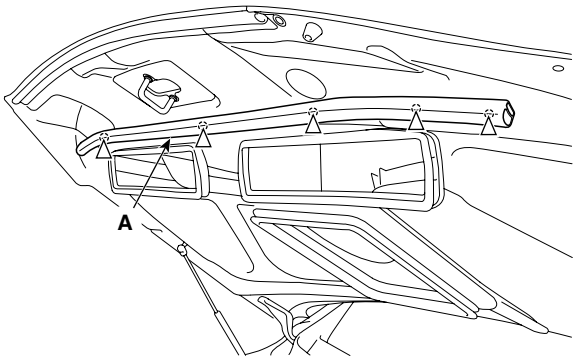

SCMBD6004L

2. Installation is the reverse of removal.

NOTE

- *Replace any damaged clips.*

HOOD LIFT REPLACEMENT

1. Using a screwdriver (A), lift up slightly the socket clips (B) of both ends on the lifter (D), and then remove the lifter from the bracket (C).

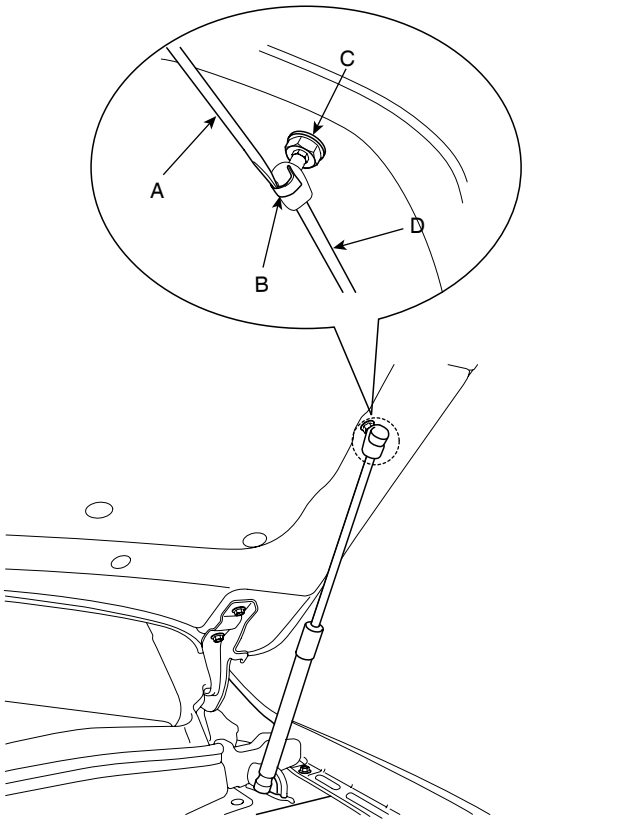

SCMBD6005D

2. Installation is the reverse of removal.

HOOD RELEASE HANDLE REPLACEMENT

1. After loosening the mounting screw, then remove the hood release handle (A).

▷: Clip

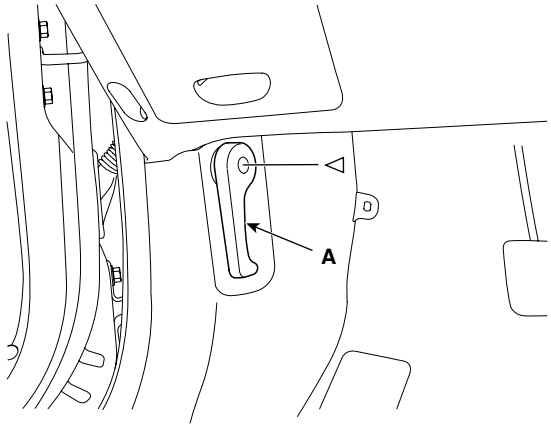

SCMBD6006L

2. Installation is the reverse of removal.

NOTE

- *Make sure the hood latch cable is connected properly.*
- *Make sure the hood locks securely.*

HOOD LATCH REPLACEMENT

1. Remove the front bumper cover. (See page BD- 90)
2. Detach the clips, then remove the duct (A).

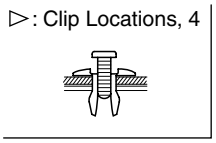

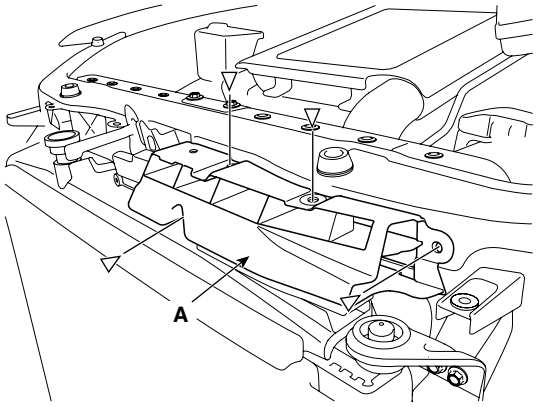

SCMBD6007L

3. Pull the radiator cover(A).

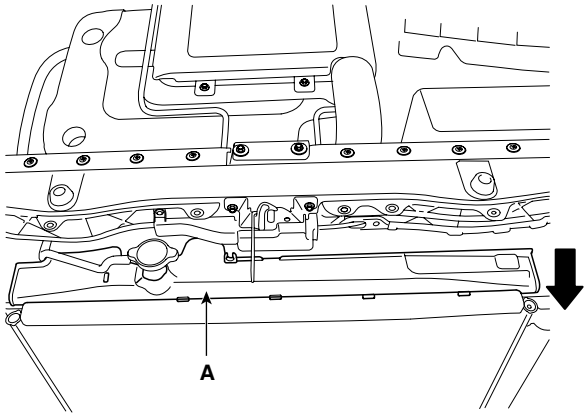

SCMBD6008D

4. Detach the clips, then remove the hood latch cover (A).

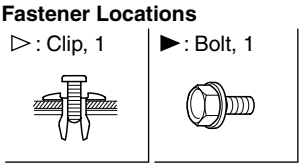

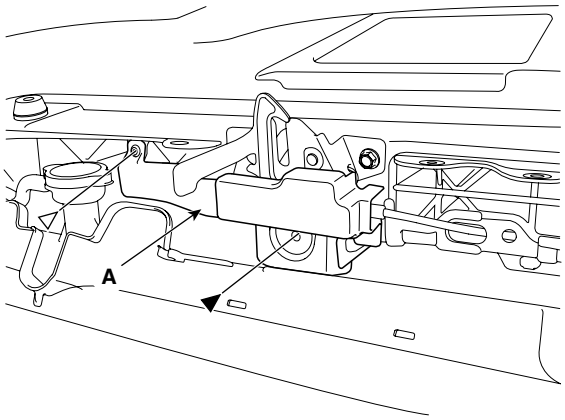

SCMBD6009L

5. After loosening the mounting bolts, then remove the hood latch (B).

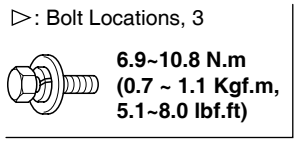

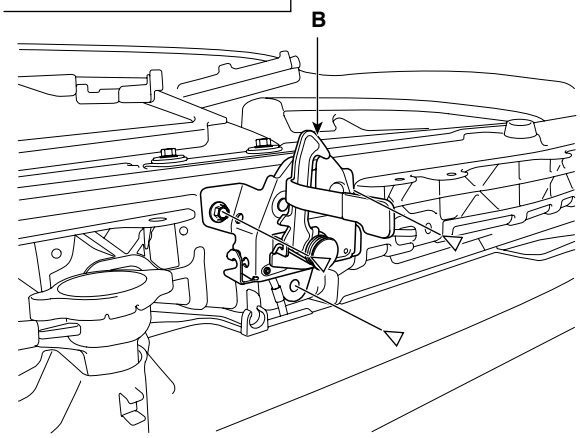

SCMBD6010L

6. Disconnect the connector (C).

7. Remove the release cable (A).

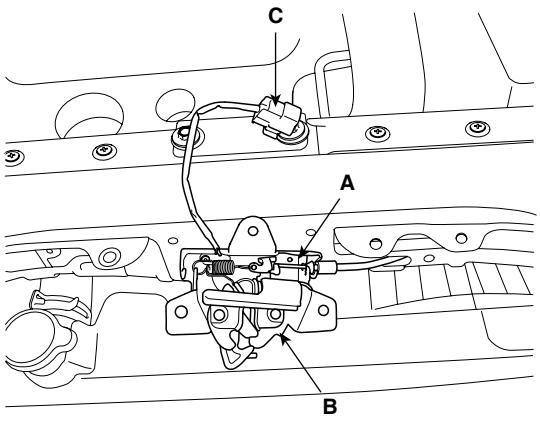

SCMBD6011D

8. Installation is the reverse of removal.

NOTE

- *Make sure the hood latch cable is connected properly.*
- *Make sure the hood locks securely.*

HOOD LATCH CABLE REPLACEMENT

1. Remove the following items.
   - Hood latch. (See page BD- 10)
   - Hood release handle. (See page BD- 9)
   - Wheel guard. (See page BD- 43)

NOTE

- *Take care not to bend the cable.*

2. Disconnect the hood latch cable (A) and release cable (B).

3. Remove the hood latch cable (C).

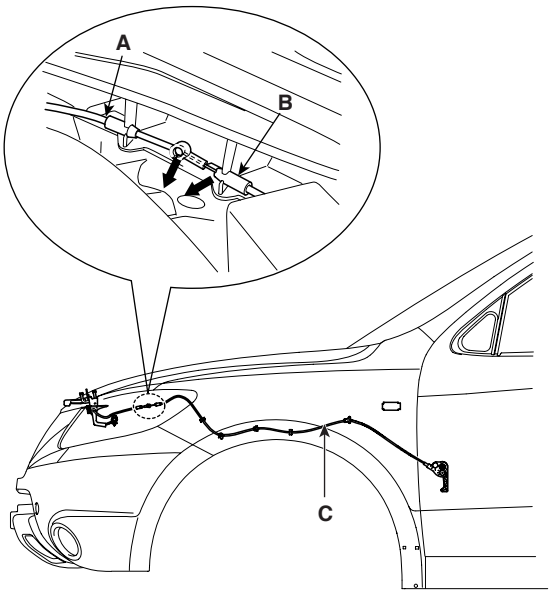

SCMBD6054D

4. Installation is the reverse of removal.

NOTE

- *Make sure the hood latch is connected properly.*
- *Replace any damaged clips.*

COWL TOP COVER REPLACEMENT

1. Remove the wiper (A).

▷: Bolt Locations, 2

27.5~37.3 N.m (2.8~3.3 Kgf.m, 20.3~27.5 lbf.ft)

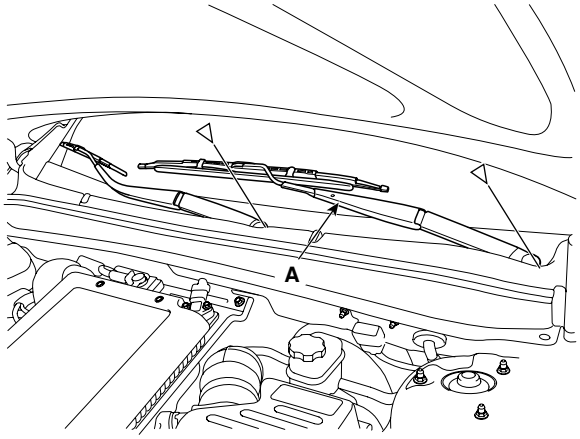

SCMBD6012L

2. Remove the hood seal weatherstrip.

3. Detach the clips, then remove the cowl top cover (A).

▷: Clip Locations, 3



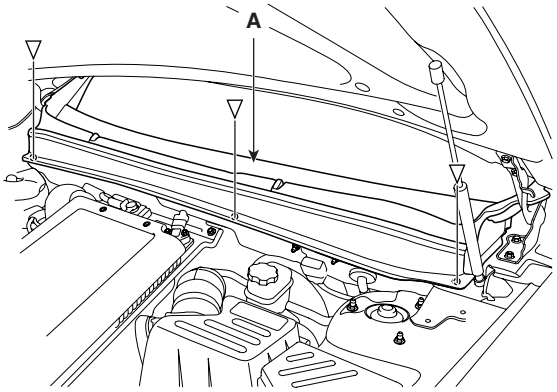

SCMBD6013L

4. Installation is the reverse of removal.

ADJUSTMENT E0D47449

1. After loosening the hinge (A) mounting bolt, adjust the hood (B) by moving it up or down, or right or left.
2. Adjust the hood height by turning the hood overslam bumpers (C).
3. After loosening the hood latch (C) mounting bolts, adjust the latch by moving it up or down, or right or left.

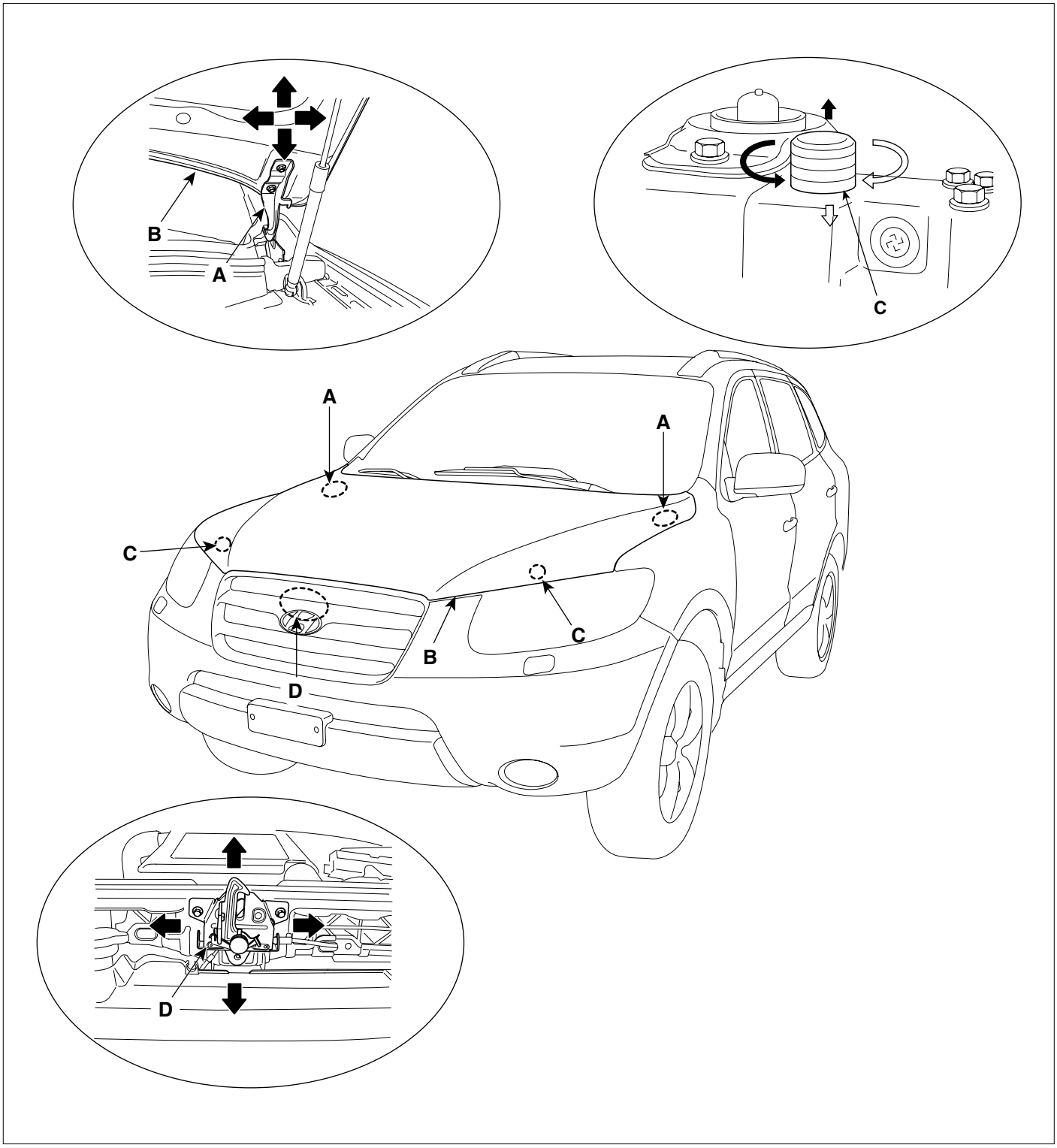

SCMBD6014D

TAIL GATE

REPLACEMENT E40E3DD5

TAILGATE TRIM REPLACEMENT

NOTE

- *When prying with a flat-tipped screwdriver, wrap it with protective tape, and apply protective tape around the related parts, to prevent damage.*
- *Put on gloves to protect your hands.*

1. After loosening the screws the remove the tailgate trim (A).
2. Remove the upper trim (B) and side trim (C).
3. Installation is the reverse of removal.

NOTE

- *Replace and damaged clips.*

Fastener Locations

► : Clip | ▻ : Clip | ⦿ : Screw | 1► : Bolt

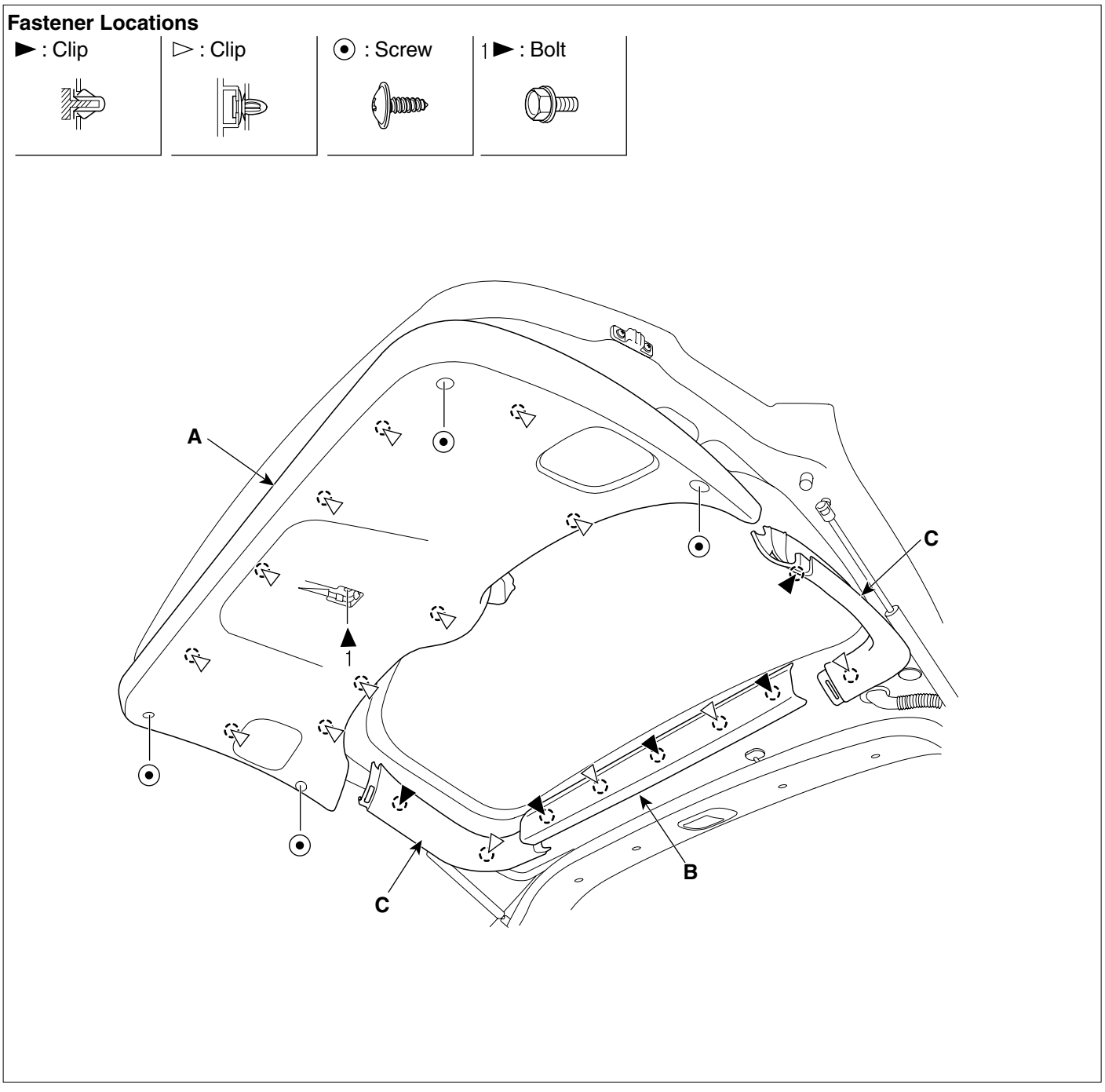

SCMBD6015L

LATCH ASSEMBLY REPLACEMENT

1. Remove the tailgate trim. (See page BD- 14)
2. Disconnect the outside handle rod (A), actuator rod (B).

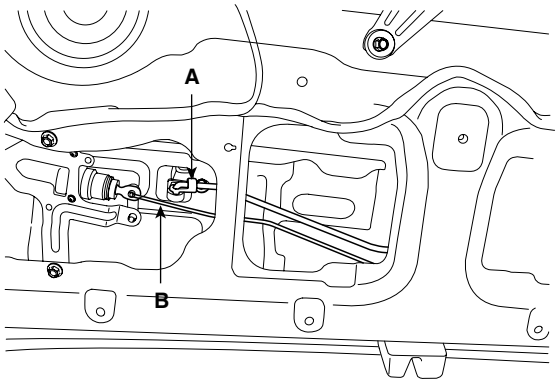

SCMBD6016D

3. After loosening the mounting screws, then remove the latch assembly (A).
4. Disconnect the connector (B).

▷: Bolt Locations, 3

6.9~10.8 N.m (0.7~1.1 Kgf.m, 5.1~8.0 lbf.ft)

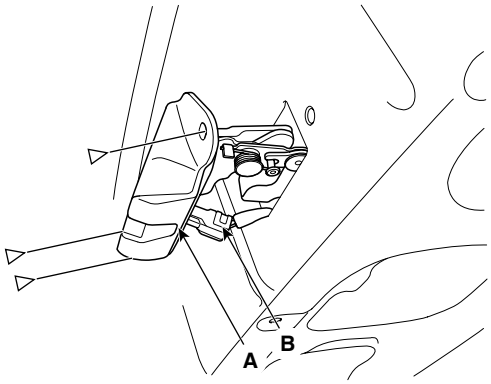

SCMBD6017L

5. Installation is the reverse of removal.

NOTE

- *Make sure the connector is connected properly and the connecting rod is connected properly.*
- *Make sure the tailgate opens properly and locks securely.*

ACTUATOR ASSEMBLY REPLACEMENT

1. Remove the tailgate trim. (See page BD- 14)
2. Disconnect the outside handle rod (A).
3. After loosening the mounting bolt and nuts, then remove the actuator assembly (C).

▷: Nut Locations, 2

3.9~5.9 N.m (0.4~0.6 Kgf.m, 2.9~4.3 lbf.ft)

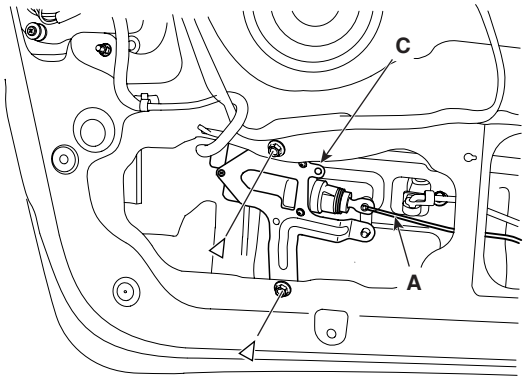

SCMBD6018L

4. Installation is the reverse of removal.

NOTE

- *Make sure the connector is connected properly and the connecting rod is connected properly.*
- *Make sure the tailgate opens properly and locks securely.*

OUTSIDE HANDLE REPLACEMENT

1. Remove the tailgate trim. (See page BD- 14)
2. Remove the actuator assembly. (See page BD- 15)
3. Disconnect the outside handle rod (A).
4. Loosen the outside handle mounting nuts.

▷: Nut Locations, 2

3.9~5.9 N.m (0.4~0.6 Kgf.m, 2.9~4.3 lbf.ft)

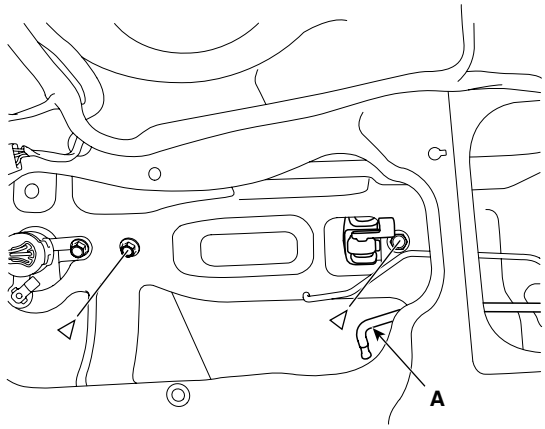

SCMBD6019L

5. Remove the outside handle (A).

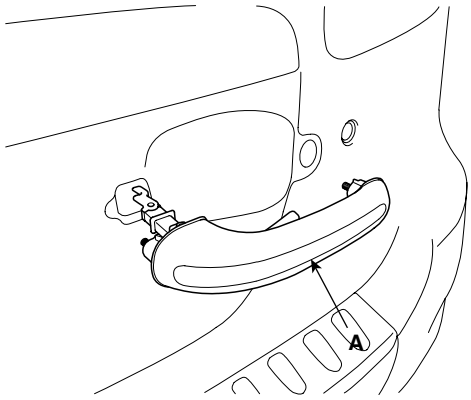

SCMBD6020D

6. Installation is the reverse of removal.

NOTE

- *Make sure the tailgate opens properly and locks securely.*

LIFTER REPLACEMENT

1. Using a screwdriver (A), lift up slightly the socket clips (B) of both ends on the lifer (D), and then remove the lifter from the bracket (C).

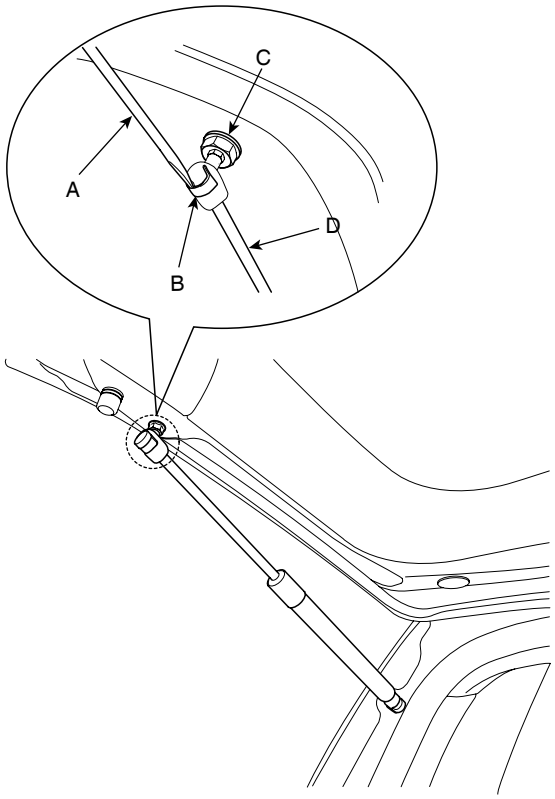

SCMBD6021D

2. Push the socket of the lifter into the bracket for installation.

SPEAKER REPLACEMENT

1. Remove the tailgate trim. (See page BD- 14)
2. Disconnect the connector (A).
3. After loosening the mounting bolts, then remove the speaker (B).

▷: Bolt Locations, 2

3.9~5.9 N.m (0.4~0.6 Kgf.m, 2.9~4.3 lbf.ft)

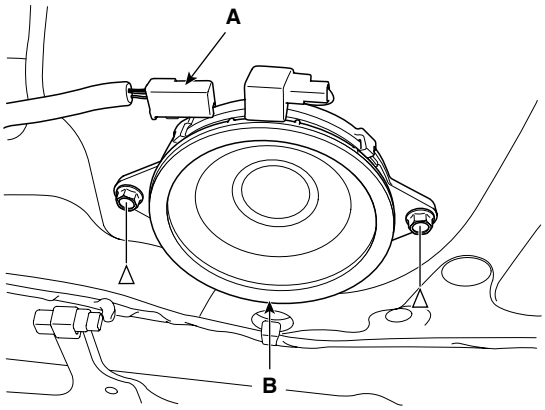

SCMBD6023L

4. Installation is the reverse of removal.

TAILGATE WEATHERSTRIP REPLACEMENT

NOTE

- *Do net apply sealant to the body.*

1. Remove the tailgate weather strip (A).

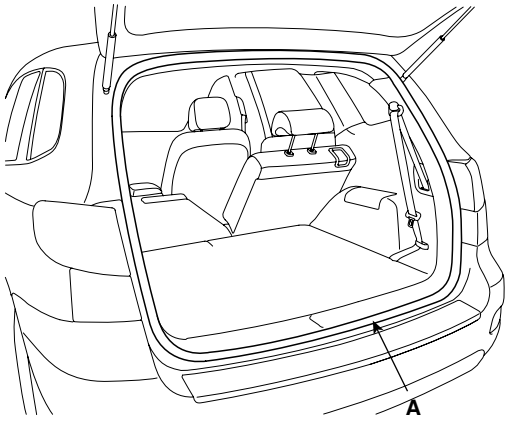

SCMBD6025D

2. Installation is the reverse of removal.

FUEL FILL DOOR REPLACEMENT

1. After loosening the mounting bolts, then remove the fuel fill door (A).
2. Check that the fuel fill door (A) fits flush against the body. If necessary, adjust it.

▷: Bolt Locations, 2

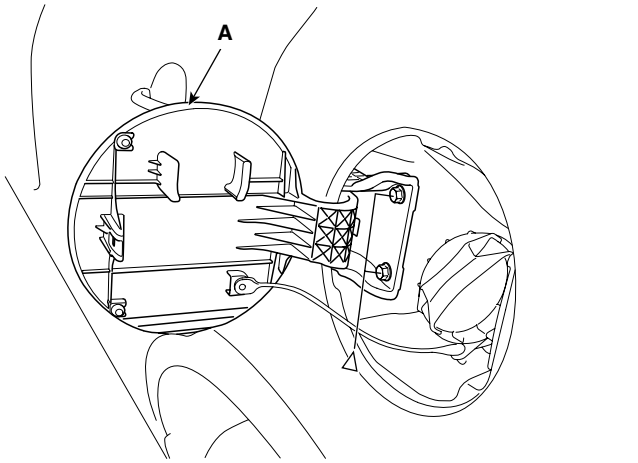

SCMBD6024L

3. Installation is the reverse of removal.

NOTE

- *Make sure the fuel fill door opens properly and locks securely.*

ADJUSTMENT EEC12B6D

1. After loosening the tailgate hinge (A) mounting bolt, adjust the tailgate by moving it up or down, or right or left.
2. Adjust the tailgate fit by turning the tailgate over slam bumper and side bumper (B).
3. Adjust the striker (C) by moving it up or down, or right or left.

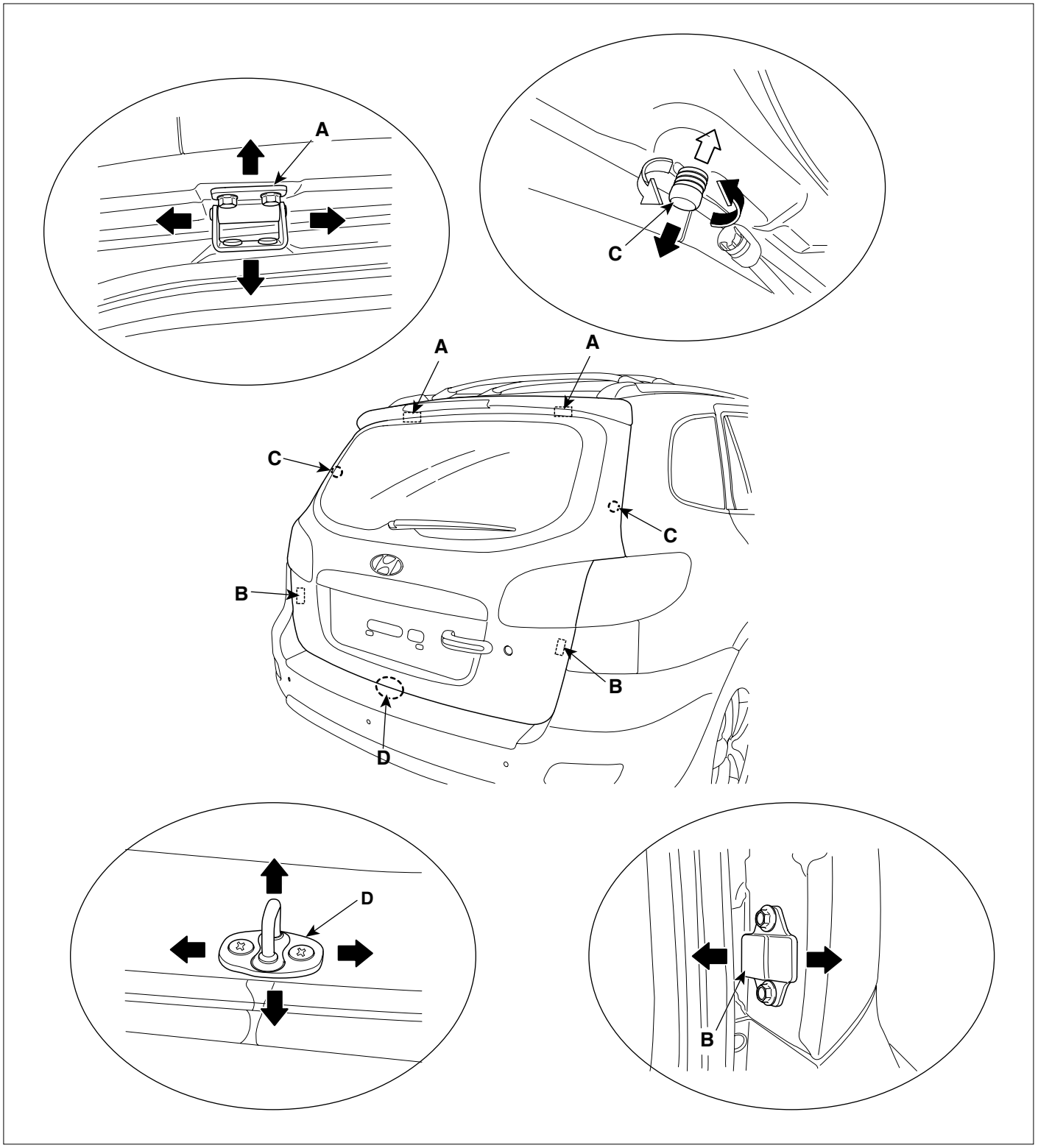

SCMBD6026D

FRONT DOOR

COMPONENTS ED79DACE

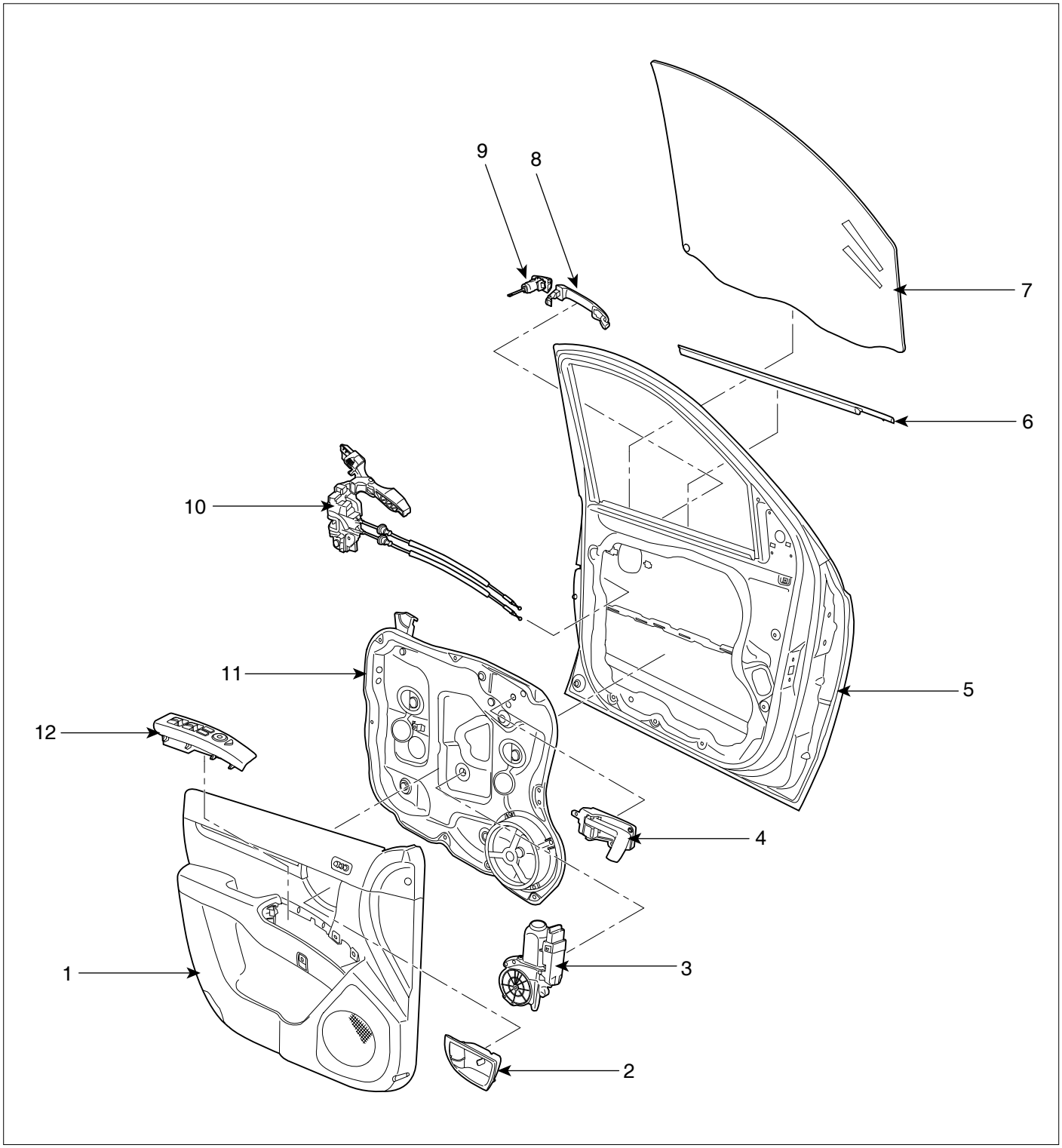

1. Front door trim
2. Inside handle cover
3. Power window motor
4. Inside handle
5. Front door frame
6. Door belt weatherstrip
7. Window glass
8. Outside handle
9. Key cylinder
10. Door latch assembly
11. Door module
12. Power window switch

SCMBD6167L

REPLACEMENT EFA76ADD

FRONT DOOR TRIM REPLACEMENT

NOTE

- *Take care not to scratch the door trim and other parts.*
- *Put on gloves to protect your hands.*

1. Remove the quadrant inner cover (A).

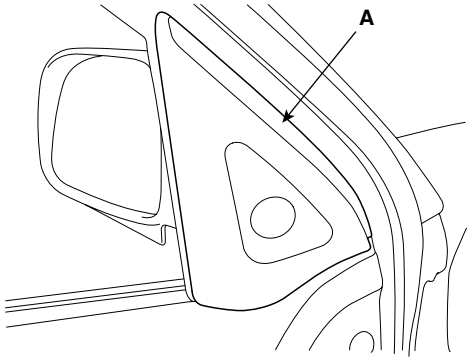

SCMBD6027D

2. Remove the inside handle cover (A).

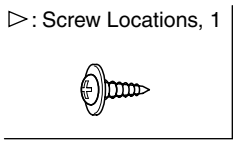

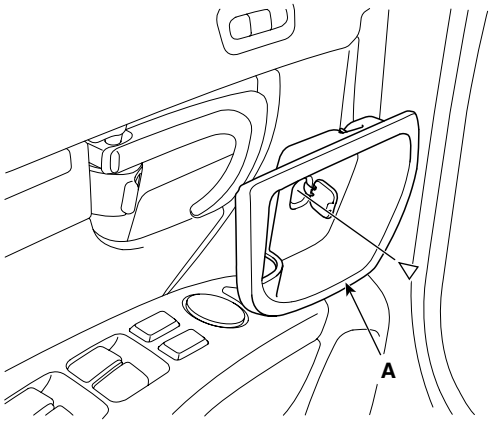

SCMBD6028L

3. Loosen the door trim (D) mounting screws. Release the clips that hold the door trim, then remove the door trim by pulling it upward. Disconnect the power window switch connector (A), power mirror connector (B), and door courtesy lamp connector (C).

Fastener Locations

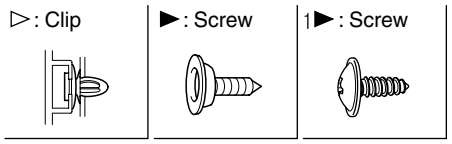

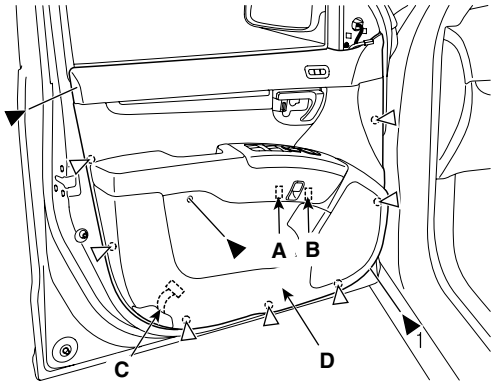

SCMBD6029L

4. Installation is the reverse of removal.

NOTE

- *Make sure of connectors is plugged in properly and each rod is connected securely.*
- *Make sure the door lock and opens properly.*

GLASS REPLACEMENT

1. Remove the front door trim. (See page BD- 21)
2. Carefully move the glass (A) until you can see the bolts, then loosen them. Separate the glass from the glass run and carefully pull the glass out through the window slot.

▷: Bolt Locations, 2

8.8~11.8 N.m (0.9~1.2 Kgf.m, 6.5~8.7 lbf.ft)

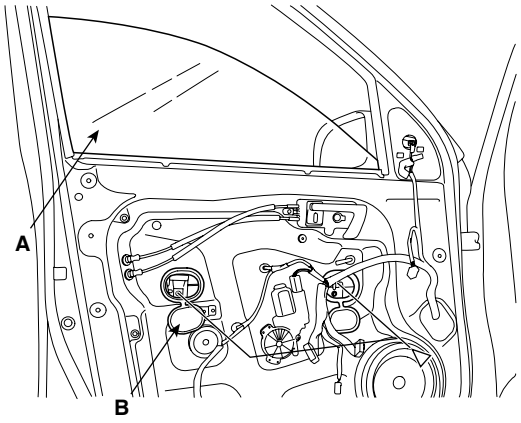

SCMBD6030L

3. Installation is the reverse of removal.

NOTE

- *Roll the glass up down to see if it move freely without binding.*
- *Adjust the position of the glass as necessary.*

INSIDE HANDLE REPLACEMENT

1. Remove the front door trim. (See page BD- 21)
2. Loosen the inside handle (A) mounting screw.

▷: Screw Locations, 3

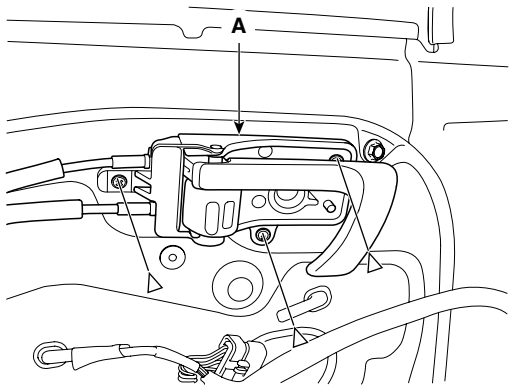

SCMBD6031L

3. Disconnect the lock cable (A) and inside handle cable (B).
4. Remove the inside handle(C).

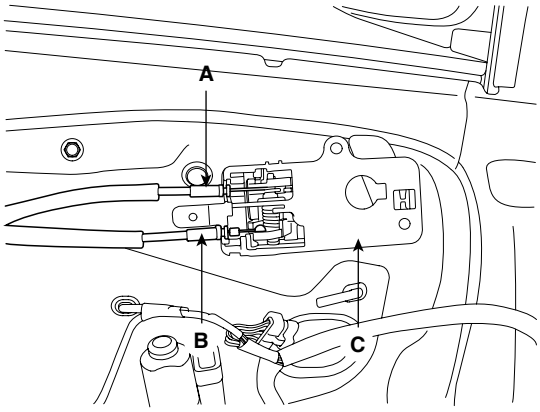

SCMBD6032D

5. Installation is the reverse of removal.

NOTE

- *Make sure the door locks and open properly.*

SPEAKER REPLACEMENT

1. Remove the front door trim. (See page BD- 21)
2. After disconnecting the connector (A), remove the power window motor (B).

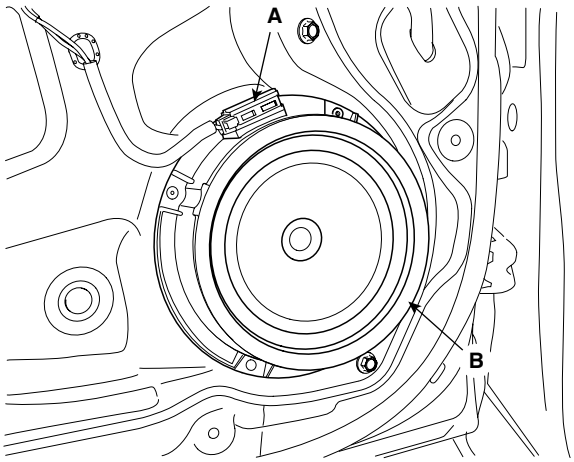

SCMBD6033D

3. Installation is the reverse of removal.

POWER WINDOW MOTOR REPLACEMENT

1. Remove the door trim. (See page BD- 21)
2. After disconnecting the connector (A), remove the power window motor (B).

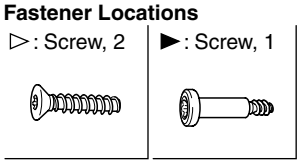

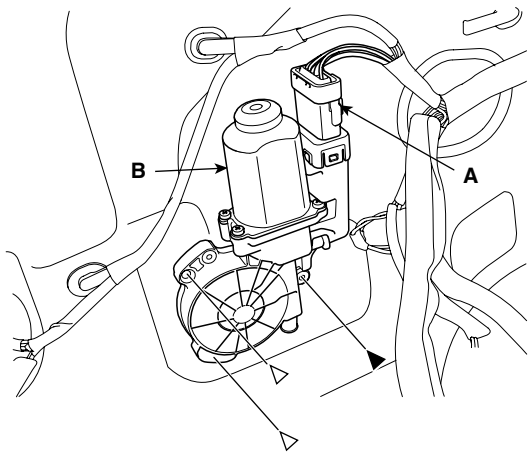

SCMBD6034L

3. Installation is the reverse of removal.

NOTE

- *Roll the glass up down to see if it move freely without binding.*

FRONT DOOR MODULE ASSEMBLY REPLACEMENT

1. Remove the following parts.
   - Front door trim. (See page BD- 21)
   - Window glass. (See page BD- 22)
   - Outside handle. (See page BD- 25)

2. Loosen the outside handle base mounting screw (A).

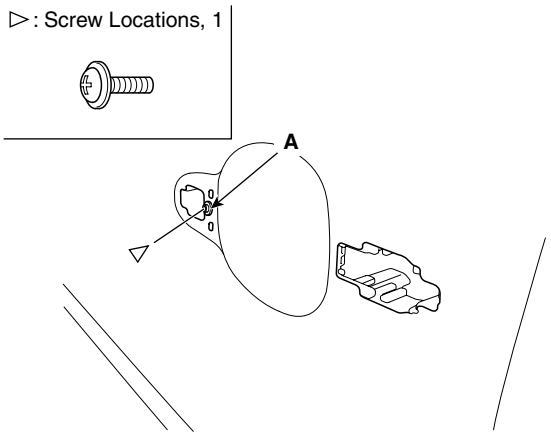

SCMBD6035L

3. Loosen the module (A) mounting bolts and latch mounting screws.

Fastener Locations

►: Screw, 3	▷: Bolt, 8
6.9~10.8 N.m (0.7~1.1 Kgf.m, 5.1~8.0 lbf.ft)	**7.8~11.8 N.m (0.8~1.2 Kgf.m, 5.1~8.7 lbf.ft)**

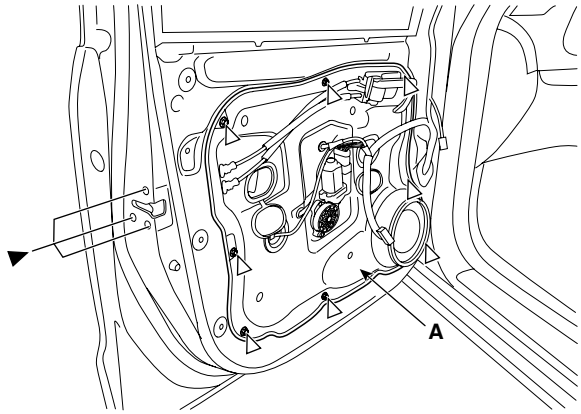

SCMBD6036L

4. Disconnect the door module wiring harness (A), then remove the module assembly (B).

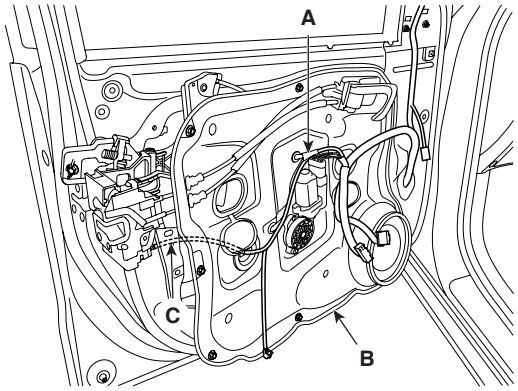

SCMBD6037D

5. Installation is the reverse of removal.

NOTE

- *Make sure the connector are plugged in properly and each rod is connected securely.*
- *Make sure the door locks and opens properly.*

LATCH ASSEMBLY REPLACEMENT

1. Remove the following parts.
   - Front door trim. (See page BD- 21)
   - Window glass. (See page BD- 22)
   - Inside handle. (See page BD- 8)
   - Door module. (See page BD- 24)

2. Remove the latch assembly (A).

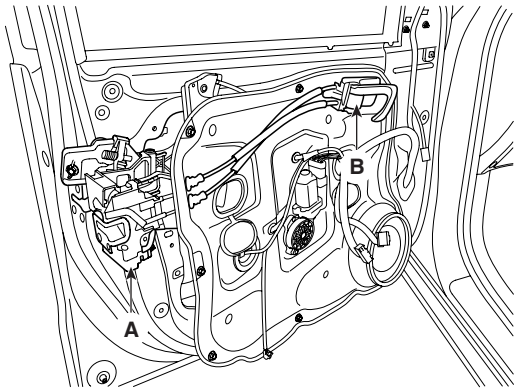

SCMBD6505D

3. Installation is the reverse the removal.

NOTE

- *Make sure the door locks and opens properly.*

OUTSIDE HANDLE REPLACEMENT

1. Loosen the mounting bolt, then remove the key holder (A).

▷: Bolt Locations

6.9~10.8 N.m (0.7~1.1 Kgf.m, 5.1~8.0 lbf.ft)

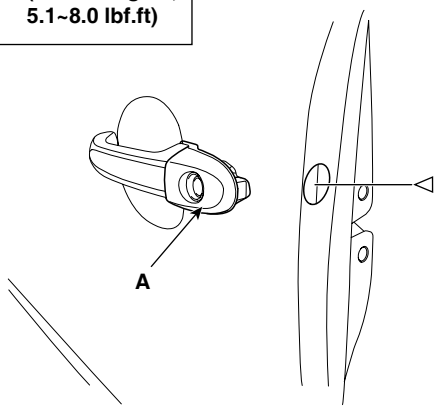

SCMBD6038L

2. Remove the outside handle (A).

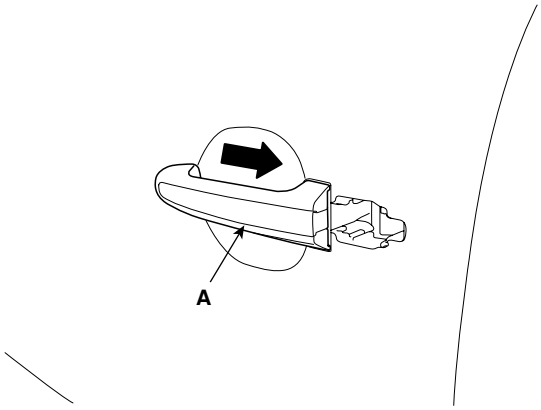

SCMBD6039D

3. Installation is the reverse of removal.

DOOR CHECKER REPLACEMENT

1. Remove the front door trim. (See page BD- 21)
2. Remove the door module. (See page BD- 24)
3. Loosen the mounting bolt, then remove the rear checker (A).

Fastener Locations

▷: Bolt, 2	►: Bolt, 1
6.9~10.8N.m (0.7 ~ 1.1Kgf.m, 5.1~8.0lbf.ft)	**16.7~21.6N.m (1.7 ~ 2.2Kgf.m, 12.3~15.9lbf.ft)**

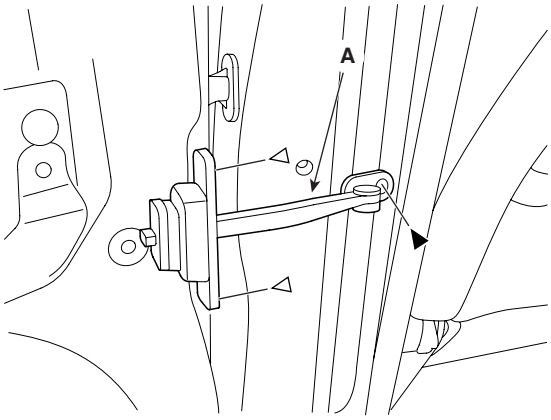

LSLG006O

4. Installation is the reverse the removal.

DOOR BELT WEATHERSTRIP REPLACEMENT

1. Loosen the mounting screw, then remove the door belt weatherstrip (A).

▷: Screw Locations, 1

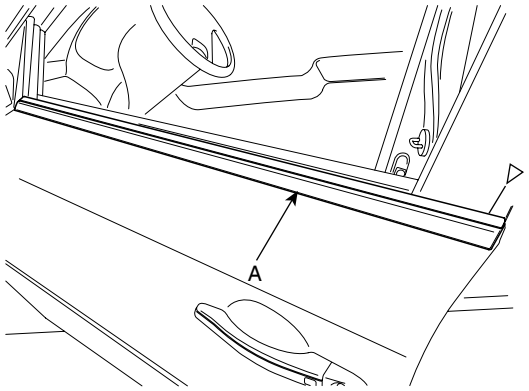

LSLG140N

2. Installation is the reverse of removal.

DOOR WEATHERSTRIP REPLACEMENT

1. Loosen the checker mounting bolts.
2. Detach the clips, then remove the weatherstrip(A).

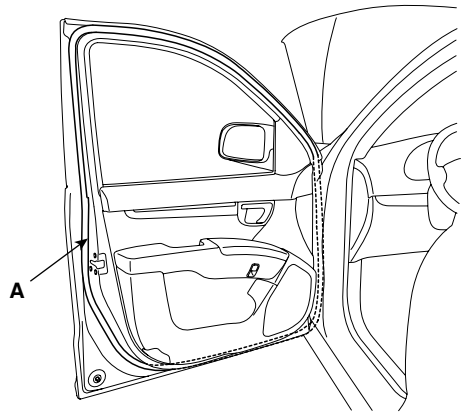

SCMBD6040D

3. Installation is the reverse of removal.

POWER WINDOW SWITCH REPLACEMENT

NOTE

- *When prying with a flat-tipped screwdriver, wrap it with protective tape, and apply protective tape around the related parts, to prevent damaged.*

1. Remove the front door trim. (See page BD- 21)
2. Remove the power window switch (A).

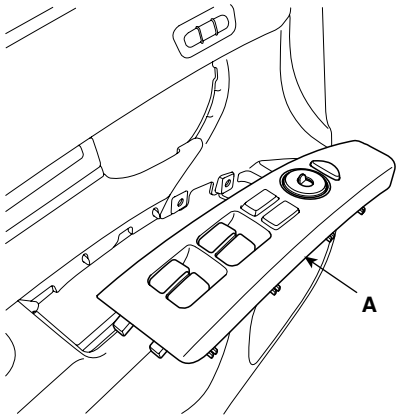

SCMBD6041D

3. Installation is the reverse the removal.

ADJUSTMENT EDDDB1BD

GLASS ADJUSTMENT

NOTE

- *Check the glass run channel for damaged or deterioration, and replace them necessary.*

1. Remove the door trim. (See page BD- 21)
2. Carefully move the glass (A) until you can see the glass mounting bolts (B), then loosen them.

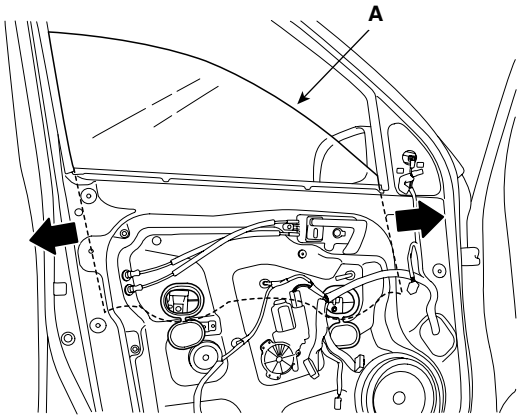

SCMBD6506D

3. Check that the glass moves smoothly.
4. Raise the glass fully, and check for gaps.
   Check that the glass contacts the glass run channel evenly.
5. Check for water leaks. Run water over the roof and on the sealing area as shown, and note these items:
   - Use a 12mm (1/2 in.) diameter hose (A).
   - Adjust the rate of water flow as shown (B).
   - Do not use a nozzle.
   - Hold the hose about 300mm(12in.) away from the door (C).

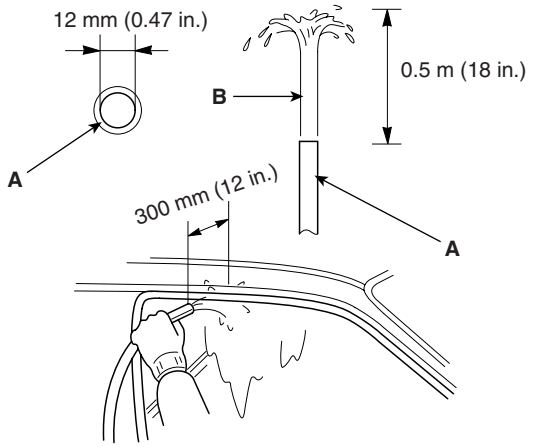

ESKE003L

DOOR POSITION ADJUSTMENT

NOTE

- *After installing the door, check for a flush fit with the Body, then check for equal gaps between the front, Rear, and bottom, door edges and the body. CheckThat the door and body edges are parallel. Before Adjusting, replace the mounting bolts.*

1. Place the vehicle on a firm, level surface when adjusting the doors.
2. Adjust at the hinges (A):
   - Loosen the door mounting bolts (B) slightly, and move the door IN or OUT until it aligns flush with the body.
   - Loosen the hinge mounting bolts (C) slightly, and move the door BACKWARD or FORWARD, UP or DOWN as necessary to equalize the gaps.
   - Place a shop towel on the jack to prevent damaged to the door when adjusting the door.

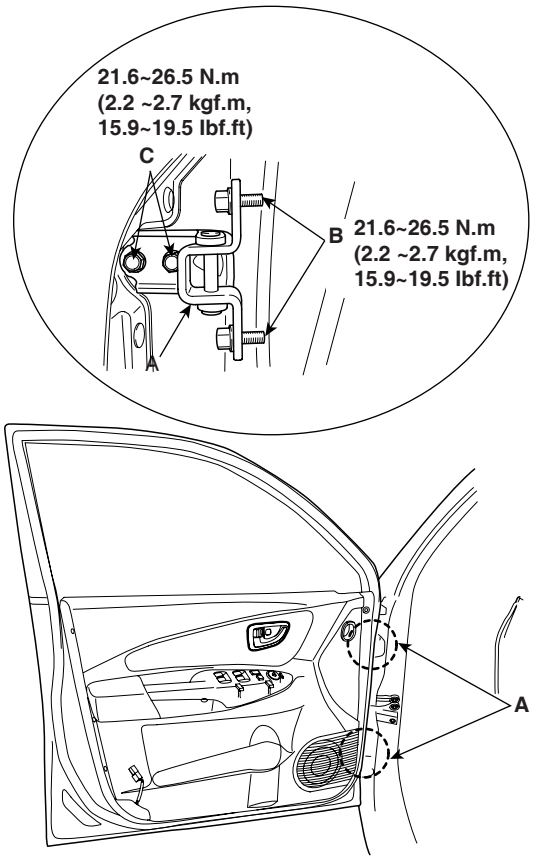

SCMBD6513L

3. Check that the door and body edges are parallel.

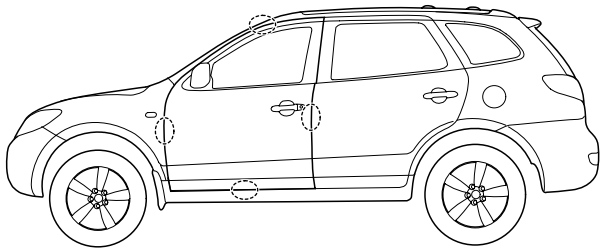

SCMBD6500D

4. Grease the pivot portions of the hinges indicated by the arrows.

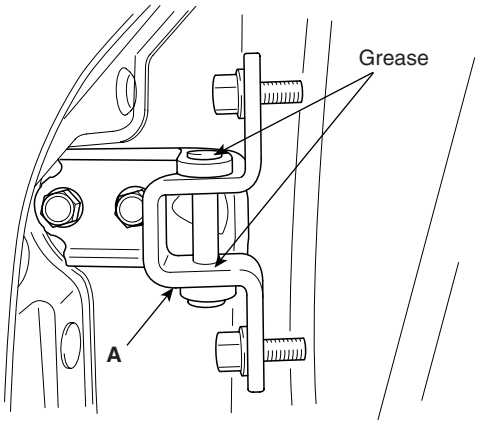

ESBF152A

5. Check for water leaks.

DOOR STRIKER ADJUSTMENT

Make sure the door latches securely without slamming it. If necessary, adjust the striker (A): The striker nuts are fixed. The striker can be fine adjusted up or down, and in or out.

1. Loosen the screws (B), then insert a shop towel between the body and striker.

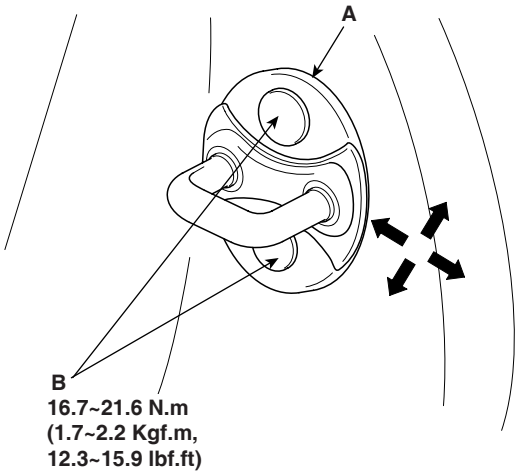

SCMBD6515L

2. Lightly tighten the screws.
3. Wrap the striker with a shop towel, then adjust the striker by tapping it with a plastic hammer. Do not tap the striker too hard.
4. Loosen the screws and remove the shop towel.
5. Lightly tighten the screws.
6. Hold the outer handle out, and push the door against the body to be sure the striker allows a flush fit. If the door latches properly, tighten the screws and recheck.

REAR DOOR

COMPONENTS EABD728F

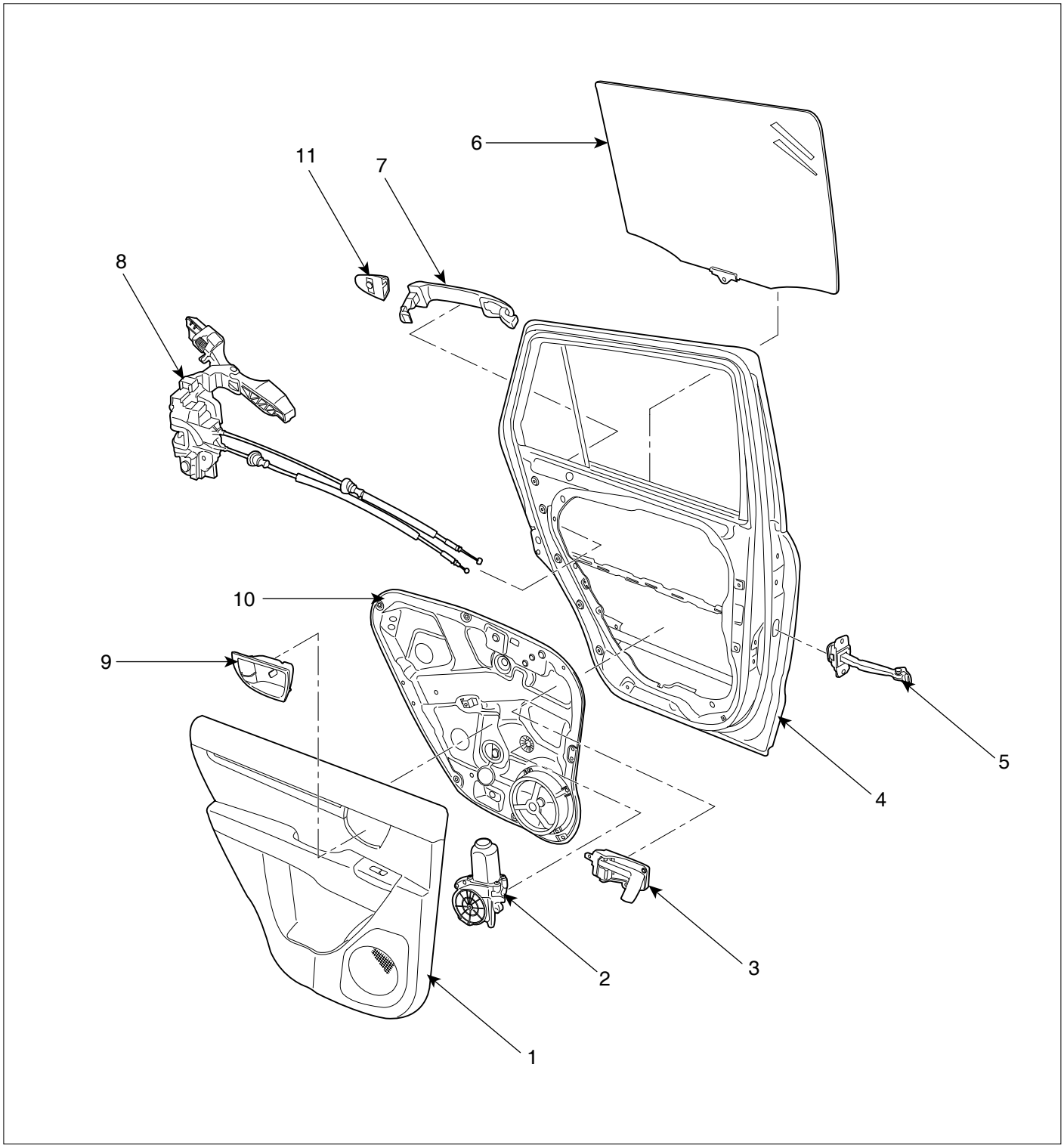

1. Rear door trim
2. Power window motor
3. Inside handle
4. Rear door frame
5. Door checker
6. Window glass
7. Outside handle
8. Door latch assembly
9. Inside handle cover
10. Rear door module
11. Outside handle cover

SCMBD6168L

REPLACEMENT EB658B42

REAR DOOR TRIM REPLACEMENT

NOTE

- *Take care not to scratch the door trim and other parts.*
- *Put on gloves to protect your hands.*

1. Remove the inside handle cover (A).

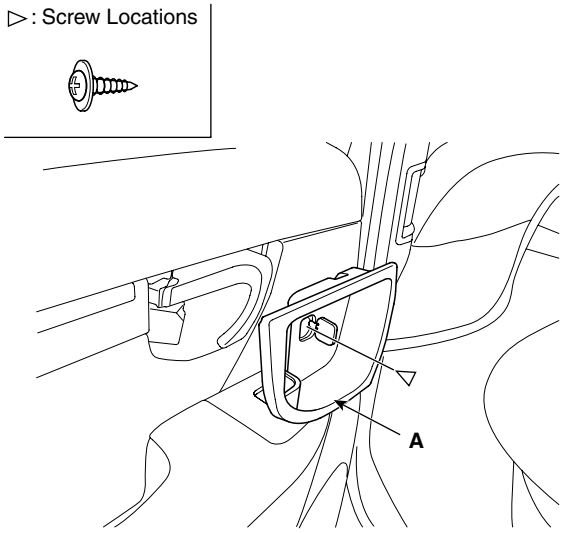

SCMBD6043L

2. Loosen the door trim (B) mounting screws. Release the clips that hold the door trim, then remove the door trim by pulling it upward. Disconnect the power window switch connector (A).

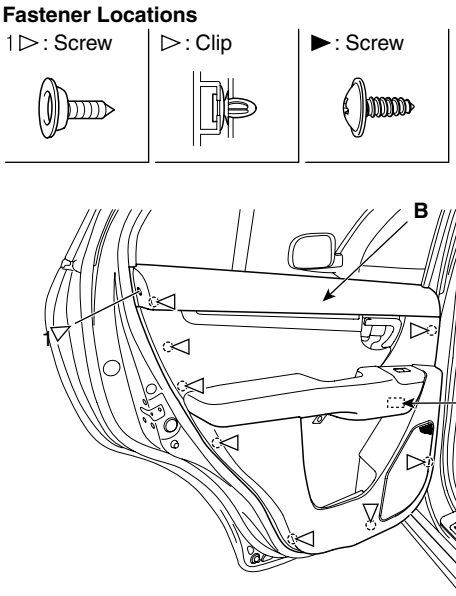

SCMBD6044L

3. Installation is the reverse of removal.

NOTE

- *Make sure of connectors is plugged in properly and each rod is connected securely.*
- *Make sure the door locks and opens properly.*

REAR DOOR MODULE ASSEMBLY REPLACEMENT

1. Remove the following parts.
   - Rear door trim. (See page BD- 32)
   - Window glass. (See page BD- 34)
   - Outside handle. (See page BD- 35)

2. Loosen the outside handle base mounting screw (A).

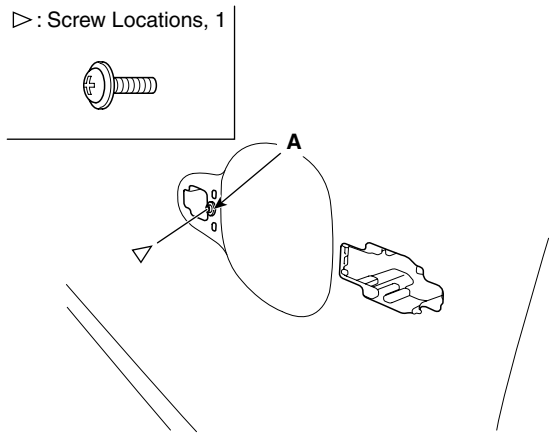

SCMBD6035L

3. Loosen the module (A) mounting bolts and latch mounting screws.

Fastener Locations

▷: Bolt, 8	▶: Screw, 3
7.8~11.8 N.m (0.8~1.2 Kgf.m, 5.8~8.7 lbf.ft)	**6.9~10.8 N.m (0.7~1.1 Kgf.m, 5.1~8.0 lbf.ft)**

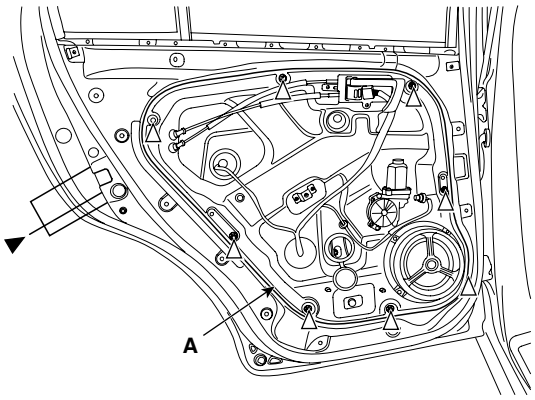

SCMBD6045L

4. Disconnect the door module wiring harness (A), then remove the module assembly (B).

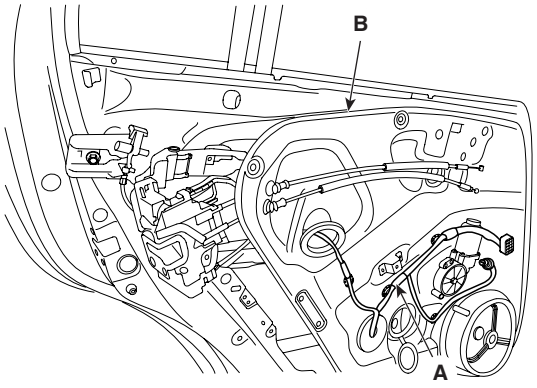

SCMBD6046D

5. Installation is the reverse of removal.

NOTE

- *Make sure the connector are plugged in properly and each rod is connected securely.*
- *Make sure the door locks and opens properly.*

GLASS REPLACEMENT

NOTE

- *Put on gloves to protect your hands.*

1. Remove the rear door trim. (See page BD- 32)
2. Loosen the screws and bolt, then remove the quarter glass (A).

Fastener Locations

►: Screw	▷: Bolt
	 **6.9~10.8 N.m (0.7~1.1 Kgf.m, 5.1~8.0 lbf.ft)**

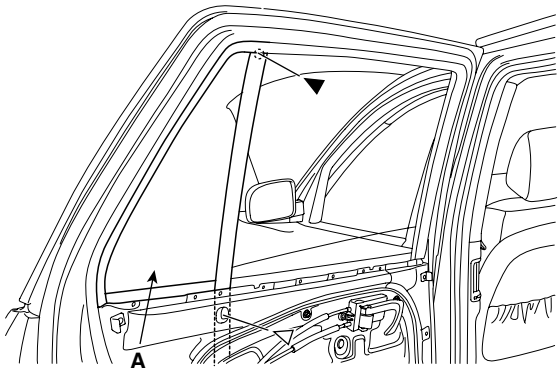

SCMBD6047L

CAUTION

- ***Take care not to drop to glass and scratch the glass surface.***

3. Carefully move the glass (A) until you can see the bolts, then loosen them. Separate the glass from the glass run and carefully pull the glass out through the window slot.

▷: Screw Locations, **3.9~5.9 N.m (0.4~0.6 Kgf.m, 2.9~4.3 lbf.ft)**

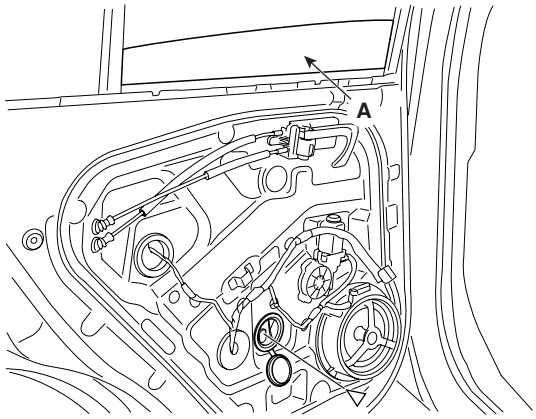

SCMBD6220L

4. Installation is the reverse of removal.

NOTE

- *Roll the glass up down to see if it move freely without binding.*
- *Adjust the position of the glass as necessary.*

POWER WINDOW MOTOR REPLACEMENT

1. Remove the rear door trim. (See page BD- 32)
2. After disconnecting the connector (A), remove the power window motor (B).

Fastener Locations

1 ▶ : Screw, 2 | ▶ : Screw, 1

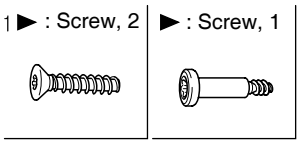

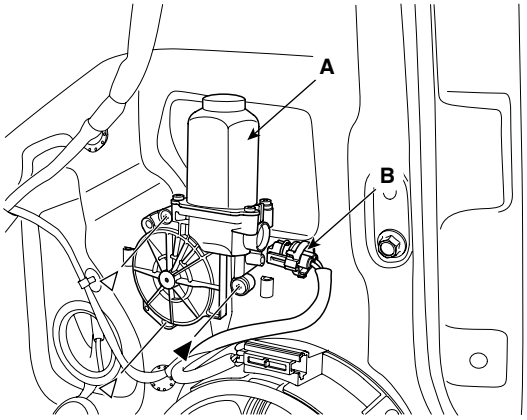

SCMBD6048L

3. Installation is the reverse of removal.

NOTE

- *Roll the glass up down to see if it move freely without binding.*

OUTSIDE HANDLE REPLACEMENT

1. Remove the door trim. (See page BD- 32)
2. Loosen the mounting bolt, then remove the handle cover (A).

▷ : Bolt Locations, 2



6.9~10.8 N.m (0.7~1.1 Kgf.m, 5.1~8.0 lbf.ft)

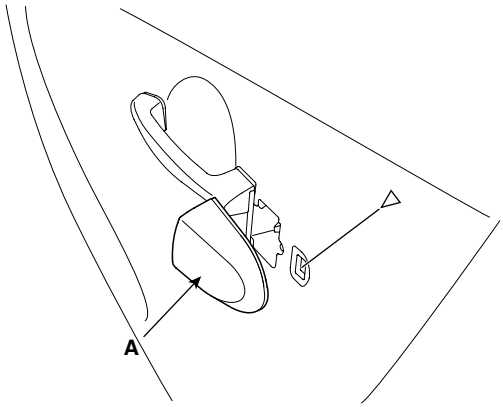

SCMBD6049L

3. Remove the outside handle (A).

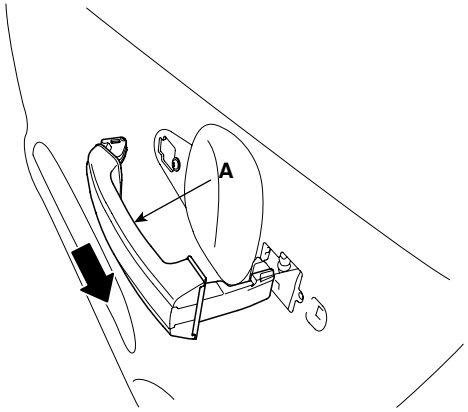

SCMBD6050D

4. Installation is the reverse of removal.

LATCH ASSEMBLY REPLACEMENT

1. Remove the following parts.
   - Front door trim. (See page BD- 32)
   - Window glass. (See page BD- 34)
   - Inside handle. (See page BD- 36)
   - Outside handle. (See page BD- 35)
2. Remove the module assembly. (See page BD- 33)
3. Remove the latch assembly (B).

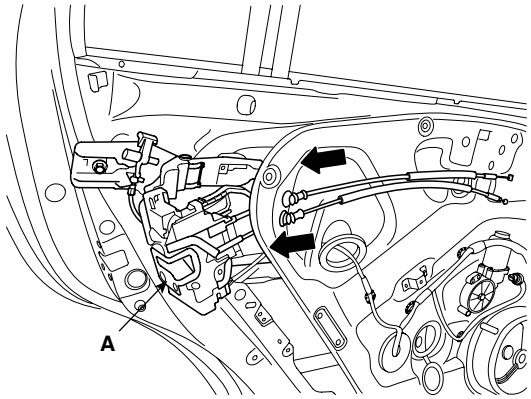

SCMBD6051D

4. Installation is the reverse the removal.

NOTE

- *Make sure the door locks and opens properly.*

INSIDE HANDLE REPLACEMENT

1. Remove the front door trim. (See page BD- 32)
2. Loosen the inside handle (A) mounting screw. Push the inside handle rearward to disconnect.

▷ : Screw Locations, 3

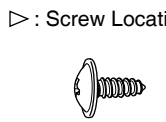

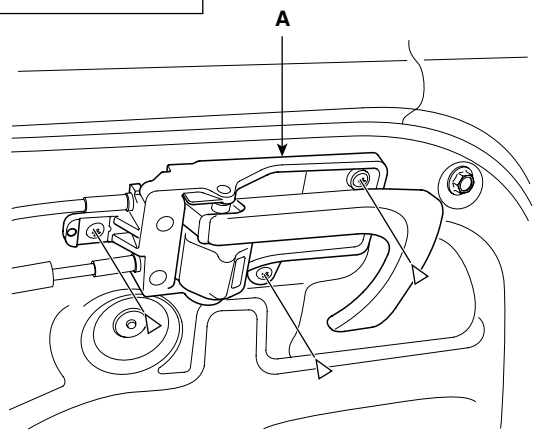

SCMBD6052L

3. Disconnect the lock cable (A) and inside connect cable (B).

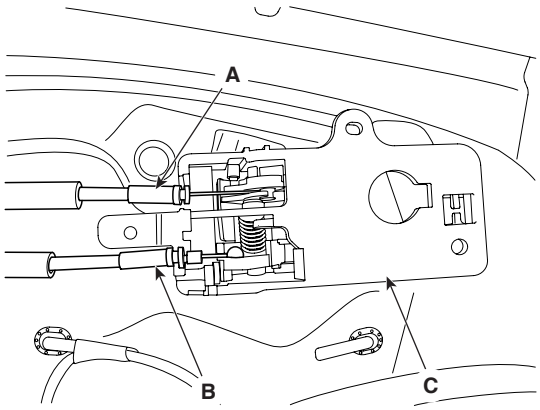

SCMBD6053D

4. Installation is the reverse of removal.

NOTE

- *Make sure the door locks and opens properly.*

DOOR BELT WEATHERSTRIP REPLACEMENT

1. Loosen the mounting screw, then remove the door belt weatherstrip (A).

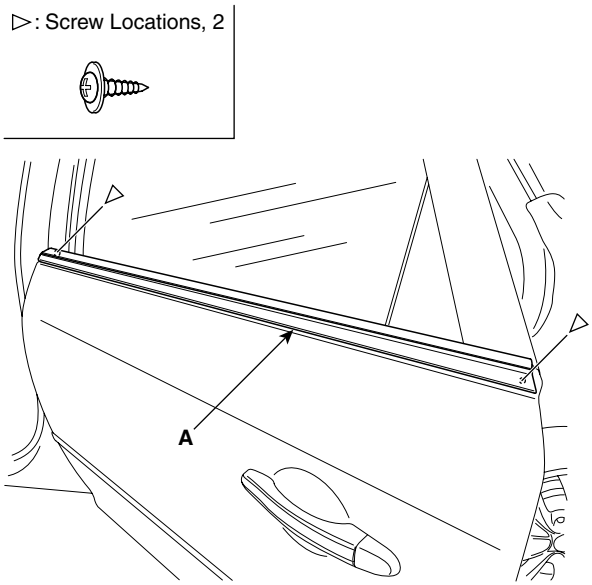

ESBF150N

2. Installation is the reverse of removal.

DOOR WEATHHERSTRIP REPLACEMENT

1. Loosen the checker mounting bolts.
2. Detach the clips, then remove the weatherstrip(A).

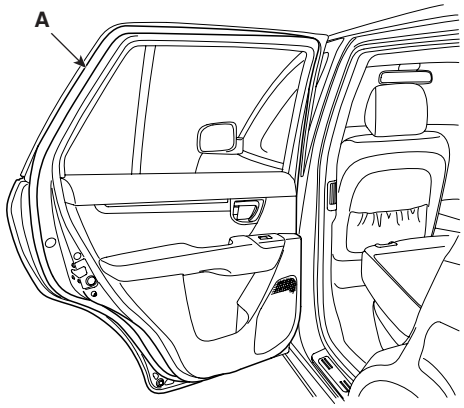

SCMBD6055D

3. Installation is the reverse the removal.

SPEAKER REPLACEMENT

1. Remove the rear door trim. (See page BD- 32)

2. After disconnecting the connector (A), remove the power window motor (B).

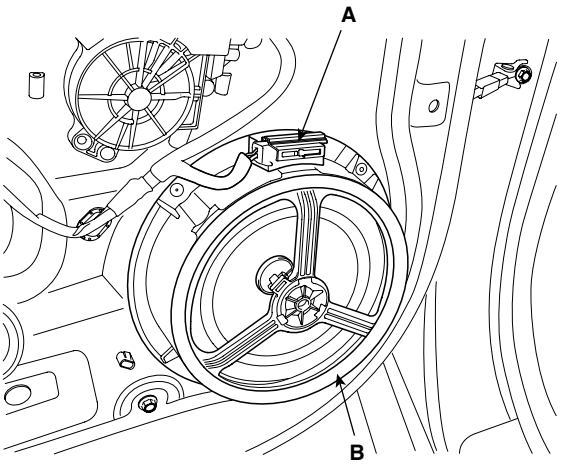

SCMBD6056D

3. Installation is the reverse of removal.

ADJUSTMENT E66E60F0

GLASS ADJUSTMENT

NOTE

- *Check the glass run channel for damaged or deterioration, and replace them necessary.*

1. Remove the following parts.
   - Quadrant cover.
   - Door trim.

2. Carefully move the glass (A) until you can see the glass mounting bolts, then loosen them.

▷: Screw Locations, **3.9~5.9 N.m (0.4~0.6 Kgf.m, 2.9~4.3 lbf.ft)**

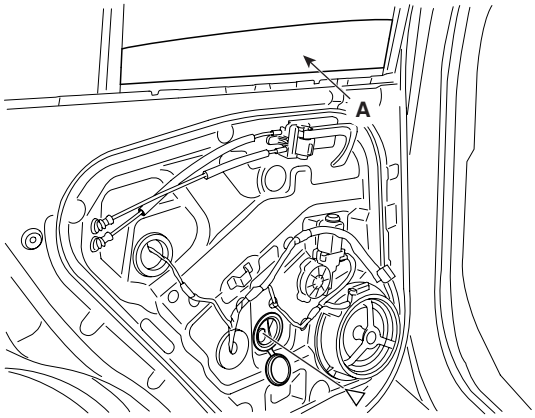

SCMBD6220L

3. Check that the glass moves smoothly.

4. Raise the glass fully, and check for gaps.
   Check that the glass contacts the glass run channel evenly.

5. Check for water leaks. Run water over the roof and on the sealing area as shown, and note these items:
   - Use a 12mm (1/2 in.) diameter hose (A).
   - Adjust the rate of water flow as shown (B).
   - Do not use a nozzle.
   - Hold the hose about 300mm(12in.) away from the door (C).

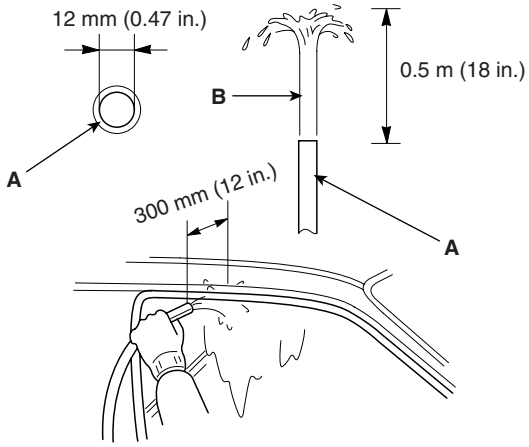

ESKE003L

DOOR POSITION ADJUSTMENT

NOTE

- *After installing the door, check for a flush fit with the Body, then check for equal gaps between the front, Rear, and bottom, door edges and the body. CheckThat the door and body edges are parallel. Before Adjusting, replace the mounting bolts.*

1. Place the vehicle on a firm, level surface when adjusting the doors.
2. Adjust at the hinges (A):
   - Loosen the door mounting bolts (B) slightly, and move the door IN or OUT until it aligns flush with the body.
   - Loosen the hinge mounting bolts (C) slightly, and move the door BACKWARD or FORWARD, UP or DOWN as necessary to equalize the gaps.
   - Place a shop towel on the jack to prevent damaged to the door when adjusting the door.

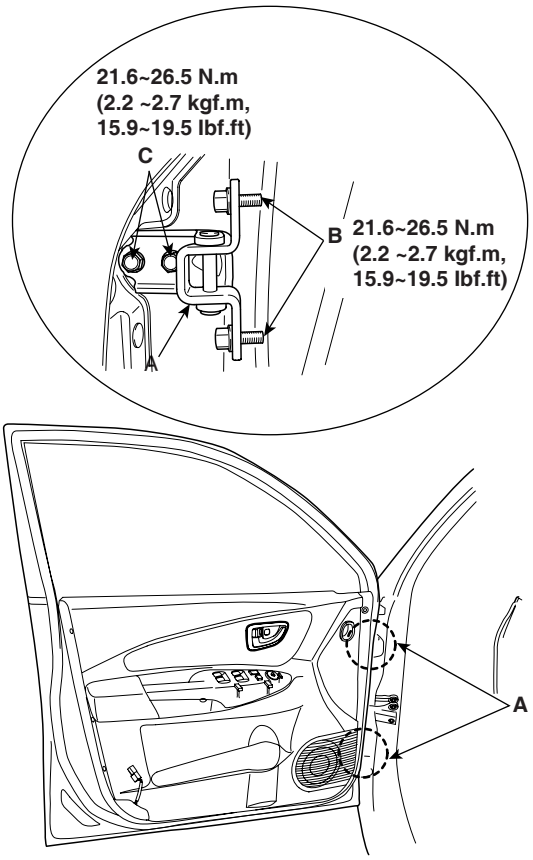

SCMBD6513L

3. Check that the door and body edges are parallel.

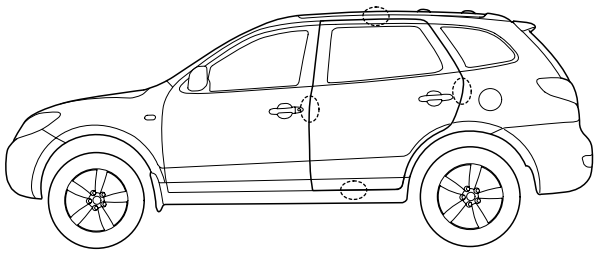

SCMBD6042D

4. Grease the pivot portions of the hinges indicated by the arrows.

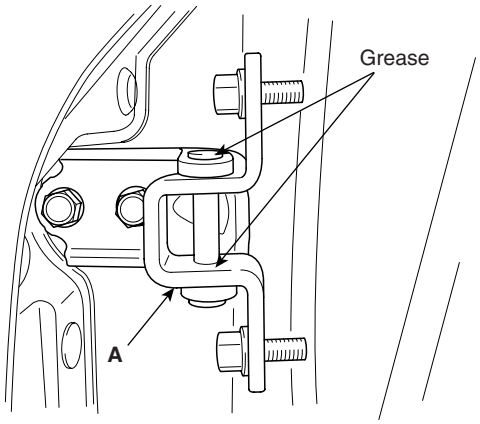

ESBF152A

5. Check for water leaks.

DOOR STRIKER ADJUSTMENT

Make sure the door latches securely without slamming it. If necessary, adjust the striker (A): The striker nuts are fixed. The striker can be fine adjusted up or down, and in or out.

1. Loosen the screws (B), then insert a shop towel between the body and striker.

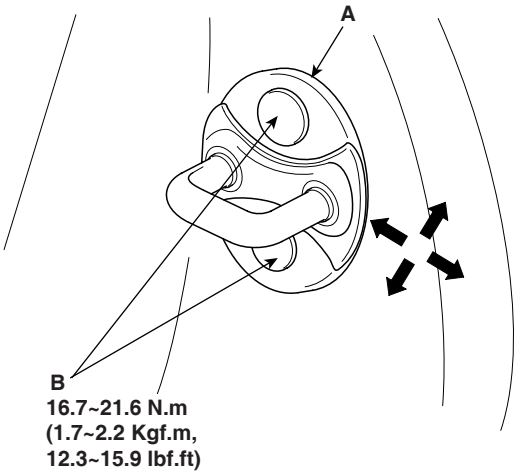

SCMBD6515L

2. Lightly tighten the screws.
3. Wrap the striker with a shop towel, then adjust the striker by tapping it with a plastic hammer. Do not tap the striker too hard.
4. Loosen the screws and remove the shop towel.
5. Lightly tighten the screws.
6. Hold the outer handle out, and push the door against the body to be sure the striker allows a flush fit. If the door latches properly, tighten the screws and recheck.

BODY SIDE MOLDINGS

REPLACEMENT EFFD4D9F

ROOF RACK REPLACEMENT

NOTE

- *When prying with a flat-tipped screwdriver, wrap it with protective tape, and apply protective tape around the related parts, to prevent damaged.*
- *Put on gloves to protect your hands.*
- *Take care not to scratch the body surface.*

1. Remove the roof trim. (See page BD- 79)
2. Remove the roof rack cover (A).
3. After loosening the mounting nuts, then remove the roof rack (B).
4. Installation is the reverse of removal.

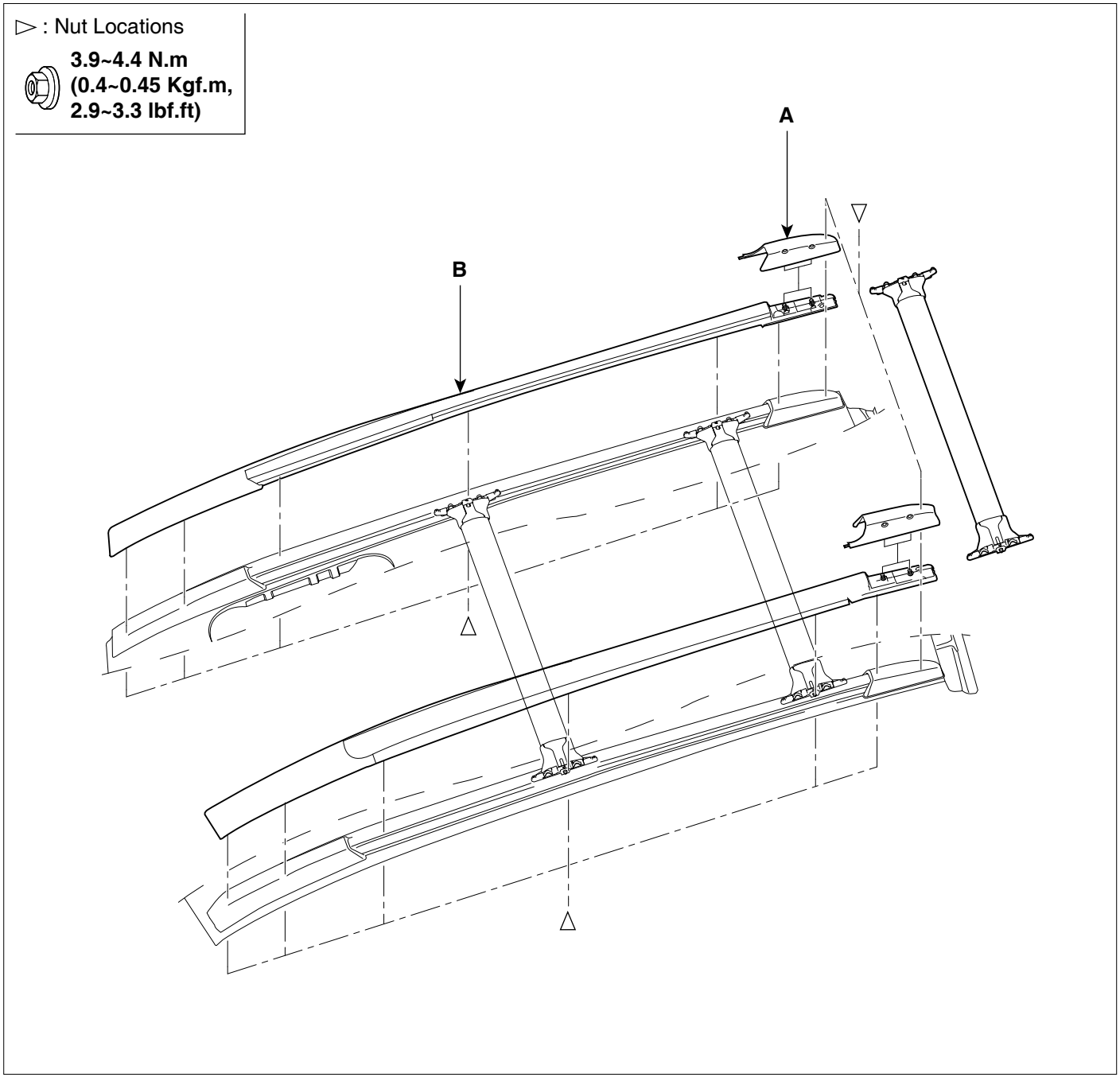

SCMBD6169L

MUD GUARD AND WHEEL GUARD REPLACEMENT

NOTE

- *When prying with a flat-tipped screwdriver, wrap it with protective tape, and apply protective tape around the related parts, to prevent damaged.*
- *Put on gloves to protect your hands.*
- *Take care not to scratch the body surface.*

1. Remove the mud guard and wheel guard.
2. Installation is the reverse of removal.

Fastener Locations

► : Screw | ▷ : Clip | 1► : Nut

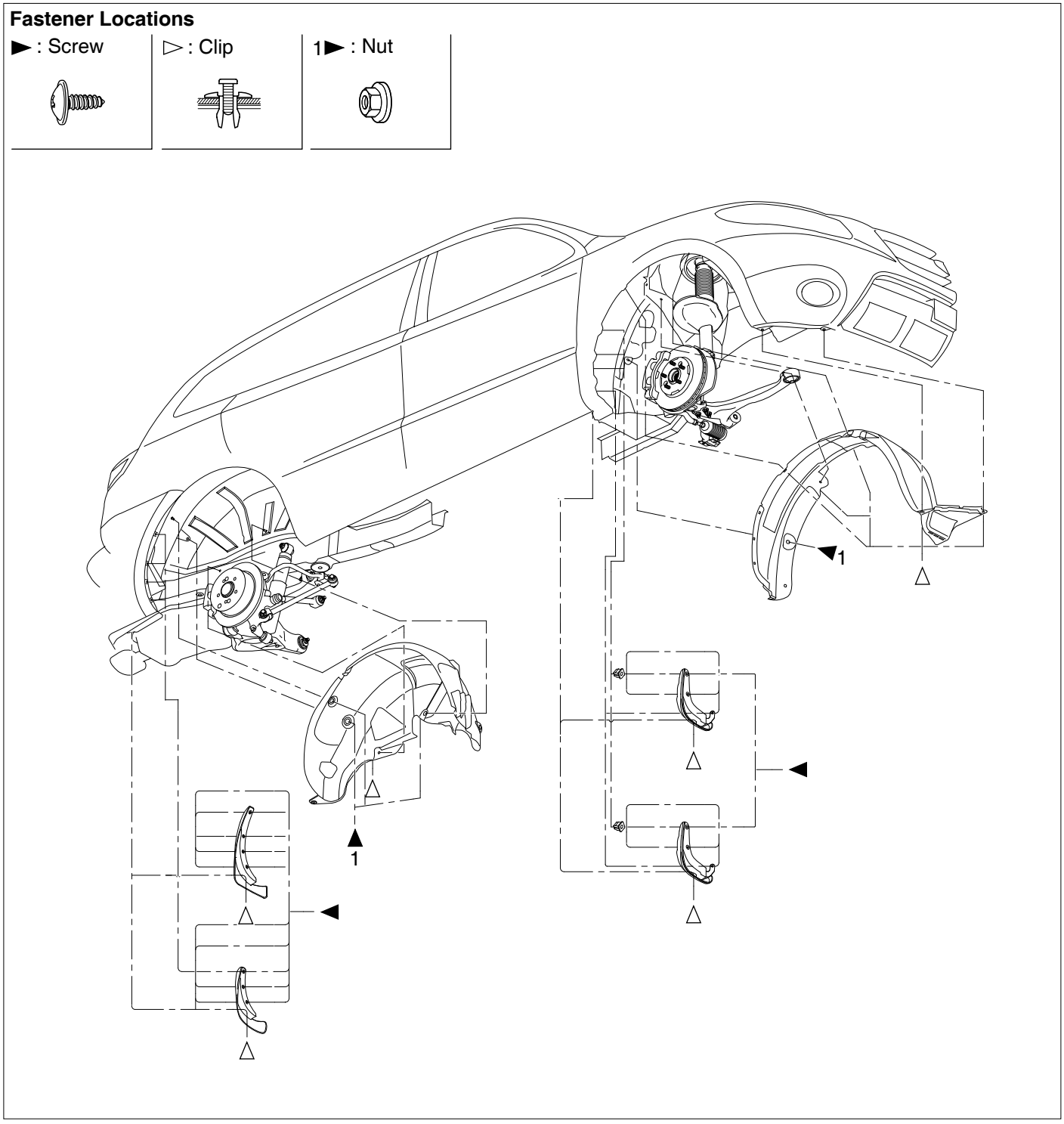

SCMBD6170L

SIDE GARNISH AND SIDE SILL REPLACEMENT

NOTE

- *When prying with a flat-tipped screwdriver, wrap it with protective tape, and apply protective tape around the related parts, to prevent damaged.*
- *Put on gloves to protect your hands.*
- *Take care not to scratch the body surface.*

1. Remove the side garnish.

Fastener Locations

▷ : Clip ► : Screw

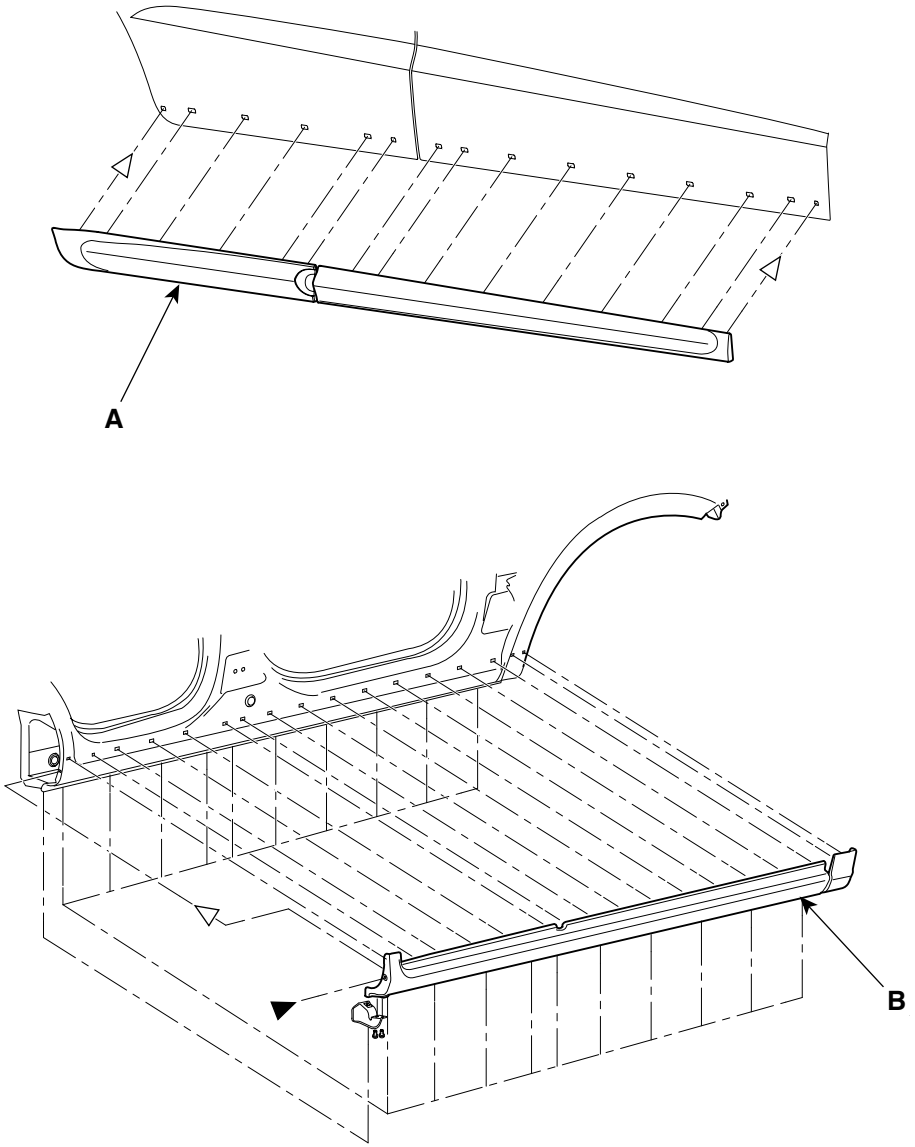

SCMBD6171L

REAR GARNISH REPLACEMENT

1. Remove the tailgate trim. (See page BD- 14)
2. Remove the speaker. (See page BD- 17)
3. Disconnect the connector (A).
4. Loosen the rear garnish mounting nuts.

▷ : Nut Locations, 4

3.9~4.4 N.m (0.4~0.45 Kgf.m, 2.9~3.3 lbf.ft)

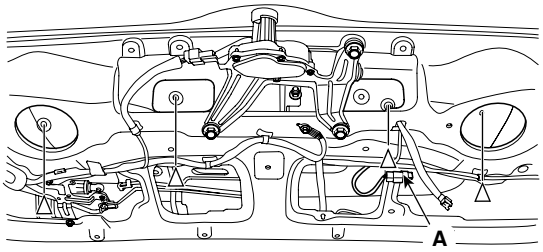

SCMBD6057L

5. Remove the rear garnish (A).

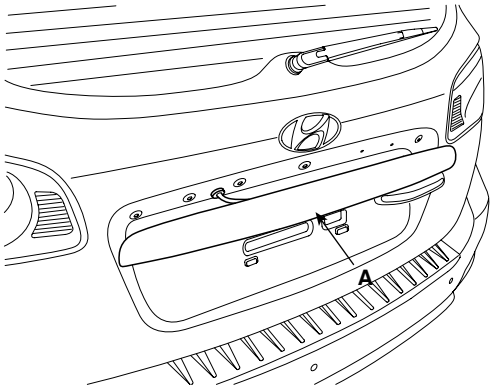

SCMBD6058D

6. Installation is the reverse of removal.

SPOLER REPLACEMENT

1. Remove the tailgate upper trim. (See page BD- 14)
2. Disconnect the connector (A).
3. Loosen the mounting nuts.

▷ : Nut Locations, 4

5.9~6.4 N.m (0.6~0.65 Kgf.m, 4.3~4.7 lbf.ft)

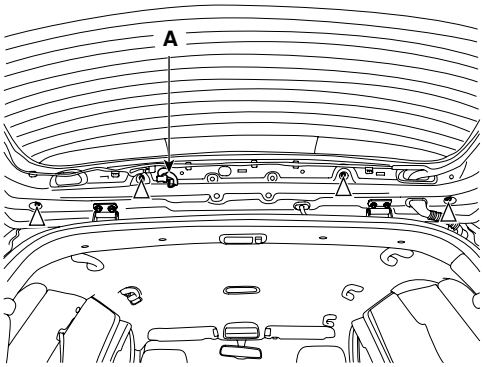

SCMBD6059L

4. Remove the spoler(B).

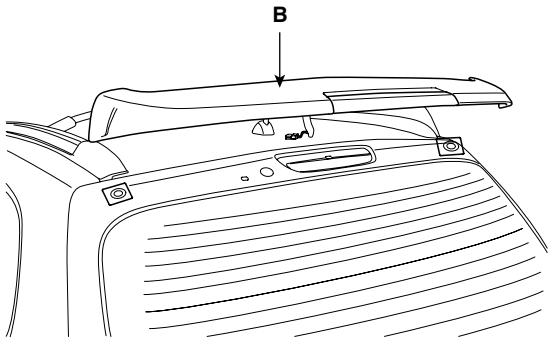

SCMBD6060L

5. Installation is the reverse of removal.

SUN ROOF

COMPONENTS E86F9EFC

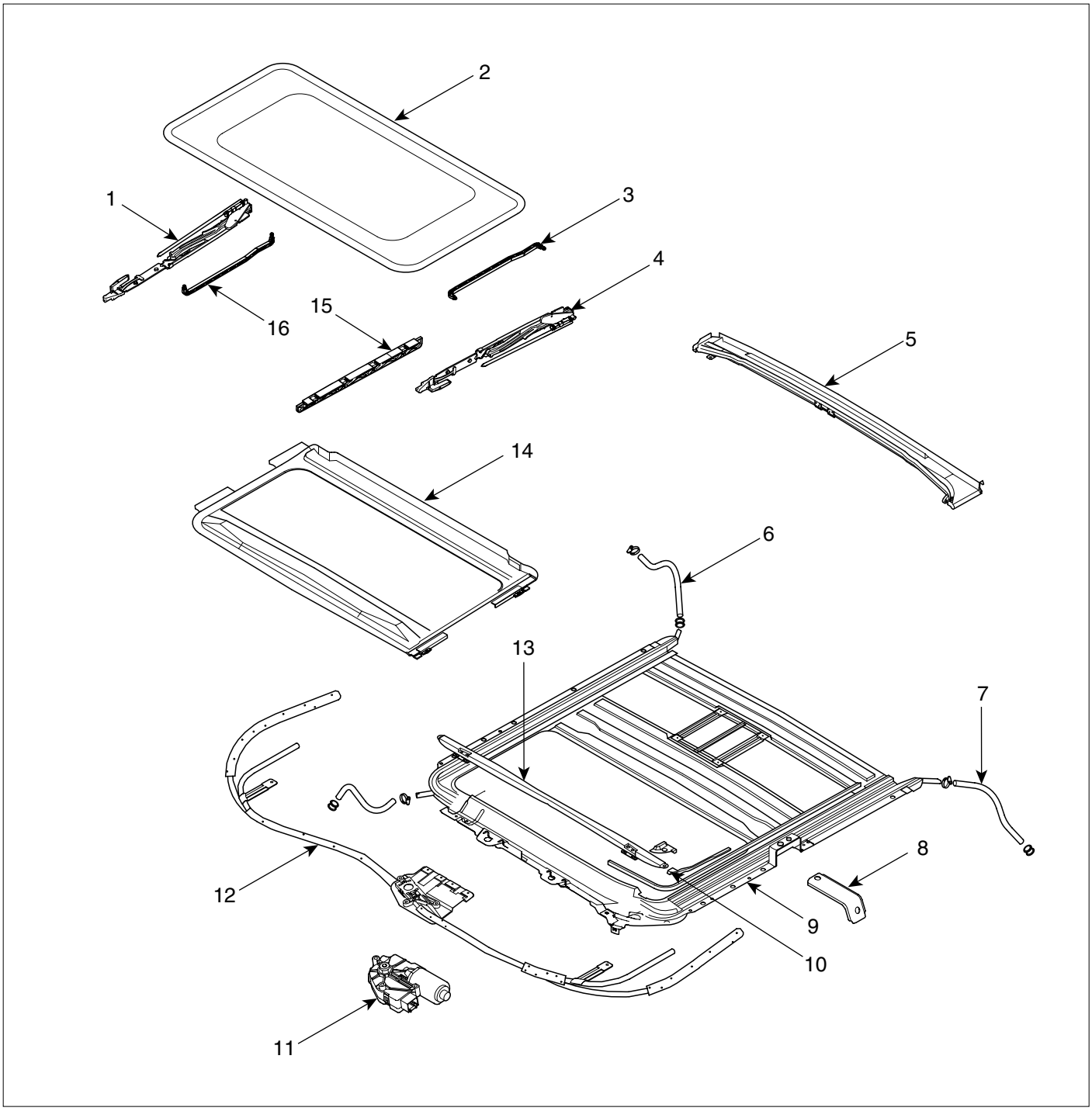

1. Guide assembly
2. Glass
3. Drip link
4. Guide assembly
5. Drip rail
6. Drain tube
7. Drain tube
8. Set bracket
9. Frame
10. Defector link
11. Motor
12. Drive unit
13. Defector
14. Sunshade
15. Decoration cover

ESBF170A

REPLACEMENT EF144FFE

GLASS REPLACEMENT

NOTE

- *Put on glove to protect your hands.*

1. Remove both decoration cover (A).

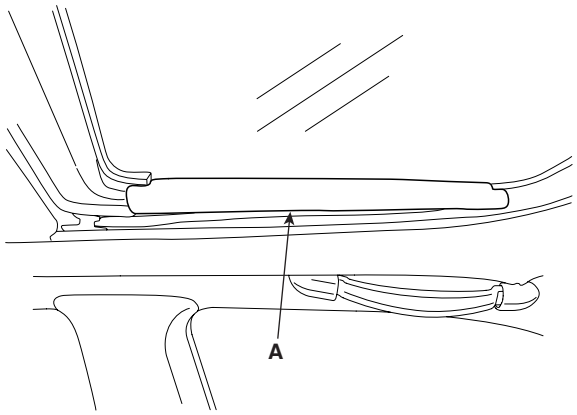

KSBF170E

2. Remove the glass (A) by lifting it up.

NOTE

- *Do not damaged the roof panel.*

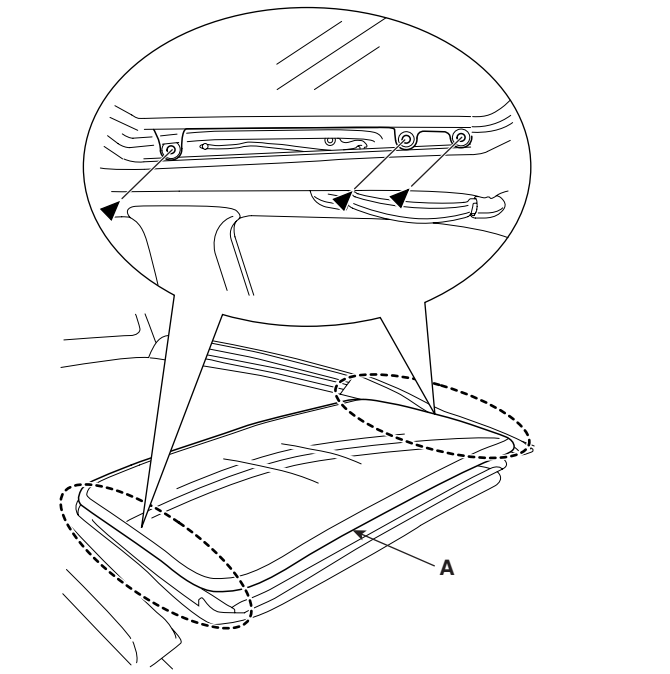

SCMBD6517L

3. Installation is the reverse of removal.

MOTOR REPLACEMENT

1. Remove the over head console. (See page BD- 76)

NOTE

- *Confirm the position of guide whether it is closed or not when you remove the motor.*

2. Disconnect the motor connector (A), remove the screws and then remove the motor (B).

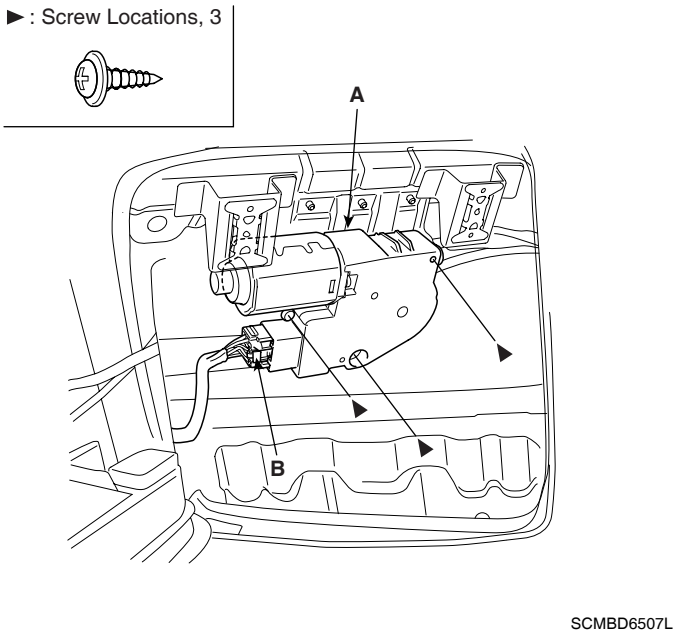

SCMBD6507L

3. Installation is the reverse of removal.

NOTE

- *Make sure to initialize the motor.*

DEFLECTOR REPLACEMENT

1. Open the glass fully.

2. Disconnect the deflector link (A) from the frame (B), and then remove the deflector (C).

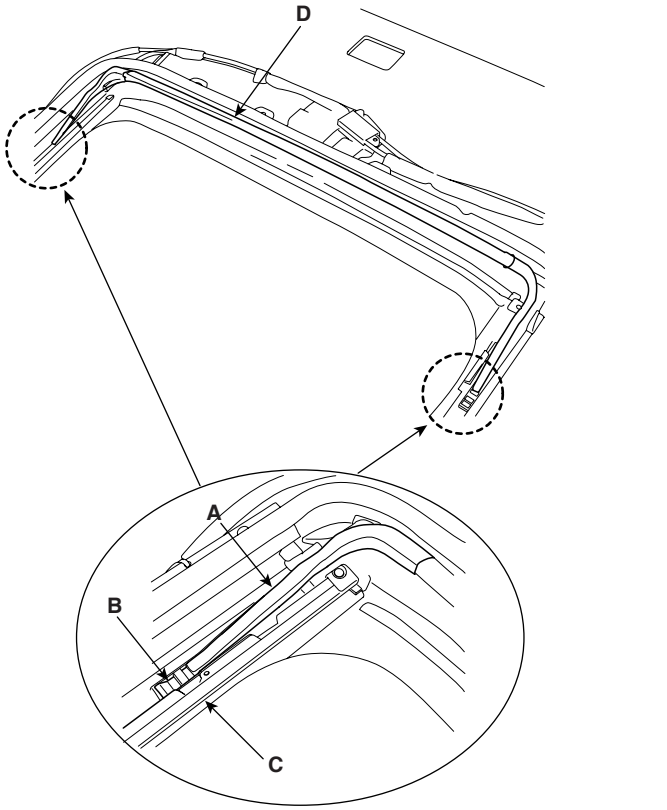

KSBF170M

3. Installation is the reverse of removal.

SUNROOF ASSEMBLY REPLACEMENT

1. Remove the follows parts.
   - Front and rear door scuff trim. (See page BD- 81)
   - Front pillar trim. (See page BD- 81)
   - Center and rear pillar trim. (See page BD- 82)
   - Headliner. (See page BD- 79)
   - Sunroof glass. (See page BD- 47)
2. Disconnect the drain tubes (A).
3. Remove the bracket (C).
4. After loosening the mounting bolts and nuts, remove the sunroof assembly (B).

   NOTE

   - *Take care not to scratch the interior trims and other parts.*
5. Installation is the reverse of removal.

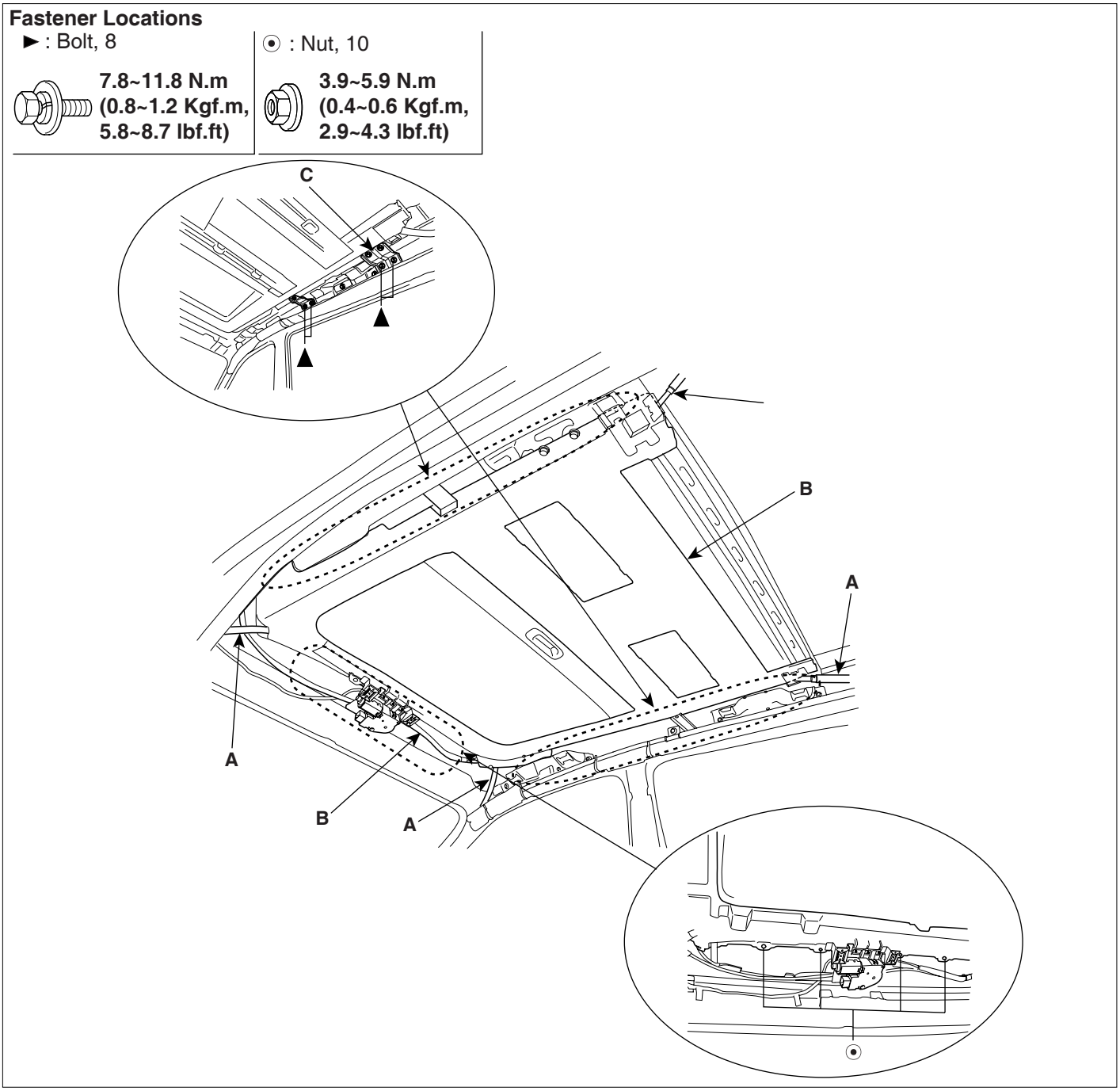

SCMBD6508L

GUIDE ASSEMBLY REPLACEMENT

1. Remove the sunroof assembly. (See page BD- 49)
2. Remove a guide assembly (A) after lowering a guide thoroughly by pushing a slide (B) to rear.

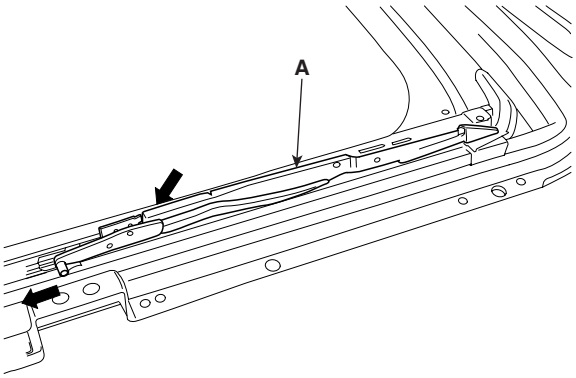

KSBF171E

3. Remove the guide (A) and slide (B).

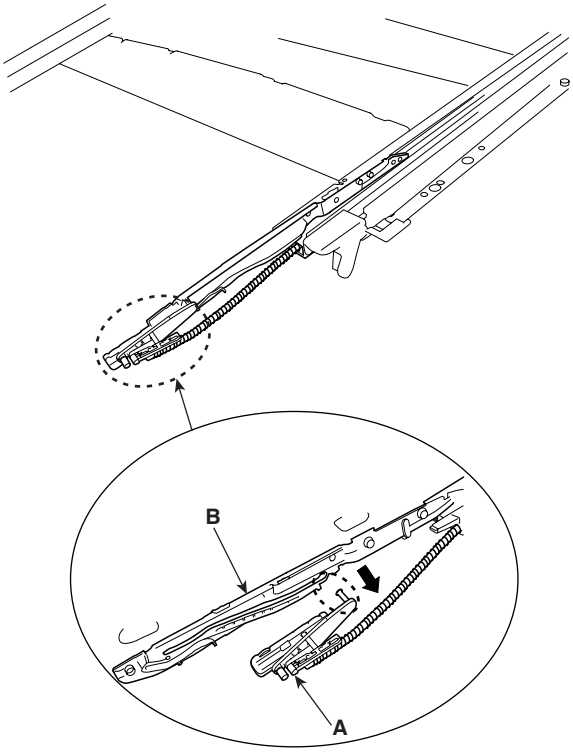

KSBF171H

4. Installation is the reverse of removal.

NOTE

- *Make sure to align the slide with the center of " A" and " B"*
- *Make sure to initialize the motor.*

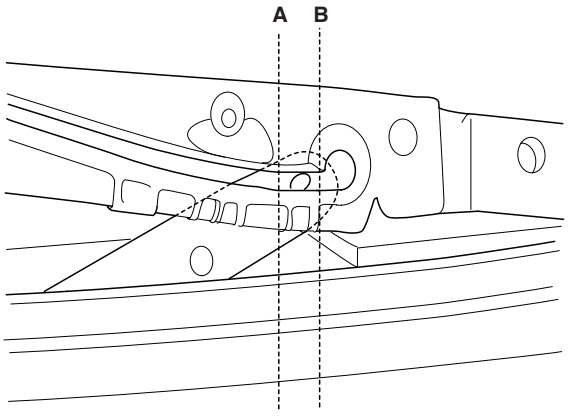

KSBF171I

SUNSHADE AND DRIP RAIL REPLACEMENT

1. Remove the sunroof assembly. (See page BD- 49)
2. Remove the drip link (A) and sunshade stopper (B).
3. Remove the sunshade (C) and drip rail (D).

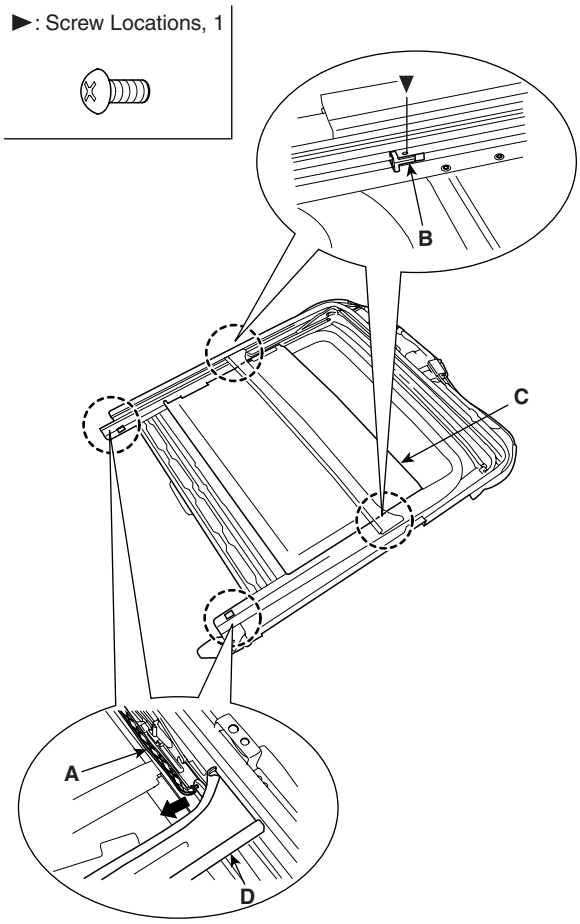

ESBF171D

4. Installation is the reverse of removal.

ADJUSTMENT EC9DFFD3

ON-VEHICLE INSPECTION

INSPECT SUNROOF GLASS ALIGNMENT

1. Start the engine and check the operating time of the sunroof (A).

Operating time: Approx. 5 secs.

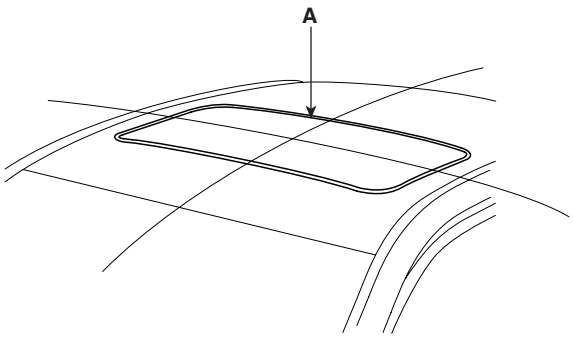

ESKE007B

2. Check for abnormal noise or bending during operation.
3. With the sunroof fully closed, check for water leakage.
4. The roof panel (A) should be even with the glass (B) weatherstrip (C), to within the standard value "E" all the way around. If not, make the following adjustment.

Standard value "E" Front edge : 0 ~ 1.4mm Rear edge : 0 ~ 1.4mm

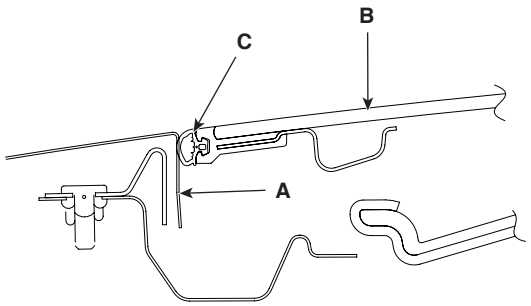

SCMBD6190L

5. If the position is not as specified, lightly loosen the glass adjusting screw (A) to adjust the glass height and tighten it.

Tightening torque : 2.0 ~ 3.9N.m (0.2 ~ 0.4kgf.m, 1.4 ~ 2.9 lbf.ft)

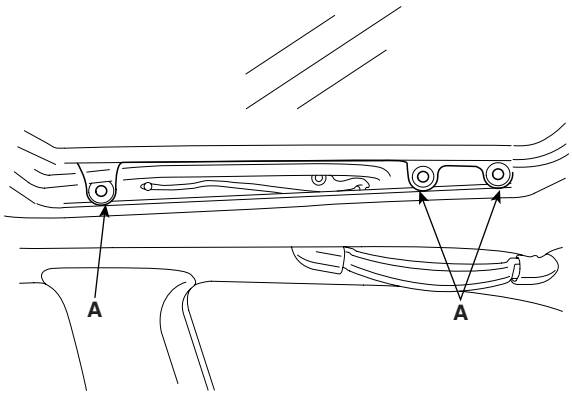

KSBF170C

6. Check for overlap between the sunroof weatherstrip (A) and the roof panel (B).

Standard value: 0.3mm

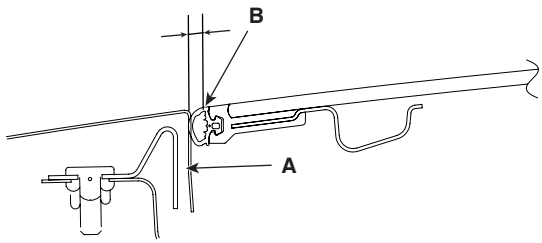

SCMBD6518L

HOW TO INITIALIZE MOTOR

1. Check that the glass has been installed.
   - Finished height adjustment.

2. Push the up switch. (Keep on pushing the switch)
   - the slide moved 5mm forward after 15 seconds.

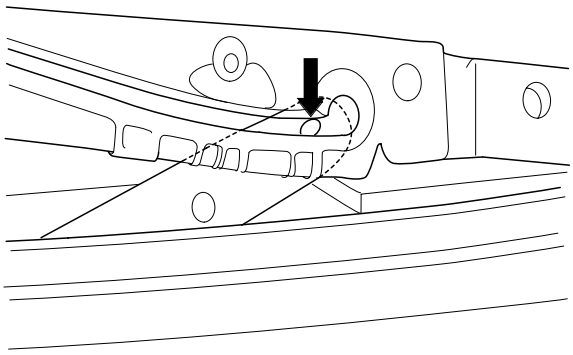

- Before moving the slide -

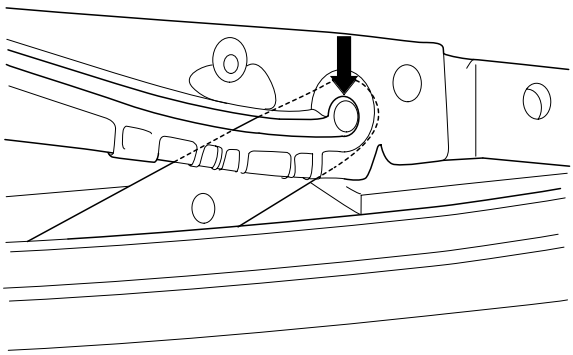

- After moving the slide -

ESBF171M

3. After moving the slide 5mm forward, turn OFF the switch and push the UP switch (Keeping on pushing the switch with continuous operation)
   - If the operation above is normal condition, the sunroof once and closes.

4. When the sunroof is closed completely, turn OFF the UP switch initialize the motor completely.

WHEN TO INITIALIZE THE MOTOR

1. First operation the vehicle after manufacture it.

2. Initial value is erased or damaged because of short power electric discharge during operation.

3. After using the manual handle.

OPERATING THE SUNROOF EMERGENCY HANDLE

1. Use the sunroof emergency handle to close and open the sunroof manually for the following case only.
   - To close the sunroof before driving a vehicle in a rainy day or on the highway if the sunroof cannot be closed due to failure of the sunroof motor or controller.

2. Operating method
   - Remove the overhead console
   - Push the emergency handle up into the hexagonal drive (A) of the sunroof motor. You must push hard enough to disengage the motor clutch; otherwise the emergency handle will slip due to incomplete fit in the motor.
   - Carefully turn the emergency handle clockwise to close the sunroof.
   - After closing the sunroof, wiggle the handle back and forth as you remove the tool from the motor, to ensure the motor clutch reengages.
   - A 5mm hex socket may be used in place of the emergency handle, with a" Speeder" type handle.

CAUTION

Do not use power tools to operate the sunroof. Damaged to the components may occur.

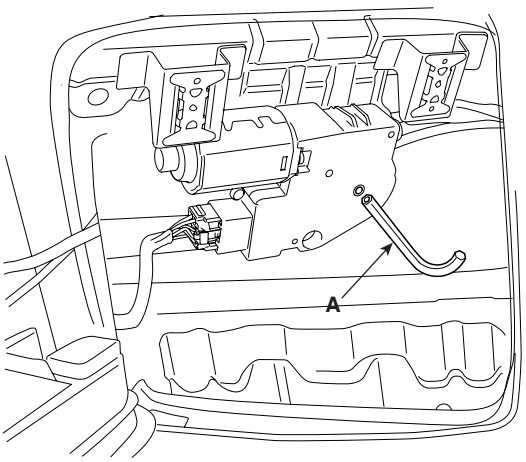

KSBF171N

MIRROR

REPLACEMENT E9EDEB42

OUTSIDE REAR VIEW MIRROR REPLACEMENT

NOTE

- *When prying with a flat-tipped screwdriver, wrap it with protective tape, and apply protective tape around the related parts, to prevent damaged.*
- *Put on gloves to protect your hands.*

1. Remove the quadrant inner cover (A).

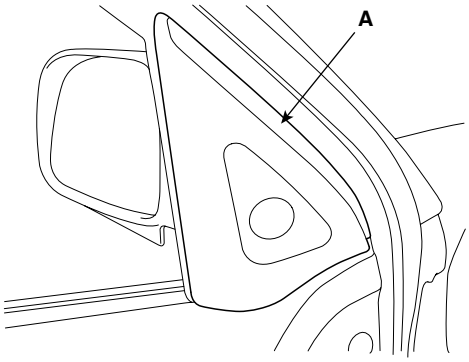

SCMBD6027D

2. After disconnecting the connector (A), remove the outside rear view mirror (B).

▷ : Nut Locations, 3

6.4~10.8 N.m (0.7~1.1 Kgf.m, 4.7~8.0 lbf.ft)

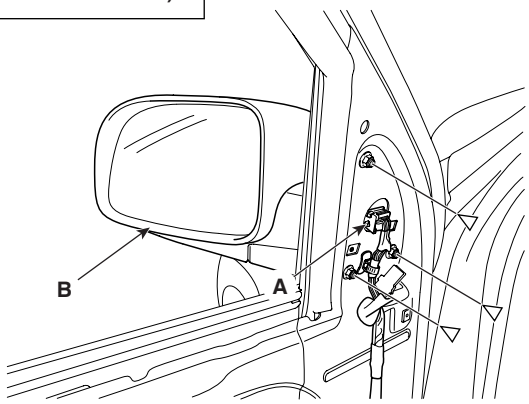

SCMBD6095L

3. Installation is the reverse of removal.

INSIDE REAR VIEW MIRROR REPLACEMENT

1. Push the inside rear view mirror base (A) down to remove to inside rear view mirror assembly (B).

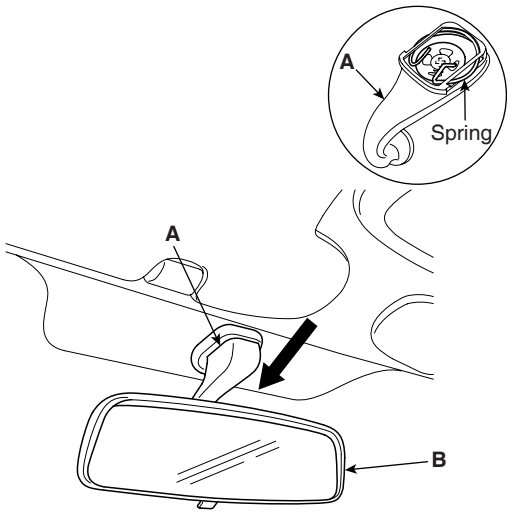

LSIE080D

2. Installation is the reverse of removal.

ECM MIRROR REPLACEMENT

1. Remove the ECM mirror cover (A).

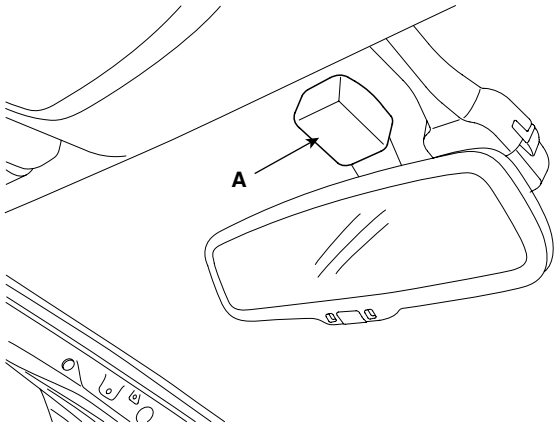

SCMBD6096D

2. Remove the cover and connector (A).

3. Push the ECM mirror base down to remove the ECM mirror assembly (B).

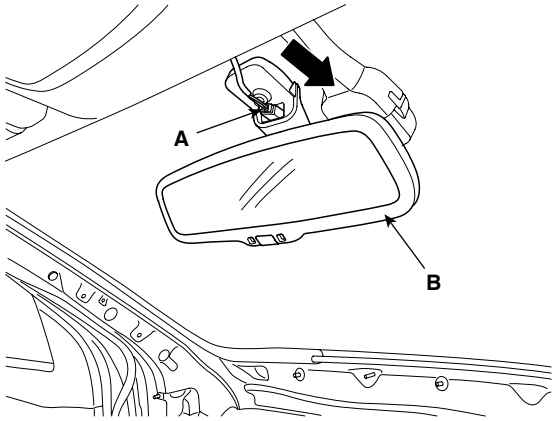

SCMBD6097L

4. Installation is the reverse of removal.

INTERIOR

CONSOLE

COMPONENTS EC25E0BD

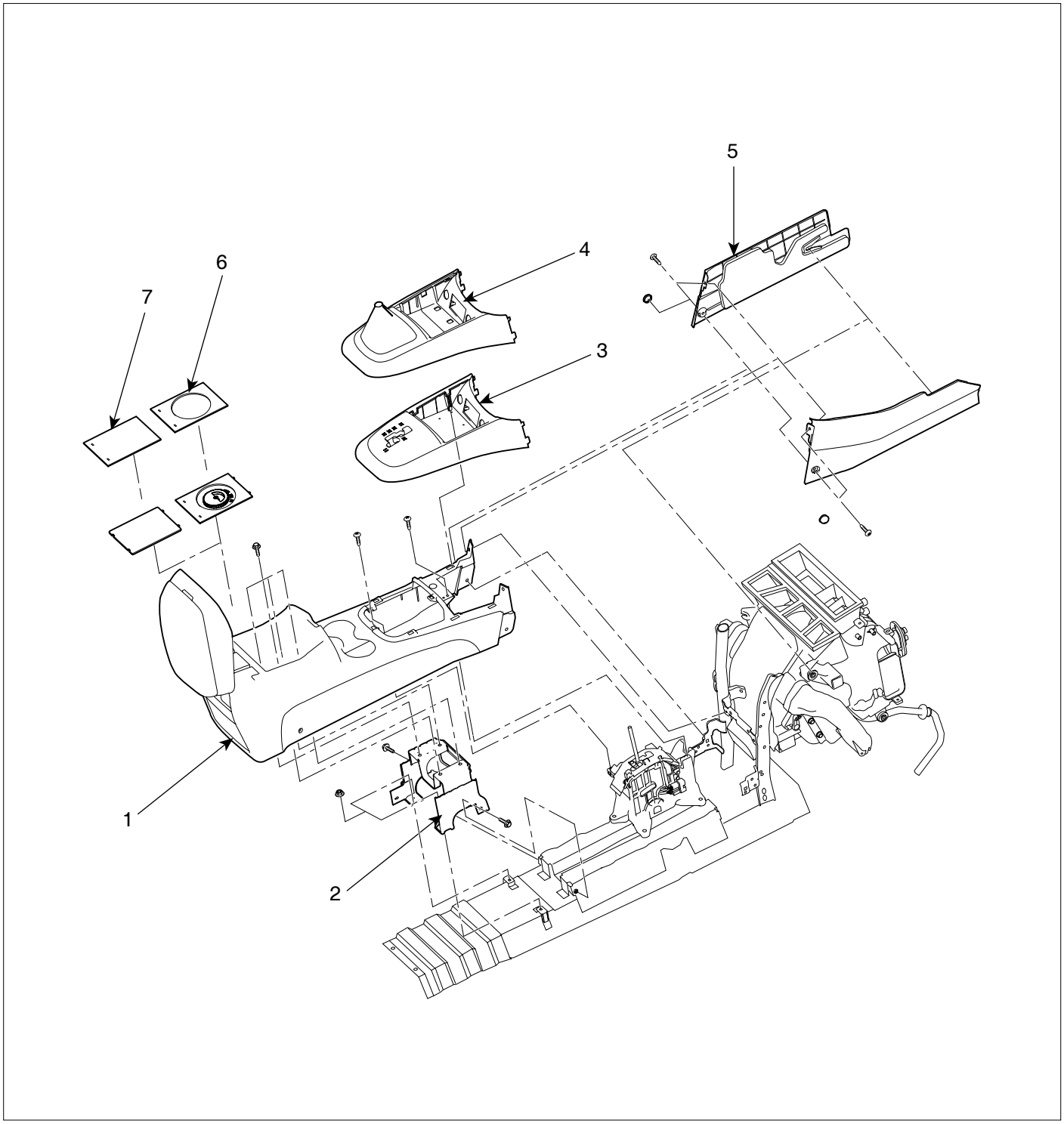

1. Console assembly
2. Console mounting bracket
3. Console under cover (AT)
4. Console upper cover (MT)
5. Console side cover
6. Armrest lower met
7. Strage box cover
8. Armrest

SCMBD6172L

REPLACEMENT EB0946E4

FLOOR CONSOLE REPLACEMENT

NOTE

- *When prying with a flat-tipped screwdriver, wrap it with protective tape, and apply protective tape around the related parts, to prevent damaged.*
- *Put on gloves to protect your hands.*

[AT]

1. Remove the knob(A).

[LHD]

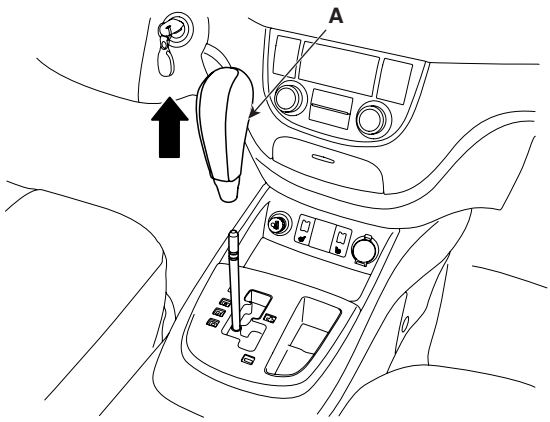

SCMBD6302D

[RHD]

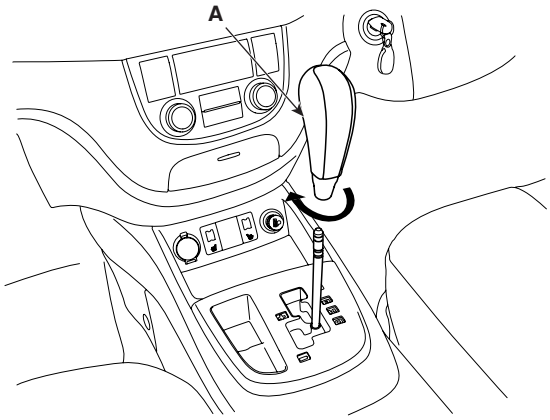

SCMBD6302R

2. Remove the consol under cover(A).
3. Disconnect the connector.

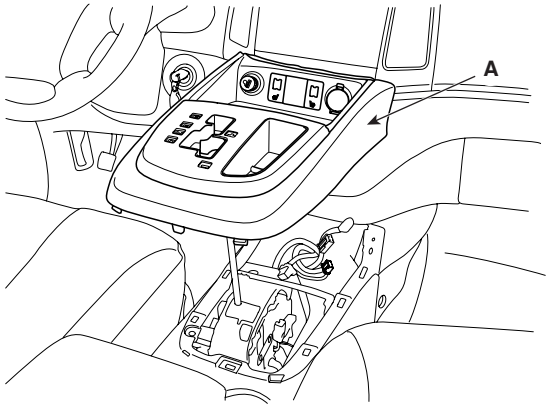

SCMBD6300D

4. After loosening the console mounting screw, remove the floor console side cover (A).

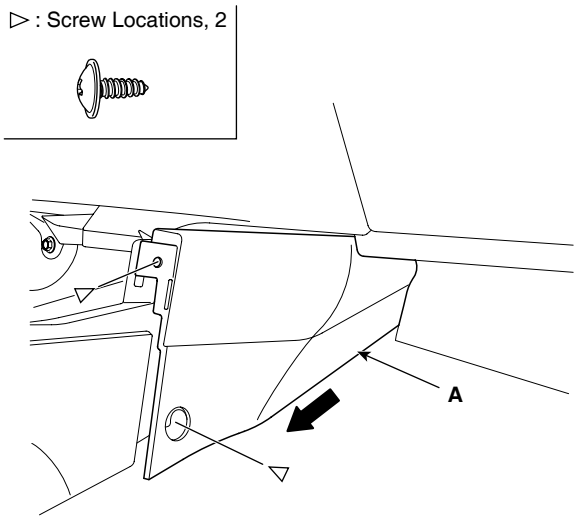

SCMBD6062L

5. Remove the console rear cover (A).

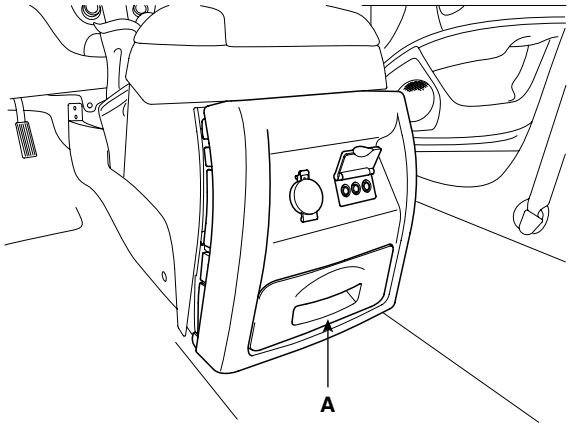

SCMBD6063D

6. Disconnect the connector (A).

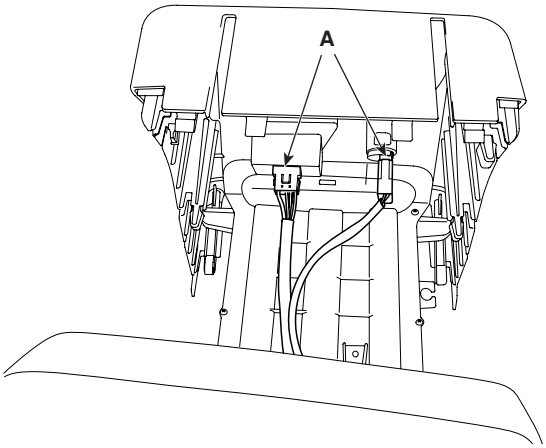

SCMBD6064D

7. Remove the armrest lower met (A).

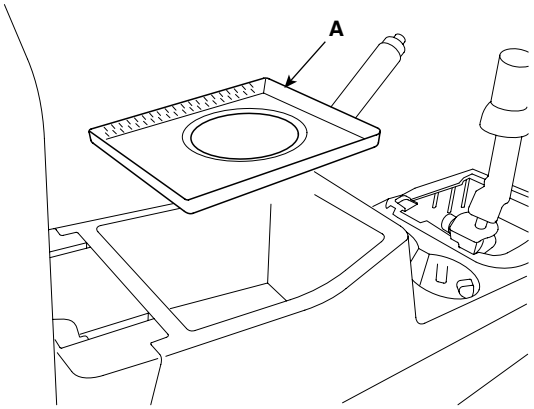

SCMBD6065D

8. Remove the stroage box console cover (A).

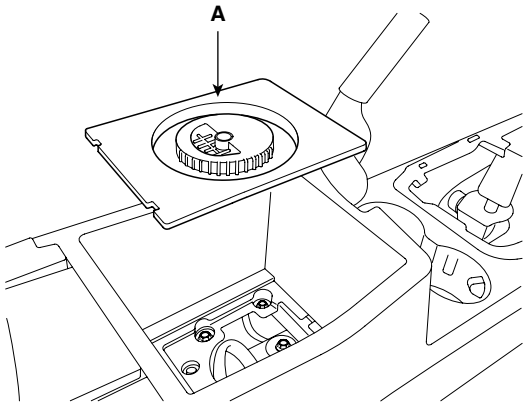

SCMBD6066D

9. Disconnect the connectors(A).

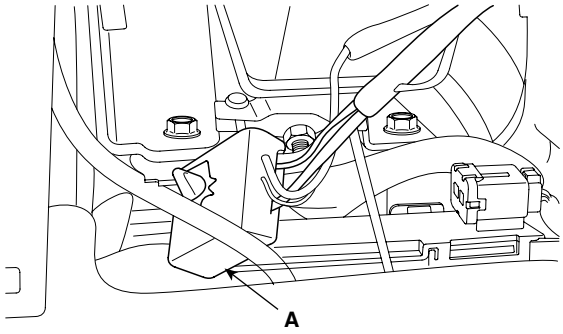

SCMBD6067D

10. After loosening the console mounting bolts and screws remove the floor console assembly (A).

[LHD]

Fastener Locations

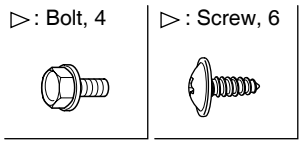

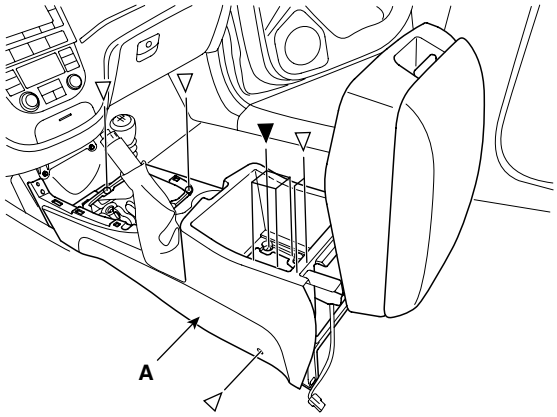

SCMBD6068L

[RHD]

Fastener Locations

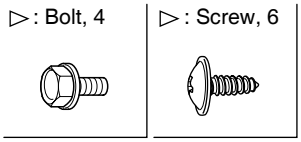

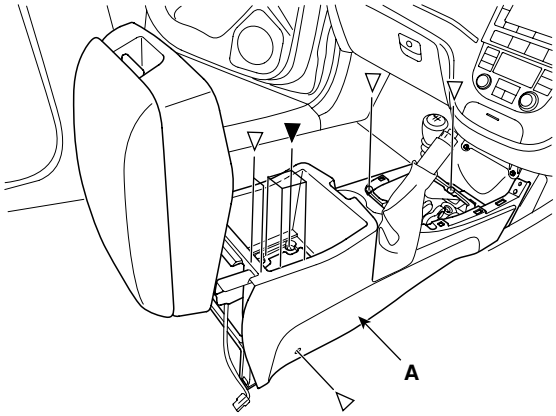

SCMBD6068R

11. Installation is the reverse of removal.

[MT]

1. Remove the console upper cover (A).
2. Disconnect the connector.

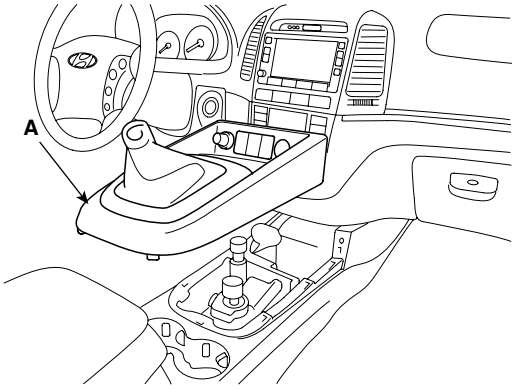

SCMBD6061D

3. After loosening the console mounting screw, remove the floor console side cover (A).

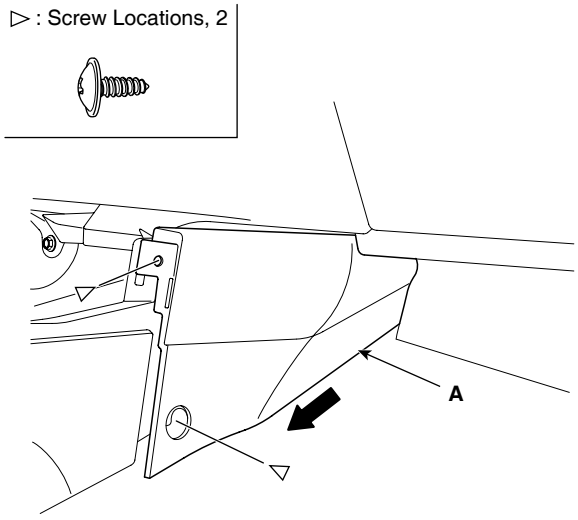

SCMBD6062L

4. Remove the console rear cover (A).

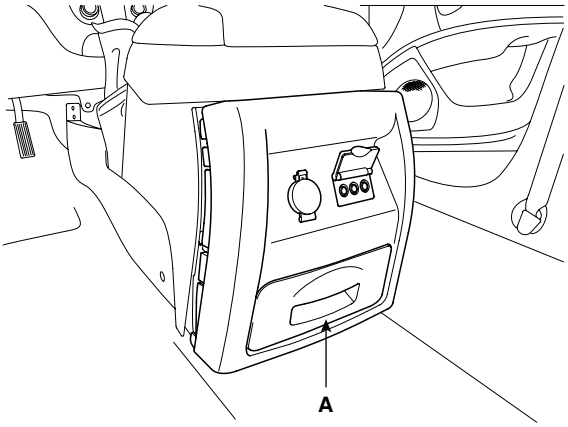

SCMBD6063D

5. Disconnect the connector (A).

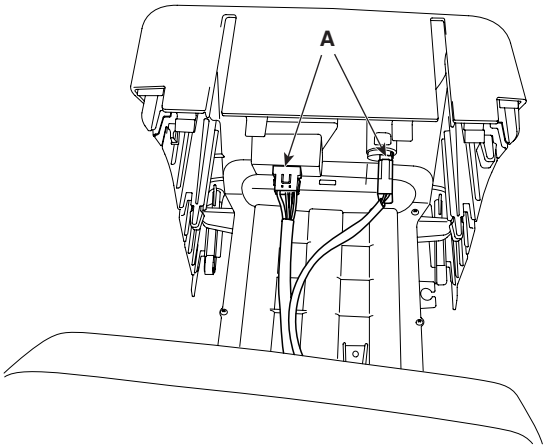

SCMBD6064D

6. Remove the armrest lower met (A).

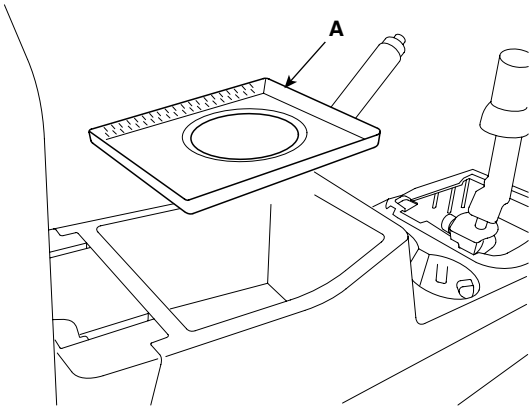

SCMBD6065D

7. Remove the stroage box console cover (A).

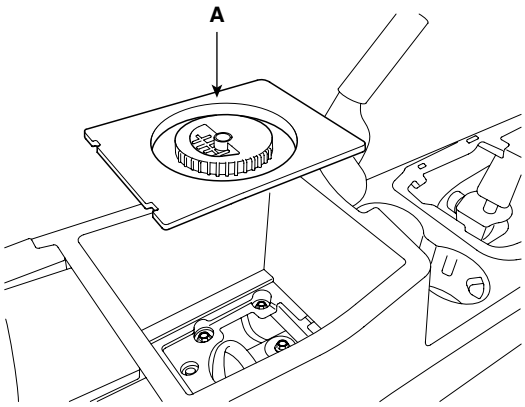

SCMBD6066D

8. Disconnect the connectors(A).

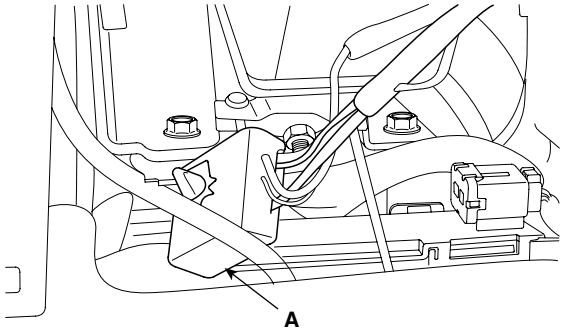

SCMBD6067D

9. After loosening the console mounting bolts and screws remove the floor console assembly (A).

[LHD]

Fastener Locations

▷: Bolt, 4 ▷: Screw, 6

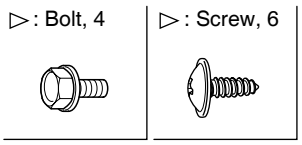

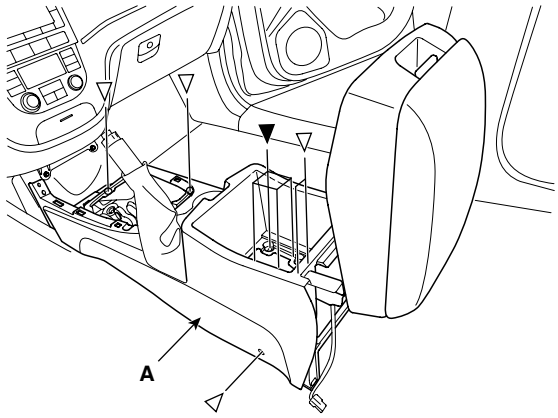

SCMBD6520L

[RHD]

Fastener Locations

▷: Bolt, 4 ▷: Screw, 6

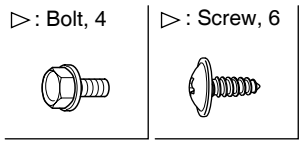

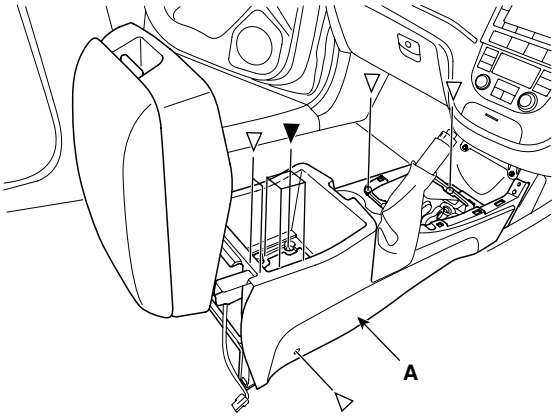

SCMBD6520R

10. Installation is the reverse of removal.

ARMREST REPLACEMENT

1. After remove the rear console cover (A).

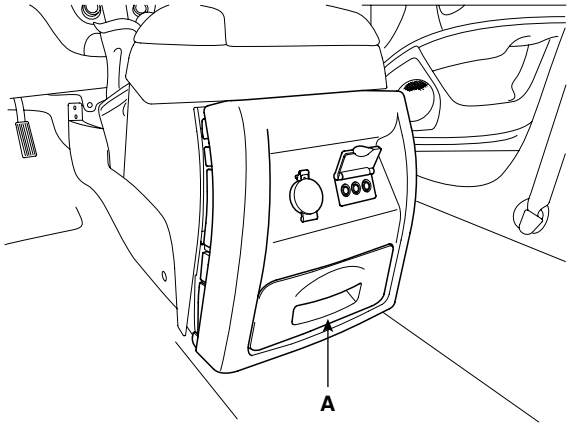

SCMBD6063D

2. Disconnect the connector (A).

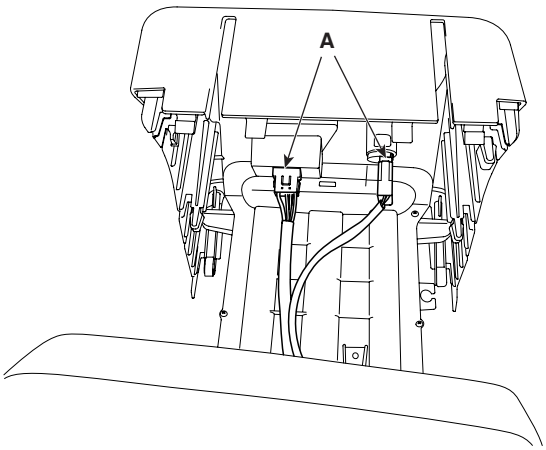

SCMBD6064D

3. After loosening the armrest mounting nuts, remove the armrest (A).

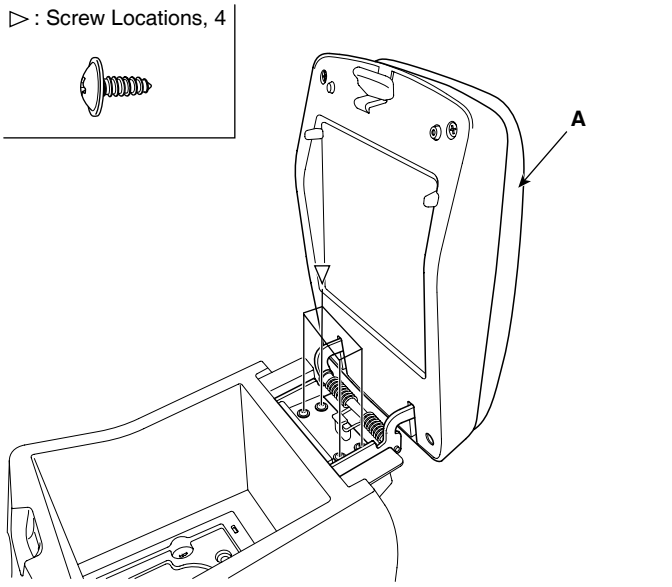

SCMBD6069L

4. Installation is the reverse of removal.

CRASH PAD

CONPONENTS E269893C

[LHD]

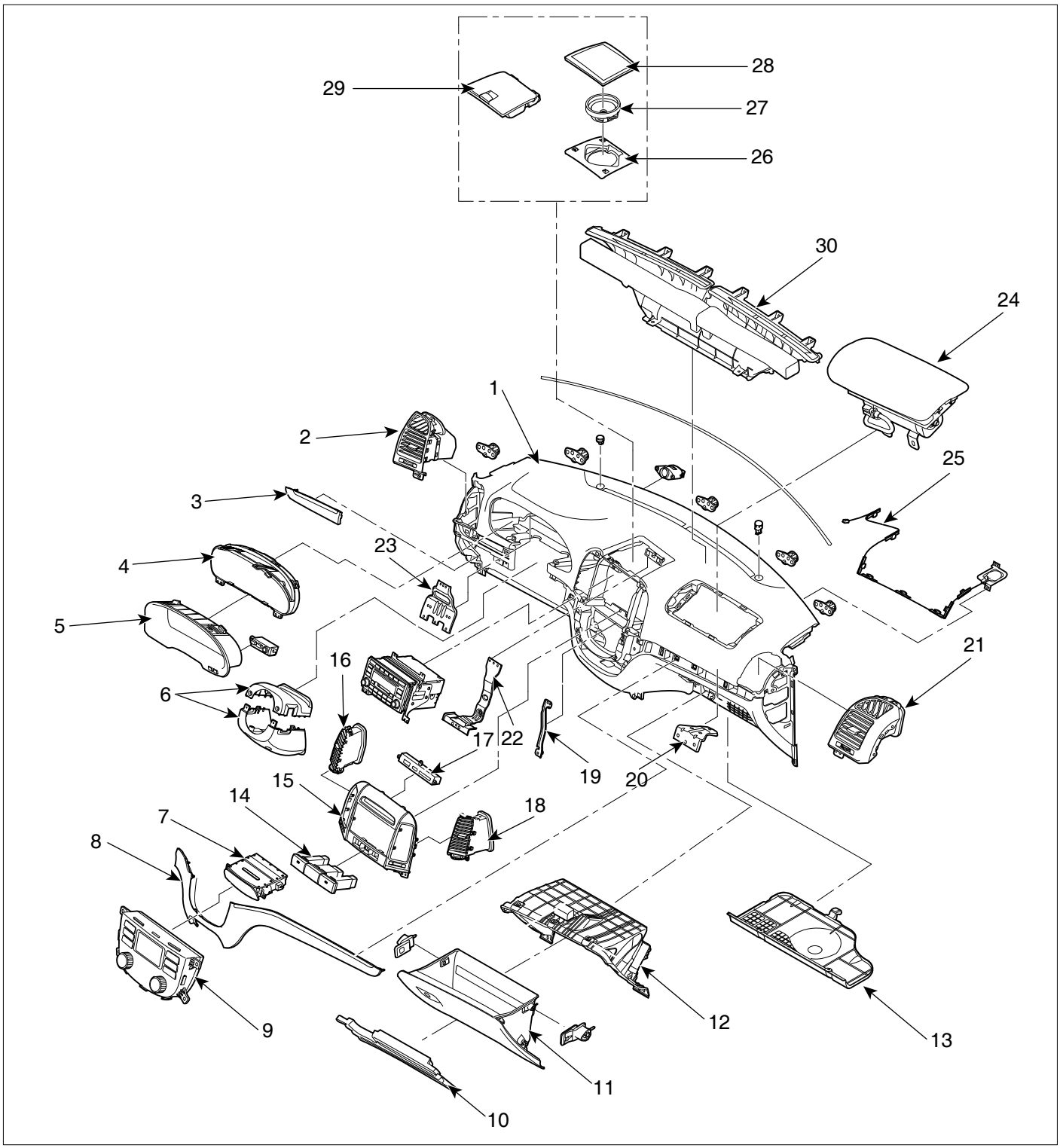

1. Main crash pad
2. Side air vent
3. Side garnish
4. Cluster
5. Cluster facia panel
6. Shroud assembly
7. Ash tray
8. Center garnish
9. Heater control unit
10. Knee bolster
11. Glove box
12. Glove box housing
13. Glove box under cover
14. Switch assembly
15. Center facia upper panel
16. Center air vent (LH)
17. Digital clock
18. Center air vent (RH)
19. Crash pad center bracket
20. Airbag bracket
21. Side air vent
22. Audio bracket
23. Crash pad drive bracket
24. Passenger airbag module
25. GPS antenna unit
26. Speaker plate
27. Speaker
28. Speaker grill
29. Center facia upper tray
30. Defroster nozzle

SCMBD6173L

[RHD]

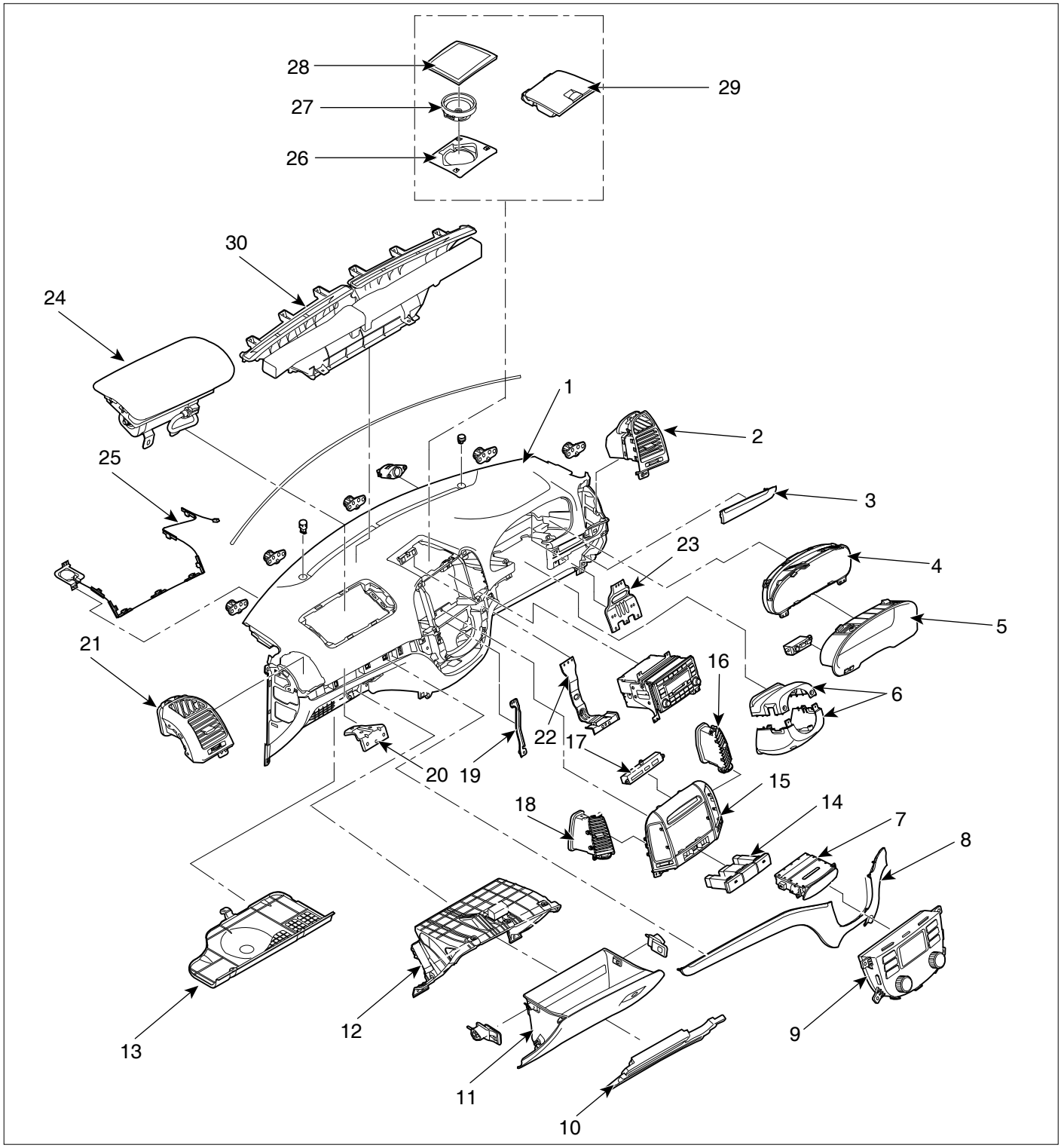

1. Main crash pad
2. Side air vent
3. Side garnish
4. Cluster
5. Cluster facia panel
6. Shroud assembly
7. Ash tray
8. Center garnish
9. Heater control unit
10. Knee bolster
11. Glove box
12. Glove box housing
13. Glove box under cover
14. Switch assembly
15. Center facia upper panel
16. Center air vent (LH)
17. Digital clock
18. Center air vent (RH)
19. Crash pad center bracket
20. Airbag bracket
21. Side air vent
22. Audio bracket
23. Crash pad drive bracket
24. Passenger airbag module
25. GPS antenna unit
26. Speaker plate
27. Speaker
28. Speaker grill
29. Center facia upper tray
30. Defroster nozzle

SCMBD6173R

REPLACEMENT E0FDDE2F

CLUSTER REPLACEMENT

NOTE

- *When prying with a flat-tipped screwdriver, wrap it with protective tape, and apply protective tape around the related parts, to prevent damaged.*
- *Put on gloves to protect your hands.*

1. Tilt the steering column down.
2. After disconnecting the trip sensor connector (A), remove the cluster facia panel (B).

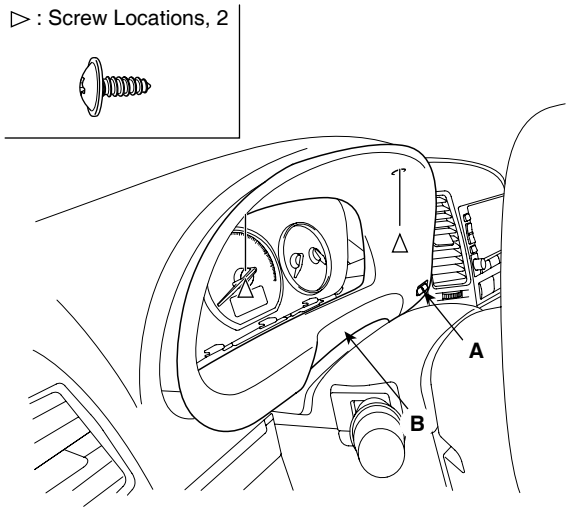

SCMBD6070L

3. Installation is the reverse the removal.
4. Loosen the screws.
5. Remove the cluster (A).

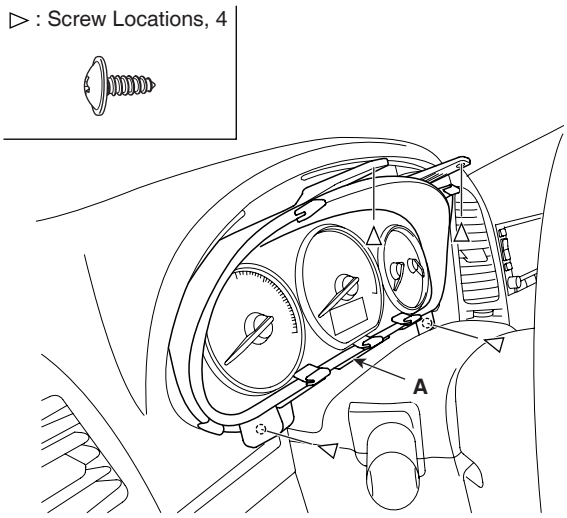

SCMBD6071L

6. Disconnect the cluster connector (A), then remove the cluster (B).

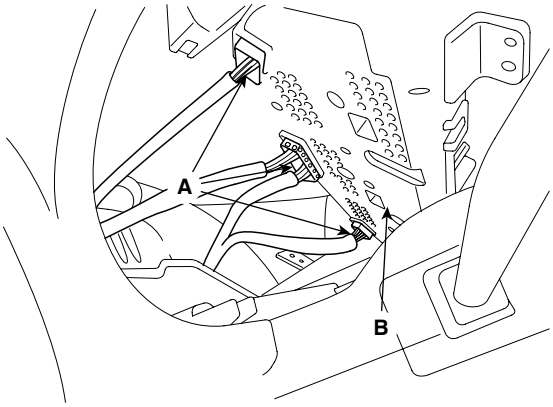

SCMBD6072L

7. Installation is the reverse of removal.

NOTE

- *Make sure the connector are plugged in properly.*

CENTER FACIA PANEL REPLACEMENT

NOTE

- *When prying with a flat-tipped screwdriver, wrap it with protective tape, and apply protective tape around the related parts, to prevent damaged.*
- *Put on gloves to protect your hands.*

1. Remove the crash pad lower panel. (See page BD-68)
2. Remove the center lower garnish (A).

[LHD]

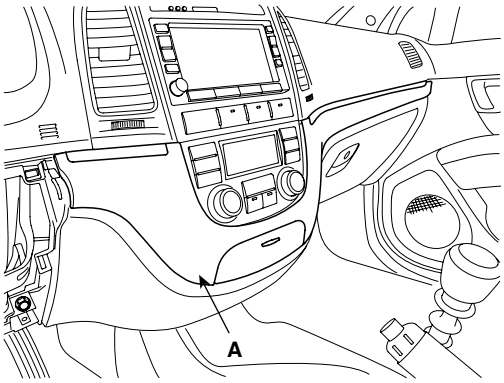

SCMBD6073D

[RHD]

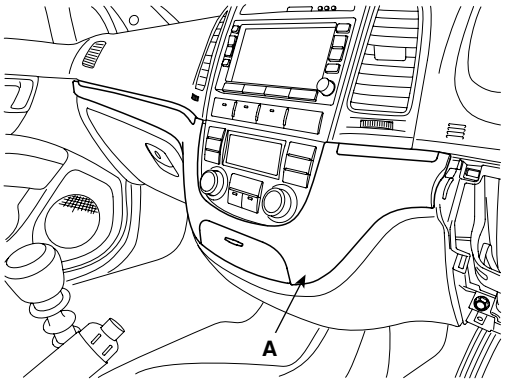

SCMBD6073R

3. Remove the speaker grill (A).

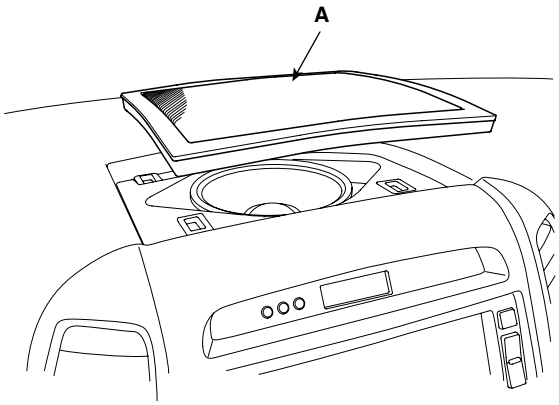

SCMBD6074D

4. Loosen the mounting screw, remove the speaker grill (A).

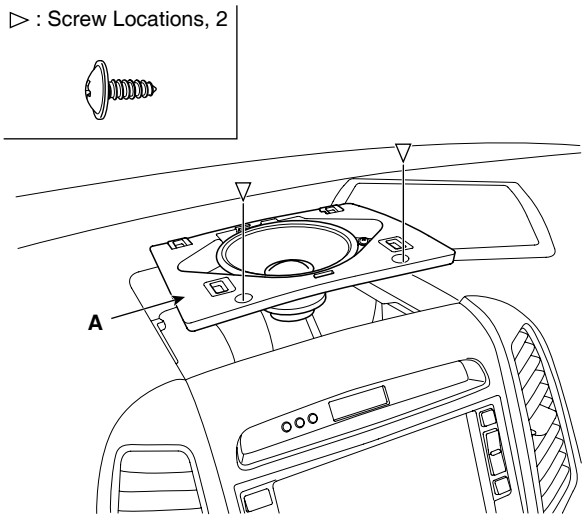

SCMBD6075L

5. Disconnect the connector (A).

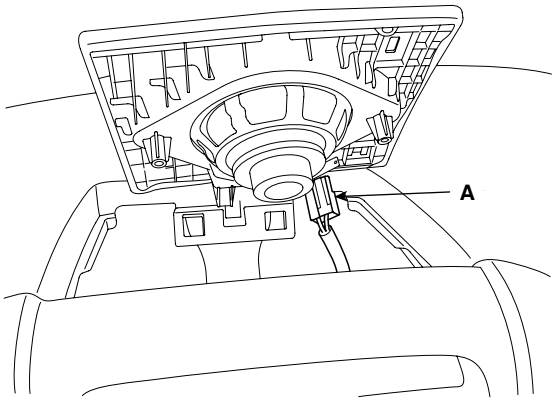

SCMBD6076D

6. After loosening the mounting screw, remove the center facia panel (A).

▷ : Screw Locations, 2



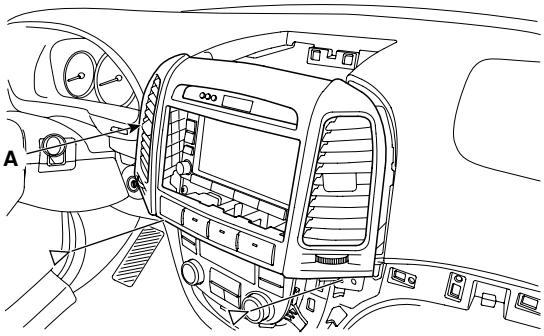

SCMBD6077L

7. Installation is the reverse of removal.

NOTE

- *Make sure the connector are plugged in properly.*

LOWER PANEL REPLACEMENT

1. Remove the crash pad side cover. (See page BD- 69)
2. Remove the switch assembly (A).

[LHD]

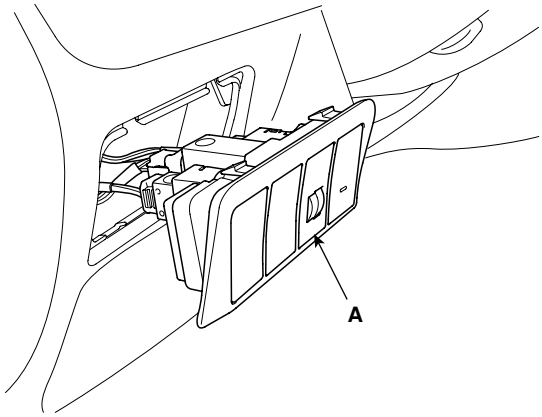

SCMBD6079D

[RHD]

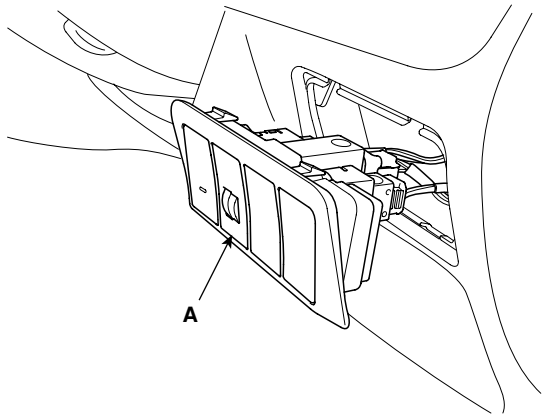

SCMBD6079R

3. Loosen the mounting screw, remove the lower panel (B).
4. Disconnect the connector (A).

[LHD]

▷: Screw Locations, 4

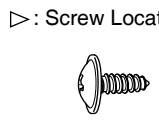

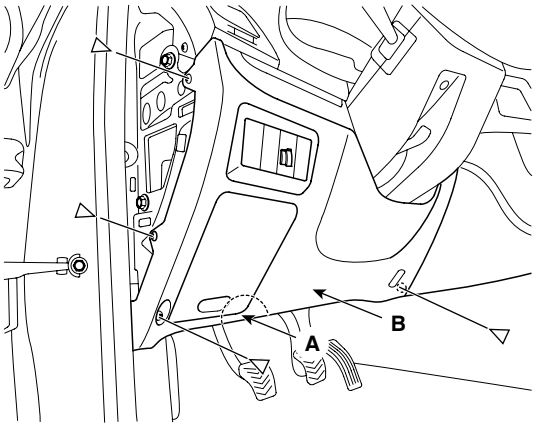

SCMBD6080L

[RHD]

▷: Screw Locations, 4



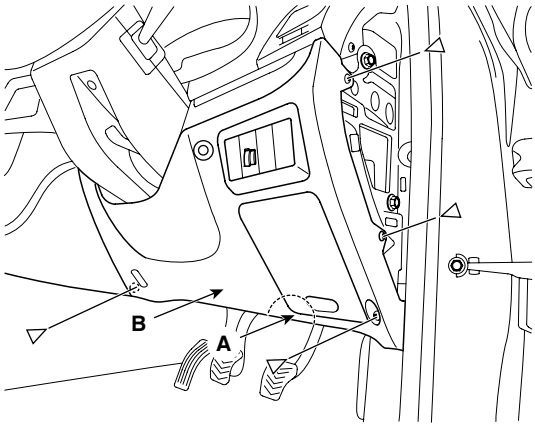

SCMBD6080R

5. Remove the reinforcing panal(A).

▷: Screw Locations, 1



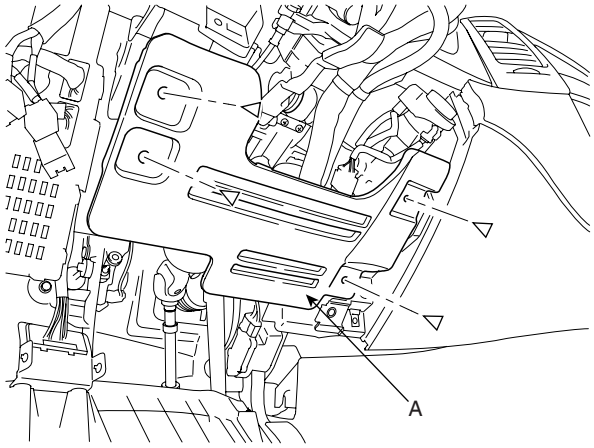

SCMBD6521L

6. Installation is the reverse of removal.

HEATER CONTROL UNIT REPLACEMENT

1. Remove the center pacia panel. (See page BD- 67)
2. After loosening the heater control mounting screw, remove the heater control unit (A).

▷: Screw Locations, 4

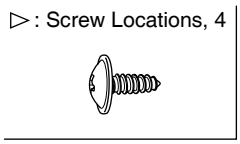

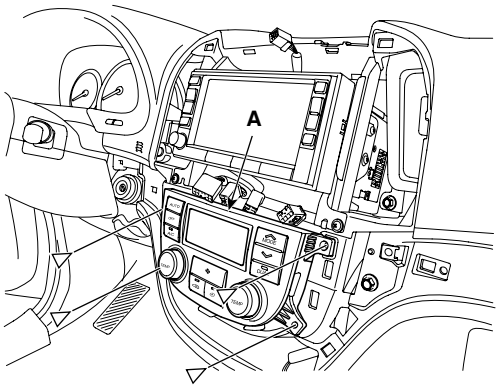

SCMBD6081L

3. Disconnect the connector (A).

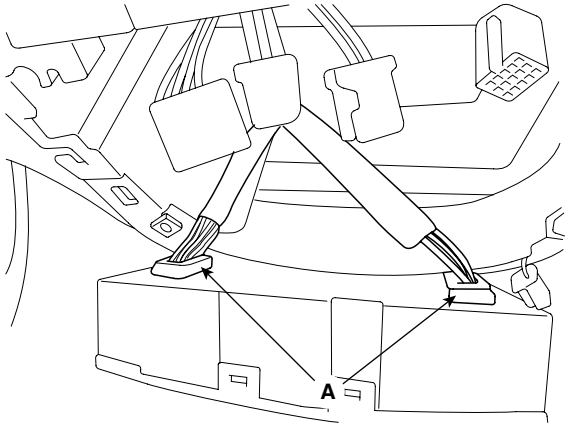

SCMBD6082D

4. Installation is the reverse of removal.

NOTE

- *Make sure the connector is plugged in properly.*

AUDIO ASSENBLY REPLACEMENT

1. Remove the center facia panel. (See page BD- 67)
2. Loosen the screws.
3. Disconnect the audio connector and antenna cable, then remove the audio assembly (A).

▷: Screw Locations, 4



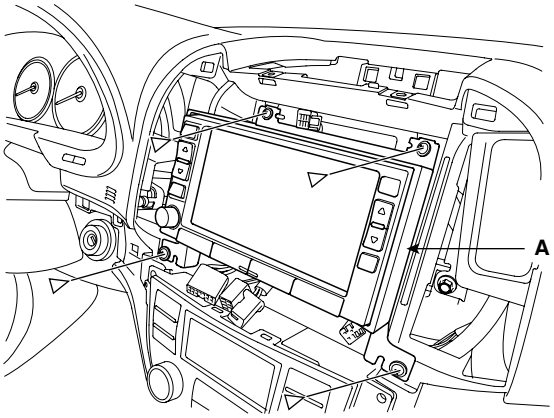

SCMBD6083L

4. Installation is the reverse of removal.

NOTE

- *Make sure the connector are plugged in properly.*

GLOVE BOX REPLACEMENT

1. Disconnect the damper (B) from the glove box (A).

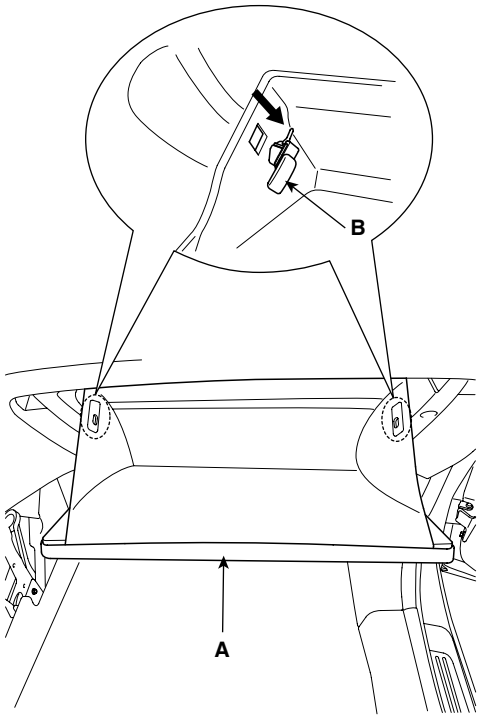

SCMBD6084D

2. Remove the glove box (A) from the lift (B).

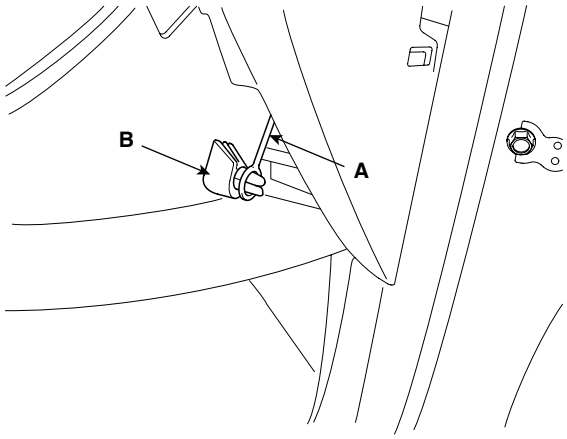

SCMBD6085D

3. Disconnect the pine (A), then remove the glove box (B).

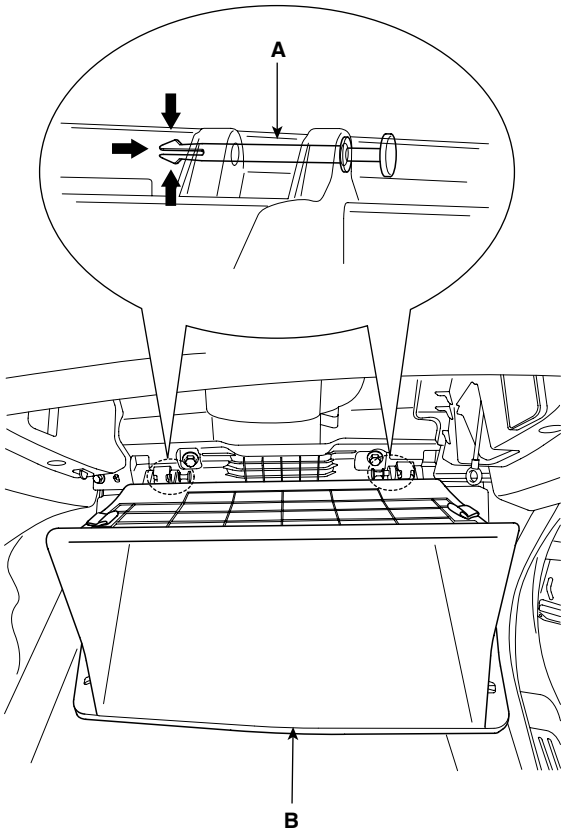

SCMBD6086D

4. Remove the glove box housing (A).

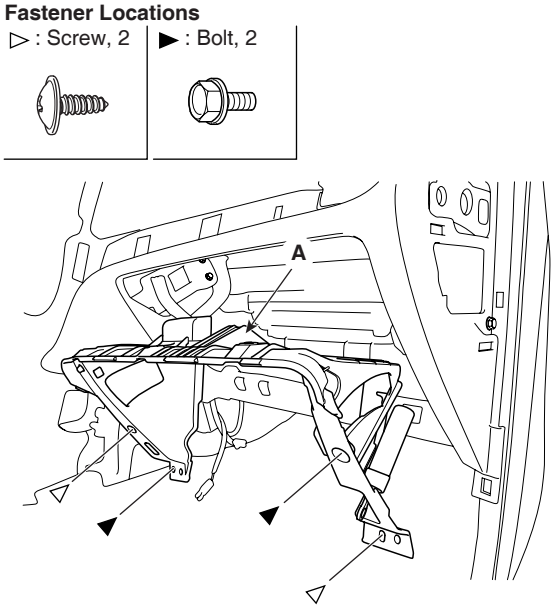

SCMBD6253L

5. Installation is the reverse of removal.

AIR VENT REPLANCMENT

DRIVER'S

1. Remove the crash pad side cover. (See page BD- 72)
2. Remove the center garnish (A).

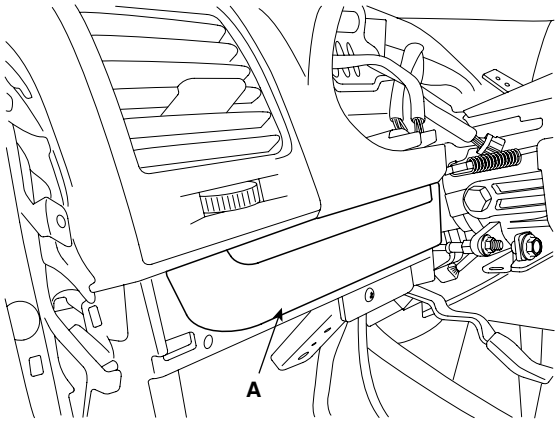

SCMBD6087D

3. After loosening the mounting screw, then remove the air vent (A).

▷ : Screw Locations, 3



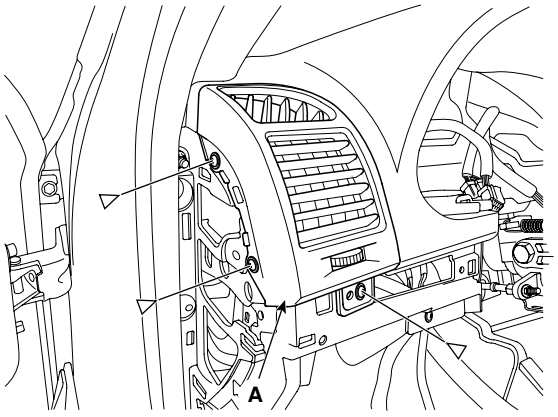

SCMBD6088L

4. Installation is the reverse of removal.

PASSENGER'S

1. Remove the crash pad side cover. (See page BD- 72)
2. Remove the crash pad center lower garnish. (See page BD- 66)
3. After loosening the mounting screw, then remove the air vent (A).

▷ : Screw Locations, 3



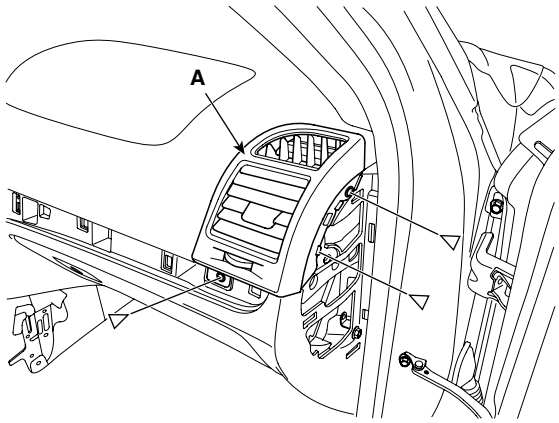

SCMBD6089L

4. Installation is the reverse of removal.

COVER REPLACEMENT

NOTE

- *When prying with a flat-tipped screwdriver, wrap it with protective tape, and apply protective tape around the related parts, to prevent damaged.*
- *Put on gloves to protect your hands.*

1. Remove the crash pad side cover(A).

[DRIVER'S]

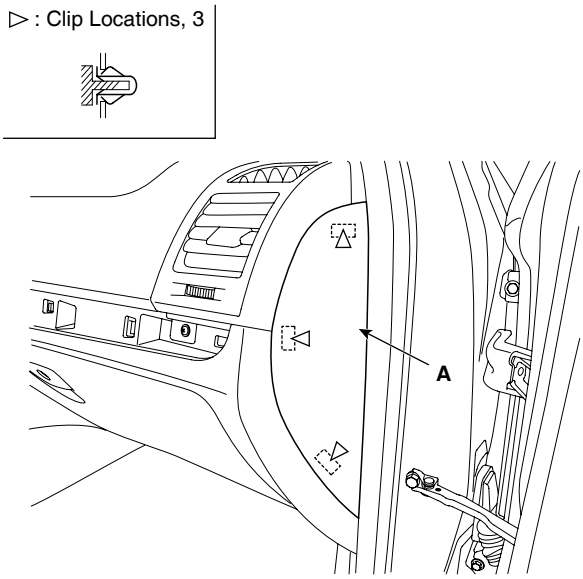

SCMBD6091L

[PASSENGER'S]

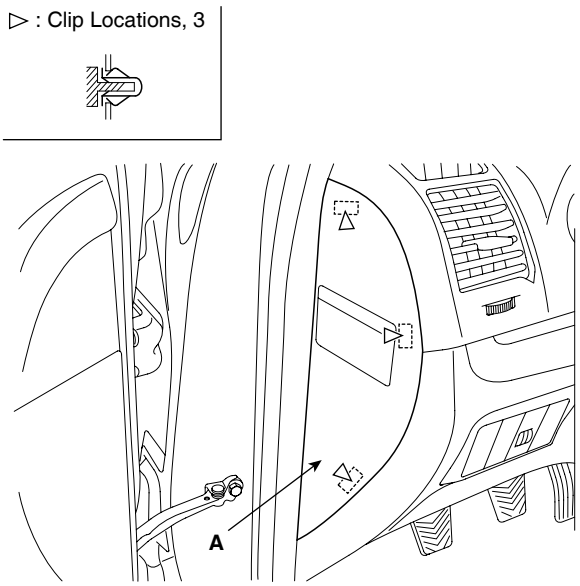

SCMBD6092L

2. Installation is the reverse of removal.

SHROUD REPLACEMENT

1. Loosen the screws, then remove the shroud assembly (A).

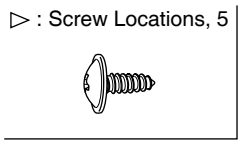

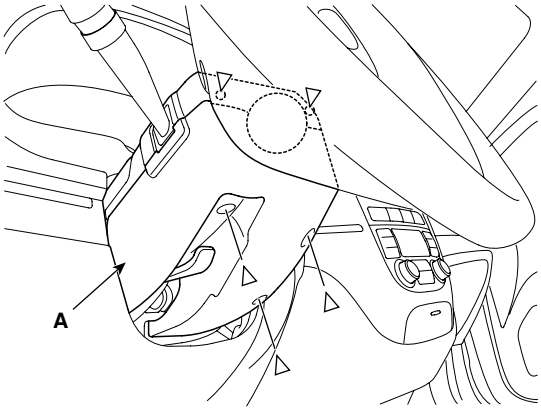

SCMBD6090L

2. Installation is the reverse of removal.

GLOVE BOX UNDER COVER REPLACEMENT

1. Loosen the screws, then remove the glove box under cover (A).

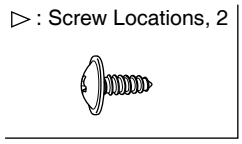

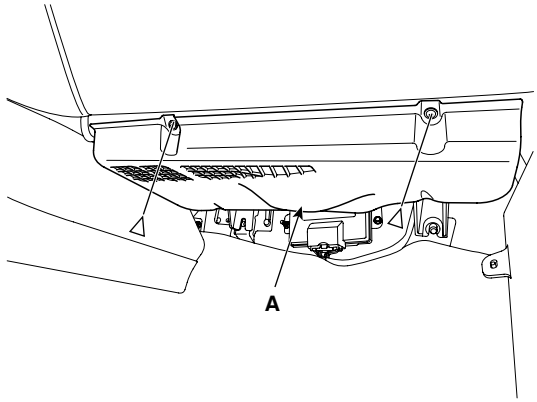

SCMBD6093L

2. Installation is the reverse of removal.

CRASH PAD REPLACEMENT

NOTE

- *When prying with a flat-tipped screwdriver, wrap it with protective tape, and apply protective tape around the related parts, to prevent damaged.*
- *Put on gloves to protect your hands.*

1. Remove the following items.
   - Front seat. (See page BD- 94)
   - Cluster facia panel and cluster. (See page BD- 65)
   - Audio assembly. (See page BD- 69)
   - Glove box. (See page BD- 70)
   - Side cover, center under cover. (See page BD- 72)
   - Front pillar trim. (See page BD- 81)
2. Remove the photo sensor (E)
3. Disconnect the passenger's air bag connector (A), loosen the bolt and nut, then remove the crash pad (B).
4. Installation is the reverse of removal.

NOTE

- *Make sure the crash pad fits onto the guide pins correctly.*
- *Before tightening the bolts, make sure the crash pad wire harnesses are not pinched.*
- *Make sure the connectors are plugged in properly, and the antenna lead is connected properly,*
- *Enter the anti- theft code for the radio, then enter the customer's radio station presets.*

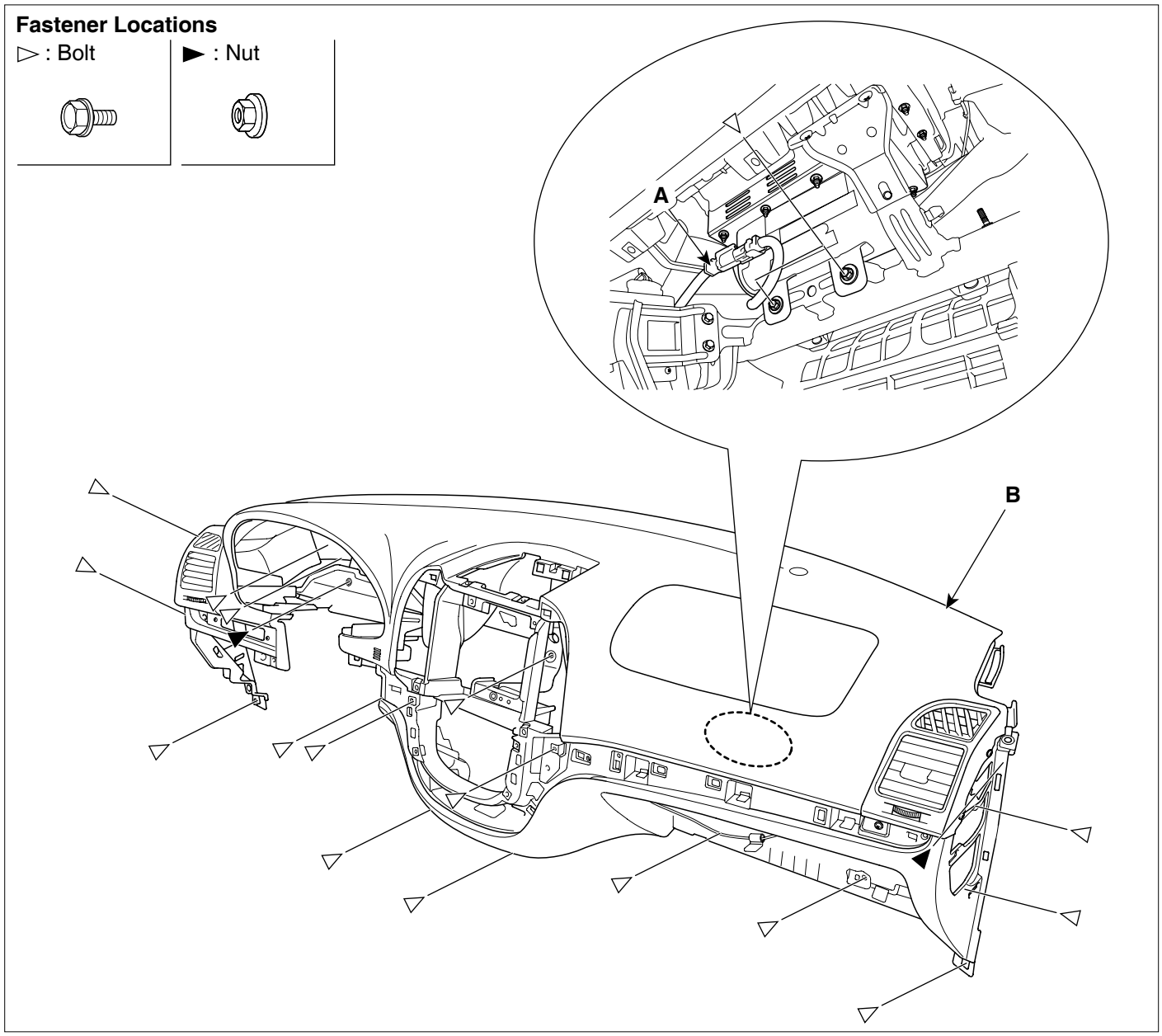

SCMBD6094L

ROOF TRIM

COMPONENTS E3D164BD

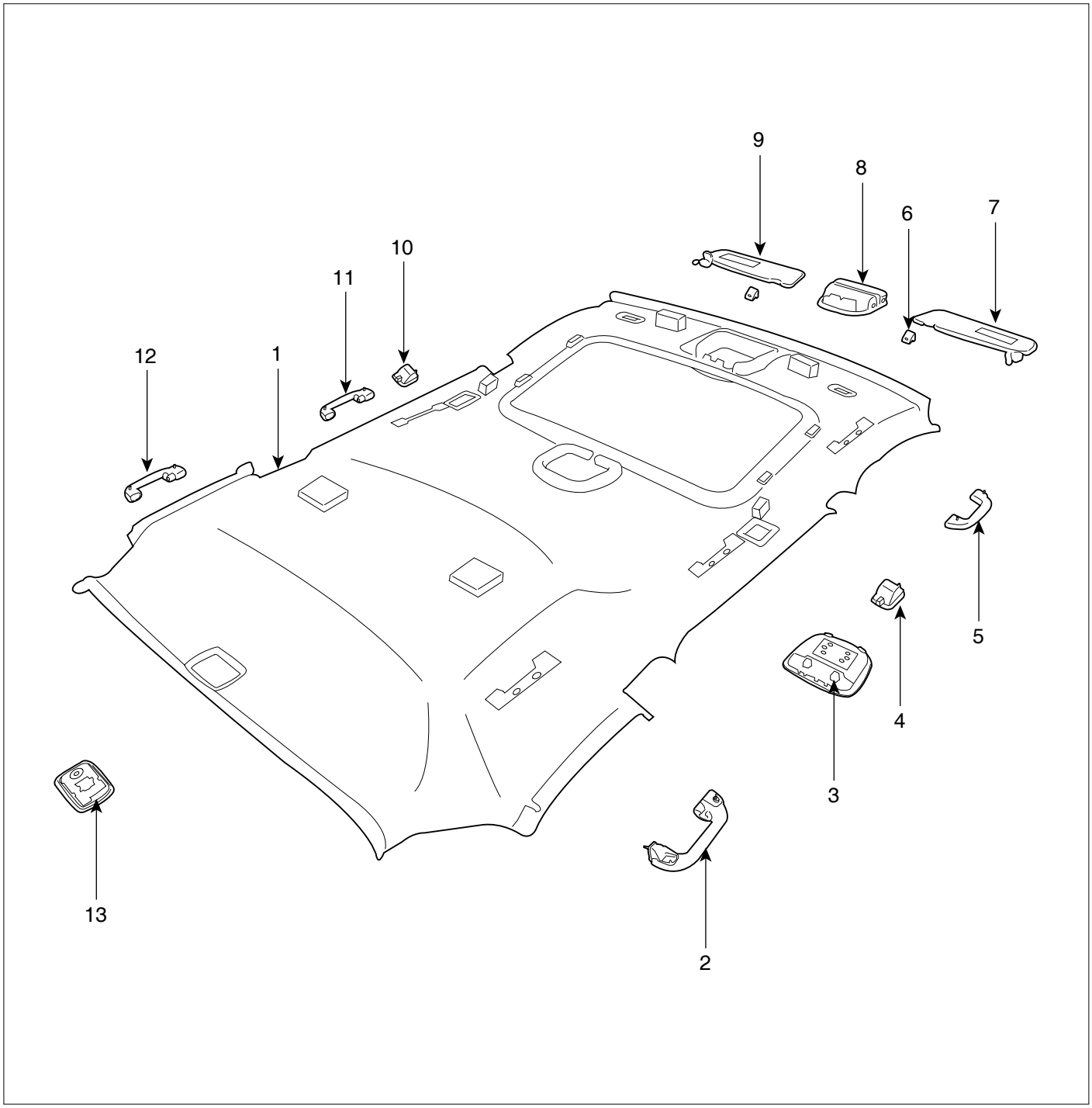

1. Package tray
2. Assist handle
3. Room lamp
4. Lamp
5. Assist handle
6. Holder
7. Sunvisor
8. Overhead console
9. Sunvisor
10. Lamp
11. Assist handle
12. Assist handle
13. Rear room ramp

SCMBD6175L

REPLACEMENT EF131CCF

SUNVISOR REPLACEMENT

NOTE

- *When prying with a flat-tipped screwdriver, wrap it with protective tape to prevent damaged.*
- *Put on gloves to protect your hands.*

1. Remove the sunvisor (A) and holder (B) from each side.
2. Disconnected the connector (C).

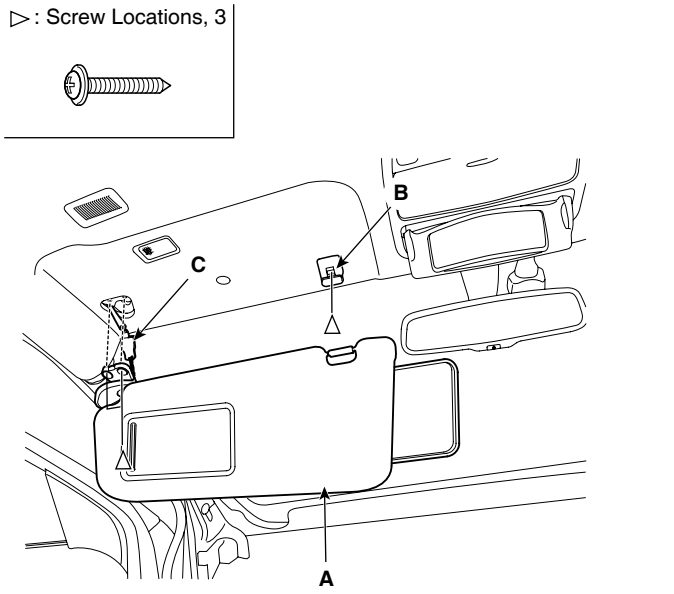

SCMBD6105L

3. Installation is the reverse of removal.

OVERHEAD CONSOLE LAMP REPLACEMENT

NOTE

- *When prying with a flat-tipped screwdriver, wrap it with protective tape to prevent damaged.*
- *Put on gloves to protect your hands.*

1. Remove the overhead console.
   - Remove the screw.
   - Disconnect the connector (B).

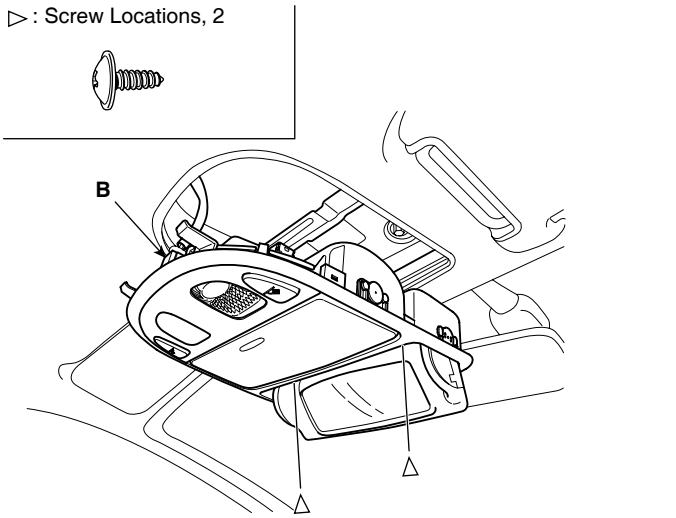

SCMBD6107L

2. Installation is the reverse of removal.

ROOM LAMP AND REPLACEMENT

NOTE

- *When prying with a flat-tipped screwdriver, wrap it with protective tape to prevent damaged.*
- *Put on gloves to protect your hands.*

1. Remove the room lamp.
   - Remove the lens (A).
   - Remove the screws.
   - Pull out the room lamp (B).
   - Disconnect the connector (C).

[FRONT]

▷ : Screw Locations, 2

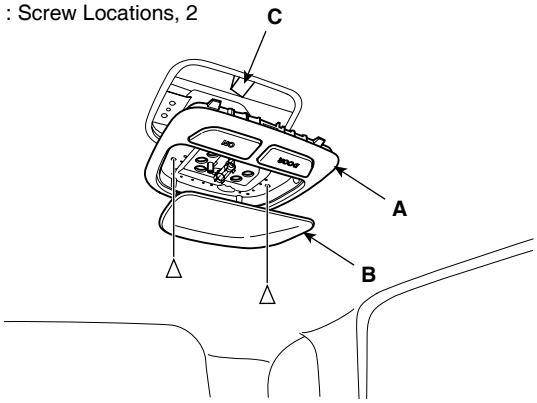

SCMBD6108L

[REAR]

▷ : Screw Locations, 2

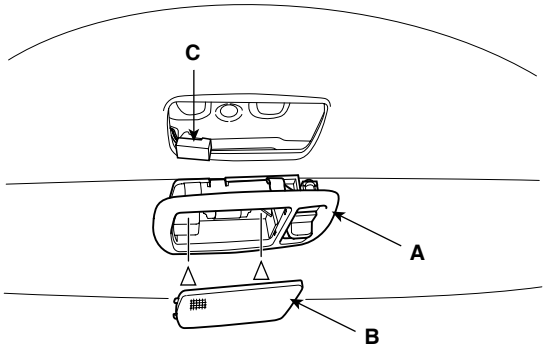

SCMBD6109L

2. Installation is the reverse of removal.

PERSONAL LAMP REPLACEMENT

1. Remove the lamp (A).
2. Disconnect the connector (B).

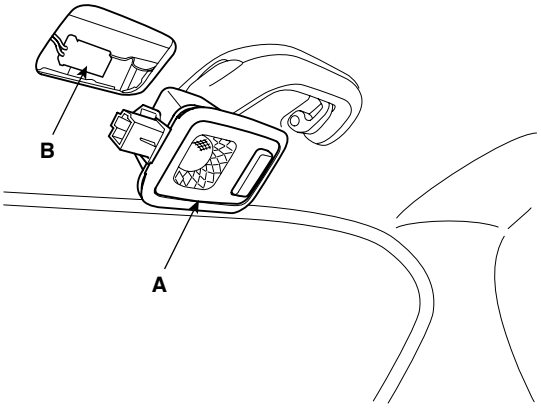

SCMBD6110D

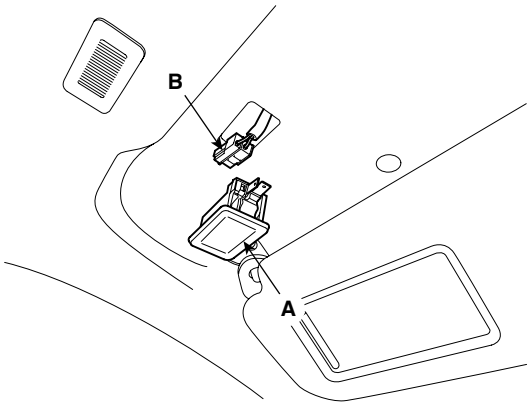

SCMBD6112D

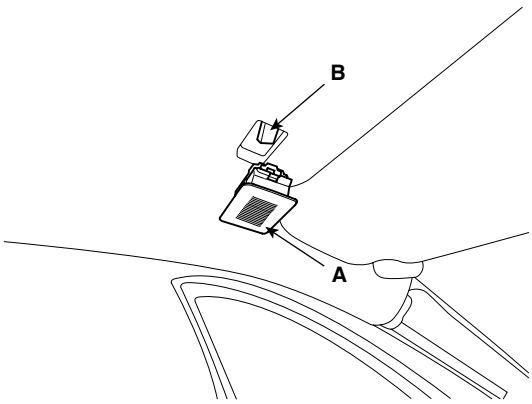

SCMBD6111D

3. Installation is the reverse of removal.

ASSIST HANDLE REPLACEMENT

NOTE

- *When prying with a flat-tipped screwdriver, wrap it with protective tape to prevent damaged.*
- *Put on gloves to protect your hands.*

1. Remove the covers, and remove the screws, then remove the assist handle (A).

▷ : Screw Locations

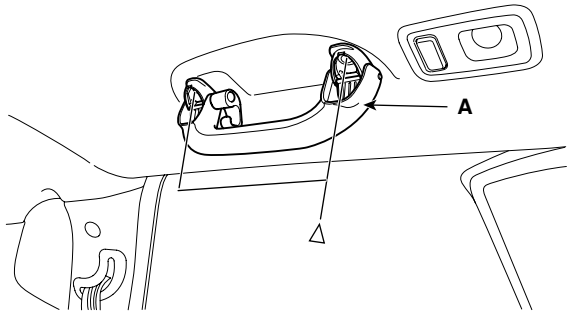

SCMBD6106L

2. Installation is the reverse of removal.

ROOF TRIM REPLACEMENT

NOTE

- *Put on gloves to protect your hands.*
- *When prying with a flat-tipped screwdriver, wrap it with protective tape to prevent damaged.*
- *Take care not to bend or scratch the trim and panels.*

1. Remove the following items.
   - Front seat, rear seat assembly. (See page BD- 94)
   - Front, rear door scuff trim. (See page BD- 81)
   - Front pillar trim. (See page BD- 81)
   - Center lower, upper pillar trim. (See page BD- 82)
   - Rear lower, upper pillar trim. (See page BD- 83)
   - Overhead console. (See page BD- 76)
   - Room ramp. (See page BD- 77)
   - Sunvisor, assist handle. (See page BD- 76)
   - Vanity lamp and hands free mic. (See page BD- 77)
2. Remove the connector (B).
3. Remove the roof trim (A).
4. Installation is the reverse of removal.

NOTE

- *Replace any damaged clips.*

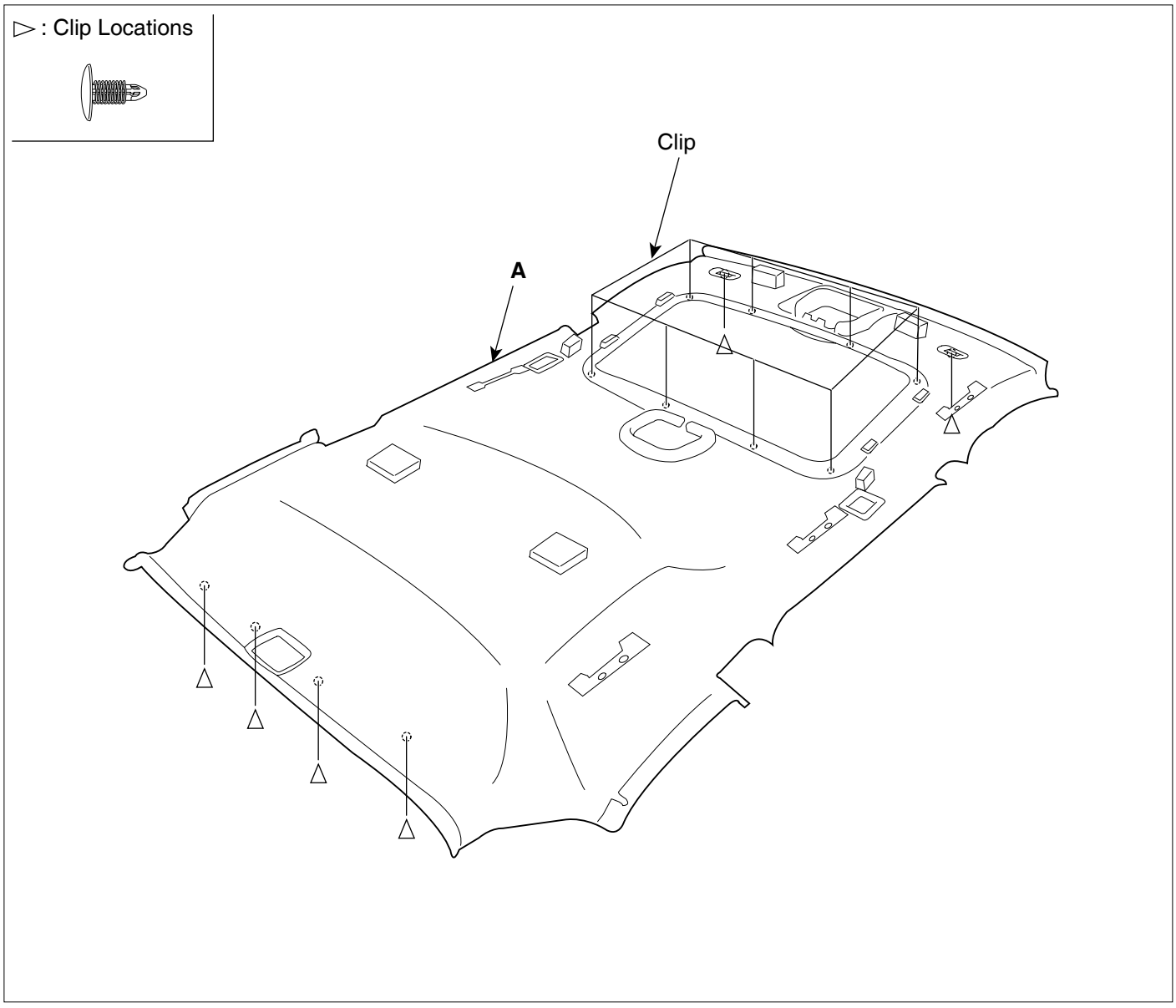

SCMBD6250L

INTERIOR TRIM

COMPONENTS EC53C6A4

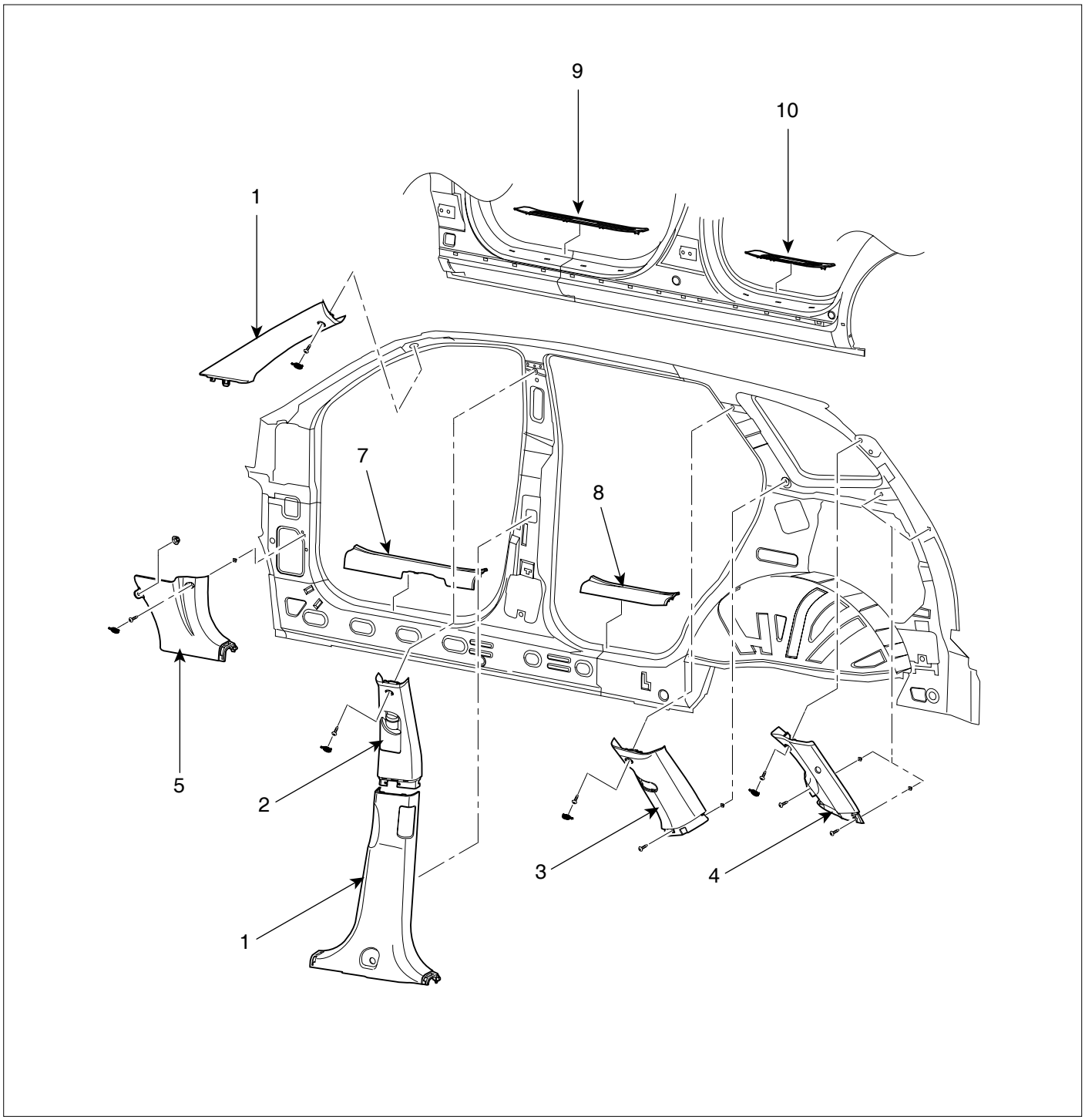

1. Center lower pillar trim
2. Center upper trim
3. Rear pillar trim
4. Gate pillar trim
5. Cowl side trim
6. Front pillar trim
7. Front door scuff trim
8. Rear door scuff trim (RH)
9. Front door side step
10. Rear door side step

SCMBD6224L

REPLACEMENT EEE14F2C

FRONT DOOR AND REAR DOOR SCUFF TRIM REPLACEMENT

NOTE

- *Put on gloves to protect your hands.*
- *When prying with a flat-tipped screwdriver, wrap it with protective tape to prevent damaged.*
- *Take care not to bend or scratch the trim and panels.*

1. Remove the front door scuff trim (A).
2. Remove the rear door scuff trim (B).

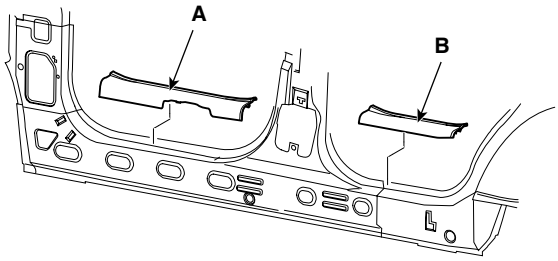

SCMBD6098D

3. Installation is the reverse of removal.

NOTE

- *Replace any damaged clips.*

FRONT PILLAR TRIM REPLACEMENT

NOTE

- *Put on gloves to protect your hands.*
- *When prying with a flat-tipped screwdriver, wrap it with protective tape to prevent damaged.*
- *Take care not to bend or scratch the trim and panels.*

1. Remove the front pillar trim (A).

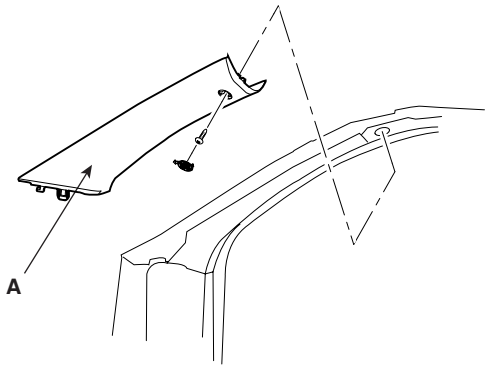

SCMBD6509D

2. Installation is the reverse of removal.

NOTE

- *Replace any damaged clips.*

COWL SIDE TRIM REPLACEMENT

NOTE

- *Put on gloves to protect your hands.*
- *When prying with a flat-tipped screwdriver, wrap it with protective tape to prevent damaged.*
- *Take care not to bend or scratch the trim and panels.*

1. Remove the front door scuff trim. (See page BD- 81)
2. Remove the cowl side trim (A).

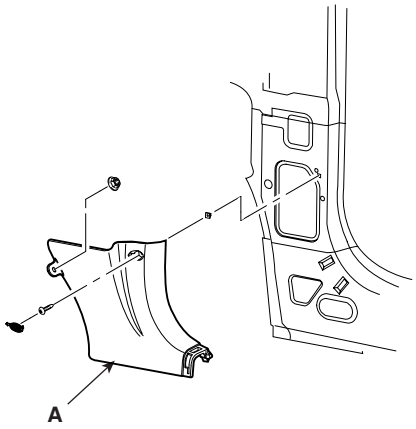

SCMBD6100D

3. Installation is the reverse of removal.

NOTE

- *Replace any damaged clips.*

CENTER LOWER AND UPPER PILLAR TRIM REPLACEMENT

NOTE

- *Put on gloves to protect your hands.*
- *When prying with a flat-tipped screwdriver, wrap it with protective tape to prevent damaged.*
- *Take care not to bend or scratch the trim and panels.*

1. Remove the front and rear door trim. (See page BD-81)
2. Remove the center lower pillar trim(A).
3. Remove the center upper pillar trim (B).

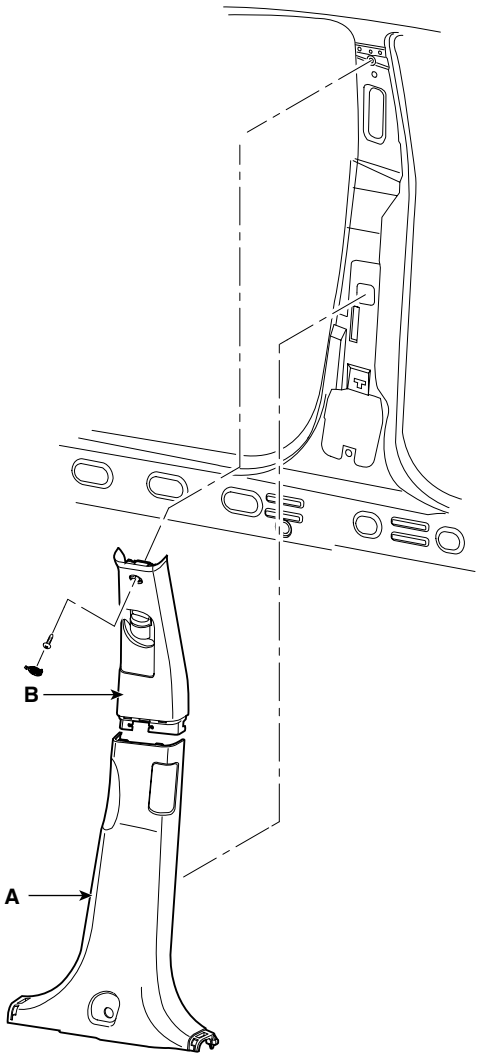

SCMBD6101L

4. Installation is the reverse of removal.

NOTE

- *Replace any damaged clips.*

REAR PILLAR TRIM REPLACEMENT

NOTE

- *Put on gloves to protect your hands.*
- *When prying with a flat-tipped screwdriver, wrap it with protective tape to prevent damaged.*
- *Take care not to bend or scratch the trim and panels.*

1. Remove the luggage side trim. (See page BD- 84)
2. Remove the rear pillar trim (A).

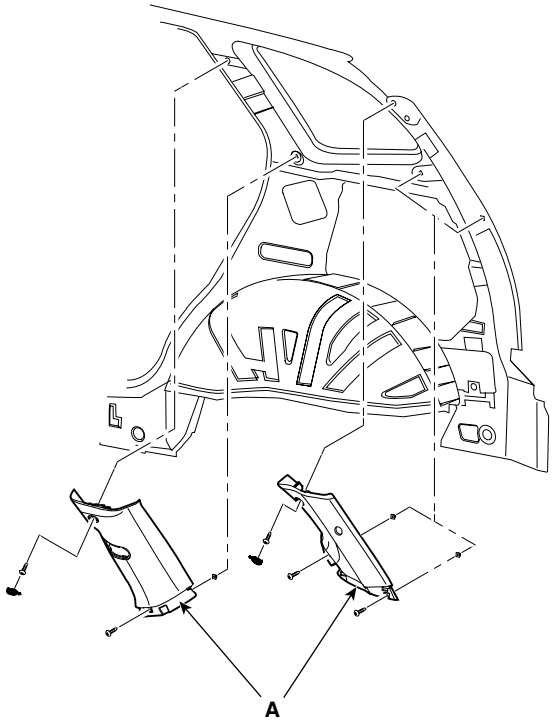

SCMBD6103D

3. Installation is the reverse of removal.

NOTE

- *Replace any damaged clips.*

LUGGAGE SIDE TRIM REPLACEMEN

NOTE

- *Put on gloves to protect your hands.*
- *When prying with a flat-tipped screwdriver, wrap it with protective tape to prevent damaged.*
- *Take care not to bend or scratch the trim and panels.*

1. Remove the rear seat. (See page BD- 102)
2. Remove the rear seat belt lower anchor. (See page BD- 119)
3. After loosening the mounting screws, then remove the luggage side trim.
4. Installation is the reverse of removal.

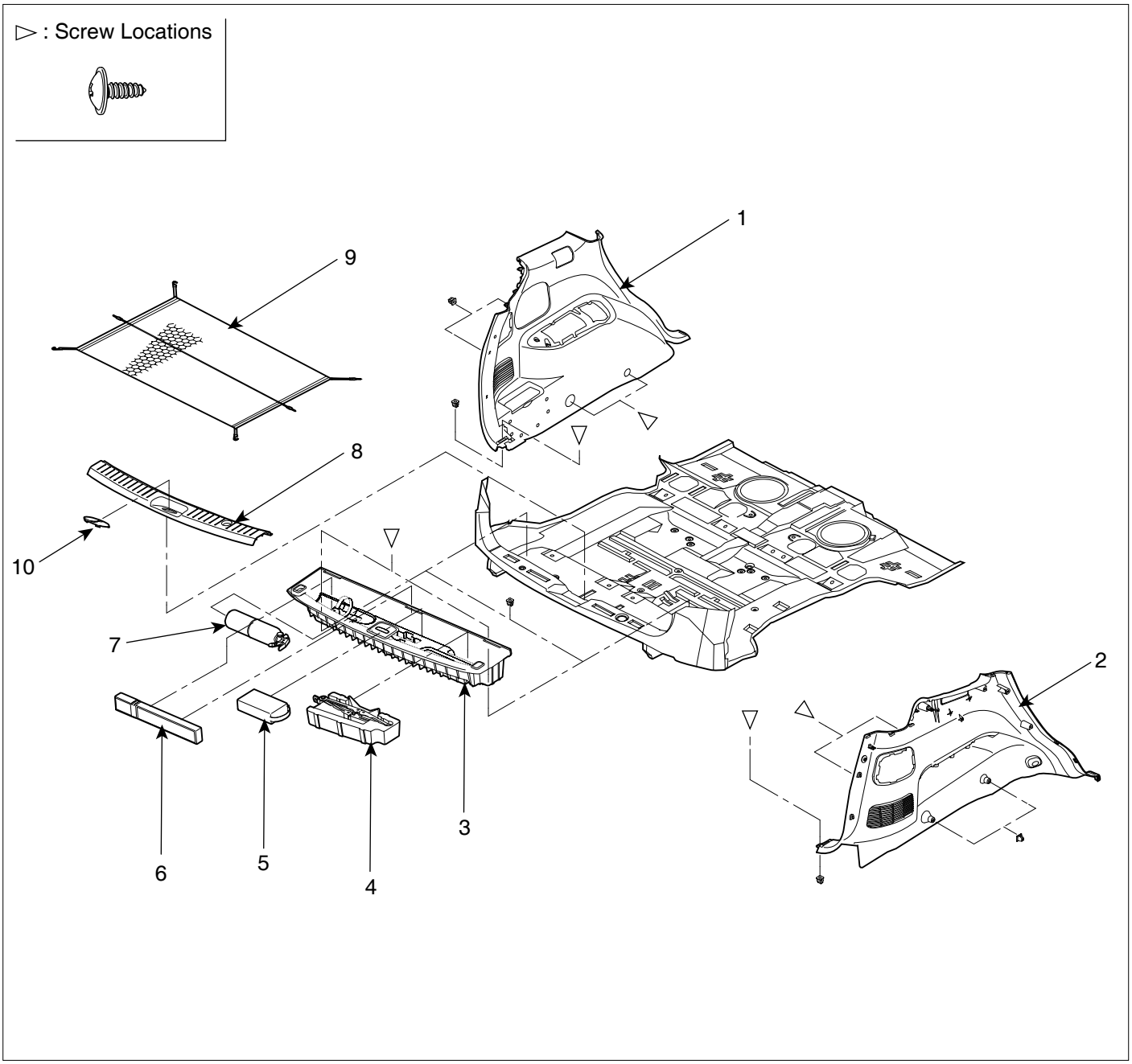

1. Luggage side trim (LH)
2. Luggage side trim (RH)
3. Luggage flower box trim
4. Jack
5. First AIP kit
6. Trianlge ssy car warning
7. Fire extinguisher
8. Transverse
9. Luggage net
10. Striker cover

SCMBD6174L

WINDSHIELD GLASS

COMPONENTS EB4D977E

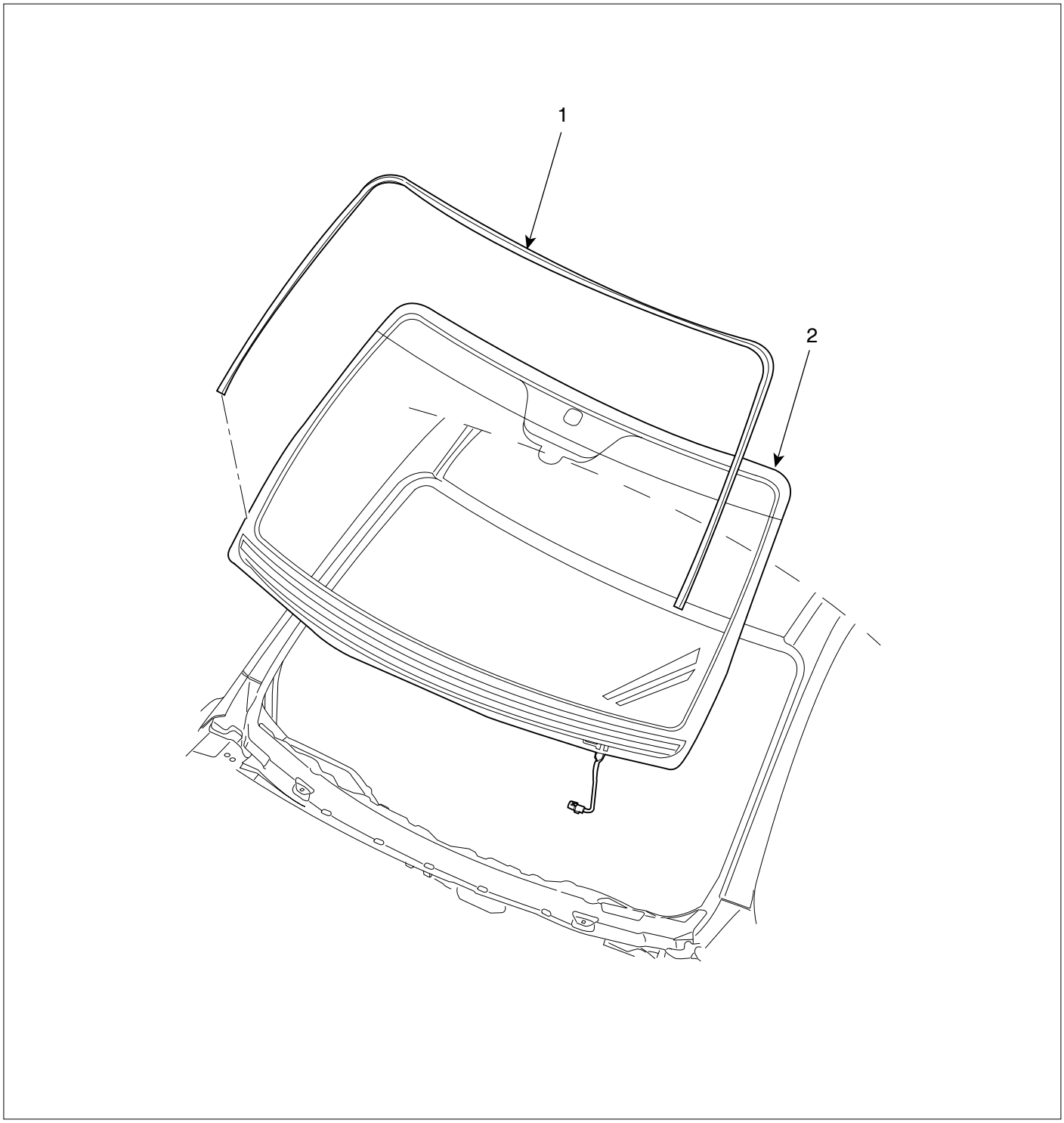

1. Windshield upper molding
2. Windshield glass

SCMBD6176L

REPLACEMENT EEB750D4

REMOVAL

NOTE

- *Put on gloves to protect your hands.*
- *Use seat covers to avoid damaging any surfaces.*

1. Remove the following items.
   - Outside rear view mirror. (See page BD- 54)
   - Front pillar trim, both sides. (See page BD- 81)
   - Windshield wiper arms and cowl cover. (See page BE-" Windshield wiper")
   - Sunvisore and holders, both sides, overhead console, Grab handles, both sides. (See page BD- 76)

2. Remove the molding (A) from the edge of the windshield (B). If necessary, cut the molding with a utility knife.

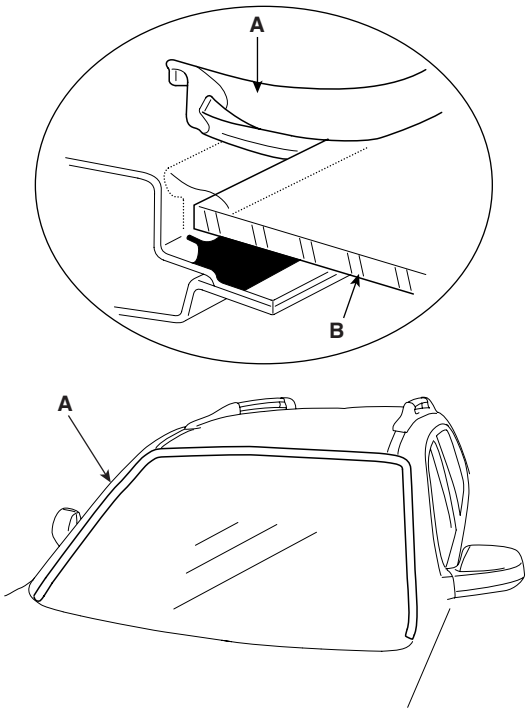

SCMBD6516L

3. Pull down the front portion of the headliner. Take care not to bend the headliner excessively, or you may crease or break it.

4. Cut out the sealant using the sealant cutting tool (A) (09861-31100).

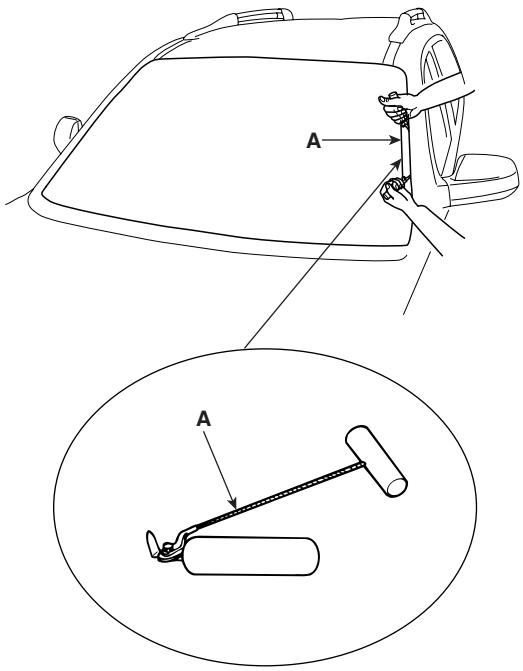

ASIE070C

5. Remove the windshield (A) carefully using the glass holder (B)(09861-31100).

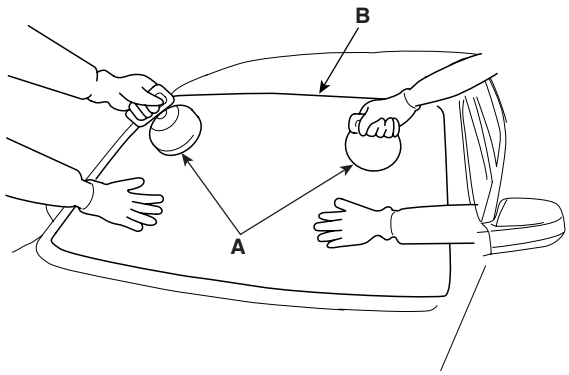

ASIE070D

INSTALLTION

1. With a knife, scrape the old adhesive smooth to a thickness of about 2mm (0.08 in.) on the bonding surface around the entire windshield opening flange:
   - Do not scrape down to the painted surface of the body; damaged paint will interfere with proper bonding.
   - Remove the rubber dam and fasteners from the body.
   - Mask off surrounding surfaces before painting.

2. Clean the bonding surface with a sponge dampened in alcohol. After cleaning, keep oil, grease and water from getting on the clean surface.

3. Apply the glass primer (A) to the side of the windshield glass edge and stick the both-sided adhesive tape (B) on the inside of molding (C).

4. When attaching the molding, make it in line (D) with the windshield glass and attach the windshield glass pad (E)to the designated place.

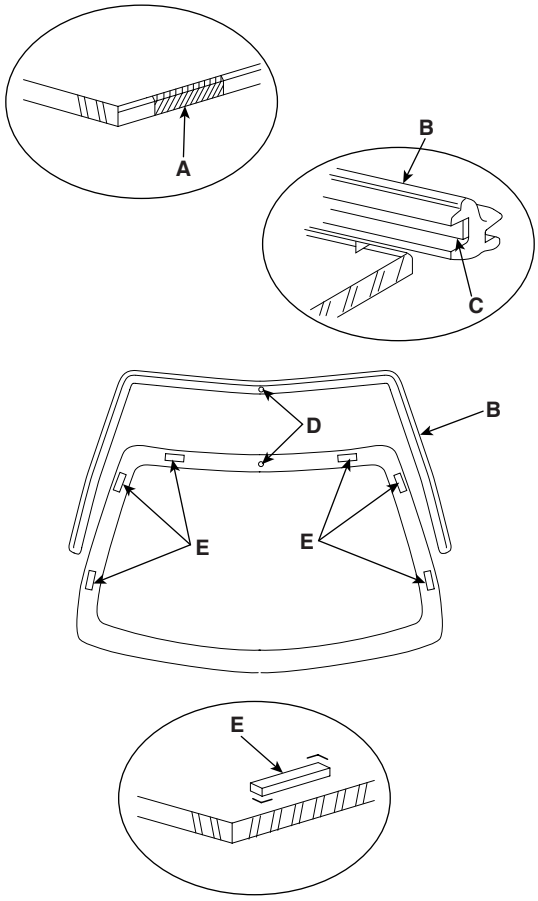

ASIE070E

5. Install the spacer (A) install the windshield glass (B) temporarily with making sure to position them on the center, and then place the alignment mark (C).

6. Remove the windshield.

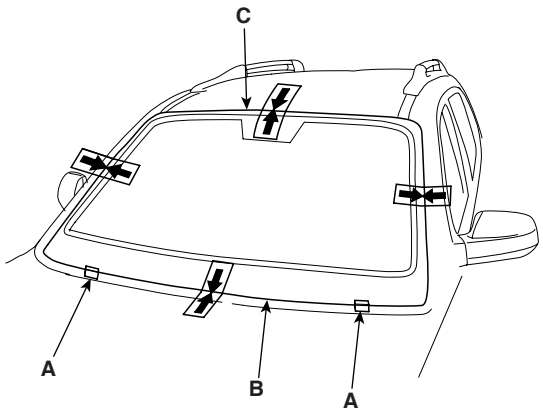

ASIE070F

7. With a sponge, apply a light coat of body primer to the original adhesive remaining around the windshield opening flange. Let the body primer dry for at least 10 minutes.
   - Do not apply glass primer to the body, and be careful not to mix up glass and body primer sponges.
   - Never touch the primed surfaces with your hands.
   - Mask off the dashboard before painting the flange.

: Apply body primer here.

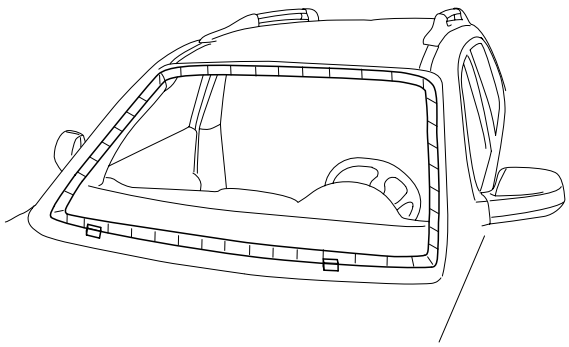

LSIE070H

8. Apply a light coat of glass primer to the outside of the fasteners.

NOTE

- *Never touch the primed surface with your hand. If you do, the adhesive may not bond to the glass Properly, causing a leak after the windshield glass is installed.*
- *Do not apply body primer to the glass.*
- *Keep water, dust, and abrasive materials away from the primer.*

////////// : Apply glass primer here.

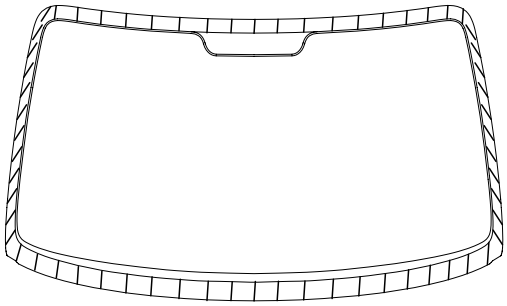

LSIE070G

9. Pack adhesive into the cartridge without air pockets to ensure continuous delivery. Put the cartridge in a caulking gun, and run a bead of adhesive (A) around the edge of the windshield (B) between the fastener (C) and molding (D) as shown.
Apply the adhesive within 30 minutes after applying the glass primer.
Make a slightly thicker bead at each corner.

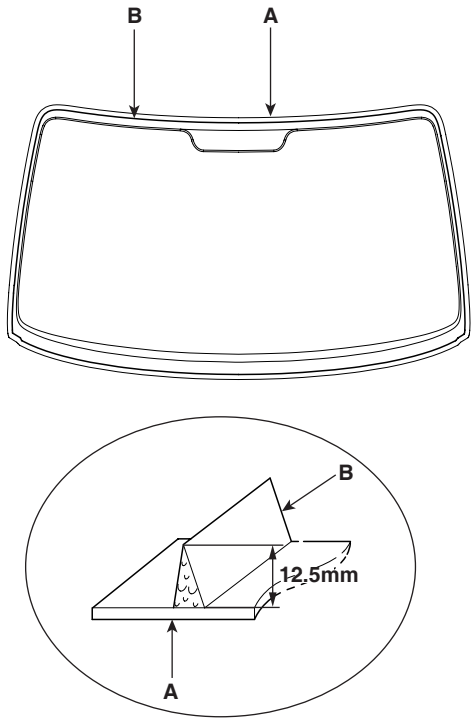

ASIE070I

10. Use suction cups (A) to hold the windshield over the opening, align it with the alignment marks (B) made in step 15, and set it down on the adhesive. Lightly push on the windshield until its edges are fully seated on the adhesive all the way around. Do not open or close the doors until the adhesive is dry.

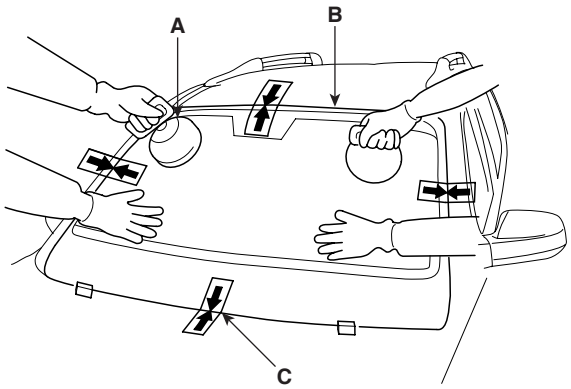

ASIE070J

11. Scrape or wipe the excess adhesive off with a putty knife or towel. To remove adhesive from a painted surface or the windshield, wipe with a soft shop towel dampened with alcohol.

12. Let the adhesive dry for at least one hour, then spray water over the windshield and check for leaks. Make leaking areas, and let the windshield dry, then seal with sealant:
    - Let the vehicle stand for at least four hours after windshield installation. If the vehicle has to be used within the first four, it must be driven slowly.
    - Keep the windshield dry for the first hour after installation.

13. Reinstall all remaining removed parts. Install the rearview mirror after the adhesive has dried thoroughly. Advise the customer not to do the following things for two the three days:
    - Slam the door with all the windows rolled up.
    - Twist the body excessively (such as when going in and out of driveways at an angle or driving over rough, uneven roads).

BUMPER

FRONT BUMPER

REPLACEMENT E464C9DA

1. Widen the chink between the cover (B) and bumper where the finger can enter sufficiently.

CAUTION

- ***Be careful not to damage the surface of bumper by a sharp edge.***

2. Hold the nozzle with fingers under the cover and then pull it as described below picture(B).
3. Pull the cover (A) and set it apart, then remove the cover(B).
4. Remove the front bumper cover.

NOTE

- *Put on gloves to protect your hands.*
- *When prying with a flat-tipped screwdriver, wrap it with protective tape to prevent damaged.*
- *Take care not bend or scratch the cover and other parts.*

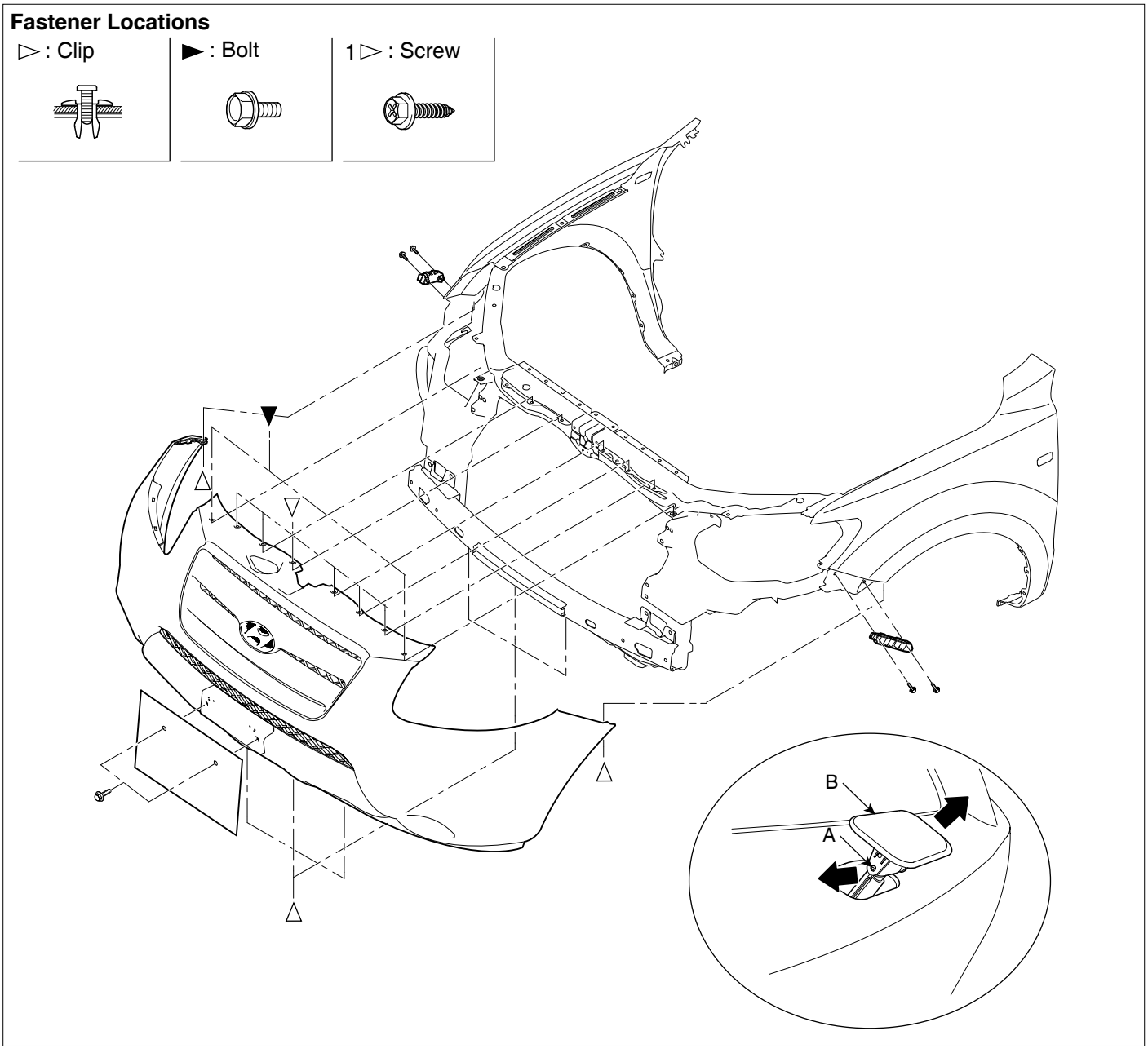

SCMBD6177L

REAR BUMPER

REPLACEMENT E9F085BC

NOTE

- *After remove the rear combination lamp.*
- *When prying with a flat-tipped screwdriver, wrap it with protective tape, and apply protective tape around the related parts your hands.*
- *Put on gloves to protect your hands.*
- *Take care not bend or scratch the cover and other parts.*
- *Replace any damaged clips.*

Fastener Locations

▷ : Screw	► : Bolt	1► : Screw	1▷ : Clip

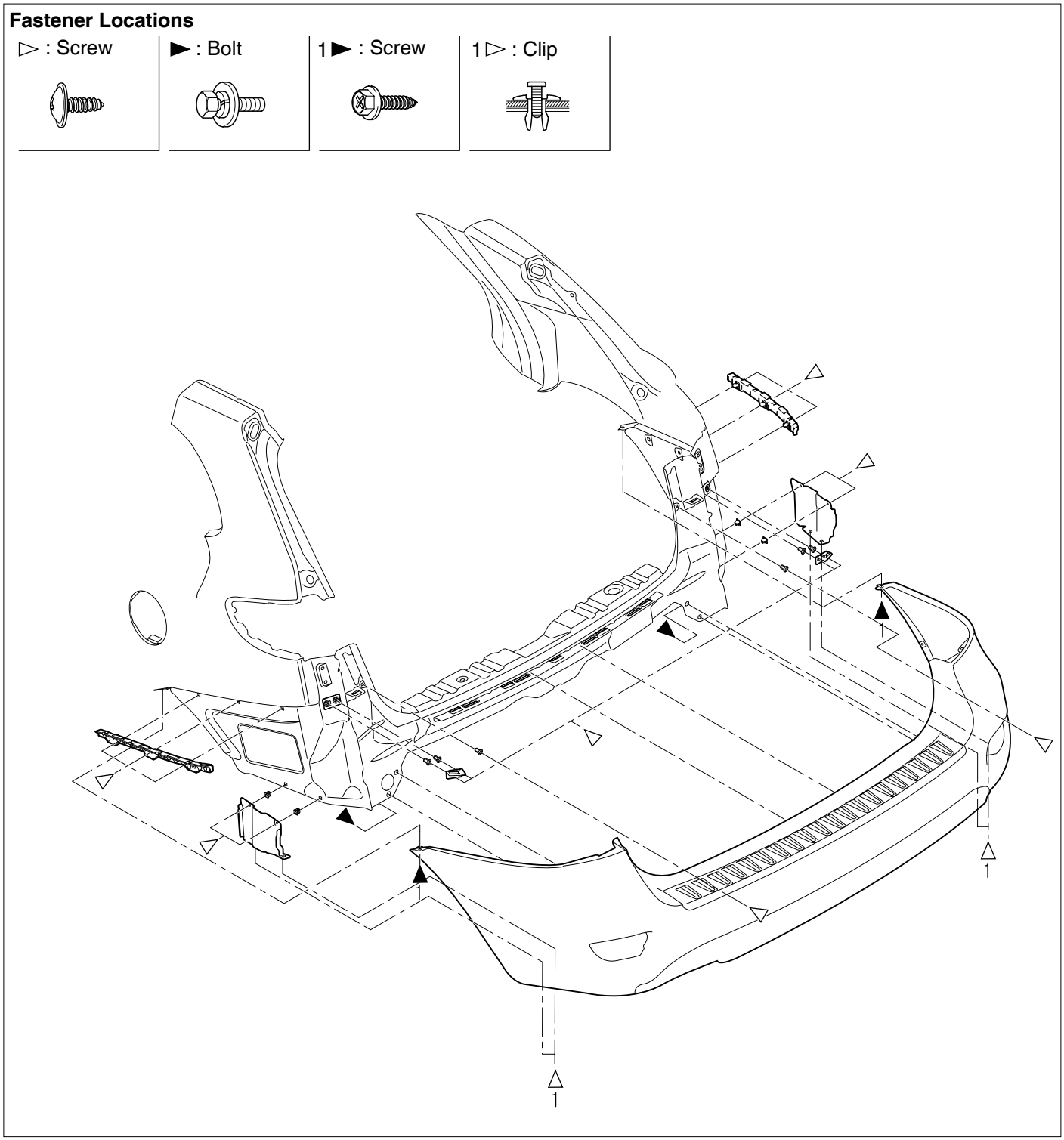

SCMBD6178L

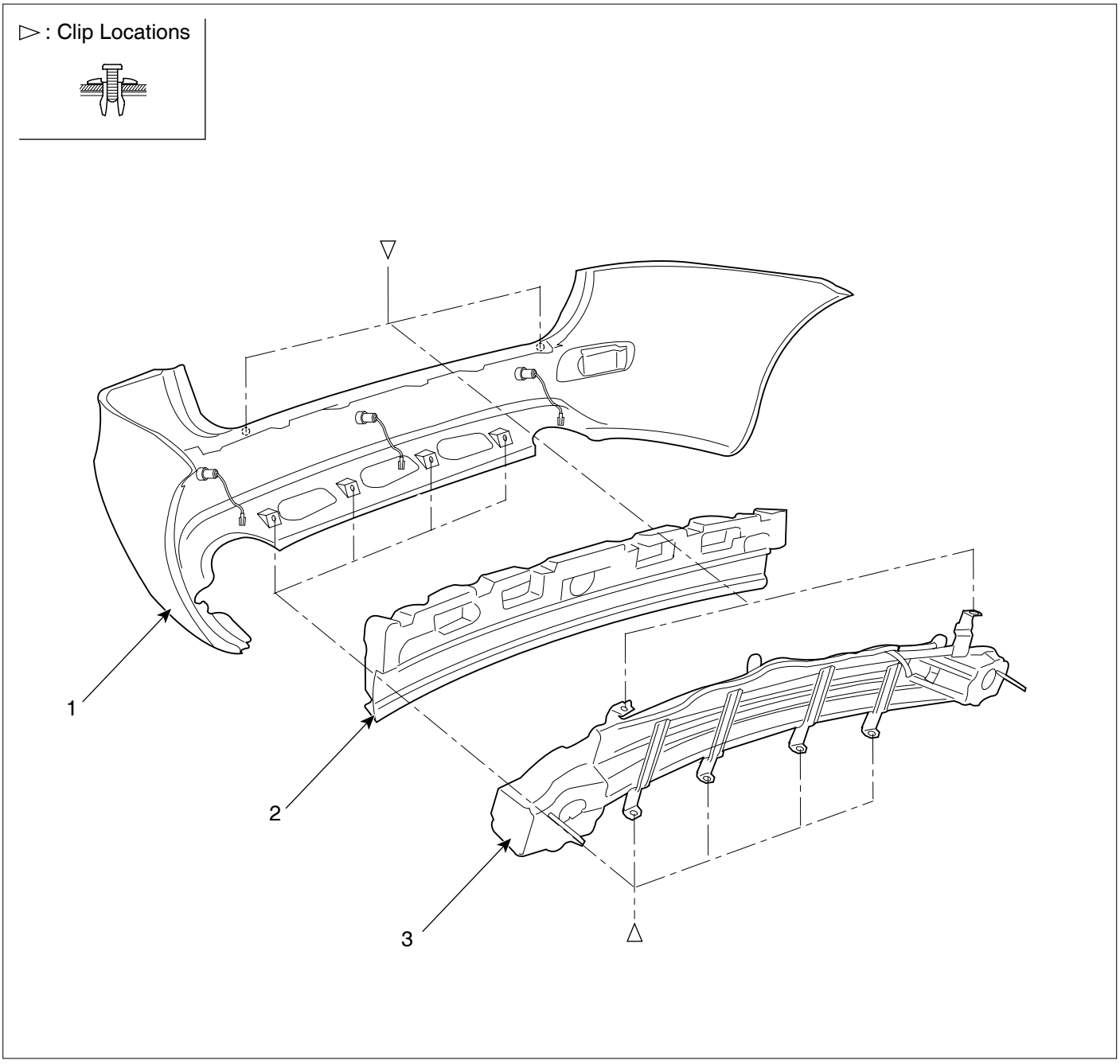

1. Rear bumper cover
2. Energy absorber
3. Rear bumper rail

SCMBD6179L

SEAT

FRONT SEAT

COMPONENTS E088B74F

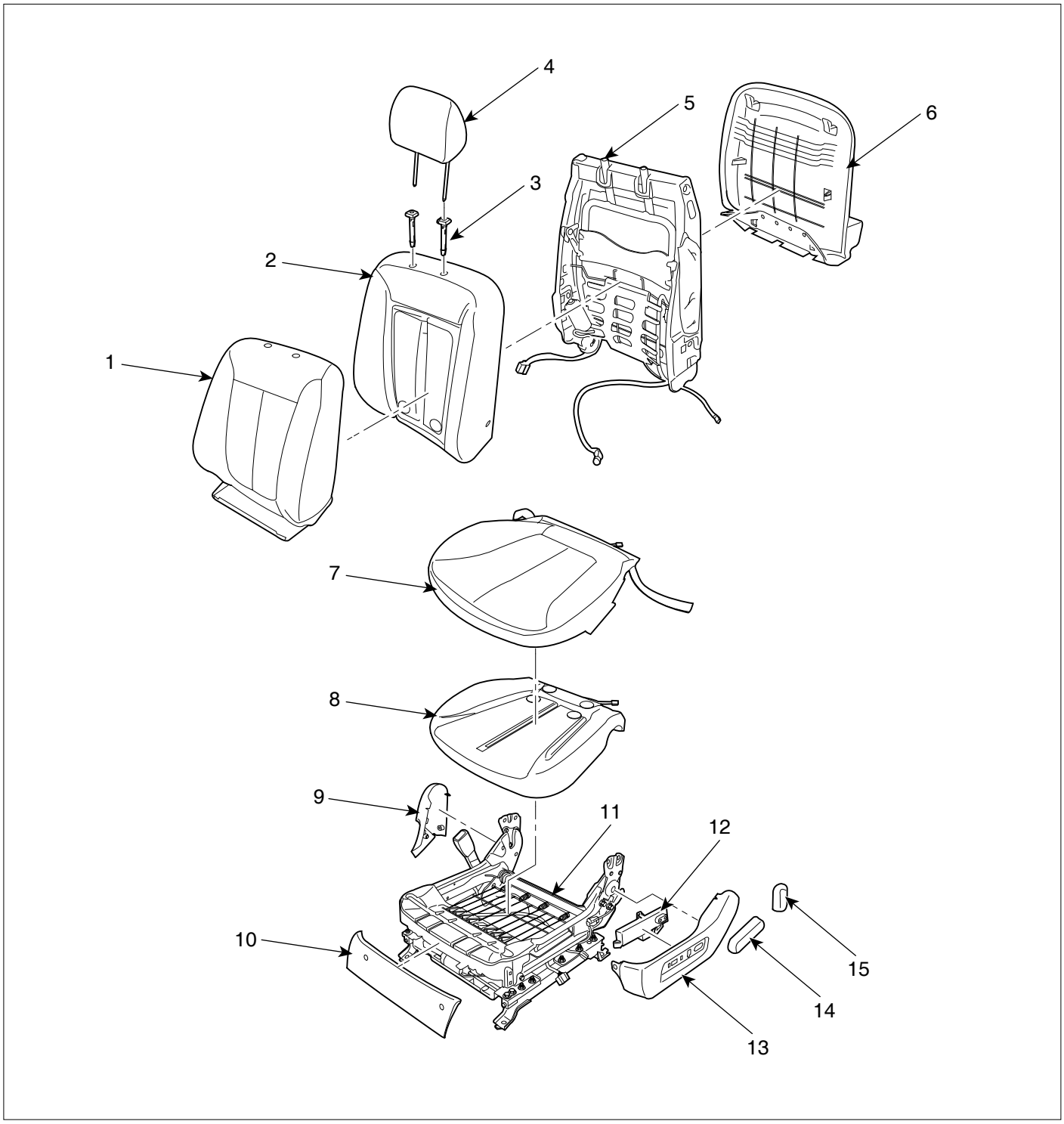

1. Seat back cover
2. Seat back pad
3. Headrest guide
4. Headrest
5. Seat back frame
6. Seat back panel
7. Seat cushion cover
8. Seat cushion pad
9. Side cover
10. Front cover
11. Seat cushion frame
12. Switch assembly
13. Recliner cover
14. Reber
15. Recliner reber

SCMBD6180L

REPLACCEMENT EEDFEB65

SEAT ASSEMBLY REPLACEMENT

1. Remove the seat assembly mounting cover (A).
2. After loosening the seat assembly mounting bolts and nuts, remove the seat assembly (C).

▷ : Bolt Locations, 4

43.1~64.7 N.m (4.4~6.6 Kgf.m, 31.8~47.7 lbf.ft)

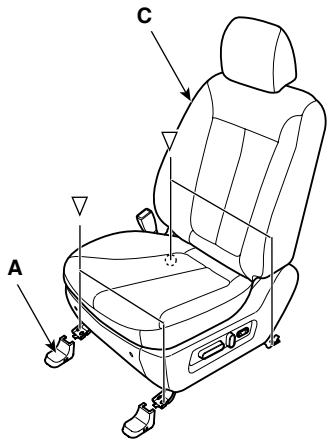

SCMBD6113L

3. Installation is the reverse of removal.

CAUTION

SEAT MOUNTING BOLT INSTALLATION PROCEDURE

- ***Set the into the most rearward position. Check then each slide is locked, and then tighten the front mounting bolt temporarily.***

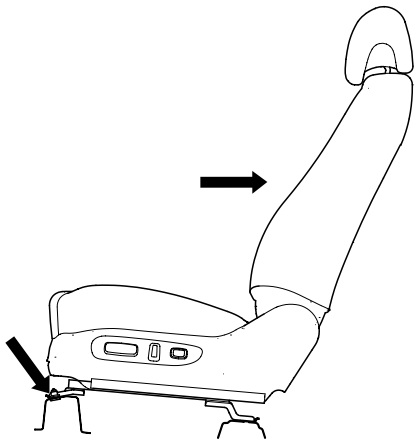

ESBF304A

- ***Set the seat into most forward position. Check that each slide is locked, and then tighten the rear mounting bolt completely.***

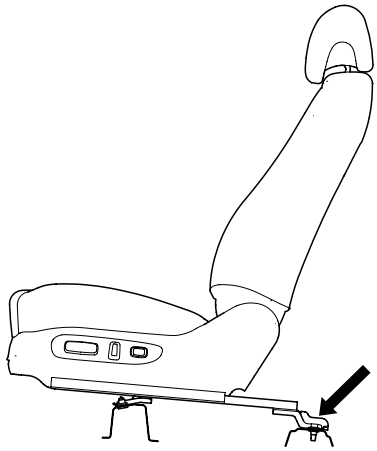

ESBF305A

- ***Set the seat into the most rearward position. Check the front mounting bolt completely.***

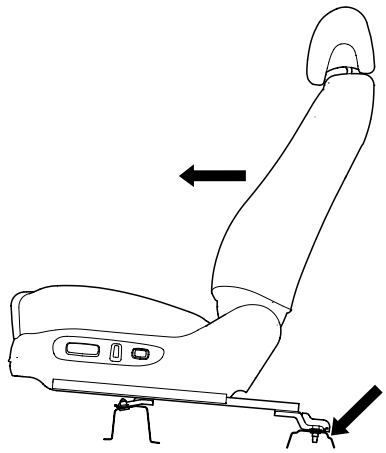

ESBF306A

- ***Check that the seat operates to and fro smoothy and the locking portion locks properly.***

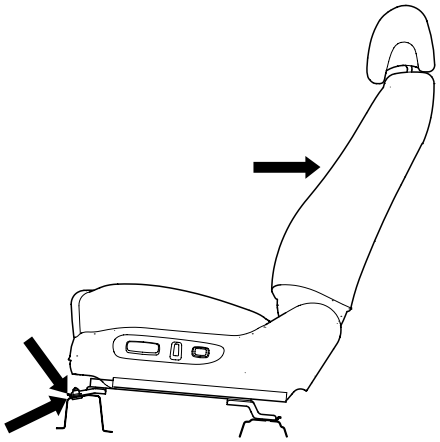

ESBF307A

RECLINER COVER REPLACEMENT

1. Remove the front cover (A).

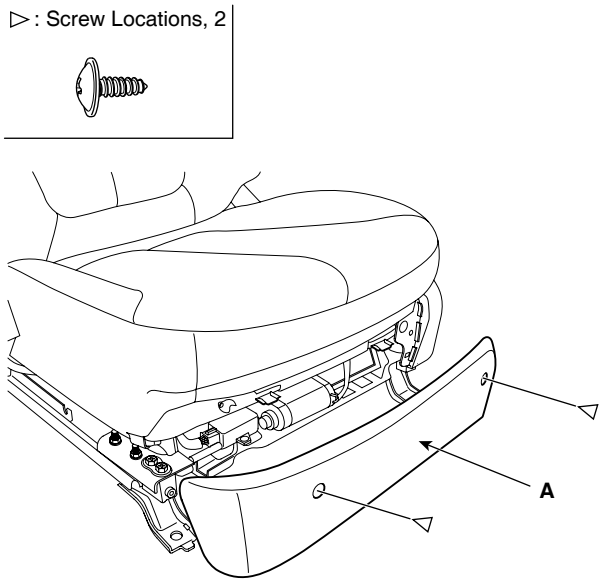

SCMBD6114L

2. Remove the recliner rever (A) and sliding rever (B).
3. Loosen the recliner mounting screw and clip, then remove the recliner cover (C).

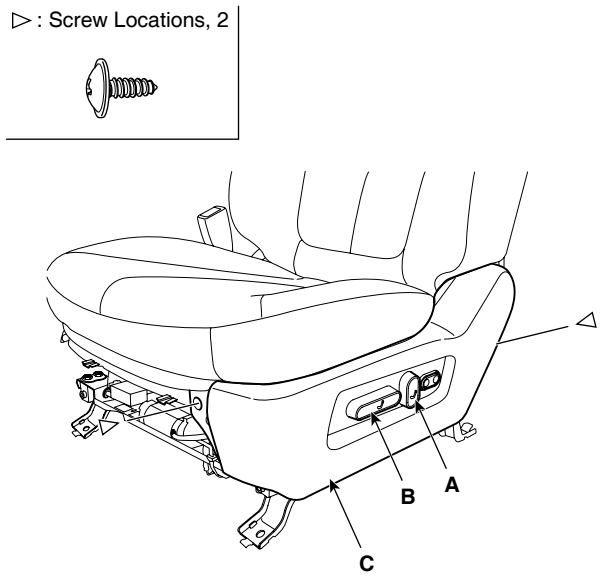

SCMBD6115L

4. Installation is the reverse of removal.

SEAT BACK COVER REPLACEMENT

1. Remove front seat assembly. (See page BD- 94)
2. Remove the recliner cover. (See page BD- 95)
3. After disconnecting the scuff band (A), remove the seat back panel (B).

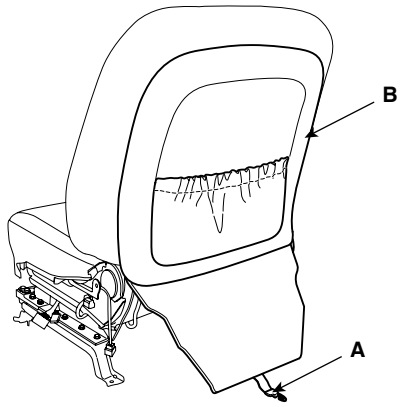

SCMBD6116D

4. Remove the headrest and headrest guide.
5. Disconnect the protector (A) from the back frame.

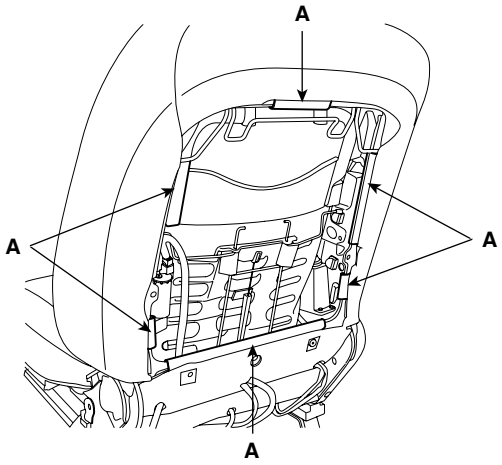

SCMBD6117D

6. Disconnect the connector (A).

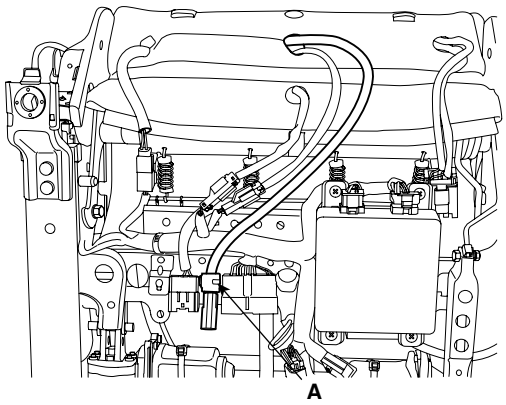

SCMBD6118D

7. Remove the seat back(A).

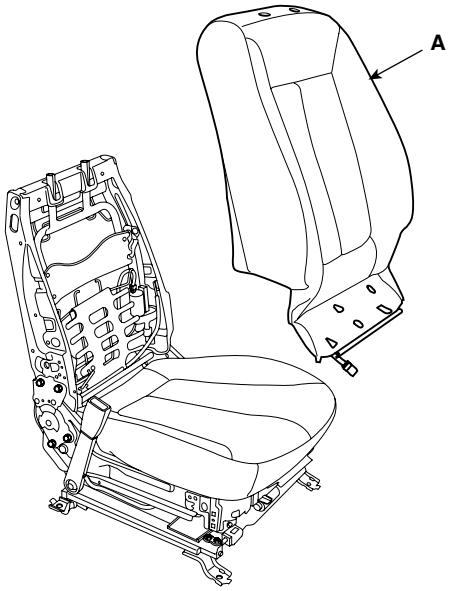

SCMBD6119D

8. Remove the seat back cover (A).

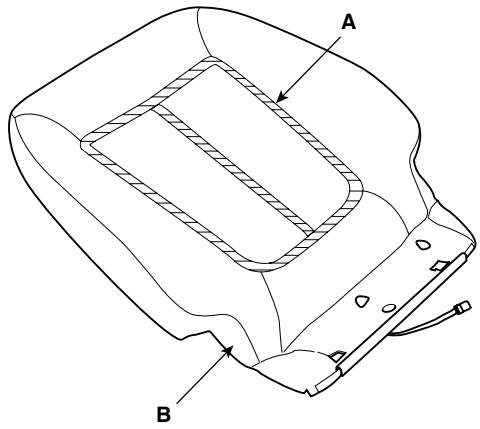

SCMBD6120D

9. Installation is the reverse of removal.

SEAT BACK HEATER REPLACEMENT

1. Remove the seat back cover. (See page BD- 96)
2. Seat back pad replacement (A).

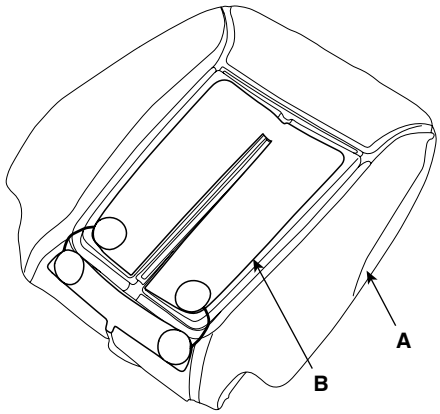

SCMBD6126D

SEAT CUSHION HEATER REPLACEMENT

1. Remove the seat back cover. (See page BD- 98)
2. Seat cushion pad replacement (A).

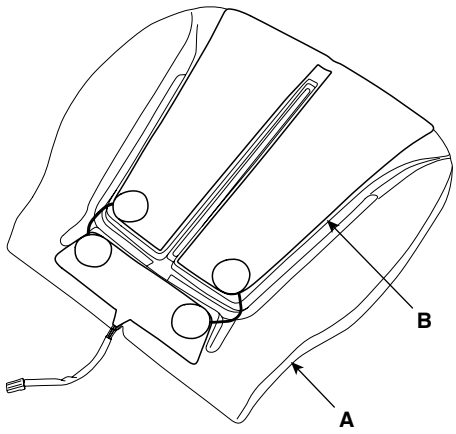

SCMBD6127D

SEAT CUSHION COVER REPLACEMENT

1. Remove front seat assembly. (See page BD- 94)
2. Remove the recliner cover. (See page BD- 95)
3. Disconnect the protector (A).

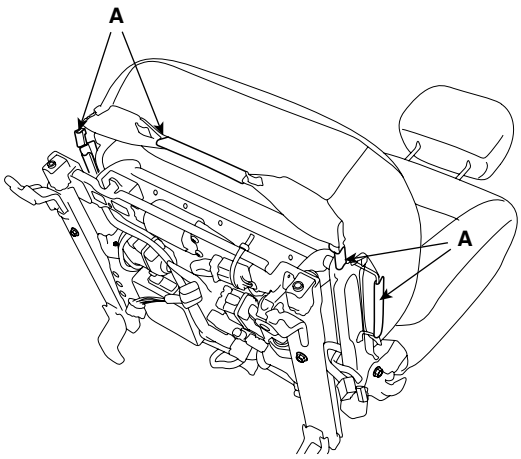

SCMBD6121D

4. Disconnect the connector (A).

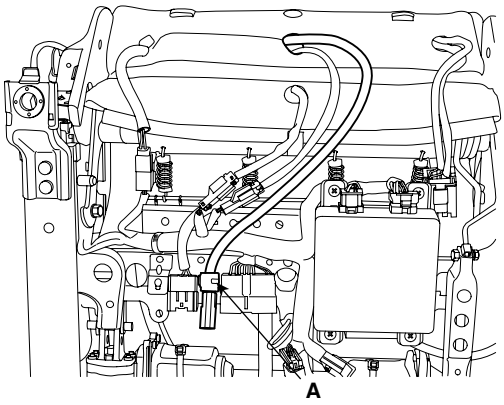

SCMBD6118D

5. After removing the hog-ring clip (A) on the front of seat cushion and remove the seat cushion cover (B).

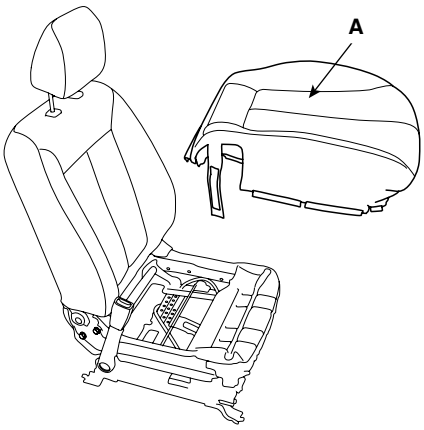

SCMBD6122D

6. Disconnect the adhesives (A) on the front of seat cushion, remove the cushion cover (B).

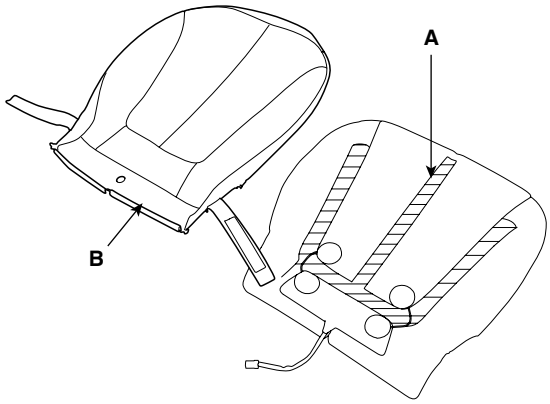

SCMBD6123D

7. Installation is the reverse of removal.

SEAT FRAME REPLACEMENT

1. Remove the following items.
   - Recliner cover. (See page BD- 95)
   - Seat back panel. (See page BD- 96)
   - Headrest guide. (See page BD- 96)
   - Seat back cover. (See page BD- 96)
   - Seat cushion cover. (See page BD- 98)
2. Remove the clip.
3. Remove the shift (A).

NOTE

- *Remove the side air bag for replacing side air bag installation seat.*
- *Be fore service, be fully aware of precautions and service procedure relevant to air bag. (See page RT-Airbag)*

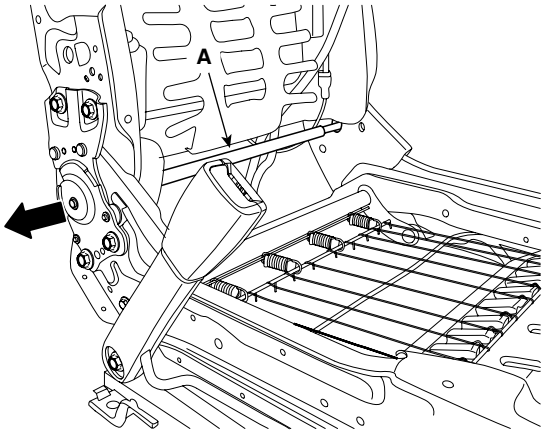

SCMBD6124D

4. After loosening the mounting bolts, then disconnect the seat back frame (A) and seat cushion frame (B).

▷ : Bolt Locations, 4

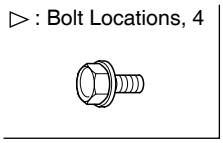

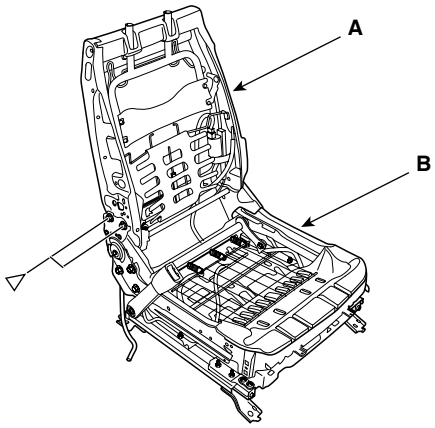

SCMBD6125L

5. Installation is the reverse of removal.

REAR SEAT

COMPONENTS E7C22FC0

[RH]

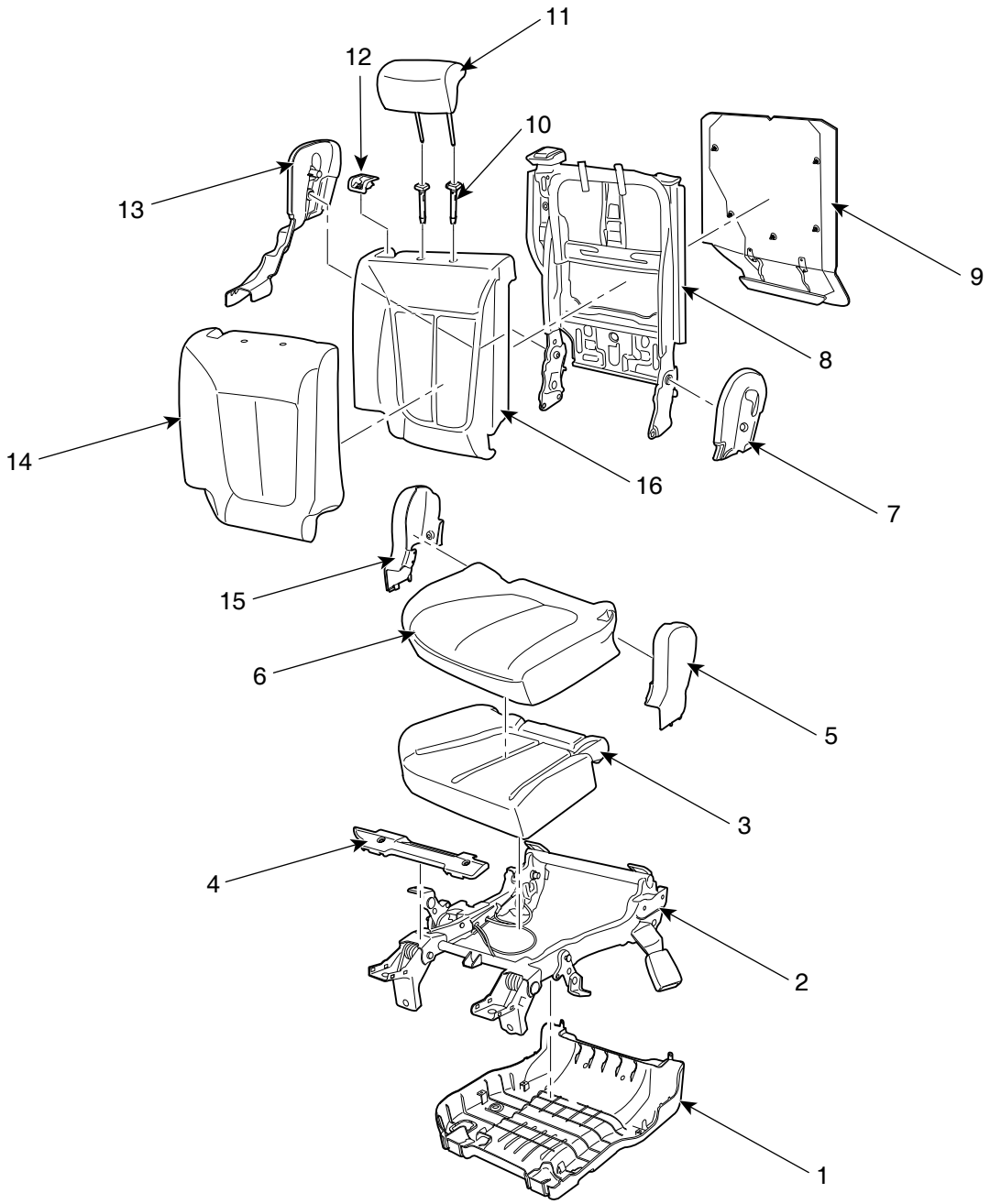

1. Leg cover
2. Seat cushion cover
3. Seat cushion pad
4. Cover
5. Recliner cover
6. Seat cushion cover
7. cover
8. Seat back frame
9. Seat back panel
10. Headrest guide
11. Headrest
12. Recliner lever cover

SCMBD6181L

[LH]

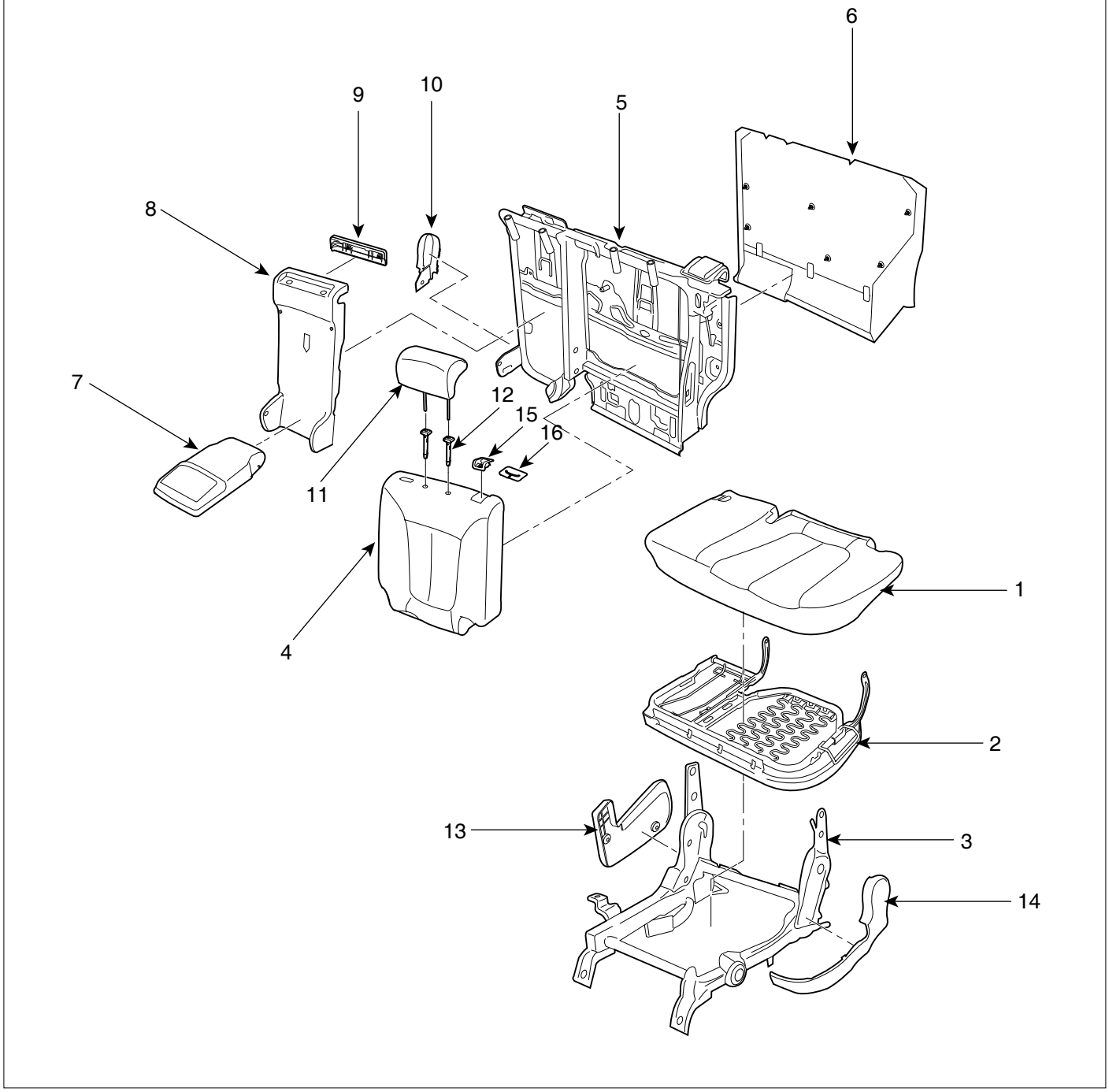

1. Seat cushion cover
2. Seat cushion frame
3. Leg assembly
4. Seat back cover
5. Seat back frame
6. Seat back panel
7. Armrest
8. Armrest cover
9. cover
10. Recliner cover
11. Headrest
12. Headrest guide
13. Recliner cover
14. Recliner cover
15. Recliner lever cover
16. Seat belt guide

SCMBD6221L

REPLACEMENT EE371E54

SECONDARY SEAT

SEAT ASSEMBLY REPLACEMENT(RH)

1. Loosen the mounting bolt, then remove the rear seat assembly (A).

▷: Bolt Locations, 2

43.1~64.7 N.m (4.4~6.6 Kgf.m, 31.8~47.7 lbf.ft)

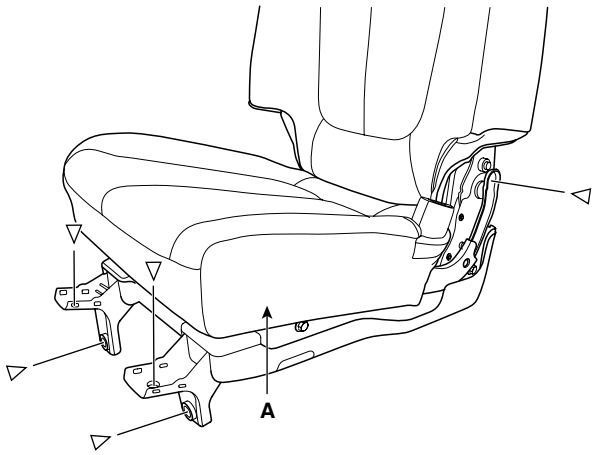

SCMBD6519L

2. Installation is the reverse of removal.

SEAT BACK COVER REPLACEMENT

1. Remove the recliner cover (A).

▷: Screw Locations, 1



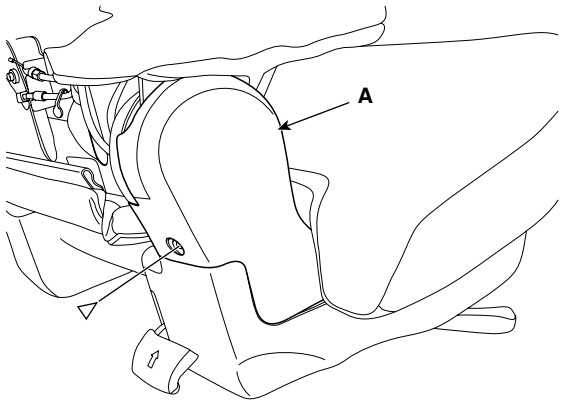

SCMBD6128L

2. Remove the back panel (A).

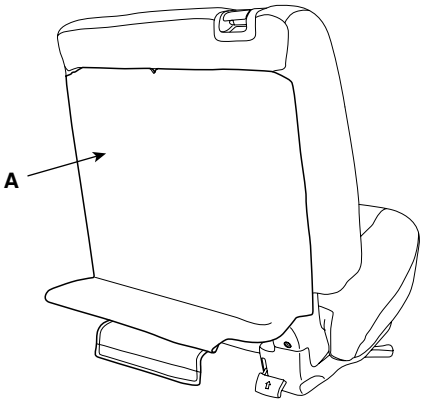

SCMBD6129D

3. Remove the recliner lever cover (A).

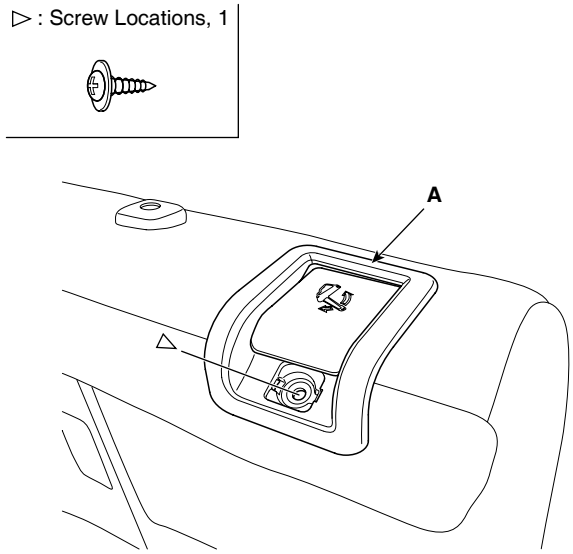

SCMBD6130L

4. Disconnect the protector (A).

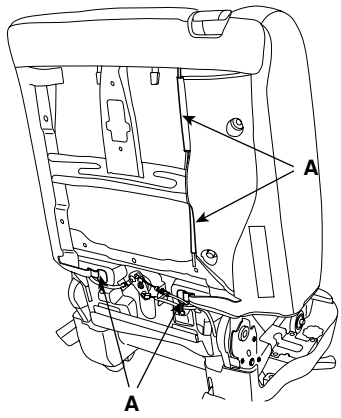

SCMBD6131D

5. Remove the headrest and headrest guide (A).

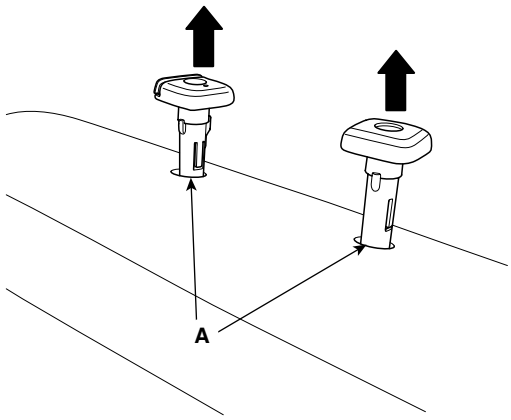

SCMBD6132D

6. Remove the seat back (A).

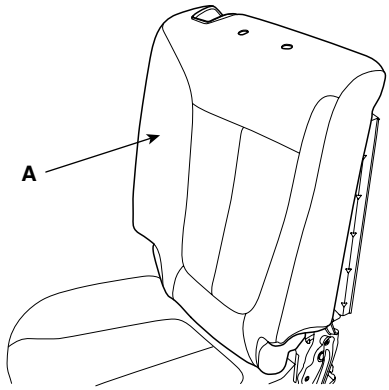

SCMBD6133D

7. Remove the seat back cover (B).

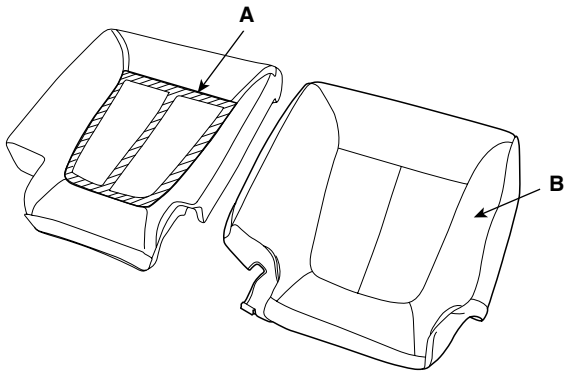

SCMBD6134D

8. Installation is the reverse of removal.

SEAT CUSHION COVER REPLACEMENT

1. Remove the cover (A).

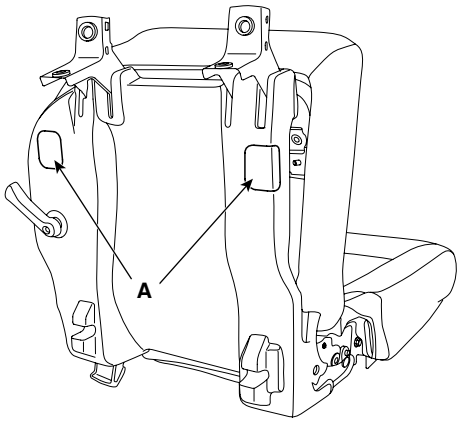

SCMBD6135D

2. Loosen the seat cushion (A) mounting bolts.

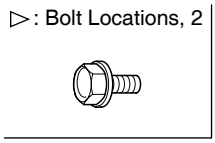

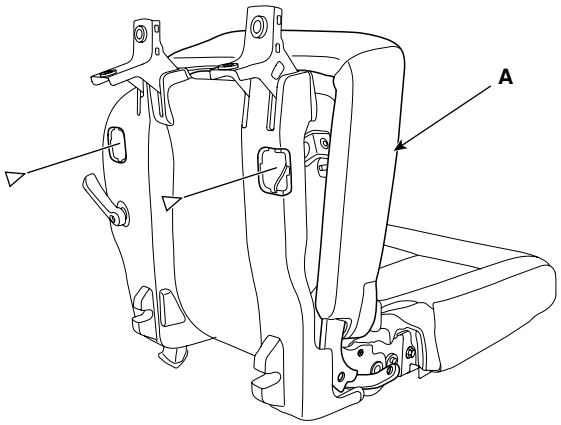

SCMBD6136L

3. After loosening the mounting bolts, then remove the seat cushion (A).

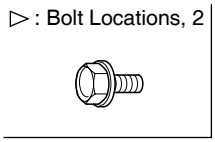

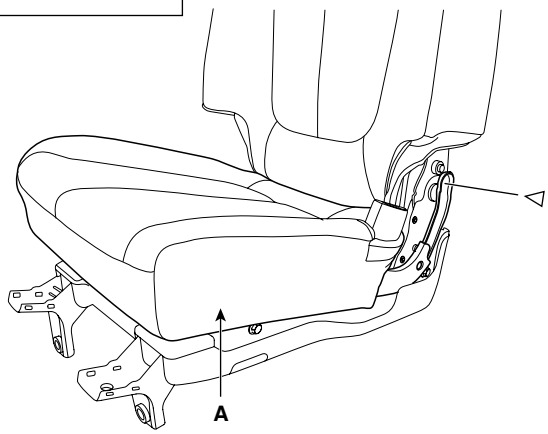

SCMBD6137L

4. Disconnect the scuff bend (A).

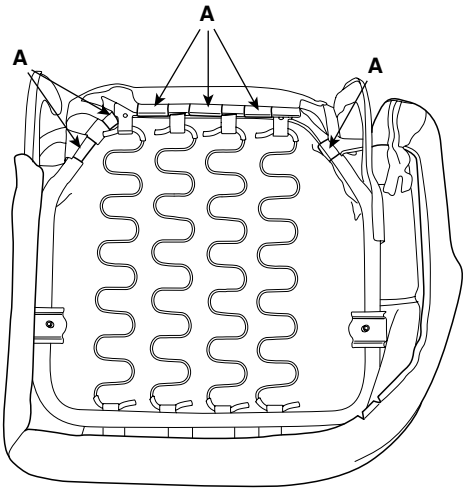

SCMBD6138D

5. Remove the seat cushion (A).

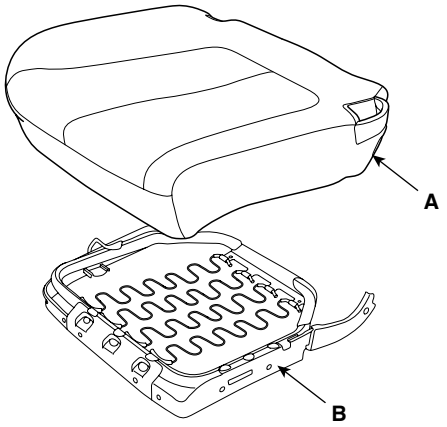

SCMBD6139D

6. Disconnect the adhesives (A) on the front of seat cushion, remove the seat cushion cover (B).

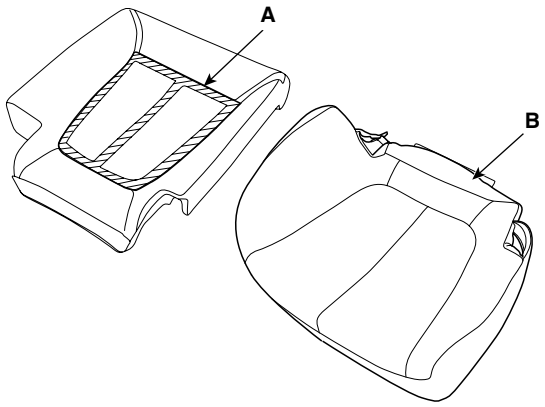

SCMBD6140D

7. Installation is the reverse of removal.

SEAT FRAME REPLACEMENT

1. Remove the recliner cover. (See page BD- 102)
2. Remove the headrest and headrest guide. (See page BD- 103)
3. Remove the seat back cover. (See page BD- 102)
4. Remove the seat cushion cover. (See page BD- 104)
5. Remove the cover (A).

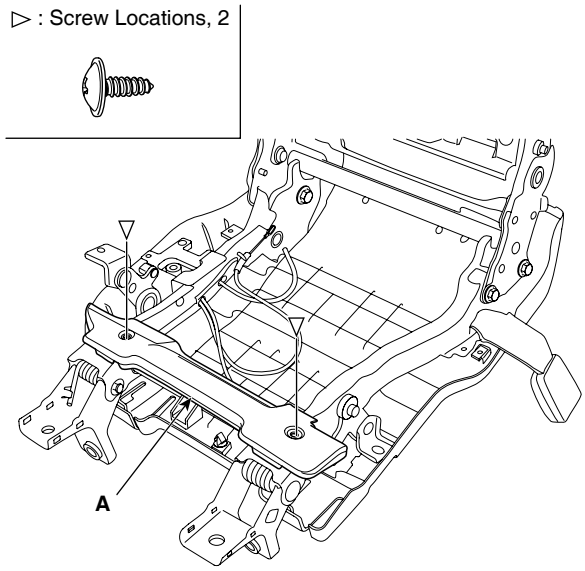

SCMBD6141L

6. Remove the recliner lever (A).

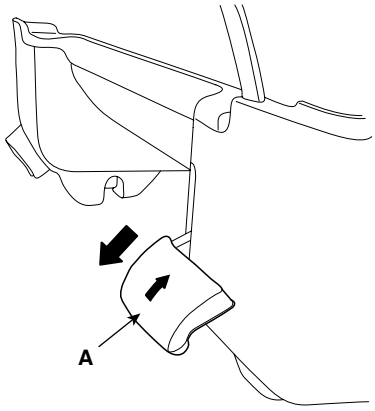

SCMBD6142D

7. After loosening the mounting screw, then remove the recliner cover (A).

▷: Screw Locations, 2

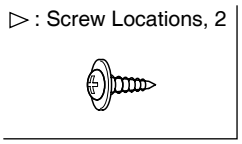

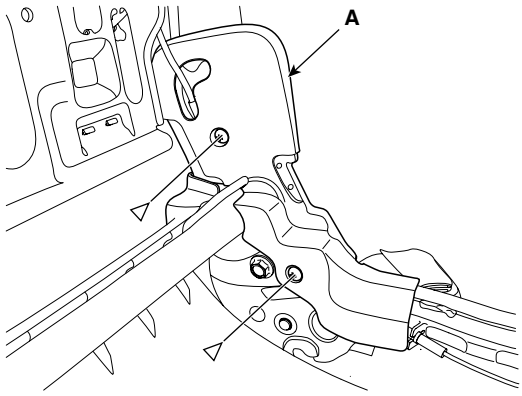

SCMBD6143L

8. Remove the recliner cable (A).

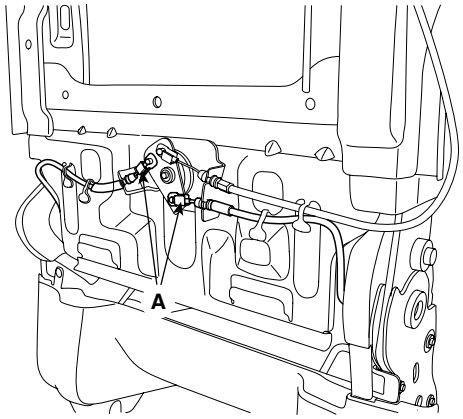

SCMBD6144D

9. Remove the cover (A).

▷: Screw Locations, 4



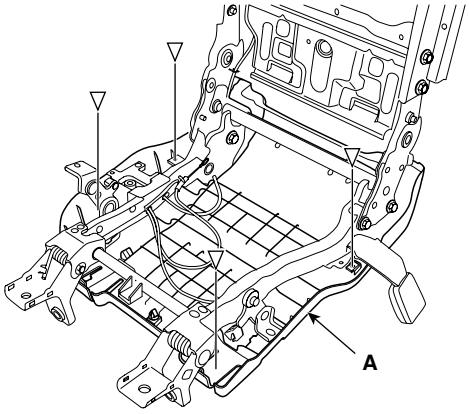

SCMBD6145L

10. After loosening the mounting bolts, then disconnect the seat back frame (A) and seat cushion frame (B).

▷: Bolt Locations, 4



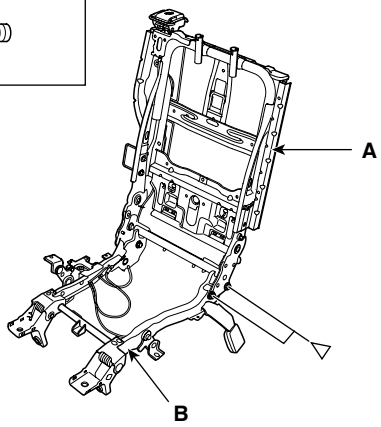

SCMBD6146L

11. Installation is the reverse of removal.

SEAT ASSEMBLY REPLACEMENT(LH)

1. After loosening the mounting bolts, then remove the seat assembly (A).

▷ : Bolt Locations, 4

43.1~64.7 N.m (4.4~6.6 Kgf.m, 31.8~47.7 lbf.ft)

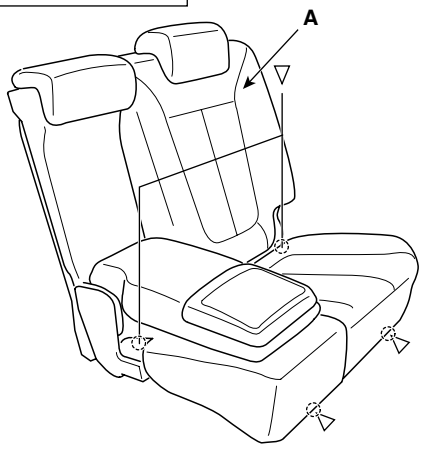

SCMBD6192L

2. Installation is the reverse of removal.

ARMREST ASSEMBLY REPLACEMENT

1. Remove the recliner cover (A).

▷ : Screw Locations, 2

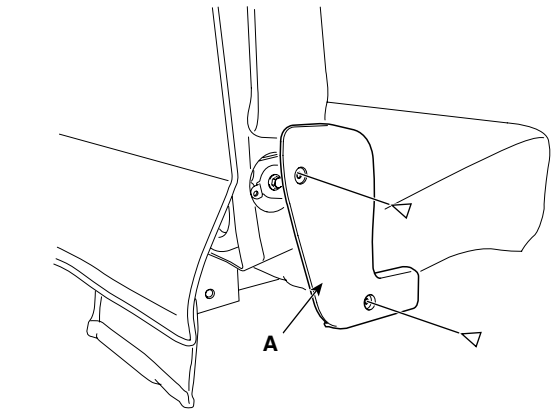

SCMBD6193L

2. After loosening the mounting bolt, then remove the assembly (A) armrest.

▷ : Bolt Locations, 1

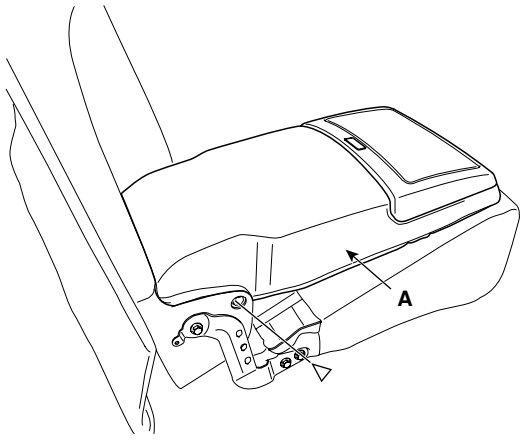

SCMBD6194L

3. Installation is the reverse of removal.

SEAT BACK COVER REPLACEMENT

1. Remove the recliner cover (A).

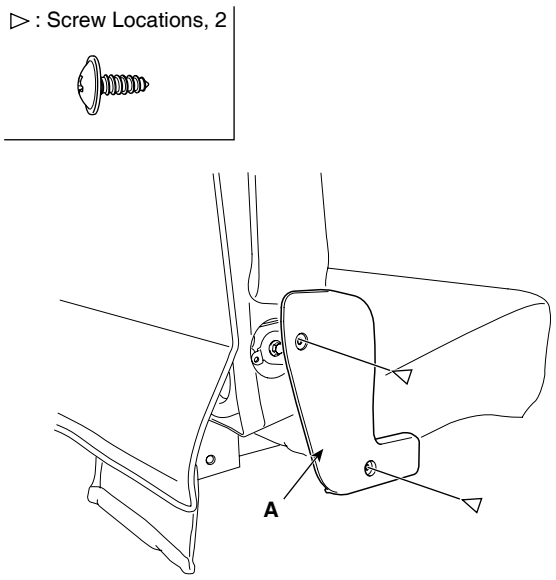

SCMBD6193L

2. Remove the armrest assembly. (See page BD- 107)
3. Remove the recliner mounting bracket (A).

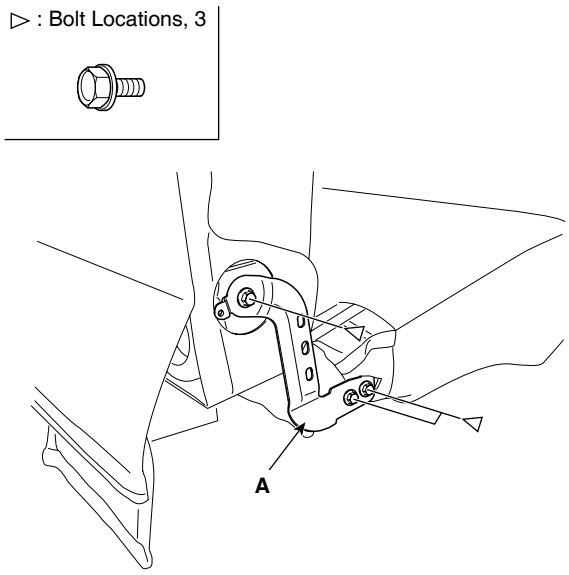

SCMBD6195L

4. Disconnect the scuff band (A).
5. Remove the seat back panel (B).

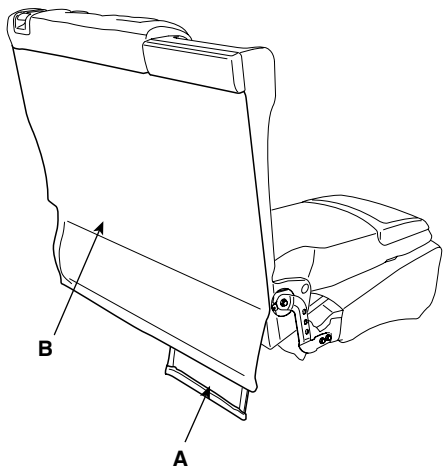

SCMBD6196D

6. Remove the recliner cover (A).

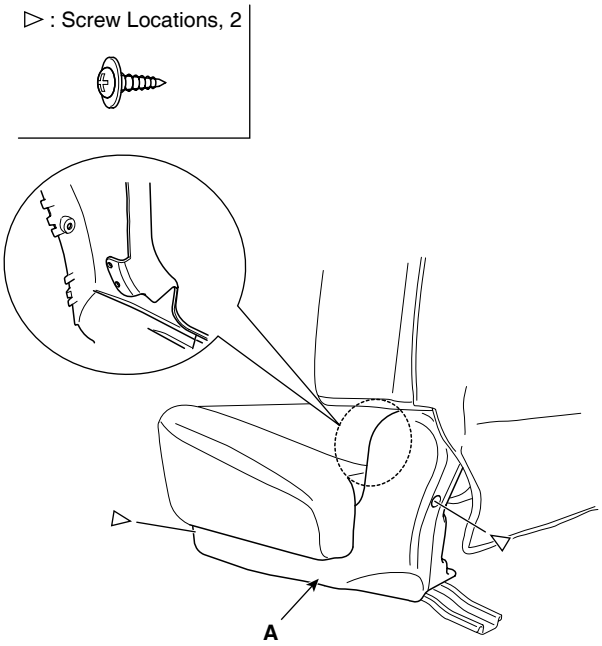

SCMBD6197L

7. Remove the headrest and headrest guide (A).

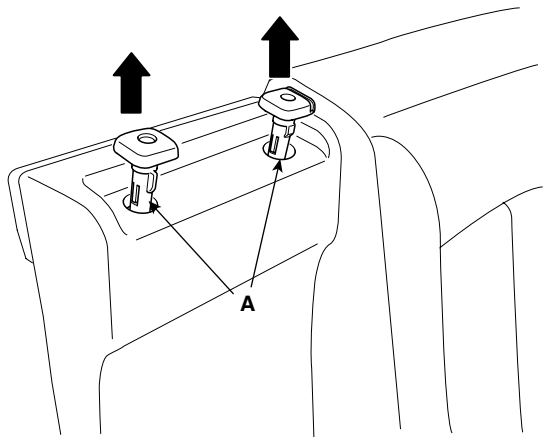

SCMBD6198D

8. Remove the cover (A).

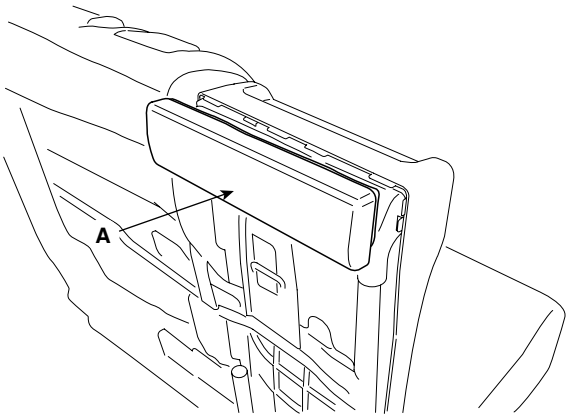

SCMBD6199D

9. After loosening the mounting screw, then remove the armrest cover (A).

Fastener Locations

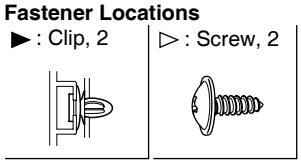

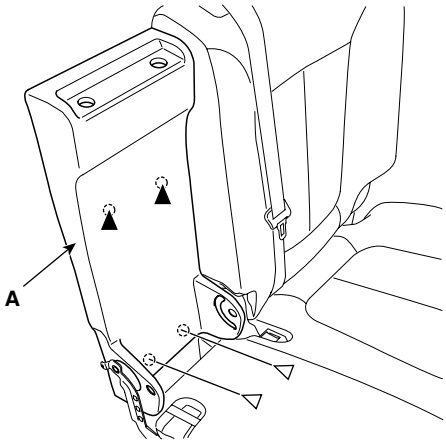

SCMBD6200L

10. Remove the seat belt lower anchor (A).

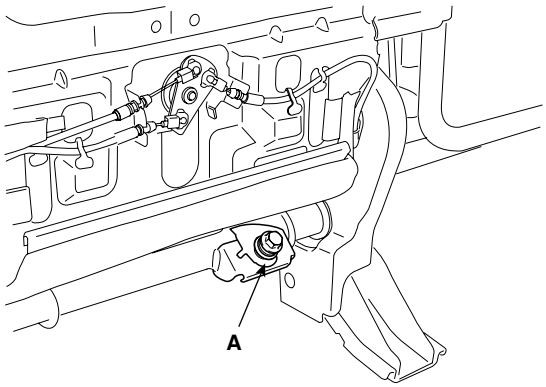

SCMBD6201D

11. After loosening the mount screw, then remove the recliner lever cover (A).

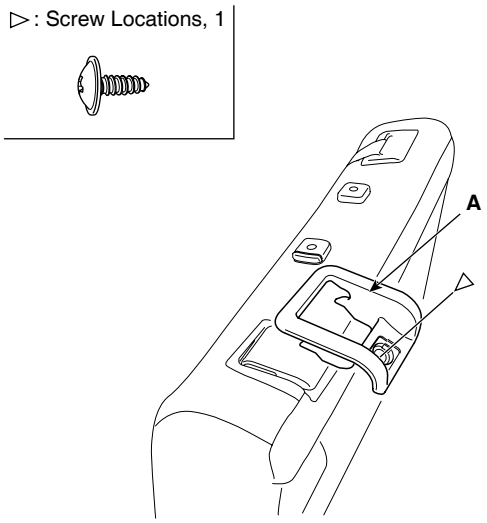

SCMBD6202L

12. Remove the headrest and headrest guide (A).

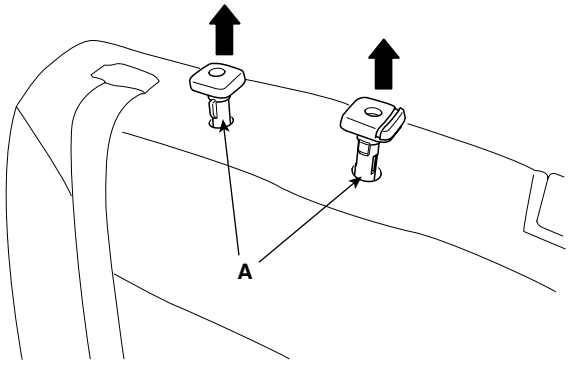

SCMBD6504D

13. Disconnect the protector (A).

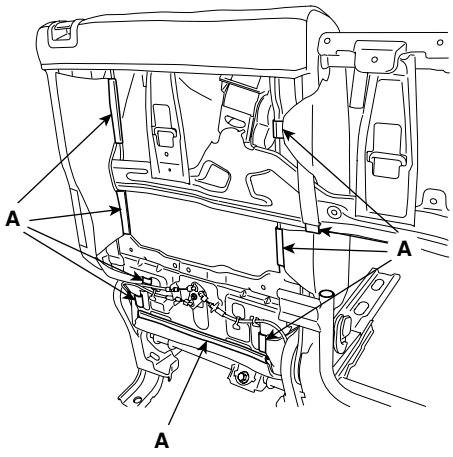

SCMBD6203D

14. Remove the seat back (A).

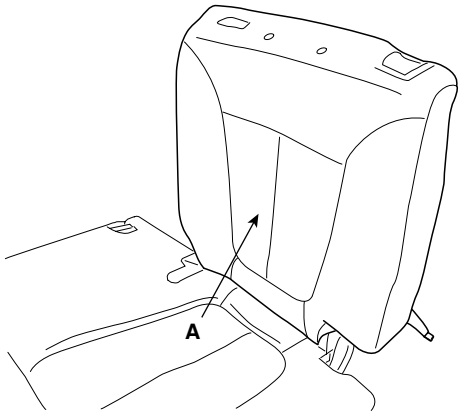

SCMBD6204D

15. Remove the seat back cover (A).

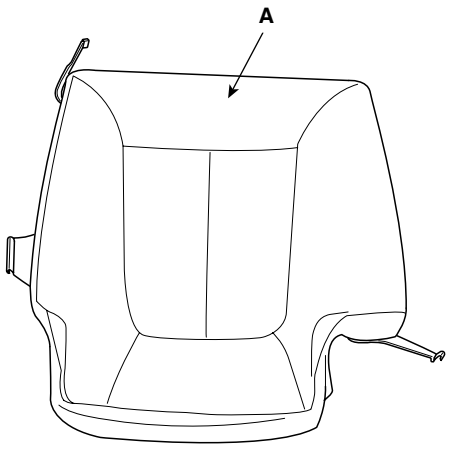

SCMBD6205D

16. Installation is the reverse of removal.

SEAT CHUSION COVER REPLACEMENT

1. Disconnect the protector (A).

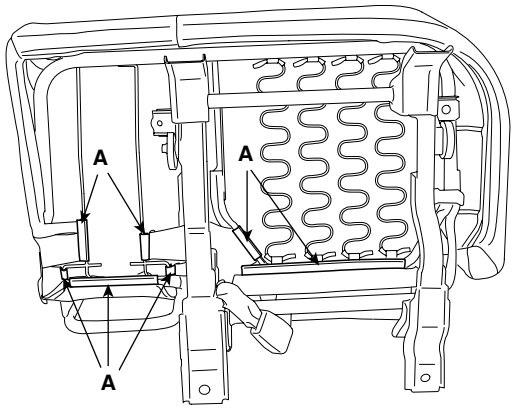

SCMBD6206D

2. After loosening the mounting screw, then remove the recliner cover (A).

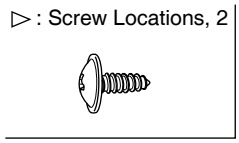

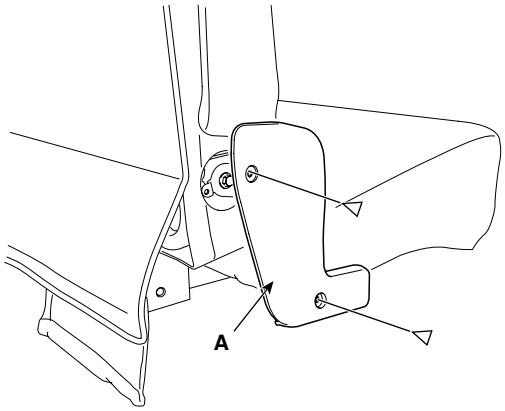

SCMBD6193L

3. Remove the bracket (A).

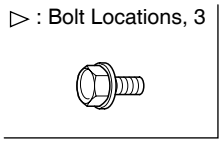

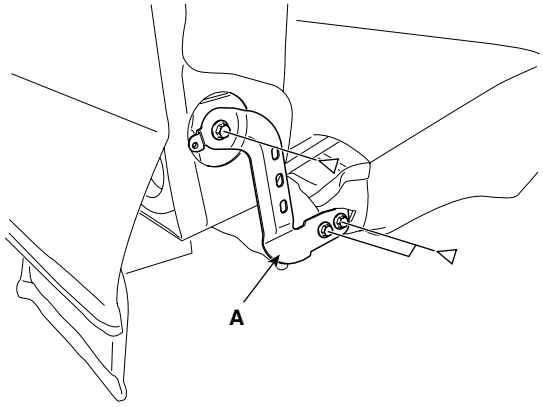

SCMBD6195L

4. Remove the seat cushion (A).

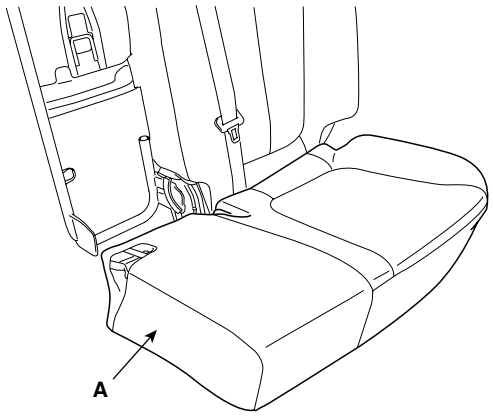

SCMBD6207D

5. Remove the seat cushion cover (A).

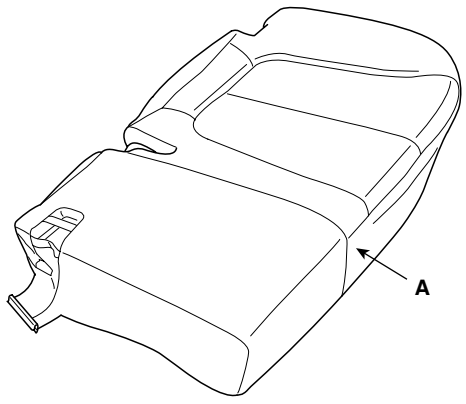

SCMBD6208D

6. Installation is the reverse of removal.

SEAT FRAME REPLACEMENT

1. Remove the seat back cover. (See page BD- 108)
2. Remove the seat cushion cover. (See page BD- 111)
3. Remove the recliner cable (A).

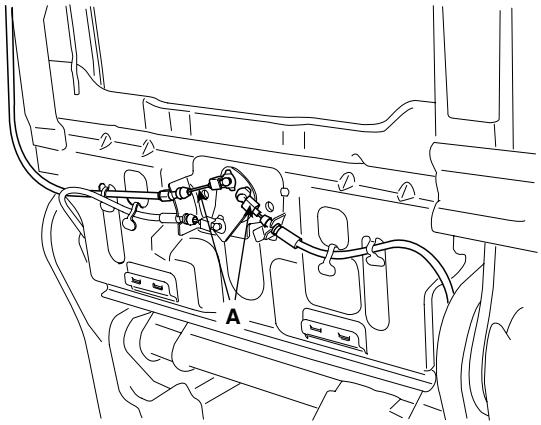

SCMBD6209D

4. After loosening the mounting bolts, then remove the seat back frame (A).

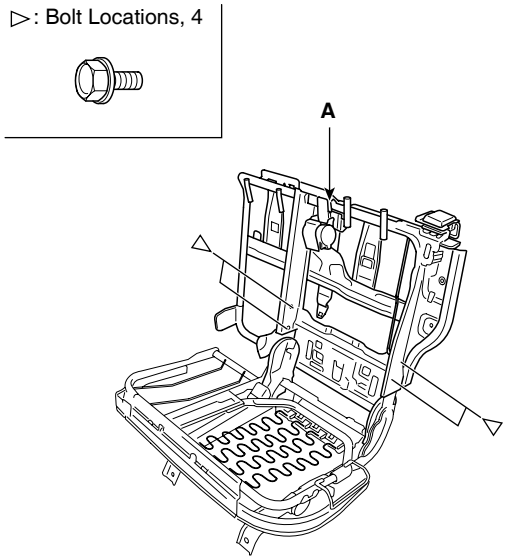

SCMBD6210L

5. After loosening the mounting screw, then remove the recliner cover (A).

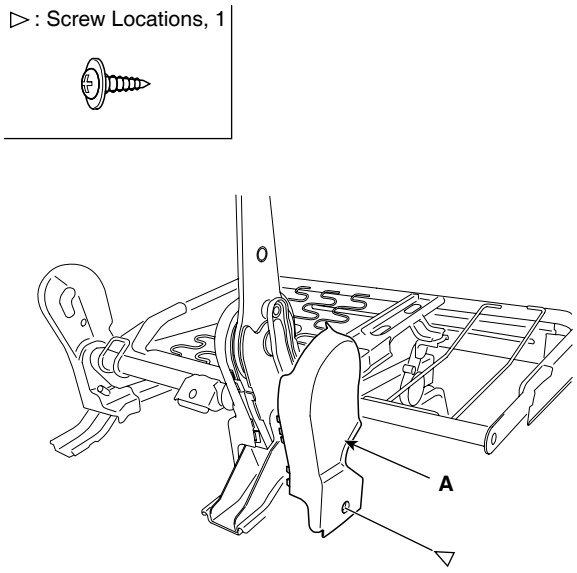

SCMBD6211L

6. Loosen the mounting bolts.

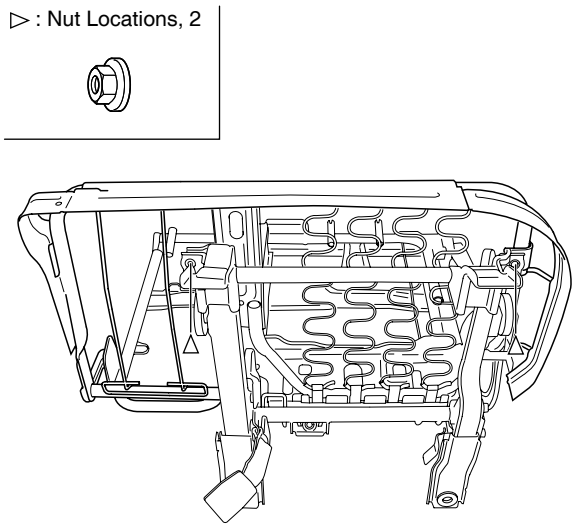

SCMBD6212L

7. After loosening the mounting bolts, then remove the seat cushion frame (A).

▷: Bolt Locations, 2

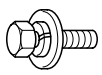

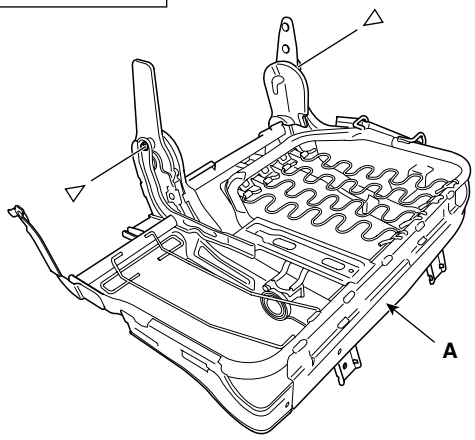

SCMBD6213L

8. Installation is the reverse of removal.

THIRD SEAT

SEAT ASSEMBLY REPLACEMENT

1. Loosen the mounting bolts.

▷: Bolt Locations, 4

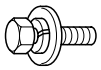

43.1~64.7 N.m (4.4~6.6 Kgf.m, 31.8~47.7 lbf.ft)

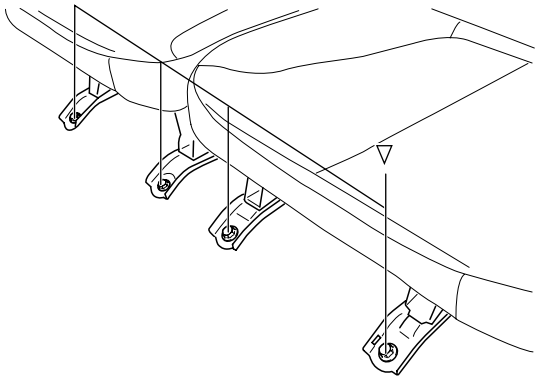

SCMBD6214L

2. Remove the extinguisher and tool (A).

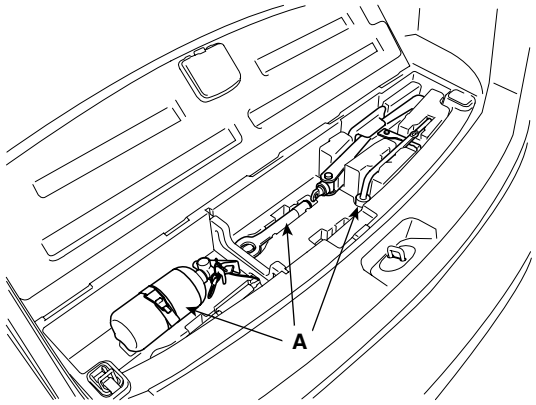

SCMBD6219D

3. After loosening the mounting screw, then remove the luggage flower box (A).

▷: Screw Locations, 3

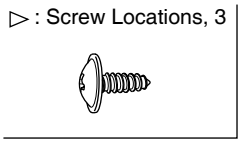

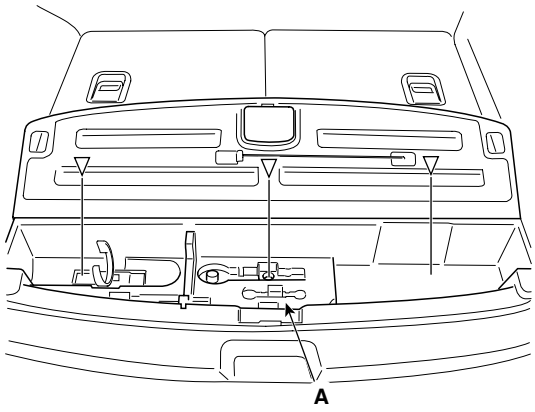

SCMBD6215L

4. Loosen the mounting bolts.

▷: Bolt Locations, 4



43.1~64.7 N.m (4.4~6.6 Kgf.m, 31.8~47.7 lbf.ft)

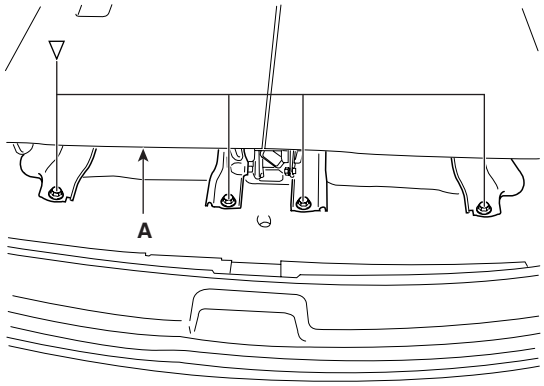

SCMBD6216L

5. Installation is the reverse of removal.

SEAT BACK COVER REPLACEMENT

1. Remove the third seat assembly. (See page BD- 113)

2. After loosening the mounting screw, then remove the recliner lever cover (A).

▷: Screw Locations, 1



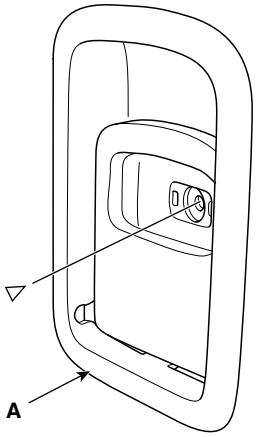

SCMBD6147L

3. Remove the hook (A).

▷: Screw Locations, 1



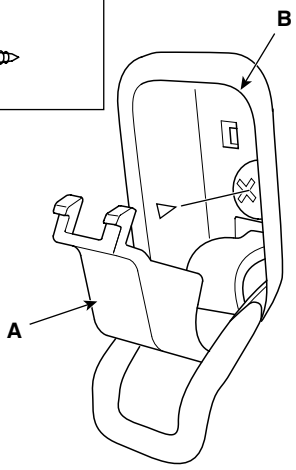

SCMBD6148L

4. Remove the seat back panel (A).

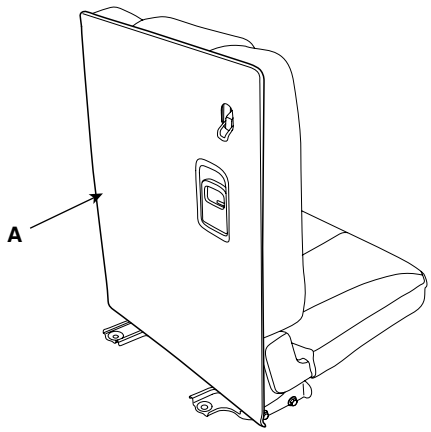

SCMBD6149D

5. Disconnect the scuff band (A).

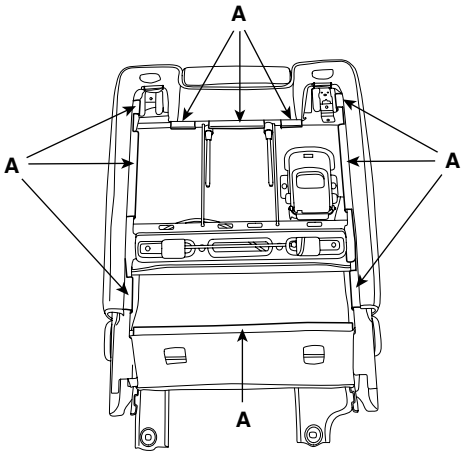

SCMBD6150D

6. Remove the headrest and headrest guide (A).

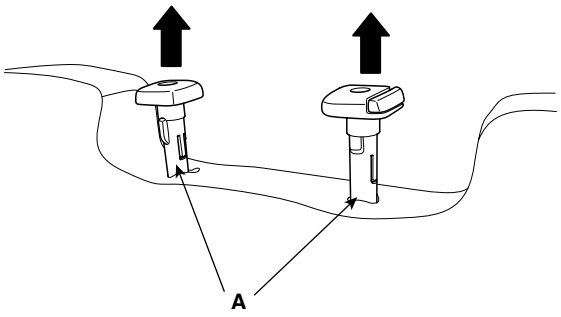

SCMBD6151D

7. Remove the seat back (A).

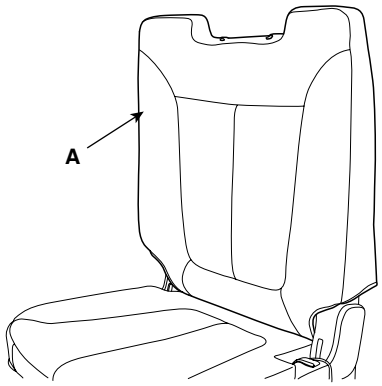

SCMBD6152D

8. Disconnect the adhesives (A) on the front of seat back, remove the seat back cover (B).

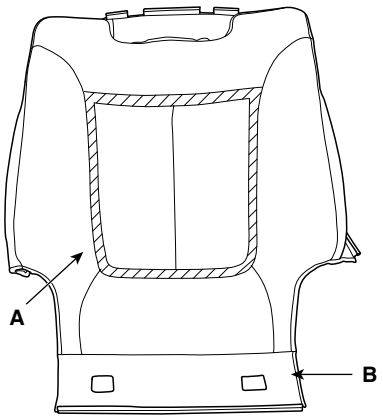

SCMBD6153D

9. Installation is the reverse of removal.

SEAT CUSHION COVER REPLACEMENT

1. Remove the third seat assembly. (See page BD- 113)
2. Disconnect the scuff band (A).

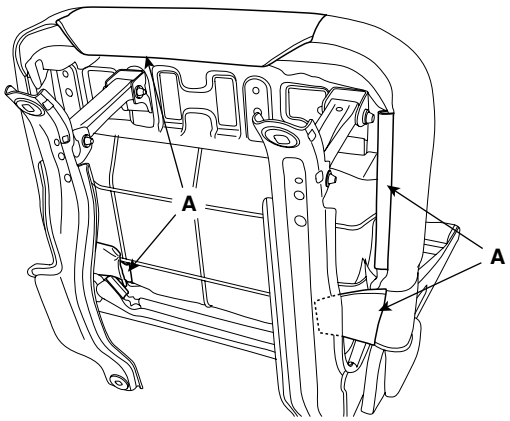

SCMBD6154D

3. Remove the seat cushion (A).

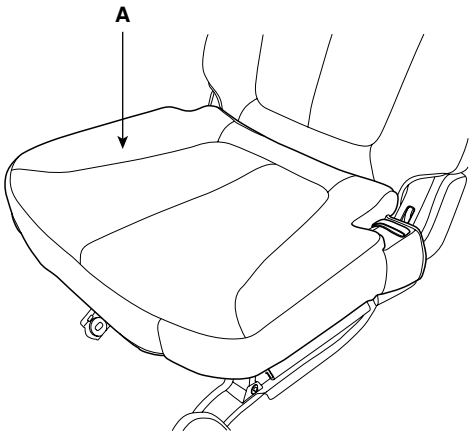

SCMBD6155D

4. Disconnect the adhesives (A) on the front of seat cushion, remove the seat cushion cover (B).

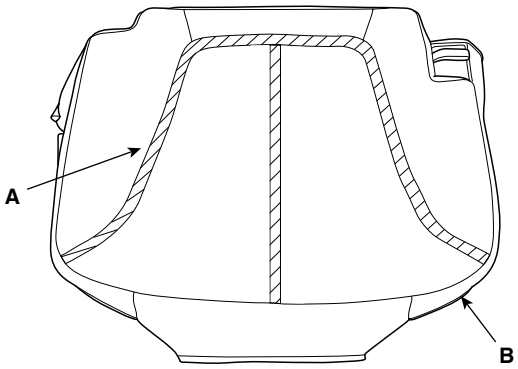

SCMBD6156D

5. Installation is the reverse of removal.

SEAT FRAME REPLACEMENT

1. Remove the seat back cover. (See page BD- 113)
2. Remove the seat cushion cover. (See page BD- 116)
3. After loosening the mounting bolts, then disconnect the seat back frame (A) and seat cushion frame (B).

▷ : Bolt Locations, 4

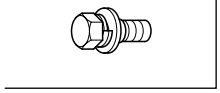

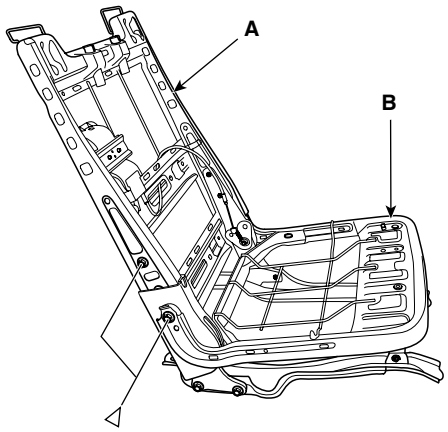

SCMBD6157L

4. Installation is the reverse of removal.

SEAT BELT

REPLACEMENT E7AFB1F3

FRONT SEAT BELT REPLACEMENT

CAUTION

- ***When installing the belt, make sure not to damaged the pretensioner.***

1. Remove the following items first.
   - Front seat assembly. (See page BD- 94)
   - Front and rear door scuff trim. (See page BD- 81)

2. After raise the lower anchor cover (A), loosen the lower anchor mounting bolt (B).

▷: Bolt, **39.2~53.9N.m (4.0 ~ 5.5Kgf.m, 28.9~39.8lbf.ft)**

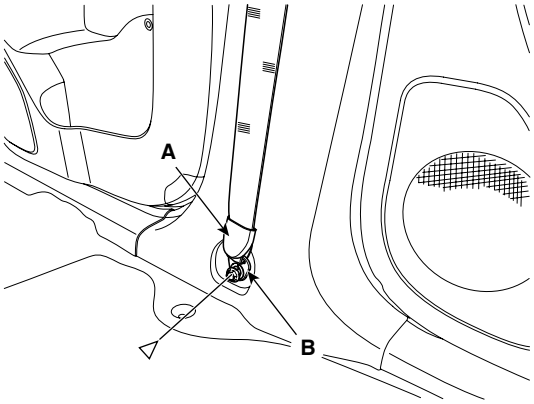

SCMBD6158L

3. Remove the center pillar lower trim. (See page BD-82)

4. Remove the center pillar upper trim. (See page BD-82)

5. Remove the upper anchor (A).

6. After disconnecting the pretensioner connector lock pin, remove the connector (B), Loosen the mounting bolt, then remove the pretensioner (C).

▷: Bolt, **39.2~53.9N.m (4.0 ~ 5.5Kgf.m, 28.9~39.8lbf.ft)**

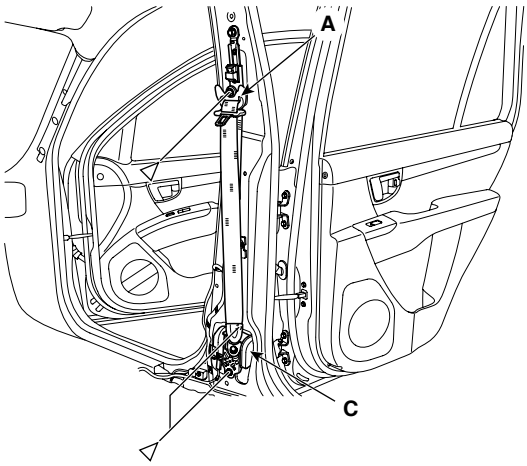

SCMBD6159L

7. Installation is the reverse of removal.

SECONDARY SEAT BELT RELACEMENT

CAUTION

- ***When installing the belt, make sure not to damaged the pretensioner.***

1. Remove the following items first.
   - Rear seat assembly. (See page BD- 113)
   - Rear door scuff trim. (See page BD- 81)

2. Remove the lower anchor (A).

▷: Bolt, **39.2~53.9N.m (4.0 ~ 5.5Kgf.m, 28.9~39.8lbf.ft)**

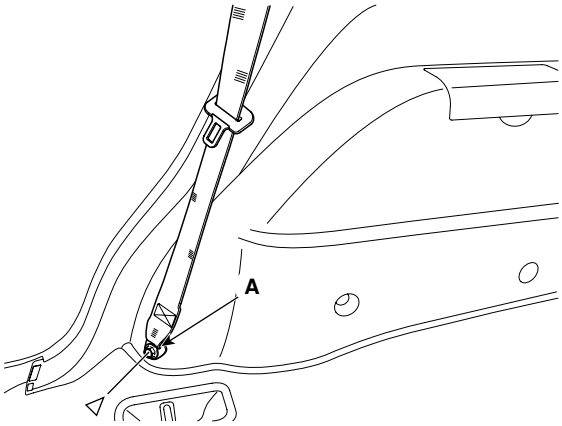

SCMBD6160L

3. Remove the third seat lower anchor and lower anchor. (See page BD- 120)

4. Remove the luggage side trim. (See page BD- 84)

5. Remove the gate pillar trim. (See page BD- 83)

6. Remove the upper anchor (A).

7. After loosening the retractor (B) mounting bolt, remove the rear seat belt (C).

▷: Bolt, **39.2~53.9N.m (4.0 ~ 5.5Kgf.m, 28.9~39.8lbf.ft)**

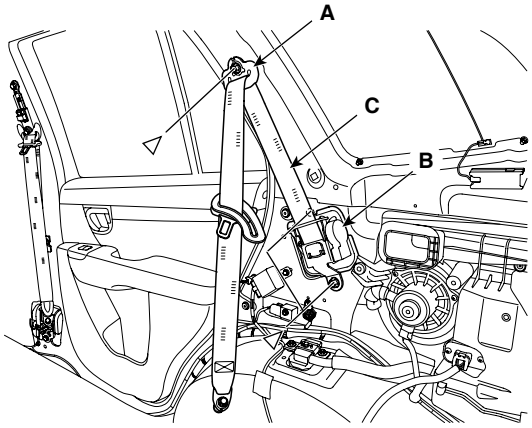

SCMBD6161L

8. Installation is the reverse of removal.

SECONDARY CENTER SEAT BELT REPLACEMENT

1. Remove the secondary seat assembly. (See page BD- 107)
2. Remove the seat back cover. (See page BD- 108)
3. After loosening the mounting bolts, then remove the seat belt (A).

▷ : Nut Locations, 1

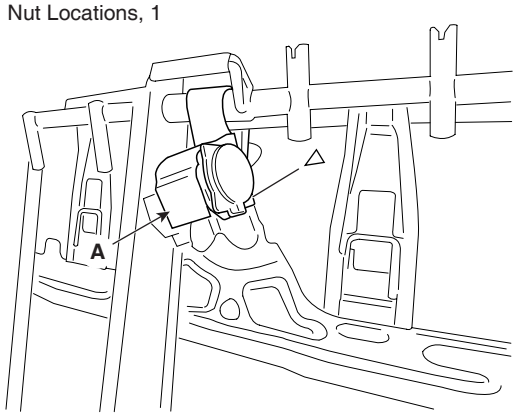

SCMBD6217L

4. Installation is the reverse of removal.

THIRD SEAT BELT RELACEMENT

⚠ ***CAUTION***

- ***When installing the belt, make sure not to damaged the pretensioner.***

1. Remove the following items first.
   - Rear seat assembly. (See page BD- 102, 113)
   - Rear door scuff trim. (See page BD- 81)
   - Tranverse trim. (See page BD- 84)
2. Remove the upper anchor (B).
3. Remove the lower anchor (A).

▷: Bolt, **39.2~53.9N.m (4.0 ~ 5.5Kgf.m, 28.9~39.8lbf.ft)**

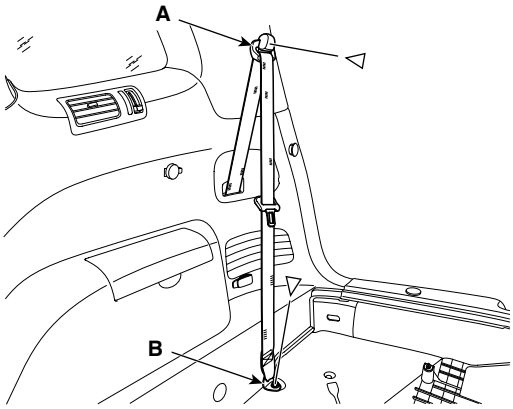

SCMBD6162L

4. Remove the secondary seat lower anchor. (See page BD- 119)
5. Remove the luggage side trim. (See page BD- 84)
6. After loosening the retractor (B) mounting bolt, remove the rear seat belt.

▷: Bolt, **39.2~53.9N.m (4.0 ~ 5.5Kgf.m, 28.9~39.8lbf.ft)**

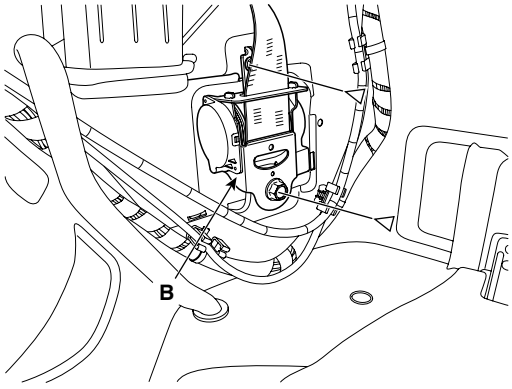

SCMBD6163L

7. Installation is the reverse of removal.

FRONT SEAT BELT BUCKLE REPLACEMENT

1. Remove the front seat assembly. (See page BD- 94)
2. Remove the wire harness of buckle from seat(B).
3. Remove the seat belt buckle (A).

▷: Bolt, **39.2~53.9N.m (4.0 ~ 5.5Kgf.m, 28.9~39.8lbf.ft)**

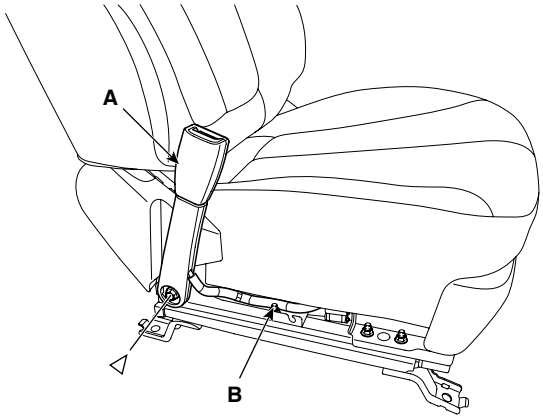

SCMBD6164L

4. Installation is the reverse of removal.

SECONDARY SEAT BELT BUCKLE REPLACEMENT

1. Remove the secondary seat assembly. (See page BD- 102)
2. Remove the secondary seat cushion. (See page BD-111)
3. Remove the seat belt buckle (A).

▷: Bolt, **39.2~53.9N.m (4.0 ~ 5.5Kgf.m, 28.9~39.8lbf.ft)**

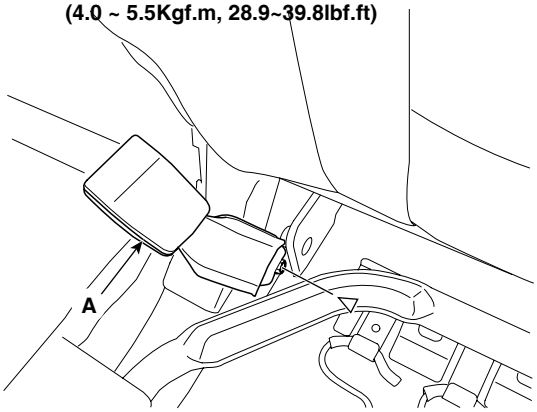

SCMBD6218L

4. Installation is the reverse of removal.

THIRD SEAT BELT BUCKLE REPLACEMENT

1. Remove the third seat assembly. (See page BD- 113)
2. Remove the seat belt buckle (A).

▷: Bolt, **39.2~53.9N.m (4.0 ~ 5.5Kgf.m, 28.9~39.8lbf.ft)**

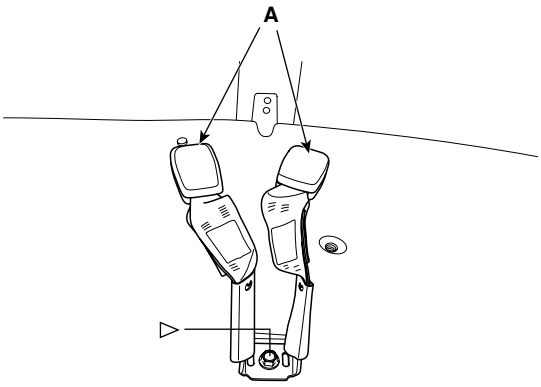

SCMBD6165L

3. Installation is the reverse of removal.

HEIGHT ADJUSTER REPLACEMENT

1. Remove the following items first.
   - Front assembly. (See page BD- 94)
   - Front and rear door scuff trim. (See page BD- 81)
   - Front seat belt upper and lower anchor. (See page BD- 120)
   - Center pillar lower and upper trim. (See page BD- 82)
2. Loosen the mounting bolts, then remove the height adjuster (A).

▷: Bolt, **39.2~53.9N.m (4.0 ~ 5.5Kgf.m, 28.9~39.8lbf.ft)**

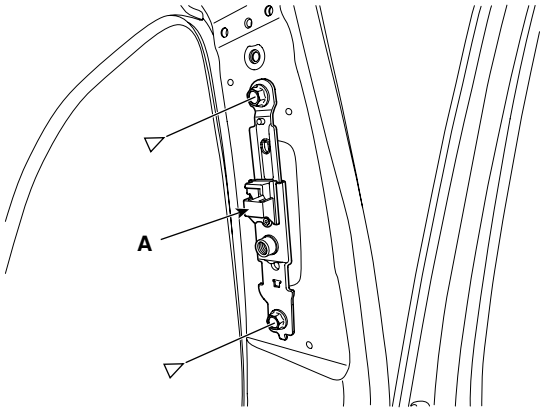

SCMBD6166L

3. Installation is the reverse of removal.

Body Electrical System

GENERAL

REFERENCE SERVICE TOOLS EFCBCDBB

Tool Number	Tool Name
TRK00A	Wiring Repair Kit
TRK001	Wire Stripper Set
TRK002	Remover Tool Set
TRK003	Terminal Tension Gauge Set
TRK004	Cable Tie Set
TRK005	Shrink Tube Set
TRK006	Jump Connector kit(A)
TRK007~10	General Connector Kit(B~E)
TRK011	Terminal With Lead Wire Kit(F)
TRK012	Composition Kit(G)
TRK013	Lead Wire Set
TRK014	Carrying Case
TRK015	User's Guide & Parts Information
TRK016	Inner Box(Large)
TRK017	Inner Box(Small)

* For the wiring repair kit, refer to the User's guide & parts Information of the Wiring Repair Kit (Pub. No. : OSG200208).

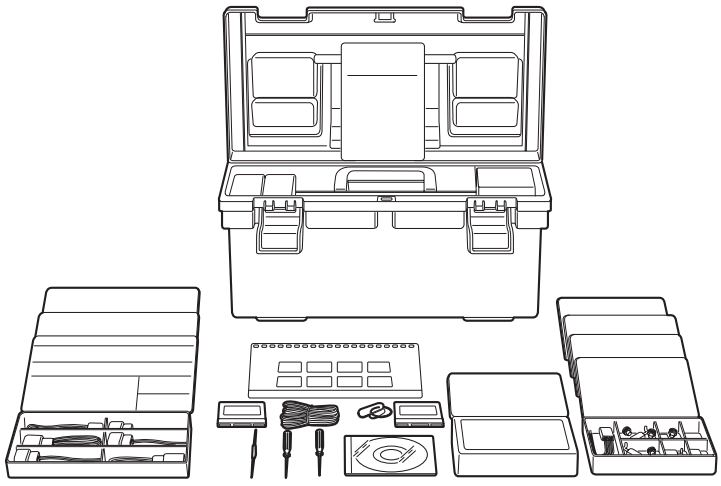

LTLG990B

GENERAL TROUBLESHOOTING INFORMATION ECBDF6CC

BEFORE TROUBLESHOOTING

1. Check applicable fuses in the appropriate fuse/relay box.
2. Using the battery checker (MCR-570 KIT), check the battery for damage, state of charge, and clean and tight connections.
   (Refer to the Engine Electrical System - Battery)

   NOTE

   - *Do not quick-charge a battery unless the battery ground cable has been disconnected, otherwise you will damage the alternator diodes.*
   - *Do not attempt to crank the engine with the battery ground cable loosely connected or you will severely damage the wiring.*
3. Check the alternator belt tension.

HANDLING CONNECTORS

1. Make sure the connectors are clean and have no loose wire terminals.
2. Make sure multiple cavity connectors are packed with grease (except watertight connectors).
3. All connectors have push-down release type locks (A).

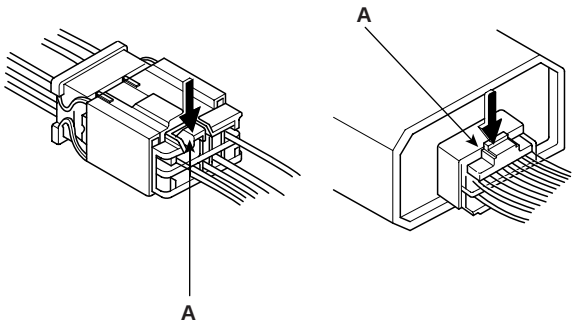

ETKD150A

4. Some connectors have a clip on their side used to attach them to a mount bracket on the body or on another component. This clip has a pull type lock.
5. Some mounted connectors cannot be disconnected unless you first release the lock and remove the connector from its mount bracket (A).

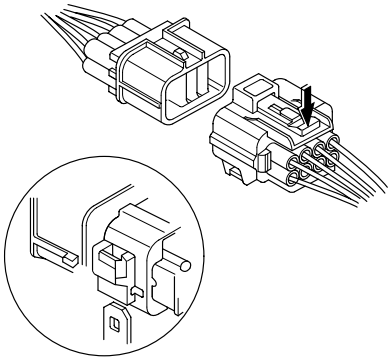

ETKD150B

6. Never try to disconnect connectors by pulling on their wires; pull on the connector halves instead.
7. Always reinstall plastic covers.

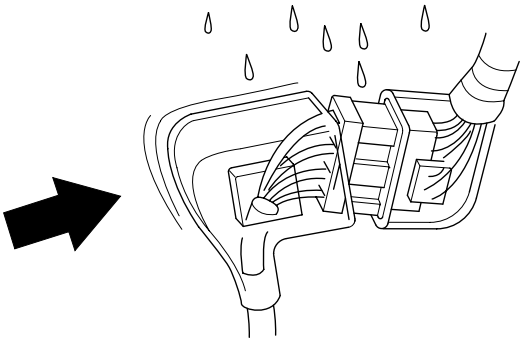

ETKD150C

8. Before connecting connectors, make sure the terminals (A) are in place and not bent.

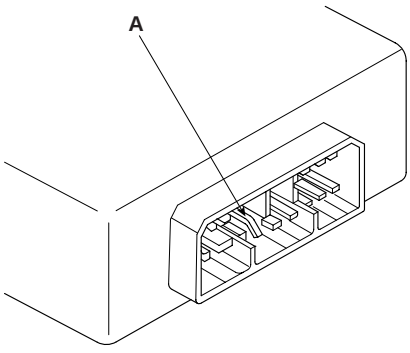

ETKD150D

9. Check for loose retainer (A) and rubber seals (B).

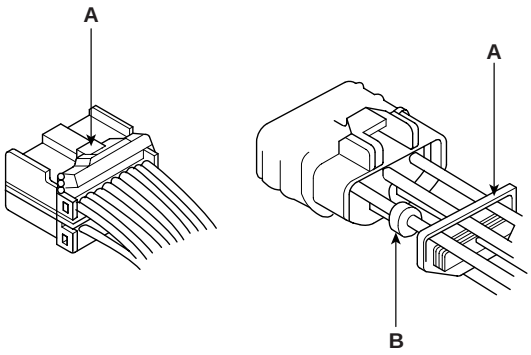

ETKD150E

10. The backs of some connectors are packed with grease. Add grease if necessary. If the grease (A) is contaminated, replace it.

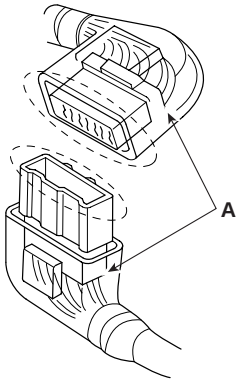

ETKD150F

11. Insert the connector all the way and make sure it is securely locked.

12. Position wires so that the open end of the cover faces down.

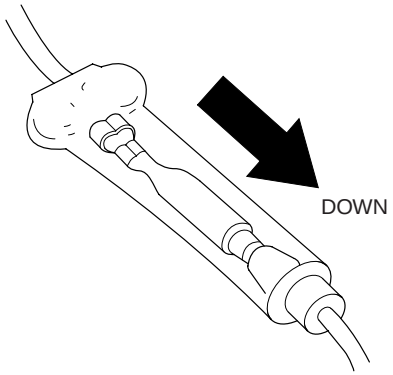

ETKD150G

HANDLING WIRES AND HARNESSES

1. Secure wires and wire harnesses to the frame with their respective wire ties at the designated locations.

2. Remove clips carefully; don't damage their locks (A).

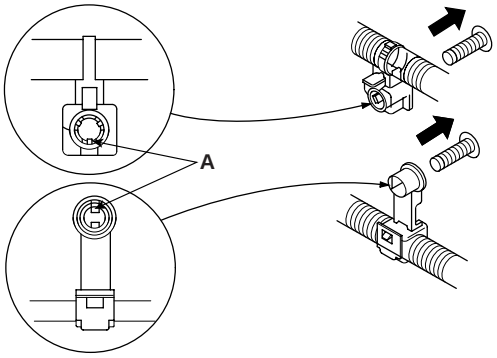

ETKD150H

3. Slip pliers (A) under the clip base and through the hole at an angle, and then squeeze the expansion tabs to release the clip.

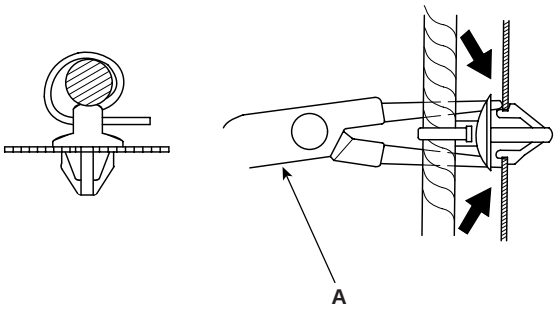

ETKD150I

4. After installing harness clips, make sure the harness doesn't interfere with any moving parts.

5. Keep wire harnesses away from exhaust pipes and other hot parts, from sharp edges of brackets and holes, and from exposed screws and bolts.

6. Seat grommets in their grooves properly (A). Do not leave grommets distorted (B).

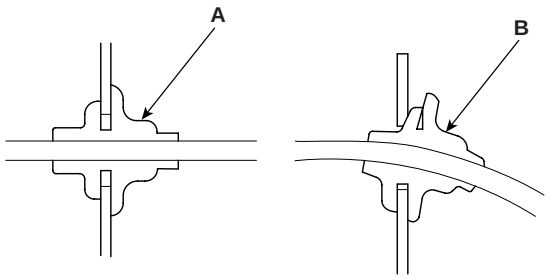

ETKD150J

TESTING AND REPAIRS

1. Do not use wires or harnesses with broken insulation. Replace them or repair them by wrapping the break with electrical tape.

2. After installing parts, make sure that no wires are pinched under them.

3. When using electrical test equipment, follow the manufacturer's instructions and those described in this manual.

4. If possible, insert the remover tool from the wire side (except waterproof connector).

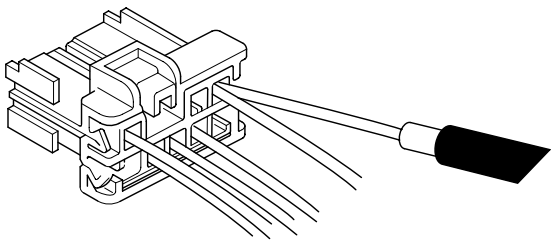

ETKD150K

5. Use a probe with a tapered tip.
Refer to the user's guide in the wiring repair kit (Pub No. : TRK 015.)

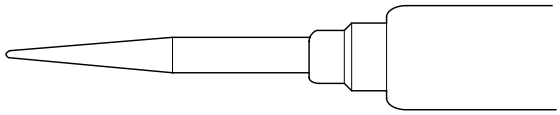

ETKD150L

FIVE-STEP TROUBLESHOOTING

1. Verify the complaint
Turn on all the components in the problem circuit to verify the customer complaint. Note the symptoms. Do not begin disassembly or testing until you have narrowed down the problem area.

2. Analyze the schematic
Look up the schematic for the problem circuit.
Determine how the circuit is supposed to work by tracing the current paths from the power feed through the circuit components to ground. If several circuits fail at the same time, the fuse or ground is a likely cause.
Based on the symptoms and your understanding of the circuit operation, identify one or more possible causes of the problem.

3. Isolate the problem by testing the circuit.
Make circuit tests to check the diagnosis you made in step 2. Keep in mind that a logical, simple procedure is the key to efficient troubleshooting.
Test for the most likely cause of failure first. Try to make tests at points that are easily accessible.

4. Fix the problem
Once the specific problem is identified, make the repair. Be sure to use proper tools and safe procedures.

5. Make sure the circuit works
Turn on all components in the repaired circuit in all modes to make sure you've fixed the entire problem. If the problem was a blown fuse, be sure to test all of the circuits on the fuse. Make sure no new problems turn up and the original problem does not recur.

AUDIO SYSTEM

SPECIFICATION EDB048F2

AUDIO

Item		Specification			
Model		RADIO/CD (M445)	RADIO / TAPE / CD/MP3 (M455)	RADIO / TAPE / 6CDC / MP3 (M465)	RADIO / 6CDC / MP3 (D466)
Power supply		DC 14.4V			
Rated output		Max 43W x 4		Max 3.2Vrms	Max 4.5Vrms
Antenna		80PF 75Ω			
Tuning type		PLL synthesized type			
Frequency range / Channel space	FM	87.5 ~ 108.0 MHz/100 KHz (General), 50KHz(Europe)			
	AM	531 ~ 1602 KHz/9 KHz (General)			
	MW	522 ~ 1620 KHz/9 KHz (Europe)			
	LW	153 ~ 279 KHz/1 KHz (Europe)			

SPEAKER & EXTERNAL AMPLIFIER

Item		M445 (Internal Amplifier)	M455	M465	D466
Input Power (W)	Front	50	50	50	40
	Rear	50	50	50	40
	Tailgate	-	-	-	32
	Tweeter	50	50	50	20
	Front center	-	-	-	32
	Sub woofer	-	-	50	64
Speaker Impedance (Ω)	Front	3.4 ± 0.5	3.4 ± 0.5	2 ± 0.3	2 ± 0.4
	Rear	3.4 ± 0.5	3.4 ± 0.5	2 ± 0.3	2 ± 0.4
	Tailgate	-	-	-	2.15 ± 0.25
	Tweeter	3.4 ± 0.5	3.4 ± 0.5	3.4 ± 0.5	4 ± 0.8
	Front center	-	-	-	2.15 ± 0.25
	Sub woofer	-	-	2 ± 0.3	1.4 ± 0.25
Speaker Number		6	6	7	10
External Amplifier	Power supply	DC 14.4V	DC 14.4V	DC 14.4V	DC 14.4V
	Output power	MAX 43W x 4	MAX 43W x 4	MAX 310W (55W x 4CH + 45W x 2CH)	MAX 660W (55W x 12CH)
	Speaker Impedance (Ω)	4Ω x 4	4Ω x 4	2Ω x 5 + 3.4Ω x 2	2Ω x 5 + 3.4Ω x 2 + 1.4V

COMPONENT LOCATION E713F673

This illustration shows the LHD type.
RHD type is symmetrical.

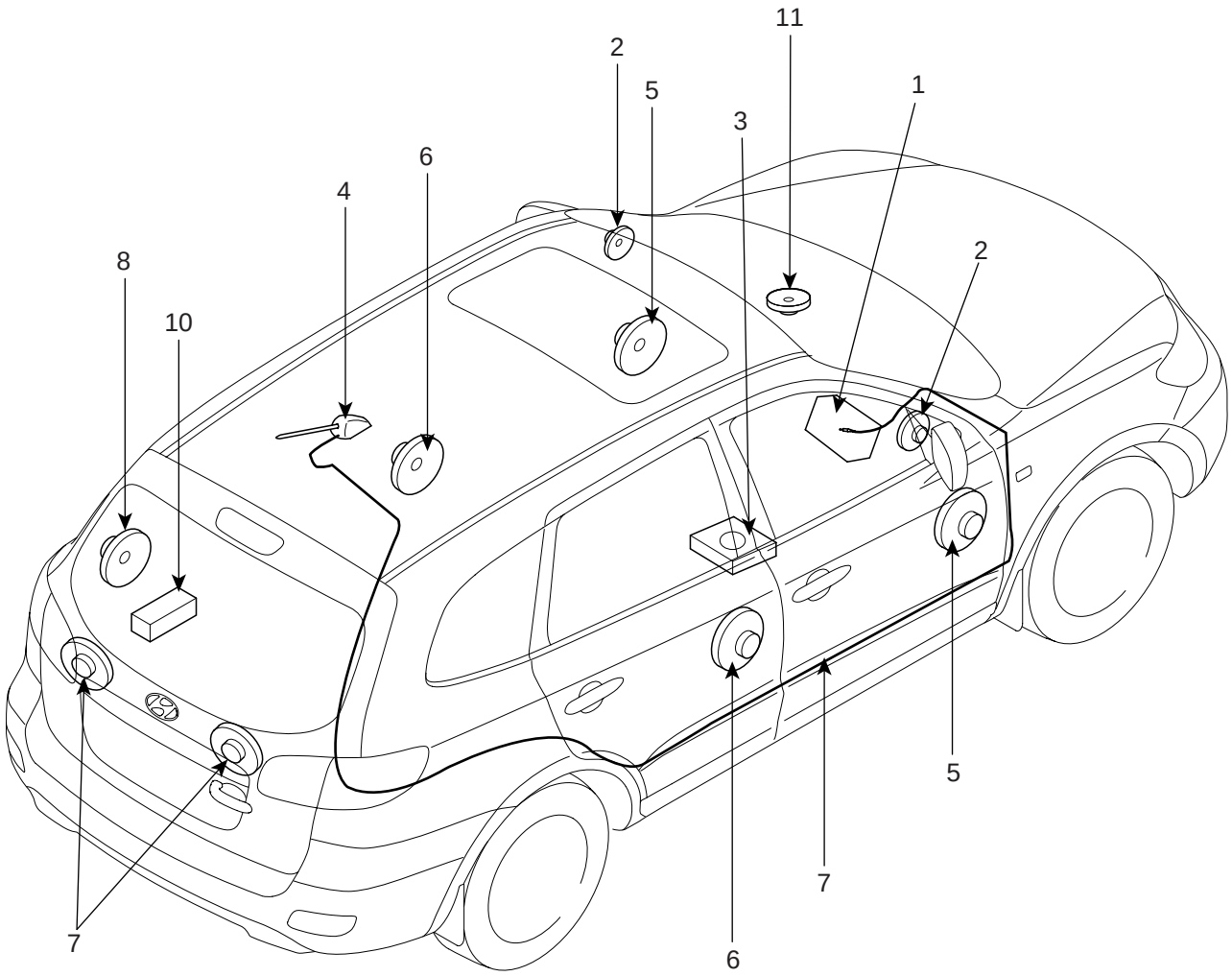

1. Audio unit
2. Tweeter speaker
3. External amplifier
4. Roof antenna
5. Front door speaker
6. Rear door speaker
7. Tailgate speaker
8. Sub-woofer speaker
9. Antenna feeder cable
10. 6CD changer
11. Crash pad center speaker

SCMBE6001L

TROUBLESHOOTING EABDCBC8

CUSTOMER COMPLAINT ANALYSIS CHECK SHEET

TROUBLE IN	☐ ALL ☐ AM ☐ FM ☐ TAPE ☐ CD ☐ MP3 ☐ CD changer ☐ AMP ☐ Others
TROUBLE OCCURS	☐ Always ☐ Engine start ☐ Engine Running ☐ Cold ☐ Warm ☐ Sometimes ☐ Most of the time ☐ Engine off
TYPE OF TROUBLE	☐ Will not play ☐ Tape speed not proper ☐ Weak ☐ Squealing noise ☐ Eats tape ☐ Display/illumination poor ☐ CD skips & jumps ☐ Tape/CD will not eject or insert ☐ Others (Describe) :
OTHERS	▶ Customer complaint contents : ▶ Have you checked customer's defects :
* Using the customer complaint analysis check sheet for reference, ask the customer for as much detail as possible about the problem.	

BT1G001A

There are six areas where a problem can occur: wiring harness, the radio, the cassette tape deck, the CD player, and speaker. Troubleshooting enables you to confine the problem to a particular area.

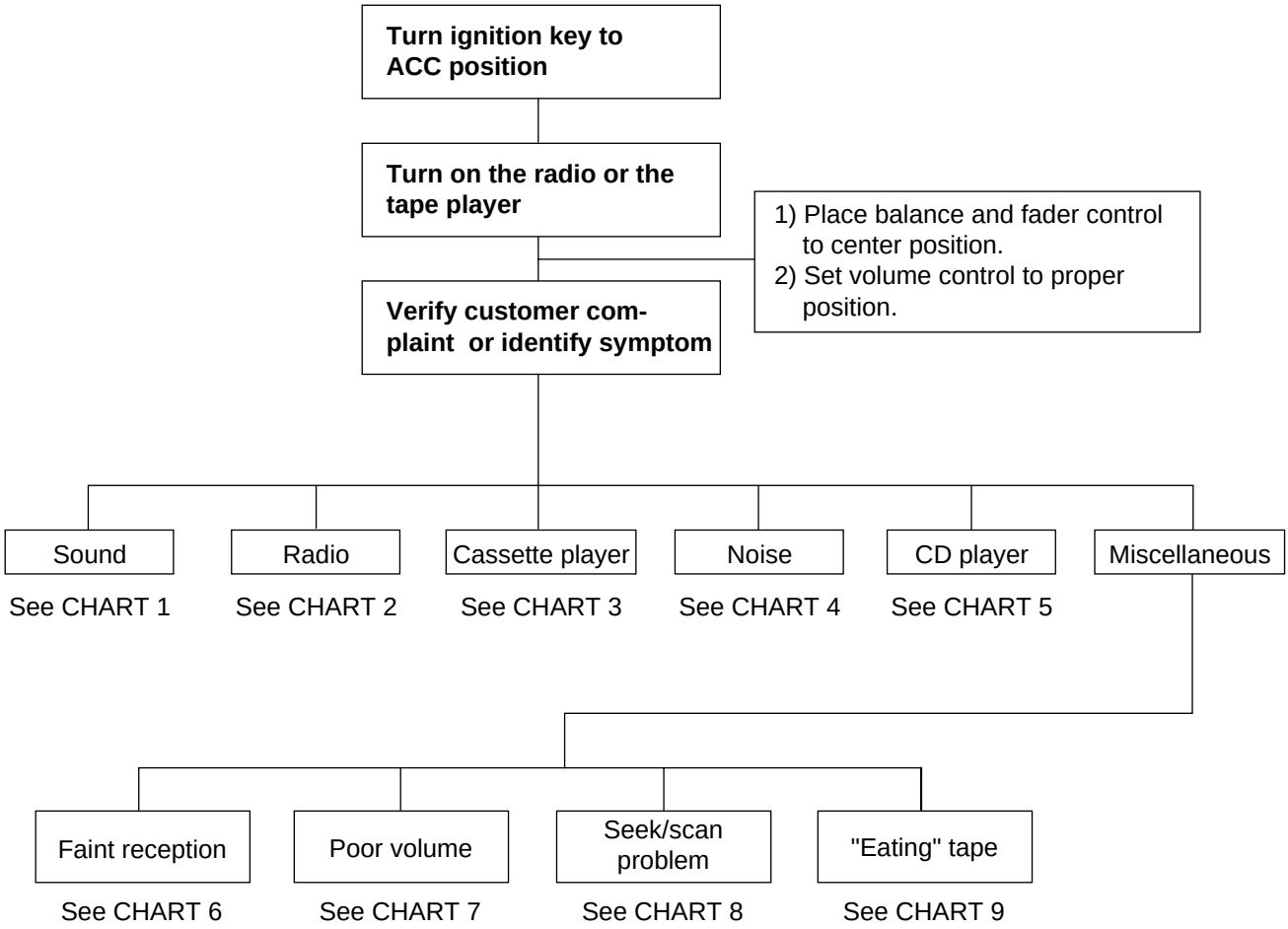

LTIF001A

CHART 1

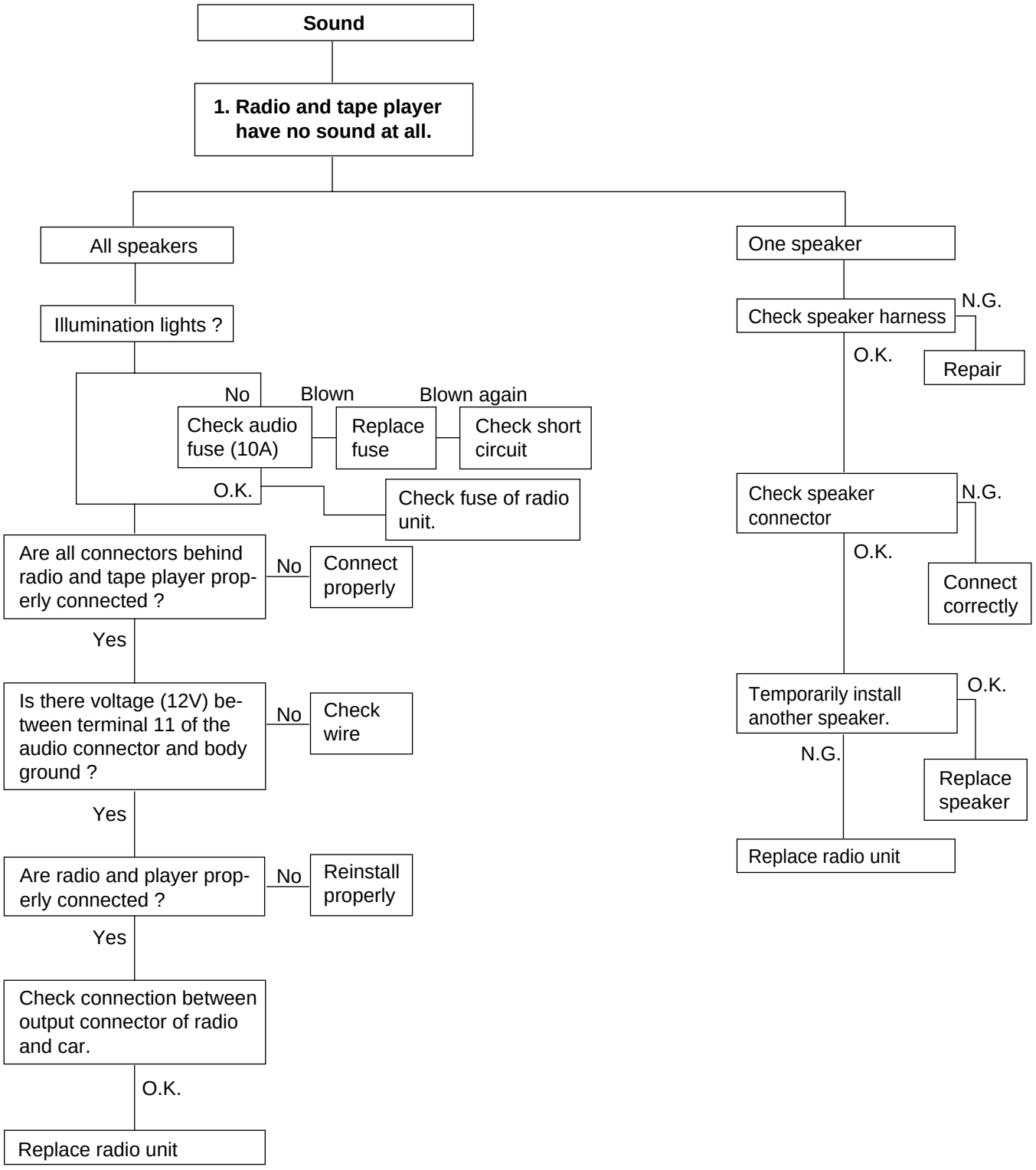

LTJF001B

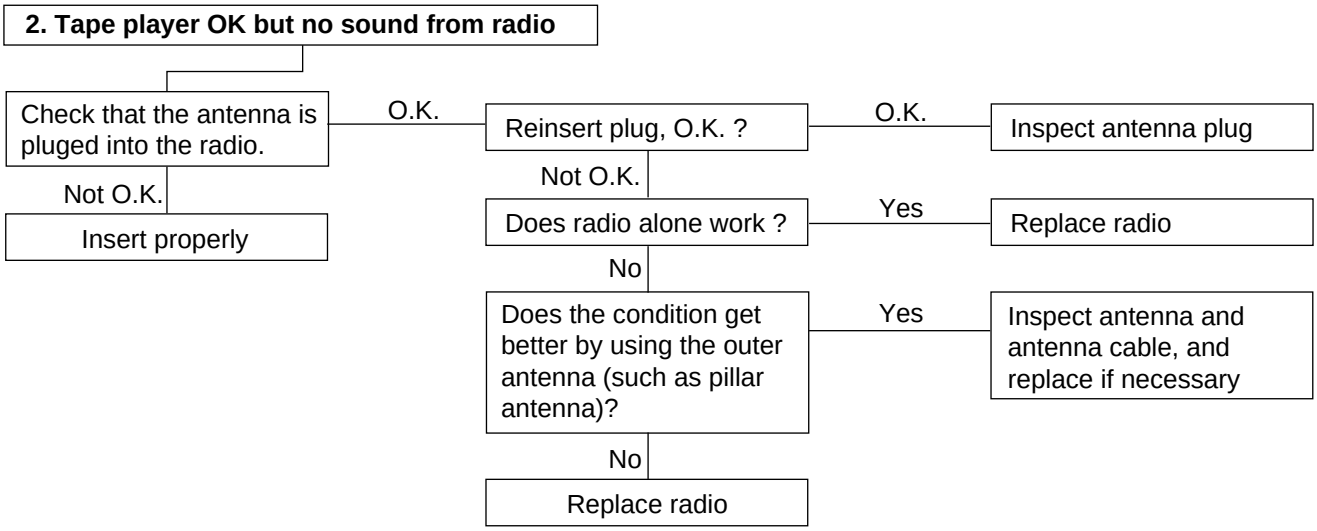

LTIF001C

CHART 2

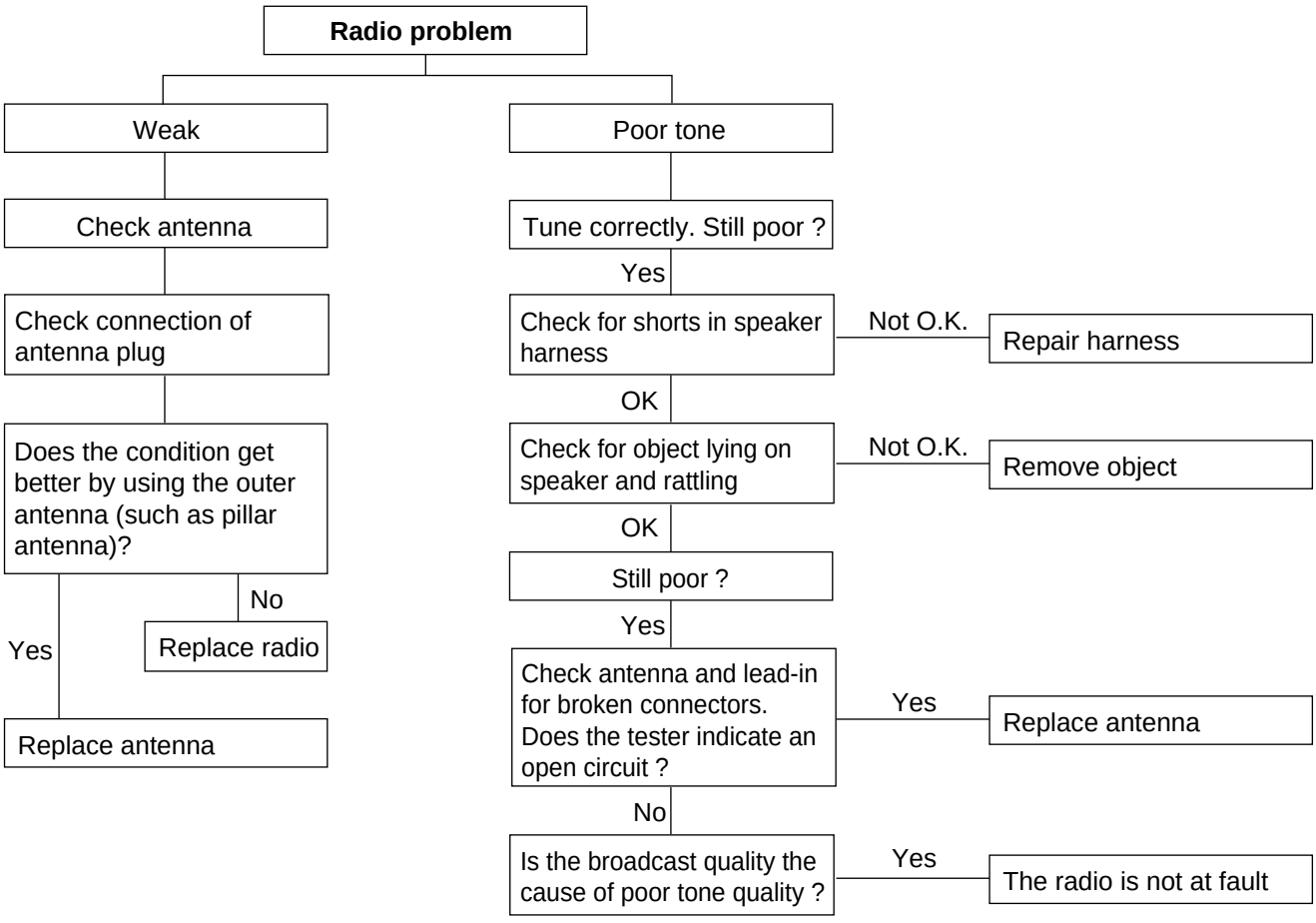

BTIF001D

CHART 3

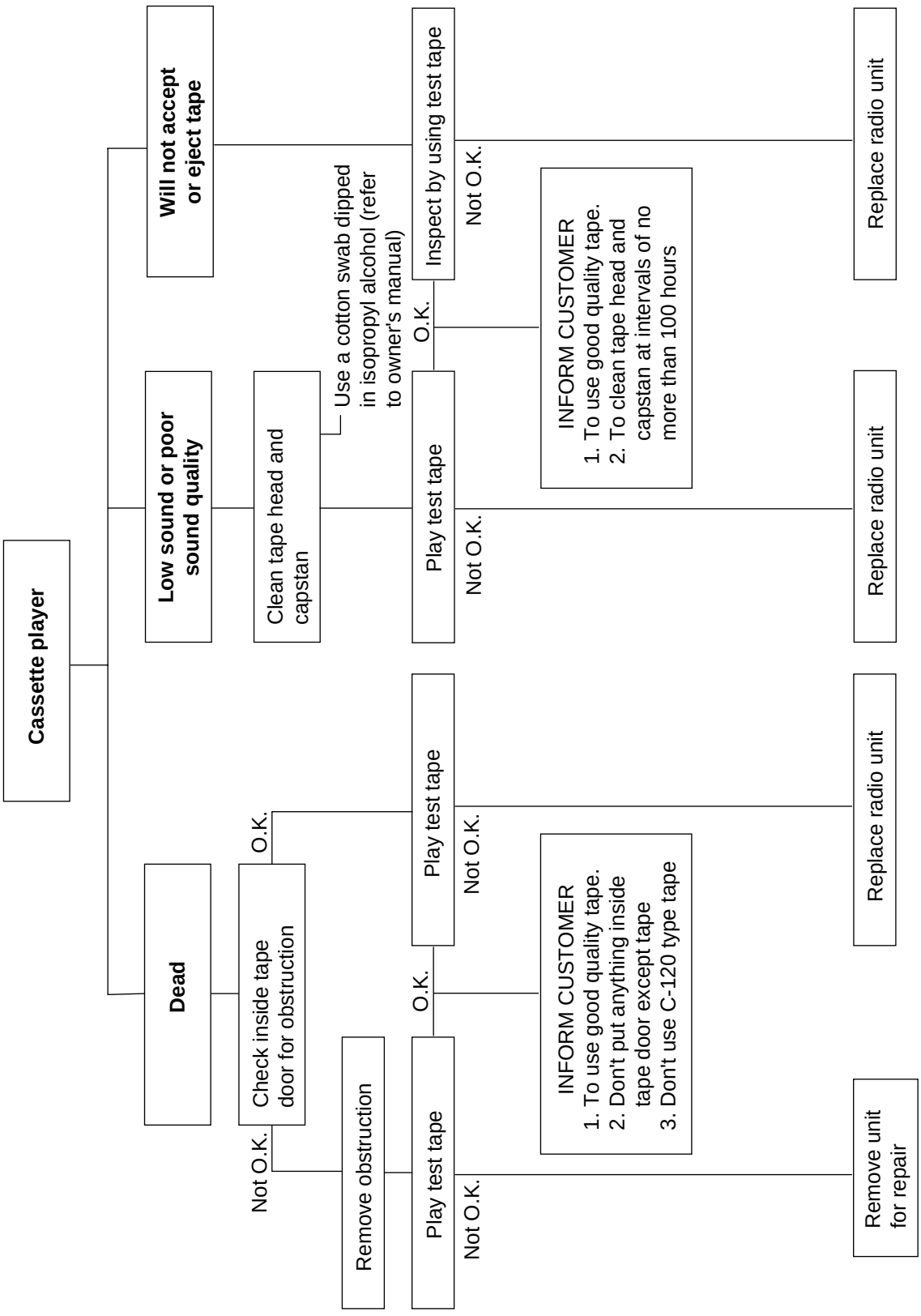

ETBF001E

CHART 4

1. RADIO

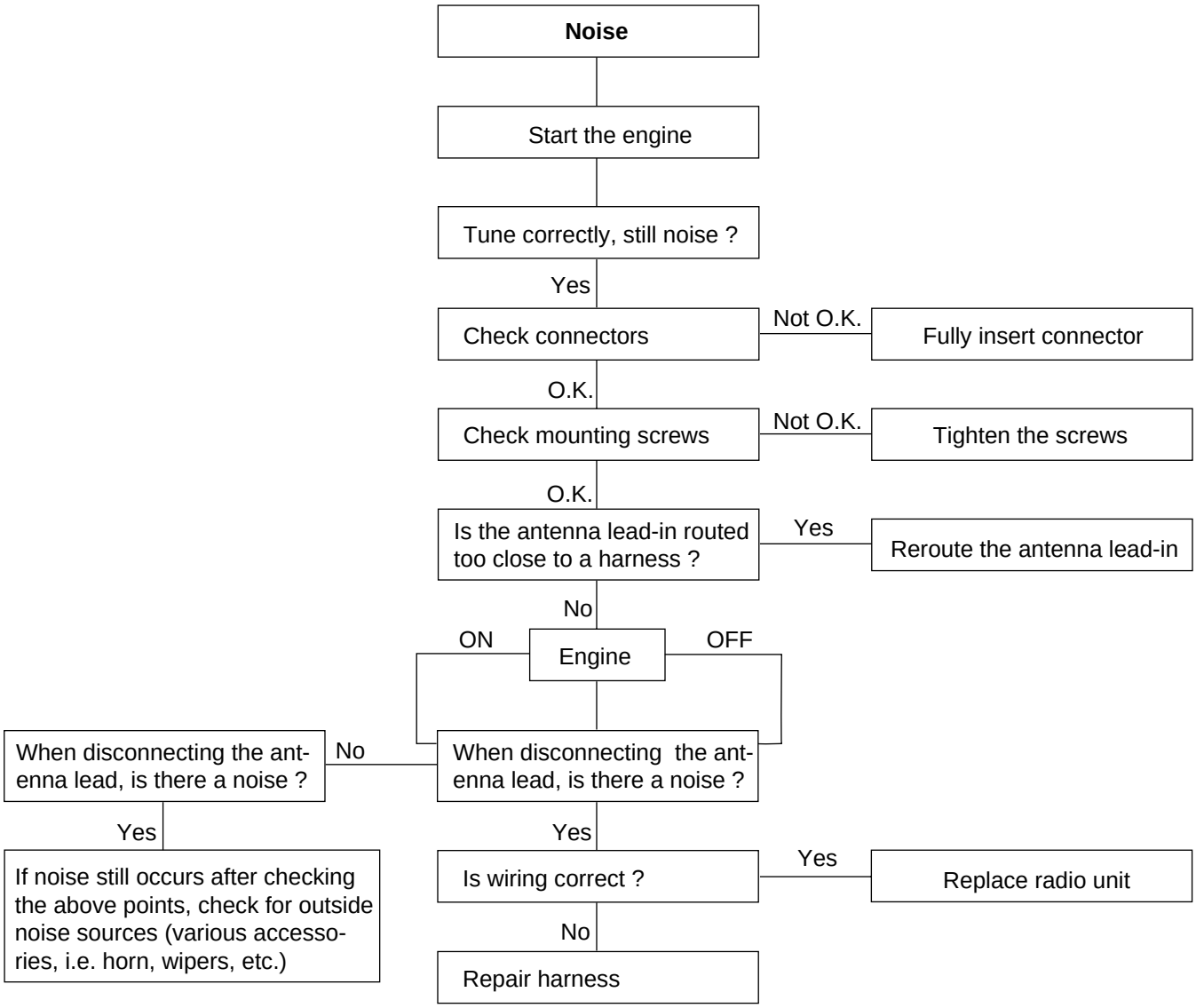

LTIF001F

2. TAPE

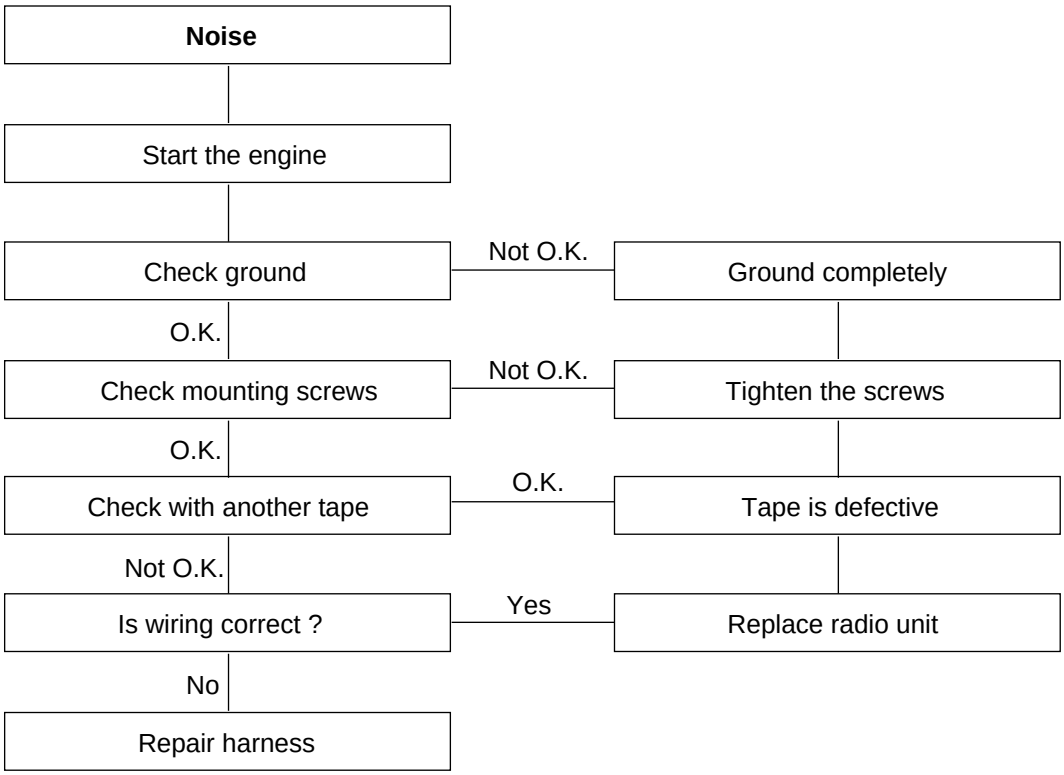

LTIF001G

CHART 5

1. CD WILL NOT BE ACCEPTED

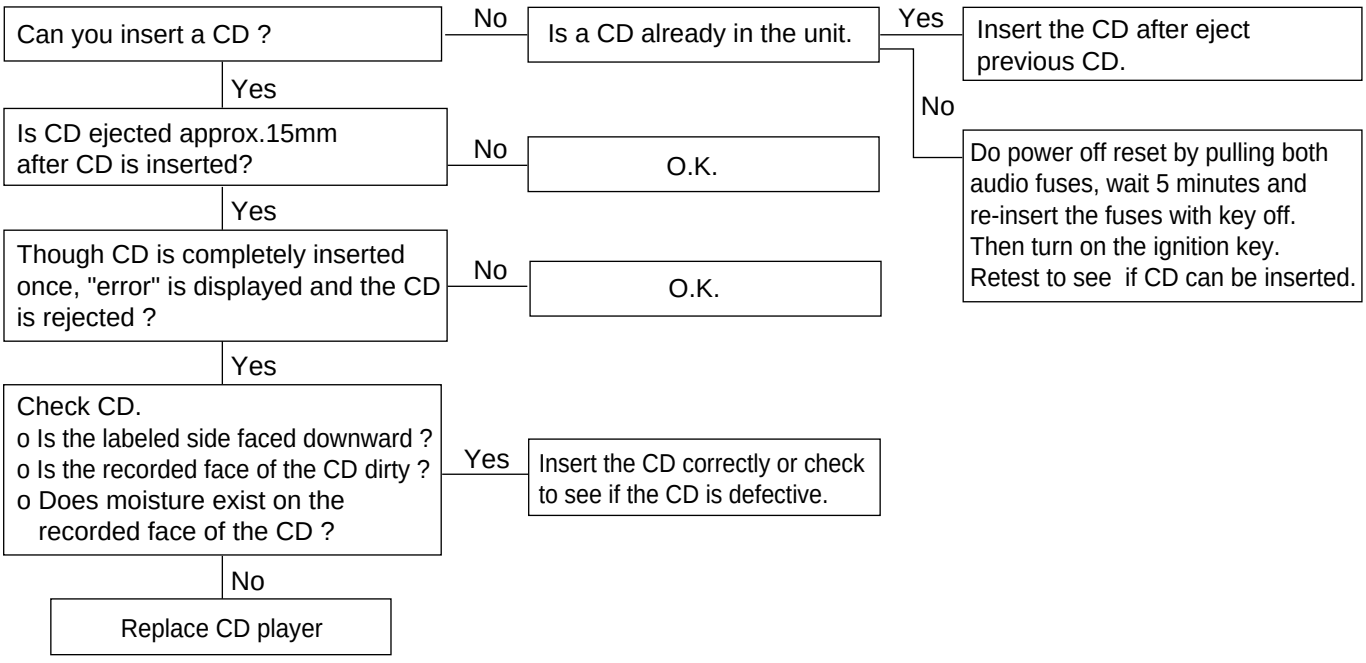

LTIF001H

2. NO SOUND

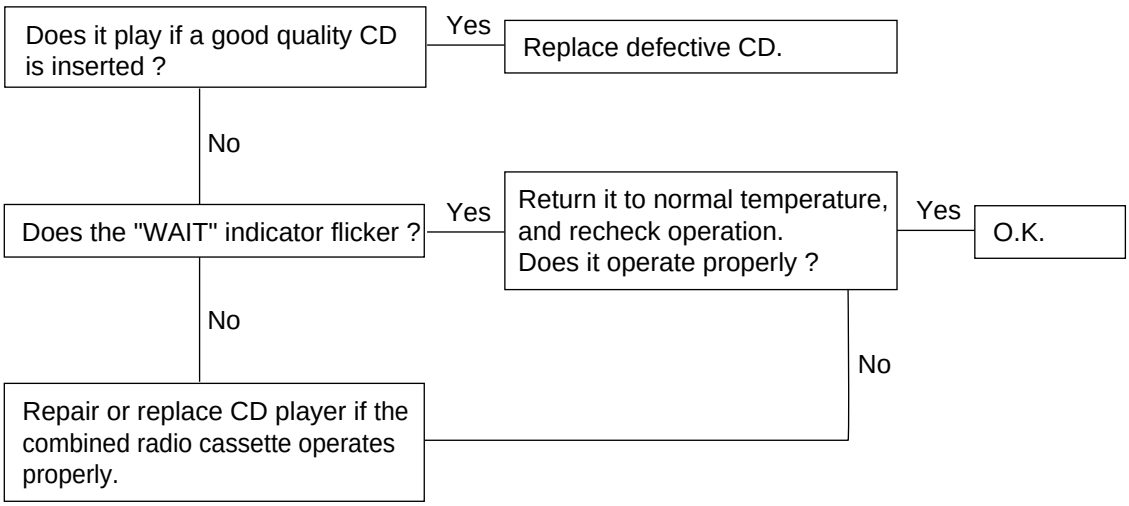

LTIF001I

3. CD SOUND SKIPS

1) Sound sometimes skips when parking.

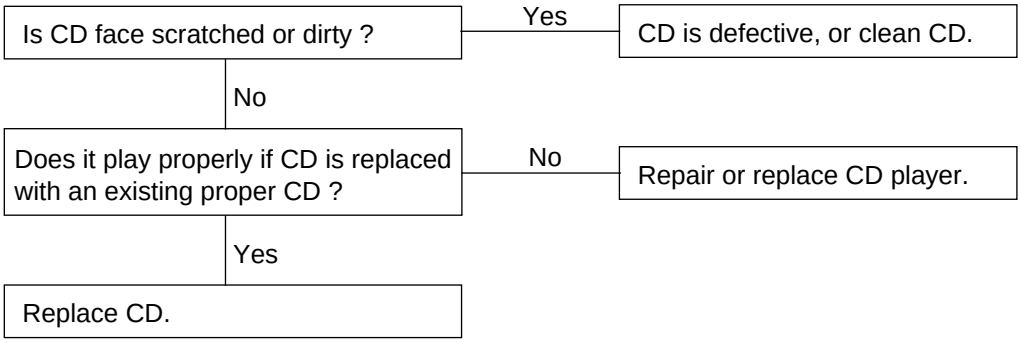

2) Sound sometimes skips when driving.
(Stop vehicle, and check it.)
(Check by using a CD which is free of scratches, dirt or other damage.)

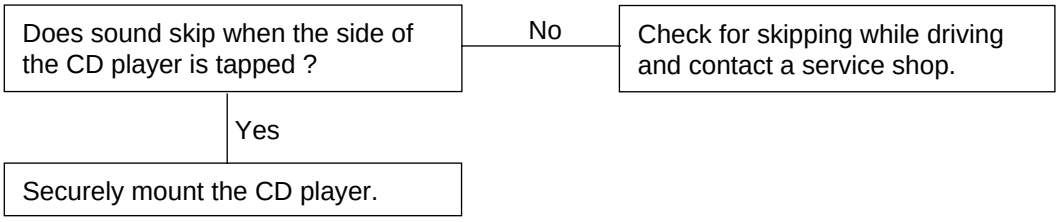

LTIF001J

4. SOUND QUALITY IS POOR

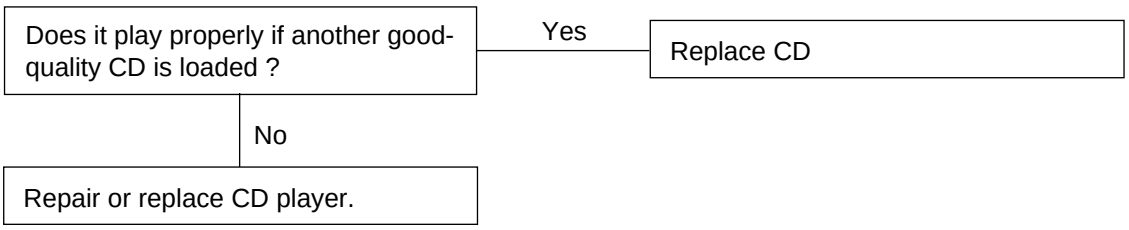

5. CD WILL NOT EJECT

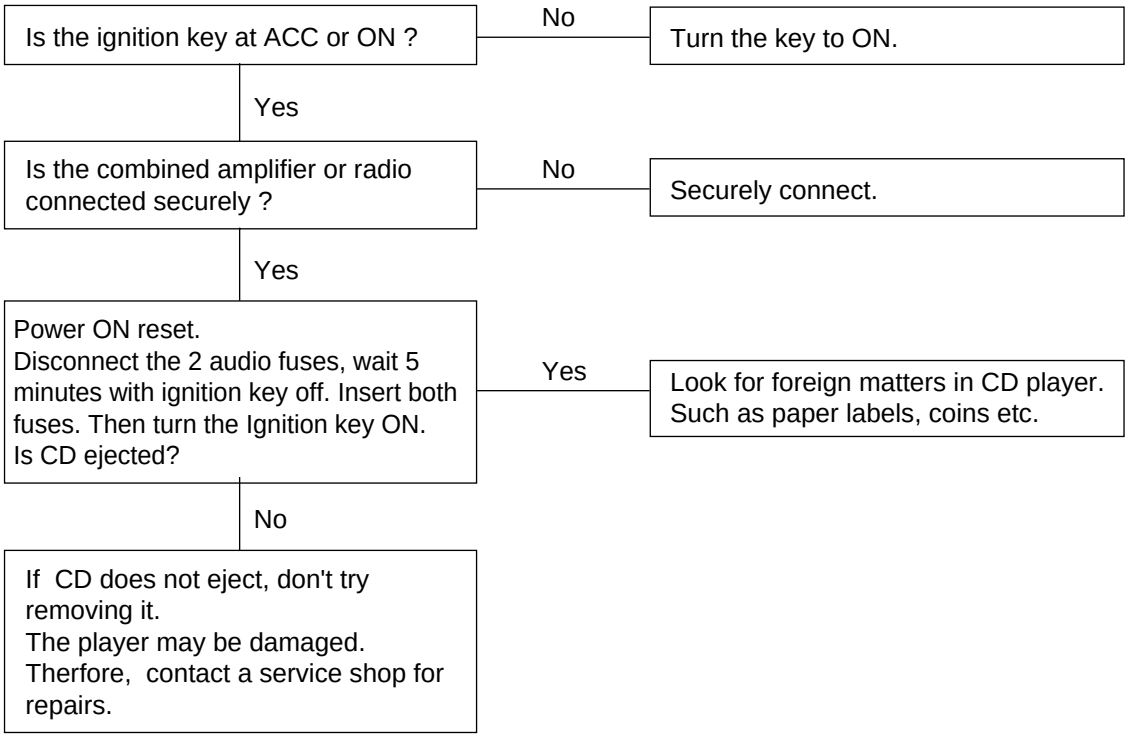

6. NO SOUND FROM ONE SPEAKER

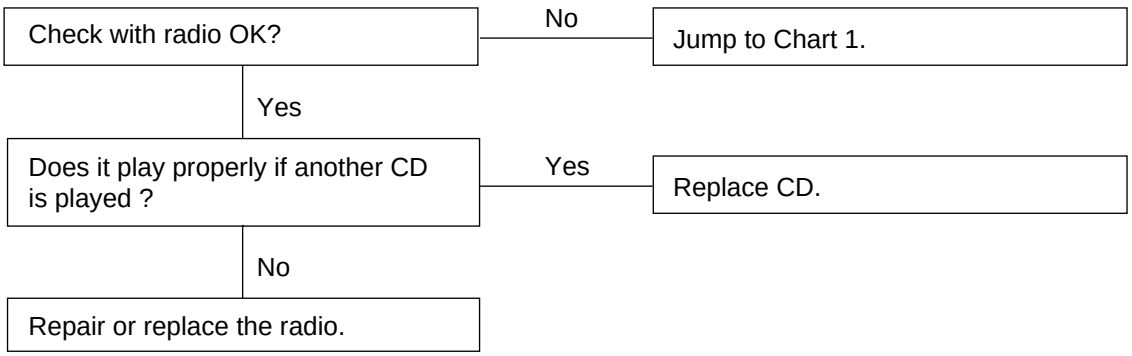

LTIF001K

CHART 6

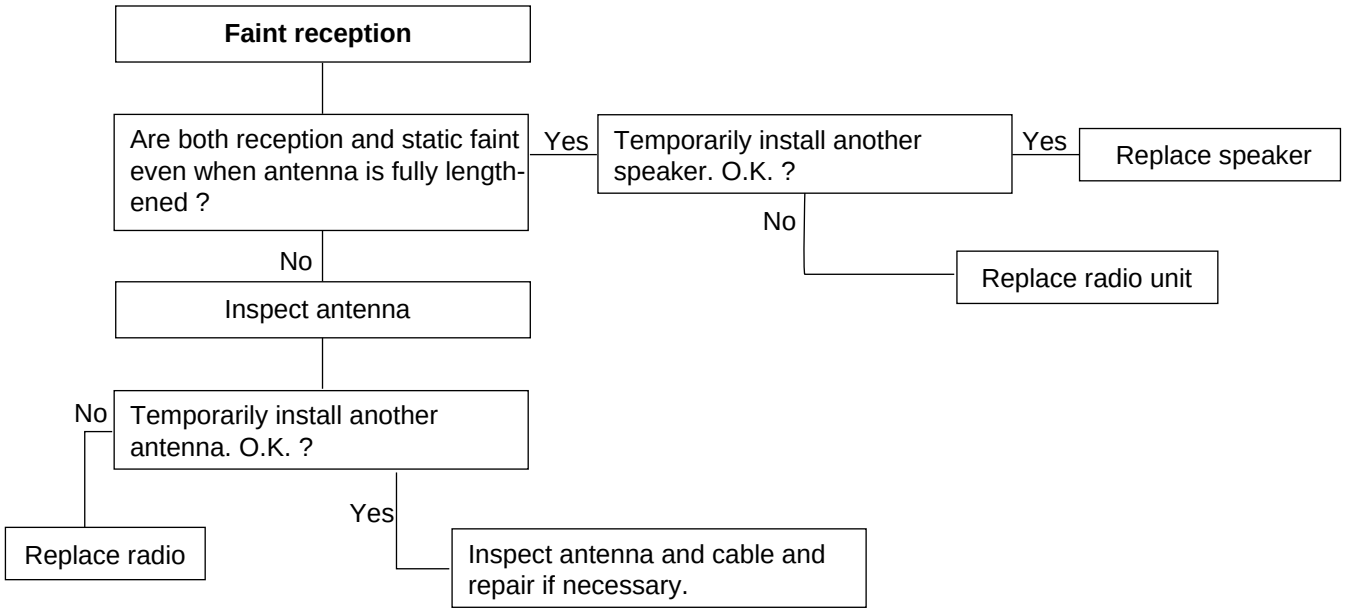

LTIF001L

CHART 7

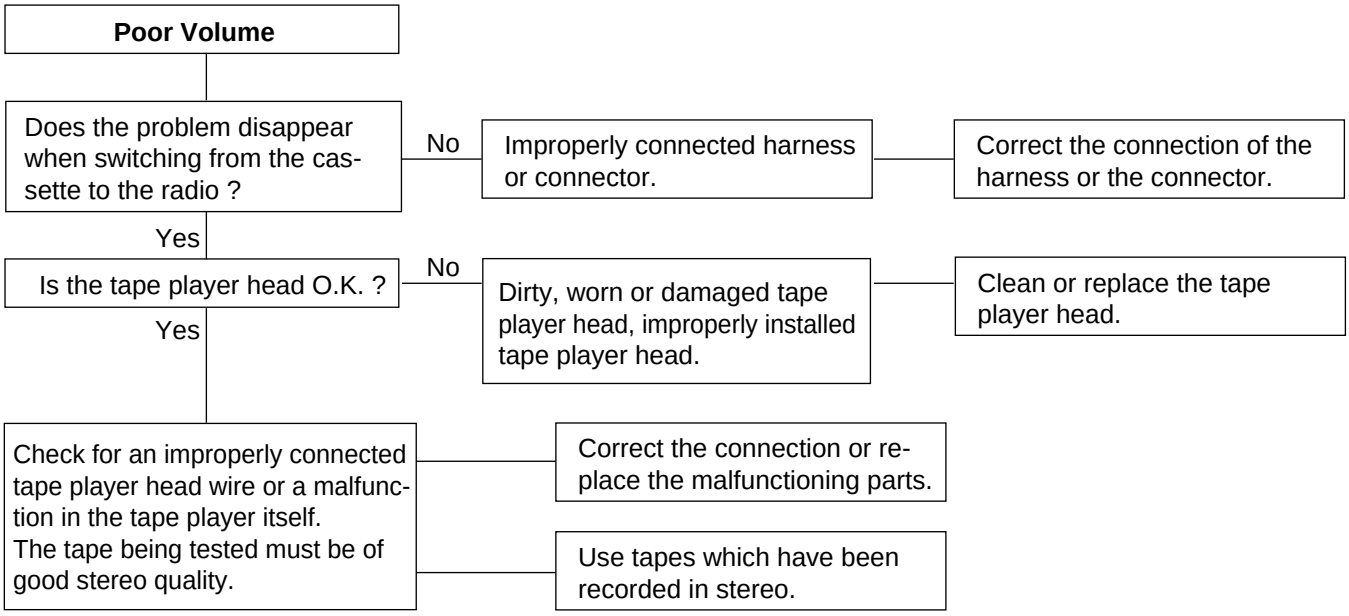

LTIF001M

CHART 8

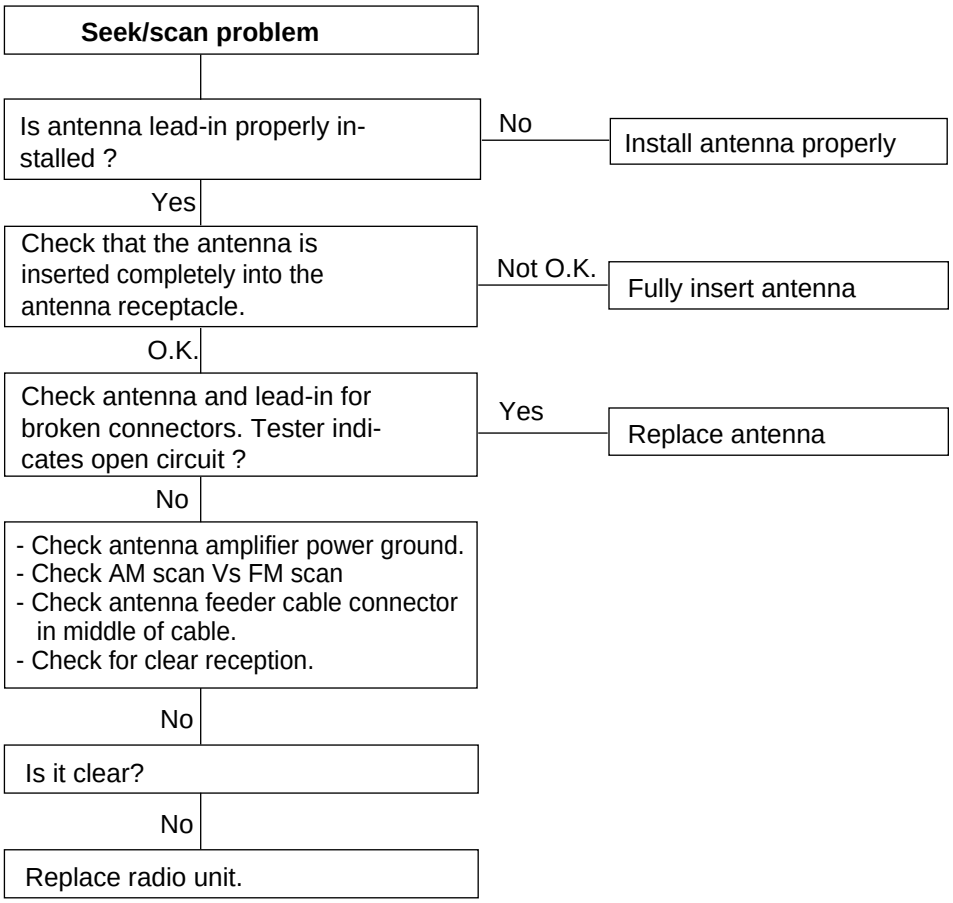

LTIF001N

CHART 9

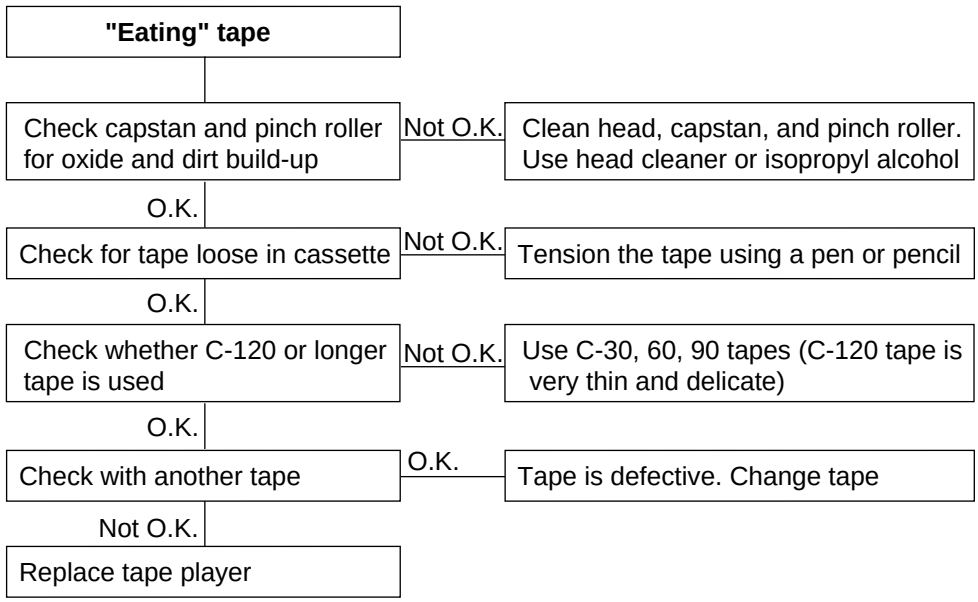

LTIF001O

AUDIO UNIT

COMPONENTS E35BCAF6

[AM/FM/CASSETTE/CD(M445)]

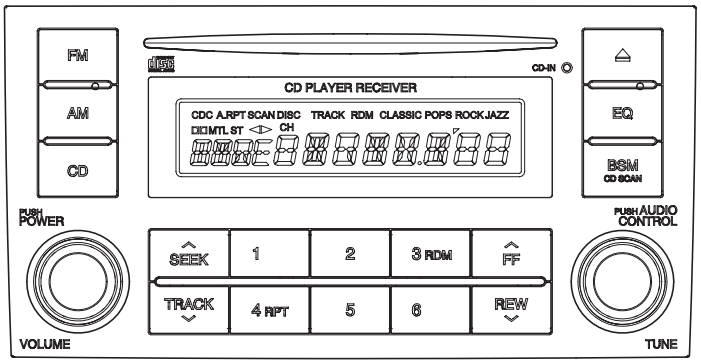

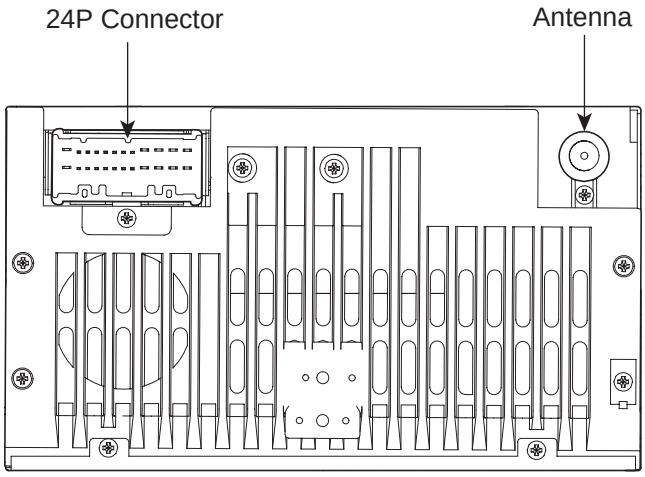

24P Connector	Pin	Description	Pin	Description
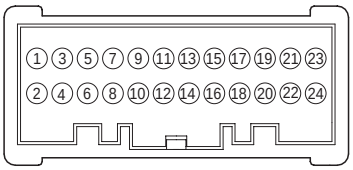	1	Ground	13	Remote control ground
	2	B+	14	Steering remote control
	3	Antenna B+	15	Illumination(-)
	4	ACC	16	Illumination(+)
	5	-	17	Rear left speaker(-)
	6	-	18	Rear left speaker(+)
	7	Tweeter in(Right)	19	Rear right speaker(-)
	8	Tweeter in(Left)	20	Rear right speaker(+)
	9	Ground	21	Front right speaker(-)
	10	Tweeter ground	22	Front right speaker(+)
	11	MUTE	23	Front left speaker(-)
	12	Rear arm remote control	24	Front left speaker(+)

[AM/FM/MP3/CD(M455)]

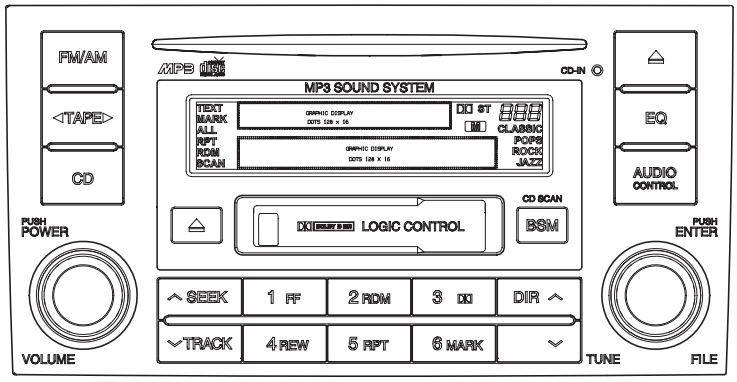

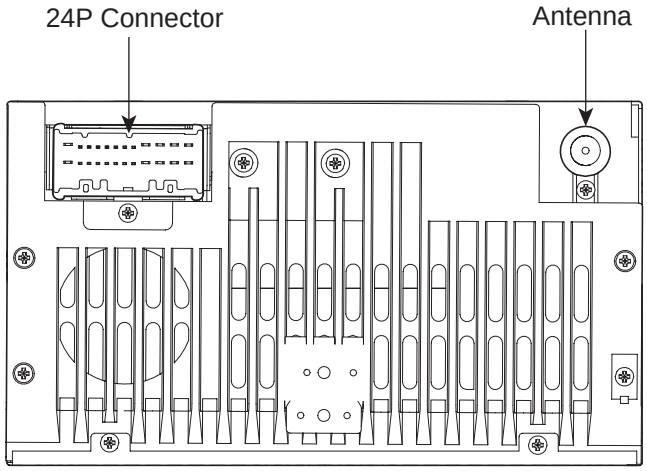

24P Connector	Pin	Description	Pin	Description
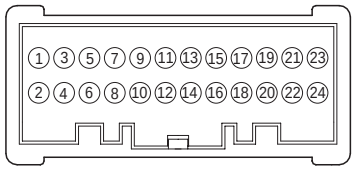	1	Ground	13	Remote control ground
	2	B+	14	Steering remote control
	3	Antenna B+	15	Illumination(-)
	4	ACC	16	Illumination(+)
	5	-	17	Rear left speaker(-)
	6	-	18	Rear left speaker(+)
	7	Tweeter in(Right)	19	Rear right speaker(-)
	8	Tweeter in(Left)	20	Rear right speaker(+)
	9	Ground	21	Front right speaker(-)
	10	Tweeter ground	22	Front right speaker(+)
	11	MUTE	23	Front left speaker(-)
	12	Rear arm remote control	24	Front left speaker(+)

SCMBE6003L

[AM/FM/CASSETTE/MP3/6CDC(M465)]

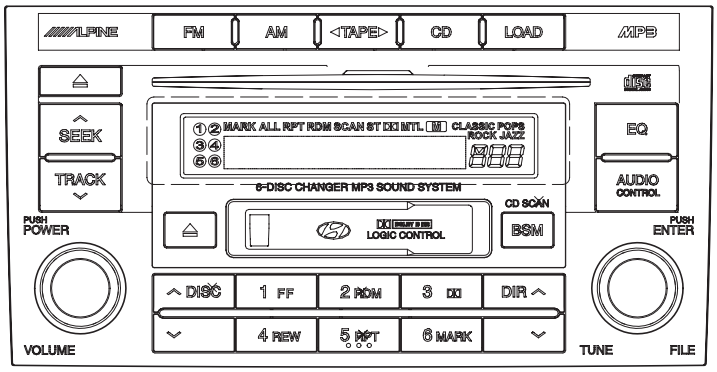

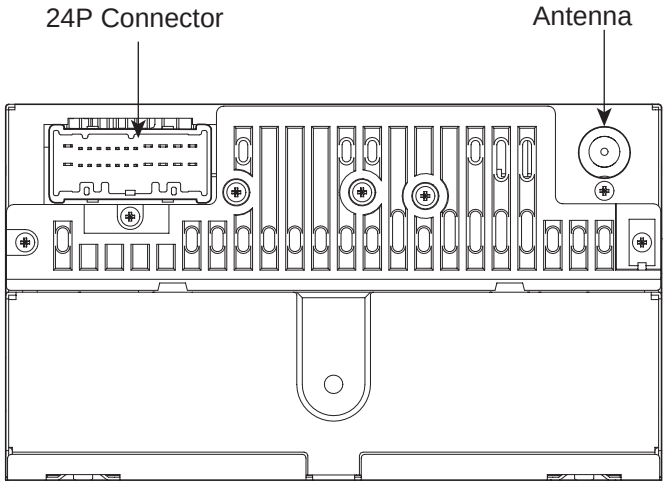

24P Connector	Pin	Description	Pin	Description
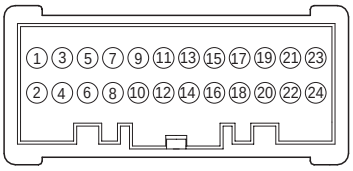	1	Ground	13	Remote control ground
	2	B+	14	Steering remote control
	3	Antenna B+	15	Illumination(-)
	4	ACC	16	Illumination(+)
	5	-	17	Rear left speaker(-)
	6	Remote control	18	Rear left speaker(+)
	7	Tweeter in(Right)	19	Rear right speaker(-)
	8	Tweeter in(Left)	20	Rear right speaker(+)
	9	Ground	21	Front right speaker(-)
	10	Tweeter ground	22	Front right speaker(+)
	11	MUTE	23	Front left speaker(-)
	12	Rear arm remote control	24	Front left speaker(+)

SCMBE6004L

[PREMIUM (D466)]

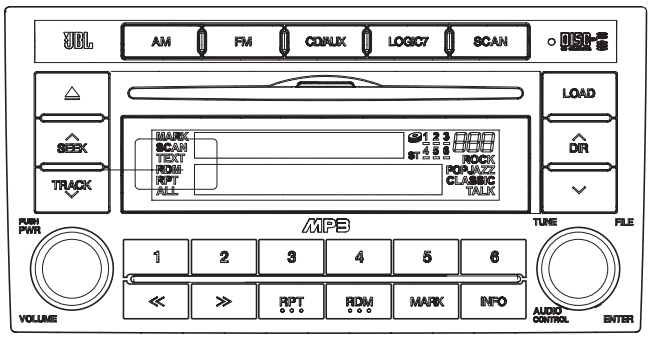

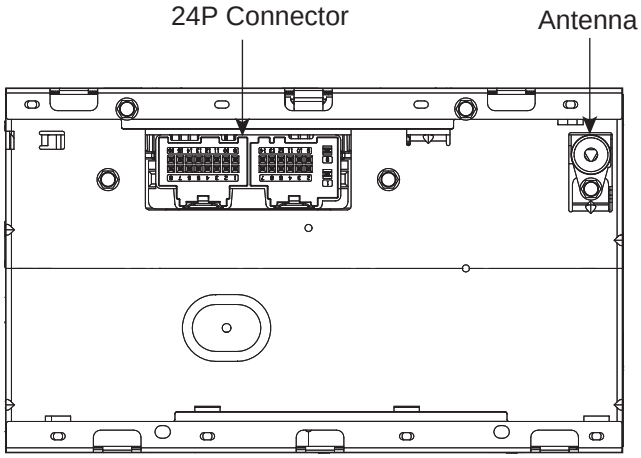

Connector	Connector A		Connector B	
	Pin	Description	Pin	Description
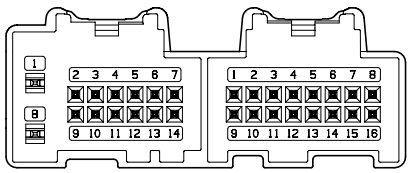	1	B+	1	Tweeter (Left)
	2	-	2	Tweeter (Right)
	3	-	3	Tweeter ground
	4	Illumination(+)	4	EQ SEL
	5	Illumination(-)	5	Front right speaker(-)
	6	Remote control	6	Front right speaker(+)
	7	ACC	7	Rear left speaker(-)
	8	Ground	8	Rear left speaker(+)
	9	MUTE	9	-
	10	Surround ON/OFF	10	-
	11	SWC	11	-
	12	SWC output	12	-
	13	MSCAN high	13	Front left speaker(-)
	14	MSCAN low	14	Front left speaker(+)
			15	Rear right speaker(-)
			16	Rear right speaker(+)

SCMBE6005L

INSPECTION E813AFA7

TAPE HEAD AND CAPSTAN CLEANING

1. To obtain optimum performance, clean the head, and capstan as often as necessary, depending on frequency of use and tape cleanness.
2. To clean the tape head and capstan, use a cotton swab dipped in ordinary rubbing an alcohol. Wipe the head and capstan.

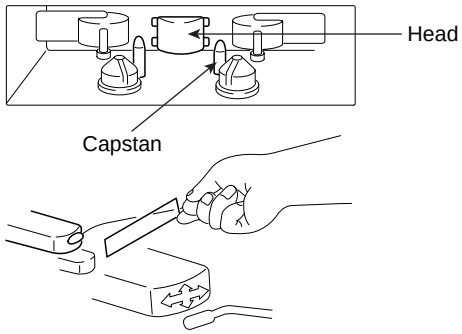

LTAC005A

REPLACEMENT EA2B9CB5

1. Disconnect the negative (-) battery terminal.
2. Remove the crash pad center speaker grill (A). (Refer to the Body group - Crash pad).

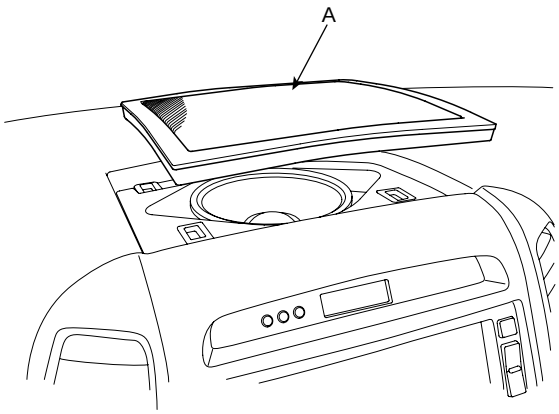

SCMBE6014D

3. Remove the crash pad center speaker (A) after loosening the screws. Avoid damaging retaining clips.

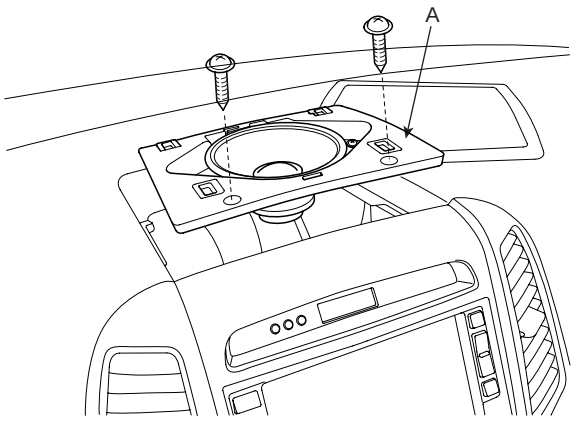

SCMBE6015D

4. Remove the center facia panel (A) after loosening the screws.
   (Refer to the Body group - Crash pad).

▷: Screw, 2

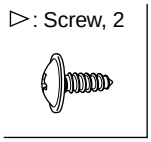

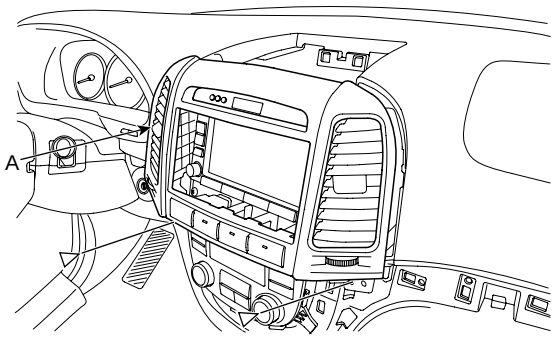

SCMBE6010L

5. Remove the connectors.

6. Remove the mounting bolts then remove the audio unit (A).

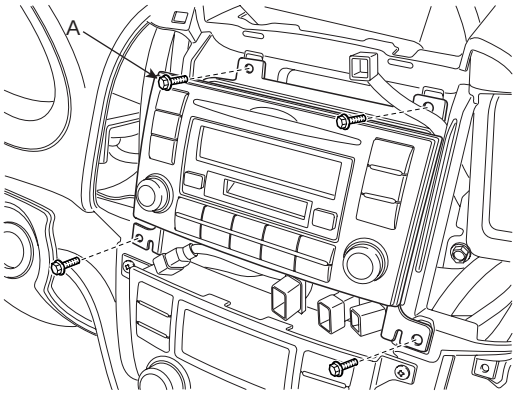

SCMBE6011D

7. Remove the audio unit after disconnecting the audio connectors and cable.

8. Installation is the reverse of removal.

SPEAKERS

INSPECTION EA07AC38

1. Check the speaker with an ohmmeter. If an ohmmeter indicates the correct impedance of the speaker when checking between the speaker (+) and speaker (-) of the same channel, the speaker is ok.

Specified impedance : 2~4 Ω

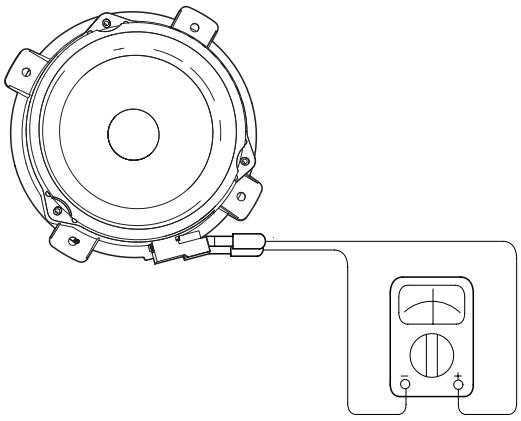

ATLG022E

REPLACEMENT EC2DE7E3

FRONT SPEAKER

1. Remove the front door trim.
   (Refer to the Body group - Front door).
2. Remove the front speaker (A) after removing 4 rivets.

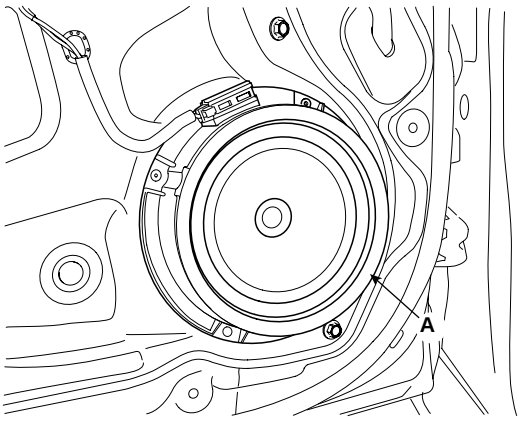

SCMBE6020D

3. Installation is the reverse of removal.

REAR SPEAKER

1. Remove the rear door trim.
   (Refer to the Body group - Rear door).
2. Remove the rear speaker (A) after removing 4 rivets.

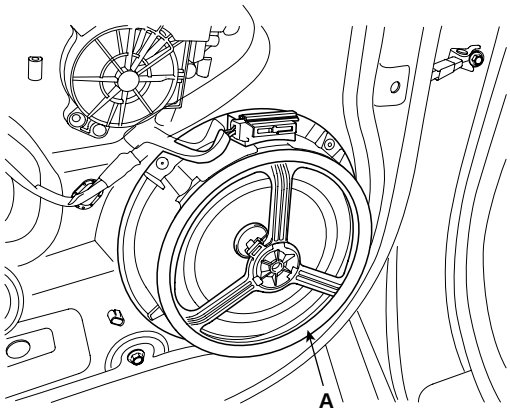

SCMBE6021D

3. Installation is the reverse of removal.

CRASH PAD SPEAKER

1. Remove the crash pad center speaker grill (A).

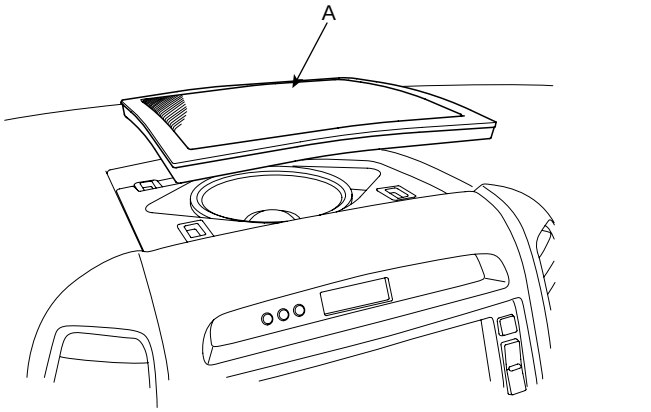

SCMBE6022D

2. Remove the crash pad center speaker (A) after loosening the 2 mounting screws.

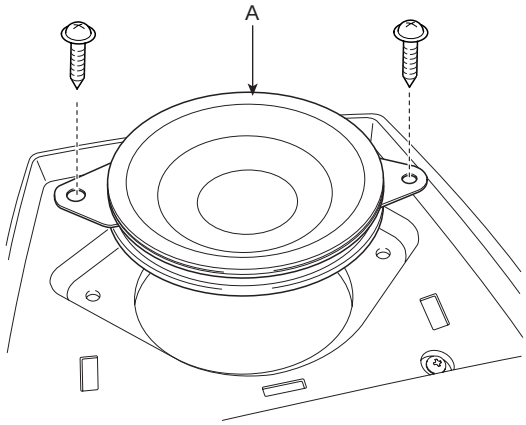

SCMBE6023D

3. Installation is the reverse of removal.

TAILGATE SPEAKER

1. Remove the tailgate trim.
   (Refer to the Body group - Tailgate).

2. Remove the tailgate speaker (A) after loosening 2 bolts.

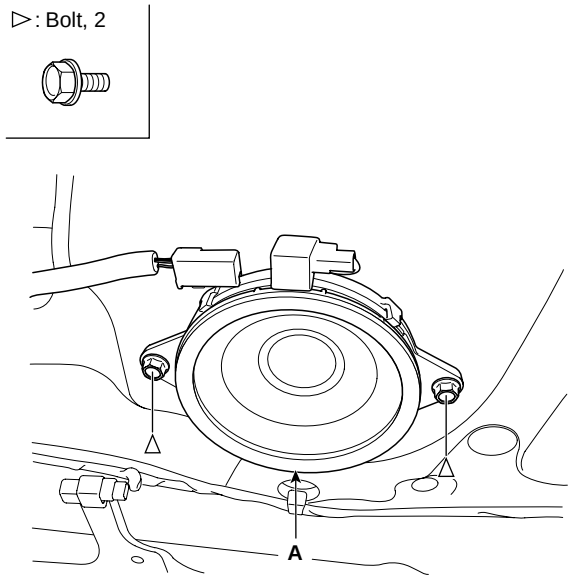

SCMBE6027L

6CD CHANGER

1. Remove the left luggage side trim.
   (Refer to the Body group - Internal trim)

2. Remove the 6CD changer (A) after removing 4 bolts and disconnecting the connector.

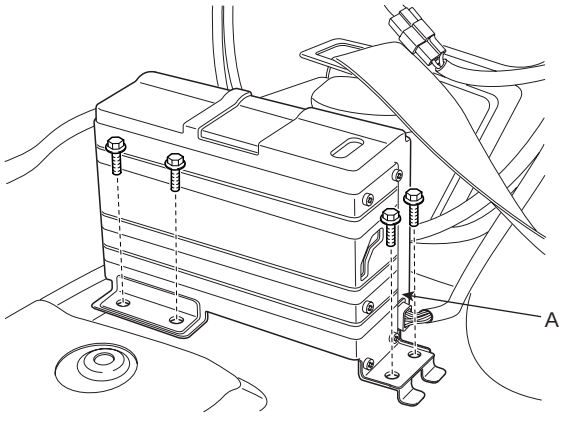

SCMBE6028D

3. Installation is the reverse of removal.

EXTERNAL AMPLIFIER

1. Remove the assistance seat after removing the 4 bolts and disconnecting the connector
(Refer to the Body group - Front seat).

2. Remove the external amplifier (A) under the assistance seat after removing the 3 bolts.

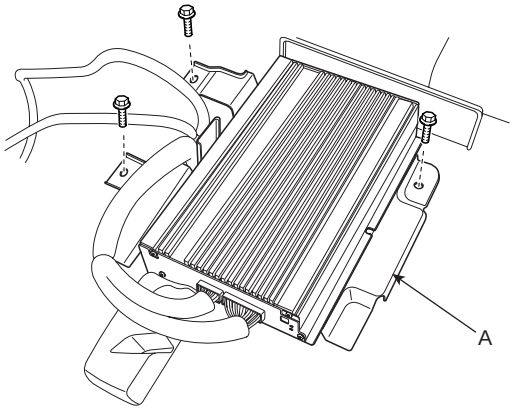

SCMBE6029D

3. Installation is the reverse of removal.

TWEETER SPEAKER

1. Remove the front door delta cover (A).
(Refer to the Body group - Front door).

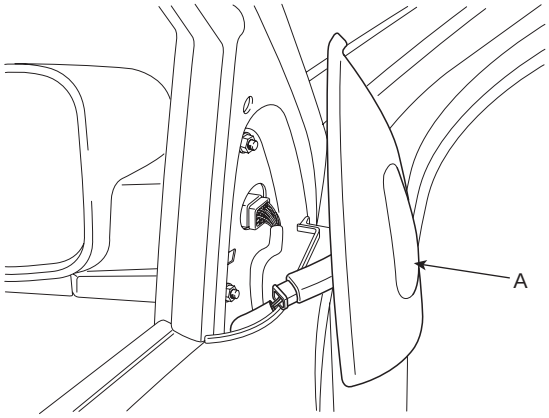

SCMBE6024D

2. Remove the tweeter speaker (A) after loosening 2 screws and disconnecting the connector.

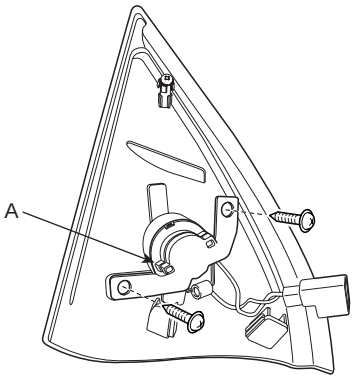

SCMBE6025D

3. Installation is the reverse of removal.

WOOFER SPEAKER

1. Remove the left luggage side trim.
(Refer to the Body group - Rear seats).

2. Remove the woofer speaker (A) after removing 4 bolts and disconnecting the connector.

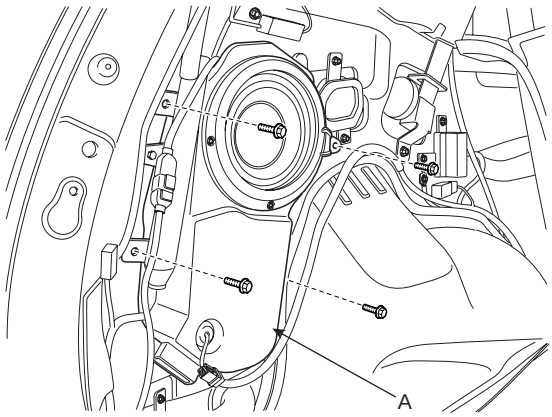

SCMBE6026D

3. Installation is the reverse of removal.

ANTENNA

INSPECTION E14AC1A5

ANTENNA CABLE

1. Remove the antenna jack from the audio unit and antenna.
2. Check for continuity between the center poles of antenna cable.

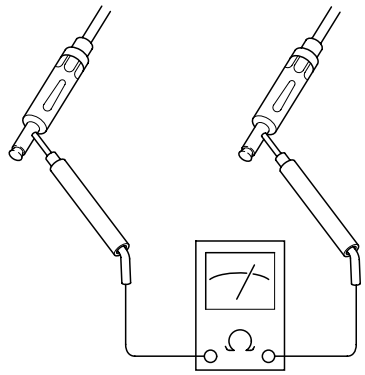

ATJF023C

3. Check for continuity between the outer poles of antenna cable. There should be continuity.

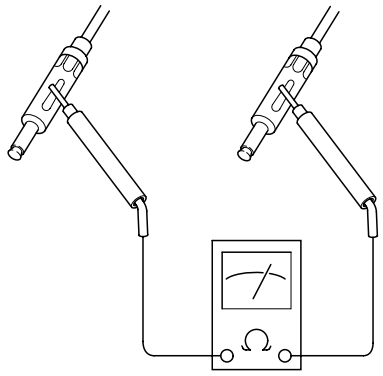

ATJF023D

4. If there is no continuity, replace the antenna cable.
5. Check for continuity between the center pole of antenna cable and terminal of glass antenna. There should be continuity.

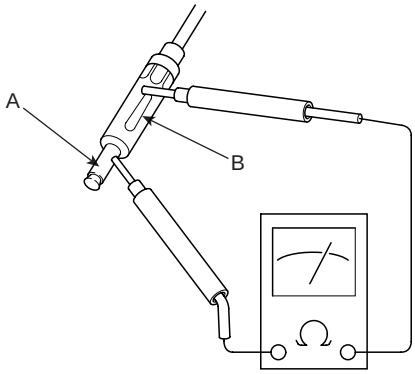

ATJF023F

6. If there is continuity, replace the antenna cable.

REPLACEMENT E8FE7EEC

1. Remove the rear roof trim.
   (Refer to the Body group - Roof trim).
2. Disconnect the 1P power connector (A) and antenna jack (B) from the roof antenna.
3. Remove the roof antenna after removing a nut.

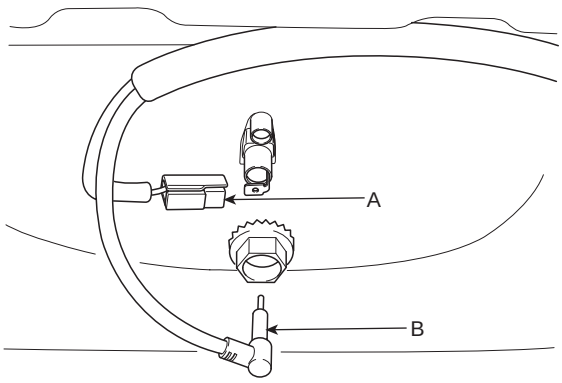

SCMBE6031D

4. Installation is the reverse of removal.

AUDIO REMOTE CONTROL

CIRCUIT DIAGRAM EB89A7CE

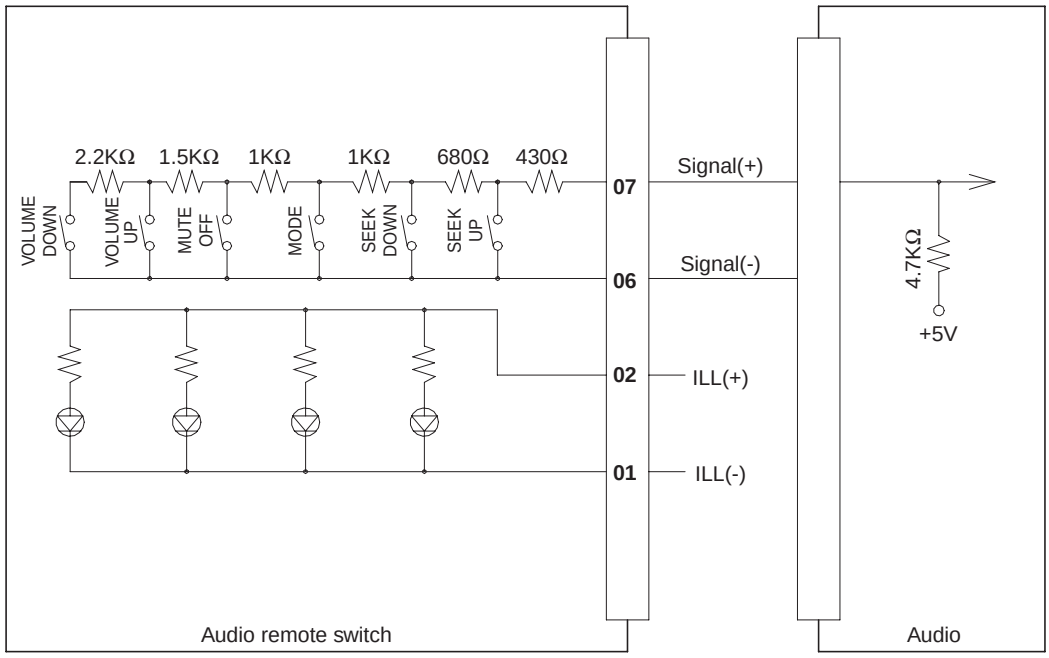

SCMBE6037L

INSPECTION EA0BC62A

1. Check for resistance between No.6 and No.7 terminals in each switch position.

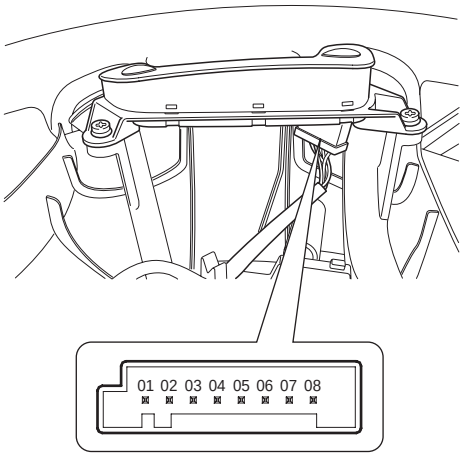

SCMBE6036D

Switch	Connector terminal	Resistance (±5%)
VOLUME DOWN	6 - 7	6.81 kΩ
VOLUME UP	6 - 7	4.61 kΩ
MODE	6 - 7	2.11 kΩ
SEEK DOWN	6 - 7	1.11 kΩ
SEEK UP	6 - 7	430 Ω
MUTE	6 - 7	3..11 kΩ

REPLACEMENT E2420AFD

1. Disconnect the negative (-) battery terminal.
2. Remove the driver airbag module. (Refer to the Airbag group).

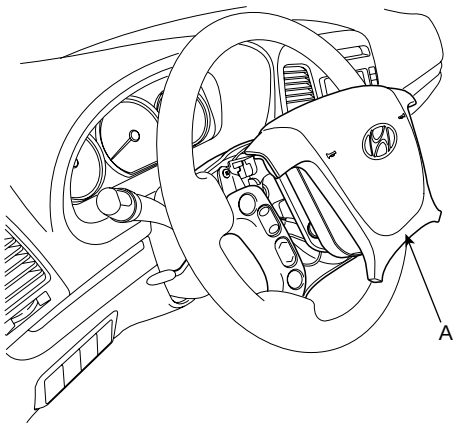

SCMBE6034D

3. Remove the audio remote control switch (B) after remove the steering wheel remote control switch connector (A) and 2 screws.

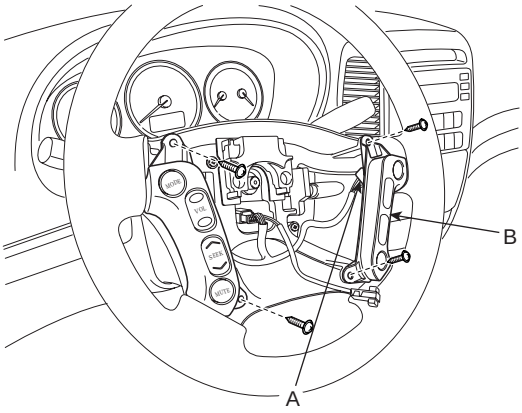

SCMBE6035D

4. Installation is the reverse of removal.

MULTI FUNCTION SWITCH

SPECIFICATIONS E0A2FFD2

Items		Specifications
Rated voltage		DC 12V
Operating temperature range		-30°C ~ +80°C (-22 ~ +176°F)
Rated load	Dimmer & passing switch	High : 1A (Relay load) Low : 1A (Relay load) Passing : 1A (Relay load)
	Lighting switch	Lighting : 1A (Relay load)
	Turn signal switch	6.6 ± 0.5A (Lamp load)
	Wiper & mist switch	Low, High : 4A (Motor load) Intermittent : 0.22 ± 0.05A (Relay load) Lock : Max. 23A (Motor load) Mist : 4A (Motor load)
	Washer switch	4A (Motor load)
	Variable intermittent volume switch	Max. 25mA
	Rear wiper & washer switch	Rear wiper : 200mA (Relay load) Rear washer : 4A (Motor load)

COMPONENT E42330BD

[LHD]

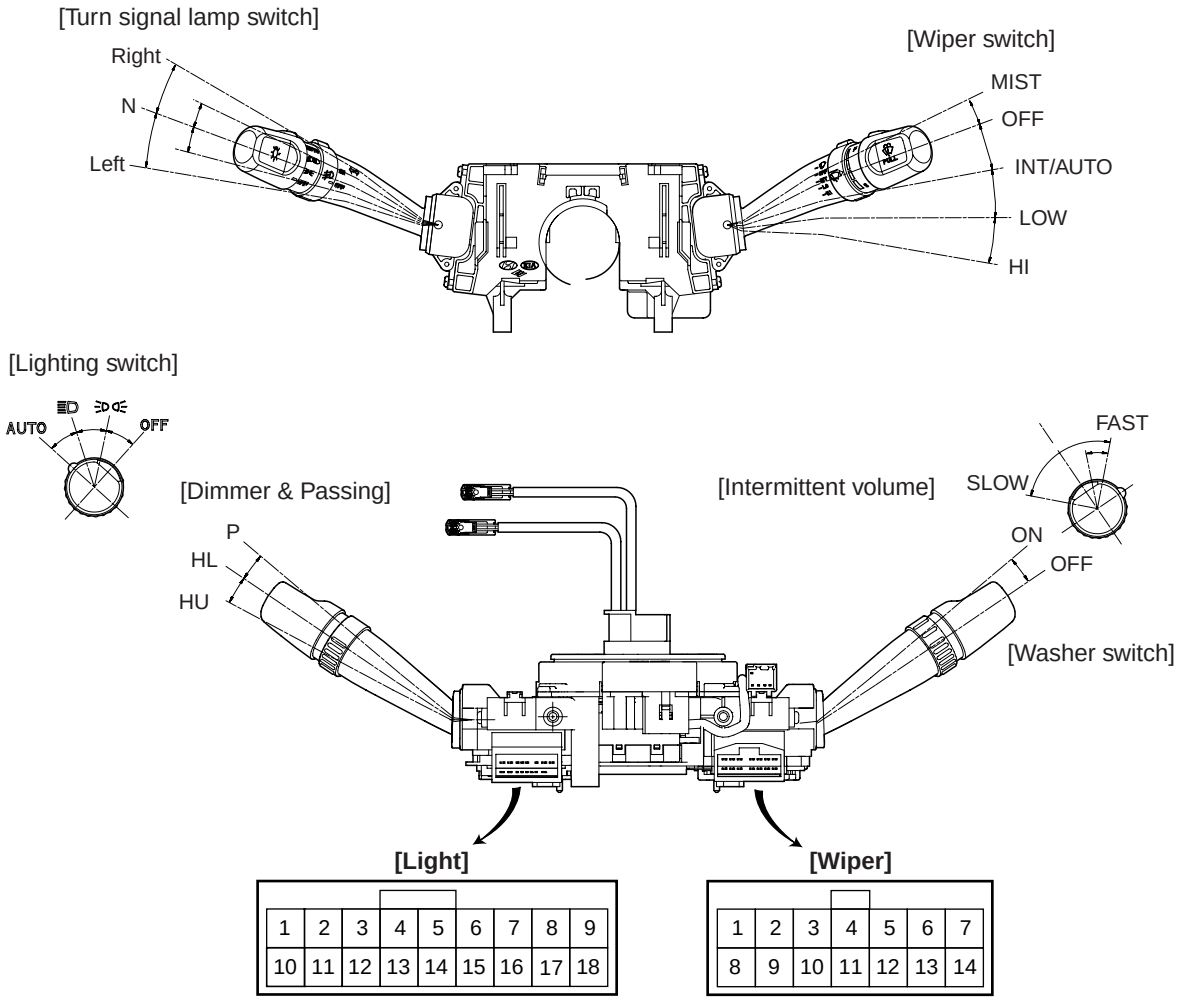

Circuit connection

Connector Name	Terminal No.	Description	Connector Name	Terminal No.	Description
Light	1	Head lamp passing	**Wiper**	1	Wiper high speed
	2	Head lamp high beam power		2	Wiper low speed
	7	Turn signal lamp (RH)		3	Wiper parking
	8	Flasher unit power		4	Mist switch
	9	Turn signal lamp (LH)		5	Wiper & washer power
	10	Head lamp low beam power		6	Intermittent wiper
	11	Dimmer & passing ground		7	Front washer switch
	12	-		8	-
	13	-		9	Rear washer & wiper switch
	14	Tail lamp switch		10	-
	15	Head lamp switch		11	Rear wiper
	16	Rear fog lamp/Auto light switch		12	Rear washer
	17	Lighting switch ground		13	Intermittent wiper volume
	18	-		14	Intermittent wiper ground

SCMBE6040L

[RHD]

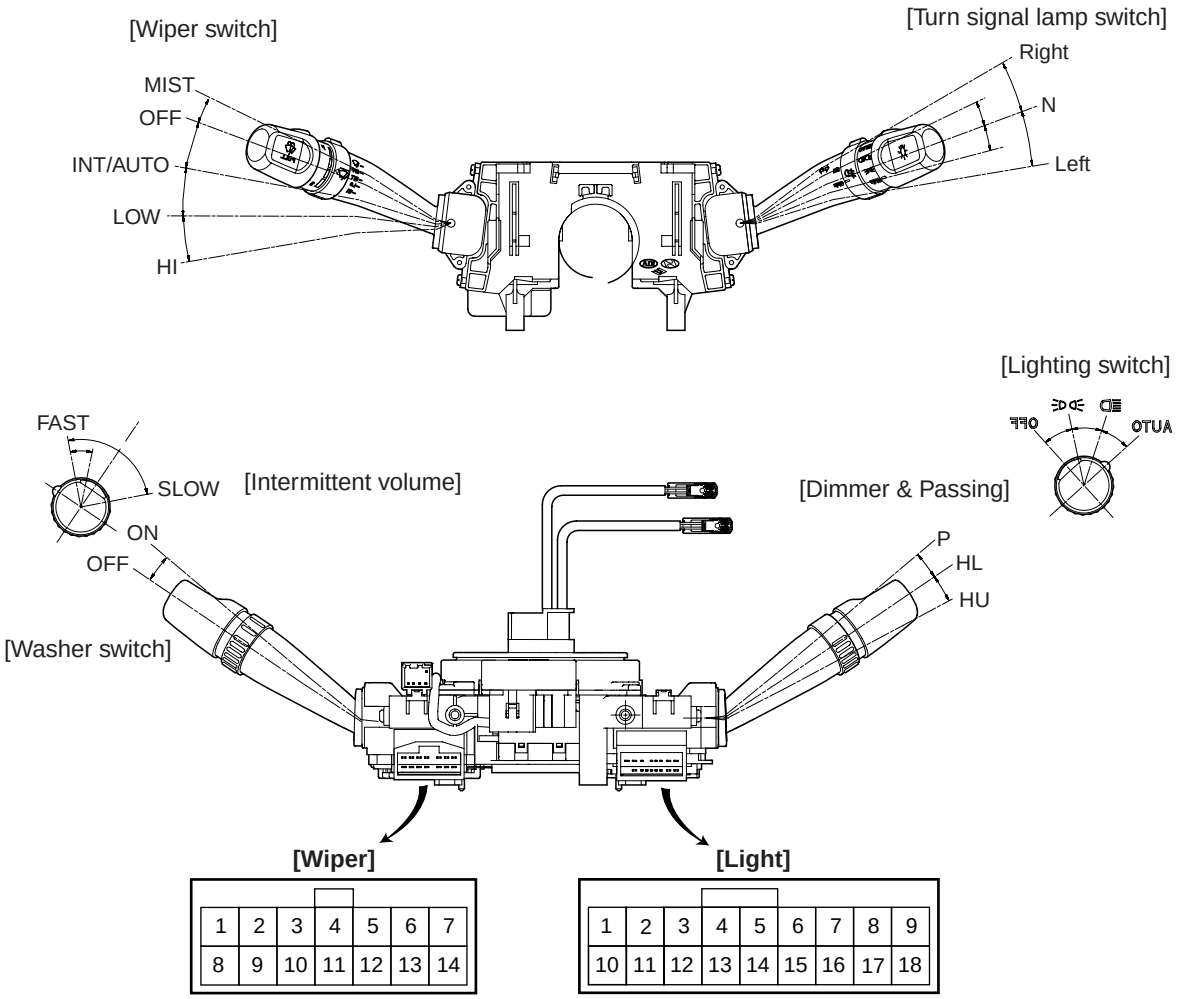

Circuit connection

Connector Name	Terminal No.	Description	Connector Name	Terminal No.	Description
Wiper	1	Front washer switch	**Light**	1	Turn signal lamp (RH)
	2	Intermittent wiper		2	Flasher unit power
	3	Wiper & washer power		3	Turn signal lamp (LH)
	4	Mist switch		8	Head lamp low beam power
	5	Wiper parking		9	Head lamp passing
	6	Wiper low speed		11	-
	7	Wiper high speed		12	-
	8	Intermittent wiper ground		13	Tail lamp switch
	9	Intermittent wiper volume		14	Head lamp switch
	10	Rear washer		15	Rear fog lamp/Auto light switch
	11	Rear wiper		16	Lighting switch ground
	12	-		17	Dimmer & passing ground
	13	Rear washer & wiper switch		18	Head lamp low beam power
	14	-		19	-

SCMBE6040R

INSPECTION E7E08FEB

LIGHTING SWITCH INSPECTION

1. With the multi function switch in each position, make sure that continuity exists between the terminals below.
   If continuity is not as specified, replace the multi-function switch

[LHD]

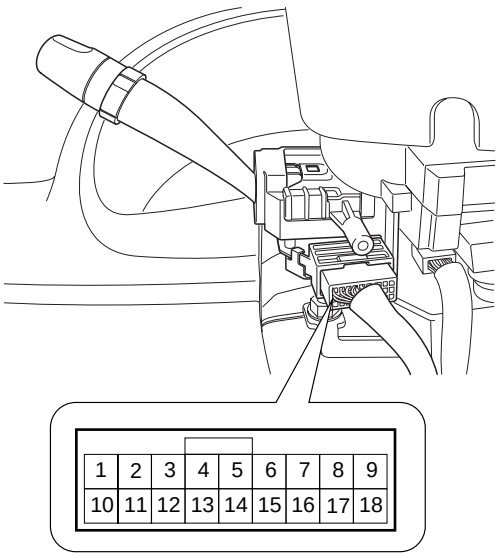

SCMBE6044D

[RHD]

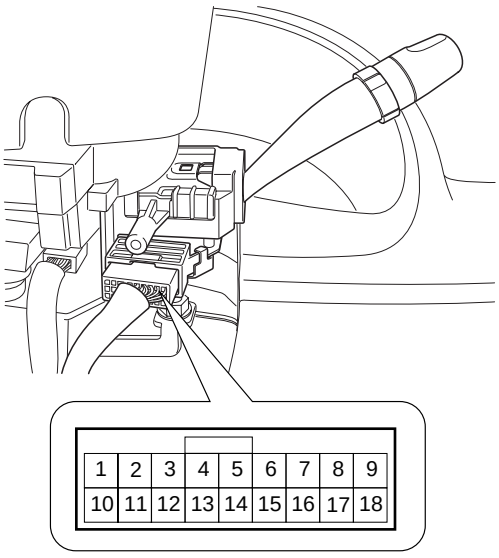

SCMBE6044R

LIGHTING SWITCH (AUTO LIGHT)

( ) : RHD

Position \ Terminal	14(13)	15(14)	16(15)	17(16)
OFF				
I	○	—	—	○
II	○	○	—	○
AUTO			○	○

SCMBE6045L

LIGHTING SWITCH

( ) : RHD

Position \ Terminal	14(13)	15(14)	16(15)	17(16)
OFF				
I	○	—	—	○
II	○	○	○	○

SCMBE6046L

DIMMER AND PASSING SWITCH

( ) : RHD

Position \ Terminal	1(9)	2(8)	10(18)	11(17)
HU		○	—	○
HL			○	○
P	○	○	—	○

HU : Head lamp high beam
HL : Head lamp low beam
P : Head lamp passing switch

SCMBE6047L

TURN SIGNAL SWITCH

( ) : RHD

Hazard switch	Turn signal switch \ Terminal	7(1)	8(2)	9(3)
OFF	L		○	○
	N			
	R	○	○	

SCMBE6048L

WIPER AND WASHER SWITCH INSPECTION

1. With the multi function switch in each position, make sure that continuity exists between the terminals below.
   If continuity is not as specified, replace the multi-function switch.

[LHD]

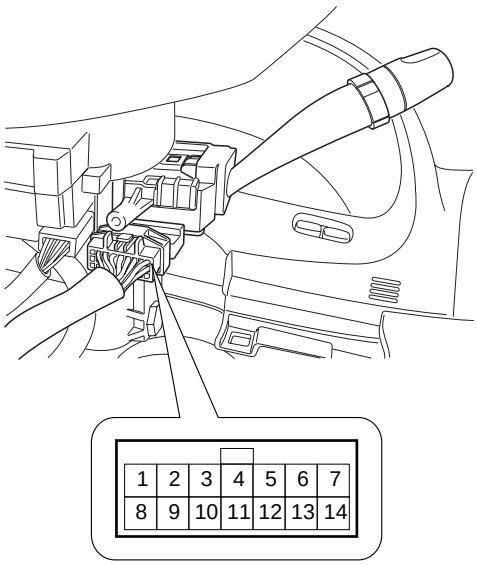

SCMBE6050D

[RHD]

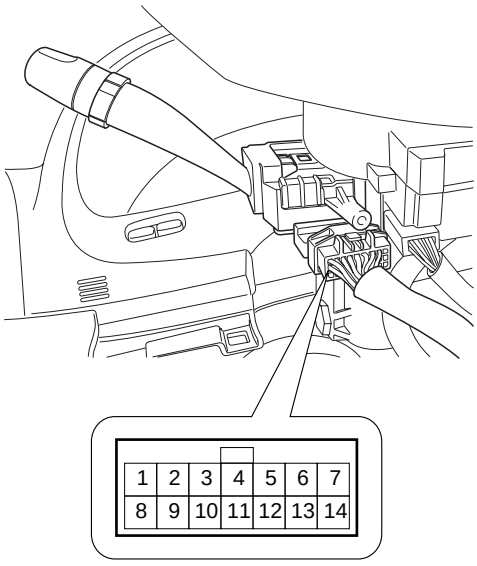

SCMBE6050R

WIPER SWITCH

[RAIN SENSOR] ( ) : RHD

Terminal / Position	1 (7)	2 (6)	3 (5)	4 (4)	5 (3)	6 (2)	13 (9)	14 (8)
MIST				○	○			
OFF		○	○					
AUTO		○	○		○	○	○	○
LOW		○			○			
HI	○				○			

SCMBE6052L

[STANDARD] ( ) : RHD

Terminal / Position	1 (7)	2 (6)	3 (5)	4 (4)	5 (3)	6 (2)	13 (9)	14 (8)
MIST				○	○			
OFF		○	○					
INT		○	○		○	○	○	○
LOW		○			○			
HI	○				○			

SCMBE6051L

WASHER SWITCH

( ) : RHD

Terminal / Position	5(3)	7(1)
OFF		
ON	○	○

SCMBE6053L

REAR WIPER & WASHER SWITCH

( ) : RHD

Terminal / Position	9(13)	11(11)	12(10)
Rear washer	○		⊖
OFF			
ON	○	⊖	
Rear washer	○		⊖

SCMBE6054L

REPLACEMENT E5E9CB1C

1. Disconnect the negative (-) battery terminal.
2. Remove the steering column upper and lower shrouds (A) after removing 3 screws.

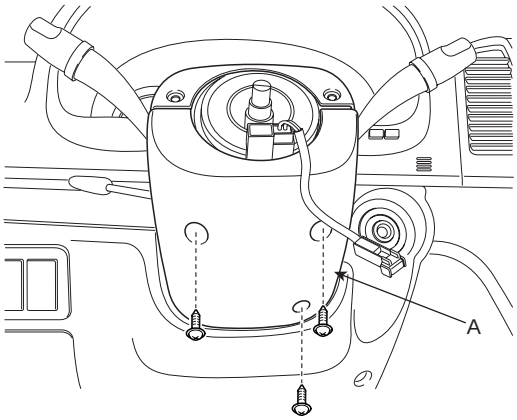

SCMBE6041D

3. Remove the light switch (A) by pushing the lock pin after disconnecting the connector.

[LHD]

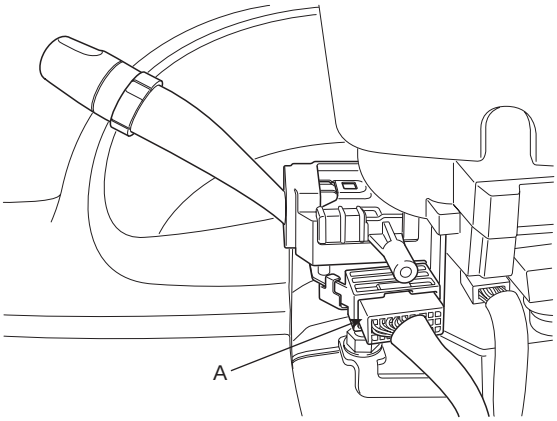

SCMBE6042D

[RHD]

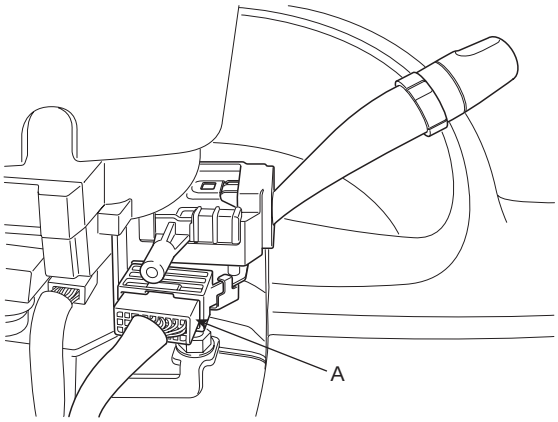

SCMBE6042R

4. Remove the wiper switch (A) by pushing the lock pin after disconnecting the connector.

[LHD]

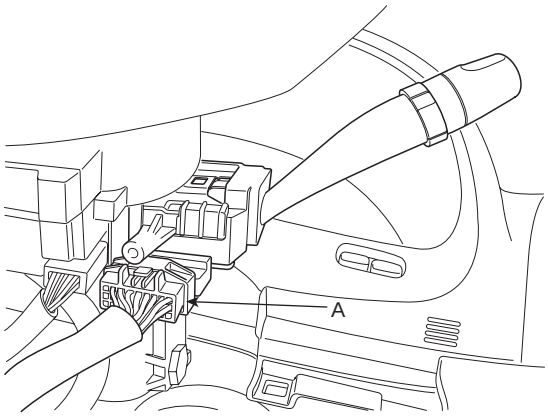

SCMBE6043D

[RHD]

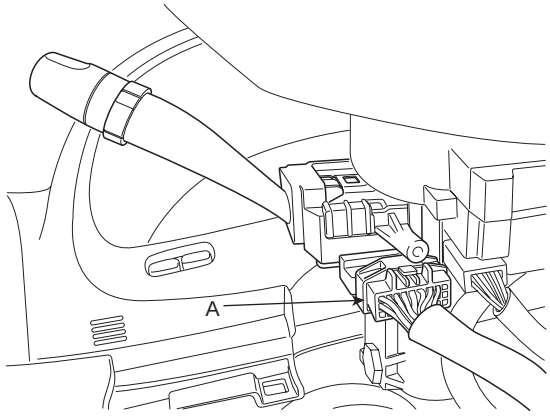

SCMBE6043R

5. Installation is the reverse of removal.

HORNS

COMPONENT LOCATION E15C8F93

The parts with asterisk(*) :
This illustration shows the LHD type.
RHD type is symmetrical.

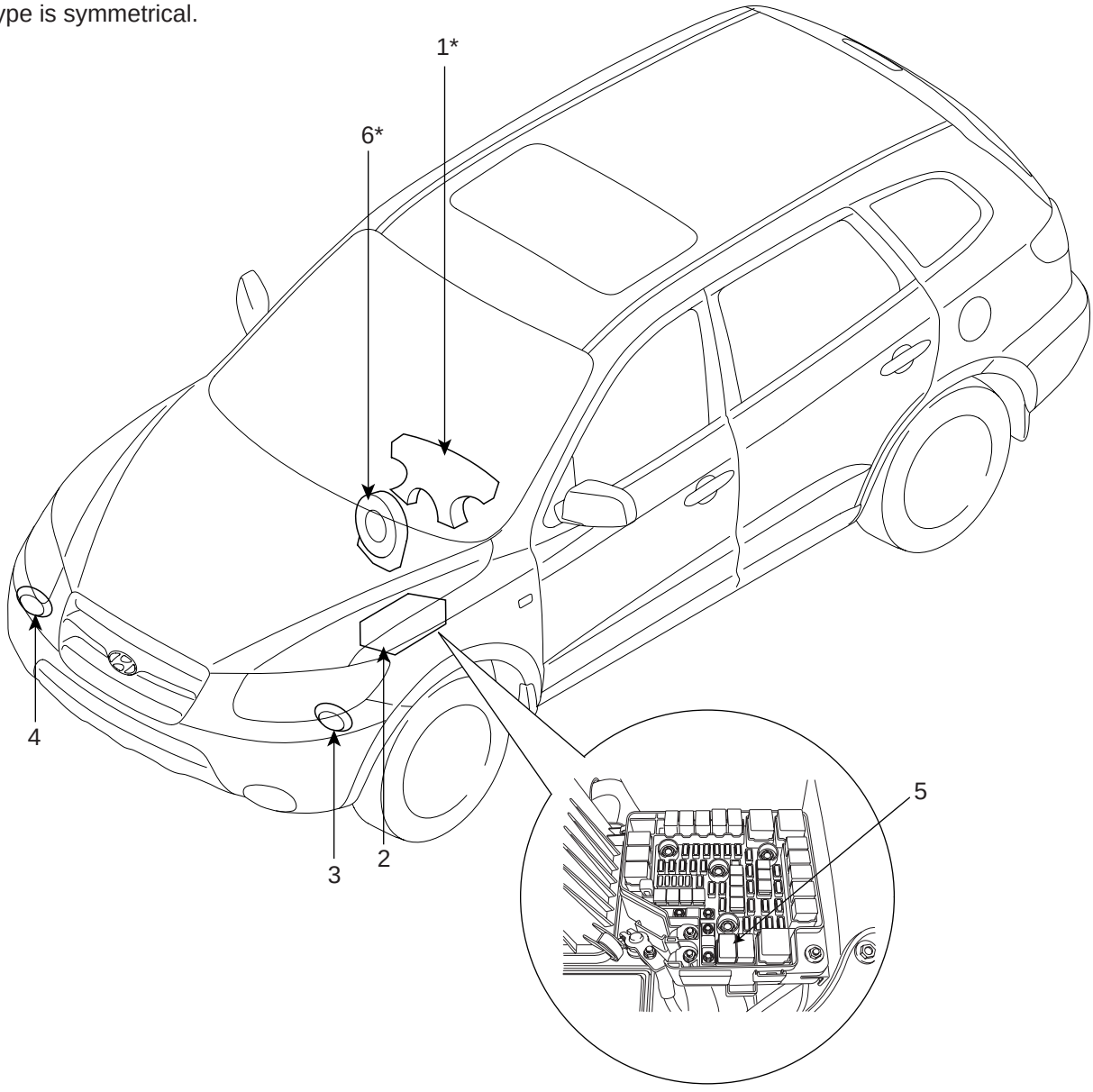

1. Horn switch
2. Relay box (Engine room compartment)
3. Horn (Low pitch)
4. Horn (High pitch)
5. Horn relay
6. Clock spring

SCMBE6060L

INSPECTION EC1AB8DD

Test the horn by connecting battery voltage to the 1 terminal and ground the 2 terminal.
The horn should make a sound. If the horn fails to make a sound, replace it.

HORN RELAY INSPECTION

1. Remove the horn relay (A) from the engine room relay box.
2. There should be continuity between the No.30 and No.87 terminals when power and ground are connected to the No.85 and No.86 terminals.
3. There should be no continuity between the No.30 and No.87 terminals when power is disconnected.

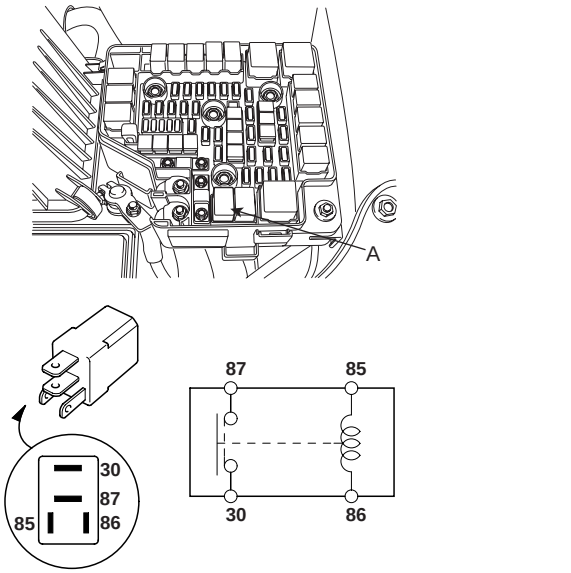

SCMBE6062D

Terminal / Power	30	87	85	86
Disconnected			○	○
Connected	○	○	⊖	⊕

SCMBE6063L

REPLACEMENT ECB03EF0

1. Remove the front bumper. (Refer to the Body group - front bumper).
2. Remove the bolt and disconnect the horn connector, then remove the high pitch horn (A) and low pitch horn (B).

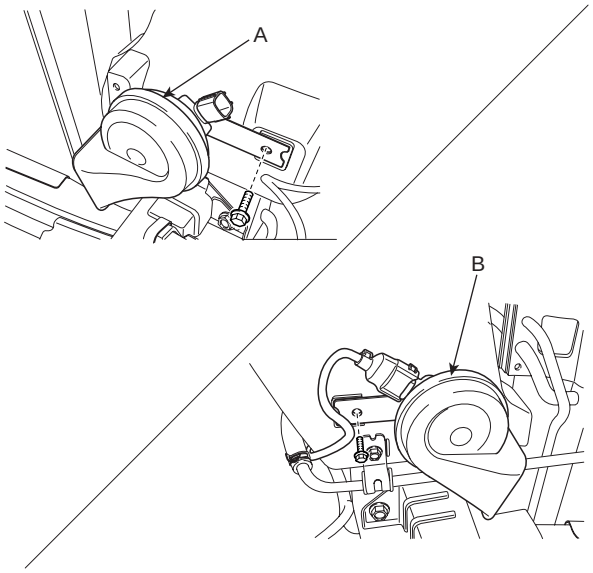

SCMBE6061D

3. Installation is the reverse of removal.

ADJUSTMENT E3F677F8

1. Operate the horn, and adjust the tone to a suitable level by turning the adjusting screw.

NOTE

After adjustment, apply a small amount of paint around the screw head to keep it from loosening.

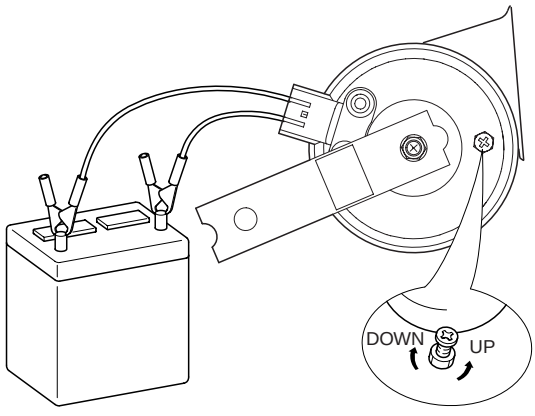

SCMBE6064D

KEYLESS ENTRY AND BURGLAR ALARM

COMPONENT LOCATION E168CF7A

The parts with asterisk(*) :
This illustration shows the LHD type.
RHD type is symmetrical.

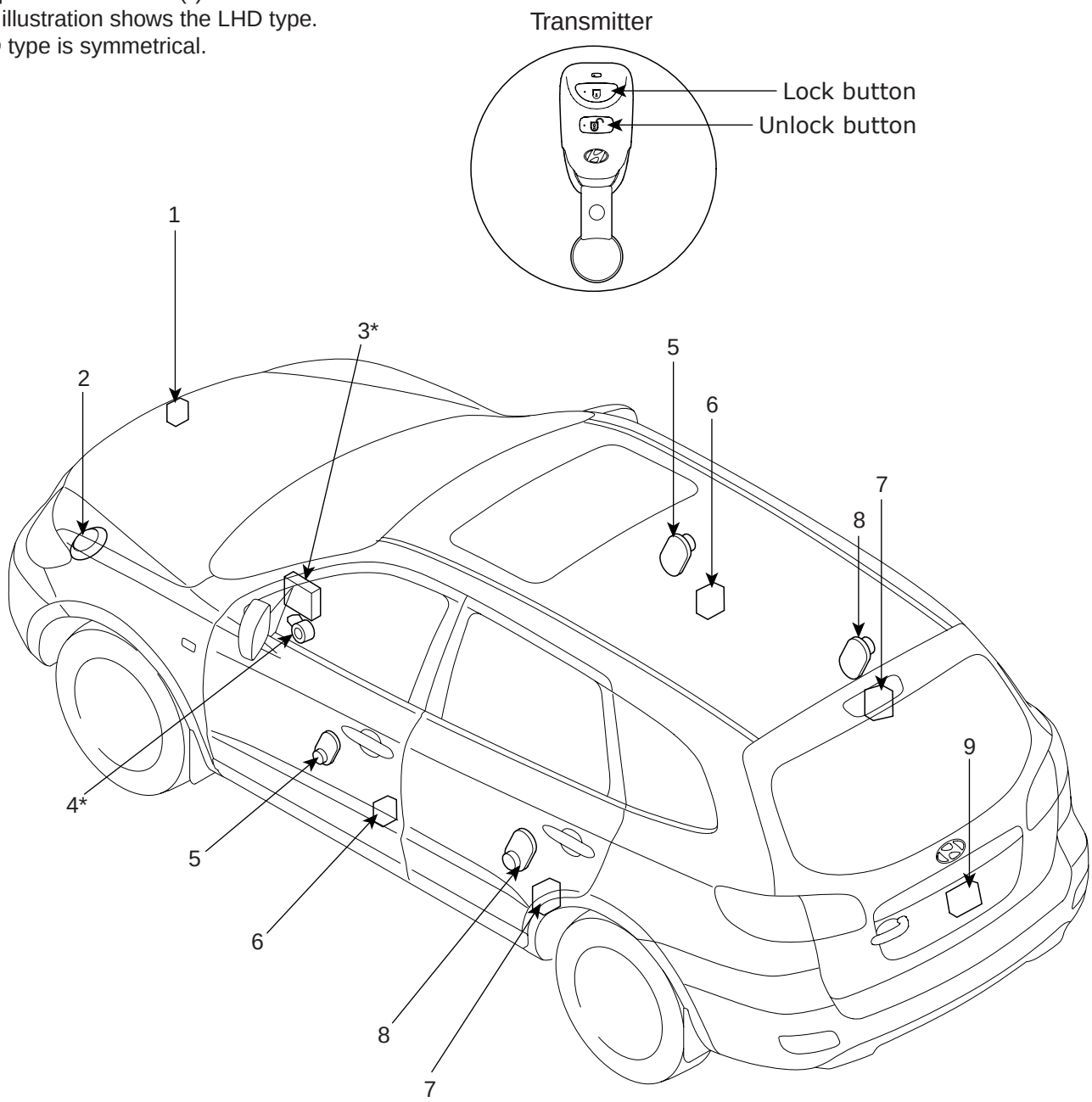

1. Hood switch
2. Burglar horn
3. Body control module
4. Key warning switch
5. Front door switch
6. Front door lock actuator & switch
7. Rear door lock actuator & switch
8. Rear door switch
9. Tailgate lock actuator & switch

SCMBE6120L

DESCRIPTION E5FCECF8

BURGLAR ALARM SYSTEM

The burglar alarm system is armed automatically after the doors, hood, and tailgate are closed and locked.

The system is set off when any of these things occur :
- A door is forced open.
- The tailgate is opened without using the key.
- The hood is opened.

When the system is set off, the alarm sounds and the hazard lamp flash for about 30 seconds or until the system is disarmed by unlocking the transmitter.

For the system to arm, the ignition switch must be off and the key removed. Then, the body control module must receive signals that the doors, hood, and tailgate are closed and locked. When everything is closed and locked, none of the control unit inputs are grounded.

The door switches, hood switch and tailgate switch are all close and lock the doors with the remote transmitter and then the system arms immediately.

If anything is opened after the system is armed, the body control module gets a ground signal from that switch, and the system is set off.

If one of the switches is misadjusted or there is a short in the system, the system will not arm. As long as the body control module continues to get a ground signal, it thinks the vehicle is not closed and locked and will not arm.

KEYLESS ENTRY SYSTEM

The burglar alarm system is integrated with the keyless entry system. The keyless entry system allows you to lock and unlock the vehicle with the remote transmitter. When you push the LOCK/UNLOCK button, all doors lock. When you push the LOCK/UNLOCK button again, all doors unlock.

The room lamp, if its switch is in the center position, will come on when you press the UNLOCK button. If you do not open a door, the light will go off in about 30 seconds, the doors will automatically relock, and the burglar alarm system will rearm. If you relock the doors with the remote transmitter within 30 seconds, the light will go off immediately.

You cannot lock or unlock the doors with the remote transmitter if the key is in the ignition switch.

The system will signal you when the doors lock and unlock by flashing the hazard lamp once when they lock, and twice when they unlock.

FUNCTION E3F8A938

ANTI-THEFT WARNING SYSTEM

* Arm Mode

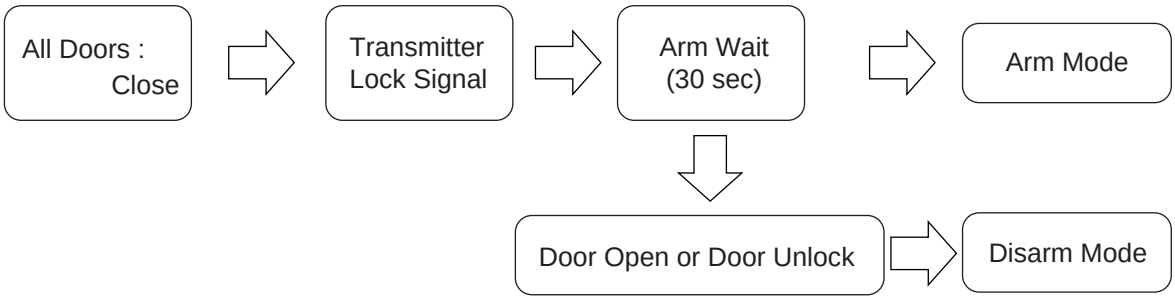

* Auto Lock Timer 1



* Auto Lock Timer 2

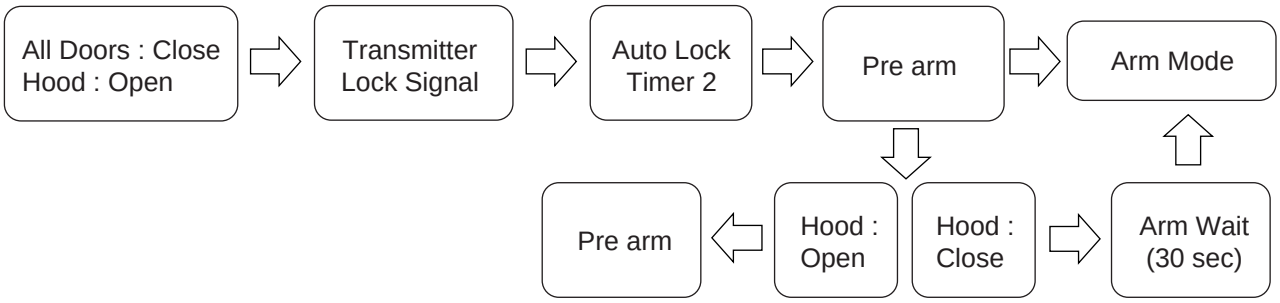

* Auto Lock Timer 2

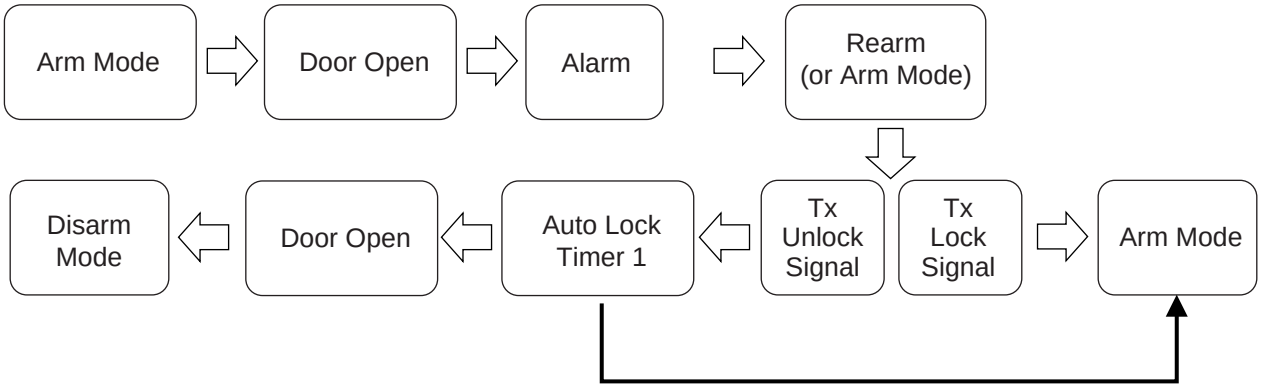

Tx : Transmitter

SCMBE6089L

1. SECURITY LED CONTROL

   1) If the KEY IN is ON or ACC is ON or IGN1 is ON or IGN2 is ON, the LED shall be OFF.

   2) When entered into the ARM WAIT mode in the IGN KEY OUT state, control not only the FULL ON but also the BLINKING in the mode other than the ARM WAIT.

   3) The BLINKING cycle is 2.3 seconds, and it is ON for 0.3 seconds and OFF for 2.0 seconds.

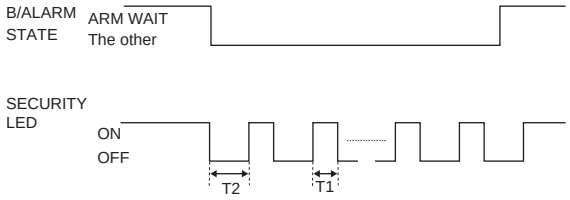

SCMBE6123L

T1 : 0.3s, T2 : 2s

2. DISARM

CONDITION 1

State	Description
Initial Condition	ALARM
Transition Condition	- When 4DOOR or T/GATE is OPEN and TX(Transmitter) UNLOCK is input - After 30 seconds in the KEY IN ON and IGN1 ON and IGN2 ON states - When all doors are unlocked (LOCK FAIL) within 5 seconds after the TX(Transmitter) LOCK input
Operating	- ENTRY INTO THE DISARM STATE - HORN, HAZARD, B/ALARM output shall be OFF - In the case of the TX UNLOCK input, the HAZARD LAMP signal is output with the cycle of the ON/OFF of 0.5 seconds two times.

CONDITION 2

State	Description
Initial Condition	In the DISARM state and any one of the IGN KEY OUT & 4DOOR and T/GATE are opened
Transition Condition	When entering TX UNLOCK
Operating	- Maintain in the DISARM state - The HAZARD LAMP signal is output with the ON/OFF cycle of 0.5 seconds two times.

CONDITION 3

State	Description
Initial Condition	ARM WAIT state
Transition Condition	- When any one of the 4DOOR, HOOD or T/GATE is opened. - When at least one or more doors are unlocked. - In case of KEY IN. - When the DRIVER KEY UNLOCK(T/GATE KEY UNLOCK) signal is input
Operating	- ENTRY INTO THE DISARM STATE

CONDITION 4

State	Description
Initial Condition	AUTOLOCK TIMER1 state
Transition Condition	- When any one of the 4DOOR, HOOD or T/GATE is opened. - In case of KEY IN. - LOCK FAIL after the LOCK attempt by the AUTO LOCK. - LOCK FAIL after the LOCK attempt by the TX LOCK. - LOCK FAIL after the LOCK attempt by the DRIVER KEY LOCK(T/GATE KEY LOCK).
Operating	- ENTRY INTO THE DISARM STATE

CONDITION 5

State	Description
Initial Condition	AUTOLOCK TIMER2 state
Transition Condition	- When any one of the 4DOOR, HOOD or T/GATE is opened. - In case of KEY IN. - LOCK FAIL after the LOCK attempt by the AUTO LOCK. - LOCK FAIL after the LOCK attempt by the TX LOCK. - LOCK FAIL after the LOCK attempt by the DRIVER KEY LOCK (In case of B_MECH_KEY=Enable)
Operating	- ENTRY INTO THE DISARM STATE

CONDITION 6

State	Description
Initial Condition	ARM state
Transition Condition	- IGN KEY ON - DRIVER KEY UNLOCK(T/GATE KEY UNLOCK) input.
Operating	- ENTRY INTO THE DISARM STATE

CONDITION 7

State	Description
Initial Condition	REARM state
Transition Condition	- After 30 seconds in the IGN KEY ON state. - LOCK FAIL after the LOCK attempt by the TX LOCK. - LOCK FAIL after the LOCK attempt by the DRIVER KEY LOCK. - When entering DRIVER KEY UNLOCK.
Operating	- ENTRY INTO THE DISARM STATE - B/ALARM RELAY OFF

CONDITION 8

State	Description
Initial Condition	REARM state
Transition Condition	- In case of TX UNLOCK INPUT in the state that any one of the 4DOOR or T/GATE is opened. - In case of KEY IN. - In case of the 4DOORor T/GATE or HOOD is closed and at least one door is unlocked.
Operating	- ENTRY INTO THE DISARM STATE - In the case of the TX UNLOCK INPUT, the HAZARD LAMP signal is output two times with the ON/OFF cycle of 0.5 seconds.

3. ARM

CONDITION 1

State	Description
Initial Condition	ARM state
Transition Condition	When entering TX LOCK
Operating	- Keep the ARM state - The HAZARD LAMP signal is output for 1s once.

CONDITION 2

State	Description
Initial Condition	ARM WAIT state
Transition Condition	After the ARM WAIT TIMER completion
Operating	- ENTRY INTO THE ARM state

4. ALARM

CONDITION 1

State	Description
Initial Condition	ARM state
Transition Condition	In case of 4DOOR, T/GATE or HOOD is opened.
Operating	- ENTRY INTO THE ALARM state - The B/ALARM RELAY outputs is ON, and then, inhibit the start. - Non-EC area: the Horn alarm shall be output three times with the cycle consisting of the ON for 27s(±2s) and the OFF for 10s(±1s). (At this time, the Hazard Lamp signal shall also be output as the Horn alarm.) - EC and The Middle EAST: the HORN alarm output shall be ON for 27s(±2s) once. (At this time, the Hazard Lamp signal output shall also be ON as the Horn alarm.)

CONDITION 2

State	Description
Initial Condition	REARM state
Transition Condition	In case of 4DOOR, T/GATE or HOOD is opened.
Operating	- ENTRY INTO THE ALARM state - Non-EC area: the Horn alarm shall be output three times with the cycle consisting of the ON for 27s(±2s) and the OFF for 10s(±1s). (At this time, the Hazard Lamp signal shall also be output as the Horn alarm.) - EC and The Middle EAST: the HORN alarm output shall be ON for 27s(±2s) once. (At this time, the Hazard Lamp signal output shall also be ON as the Horn alarm.)

■ Non-EC SPECIFICATION

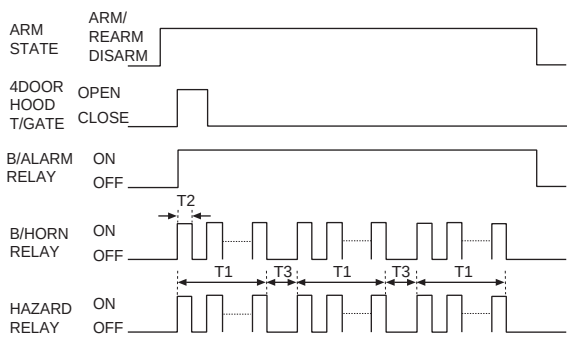

SCMBE6124L

■ EC SPECIFICATION

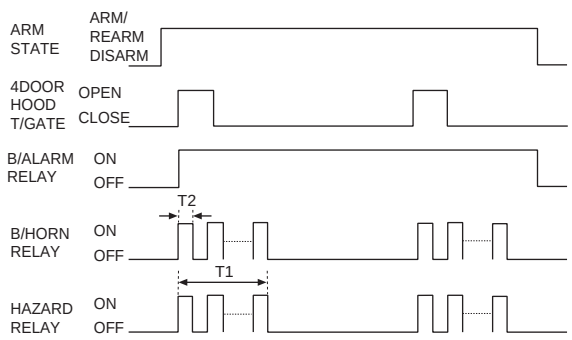

SCMBE6119L

T1 : 27 ± 2sec, T2 : 0.4 ~ 0.5 sec,
T3 : 10 ± 1sec.

T1 : 27 ± 2sec, T2 : 0.4 ~ 0.5 sec.

5. ARM WAIT

CONDITION 1

State	Description
Initial Condition	ARM WAIT state
Transition Condition	When entering TX LOCK
Operating	- Keep ARM WAIT state - The HAZARD LAMP signal shall be output for 1s once.

CONDITION 2

State	Description
Initial Condition	DISARM state & IGN KEY OUT & 4DOOR, T/GATE and HOOD CLOSE state
Transition Condition	- In case of LOCK SUCCESS after the LOCK attempt by the TX LOCK. - In case of LOCK SUCCESS after the LOCK attempt by the DRIVER KEY LOCK (T/GATE KEY LOCK) INPUT. - In case of 4DOOR, T/GATE, HOOD OPEN>CLOSE with all doors locked.
Operating	- Entry into the ARM WAIT state - The HAZARD LAMP signal shall be output for 1s once. - Start the ARMWAIT TIMER

CONDITION 3

State	Description
Initial Condition	ALARM state & IGN KEY OUT & 4DOOR, T/GATE and HOOD CLOSE state
Transition Condition	- In case of LOCK SUCCESS after the LOCK attempt by the TX LOCK. - In case of LOCK SUCCESS after the LOCK attempt by the DRIVER KEY LOCK (T/GATE KEY LOCK) INPUT.
Operating	- Entry into the ARM WAIT state - OFF the HORN, B/ALARM output. - The HAZARD LAMP signal shall be output for 1s once - Start the ARMWAIT TIMER

CONDITION 4

State	Description
Initial Condition	AUTOLOCK TIMER1 state
Transition Condition	- In case of LOCK SUCCESS after the LOCK attempt by the AUTOLOCK. - In case of LOCK SUCCESS after the LOCK attempt by the TX LOCK. - In case of LOCK SUCCESS after the LOCK attempt by the DRIVER KEY LOCK (T/GATE KEY LOCK) INPUT
Operating	- Entry into the ARM WAIT state - The HAZARD LAMP signal shall be output for 1s once. - Start the ARMWAIT TIMER

CONDITION 5

State	Description
Initial Condition	PREARM state
Transition Condition	- 4DOOR, T/GATE and HOOD are closed and all doors are locked.
Operating	- Entry into the ARM WAIT state - The HAZARD LAMP signal shall be output for 1s once. - Start the ARMWAIT TIMER

CONDITION 6

State	Description
Initial Condition	REARM state
Transition Condition	- LOCK SUCCESS after the LOCK attempt by the TX LOCK. - LOCK SUCCESS after the LOCK attempt by the DRIVER KEY LOCK (T/GATE KEY LOCK) INPUT.
Operating	- Entry into the ARM WAIT state - The HAZARD LAMP signal shall be output for 1s once. - B/ALARM RLY OFF - Start the ARMWAIT TIMER

6. REARM

CONDITION 1

State	Description
Initial Condition	ALARM state
Transition Condition	4DOOR, T/GATE and HOOD are closed and after the ALARM PATTERN completion
Operating	- Entry into the REARM state

7. AUTO-LOCK TIMER1

CONDITION 1

State	Description
Initial Condition	ARM state
Transition Condition	TX UNLOCK INPUT
Operating	- Entry into the AUTO-LOCK TIMER1 state - The HAZARD LAMP signal shall be output with the ON/OFF cycle of 0.5s two times. - START the AUTOLOCK TIMER1

CONDITION 2

State	Description
Initial Condition	REARM state
Transition Condition	- AUTO-LOCK TIMER1 state. - TX UNLOCK INPUT.
Operating	- keep the AUTO-LOCK TIMER1 state - CASE1: AUTOLOCK TIMER1 COMPLETION LOCK ATTEMPT. - CASE2: TX UNLOCK - The HAZARD LAMP signal shall be output with the ON/OFF cycle of 0.5s two times - RESTART THE AUTOLOCK TIMER1

CONDITION 3

State	Description
Initial Condition	ARM WAIT state
Transition Condition	TX UNLOCK INPUT
Operating	- Entry into the AUTO-LOCK TIMER1 state - The HAZARD LAMP signal shall be output with the ON/OFF cycle of 0.5s two times. - START THE AUTOLOCK TIMER

CONDITION 4

State	Description
Initial Condition	The DISARM state and 4DOOR, T/GATE and HOOD are closed and IGN KEY OUT
Transition Condition	TX UNLOCK INPUT
Operating	- Entry into the AUTO-LOCK TIMER1 STATE - The HAZARD LAMP signal shall be output with the ON/OFF cycle of 0.5s two times. - START THE AUTOLOCK TIMER1

CONDITION 5

State	Description
Initial Condition	ALARM state, and 4DOOR, T/GATE and HOOD CLOSE state
Transition Condition	TX UNLOCK INPUT
Operating	- Entry into the AUTO-LOCK TIMER1 STATE - B/ALARM RELAY OFF - The HAZARD LAMP signal shall be output with the ON/OFF cycle of 0.5s two times. - START THE AUTOLOCK TIMER1

CONDITION 6

State	Description
Initial Condition	REARM state
Transition Condition	TX UNLOCK INPUT
Operating	- Entry into the AUTO-LOCK TIMER1 STATE - B/ALARM RELAY OFF - The HAZARD LAMP signal shall be output with the ON/OFF cycle of 0.5s two times. - START THE AUTOLOCK TIMER1

8. AUTO-LOCK TIMER 2

CONDITION 1

State	Description
Initial Condition	AUTO-LOCK TIMER2 state
Transition Condition	- AUTOLOCK TIMER2 COMPLETION. - TX UNLOCK INPUT.
Operating	- keep the AUTO-LOCK TIMER2 state - CASE1: AUTOLOCK TIMER1 COMPLETION LOCK ATTEMPT. - CASE2: TX UNLOCK - The HAZARD LAMP signal shall be output with the ON/OFF cycle of 0.5s two times - RESTART THE AUTOLOCK TIMER1

CONDITION 2

State	Description
Initial Condition	REARM state
Transition Condition	DISARM state AND 4DOOR & T/GATE CLOSE & HOOD OPEN AND IGN KEY OUT
Operating	- Entry into the AUTO-LOCK TIMER2 STATE - The HAZARD LAMP signal shall be output with the ON/OFF cycle of 0.5s two times. - START THE AUTOLOCK TIMER2

CONDITION 3

State	Description
Initial Condition	ALARM STATE AND 4DOOR & T/GATE CLOSE & HOOD OPEN STATE
Transition Condition	TX UNLOCK INPUT
Operating	- Entry into the AUTO-LOCK TIMER2 STATE - OFF the HORN, B/ALARM OUTPUT - The HAZARD LAMP signal shall be output with the ON/OFF cycle of 0.5s two times. - START THE AUTOLOCK TIMER2

CONDITION 4

State	Description
Initial Condition	PREARM START AND 4DOOR & T/GATE CLOSE & HOOD OPEN STATE
Transition Condition	TX UNLOCK INPUT
Operating	- Entry into the AUTO-LOCK TIMER2 STATE - The HAZARD LAMP signal shall be output with the ON/OFF cycle of 0.5s two times. - START THE AUTOLOCK TIMER2

9. PREARM

CONDITION 1

State	Description
Initial Condition	AUTO-LOCK TIMER2 state
Transition Condition	- LOCK SUCCESS after the LOCK attempt by the AUTO LOCK. - LOCK SUCCESS after the LOCK attempt by the TX LOCK. - LOCK SUCCESS after the LOCK attempt by the DRIVER KEY LOCK (T/GATE KEY LOCK) INPUT.
Operating	- Entry into the PREARM state

CONDITION 2

State	Description
Initial Condition	DISARM state & IGN KEY OUT
Transition Condition	- LOCK SUCCESS after the LOCK ATTEMPT by the TX LOCK in the state that 4 DOOR or T/GATE or HOOD is opened. - LOCK SUCCESS after the LOCK ATTEMPT by the DRIVER KEY LOCK (T/GATE KEY LOCK) INPUT in the state that 4 DOOR or T/GATE or HOOD is opened. - The DOOR is turned to the CLOSE state from the OPEN state in the state that all doors are locked. But, the HOOD is opened.
Operating	- Entry into the PREARM state

CONDITION 3

State	Description
Initial Condition	ALARM state & IGN KEY OUT & 4DOOR or T/GATE or HOOD OPEN
Transition Condition	- LOCK SUCCESS after the LOCK attempt by the TX LOCK. - LOCK SUCCESS after the LOCK attempt by the DRIVER KEY LOCK (T/GATE KEY LOCK) INPUT.
Operating	- Entry into the PREARM state - OFF the HORN, HAZARD, B/ALARM OUTPUT

10. RESET

CONDITION 1

State	Description
Initial Condition	ALARM, REARM state
Transition Condition	Insert after the BATTERY is withdrawn
Operating	- The B/ALARM RELAY shall be ON and the HORN ALARM shall be output three times again (EC SPEC ONCE).

CONDITION 2

State	Description
Initial Condition	ARM state
Transition Condition	Insert after the BATTERY is withdrawn
Operating	- Keep the ARM state.

TROUBLESHOOTING EB6A7DD0

1. Alarm does not work. (Hazard lamps work)

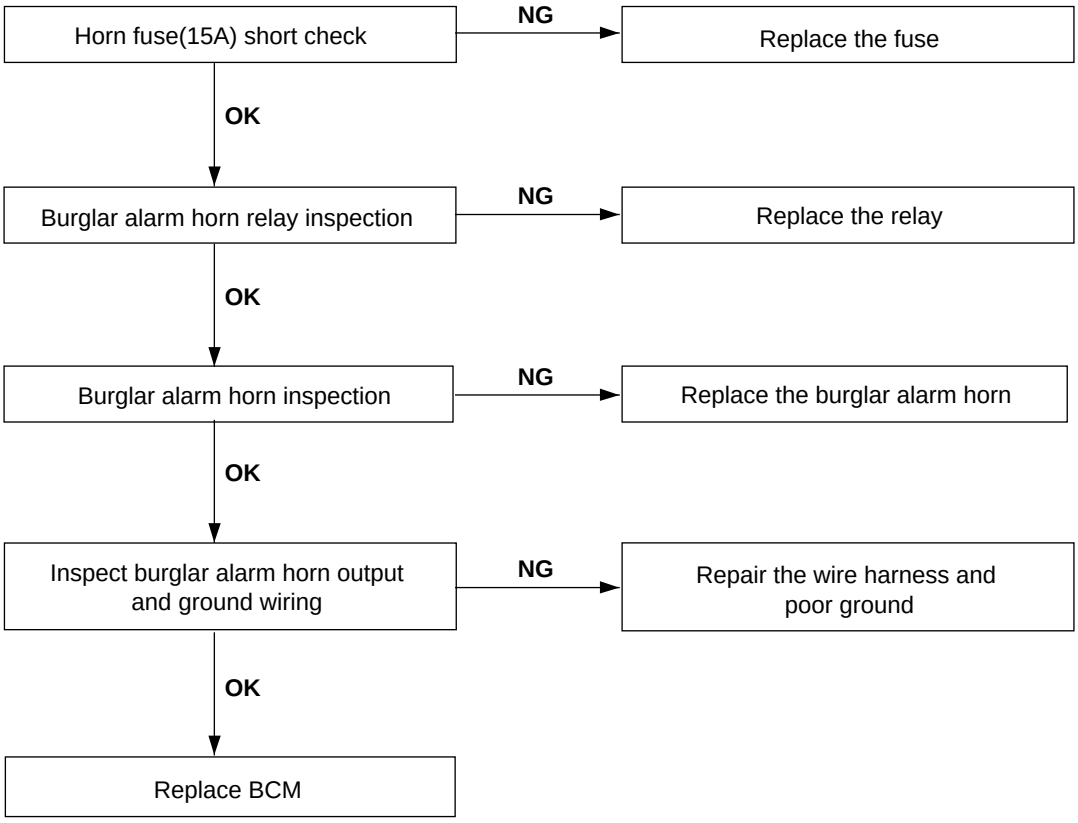

SCMBE6126L

2. When hood is opened in ARM mode, burglar horn does not work.

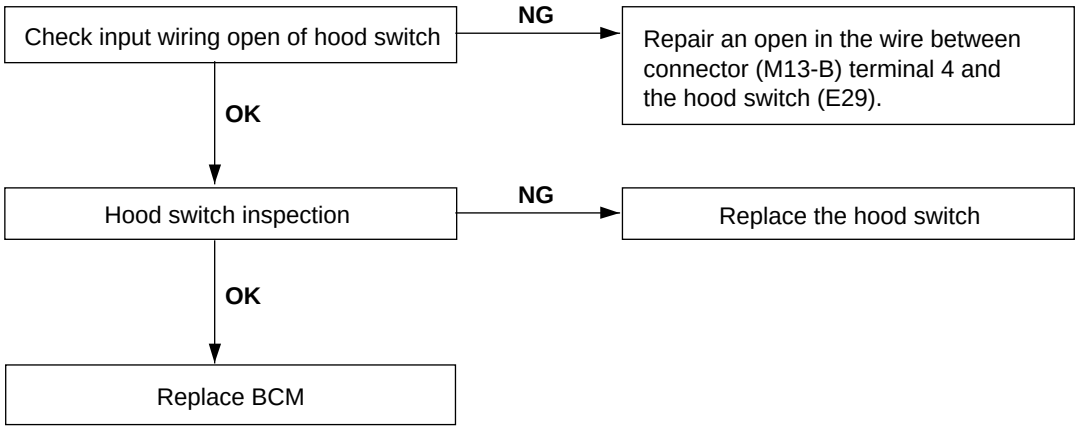

SCMBE6127L

3. When door is opened, burglar horn does not work. (If tailgate and hood is opened, alarm works)

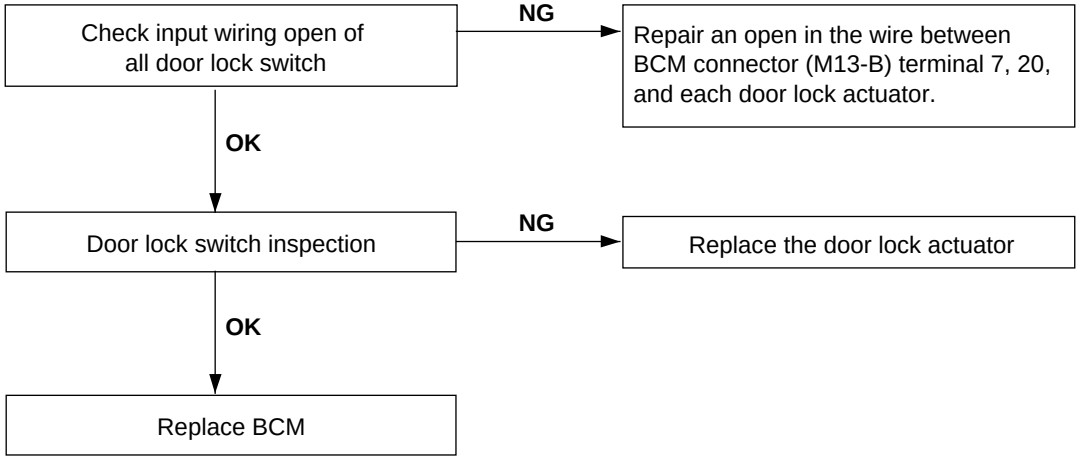

SCMBE6128L

4. When tailgate is opened in ARM mode, burglar horn does not work.

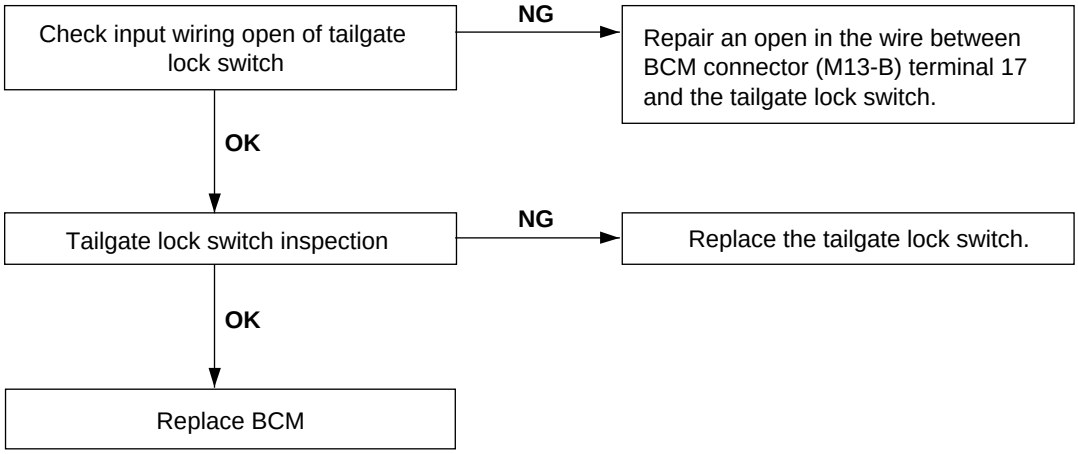

SCMBE6129L

5. When the vehicle is locked by the transmitter, central door lock function works but hazard lamp doesn't blink.

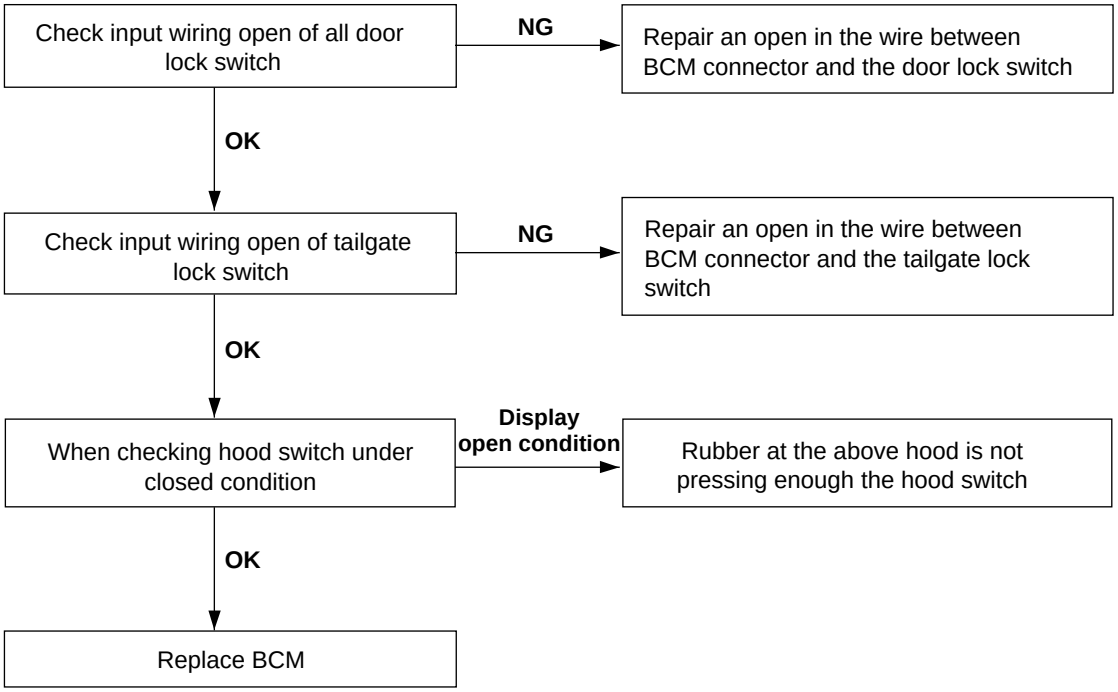

SCMBE6098L

6. Central door lock function works, but keyless entry system does not work.

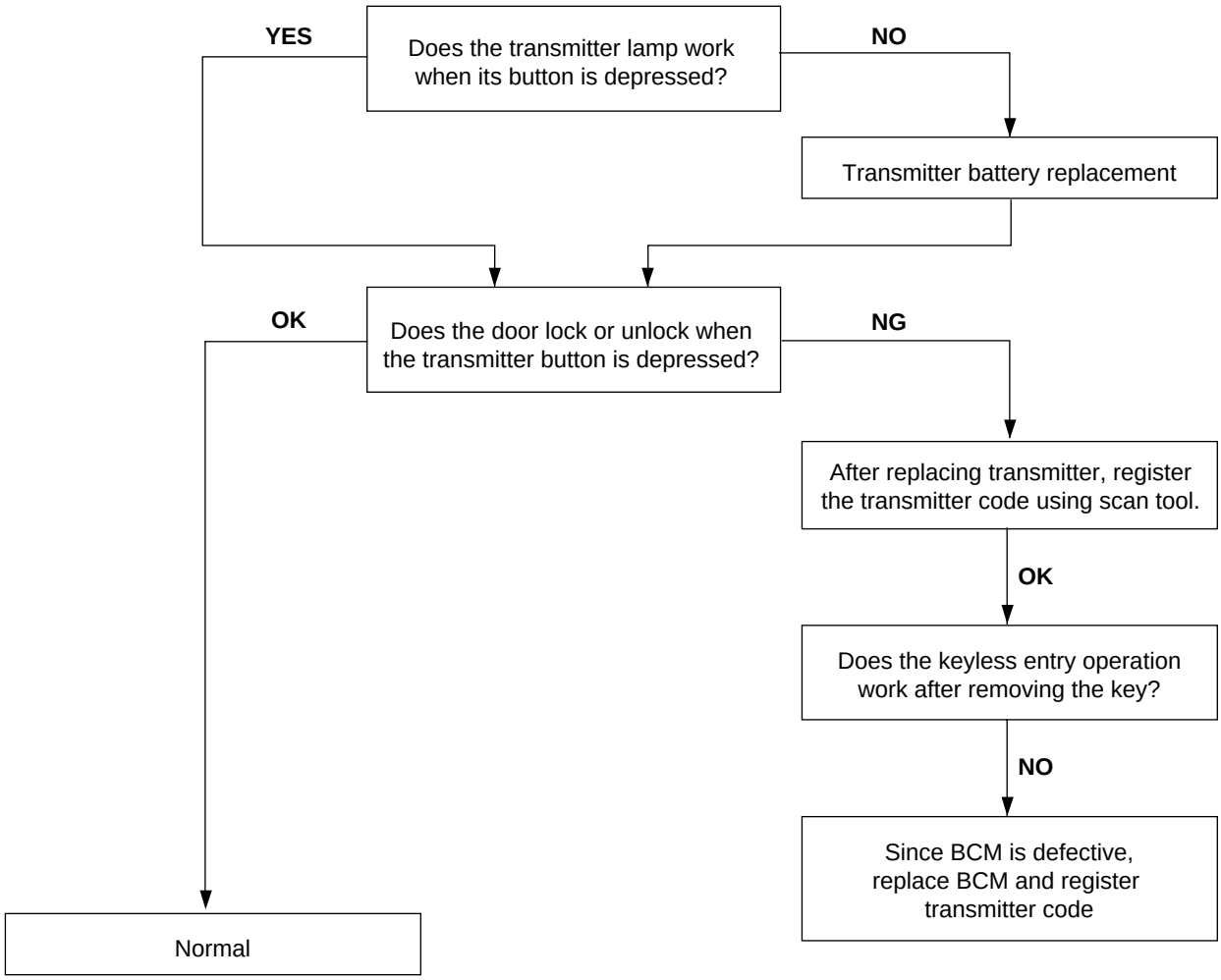

SCMBE6099L

INSPECTION EAD8ECED

FRONT DOOR LOCK ACTUATOR

1. Remove the front door trim.
   (Refer to the Body group - Front door)
2. Remove the front door module.
   (Refer to the Body group - Front door).
3. Disconnect the connectors from the actuator.

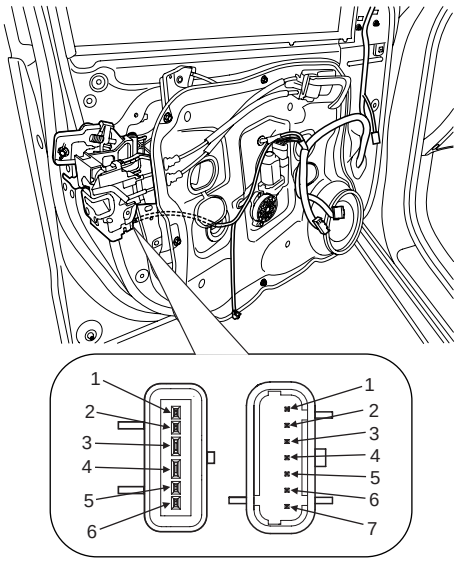

[CENTRAL LOCK] [DEAD LOCK]

SCMBE6130L

4. Check actuator operation by connecting power and ground according to the table. To prevent damage to the actuator, apply battery voltage only momentarily.

[CENTRAL LOCK]

Position \ Terminal		4	3
Front left	Lock	⊕	⊖
	Unlock	⊖	⊕
Front right	Lock	⊖	⊕
	Unlock	⊕	⊖

SCMBE6131L

[DEAD LOCK]

Position \ Terminal			5	6	7
Central Lock	Front left	Lock	⊕	⊖	⊖
		Unlock	⊖	⊕	⊕
	Front right	Lock	⊖	⊕	⊕
		Unlock	⊕	⊖	⊖
Dead Lock	Front left	Lock	⊖	⊕	⊕
		Unlock	⊖	⊕	⊖
	Front right	Lock	⊕	⊖	⊖
		Unlock	⊕	⊖	⊕

SCMBE6144L

REAR DOOR LOCK ACTUATOR

1. Remove the rear door trim.
   (Refer to the Body group - Rear door)
2. Remove the rear door module.
   (Refer to the Body group - Rear door)
3. Disconnect the connectors from the actuator.

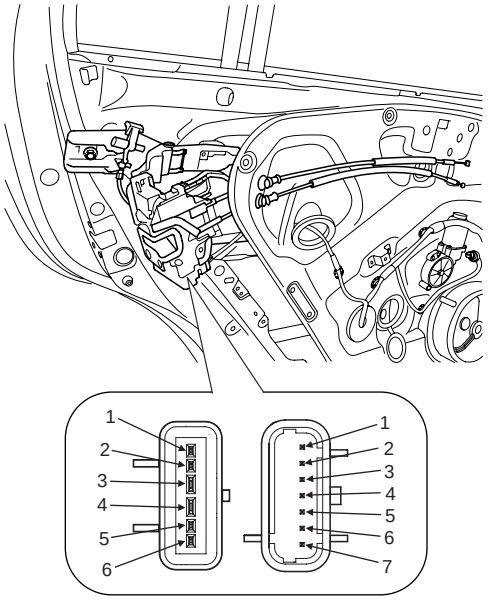

[CENTRAL LOCK] [DEAD LOCK]

SCMBE6132L

4. Check actuator operation by connecting power and ground according to the table. To prevent damage to the actuator, apply battery voltage only momentarily.

[CENTRAL LOCK]

Position \ Terminal		4	3
Rear left	Lock	⊕	⊖
	Unlock	⊖	⊕
Rear right	Lock	⊖	⊕
	Unlock	⊕	⊖

SCMBE6133L

[DEAD LOCK]

Position \ Terminal			5	6	7
Central Lock	Rear left	Lock	⊕	⊖	⊖
		Unlock	⊖	⊕	⊕
	Rear right	Lock	⊖	⊕	⊕
		Unlock	⊕	⊖	⊖
Dead Lock	Rear left	Lock	⊖	⊖	⊕
		Unlock	⊕	⊕	⊖
	Rear right	Lock	⊕	⊕	⊖
		Unlock	⊖	⊖	⊕

SCMBE6145L

TAILGATE LOCK ACTUATOR INSPECTION

1. Remove the tailgate trim. (Refer to the Body group - tailgate)
2. Disconnect the 4P connector from the actuator.

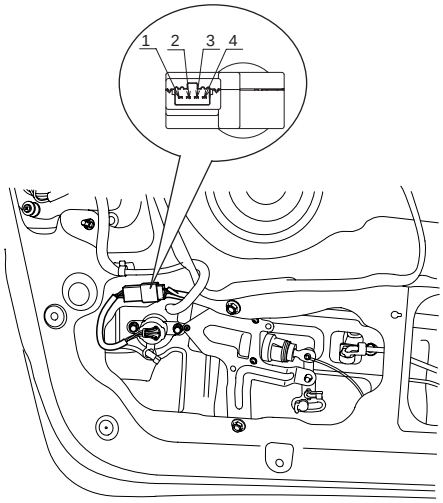

SCMBE6134D

3. Check actuator operation by connecting power and ground according to the table. To prevent damage to the actuator, apply battery voltage only momentarily.

Terminal / Position	2	3
Lock	⊖	⊕
Unlock	⊕	⊖

SCMBE6135L

FRONT DOOR LOCK SWITCH

1. Remove the front door trim. (Refer to the Body group - Front door)
2. Remove the front door module. (Refer to the Body group - Front door).
3. Disconnect the connectors from the actuator.

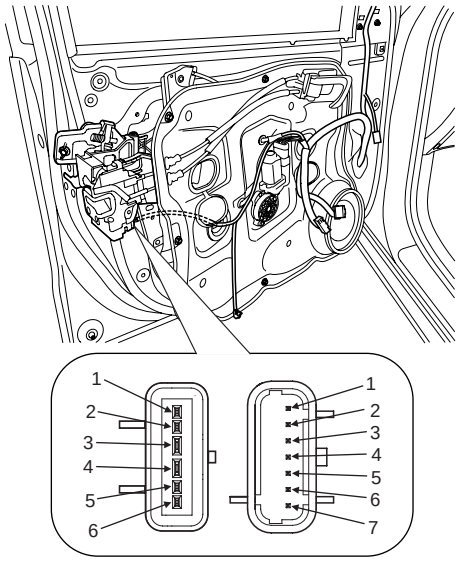

[CENTRAL LOCK] [DEAD LOCK]

SCMBE6130L

4. Check for continuity between the terminals in each switch position when inserting the key into the door according to the table.

[CENTRAL LOCK]

Position			Terminal 2	5	1
Central Lock	Front left	Clockwise	○	○	
		Counter-clockwise		○	○
	Front right	Clockwise	○	○	
		Counter-clockwise		○	○

SCMBE6136L

[CENTRAL LOCK]

Position			Terminal 1	5	2	6
Central Lock	Front left	Unlock		○		○
	Front right	Lock	○		○	

SCMBE6148L

[DEAD LOCK]

Position			Terminal 3	2	4
Central Lock	Front left	Clockwise	○	○	
		Counter-clockwise		○	○
	Front right	Clockwise	○	○	
		Counter-clockwise		○	○

SCMBE6146L

[DEAD LOCK]

Position			Terminal 3	1	7	5
Central Lock	Front left	Unlock	○	○		
	Front right	Lock			○	○

SCMBE6147L

REAR DOOR LOCK SWITCH

1. Remove the rear door trim.
   (Refer to the Body group - Rear door)

2. Remove the rear door module.
   (Refer to the Body group - Rear door)

3. Disconnect the connectors from the actuator.

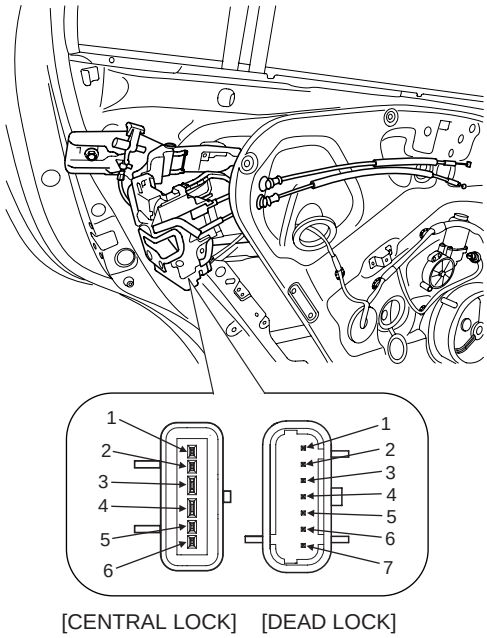

[CENTRAL LOCK] [DEAD LOCK]

SCMBE6132L

4. Check for continuity between the terminals in each switch position according to the table.

[CENTRAL LOCK]

Position		Terminal 1	5	2	6
Central Lock	Unlock		○		○
	Lock	○		○	

SCMBE6122L

[DEAD LOCK]

Position		Terminal 3	1	7	5
Central Lock	Unlock	○	○		
	Lock			○	○

SCMBE6142L

TAILGATE SWITCH

1. Remove the tailgate trim. (Refer to the Body group - Tailgate)
2. Disconnect the 4P connector from the actuator.

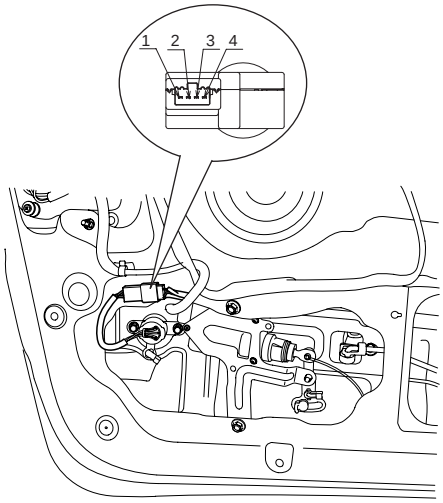

SCMBE6134D

3. Check for continuity between the terminals in each switch position according to the table.

Position \ Terminal	1	4
Lock	○———	———○
Unlock		

SCMBE6138L

DOOR SWITCH

Remove the door switch and check for continuity between the terminals.

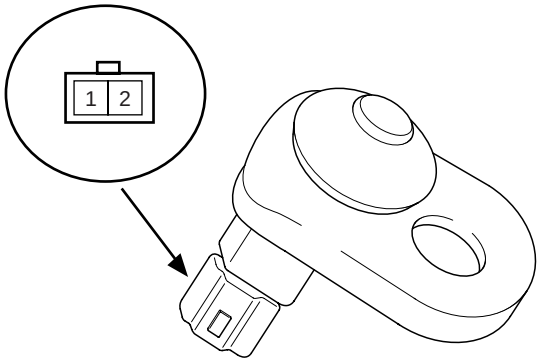

KTKD020A

Position \ Terminal	1	2	Body (Ground)
Free(Door open)	○	○	○
Push(Door close)			

ETQF180D

HOOD SWITCH

1. Remove the hood latch.
   (Refer to the Body group - Hood)

2. Disconnect the connector from the hood switch.

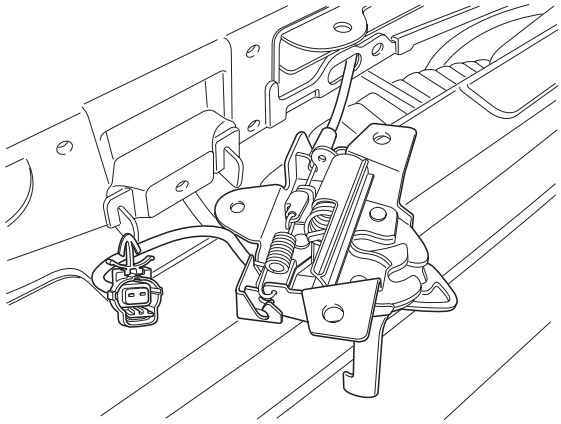

SCMBE6139D

3. Check for continuity between the terminals and ground according to the table.

Terminal / Position	1	2
Hood open (Free)	○	○
Hood close (Push)		

ETBF180B

KEY WARNING SWITCH

1. Remove the crash pad lower panel. (Refer to Body group-Crash pad)

2. Disconnect the 6P connector from the key warning switch.

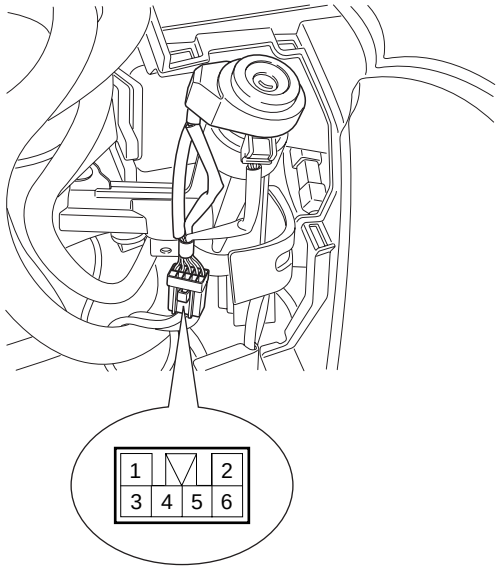

SCMBE6141D

3. Check for continuity between the terminals in each position according to the table.

Terminal / Key position	5	6
Insert	○	○
Removal		

ETQF180F

BURGLAR HORN

1. Remove the burglar horn after removing 2 bolts and disconnect the 2P connector from the burglar horn.

2. Test the burglar horn by connecting battery power to the terminal 1 and ground the terminal 2.

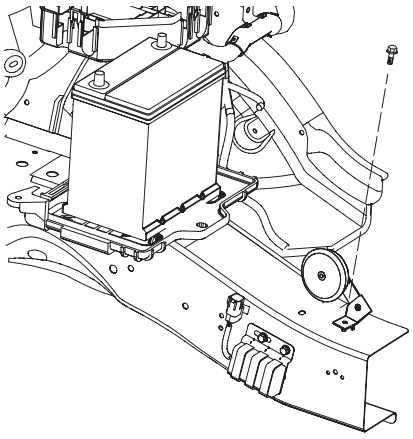

SCMBE6143D

3. The burglar horn should make a sound. If the burglar horn fails to make a sound replace it.

TRANSMITTER

SPECIFICATION EB5DFE4B

Items	Specifications
Keyless entry transmitter Power source	Lithium 3V battery (1EA)
Transmissible distance	10m or more
Life of battery	2 years or more (at 10 times per a day)
Button	Door lock Door unlock
Transmission frequency	433.92 MHz(GEN, EUR), 315 MHz (JAPAN, CHINA)

INSPECTION E55ACB71

1. Check that the red light flickers when the door lock or unlock button is pressed on the transmitter.
2. Remove the battery and check voltage if the red light doesn't flicker.

Standard voltage : 3V

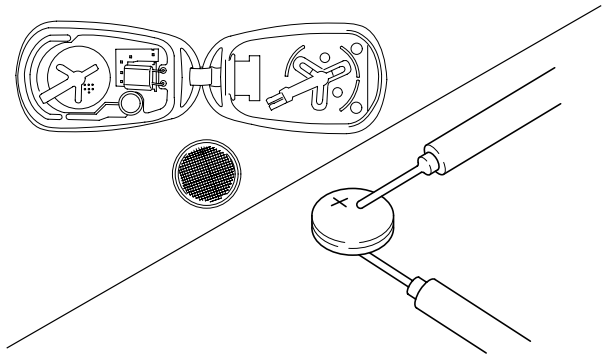

ATLG029A

3. Replace the transmitter battery with a new one, if voltage is below 3V then try to lock and unlock the doors with the transmitter by pressing the lock or unlock button five or six times.
4. If the doors lock and unlock, the transmitter is O.K, but if the doors don't lock and unlock, register the transmitter code, then try to lock and unlock the doors.
5. If the transmitter is failure, replace only the transmitter (A).

TRANSMITTER CODE REGISTRATION E059A767

1. Connect the DLC cable of scan tool to the data link connector (16 pins) in driver side crash pad lower panel, turn the power on scan tool.

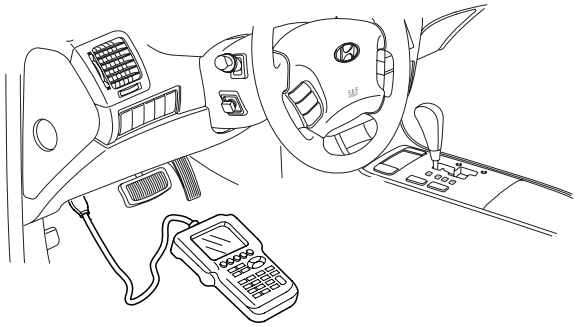

KTBF121T

2. Select the vehicle model and then do "CODE SAVING".

1. HYUNDAI VEHICLE DIAGNOSIS

MODEL : ALL

02. ENGINE
03. AUTOMATIC TRANSAXLE
04. ANTI-LOCK BRAKE SYSTEM
:
:
:
07. CODE SAVING

ETPD700I

3. After selecting "CODE SAVING" menu, push "ENTER" key, then the screen will be shown as below.

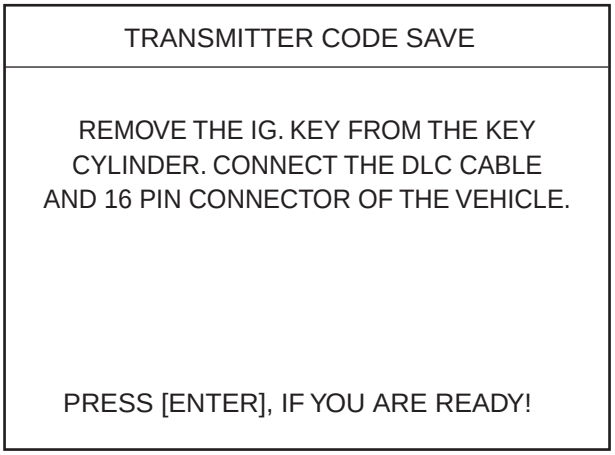

ETRF065M

4. After removing the ignition key from key cylinder, push "ENTER" key to proceed to the next mode for code saving. Follow steps 1 to 4 and then code saving is completed.

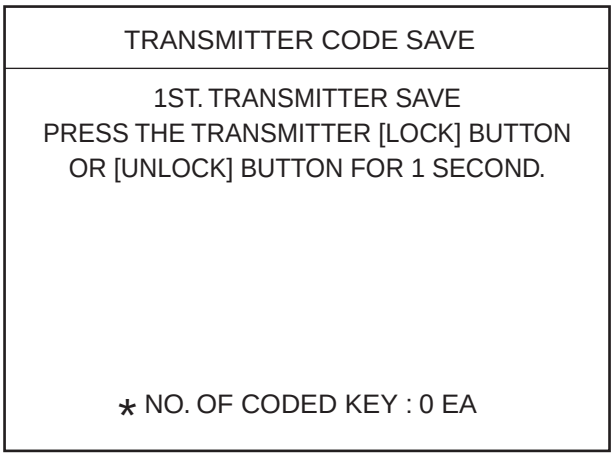

ETRF065N

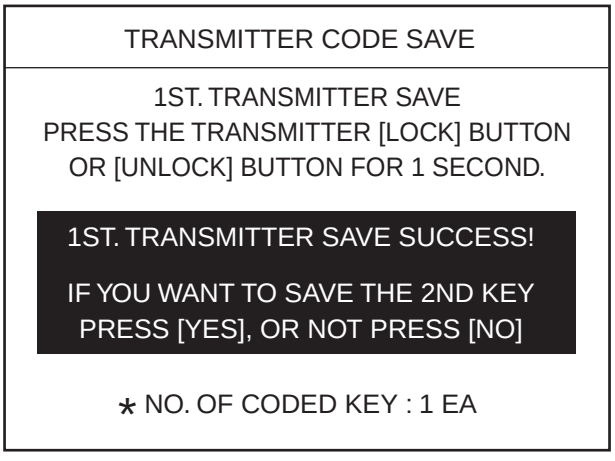

ETRF065O

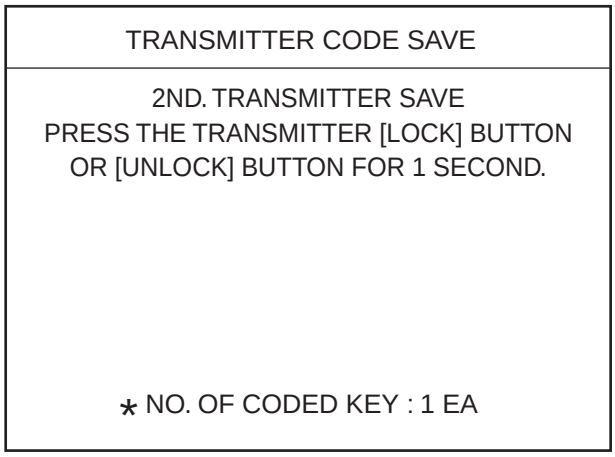

ETRF065P

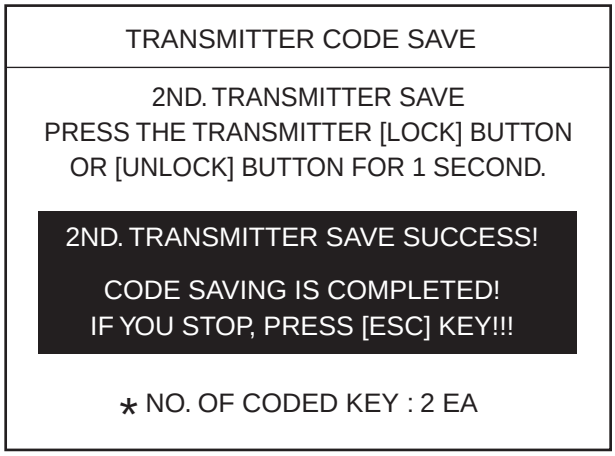

ETRF065Q

ETACS (ELECTRONIC TIME AND ALARM CONTROL SYSTEM)

BODY CONTROL MODULE

DESCRIPTION E7BADD35

Body control module (A) receives various input switch signals controlling time and alarm functions for tail lamp, rear fog lamp, tail lamp auto cut, auto light, DRL, seat belt reminder warning, key operated warning, parking brake warning, over speed warning, ignition key hole illumination, room lamp control, power window delay time control, keyless entry control, burgular alarm control, dead lock, auto door lock/crash door unlock, key reminder & front/rear heated control.	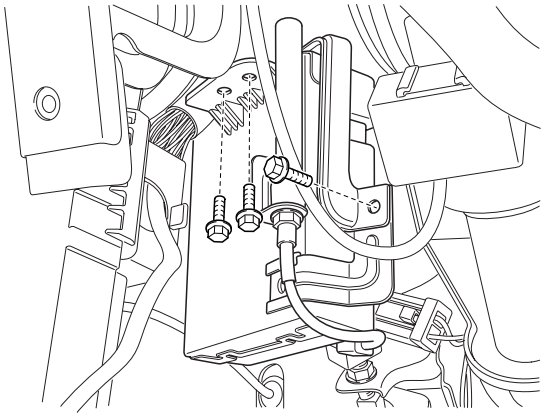 SCMBE6150D

BCM BLOCK DIAGRAM

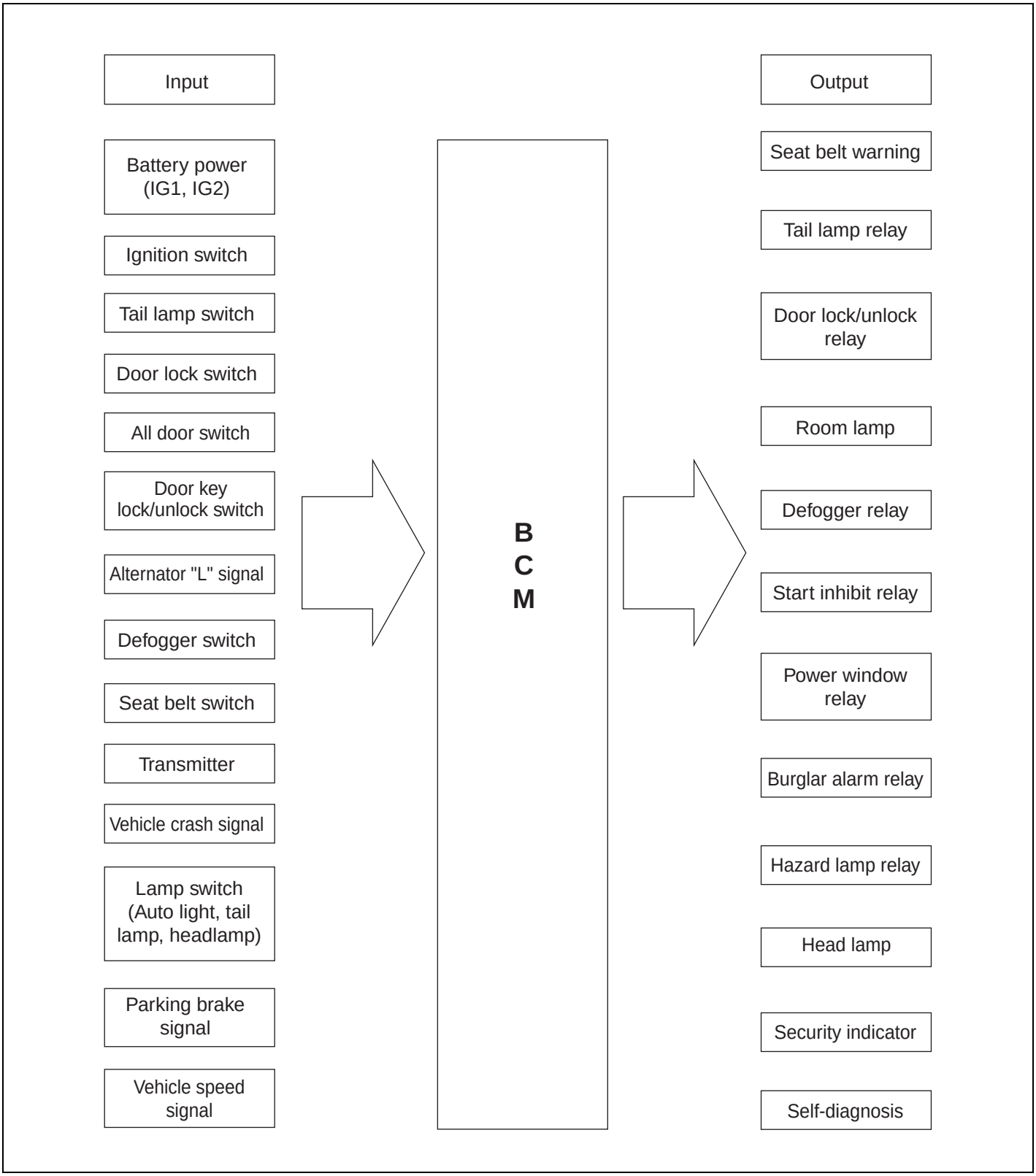

SCMBE6151L

OPERATION EAE305E9

1. WASHER INTERLOCKING WIPER

   1) If the Washer SW is ON in the IGN2 SW ON state, then the Wiper output shall be ON after T1, and if the Washer SW input is ON for 0.2~0.6 seconds, then the Wiper output shall be OFF after T3. However, WASHER SW input shall be disregarded during the Washer Wiper operating, but after operating the Washer Wiper, WASHER SW input shall be accepted first.

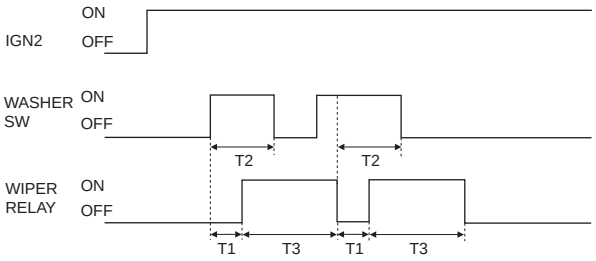

SCMBE6155L

   T1 : 0.3 ± 0.1s, T2 : 0.2~0.6s, T3 : 0.7 ± 0.1s
   In case of T2 is less than 0.2s, T3=0

   2) If the Washer SW is ON in the IGN2 SW ON state, then the Wiper output shall be ON after T1, and if the Washer SW is ON over 0.6 seconds, after the Washer SW is OFF and the Wiper output shall be ON for 2.5~3.8 seconds and then, the Wiper output shall be OFF. However, WASHER SW input shall be disregarded during the Washer Wiper operating, but after the Washer Wiper operating, WASHER SW input be accepted first.

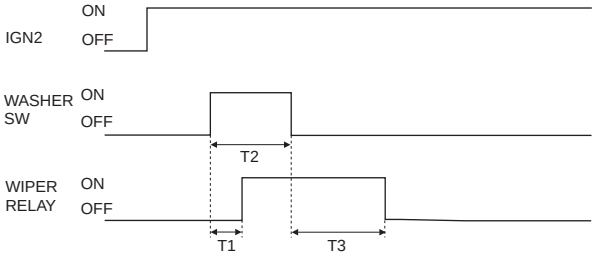

SCMBE6900L

   T1 : 0.3 ± 0.1s, T2 : more than 0.6s, T3 : 2.5~3.8s

   3) During INT Wiper operating, if the Washer SW is ON over 0.6 seconds, then the Washer Interlocking Wiper output shall be ON. If the Washer SW is ON for 0.2~0.6 seconds, then the Wiper output shall be ON once.

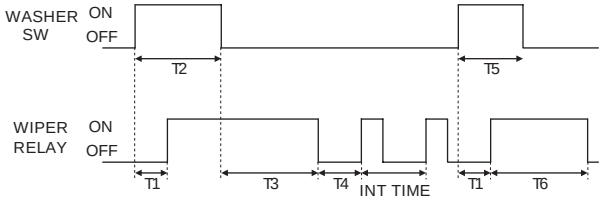

SCMBE6901L

   T1 : 0.3 ± 0.1s, T2 : more than 0.6s
   T3 : 2.5~3.8s ± 0.1s, T4 : INT TIME-0.7s,
   T5 : 0.2~0.6s, T6 : 0.7 ± 0.1s

2. VEHICLE SPEED (SENSITIVE TYPE) INT WIPER
   According to the vehicle speed, control intermittent time of the Intermittent Wiper.
   - IGN1 SW ON state
   - WIPER SW INT state
   - INPUT the vehicle speed, intermittent time set VOLUME value
     - Change the WIPER by calculating the intermittent time according to the vehicle speed.

   1) Input of Vehicle speed
      Calculate the vehicle speed by the number of Input PULSE for 1 second.

      1 [PULSE/sec] = (60[Km/h] × 60[sec]) / (637 × 4 PULSE) 1.41[Km/h]

   2) Output of Vehicle speed
      Count the number of the PULSE for 1 second, and compare with the former value, and then define the higher value of the vehicle speeds as the vehicle speed for intermittent time output.

      V = max (Vnew, Vold)
      But, Vnew: the present vehicle speed, Vold: the former vehicle speed

3) Output of Intermittent time ratio (vehicle speed: 0Km/h)
Calculate the INT time rate by inputting the INT Time set Volume value (input voltage)
The INT Time Rate is to indicate the position where the Volume is located from the Slow (100%) to the Fast (0%) of the Knob. Therefore the Volume shall be linearly calibrated about the input voltage.

4) Output of Standard Intermittent Time
Calculate the intermittent time of the intermittent time ratio 100% and 0% at the vehicle speed (V) computed above by linear correction and then, calculate the standard intermittent time by the proportional distribution of the intermittent time ratio computed in (3) item.
- If the variation of the standard intermittent time is less than 0.3 sec, should not renew the intermittent time.
- If the standard intermittent time is less than 0.2 sec, continually operate.
- When the INT Time Timer (passed time) is over 10 seconds, if the vehicle is speeded up (from 0 km/h to 7km/h and more), then the Wiper shall be operated.

3. TAIL LAMP AUTO CUT
After Key IN SW is On, if Tail SW is On, then Key IN SW shall be OFF; when the driver's door is opened, then the Tail Lamp shall be OFF automatically.
Also, in the state that the KEY IN SW is ON, after the driver's door is opened, if the KEY IN SW is OFF, then the Tail Lamp shall be OFF automatically.
After the Auto Cut, if the Tail SW is ON after OFF again, the Tail Lamp shall be ON, and the Auto Cut function shall be canceled.
After the Auto Cut, when KEY IN SW is ON again, TAIL LAMP shall be ON, and the Auto Cut function shall be canceled.
In the state of the AUTO CUT, if mounting or removing the BATTERY, then the AUTO CUT state shall be continued.

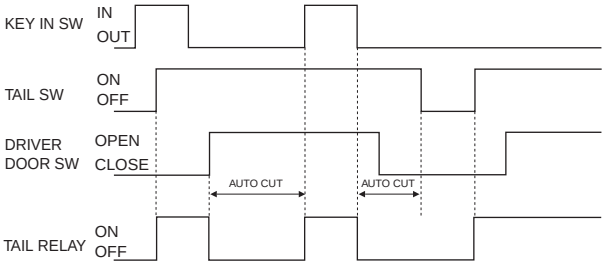

SCMBE6157L

4. HEAD LAMP LOW CONTROL
If HEAD LAMP LOW SW is On in the IGN1 On state, HEAD LAMP HIGH RELAY shall be ON so that HEAD LAMP HIGH can be controlled by HEAD LAMP RELAY and M/F SW.

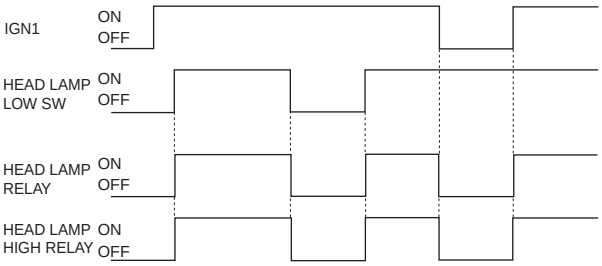

SCMBE6158L

5. AUTO LIGHT CONTROL

1) The AUTO LIGHT function shall not be applied in case of DRL OPTION of Europe spec(DRL OPTION LINE = GND).

2) It shall be able to operate only in case of B AUTO LIGHT is active, and comply with CALIBRAION PARAMETER TABLE of each spec.

3) In GN1 SW ON state, if the supply voltage of the AUTO LIGHT SENSOR is less than 4v or more than 6v, it is determined as the fault. In the fault state, in case of the AUTO LIGHT SW is ON, always HEAD LAMP RELAY shall be ON regardless of the Sensor value. FILTERING TIME for the fault and recovery with regard to the supply voltage is 300 msec respectively.

4) In the condition of LIGHT ON, when the AUTO LIGHT SENSOR value is entered into AUTO LIGHT control condition, then LIGHT shall be ON immediately.

5) If IGN1 SW is ON, and AUTO LIGHT SW is ON, and in LIGHT OFF state, and in case of AUTO LIGHT SENSOR value is the input value of the LIGHT ON, LIGHT shall be ON after 2.5 ± 0.2sec.

6) In LIGHT ON state, in case of the AUTO LIGHT SENSOR value is the input value of the LIGHT OFF, LIGHT shall be OFF after 2.5 ± 0.2sec.

7) If the SENSOR value is the input value of the TAIL LAMP ON, then TAIL LAMP RELAY shall be ON only, and if it is the input value of the HEAD LAMP ON, then HEAD LAMP HIGH RELAY shall be ON so that HEAD LAMP HIGH can be controlled by TAIL LAMP RELAY, HEAD LAMP RELAY, and multifunction (M/F) SW.

8) In the condition of LIGHT ON, when AUTO LIGHT SW is ON, HEAD LAMP RELAY shall be ON immediately, and when AUTO LIGHT SW is OFF, LIGHT shall be OFF immediately.
The LIGHT ON value of the AUTO LIGHT SENSOR shall be complied with the table below.

	TAIL LAMP	HEAD LAMP
ON	0.81 ± 0.05V	0.81 ± 0.05V
OFF	1.41 ± 0.05V	1.41 ± 0.05V

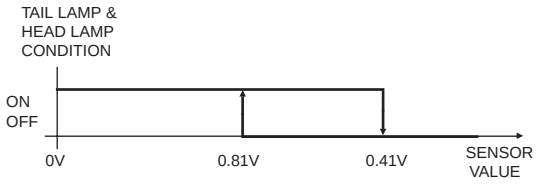

SCMBE6159L

9) The time chart according to filtering time and sensor for each applicable area shall be as follow.

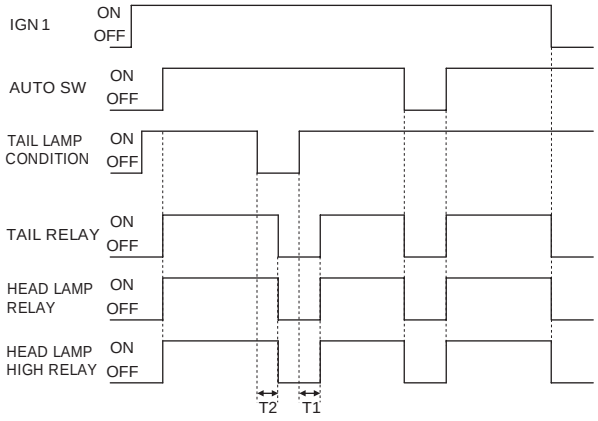

SCMBE6902L

T1 : 2.5±0.2s, T2 : 2.5±0.2s

6. DAYTIME RUNNING LIGHT
In the case of DRL EUROPE specification, by eliminating the SHUNT between the TAIL LAMP RELAY and the INTERIOR LAMP, the interior lamp is controlled by the DRL RALY.

If the IGN2 & ALT "L" are ON, the Tail Lamp RELAY and the Head Lamp LOW RELAY shall be ON ;
If TAIL LAMP LOW RELAY is ON by the TAIL SW, the DRL function shall be canceled.

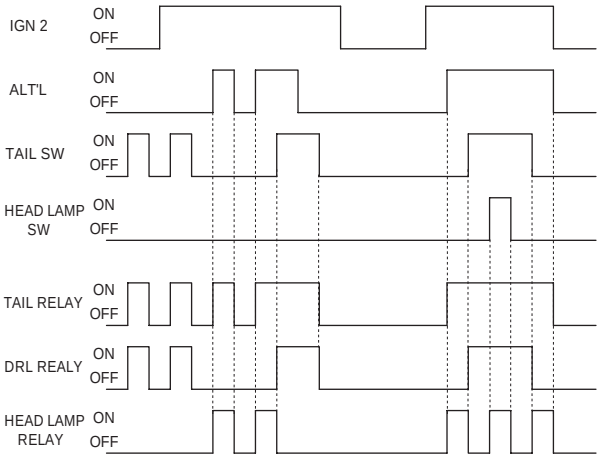

SCMBE6903L

7. REAR FOG LAMP

1) After the IGN1 is ON and the Tail Lamp SW is ON, in the state that the HEAD LAMP SW is ON, if the REAR FOG SW is pressed, the Rear Fog Lamp shall be ON.

2) In case of IGN1 ON and the TAIL LAMP and the HEADLAMP is pushing the REAR FOG SW by AUTO LIGHT function in state of ON, the REAR FOG LAMP shall be ON.

3) In case of IGN1 ON and the TAIL LAMP is ON by AUTO LIGHT function, and if FOG LAMP SW is pushing REAR FOG SW in state of ON, the REAR FOG LAMP shall be ON.

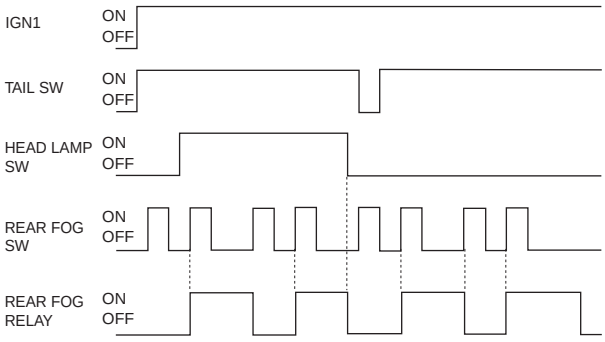

SCMBE6160L

8. BUZZER SOUND

1) BUZZER SOUND SPECIFICATION

	Frequency	Frequency DUTY	Cycle	Sound Pressure	Remark
SEAT BELT WARNING	800Hz	50%	1.0s	70±10Db	Damped Sound
KEY OPERATED	800Hz	50%	0.7s	70±10Db	Damped Sound
OVER SPEED WARNING / SEAT BELT REMINDER (EC)	800Hz	50%	1.0s	70±10Db	Continuous Sound
PARKING START WARINGI	800Hz	50%	1.0s	70±10Db	Continuous Sound

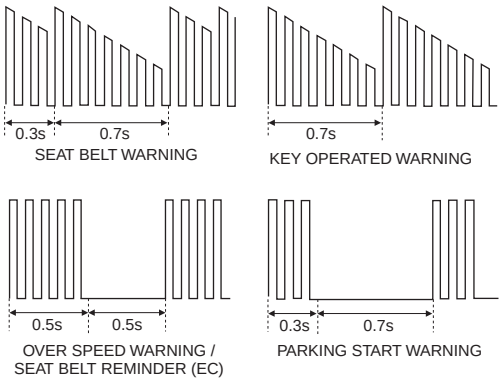

SCMBE6161L

2) The Priority Order: OVER SPEED WARNING > S/BELT WARNING > KEY OPERATED WARNING > PARKING START WARNING

3) If the output is OFF, maintain the output until the OFF cycle

4) Sound pressure measurement distance : 1.0 m

9. SEAT BELT WARNING TIMER

CONDITION 1

State	Description
Initial condition	IGN1 OFF
Transition condition	Driver side seat belt is belted and IGN1 is ON
Operating	- Start 6 seconds driver indicator blinking - The automaton state is changed to IGN1 ON DRIVER BELTED

CONDITION 2

State	Description
Initial condition	IGN1 OFF
Transition condition	Driver side seat belt is unbelted and IGN1 is ON
Operating	- Start 6 seconds driver indicator blinking - Start 6 seconds buzzer warning - The automaton state is changed to IGN1 ON DRIVER UNBELTED

CONDITION 3

State	Description
Initial condition	IGN1 ON DRIVER BELTED
Transition condition	IGN1 OFF
Operating	- Start 6 seconds driver indicator blinking - Start 6 seconds buzzer warning - The automaton state is changed to IGN1 OFF

CONDITION 4

State	Description
Initial condition	IGN1 ON DRIVER BELTED
Transition condition	Driver side seat belt is unbelted
Operating	- Start 6 seconds driver indicator blinking - Start 6 seconds buzzer warning - The automaton state is changed to IGN1 ON DRIVER UNBELTED

CONDITION 5

State	Description
Initial condition	IGN1 ON DRIVER BELTED
Transition condition	IGN1 OFF
Operating	- Start 6 seconds driver indicator blinking - Start 6 seconds buzzer warning - The automaton state is changed to IGN1 OFF

CONDITION 6

State	Description
Initial condition	IGN1 ON DRIVER BELTED
Transition condition	Driver side seat belt is belted
Operating	- Start 6 seconds buzzer warning - The automaton state is changed to IGN1 ON DRIVER BELTED

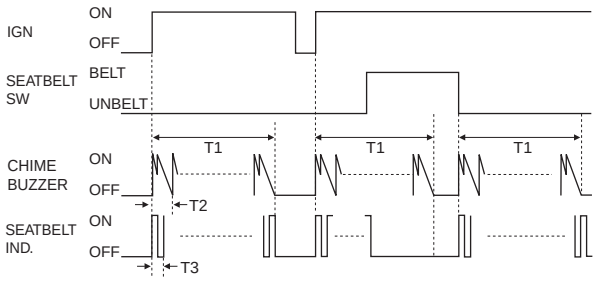

SCMBE6162L

T1 : 6 ± 1 sec, T2 : 1 ± 0.1 sec,
T3 : 0.6 ± 0.1 sec

10. SEAT BELT REMINDER

CONDITION 1

State	Description
Initial condition	IGN1 OFF
Transition condition	Driver side seat belt is belted and IGN1 is ON
Operating	- Start 6 seconds driver indicator ON - Start driver T1 timer IGN1 ON & DRIVER BELTED

CONDITION 2

State	Description
Initial condition	IGN1 OFF
Transition condition	Driver side seat belt is unbelted and IGN1 is ON and (T2＞55s or T2 not started)
Operating	- Start 6 seconds driver indicator ON - Start infinite driver indicator ON - The automaton state is changed to IGN1 ON DRIVER UNBELTED1

CONDITION 3

State	Description
Initial condition	IGN1 OFF
Transition condition	Driver side seat belt is unbelted and IGN1 is ON and T2＜=55s
Operating	- Start 6 seconds driver indicator blinking - Start infinite driver indicator blinking - Start driver T3 Timer(55s) - The automaton state is changed to IGN1 ON DRIVER UNBELTED2

CONDITION 4

State	Description
Initial condition	IGN1 ON DRIVER BELTED
Transition condition	IGN1 OFF
Operating	- Stop 6 seconds driver indicator blinking - Stop driver T1 Timer - Start driver T2 Timer - Stop 6 seconds driver indicator ON - The automaton state is changed to IGN1 OFF

CONDITION 5

State	Description
Initial condition	IGN1 ON DRIVER BELTED
Transition condition	Driver side seat belt belted＞unbelted and T1＞=9s and VS＜9kph
Operating	- Start infinite driver indicator blinking - Start driver T3 timer - Start 6s driver indicator blinking - Stop 6 seconds driver indicator ON - The automaton state is changed to IGN1 ON DRIVER UNBELTED2

CONDITION 6

State	Description
Initial condition	IGN1 ON DRIVER BELTED
Transition condition	Driver side seat belt belted＞unbelted and T1＞=9s and VS＞=9kph
Operating	- Start driver buzzer pattern (100sec ON) - Start infinite driver indicator blinking - Start 6s driver indicator blinking - The automaton state is changed to DRIVER PATTERN

CONDITION 7

State	Description
Initial condition	IGN1 ON DRIVER BELTED
Transition condition	Driver side seat belt belted＞unbelted and T1＞=9s and VS＞=9kph
Operating	- Start driver buzzer pattern (100sec ON) - Start infinite driver indicator blinking - Start 6s driver indicator blinking - The automaton state is changed to DRIVER PATTERN

CONDITION 8

State	Description
Initial condition	IGN1 ON DRIVER BELTED
Transition condition	Driver side seat belt unbelted＞belted
Operating	- (Re)Start T1 timer(9sec)

CONDITION 9

State	Description
Initial condition	IGN1 ON DRIVER UNBELTED1
Transition condition	IGN1 OFF
Operating	- Stop 6 seconds driver indicator ON - Stop infinite driver indicator ON - The automaton state is changed to IGN1 OFF

CONDITION 10

State	Description
Initial condition	IGN1 ON DRIVER UNBELTED1
Transition condition	Driver side seat belt belted
Operating	- Stop infinite driver indicator ON - Start driver T1 timer - The automaton state is changed to IGN1 ON DRIVER BELTED

CONDITION 11

State	Description
Initial condition	IGN1 ON DRIVER UNBELTED1
Transition condition	Driver side seat belt unbelted and VS＞9kph
Operating	- Stop infinite driver indicator ON - Start infinite driver indicator blinking - Start driver T3 timer - The automaton state is changed to IGN1 ON DRIVER UNBELTED2

CONDITION 12

State	Description
Initial condition	IGN1 ON DRIVER UNBELTED2
Transition condition	IGN1 OFF
Operating	- Stop 6 seconds driver indicator blinking - Stop infinite driver indicator blinking - Stop driver T3 timer - Start driver T2 timer - Stop infinite driver indicator ON - The automaton state is changed to IGN1 OFF

CONDITION 13

State	Description
Initial condition	IGN1 ON DRIVER UNBELTED2
Transition condition	Driver side seat belt belted
Operating	- Stop infinite driver indicator blinking - Stop driver T3 timer - Start driver T1 timer - Stop infinite driver indicator ON - The automaton state is changed to IGN1 ON DRIVER BELTED

CONDITION 14

State	Description
Initial condition	IGN1 ON DRIVER UNBELTED2
Transition condition	Driver T3 timer started and elapsed
Operating	- Start driver buzzer pattern (90sec ON) - The automaton state is changed to DRIVER PATTERN

CONDITION 15

State	Description
Initial condition	PATTERN
Transition condition	IGN1 OFF
Operating	- Stop infinite driver indicator blinking - Stop driver Buzzer Pattern - Start driver T2 timer - Stop 6s driver indicator blinking - The automaton state is changed to IGN1 OFF

CONDITION 16

State	Description
Initial condition	PATTERN
Transition condition	Driver side seat belt belted
Operating	- Stop driver Buzzer Pattern - Stop infinite driver indicator blinking - Start driver T1 timer - The automaton state is changed to IGN1 ON DRIVER BELTED

CONDITION 17

State	Description
Initial condition	PATTERN
Transition condition	Driver Buzzer Pattern finished(90s elapsed)
Operating	- Stop driver Buzzer Pattern - Stop infinite driver indicator blinking - Start driver T1 timer - The automaton state is changed to IGN1 ON DRIVER UNBELTED2

11. KEY OPERATED WARNING

    1) In state of KEY IN SW is IN, if the DRIVER DOOR is opened, then the CHIME BUZZER output shall be continued with the cycle of 0.7 seconds.

    2) If KEY IN SW is OUT or the driver's door is closed during the Chime Buzzer output, then the output shall be OFF.

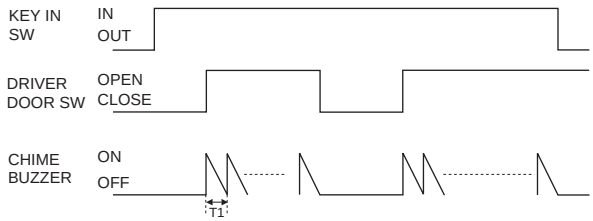

SCMBE6163L

T1 : 0.7 ± sec.

12. OVER SPEED WARNING
    In the IGN 2 ON state, if the over speed SW of the cluster is On, the chime buzzer output shall be ON.
    If the over speed SW is OFF, the chime buzzer output shall be OFF.

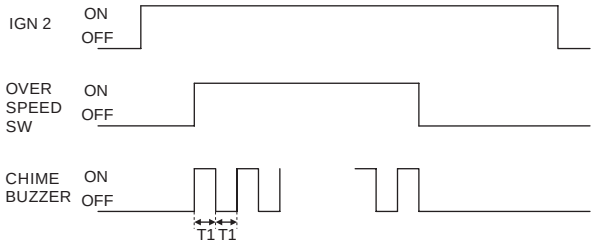

SCMBE6904L

T1 : 0.5 ± 0.1 sec.

13. PARKING START WARNING
    In the state that the IGN1 is ON or the Parking Brake is pulled, if the speed of vehicle is maintained over 10 km/h for 2~3 seconds or more, then the Chime Buzzer output shall be continued with 1 second cycle of the ON/OFF (0.3/0.7 seconds). But, after the speed of vehicle is maintained over 10 km/h for 2~3 seconds or more, if the Parking Brake is pulled, output immediately.

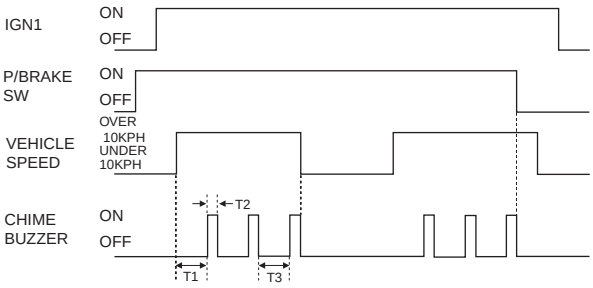

SCMBE6164L

T1 : 2.5±0.5 sec, T2 : 0.3±0.1 sec,
T3 : 0.7±0.1 sec.

14. IGN KEY HOLE ILLUMINATION

1) If the driver's door (or assist' s door) is opened in the state that the IGN1 SW is OFF, then the IGN Key Hole Illumination shall be ON.

2) In the (1) state, if the driver's door (or assist's door) is closed, then the IGN Key Hole Illumination shall be OFF after it is in the ON state for 30 seconds.

3) During the (1) and (2) operating, if the IGN1 SW is On, the IGN Key Hole Illumination shall be OFF immediately.

4) But, if it is in the ARM Mode, then the IGN Key Hole Illumination shall be OFF immediately.

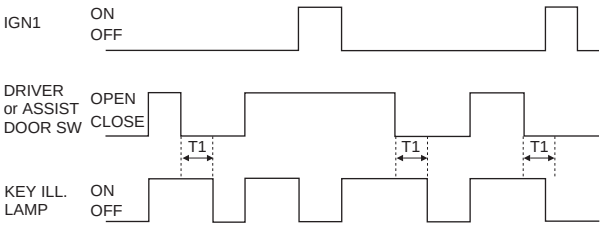

SCMBE6165L

T1 : 30 ± 1 sec.

15. DEFOGGER TIMER

1) If the Defogger SW is ON after the ALT "L" is ON in the state that the IGN1 SW is ON, then the Defogger output shall be ON for 20 minutes. (Operating in the state of the ENGINE RUNNING)

2) If the DEFOGGER SW is ON again while the DEFOGGER output is ON, then the DEFOGGER output shall be OFF.

3) If the ALT "L" is OFF or IGN1 is OFF while the DEFOGGER output is ON, then the DEFOGGER output shall be OFF.

4) If the ALT "L" $>$ 10 volts, then it shall be in the Engine Running State (ALT "L" shall be ON); if the ALT "L" $<$ 5 volts, then it shall be in the Engine Stop State (ALT "L" shall be OFF). Also, if the ALT "L" is more than 5 and less than 10 volts, then the former state shall be maintained.

5) If the defogger SW is pressed and the ALT "L" is ON, there shall be no the DEFOGGER RLY output.

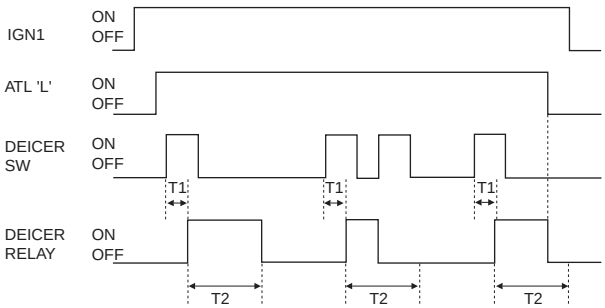

SCMBE6166L

T1 : 60 ± 20 msec, T2 : 20 ± 1 min.

16. DECAYED ROOM LAMP & KEYLESS UNLOCK TIMER

CONDITION 1

State	Description
Initial Condition	Room lamp OFF & IGN1 OFF & 4DOOR AND T/GATE CLOSE
Transition Condition	In the state that all doors are closed, the 4DOOR or T/GATE is opened over 0.1 seconds.
Operating	- Entry into the ROOM LAMP ON state for 20 min - ROOM LAMP ON for 20 ± 1 min

CONDITION 2

State	Description
Initial Condition	Room lamp OFF & IGN1 OFF & 4DOOR AND T/GATE CLOSE
Transition Condition	In case of UNLOCK by the TX
Operating	- Entry into the ROOM LAMP ON state for 30s - ROOM LAMP ON for 30 ± 3seconds

CONDITION 3

State	Description
Initial Condition	Room lamp OFF & IGN1 OFF & 4DOOR AND T/GATE CLOSE
Transition Condition	IGN1 ON and 4 DOOR or T/GATE OPEN over 0.1 seconds
Operating	- Entry into the ROOM LAMP ON state - ROOM LAMP ON

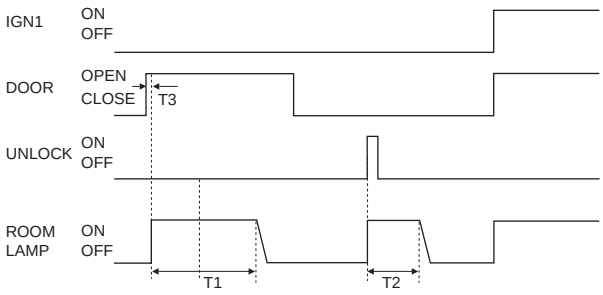

SCMBE6167L

T1 : 20 ± 1 min, T2 : 30 ± 3 sec,
T3 : 100 ms.

CONDITION 4

State	Description
Initial Condition	ROOM LAMP ON for 30s & IGN1 OFF
Transition Condition	In the state that all doors are closed, the 4DOOR or T/GATE is opened over 0.1 seconds.
Operating	- Entry into the ROOM LAMP ON state for 20 min - ROOM LAMP ON for 20 ± 1min.

CONDITION 5

State	Description
Initial Condition	ROOM LAMP ON for 30s & IGN1 OFF
Transition Condition	In case of UNLOCK by the TX.
Operating	- Maintain in the ROOM LAMP ON state for 30s - Extend the ROOM LAMP ON state for 30 seconds.

CONDITION 6

State	Description
Initial Condition	ROOM LAMP ON for 30s & IGN1 OFF
Transition Condition	IGN1 ON, or after 30 seconds, or when entered into the ARM state, or when all doors are locked.
Operating	- Entry into the ROOM LAMP DECAYING state - After the ROOM LAMP is decayed for 2 ± 0.2 seconds, it shall be OFF.

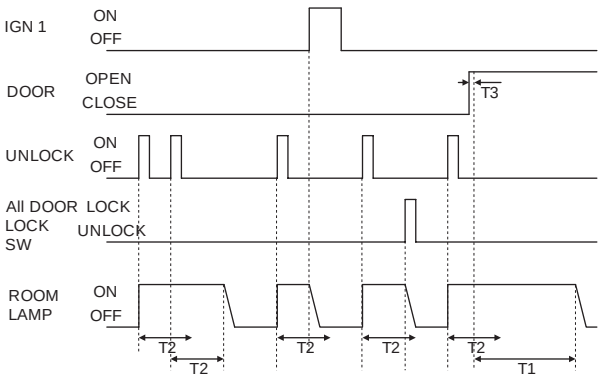

SCMBE6905L

T1 : 20 ± 1 min, T2 : 30 ± 3 sec,
T3 : 100 ms.

CONDITION 7

State	Description
Initial Condition	ROOM LAMP ON for 20min & IGN1 OFF
Transition Condition	IGN1 ON
Operating	- Entry into the ROOM LAMP ON state - ROOM LAMP ON.

CONDITION 8

State	Description
Initial Condition	ROOM LAMP ON for 20min & IGN1 OFF
Transition Condition	4DOOR AND T/GATE CLOSE
Operating	- Entry into the ROOM LAMP ON state for 30s. - ROOM LAMP ON for 30 ± 3 seconds.

CONDITION 9

State	Description
Initial Condition	ROOM LAMP ON for 20min & IGN1=OFF
Transition Condition	4DOOR AND T/GATE CLOSE & When All doors are locked, or After 20 minutes
Operating	- Entry into the ROOM LAMP DECAYING state - The ROOM LAMP is decayed for 2 ± 0.2 seconds and then, shall be OFF.

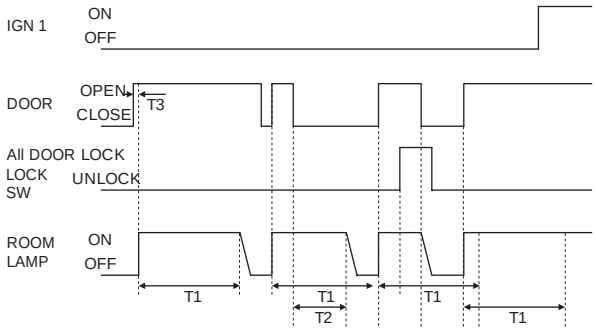

SCMBE6906L

T1 : 20 ± 1 min, T2 : 30 ± 3 sec,
T3 : 100 ms.

CONDITION 10

State	Description
Initial Condition	ROOM LAMP DECAYING & IGN1 OFF
Transition Condition	In the state that all doors are closed, 4DOOR or T/GATE OPEN over 0.1 seconds
Operating	- Entry into the ROOM LAMP ON state for 20min - ROOM LAMP ON for 20 ± 1minutes.

CONDITION 11

State	Description
Initial Condition	ROOM LAMP DECAYING & IGN1 OFF & 4DOOR AND T/GATE CLOSE
Transition Condition	In case of UNLOCK by the TX
Operating	- Entry into the ROOM LAMP ON state for 30s - ROOM LAMP ON for 30 ± 3 seconds.

CONDITION 12

State	Description
Initial Condition	ROOM LAMP DECAYING
Transition Condition	After completing the decaying
Operating	- Entry into the ROOM LAMP OFF state - ROOM LAMP OFF.

CONDITION 13

State	Description
Initial Condition	ROOM LAMP DECAYING
Transition Condition	IGN1 ON and OPEN 4 DOOR or T/GATE for 0.1 seconds
Operating	- Entry into the ROOM LAMP ON state - ROOM LAMP ON.

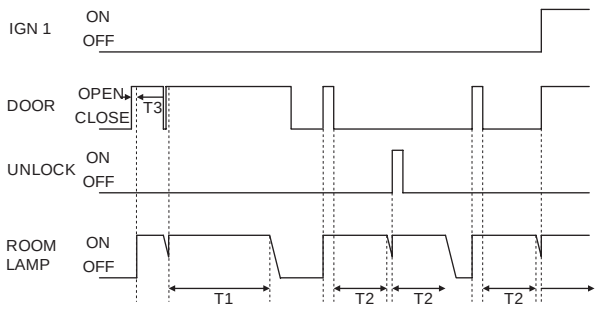

SCMBE6907L

T1 : 20 ± 1 min, T2 : 30 ± 3 sec,
T3 : 100 ms

CONDITION 14

State	Description
Initial Condition	ROOM LAMP ON & IGN1 ON & 4DOOR or T/GATE OPEN
Transition Condition	4DOOR AND T/GATE CLOSE
Operating	- Entry into the ROOM LAMP DECAYING state - The ROOM LAMP is decayed for 2 ± 0.2 seconds and then, shall be OFF.

CONDITION 15

State	Description
Initial Condition	ROOM LAMP ON & IGN1 ON & 4DOOR or T/GATE OPEN
Transition Condition	IGN1 OFF
Operating	- Entry into the ROOM LAMP ON state for 20min - ROOM LAMP ON for 20 ± 1minutes.

CONDITION 16

State	Description
Initial Condition	ROOM LAMP ON & IGN1 ON & 4DOOR or T/GATE OPEN
Transition Condition	4DOOR AND T/GATE CLOSE & IGN1 OFF
Operating	- Entry into the ROOM LAMP ON state for 30s - ROOM LAMP ON for 30 ± 3seconds.

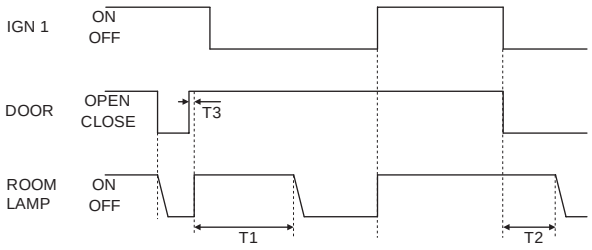

SCMBE6908L

T1 : 20 ± 1 min, T2 : 30 ± 3 sec,
T3 : 100ms

NOTE

1. *When the IGN1 is ON, there shall be no blinking of the ROOM LAMP.*
2. *The decaying of the ROOM LAMP should be more than 32 steps.*

17. POWER WINDOW TIMER

1) When the IGN2 SW is ON, then the Power Window Relay output shall be ON.

2) When the IGN2 SW is OFF, then the Power Window output shall be OFF after the output is maintained ON for 30 seconds.

3) Maintained ON for 30 seconds.

4) In the condition of the above (2), if the driver’ s or assist’ s door is opened, then the output shall be OFF immediately.

5) In the state that the driver’s or assist’s door is opened, if the IGN is OFF, then the Power Window output shall be OFF.

6) The SAFTEY POWER WINDOW ECU Output-port shall be controlled the same as the POWER WINDOW RELAY does.

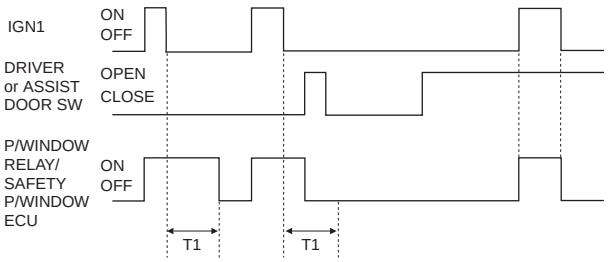

SCMBE6168L

T1 : 30 ± 3 sec.

18. DOOR LOCK/UNLOCK RELAY CONTROL

1) 2-TURN, DEAD LOCK NON-APPLICATION SPECIFICATION

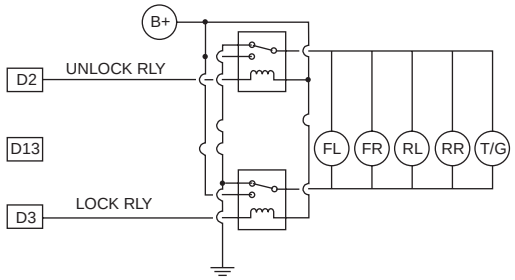

SCMBE6177L

CONDI-TION	UNLOCK RELAY	Dr UNLOCK / DEAD LOCK RELAY	LOCK RELAY
CENTRAL LOCK	OFF	NC	ON
CENTRAL UNLOCK	ON	NC	OFF

2) DEAD LOCK SPECIFICATION (EUROPE)

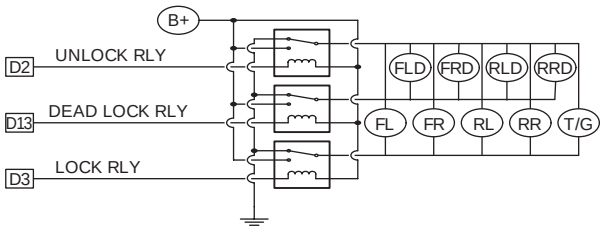

SCMBE6909L

CONDI-TION	UNLOCK RELAY	Dr UNLOCK / DEAD LOCK RELAY	LOCK RELAY
CENTRAL LOCK	OFF	OFF	ON
CENTRAL UNLOCK	ON	ON	OFF
DEAD LOCK	OFF	ON	OFF
DEAD UNLOCK	ON	OFF	ON

19. CENTRAL DOOR LOCK/UNLOCK

1) If the driver's door, the assist' door, T/GATE, the DOOR KEY LOCK SW are On, all DOOR Lock output shall be ON for T1.But, in case of KEY IN and IGN1 SW ON, output shall be inhibited.

2) If the driver's door, the assist' door, the DOOR KEY UNLOCK SW are On, all DOOR UNLOCK output shall be ON for T1.

3) When the TX (Transmitter) LOCK signal is received, all DOOR LOCK output shall be ON for T1.

4) When the TX UNLOCK signal is received, all DOOR UNLOCK output shall be ON for T1.

5) If the DR LOCK SW(P/WDW) is locked , all DOOR LOCK output shall be ON for T1.

6) If the DR UNLOCK SW(P/WDW) is unlocked, all DOOR UNLOCK output shall be ON for T1.But, in ARM state, the operation by POWER WINDOW UNLOCK Sw shall be inhibited.

7) The LOCK/UNLOCK by the SAFETY KNOB is non-interlocking. (Mechanical operation)

8) When connected to the BATTERY, there shall be no malfunction.(there shall be no malfunction in the KEY IN position)

9) Don't receive the input with less than 60msec(KEY LOCK/UNLOCK SW).

10) During output, if there are the output request, the current output shall be OFF immediately, and after 100ms delay, and then, perform the reverse direction output. But, if there are the output request during 100ms delay, perform the output for the last output request occurred.

11) In case of the Lock output and Unlock output condition are occurred at the same tine, perform the lock output and disregard the unlock output.

12) In case of all DOOR UNLOCK(UNLOCK) SW is LOCK(UNLOCK) state, the LOCK(UNLOCK) request does not output.

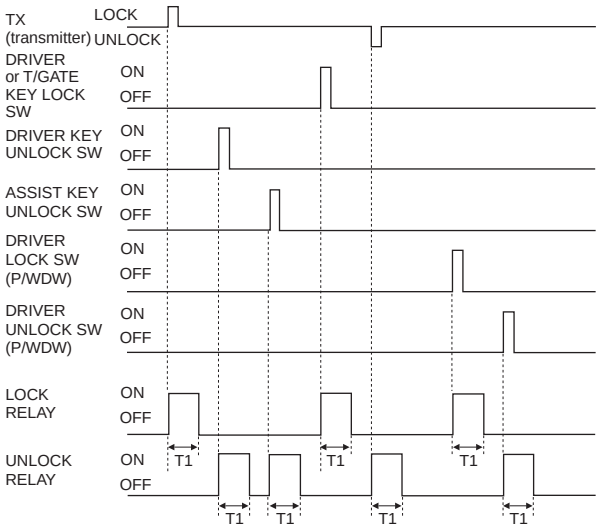

SCMBE6178L

T1 : 0.5 ± 0.1 sec.

20. IGN KEY REMINDER

1) If the Vehicle speed is over 3Km/h, then this function doesn't act on.

2) If KEY IN SW is IN and the driver's door is opened and the driver's DOOR UNLOCK SW is locked, then after 0.5 seconds, the unlock signal shall be output to all doors for 1s.

3) If KEY IN SW is IN and the assist's door is opened and the assist's DOOR UNLOCK SW is locked, then after 0.5 seconds and output DEAD UNLOCK for 0.5s. And then, the unlock signal shall be output to all doors for 1s.(only DEAD LOCK specification)

4) If it is in state of that KEY IN SW is IN and assist's DOOR is opened and assist's DOOR UNLOCK SW is locked, and after 0.5s, and then perform the ALL DOOR UNLOCK output for 1 second. (Except for DEAD LOCK spec)

5) If it is in state of that KEY IN SW is IN and assist's DOOR is opened and assist's DOOR UNLOCK SW is locked, and after 0.5s, and then output the DEAD UNLOCK for 0.5s, and then after 200msec, and then ALL DOOR UNLOCK signal output is ON for 1second. (only DEAD LOCK specification)

6) When (2), (3) items are met at the same time, after 0.5 seconds, the unlock signal shall be output to all doors for 1 second in conformity with (4) item.

7) When (3), (5) items are met at the same time, after 0.5 seconds and output DEAD UNLOCK for 0.5 seconds, and then after 200 msec, and then, all door unlock signal shall be output for 1 second in conformity with (5) item. (Only DEAD LOCK specification)

8) Although the unlock signal is output for 1 s by the (2), (3) items, if the lock state is maintained, the unlock signal shall be output at maximum three times (except for 1s output). (1s cycle: 0.5s ON/OFF, except for DEAD LOCK specification)

9) Even if the unlock is output for 1s by (3), (5) items, if the lock state is maintained, and after output the dead unlock for 0.5 seconds, and after 200msec, and then perform the ALL DOOR UNLOCK output maximum 3 times.(1s cycle : as 0.5s ON/OFF, DEAD LOCK specification)

10) After perform (8), (9) items, in case of LOCK state is maintained, and in case of DOOR CLOSE, and then attempt the ALL DOOR UNLOCK one time.

11) In the KEY IN SW IN state, if the driver's door is closed within 0.5 seconds as soon as the driver's DOOR UNLOCK SW is turned to the LOCK from the UNLOCK, the unlock signal shall be output to all doors for 1 s one time.

12) In the KEY IN SW IN state, if the driver's door is closed within 0.5 seconds as soon as the driver's DOOR UNLOCK SW is turned to the LOCK from the UNLOCK, and after output DEAD UNLOCK for 0.5 s and 20 msec, and then, the unlock signal output shall be ON to all doors for 1 s one time.

13) In the KEY IN SW IN state, if the assist's door is closed within 0.5 seconds as soon as the assist's DOOR UNLOCK SW is turned to the LOCK from the UNLOCK, the unlock signal shall be output to all doors for 1 s one time. (Except for DEAD LOCK SPEC)

14) In the KEY IN SW IN state, if the assist's door is closed within 0.5 seconds as soon as the assist's DOOR UNLOCK SW is turned to the LOCK from the UNLOCK and after output DEAD UNLOCK for 0.5 s and 20 msec, and then, the unlock signal output shall be ON to all doors for 1 s one time. (Only DEAD LOCK spec)

15) In the KEY IN SW IN state, if the driver's DOOR UNLOCK SW is turned to the LOCK from the UNLOCK within 0.5 seconds as soon as the driver's door is turned to the closed state from the opened state, then the Unlock signal shall be output to all doors for 1 second one time.(DEAD LOCK)

16) In the KEY IN SW IN state, if the driver' s DOOR UNLOCK SW is turned to the LOCK from the UNLOCK within 0.5 seconds as soon as the driver's door is turned to the closed state from the opened state, then the signal output of the ALL DOOR UNLOCK shall be ON for 1 second after outputting the DEAD UNLOCK for 0.5 seconds and 200msec. (only DEAD LOCK specification)

17) In the KEY IN SW IN state, if the assist's DOOR UNLOCK SW is turned to the LOCK from the UNLOCK within 0.5 seconds as soon as the assist' s door is turned to the closed state from the opened state, then the Unlock signal shall be output to all doors for 1 second one time. (Except for DEAD LOCK spec)

18) In the KEY IN SW IN state, if the assist' s DOOR UNLOCK SW is turned to the LOCK from the UNLOCK within 0.5 seconds as soon as the assist' s door is turned to the closed state from the opened state, then the signal output of the ALL DOOR UNLOCK shall be ON for 1 second after outputting the DEAD UNLOCK for 0.5 seconds and 200msec. (only DEAD LOCK specification)

19) In the KEY IN state, after the DRIVER DOOR or ASSIST DOOR are opened, if the doors are locked by the P/W LOCK SW, the unlock signal shall be output to all doors.

20) To determine whether the RETRY signal is output or not performs at the beginning time of the RETRY output. (After 1.5 seconds from the first UNLOCK output)

21) Even if the condition is not maintained for 0.5s after the UNLOCK condition is satisfied, the unlock signal shall be output. But, after the condition is satisfied as the result that the DOOR LOCK SW is turned to the LOCK from the UNLOCK, if the KEY IN SW is OFF at the passage time of 0.5s, the unlock signal shall not be output.

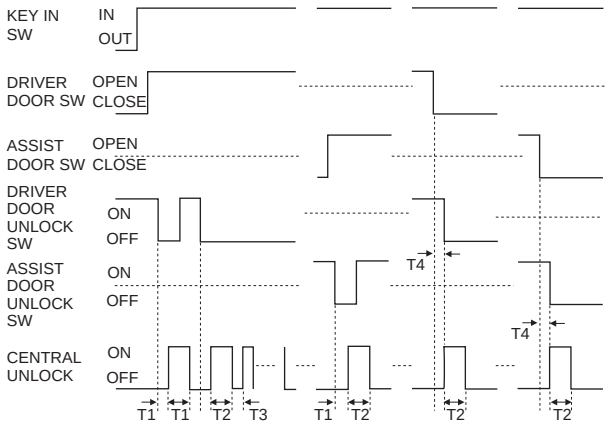

SCMBE6179L

T1, T3 : 0.5 ± 0.1 sec, T2 : 1 ± 0.1 sec,
T4 : 0.5 sec Max.

21. CRASH DOOR UNLOCK

1) In the IGN SW ON state, whenever the AIR BAG signal is received, the unlock signal shall be output always.

2) During the unlock output, even if the IGN SW is turned to the OFF from the ON, the unlock output is maintained for the remained time.

3) If the air bag signal is received first and then, the IGN SW is turned to the ON from the OFF, the unlock signal shall not be output.

4) After the UNLOCK output, if the DRIVER or ASSIST, REAR DOOR LOCK SW are turned to the LOCK from the UNLOCK, the unlock signal shall be output for T3.

5) The AUTO DOOR LOCK function is not performed in the CRASH UNLOCK condition.

6) The CENTRAL DOOR LOCK function is not performed during the CRASH UNLOCK output or after it. But, after the IGN is OFF, if the crash unlock function is reset, the CENTRAL DOOR LOCK function is normally performed.

7) The CRASH DOOR UNLOCK function is prior to the LOCK/UNLOCK control by the other functions.

8) The LOCK/UNLOCK requirement by the other functions is disregarded during the CRASH DOOR UNLOCK output or after it. But, if the IGN1 SW is OFF and IGN2 SW is OFF, the LOCK/UNLOCK control by the other functions shall be performed.

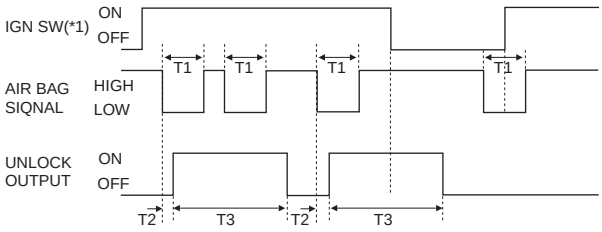

SCMBE6187L

T1 : 0.2 sec, T2 : 40 msec,
T3 : 5 ± 0.5 sec.
*1 ON : IGN1 ON or IGN2 ON
OFF : IGN1 OFF and IGN2 OFF

22. AUTO DOOR LOCK

1) The function of the AUTO DOOR LOCK shall be operated in case of the AUTO DOOR LOCK is active only.

2) In case of the vehicle speed set in the state of that IGN1 SW is ON than the standard is maintained for 2~3 seconds, perform the LOCK output. But, if the all DOOR is LOCK state, or all DOOR is FAIL, do not perform the LOCK output.

3) After the lock output of the (1) item, if any one of all doors is unlocked, the lock signal shall be output at maxim three times. (1s cycle) But, during the 3-output operating, if the door state is turned to the LOCK from the UNLOCK, disregard it.

4) After the 3-output operating, if a door is Unlocked, the door equivalent for the UNLOCK state shall be treated as FAIL.

5) After the door treated as Fail is turned to the LOCK from the UNLOCK, and then if the door is unlocked, the lock signal shall be output once.

6) After the LOCK output of (2) item, if the locked door is unlocked, the lock signal shall be output once.

7) But, after the LOCK output, even if the unlock state is maintained, the lock signal shall be output to the door (the unlock state) once.

8) When the IGN SW is OFF, the door treated as Fail performs the CLEAR function.

9) The AUTO DOOR LOCK function is not performed in the CRASH UNLOCK condition.

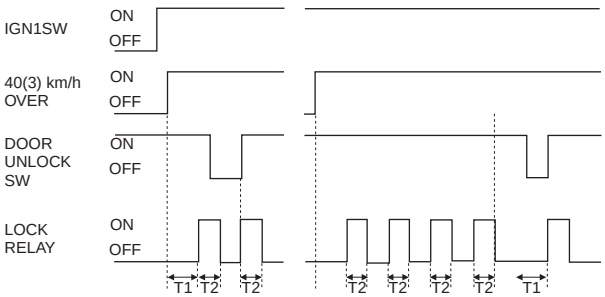

* 1 ON (UNLOCK): DRIVER or ASSIST or REAR DOOR UNLOCK SW = UNLOCK
OFF (LOCK): DRIVER and ASSIST and REAR DOOR UNLOCK SW = LOCK

SCMBE6188L

T1 : 2.5 ± 0.5 sec, T2 : 0.5 ± 0.1 sec.

23. DEAD LOCK (EUROPE OPTION)

1) In case of the execution condition of the ALL DOOR LOCK is met by KEY LOCK, TX(Transmitter) LOCK, AUTO LOCK TIMER1, AUTO LOCK TIMER2 in driver's seat/assist's seat, and then after outputting the all door lock for 0.5 seconds, and then after checking the state (after 200msec), and then, DEAD LOCK signal output shall be ON for 0.52 seconds.

2) In case of the execution condition of the ALL DOOR LOCK is met by central door LOCK SW of P/WDW SW, and then after outputting the ALL DOOR LOCK, and then do not perform the DEAD LOCK. (No Safety/KNOB)

3) In case of the execution condition of the ALL DOOR UNLOCK is met by KEY or TX in driver's seat/assist's seat, and then after outputting the DEAD UNLOCK for 0.5 seconds, and then 200msec, and then ALL DOOR UNLOCK signal output shall be ON for 0.5 seconds.

4) In case of the execution condition of the ALL DOOR UNLOCK is met by central door UNLOCK SW of P/WDW SW, perform ALL DOOR UNLOC only, and do not perform DEAD UNLOCK. But, in DEAD LOCK state, do not perform ALL DOOR UNLOCK by central door UNLOCK SW of P/WDW SW.

5) DEAD LOCK/UNLOCK shall be performed regardless of DR OPEN/CLOSE.

6) During the ALL DOOR LOCK/UNLOCK output by KEY or TX, and in case of the 'ALL DOOR LOCK/UNLOCK' command, end the current output immediately, and after 200msec, and then output it by a new input condition.

7) During DEAD LOCK output after ALL DOOR LOCK by KEY or TX, in case of entering 'ALL DOOR UNLOCK' command, end the current output immediately, and after 200msec, and then output it by a new input condition. Also, During ALL DOOR UNLOCK output after DEAD UNLCOCK by KEY or TX, in case of entering 'ALL DOOR LOCK' command, end the current output immediately, and after 200msec, and then output it by a new input condition.

8) In case of the LOCK/UNLOCK is performed at the same time, perform the LOCK function first.

9) In case of entering at the same time by KEY/TX/DR LOCK SW, the priority order shall be TX > KEY > DR LOCK SW.

10) In case of the same condition for (8), (9) items is occurred, (9) item shall be the first.

11) In case of DEAD LOCK is performed, if ACTUATOR UNLOCK SW is lock, and then output the DEAD LOCK without 200msec delay.

12) In case of DEAD UNLOCK is performed, if ACTUATOR UNLOCK SW is unlock, and then execute the DEAD UNLOCK, not CENTRAL UNLOCK.

13) In DEAL LOCK state, in case of KEY IN and IGN1 SW state is turned to ON from OFF, and then output the DEAD UNLOCK for 0.5 seconds.

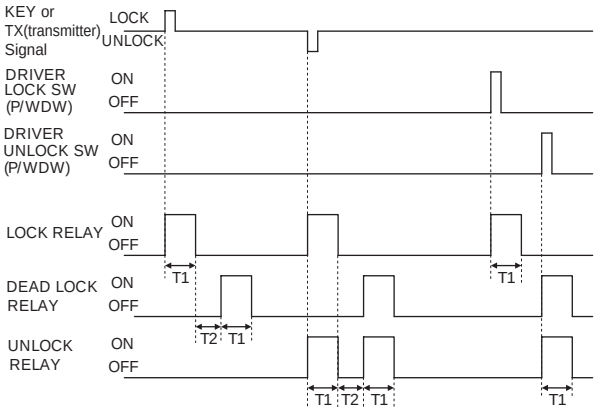

SCMBE6910L

T1 : 0.5 ± 0.1 sec, T2 : 0.2 ± 0.05 sec.

24. 3KM SIGNAL OUTPUT CONTROL
If the vehicle speed is maintained at more than 3km/h for 2~3 seconds in the IGN1 ON state, the signal of 3 KM Output-port shall be ON.

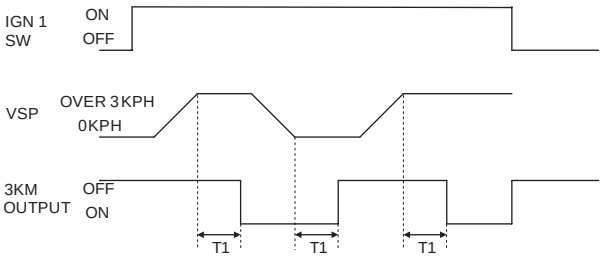

SCMBE6911L

T1 : 2.5 ± 0.5 sec.

CIRCUIT DIAGRAM E6C22B36

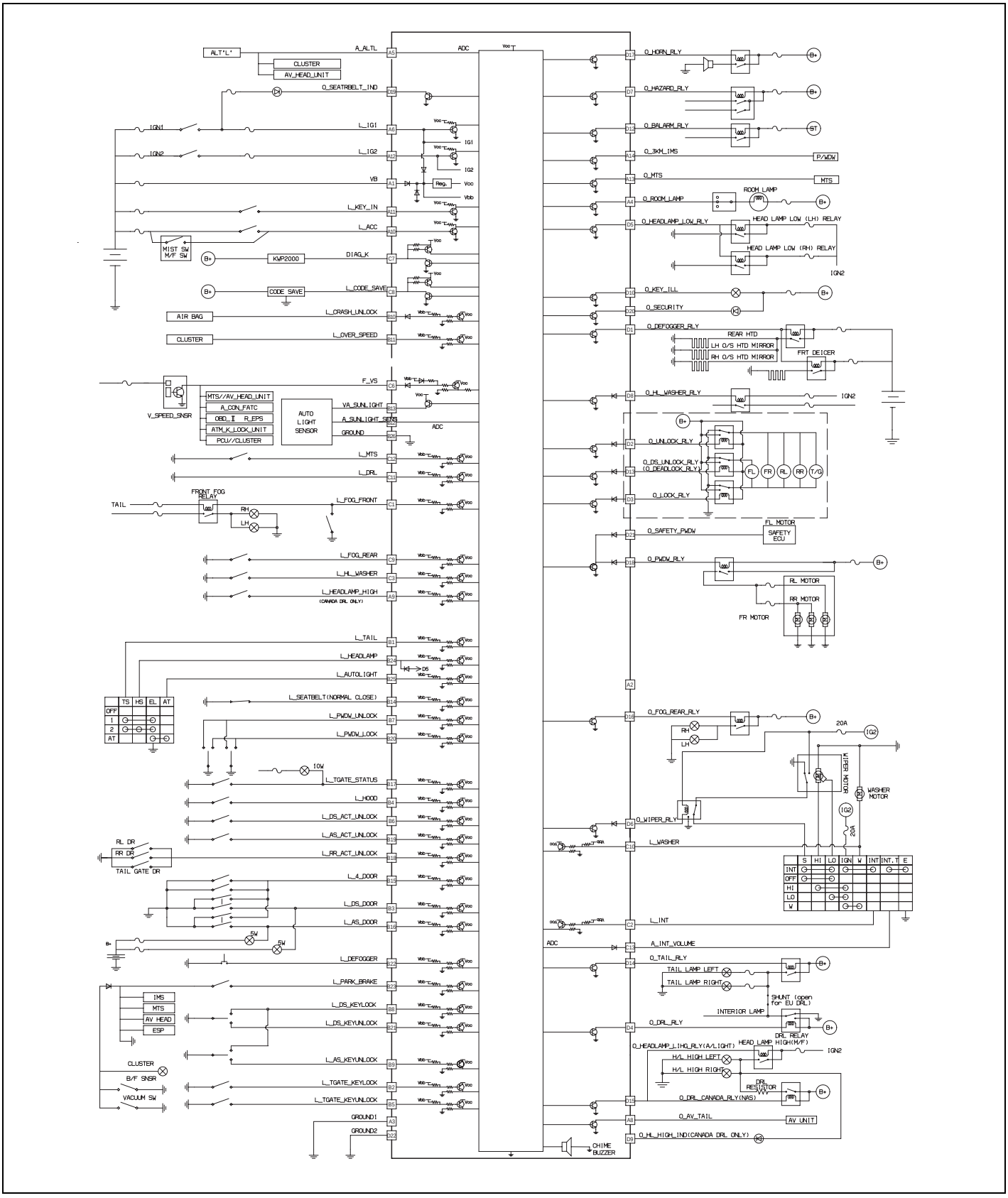

SCMBE6149D

INSPECTION E90F6A81

BCM CONNECTORS

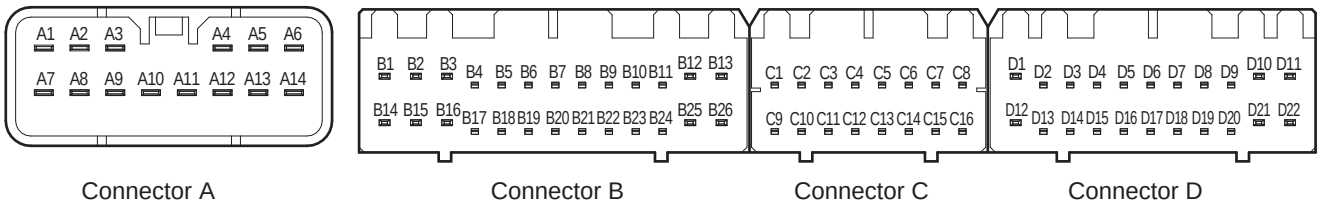

SCMBE6152L

PIN NO	CONNECTOR A	CONNECTOR B	CONNECTOR C	CONNECTOR D
1	Battery voltage	Tail switch	Front fog lamp switch	Defogger switch
2	-	Tailgate key lock switch	INT switch	Unlock relay
3	Ground 1	Drive door switch	-	Lock relay
4	Room lamp	Hood switch	-	DRL relay
5	ALT "L"	Tailgate key unlock switch	-	Head lamp low relay
6	IGN1	Drive actuator unlock switch	Vehicle speed	Wiper relay
7	ARM buzzer	Power window unlock switch	K-line	Hazard relay
8	AV tail output	Drive key lock switch	Code save	-
9	Head lamp high switch	Assistant key unlock switch	Rear fog lamp switch	Head lamp high indicator
10	ACC(L_MIST)	Crash unlock	Washer switch	Key illumination lamp
11	Key IN switch	Overspeed input	DRL switch	-
12	IGN2	Sunlight sensor	-	Burglar alarm relay
13	-	Sunlight sensor power	INT volume	Driver unlock relay
14	3KM to IMS	Seat belt switch	-	Tail relay
15		4Door switch	-	Head lamp high relay
16		Assistant door switch	-	Rear fog lamp relay
17		Tailgate switch		Horn relay
18		Rear actuator unlock switch		Power window relay
19		Assistant actuator unlock switch		Seat belt indicator
20		Power window lock switch		Security indicator
21		Driver key unlock switch		Safety power window
22		Defogger switch		Ground 1
23		Parking brake switch		
24		Head lamp switch		

PIN NO	CONNECTOR A	CONNECTOR B	CONNECTOR C	CONNECTOR D
25		Auto light switch		
26		Sunlight switch		

BCM INPUT/OUTPUT SPECIFICATION

CONNECTOR A

PIN NO.	PIN NAME	Input acquisition threshold voltage (Operating Voltage 9V to 16V at normal temperature / Output type)	
A01	BATTERY VOLTAGE	9V ~ 16V	
A02	-	-	
A03	GROUND 1	GND	
A04	ROOM LAMP	Low side / FET	
A05	ALT "L"	Analog input	
A06	IGN1 SW	ON	6V above
		OFF	2V below
A07	ARM BUZZER	10V above	
A08	AV TAIL OUTPUT	1V below	
A09	HEAD LAMP HIGH SW	ON	6V above
		OFF	2V below
A10	ACC (L_MIST)	ON	6V above
		OFF	2V below
A11	KEY IN SW	ON	6V above
		OFF	2V below
A12	IGN2 SW	ON	6V above
		OFF	2V below
A13	-	-	
A14	3KM TO IMS	Low side / FET	

CONNECTOR B

PIN NO.	PIN NAME	Input acquisition threshold voltage (Operating Voltage 9V to 16V at normal temperature / Output type)	
B01	TAIL SW	ON	6V above
		OFF	2V below
B02	TAILGATE KEY LOCK SW	ON	6V above
		OFF	2V below
B03	DRIVER DOOR SW	ON	6V above
		OFF	2V below
B04	HOOD SW	ON	6V above
		OFF	2V below
B05	TAILGATE KEY UNLOCK SW	ON	6V above
		OFF	2V below
B06	DRIVER ACTUATOR UNLOCK SW	ON	6V above
		OFF	2V below
B07	POWER WINDOW UNLOCK SW	ON	6V above
		OFF	2V below
B08	DRIVER KEY LOCK SW	ON	6V above
		OFF	2V below
B09	ASSISTANT KEY UNLOCK SW	ON	6V above
		OFF	2V below
B10	CRASH UNLOCK	ON	6V above
		OFF	2V below
B11	OVERSPEED INPUT	ON	6V above
		OFF	2V below
B12	SUNLIGHT SENSOR	Analog input	
B13	SUNLIGHT SENSOR POWER	5V output, Analog input	
B14	SEAT BELT SW	ON	6V above
		OFF	2V below
B15	4DOOR SW	ON	6V above
		OFF	2V below
B16	ASSISTANT DOOR SW	ON	6V above
		OFF	2V below
B17	TAILGATE SW	ON	6V above
		OFF	2V below
B18	REAR ACTURATOR UNLOCK SW	ON	6V above
		OFF	2V below
B19	ASSISTANT ACTUATOR UNLOCK SW	ON	6V above
		OFF	2V below

PIN NO.	PIN NAME	Input acquisition threshold voltage (Operating Voltage 9V to 16V at normal temperature / Output type)	
B20	POWER WINDOW LOCK SW	ON	6V above
		OFF	2V below
B21	DRIVER KEY UNLOCK SW	ON	6V above
		OFF	2V below
B22	DEFOGGER SW	ON	6V above
		OFF	2V below
B23	PARK BRAKE SW	ON	6V above
		OFF	2V below
B24	HEAD LAMP SW	ON	6V above
		OFF	2V below
B25	AUTO LIGHT SW	ON	6V above
		OFF	2V below
B26	SUNLIGHT SENSOR GROUND	GND	

CONNECTOR C

PIN NO.	PIN NAME	Input acquisition threshold voltage (Operating Voltage 9V to 16V at normal temperature / Output type)	
C01	FRONT FOG SW	ON	6V above
		OFF	2V below
C02	INT SW	ON	6V above
		OFF	2V below
C03	-	-	
C04	-	-	
C05	-	-	
C06	VEHICLE SPEED	Frequency Input	
C07	DIAGNOSIS LINE	Communication Line	
C08	CODE SAVE	ON	6V above
		OFF	2V below
C09	REAR FOG SW	ON	6V above
		OFF	2V below
C10	WASHER SW	ON	6V above
		OFF	2V below
C11	DRL OPTION LINE	ON	6V above
		OFF	2V below
C12	-	-	
C13	INT VOLUME	Analog input	
C14	-	-	
C15	-	-	
C16	-	-	

CONNECTOR D

PIN NO.	PIN NAME	Input acquisition threshold voltage (Operating Voltage 9V to 16V at normal temperature / Output type)
D01	DEFOGGER RELAY	Low side / FET
D02	UNLOCK RELAY	Low side / FET
D03	LOCK RELAY	Low side / FET
D04	DRL RELAY	Low side / FET
D05	HEAD LAMP LOW RELAY	Low side / FET
D06	WIPER RELAY	Low side / FET
D07	HAZARD RELAY	Low side / FET
D08	-	-
D09	HEAD LAMP HIGH INDICATOR	Low side / TR
D10	KEY ILLUMINATION LAMP	High side / TR
D11	-	-
D12	BURGLAR ALARM RELAY	Low side / FET
D13	DRIVER UNLOCK RELAY	Low side / FET
D14	TAIL RELAY	Low side / FET
D15	DRL CANADA RELAY	Low side / FET
D16	REAR FOG RELAY	Low side / FET
D17	HORN RELAY	Low side / FET
D18	POWER WINDOW RELAY	Low side / FET
D19	SEATBELT INDICATOR	Low side / TR
D20	SECURITY INDICATOR	Low side / TR
D21	SAFETY POWER WINDOW	Low side / FET
D22	GROUND1	GND

BCM CURRENT DATA

The body control module can diagnose with the diagnosis tool more quickly.
The BCM communicates with the diagnosis tool and then reads the input/output value and drives the actuator.

INPUT/OUTPUT VALUE

SECTION	BCM DISPLAY	ABBREVIATION	UNIT	REMARKS
POWER	IGN1	IG1	OFF/ON	INPUT
	IGN2	IG2	OFF/ON	INPUT
	ALT L	ALT VOLT	OFF/ON	INPUT
	KEY IN SW	KEY IN	OUT/IN	INPUT
	STARTER INHIBIT RELAY(+RK)	INHIBIT	ENABLE/ STOP	OUTPUT
	POWER WINDOW RELAY	P/WDW RLY	OFF/ON	OUTPUT
	AUTO LIGHT POWER	LIGHT PWR	OFF/ON	
LAMP	TAIL LAMP SW	TAIL SW	OFF/ON	INPUT
	AUTO LIGHT SW(-DRL)	LIGHT SW	OFF/ON	INPUT
	HEAD LAMP SW	HEAD/L SW	OFF/ON	INPUT
	FRONT FOG SW	FF FOG SW	OFF/ON	INPUT
	H/LAMP HIGH SW	H/LAMP HI	OFF/ON	INPUT
	DRL OPTION LINE SW	DRL	NONE/DRL	INPUT
	TAIL LAMP RELAY	TAIL RLY	OFF/ON	OUTPUT
	HEAD LAMP RELAY	H/L RLY	OFF/ON	OUTPUT
	HAZARD LAMP RELAY(+RK)	HAZARD RL	OFF/ON	OUTPUT
	DRIVER SEAT BELT IND.	D S/BELT	OFF/ON	OUTPUT
	ROOM LAMP	ROOM LAMP	OFF/ON	OUTPUT
	IGN KEY HOLE ILL.	KEY ILL.	OFF/ON	OUTPUT
	SECURITY INDICATOR	S/IND.	OFF/ON	OUTPUT
	DRL RELAY	DRL RLY	OFF/ON	OUTPUT
	H/LAMP HIGH RLY	H/L RLY	OFF/ON	OUTPUT
	H/LAMP HIGH IND.	H/L IND.	OFF/ON	OUTPUT
ENTER ANCE	DRIVER DOOR OPEN SW	D/DOOR SW	CLOSED/ OPEN	INPUT
	ASSIST DOOR OPEN SW	A/DOOR SW	CLOSED/ OPEN	INPUT
	4 DOOR SWITCH	4DOOR SW	CLOSED/ OPEN	INPUT
	TAIL GATE SW	TAIL	CLOSED/ OPEN	INPUT
	HOOD SWITCH(+RK)	HOOD SW	CLOSED/ OPEN	INPUT

SECTION	BCM DISPLAY	ABBREVIATION	UNIT	REMARKS
LOCK / UNLOCK	DR.DOOR ACT.POSI.SW	D/DR ACT	UNLOCK/ LOCK	INPUT
	AS.DOOR ACT.POSI.SW	A/DR ACT	UNLOCK/ LOCK	INPUT
	RH,RR,T/GATE ACT POSI.SW	ACT SW	UNLOCK/ LOCK	INPUT
	DR.DOOR KEY LOCK SW	DR KEY SW	OFF/ON	INPUT
	DR.DOOR KEY UNLOCK SW	D/DR KEY	OFF/ON	INPUT
	AS.DOOR KEY UNLOCK SW	A/DR KEY	OFF/ON	INPUT
	T/GATE KEY UNLOCK SW	TRUNK SW	OFF/ON	INPUT
	CTRL DOOR LOCK SW	CTRL D/LO	OFF/ON	INPUT
	CTRL DOOR UNLOCK SW	CTRL D/UN	OFF/ON	INPUT
	CRASH UNLOCK SIGNAL	CRASH SIG	OFF/ON	INPUT
	DOOR LOCK RELAY	DR L/RLY	OFF/ON	OUTPUT
	DOOR UNLOCK RELAY	DR U/RLY	OFF/ON	OUTPUT
	T/GATE KEY LOCK SW	TRUNK SW	OFF/ON	OUTPUT
	DEAD LOCK RELAY		OFF/ON	OUTPUT
WIPER DEFFO GER	WASHER SWITCH	WASHER SW	OFF/ON	INPUT
	INT.WIPER SWITCH	INT SW	OFF/ON	INPUT
	REAR DEFOGGER SW	RR DEF SW	OFF/ON	INPUT
	H/LAMP WASHER SW	H/WASHER	OFF/ON	INPUT
	WIPER RELAY	WIPER RLY	OFF/ON	OUTPUT
	REAR DEFOGGER RELAY	RR DEF RLY	OFF/ON	OUTPUT
	H/LAMP WASHER RLY	H/L RLY	OFF/ON	OUTPUT
	MIST SW	MIST SW	OFF/ON	INPUT
WARNING	OVER SPEED INPUT	O/SPEED	OFF/ON	INPUT
	DRIVER SEAT BELT SW	D S/B SW	UNBUCKLED /BUCKLED	INPUT
	P/BRAKE SW	P/BRAKE	UNPARK/ PARK	INPUT
	BUGLAR HORN RELAY	BUR. RLY	OFF/ON	OUTPUT
	CHIME BELL	CHIM. BELL	OFF/ON	OUTPUT
ANALOG INPUT SIGNAL	INT. VOLUME(-RAIN)	INT. VOL	V	INPUT
	AUTO LIGHT SNSR	A/LIGHT	V	INPUT
	SPEED SIGNAL	VSS	Km/h	INPUT
ETC	SAFETY P/W ECU	P/W ECU	OFF/ON	INPUT

BCM ACTUATOR OPERATION

SCAN tool can operates all actuators controlled by BCM by force.

NO.	BCM DISPLAY
1	Tail lamp
2	Head lamp low
3	Head lamp high
4	Head lamp high indicator
5	Front fog lamp
6	Front fog lamp indicator
7	Rear fog lamp
8	Day Running light
9	Low speed wiping relay
10	High speed wiping relay
11	Defroster relay
12	Trunk release
13	B/A Horn
14	Room Lamp
15	Hazard Lamp + Flasher Buzzer Output
16	Left turn signal + Flasher Buzzer Output
17	Right turn signal + Flasher Buzzer Output
18	Buzzer
19	Key illumination
20	Seat Belt Indicator(Driver side and Assist side)
21	Head Lamp Washer
22	Start Inhibition output
23	External Buzzer output
24	Security Led output
25	Rear RH Power window Up
26	Rear RH Power Window Down
27	Rear LH Power window Up
28	Rear LH Power Window Down
29	Foot lamp output
30	AV TAIL output

BCM DIAGNOSIS WITH SCAN TOOL

1. It will be able to diagnose defects of BCM with scan tool quickly. Scan tool can operates actuator forcefully, input/output value monitoring and self diagnosis.
2. Select model and menu.

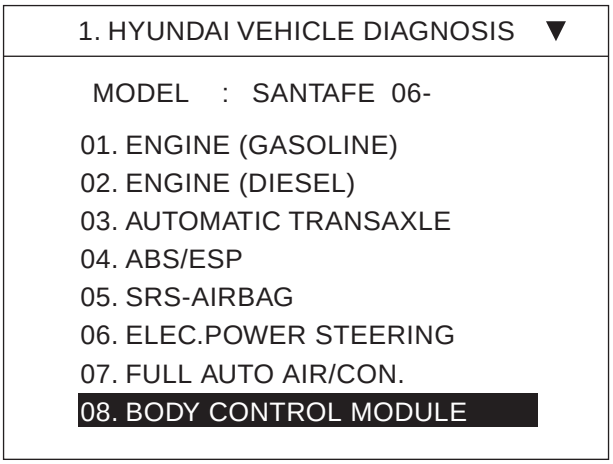

SCMBE6385L

3. Select "Current data", if you will check current data of BCM. It provides power supply status, multi function status, lamp status, door status, lock system status, wiper, auto light status and so on.

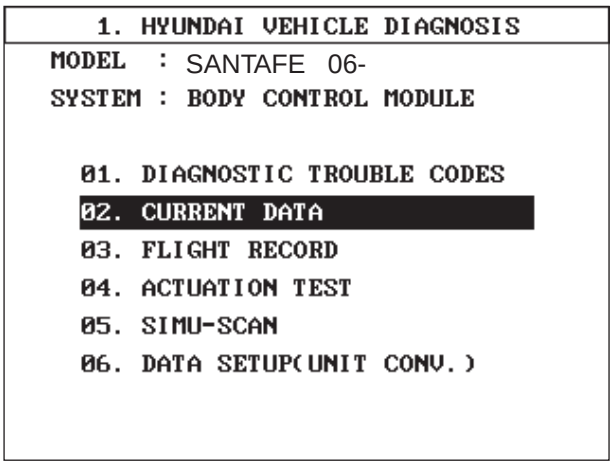

SCMBE6356L

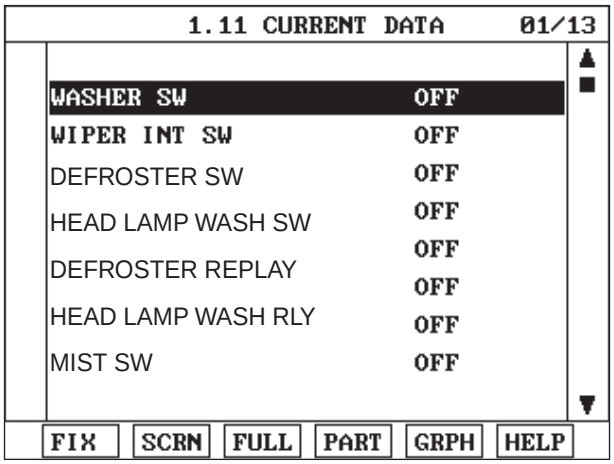

SCMBE6358L

4. If you will check BCM data operation forcefully, select "Actuation test".

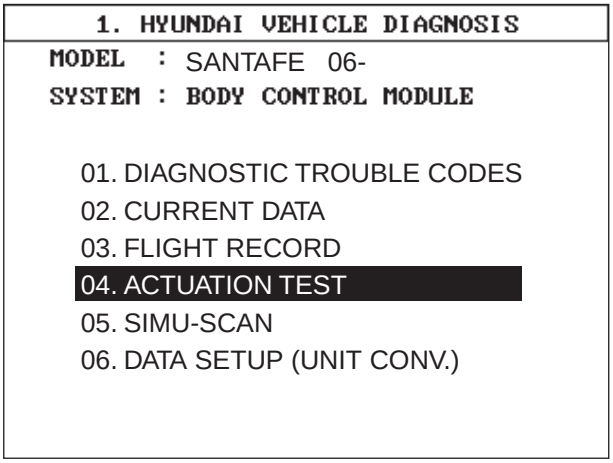

SCMBE6218L

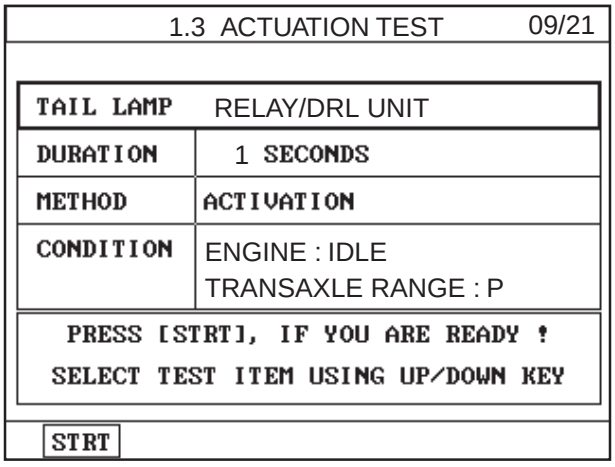

SCMBE6219L

5. You can turn ON/OFF as below option function with the user option program.

   1) LOCK / UNLOCK comfirming alarm: Alarm sound ON/OFF control when you LOCK/UN-LOCK doors with transmitter.

   2) Mechanical LOCKING system: Arm/Disarm ON/OFF when you lock the door with the mechanical key.

   3) AUTO DOOR LOCK/UNLOCK system ON/OFF.
      - Vehicle speed gearing AUTO DOOR LOCK (more than 20km/h)
      - AUTO DOOR LOCK non application
      - Shift lever gearing AUTO DOOR LOCK
      - Driver seat AUTO DOOR LOCK
      - AUTO DOOR UNLOCK non application
      - All doors UNLOCK in the case of driver door UNLOCK
      - All doors UNLOCK in the case of IGN key seperation.

   4) Riding & Getting off gearing
      - Seat installation state ON/OFF
      - Seat riding & getting off gearing ON/OFF
      - Column installation state ON/OFF
      - Column riding & getting off gearing ON/OFF

REPLACEMENT E59EEA1A

1. Disconnect the negative (-) battery terminal.
2. Remove the crash pad lower panel (A). Avoid damaging retaining clip. (Refer to the Body group - Crash pad)

[LHD]

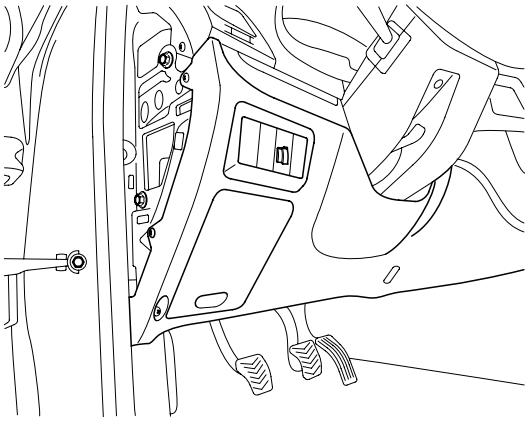

SCMBE6154L

[RHD]

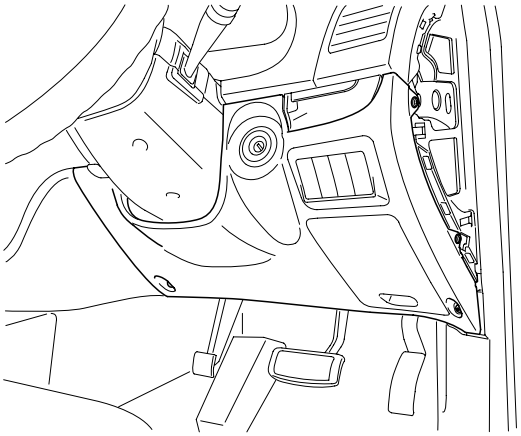

SCMBE6154R

3. Remove the body control module (A) and antenna cable after loosening 3 bolts and disconnecting connector.

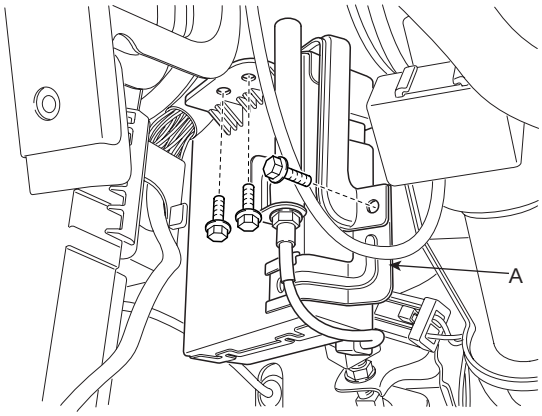

SCMBE6153D

4. Installation is the reverse of removal.

FUEL FILLER DOOR OPENER

COMPONENT LOCATION E6EB50CF

The parts with asterisk(*) :
This illustration shows the LHD type.
RHD type is symmetrical.

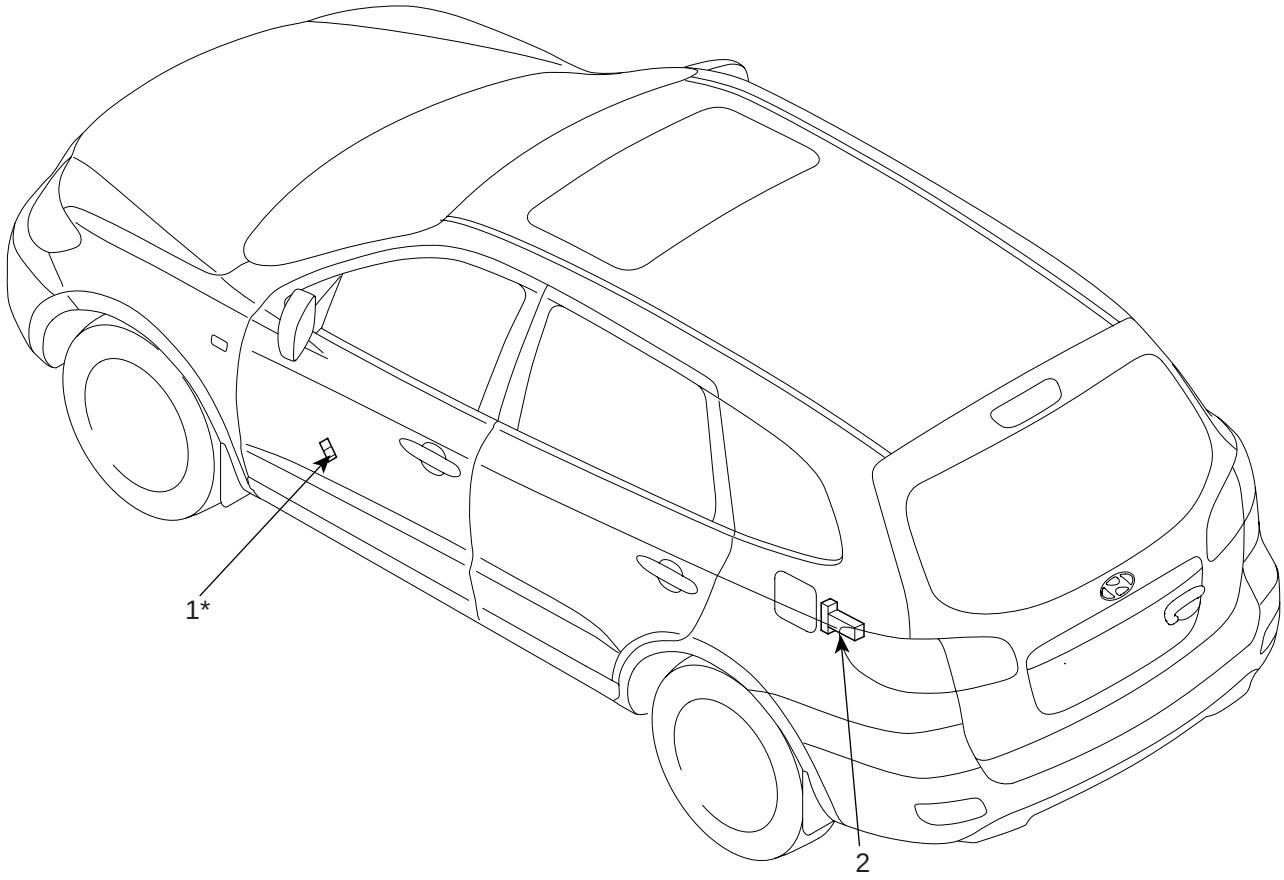

1. Fuel filler door open switch
2. Fuel filler door release actuator

SCMBE6180L

FUEL FILLER DOOR RELEASE ACTUATOR

INSPECTION E2F1D93F

1. Remove the rear seat. (Refer to the Body group - Rear seat).
2. Remove the luggage side trim. (Refer to the internal trim)
3. Open the fuel filter door and disconnect the wiring connector after loosening 2 nuts.
4. Check for continuity between terminal No. 1 and No. 2. If there is no continuity replace the fuel filler door release actuator (A).

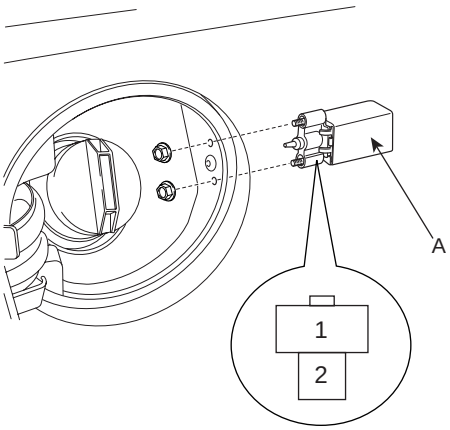

ATKF181A

FUEL FILLER DOOR OPEN SWITCH

INSPECTION EE6CC63B

1. Remove the front door trim panel. (Refer to the Body group - front door)
2. Disconnect the switch connector (4P) from wiring.
3. Check the switch for continuity between the No. 1 and No. 2 terminals.
4. If the continuity is not as specified, replace the switch.

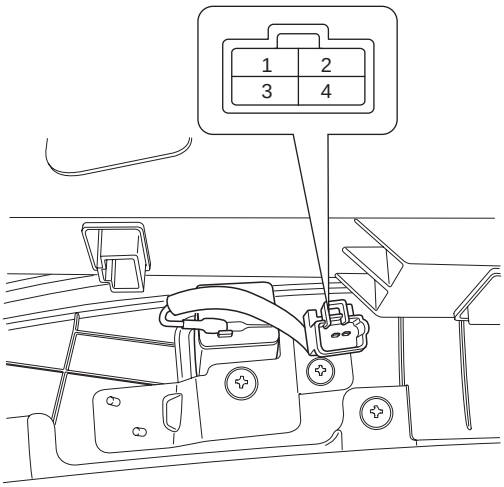

SCMBE6182D

FUSES AND RELAYS

COMPONENT LOCATION EB826186

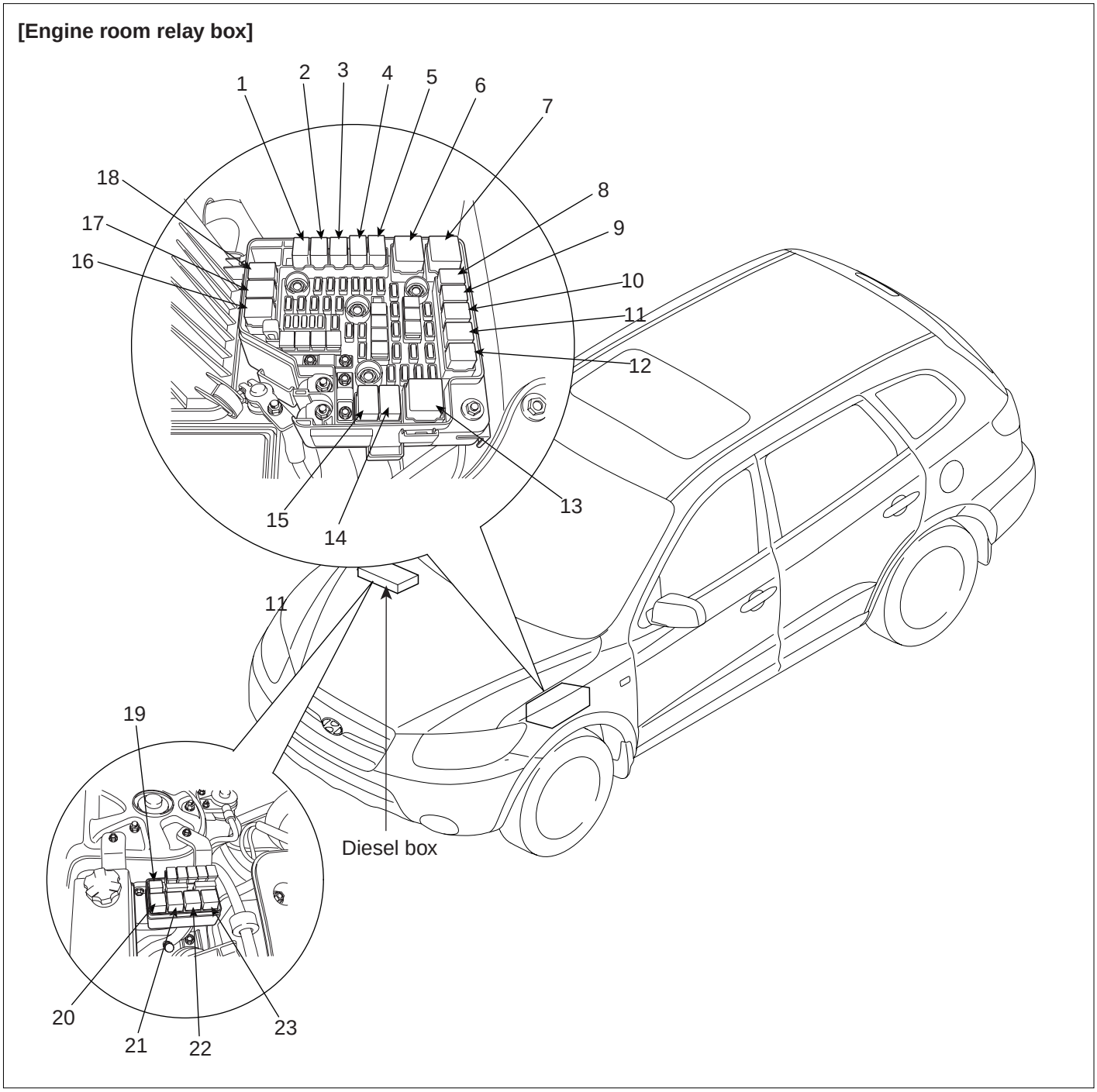

1. A/T control relay
2. Cooling pan relay
3. Front fog lamp relay
4. A/C relay
5. Head lamp relay (High)
6. Main relay
7. Start relay
8. Condenser pan 2 relay
9. Condenser pan 1 relay
10. Tail lamp relay
11. Head lamp relay (Low-left side)
12. Head lamp relay (Low-right side)
13. Rear defogger relay
14. Windshield relay
15. Horn relay
16. Wiper relay
17. Rain sensor relay
18. Fuel pump relay
19. Fuel filter heater relay
20. PTC heater relay #2
21. Glow relay
22. PTC heater relay #1
23. PTC heater relay #3

SCMBE6190L

[Passenger compartment relay]

The parts with asterisk(*) :
This illustration shows the LHD type.
RHD type is symmetrical.

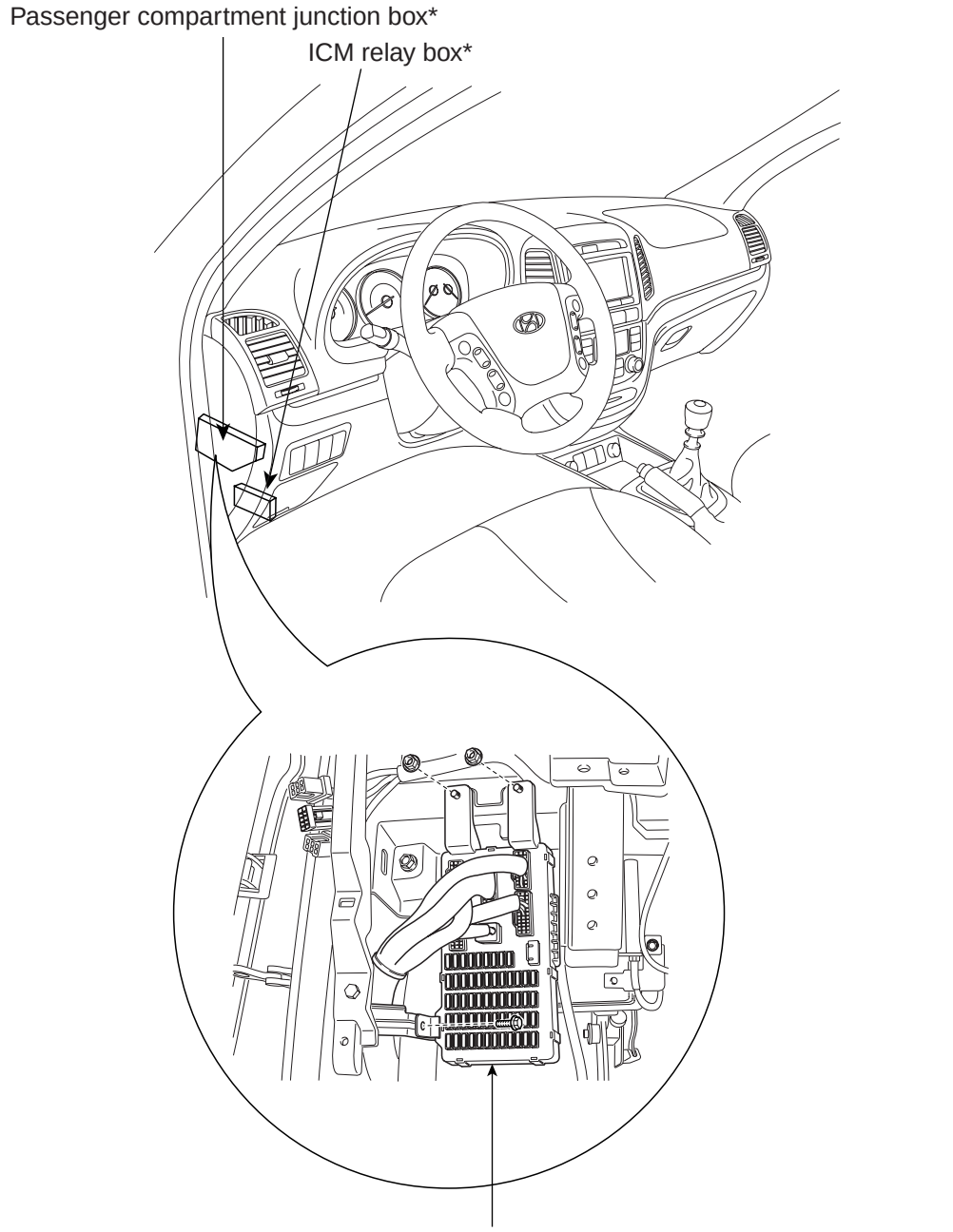

SCMBE6191L

RELAY BOX (ENGINE COMPARTMENT)

COMPONENT LOCATION E5BA7BEF

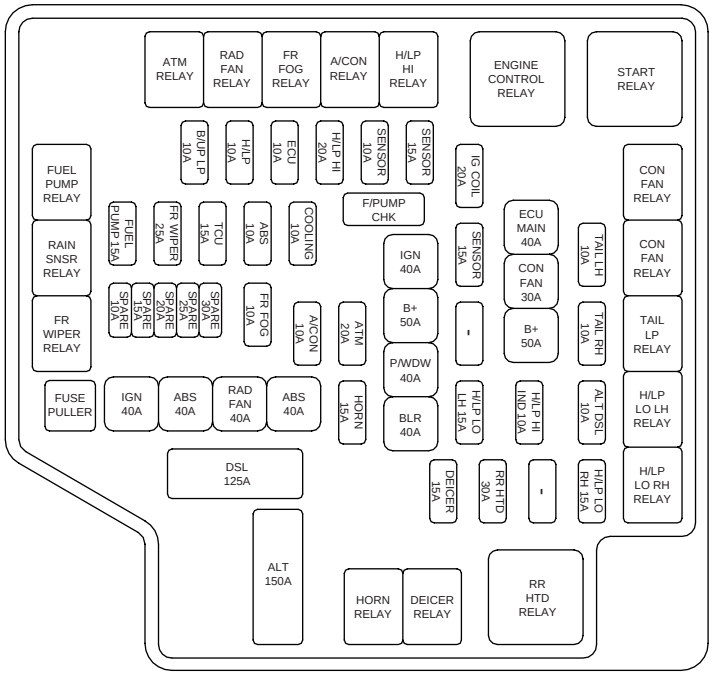

CIRCUIT

FUSE	(A)	Circuit Protected
DSL	125A	FUSIBLE LINK BOX
ALT	150A	GENERATOR
A/CON	10A	A/CON RELAY
RR HTD	30A	RR HTD RELAY
BLR	40A	I/P JUNCTION BOX
B+ #2	50A	I/P JUNCTION BOX
P/WDW	40A	I/P JUNCTION BOX
ABS #1	40A	ABS CONTROL MODULE, ESP CONTROL MODULE, MULTIPURPOSE CHECK CONNECTOR
ABS #2	40A	ABS CONTROL MODULE, ESP CONTROL MODULE, MULTIPURPOSE CHECK CONNECTOR
DEICER	15A	DEICER RELAY
ECU MAIN	40A	ENGINE CONTROL RELAY
HORN	15A	HORN RELAY
IG COIL	20A	IGNITION COIL #1~#6(GSL), CONDENSER(GSL), ECM(DSL)
SENSOR #3	15A	ECM(DSL), PURGE CONTROL SOLENOID VALVE(GSL), VARIABLE INTAKE MANIFOLD VALVE(GSL), PCM(GSL), OIL CONTROL VALVE(GSL)
RAD FAN	40A	RAD FAN RELAY
CON FAN	30A	CON FAN #1 RELAY, CON FAN #2 RELAY
SENSOR #2	15A	MASS AIR FLOW SENSOR(GSL), OXYGEN SENSOR #1~#4(GSL), EGR ACTUATOR(DSL), BOOST PRESSURE ACTUATOR(DSL), CAM SHAFT POSITION SENSOR(DSL), FUSIBLE LINK BOX(DSL), THROTTLE FLAP ACTUATOR(DSL), PCM(GSL)
SENSOR #1	10A	IMMOBILIZER MODULE, INJECTOR #1~#6(GSL), PCM(GSL) STOP LAMP SWITCH(DSL), A/CON RELAY, FUEL PUMP RELAY
FUEL PUMP	15A	FUEL PUMP RELAY
H/LP LO LH	15A	H/LP LO LH RELAY
H/LP LO RH	15A	H/LP LO RH RELAY

FUSE	(A)	Circuit Protected
H/LP	10A	I/P JUNCTION BOX
FR WIPER	25A	FR WIPER RELAY, RAIN SNSR RELAY, FRONT WIPER MOTOR, MULTIFUNCTION SWITCH
H/LP HI	20A	H/LP HI RELAY
H/LP HI IND	10A	HEAD LAMP, INSTRUMENT CLUSTER
IGN #1	40A	IGNITION SWITCH
IGN #2	40A	IGNITION SWITCH, START RELAY
B+ #1	50A	I/P JUNCTION BOX
ATM	20A	ATM RELAY(GSL), 4WD ECM, ATM CONTROL RELAY(DSL)
TCU	15A	PCM(GSL), TCM(DSL)
ALT DSL	10A	GENERATOR
ECU	10A	VEHICLE SPEED SENSOR, MASS AIR FLOW SENSOR(DSL), ECM(DSL), SEMI ACTIVE CONTROL MODULE(GSL), PCM(GSL)
COOLING	10A	CON FAN #1 RELAY, CON FAN #2 RELAY
B/UP UP	10A	INPUT SPEED SENSOR, OUTPUT SPEED SENSOR, TCM(DSL), TRANSAXLE RANGE SWITCH, BACK-UP LAMP SWITCH
ABS	10A	ABS CONTROL MODULE, ESP CONTROL MODULE, YAW RATE SENSOR, 4WD ECM, STOP LAMP SWITCH(GSL), FUSIBLE LINK BOX(DSL), FUEL FILTER WARNING SWITCH(DSL) CLUTCH SWITCH(GSL), MULTIPURPOSE CHECK CONNECTOR
TAIL LH	10A	REAR COMBINATION LAMP LH, POSITION LAMP LH
TAIL RH	10A	REAR COMBINATION LAMP RH, POSITION LAMP RH, GLOVE BOX LAMP, ICM RELAY BOX
FR FOG	10A	FR FOG RELAY
SPARE	10A	-
SPARE	15A	-
SPARE	20A	-
SPARE	25A	-
SPARE	30A	-

※USE THE DESIGNATED FUSE ONLY

SCMBE6192L

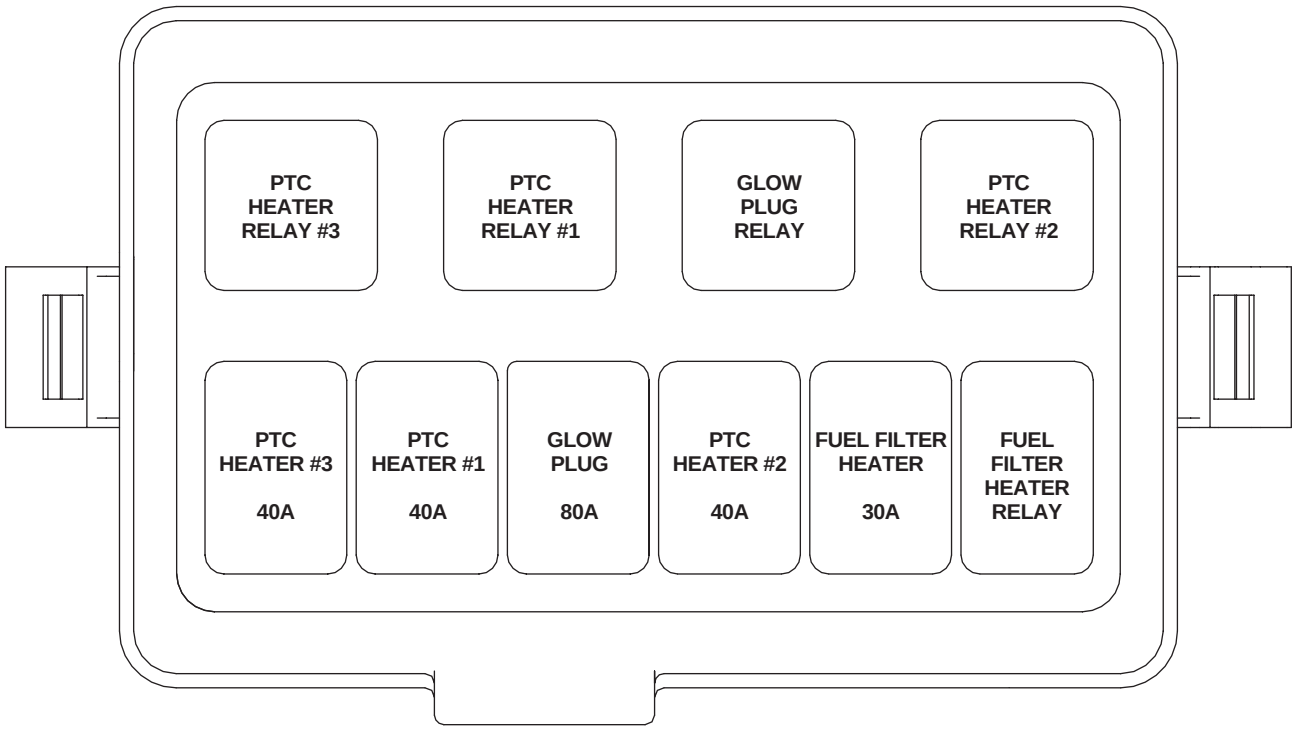

※ USE THE DESIGNATED FUSE ONLY

SCMBE6193L

INSPECTION EE70B5AD

POWER RELAY (TYPE A)

Check for continuity between the terminals.

1. There should be continuity between the No.30 and No.87 terminals when power and ground are connected to the No.85 and No.86 terminals.
2. There should be no continuity between the No.30 and No.87 terminals when power is disconnected.

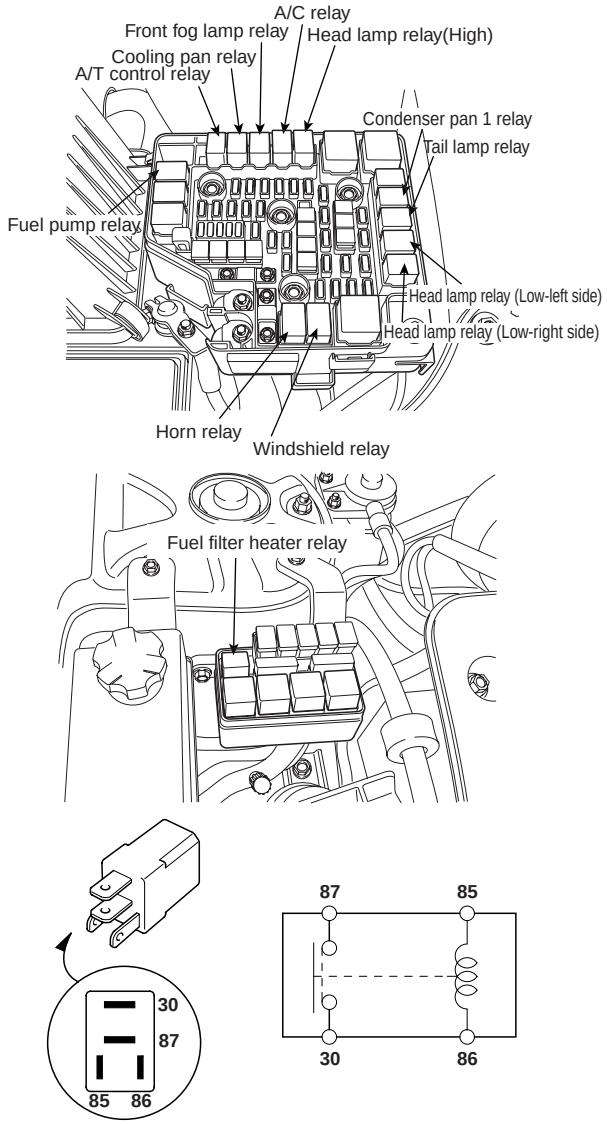

SCMBE6194L

Terminal / Power	30	87	85	86
Disconnected			○	○
Connected	○	○	⊖	⊕

SCMBE6195L

POWER RELAY (TYPE B)

Check for continuity between the terminals.

1. There should be continuity between the No.30 and No.87 terminals when power and ground are connected to the No.85 and No.86 terminals.
2. There should be continuity between the No.30 and No.87 terminals when power is disconnected.

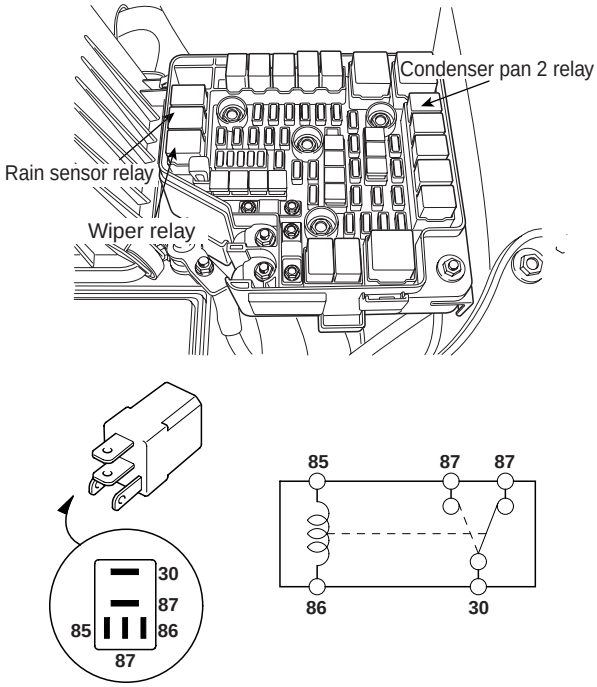

SCMBE6196L

Terminal / Power	85	86	30	87	87
Disconnected			○		○
Connected	⊖	⊕	○	○	

SCMBE6197L

POWER RELAY (TYPE C)

Check for continuity between the terminals.

1. There should be continuity between the No.30 and No.87 terminals when power and ground are connected to the No.85 and No.86 terminals.
2. There should be no continuity between the No.30 and No.87 terminals when power is disconnected.

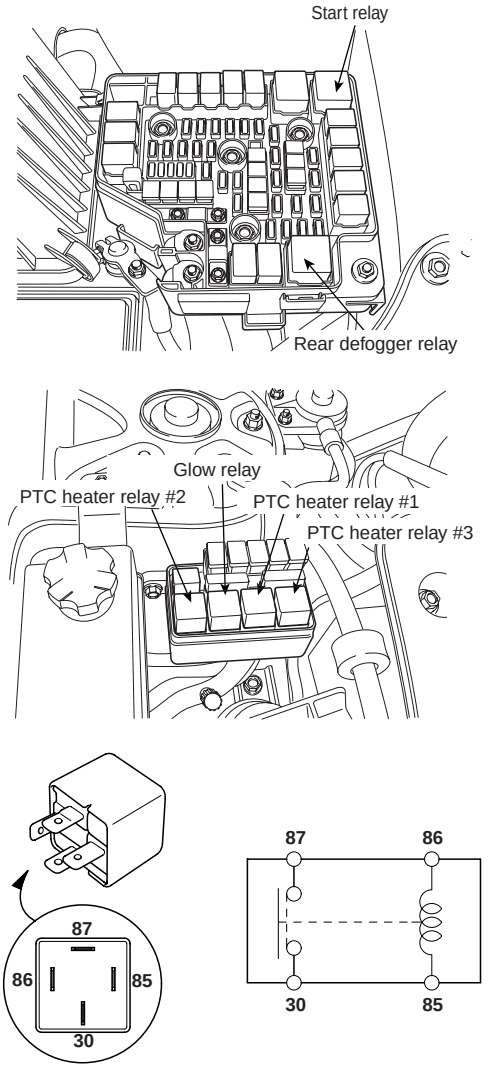

SCMBE6198L

Terminal / Power	86	85	87	30
Disconnected	○	○		
Connected	⊖	⊕	○	○

SCMBE6199L

POWER RELAY (TYPE D)

Check for continuity between the terminals.

1. There should be continuity between the No.30 and No.87 terminals when power and ground are connected to the No.85 and No.86 terminals.
2. There should be continuity between the No.30 and No.87 terminals when power is disconnected.

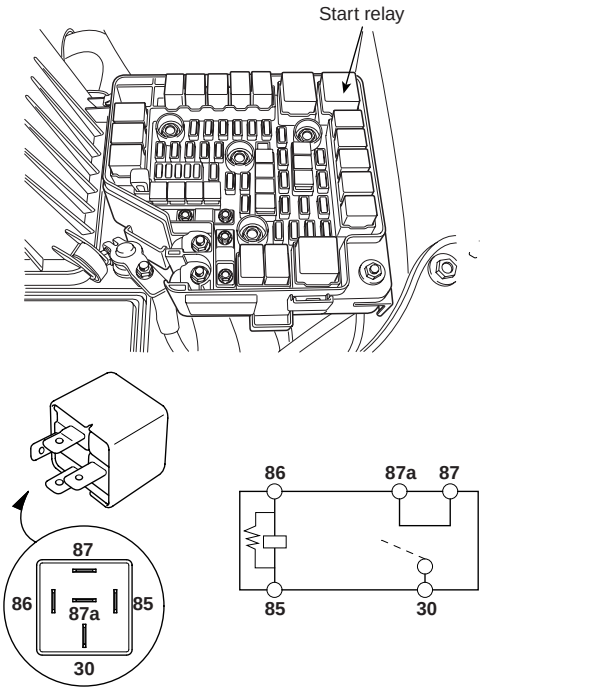

SCMBE6200L

Terminal / Power	86	85	87	87a	30
Disconnected	○	○			
Connected	⊖	⊕	○	○	○

SCMBE6201L

FUSE

1. Be sure there is no play in the fuse holders, and that the fuses are held securely.
2. Are the fuse capacities for each circuit correct?
3. Are there any blown fuses?
   If a fuse is to be replaced, be sure to use a new fuse of the same capacity. Always determine why the fuse blew first and completely eliminate the problem before installing a new fuse.

RELAY BOX (PASSENGER COMPARTMENT)

COMPONENT LOCATION EBFFF18D

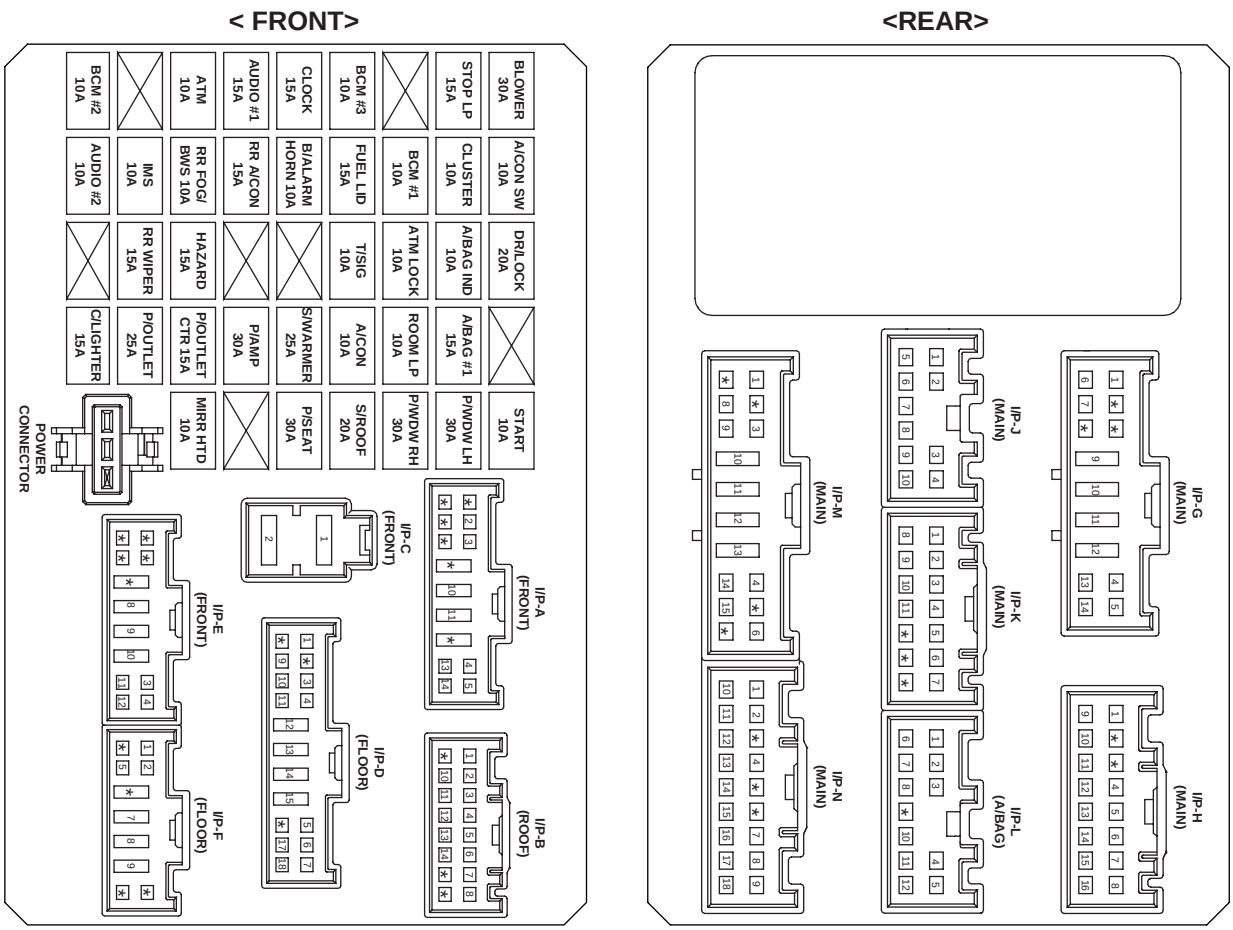

※USE THE DESIGNATED FUSE ONLY

SCMBE6210L

CIRCUIT

FUSE	(A)	Circuit Protected
C/LIGHTER	15A	CIGARETTE LIGHTER
P/OUTLET	25A	FRONT POWER OUTLET, REAR POWER OUTLET
P/OUTLET CTR	15A	CENTER POWER OUTLET
AUDIO #2	10A	POWER OUTSIDE MIRROR SWITCH, AUDIO, DIGITAL CLOCK, ATM KEY LOCK CONTROL MODULE
RR WIPER	15A	MULTIFUNCTION SWITCH, REAR WIPER CONTROL MODULE, REAR WIPER MOTOR
IMS	10A	RAIN SENSOR
BCM #2	10A	RHEOSTAT, BCM, INSTRUMENT CLUSTER
A/CON	10A	A/C CONTROL MODULE, INCAR & HUMIDITY SENSOR, HIGH BLOWER RELAY, REAR A/CON SWITCH, ICM RELAY BOX, AQS SENSOR, FUSIBLE LINK BOX (DSL), SUNROOF MOTOR, BLOWER RELAY, ELECTRO CHROMIC MIRROR
BLOWER	30A	BLOWER RELAY, BLOWER MOTOR, A/C CONTROL MODULE
A/CON SW	10A	A/C CONTROL MODULE
A/BAG #1	15A	SRS CONTROL MODULE
A/BAG IND	10A	PAB CUT OFF SWITCH, INSTRUMENT CLUSTER
T/SIG	10A	HAZARD SWITCH
ATM LOCK	10A	MULTIFUNCTION SWITCH, STEERING ANGLE SENSOR, ESP SWITCH, ATM KEY LOCK CONTROL MODULE, SEAT WARMER MODULE
BCM #1	10A	OIL LEVEL SENSOR MODULE, BCM
CLUSTER	10A	INSTRUMENT CLUSTER, PRE-EXCITATION RESISTOR, BCM, SEMI ACTIVE ENGINE MOUNTING CONTROL MODULE (GSL), GENERATOR
START	10A	BURGLAR ALARM RELAY
P/AMP	30A	DELPHI AMP, MOBIS AMP
S/WARMER	25A	SEAT WARMER CONTROL MODULE
P/SEAT	30A	POWER SEAT SWITCH
RR A/CON	15A	ICM RELAY BOX
RR FOG/BWS	10A	ICM RELAY BOX
S/ROOF	20A	SUNROOF MOTOR
B/ALARM HORN	10A	BURGLAR ALARM HORN RELAY
MIRR HTD	10A	REAR DEFOGGER SWITCH, POWER OUTSIDE MIRROR MOTOR
DR/LOCK	20A	DOOR LOCK (UN) RELAY, ICM RELAY BOX
STOP LP	15A	STOP LAMP SWITCH
FUEL LID	15A	FUEL LID SWITCH
ATM	10A	KEY SOLENOID, SEMI ACTIVE SOLENOID (GSL), SPORTS MODE SWITCH INSTRUMENT CLUSTER, LUGGAGE LAMP, MAP LAMP, REAR PERSONAL LAMP,
ROOM LP	10A	ROOM LAMP, FRONT DOOR LAMP, CARGO LAMP, VANITY LAMP SWITCH
BCM #3	10A	IGNITION KEY ILL. & DOOR WARNING SWITCH, BCM, SECURITY INDICATOR
CLOCK	15A	A/C CONTROL MODULE, DATA LINK CONNECTOR, DIGITAL CLOCK
AUDIO #1	15A	DELPHI AUDIO, MOBIS AUDIO
HAZARD	15A	HAZARD SWITCH, HAZARD RELAY
P/WDW LH	30A	POWER WINDOW MAIN SWITCH, REAR POWER WINDOW SWITCH LH
P/WDW RH	30A	POWER WINDOW MAIN SWITCH, REAR POWER WINDOW SWITCH RH

※ USE THE DESIGNATED FUSE ONLY

INSPECTION ED3ADA2E

FUSE

1. Be sure there is no play in the fuse holders, and that the fuses are held securely.

2. Are the fuse capacities for each circuit correct?

3. Are there any blown fuses?
   If a fuse is to be replaced, be sure to use a new fuse of the same capacity. Always determine why the fuse blew first and completely eliminate the problem before installing a new fuse.

ICM (INTEGRATED CIRCUIT MODULE) RELAY BOX

DESCRIPTION EDD82CCE

The ICM is united with many kinds of relays and installed below the body control module.
relay box (Assist compartment).

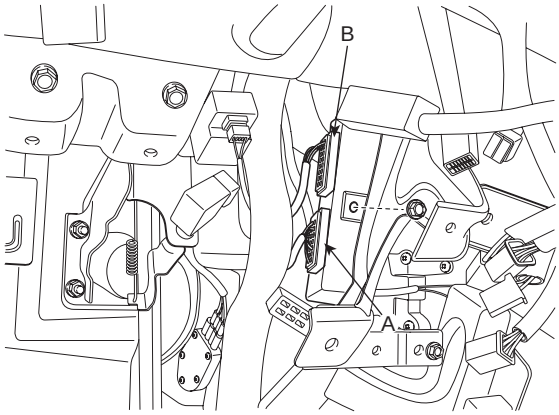

SCMBE6212D

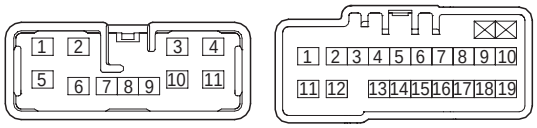

[A] [B]

SCMBE6213L

INSPECTION E04C6F4C

REAR AIRCONDITION

Check for continuity between the terminals.

1. There should be continuity between the No.2 and No.3 terminals when power and ground are connected to the No.1 and No.11 in the ICM-B.
2. There should be no continuity between the No.2 and No.3 terminals when power is disconnected.

ADJUST PEDAL

Check for continuity between the terminals.

1. There should be no continuity between the No.12 and No.13 terminals when power and ground are connected to the No.12 and No.15 in the ICM-B.
2. There should be continuity between the No.12 and No.13 terminals when power is disconnected.

DEAD LOCK

Check for continuity between the terminals.

1. There should be continuity between the No.9 and No.10 terminals when power and ground are connected to the No.18 and No.19 in the ICM-B.
2. There should be no continuity between the No.11 and No.10 terminals when power is disconnected.

DRL

Check for continuity between the terminals.

1. There should be continuity between the No.8 and No.9 terminals when power and ground are connected to the No.4 and No.11 terminals in the ICM-A.
2. There should be no continuity between the No.8 and No.9 terminals when power is disconnected.

REAR FOG LAMP

Check for continuity between the terminals.

1. There should be continuity between the No.6 and No.7 terminals when power and ground are connected to the No.3 and No.10 terminals in the ICM-A.
2. There should be no continuity between the No.6 and No.7 terminals when power is disconnected.

INDICATORS AND GAUGES

COMPONENT LOCATION E09EAE88

The parts with asterisk(*) :
This illustration shows the LHD type.
RHD type is symmetrical.

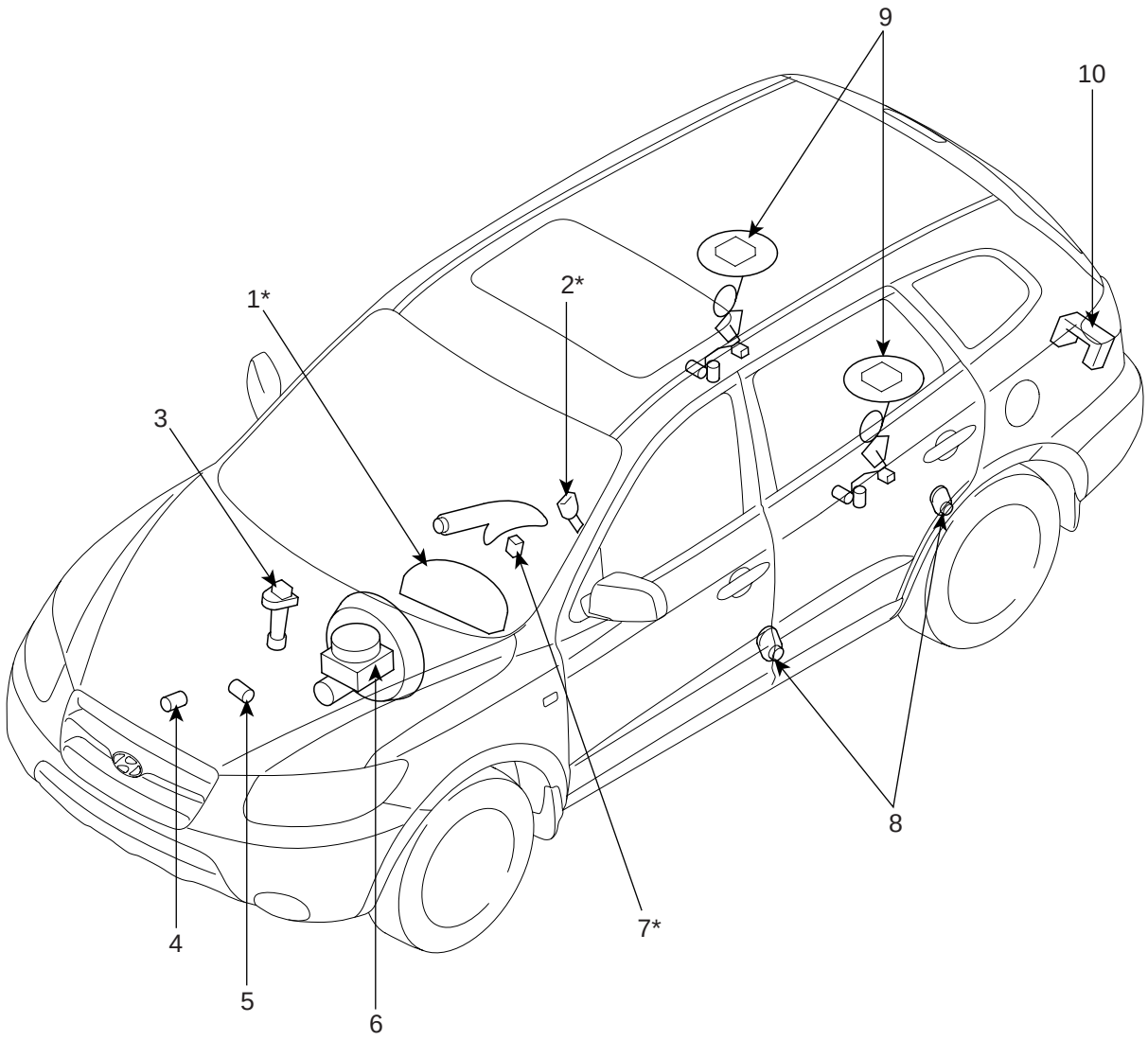

1. Cluster assembly
2. Seat belt switch
3. Vehicle speed sensor
4. Engine coolant temperature sender
5. Oil pressure switch
6. Brake fluid level warning switch
7. Parking brake switch
8. Door switch
9. Fuel gauge sender
10. Tailgate switch

SCMBE6220L

TROUBLESHOOTING E78F78F1

Symptom	Possible cause	Remedy
Speedometer does not operate	Cluster fuse (10A) blown	Check for short and replace fuse
	Speedometer faulty	Check speedometer
	Vehicle speed sensor faulty	Check vehicle speed sensor
	Wiring or ground faulty	Repair if necessary
Tachometer does not operate	Cluster fuse (10A) blown	Check for short and replace fuse
	Tachometer faulty	Check tachometer
	Wiring or ground faulty	Repair if necessary
Fuel gauge does not operate	Cluster fuse (10A) blown	Check for short and replace fuse
	Fuel gauge faulty	Check gauge
	Fuel sender faulty	Check fuel sender
	Wiring or ground faulty	Repair if necessary
Low fuel warning lamp does not light up	Cluster fuse (10A) blown	Check for short and replace fuse
	Bulb burned out	Replace bulb
	Fuel sender faulty	Check fuel sender
	Wiring or ground faulty	Repair if necessary
Water temperature gauge does not operate	Cluster fuse (10A) blown	Check for short and replace fuse
	Water temperature gauge faulty	Check gauge
	Water temperature sender faulty	Check sender
	Wiring or ground faulty	Repair if necessary
Oil pressure warning lamp does not light up	Cluster fuse (10A) blown	Check for short and replace fuse
	Bulb burned out	Replace bulb
	Oil pressure switch faulty	Check switch
	Wiring or ground faulty	Repair if necessary
Parking brake warning lamp does not light up	Cluster fuse (10A) blown	Check for short and replace fuse
	Bulb burned out	Replace bulb
	Brake fluid level warning switch faulty	Check switch
	Parking brake switch faulty	Check switch
	Wiring or ground faulty	Repair if necessary
Open door warning lamp and trunk lid warning lamp do not light up	Memory fuse (15A) blown	Check for short and replace fuse
	Bulb burned out	Replace bulb
	Door switch faulty	Check switch
	Wiring or ground faulty	Repair if necessary
Seat belt warning lamp does not light up	Cluster fuse (10A) blown	Check for short and replace fuse
	Bulb burned out	Replace bulb
	Seat belt switch faulty	Check switch
	Wiring or ground faulty	Repair if necessary

INSTRUMENT CLUSTER

COMPONENTS E5E2EEB4

<STANDARD>

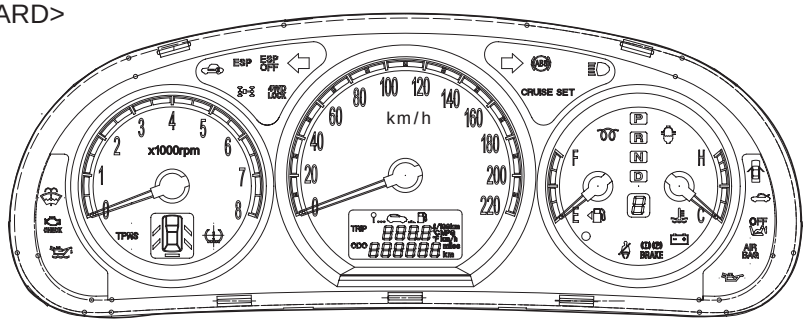

<SUPER VISION>

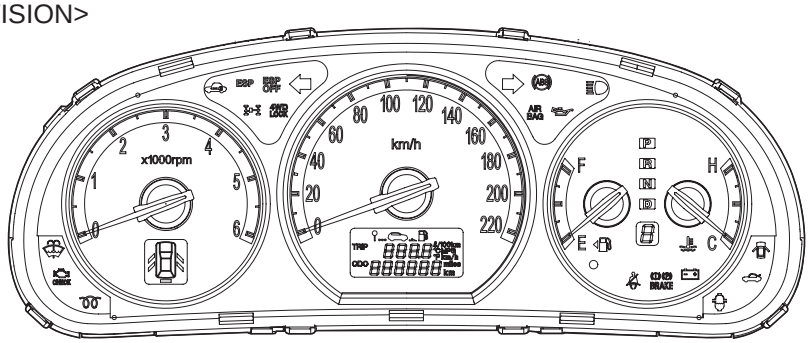

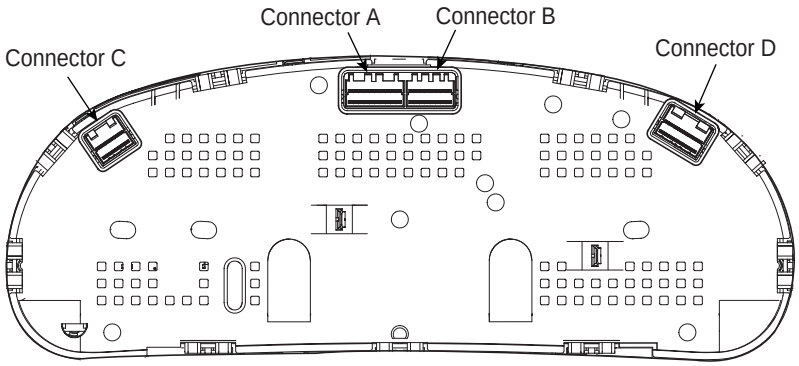

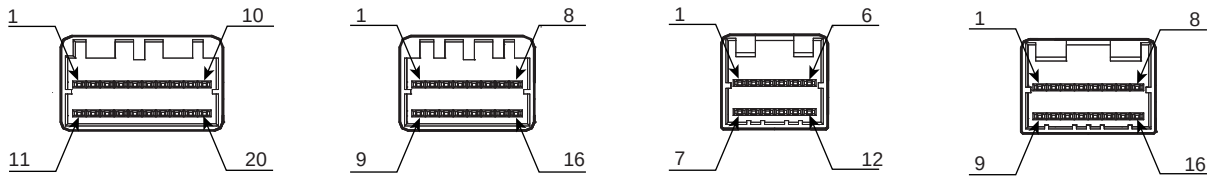

Connector A Connector B Connector C Connector D

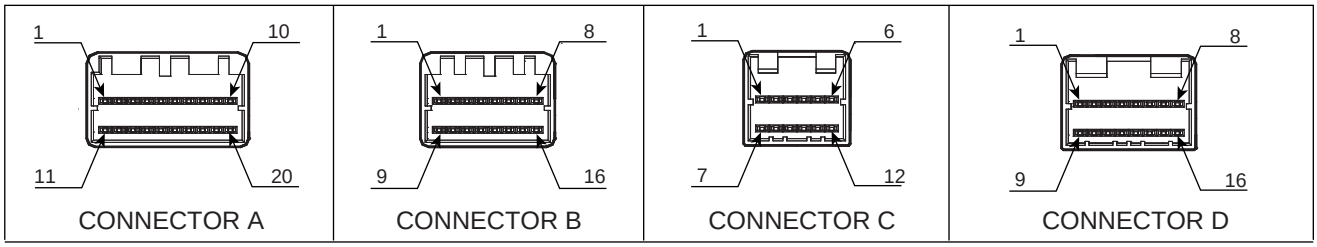

NO	CONNECTOR A	CONNECTOR B	CONNECTOR C	CONNECTOR D
1	Turn signal-right	Washer level	Door	P
2	ABS	Immobilizer	Trunk open	R
3	High beam(-)	ESP	PAB CUT OFF(-)	N
4	High beam(+)	ESP OFF	Air bag off(+)	D
5	-	Fuel GND(MICOM)	Air bag(-)	PWM signal(AT)
6	Fuel sender	Turn signal-left	EBD	-
7	Termperture sender	4WD LOCK	Battery charge	-
8	-	4WD	Brake	-
9	Oil level	Injection signal	seat belt	-
10	CHECK ENGINE	AMBIENT sensor	Oil pressure	-
11	Cruise	Trip computer mode sw	W/SEPERATOR	-
12	SET	Trip reset sw	Glow	Front left door
13	Power GND(-)	IGN2+		Front right door
14	-	GND(signal)		Rear left door
15	Illumination(+)	IGN+		Rear right door
16	Illumination(-)	Battery		-
17	High speed(BCM)			
18	Speed signal			
19	Tachometer signal			
20	-			

SCMBE6233L

INSPECTION E52DCCC6

SPEEDOMETER

1. Adjust the pressure of the tires to the specified level.
2. Drive the vehicle onto a speedometer tester. Use wheel chocks as appropriate.
3. Check if the speedometer indicator range is within the standard values.

CAUTION

Do not operate the clutch suddenly or increase/ decrease speed rapidly while testing.

NOTE

Tire wear and tire over or under inflation will increase the indication error.

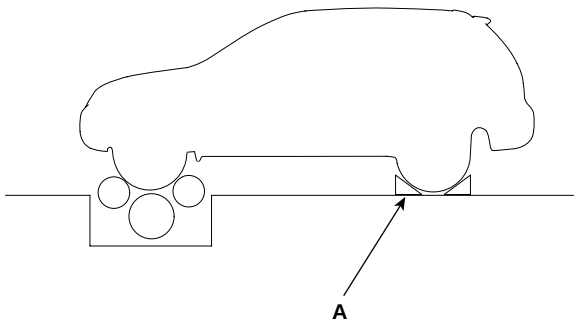

SCMBE6203L

[EXCEPT AUSTRALIA - KM/H]

Velocity (km/h)	20	40	60	80	100
Tolerance (km/h)	+4.6 +0.5	+5.1 +1.1	+6.6 +1.1	+7.1 +2.1	+7.6 +2.6
Velocity (km/h)	120	140	160	180	220
Tolerance (km/h)	+8.1 +3.1	+8.6 +3.6	+9.1 +4.1	+9.6 +4.6	+10.6 +5.5

[AUSTRALIA- KM/H]

Velocity (km/h)	20	40	60	80	100
Tolerance (km/h)	+2.9 -0.4	+2.9 -0.4	+4.0 -0.5	+4.4 -0.6	+4.3 -0.7
Velocity (km/h)	120	140	160	180	220
Tolerance (km/h)	+4.2 -0.8	+4.1 -0.9	+4.0 -1.0	+3.9 -1.1	+3.7 -1.3

[MPH]

Velocity (MPH)	10	20	40	60
Tolerance (MPH)	+2.6 +0.1	+2.9 +0.4	+3.7 +0.7	+4.0 +1.0
Velocity (MPH)	80	100	120	140
Tolerance (MPH)	+4.3 +1.3	+4.6 +1.6	+4.9 +1.9	+5.2 +2.2

VEHICLE SPEED SENSOR

1. Connect the positive (+) lead from battery to terminal 2 and negative (-) lead to terminal 1.
2. Connect the positive (+) lead from tester to terminal 3 and the negative (-) lead to terminal 1.
3. Rotate the shaft.
4. Check that there is voltage change from approx. 0V to 11V or more between terminals 3 and 1.
5. The voltage change should be 4 times for every revolution of the speed sensor shaft.
   If operation is not as specified, replace the sensor.

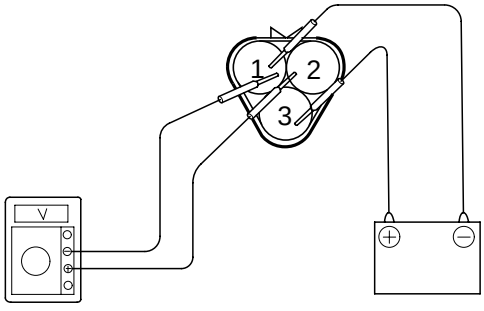

ETKD330A

TACHOMETER

1. Connect the scan tool to the diagnostic link connector or install a tachometer.
2. With the engine started, compare the readings of the tester with that of the tachometer. Replace the tachometer if the tolerance is exceeded.

CAUTION

a. Reversing the connections of the tachometer will damage the transistor and diodes inside.
b. When removing or installing the tachometer, be careful not to drop it or subject it to severe shock.

Revolution (rpm)	1,000	2,000	3,000	4,000	Re-mark
Tolerance (rpm)	±100	±125	±150	±150	Gaso-line
Tolerance (rpm)	±100	±125	±150	±150	Diesel
Revolution (rpm)	5,000	6,000	7,000	-	Re-mark
Tolerance (rpm)	±150	±180	±210	-	Gaso-line
Tolerance (rpm)	±150	±180	-	-	Diesel

FUEL GAUGE

1. Disconnect the fuel sender connector from the fuel sender.
2. Connect a 3.4 wattages, 12V test bulb to terminals 1 and 3 on the wire harness side connector.
3. Turn the ignition switch to the ON, and then check that the bulb lights up and the fuel gauge needle moves to full.

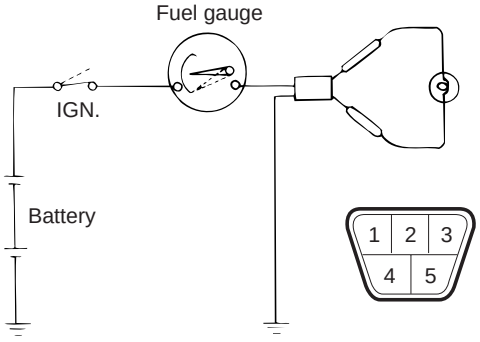

SCMBE6226L

FUEL GAUGE SENDER

1. Using an ohmmeter, measure the resistance between terminals 1 and 3 of sender connector (A) at each float level.

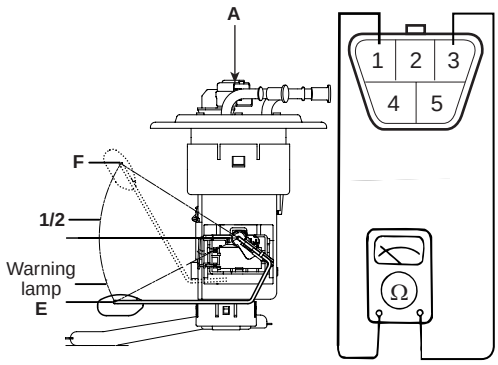

SCMBE6227L

2. Also check that the resistance changes smoothly when the float is moved from "E" to "F".

Position	Resistance(Ω)
E	104.8 ± 1Ω
Warning lamp	89.9 ± 1Ω
1/2	13.7 ± 1Ω
Sender (F)	4.2 ± 1Ω

3. If the height resistance is unsatisfied, replace the fuel sender as an assembly.

CAUTION

After completing this test, wipe the sender dry and reinstall it in the fuel tank.

FUEL GAUGE SERVO SENDER

1. Using an ohmmeter measure the resistance between terminals 1 and 2 of servo sender connector (A) at each flot level.

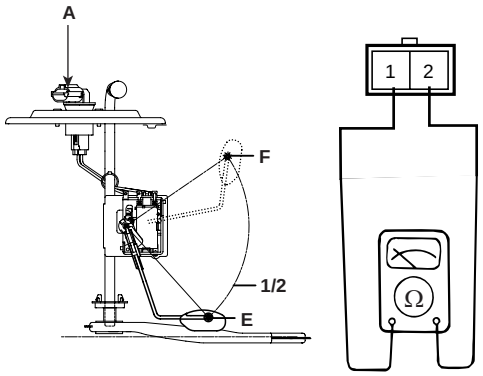

ATIE262C

2. Also check that the resistance changes smoothly when the flot is moved from "E" to "F".

Position	Resistance (Ω)
E	95.2 ± 1Ω
1/2	90.2 ± 1Ω
F	3.8 ± 1Ω

ENGINE COOLANT TEMPERATURE GAUGE

1. Disconnect the wiring connector (A) from the engine coolant temperature sender in the engine compartment.
2. Connect a 12V, 3.4 wattages test bulb between the harness side connector 2 terminal and ground.
3. Turn the ignition switch ON.
4. Verify that the test bulb flashes and that the indicator moves to HOT position.
   If operation is not as specified, replace the cluster (Engine coolant temperature gauge). Then recheck the system.

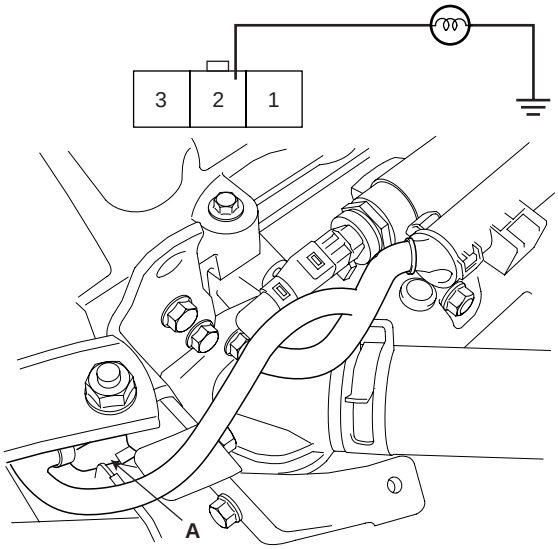

SCMBE6228D

ENGINE COOLANT TEMPERATURE SENDER

1. Using an ohmmeter, measure the resistance between the terminal 2 and ground.

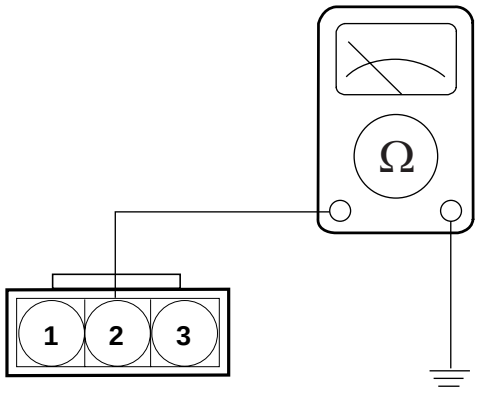

ETKE110I

2. If the resistance value is not as shown in the table, replace the temperature sender.

Temperature [°F(°C)]	140 (60)	185 (85)	230 (110)	257 (127.4)	E/G
Resistance (Ω)	128.5	53.8	23.0	16.1	Gasoline
	195 (49°C)	86.5 (71°C)	23.0	16.1	Diesel

OIL PRESSURE SWITCH

1. Check that there is continuity between the oil press switch terminal and ground with the engine off.
2. Check that there is no continuity between the terminal (A) and ground with the engine running.
3. If operation is not as specified, replace the switch.

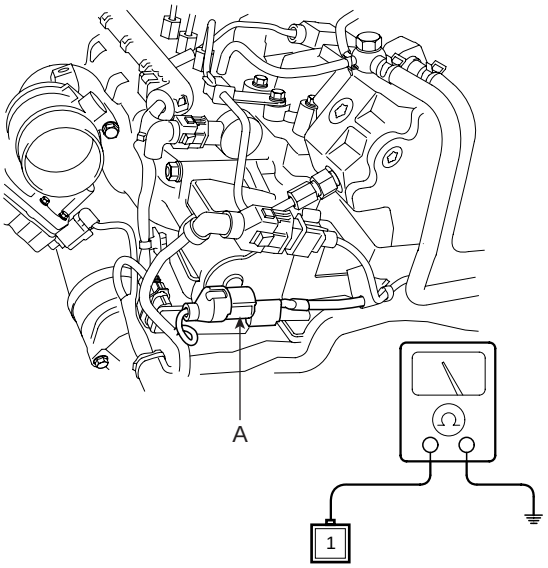

SCMBE6229D

OIL PRESSURE WARNING LAMP

1. Disconnect the connector (A) from the warning switch and ground the terminal on the wire harness side connector.
2. Turn the ignition switch ON. Check that the warning lamp lights up. If the warning lamp doesn't light, test the bulb or inspect the wire harness.

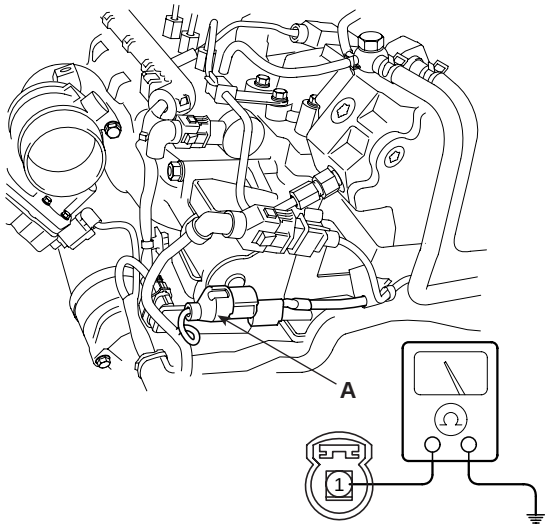

SCMBE6230D

BRAKE FLUID LEVEL WARNING SWITCH

1. Remove the connector (A) from the switch located at the brake fluid reservoir.
2. Verify that continuity exists between switch terminals 1 and 2 while pressing the switch (float) down with a rod.

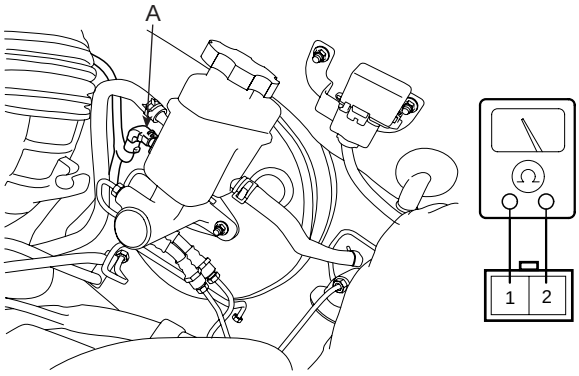

SCMBE6231D

BRAKE FLUID LEVEL WARNING LAMP

1. Ignition "ON".
2. Release the parking brake.
3. Remove the connector from the brake fluid level warning switch.
4. Ground the connector at the harness side.
5. Verify that the warning lamp lights.

PARKING BRAKE SWITCH

The parking brake switch is a push type. It is located at the side of the parking brake pedal.

1. Check that there is continuity between the terminal and switch body with the switch (A) ON.
2. Check that there is no continuity between the terminal and switch body with the switch OFF.
   If continuity is not as specified, replace the switch or inspect its ground connection.

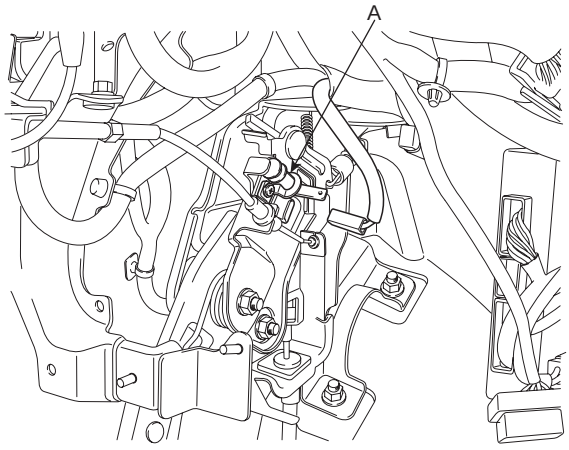

ATKF262D

DOOR SWITCH

Remove the door switch and check for continuity between the terminals.

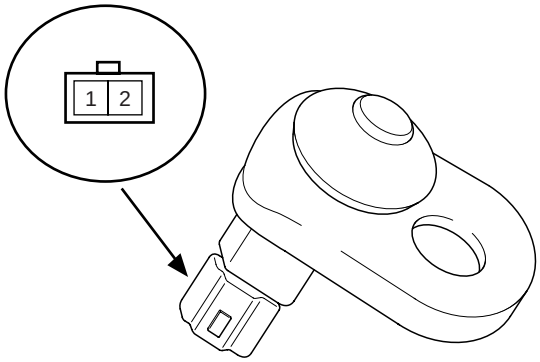

ATIE121Q

Position \ Terminal	1	2	Body (Ground)
Free(Door open)	○	○	○
Push(Door close)			

ETQF180D

SEAT BELT SWITCH

1. Remove the connector from the switch.
2. Check for continuity between terminals.

Seat belt condition	Continuity
Fastened	Non-conductive (∞Ω)
Not fastened	Conductive (Ω)

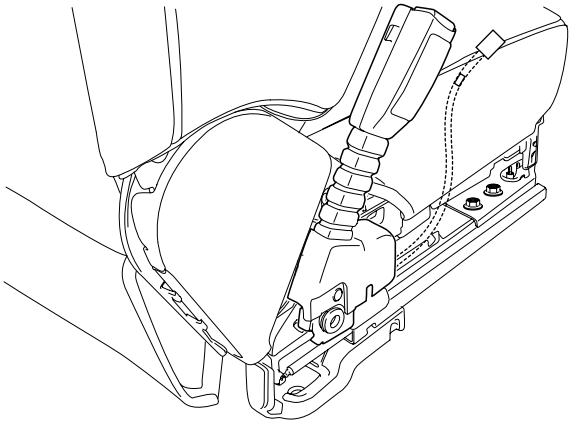

ETBF260G

SEAT BELT WARNING LAMP

With the ignition switch turned ON, verify that the lamp glows.

Seat belt condition	Warning lamp
Fastened	OFF
Not fastened	ON

TRIP SWITCH

1. Disconnect the negative (-) battery terminal.
2. Remove the trip switch (A) from the cluster facia panel (B).

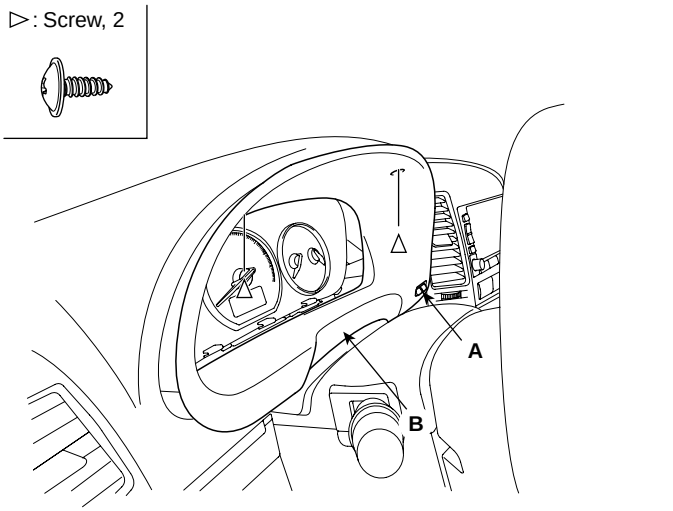

SCMBE6234L

3. Check for continuity between the terminals in each switch position according to the table.

Terminal / Position	2	3	4
MODE(PUSH)		○	○
RESET(PUSH)	○	○	

ETBF260I

REPLACEMENT E9AE5508

1. Disconnect the negative (-) battery terminal.
2. Remove the center facia panel (A) after and loosening 2 screws.

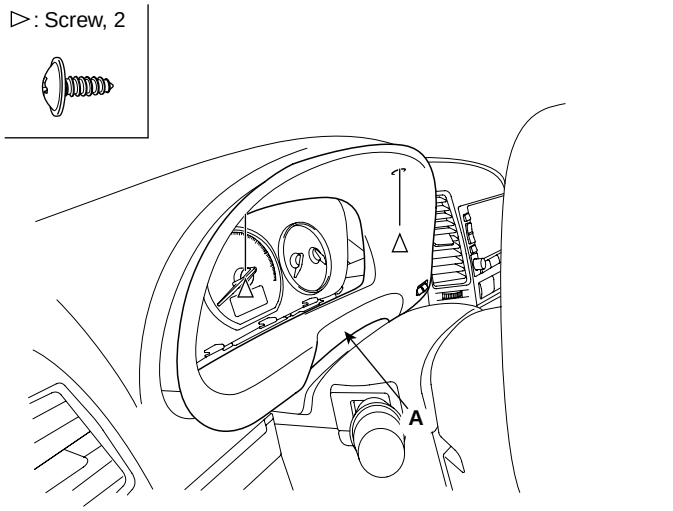

SCMBE6223L

3. Disconnect trip switch connector.
4. Pull out the cluster (A) from the housing after removing 4 screws.

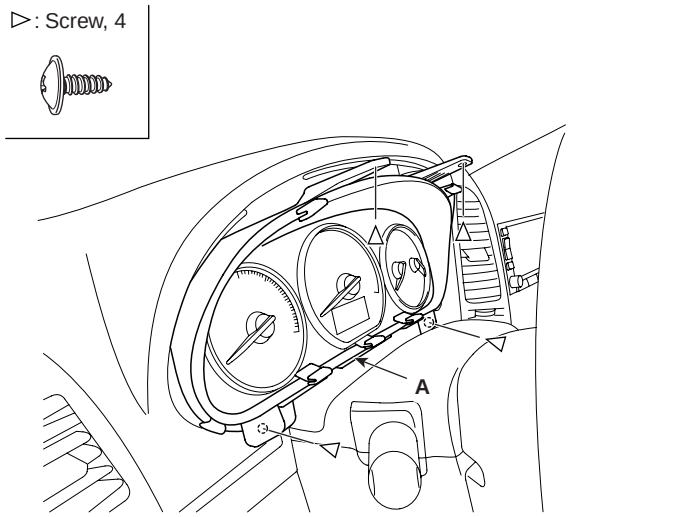

SCMBE6224L

5. Disconnect the cluster connecters (A) and then remove the cluster (B).

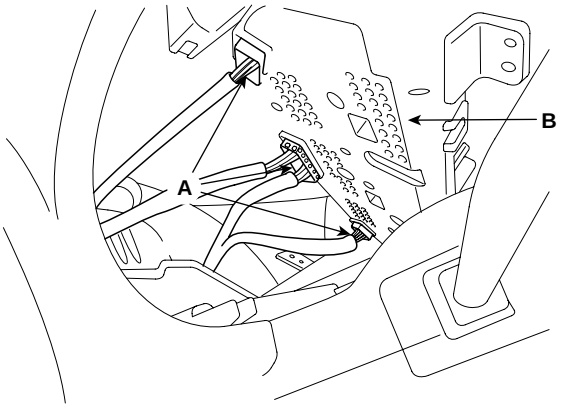

SCMBE6225D

6. Installation is the reverse of removal.

POWER DOOR LOCKS

COMPONENT LOCATION EFF8DAEC

The parts with asterisk(*) :
This illustration shows the LHD type.
RHD type is symmetrical.

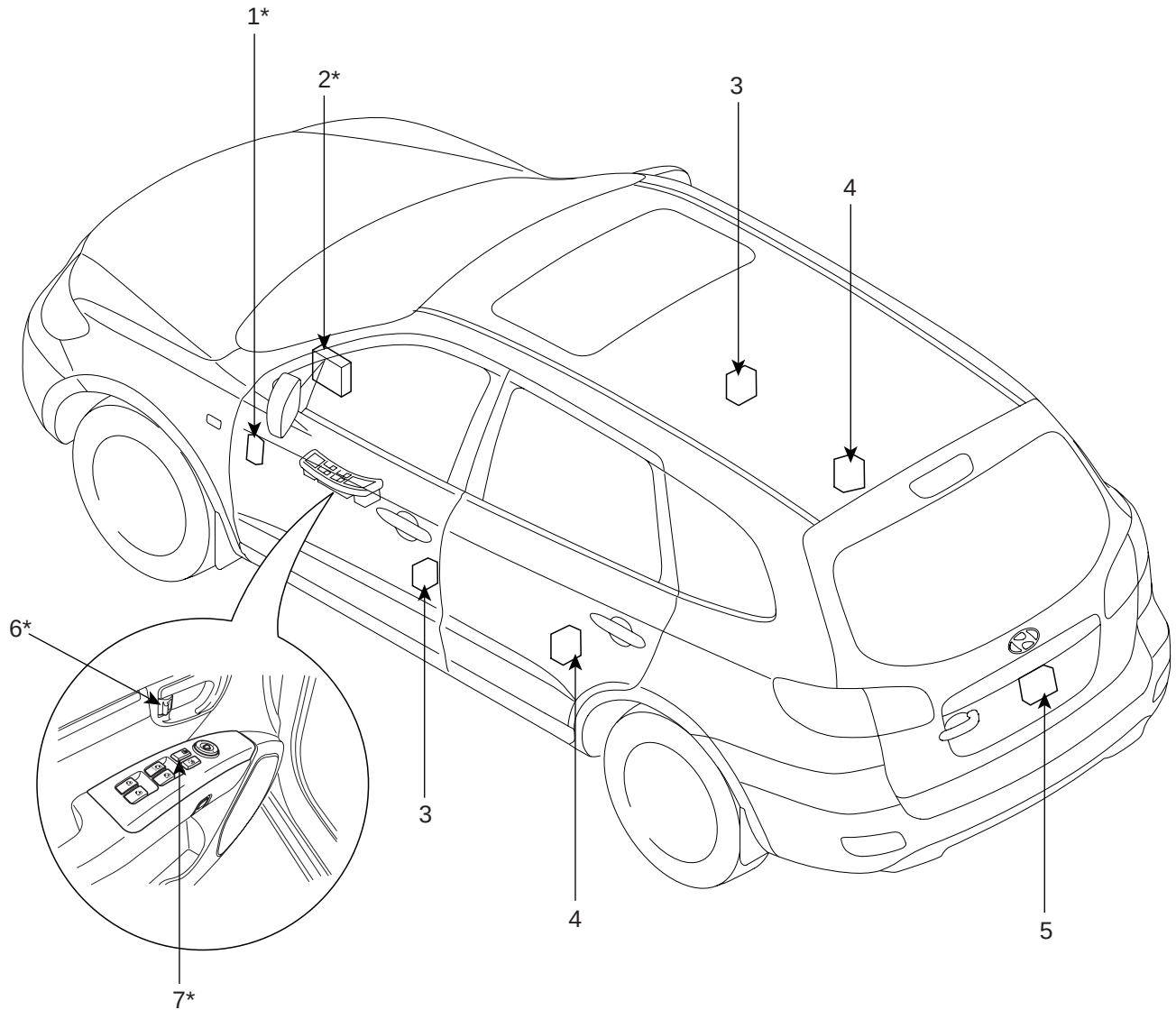

1. ICM relay box (Door lock/unlock relay)
2. Body control module (BCM)
3. Front door lock actuator & switch
4. Rear door lock actrator & switch
5. Tailgate & switch
6. Door lock knob
7. Door lock switch

SCMBE6240L

TROUBLESHOOTING E3BBBF42

1. Lock function works but unlock function does not work. → Since door unlock relay is malfunction, replace the door unlock relay.
2. Unlock function works but lock function does not work. → Since door lock relay is malfunction, replace the door lock relay.
3. When passenger side knob is controlled, all doors locks, but when driver side knob is controlled, all doors do not lock.

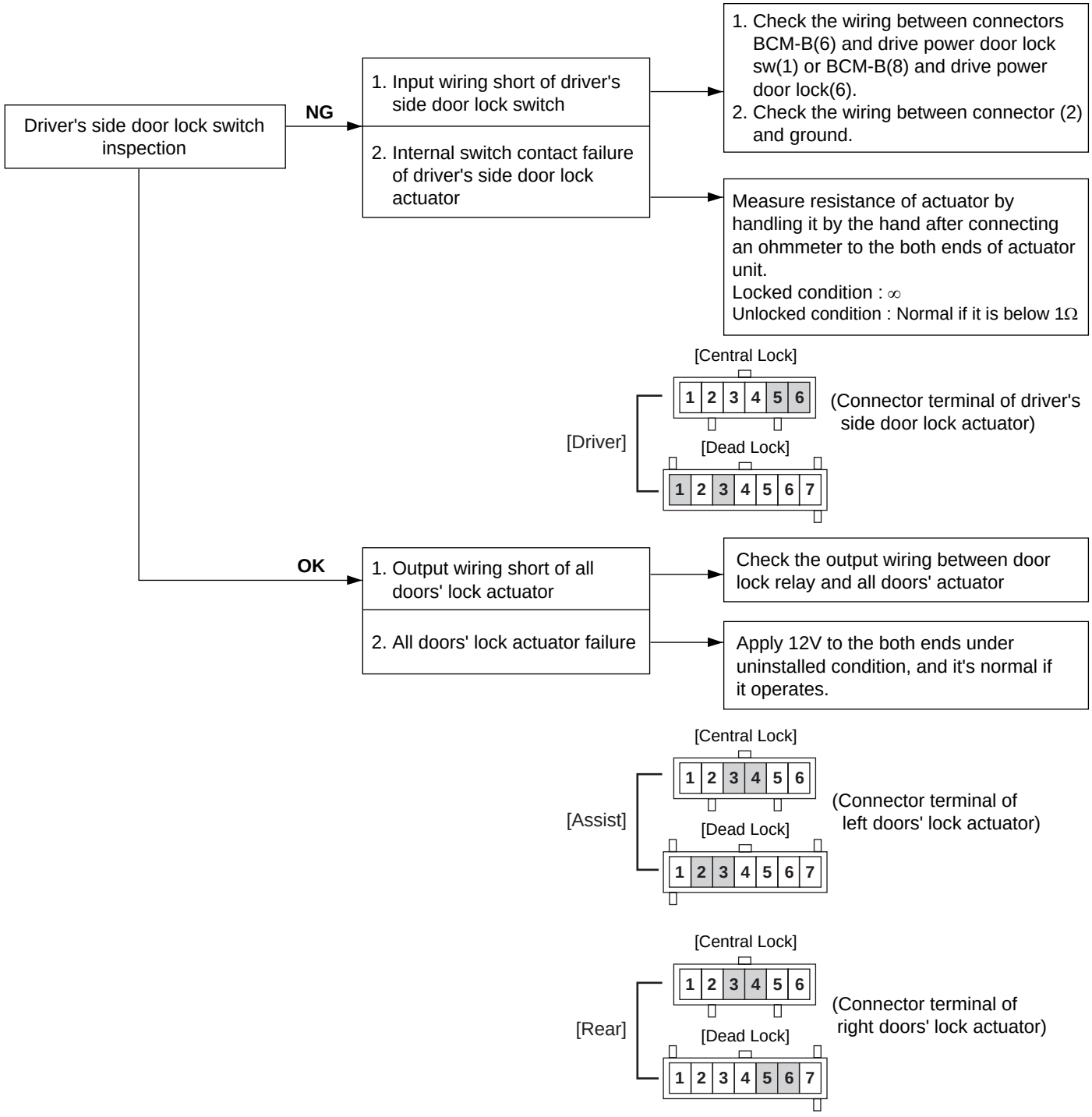

SCMBE6252L

4. When driver side knob is controlled. All doors lock. But when the passenger side knob is controlled, all doors do not lock.

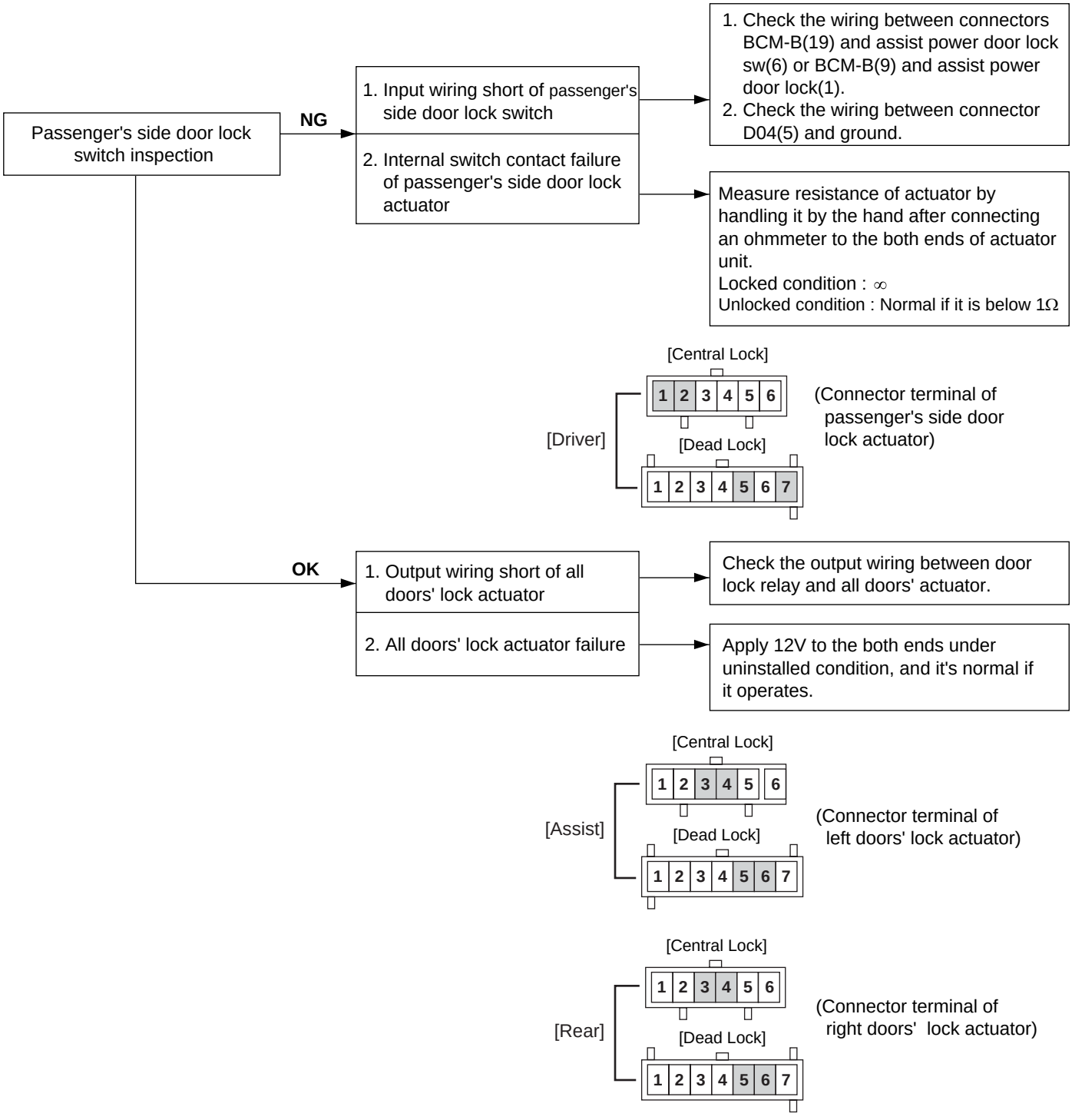

SCMBE6253L

5. Both sides do not lock either.

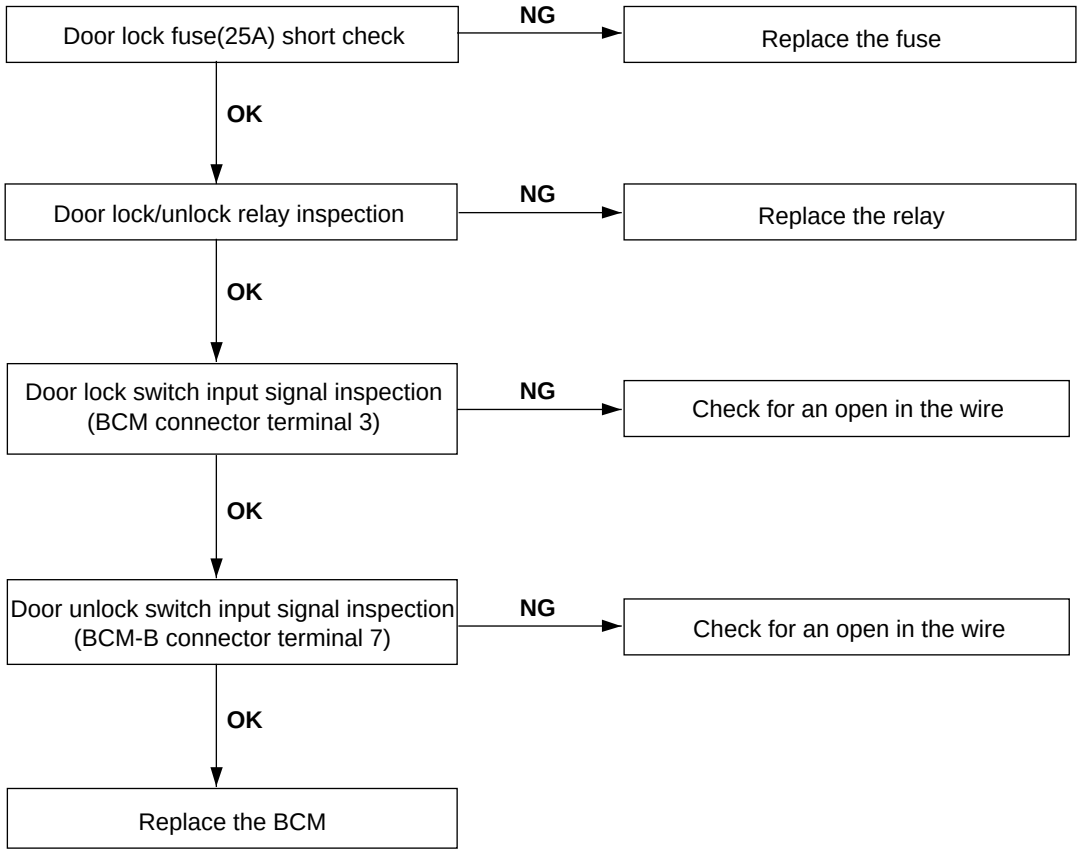

SCMBE6254L

POWER DOOR LOCK ACTUATORS

INSPECTION EEF47A4B

FRONT DOOR LOCK ACTUATOR

1. Remove the front door trim. (Refer to the Body group - Front door)
2. Remove the front door module. (Refer to the Body group - Front door).
3. Disconnect the connectors from the actuator.

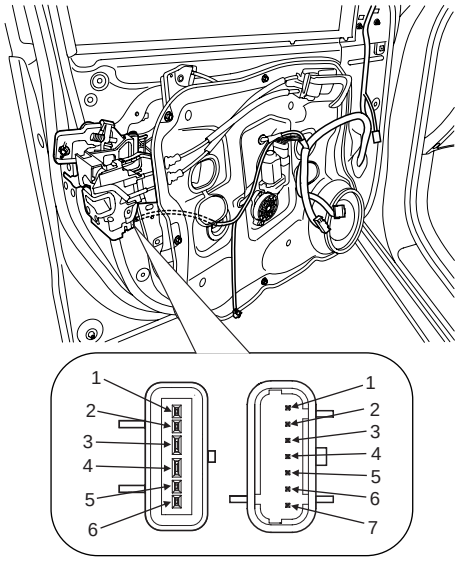

[CENTRAL LOCK] [DEAD LOCK]

SCMBE6130L

4. Check actuator operation by connecting power and ground according to the table. To prevent damage to the actuator, apply battery voltage only momentarily.

[CENTRAL LOCK]

Position \ Terminal		4	3
Front left	Lock	⊕	⊖
	Unlock	⊖	⊕
Front right	Lock	⊖	⊕
	Unlock	⊕	⊖

SCMBE6131L

[DEAD LOCK]

Position \ Terminal			5	6	7
Central Lock	Front left	Lock	⊕	⊖	⊖
		Unlock	⊖	⊕	⊕
	Front right	Lock	⊖	⊕	⊕
		Unlock	⊕	⊖	⊖
Dead Lock	Front left	Lock	⊖	⊕	⊕
		Unlock	⊖	⊕	⊖
	Front right	Lock	⊕	⊖	⊖
		Unlock	⊕	⊖	⊕

SCMBE6144L

REAR DOOR LOCK ACTUATOR

1. Remove the rear door trim panel. (Refer to the Body group - Rear door)
2. Remove the rear door module. (Refer to the Body group - Rear door)
3. Disconnect the connectors from the actuator.

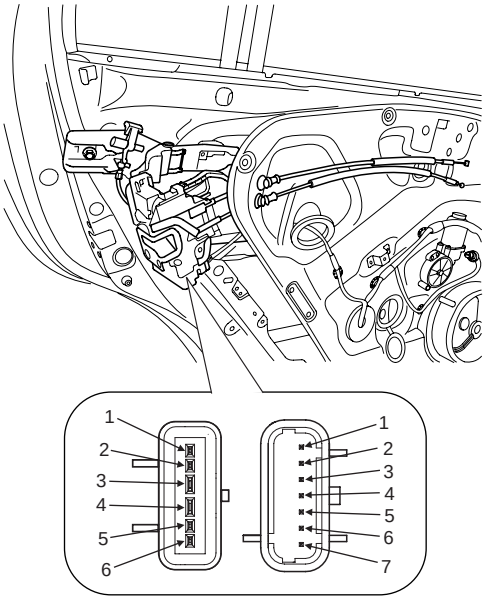

[CENTRAL LOCK] [DEAD LOCK]

SCMBE6132L

4. Check actuator operation by connecting power and ground according to the table. To prevent damage to the actuator, apply battery voltage only momentarily.

[CENTRAL LOCK]

Position \ Terminal		4	3
Rear left	Lock	⊕	⊖
	Unlock	⊖	⊕
Rear right	Lock	⊖	⊕
	Unlock	⊕	⊖

SCMBE6133L

[DEAD LOCK]

Position \ Terminal			5	6	7
Central Lock	Rear left	Lock	⊕	⊖	⊖
		Unlock	⊖	⊕	⊕
	Rear right	Lock	⊖	⊕	⊕
		Unlock	⊕	⊖	⊖
Dead Lock	Rear left	Lock	⊖	⊖	⊕
		Unlock	⊕	⊕	⊖
	Rear right	Lock	⊕	⊕	⊖
		Unlock	⊖	⊖	⊕

SCMBE6145L

TAILGATE LOCK ACTUATOR

1. Remove the tailgate trim. (Refer to the Body group - Tailgate)
2. Disconnect the 4P connector from the actuator.

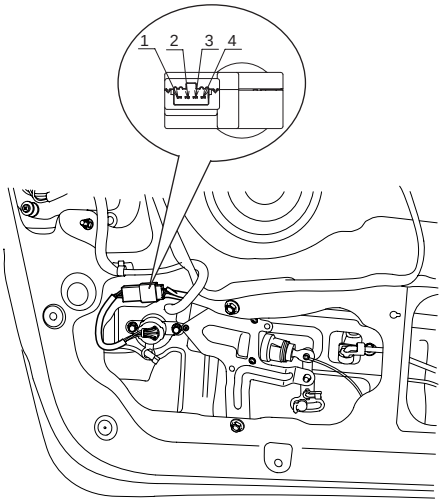

SCMBE6134D

3. Check actuator operation by connecting power and ground according to the table. To prevent damage to the actuator, apply battery voltage only momentarily.

Terminal / Position	2	3
Lock	⊖	⊕
Unlock	⊕	⊖

SCMBE6135L

FRONT DOOR LOCK SWITCH

1. Remove the front door trim. (Refer to the Body group - Front door)
2. Remove the front door module. (Refer to the Body group - Front door).
3. Disconnect the connectors from the actuator.

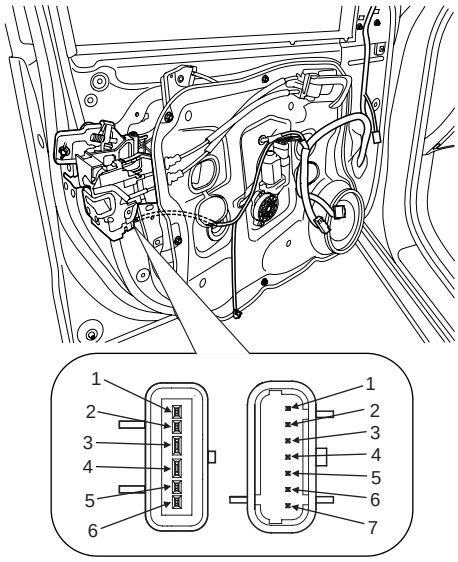

[CENTRAL LOCK] [DEAD LOCK]

SCMBE6130L

4. Check for continuity between the terminals in each switch position when inserting the key into the door according to the table.

[CENTRAL LOCK]

Position			Terminal 2	5	1
Central Lock	Front left	Clockwise	○	○	
		Counter-clockwise		○	○
	Front right	Clockwise	○	○	
		Counter-clockwise		○	○

SCMBE6136L

[CENTRAL LOCK]

Position			Terminal 1	5	2	6
Central Lock	Front left	Unlock		○		○
	Front right	Lock	○		○	

SCMBE6148L

[DEAD LOCK]

Position			Terminal 3	2	4
Central Lock	Front left	Clockwise	○	○	
		Counter-clockwise		○	○
	Front right	Clockwise	○	○	
		Counter-clockwise		○	○

SCMBE6146L

[DEAD LOCK]

Position			Terminal 3	1	7	5
Central Lock	Front left	Unlock	○	○		
	Front right	Lock			○	○

SCMBE6147L

REAR DOOR LOCK SWITCH

1. Remove the rear door trim panel. (Refer to the Body group - Rear door)
2. Remove the rear door module. (Refer to the Body group - Rear door)
3. Disconnect the connectors from the actuator.

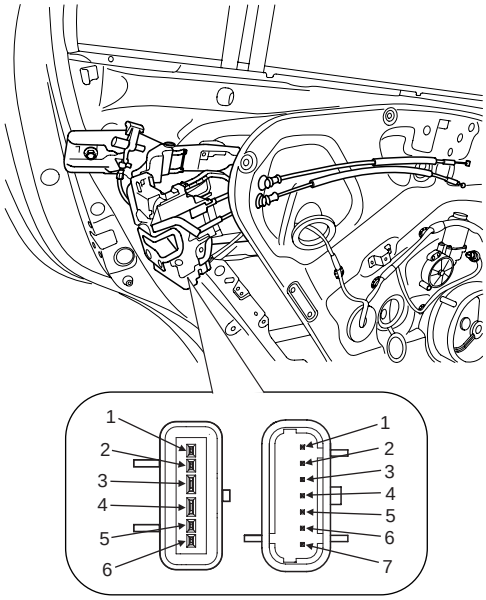

[CENTRAL LOCK] [DEAD LOCK]

SCMBE6132L

4. Check for continuity between the terminals in each switch position according to the table.

[CENTRAL LOCK]

Position		Terminal 1	5	2	6
Central Lock	Unlock		○		○
	Lock	○		○	

SCMBE6122L

[DEAD LOCK]

Position		Terminal 3	1	7	5
Central Lock	Unlock	○	○		
	Lock			○	○

SCMBE6142L

TAILGATE LOCK SWITCH

1. Remove the tailgate trim. (Refer to the Body group - Tailgate)

2. Disconnect the 4P connector from the actuator.

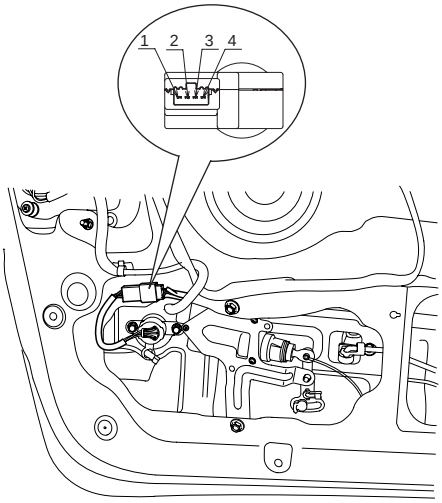

SCMBE6134D

3. Check for continuity between the terminals in each switch position according to the table.

Terminal / Position	1	4
Lock	○	○
Unlock		

SCMBE6138L

POWER DOOR LOCK RELAY

INSPECTION E7A48CBC

1. Disconnect the negative (-) battery terminal.
2. Remove the junction box.
3. Check for continuity between the terminals.

DOOR LOCK

1. There should be continuity between the No.5 in the I/P-J and No.18 terminals in the I/P-D when power and ground are connected to the No.2 terminal in the I/P-C and No.9 terminal in the I/P-J.
2. There should be no continuity between the No.5 terminal in the I/P-J and No.18 terminal in the I/P-D when power is disconnected.

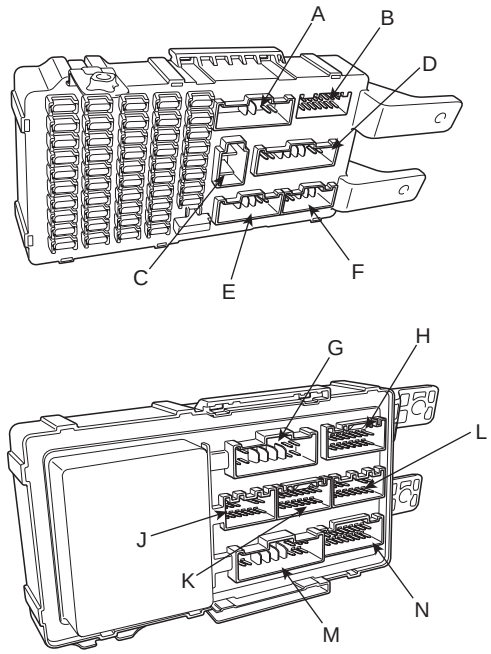

SCMBE6241D

Terminal / Power	I/P-D (18)	I/P-J (5)	I/P-C (2)	I/P-J (9)
Disconnected			○	○
Connected	○	○	⊖	⊕

SCMBE6242L

DOOR UNLOCK

1. There should be continuity between the No.5 terminal in the I/P-J and No.7 terminal in the I/P-K when power and ground are connected to the No.2 terminal in the I/P-C and No.1 terminal in the I/P-K.
2. There should be no continuity between the No.5 terminal in the I/P-J and No.7 terminal in the I/P-D when power is disconnected.

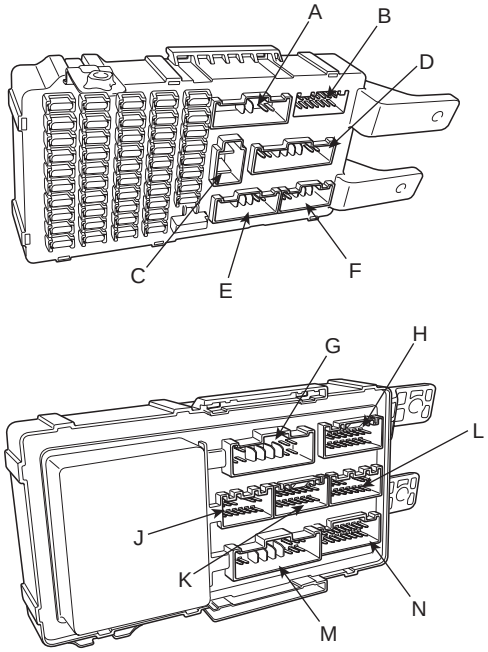

SCMBE6243D

Terminal / Power	I/P-D (7)	I/P-J (5)	I/P-C (2)	I/P-K (1)
Disconnected			○	○
Connected	○	○	⊖	⊕

SCMBE6244L

POWER DOOR LOCK SWITCH

INSPECTION ECAB726B

DRIVER DOOR LOCK SWITCH

1. Disconnect the negative (-) battery terminal.
2. Remove the front door trim and power window switch module. (Refer to the Body group - front door)

[LHD]

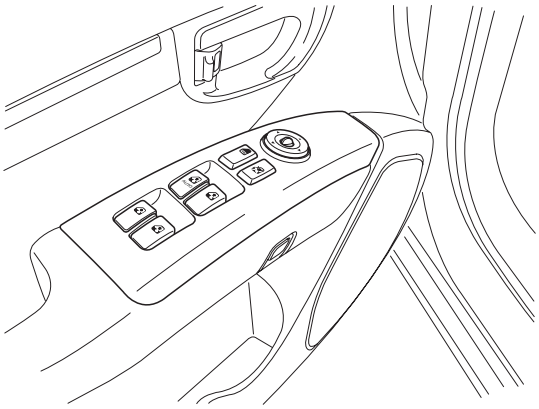

SCMBE6246L

[RHD]

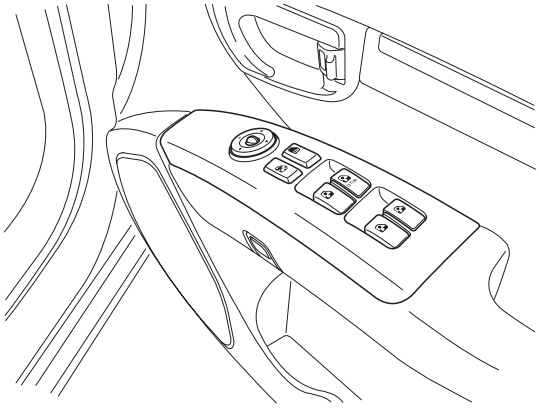

SCMBE6246R

3. Disconnect the connector from the switch.

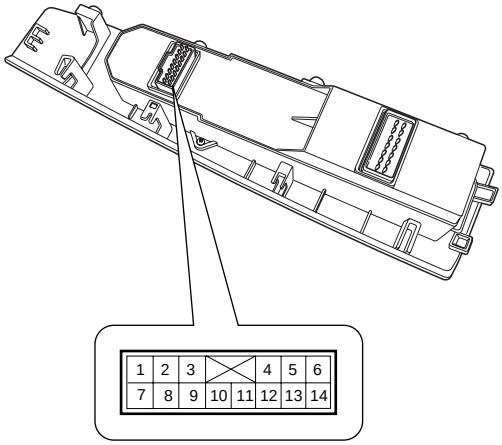

SCMBE6247L

4. Check for continuity between the terminals in each switch position according to the table.

( ) : RHD

Terminal / Position	4(4)	10(10)	11(11)
Lock		○	○
Unlock	○	○	

SCMBE6248L

ASSIST DOOR LOCK SWITCH

1. Disconnect the negative (-) battery terminal.
2. Remove the front door trim and power window switch module. (Refer to the Body group - front door)
3. Disconnect the connector from the switch.

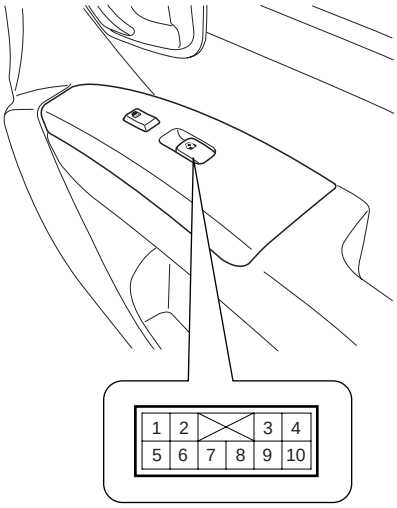

SCMBE6249L

4. Check for continuity between the terminals in each switch position according to the table.

Terminal / Position	3	4	7
Lock		○——	——○
Unlock	○——		——○

SCMBE6251L

POWER DOOR MIRRORS

COMPONENT LOCATION E5B25FCD

The parts with asterisk(*) :
This illustration shows the LHD type.
RHD type is symmetrical.

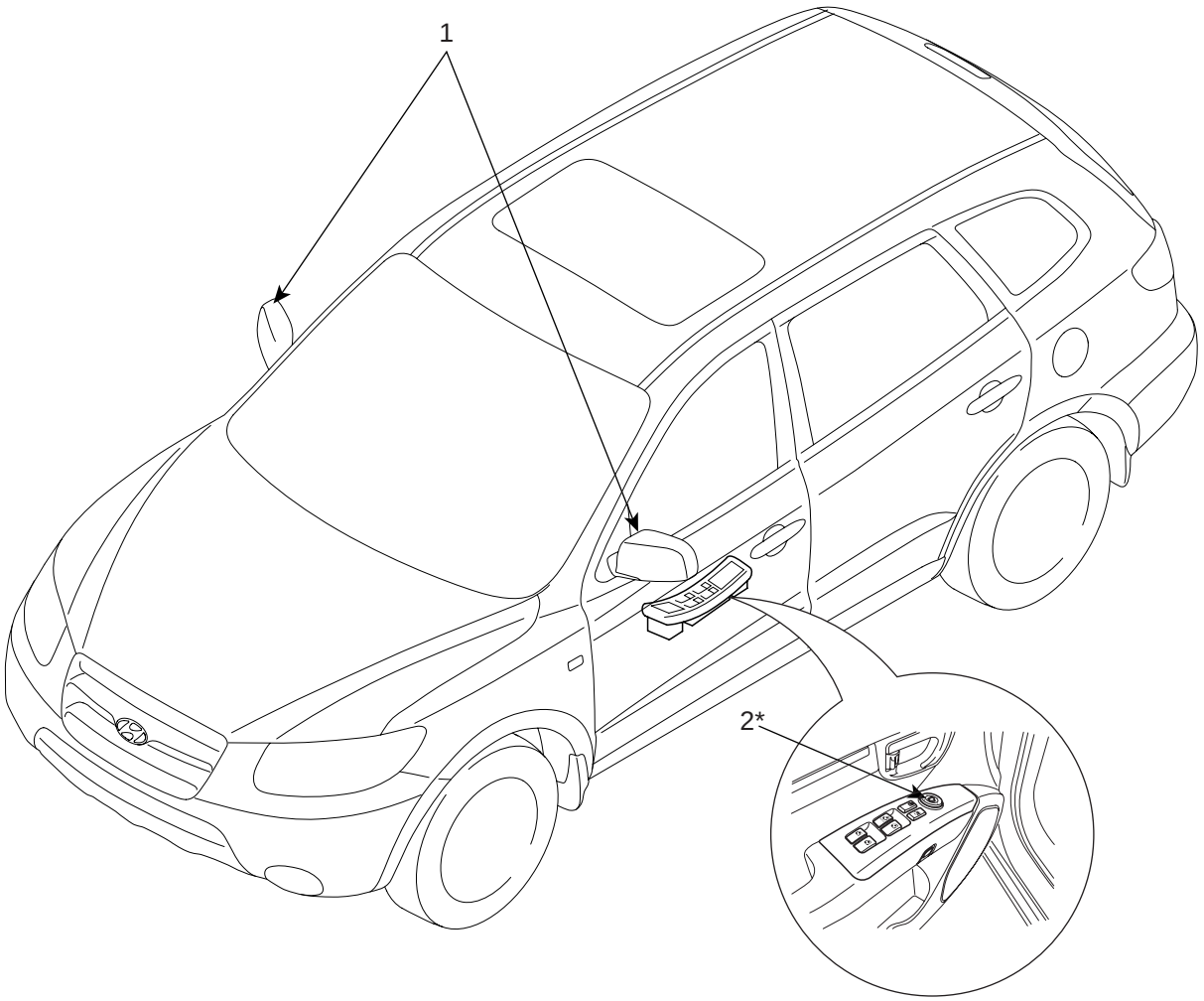

1. Power door mirror
2. Power door mirror switch

SCMBE6260L

POWER DOOR MIRROR SWITCH

COMPONENTS E98FAE26

Power outside mirror switch

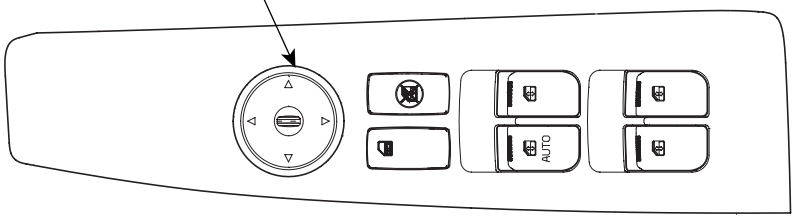

Power outside mirror switch connector (12 Pin)

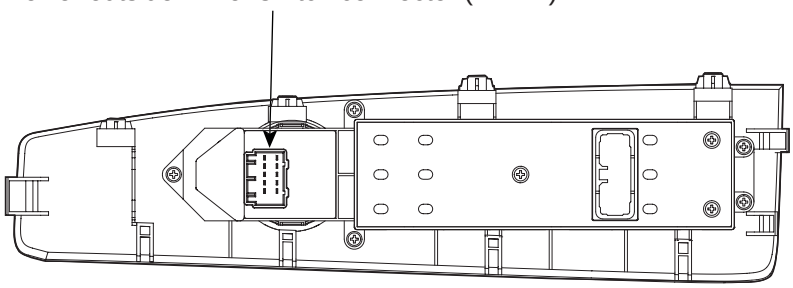

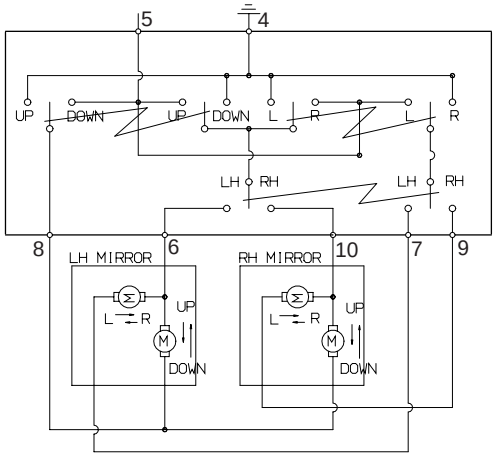

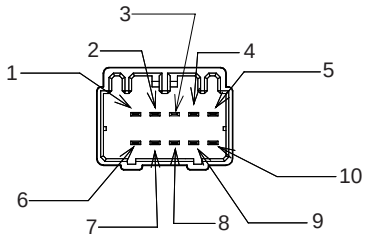

SCMBE6261L

INSPECTION E4439FF6

1. Disconnect the negative (-) battery terminal.
2. Remove the front door trim and power window switch module. (Refer to the Body group-front door)

[LHD]

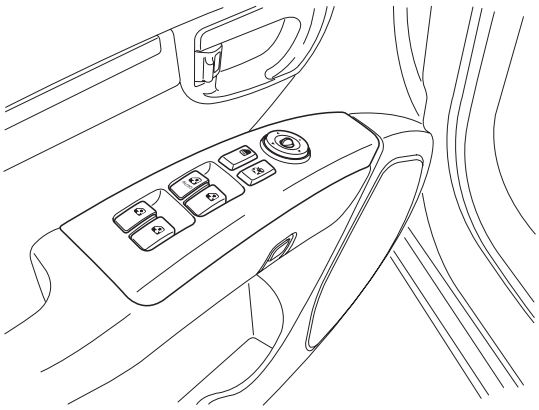

SCMBE6246L

[RHD]

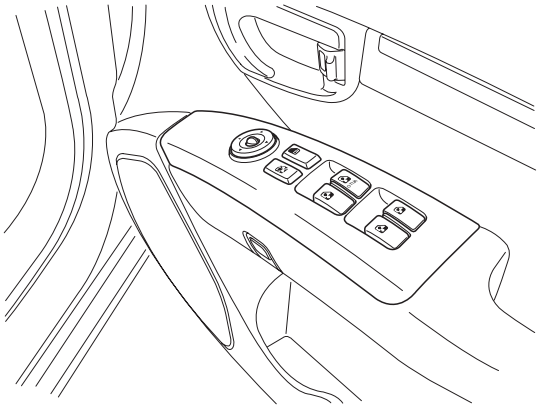

SCMBE6246R

3. Check for the continuity between terminals of power door lock switch according to the table.

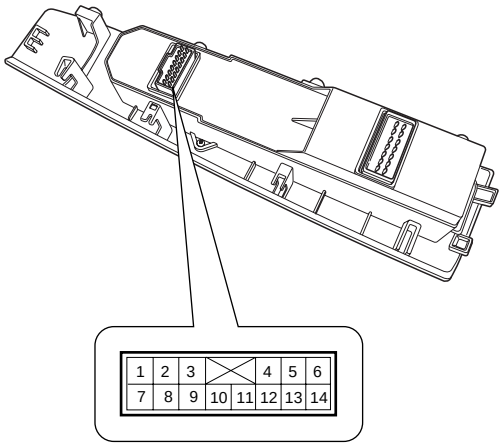

SCMBE6247L

( ) : RHD

Position \ Terminal	4(4)	10(10)	11(11)
Lock		○	○
Unlock	○	○	

SCMBE6248L

4. Check for continuity between the terminals in each switch position according to the table.

Item	Direction \ Terminal	5	4	6	7	8	9	10
Left	UP	○	○	○	○	○		
	DOWN	○	○	○	○	○		
	OFF		○	○	○	○		
	LEFT	○	○	○	○	○		
	RIGHT	○	○	○	○	○		
Right	UP	○	○			○	○	○
	DOWN	○	○			○	○	○
	OFF		○			○	○	○
	LEFT	○	○			○	○	○
	RIGHT	○	○			○	○	○

SCMBE6256L

POWER DOOR MIRROR ACTUATOR

INSPECTION EAE14156

1. Remove the front door quadrant inner cover (A). Take care not to damage fixing clips. (Refer to the Body group - front door)

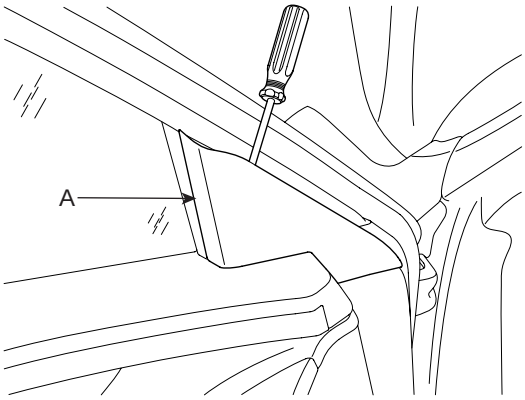

ETBF302F

2. Disconnect the power door mirror connector from the harness.

3. Apply battery voltage to each terminal as shown in the table and verify that the mirror operates properly.

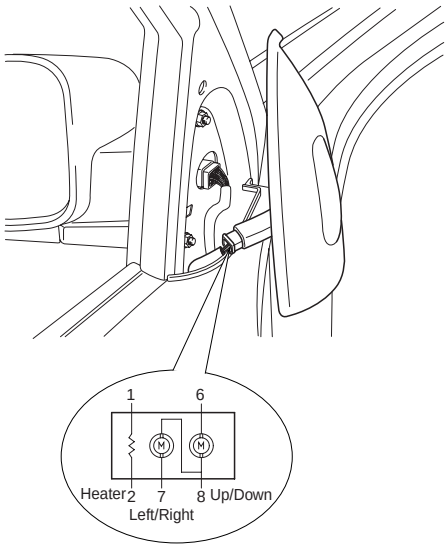

SCMBE6263L

Position \ Terminal	6	7	8
UP	⊖	⊕	⊕
DOWN	⊕	⊖	⊖
OFF	⊖	⊕	⊕
LEFT	⊖	⊕	⊖
RIGHT	⊕	⊖	⊕

SCMBE6264L

MIRROR HEATER

Position \ Terminal	1	2
Heater	○——	——○

SCMBE6265L

POWER WINDOWS

COMPONENT LOCATION EAA7E4EF

The parts with asterisk(*) :
This illustration shows the LHD type.
RHD type is symmetrical.

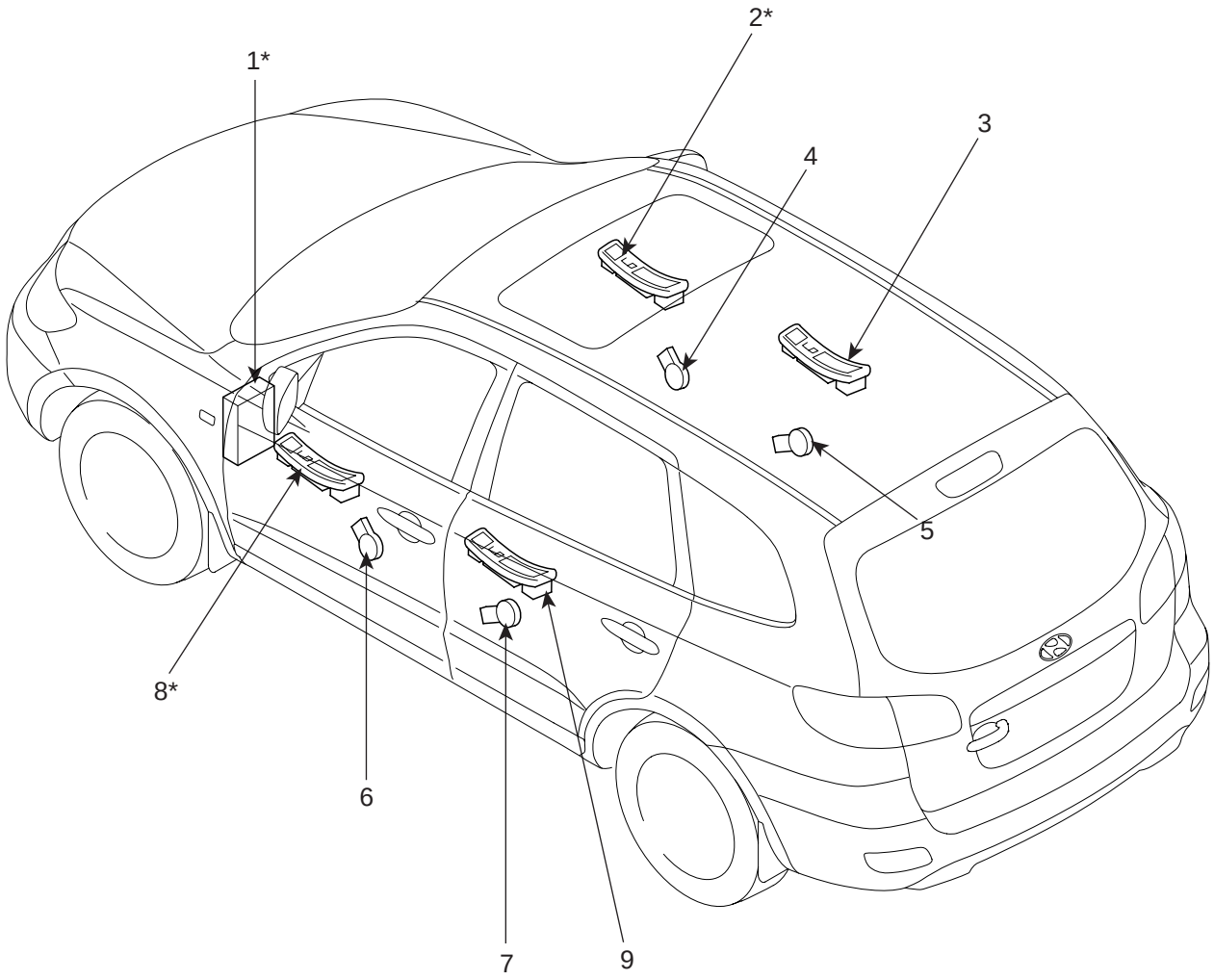

1. Instrument panel junction box (Power window relay)
2. Assist window switch
3. Rear window switch
4. Front window motor
5. Rear window motor
6. Front window motor
7. Rear window motor
8. Driver power window main switch
9. Rear window switch

SCMBE6270L

TROUBLESHOOTING E016BF36

1. No windows operate from the main switch on the driver's door.

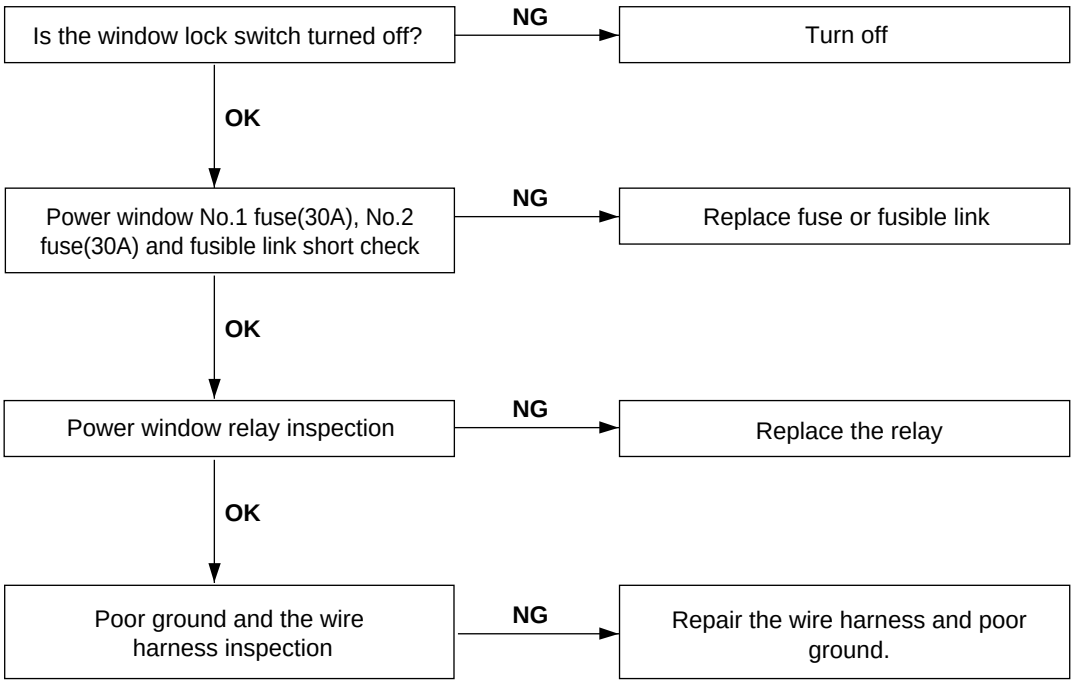

SCMBE6276L

2. Driver's side window does not operate.

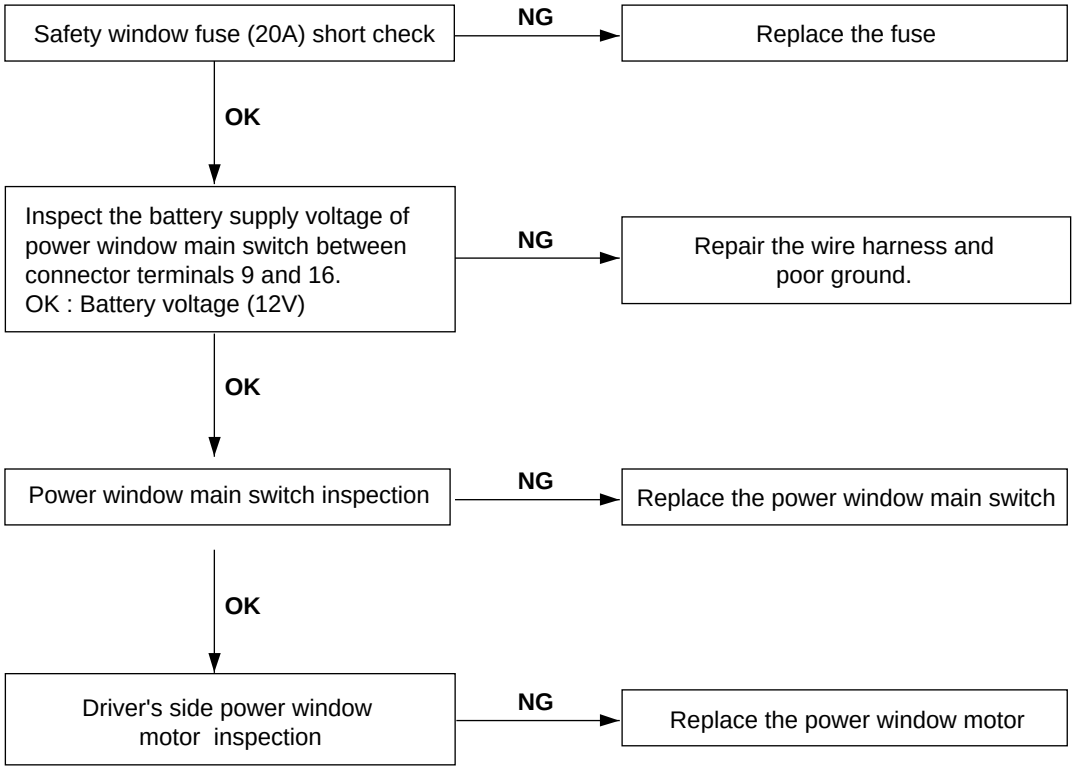

SCMBE6277L

3. Passenger’s side window does not operate.

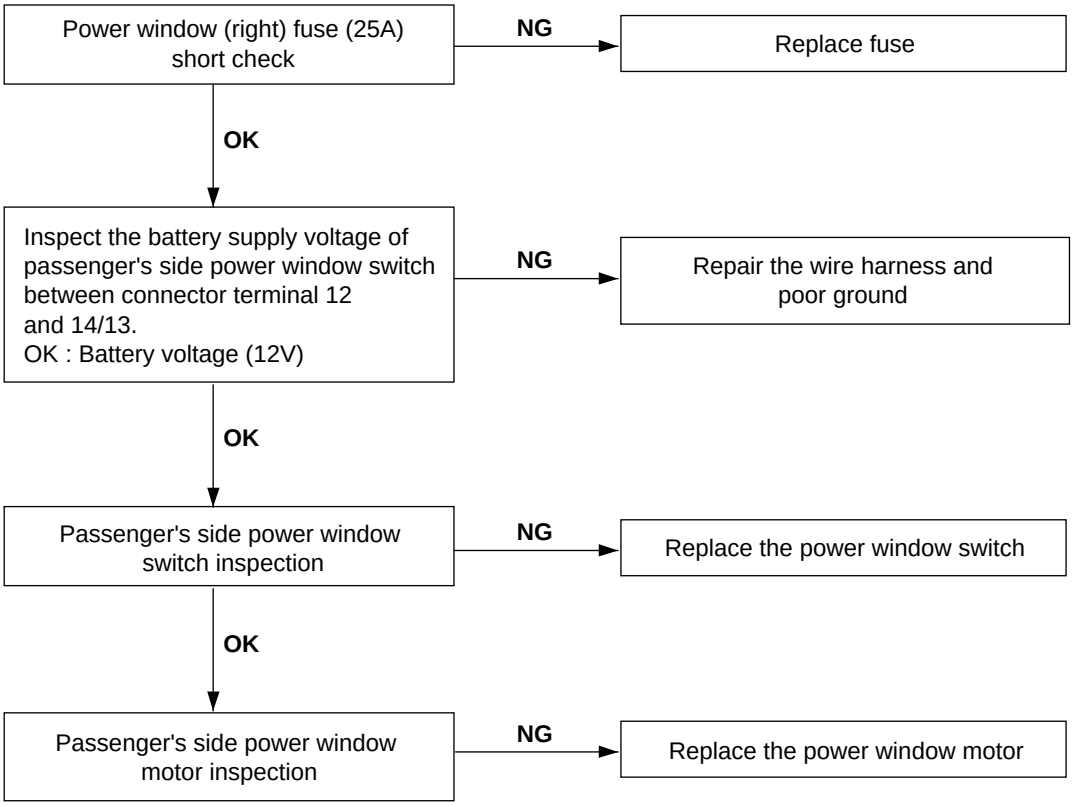

SCMBE6278L

POWER WINDOW MOTOR

INSPECTION E10408D5

FRONT POWER WINDOW MOTOR

1. Remove (-) negative battery terminal.
2. Remove the front door trim. (Refer to the Body group-front door)
3. Disconnect the connector (2P) from the motor.

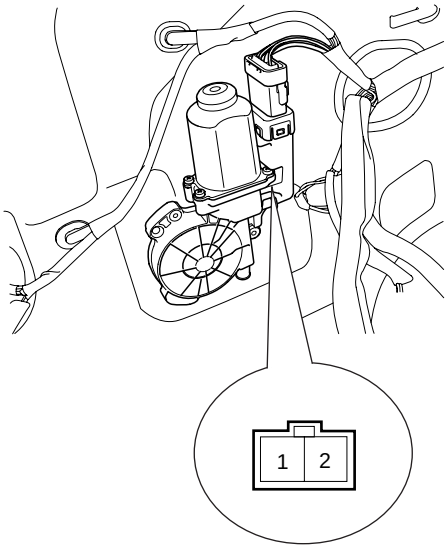

SCMBE6271L

4. Connect the motor terminals directly to battery voltage (12V) and check that the motor operates smoothly. Next, reverse the polarity and check that the motor operates smoothly in the reverse direction. If the operation is abnormal, replace the motor.

Position		Terminal	1	2
Left	UP	Clockwise	⊖	⊕
	DOWN	Counter-clockwise	⊕	⊖
Right	DOWN	Clockwise	⊕	⊖
	UP	Counter-clockwise	⊖	⊕

SCMBE6272L

REAR POWER WINDOW MOTOR

1. Remove (-) negative battery terminal.
2. Remove the rear door trim. (Refer to the Body group-rear door)
3. Disconnect the 2P connector from the motor.

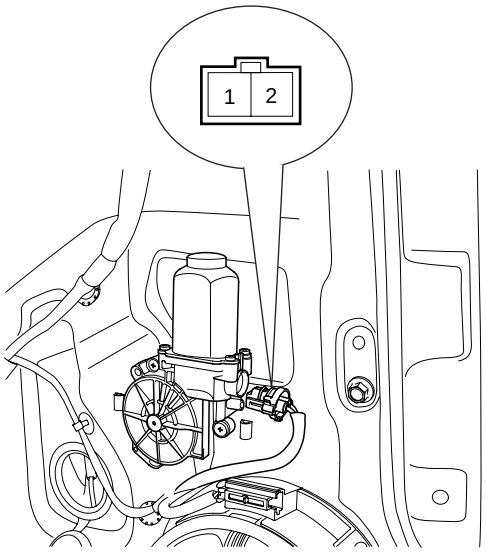

SCMBE6274D

4. Connect the motor terminals directly to battery voltage (12V) and check that the motor operates smoothly. Next, reverse the polarity and check that the motor operates smoothly in the reverse direction. If the operation is abnormal, replace the motor.

Position		Terminal	1	2
Left	UP	Clockwise	⊖	⊕
	DOWN	Counter-clockwise	⊕	⊖
Right	DOWN	Clockwise	⊕	⊖
	UP	Counter-clockwise	⊖	⊕

SCMBE6272L

POWER WINDOW SWITCH

COMPONENTS ED0ABABA

POWER WINDOW MAIN SWITCH

[LHD]

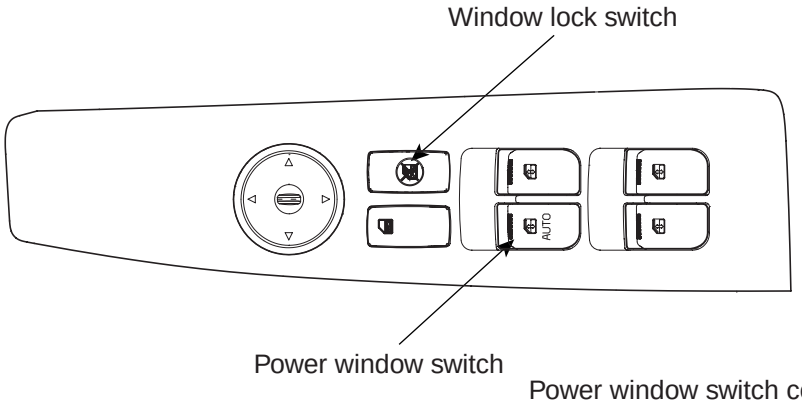

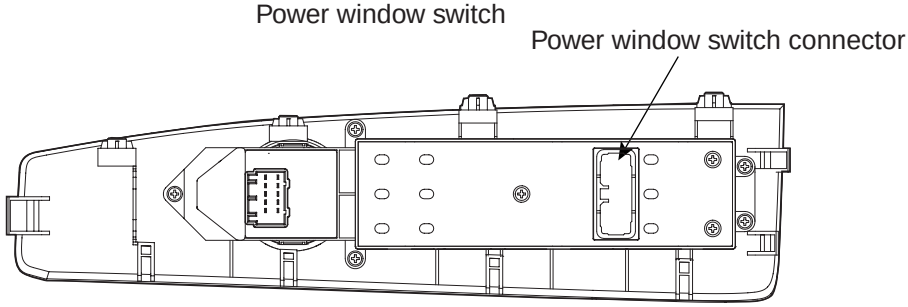

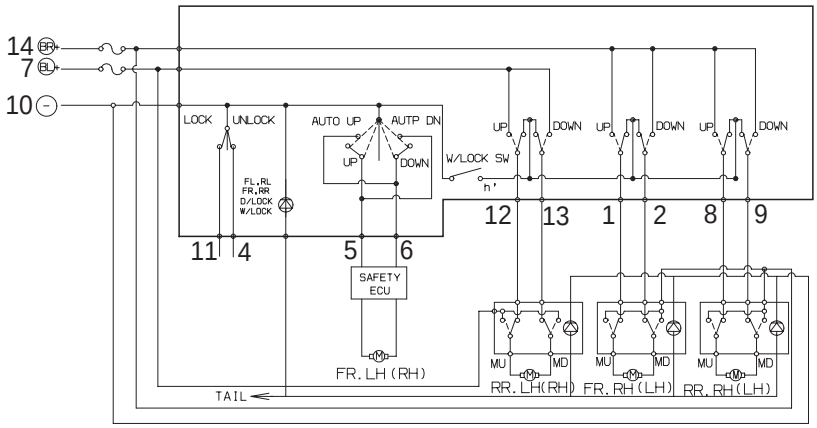

1	2	3			4	5	6
7	8	9	10	11	12	13	14

SCMBE6280L

[RHD]

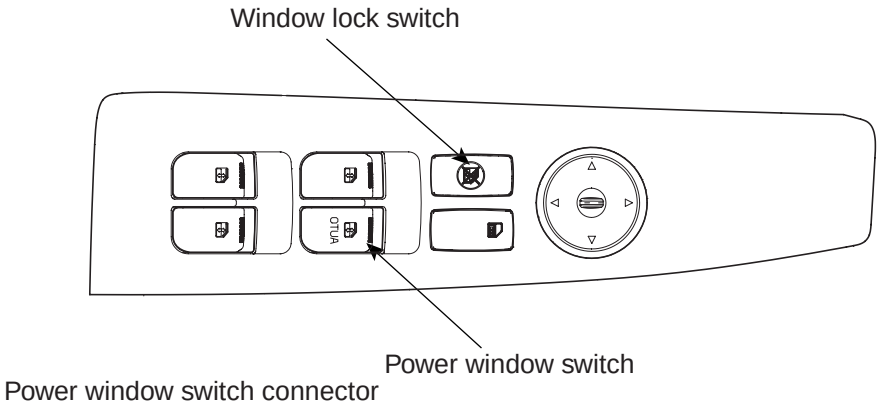

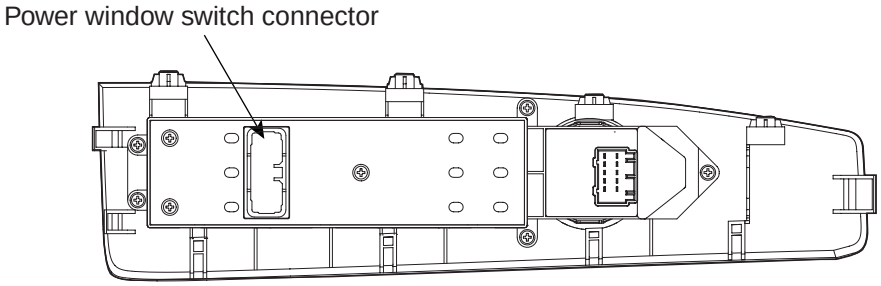

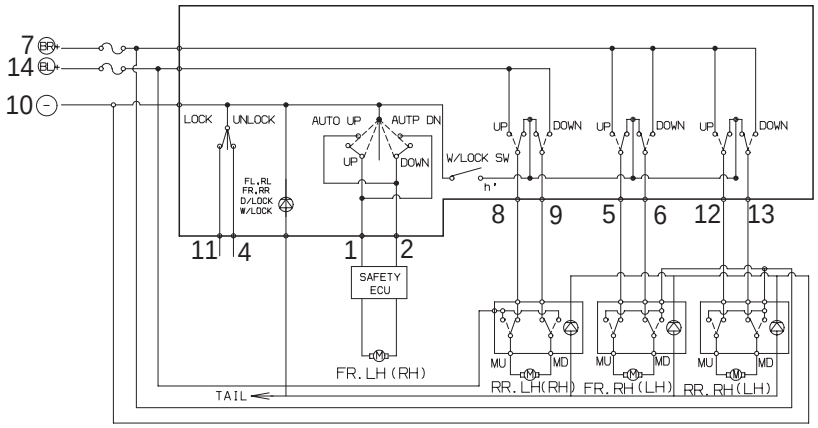

1	2	3			4	5	6
7	8	9	10	11	12	13	14

SCMBE6280R

ASSIST POWER WINDOW SWITCH

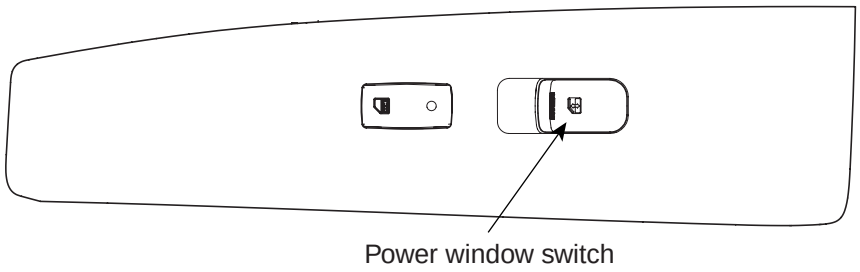

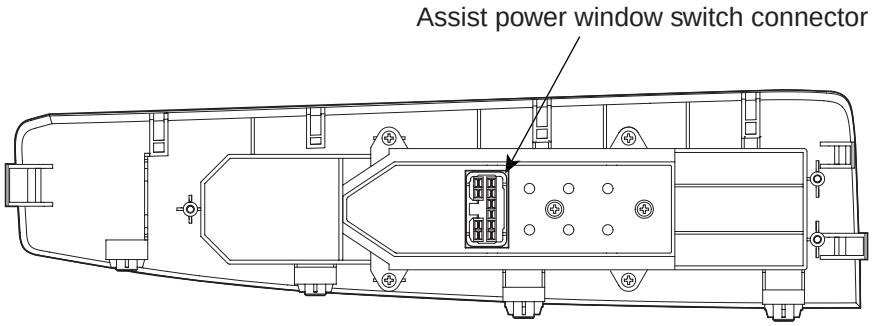

1	2			3	4
5	6	7	8	9	10

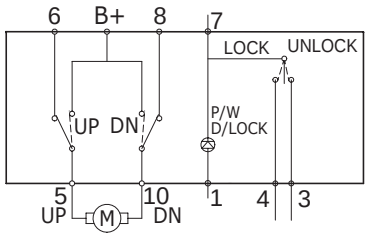

SCMBE6281L

REAR POWER WINDOW SWITCH

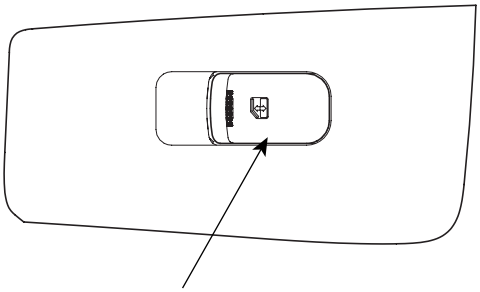

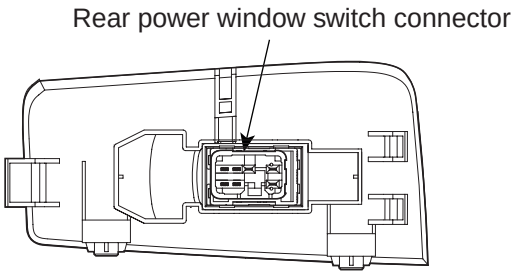

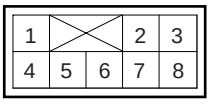

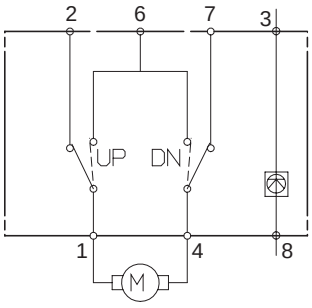

SCMBE6282L

INSPECTION E3DB1E58

POWER WINDOW MAIN SWITCH INSPECTION

1. Disconnect the negative (-) battery terminal.
2. Remove the front door trim. (Refer to the Body group - front door)
3. Disconnect the 14P connector from the switch.

[LHD]

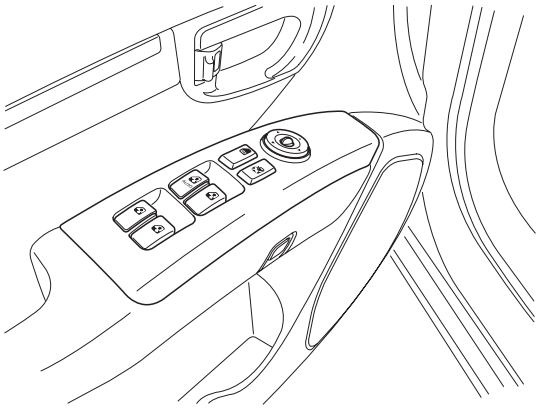

SCMBE6246L

[RHD]

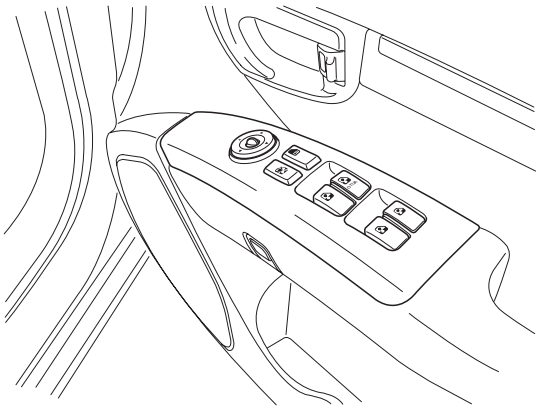

SCMBE6246R

4. Check for continuity between the terminals in each switch position according to the table. If the continuity condition is not normal, replace the switch.

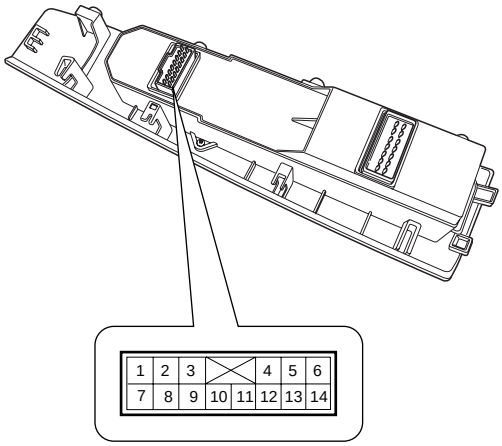

SCMBE6247L

[LHD]

Position \ Terminal	Front left				Front right			
	6	10	5	14	1	2	10	7
UP	○—○		○—○		○———○	○—○		
OFF	○—○—○				○—○—○			
DOWN	○———○	○—○			○———○	○—○		○
Position \ Terminal	**Rear left**				**Rear right**			
	12	13	10	7	9	7	8	10
UP	○———	○—○		○	○———	○—○		○
OFF	○—○—○				○———○			
DOWN	○———	○———○			○———	○———○		

SCMBE6285L

[RHD]

Position \ Terminal	Front left				Front right			
	2	10	1	7	5	6	10	14
UP	○—○		○—○		○———○	○—○		
OFF	○—○—○				○—○—○			
DOWN	○———○	○—○			○———○	○—○		○
Position \ Terminal	**Rear left**				**Rear right**			
	8	9	10	14	13	14	12	10
UP	○———	○—○		○	○———	○—○		○
OFF	○—○—○				○———○			
DOWN	○———	○———○			○———	○———○		

SCMBE6285R

POWER WINDOW LOCK SWITCH

( ) : RHD

Terminal / Position	12(8)	10(10)
NORMAL	○	○
LOCK		

SCMBE6284L

ASSIST POWER WINDOW SWITCH INSPECTION

1. Disconnect the negative (-) battery terminal.
2. Remove the front door trim. (Refer to the Body group - front door)
3. Disconnect the 10P connector from the switch.

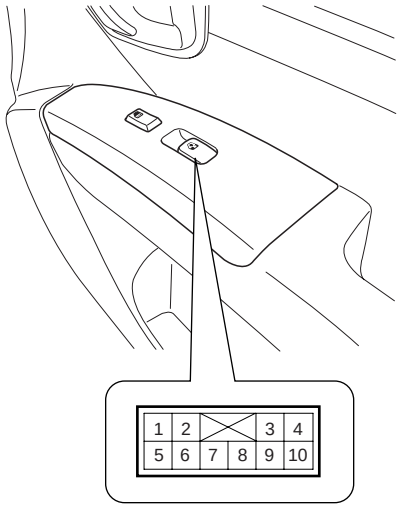

SCMBE6249L

4. Check for continuity between the terminals in each switch position according to the table. If the continuity condition is not normal, replace the switch.

Terminal / Position	8	10	6	9	5
UP	○	○		○	○
OFF	○	○	○		○
DOWN		○	○	○	○

SCMBE6288L

REAR POWER WINDOW SWITCH INSPECTION

1. Disconnect the negative (-) battery terminal.
2. Remove the rear door trim. (Refer to the Body group - rear door)
3. Disconnect the 8P connector from the switch.

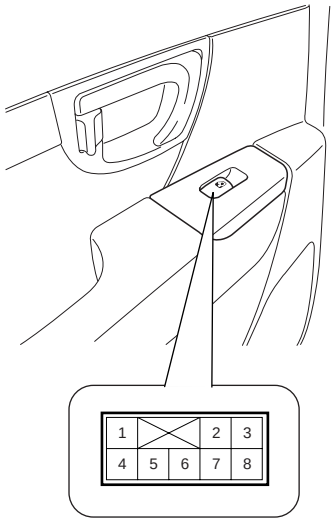

SCMBE6289L

4. Check for continuity between the terminals in each switch position according to the table. If the continuity condition is not normal, replace the switch.

Terminal / Position	6	7	2	1	4
UP	○	○		○	○
OFF		○	○	○	
DOWN	○		○	○	○

SCMBE6291L

POWER WINDOW RELAY

INSPECTION EBFFD3A3

1. Disconnect the negative (-) battery terminal.
2. Remove the junction box.
3. Check for continuity between the terminals.
4. There should be continuity between the No.6 in the I/P-F and No.14 terminal in the I/P-D when power and ground are connected to the No.10 terminal in the I/P-E and No.2 terminal in the I/P-J.
5. There should be no continuity between the No.6 terminal in the I/P-F and No.14 terminal in the I/P-D when power is disconnected.

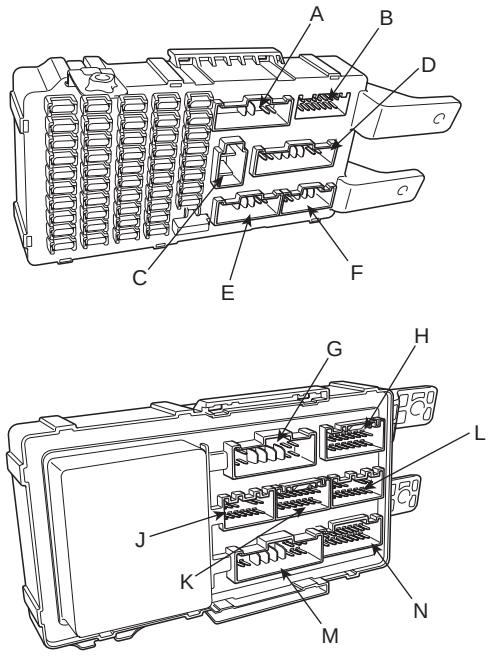

SCMBE6292D

Terminal / Position	I/P-D (14 or 15)	I/P-F (6)	I/P-J (2)	I/P-E (10)
Disconnected			○	○
Connected	○	○	⊖	⊕

SCMBE6293L

WINDSHIELD DEICER

COMPONENT LOCATION E58B0AF7

The parts with asterisk(*) :
This illustration shows the LHD type.
RHD type is symmetrical.

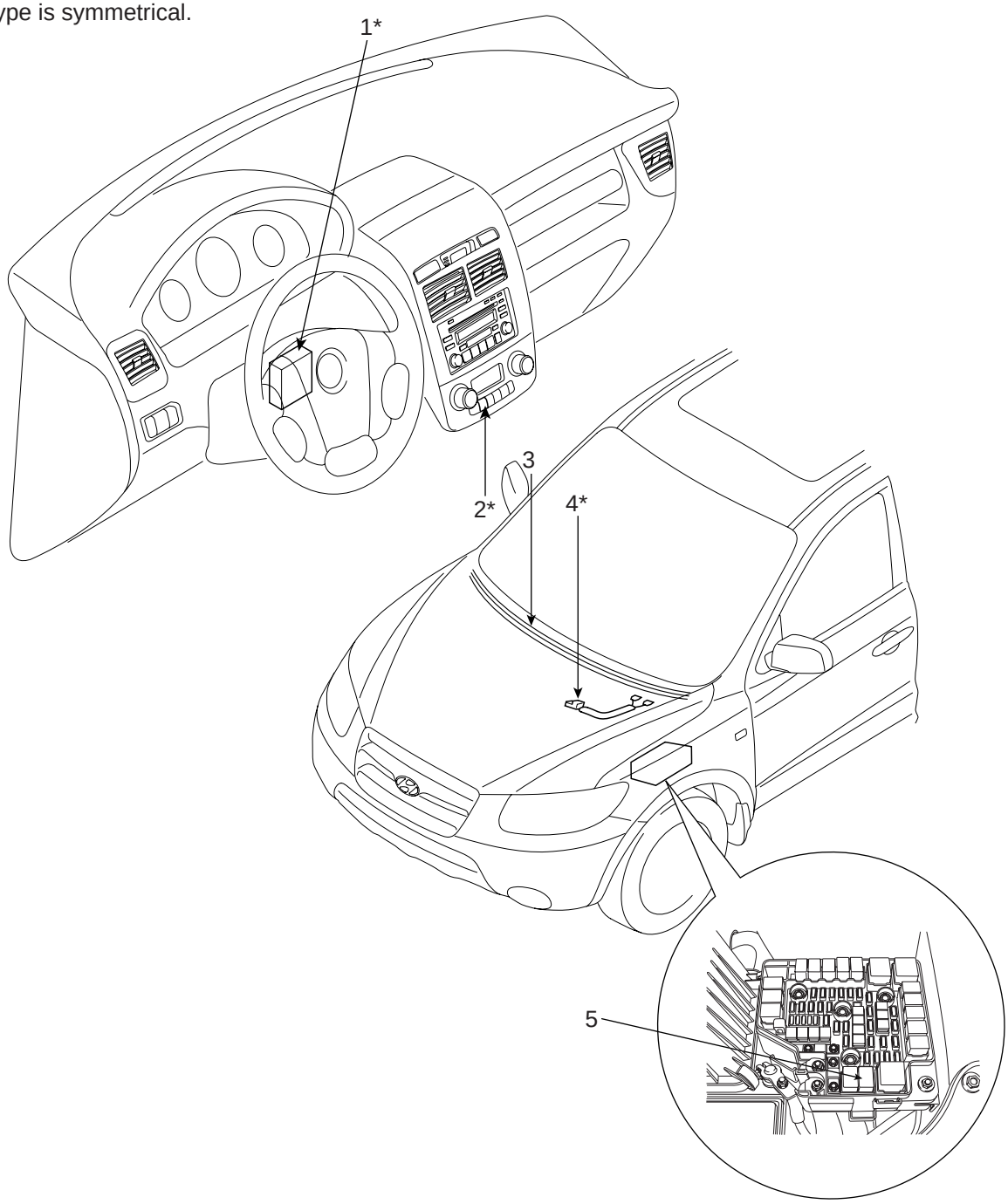

1. Body control module
2. Windshield deicer switch
3. Windshield deicer
4. Deicer connector
5. Windshield deicer relay

SCMBE6300L

DESCRIPTION EA1AF9C9

Windshield deicer system prevent windshield wiper from freezing in the winter season. It consists of deicer in the lower part of windshield, switch and relay. Body control module receives an input signal from the deicer switch, then controls relay. Operating condition is the same that of rear window defogger system.
Since the generator "L" is switched ON, if the deicer switch is ON, then deicer output is ON for 20 minutes.

WINDSHIELD DEICER

INSPECTION E516D0CB

1. Remove the cowl top cover.(Refer to the wiper)
2. Disconnect the windshield deicer connector (A) from the wiper motor linkage.

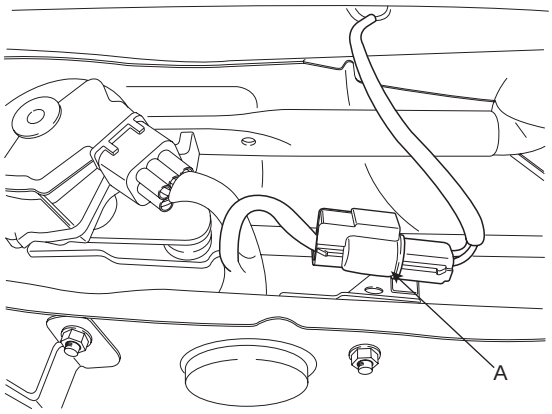

SCMBE6301D

3. Check for continuity between the terminals of deicer lines.

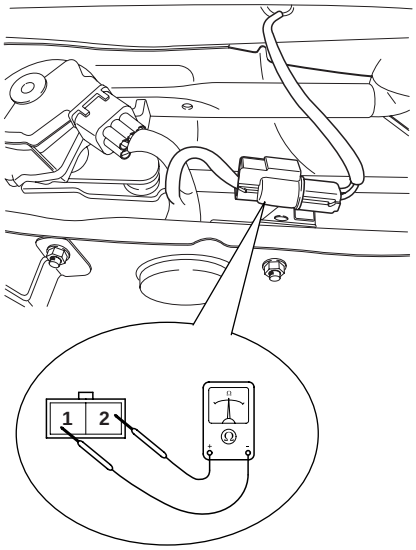

SCMBE6302D

4. Turn the ignition switch ON and the windshield deicer switch ON, then measure the voltage between the terminals of harness side deicer connector.

O K : approx. Battery voltage (12V)

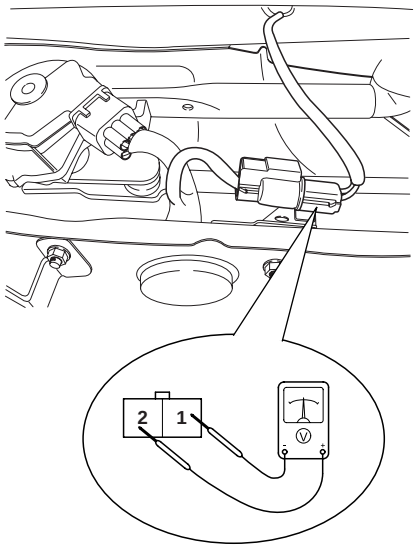

SCMBE6303D

WINDSHIELD DEICER SWITCH

INSPECTION EA198B67

1. Disconnect the negative (-) battery terminal.
2. Remove the crash pad center speaker grill (A).

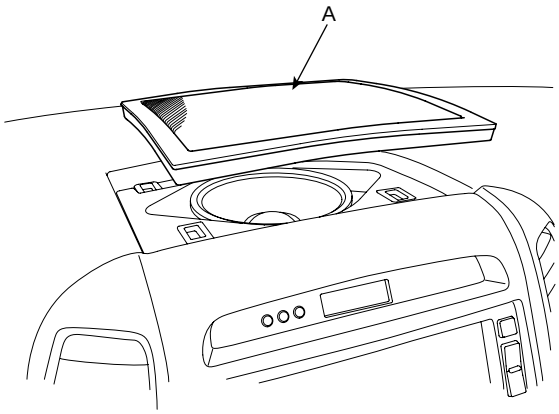

SCMBE6014D

3. Remove the crash pad center speaker (A) after loosening 2 screws.

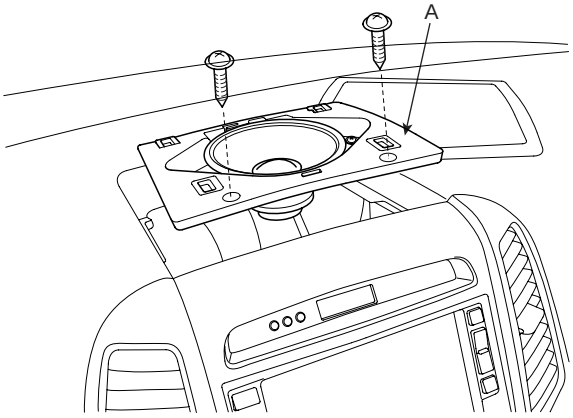

SCMBE6015D

4. Remove the center facia panel(A) after loosening 2 screws. Take care not to damage fixing clips. (Refer to the Body group - Crash pad)

▷: Screw, 2

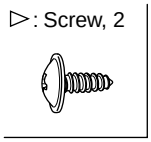

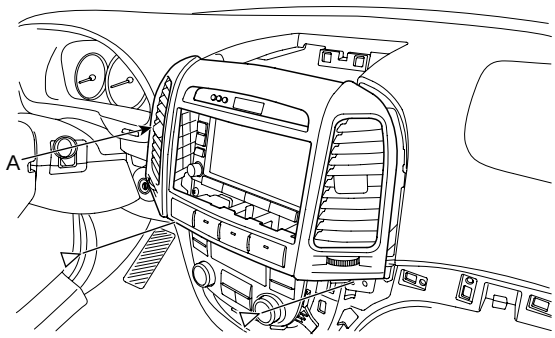

SCMBE6010L

5. Disconnect connectors.
6. Using an ohmmeter, inspect the continuity between the terminals after removing controller.

[LHD]

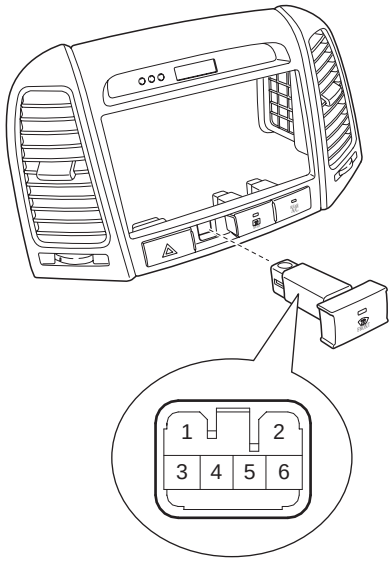

SCMBE6304D

[RHD]

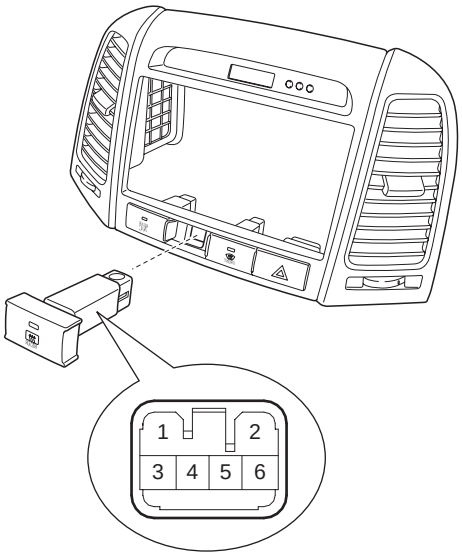

SCMBE6304R

Position / Terminal	ON(PUSH)	OFF(FREE)	Remark
1			
4			
3			IND+
2			ILL-
6			ILL+

SCMBE6305L

WINDSHIELD DEICER RELAY

INSPECTION EF0EF7EE

1. Disconnect the negative (-) battery terminal.
2. Remove the windshield deicer relay from the engine room relay box.
3. There should be continuity between the No.30 and No.87 terminal when power and ground are connected to the No.85 terminal and No.86 terminal.
4. There should be no continuity between the No.30 terminal and No.87 terminal when power is disconnected.

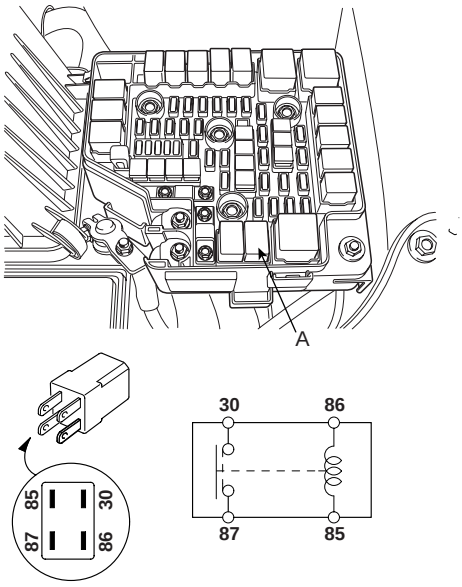

SCMBE6306D

Terminal / Power	85	86	30	87
Disconnected	○	○		
Connected	⊖	⊕	○	○

SCMBE6307L

REAR WINDOW DEFOGGER

COMPONENT LOCATION EED7B9CA

The parts with asterisk(*) :
This illustration shows the LHD type.
RHD type is symmetrical.

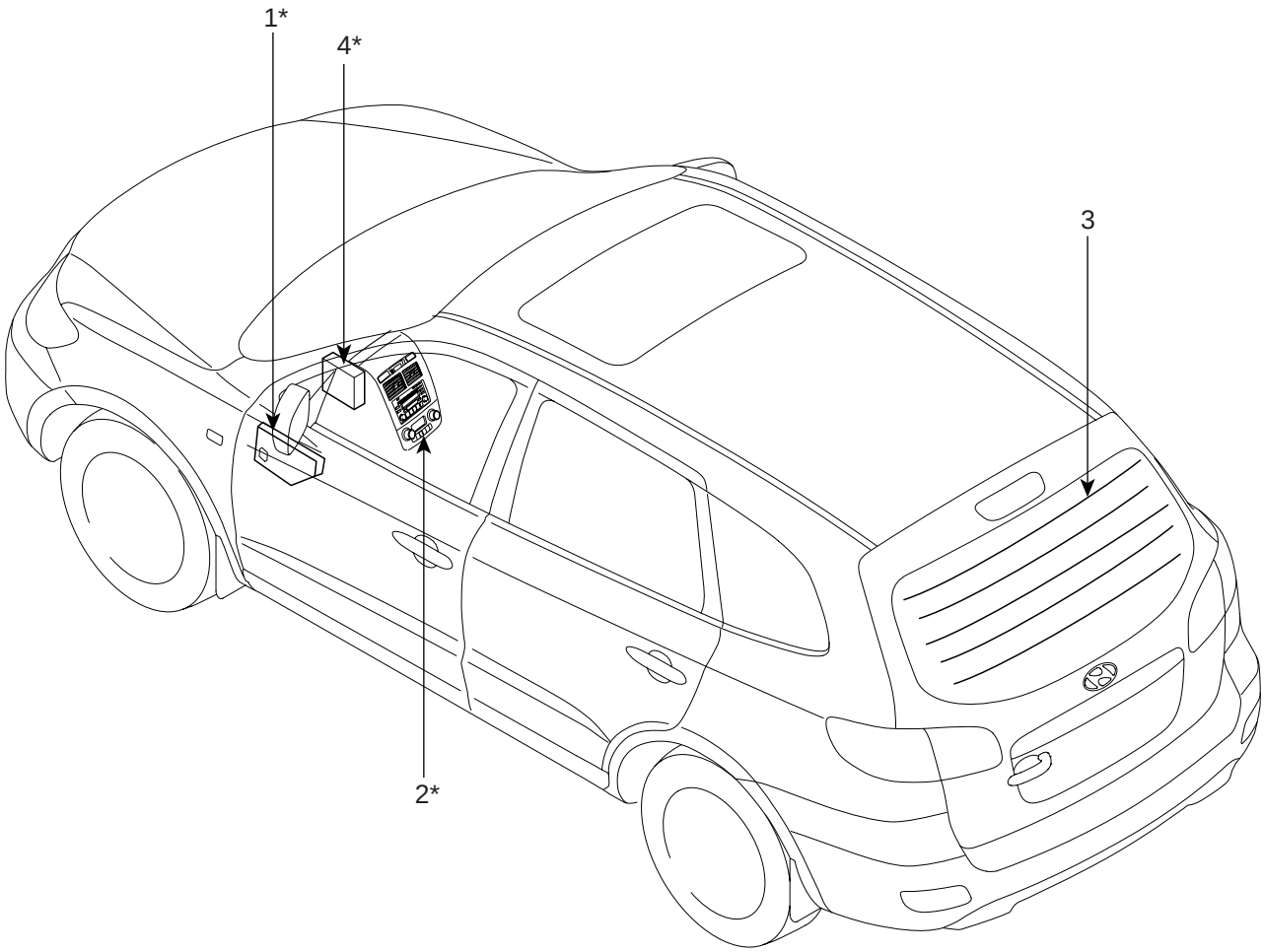

1. Junction box (Rear window defogger)
2. Rear window defogger switch
3. Rear window defogger
4. Body control module

SCMBE6310L

REAR WINDOW DEFOGGER PRINTED HEATER

INSPECTION EF6BBBEE

CAUTION

Wrap tin foil around the end of the voltmeter test lead to prevent damaging the heater line. Apply finger pressure on the tin foil, moving the tin foil along the grid line to check for open circuits.

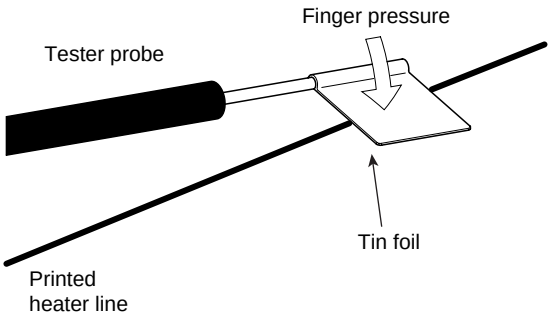

ETA9165A

1. Turn on the defogger switch and use a voltmeter to measure the voltage of each heater line at the glass center point. If a voltage of approximately 6V is indicated by the voltmeter, the heater line of the rear window is considered satisfactory.

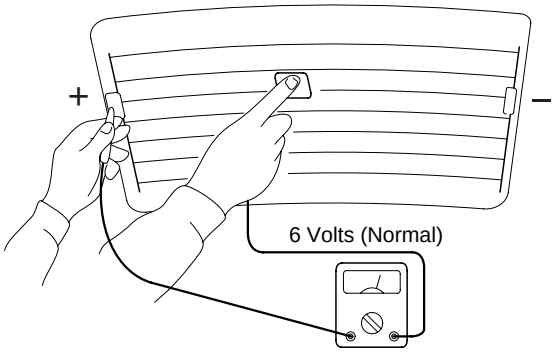

ETA9165B

2. If a heater line is burned out between the center point and (+) terminal, the voltmeter will indicate 12V.

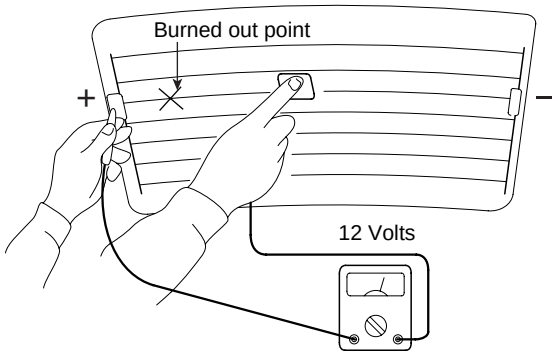

ETA9165C

3. If a heater line is burned out between the center point and (-) terminal, the voltmeter will indicate 0V.

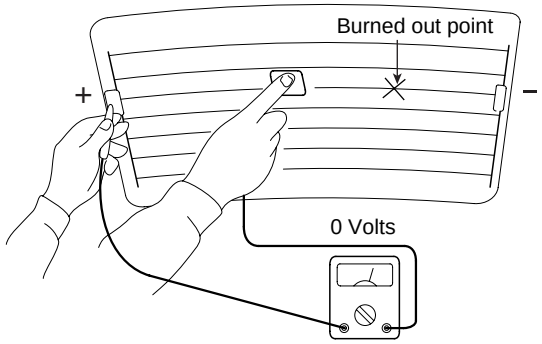

ETA9165D

4. To check for open circuits, slowly move the test lead in the direction that the open circuit seems to exist. Try to find a point where a voltage is generated or changes to 0V. The point where the voltage has changed is the open-circuit point.

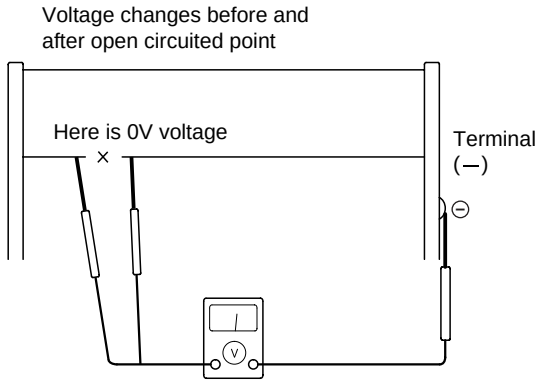

ETA9165E

5. Use an ohmmeter to measure the resistance of each heater line between a terminal and the center of a grid line, and between the same terminal and the center of one adjacent heater line. The section with a broken heater line will have a resistance twice as that in other sections. In the affected section, move the test lead to a position where the resistance sharply changes.

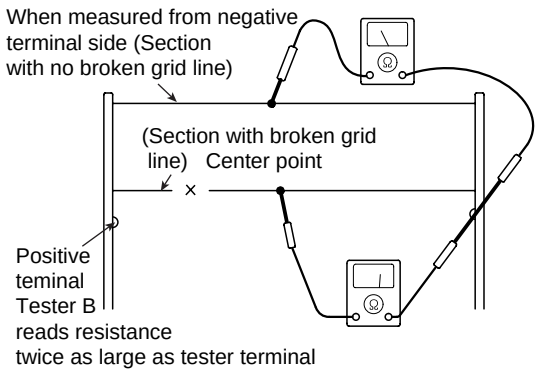

ETA9165F

REPAIR OF BROKEN HEATER LINE

Prepare the following items :

1. Conductive paint.
2. Paint thinner.
3. Masking tape.
4. Silicone remover.
5. Using a thin brush :
   Wipe the glass adjacent to the broken heater line, clean with silicone remover and attach the masking tape as shown. Shake the conductive paint container well, and apply three coats with a brush at intervals of about 15 minutes apart. Remove the tape and allow sufficient time for drying before applying power. For a better finish, scrape away excess deposits with a knife after the paint has completely dried. (Allow 24 hours).

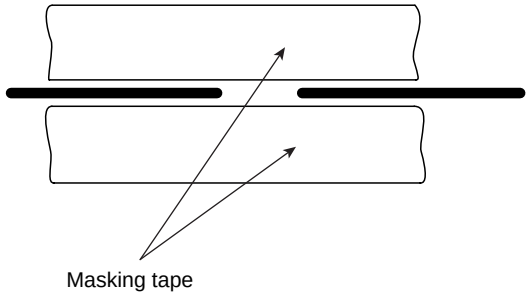

ETA9165G

REAR WINDOW DEFOGGER SWITCH

INSPECTION E2FDCAC7

1. Disconnect the negative (-) battery terminal.
2. Remove the crash pad center speaker grill (A).

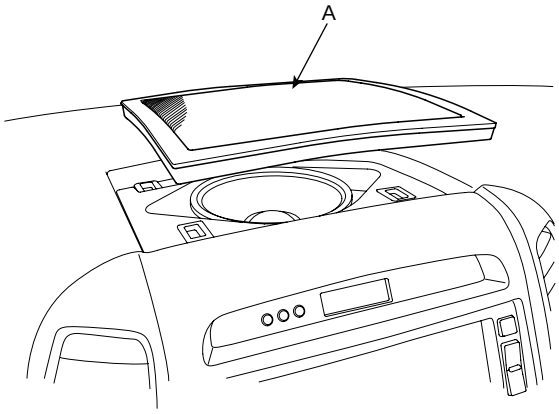

SCMBE6014D

3. Remove the crash pad center speaker (A) after loosening 2 screws.

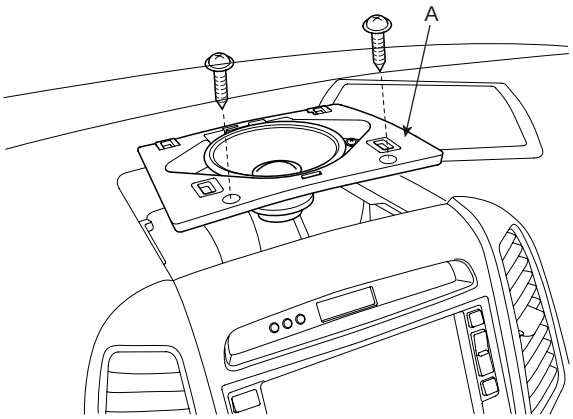

SCMBE6015D

4. Remove the center facia panel(A) after loosening 2 screws. Take care not to damage fixing clips. (Refer to the Body group - Crash pad)

▷: Screw, 2

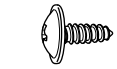

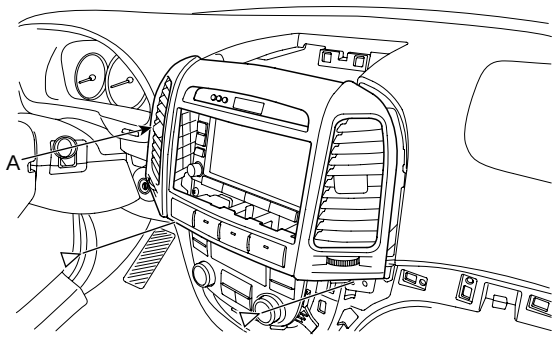

SCMBE6010L

5. Disconnect connectors.
6. Using an ohmmeter, inspect the continuity between the terminals after removing controller.

[LHD]

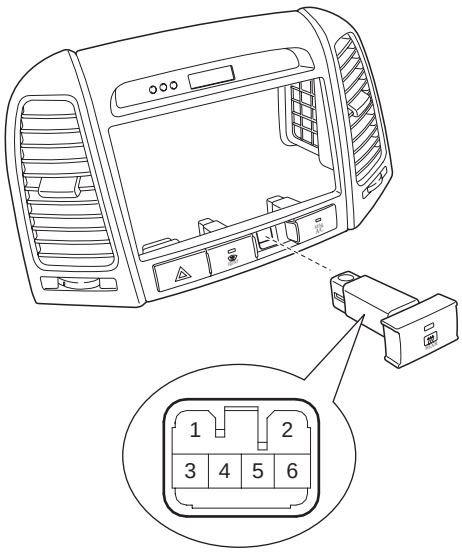

SCMBE6311D

[RHD]

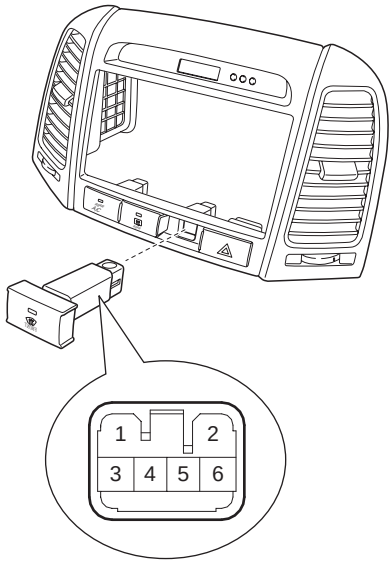

SCMBE6311R

Position / Terminal	ON(PUSH)	OFF(FREE)	Remark
1			
4			
3			IND+
2			ILL-
6			ILL+

SCMBE6305L

REAR WINDOW DEFOGGER RELAY

INSPECTION EBA31AE2

1. Disconnect the negative (-) battery terminal.
2. Remove the crash pad lower panel. (Refer to the Body group- Crash pad)
3. Remove the junction box.
4. There should be continuity between the No.6 of I/P-F and No.14 terminal of I/P-F when power and ground are connected to the No.10 terminal of I/P-E and No.2 terminal of I/P-J.
5. There should be no continuity between the No.6 terminal of I/P-F and No.14 terminal of I/P-D when power is disconnected.

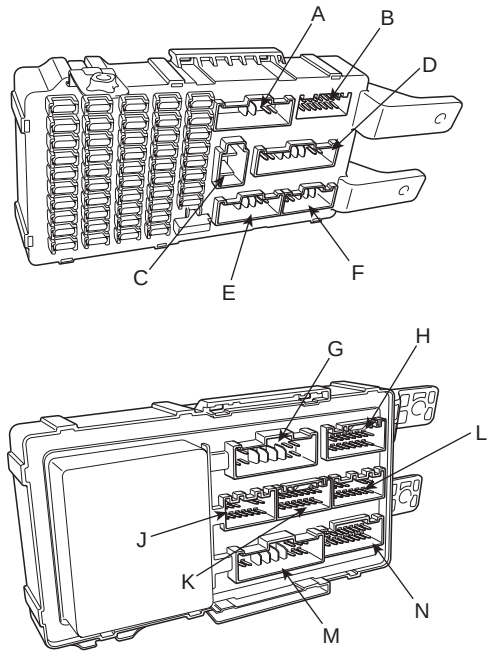

SCMBE6292D

Terminal / Position	I/P-D (14 or 15)	I/P-F (6)	I/P-J (2)	I/P-E (10)
Disconnected			○ ——— ○	
Connected	○ ——— ○		⊖ ——— ⊕	

SCMBE6293L

REAR WINDOW DEFOGGER TIMER

INSPECTION E39E3E4B

1. If the Defogger SW is ON after the ALT "L" is ON in the state that the IGN1 SW is ON, then the Defogger output shall be ON for 20 minutes. (Operating in the state of the ENGINE RUNNING)

2. If the DEFOGGER SW is ON again while the DEFOGGER output is ON, then the DEFOGGER output shall be OFF.

3. If the ALT "L" is OFF or IGN1 is OFF while the DEFOGGER output is ON, then the DEFOGGER output shall be OFF.

4. If the ALT "L" $>$ 10 volts, then it shall be in the Engine Running State (ALT "L" shall be ON); if the ALT "L" $<$ 5 volts, then it shall be in the Engine Stop State (ALT "L" shall be OFF). Also, if the ALT "L" is more than 5 and less than 10 volts, then the former state shall be maintained.

5. If the defogger SW is pressed and the ALT "L" is ON, there shall be no the DEFOGGER relay output.

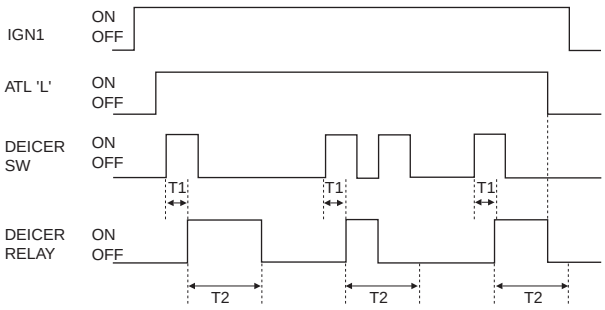

SCMBE6166L

T1 : 60 ± 20 msec, T2 : 20 ± 1 min.

WINDSHIELD WIPER／ WASHER

COMPONENT LOCATION E2A93BAD

The parts with asterisk(*) :
This illustration shows the LHD type.
RHD type is symmetrical.

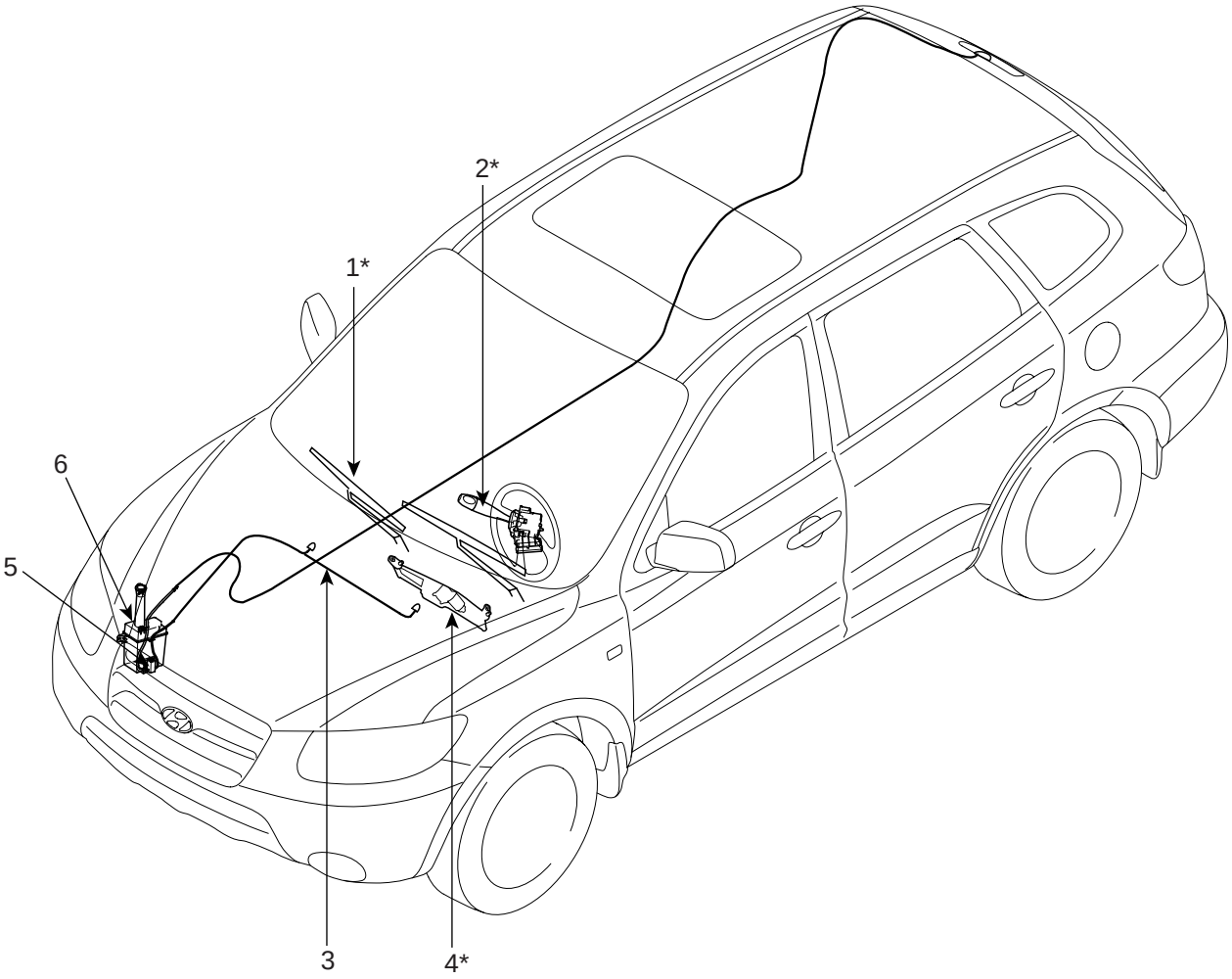

1. Windshield wiper arm & blade
2. Wiper & washer switch
3. Windshield washer hose
4. Windshield wiper motor & linkage
5. Washer motor
6. Washer reservoir

SCMBE6320L

TROUBLESHOOTING E70074B4

1. Wiper low and wiper high do not work.

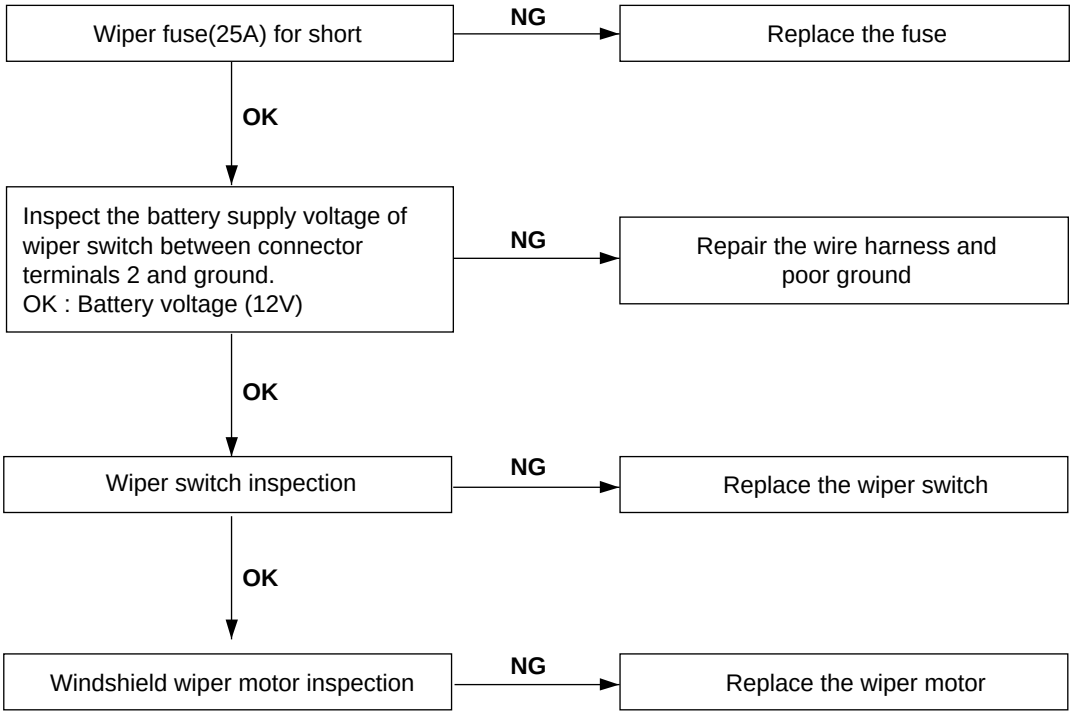

SCMBE6333L

2. When washer switch is on, wiper does not work.

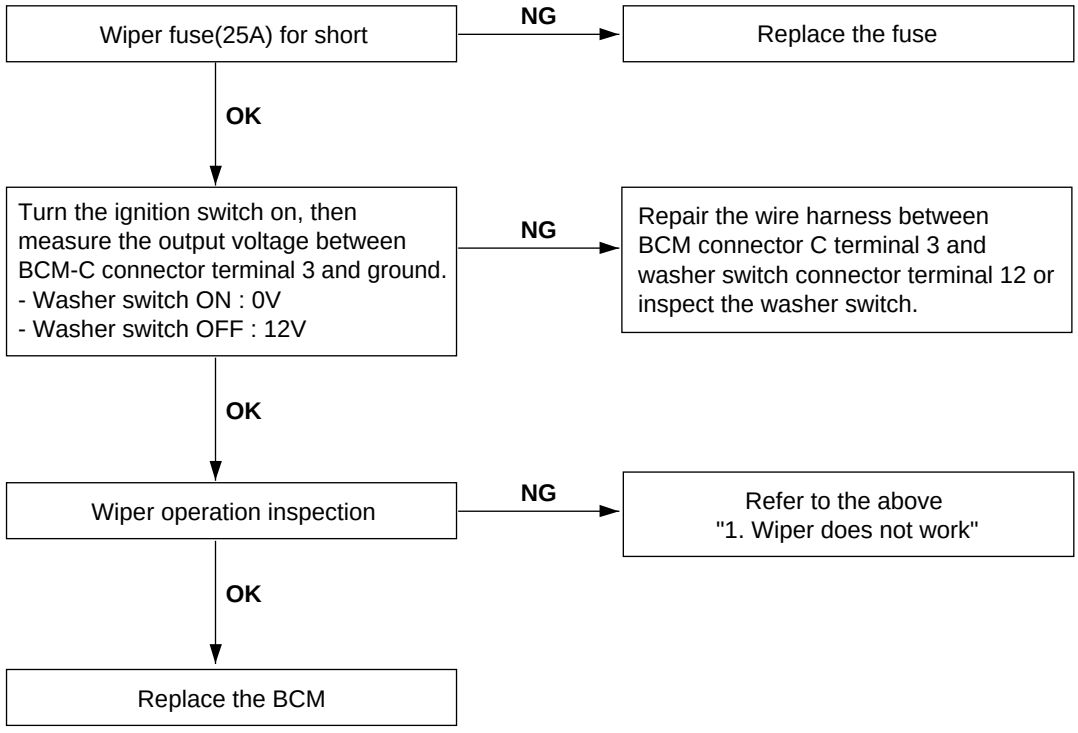

SCMBE6334L

WINDSHIELD WIPER／WASHER SWITCH

REPLACEMENT E64A45F0

1. Disconnect the negative (-) battery terminal.
2. Remove the steering column upper and lower shrouds (A) after removing 3 screws.

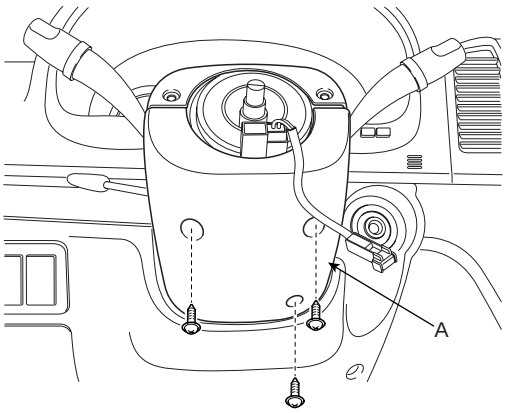

SCMBE6321D

3. Remove the wiper switch (A) after disconnecting the connector and loosening 2 screws.

[LHD]

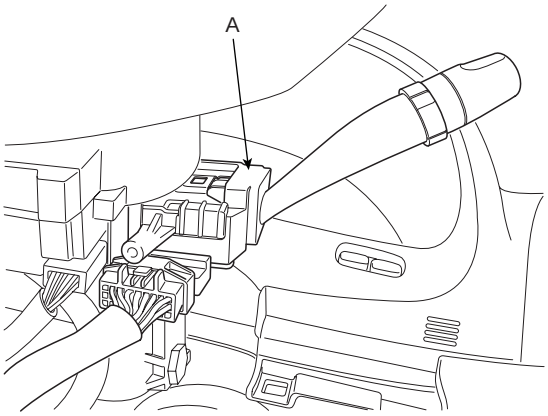

SCMBE6322D

[RHD]

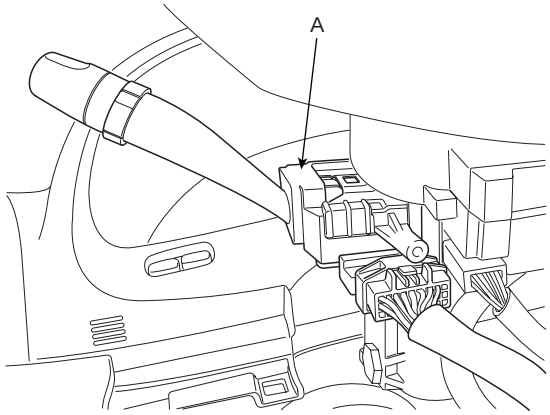

SCMBE6322R

4. Installation is the reverse of removal.

INSPECTION E7A21203

1. Check for continuity between the terminals while operating the wiper and washer switch. If it is not normal condition, replace wiper and wiper switch.

[LHD]

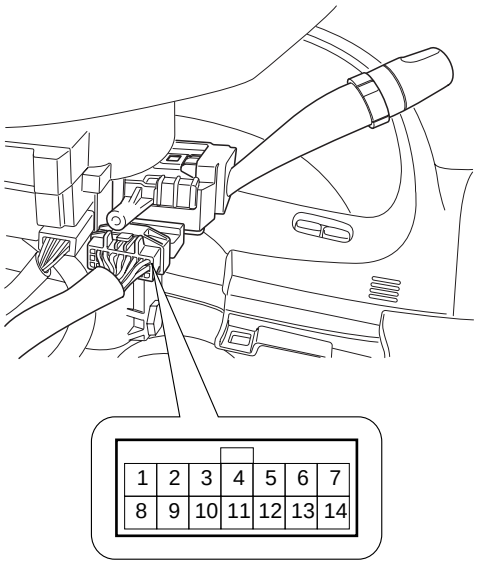

SCMBE6050D

[RHD]

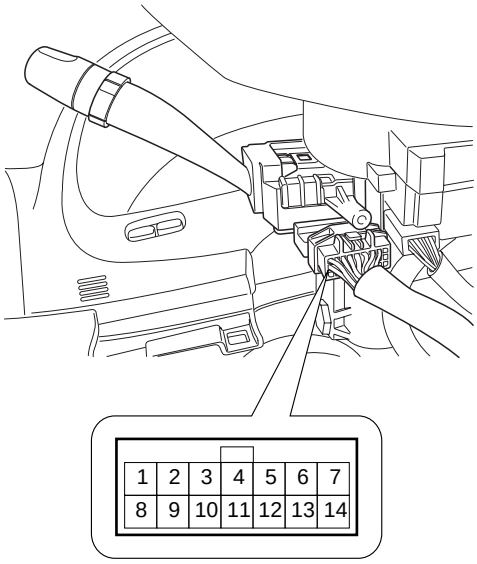

SCMBE6050R

WIPER SWITCH

[STANDARD] ( ) : RHD

Position \ Terminal	1 (7)	2 (6)	3 (5)	4 (4)	5 (3)	6 (2)	13 (9)	14 (8)
MIST				○	○			
OFF		○	○					
INT		○	○		○	○	○	○
LOW		○			○			
HI	○				○			

SCMBE6051L

[RAIN SENSOR] ( ) : RHD

Position \ Terminal	1 (7)	2 (6)	3 (5)	4 (4)	5 (3)	6 (2)	13 (9)	14 (8)
MIST				○	○			
OFF		○	○					
AUTO		○	○		○	○	○	○
LOW		○			○			
HI	○				○			

SCMBE6052L

WASHER SWITCH

( ) : RHD

Position \ Terminal	5(3)	7(1)
OFF		
ON	○	○

SCMBE6053L

INSPECTION E8B9F4EC

1. Multifunction switch operates head lamps and wiper by communicating with BCM through LIN communication.
2. Check BCM input/output value of each position of multifunction switch when you inspect the module whether faulty or not.
3. Select model and BCM menu.

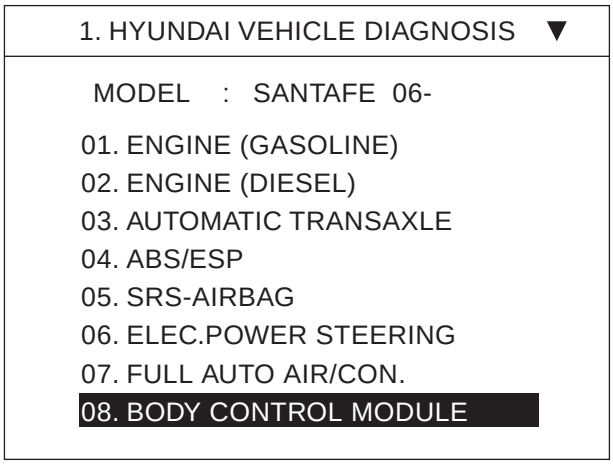

SCMBE6385L

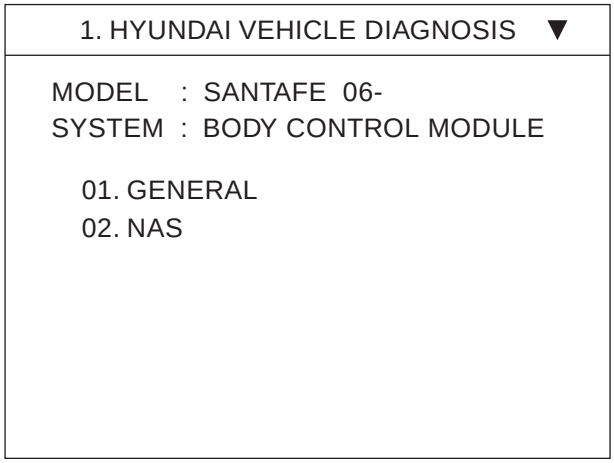

SCMBE6355L

4. Select "Current data" and wiper.

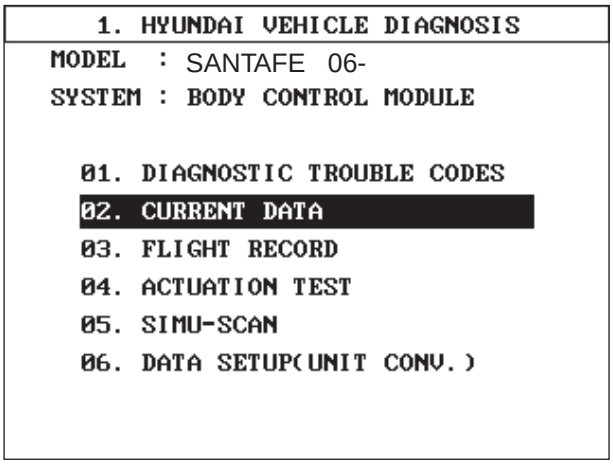

SCMBE6356L

5. Check input/output value of washer & wiper switch.

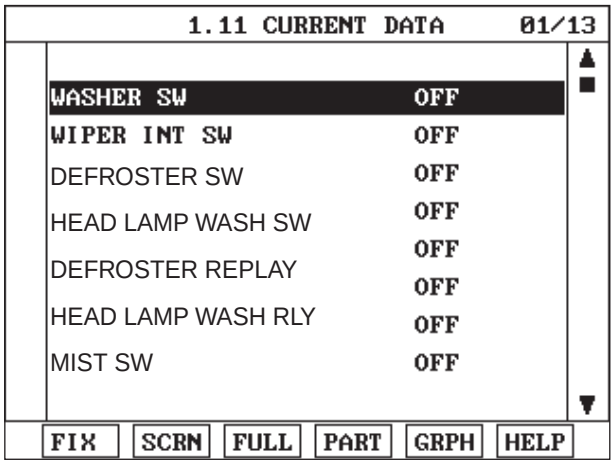

SCMBE6358L

FRONT WIPER MOTOR

COMPONENT LOCATION EDBF6DB7

This illustration shows the LHD type.
RHD type is symmetrical.

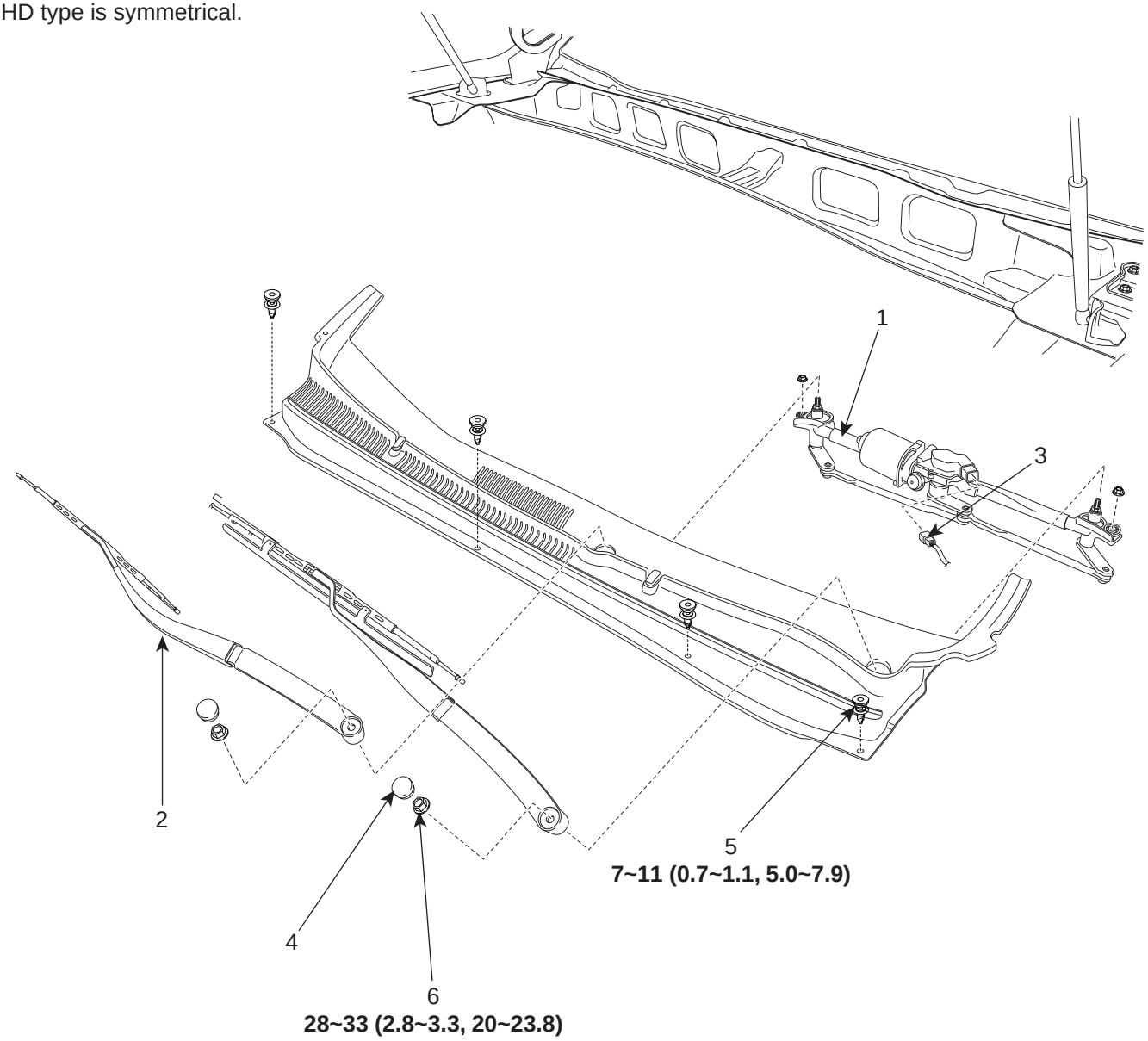

TORQUE : Nm (kgf·m, lbf.ft)

1. Wiper motor & linkage assembly
2. Wiper arm & blade
3. Wiper motor connector
4. Cap
5. Rivet
6. Nut

SCMBE6340L

INSPECTION EF6CA691

SPEED OPERATION CHECK

1. Remove the connector from the wiper motor.
2. Attach the positive (+) lead from the battery to terminal 6 and the negative (-) lead to terminal 5.
3. Check that the motor operates at low speed.
4. Connect the positive (+) lead from the battery to terminal 4 and the negative (-) lead to terminal 5.
5. Check that the motor operates at high speed.

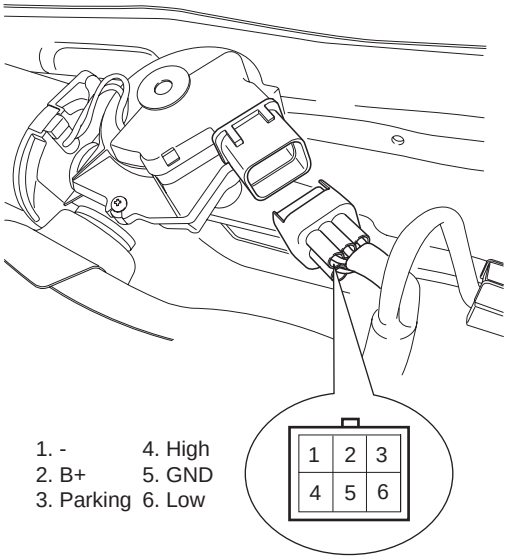

SCMBE6343L

AUTOMATIC STOP OPERATION CHECK

1. Operate the motor at low speed using the stalk control.
2. Stop the motor operation anywhere except at the off position by disconnecting terminal 6.
3. Connect terminals 3 and 6.
4. Connect the positive (+) lead from the battery to terminal 2 and the negative (-) lead to terminal 5.
5. Check that the motor stops running at the off position.

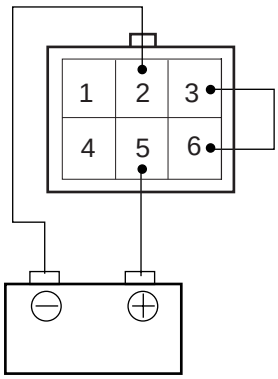

SCMBE6344D

REPLACEMENT EAC38CCF

1. Remove the windshield wiper arm and blade after removing a nut (A).

TORQUE: 28~32 Nm (2.8~3.2 kgf.m, 20~23.1 lbf.ft)

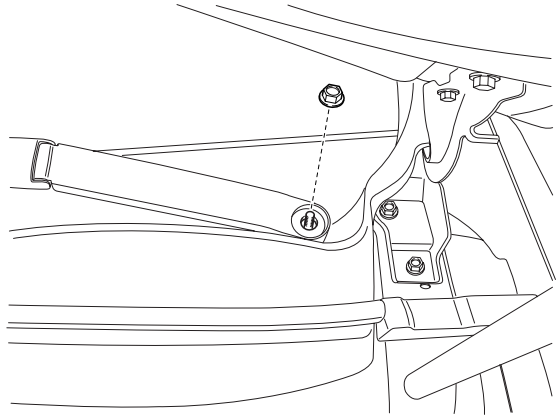

SCMBE6341D

2. Remove the weather strip and the cowl top cover (A) after removing 4 rivets.

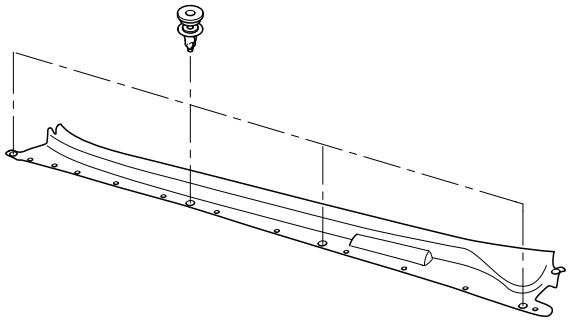

ATIE362C

3. Remove the windshield wiper motor and linkage assembly after removing 2 bolts. Disconnect the wiper motor connector and windshield deicer connector from the wiper motor & linkage assembly.

TORQUE: 7-11Nm (0.7-1.1, kgf.m, 5.0-7.9 lbf.ft)

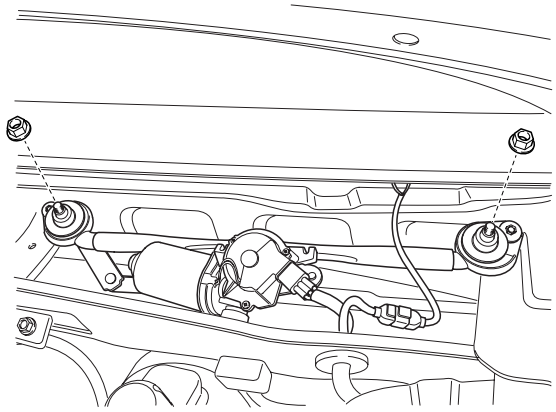

SCMBE6342D

4. Installation is the reverse of removal.

INSPECTION EBFE4E3A

1. Install the wiper arm and blade to the specified position.

Specified position	A	B
Distance [in (mm)]	1.18 ± 0.2 (30 ± 5)	1.18 ± 0.2 (30 ± 5)

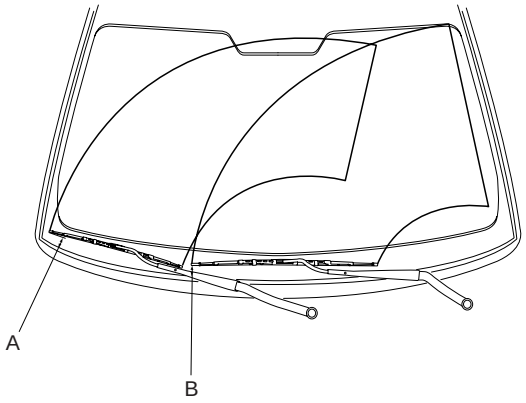

ATGE362C

2. Set the washer nozzle on the specified spray position.

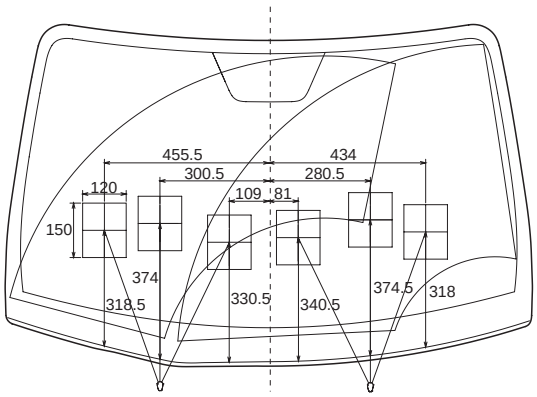

Unit : mm

SCMBE6345L

FRONT WASHER MOTOR

INSPECTION E40BA24E

1. With the washer motor connected to the reservoir tank, fill the reservoir tank with water.
2. Connect positive (+) battery cables to terminal 1 and negative (-) battery cables to terminal 2 respectively.
3. Check that the motor operates normally and the washer motor runs and water sprays from the front nozzles.
4. If they are abnormal, replace the washer motor.

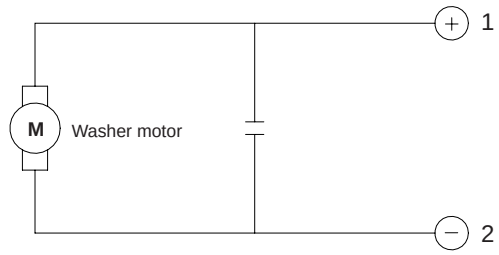

[Windshield washer motor]

SCMBE6346L

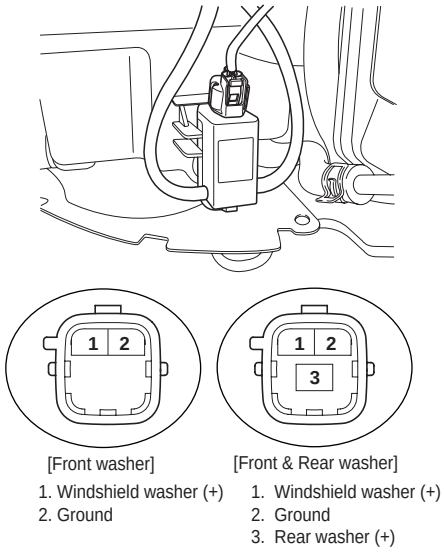

SCMBE6348L

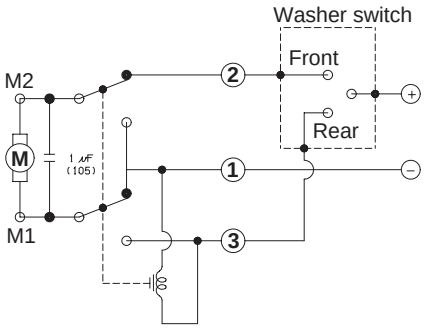

<Windshield & Rear washer motor>

SCMBE6349L

WASHER FLUID LEVEL SENSOR SWITCH

1. Disconnect the negative(-) battery terminal.
2. Drain the washer fluid less than 650 cc.
3. Check for continuity between the No. 1 and No.2 terminal in each float position.
   There should be continuity when the float is down.
   There should be no continity when the folat is up.
4. If the continuity is not as specified, replace the washer fluid level switch

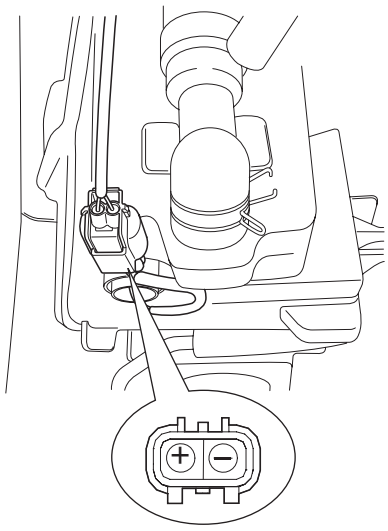

SCMBE6352D

Terminal / Position	1	2
Over 650cc		
Under 650cc	○	○

(Tolerance : -50cc ~ +100cc)

SCMBE6353L

REPLACEMENT EF02B9DF

1. Disconnect the negative (-) battery terminal.
2. Remove the front bumper cover. (Refer to Body group - Front bumper)
3. Remove the washer hose (A) and the washer motor connector (B).

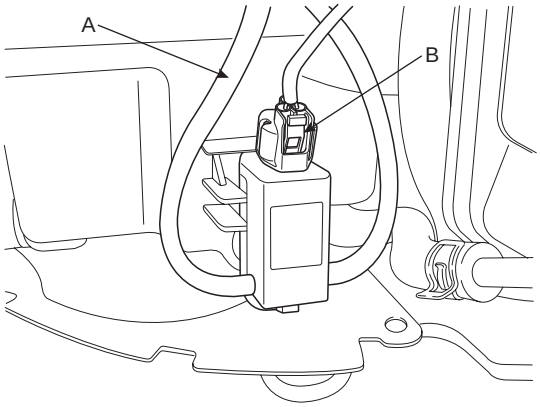

SCMBE6335D

4. Disconnect the washer fluid level sensor switch connector (A).

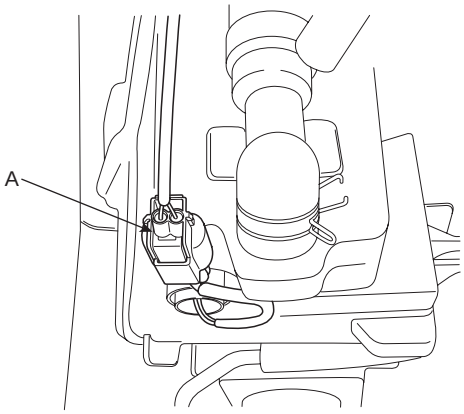

SCMBE6346D

5. Remove the washer reservoir after removing 3 bolts.

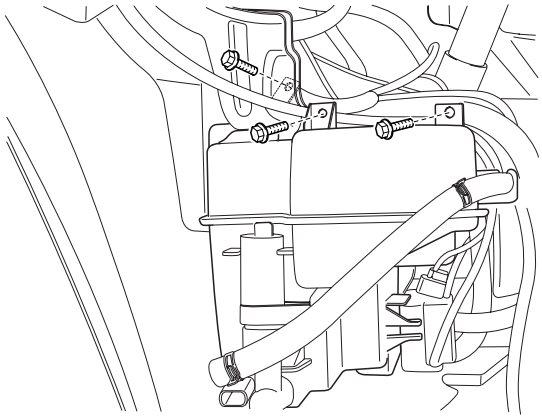

SCMBE6347D

6. Installation is the reverse of removal.

RAIN SENSOR

CIRCUIT DIAGRAM E27A55E1

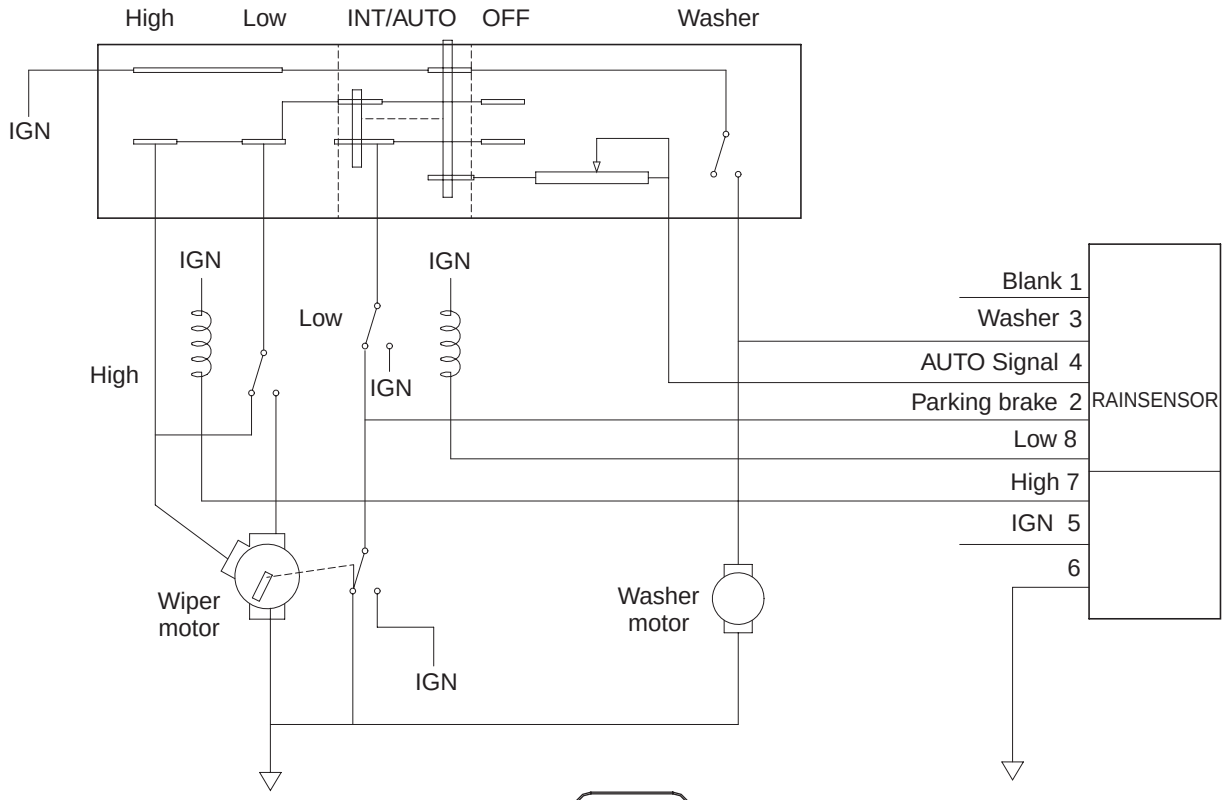

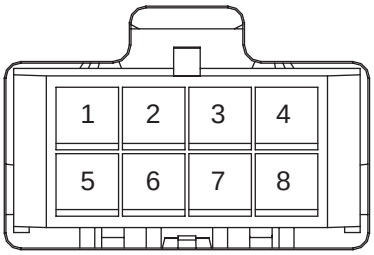

Position \ Terminal	2	8	7	4	3	6
Washer					○	○
Low		○	—	—	—	○
High			○	—	—	○
OFF	○	○				
AUTO/INT	○	○		○	—	○

SCMBE6337L

DESCRIPTION E65E5882

The Rain sensing windshield wiper system is a wiper system that, in addition to providing normal wiper functions off, mist, manual low speed, manual high speed, and wash, provides automatic control of automatic intermittent automatic low, and automatic high speeds.
When the ignition key is in the ON position, the rain sensor (A) will be activated.

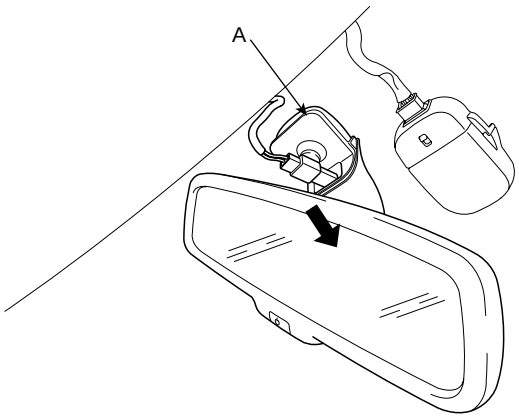

SCMBE6354D

OPERATING MODES - RAINSENSING WINDSHIELD WIPER SYSTEM E72BA1AD

MULTIFUNCTION SWITCH POSITION	RAINSENSOR OPERATING MODE	SENSOR ACTION
MIST	MIST	Mist is controlled by the column switch. The sensor has no affect on this function
OFF	OFF	If not already parked, wiper motor runs in low speed until blades are in the depressed park position.
AUTOMATIC Automatic mode has 5 SENSITIVITY settings. This is further defined in par 84.	AUTOMATIC	AUTOMATIC Automatic INT/speed control. The sensitvity to raindrop accumulation on the windshield is set by the MULTIFUNCTION SWITCH sensitivity adjustment.
LOW SPEED	MANUAL	Wiper motor runs continuously in low speed, for example 45 wipes/minute. The sensor has no affect on this function
HI SPEED	MANUAL	Wiper motor runs continuously in high speed, for example 60 wipes/minute. The sensor has no affect on this function
WASH - DEMAND WASHER SW ≥ 0.6 SEC	WASH	If washer sw on after 0.6 sec then wipes during 2.5 to 3.8 sec. The rain sensor enables the wipers and controls the after wipes.
WASH - DEMAND WASHER SW < 0.6 SEC	WASH	If washer sw on less than 0.2 to 0.6 sec then once wipes

OFF MODE

With the wipe switch in the OFF position and the ignition switch in the ON positions, the Rainsensor is considered to be in "OFF" mode. In this mode, the sensor commands the wiper to be off.

The Rainsensor monitors the state of the windshield during OFF mode so that knowledge of the state of the windshield is present when the MULTIFUNCTION SWITCH is moved to any SENSITIVITY setting. This optimizes the performance of the sensor when moving from the OFF condition to an AUTOMATIC mode. The algorithm assumes the nominal sensitivity setting when in the OFF mode.

AUTOMATIC MODE

When the MULTIFUNCTION SWITCH is moved to AUTO position and the ignition switch is in the RUN or ACCESSORY positions, the Rainsensor is considered to be in "AUTOMATIC" mode. Once a single "Instant wipe" as described in par 8.8 has occurred, the wipers remain at "Innerwiper/park" untill the Rainsensor determines that the dwell time at that position is appropriate for the amount of precipitation on the windshield, considering the driver input from the switch SENSITIVITY setting. After the dwell time the Rainsensor provides input to the wiper motor to activate the wipers to clear the preciptation from the windshield.

AUTOMATIC INT

For all AUTOMATIC INT operations the Rainsensor commands the wipers to operate in LOW SPEED for one wipe, followed by a variable dwell period in the inner wipe position.

AUTOMATIC LOW

AUTOMATIC LOW SPEED operation is utilized when the amount of precipitation imping on the windshield exceeds the AUTOMATIC INT TO AUTOMATIC LOW threshold. This threshold includes sufficient hysterisis to prevent cycling between AUTOMATIC INT and AUTOMATIC LOW SPEED operation with a steady amount of precipitation accumulation on the windshield.

AUTOMATIC HIGH

AUTOMATIC HIGH SPEED operation is utilized when the amount of precipitation imping on the windshield exceeds the AUTOMATIC LOW to AUTOMATIC HIGH threshold. This threshold includes sufficient hysterisis to prevent cycling between AUTOMATIC LOW to AUTOMATIC HIGH operation with a steady amount of precipitation accumulation on the windshield.

WASH MODE

The Rainsensor monitors the MULTIFUNCTION SWITCH to determine if the wash function is selected. Rainsensor enables the wiper motor to run in low speed during the wash mode and performs follow up wipes during 2.5 to 3.8 sec.

MANUAL MODE

The Rainsensor determines when a manual mode such as manual low, Mist, Off or manual high is selected. The column switch performs these modes and the rain sensor has no affect.

INSPECTION EF3F0CB0

RAIN SENSING WIPER

1. In IGN2 ON state, if auto switch input (LIN communication) is ON then both wiper low relay and wiper high relay outputs are controlled by the rain sensor input signal.

2. If the wiper switch has been left in automatic mode with the vehicle ignition OFF, and then the vehicle ignition switch is turned on, a single wipe will be performed.

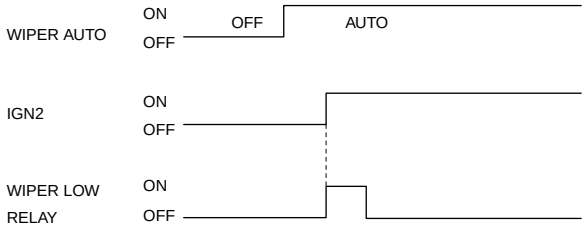

ETBF145E

3. A single wipe will be performed whenever rain has been detected (Rain Detected signal from Rain sensor) and the wiper switch is moved to the AUTO position. But a single wipe will not be performed when the wiper switch is moved to the AUTO position and OFF signal is being received from Rain sensor. But if the wiper switch is moved to AUTO position for the first time since vehicle ignition switch is turned on then a single wipe will be performed regardless of Rain Detected or OFF signal.

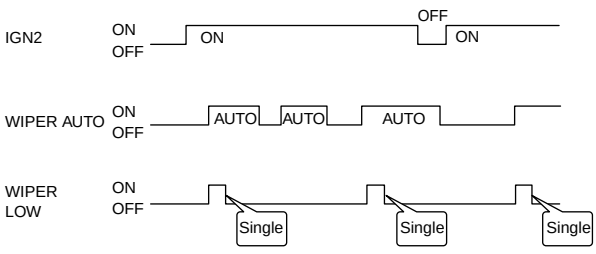

ETBF145F

4. The drive may adjust the rain sensor performance by adjusting the sensitivity input. When in automatic mode, the BCM will perform a single wipe each time the sensitivity is adjusted upward to a more sensitive setting (downward more then one step). This single wipe will only be performed if Rain Detected signal is being received from the Rain sensor. If the sensitivity adjustment is adjusted upward more than one sensitivity, the BCM will only perform a single wipe unless the time between Increases is more than 2 seconds.

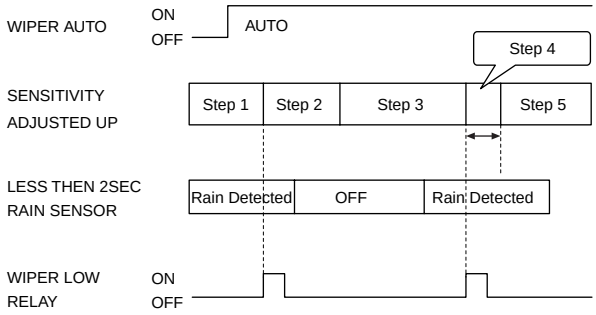

ETBF145G

5. Fault strategy for the rain sensor
   Rain Sensor Fault 1 - Internal Fault Detected
   This failure is detected when the wiper is in automatic mode and the input faulty rain sensor from the rain sensor has a duty cycle corresponding to Fault 1. The confirmation delay for the failure is of 1 sec.
   When this failure is detected, the wiper outputs are OFF and the wiper will also do a wipe in slow speed on the transition from sensitivity 3 to sensitivity 2 (Step 2 to 3) in order to signal the presence of this fault. If another sensitivity is set, the wiper won’ t make any additional wipe.

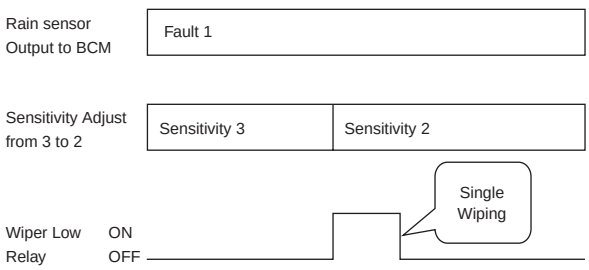

ETBF145H

Rain Sensor Fault 2 - Glass Attachment Fault Detected
This failure is detected when the wiper is in automatic mode and the input faulty rain sensor from the rain sensor has a duty cycle corresponding to Fault 2. The confirmation delay for the failure is of 1 s.
When this failure is detected, the wiper outputs are OFF and the wiper will also do a wipe on the transition from sensitivity 4 to sensitivity 3 (Step 1 to 2) in order to signal the presence of this fault. If another sensitivity is set, the wiper won't make any additional wipe.

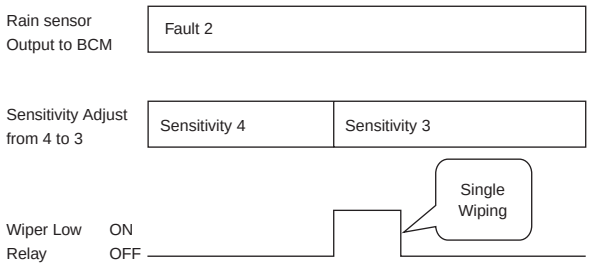

ETBF145I

Rain Sensor Fault 3 - No Input Signal Present
This failure is detected when the wiper is in automatic mode and the input faulty rain sensor from the rain sensor has a duty cycle corresponding to Fault 3 or in case the duty cycle of the input faulty rain sensor is 0% or 100%. The confirmation delay for the failure is of 1 s.
When this failure is detected, the wiper outputs are OFF.

REMOVAL EB4E2F2B

CAUTION

The dust or foreign substance on the rain sensor have a bad effect upon the rain sensor capability,so protect the sensor surface with protection cover until installing the rain sensor to bracket for accurate funtion.
The coupling pad on the rain sensor surface has adherive strength, so the coupling pad could stick to the windshield by environment condition during the using time.
If separate it by force, it could be damaged. So make sure to separate the rain sensor from the windshield carefully.

1. Remove the rain sensor cover first. Be careful not to damage the cover latch by applying excessive force. To remove the latch, pull aside the latch using the cover hole (B) with the little (-) screwdriver (A).

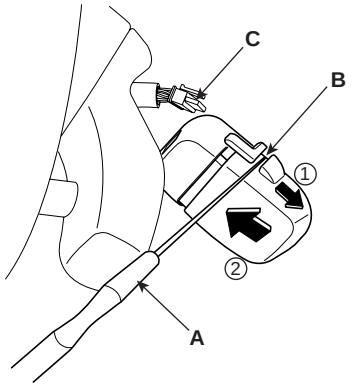

KTBF365B

2. Remove the wiring harness connector (C) from sensor.

3. Rain sensor module is attached to the front windshield by glue replacing the front windshield, remove the rain sensor module from the existing front windshield and install on the new front windshield.

INSTALLATION EFF683D8

NOTE

- *In case of the windshield with reflection layer which reflects the infrared rays in sensing field, should install the rain sensor into the field removed the reflection layer.*
- *Install the rain sensor after some time and be care not to be settled the dust after installation.*

1. Install the rainsensor bracket to the windshield glass using the tape.

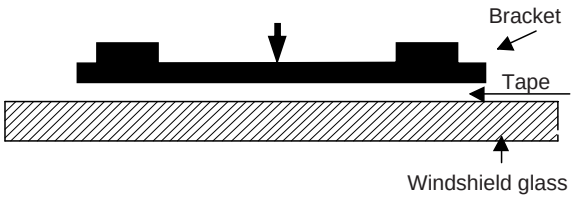

ETZE015I

CAUTION

It is very important that the coupling pad pushes the windshield completely to stick to each other without bubbles.

2. Connect the rainsensor connector, and then install the sensor cover.

REAR WIPER／WASHER

COMPONENT LOCATION E91C4A25

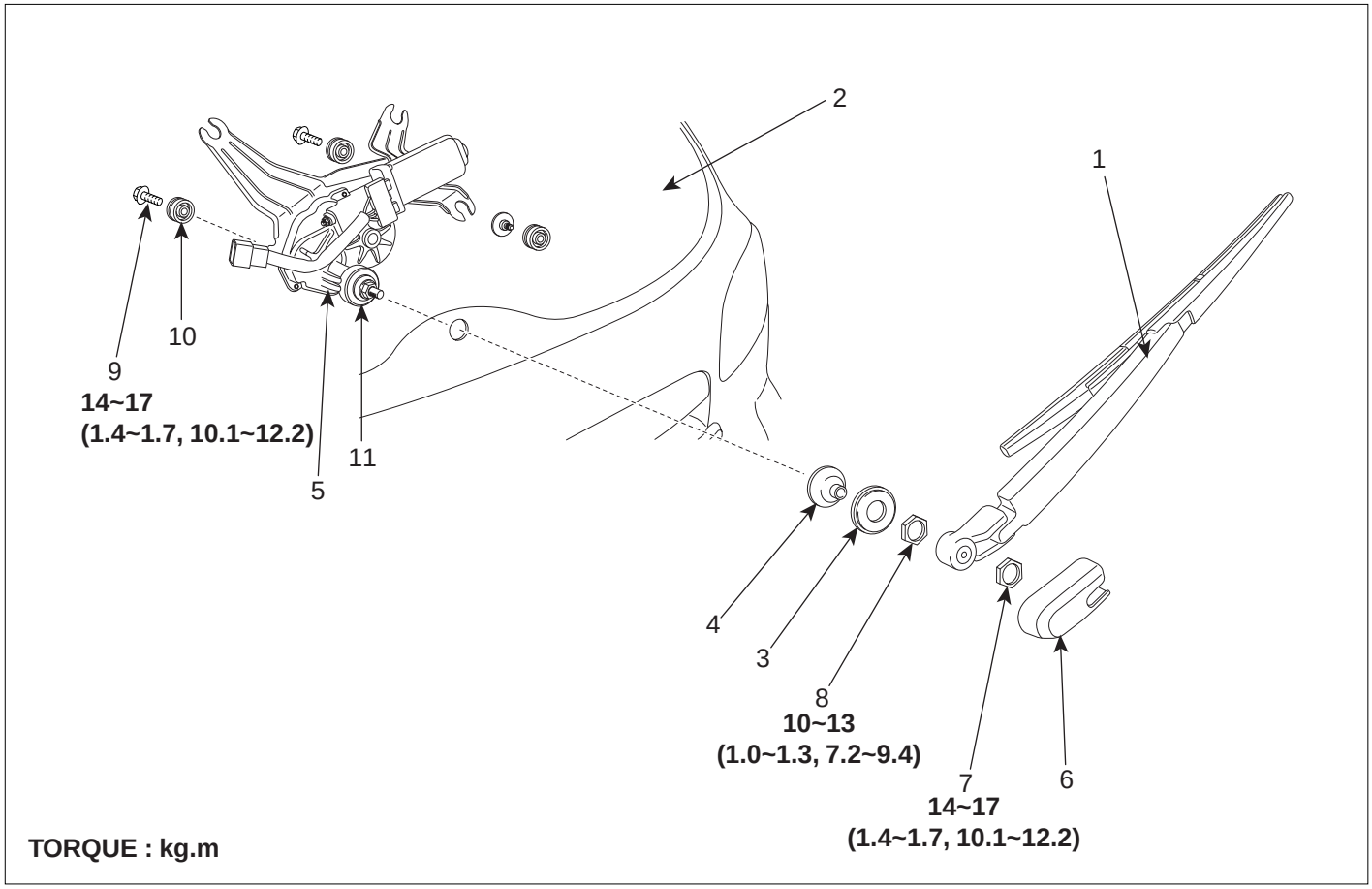

1. Rear wiper arm & blade
2. Tailgate glass
3. Grommet
4. Outside cover
5. Rear wiper motor assembly
6. Head cap
7. Nut
8. Nut
9. Bolt
10. Bush
11. Grommet

SCMBE6360L

REAR WIPER MOTOR

INSPECTION EE5AEB15

REAR WIPER AND NOZZEL

1. Install the rear wiper arm and blade to the specified position.

Specified position	A
Distance	0.059 ± 0.2 in (15 ± 5 mm)

※ Specified position : The first deicer line from bottom of the rear window.

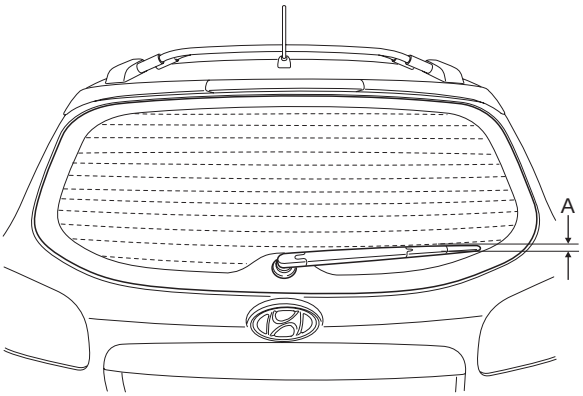

SCMBE6365D

2. Set the rear washer nozzle on the specified spray position.

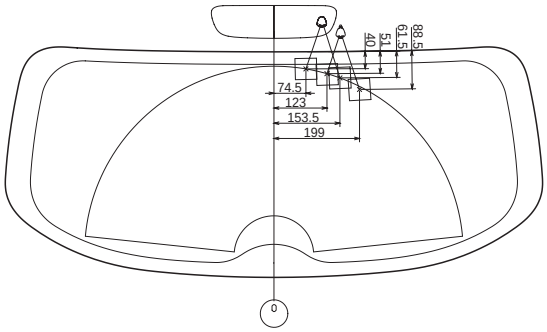

Unit : mm

SCMBE6366L

REAR WIPER MOTOR

1. Remove the 4P connector from the rear wiper motor.
2. Connect battery positive (+) and negative (-) cables to terminals 3 and 4 respectively.
3. Check that the motor operates normally. Replace the motor if it operates abnormally.

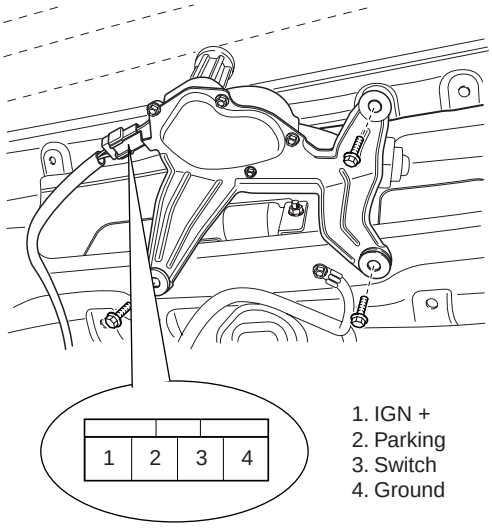

SCMBE6364L

AUTOMATIC STOP OPERATION CHECK

1. Operate the motor at low speed using the stalk control.
2. Stop the motor operation anywhere except at the off position by disconnecting terminal 3.
3. Connect terminals 2 and 3.
4. Connect the positive (+) lead from the battery to terminal 1 and the negative (-) lead to terminal 4.
5. Check that the motor stops running at the off position.

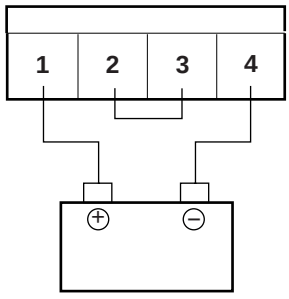

ATGE381F

REPLACEMENT E9F0AEC8

1. Detach the wiper cap (A), then remove the rear wiper arm (C) after removing a nut (B).

Tightening torque Nut(B) :
14~17 Nm (1.4~1.7 kgf.m, 10.1~12.3 lbf.ft)

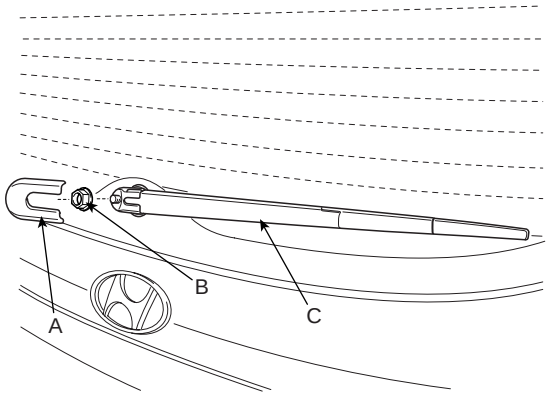

SCMBE6361D

2. Remove the rear wiper cap & pad (B) after removing a nut (A).

Tightening torque Nut (A) :
10~13 Nm (1.0~1.3 kgf.m, 7.2~9.4 lbf.ft)

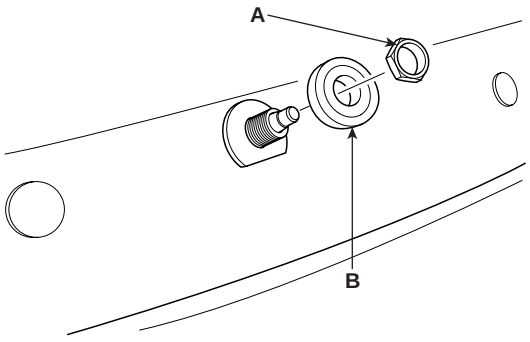

SCMBE6362D

3. Open the tailgate glass then remove the tailgate trim.

4. Disconnect the rear wiper motor connector then remove the rear wiper motor (B) after removing 3 bolts.

Tightening torque Nut :
14~17 Nm (1.4~1.7 kgf.m, 10.1~12.3 lbf.ft)

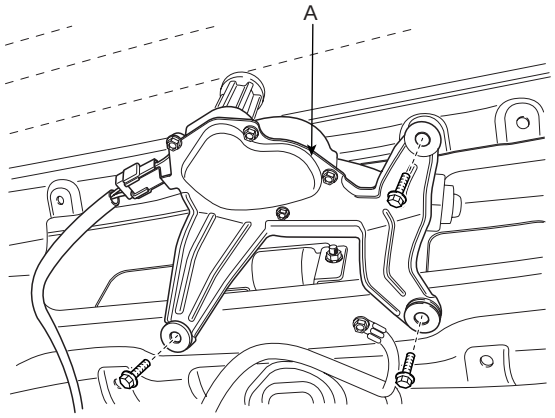

SCMBE6363D

5. Installation is the reverse of removal.

REAR WASHER SWITCH

INSPECTION E5C9EED0

1. With the rear wiper & washer switch in each position, make sure that continuity exists between the terminals below. If continuity is not as specified, replace the multifunction switch.

[LHD]

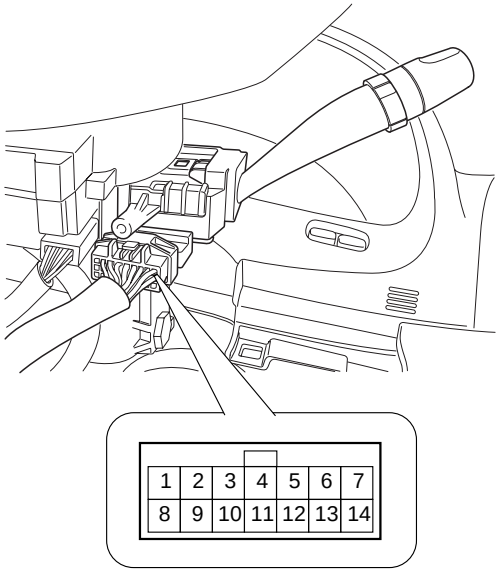

SCMBE6367D

[RHD]

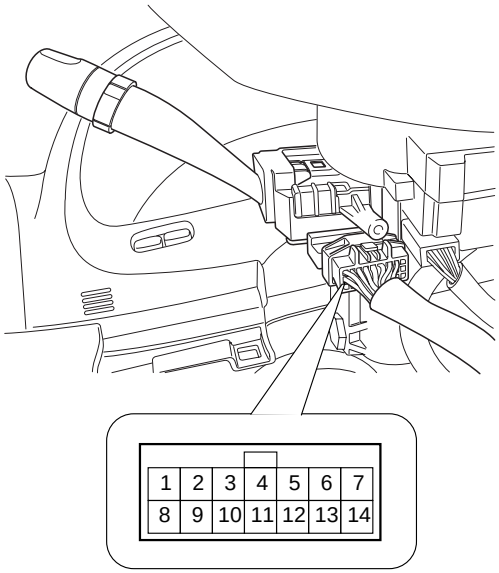

SCMBE6367R

REAR WIPER & WASHER SWITCH

( ) : RHD

Terminal / Position	9(13)	11(11)	12(10)
Rear washer	○		⊖
OFF			
ON	○	⊖	
Rear washer	○		⊖

SCMBE6054L

REAR WASHER MOTOR

INSPECTION EA10033D

1. With the washer motor connected to the reservoir tank, fill the reservoir tank with water.
2. Remove the front bumper cover. (Refer to the Body group- Front bumper)
3. Connect positive (+) and negative (-) battery cables to terminals 3 and 1 respectively to see that the washer motor runs and water is pumped.
4. Check that the motor operates normally.
   Replace the motor if it operates abnormally.

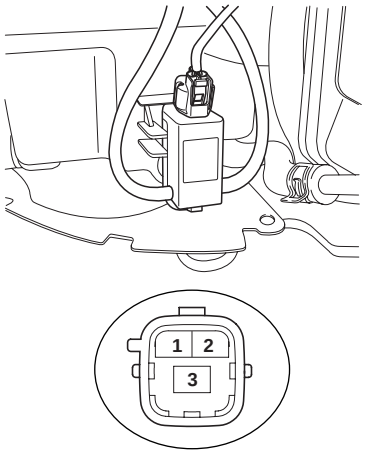

[Front & Rear washer]

1. Windshield washer (+)
2. Ground
3. Rear washer (+)

SCMBE6368L

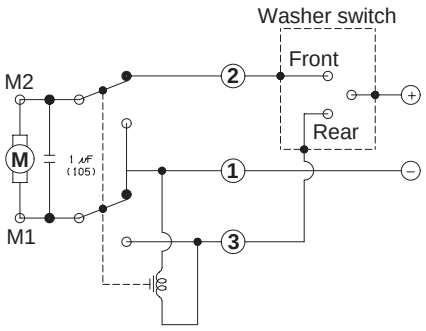

<Windshield & Rear washer motor>

SCMBE6369L

ELECTRO CHROMIC INSIDE REAR VIEW MIRROR

DESCRIPTION E1A4FF0E

The ECM (Electro Chromic inside rear view Mirror) is for dimming the reflecting light from a vehicle behind at night, in order the user not to be dazzled by the light. The front looking sensor detects brightness of the surroundings, while the rearward looking sensor the strength of the reflecting light so that adjusts the reflexibility of the mirror in the range of 10~70%. But, when the reverse gear is engaged, it stops functioning.

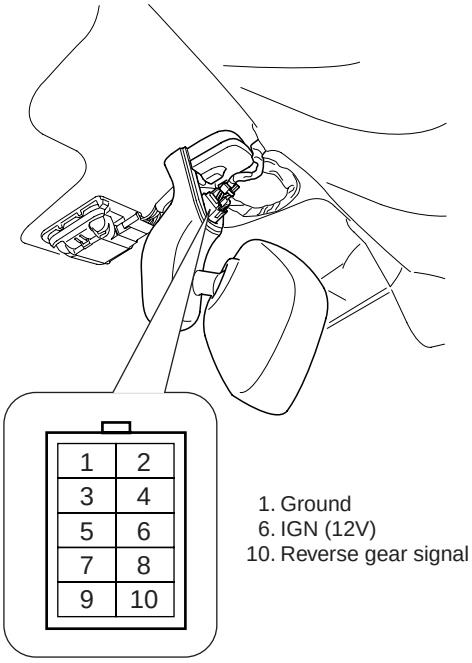

1. Ground
6. IGN (12V)
10. Reverse gear signal

ETQE280J

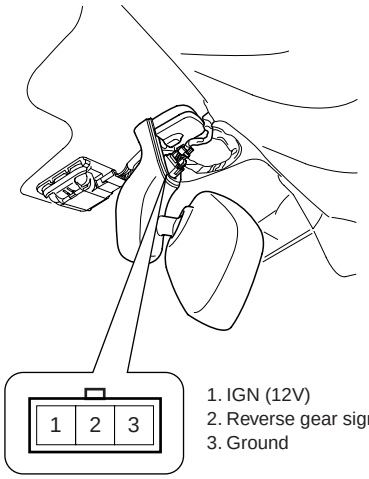

1. IGN (12V)
2. Reverse gear signal
3. Ground

SCMBE6370L

1. The front looking sensor sees if the brightness of the surroundings is low enough for the mirror to operate its function.
2. The rearward looking sensor detects glaring of the reflecting light from a vehicle behind.
3. The ECM is darkened to the level as determined by the rearward looking sensor. When the glaring is no longer detected, the mirror stops functioning.

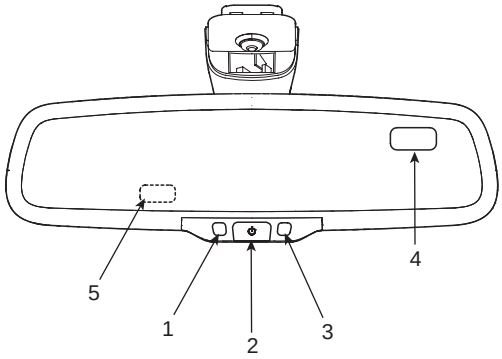

1. Status Indicator LED
2. Buttom
3. Rear indicator
4. Rear light sensor
5. Front light sensor

SCMBE6371L

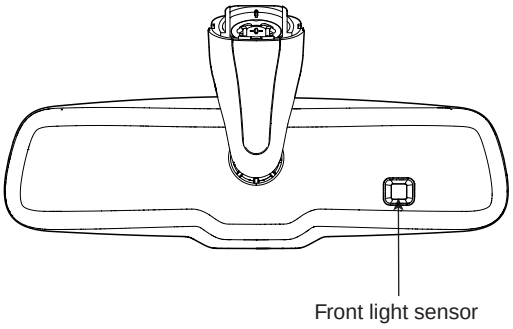

ETBF410C

AUTOMATIC-DIMMING FUNCTION EF840FF2

To protect your vision during nighttime driving, your mirror will automatically dim upon detecting glare from the vehicles traveling behind you. The auto-dimming function can be controlled by the Dimming ON/OFF Button :

1. Pressing and holding the Feature Control button for more than 3 but less than 6 seconds turns the auto-dimming function OFF which is indicated by the green Status Indicator LED turning off.
2. Pressing and holding the Feature Control button again for more than 3 but less than 6 seconds turns the auto-dimming function ON which is indicated by the green Status Indicator LED turning on.

NOTE

The mirror defaults to the "ON" position each time the vehicle is started.

INSPECTION EEF84EDF

Check it by the procedure below to see if the function of the ECM is normal.

1. Turn the ignition key to the "ON" position.
2. Cover the front looking sensor to stop functioning.
3. Head a light to the rearward looking sensor.
4. The ECM should be darkened as soon as the rearward looking sensor detects the light.

NOTE

If this test is performed in daytime, the ECM may be darkened as soon as the front looking sensor is covered.

5. When the reverse gear is engaged, the ECM should not be darkened.
   When heading lights to both the front looking and rearward looking sensors, the ECM should not be darkened.

REPLACEMENT EF3DC08D

1. Push the inside rear view mirror base down to remove the inside rear view mirror assembly (A) after removing the mirror wire cover.

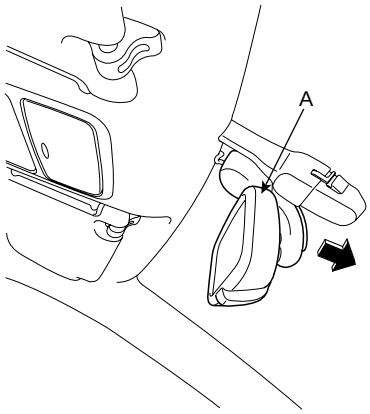

SCMBE6373D

NOTE

Mirror it adheres closely in the mirror base (A) and it separates while removing the mirror (B).
Make sure the spring mounting bracket (C) of the mirror not to be damaged.

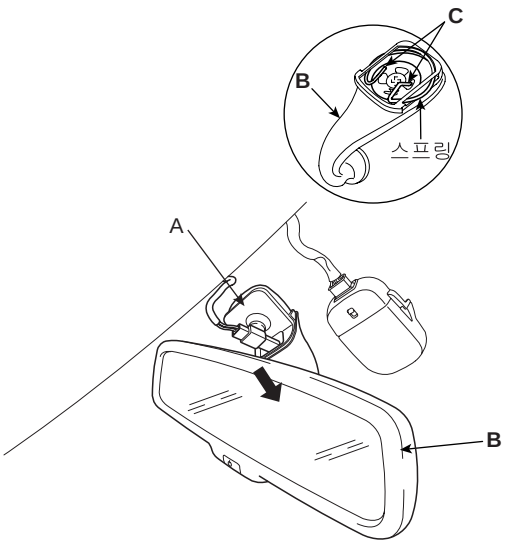

SCMBE6375D

2. Installation is the reverse of removal.

COMPASS MIRROR

DESCRIPTION EDD9985F

The compass feature is designed to be integrated into an electro chromic interior rearview mirror.

The mirror assembly shall display a compass heading. The compass mirror then take the sensor information to determine static field strengths and rotating field information to determine an accurate compass heading.

SPECIFICATION

Item	Standard value
Rate voltage	DC 12V
Operating voltage range	DC9 ~ 16V
Operating temperature range	-30 ~ +65°C
Direction display	8
Renewal time	2 sec.

SWITCH POINT ACCURACY

The compass module shall, while compensating for the vehicle magnetic fields, until the Earth's varying magnetic fields to determine direction.

[SWITCH POINTS]

Switch point	Heading ± 10°
N - NE	22.5
NE - E	67.5
E - SE	112.5
SE - S	157.5
S - SW	202.5
SW - W	247.5
W - NW	292.5
NW - N	337.5

NOTE

There should be hysteresis at each switch point. Switch points between the 8 cardinal directions, these switch points are ± 10°

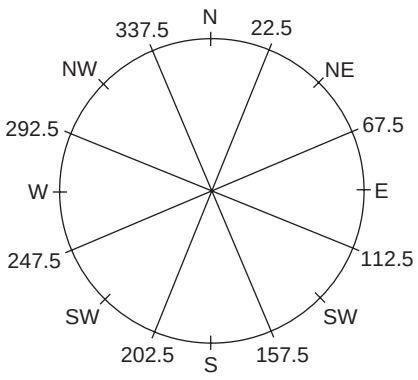

ETQF241F

COMPASS DISPLAY INTERVAL

Compass display should be updated at every two seconds.

FUNCTION EE94334D

The compass can be turned ON and OFF and will remember the last state when the ignition is cycled. To turn the display feature ON/OFF :

1. Press and release the feature control button (A) to turn the display feature OFF.

2. Press and release the feature control button (A) again to turn the display back ON.
   Additional options can be set with press and hold sequences of the feature control button (A) and are detailed below.

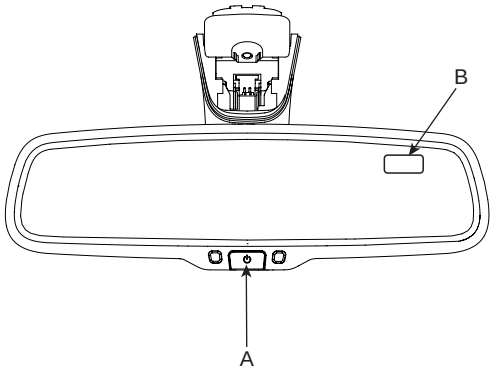

ETQF241C

There is a difference between magnetic north and true north. The compass in the mirror can compensate for this difference when it knows the magnetic zone in which it is operating. This is set either by the dealer or by the user.

ADJUSTMENT EE10EDCF

CALIBRATION PROCEDURE

If the display read "C", calibrate the compass.

1. Driving the vehicle in a circle at less than 8km/h 3 times or until the compass heading appears.

2. Driving in a circle in right-handed direction and opposite direction are possible, and if the calibration is completed, the compass heading will appear.

3. Keep driving in a circle until a commpass heading appears.

TO ADJUST THE ZONE SETTING :

1. Determine the desired zone number based upon your current location on the zone maps.

2. Press and hold the Feature Control button for more than 6 but less than 9 seconds, the current zone number will appear on the display (B).

3. Pressing and holding the feature control button (A) again will cause the numbers to increment (Note: they will repeat ⋯13, 14, 15, 1, 2,..). Releasing the button when the desired zone number appears on the display will set the new zone.

4. Within about 5 seconds the compass will start displaying a compass heading again.

TO RE-CALIBRATE THE COMPASS :

There are some conditions that can cause changes to the vehicle magnets. Items such as installing a ski rack or a antenna or even some body repair work on the vehicle can cause changes to the vehicle's magnetic field. In these situations, the compass will need to be re-calibrated to quickly correct for these changes.

1. Press and hold the feature control button (A) for more than 9 seconds. When the compass memory is cleared, a "C" will appear in the display (B).

2. To calibrate the compass, drive the vehicle is 2 complete circles at less than 8 KPH (5 MPH).

ZONE MAP



NORTH AMERICA

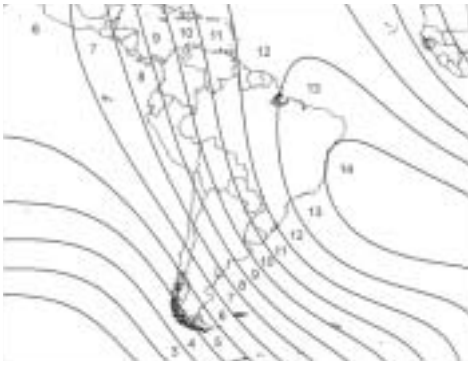

SOUTH AMERICA

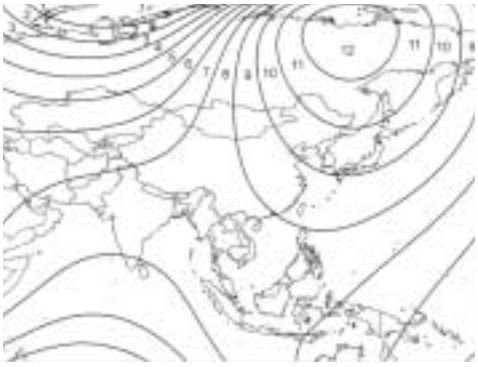

ASIA

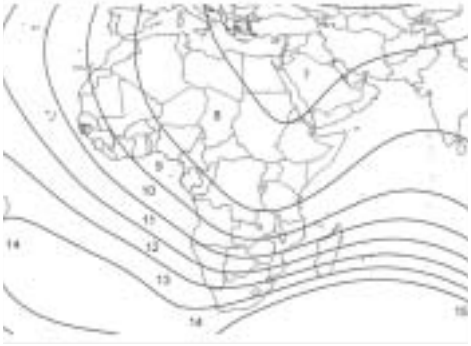

AFRICA

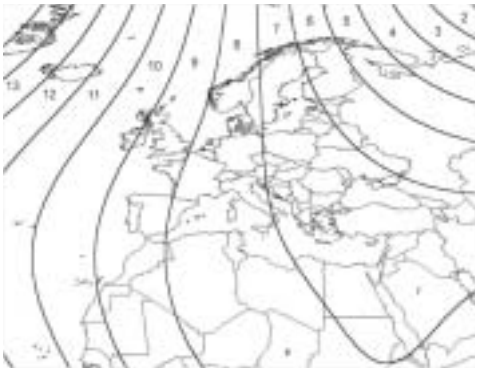

EUROPE

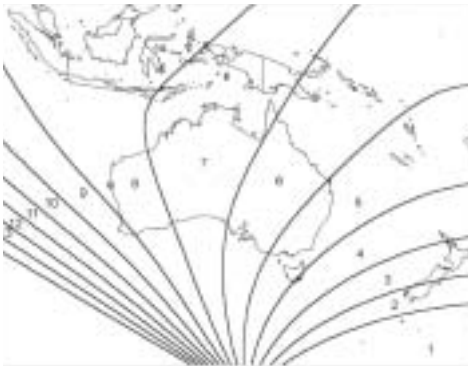

AUSTRALIA

ETQF241D

POWER SEAT

COMPONENT LOCATION EC5CFA07

This illustration shows the LHD type.
RHD type is symmetrical.

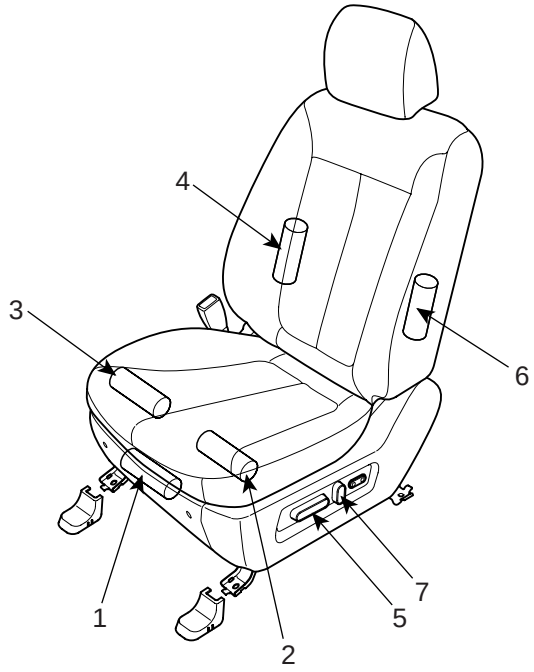

1. Slide motor
2. Front height motor
3. Rear height motor
4. Reclining motor
5. Power seat switch
6. Lumbar support motor
7. Reclining switch

SCMBE6390L

POWER SEAT MOTOR

INSPECTION E6BDAD4F

SLIDE MOTOR LIMIT SWITCH

1. Disconnect the limit switch (A) and operate the limit switch.
2. Check for continuity between the terminals.
3. Make sure that the seat operation is normal in the reverse after the maximum operation.
4. If there is an abnormality, replace the limit switch.

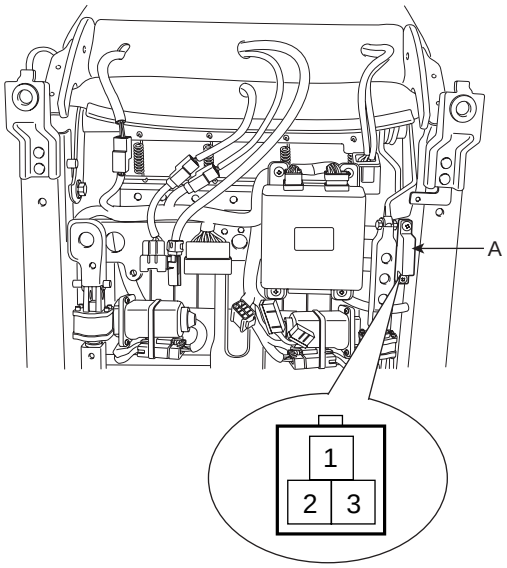

SCMBE6391D

Position \ Terminal NO.	1	2	3
Frontward	○		○
Backward	○	○	

ETRF421B

RECLINING MOTOR LIMIT SWITCH

1. Disconnect the limit switch and operate the limit switch.
2. Check for continuity between the terminals.
3. Make sure that the seat operation is normal in the reverse after the maximum operation.
4. If there is an abnormality, replace the limit switch.

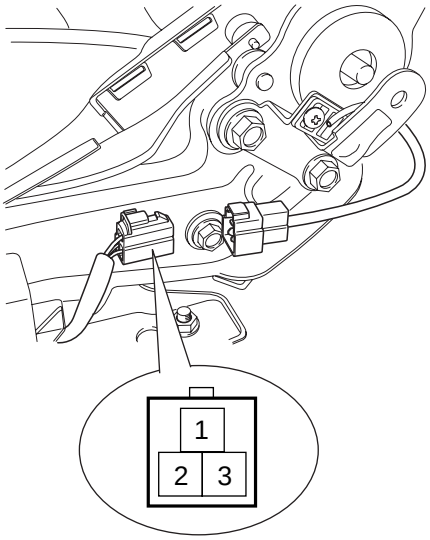

SCMBE6393D

Position \ Terminal NO.	1	2	3
Frontward	○		○
Backward	○	○	

ETRF421B

POWER SEAT MOTOR

1. Disconnect the connectors for each motor.

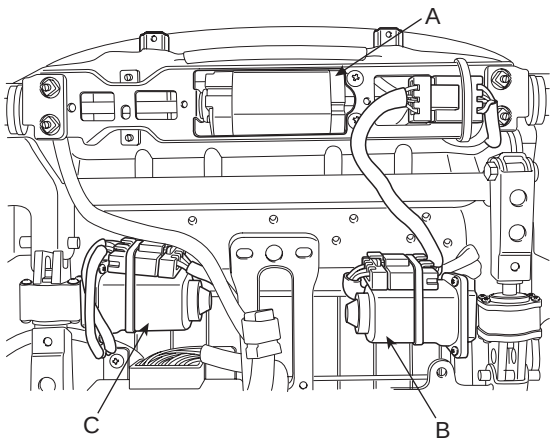

SCMBE6395D

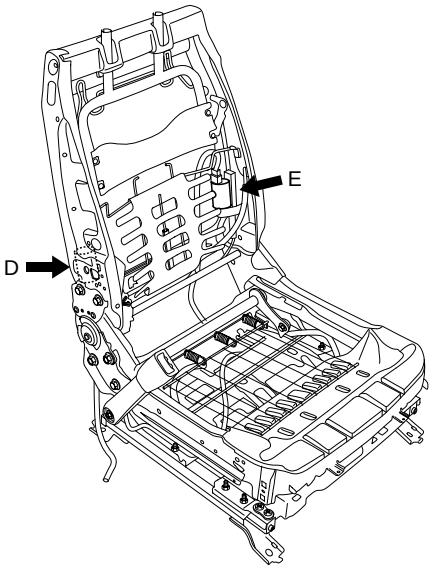

SCMBE6396D

2. With the battery connected directly to the motor terminals, check if the motors run smoothly.

3. Reverse the connections and check that the motor turns in reverse.

4. If there is an abnormality, replace the motors.

Position \ Terminal		1	2
Slide motor A	Frontward	⊕	⊖
	Backward	⊖	⊕
Front height motor B	UP	⊖	⊕
	DOWN	⊕	⊖
Rear height motor C	UP	⊕	⊖
	DOWN	⊖	⊕
Reclining motor D	Forward	⊖	⊕
	Rearward	⊕	⊖
Lumbar support E	Forward	⊕	⊖
	Rearward	⊖	⊕

SCMBE6398L

POWER SEAT SWITCH

INSPECTION E6FC0DFE

1. With the power seat switch in each position, make sure that continuity exists between the terminals below. If continuity is not as specified, replace the power seat switch.

[LHD]

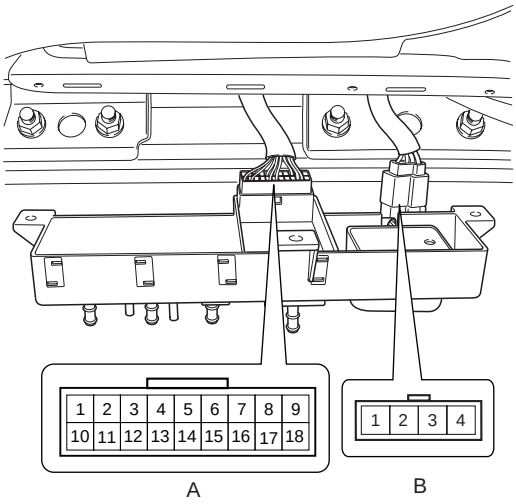

SCMBE6400D

[RHD]

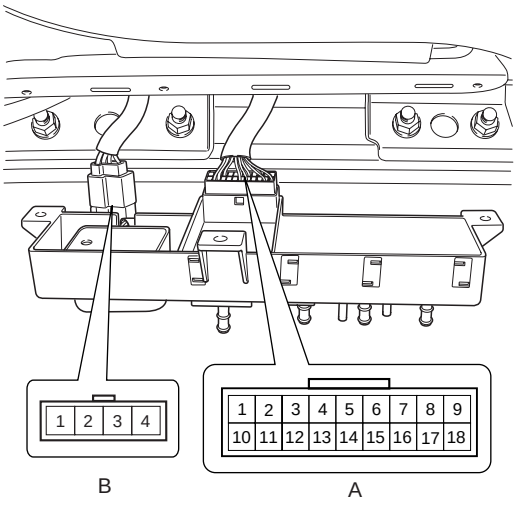

SCMBE6400R

Power seat switch connector A

( ) : RHD

	Height switch					Seat switch					Height switch (Backward)				Reclining switch						
	Left		Right		Frontward	Left			Right		Left		Right		Frontward			Left		Right	
	UP	DOWN	UP	DOWN	Height	SEAT	F	R	F	R	UP	DOWN	UP	DOWN	HEI LH	HEI RH	REC	Height	R	F	R
17(11)	○	○	○	○			○	○	○	○	○	○	○	○				○	○	○	○
11(17)						○	○	○	○	○											
10(18)						○	○	○	○	○											
6(4)						○		○	○												
5(5)						○	○			○											
8(2)																	○	○	○	○	○
18(10)																	○	○	○	○	○
15(13)																	○	○			○
16(12)																	○		○	○	
2(8)	○		○	○	○																
4(6)	○	○	○	○	○																
1(9)	○			○	○																
3(7)		○	○			○															
13(15)											○		○	○	○	○					
14(14)											○	○	○	○	○	○					
12(16)											○		○		○	○					
7(3)												○		○	○	○					

Driver lumbar connector B ( ) : RHD

	L/SUPT SW		
	RR	N	FR
1(4)	○		○
2(3)		○ ○	
3(2)		○	○
4(1)	○	○	

SCMBE6401L

SEAT WARMER

COMPONENT LOCATION E4F9F24F

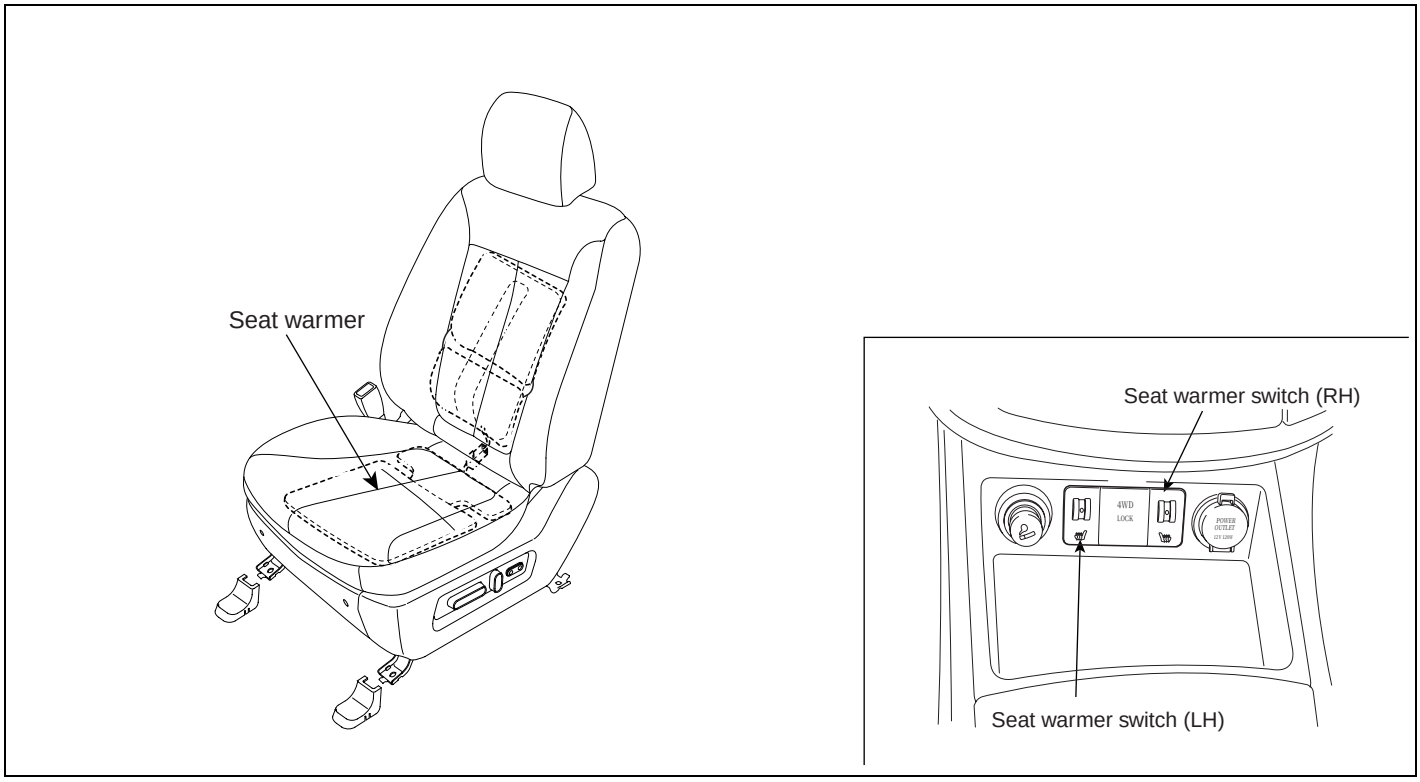

SCMBE6380L

CIRCUIT DIAGRAM E40A63EF

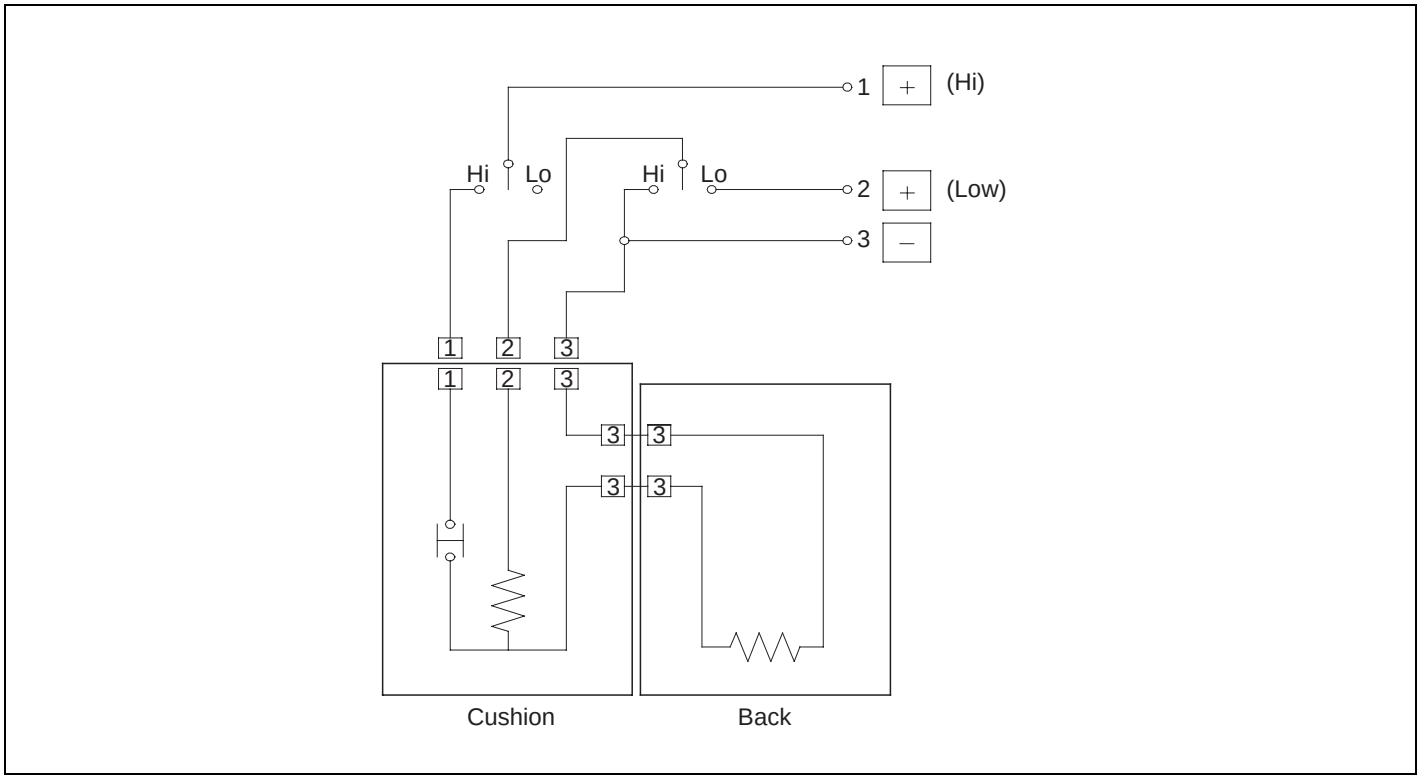

SCMBE6381L

SEAT WARMER SWITCH

INSPECTION EE2C00FE

FRONT SEAT WARMER SWITCH

1. Disconnect the negative (-) battery terminal.
2. Remove the seat warmer switch (A) with scraper.

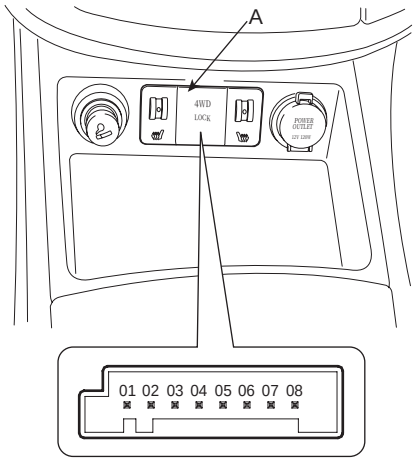

SCMBE6382D

3. Check that continuity exists between the terminals.

Terminal / Position	2	6	3	4	1
ON				IND.	
OFF		Illumination			

ETRF441B

SEAT WARMER

INSPECTION EBA3D9F7

1. Check for continuity and measure the resistance between No.1 and NO.3 terminals.

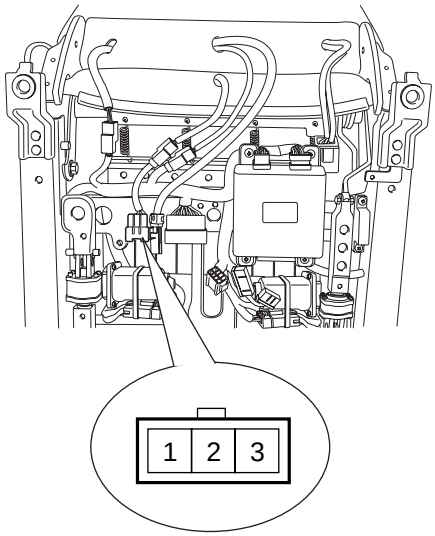

SCMBE6383D

Standard value
Cushion : 4.73Ω ± 10%, Back : 34.97Ω ± 10%

2. Operate the seat warmer after connecting the 3P connector, and then check the thermostat by measuring the temperature of seat surface.

3. Check for continuity between the terminals after disconnecting the connector.

Standard value
HI : 42 ± 2°C (Cushion), 52 ± 2°C (Back)

Terminal / Position	1	2	3
HIGH	⊕	⊖	⊖
LOW		⊕	⊖

SCMBE6384L

SUNROOF

COMPONENT LOCATION EFAD0C7C

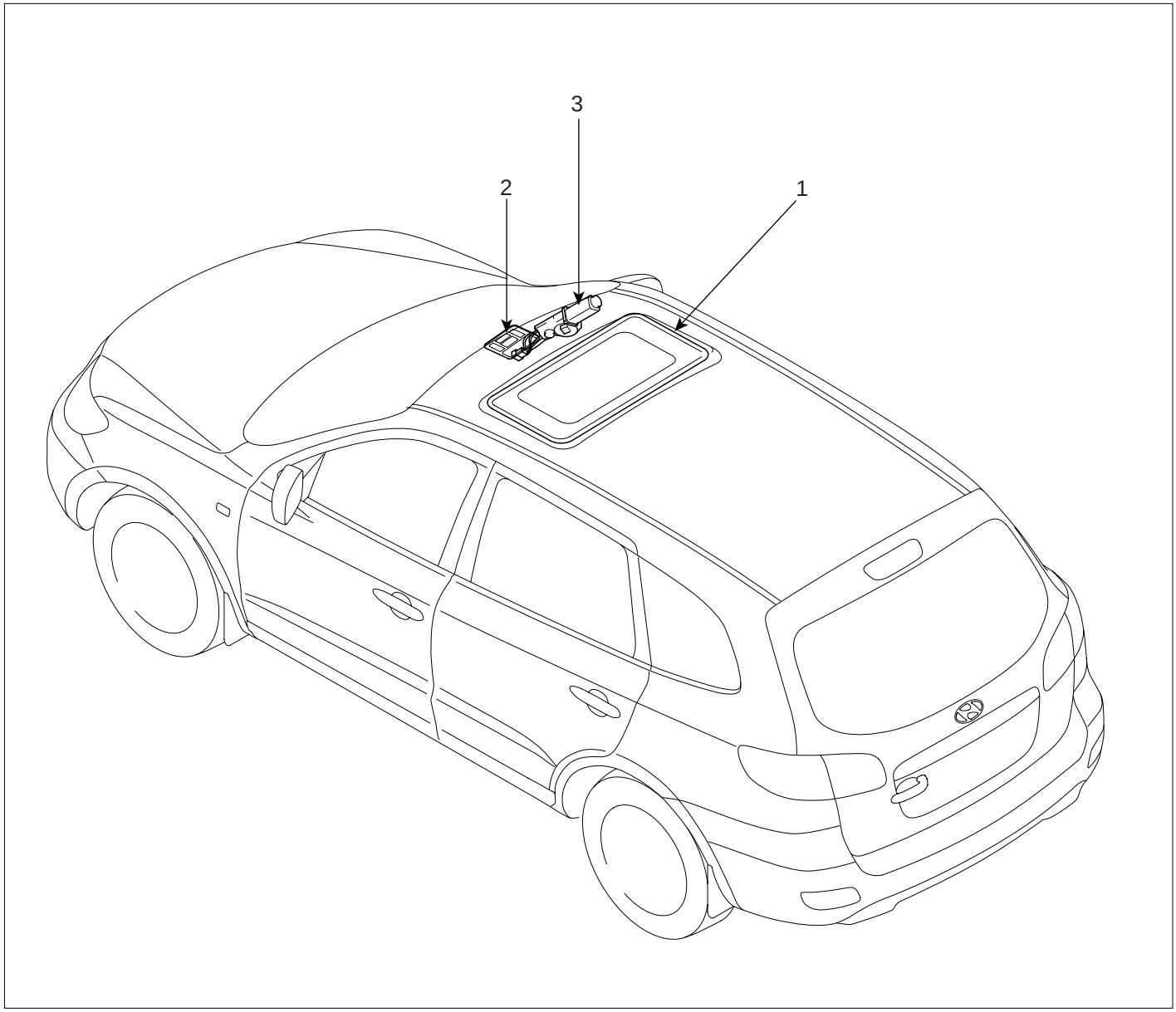

1. Sunroof
2. Sunroof switch
3. Sunroof motor & controller

SCMBE6420L

CIRCUIT DIAGRAM E3BAFCEA

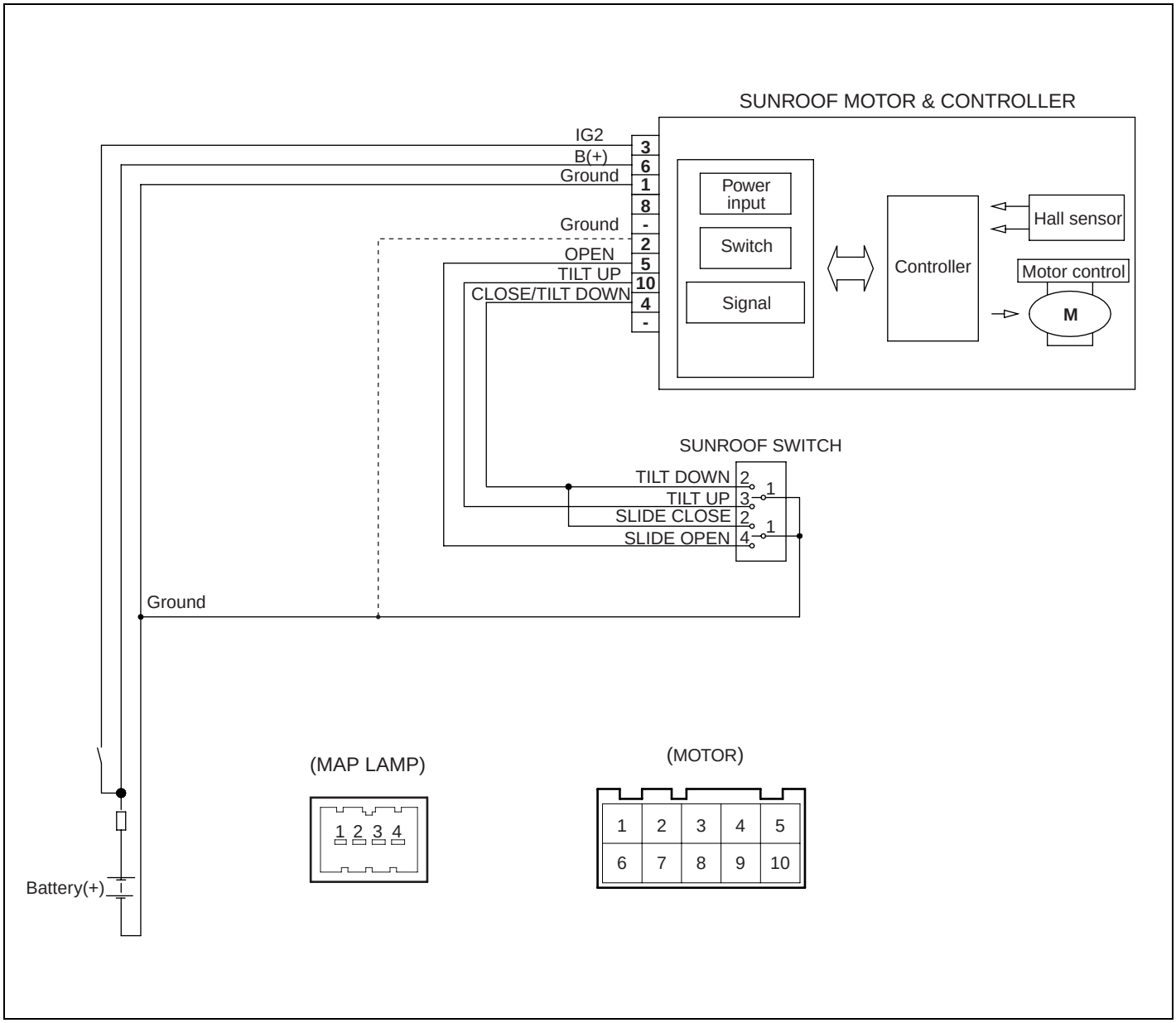

SCMBE6421L

SUNROOF SWITCH

INSPECTION E3FE5982

1. Disconnect the negative (-) battery terminal.
2. Open the sunglass case cover from the overhead console then remove the 2 screws holding the overhead console. Disconnect the switch connector (4P) and Map lamp connector (2P), and then remove the overhead console lamp.

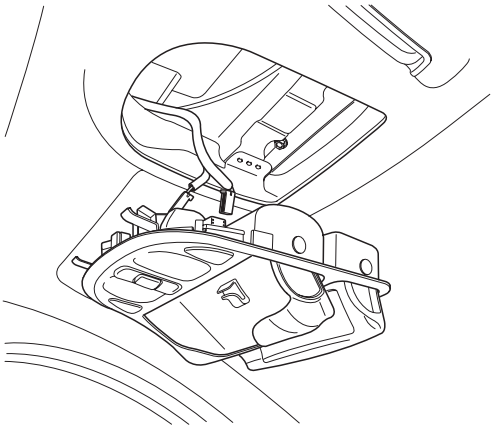

SCMBE6422D

3. Check for continuity between the terminals. If the continuity is not as specified, replace the sunroof switch.

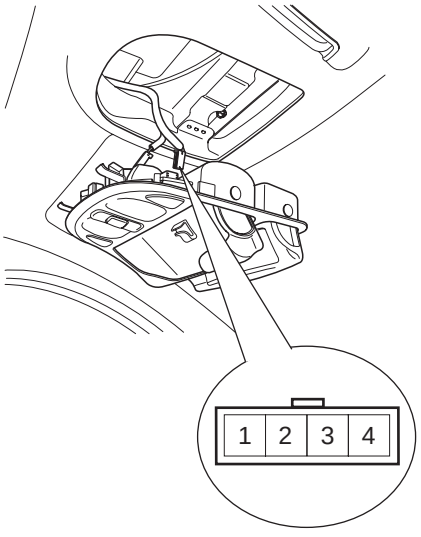

[Switch side connector]

SCMBE6423L

Position \ Terminal	1	2	3	4
SLIDE OPEN	○			○
CLOSE/DOWN	○	○		
TILT UP	○		○	

SCMBE6424L

SUNROOF MOTOR

REPLACEMENT E7FAABC1

1. Disconnect the negative (-) battery terminal.
2. Remove the overhead console then remove the sun roof motor mounting screws (3EA). And then remove the sunroof motor after disconnecting the connector (10 Pin).

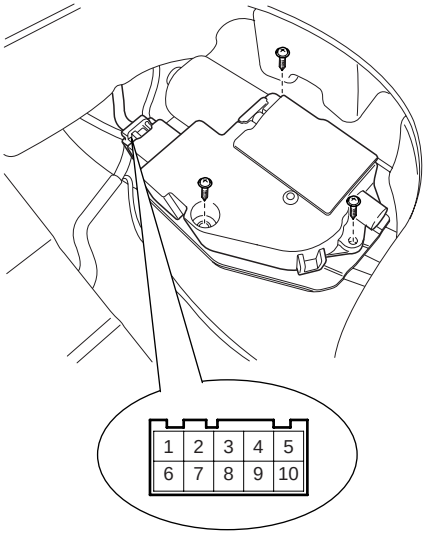

SCMBE6425D

3. Ground the terminals as below table, and check that the sunroof unit operates as below table.

Position \ Terminal	3	4	5	10
TILT UP	⊕			⊖
SLIDE CLOSE/DOWN	⊕	⊖		
SLIDE OPEN	⊕		⊖	

ETQF965A

4. Make these input tests at the connector
   if any test indicates a problem, find and correct the cause, then recheck the system.
   If all the input tests prove OK, the sunroof motor must be faulty; replace it.

Terminal	Test condition	Test : Desired result
3	IG2 ON	Check for voltage to ground : There should be battery voltage
1	Under all conditions	Check for continuity to ground : There should be continuity.
6	Under all conditions	Check for voltage to ground : There should be battery voltage.

RESETTING THE SUNROOF

Whenever the vehicle battery is disconnected or discharged, or you use the emergency handle to operate the sunroof, you have to reset your sunroof system as follows :

1. Turn the ignition key to the ON position.
2. According to the position of the sunroof, do as follows.
   1) In case that the sunroof has closed completely or been tilted :
      Press the TILT button until the sunroof has tilted upward completely.
   2) In case that the sunroof has slide-opened :
      Press and hold the CLOSE button for more than 5 seconds until the sunroof has closed completely.
      Press and hold the CLOSE button for more than 5 seconds after the sunroof has closed completely.
      Press the TILT button until the sunroof has tilted upward completely.
3. Release the TILT button.
4. Press and hold the TILT button once again until the sunroof has returned to the original position of TILT after it is raised a little higher than the maximum TILT position.
   When this is complete, the sunroof system is reset.

LIGHTING SYSTEM

SPECIFICATION E46B93B3

Items	Bulb Wattage (W)
Head lamp (High)	55
Head lamp (Low)	35
Front turn signal lamp	21
Front position lamp	6
Front fog lamp	27
Rear stop/tail lamp (Outside)	8/27
Back up lamp	16
Rear turn signal lamp	21
Rear fog lamp - Europe	21
License plate lamp	5
Side repeater	5
Room lamp	10
Overhead console lamp	10
High mounted stop lamp	5
Glove box lamp	5
Rear map lamp	10

COMPONENT LOCATION EE6A464F

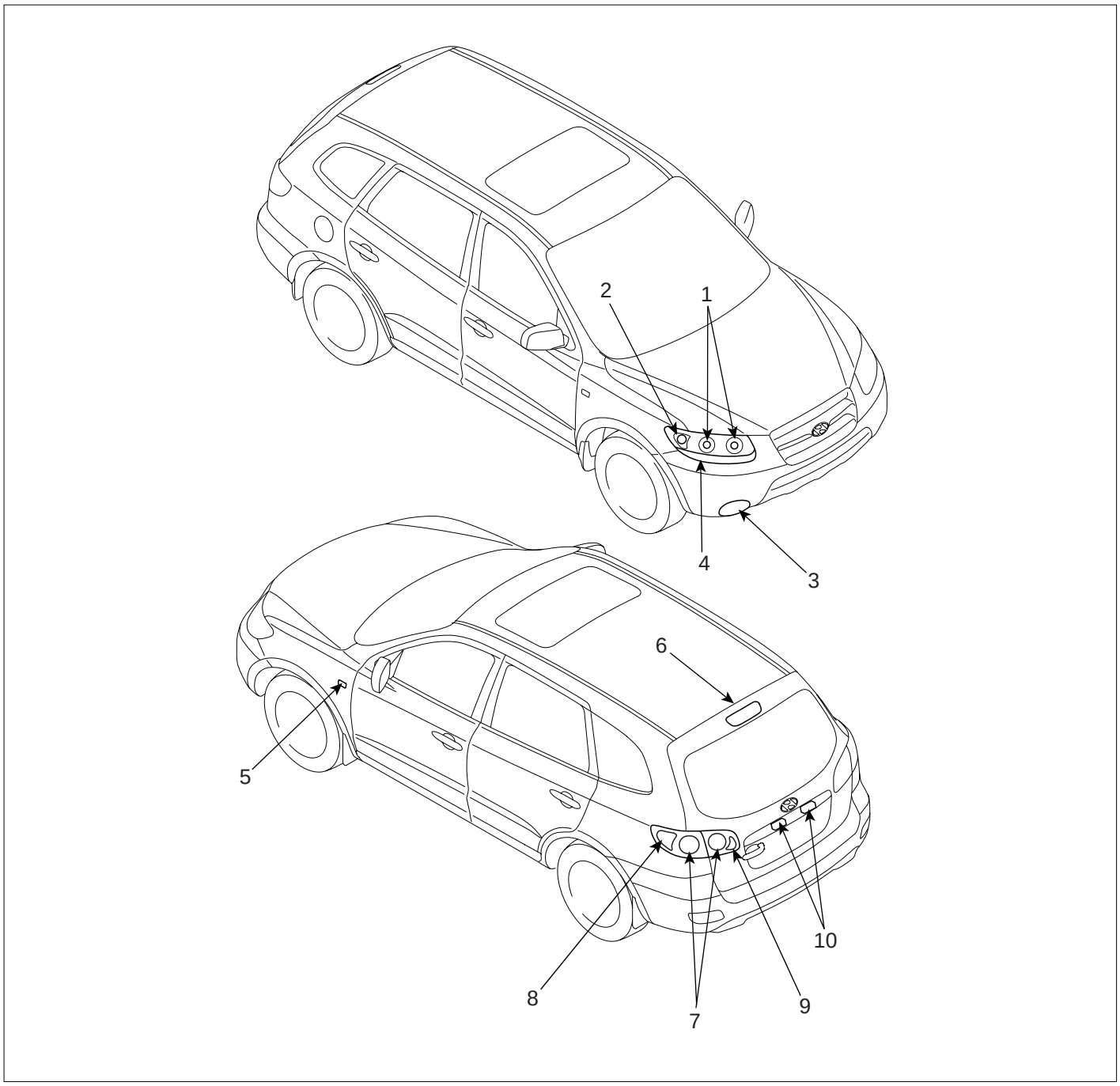

1. Head lamp (High/Low)
2. Front turn signal lamp
3. Front fog lamp
4. Position lamp
5. Side repeater
6. High mounting stop lamp
7. Tail/stop lamp
8. Rear turn signal lamp
9. Back up lamp
10. License plate lamp

SCMBE6430L

TROUBLESHOOTING E4993738

Symptom	Possible cause	Remedy
One lamp does not light (all exterior)	Bulb burned out	Replace bulb
	Socket, wiring or ground faulty	Repair if necessary
Head lamps do not light	Bulb burned out	Replace bulb
	Ignition fuse (LOW:15A, HIGH:15A) blown	Check for short and replace fuse
	Head lamp fuse (15A) blown	Check for short and replace fuse
	Head lamp relay faulty	Check relay
	Lighting switch faulty	Check switch
	Wiring or ground faulty	Repair if necessary
Tail lamps and license plate lamps do not light	Bulb burned out	Replace bulb
	Tail lamp fuse (20A) blown	Check for short and replace fuse
	Tail lamp relay faulty	Check relay
	Lighting switch faulty	Check switch
	Wiring or ground faulty	Repair if necessary
Stop lamps do not light	Bulb burned out	Replace bulb
	Stop lamp fuse (15A) blown	Check for short and replace fuse
	Stop lamp switch faulty	Adjust or replace switch
	Wiring or ground faulty	Repair if necessary
Stop lamps do not turn off	Stop lamp switch faulty	Repair or replace switch
Instrument lamps do not light (Tail lamps light)	Rheostat faulty	Check rheostat
	Wiring or ground faulty	Repair if necessary
Turn signal lamp does not flash on one side	Bulb burned out	Replace bulb
	Turn signal switch faulty	Check switch
	Wiring or ground faulty	Repair if necessary
Turn signal lamps do not light	Bulb burned out	Replace bulb
	Turn signal lamp fuse (10A) blown	Check for short and replace fuse
	Flasher unit faulty	Check flasher unit
	Turn signal switch faulty	Check switch
	Wiring or ground faulty	Repair if necessary
Hazard warning lamps do not light	Bulb burned out	Replace bulb
	Hazard warning lamp fuse (15A) blown	Check for short and replace fuse
	Flasher unit faulty	Check flasher unit
	Hazard switch faulty	Check switch
	Wiring or ground faulty	Repair if necessary
Flasher rate too slow or too fast	Lamps' wattages are smaller or larger than specified	Replace lamps
	Flasher unit faulty	Check flasher unit

Symptom	Possible cause	Remedy
Back up lamps do not light	Bulb burned out	Replace bulb
	Back up lamp fuse (10A) blown	Check for short and replace fuse
	Back up lamp switch (M/T) faulty	Check switch
	Transaxle range switch (A/T) faulty	Check switch
	Wiring or ground faulty	Repair if necessary
Room lamp does not light	Bulb burned out	Replace bulb
	Room lamp fuse (15A) blown	Check for short and replace fuse
	Room lamp switch faulty	Check switch
	Wiring or ground faulty	Repair if necessary
Front fog lamps do not light	Bulb burned out	Replace bulb
	Front fog lamp fuse (15A) blown	Check for short and replace fuse
	Front fog lamp relay faulty	Check relay
	Front fog lamp switch faulty	Check switch
	Wiring or ground faulty	Repair if necessary
Rear fog lamps do not light	Bulb burned out	Replace bulb
	Rear fog lamp fuse (10A) blown	Check for short and replace fuse
	Rear fog lamp fuse (15A) blown	Check for short and replace fuse
	Rear fog lamp switch faulty	Check switch
	Rear fog lamp relay faulty	Check relay
	Wiring or ground faulty	Repair if necessary
Map lamp does not light	Bulb burned out	Replace bulb
	Room lamp fuse (10A) blown	Check for short and replace fuse
	Map lamp switch faulty	Check switch
	Wiring or ground faulty	Repair if necessary
Trunk room lamp does not light	Bulb burned out	Replace bulb
	Room lamp fuse (10A) blown	Check for short and replace fuse
	Trunk room lamp switch faulty	Check switch
	Wiring or ground faulty	Repair if necessary

HEAD LAMPS

INSPECTION E76F89A5

HEAD LAMP RELAY INSPECTION

1. Pull out the head lamp relay (Low) (A) and head lamp relay (High) (B) from the engine compartment relay box.

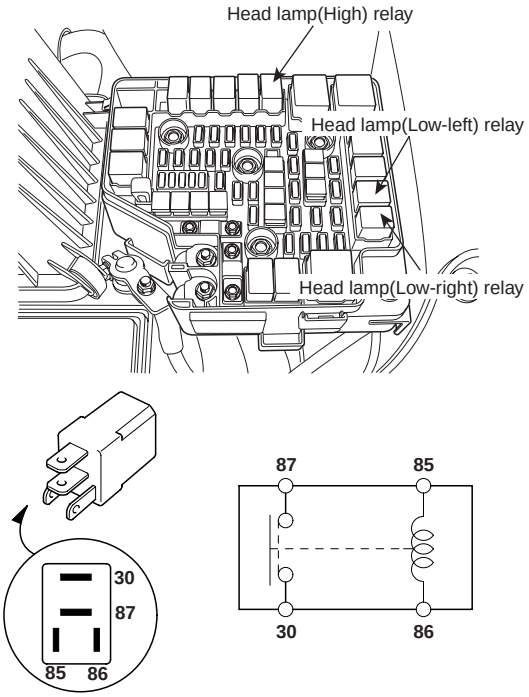

SCMBE6434L

2. Check for continuity between terminals. There should be continuity between the No.87 and No.30 terminals when power and ground are connected to the No.86 and No.85 terminals.

3. There should be no continuity between the No.87 and No.30 terminals when power is disconnected.

Terminal / Power	30	87	85	86
Disconnected			○	○
Connected	○	○	⊖	⊕

SCMBE6195L

REPLACEMENT E4FFBE43

1. Disconnect the negative (-) battery terminal.

2. Loosen the mounting bolts (2EA) and a nut of head lamp. Remove the head lamp assembly after disconnecting the lamp connectors.

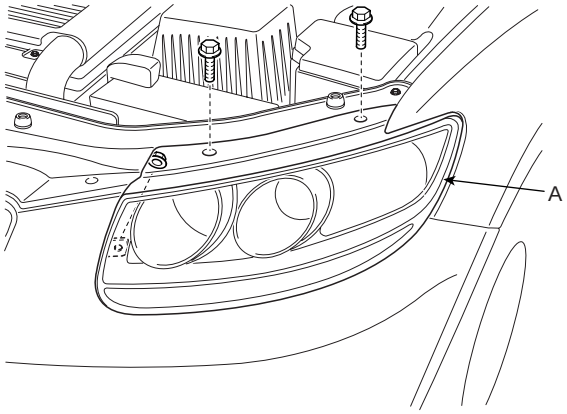

SCMBE6431D

NOTE

Take care that retaining clip (A) is not to be damaged.

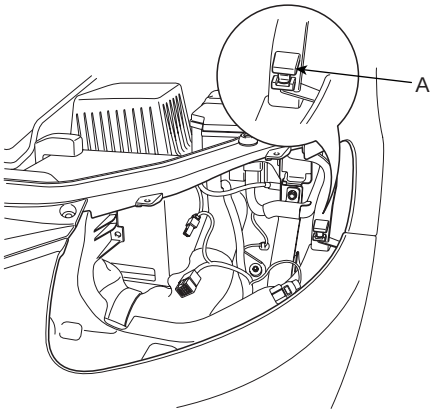

SCMBE6433D

3. Remove the head lamp bulb.

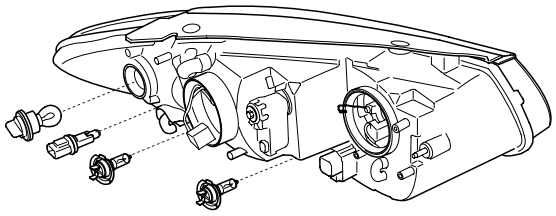

SCMBE6435L

4. Installation is the reverse of removal.

ADJUSTMENT EFD0DACA

HEAD LAMP AIMING INSTRUCTIONS

The head lamps should be aimed with the proper beam-setting equipment, and in accordance with the equipment manufacturer's instructions.

NOTE

If there are any regulations pertinent to the aiming of head lamps in the area where the vehicle is to be used, adjust so as to meet those requirements.

Alternately turn the adjusting gear to adjust the head lamp aiming. If beam-setting equipment is not available, proceed as follows :

1. Inflate the tires to the specified pressure and remove any loads from the vehicle except the driver, spare tire, and tools.
2. The vehicle should be placed on a flat floor.
3. Draw vertical lines (Vertical lines passing through respective head lamp centers) and a horizontal line (Horizontal line passing through center of head lamps) on the screen.
4. With the head lamp and battery in normal condition, aim the head lamps so the brightest portion falls on the horizontal and vertical lines.
   Make vertical and horizontal adjustments to the lower beam using the adjusting wheel.

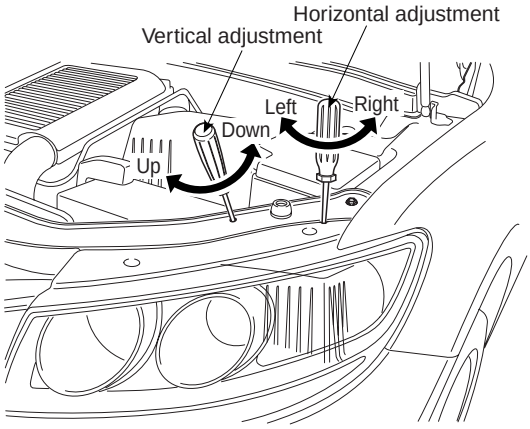

SCMBE6440L

FRONT FOG LAMP AIMING

The front fog lamps should be aimed as the same manner of the head lamps aiming.
With the front fog lamps and battery normal condition, aim the front fog lamps by turning the adjusting gear (A).

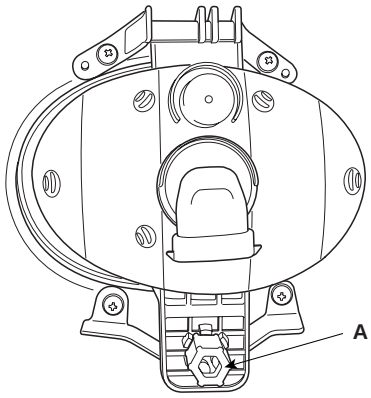

SCMBE6442D

HEAD LAMP AND FOG LAMP AIMING POINT

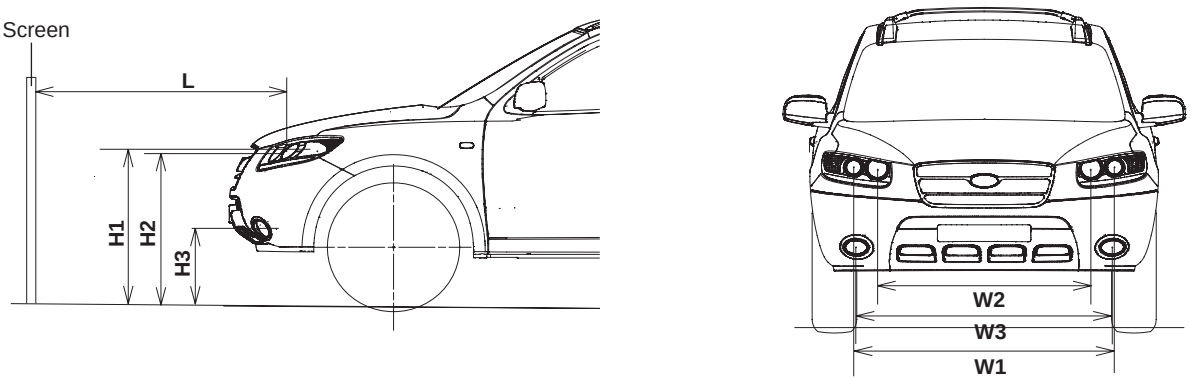

H1 : Height between the head lamp bulb center and ground (Low beam)
H2 : Height between the head lamp bulb center and ground (High beam)
H3 : Height between the fog lamp bulb center and ground
W1 : Distance between the two head lamp bulbs centers (Low beam)
W2 : Distance between the two head lamp bulbs centers (High beam)
W3 : Distance between the two fog lamp bulbs centers
L : Distance between the head lamp bulb center and screen

SCMBE6443L

Unit : in (mm)

Vehicle condition	H1	H2	H3	W1	W2	W3	L
Without driver	35(889)	34.4(875)	17.5(445)	55.2(1,402)	45.0(1,144)	54.2(1,378)	118(3,000)
With driver	34.7(883)	34.2(869)	17.2(439)				

SCMBE6444L

1. Turn the low beam on without the driver aboard.
   The cut-off line should be projected in the allowable range (shaded region).
   In case of equipping with the manual leveling device, set the leveling device switch on the "O" position.
   In case of equipping with the auto leveling device, set the initialization by using the diagnostic tool before aiming.

[LHD]

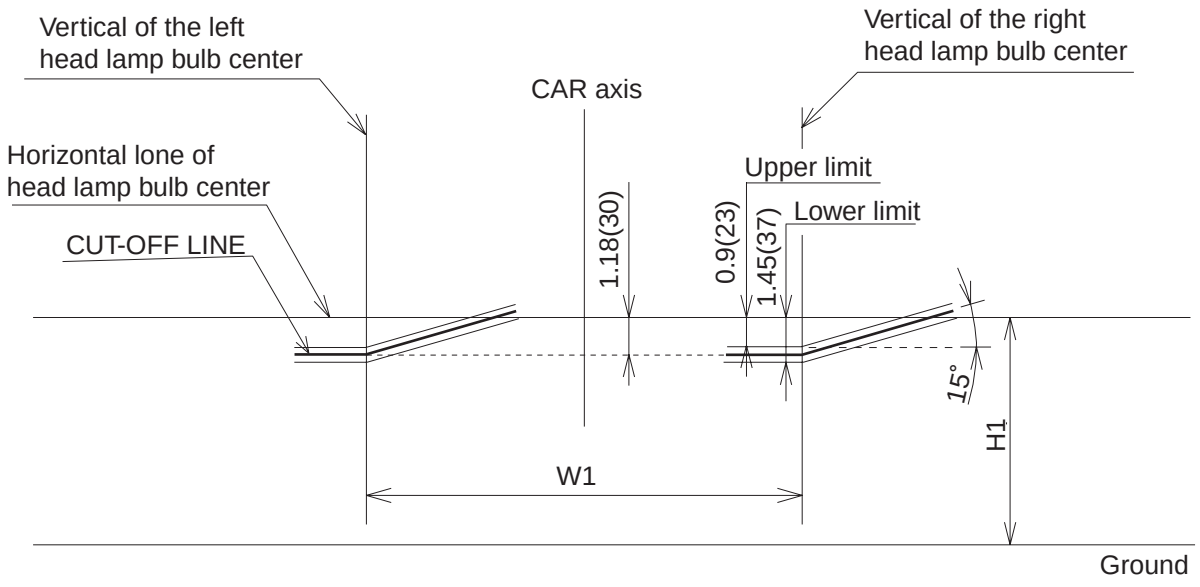

Unit : in.(mm)

SCMBE6445L

[RHD]

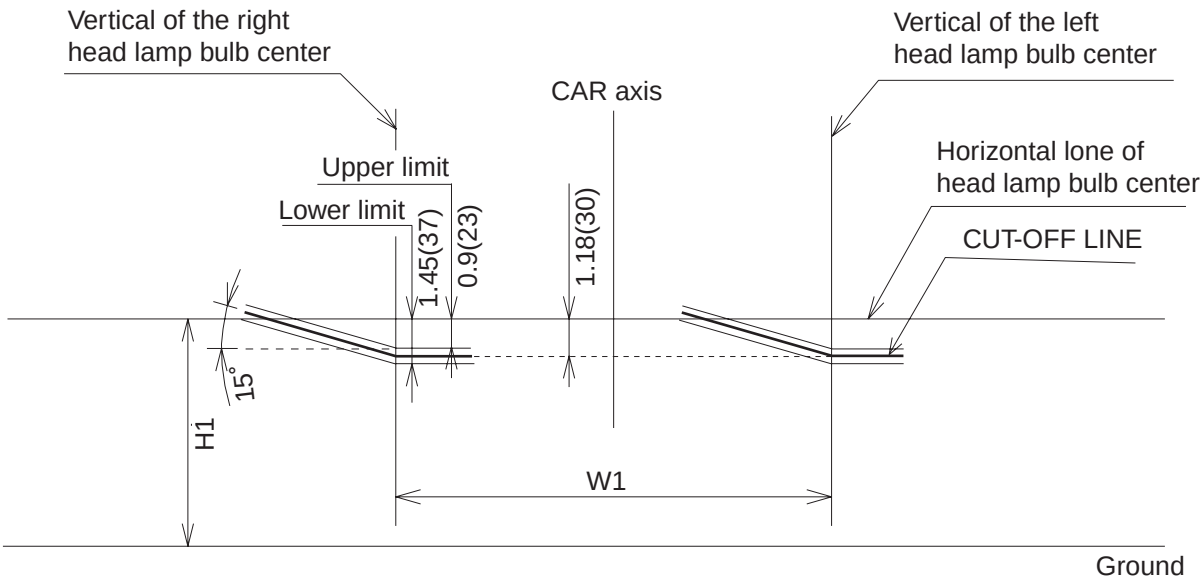

Unit : in.(mm)

SCMBE6459L

2. Turn the high beam on without the driver aboard.
   The cut-off line should be projected in the allowable range (shaded region).

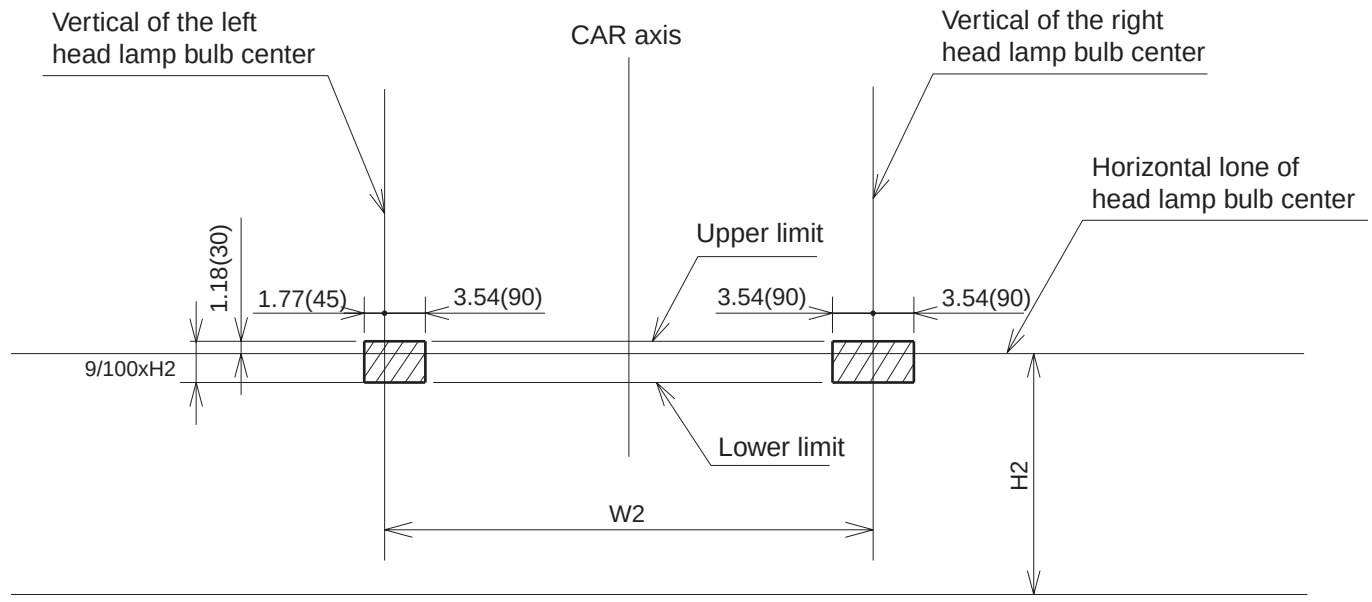

SCMBE6446L

3. Turn the front fog lamp on without the driver aboard.
   The cut-off line should be projected in the allowable range (shaded region)

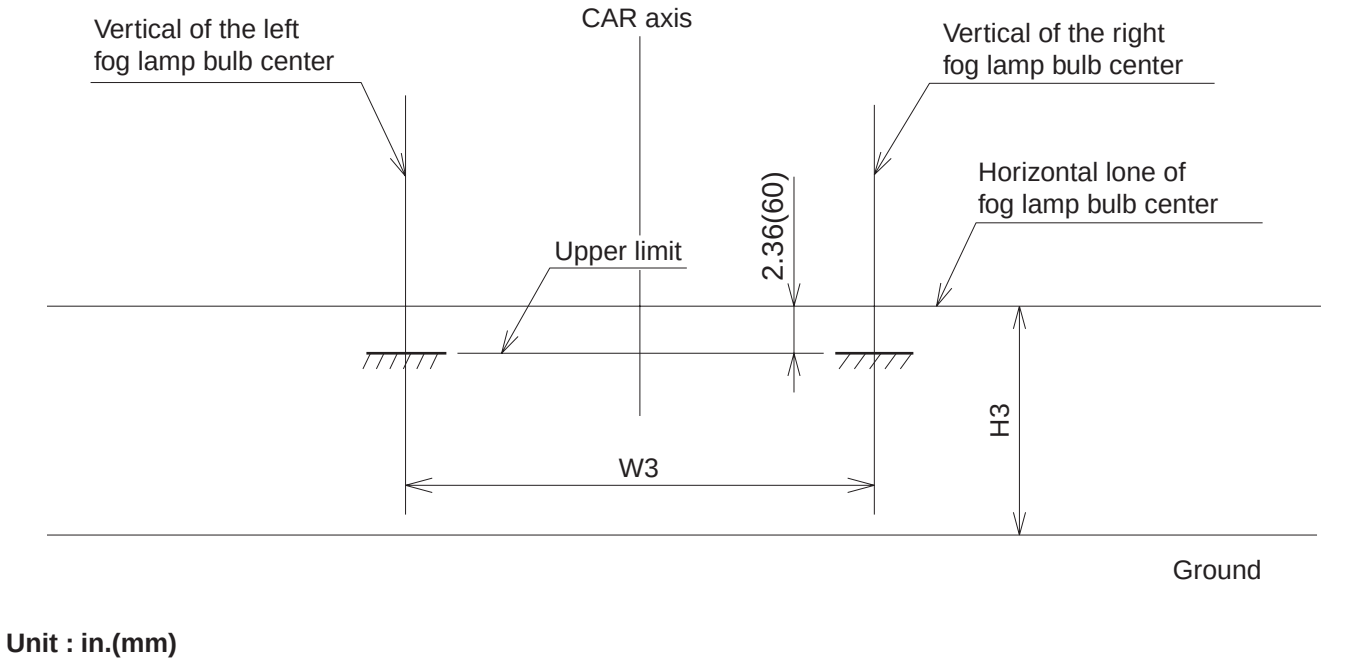

SCMBE6447L

TURN SIGNAL LAMP

REPLACEMENT EEF3E5C7

1. Disconnect the negative (-) battery terminal.
2. Loose the screws (3EA) holding the rear combination lamp then disconnect the 4P connector then remove the outside rear combination lamp.

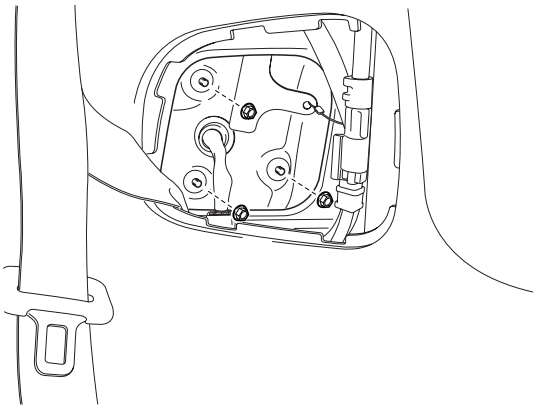

SCMBE6448D

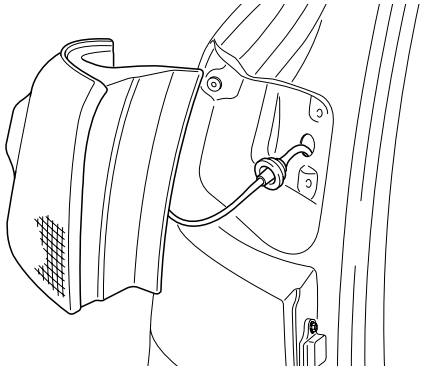

SCMBE6449D

3. Replace the bulbs (2EA) after disconnecting the rear combination lamp assembly..

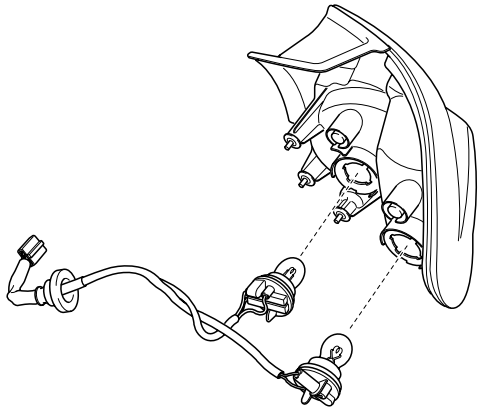

SCMBE6450D

4. Disconnect the lamp cover on tailgate. Remove the lamp assembly after loosening the connector (4pin), Cap nuts (2EA) and nuts (2EA).
5. Remove the tailgate combination lamp assembly and the replace the bulbs.

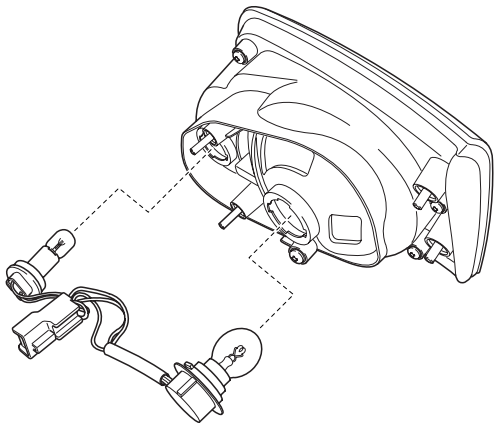

SCMBE6451D

6. Installation is the reverse of removal.

ROOM LAMP

INSPECTION EA676E05

1. Remove the room lamp assembly then check for continuity between terminals.

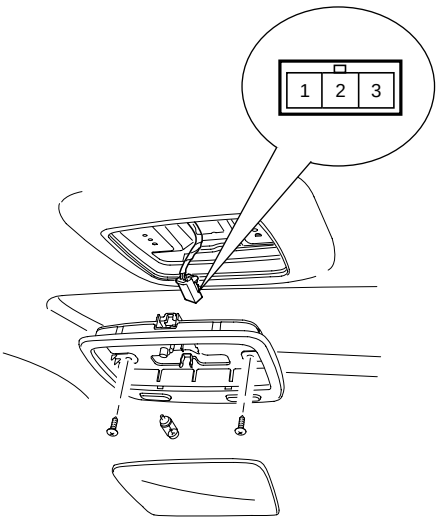

SCMBE6453L

Terminal / Position	1	2	3
ON		○—(•)—○	
DOOR	○—(•)—○		
OFF			

SCMBE6454L

REPLACEMENT E342AAEF

1. Disconnect the negative (-) battery terminal.
2. Detach the lamp lens (A) from the room lamp with a flat-tip screwdriver then replace the bulb.
3. Loosen the fixing screw (2EA) and disconnect the 3P connector. And then remove the room lamp assembly.

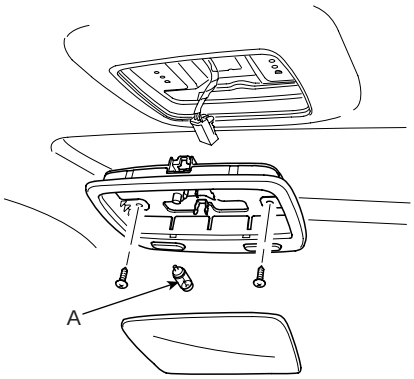

SCMBE6452D

4. Installation is the reverse of removal.

OVERHEAD CONSOLE LAMP

INSPECTION E0EDDEFD

Remove the overhead console lamp assembly then check for continuity between terminals. If the continuity is not as specified, replace the map lamp switch.

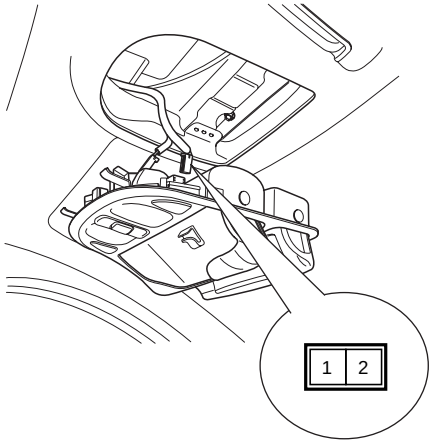

SCMBE6457D

Sort / Position / Terminal	Map lamp switch			
	LH		RH	
	ON	OFF	ON	OFF
1	●		●	
2	●		●	

ETKE007M

REPLACEMENT E0EB8DD4

1. Disconnect the negative (-) battery terminal.
2. Replace the bulb after removing the lens.
3. Remove the 2 screws, sunroof switch connectors (4Pin / 2Pin). And then remove the overhead consol (A), lamp (B).

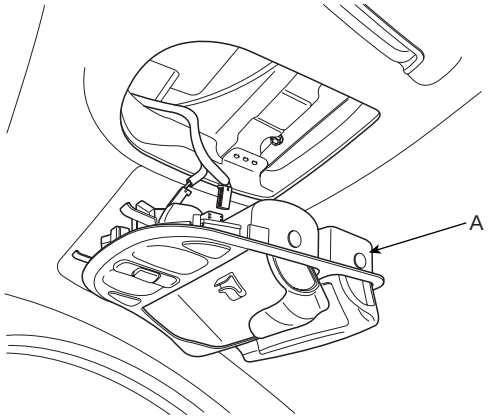

SCMBE6455D

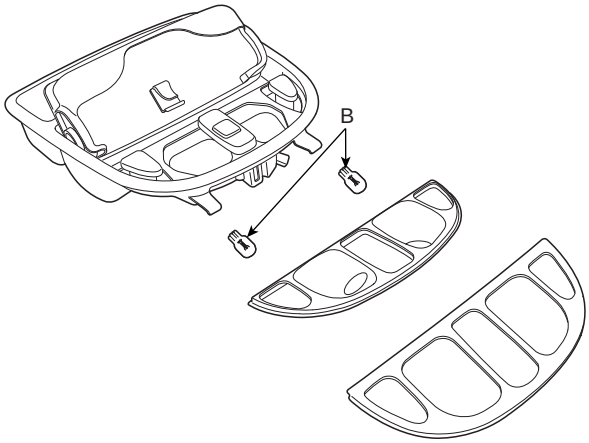

SCMBE6456D

4. Installation is the reverse of removal.

TURN ／ HAZARD LAMPS

INSPECTION EBC7E7BC

HAZARD LAMP SWITCH

1. Disconnect the negative (-) battery terminal.
2. Remove the crash pad center speaker grill (A).

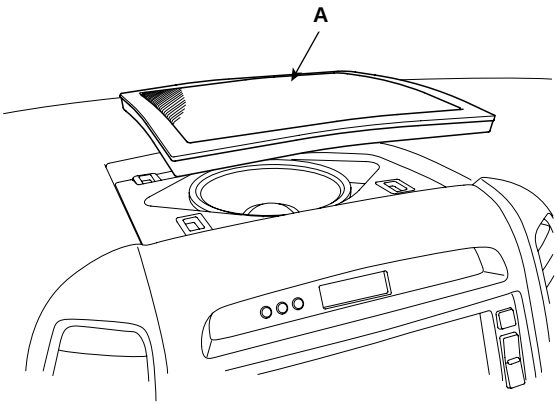

SCMBE6460D

3. Remove the center speaker (A) after loosening the screws (2EA).

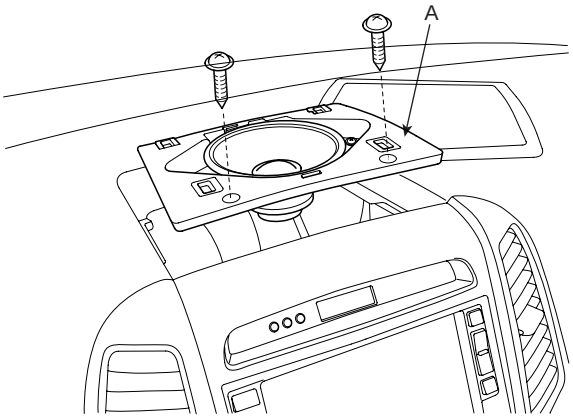

SCMBE6015D

4. Remove the center facia panel after loosning the screw (2EA).
(Refer to the Body group - Crash pad)

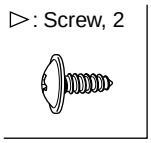

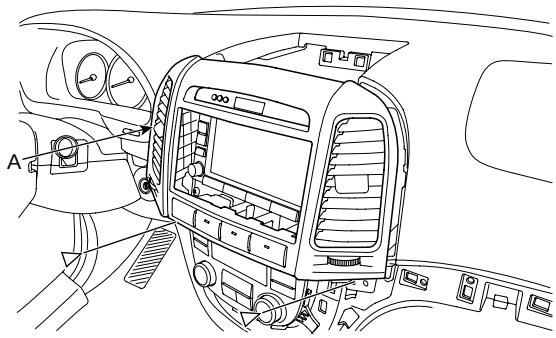

SCMBE6010L

5. Disconnect the conectors.
6. Operate the switch and check for continuity between terminals with an ohmmeter.

[LHD]

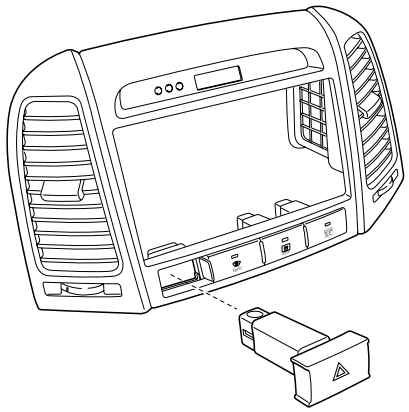

SCMBE6467D

[RHD]

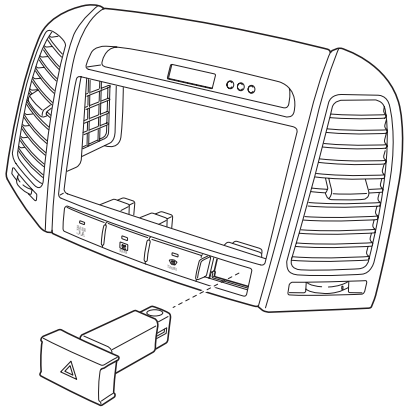

SCMBE6467R

Terminal / Position	2	3	6	9	10	5	7	8
OFF						○	○	○
ON	Illumination		○	○	○		○	○

SCMBE6461L

HAZARD LAMP RELAY

1. Disconnect the negative (-) battery terminal.
2. Disconnect the passenger compartment.
3. Check for continuity between terminals. There should be continuity between the No.2 of I/P-C and No.3 or No.4 of I/P-E terminals when power and ground are connected to the No.2 of I/P-C and No.6 of I/P-G terminals.
4. There should be no continuity between the No.2 of I/P-C and No.3 or No.4 of I/P-E terminals when power is disconnected to the No.2 of I/P-C and No.6 of I/P-G terminals.

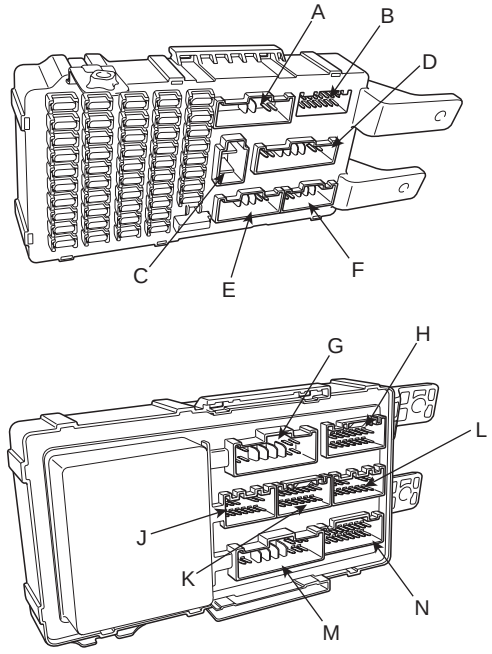

SCMBE6462D

Terminal / Position	I/P-C (2)	I/P-E (3 or 4)	I/P-G (6)	I/P-C (2)
Power off			○	○
Power on	○	○	⊖	⊕

SCMBE6463L

RHEOSTAT

INSPECTION E4E671BB

1. Disconnect the negative (-) battery terminal.
2. Remove the lower crash pad switch assembly (A) by using the scraper and then disconnect the connectors.

[LHD]

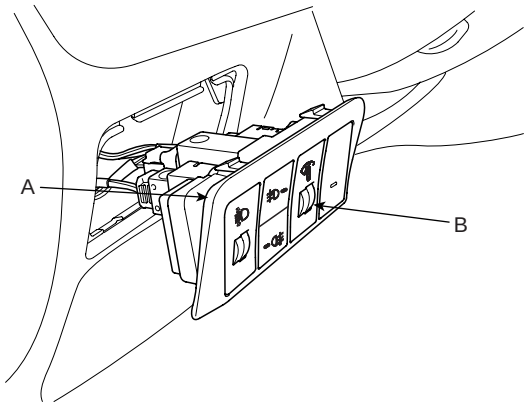

SCMBE6458L

[RHD]

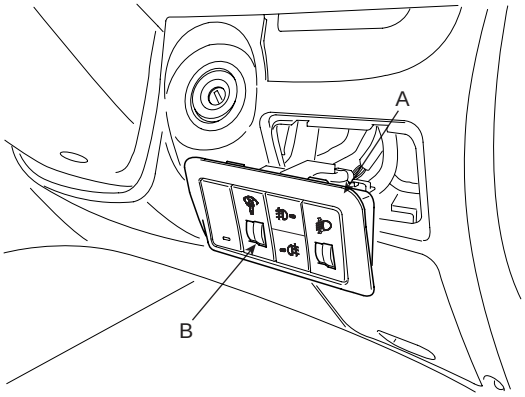

SCMBE6458R

3. Remove the rheostat (B) from lower crash pad switch assembly.
4. Check for intensity of new rheostat switch. If the light intensity of the lamps changes smoothly without any flickering when the rheostat is turned, it can be assumed that the rheostat is normal.

FRONT FOG LAMPS

INSPECTION E738DE84

FRONT FOG LAMP RELAY

1. Pull out the front fog lamp (A) relay from the engine compartment relay box.
2. Check for continuity between terminals. There should be continuity between the No.87 and No.30 terminals when power and ground are connected to the No.85 and No.86 terminals.
3. There should be no continuity between the No.87 and No.30 terminals when power is disconnected.

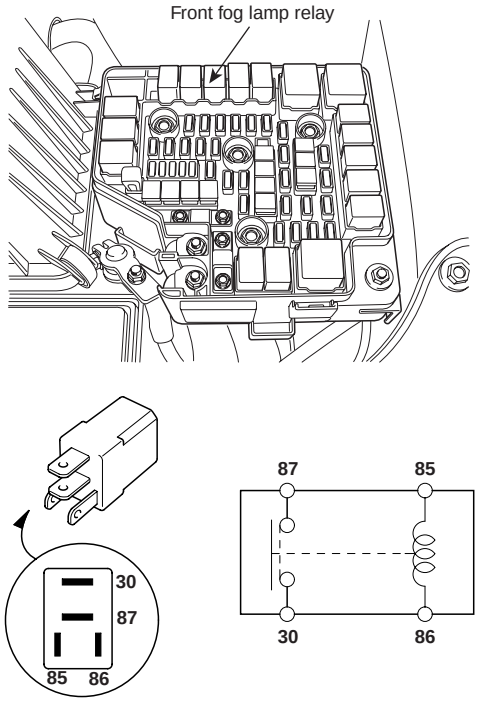

SCMBE6464L

Terminal / Power	30	87	85	86
Disconnected			○	○
Connected	○	○	⊖	⊕

LTGE221B

REPLACEMENT E5D0F606

1. Disconnect the negative (-) battery terminal.
2. Remove the front side cover screw.
3. Remove the front fog lamp assembly (A) after loosening screws (4EA).

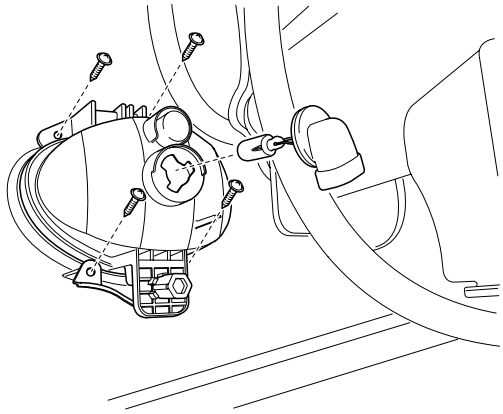

SCMBE6441D

4. Installation is the reverse of removal.

REAR FOG LAMPS

INSPECTION E7D4CDB2

REAR FOG LAMP SWITCH

1. Disconnect the negative (-) battery terminal.
2. Remove the lower crash pad switch (A) from the side crash pad cover by using the scraper and then disconnect the connectors.
3. Remove the rear fog lamp (B) switch from lower crash pad switch.

[LHD]

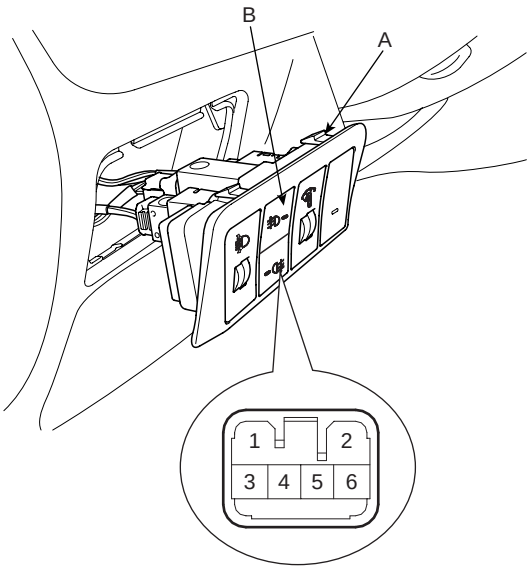

SCMBE6427L

[RHD]

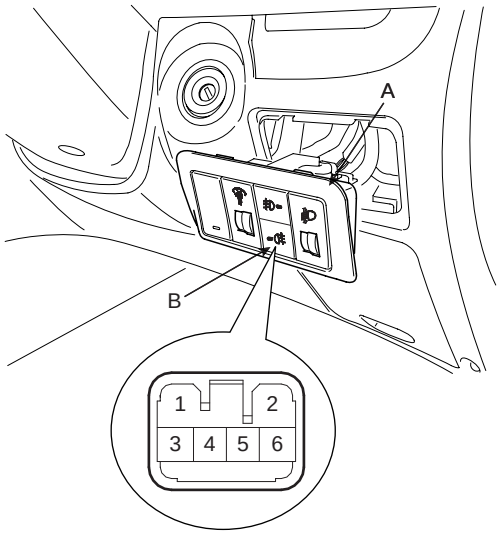

SCMBE6427R

4. Check for continuity between the terminals in each switch position according to the table.

Terminal / Position	2	5	1	4	3
ON	Illumination		IND.		
OFF					

SCMBE6469L

LICENSE LAMPS

REPLACEMENT E83B391E

1. Disconnect the negative (-) battery terminal.
2. Remove the license lamp lens (A) from the panel after loosening a screw (2EA).

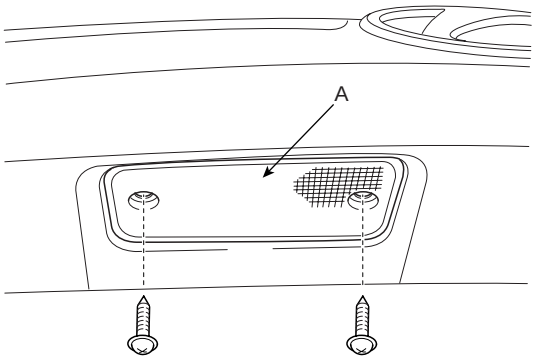

SCMBE6465D

3. Replace the bulb (A).

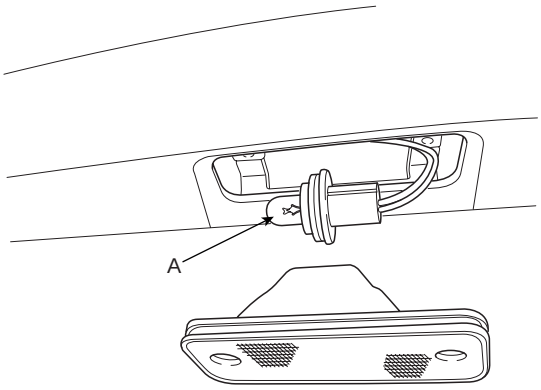

SCMBE6466D

4. Installation is the reverse of removal.

STOP LAMPS

REPLACEMENT E79FFC53

HIGH MOUNTED STOP LAMP

1. Disconnect the negative (-) battery terminal.
2. Remove the tailgate (Refer to the Body group - Tailgate).
3. Remove the high mounted stop lamp assembly after removing 2 nuts, then remove the spoiler.

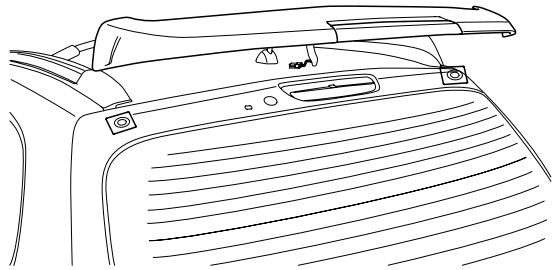

SCMBE6477D

4. Remove the spoiler lamp cover (A) and loosening the screw (4EA). And then remove the high mounted stop lamp.

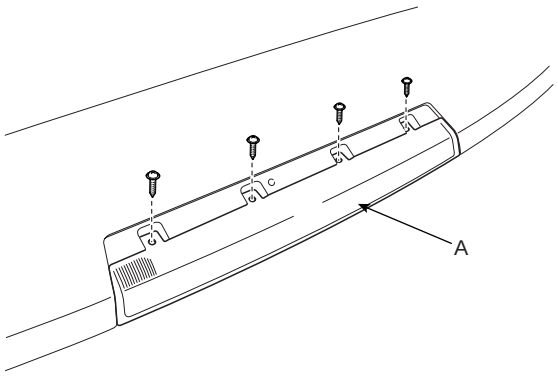

SCMBE6478D

5. Installation is the reverse of removal.

REAR ROOM LAMP

INSPECTION E4FBF49C

1. Remove the trunk room lamp assembly then check for continuity between terminals.

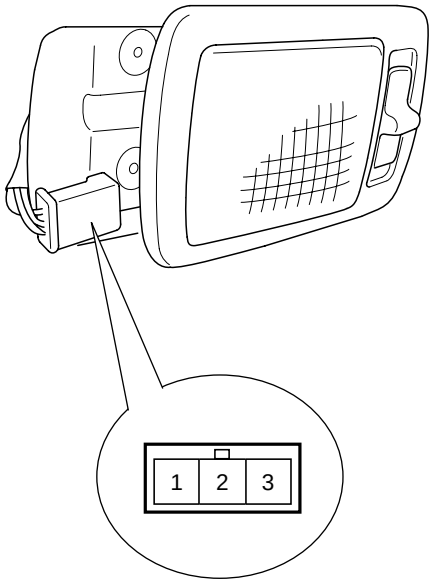

KTKD087A

Terminal / Position	1	2	3
ON		○—⌒—○	○
DOOR	○	○—⌒—○	○
OFF			

ETQF088A

REPLACEMENT E48BEEC9

1. Disconnect the negative (-) battery terminal.
2. Remove the trunk room lamp lens with a flat-tip screwdriver and replace the bult.
3. Remove the trunk room lamp assembly after removing 2 screws, then disconnect the 3P connector.

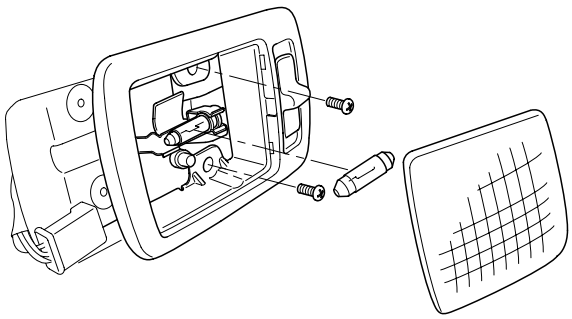

KTKD008A

4. Installation is the reverse of removal.

AUTO LIGHTING CONTROL SYSTEM

SPECIFICATIONS E968DD1C

Item		Specifications
Rated voltage		5V
Load		Max. 1mA
Detection illuminations	Tail lamp	ON : 24 ± 5.2 (Lux), 1.77 ± 0.08 (V) OFF : 48 ± 10.5 (Lux), 3.47 ± 0.1 (V)
	Head lamp	ON : 6 ± 1.4 (Lux), 0.63 ± 0.06 (V) OFF : 12 ± 2.7 (Lux), 1.02 ± 0.06 (V)

DESCRIPTION E4047CBE

The auto light control system operates by using the auto light switch.
If you set the multi-function switch to "AUTO" position, the tail lamp and head lamp will be turned automatically on or off according to external illumination.

COMPONENT LOCATION EFCEC781

The parts with asterisk(*) :
This illustration shows the LHD type.
RHD type is symmetrical.

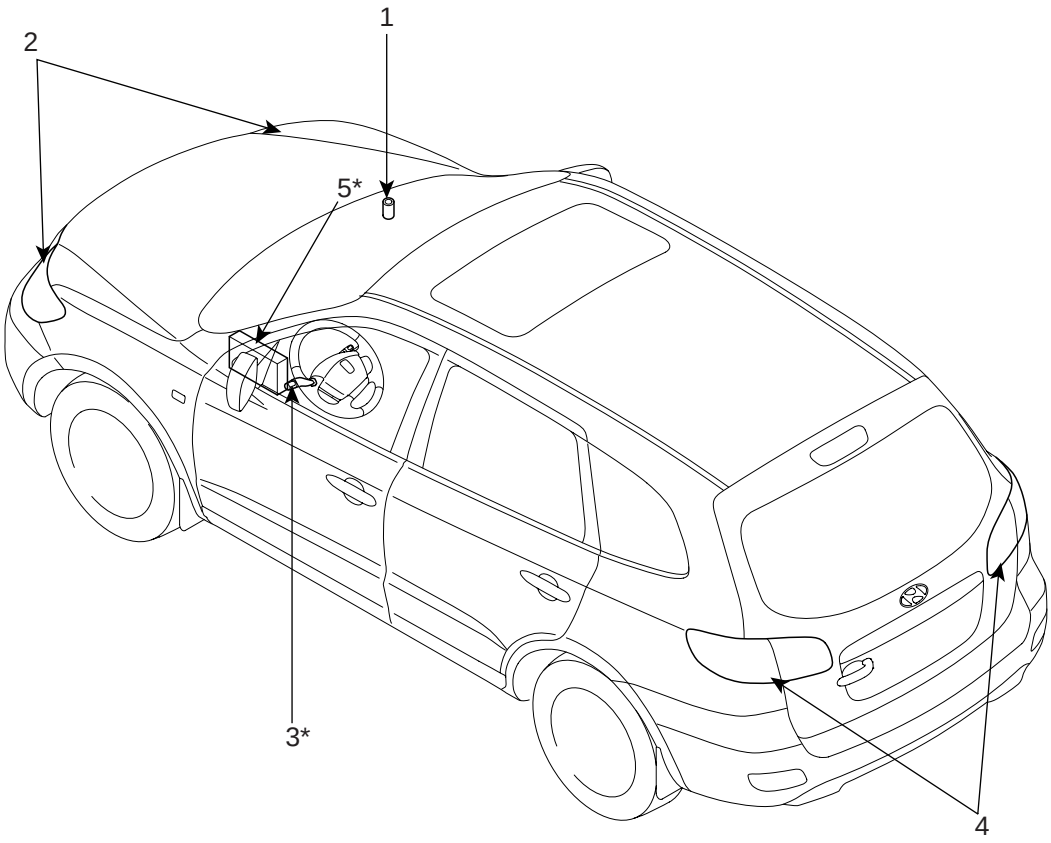

1. Auto light sensor unit
2. Head lamps
3. Lighting switch (Auto)
4. Tail lamps
5. Body control module

SCMBE6514L

CIRCUIT DIAGRAM ED5E07FD

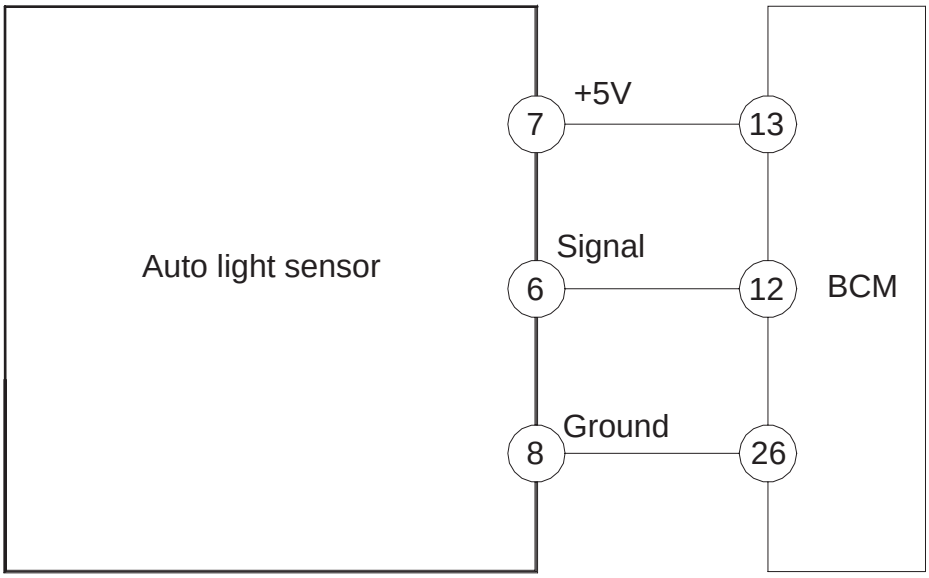

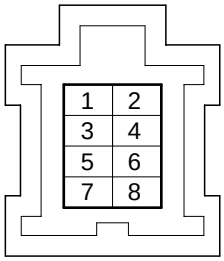

[Autolight unit connector]

6. Sensor signal
7. Vcc (+5V)
8. Sensor ground

SCMBE6515L

AUTO LIGHT SWITCH

INSPECTION E0BF4EBE

1. Operate the auto light switch, then check for continuity between terminals of 18P multi - function switch connector.

( ) : RHD

Position \ Terminal	14(13)	15(14)	16(15)	17(16)
OFF				
I	○			○
II	○	○		○
AUTO			○	○

SCMBE6513L

[LHD]

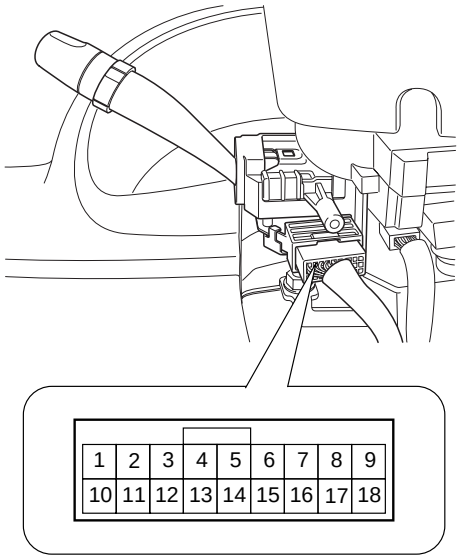

SCMBE6512D

[RHD]

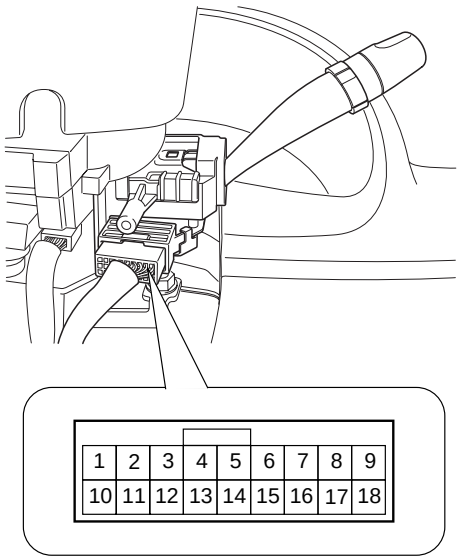

SCMBE6512R

AUTO LIGHT SENSOR

INSPECTION E0BEF93A

While operating the auto light switch, check if the operations are normal as shown in the timing chart.

1. Auto light sensor value is always read at IGN ON.
2. Light is turned ON after 2.5sec±0.2sec when auto light sensor value is same as light ON input value.
3. Light is turned OFF after 2.5sec±0.2sec when sensor value is same as light OFF input value.
4. Tail lamp and head lamp are turned ON when sensor value is same as tail lamp ON input value.
5. Light ON value of sensor is based on the below table.
6. Head lamp signal is output when head lamp switch is ON. After head lamp is turned OFF, head lamp signal output is immediately stopped if head lamp OFF luminance condition is met at auto light switch ON.

	TAIL LAMP, AV LAMP	HEAD LAMP (low beam)
ON	1.77V ± 0.08V	0.63V ± 0.06V
OFF	3.47V ± 0.10V	1.02V ± 0.06V

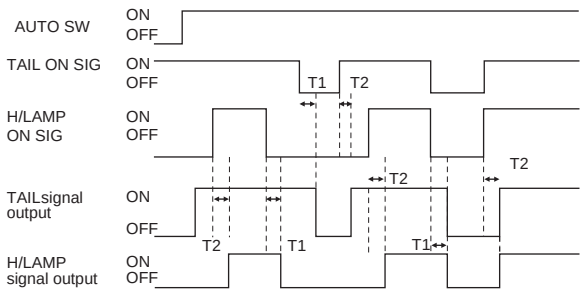

ETRF141X

T1 : 2.5 ± 0.2 sec
T2 : 2.5 ± 0.2 sec.

REPLACEMENT EF6FDFE7

1. Disconnect the negative (-) battery terminal.
2. Remove the Photo & auto light sensor (B) using screw (-) driver.

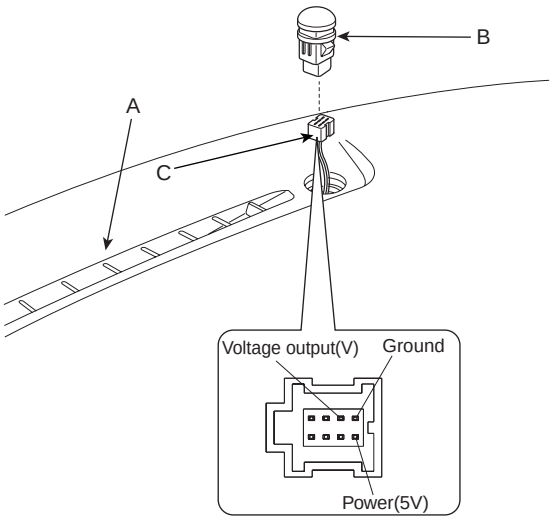

SCMBE6510L

3. Remove the auto light connector (C).
4. Installation is the reverse of removal.

DAYTIME RUNNING LIGHTS

DRL CONTROL MODULE

INSPECTION E251DBDE

1. The daytime running unit (A) is integrated in the BCM.

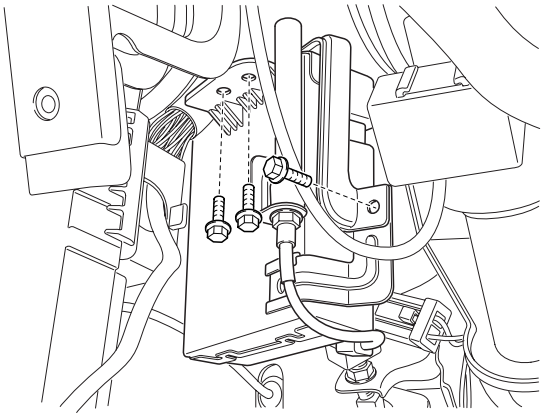

SCMBE6150D

2. Check that the light operate according to the following timing chart.

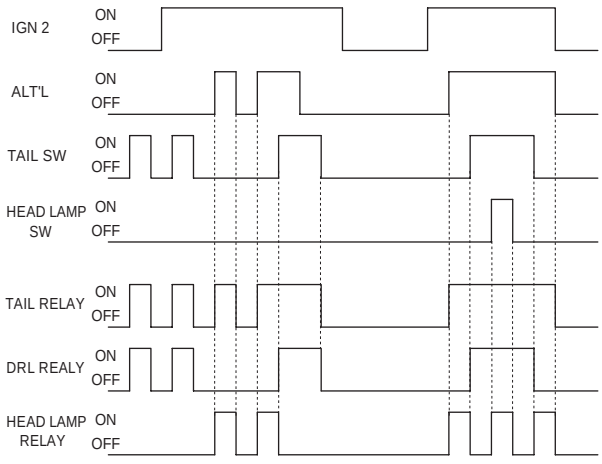

SCMBE6903L

3. If the daytime running light is not operated well, Inspect the connector and terminals to be sure they are all making good contact.
   If the terminals are bent, loose or corroded, repair them as necessary, and recheck the system.
   If the terminals look OK, go to step 4.

4. Make these input tests at the connector by using ETM.
   If any test indicates a problem, find and correct the cause, then recheck the system.
   If all the input tests prove OK, the BCM (Body control module) must be faulty; replace it.

HEAD LAMP LEVELING DEVICE

COMPONENT LOCATION E4FA4AB6

The parts with asterisk (*) :
This illustration shows the LHD type.
RHD type is symmetrical.

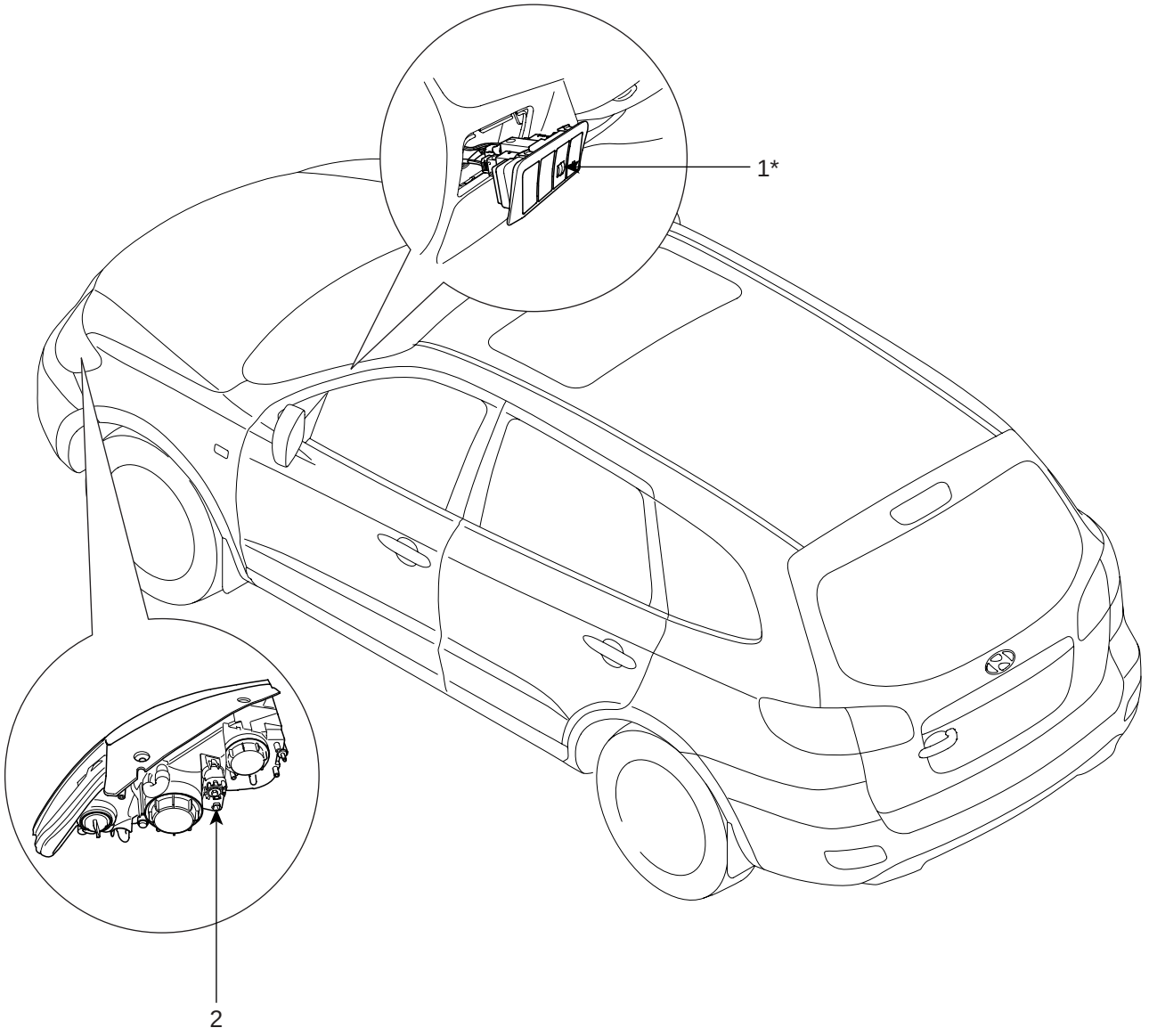

1. Headlamp leveling switch
2. Headlamp leveling actuator

SCMBE6490L

CIRCUIT DIAGRAM E17EB8B0

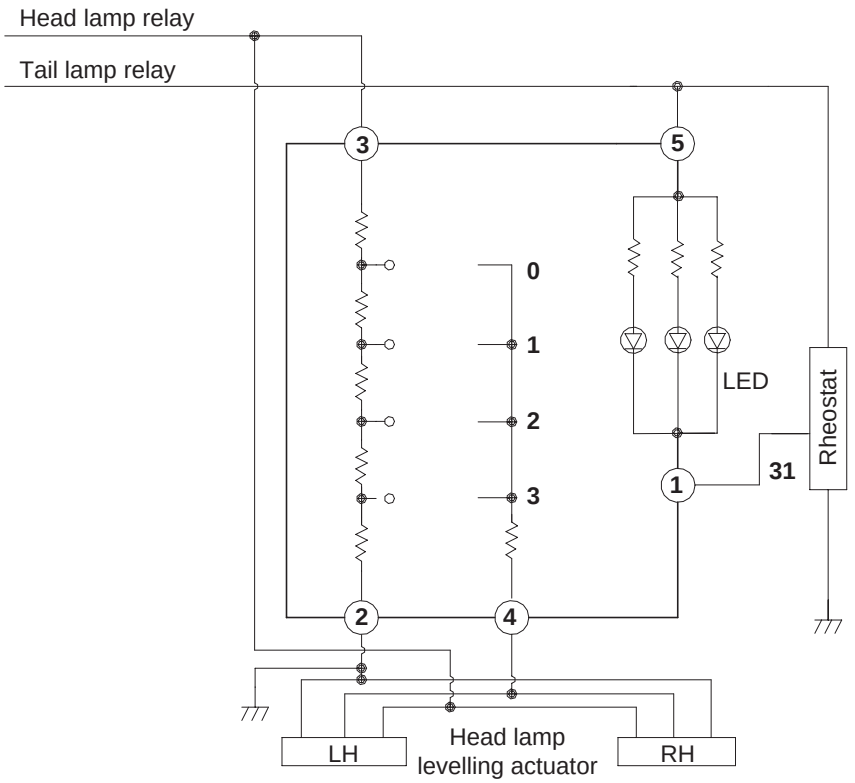

PIN CONNECTION

PIN NO	Description
1	Rheostat
2	Ground
3	IGN
4	Actuator (+)
5	Illumination(+)

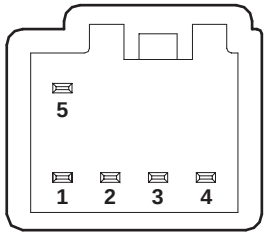

SCMBE6429L

HEAD LAMP LEVELING ACTUATOR

REPLACEMENT E14C459B

1. Disconnect the negative (-) battery terminal.
2. Remove the head lamp assembly (Refer to the head lamp).
3. Remove the head lamp leveling actuator (A) by loosening the adjusting bolt (B) after rotating it to an arrow direction.

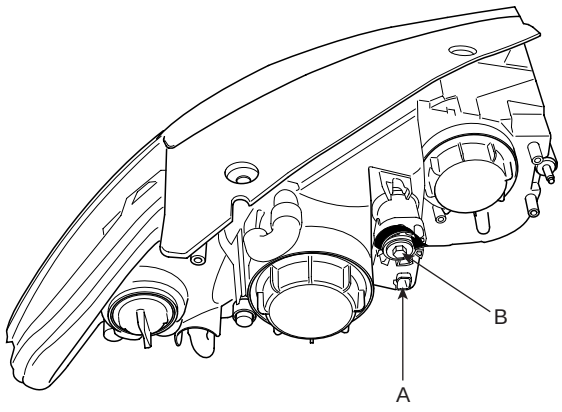

SCMBE6494L

4. Installation is the reverse of removal procedure.

HEAD LAMP LEVELING SWITCH

INSPECTION EE9680DD

1. Disconnect the negative (-) battery terminal.
2. Remove the lower crash pad switch (A) from the side crash pad cover by using the scraper and then disconnect the connectors.

[LHD]

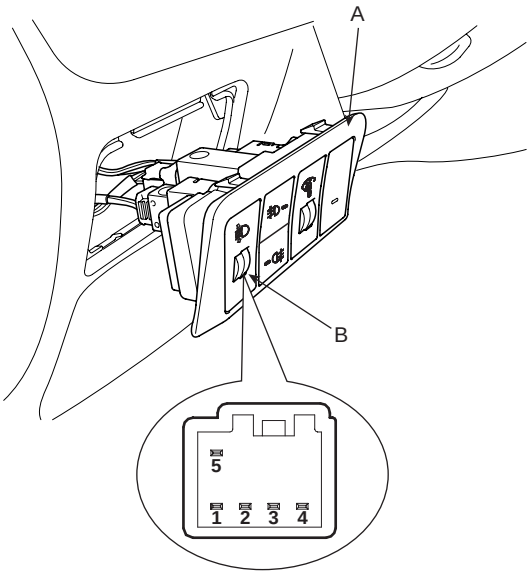

SCMBE6428L

[RHD]

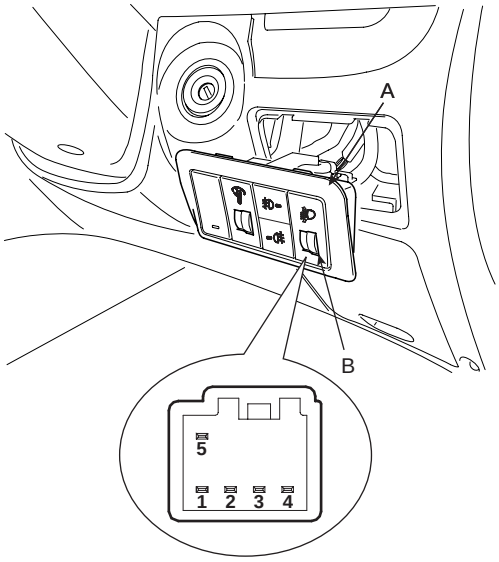

SCMBE6428R

3. Remove the head lamp leveling switch (B) from the lower crash pad switch.
4. Connect the battery voltage between terminals 5 and 4.
5. Measure the voltage between terminals 1 and 4 (V) at each position.

Position No.	Rotation	Voltage (V) (±5%)
0	0°	6.6
1	20°	7.7
2	40°	9.67
3	60°	12.06

6. If the voltage is not as specified, replace the head lamp leveling switch.

IMMOBILIZER CONTROL SYSTEM

DESCRIPTION EB551D42

The immobilizer system will disable the vehicle unless the proper ignition key is used, in addition to the currently available anti-theft systems such as car alarms, the immobilizer system aims to drastically reduce the rate of auto theft.

1. SMARTRA type immobilizer
   - The SMARTRA system consists of a transponder located in the ignition key, an antenna coil, a SMARTRA unit, an indicator light and the PCM(ECM).
   - The SMARTRA communicates to the PCM(ECM) (Engine Control Module) via a dedicated communications line. Since the vehicle engine management system is able to control engine mobilization, it is the most suitable unit to control the SMARTRA.
   - When the key is inserted in the ignition and turned to the ON position, the antenna coil sends power to the transponder in the ignition key. The transponder then sends a coded signal back through the SMARTRA unit to the PCM(ECM).
   - If the proper key has been used, the PCM(ECM) will energize the fuel supply system. The immobilizer indicator light in the cluster will simultaneously come on for more than five seconds, indicating that the SMARTRA unit has recognized the code sent by the transponder.
   - If the wrong key has been used and the code was not received or recognized by the PCM(ECM) the indicator light will continue blinking for about five seconds until the ignition switch is turned OFF.
   - If it is necessary to rewrite the PCM(ECM) to learn a new key, the dealer needs the customer's vehicle, all its keys and the Hi-scan (pro) equipped with an immobilizer program card. Any key that is not learned during rewriting will no longer start the engine.
   - The immobilizer system can store up to four key codes.
   - If the customer has lost his key, and cannot start the engine, contact HMC motor service station.

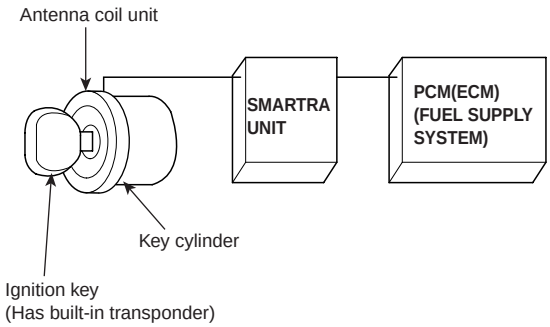

ETBF740B

COMPONENTS OPERATIONS EA703DCB

PCM (POWER TRAIN CONTROL MODULE)

1. The PCM(ECM) carries out a check of the ignition key using a special encryption algorithm, which is programmed into the transponder as well as the PCM(ECM) simultaneously. Only if the results are equal, the engine can be started. The data of all transponders, which are valid for the vehicle, are stored in the PCM(ECM).

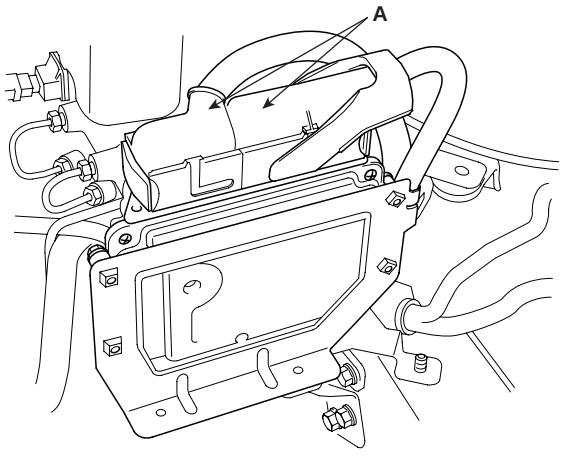

SCMBE6544D

SMARTRA UNIT (B)

The SMARTRA carries out communication with the built-in transponder in the ignition key. This wireless communication runs on RF (Radio frequency of 125 kHz). The SMARTRA is mounted behind of the crush pad under panel close to the antenna coil for RF transmission and receiving.
The RF signal from the transponder, received by the antenna coil, is converted into messages for serial communication by the SMARTRA device. And, the received messages from the PCM(ECM) are converted into an RF signal, which is transmitted to the transponder by the antenna.
The SMARTRA does not carry out the validity check of the transponder or the calculation of encryption algorithm. This device is only an advanced interface, which converts the RF data flow of the transponder into serial communication to the PCM(ECM) and vice versa.

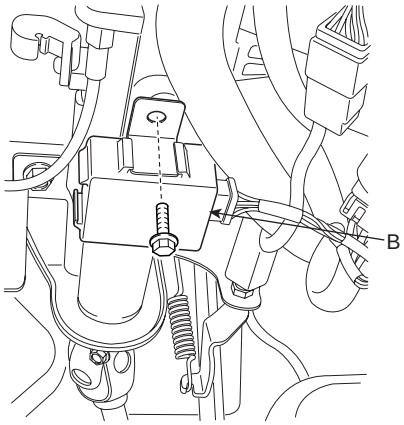

SCMBE6542L

TRANSPONDER (BUILT-IN KEYS)

The transponder has an advanced encryption algorithm. During the key teaching procedure, the transponder will be programmed with vehicle specific data. The vehicle specific data are written into the transponder memory. The write procedure is once only; therefore, the contents of the transponder can never be modified or changed.

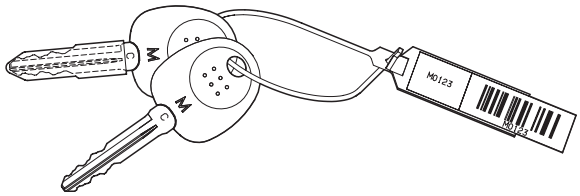

SCMBE6540D

ANTENNA COIL

The antenna coil (A) has the following functions.
- The antenna coil supplies energy to the transponder.
- The antenna coil receives signal from the transponder.
- The antenna coil sends transponder signal to the SMARTRA.

It is located directly in front of the steering handle lock.

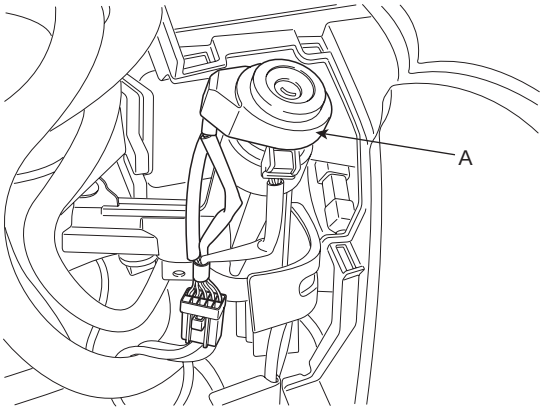

SCMBE6541D

TEACHING PROCEDURES EEDEFC04

1. Key Teaching Procedure
   Key teaching must be done after replacing a defective PCM(ECM) or when providing additional keys to the vehicle owner.

   The procedure starts with an PCM(ECM) request for vehicle specific data (PIN code: 6digits) from the tester. The "virgin" PCM(ECM) stores the vehicle specific data and the key teaching can be started. The "learnt" PCM(ECM) compares the vehicle specific data from the tester with the stored data. If the data are correct, the teaching can proceed.

   If incorrect vehicle specific data have been sent to the PCM(ECM) three times, the PCM(ECM) will reject the request of key teaching for one hour. This time cannot be reduced by disconnecting the battery or any other manipulation. After reconnecting the battery, the timer starts again for one hour.

   The key teaching is done by ignition on with the key and additional tester commands. The PCM(ECM) stores the relevant data in the EEPROM and in the transponder. Then the PCM(ECM) runs the authentication required for confirmation of the teaching process. The successful programming is then confirmed by a message to the tester.

   If the key is already known to the PCM(ECM) from a previous teaching, the authentication will be accepted and the EEPROM data are updated. There is no changed transponder content (this is impossible for a learnt transponder).

   The attempt to repeatedly teach a key, which has been taught already during the same teaching cycle, is recognized by the PCM(ECM). This rejects the key and a message is sent to the tester.

   The PCM(ECM) rejects invalid keys, which are presented for teaching. A message is sent to the tester. The key can be invalid due to faults in the transponder or other reasons, which result from unsuccessful programming of data. If the PCM(ECM) detects different authenticators of a transponder and an PCM(ECM), the key is considered to be invalid.

   The maximum number of taught keys is 4

   If an error occurs during the Immobilizer Service Menu, the PCM(ECM) status remains unchanged and a specific fault code is stored.

   If the PCM(ECM) status and the key status do not match for teaching of keys, the tester procedure will be stopped and a specific fault code will be stored at PCM(ECM).

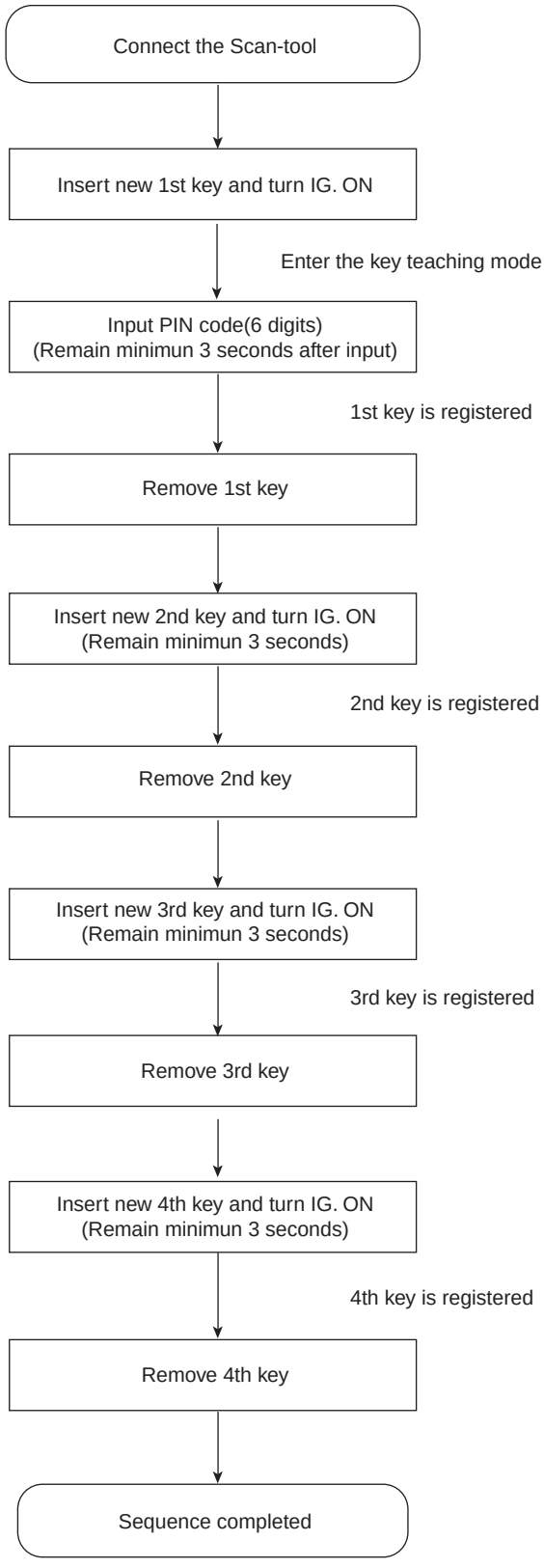

ETBF740M

1) PCM(ECM) learnt status.

1. HYUNDAI VEHICLE DIAGNOSIS ▼

MODEL : SANTAFE

01. ENGINE
02. AUTOMATIC TRANSAXLE
03. ANTI-LOCK BRAKE SYSTEM
04. SRS-AIRBAG
05. ELEC. CONTROL SUSPENSION
06. IMMOBILIZER
07. ELEC. POWER STEERING
08. FULL AUTO AIR/CON.

SCMBE6551L

1. HYUNDAI VEHICLE DIAGNOSIS

MODEL : SANTAFE
SYSTEM : IMMOBILIZER

01. CURRENT DATA
02. PASSWORD TEACHING/CHANGING
03. TEACHING
04. NEUTRAL MODE
05. LIMP HOME MODE

SCMBE6552L

1.3 TEACHING

MODEL : GRANDEUR
SYSTEM : IMMOBILIZER
STATUS : LEARNT

INPUT PIN OF SIX
FIGURE AND PRESS [ENTER] KEY

CODE : 234567

SCMBE6553L

1.3 TEACHING

MODEL : SANTAFE
SYSTEM : IMMOBILIZER
STATUS : LEARNT

1st KEY TEACHING
ARE YOU SURE ? [Y/N]

CODE : 234567

SCMBE6554L

1.3 TEACHING

MODEL : SANTAFE
SYSTEM : IMMOBILIZER
STATUS : LEARNT

1st KEY TEACHING
COMPLETED

CODE : 234567

SCMBE6555L

1.3 TEACHING

MODEL : SANTAFE
SYSTEM : IMMOBILIZER
STATUS : LEARNT

2st KEY TEACHING
ARE YOU SURE ? [Y/N]

CODE : 234567

SCMBE6556L

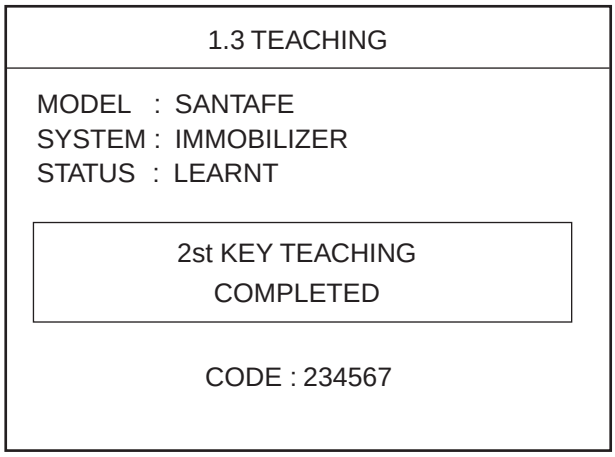

SCMBE6557L

2) PCM(ECM) virgin status.
After replacing new "PCM(ECM)" scantool displays that PCM(ECM) is virgin status in Key Teaching mode.
"VIRGIN" status means that PCM(ECM) has not matched any PIN code before.

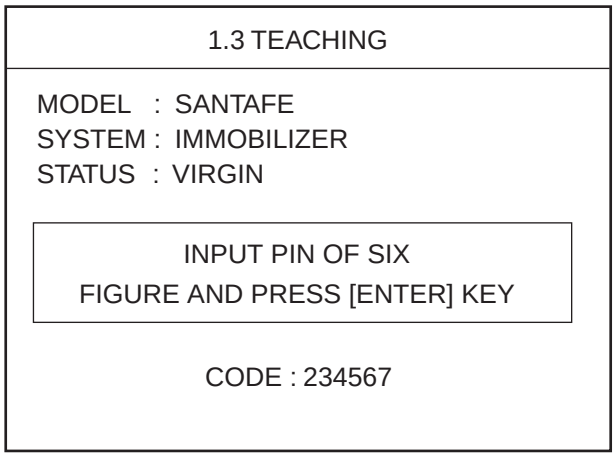

SCMBE6558L

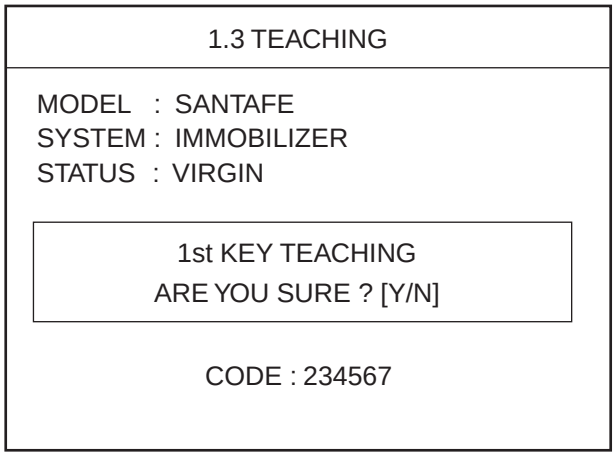

SCMBE6559L

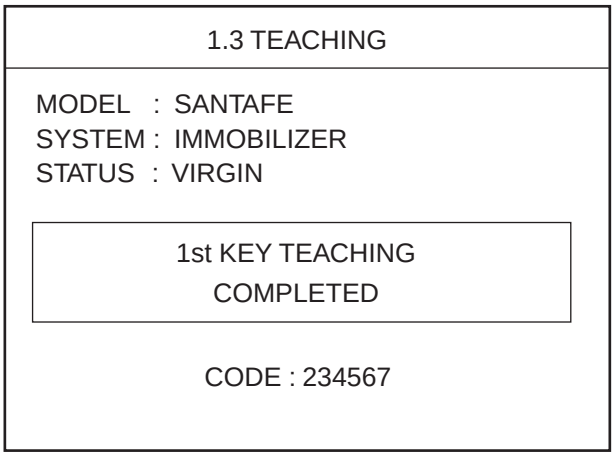

SCMBE6560L

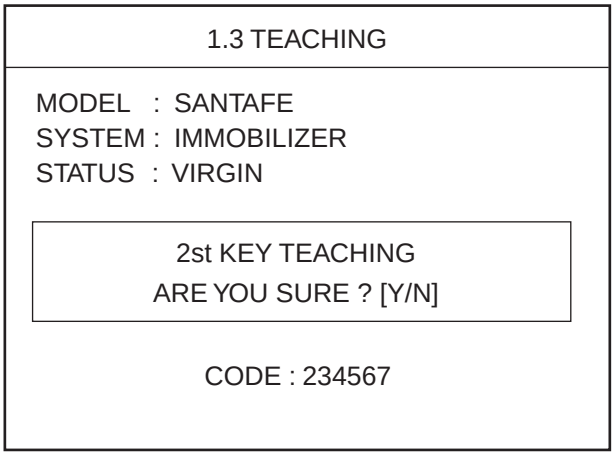

SCMBE6561L

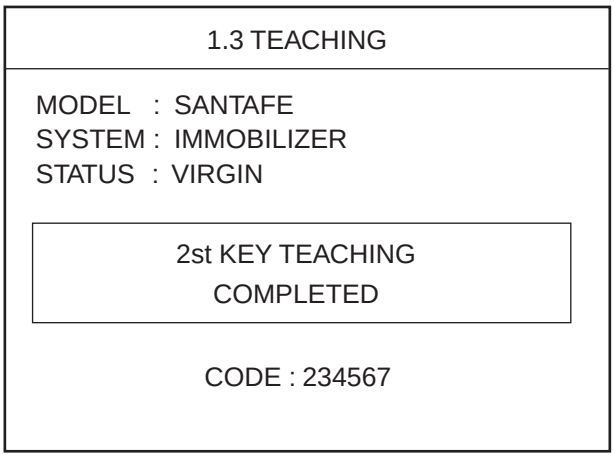

SCMBE6562L

2. User Password Teaching Procedure
The user password for limp home is taught at the service station. The owner of the vehicle can select a number with four digits.

User password teaching is only accepted by a "learnt" PCM(ECM). Before first teaching of user password to an PCM(ECM), the status of the password is "virgin" No limp home function is possible.

The teaching is started by ignition on, with a valid key and sending the user password by tester. After successful teaching, the status of the user password changes from "virgin" to "learnt"

The learnt user password can also be changed. This can be done if the user password status is "learnt" and the tester sends authorization of access, either the old user password or the vehicle specific data. After correct authorization, the PCM(ECM) requests the new user password. The status remains "learnt" and the new user password will be valid for the next limp home mode.

If incorrect user passwords or wrong vehicle specific data have been sent to the PCM(ECM) three times, the PCM(ECM) will reject the request to change the password for one hour. This time cannot be reduced by disconnecting the battery or any other actions. After reconnecting the battery, the timer starts again for one hour.

1) User password teaching

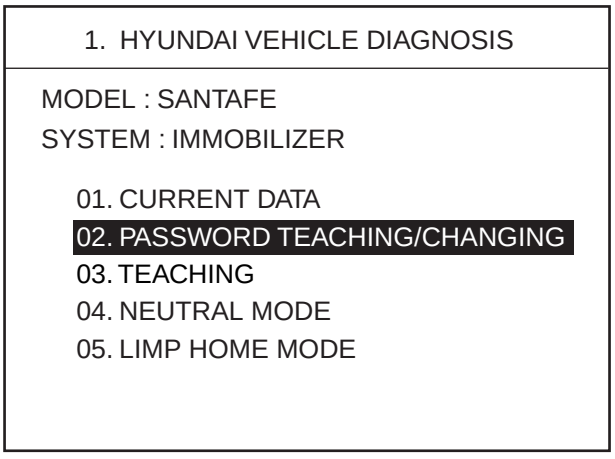

SCMBE6563L

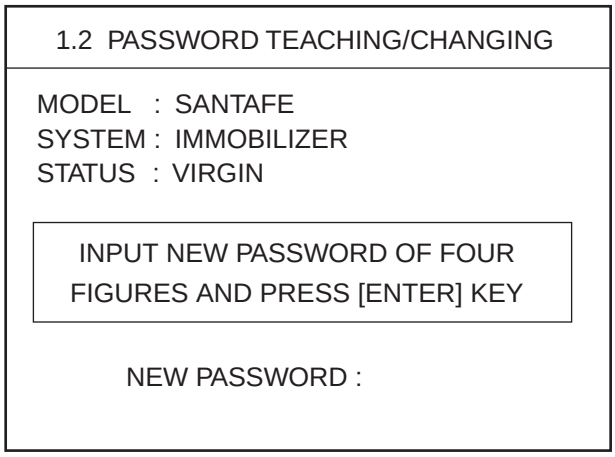

SCMBE6564L

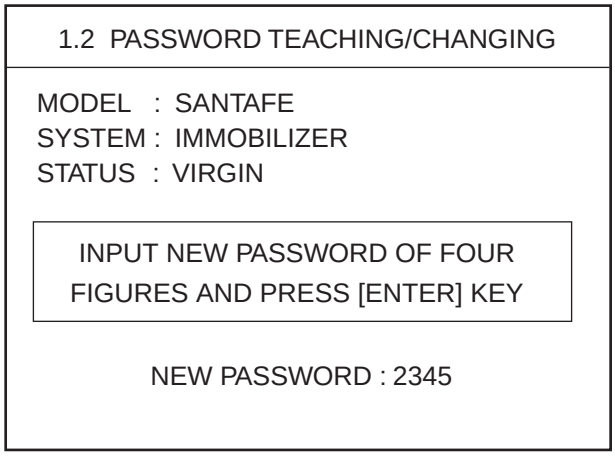

SCMBE6565L

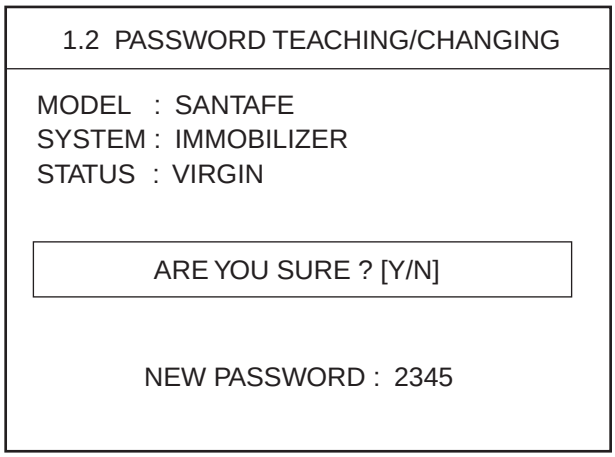

SCMBE6566L

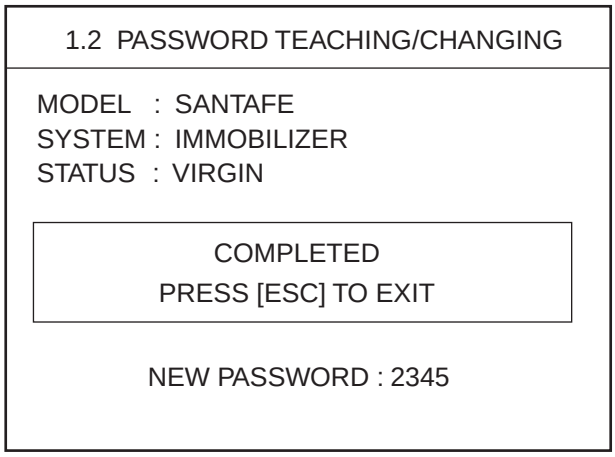

SCMBE6567L

※ In case of putting wrong password, retry from first step after 10 seconds.

2) User password changing

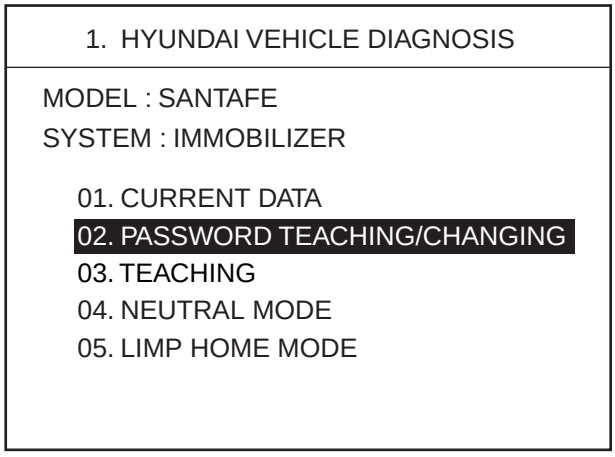

SCMBE6563L

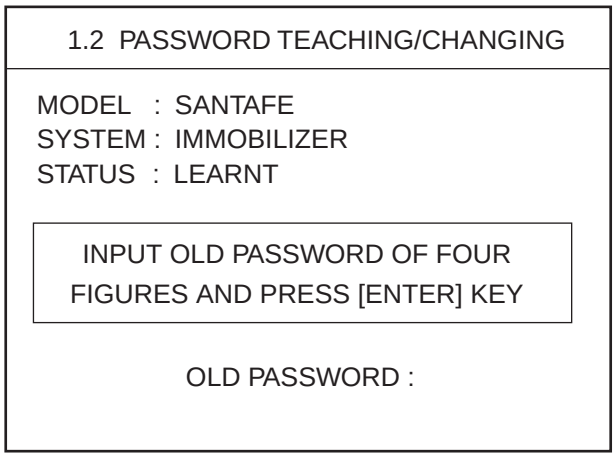

SCMBE6568L

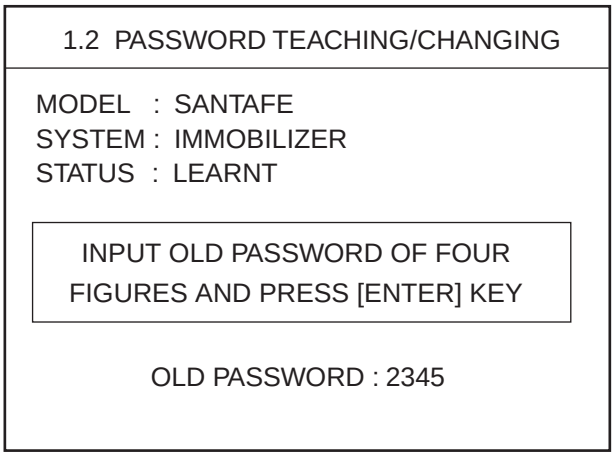

SCMBE6569L

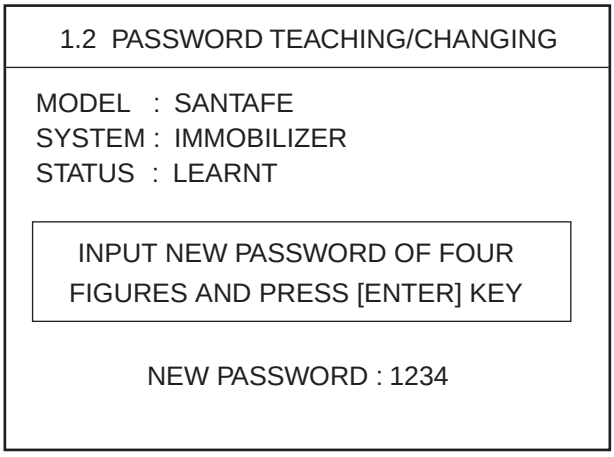

SCMBE6570L

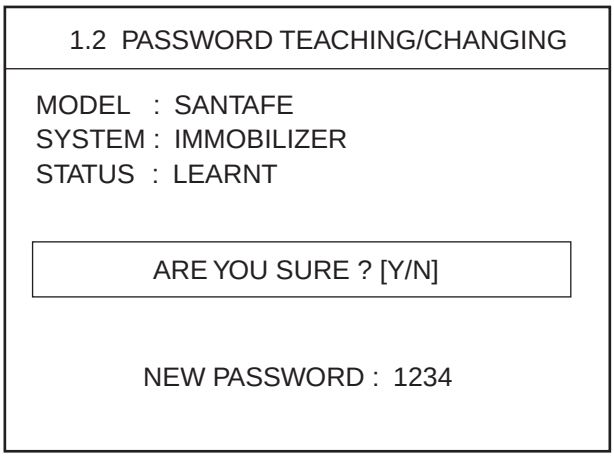

SCMBE6571L

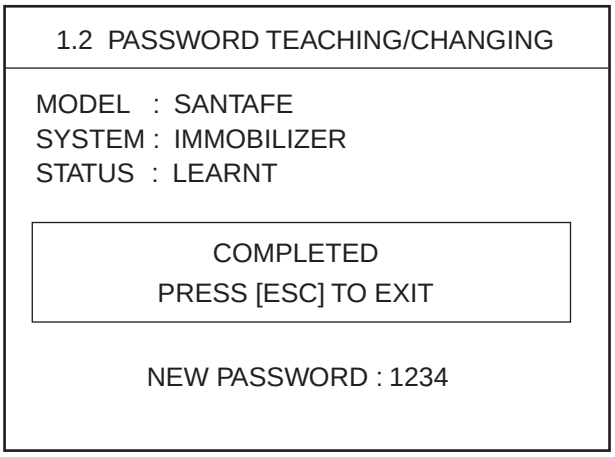

SCMBE6572L

REPLACEMENT EE2BB323

PROBLEMS AND REPLACEMENT PARTS:

Problem	Part set	Scan tool required?
All keys have been lost	Blank key (4)	YES
Antenna coil unit does not work	Antenna coil unit	NO
ECM does not work	PCM(ECM)	YES
Ignition switch does not work	Ignition switch with Antenna coil unit	YES
Unidentified vehicle specific data occurs	Key, PCM(ECM)	YES
SMARTRA unit does not work	SMARTRA unit	NO

REPLACEMENT OF ECM AND SMARTRA

In case of a defective ECM, the unit has to be replaced with a "virgin" or "neutral" ECM. All keys have to be taught to the new ECM. Keys, which are not taught to the ECM, are invalid for the new ECM (Refer to key teaching procedure). The vehicle specific data have to be left unchanged due to the unique programming of transponder.
In case of a defective SMARTRA, there is no special procedure required. A new SMARTRA device simply replaces the old one. There are no transponder-related data stored in this device.

1. Things to remember before a replacement (PCM(ECM))

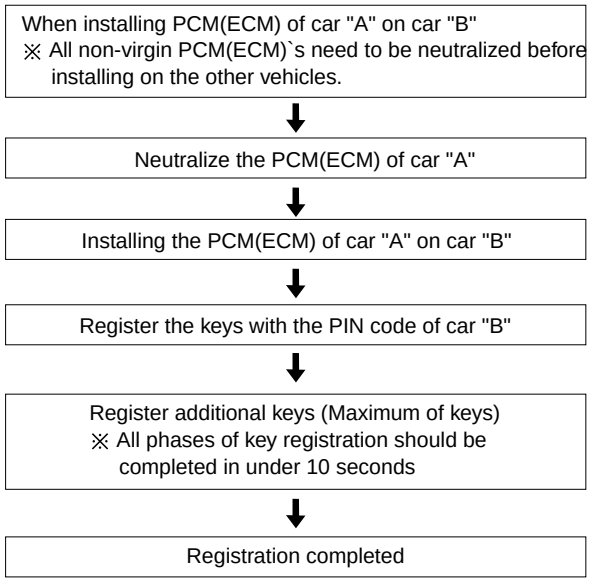

ETBF746A

2. Things to remember before a replacement (Keys & Additional registration)

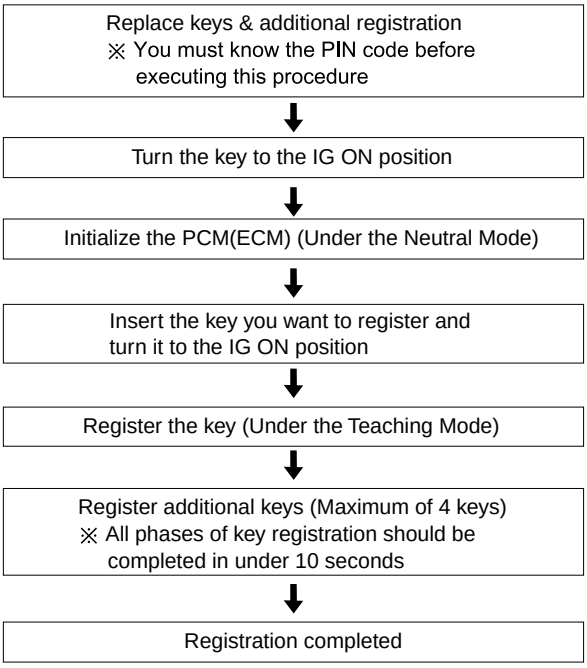

ETBF746B

NOTE

1. *When there is only one key registered and you wish to register another key, you need to re-register the key which was already registered.*
2. *When the key #1 is registered and master key #2 is not registered, Put the key #1 in the IG/ON or the start position and remove it. The engine can be started with the unregistered key #2. (Note that key #2 must be used within 10 seconds of removing key #1)*

3. *When the key #1 is registered and key #2 is not registered, put the unregistered master key #2 in the IG/ON or the start position.*
   The engine cannot be started even with the registered key #1.
4. *When you inspect the immobilizer system, refer to the above paragraphs 1, 2 and 3.*
   Always remember the 10 seconds zone.
5. *If the pin code & password are entered incorrectly on three consecutive inputs, the system will be locked for one hour.*
6. *Be cautious not to overlap the transponder areas.*
7. *Problems can occur at key registration or vehicle starting if the transponders should overlap.*

NEUTRALISING OF ECM

The PCM(ECM) can be set to the "neutral" status by a tester.

A valid ignition key is inserted and after ignition on is recorded, the PCM(ECM) requests the vehicle specific data from the tester. The communication messages are described at "Neutral Mode" After successfully receiving the data, the PCM(ECM) is neutralized.

The ECM remains locked. Neither the limp home mode nor the "twice ignition on" function, is accepted by the PCM(ECM).

The teaching of keys follows the procedure described for the virgin PCM(ECM). The vehicle specific data have to be unchanged due to the unique programming of the transponder. If data should be changed, new keys with a virgin transponder are requested.

This function is for neutralizing the PCM(ECM) and Key. Ex) when lost key, Neutralize the PCM(ECM) then teach keys.
(Refer to the Things to do when Key & PIN Code the PCM(ECM) can be set to the "neutral" status by a scanner. A valid ignition key is inserted and after ignition on is recorded, the PCM(ECM) requests the vehicle specific data from the scanner. The communication messages are described at" Neutral Mode". After successfully receiving the data, the PCM(ECM) is neutralized.
The PCM(ECM) remains locked. Neither the limp home mode nor the "twice ignition on" function is accepted by PCM(ECM).
The teaching of keys follows the procedure described for virgin PCM(ECM). The vehicle specific data have to be unchanged due to the unique programming of transponder. If data should be changed, new keys with virgin transponder are requested.

NOTE

- *Neutralizing setting condition*
  - *In case of PCM(ECM) status "Learnt" regardless of user password "Virgin or Learnt"*
  - *Input correct PIN code by scanner.*
  - *Neutralizing meaning .*
    : PIN code (6) & user password (4) deletion.
    : Locking of ECM (except key teaching permission)

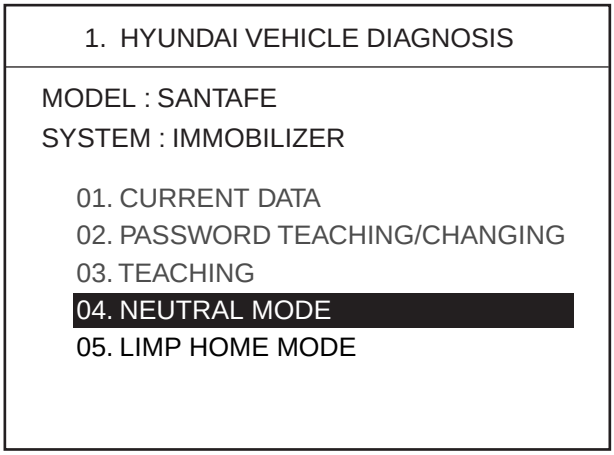

SCMBE6573L

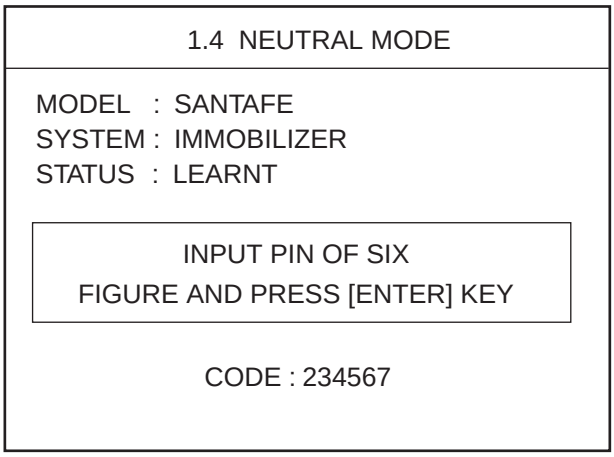

SCMBE6574L

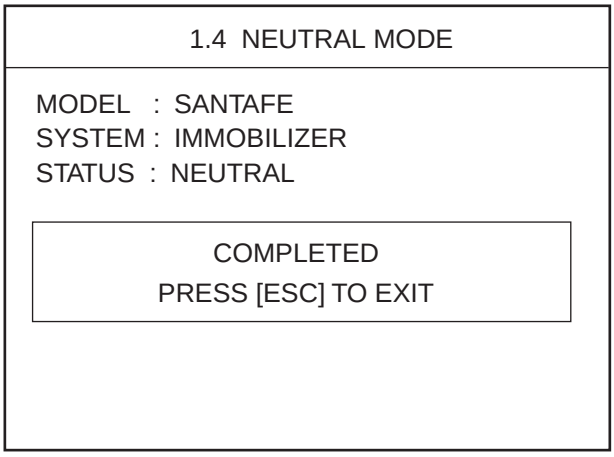

SCMBE6575L

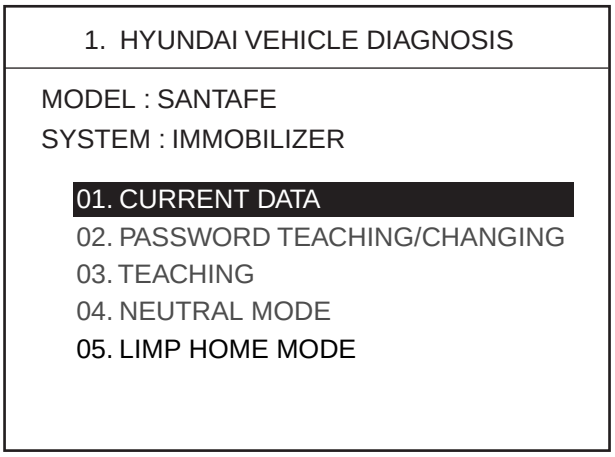

SCMBE6576L

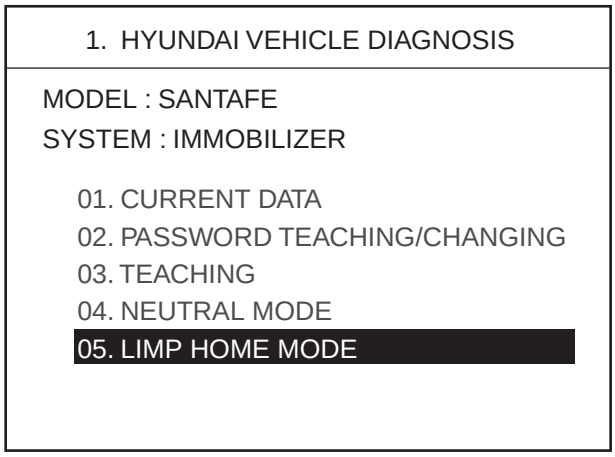

SCMBE6585L

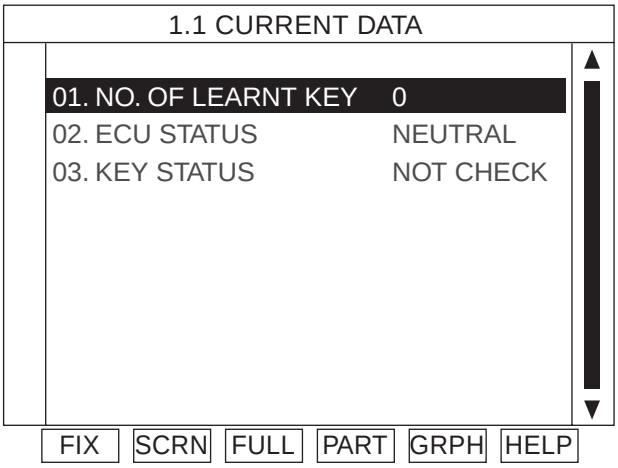

SCMBE6577L

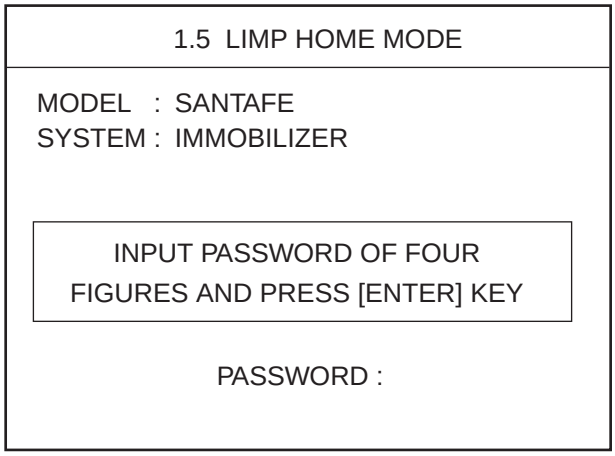

SCMBE6586L

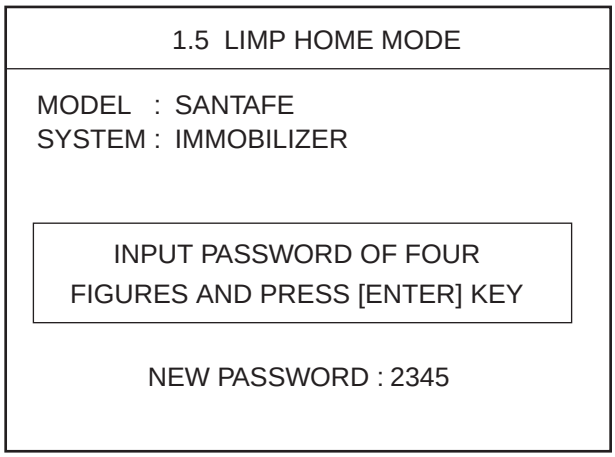

SCMBE6587L

LIMP HOME FUNCTION E6DD2F66

1. LIMP HOME BY TESTER
   If the PCM(ECM) detects the fault of the SMARTRA or transponder, the PCM(ECM) will allow limp home function of the immobilizer. Limp home is only possible if the user password (4 digits) has been given to the PCM(ECM) before. This password can be selected by the vehicle owner and is programmed at the service station.
   The user password can be sent to the PCM(ECM) via the special tester menu.
   Only if the PCM(ECM) is in status "learnt" and the user password status is "learnt" and the user password is correct, the PCM(ECM) will be unlocked for a period of time (30 sec.). The engine can only be started during this time. After the time has elapsed, engine start is not possible.
   If the wrong user password is sent, the PCM(ECM) will reject the request of limp home for one hour. Disconnecting the battery or any other action cannot reduce this time. After connecting the battery to the PCM(ECM), the timer starts again for one hour.

1.5 LIMP HOME MODE

MODEL : SANTAFE
SYSTEM : IMMOBILIZER

COMPLETED
PRESS [ESC] TO EXIT

SCMBE6588L

2. LIMP HOME BY IGNITION KEY

The limp home can be activated also by the ignition key. The user password can be input to the PCM(ECM) by a special sequence of ignition on/off. Only if the PCM(ECM) is in status "learnt" and the user password status is "learnt" and the user password is correct, the PCM(ECM) will be unlocked for a period of time (30 sec.). The engine can be started during this time. After the time has elapsed, engine start is not possible. After a new password has been input, the timer (30 sec.) will start again.

After ignition off, the PCM(ECM) is locked if the timer has elapsed 8 seconds. For the next start, the input of the user password is requested again.

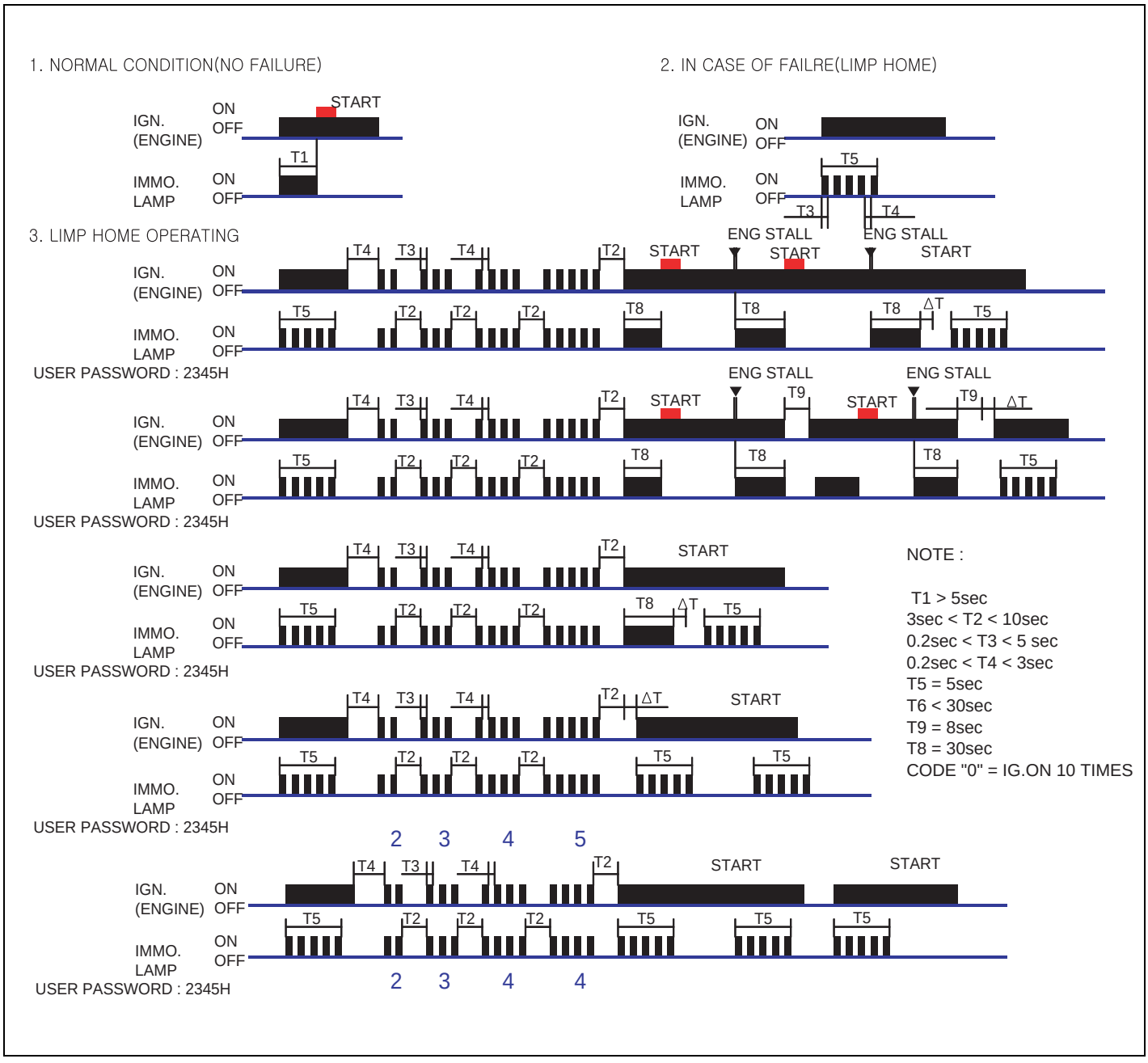

LTIF740N

DIAGNOSIS OF IMMOBILIZER FAULTS EBD7CB72

- Communication between the ECM and the SMARTRA.
- Function of the SMARTRA and the transponder.
- Data (stored in the ECM related to the immobilizer function.

The following table shows the assignment of immobilizer related faults to each type:

Immobilizer Related Faults	Fault types	Diagnostic codes
PCM(ECM) fault	1. Non-Immobilizer-EMS connected to an Immobilizer	P1610
Transponder key fault	1. Transponder not in password mode 2. Transponder transport data has been changed.	P1674 (Transponder status error)
Transponder key fault	1. Transponder programming error	P1675 (Transponder programming error)
SMARTRA fault	1. Invalid message from SMARTRA to PCM(ECM)	P1676 (SMARTRA message error)
SMARTRA fault	1. No response from SMARTRA 2. Antenna coil error 3. Communication line error (Open/Short etc.) 4. Invalid message from SMARTRA to PCM(ECM)	P1690 (SMARTRA no response)
Antenna coil fault	1. Antenna coil open/short circuit	P1691 (Antenna coil error)
Immobilizer indicator lamp fault	1. Immobilizer indicator lamp error (Cluster)	P1692 (Immobilizer lamp error)
Transponder key fault	1. Corrupted data from transponder 2. More than one transponder in the magnetic field (Antenna coil) 3. No transponder (Key without transponder) in the magnetic field (Antenna coil)	P1693 (Transponder no response error/invalid response)
PCM(ECM) fault	1. Request from PCM(ECM) is invalid (Protocol layer violation- Invalid request, check sum error etc.)	P1694 (PCM(ECM) message error)
PCM(ECM) internal permanent memory (EEPROM) fault	1. PCM(ECM) internal permanent memory (EEPROM) fault 2. Invalid write operation to permanent memory (EEPROM)	P1695 (PCM(ECM) memory error)
Invalid key fault	1. Virgin transponder at PCM(ECM) status "Learnt"Learnt (Invalid) Transponder at PCM(ECM) status "Learnt"(Authentication fail)	P1696 (Authentication fail)
Hi-Scan fault	1. Hi-Scan message error	P1697
Locked by timer	1. Exceeding the maximum limit of Twice IGN ON (⊇ 32 times)	P1699 (Twice IG ON over trial)

IMMOBILIZER (SMARTRA) DTC LIST

No.	Fault code	Monitor strategy description	Gasoline (µ-engine)	Diesel (D-engine)	Page
1	P1610	Non-Immobilizer-EMS connected to an immobilizer	-	O	BE - 246
2	P1674	Transponder status error	O	O	BE - 249
3	P1675	Transponder programming error	O	O	BE - 252
4	P1676	SMARTRA message error	O	O	BE - 255
5	P1690	SMARTRA no response	O	O	BE - 258
6	P1691	Antenna coil error	O	O	BE - 264
7	P1692	Immobilizer lamp error	O	O	BE - 267
8	P1693	Transponder no response error / Invalid response	O	O	BE - 272
9	P1694	EMS message error	O	O	BE - 274
10	P1695	EMS memory error	O	O	BE - 277
11	P1696	Authentication fail	O	O	BE - 280
12	P1697	HI-SCAN message error	O	-	BE - 282
13	P1699	Twice overtrial	O	O	BE - 284

DTC P1610 NON-IMMOBILIZER-EMS CONNECTED TO AN IMMOBILIZER

COMPONENT LOCATION ED81FEC6

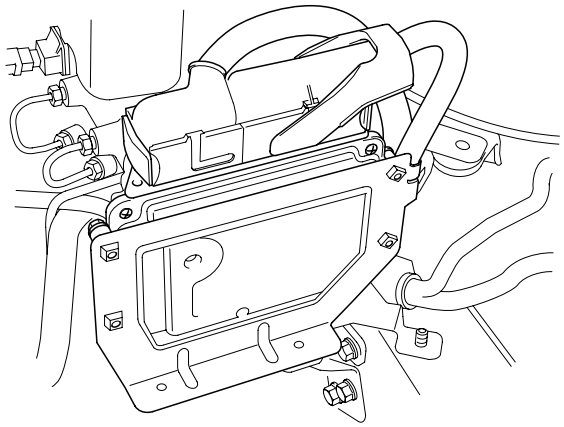

SCMBE6740D

GENERAL DESCRIPTION EF0ACABD

Immobilizer is device that prevents car from being thieved by reproduced key. Major components of immobilizer are ECM(Engine Control Module) and SMARTRA. Besides them, Immobilizer has transponder and coil antenna in it. If driver inserts key into key hole, SMARTRA gets tansponder signal by wireless communications via coil antenna and delivers it to ECM through K-line communication line. then ECM deciphers code in it. If inserted key has invalid transponder with incorrect code or doesn't have transponder in it, ECM judges that inserted key is reproduced key and prohibits engine starting.

DTC DESCRIPTION EAB57BBB

The ECM sets DTC P1610 if Non Immobilizer EMS is installed on vehicle equipped with Immobilizer.

DTC DETECTING CONDITION E5163E76

Item	Detecting Condition	Possible Cause
DTC Strategy		• Invalid ECM
Enable Conditions	• IG ON	
Threshold value		
Detecting time		
FAIL SAFE		

SCHEMATIC DIAGRAM E6C04908

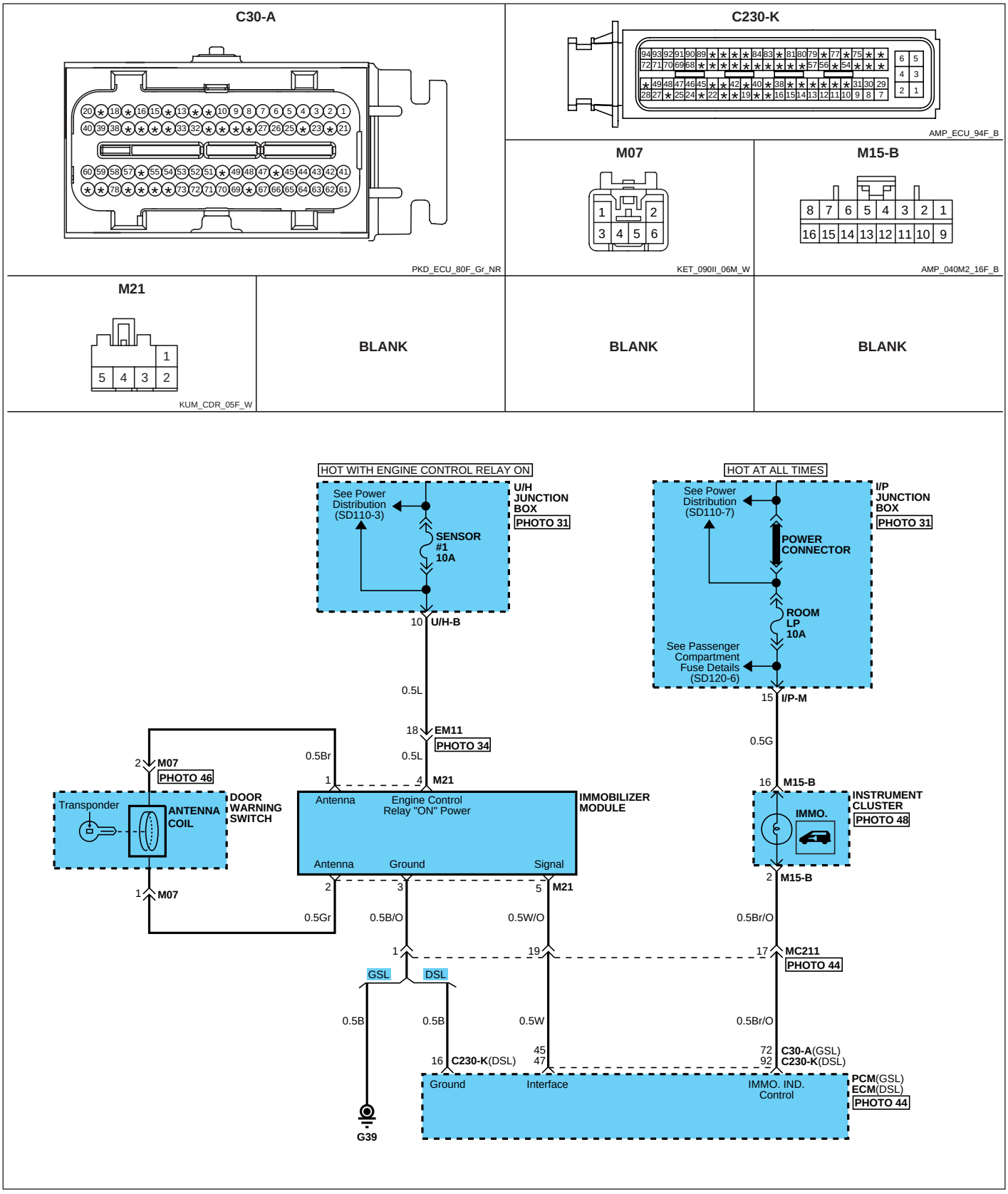

SCMBE6745L

MONITOR DTC STATUS E7FEF4DA

1. Connect scantool to Data Link Connector(DLC).
2. Ignition "ON" & engine "OFF".
3. Selet "Diagnostic Trouble Codes(DTCs)"mode and monitor "DTC Status" parameter
4. Is the DTC B1610 present?

YES

Substitute with a known-good ECM with immobilizer and check for proper operation.If the problem is corrected, replace ECU and then go to "Verification of Vehicle Repair" procedure.

NO

Fault is intermittent caused by poor contact in SMARTRA's and/or ECM's connector or was repaired and ECM memory was not cleared. Thoroughly check connectors for looseness, poor connection, bending, corrosion, contamination, deterioration, or damage. Repair or replace as necessary and then go to "Verification of Vehicle Repair" procedure.

VERIFICATION OF VEHICLE REPAIR E103EAA9

After a repair, it is essential to verify that the fault has been corrected.

1. Connect scantool and selet "Diagnostic Trouble Codes(DTCs)" mode and then clear DTC.
2. Operate the vehicle and monitor the DTC on the scantool.
3. Are any DTCs present?

YES

Go to the applicable troubleshooting procedure.

NO

System is performing to specification at this time.

DTC P1674 TRANSPONDER STATUS ERROR

COMPONENT LOCATION E16E69B2

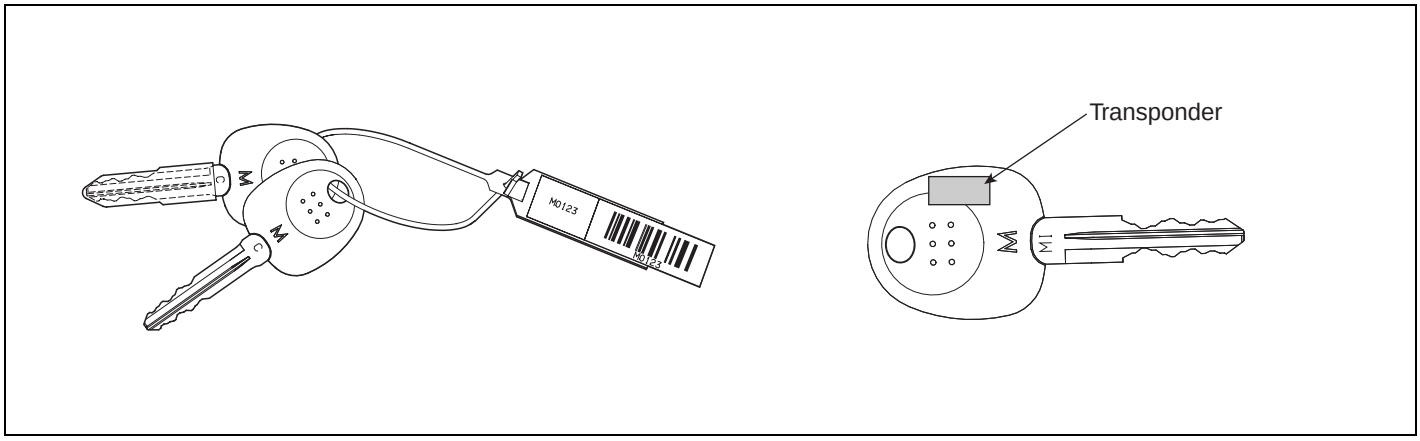

SCMBE6750L

GENERAL DESCRIPTION E41DDC6B

During the key teaching procedure the transponder will be programmed with vehicle specific data. The vehicle specific data are written into the transponder memory. The write procedure is unique; therefore the content of transponder can never be modified or changed. The data are a string of 9 bytes defined by vehicle manufacturer.
The transponder memory is split into two strings called authenticator and key password After this programming the transponder memory is locked and the data(PIN code) cannot be read or changed respectively. The transponder status changes from "virgin" to "learnt". Additionally every transponder includes a unique IDE (Identifier number) of 32 bit.
Unique means that the IDE of all transponder is different from each other. The IDE is programmed by the transponder manufacturer and is a read-only value. The authenticator and the key password are not transferred from ECM to transponder or vice versa. Only the results from the encryption algorithm are transferred. It is almost impossible to calculate the vehicle specific data from the encryption result.
For teaching of keys and special purposes the ECM is connected to the tester device.

When IG is ON, the coil supplies energy to the transponder which in turn accumulates energy in the condenser.
Once the energy supply from the coil has stopped, using the stored energy in the condenser, the transponder transmits the ID CODE (stored within the ASIC).

DTC DESCRIPTION E4CEBDC2

The ECM sets DTC P1674 if transponder key that can't be register(TP not in the password mode or whose transport data has been changed) is inserted for registration procedure.

DTC DETECTING CONDITION ED14DFB8

Item	Detecting Condition	Possible Cause
DTC Strategy		• Invalid transponder. ※ Key not in 'VIRGIN' Status or with invalid ID code
Enable Conditions	• IG ON (On Registering TP Procedure)	
Threshold value		
Detecting time		
FAIL SAFE		

SCHEMATIC DIAGRAM ECFBA039

Refer to DTC P1610.

MONITOR DTC STATUS EF4076FD

1. Connect scantool to Data Link Connector(DLC).
2. Ignition "ON" & engine "OFF".
3. Selet "Diagnostic Trouble Codes(DTCs)"mode and monitor "DTC Status" parameter
4. Is the DTC B1674 present?

YES

Go to "Inspection & Repair" procedure.

NO

Fault is intermittent caused by poor contact in SMARTRA's and/or ECM's connector or was repaired and ECM memory was not cleared. Thoroughly check connectors for looseness, poor connection, bending, corrosion, contamination, deterioration, or damage. Repair or replace as necessary and then go to "Verification of Vehicle Repair" procedure.

COMPONENT INSPECTION EBEBD049

1. Check transponder status

   1) IGN "ON" & Engine "OFF" with key intended to register.

   2) Monitor the "KEY STATUS" Parameter on the Scantool.

Specification : 'VIRGIN' or 'LEARNT'

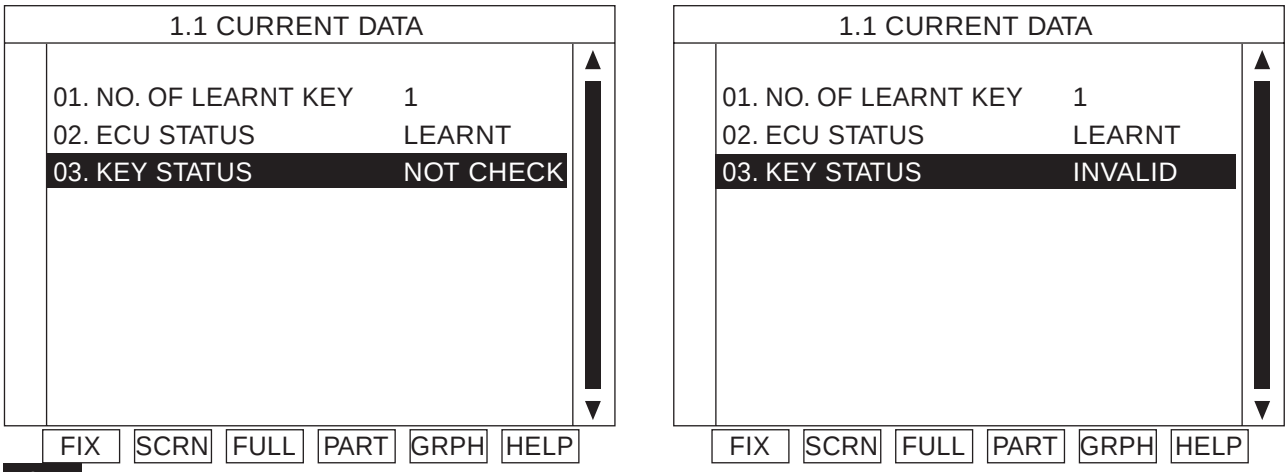

Fig 1

Fig 1) The current data in abnormal state

SCMBE6751L

   3) Is the measured voltage within specifications?

YES

Check connectors for looseness, poor connection, bending, corrosion, contamination, deterioration, or damage. Repair or replace as necessary and then go to "Verification of Vehicle Repair" procedure.

NO

Substitute with a known-good transponder and check for proper operation.
If the problem is corrected, replace transponder and then go to "Verification of Vehicle Repair" procedure.

VERIFICATION OF VEHICLE REPAIR EEC1748B

Refer to DTC P1610.

DTC P1675 TRANSPONDER PROGRAMMING ERROR

COMPONENT LOCATION E0EFE3BC

Refer to DTC P1674.

GENERAL DESCRIPTION EC6C260F

Refer to DTC P1674.

DTC DESCRIPTION EE5B821B

The ECM sets DTC P1675 if characteristic data of transponder doesn't coincide with that of ECM owing to transponder programming error.

DTC DETECTING CONDITION EF9A9CD1

Item	Detecting Condition	Possible Cause
DTC Strategy		• Invalid transponder. ※ Invalid characteristic data ※ No transponder or more than two transponder is detected by coil antenna.
Enable Conditions	• IG ON	
Threshold value		
Detecting time		
FAIL SAFE		

SCHEMATIC DIAGRAM E5A3794F

Refer to DTC P1610.

MONITOR DTC STATUS E9EAAB24

1. Connect scantool to Data Link Connector(DLC).
2. Ignition "ON" & engine "OFF".
3. Selet "Diagnostic Trouble Codes(DTCs)"mode and monitor "DTC Status" parameter
4. Is the DTC B1675 present?

YES

Go to "Inspection & Repair" procedure.

NO

Fault is intermittent caused by poor contact in SMARTRA's and/or ECM's connector or was repaired and ECM memory was not cleared. Thoroughly check connectors for looseness, poor connection, bending, corrosion, contamination, deterioration, or damage. Repair or replace as necessary and then go to "Verification of Vehicle Repair" procedure.

COMPONENT INSPECTION EDEB8AA9

1. Check transponder and ECU status

   1) IGN "ON" & Engine "OFF" with key intended to register.

   2) Monitor the "KEY STATUS" and "ECU STATUS' Parameter on the Scantool.

Specification : 'LEARNT'

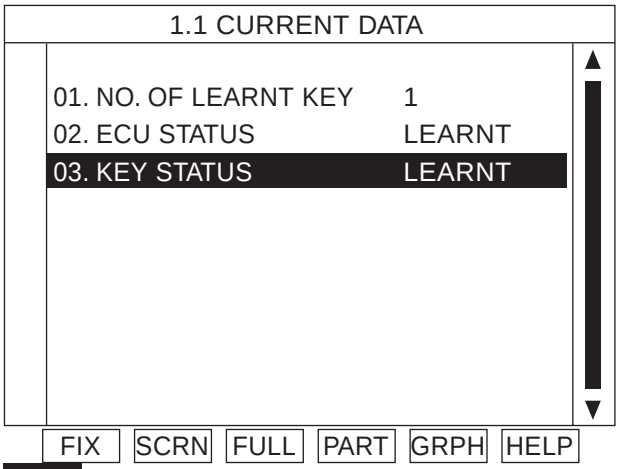

Fig 1

Fig 1) The current data in abnormal state

SCMBE6752L

   3) Is the measured voltage within specifications?

YES

Check connectors for looseness, poor connection, bending, corrosion, contamination, deterioration, or damage. Repair or replace as necessary and then go to "Verification of Vehicle Repair" procedure.

NO

Go to "Check transponder" procedure.

2. Check transponder

   1) IGN "ON" & Engine "OFF".

   2) Neutralize ECM and Register transponder key by scantool.

   NOTE

   Pin code is requied to Neutralize ECM and to Register transponder key.

   3) Are Neutralizing and Registering completed normally?

   YES

   Check connectors for looseness, poor connection, bending, corrosion, contamination, deterioration, or damage. Repair or replace as necessary and then go to "Verification of Vehicle Repair" procedure.

   NO

   Substitute with a known-good transponder and check for proper operation.
   If the problem is corrected, replace transponder and then go to "Verification of Vehicle Repair" procedure.

VERIFICATION OF VEHICLE REPAIR E43CAE2D

Refer to DTC P1610.

DTC P1676 SMARTRA MESSAGE ERROR

COMPONENT LOCATION EF6EAFEA

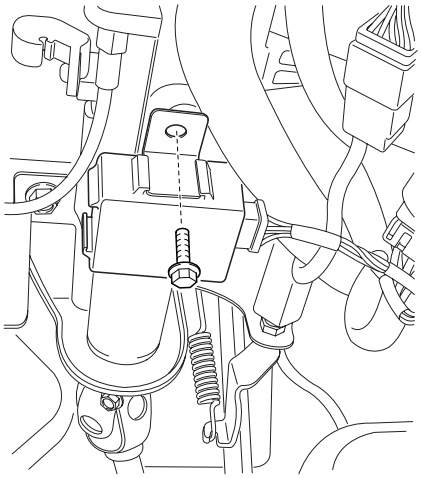

SCMBE6751D

GENERAL DESCRIPTION E53AFD8A

The SMARTRA carries out communication with the built-in transponder of the ignition key. This wireless communication runs on RF (Radio frequency of 125 kHz). The SMARTRA is mounted at the ignition lock close to the antenna coil for RF transmission and receiving. The RF signal from the transponder received by the antenna coil is converted into messages for serial communication by the SMARTRA device. And the received messages from the ECM are converted into an RF signal, which is transmitted to the transponder by the antenna. The SMARTRA does not carry out the validity check of transponder or the calculation of encryption algorithm. This device is only an advanced interface, which converts the RF data flow of the transponder into serial communication to ECM and vice versa.

* SMARTRA : SMARt TRansponder Antenna

DTC DESCRIPTION E50570B3

The ECM sets DTC P1676 if there's any fault in message from SMARTRA to ECU.

DTC DETECTING CONDITION E15FB4DC

Item	Detecting Condition	Possible Cause
DTC Strategy		• Faulty SMARTRA.
Enable Conditions	• IG ON	
Threshold value		
Detecting time		
FAIL SAFE		

SCHEMATIC DIAGRAM EECC953B

Refer to DTC P1610.

MONITOR DTC STATUS ED91CC1F

1. Connect scantool to Data Link Connector(DLC).
2. Ignition "ON" & engine "OFF".
3. Selet "Diagnostic Trouble Codes(DTCs)"mode and monitor "DTC Status" parameter
4. Is the DTC B1676 present?

YES

Go to "Inspection & Repair" procedure.

NO

Fault is intermittent caused by poor contact in SMARTRA's and/or ECM's connector or was repaired and ECM memory was not cleared. Thoroughly check connectors for looseness, poor connection, bending, corrosion, contamination, deterioration, or damage. Repair or replace as necessary and then go to "Verification of Vehicle Repair" procedure.

COMPONENT INSPECTION E1B0DDCA

1. Check transponder and ECU status
   1) IGN "ON" & Engine "OFF" with key intended to register.
   2) Monitor the "KEY STATUS" and "ECU STATUS' Parameter on the Scantool.

Specification : 'LEARNT'

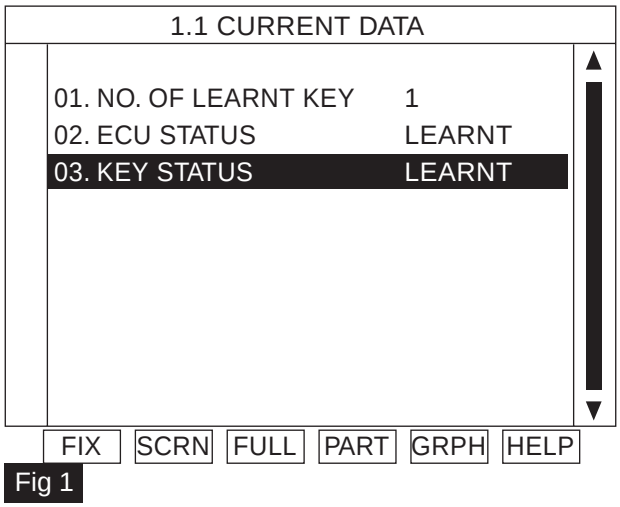

Fig 1

Fig 1) The current data in abnormal state

SCMBE6752L

3) Are "KEY STATUS" and "ECU STATUS' Parameter within specifications?

YES

Check connectors for looseness, poor connection, bending, corrosion, contamination, deterioration, or damage. Repair or replace as necessary and then go to "Verification of Vehicle Repair" procedure.

NO

Go to "Check SMARTRA" procedure.

2. Check SMARTRA

1) IGN "ON" & Engine "OFF".

2) Neutralize ECM and Register transponder key by scantool.

NOTE

Pin code is requied to Neutralize ECM and to Register transponder key.

3) Are Neutralizing and Registering completed normally?

YES

Check connectors for looseness, poor connection, bending, corrosion, contamination, deterioration, or damage. Repair or replace as necessary and then go to "Verification of Vehicle Repair" procedure.

NO

Substitute with a known-good SMARTRA and check for proper operation.
If the problem is corrected, replace SMARTRA and then go to "Verification of Vehicle Repair" procedure.

VERIFICATION OF VEHICLE REPAIR EBECB467

Refer to DTC P1610.

DTC P1690 SMARTRA NO RESPONSE

COMPONENT LOCATION EEACF1AF

Refer to DTC P1676.

GENERAL DESCRIPTION EDCA78B8

Refer to DTC P1676.

DTC DESCRIPTION E4711F56

The ECM sets DTC P1690 if there's No Response from SMARTRA.

DTC DETECTING CONDITION E7DB0663

Item	Detecting Condition	Possible Cause
DTC Strategy		• Open Circuit in signal harness • Short Circuit in signal harness • Faulty SMARTRA
Enable Conditions	• IG ON	
Threshold value		
Detecting time		
FAIL SAFE		

SCHEMATIC DIAGRAM E0B1A7CE

Refer to DTC P1610.

MONITOR DTC STATUS E3782FEB

1. Connect scantool to Data Link Connector(DLC).
2. Ignition "ON" & engine "OFF".
3. Monitor the "KEY STATUS" and "ECU STATUS' Parameter on the Scantool.

Specification : 'LEARNT'

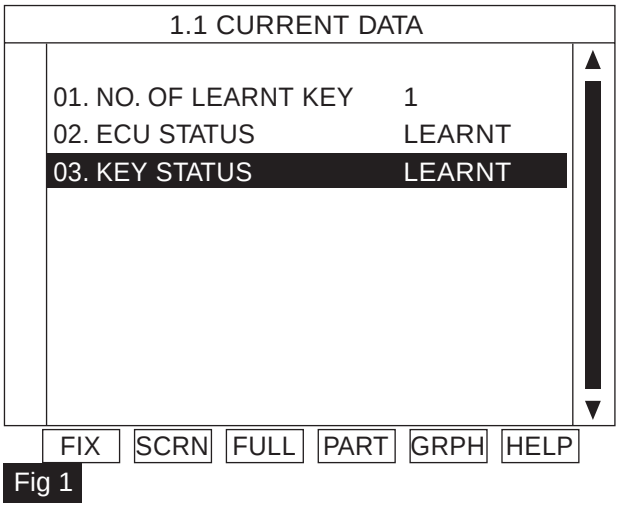

Fig 1

Fig 1) The current data in abnormal state

SCMBE6752L

4. Are "KEY STATUS" and "ECU STATUS' Parameter within specifications?

YES

Check connectors for looseness, poor connection, bending, corrosion, contamination, deterioration, or damage. Repair or replace as necessary and then go to "Verification of Vehicle Repair" procedure.

NO

Go to "Inspection & Repair" procedure.

TERMINAL AND CONNECTOR INSPECTION E8C1BDAD

1. Many malfunctions in the electrical system are caused by poor harness and terminals.
   Faults can also be caused by interference from other electrical systems, and mechanical or chemical damage.
2. Thoroughly check connectors for looseness, poor connection, bending, corrosion, contamination, deterioration, or damage.
3. Has a problem been found?

YES

Repair as necessary and go to "Verification Vehicle Repair" procedure.

NO

Go to "W/Harness Inspection" procedure .

POWER SUPPLY CIRCUIT INSPECTION E22B148E

1. Check for open in harness

   1) Ignition "OFF"

   2) Disconnect SMARTRA.

   3) Ignition "ON" & Engine "OFF"

   4) Measure voltage value between terminal "4" of SMARTRA and chassis ground.

Specification : 9~16V

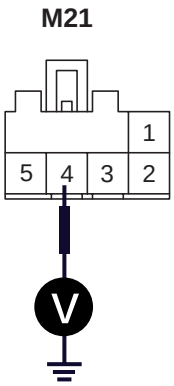

1. Coil antenna
2. Coil antenna
3. Ground
4. Power
5. Signal

SCMBE6753L

   5) Is the measured voltage within specifications?

YES

Go to "Signal circuit Inspection" procedure

NO

Check for open or short in harness. Repair as necessary and go to "Verification of Vehicle Repair" procedure.

SIGNAL CIRCUIT INSPECTION E7935D7A

1. Check for open in harness

   1) Ignition "OFF"

   2) Disconnect SMARTRA.

   3) Measure resistance between terminal "5" of SMARTRA and terminal C30-A-45(Gasoline) or C230-K-47(Diesel)

Specification : 1 Ω or less

[Gasoline]

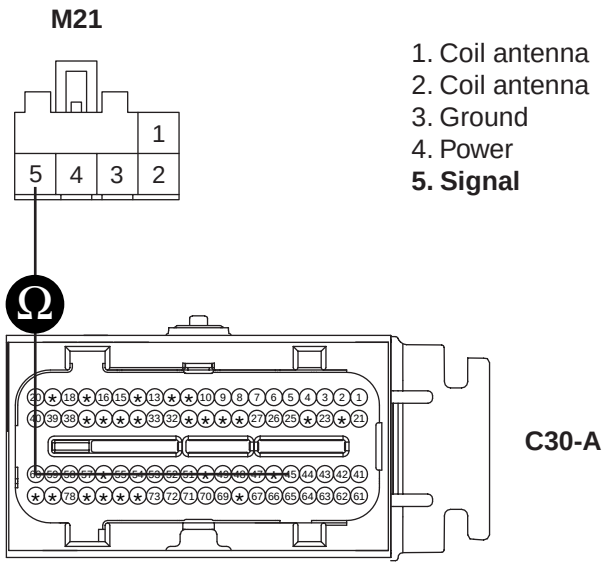

1. Coil antenna
2. Coil antenna
3. Ground
4. Power
5. Signal

SCMBE6754L

[Diesel]

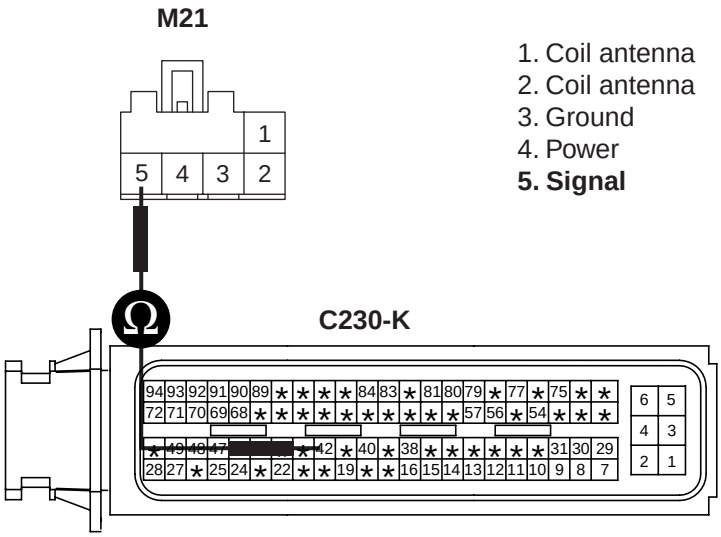

1. Coil antenna
2. Coil antenna
3. Ground
4. Power
5. Signal

SCMBE6755L

4) Is the measured resistance within specifications?

YES

Go to "Check for short in harness" procedure.

NO

Check for open in harness. Repair as necessary and go to "Verification of Vehicle Repair" procedure.

2. Check for short in harness

1) Ignition "OFF"

2) Disconnect SMARTRA.

3) Ignition "ON" & Engine "OFF"

4) Measure voltage value between terminal "5" of SMARTRA and chassis ground.

Specification :Approx. 5.48V

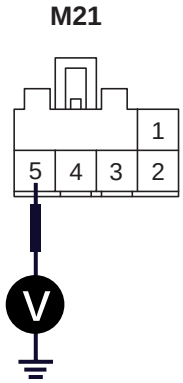

1. Coil antenna
2. Coil antenna
3. Ground
4. Power
5. Signal

SCMBE6756L

5) Is the measured voltage within specifications?

YES

Go to "Signal circuit Inspection" procedure

NO

Check for short in harness. Repair as necessary and go to "Verification of Vehicle Repair" procedure.

GROUND CIRCUIT INSPECTION ECBB382A

1. Check for open in ground harness

   1) Ignition "OFF"

   2) Disconnect SMARTRA.

   3) Measure resistance between terminal "3" of SMARTRA and chassis ground.

Specification : 1 Ω or less

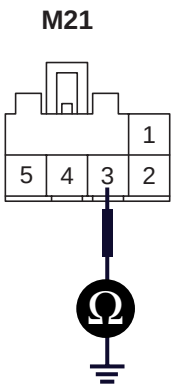

1. Coil antenna
2. Coil antenna
3. Ground
4. Power
5. Signal

SCMBE6757L

   4) Is the measured resistance within specifications?

YES

Check connectors for looseness, poor connection, bending, corrosion, contamination, deterioration, or damage. Repair or replace as necessary and then go to "Verification of Vehicle Repair" procedure.

NO

Check for open in harness. Repair as necessary and go to "Verification of Vehicle Repair" procedure.

VERIFICATION OF VEHICLE REPAIR ED2C8346

Refer to DTC P1610.

DTC P1691 ANTENNA COIL ERROR

COMPONENT LOCATION EBEC2385

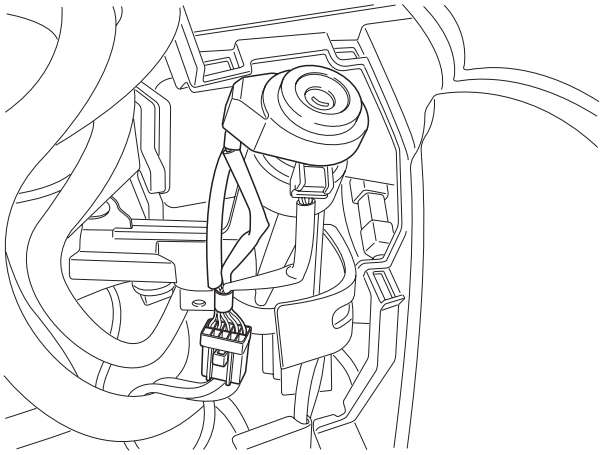

SCMBE6752D

GENERAL DESCRIPTION E0D9D74B

This wireless communication runs on RF (Radio frequency of 125 kHz). The SMARTRA is mounted at the ignition lock close to the antenna coil for RF transmission and receiving. The RF signal from the transponder received by the antenna coil is converted into messages for serial communication by the SMARTRA device. And the received messages from the EMS are converted into an RF signal, which is transmitted, to the transponder by the antenna.

DTC DESCRIPTION E58B7CDE

The ECM sets DTC P1691 if there's any fault in immobilizer antenna coil.

DTC DETECTING CONDITION EDA9BF49

Item	Detecting Condition	Possible Cause
DTC Strategy		• Open Circuit in antenna coil • Short Circuit in antenna coil • Faulty antenna coil
Enable Conditions	• IG ON (On Registering TP Procedure)	
Threshold value		
Detecting time		
FAIL SAFE		

SCHEMATIC DIAGRAM ECB64C26

Refer to DTC P1610.

MONITOR DTC STATUS EF7F0BA8

1. Connect scantool to Data Link Connector(DLC).
2. Ignition "ON" & engine "OFF".
3. Monitor the "KEY STATUS" and "ECU STATUS' Parameter on the Scantool.

Specification : 'LEARNT'

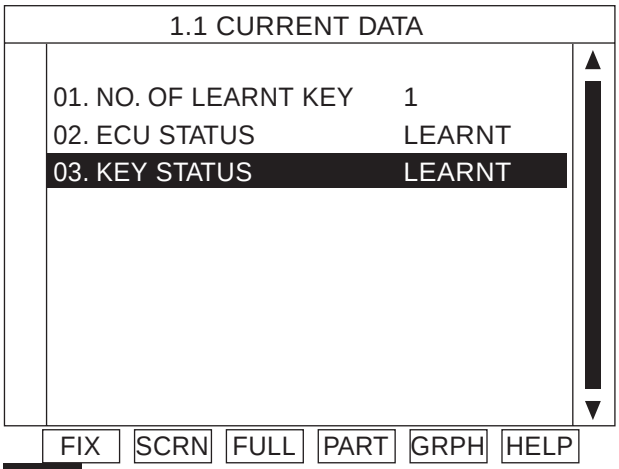

Fig 1

Fig 1) The current data in abnormal state

SCMBE6752L

4. Are "KEY STATUS" and "ECU STATUS' Parameter within specifications?

YES

Check connectors for looseness, poor connection, bending, corrosion, contamination, deterioration, or damage. Repair or replace as necessary and then go to "Verification of Vehicle Repair" procedure.

NO

Go to "Inspection & Repair" procedure.

COMPONENT INSPECTION EA4EFBB4

1. Check coil antenna
   1) Ignition "OFF"
   2) Disconnect SMARTRA.

3) Measure resistance between terminal "1" and "2" of SMARTRA.

Specification : Approx 8.5 Ω

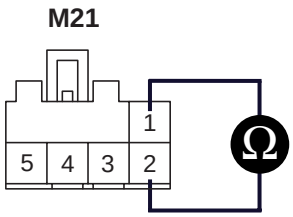

1. Coil antenna
2. Coil antenna
3. Ground
4. Power
5. Signal

SCMBE6758L

4) Is the measured resistance within specifications?

YES

Go to "Check SMARTRA" procedure.

NO

Check for open or short in antenna coil. Repair as necessary and go to "Verification of Vehicle Repair" procedure.

2. Check SMARTRA

1) IGN "ON" & Engine "OFF"

2) Neutralize ECM and Register transponder key by scantool.

NOTE

Pin code is requied to Neutralize ECM and to Register transponder key

3) Are Neutralizing and Registering completed normally?

YES

Check connectors for looseness, poor connection, bending, corrosion, contamination, deterioration, or damage. Repair or replace as necessary and then go to "Verification of Vehicle Repair" procedure.

NO

Substitute with a known-good SMARTRA and check for proper operation.
If the problem is corrected, replace SMARTRA and then go to "Verification of Vehicle Repair" procedure.

VERIFICATION OF VEHICLE REPAIR ED99DEFE

Refer to DTC P1610.

DTC P1692 IMMOBILIZER LAMP ERROR

COMPONENT LOCATION E7FCA69D

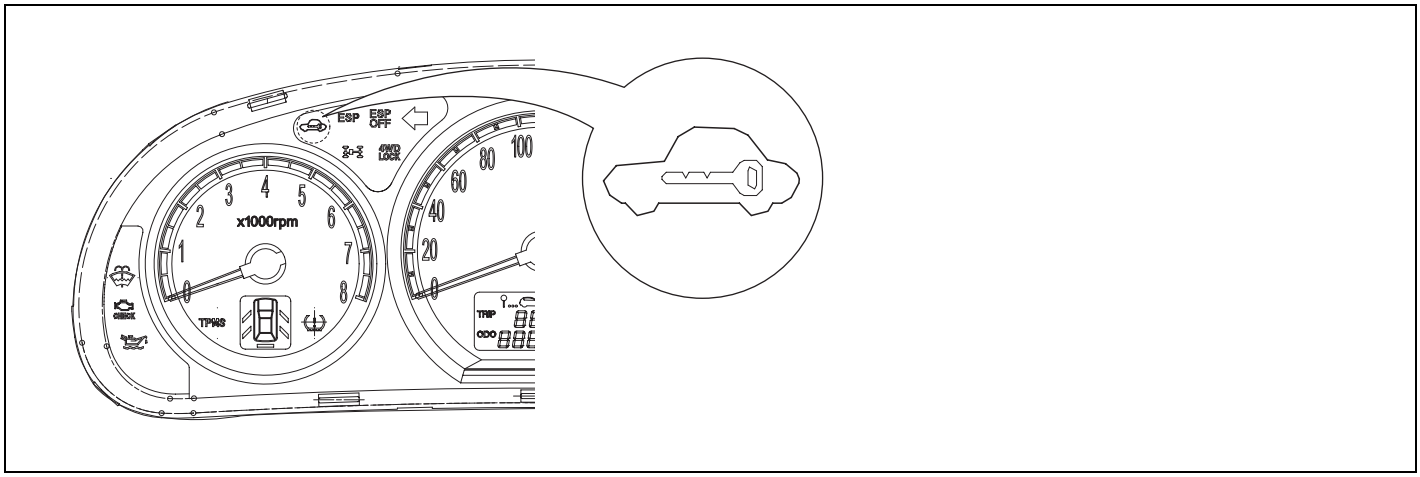

SCMBE6753D

GENERAL DESCRIPTION EC85AA6F

When driver inserts key and IGN "ON", Immobilizer informs status of system and result of Authentication by blinking of immobilizer lamp on instrument cluster. through Authentication procedure immobilizer lamp keep lighting up till engine starts. In normal status. Immobilizer lamp lights up for 30sec Right after ignition "ON". If there's any fault in immobilizer system or in Authentication, lamp blinks 5 times after ignition "ON".

DTC DESCRIPTION ECAAA0D9

The ECM sets DTC P1692 if there's short circuit in immobilizer lamp circuit.

DTC DETECTING CONDITION E9ED3A55

Item	Detecting Condition	Possible Cause
DTC Strategy		• Short Circuit in immobilizer lamp circuit. • Open/Short in control harness • Faulty ECM
Enable Conditions	• IG ON (On Registering TP Procedure)	
Threshold value		
Detecting time		
FAIL SAFE		

SCHEMATIC DIAGRAM ED209A72

Refer to DTC P1610.

MONITOR DTC STATUS E3AF39B2

1. Connect scantool to Data Link Connector(DLC).
2. Ignition "ON" & engine "OFF".
3. Selet "Diagnostic Trouble Codes(DTCs)"mode and monitor "DTC Status" parameter
4. Is the DTC B1692 present?

YES

Go to "Inspection & Repair" procedure

NO

Fault is intermittent caused by poor contact in SMARTRA's and/or ECM's connector or was repaired and ECM memory was not cleared. Thoroughly check connectors for looseness, poor connection, bending, corrosion, contamination, deterioration, or damage. Repair or replace as necessary and then go to "Verification of Vehicle Repair" procedure.

TERMINAL AND CONNECTOR INSPECTION E5C9AE07

1. Many malfunctions in the electrical system are caused by poor harness and terminals.
   Faults can also be caused by interference from other electrical systems, and mechanical or chemical damage.
2. Thoroughly check connectors for looseness, poor connection, bending, corrosion, contamination, deterioration, or damage.
3. Has a problem been found?

YES

Repair as necessary and go to "Verification Vehicle Repair" procedure

NO

Go to "W/Harness Inspection" procedure

CONTROL CIRCUIT INSPECTION E3C85BF4

1. Check for open in harness

   1) Ignition "OFF"

   2) Disconnect SMARTRA.

   3) Ignition "ON" & Engine "OFF"

   4) Measure voltage value between terminal C30-A-72(Gasoline) or C230-K-92 (Diesel) and chassis ground.

Specification : Approx. 11V

[Gasoline]

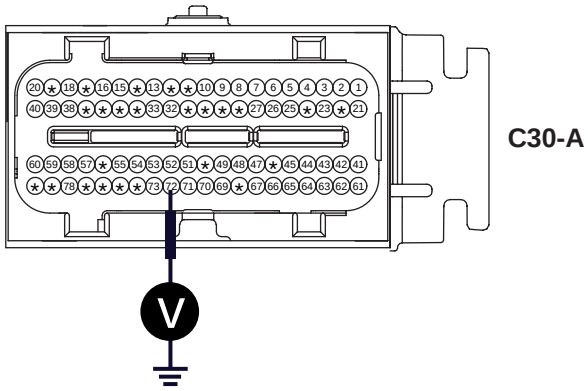

SCMBE6760L

[Diesel]

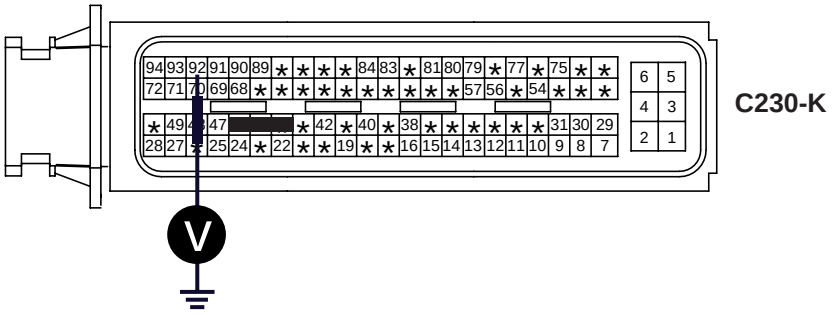

SCMBE6761L

   5) Is the measured voltage within specifications?

YES

Go to "Component Inspection" procedure

NO

Check for open or short in harness. Repair as necessary and go to "Verification of Vehicle Repair" procedure.

VISUAL / PHYSICAL INSPECTION EEAF1EB8

1. Check immobilizer lamp circuit.

   1) Ignition "ON" & Engine "OFF"

   2) Check if immobilizer lamp operates properly.

   NOTE

   Right after ignition "ON", Immobilizer lamp lights up for 30sec.
   If lamp blinks 5 times after ignition "ON", there's any fault in immobilizer system.

   3) Is immobilizer lamp operates properly?

   YES

   Check connectors for looseness, poor connection, bending, corrosion, contamination, deterioration, or damage. Repair or replace as necessary and then go to "Verification of Vehicle Repair" procedure.

   NO

   Go to "Component Inspection" procedure

COMPONENT INSPECTION E7BFBE87

1. Check immobilizer lamp.

   1) Ignition "OFF"

   2) Disconnect ECM.

   3) Ground terminal "B2" of immobilizer lamp.

   4) Ignition "ON" and Monitor operation of immobilizer lamp.

Specification : Immobilizer lamp "ON"

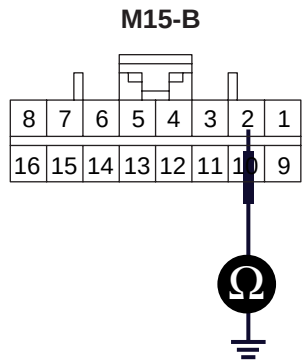

SCMBE6762L

5) Is the Immobilizer lamp "ON"?

YES

Substitute with a known-good ECM and check for proper operation.
If the problem is corrected, replace ECM and then go to "Verification of Vehicle Repair" procedure.

NOTE

ECM substitued for old one must be in "Virgin" or "Neutral" status and Pin code is requied to Neutralize ECM and to Register transponder key

NO

Check connectors for looseness, poor connection, bending, corrosion, contamination, deterioration, or damage.
Repair or replace as necessary and then go to "Verification of Vehicle Repair" procedure.

VERIFICATION OF VEHICLE REPAIR ED89A5A6

Refer to DTC P1610.

DTC P1693 TRANSPONDER NO RESPONSE ERROR / INVALID RESPONSE

COMPONENT LOCATION E6B0B3ED

Refer to DTC P1674.

GENERAL DESCRIPTION EACC3444

Refer to DTC P1674.

DTC DESCRIPTION ED9200AA

The ECM sets DTC P1693 if there's abnormal response from transponder.

DTC DETECTING CONDITION EA03F4ED

Item	Detecting Condition	Possible Cause
DTC Strategy		• Corrupted data from Transponder • More than one TP in the magnetic field • No TP(Key without TP) in the magnetic field
Enable Conditions	• IG ON	
Threshold value		
Detecting time		
FAIL SAFE		

SCHEMATIC DIAGRAM E8525FE3

Refer to DTC P1610.

COMPONENT INSPECTION EA082EB6

1. Check transponder and ECU status

   1) IGN "ON" & Engine "OFF"

   2) Monitor the "KEY STATUS" and "ECU STATUS' Parameter on the Scantool.

Specification : 'LEARNT'

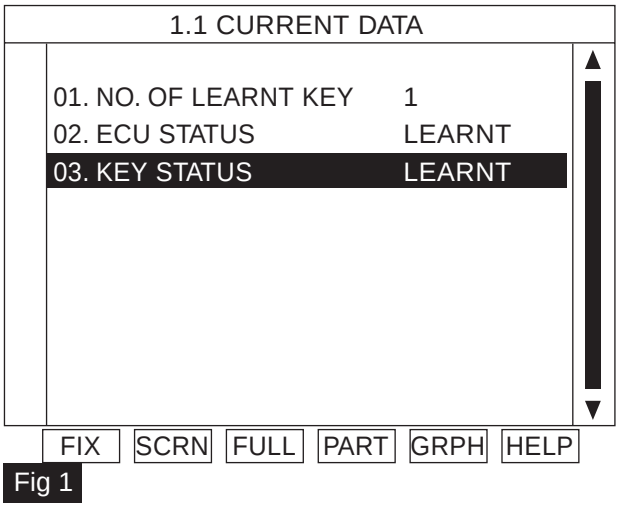

Fig 1) The current data in abnormal state

SCMBE6752L

3) Are "KEY STATUS" and "ECU STATUS' Parameter within specifications?

YES

Check connectors for looseness, poor connection, bending, corrosion, contamination, deterioration, or damage. Repair or replace as necessary and then go to "Verification of Vehicle Repair" procedure.

NO

Go to "Check transponder" procedure.

2. Check transponder

1) IGN "ON" & Engine "OFF"

2) Neutralize ECM and Register transponder key by scantool.

NOTE

Pin code is requied to Neutralize ECM and to Register transponder key

3) Are Neutralizing and Registering completed normally?

YES

Check connectors for looseness, poor connection, bending, corrosion, contamination, deterioration, or damage. Repair or replace as necessary and then go to "Verification of Vehicle Repair" procedure.

NO

Substitute with a known-good transponder and check for proper operation.
If the problem is corrected, replace transponder and then go to "Verification of Vehicle Repair" procedure.

VERIFICATION OF VEHICLE REPAIR EBB1DD15

Refer to DTC P1610.

DTC P1694 EMS MESSAGE ERROR

COMPONENT LOCATION E7BFF80B

Refer to DTC P1610.

GENERAL DESCRIPTION EBA74F6C

The ECM and the SMARTRA communicate by dedicated line. During this communication of ECM and SMARTRA the K line of ECM cannot be used for communication. The ECM controls the communication either to SMARTRA or to other devices(e.g. scanner) on K line by switching of a multiplexer and specific communication procedures. The multiplexer is a part of ECM H/W.

DTC DESCRIPTION E3EB4038

The ECM sets DTC P1694 if Request from EMS is invalid.

DTC DETECTING CONDITION E3C9689B

Item	Detecting Condition	Possible Cause
DTC Strategy		• Faulty EMS ※ Protocol layer violation - Invalid request - Check sum error
Enable Conditions	• IG ON	
Threshold value		
Detecting time		
FAIL SAFE		

SCHEMATIC DIAGRAM E5FDAEE2

Refer to DTC P1610.

COMPONENT INSPECTION EC87BCB0

1. Check transponder and ECU status

   1) IGN "ON" & Engine "OFF"

   2) Monitor the "KEY STATUS" and "ECU STATUS' Parameter on the Scantool.

Specification : 'LEARNT'

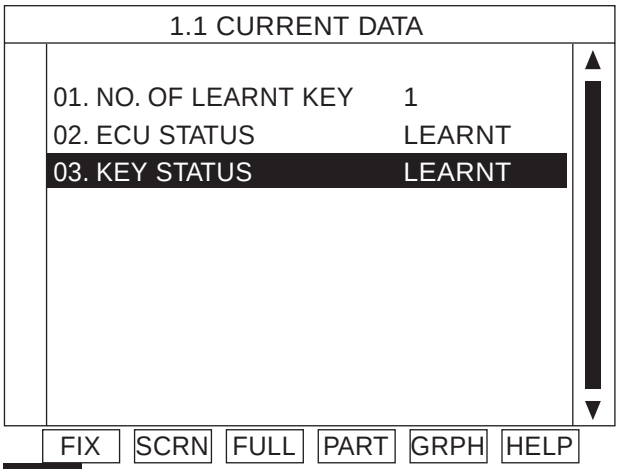

Fig 1

Fig 1) The current data in abnormal state

SCMBE6752L

   3) Are "KEY STATUS" and "ECU STATUS' Parameter within specifications?

YES

Check connectors for looseness, poor connection, bending, corrosion, contamination, deterioration, or damage. Repair or replace as necessary and then go to "Verification of Vehicle Repair" procedure.

NO

Go to "Check transponder" procedure

2. Check ECM

   1) IGN "ON" & Engine "OFF"

   2) Neutralize ECM and Register transponder key by scantool.

   NOTE

   Pin code is requied to Neutralize ECM and to Register transponder key

   3) Are Neutralizing and Registering completed normally?

      YES

      Check connectors for looseness, poor connection, bending, corrosion, contamination, deterioration, or damage. Repair or replace as necessary and then go to "Verification of Vehicle Repair" procedure.

      NO

      Substitute with a known-good ECM and check for proper operation.
      If the problem is corrected, replace ECM and then go to "Verification of Vehicle Repair" procedure.

   NOTE

   ECM substitued for old one must be in "Virgin" or "Neutral" status and Pin code is requied to Neutralize ECM and to Register transponder key

VERIFICATION OF VEHICLE REPAIR E0E43ABF

Refer to DTC P1610.

DTC P1695 EMS MEMORY ERROR

COMPONENT LOCATION E786EAFF

Refer to DTC P1610.

GENERAL DESCRIPTION EDFD08C5

The relevant data for the immobilizer function are stored at permanent memory (EEPROM or Flash etc.).
The immobilizer data are stored by three independent entries.
The data from EEPROM are evaluated by ?2 of 3 decision“ . That means all three entries are read and the content is compared before authentication process.
If the contents of all entries are equal, the authentication will run without additional measures.
If only the contents of two entries are equal, the authentication will run and fault code "EEPROM defective" is stored at ECM.
If the contents of all three entries are different from each other, no authentication will be possible and the fault code "EEPROM defective" will be stored. The limp home function cannot be activated. The ECM shall be replaced if the EEPROM related fault occurs again after new teaching of all keys.

DTC DESCRIPTION EE7F16B5

The ECM sets DTC P1694 if there’s any fault in EMS internal permanent memory(EEPROM or Flash etc.

DTC DETECTING CONDITION EC4D1C22

Item	Detecting Condition	Possible Cause
DTC Strategy		• Faulty EMS
Enable Conditions	• IG ON	
Threshold value		
Detecting time		
FAIL SAFE		

SCHEMATIC DIAGRAM EAA3850E

Refer to DTC P1610.

COMPONENT INSPECTION E6FAC11A

1. Check transponder and ECU status

   1) IGN "ON" & Engine "OFF"

   2) Monitor the "KEY STATUS" and "ECU STATUS' Parameter on the Scantool.

Specification : 'LEARNT'

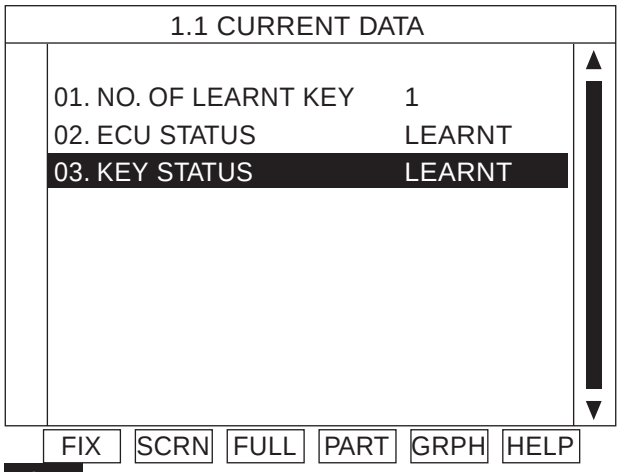

Fig 1

Fig 1) The current data in abnormal state

SCMBE6752L

   3) Are "KEY STATUS" and "ECU STATUS' Parameter within specifications?

YES

Check connectors for looseness, poor connection, bending, corrosion, contamination, deterioration, or damage. Repair or replace as necessary and then go to "Verification of Vehicle Repair" procedure.

NO

Go to "Check transponder" procedure

2. Check ECM

   1) IGN "ON" & Engine "OFF"

   2) Neutralize ECM and Register transponder key by scantool.

   NOTE

   Pin code is requied to Neutralize ECM and to Register transponder key

   3) Are Neutralizing and Registering completed normally?

      YES

      Check connectors for looseness, poor connection, bending, corrosion, contamination, deterioration, or damage. Repair or replace as necessary and then go to "Verification of Vehicle Repair" procedure.

      NO

      Substitute with a known-good ECM and check for proper operation.
      If the problem is corrected, replace ECM and then go to "Verification of Vehicle Repair" procedure.

   NOTE

   ECM substitued for old one must be in "Virgin" or "Neutral" status and Pin code is requied to Neutralize ECM and to Register transponder key

VERIFICATION OF VEHICLE REPAIR EB801803

Refer to DTC P1610.

DTC P1696 AUTHENTICATION FAIL

COMPONENT LOCATION E5AAB3B2

Refer to DTC P1674.

GENERAL DESCRIPTION EBF9D3EB

Refer to DTC P1674.

DTC DESCRIPTION E3D110D8

The ECM sets DTC P1696 if invaild key is inserted into key hole for Authentication.

DTC DETECTING CONDITION EFEFC47A

Item	Detecting Condition	Possible Cause
DTC Strategy		• Virgin TP at EMS status "Learnt" • Learnt(Invalid) TP at EMS status "Learnt"
Enable Conditions	• IG ON	
Threshold value		
Detecting time		
FAIL SAFE		

SCHEMATIC DIAGRAM E481B11B

Refer to DTC P1610.

COMPONENT INSPECTION EC6B8B88

1. Check transponder and ECU status

   1) IGN "ON" & Engine "OFF"

   2) Monitor the "KEY STATUS" and "ECU STATUS' Parameter on the Scantool.

Specification : 'LEARNT'

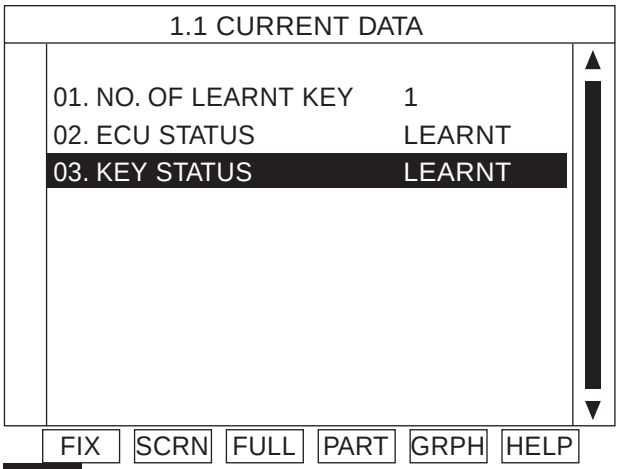

Fig 1

Fig 1) The current data in abnormal state

SCMBE6752L

   3) Are "KEY STATUS" and "ECU STATUS' Parameter within specifications?

YES

Check connectors for looseness, poor connection, bending, corrosion, contamination, deterioration, or damage. Repair or replace as necessary and then go to "Verification of Vehicle Repair" procedure.

NO

Register as necessary and then go to "Verification of Vehicle Repair" procedure.
CASE 1. KEY STATUS "VIRGIN" : Register transponder key now inserted
CASE 2. KEY STATUS "INVAILD" : Register all transponder key

VERIFICATION OF VEHICLE REPAIR EF67FFDF

Refer to DTC P1610.

DTC P1697 HI-SCAN MESSAGE ERROR

COMPONENT LOCATION EFA93E09

Refer to DTC P1610.

GENERAL DESCRIPTION E1C8E714

In immobilizer system, scantool is mainly used for diagnosis. besides this, registration of key and neutralization of ECM is executed by scantool. For ECM communicate with other components such as SMARTRA and scantool by changing type of communication through just one line, K-line communication between scantool and ECM is unavalible while communication between ECM and SMARTRA is in progress.

DTC DESCRIPTION EEDB9E3B

The ECM sets DTC P1696 if Request from Tester is Invalid.

DTC DETECTING CONDITION EE00D6EF

Item	Detecting Condition	Possible Cause
DTC Strategy		• Invalid request - Protocol layer violation - Check sum error
Enable Conditions	• IG ON	
Threshold value		
Detecting time		
FAIL SAFE		

SCHEMATIC DIAGRAM EC2CF610

Refer to DTC P1610.

MONITOR DTC STATUS EB601B51

1. Connect scantool to Data Link Connector(DLC).
2. Ignition "ON" & engine "OFF".
3. Selet "Diagnostic Trouble Codes(DTCs)"mode and monitor "DTC Status" parameter
4. Is the DTC B1697 present?

YES

Go to "Inspection & Repair" procedure.

NO

Fault is intermittent caused by poor contact in SMARTRA's and/or ECM's connector or was repaired and ECM memory was not cleared. Thoroughly check connectors for looseness, poor connection, bending, corrosion, contamination, deterioration, or damage. Repair or replace as necessary and then go to "Verification of Vehicle Repair" procedure.

COMPONENT INSPECTION E4CF2279

1. Check communication between ECM and scantool

   1) IGN "ON" & Engine "OFF"

   2) Connect scantool to Data Link Connector(DLC).

   3) Erase the DTC and Monitor Parameter of immobilizer on the Scantool.
   Try one more time from "select car model " even if "Communication error" is present on the scantool.

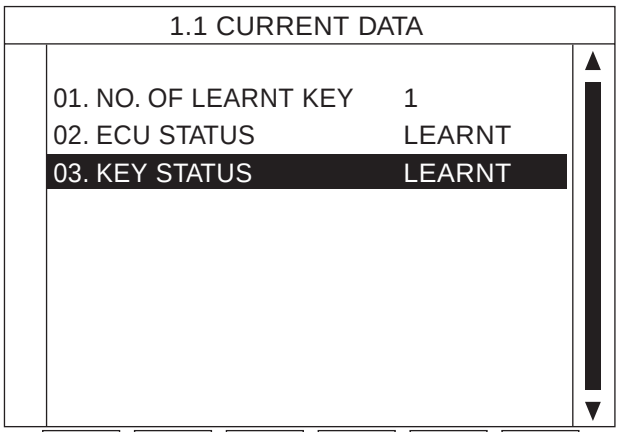

Fig 1

Fig 1) The current data in abnormal state

SCMBE6752L

   4) Is the communication between ECM and scantool normal?

   YES

   If ECM is in "Locked by Timer" status. Keep "KEY ON" status for 1 hours to withdraw "Locked by Timer" status. Then repair or replace as necessary and go to "Verification of Vehicle Repair" procedure.

   NO

   Substitute with a known-good scantool and check for proper operation.
   If the problem is corrected, Go to "Verification of Vehicle Repair" procedure.

VERIFICATION OF VEHICLE REPAIR E6CAE6B3

Refer to DTC P1610.

DTC P1699 TWICE OVERTRIAL

COMPONENT LOCATION E3ABB893

Refer to DTC P1610.

GENERAL DESCRIPTION ECE32C87

This is a special function for engine start by vehicle manufacturer. The engine can be started for moving from the production line to an area where the key teaching is proceeded.

DTC DESCRIPTION EF64F1A9

The ECM sets DTC P1697 if the maximum limit of Twice IGN is Exceeded.

DTC DETECTING CONDITION EBD5D472

Item	Detecting Condition	Possible Cause
DTC Strategy		• Twice IGN ≥ 32 times
Enable Conditions	• IG ON	
Threshold value		
Detecting time		
FAIL SAFE		

SCHEMATIC DIAGRAM EF63DA9A

Refer to DTC P1610.

MONITOR DTC STATUS E5D8B0F5

1. Connect scantool to Data Link Connector(DLC).
2. Ignition "ON" & engine "OFF".
3. Selet "Diagnostic Trouble Codes(DTCs)"mode and monitor "DTC Status" parameter
4. Is the DTC B1699 present?

YES

Go to "Inspection & Repair" procedure.

NO

Fault is intermittent caused by poor contact in SMARTRA's and/or ECM's connector or was repaired and ECM memory was not cleared. Thoroughly check connectors for looseness, poor connection, bending, corrosion, contamination, deterioration, or damage. Repair or replace as necessary and then go to "Verification of Vehicle Repair" procedure.

COMPONENT INSPECTION EFD3336B

1. Check transponder and ECU status

   1) IGN "ON" & Engine "OFF"

   2) Connect scantool to Data Link Connector(DLC).

   3) Erase the DTC and Monitor the "ECU STATUS' Parameter on the Scantool.

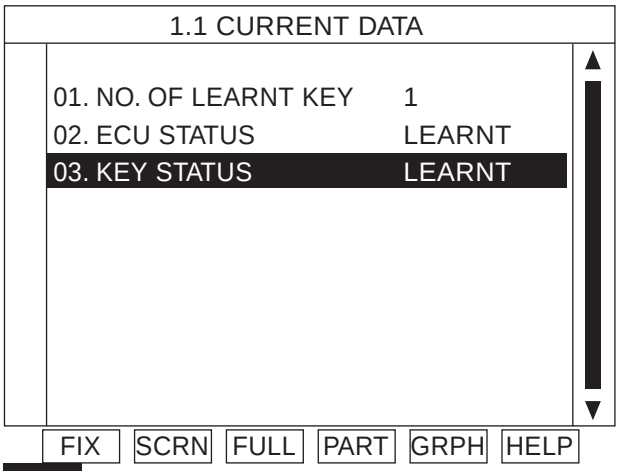

Fig 1

Fig 1) The current data in abnormal state

SCMBE6752L

   4) Is "ECU STATUS' Parameter "Locked"?

YES

Keep "KEY ON" status for 1 hours to withdraw "Locked by Timer" status. Then register transponder and go to "Verification of Vehicle Repair" procedure.

NO

Check connectors for looseness, poor connection, bending, corrosion, contamination, deterioration, or damage. Repair or replace as necessary and then go to "Verification of Vehicle Repair" procedure.

VERIFICATION OF VEHICLE REPAIR EC28D3B9

Refer to DTC P1610.

IMMOBILIZER CONTROL UNIT

REPLACEMENT E2DD9004

1. Disconnect the negative (-) battery terminal.
2. Remove the driver crash pad lower panel(A) after removing side cover. (Refer to the Body group - "Crash pad").

[LHD]

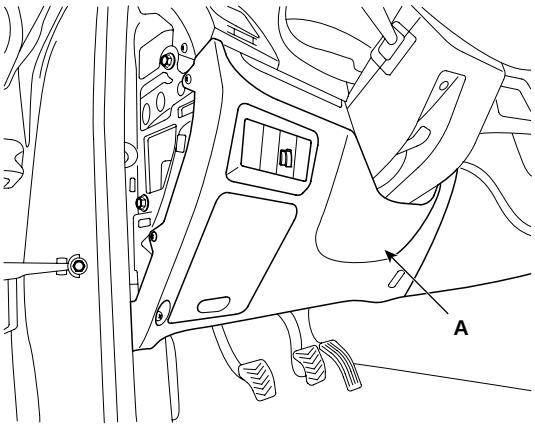

SCMBE6580D

[RHD]

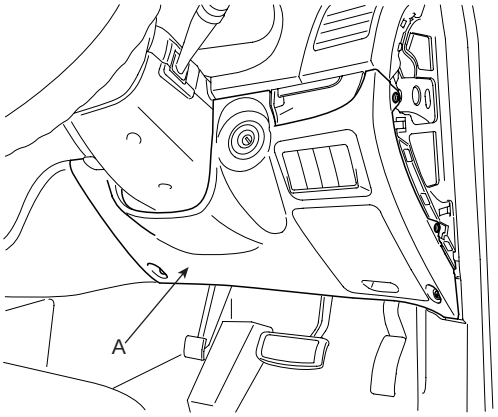

SCMBE6580R

3. Disconnect the 5P connector of the SMARTRA unit and then remove the SMARTRA unit (A) after loosening a nut.

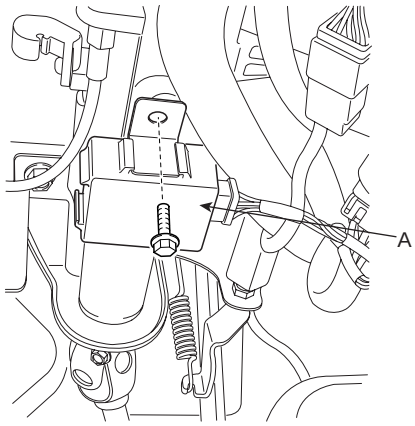

SCMBE6581D

4. Installation is the reverse of removal procedure.

COIL ANTENNA

REPLACEMENT E0B66B6D

1. Disconnect the negative (-) battery terminal.
2. Remove the driver crash pad lower panel (A). (Refer to the Body group - "Crash pad").

[LHD]

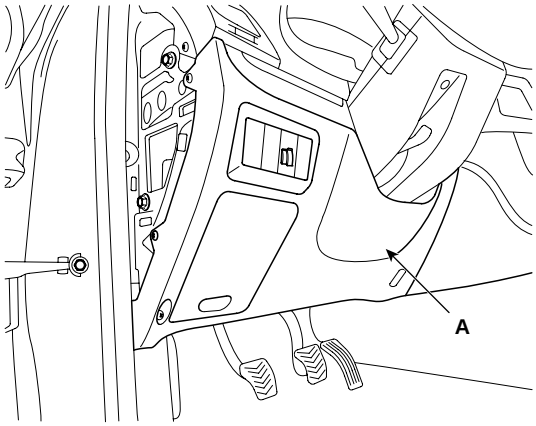

SCMBE6590D

[RHD]

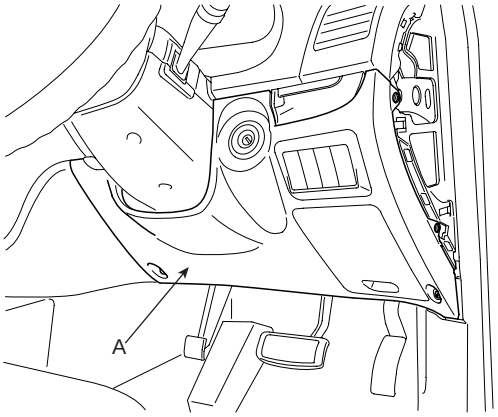

SCMBE6590R

3. Disconnect the 6P connector of the coil antenna and then remove the coil antenna (A) after loosening the screw.

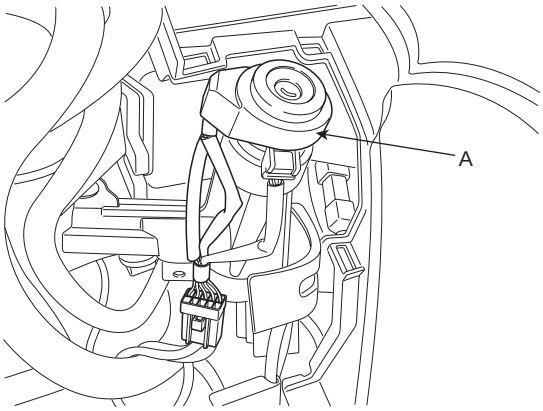

SCMBE6591D

4. Installation is the reverse of removal procedure.

IGNITION SYSTEM

REPLACEMENT EE8BA5DF

1. Disconnect the negative (-) battery terminal.
2. Remove the crash pad lower panel (Refer to the Body group - crash pad).
3. Remove the ignition switch (A) after loosening the screw with IG ON and disconnecting the 6P connector.

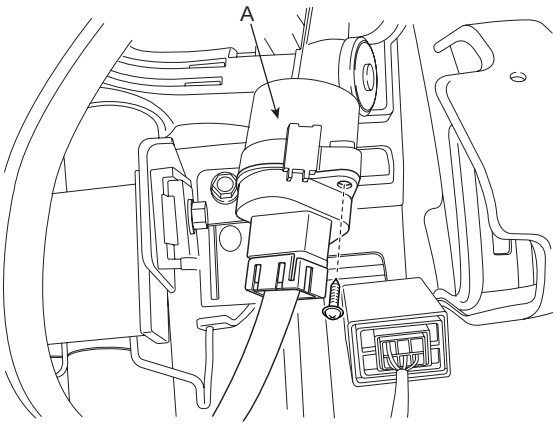

ATLG781A

4. Remove the steering column cover (Refer to the ST group).
5. Remove the door warning switch and key illumination lamp (A) after disconnecting the 6P connector.

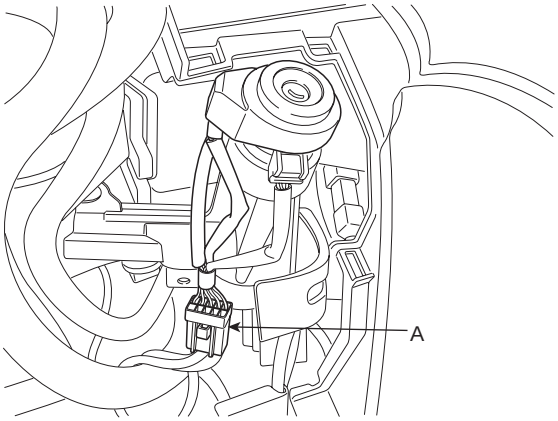

SCMBE6531D

6. If it is necessary to remove the key lock cylinder (A), Remove the key lock cylinder (A) after pushing lock pin (B) with key ACC.

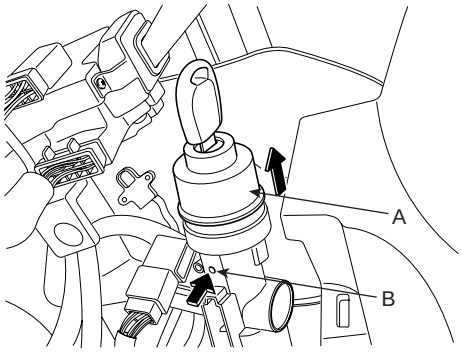

ATIE781C

7. Installation is the reverse of removal procedure.

INSPECTION EF31DB95

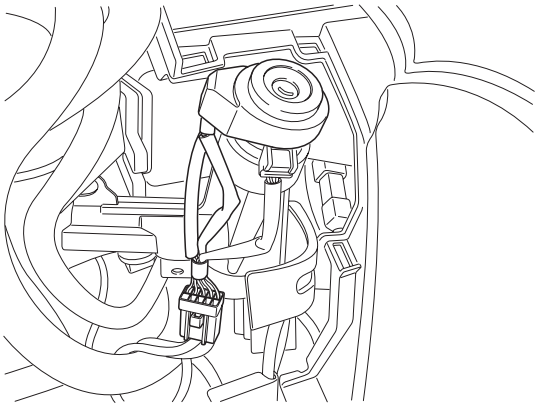

SCMBE6532D

1. Disconnect the ignition switch connector and key warning switch connector from under the steering column.
2. Check for continuity between the terminals.
3. If continuity is not specified, replace the switch.

TERMINAL / POSITION / KEY		IGNITION SWITCH						STEERING		KEY WARNING SWITCH		KEY HOLE ILLUMINATION	
		2	4	6	5	3	1	TRAVEL	TRAVEL	5	6	3	4
LOCK	REMOVAL							LOCK					
	INSERT							LOCK	UNLOCK				
ACC		○—○						UNLOCK		○—○			
ON		○—○—○			○—○								
START		○—○—○			○—○—○								

LTIF781E