HYUNDAI

OWNER'S MANUAL

Operation
Maintenance
Specifications

All information in this Owner's Manual is current at the time of publication. However, Hyundai reserves the right to make changes at any time so that our policy of continual product improvement may be carried out.

This manual applies to all Hyundai models and includes descriptions and explanations of optional as well as standard equipment. As a result, you may find material in this manual that does not apply to your specific vehicle.

CAUTION: MODIFICATIONS TO YOUR HYUNDAI

Your Hyundai should not be modified in any way. Such modifications may adversely affect the performance, safety or durability of your Hyundai and may, in addition, violate conditions of the limited warranties covering the vehicle. Certain modifications may also be in violation of regulations established by the U.S. Department of Transportation and other federal or state agencies.

TWO-WAY RADIO OR CELLULAR TELEPHONE INSTALLATION

Your vehicle is equipped with electronic fuel injection and other electronic components. It is possible for an improperly installed/adjusted two-way radio or cellular telephone to adversely affect electronic systems. For this reason, we recommend that you carefully follow the radio manufacturer's instructions or consult your Hyundai dealer for precautionary measures or special instructions if you choose to install one of these devices.

SAFETY AND VEHICLE DAMAGE WARNING

This manual includes information titled as WARNING, CAUTION and NOTICE.
These titles indicate the following:

⚠ WARNING
This indicates that a condition may result in harm, serious injury or death to you or other persons if the warning is not heeded. Follow the advice provided with the warning.

⚠ CAUTION
This indicates that a condition may result in damage to your vehicle or its equipment if the caution is not heeded. Follow the advice provided with the caution.

✻ NOTICE
This indicates that interesting or helpful information is being provided.

FOREWORD

Thank you for choosing Hyundai. We are pleased to welcome you to the growing number of discriminating people who drive Hyundais. The advanced engineering and high-quality construction of each Hyundai we build is something of which we're very proud.

Your Owner's Manual will introduce you to the features and operation of your new Hyundai. It is suggested that you read it carefully because the information it contains can contribute greatly to the satisfaction you receive from your new car.

The manufacturer also recommends that all service and maintenance on your car be performed by an authorized Hyundai dealer. Hyundai dealers are prepared to provide high-quality service, maintenance and any other assistance that may be required.

HYUNDAI MOTOR AMERICA

Note : Because future owners will also need the information included in this manual, if you sell this Hyundai, please leave the manual in the vehicle for their use. Thank you.

⚠ CAUTION

Severe engine and transaxle damage may result from the use of poor quality fuels and lubricants that do not meet Hyundai specifications. You must always use high quality fuels and lubricants that meet the specifications listed on Page 8-4 in the Vehicle Specifications section of the Owner's Manual.

Copyright 2010 Hyundai Motor America. All rights reserved. No part of this publication may be reproduced, stored in any retrieval system or transmitted in any form or by any means without the prior written permission of Hyundai Motor America.

Guide to Hyundai Genuine Parts

1. What are Hyundai Genuine Parts?

Hyundai Genuine Parts are the same parts used by Hyundai Motor Company to manufacture vehicles. They are designed and tested for the optimum safety, performance, and reliability to our customers.

2. Why should you use genuine parts?

Hyundai Genuine Parts are engineered and built to meet rigid manufacturing requirements. Using imitation, counterfeit or used salvage parts is not covered under the Hyundai New Vehicle Limited Warranty or any other Hyundai warranty.

In addition, any damage to or failure of Hyundai Genuine Parts caused by the installation or failure of an imitation, counterfeit or used salvage part is not covered by any Hyundai Warranty.

3. How can you tell if you are purchasing Hyundai Genuine Parts?

Look for the Hyundai Genuine Parts Logo on the package (see below).

Hyundai Genuine Parts exported to are packaged with labels written only in English.

Hyundai Genuine Parts are only sold through authorized Hyundai Dealerships.

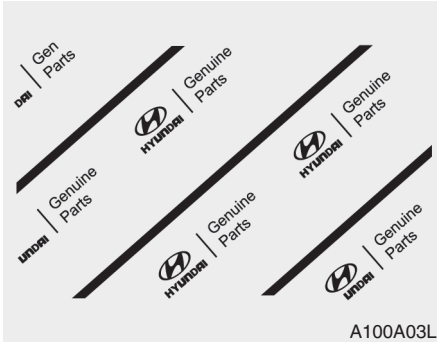

A100A03L



A100A01L



A100A02L



A100A04L

TABLE OF CONTENTS

Introduction	1
Your vehicle at a glance	2
Safety features of your vehicle	3
Features of your vehicle	4
Driving your vehicle	5
What to do in an emergency	6
Maintenance	7
Specifications, Consumer information, Reporting safety defects	8
Index	I

Introduction 1

How to use this manual / 1-2
Fuel requirements / 1-3
Vehicle handling instructions / 1-5
Vehicle break-in process / 1-5
Vehicle data collection and event data recorders / 1-6
Indicator symbols on the instrument cluster / 1-7

HOW TO USE THIS MANUAL

We want to help you get the greatest possible driving pleasure from your vehicle. Your Owner's Manual can assist you in many ways. We strongly recommend that you read the entire manual. In order to minimize the chance of death or injury, you must read the WARNING and CAUTION sections in the manual.

Illustrations complement the words in this manual to best explain how to enjoy your vehicle. By reading your manual, you will learn about features, important safety information, and driving tips under various road conditions.

The general layout of the manual is provided in the Table of Contents. A good place to start is the index; it has an alphabetical listing of all information in your manual.

Sections: This manual has eight sections plus an index. Each section begins with a brief list of contents so you can tell at a glance if that section has the information you want.

You will find various WARNINGs, CAUTIONs, and NOTICEs in this manual. These WARNINGs were prepared to enhance your personal safety. You should carefully read and follow ALL procedures and recommendations provided in these WARNINGS, CAUTIONS and NOTICES.

⚠ WARNING

A WARNING indicates a situation in which harm, serious bodily injury or death could result if the warning is ignored.

⚠ CAUTION

A CAUTION indicates a situation in which damage to your vehicle could result if the caution is ignored.

✻ NOTICE

A NOTICE indicates interesting or helpful information is being provided.

FUEL REQUIREMENTS

Your new vehicle is designed to use only unleaded fuel having a pump octane number ((R+M)/2) of 87 or higher.

Your new vehicle is designed to obtain maximum performance with UNLEADED FUEL, as well as minimize exhaust emissions and spark plug fouling.

⚠ CAUTION

Never add any fuel system cleaning agents to the fuel tank other than what has been specified. (Consult an authorized HYUNDAI dealer for details.)

⚠ WARNING

- **Do not "top off" after the nozzle automatically shuts off when refueling.**
- **Tighten the cap until it clicks one time, otherwise the Check Engine light will illuminate.**
- **Always check that the fuel cap is installed securely to prevent fuel spillage in the event of an accident.**

Gasoline containing alcohol and methanol

Gasohol, a mixture of gasoline and ethanol (also known as grain alcohol), and gasoline or gasohol containing methanol (also known as wood alcohol) are being marketed along with or instead of leaded or unleaded gasoline.

Do not use gasohol containing more than 10% ethanol, and do not use gasoline or gasohol containing any methanol. Either of these fuels may cause drivability problems and damage to the fuel system.

Discontinue using gasohol of any kind if drivability problems occur.

Vehicle damage or drivability problems may not be covered by the manufacturer's warranty if they result from the use of:

1. Gasohol containing more than 10% ethanol.
2. Gasoline or gasohol containing methanol.
3. Leaded fuel or leaded gasohol.

"E85" fuel is an alternative fuel comprised of 85 percent ethanol and 15 percent gasoline, and is manufactured exclusively for use in Flexible Fuel Vehicles. “E85” is not compatible with your vehicle. Use of “E85” may result in poor engine performance and damage to your vehicle's engine and fuel system. HYUNDAI recommends that customers do not use fuel with an ethanol content exceeding 10 percent.

⚠ CAUTION

Your New Vehicle Limited Warranty does not cover damage to the fuel system or any performance problems caused by the use of “E85” fuel.

⚠ CAUTION

Never use gasohol which contains methanol. Discontinue use of any gasohol product which impairs drivability.

Do not use methanol

Fuels containing methanol (wood alcohol) should not be used in your vehicle. This type of fuel can reduce vehicle performance and damage components of the fuel system.

⚠ CAUTION

Your New Vehicle Limited Warranty may not cover damage to the fuel system and any performance problems that are caused by the use of fuels containing methanol.

Gasolines for cleaner air

To help contribute to cleaner air, HYUNDAI recommends you use gasolines treated with detergent additives, which help prevent deposit formation in the engine. These gasolines will help the engine run cleaner and enhance performance of the Emission Control System.

Operation in foreign countries

If you are going to drive your vehicle in another country, be sure to:

- Observe all regulations regarding registration and insurance.
- Determine that acceptable fuel is available.

VEHICLE HANDLING INSTRUCTIONS

As with other vehicles of this type, failure to operate this vehicle correctly may result in loss of control, an accident or vehicle rollover.

Specific design characteristics (higher ground clearance, track, etc.) give this vehicle a higher center of gravity than other types of vehicles. It is not designed for cornering at the same speeds as a conventional 2-wheel drive sedans or sports coupe. Avoid sharp turns or abrupt maneuvers. Failure to operate this vehicle correctly may result in loss of control, an accident or vehicle rollover. **Be sure to read the "Reducing the risk of a rollover" driving guidelines, in section 5 of this manual.**

VEHICLE BREAK-IN PROCESS

No special break-in period is needed. By following a few simple precautions for the first 600 miles (1,000 km) you may add to the performance, economy and life of your vehicle.

- Do not race the engine.
- While driving, keep your engine speed (rpm, or revolutions per minute) between 2,000 rpm and 4,000 rpm.
- Do not maintain a single speed for long periods of time, either fast or slow. Varying engine speed is needed to properly break-in the engine.
- Avoid hard stops, except in emergencies, to allow the brakes to seat properly.
- Don't let the engine idle longer than 3 minutes at one time.
- Don't tow a trailer during the first 1,200 miles (2,000 km) of operation.

VEHICLE DATA COLLECTION AND EVENT DATA RECORDERS

This vehicle is equipped with an event data recorder (EDR). The main purpose of an EDR is to record, in certain crash or near crash-like situations, such as an air bag deployment or hitting a road obstacle, data that will assist in understanding how a vehicle's systems performed. The EDR is designed to record data related to vehicle dynamics and safety systems for a short period of time, typically 30 seconds or less. The EDR in this vehicle is designed to record such data as:

- **How various systems in your vehicle were operating:**
- **Whether or not the driver and passenger safety belts were buckled/ fastened;**
- **How far (if at all) the driver was depressing the accelerator and/or brake pedal; and,**
- **How fast the vehicle was traveling.**

These data can help provide a better understanding of the circumstances in which crashes and injuries occur. NOTE: EDR data are recorded by your vehicle only if a nontrivial crash situation occurs; no data are recorded by the EDR under normal driving conditions and no personal data (e.g., name, gender, age, and crash location) are recorded. However, other parties, such as law enforcement, could combine the EDR data with the type of personally identifying data routinely acquired during a crash investigation.

To read data recorded by an EDR, special equipment is required, and access to the vehicle or the EDR is needed.

In addition to the vehicle manufacturer, other parties, such as law enforcement, that have the special equipment, can read the information if they have access to the vehicle or the EDR.

INDICATOR SYMBOLS ON THE INSTRUMENT CLUSTER



ECO indicator*


Air bag warning light



ABS warning light



Parking brake & Brake fluid warning light


Seat belt warning light


Turn signal indicator


Light on indicator


High beam indicator


Front fog light indicator*


Engine oil pressure warning light


Shift pattern indicator*


Manual transaxle shift indicator*


Charging system warning light


Door ajar warning light


Tailgate open warning light


Low fuel level warning light


Malfunction indicator


ESC indicator*



ESC OFF indicator*


DBC indicator*


AWD system warning light*



AWD LOCK indicator*


Low tire pressure telltale /TPMS malfunction indicator


Engine coolant temperature warning light



Electric power steering (EPS) system warning light



Cruise indicator*



Cruise SET indicator*

* : if equipped

❊ For more detailed explanations, refer to “Instrument cluster” in section 4.

Your vehicle at a glance 2

Interior overview / 2-2
Instrument panel overview / 2-3
Engine compartment / 2-4

INTERIOR OVERVIEW

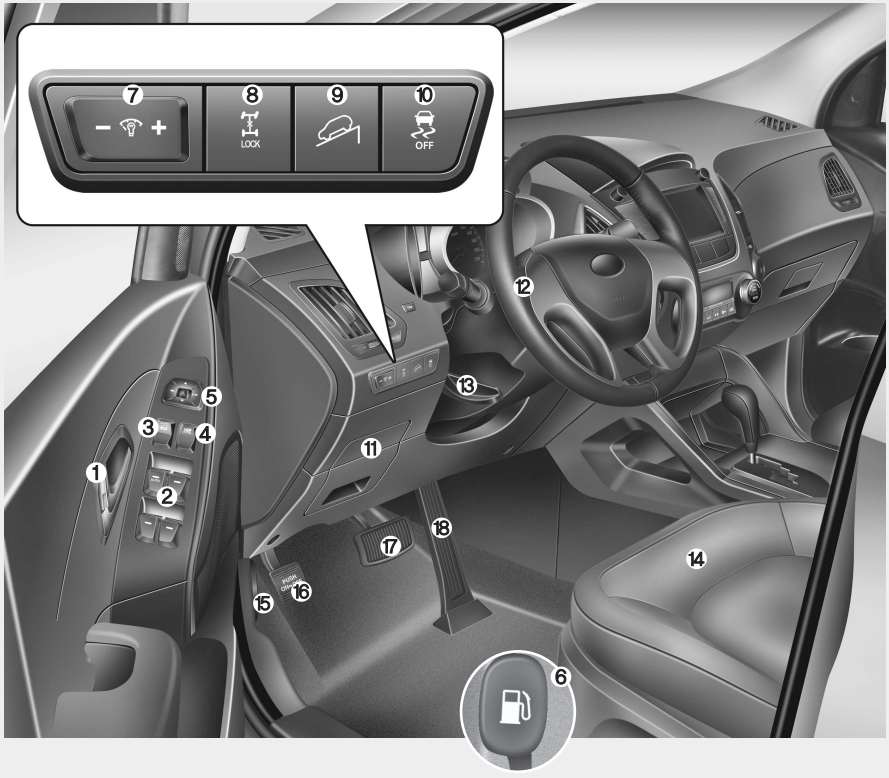

1. Door lock/unlock button 4-10
2. Power window switches 4-15
3. Central door lock switch.....4-10
4. Power window lock button 4-18
5. Outside rearview mirror control switch 4-32
6. Fuel filler door release lever 4-21
7. Instrument panel illumination control switch 4-34
8. AWD LOCK button* 5-18
9. DBC button* 5-33
10. ESC OFF button*.....5-30
11. Fuse box 7-51
12. Steering wheel 4-28
13. Steering wheel tilt/telescope* control 4-28
14. Seat.....3-2
15. Hood release lever.....4-19
16. Parking brake pedal (A/T only)*.....5-25
17. Brake pedal.....5-24
18. Accelerator pedal.....5-6

* : if equipped

OLM019001N

INSTRUMENT PANEL OVERVIEW

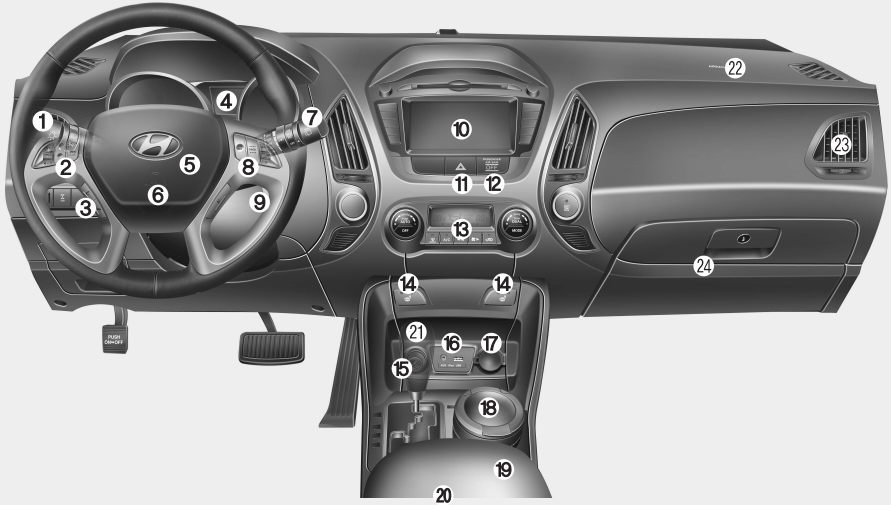

1. Light control / Turn signals.....4-50
2. Steering wheel audio controls*.....4-89
3. Bluetooth phone controls* 4-110
4. Instrument cluster.....4-33
5. Horn.....4-29
6. Driver's front air bag 3-49
7. Wiper/Washer (Front and Rear)* 4-54
8. Auto cruise controls switches*.....5-36
9. Ignition switch 5-5
10. Digital clock and Audio*.....4-85
11. Hazard warning flasher switch ...4-49/6-2
12. PASSENGER AIR BAG OFF indicator 3-44
13. Climate control system*.....4-61/4-70
14. Seat warmer*.....3-10
15. Cigar lighter*.....4-82
16. Aux, USB and iPod port*.....4-90
17. Power outlet.....4-84
18. Ashtray*.....4-82
19. Cup holder.....4-83
20. Center console box.....4-80
21. Shift lever.....5-10
22. Passenger's front air bag.....3-49
23. Air vent.....4-64
24. Glove box.....4-80

* : if equipped

OLM019002N

ENGINE COMPARTMENT

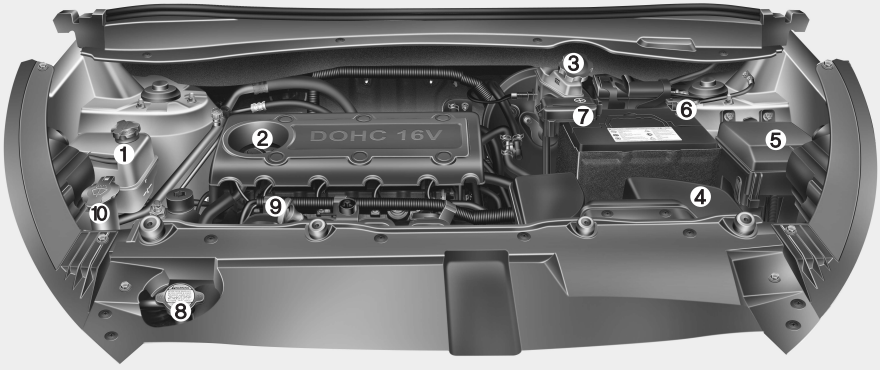

1. Engine coolant reservoir.....7-22
2. Engine oil filler cap 7-21
3. Brake/Clutch* fluid reservoir 7-25
4. Air cleaner.....7-28
5. Fuse box 7-52
6. Negative battery terminal.....7-34
7. Positive battery terminal 7-34
8. Radiator cap 7-24
9. Engine oil dipstick.....7-21
10. Windshield washer fluid reservoir ...7-26

* : if equipped

* The actual engine compartment in the vehicle may differ from the illustration.

OLM079001

Seats / 3-2
Seat belts / 3-16
Child restraint system / 3-30
Air bag - advanced supplemental restraint system / 3-38

Safety features of your vehicle 3

SEATS

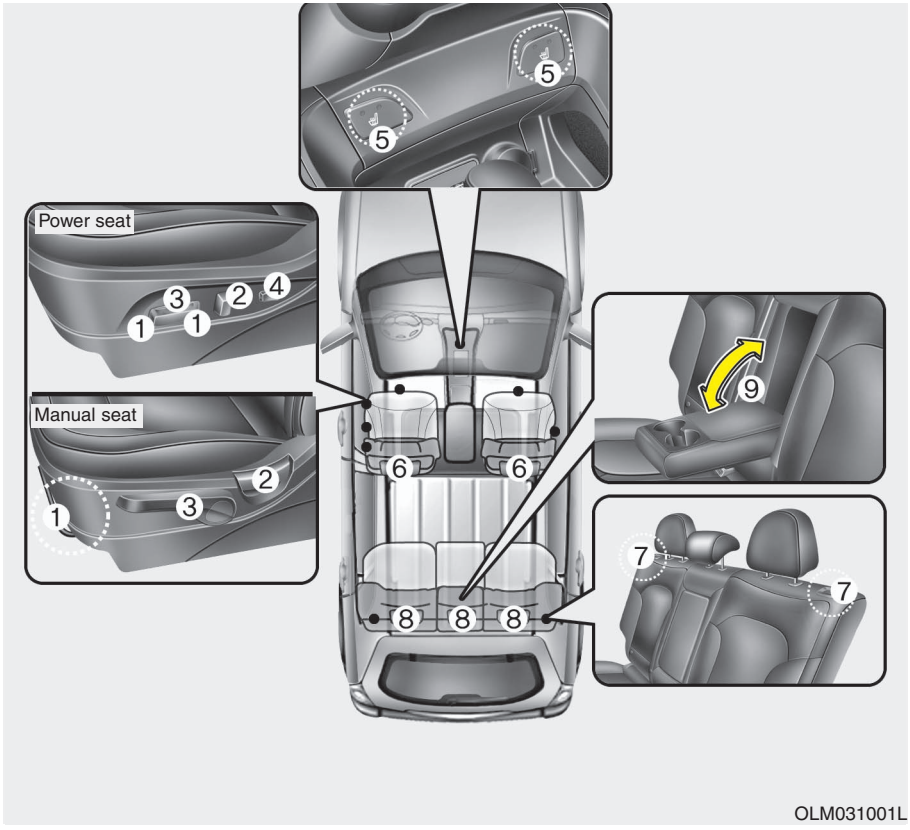

Front seat

(1) Forward and backward
(2) Seatback angle
(3) Seat cushion height (Driver's seat)*
(4) Lumbar support (Driver's seat)*
(5) Seat warmer*
(6) Headrest

Rear seat

(7) Seatback folding
(8) Headrest
(9) Armrest

*: if equipped

⚠ WARNING - Loose objects

Loose objects in the driver's foot area could interfere with the operation of the foot pedals, possibly causing an accident. Do not place anything under the front seats.

⚠ WARNING - Uprighting seat

When you return the seatback to its upright position, hold the seatback and return it slowly and be sure there are no other occupants around the seat. If the seatback is returned without being held and controlled, the back of the seat could spring forward resulting in accidental injury to a person struck by the seatback.

⚠ WARNING - Driver responsibility for passengers

Riding in a vehicle with the seatback reclined could lead to serious or fatal injury in an accident. If a seat is reclined during an accident, the occupant's hips may slide under the lap portion of the seat belt applying great force to the unprotected abdomen. Serious or fatal internal injuries could result. The driver must advise the passenger to keep the seatback in an upright position whenever the vehicle is in motion.

⚠ WARNING - Driver's seat

- **Never attempt to adjust the seat while the vehicle is moving. This could result in loss of control, and an accident causing death, serious injury, or property damage.**
- **Do not allow anything to interfere with the normal position of the seatback. Storing items against a seatback or in any other way interfering with proper locking of a seatback could result in serious or fatal injury in a sudden stop or collision.**
- **Always drive and ride with your seatback upright and the lap portion of the seat belt snug and low across the hips. This is the best position to protect you in case of an accident.**
- **In order to avoid unnecessary and perhaps severe air bag injuries, always sit as far back as possible from the steering wheel while maintaining comfortable control of the vehicle. We recommend that your chest be at least 10 inches (250 mm) away from the steering wheel.**

⚠ WARNING - Rear seatbacks

- **The rear seatback must be securely latched. If not, passengers and objects could be thrown forward resulting in serious injury or death in the event of a sudden stop or collision.**
- **Luggage and other cargo should be laid flat in the cargo area. If objects are large, heavy, or must be piled, they must be secured. Under no circumstances should cargo be piled higher than the seatbacks. Failure to follow these warnings could result in serious injury or death in the event of a sudden stop, collision or rollover.**
- **No passenger should ride in the cargo area or sit or lie on folded seatbacks while the vehicle is moving. All passengers must be properly seated in seats and restrained properly while riding.**

(Continued)

(Continued)

- **When resetting the seatback to the upright position, make sure it is securely latched by pushing it forward and rearward.**
- **To avoid the possibility of burns, from a hot rear floor surface do not remove the carpet in the cargo area. Emission control devices beneath this floor generate high temperatures.**

⚠ WARNING

After adjusting the seat, always check that it is securely locked into place by attempting to move the seat forward or rearward without using the lock release lever. Sudden or unexpected movement of the driver's seat could cause you to lose control of the vehicle resulting in an accident.

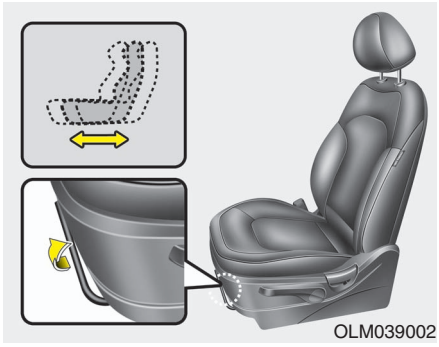
OLM039002

Front seat adjustment - manual

Forward and rearward

To move the seat forward or rearward:

1. Pull the seat slide adjustment lever under the front edge of the seat cushion up and hold it.
2. Slide the seat to the position you desire.
3. Release the lever and make sure the seat is locked in place.

Adjust the seat before driving, and make sure the seat is locked securely by trying to move forward and rearward without using the lever. If the seat moves, it is not locked properly.

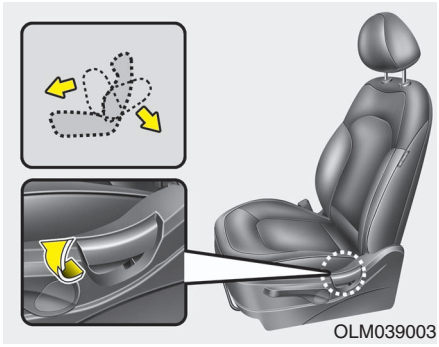
OLM039003

Seatback angle

To recline the seatback:

1. Lean forward slightly and lift up on the seatback recline lever located on the outside of the seat at the rear.
2. Carefully lean back on the seat and adjust the seatback of the seat to the position you desire.
3. Release the lever and make sure the seatback is locked in place. (The lever MUST return to its original position for the seatback to lock.)

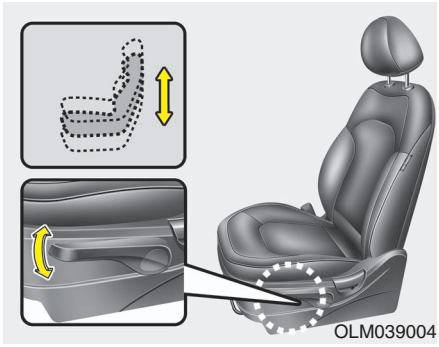
OLM039004

Seat cushion height (for driver's seat)

To change the height of the seat cushion, push the lever that is located on the outside of the seat cushion upwards or downwards.

- To lower the seat cushion, push the lever down several times.
- To raise the seat cushion, pull the lever up several times.

Front seat adjustment - power (if equipped)

The front seat can be adjusted by using the control knob located on the outside of the seat cushion. Before driving, adjust the seat to the proper position so as to easily control the steering wheel, pedals and switches on the instrument panel.

⚠ WARNING

The power seat is operable with the ignition OFF.

Therefore, children should never be left unattended in the car.

⚠ CAUTION

- ***The power seat is driven by an electric motor. Stop operating once the adjustment is completed. Excessive operation may damage the electrical equipment.***
- ***When in operation, the power seat consumes a large amount of electrical power. To prevent unnecessary charging system drain, don't adjust the power seat longer than necessary while the engine is not running.***
- ***Do not operate two or more power seat control knobs at the same time. Doing so may result in power seat motor or electrical component malfunction.***

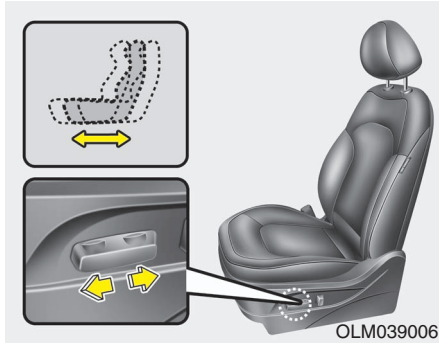

Forward and rearward

Push the control knob forward or rearward to move the seat to the desired position. Release the knob once the seat reaches the desired position.

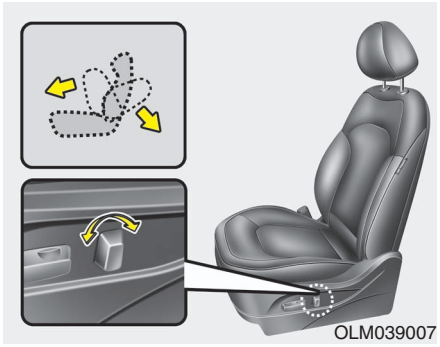

Seatback angle

Push the control knob forward or rearward to move the seatback to the desired angle. Release the knob once the seat reaches the desired position.

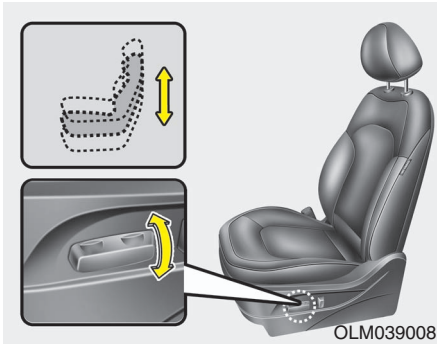

Seat cushion height (for driver's seat)

Pull the control knob up to raise or down to lower the seat cushion. Release the knob once the seat reaches the desired position.

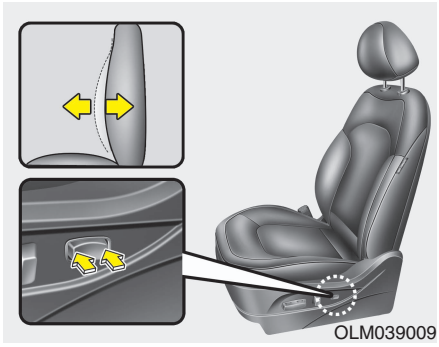

Lumbar support (for driver's seat)

The lumbar support can be adjusted by pressing the button.

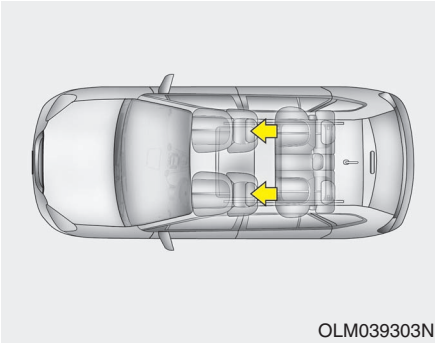

OLM039303N

Headrest

The driver's and front passenger's seats are equipped with a headrest for the occupant's safety and comfort.

The headrest not only provides comfort for the driver and front passenger, but also helps to protect the head and neck in the event of a collision.

⚠ WARNING

- **For maximum effectiveness in case of an accident, the headrest should be adjusted so the middle of the headrest is at the same height as the center of gravity of an occupant's head. Generally, the center of gravity of most people's head is similar with the height of the top of their eyes. Also, adjust the headrest as close to your head as possible. For this reason, the use of a cushion that holds the body away from the seatback is not recommended.**
- **Do not operate the vehicle with the headrests removed as severe injury to the occupants may occur in the event of an accident. Headrests may provide protection against neck injuries when properly adjusted.**
- **Do not adjust the headrest position of the driver's seat while the vehicle is in motion.**

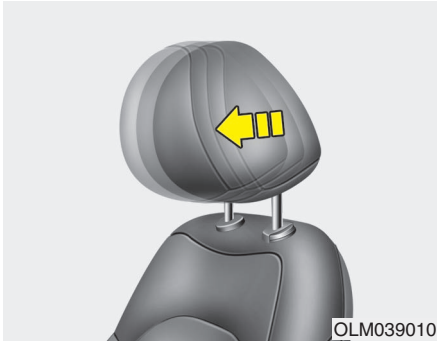

OLM039010

Forward and rearward adjustment

The headrest may be adjusted forward to 3 different positions by pulling the headrest forward to the desired detent. To adjust the headrest to it's furthest rearward position, pull it fully forward to the farthest position and release it. Adjust the headrest so that it properly supports the head and neck.

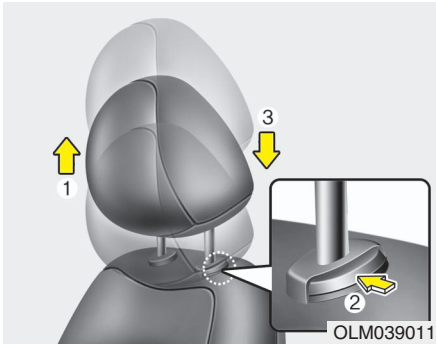

Adjusting the height up and down

To raise the headrest, pull it up to the desired position (1). To lower the headrest, push and hold the release button (2) on the headrest support and lower the headrest to the desired position (3).

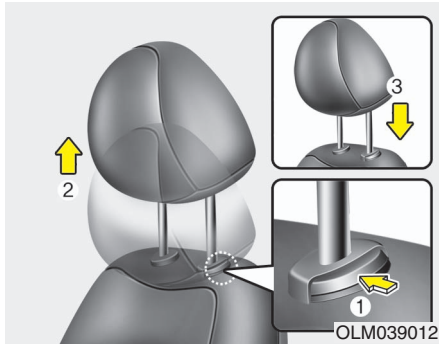

Removal and installation

To remove the headrest, raise it as far as it can go then press the release button (1) while pulling upward (2).

To reinstall the headrest, put the headrest poles (3) into the holes while pressing the release button (1). Then adjust it to the appropriate height.

⚠ WARNING

Make sure the headrest locks in position after adjusting it to properly protects the occupants.

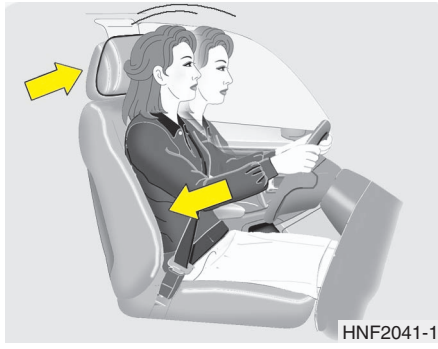

Active headrest

The active headrest is designed to move forward and upward during a rear impact. This helps to prevent the driver's and front passenger's heads from moving backward and thus helps minimize neck injuries.

⚠ WARNING

A gap between the seat and the headrest release button may appear when seating on the seat or when you push or pull the seat. Be careful not to get your finger, etc. caught in the gap.

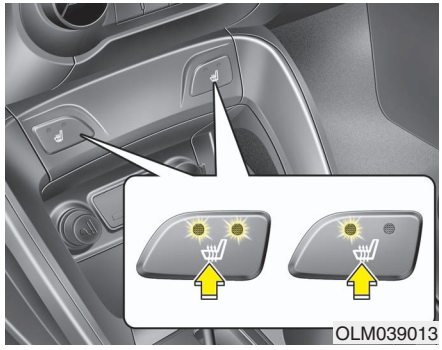

Seat warmer (if equipped)

The seat warmer is provided to warm the front seats during cold weather. With the ignition switch in the ON position, push either of the switches to warm the driver's seat or the front passenger's seat.

During mild weather or under conditions where the operation of the seat warmer is not needed, keep the switches in the OFF position.

- Each time you push the button, the temperature setting of the seat is changed as follows :

  OFF → HIGH (●●) → LOW (●)

  ↑ ←

- The seat warmer defaults to the OFF position whenever the ignition switch is turned on.

✻ NOTICE

With the seat warmer switch in the ON position, the heating system in the seat turns off or on automatically depending on the seat temperature.

⚠ CAUTION

- ***When cleaning the seats, do not use an organic solvent such as paint thinner, benzene, alcohol and gasoline. Doing so may damage the surface of the heater or seats.***
- ***To prevent overheating the seat warmer, do not place blankets, cushions or seat covers on the seats while the seat warmer is in operation.***
- ***Do not place heavy or sharp objects on seats equipped with seat warmers. Damage to the seat warming components could occur.***

⚠ WARNING - Seat warmer burns

Passengers should use extreme caution when using seat warmers due to the possibility of excess heating or burns. The occupants must be able to feel if the seat is becoming too warm and to turn the seat warmer off. In particular, the driver must exercise extreme care for the following types of passengers:

1. **Infants, children, elderly or disabled persons, or hospital outpatients**
2. **Persons with sensitive skin or those that burn easily**
3. **Fatigued individuals**
4. **Intoxicated individuals**
5. **Individuals taking medication that can cause drowsiness or sleepiness (sleeping pills, cold tablets, etc.)**

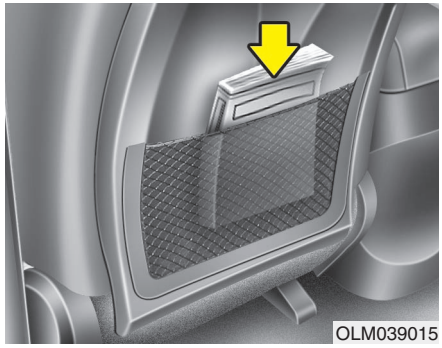

Seatback pocket

The seatback pocket is provided on the back of the front passenger's and driver's seatbacks.

⚠ WARNING - Seatback pockets

Do not put heavy or sharp objects in the seatback pockets. In an accident they could come loose from the pocket and injure vehicle occupants.

⚠ WARNING

For proper operation of the occupant classification system:

- **Do not place any items cumulatively weighing over 2.2 lbs (1 kg) in the passenger's seatback pocket or on the passenger's seat.**
- **Do not hang onto the front passenger seatback.**

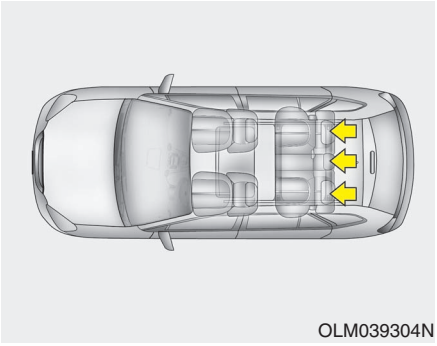
OLM039304N

Rear seat adjustment

Headrest

The rear seat(s) is equipped with headrests in all the seating positions for the occupant's safety and comfort.

The headrest not only provides comfort for passengers, but also helps to protect the head and neck in the event of a collision.

⚠ WARNING

- **For maximum effectiveness in case of an accident, the headrest should be adjusted so the middle of the headrest is at the same height as the center of gravity of an occupant's head. Generally, the center of gravity of most people's head is similar with the height of the top of their eyes. Also, adjust the headrest as close to your head as possible. For this reason, the use of a cushion that holds the body away from the seatback is not recommended.**
- **Do not operate the vehicle with the headrests removed as severe injury to an occupant may occur in the event of an accident. Headrests may provide protection against severe neck injuries when properly adjusted.**

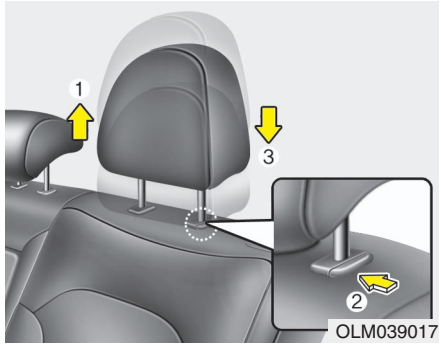

OLM039017

Adjusting the height up and down

To raise the headrest, pull it up to the desired position (1). To lower the headrest, push and hold the release button (2) on the headrest support and lower the headrest to the desired position (3).

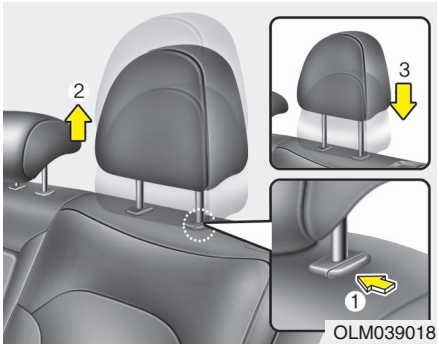

Removal and installation

To remove the headrest, raise it as far as it can go then press the release button (1) while pulling upward (2).

To reinstall the headrest, put the headrest poles (3) into the holes while pressing the release button (1). Then adjust it to the appropriate height.

⚠ WARNING

Make sure the headrest locks in position after adjusting it to properly protect the occupants.

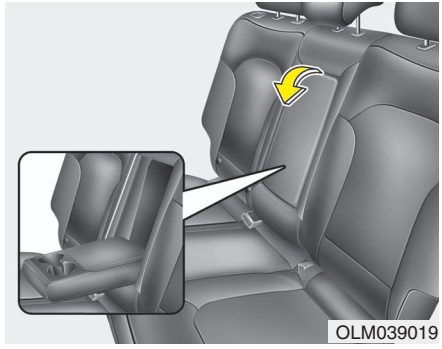

Armrest

To use the armrest, pull it forward from the seatback.

Folding the rear seat

The rear seatbacks may be folded to facilitate carrying long items or to increase the luggage capacity of the vehicle.

⚠ WARNING

The purpose of the fold-down rear seatbacks is to allow you to carry longer objects that could not be accommodated in the cargo area.

Never allow passengers to sit on top of the folded down seatback while the car is moving as this is not a proper seating position and no seat belts are available for use. This could result in serious injury or death in case of an accident or sudden stop. Objects carried on the folded down seatback should not extend higher than the top of the front seatbacks. Doing this could allow cargo to slide forward and cause injury or damage during sudden stops.

To fold down the rear seatback:

1. Press the rear seat belt buckles down into the cushion, and inserts the rear seat belt (except center seat belt) webbing in the guide to prevent the seat belt from being damaged.
2. Use a key to release the rear center seat belt from the center RH buckle.
3. Stow the center seat belt webbing in the headliner, where the small tongue will clip in the holder.
4. Set the front seatback to the upright position and if necessary, slide the front seat forward.
5. Lower the rear headrests to the lowest position.

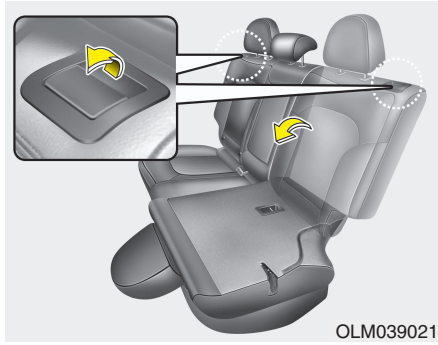

OLM039021

6. Pull on the seatback folding lever, then fold the seat toward the front of the vehicle. When you return the seatback to its upright position, always be sure it has locked into position by pushing on the top of the seatback.



OLM039022

7. To use the rear seat, lift and pull the seatback backward. Pull the seatback firmly until it clicks into place. Make sure the seatback is locked in place.
8. Return the rear seat belt to the proper position, inserting the small tongue into center RH buckle.

⚠ WARNING

When you return the rear seatback to its upright position after being folded down:

Be careful not to damage the seat belt webbing or buckle. Do not allow the seat belt webbing or buckle to get caught or pinched in the rear seat. Ensure that the seatback is completely locked into its upright position by pushing on the top of the seatback. Otherwise, in an accident or sudden stop, the seat could fold down and allow cargo to enter the passenger compartment, which could result in serious injury or death.

⚠ CAUTION - Damaging rear seat belt buckles

When you fold the rear seatback, push the buckle into the pocket in the rear cushion. Doing so can prevent the buckle from being damaged by the rear seatback.

⚠ CAUTION - Rear seat belts

When returning the rear seatbacks to the upright position, remember to return the rear shoulder belts to their proper position. Routing the seat belt webbing through the rear seat belt guides will help keep the belts from being trapped behind or under the seats.

⚠ WARNING - Cargo

Cargo should always be secured to prevent it from being thrown about the vehicle in a collision and causing injury to the vehicle occupants. Do not place objects on the rear seats, since they cannot be properly secured and may hit the front seat occupants in a collision.

⚠ WARNING - Cargo loading

Make sure the engine is off, the automatic transaxle is in P (Park) or the manual transaxle is in reverse, and the parking brake is securely applied whenever loading or unloading cargo. Failure to take these steps may allow the vehicle to move if the shift lever is inadvertently moved to another position.

SEAT BELTS

Seat belt restraint system

⚠ WARNING

- For maximum restraint system protection, the seat belts must always be used whenever the car is moving.
- Seat belts are most effective when seatbacks are in the upright position.
- Children age 12 and under must always be properly restrained in the rear seat. Never allow children to ride in the front passenger seat. If a child over 12 must be seated in the front seat, he/she must be properly belted and the seat should be moved as far back as possible.
- Never wear the shoulder belt under your arm or behind your back. An improperly positioned shoulder belt can cause serious injuries in a crash. The shoulder belt should be positioned midway over your shoulder across your collarbone.

(Continued)

(Continued)

- Avoid wearing twisted seat belts. A twisted belt can't do its job as well. In a collision, it could even cut into you. Be sure the belt webbing is straight and not twisted.
- Be careful not to damage the belt webbing or hardware. If the belt webbing or hardware is damaged, replace it.

⚠ WARNING

Seat belts are designed to bear upon the bony structure of the body, and should be worn low across the front of the pelvis or the pelvis, chest and shoulders, as applicable; wearing the lap section of the belt across the abdominal area must be avoided.

Seat belts should be adjusted as firmly as possible, consistent with comfort, to provide the protection for which they have been designed.

A slack belt will greatly reduce the protection afforded to the wearer.

(Continued)

(Continued)

Care should be taken to avoid contamination of the webbing with polishes, oils and chemicals, and particularly battery acid. Cleaning may safely be carried out using mild soap and water. The belt should be replaced if webbing becomes frayed, contaminated or damaged. It is essential to replace the entire assembly after it has been worn in a severe impact even if damage to the assembly is not obvious. Belts should not be worn with straps twisted. Each belt assembly must only be used by one occupant; it is dangerous to put a belt around a child being carried on the occupant's lap.

⚠ WARNING

No modifications or additions should be made by the user which will either prevent the seat belt adjusting devices from operating to remove slack, or prevent the seat belt assembly from being adjusted to remove slack.



1GQA2083

Seat belt warning

As a reminder to the driver, the seat belt warning light will blink for approximately 6 seconds each time you turn the ignition switch ON regardless of belt fastening.

If the driver's seat belt is not fastened when the ignition switch is turned on, the seat belt warning light and the seat belt warning chime will operate for approximately 6 seconds. But if it is fastened within the 6 seconds, the warning light will blink till the 6 seconds and the warning chime will turn off immediately.

If the driver's seat belt is disconnected after the ignition switch is turned to the ON position, the seat belt warning light will operate for approximately 6 seconds. But if it is fastened within the 6 seconds, the warning light will turn off immediately. If the driver's seat belt is not fastened when the vehicle speed exceeds 6 mph (10 km/h), the seat belt warning light and chime will operate for approximately 11 times with a pattern of 6 seconds on and 24 seconds off until the belt is fastened or the vehicle speed decreases below 3 mph (5 km/h).

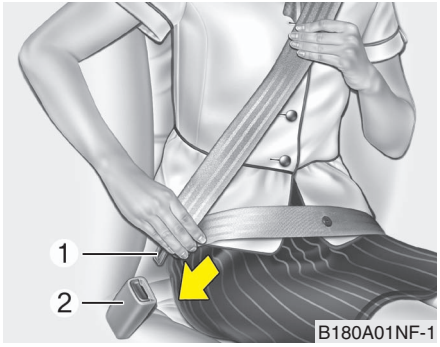

Seat belt - Driver's 3-point system with emergency locking retractor

To fasten your seat belt:

To fasten your seat belt, pull it out of the retractor and insert the metal tab (1) into the buckle (2). There will be an audible "click" when the tab locks into the buckle.

The seat belt automatically adjusts to the proper length only after the lap belt portion is adjusted manually so that it fits snugly around your hips. If you lean forward in a slow, easy motion, the belt will extend and let you move around. If there is a sudden stop or impact, however, the belt will lock into position. It will also lock if you try to lean forward too quickly.

✻ NOTICE

If you are not able to smoothly pull enough of the safety belt from the retractor, firmly pull the belt out and release it. Then you will be able to pull the belt out smoothly.

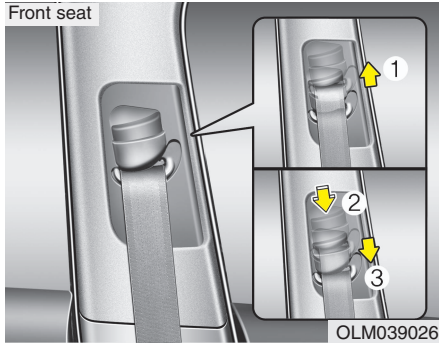

Height adjustment

You can adjust the height of the shoulder belt anchor to one of 4 positions for maximum comfort and safety.

The height of the seat belt should not be too near your neck. The shoulder portion should be adjusted so that it lies across your chest and midway over your shoulder nearest the door and not your neck.

To adjust the height of the seat belt anchor, lower or raise the height adjuster into an appropriate position.

To raise the height adjuster, pull it up (1). To lower it, push it down (3) while pressing the height adjuster button (2).

Release the button to lock the anchor into position. Try sliding the height adjuster to make sure that it has locked into position.

⚠ WARNING

- **Verify the shoulder belt anchor is locked into position at the appropriate height. Never position the shoulder belt across your neck or face. Improperly positioned seat belts can cause serious injuries in an accident.**
- **Failure to replace seat belts after an accident could leave you with damaged seat belts that will not provide protection in the event of another collision leading to personal injury or death. Replace your seat belts after being in an accident as soon as possible.**

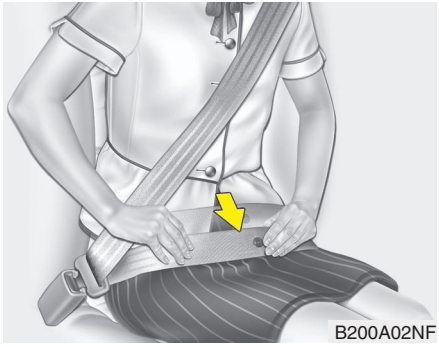
B200A02NF

⚠ WARNING

You should place the lap belt portion as low as possible and snugly across your hips, not on your waist. If the lap belt is located too high on your waist, it may increase the chance of injury in the event of a collision. Both arms should not be under or over the belt. Rather, one should be over and the other under, as shown in the illustration.

Never wear the seat belt under the arm nearest the door.

Seat belts - Front passenger and rear seat 3-point system with combination locking retractor

To fasten your seat belt:

Combination retractor type seat belts are installed in the rear seat positions to help accommodate the installation of child restraint systems. Although a combination retractor is also installed in the front passenger seat position, it is strongly recommended that children always be seated in the rear seat. NEVER place any infant restraint system in the front seat of the vehicle.

This type of seat belt combines the features of both an emergency locking retractor seat belt and an automatic locking retractor seat belt. To fasten your seat belt, pull it out of the retractor and insert the metal tab into the buckle. There will be an audible "click" when the tab locks into the buckle. When not securing a child restraint, the seat belt operates in the same way as the driver's seat belt (Emergency Locking Retractor Type). It automatically adjusts to the proper length only after the lap belt portion of the seat belt is adjusted manually so that it fits snugly around your hips.

When the seat belt is fully extended from the retractor to allow the installation of a child restraint system, the seat belt operation changes to allow the belt to retract, but not to extend (Automatic Locking Retractor Type). Refer to “Using a child restraint system” in this section.

✻ NOTICE

Although the combination retractor provides the same level of protection for seated passengers in either emergency or automatic locking modes, it is recommended that seated passengers use the emergency locking feature for improved convenience. The automatic locking function is intended to facilitate child restraint installation. To convert from the automatic locking feature to the emergency locking operation mode, allow the unbuckled seat belt to fully retract.

⚠ CAUTION

Do NOT fold down the left portion of the second row seat back when the second row center seat belt is buckled. ALWAYS UNBUCKLE the second row center seat belt before folding down the left portion of the second row seat back. If the second row center seat belt is buckled when the left portion of the second row seat back is folded down, distortion and damage to the top portion of the seat back and seat belt garnish may result, causing the seat back to lock into the folded down position.

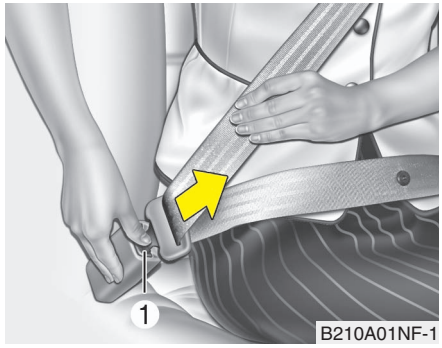

To release the seat belt:

The seat belt is released by pressing the release button (1) in the locking buckle. When it is released, the belt should automatically draw back into the retractor.

If this does not happen, check the belt to be sure it is not twisted, then try again.

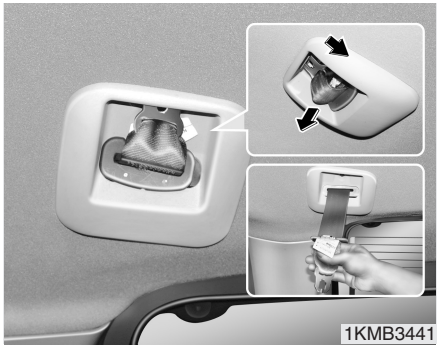

3 Point rear center belt

To fasten the rear center belt

1. Extract the tongue plate from the hole on the belt assembly cover and slowly pull the tongue plates out from the retractor.

⚠ CAUTION - Cargo

Be sure that the cargo is securely loaded in the rear cargo area. Doing not so may damage the rear center safety belt in sudden stop or certain collisions.

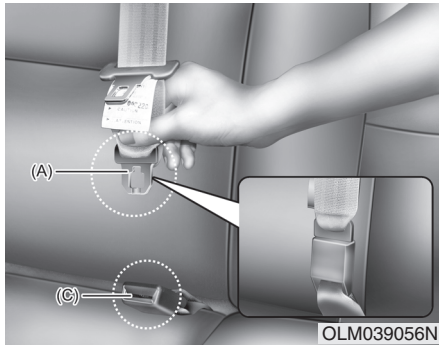

2. Insert the tongue plate (A) into the open end of the buckle (C) until an audible “click" is heard, indicating the latch is locked. Make sure the belt is not twisted.

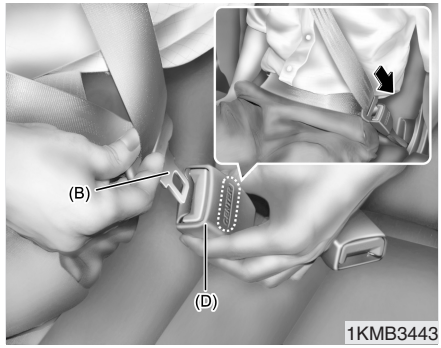

3. Pull the tongue plate (B) and insert the tongue plate (B) into the open end of the buckle (D) until an audible “click” is heard, indicating the latch is locked. Make sure the belt is not twisted.

⚠ CAUTION

When using the rear center seat belt, the buckle with the “CENTER” mark must be used.

There will be an audible “click” when the tab locks in the buckle. The seat belt automatically adjusts to the proper length only after the lap belt is adjusted manually so that it fits snugly around your hips, if you lean forward in a slow, easy motion, the belt will extend and let you move around. If there is a sudden stop or impact, the belt will lock into position. It will also lock if you try to lean forward too quickly.

⚠ WARNING

When using the rear seat center belt, you must lock all tongue plates and buckles. If any tongue plate or buckle is not locked, it will increase the chance of injury in the event of collision.

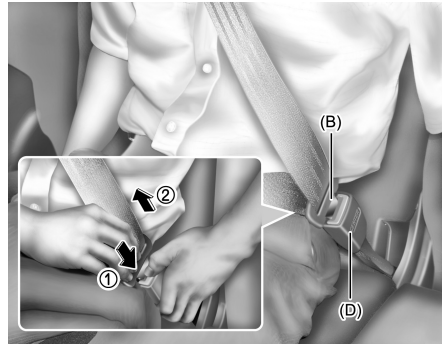

To unfasten the rear center belt

1. Press the release button on the buckle (D) and remove the tongue plate (B) from the buckle (D).

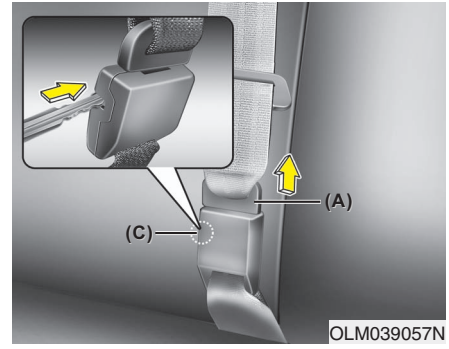

2. To retract the rear center seatbelt, insert a key or similar small rigid device into the web release hole (C). Pull up on the seat belt web (A) and allow the webbing to retract automatically.

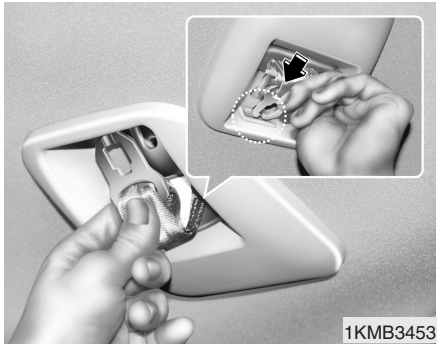

3. Insert the tongue plate (A) into the hole on the belt assembly cover.

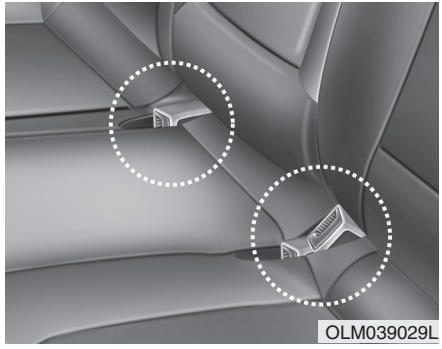

Stowing the rear seat belt

- The rear seat belt buckles can be stowed in the pocket between the rear seatback and cushion when not in use.

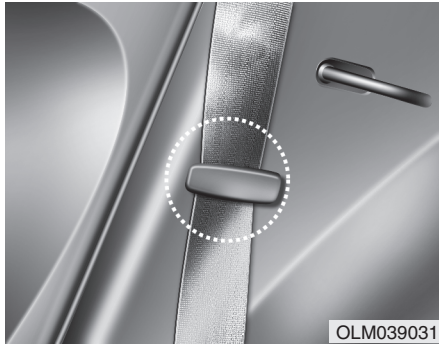

- Routing the seat belt webbing through the rear seat belt guides will help keep the belts from being trapped behind or under the seats when they are folded down.

⚠ CAUTION

When using the seat belt, use it after taking it out of the guides.

If you pull the seat belt when it is stored in the guides, it may damage the guides and/or belt webbing.


OED030300

Pre-tensioner seat belt

Your vehicle is equipped with driver's and front passenger's pre-tensioner seat belts. The purpose of the pre-tensioner is to make sure that the seat belts fit tightly against the occupant's body in certain frontal or side collisions or rollovers. The pre-tensioner seat belts may be activated in crashes where the frontal or side collision or rollover is severe enough.

When the vehicle stops suddenly, or if the occupant tries to lean forward too quickly, the seat belt retractor will lock into position. In certain frontal or side collisions or rollovers, the pre-tensioner will activate and pull the seat belt into tighter contact against the occupant's body.

If the system senses excessive seat belt tension on the driver or passenger's seat belt when the pre-tensioner activates, the load limiter inside the pre-tensioner will release some of the pressure on the affected seat belt.

✻ NOTICE

The pre-tensioner will activate not only in a frontal collision but also in a side collision or rollover, if the vehicle is equipped with a side or curtain air bag.

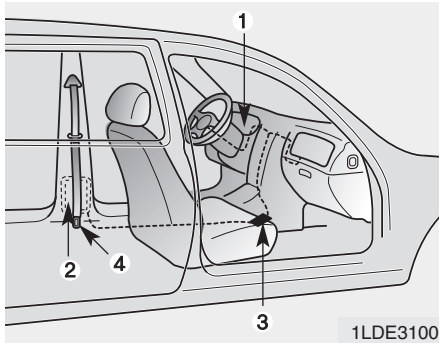

1LDE3100

The seat belt pre-tensioner system consists mainly of the following components. Their locations are shown in the illustration:

1. SRS air bag warning light
2. Retractor pre-tensioner assembly
3. SRS control module
4. Anchor pre-tensioner assembly (Driver/Passanger side, if equipped)

⚠ WARNING

To obtain maximum benefit from a pre-tensioner seat belt:

1. **The seat belt must be worn correctly and adjusted to the proper position. Please read and follow all of the important information and precautions about your vehicle's occupant safety features – including seat belts and air bags – that are provided in this manual.**
2. **Be sure you and your passengers always wear seat belts properly.**

✻ NOTICE

- **Both the driver's and front passenger's pre-tensioner seat belts may be activated in certain frontal or side collisions or rollovers.**
  The pre-tensioners will not be activated if the seat belts are not being worn at the time of the collision.
- **When the pre-tensioner seat belts are activated, a loud noise may be heard and fine dust, which may appear to be smoke, may be visible in the passenger compartment. These are normal operating conditions and are not hazardous.**
- **Although it is harmless, the fine dust may cause skin irritation and should not be breathed for prolonged periods. Wash all exposed skin areas thoroughly after an accident in which the pre-tensioner seat belts were activated.**

✻ NOTICE

Because the sensor that activates the SRS air bag is connected with the pre-tensioner seat belt, the SRS air bag warning light ( ) on the instrument panel will illuminate for approximately 6 seconds after the ignition switch has been turned to the ON position, and then it should turn off.

⚠ CAUTION

If the pre-tensioner seat belt is not working properly, this warning light will illuminate even if there is no malfunction of the SRS air bag. If the SRS air bag warning light does not illuminate when the ignition switch is turned ON, or if it remains illuminated after illuminating for approximately 6 seconds, or if it illuminates while the vehicle is being driven, please have an authorized HYUNDAI dealer inspect the pre-tensioner seat belt and SRS air bag system as soon as possible.

⚠ WARNING

- **Pre-tensioners are designed to operate only one time. After activation, pre-tensioner seat belts must be replaced. All seat belts, of any type, should always be replaced after they have been worn during a collision.**
- **The pre-tensioner seat belt assembly mechanisms become hot during activation. Do not touch the pre-tensioner seat belt assemblies for several minutes after they have been activated.**
- **Do not attempt to inspect or replace the pre-tensioner seat belts yourself. This must be done by an authorized HYUNDAI dealer.**
- **Do not strike the pre-tensioner seat belt assemblies.**
- **Do not attempt to service or repair the pre-tensioner seat belt system in any manner.**

(Continued)

(Continued)

- **Improper handling of the pre-tensioner seat belt assemblies, and failure to heed the warnings not to strike, modify, inspect, replace, service or repair the pre-tensioner seat belt assemblies may lead to improper operation or inadvertent activation and serious injury.**
- **Always wear the seat belts when driving or riding in a motor vehicle.**
- **If the vehicle or pre-tensioner seat belt must be discarded, contact an authorized HYUNDAI dealer.**

Seat belt precautions

⚠ WARNING

All occupants of the vehicle must wear their seat belts at all times. Seat belts and child restraints reduce the risk of serious or fatal injuries for all occupants in the event of a collision or sudden stop. Without a seat belt, occupants could be shifted too close to a deploying air bag, strike the interior structure or be thrown from the vehicle. Properly worn seat belts greatly reduce these hazards.

Even with advanced air bags, unbelted occupants can be severely injured by a deploying air bag.

Always follow the precautions about seat belts, air bags and occupant safety contained in this manual.

Infant or small child

All 50 states have child restraint laws. You should be aware of the specific requirements in your state. Child and/or infant seats must be properly placed and installed in the rear seat. For more information about the use of these restraints, refer to “Child restraint system” in this section.

⚠ WARNING

Every person in your vehicle needs to be properly restrained at all times, including infants and children. Never hold a child in your arms or lap when riding in a vehicle. The violent forces created during a crash will tear the child from your arms and throw the child against the interior. Always use a child restraint appropriate for your child's height and weight.

✻ NOTICE

Small children are best protected from injury in an accident when properly restrained in the rear seat by a child restraint system that meets the requirements of the Federal Motor Vehicle Safety Standards. Before buying any child restraint system, make sure that it has a label certifying that it meets Federal Motor Vehicle Safety Standard 213. The restraint must be appropriate for your child's height and weight. Check the label on the child restraint for this information. Refer to “Child restraint system” in this section.

Larger children

Children who are too large for child restraint systems should always occupy the rear seat and use the available lap/shoulder belts. The lap portion should be fastened and snugged on the hips and as low as possible. Check if the belt fits periodically. A child's squirming could put the belt out of position. Children are given the most safety in the event of an accident when they are restrained by a proper restraint system in the rear seat. If a larger child (over age 12) must be seated in the front seat, the child should be securely restrained by the available lap/shoulder belt and the seat should be placed in the rearmost position. Children age 12 and under should be restrained securely in the rear seat. NEVER place a child age 12 and under in the front seat. NEVER place a rear facing child seat in the front seat of a vehicle.

If the shoulder belt portion slightly touches the child's neck or face, try placing the child closer to the center of the vehicle. If the shoulder belt still touches their face or neck they need to be returned to a child restraint system.

⚠ WARNING - Shoulder belts on small children

- **Never allow a shoulder belt to be in contact with a child's neck or face while the vehicle is in motion.**
- **If seat belts are not properly worn and adjusted on children, there is a risk of death or serious injury.**

Restraint of pregnant women

Pregnant women should wear lap/shoulder belt assemblies whenever possible according to specific recommendations by their doctors. The lap portion of the belt should be worn AS SNUGLY AND LOW AS POSSIBLE on the hips, not a cross the abdomen.

⚠ WARNING - Pregnant women

Pregnant women must never place the lap portion of the safety belt over the area of the abdomen where the fetus is located or above the abdomen where the belt could crush the fetus during an impact.

Injured person

A seat belt should be used when an injured person is being transported. When this is necessary, you should consult a physician for recommendations.

One person per belt

Two people (including children) should never attempt to use a single seat belt. This could increase the severity of injuries in case of an accident.

Do not lie down

To reduce the chance of injuries in the event of an accident and to achieve maximum effectiveness of the restraint system, all passengers should be sitting up and the front and rear seats should be in an upright position when the car is moving. A seat belt cannot provide proper protection if the person is lying down in the rear seat or if the front and rear seats are in a reclined position.

⚠ WARNING

Riding with a reclined seatback increases your chance of serious or fatal injuries in the event of a collision or sudden stop. The protection of your restraint system (seat belts and air bags) is greatly reduced by reclining your seat. Seat belts must be snugged against your hips and chest to work properly. The more the seatback is reclined, the greater the chance an occupant's hips will slide under the lap belt causing serious internal injuries. Also, the shoulder belt may strike the occupant's neck. Drivers and passengers should always sit well back in their seats, properly belted, and with the seatbacks upright.

Care of seat belts

Seat belt systems should never be disassembled or modified. In addition, care should be taken to assure that seat belts and belt hardware are not damaged by seat hinges, doors or other abuse.

⚠ WARNING

When you return the rear seatback to its upright position after the rear seatback has been folded down, be careful not to damage the seat belt webbing or buckle. Be sure that the webbing or buckle does not get caught or pinched in the rear seat. A seat belt with damaged webbing or buckle could possibly fail during a collision or sudden stop, resulting in serious injury. If the webbing or buckles are damaged, get them replaced immediately.

Periodic inspection

All seat belts should be inspected periodically for wear or damage of any kind. Any damaged parts should be replaced as soon as possible.

Keep belts clean and dry

Seat belts should be kept clean and dry. If belts become dirty, they can be cleaned by using a mild soap solution and warm water. Bleach, dye, strong detergents or abrasives should not be used because they may damage and weaken the fabric.

When to replace seat belts

Entire in-use seat belt assembly or assemblies should be replaced if the vehicle has been involved in an accident. This should be done even if no damage is visible. Additional questions concerning seat belt operation should be directed to an authorized HYUNDAI dealer.

CHILD RESTRAINT SYSTEM

Children riding in the car should sit in the rear seat and must always be properly restrained to minimize the risk of injury in an accident, sudden stop or sudden maneuver. According to accident statistics, children are safer when properly restrained in the rear seats than in the front seat. Larger children not in a child restraint should use one of the seat belts provided.

You should be aware of the specific requirements in your state. Child and/or infant safety seats must be properly placed and installed in the rear seat. You must use a commercially available child restraint system that meets the requirements of the Federal Motor Vehicle Safety Standards (FMVSS).

Child restraint systems are designed to be secured in vehicle seats by lap belts or the lap belt portion of a lap/shoulder belt, or by a LATCH system.

Children could be injured or killed in a crash if their restraints are not properly secured. For small children and babies, a child seat or infant seat must be used. Before buying a particular child restraint system, make sure it fits your car seat and seat belts, and fits your child. Follow all the instructions provided by the manufacturer when installing the child restraint system.

⚠ WARNING

- **A child restraint system must be placed in the rear seat. Never install a child or infant seat on the front passenger's seat. Should an accident occur and cause the passenger-side air bag to deploy, it could severely injure or kill an infant or child seated in an infant or child seat. Thus only use a child restraint in the rear seat of your vehicle.**
- **A seat belt or child restraint system can become very hot if it is left in a closed vehicle on a sunny day, even if the outside temperature does not feel hot. Be sure to check the seat cover and buckles before placing a child there.**

(Continued)

(Continued)

- **When the child restraint system is not in use, store it in the luggage area or fasten it with a seat belt so that it will not be thrown forward in the case of a sudden stop or an accident.**
- **Children may be seriously injured or killed by an inflating air bag. All children, even those too large for child restraints, must ride in the rear seat.**

⚠ WARNING

To reduce the chance of serious or fatal injuries:

- **Children of all ages are safer when restrained in the rear seat. A child riding in the front passenger seat can be forcefully struck by an inflating air bag resulting in serious or fatal injuries.**
- **Always follow the child restraint system manufacturer's instructions for installation and use of the child restraint.**
- **Always make sure the child seat is secured properly in the car and your child is securely restrained in the child seat.**
- **Never hold a child in your arms or lap when riding in a vehicle. The violent forces created during a crash will tear the child from your arms and throw the child against the car's interior.**
- **Never put a seat belt over yourself and a child. During a crash, the belt could press deep into the child causing serious internal injuries.**

(Continued)

(Continued)

- **Never leave children unattended in a vehicle – not even for a short time. The car can heat up very quickly, resulting in serious injuries to children inside. Even very young children may inadvertently cause the vehicle to move, entangle themselves in the windows, or lock themselves or others inside the vehicle.**
- **Never allow two children, or any two persons, to use the same seat belt.**
- **Children often squirm and reposition themselves improperly. Never let a child ride with the shoulder belt under their arm or behind their back. Always properly position and secure children in the rear seat.**
- **Never allow a child to stand-up or kneel on the seat or floor of a moving vehicle. During a collision or sudden stop, the child can be violently thrown against the vehicle's interior, resulting in serious injury.**

(Continued)

(Continued)

- **Never use an infant carrier or a child safety seat that "hooks" over a seatback, it may not provide adequate security in an accident.**
- **Seat belts can become very hot, especially when the car is parked in direct sunlight. Always check seat belt buckles before fastening them over a child.**

Rearward-facing child restraint system

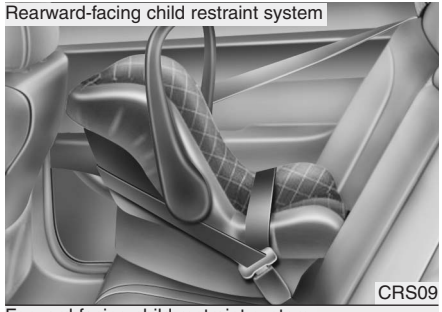

Forward-facing child restraint system

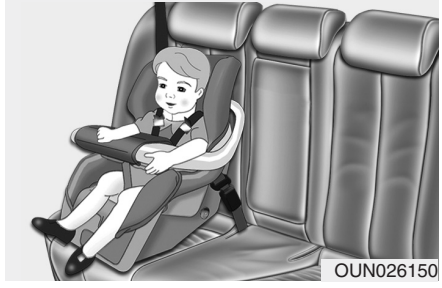

Using a child restraint system

For small children and babies, the use of a child seat or infant seat is required. This child seat or infant seat should be of appropriate size for the child and should be installed in accordance with the manufacturer's instructions.

For safety reasons, we recommend that the child restraint system be used in the rear seats.

⚠ WARNING

Never place a rear-facing child restraint in the front passenger seat, because of the danger an inflating passenger-side air bag could impact the rear-facing child restraint and kill the child.

Since all passenger seat belts move freely under normal conditions and only lock under extreme or emergency conditions (emergency locking mode), you must manually change these seat belts to the automatic locking mode to secure a child restraint.

⚠ WARNING - Child seat installation

- **A child can be seriously injured or killed in a collision if the child restraint is not properly anchored to the car and the child is not properly restrained in the child restraint. Before installing the child restraint system, read the instructions supplied by the child restraint system manufacturer.**
- **If the seat belt does not operate as described in this section, have the system checked immediately by your authorized HYUNDAI dealer.**
- **Failure to observe this manual's instructions regarding child restraint systems and the instructions provided with the child restraint system could increase the chance and/or severity of injury in an accident.**

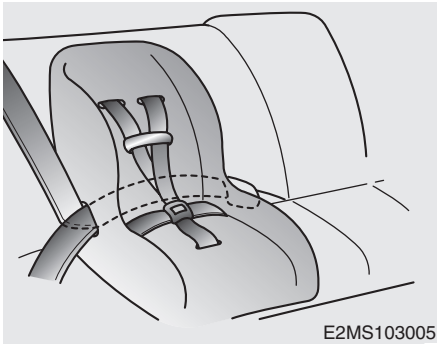
E2MS103005

Placing a passenger seat belt into the automatic locking mode

The use of the automatic locking mode will ensure that the normal movement of the child in the vehicle does not cause the seat belt to be pulled out and loosen the firmness of its hold on the child restraint system. To secure a child restraint system, use the following procedure.

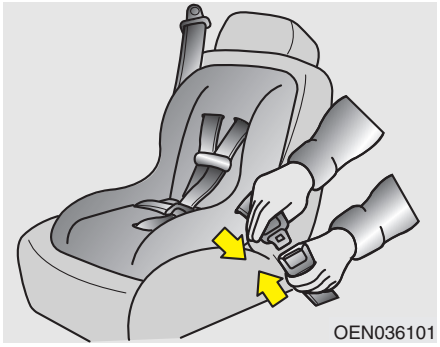
OEN036101

To install a child restraint system on the outboard or center rear seats, do the following:

1. Place the child restraint system on the seat and route the lap/shoulder belt around or through the restraint, following the restraint manufacturer's instructions. Be sure the seat belt webbing is not twisted.
2. Fasten the lap/shoulder belt latch into the buckle. Listen for the distinct "click" sound.

Position the release button so that it is easy to access in case of an emergency.

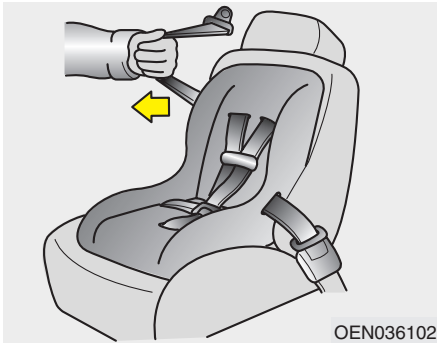
OEN036102

3. Pull the shoulder portion of the seat belt all the way out. When the shoulder portion of the seat belt is fully extended, it will shift the retractor to the "Automatic Locking" (child restraint) mode.

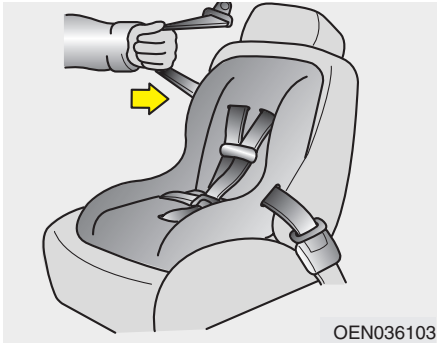
OEN036103

4. Slowly allow the shoulder portion of the seat belt to retract and listen for an audible “clicking” or “ratcheting” sound. This indicates that the retractor is in the “Automatic Locking” mode. If no distinct sound is heard, repeat steps 3 and 4.

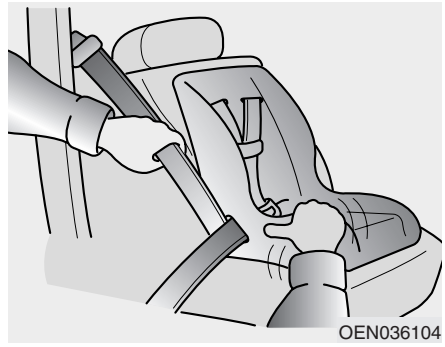
OEN036104

5. Remove as much slack from the belt as possible by pushing down on the child restraint system while feeding the shoulder belt back into the retractor.
6. Push and pull on the child restraint system to confirm that the seat belt is holding it firmly in place. If it is not, release the seat belt and repeat steps 2 through 6.
7. Double check that the retractor is in the “Automatic Locking” mode by attempting to pull more of the seat belt out of the retractor. If you cannot, the retractor is in the “Automatic Locking” mode.

To remove the child restraint, press the release button on the buckle and then pull the lap/shoulder belt out of the restraint and allow the seat belt to retract fully.

⚠ WARNING - Auto lock mode

The lap/shoulder belt automatically returns to the “emergency lock mode” whenever the belt is allowed to retract fully. Therefore, the preceding seven steps must be followed each time a child restraint is installed.

If the retractor is not in the Automatic Locking mode, the child restraint can move when your vehicle turns or stops suddenly. A child can be seriously injured or killed if the child restraint is not properly anchored to the car, including setting the retractor to the Automatic Locking mode.

When the seat belt is allowed to retract to its fully stowed position, the retractor will automatically switch from the “Automatic Locking” mode to the emergency lock mode for normal adult usage.

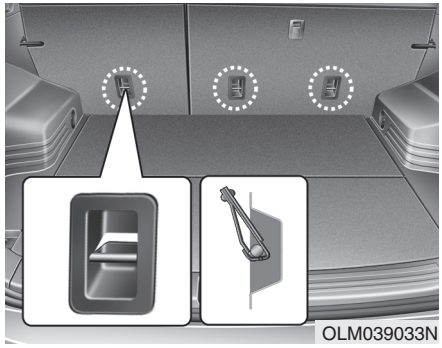

Securing a child restraint seat with tether anchor system

Child restraint hook holders are located on the back of the rear seatbacks.

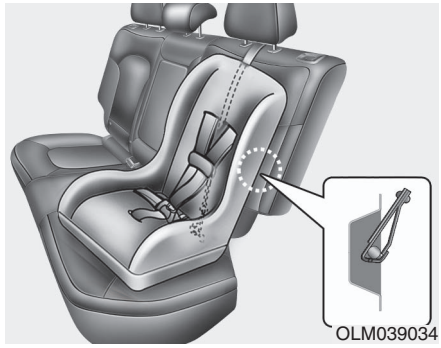

1. Route the child restraint seat tether strap over the seatback.
   For vehicles with adjustable headrests, route the tether strap under the headrest and between the headrest posts, otherwise route the tether strap over the top of the seatback.
2. Connect the tether strap hook to the appropriate child restraint hook holder and tighten to secure the child restraint seat.

⚠ WARNING

A child can be seriously injured or killed in a collision if the child restraint is not properly anchored to the car and the child is not properly restrained in the child restraint. Always follow the child seat manufacturer's instructions for installation and use.

⚠ WARNING - Tether strap

Never mount more than one child restraint to a single tether anchor or to a single lower anchorage point. The increased load caused by multiple seats may cause the tethers or lower anchorage points to break, causing serious injury or death.

⚠ WARNING - Child restraint check

Check that the child restraint system is secure by pushing and pulling it in different directions. Incorrectly fitted child restraints may swing, twist, tip or separate causing death or serious injury.

⚠ WARNING - Child restraint anchorage

- **Child restraint anchorages are designed to withstand only those loads imposed by correctly fitted child restraints. Under no circumstances are they to be used for adult seat belts or harnesses or for attaching other items or equipment to the vehicle.**
- **The tether strap may not work properly if attached somewhere other than the correct tether anchor.**

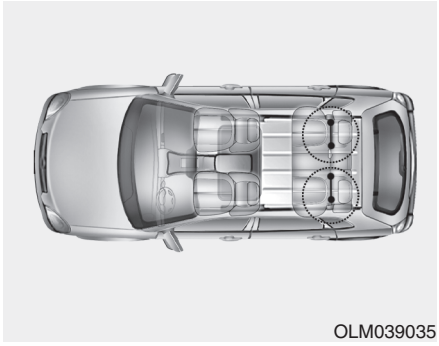

OLM039035

Securing a child restraint seat with child seat lower anchor system

Some child seat manufacturers make child restraint seats that are labeled as LATCH or LATCH-compatible child restraint seats. LATCH stands for "Lower Anchors and Tethers for Children". These seats include two rigid or webbing mounted attachments that connect to two LATCH anchors at specific seating positions in your vehicle. This type of child restraint seat eliminates the need to use seat belts to attach the child seat in the rear seats.

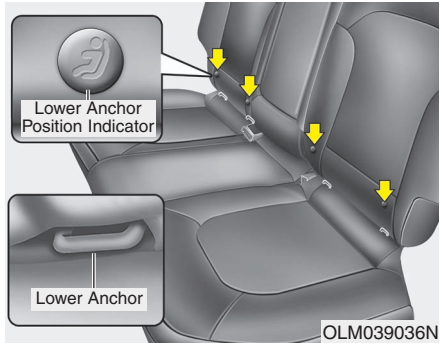

OLM039036N

Child restraint symbols are located on the left and right rear seat backs to indicate the position of the lower anchors for child restraints.

⚠ WARNING

When using the vehicle's "LATCH" system to install a child restraint system in the rear seat, all unused vehicle rear seat belt metal latch plates or tabs must be latched securely in their seat belt buckles and the seat belt webbing must be retracted behind the child restraint to prevent the child from reaching and taking hold of unretracted seat belts. Unlatched metal latch plates or tabs may allow the child to reach the unretracted seat belts which may result in strangulation and a serious injury or death to the child in the child restraint.

⚠ WARNING

Install the child restraint seat fully rearward against the seatback with the seatback reclined two positions from the most upright latched position.

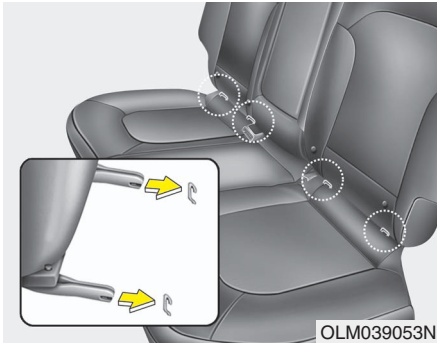
OLM039053N

LATCH anchors have been provided in your vehicle. The LATCH anchors are located in the left and right outboard rear seating positions. Their locations are shown in the illustration. There is no LATCH anchor provided for the center rear seating position.

The LATCH anchors are located between the seatback and the seat cushion of the rear seat left and right outboard seating positions.

Follow the child seat manufacturer's instructions to properly install child restraint seats with LATCH or LATCH-compatible attachments.

Once you have installed the LATCH child restraint, assure that the seat is properly attached to the LATCH and tether anchors.

Also, test the child restraint seat before you place the child in it. Tilt the seat from side to side. Also try to tug the seat forward. Check to see if the anchors hold the seat in place.

⚠ CAUTION

Do not allow the rear seat belt webbing to get scratched or pinched by the child-seat latch and LATCH anchor during the installation.

⚠ WARNING

If the child restraint is not anchored properly, the risk of a child being seriously injured or killed in a collision greatly increases.

⚠ WARNING - LATCH lower anchors

LATCH lower anchors are only to be used with the left and right rear outboard seating positions. Never attempt to attach a LATCH equipped seat in the center seating position. You may damage the anchors or the anchors may fail and break in a collision.

AIR BAG - ADVANCED SUPPLEMENTAL RESTRAINT SYSTEM

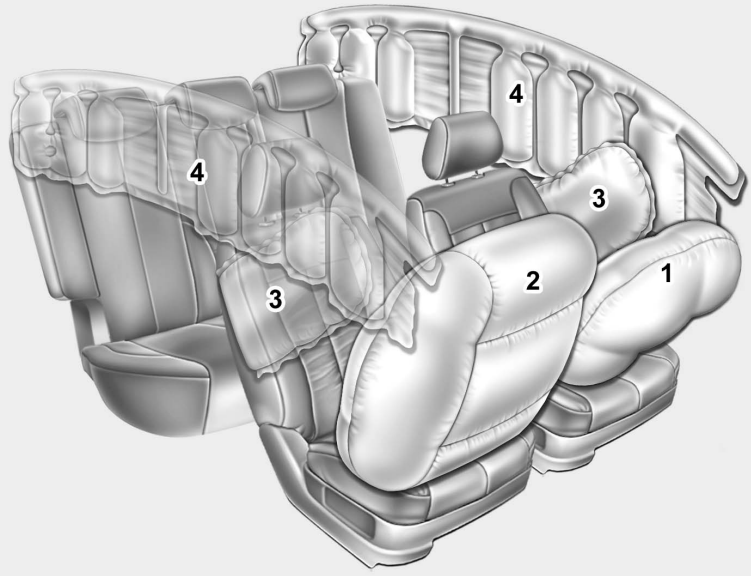

* The actual air bags in the vehicle may differ from the illustration.

OLM039301

(1) Driver's front air bag
(2) Passenger's front air bag
(3) Side impact air bag
(4) Curtain air bag

⚠ WARNING

Even in vehicles with air bags, you and your passengers must always wear the seat belts provided in order to minimize the risk and severity of injury in the event of a collision or rollover.

How does the air bag system operate

- Air bags are activated (able to inflate if necessary) only when the ignition switch is turned to the ON or START position.
- Air bags inflate in the event of a serious frontal collision or side collision (if equipped with a side air bag or curtain air bag) in order to help protect the occupants from serious physical injury.
  Also, the side and/or curtain air bags inflate in the event of a rollover in order to help protect the occupants from serious physical injury.
- There is no single speed at which the air bags will inflate.
  Generally, air bags are designed to inflate based upon the severity of a collision and its direction. These two factors determine whether the sensors produce an electronic deployment/inflation signal.
- Air bag deployment depends on a number of factors including vehicle speed, angles of impact and the density and stiffness of the vehicles or objects which your vehicle hits in the collision. The determining factors are not limited to those mentioned above.
- The front air bags will completely inflate and deflate in an instant.
  It is virtually impossible for you to see the air bags inflate during an accident.
  It is much more likely that you will simply see the deflated air bags hanging out of their storage compartments after the collision.
- In order to help provide protection in a severe collision, the air bags must inflate rapidly. The speed of air bag inflation is a consequence of the extremely short time in which a collision occurs and the need to inflate the air bag between the occupant and the vehicle structures before the occupant impacts those structures. This speed of inflation reduces the risk of serious or life-threatening injuries in a severe collision and is thus a necessary part of air bag design.
  However, air bag inflation can also cause injuries which can include facial abrasions, bruises and broken bones because the inflation speed also causes the air bags to expand with a great deal of force.
- **There are even circumstances under which contact with the air bag can cause fatal injuries, especially if the occupant is positioned excessively close to the air bag.**

⚠ WARNING

- **To avoid severe personal injury or death caused by deploying air bags in a collision, the driver should sit as far back from the steering wheel air bag as possible (at least 10 inches (250 mm) away). The front passengers should always move their seats as far back as possible and sit back in their seat.**
- **Air bags inflate instantly in the event of collision, and passengers may be injured by the air bag expansion force if they are not in proper position.**
- **Air bag inflation may cause injuries including facial or bodily abrasions, injuries from broken glasses or burns.**

Noise and smoke

When the air bags inflate, they make a loud noise and they leave smoke and powder in the air inside of the vehicle. This is normal and is a result of the ignition of the air bag inflator. After the air bag inflates, you may feel substantial discomfort in breathing due to the contact of your chest with both the seat belt and the air bag, as well as from breathing the smoke and powder. **Open your doors and/or windows as soon as possible after impact in order to reduce discomfort and prevent prolonged exposure to the smoke and powder.**

Though the smoke and powder are nontoxic, they may cause irritation to the skin (eyes, nose and throat, etc). If this is the case, wash and rinse with cold water immediately and consult a doctor if the symptom persists.

⚠ WARNING

When the air bags deploy, the air bag related parts in the steering wheel and/or instrument panel and/or in both sides of the roof rails above the front and rear doors and in the front seatbacks are very hot. To prevent injury, do not touch the air bag storage area's internal components immediately after an air bag has inflated.



Do not install a child restraint on the front passenger's seat.

Never place a rear-facing child restraint in the front passenger's seat. If the air bag deploys, it would impact the rear-facing child restraint, causing serious or fatal injury.

In addition, do not place front-facing child restraints in the front passenger's seat either. If the front passenger air bag inflates, it could cause serious or fatal injuries to the child.

⚠ WARNING

- **Extreme Hazard! Do not use a rearward facing child restraint on a seat protected by an air bag in front of it!**
- **Never put a child restraint in the front passenger's seat. If the front passenger air bag inflates, it can cause serious or fatal injuries.**
- **When children are seated in the rear outboard seats of a vehicle equipped with side and/or curtain air bags, be sure to install the child restraint system as far away from the door side as possible, and securely lock the child restraint system in position.**

  Inflation of side and/or curtain air bags could cause serious injury or death to an infant or child.



W7-147

Air bag warning light

The purpose of the air bag warning light in your instrument panel is to alert you of a potential problem with your air bag - Supplemental Restraint System (SRS).

When the ignition switch is turned ON, the warning light should illuminate for approximately 6 seconds, then go off.

Have the system checked if:

- The light does not turn on briefly when you turn the ignition ON.
- The light stays on after illuminating for approximately 6 seconds.
- The light comes on while the vehicle is in motion.

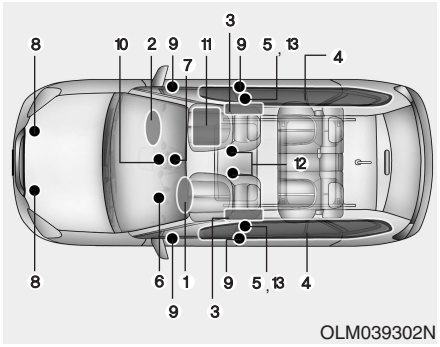

OLM039302N

SRS components and functions

The SRS consists of the following components:

1. Driver's front air bag module
2. Passenger's front air bag module
3. Side impact air bag modules
4. Curtain air bag modules
5. Retractor pre-tensioner assemblies
6. Air bag warning light
7. SRS control module (SRSCM)/ Rollover sensor
8. Front impact sensors
9. Side impact sensors
10. “PASSENGER AIR BAG OFF” indicator (Front passenger’s seat only)
11. Occupant classification system (Front passenger’s seat only)
12. Driver’s and front passenger’s seat belt buckle sensors
13. Anchor pre-tensioner assembly (Driver/Passanger side, if equipped)

The SRSCM continually monitors all SRS components while the ignition switch is ON to determine if a crash impact is severe enough to require air bag deployment or pre-tensioner seat belt deployment.

The SRS air bag warning light on the instrument panel will illuminate for about 6 seconds after the ignition switch is turned to the ON position, after which the SRS air bag warning light should go out.

If any of the following conditions occurs, this indicates a malfunction of the SRS. Have an authorized HYUNDAI dealer inspect the air bag system as soon as possible.

- The light does not turn on briefly when you turn the ignition ON.
- The light stays on after illuminating for approximately 6 seconds.
- The light comes on while the vehicle is in motion.

Driver's front air bag (1)

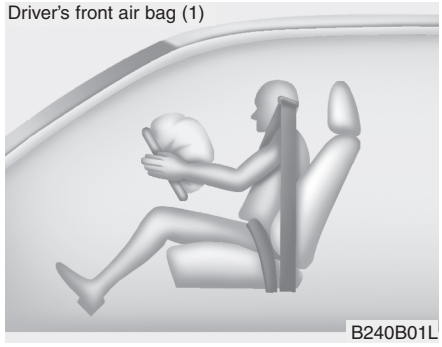

B240B01L

The front air bag modules are located both in the center of the steering wheel and in the front passenger's panel above the glove box. When the SRSCM detects a sufficiently severe impact to the front of the vehicle, it will automatically deploy the front air bags.

Driver's front air bag (2)

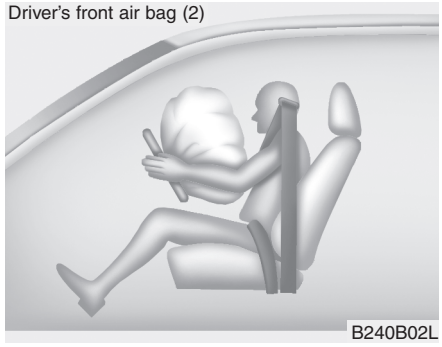

B240B02L

Upon deployment, tear seams molded directly into the pad covers will separate under pressure from the expansion of the air bags. Further opening of the covers then allows full inflation of the air bags.

Driver's front air bag (3)

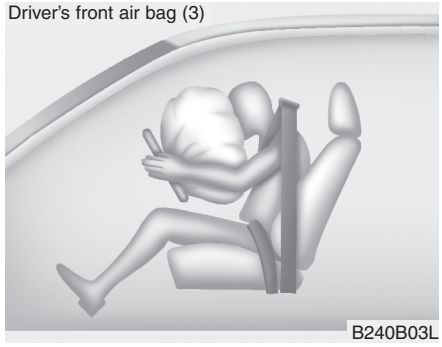

B240B03L

A fully inflated air bag, in combination with a properly worn seat belt, slows the driver's or the passenger's forward motion, reducing the risk of head and chest injury.

After complete inflation, the air bag immediately starts deflating, enabling the driver to maintain forward visibility and the ability to steer or operate other controls.

Passenger's front air bag

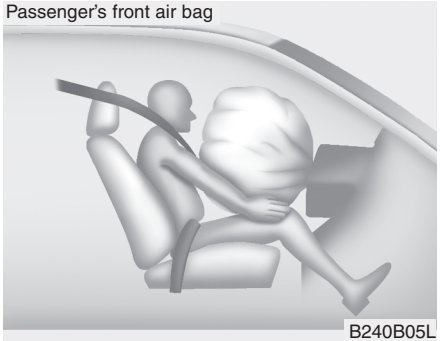

B240B05L

⚠ WARNING

- **Do not install or place any accessories (drink holder, cassette holder, sticker, etc.) on the front passenger's panel above the glove box in a vehicle with a passenger's air bag. Such objects may become dangerous projectiles and cause injury if the passenger's air bag inflates.**
- **When installing a container of liquid air freshener inside the vehicle, do not place it near the instrument cluster nor on the instrument panel surface.**

  It may become a dangerous projectile and cause injury if the passenger's air bag inflates.

⚠ WARNING

- **If an air bag deploys, there may be a loud noise followed by a fine dust released in the vehicle. These conditions are normal and are not hazardous - the air bags are packed in this fine powder. The dust generated during air bag deployment may cause skin or eye irritation as well as aggravate asthma for some persons. Always wash all exposed skin areas thoroughly with lukewarm water and a mild soap after an accident in which the air bags were deployed.**
- **The SRS can function only when the ignition switch is in the ON position. If the SRS air bag warning light does not illuminate, continuously remains on after illuminating for about 6 seconds when the ignition switch is turned to the ON position, or after the engine is started, or comes on while driving, the SRS is not working properly. If this occurs, have your vehicle immediately inspected by an authorized HYUNDAI dealer.**

(Continued)

(Continued)

- **Before you replace a fuse or disconnect a battery terminal, turn the ignition switch to the LOCK position and remove the ignition key. Never remove or replace the air bag related fuse(s) when the ignition switch is in the ON position. Failure to heed this warning will cause the SRS air bag warning light to illuminate.**



Occupant classification system

Your vehicle is equipped with an occupant classification system in the front passenger's seat.

The occupant classification system is designed to detect the presence of a properly-seated front passenger and determine if the passenger's front air bag should be enabled (may inflate) or not. The driver's front air bag is not affected or controlled by the occupant classification system.

Main components of occupant classification system

- A detection device located within the front passenger seat cushion.
- Electronic system to determine whether the passenger air bag systems should be activated or deactivated.
- A indicator light located on the instrument panel which illuminates the words "PASSENGER AIR BAG OFF" indicating the front passenger air bag system is deactivated.
- The instrument panel air bag indicator light is interconnected with the occupant classification system.

If the front passenger seat is occupied by a person that the system determines to be of adult size, and he/she sits properly (sitting upright with the seatback in an upright position, centered on the seat cushion with their seat belt on, legs comfortably extended and their feet on the floor), the "PASSENGER AIR BAG OFF" indicator will turn off and the front passenger's air bag will be able to inflate, if necessary, in frontal crashes.

You will find the "PASSENGER AIR BAG OFF" indicator on the center facia panel.

This system detects the conditions 1~4 in the following table and activates or deactivates the front passenger air bag based on these conditions.

Always be sure that you and all vehicle occupants are seated and restrained properly (sitting upright with the seat in an upright position, centered on the seat cushion, with the person's legs comfortably extended, feet on the floor, and wearing the seat belt properly) for the most effective protection by the air bag and the seat belt.

- The OCS may not function properly if the passenger takes actions which can affect the detection system. These include:
  (1) Failing to sit in an upright position.
  (2) Leaning against the door or center console.
  (3) Sitting towards the sides or the front of the seat.
  (4) Putting legs on the dashboard or resting them on other locations which reduce the passenger weight on the front seat.
  (5) Improperly wearing the safety belt.
  (6) Reclining the seat back.

Condition and operation in the front passenger occupant classification system

Condition detected by the occupant classification system	Indicator/Warning light		Devices
	"PASSENGER AIR BAG OFF" indicator light	SRS warning light	Front passenger air bag
1. Adult or child*1	Off	Off	Activated
2. Child restraint system*2	On	Off	Deactivated
3. Unoccupied	On	Off	Deactivated
4. There is a malfunction in the system	Off	On	Activated

*1 : If the front passenger seat is occupied by a child who is not in a CRS, “PASSENGER AIR BAG OFF” indicator may or may not be on. This is a normal condition. But to maximize safety, do not allow children to ride in the front passenger seat.

*2 : Never install a child restraint system on the front passenger seat.

⚠ WARNING

Riding in an improper position or placing weight or an active electronic device (ex. Laptop computer, navigation etc..) on the front passenger's seat when it is unoccupied by a passenger adversely affects the occupant classification system (OCS).

(Continued)

(Continued)

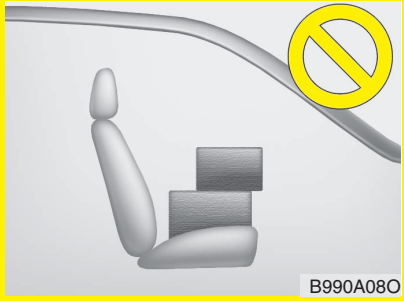

- **Never put a heavy load or an active electronic device (ex. Laptop computer, navigation etc..) on the front passenger seat.**

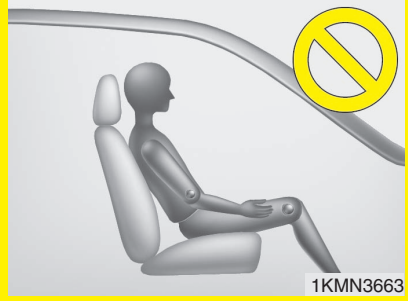

- **Never sit with hips shifted towards the front of the seat.**



- **Never place feet on the dashboard.**



- **Never place feet on the front passenger seatback.**

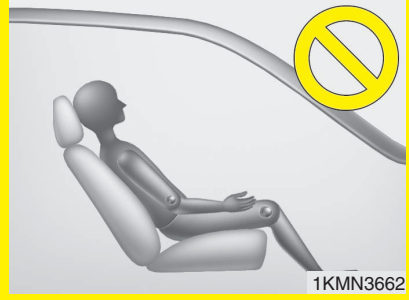

- **Never excessively recline the front passenger seatback.**



- **Never lean on the door or center console.**
- **Never sit on one side of the front passenger seat.**

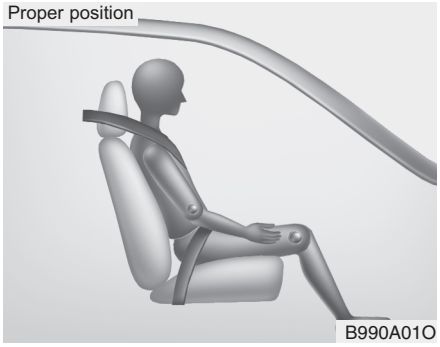

When an adult is seated in the front passenger seat, if the “PASSENGER AIR BAG OFF” indicator is on, turn the ignition switch to the LOCK position and ask the passenger to sit properly (sitting upright with the seat back in an upright position, centered on the seat cushion with their seat belt on, legs comfortably extended and their feet on the floor). Restart the engine and have the person remain in that position. This will allow the system to detect the person and to enable the passenger air bag.

If the "PASSENGER AIR BAG OFF" indicator is still on, ask the passenger to move to the rear seat.

⚠ WARNING

Do not allow an adult passenger to ride in the front seat when the “PASSENGER AIR BAG OFF” indicator is illuminated because the air bag will not deploy in the event of a crash. If the "PASSENGER AIR BAG OFF" indicator remains illuminated after the adult passenger repositions themselves properly and the car is restarted, it is recommended that passenger move to the rear seat because the passenger's front air bag will not deploy.

Front seat passengers must stay properly seated to avoid serious injury from a deploying air bag.

✻ NOTICE

The "PASSENGER AIR BAG OFF" indicator illuminates for about 4 seconds after the ignition switch is turned to the ON position or after the engine is started. If the front passenger seat is occupied, the occupant classification sensor will then classify the front passenger after several more seconds.

⚠ WARNING

Do not put a heavy load or an active electronic device (ex. Laptop computer, navigation etc..) on the front passenger seat. Do not place any items under the front passenger seat. Any of these could interfere with proper sensor operation.

⚠ WARNING

- **Even though your vehicle is equipped with the occupant classification system, never install a child restraint system in the front passenger's seat. A deploying air bag can forcefully strike a child resulting in serious injuries or death. Any child age 12 and under should ride in the rear seat. Children too large for child restraints should use the available lap/shoulder belts. No matter what type of crash, children of all ages are safer when restrained in the rear seat.**
- **If the "PASSENGER AIR BAG OFF" indicator is illuminated when the front passenger's seat is occupied by an adult and he/she sits properly (sitting upright with the seatback in an upright position, centered on the seat cushion with their seat belt on, legs comfortably extended and their feet on the floor), have that person sit in the rear seat.**

(Continued)

(Continued)

- **If the front passenger seat is occupied by a child who is not in a CRS, the "PASSENGER AIR BAG OFF" indicator may or may not be on and the passenger air bag may or may not deploy in a collision. Have the child move to a rear seat to increase their safety.**
- **Do not modify or replace the front passenger seat. Don't place anything on or attach anything such as a blanket or seat heater to the front passenger seat. This can adversely affect the occupant classification system.**
- **Do not place sharp objects on the front passenger seat. These may damage the occupant classification system, if they puncture the seat cushion.**
- **Do not use accessory seat covers on the front seats.**

(Continued)

(Continued)

- **Accident statistics show that children are safer if they are restrained in the rear, as opposed to the front seat. It is recommended that child restraints be secured in a rear seat, including an infant riding in a rear-facing infant seat, a child riding in a forward-facing child seat and an older child riding in a booster seat.**
- **Air bags can only be used once – have an authorized HYUNDAI dealer replace the air bag immediately after deployment.**
- **The occupant classification system may not work properly if water, coffee or any other liquid including rain gets on the seat. Keep the front seat dry at all times.**
- **Do not place an electronic device such as a laptop computer on the front passenger seat. Its electronic field may cause the OCS to switch to the "on" condition and thus allow the passenger air bag to deploy needlessly in a collision, increasing your repair costs.**

⚠ WARNING

If the occupant classification system is not working properly, the SRS air bag warning light on the instrument panel will illuminate because the passenger's front air bag is connected with the occupant classification system. If there is a malfunction of the occupant classification system, the "PASSENGER AIR BAG OFF" indicator will not illuminate and the passenger's front air bag will inflate in frontal impact crashes even if there is no occupant in the front passenger's seat. If the SRS air bag warning light does not illuminate when the ignition switch is turned to the ON position, remains illuminated after approximately 6 seconds when the ignition switch is turned to the ON position, or if it illuminates while the vehicle is being driven, have an authorized HYUNDAI dealer inspect the occupant classification system and the SRS air bag system as soon as possible.

Driver's front air bag



Driver's and passenger's front air bag

Your vehicle is equipped with a Supplemental Restraint (Air Bag) System and lap/shoulder belts at both the driver and passenger seating positions. The indications of the system's presence are the letters "AIRBAG" embossed on the air bag pad cover in the steering wheel and the passenger's side front panel pad above the glove box.

The SRS consists of air bags installed under the pad covers in the center of the steering wheel and the passenger's side front panel above the glove box.

Passenger's front air bag



The purpose of the SRS is to provide the vehicle's driver and/or the front passenger with additional protection than that offered by the seat belt system alone in case of a frontal impact of sufficient severity. The SRS uses sensors to gather information about the driver's and front passenger's seat belt usage and impact severity.

⚠ WARNING

If an occupant classification system is not working properly, the SRS air bag warning light on the instrument panel will illuminate because the SRS air bag warning light is connected with the occupant classification system. If the SRS air bag warning light does not illuminate when the ignition switch is turned to the ON position, remains illuminated after approximately 6 seconds when the ignition switch is turned to the ON position, or if it illuminates while the vehicle is being driven, have an authorized HYUNDAI dealer inspect the advanced SRS air bag system as soon as possible.

The seat belt buckle sensors determine if the driver and front passenger's seat belts are fastened.

The passenger's front air bag is designed to help reduce the injury of children sitting close to the instrument panel in low speed collisions. However, children are safer if they are restraint in the rear seat.

According to the impact severity and seat belt usage, the SRSCM (SRS Control Module) controls the air bag inflation. Failure to properly wear seat belts can increase the risk or severity of injury in an accident.

Additionally, your vehicle is equipped with an occupant classification system in the front passenger's seat. The occupant classification system detects the presence of a passenger in the front passenger's seat and will turn off the front passenger's air bag under certain conditions. For more detail, see "Occupant classification system" in this section.

⚠ WARNING

Do not place any objects underneath the front seats as they could interfere with the occupant classification system.

⚠ WARNING

If you are considering modification of your vehicle due to a disability, please contact the Hyundai Customer Assistance Center at 1-800-633-5151.

✻ NOTICE

- **Be sure to read information about the SRS on the labels provided on the sun visor.**
- **Advanced air bags are combined with pre-tensioner seat belts to help provide enhanced occupant protection in frontal crashes. Front air bags are not intended to deploy in collisions in which protection can be provided by the pre-tensioner seat belt.**

⚠ WARNING

Always use seat belts and child restraints – every trip, every time, everyone! Air bags inflate with considerable force and in the blink of an eye. Seat belts help keep occupants in proper position to obtain maximum benefit from the air bag. Even with advanced air bags, improperly belted and unbelted occupants can be severely injured when the air bag inflates. Always follow the precautions about seat belts, air bags and occupant safety contained in this manual.

To reduce the chance of serious or fatal injuries and receive the maximum safety benefit from your restraint system:

- **Never place a child in any child or booster seat in the front seat.**
- **ABC – Always Buckle Children in the back seat. It is the safest place for children of any age to ride.**
- **Front and side air bags can injure occupants improperly positioned in the front seats.**

(Continued)

(Continued)

- **Move your seat as far back as practical from the front air bags, while still maintaining control of the vehicle.**
- **You and your passengers should never sit or lean unnecessarily close to the air bags. Improperly positioned driver and passengers can be severely injured by inflating air bags.**
- **Never lean against the door or center console – always sit in an upright position.**
- **Do not allow a passenger to ride in the front seat when the "PASSENGER AIR BAG OFF" indicator is illuminated, because the air bag will not deploy in the event of a moderate or severe frontal crash.**

(Continued)

(Continued)

- **No objects should be placed over or near the air bag modules on the steering wheel, instrument panel, and the front passenger's panel above the glove box, because any such object could cause harm if the vehicle is in a crash severe enough to cause the air bags to deploy.**
- **Never place covers, blankets or seat warmers on the passenger seat as these may interfere with the occupant classification system.**
- **Do not tamper with or disconnect SRS wiring or other components of the SRS system. Doing so could result in injury, due to accidental deployment of the air bags or by rendering the SRS inoperative.**
- **If the SRS air bag warning light remains illuminated while the vehicle is being driven, have an authorized HYUNDAI dealer inspect the air bag system as soon as possible.**

(Continued)

(Continued)

- **Air bags can only be used once – have an authorized HYUNDAI dealer replace the air bag immediately after deployment.**
- **The SRS is designed to deploy the front air bags only when an impact is sufficiently severe and when the impact angle is less than 30° from the forward longitudinal axis of the vehicle. Additionally, the air bags will only deploy once. Seat belts must be worn at all times.**
- **Front air bags are not intended to deploy in side-impact, rear-impact or rollover crashes. In addition, front air bags will not deploy in frontal crashes below the deployment threshold.**

(Continued)

Rear impact

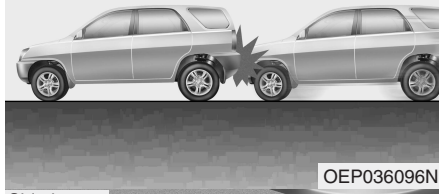

OEP036096N

Side impact

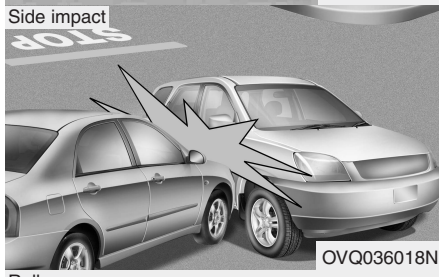

OVQ036018N

Rollover

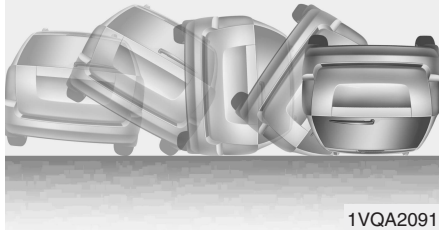

1VQA2091

(Continued)

- **Even though your vehicle is equipped with the occupant classification system, do not install a child restraint system in the front passenger seat position. A child restraint system must never be placed in the front seat. The infant or child could be severely injured or killed by an air bag deployment in case of an accident.**
- **Children age 12 and under must always be properly restrained in the rear seat. Never allow children to ride in the front passenger seat. If a child over 12 must be seated in the front seat, he or she must be properly belted and the seat should be moved as far back as possible.**
- **For maximum safety protection in all types of crashes, all occupants including the driver should always wear their seat belts whether or not an air bag is also provided at their seating position to minimize the risk of severe injury or death in the event of a crash. Do not sit or lean unnecessarily close to the air bag while the vehicle is in motion.**

(Continued)

(Continued)

- **Sitting improperly or out of position can result in serious or fatal injury in a crash. All occupants should sit upright with the seatback in an upright position, centered on the seat cushion with their seat belt on, legs comfortably extended and their feet on the floor until the vehicle is parked and the ignition key is removed.**
- **The SRS air bag system must deploy very rapidly to provide protection in a crash. If an occupant is out of position because of not wearing a seat belt, the air bag may forcefully contact the occupant causing serious or fatal injuries.**

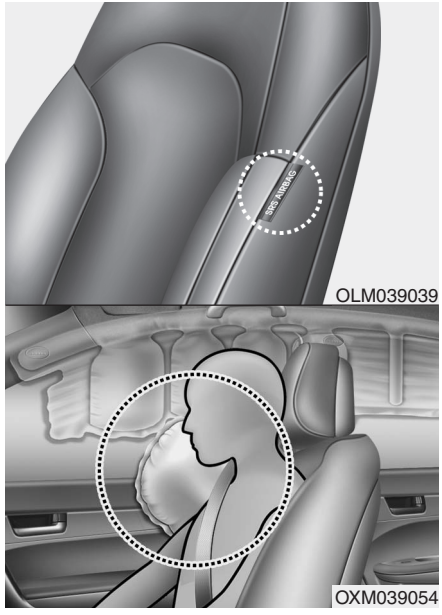

Side impact air bag

Your vehicle is equipped with a side impact air bag in each front seat. The purpose of the air bag is to provide the vehicle's driver and/or the front passenger with additional protection than that offered by the seat belt alone.

- The side impact air bags are designed to deploy during certain side-impact collisions, depending on the crash severity, angle, speed and point of impact.
- The side impact air bags do not only deploy on the side of the impact but also on the opposite side.
- Also, both side impact air bags deploy in certain rollover situations.
- The side impact air bags are not designed to deploy in all side impact or rollover situations.

⚠ WARNING

- **The side impact air bag is supplemental to the driver's and the passenger's seat belt systems and is not a substitute for them. Therefore your seat belts must be worn at all times while the vehicle is in motion. The air bags deploy only in certain side impact or rollover conditions severe enough to cause significant injury to the vehicle occupants.**
- **For best protection from the side impact air bag system and to avoid being injured by the deploying side impact air bag, both front seat occupants should sit in an upright position with the seat belt properly fastened. The driver's hands should be placed on the steering wheel at the 9:00 and 3:00 positions. The passenger's arms and hands should be placed on their laps.**
- **Do not use any accessory seat covers.**
- **Use of seat covers could reduce or prevent the effectiveness of the system.**

(Continued)

(Continued)

- **Do not install any accessories on the side or near the side impact air bag.**
- **Do not place any objects over the air bag or between the air bag and yourself.**
- **Do not place any objects (an umbrella, bag, etc.) between the front door and the front seat. Such objects may become dangerous projectiles and cause injury if the supplemental side impact air bag inflates.**
- **To prevent unexpected deployment of the side impact air bag that may result in personal injury, avoid impact to the side impact sensor when the ignition switch is on.**
- **If the seat or seat cover is damaged, have the vehicle checked and repaired by an authorized HYUNDAI dealer because your vehicle is equipped with side impact air bags and an occupant classification system.**

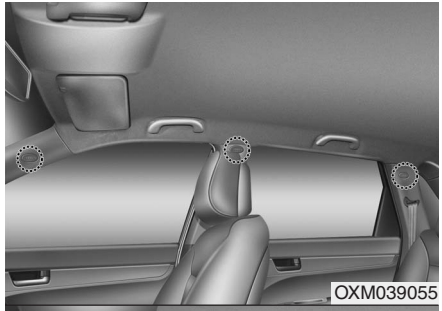
OXM039055

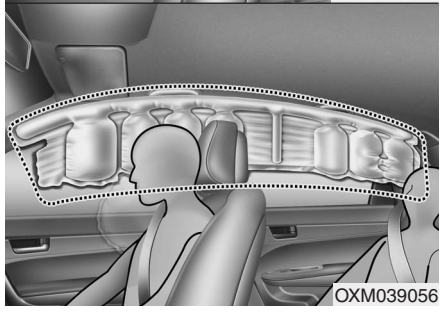
OXM039056

Curtain air bag

Curtain air bags are located along both sides of the roof rails above the front and rear doors.

They are designed to help protect the heads of the front seat occupants and the rear outboard seat occupants in certain side impact collisions.

- The curtain air bags are designed to deploy during certain side impact collisions, depending on the crash severity, angle, speed and point of impact.
- The curtain air bags do not only deploy on the side of the impact but also on the opposite side.
- Also, both curtain air bags deploy in certain rollover situations.
- The curtain air bags are not designed to deploy in all side impact or rollover situations.

⚠ WARNING

- **In order for side and curtain air bags to provide the best protection, front seat occupants and outboard rear occupants should sit in an upright position with the seat belts properly fastened. Importantly, children should sit in a proper child restraint system in the rear seat.**

(Continued)

(Continued)

- **When children are seated in the rear outboard seats, they must be seated in the proper child restraint system. Make sure to position the child restraint system as far away from the door side as possible, and secure the child restraint system in a locked position.**
- **Do not allow the passengers to lean their heads or bodies onto doors, put their arms on the doors, stretch their arms out of the window, or place objects between the doors and passengers when they are seated on seats equipped with side and curtain air bags.**
- **Never try to open or repair any components of the side curtain air bag system. This should only be done by an authorized HYUNDAI dealer.**

Failure to follow the above instructions can result in injury or death to the vehicle occupants in an accident.

Why didn't my air bag go off in a collision? (Inflation and non-inflation conditions of the air bag)

There are many types of accidents in which the air bag would not be expected to provide additional protection.

These include rear impacts, second or third collisions in multiple impact accidents, as well as low speed impacts. In other words, just because your vehicle is damaged and even if it is totally unusable, don't be surprised that the air bags did not inflate.

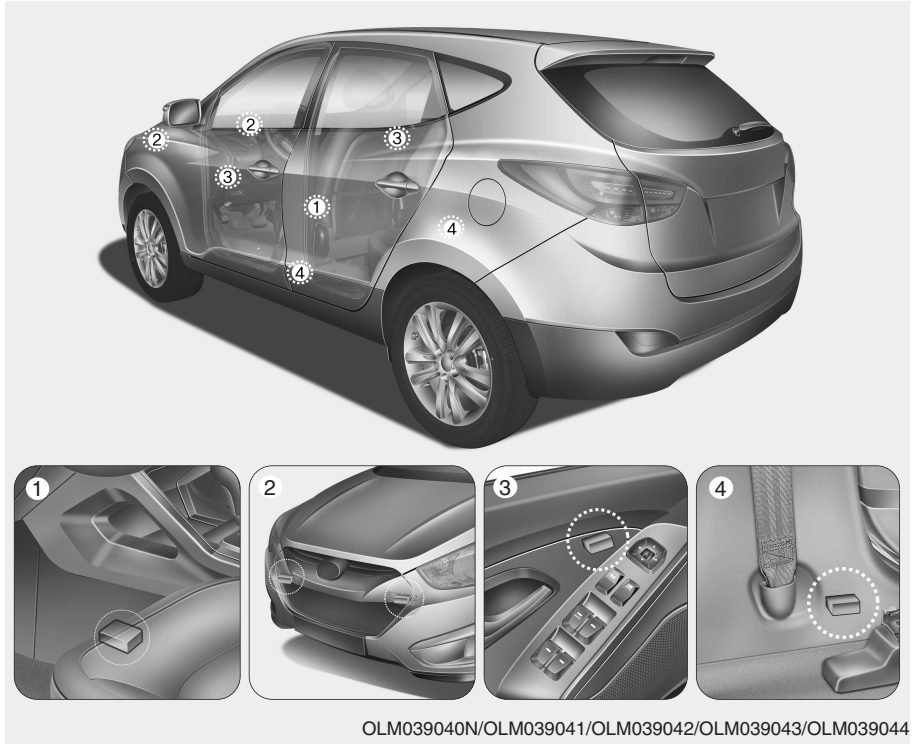

OLM039040N/OLM039041/OLM039042/OLM039043/OLM039044

Air bag collision sensors

(1) SRS control module/Rollover sensor
(2) Front impact sensor
(3) Side impact sensor
(4) Side impact sensor

⚠ WARNING

- **Do not hit or allow any objects to impact the locations where air bags or sensors are installed.**
  This may cause unexpected air bag deployment, which could result in serious personal injury or death.
- **If the installation location or angle of the sensors is altered in any way, the air bags may deploy when they should not or they may not deploy when they should, causing severe injury or death.**
  Therefore, do not try to perform maintenance on or around the air bag sensors. Have the vehicle checked and repaired by an authorized HYUNDAI dealer.
- **Problems may arise if the sensor installation angles are changed due to the deformation of the front bumper, body, front door and B pillars where side collision sensors are installed. Have the vehicle checked and repaired by an authorized HYUNDAI dealer.**

(Continued)

(Continued)

- **Your vehicle has been designed to absorb impact and deploy the air bag(s) in certain collisions. Installing bumper guards (or side step or running board) or replacing a bumper (or front door) with non-genuine parts may adversely affect your vehicles collision and air bag deployment performance.**

⚠ WARNING

If your vehicle is equipped with side and curtain air bag, set the ignition switch to OFF or ACC position when the vehicle is being towed to prevent inadvertent AIR BAG Deployment.

The side and curtain air bag may deploy when the ignitions is ON, and the rollover sensor detects the situation as a rollover.

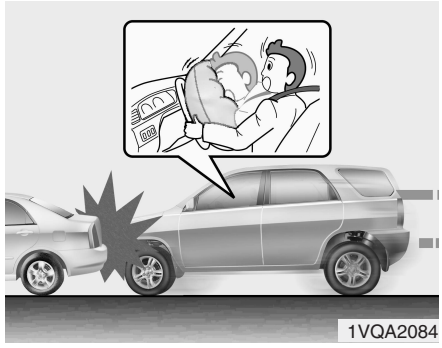

Air bag inflation conditions

Front air bags

Front air bags are designed to inflate in a frontal collision depending on the intensity, speed or angles of impact of the front collision.



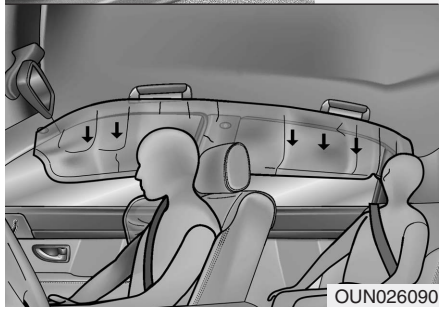

Side impact and curtain air bags

Side impact and curtain air bags are designed to inflate when an impact is detected by side collision sensors depending on the strength, speed or angles of impact resulting from a side impact collision.

Also, the side impact and curtain air bags are designed to inflate when a rollover is detected by the rollover sensor.

Although the driver's and front passenger's air bags are designed to inflate only in frontal collisions, they also may inflate in other types of collisions if the front impact sensors detect a sufficient impact. Side impact and curtain air bags are designed to inflate only in side impact collisions or rollovers. But they may inflate in other type of collisions or similar rollover situations, including when the vehicle is tilted such as being towed if the side impact sensors or rollover sensor detect a sufficient impact or rollover.

If the vehicle chassis is impacted by bumps or objects on unimproved roads, the air bags may deploy. Drive carefully on unimproved roads or on surfaces not designed for vehicle traffic to prevent unintended air bag deployment.

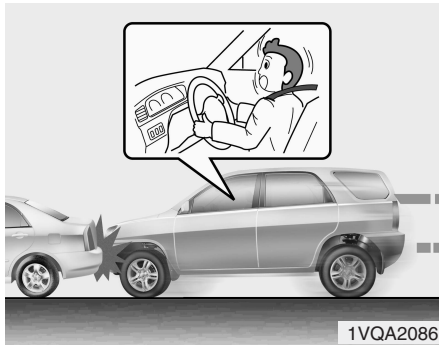

Air bag non-inflation conditions

- In certain low-speed collisions the air bags may not deploy. The air bags are designed not to deploy in such cases because they may not provide benefits beyond the protection of the seat belts in such collisions.

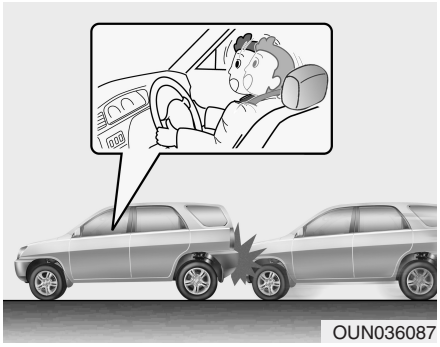
OUN036087

- Air bags are not designed to inflate in rear collisions, because occupants are moved backward by the force of the impact. In this case, inflated air bags would not be able to provide any additional benefit.



OVQ036018N

- Front air bags may not inflate in side impact collisions, because occupants move to the direction of the collision, and thus in side impacts, frontal air bag deployment would not provide additional occupant protection.

  However, side impact and curtain air bags may inflate depending on the intensity, vehicle speed and angles of impact.

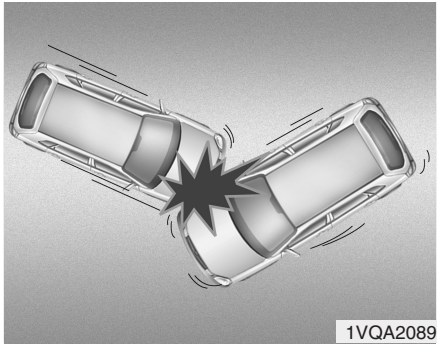
1VQA2089

- In an angled collision, the force of impact may direct the occupants in a direction where the air bags would not be able to provide any additional benefit, and thus the sensors may not deploy any air bags.

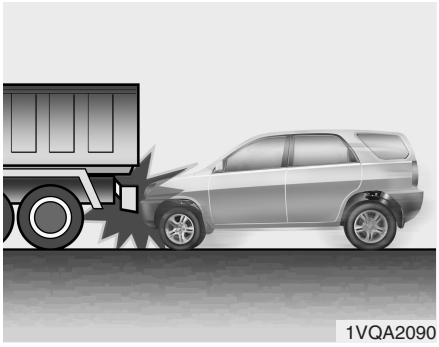
1VQA2090

- Just before impact, drivers often brake heavily. Such heavy braking lowers the front portion of the vehicle causing it to “ride” under a vehicle with a higher ground clearance. Air bags may not inflate in this "under-ride" situation because deceleration forces that are detected by sensors may be significantly reduced by such “under-ride” collisions.

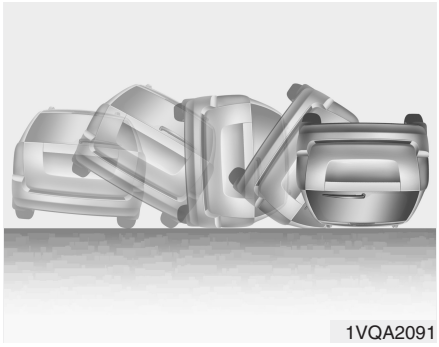
1VQA2091

- Front air bags may not inflate in rollover accidents because front air bag deployment would not provide additional occupant protection.

  However, if equipped with side impact and curtain air bags, the air bags may inflate in a rollover, when it is detected by the rollover sensor.

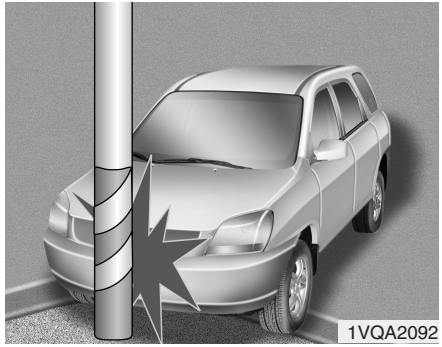
1VQA2092

- Air bags may not inflate if the vehicle collides with objects such as utility poles or trees, where the point of impact is concentrated to one area and the full force of the impact is not delivered to the sensors.

SRS Care

The SRS is virtually maintenance-free and there are no parts you can safely service by yourself. If the SRS air bag warning light does not illuminate, or continuously remains on, have your vehicle immediately inspected by an authorized HYUNDAI dealer.

Any work on the SRS system, such as removing, installing, repairing, or any work on the steering wheel, the front passenger's panel, front seats and roof rails must be performed by an authorized HYUNDAI dealer. Improper handling of the SRS system may result in serious personal injury.

⚠ WARNING

- **Modification to SRS components or wiring, including the addition of any kind of badges to the pad covers or modifications to the body structure, can adversely affect SRS performance and lead to possible injury.**
- **Not only the modification of the parts where the SRS sensors are but also the modification of other parts of the vehicle may affect the SRS performance and lead to possible injury.**
- **For cleaning the air bag pad covers, use only a soft, dry cloth or one which has been moistened with plain water. Solvents or cleaners could adversely affect the air bag covers and proper deployment of the system.**
- **No objects should be placed over or near the air bag modules on the steering wheel, instrument panel, and the front passenger's panel above the glove box, because any such object could cause harm if the vehicle is in a crash severe enough to cause the air bags to inflate.**

(Continued)

(Continued)

- **If the air bags inflate, they must be replaced by an authorized HYUNDAI dealer.**
- **Do not tamper with or disconnect SRS wiring, or other components of the SRS system. Doing so could result in injury, due to accidental inflation of the air bags or by rendering the SRS inoperative.**
- **If components of the air bag system must be discarded, or if the vehicle must be scrapped, certain safety precautions must be observed. An authorized HYUNDAI dealer knows these precautions and can give you the necessary information. Failure to follow these precautions and procedures could increase the risk of personal injury.**
- **If your vehicle was flooded and has soaked carpeting or water on the floor, you shouldn't try to start the engine; have the car towed to an authorized HYUNDAI dealer.**

Additional safety precautions

- **Never let passengers ride in the cargo area or on top of a folded-down back seat.** All occupants should sit upright, fully back in their seats with their seat belts on and their feet on the floor.
- **Passengers should not move out of or change seats while the vehicle is moving.** A passenger who is not wearing a seat belt during a crash or emergency stop can be thrown against the inside of the vehicle, against other occupants, or out of the vehicle.
- **Each seat belt is designed to restrain one occupant.** If more than one person uses the same seat belt, they could be seriously injured or killed in a collision.
- **Do not use any accessories on seat belts.** Devices claiming to improve occupant comfort or reposition the seat belt can reduce the protection provided by the seat belt and increase the chance of serious injury in a crash.
- **Passengers should not place hard or sharp objects between themselves and the air bags.** Carrying hard or sharp objects on your lap or in your mouth can result in injuries if an air bag inflates.
- **Keep occupants away from the air bag covers.** All occupants should sit upright, fully back in their seats with their seat belts on and their feet on the floor. If occupants are too close to the air bag covers, they could be injured if the air bags inflate.
- **Do not attach or place objects on or near the air bag covers.** Any object attached to or placed on the front or side air bag covers could interfere with the proper operation of the air bags.
- **Do not modify the front seats.** Modification of the front seats could interfere with the operation of the supplemental restraint system sensing components or side air bags.
- **Do not place items under the front seats.** Placing items under the front seats could interfere with the operation of the supplemental restraint system sensing components and wiring harnesses.
- **Never hold an infant or child on your lap.** The infant or child could be seriously injured or killed in the event of a crash. All infants and children should be properly restrained in appropriate child safety seats or seat belts in the rear seat.

⚠ WARNING

- **Sitting improperly or out of position can cause occupants to be shifted too close to a deploying air bag, strike the interior structure or be thrown from the vehicle resulting in serious injury or death.**
- **Always sit upright with the seatback in an upright position, centered on the seat cushion with your seat belt on, legs comfortably extended and your feet on the floor.**
- **Always have the ignition OFF in an abnormal situation. The side air bags may inflate if the vehicle is tilted such as when being towed because the rollover sensor detects it as a rollover situation.**
- **Be careful not to cause impact to the doors when the ignition is ON. The air bags may inflate.**

Adding equipment to or modifying your air bag-equipped vehicle

If you modify your vehicle by changing your vehicle's frame, bumper system, front end or side sheet metal or ride height, this may affect the operation of your vehicle's air bag system.

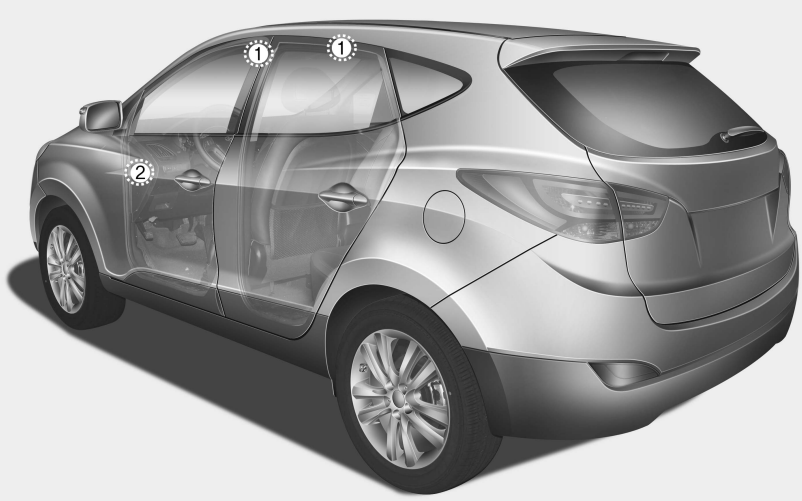

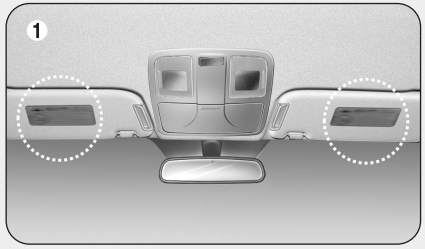



OLM039058N/OLM039050N/OLM039051

Air bag warning label

Air bag warning labels, some required by the U.S. National Highway Traffic Safety Administration (NHTSA), are attached to alert the driver and passengers of potential risks of the air bag system.

Keys / 4-3
Remote keyless entry / 4-4
Theft-alarm system / 4-7
Door locks / 4-9
Tailgate / 4-13
Windows / 4-15
Hood / 4-19
Fuel filler door / 4-21

Features of your vehicle 4

Panoramic sunroof / 4-24
Steering wheel / 4-28
Mirrors / 4-30
Instrument cluster / 4-33
Rearview camera / 4-49
Hazard warning flasher / 4-49
Lighting / 4-50
Wipers and washers / 4-54
Interior light / 4-57
Defroster / 4-59
Manual climate control system / 4-61
Automatic climate control system / 4-70
Windshield defrosting and defogging / 4-77
Storage compartment / 4-80

Interior features / 4-82
Exterior features / 4-88
Audio system / 4-89

4 Features of your vehicle

KEYS

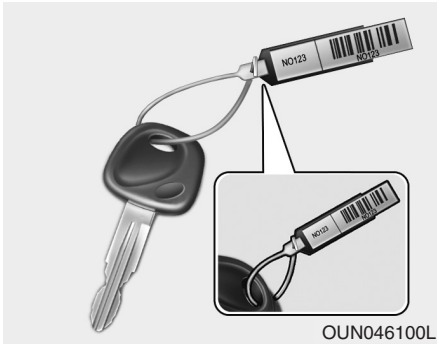

OUN046100L

Record your key number

The key code number is stamped on the bar code tag attached to the key set. Should you lose your keys, this number will enable an authorized HYUNDAI dealer to duplicate the keys easily. Remove the bar code tag and store it in a safe place. Also, record the code number and keep it in a safe place (not in the vehicle).



OUN026060

Key operations

Used to start the engine, lock and unlock the doors.

⚠ WARNING - Ignition key

Leaving children unattended in a vehicle with the ignition key is dangerous even if the key is not in the ignition switch. Children copy adults and they could place the key in the ignition switch. The ignition key would enable children to operate power windows or other controls, or even make the vehicle move, which could result in serious bodily injury or even death. Never leave the keys in your vehicle with unsupervised children.

⚠ WARNING

Use only HYUNDAI original parts for the ignition key in your vehicle. If an aftermarket key is used, the ignition switch may not return to ON after START. If this happens, the starter will continue to operate causing damage to the starter motor and possible fire due to excessive current in the wiring.

REMOTE KEYLESS ENTRY



OLM049002N

Remote keyless entry system operations

Lock (1)

All doors (and tailgate) are locked if the lock button is pressed.

If all doors (and tailgate) are closed, the hazard warning lights will blink once to indicate that all doors (and tailgate) are locked.

The chime sounds once if the lock button is pressed once more within 4 seconds.

However, if any door (or tailgate) remains open, the hazard warning lights and the chime will not operate. If all doors (and tailgate) are closed after the lock button is pressed, the hazard warning lights blink.

Unlock (2)

Driver's door is unlocked if the unlock button is pressed once. The hazard warning lights will blink twice to indicate that the driver's door is unlocked.

All doors (and tailgate) are unlocked if the unlock button is pressed once more within 4 seconds. The hazard warning lights will blink twice again to indicate that all doors (and tailgate) are unlocked.

After depressing this button, the doors (and tailgate) will be locked automatically unless you open any door within 30 seconds.

✻ NOTICE

You can change the system to unlock all doors by one pressing the unlock button on the transmitter. If you want this feature (central door unlock mode), perform the following:

Unlock mode conversion (two stage unlock mode ↔ central door unlock mode)

The unlock mode is changed alternately by pressing the lock button and unlock button on the transmitter at the same time for 4 seconds or more. The hazard warning lights will blink four times to indicate that the mode conversion is completed.

Alarm (3)

The horn sounds and hazard warning lights flash for about 30 seconds if this button is pressed. To stop the horn and lights, press any button on the transmitter.

Transmitter precautions

✻ NOTICE

The transmitter will not work if any of following occur:

- **The ignition key is in ignition switch.**
- **You exceed the operating distance limit (about 30 feet [10 m]).**
- **The battery in the transmitter is weak.**
- **Other vehicles or objects may be blocking the signal.**
- **The weather is extremely cold.**
- **The transmitter is close to a radio transmitter such as a radio station or an airport which can interfere with normal operation of the transmitter.**

When the transmitter does not work correctly, open and close the door with the ignition key. If you have a problem with the transmitter, contact an authorized HYUNDAI dealer.

⚠ CAUTION

Keep the transmitter away from water or any liquid. If the keyless entry system is inoperative due to exposure to water or other liquids, it will not be covered by your manufacturer's vehicle warranty.

This device complies with Part 15 of the FCC rules.

Operation is subject to the following two conditions:

1. This device may not cause harmful interference, and
2. This device must accept any interference received, including interference that may cause undesired operation.

⚠ WARNING

Changes or modifications not expressly approved by the party responsible for compliance could void the user's authority to operate the equipment. If the keyless entry system is inoperative due to changes or modifications not expressly approved by the party responsible for compliance, it will not be covered by your manufacturer's vehicle warranty.

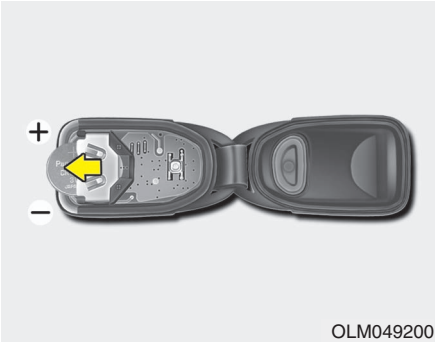

OLM049200

Battery replacement

Transmitter uses a 3 volt lithium battery which will normally last for several years. When replacement is necessary, use the following procedure.

1. Insert a slim tool into the slot and gently pry open the transmitter center cover.
2. Replace the battery with a new battery (CR2032). When replacing the battery, make sure the battery positive "+" symbol faces up as indicated in the illustration.
3. Install the battery in the reverse order of removal.

For replacement transmitters, see an authorized HYUNDAI dealer for transmitter reprogramming.

⚠ CAUTION

- ***The keyless entry system transmitter is designed to give you years of trouble-free use, however it can malfunction if exposed to moisture or static electricity. If you are unsure how to use your transmitter or replace the battery, contact an authorized HYUNDAI dealer.***
- ***Using the wrong battery can cause the transmitter to malfunction. Be sure to use the correct battery.***
- ***To avoid damaging the transmitter, don't drop it, get it wet, or expose it to heat or sunlight.***

⚠ CAUTION

An inappropriately disposed battery can be harmful to the environment and human health.

Dispose the battery according to your local law(s) or regulation.

THEFT-ALARM SYSTEM

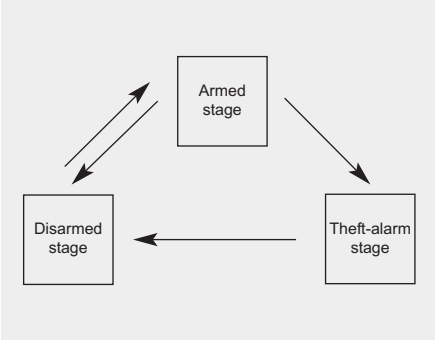

This system is designed to provide protection from unauthorized entry into the car. This system is operated in three stages: the first is the "Armed" stage, the second is the "Theft-alarm" stage, and the third is the "Disarmed" stage. If triggered, the system provides an audible alarm with blinking of the hazard warning lights.

Armed stage

Park the car and stop the engine. Arm the system as described below.

1. Remove the ignition key from the ignition switch and exit the vehicle.
2. Make sure that all doors (and tailgate) and engine hood are closed and latched.
3. Lock the doors using the transmitter of the keyless entry system.

After completion of the steps above, the hazard warning lights will blink once to indicate that the system is armed.

If any door (or tailgate) or engine hood remains open, the hazard warning lights and the chime will not operate and the theft-alarm will not arm. If all doors (and tailgate) and engine hood are closed after the lock button is pressed, the hazard warning lights blink once.

The system can also be armed by locking the doors with the key from the front doors; however, the hazard warning lights will not blink using this method.

✻ NOTICE

The theft-alarm system by the key can be deactivated by an authorized HYUNDAI dealer.
If you want this feature, consult an authorized HYUNDAI dealer.

Do not arm the system until all passengers have left the vehicle. If the system is armed while a passenger(s) remains in the vehicle, the alarm may be activated when the remaining passenger(s) leave the vehicle. If any door (or tailgate) or engine hood is opened within 30 seconds after the system enters the armed stage, the system is disarmed to prevent an unnecessary alarm.

Theft-alarm stage

The alarm will be activated if any of the following occurs while the system is armed.

- A front or rear door is opened without using the ignition key or transmitter.
- The tailgate is opened without using the transmitter.
- The engine hood is opened.

The horn will sound and the hazard warning lights will blink continuously for approximately 27 seconds, and repeat the horn 2 times unless the system is disarmed. To turn off the system, unlock the doors with the ignition key or transmitter.

Disarmed stage

The system will be disarmed when the doors (and tailgate) are unlocked with the transmitter or the ignition key.

After depressing the unlock button, the hazard warning lights will blink twice to indicate that the system is disarmed.

After depressing the unlock button, if any door (or tailgate) is not opened within 30 seconds, the system will be rearmed.

✻ NOTICE

- **Avoid trying to start the engine while the alarm is activated. The vehicle starting motor is disabled during the theft-alarm stage.**
  If the system is not disarmed with the transmitter, insert the key into the ignition switch, turn the ignition switch to the ON position and wait for 30 seconds. Then the system will be disarmed. (if equipped)
- **If you lose your keys, consult your authorized HYUNDAI dealer.**

⚠ CAUTION

Do not change, alter or adjust the theft-alarm system because it could cause the theft-alarm system to malfunction. The system should only be serviced by an authorized HYUNDAI dealer.

Malfunctions caused by improper alterations, adjustments or modifications to the theft-alarm system are not covered by your vehicle manufacturer warranty.

DOOR LOCKS

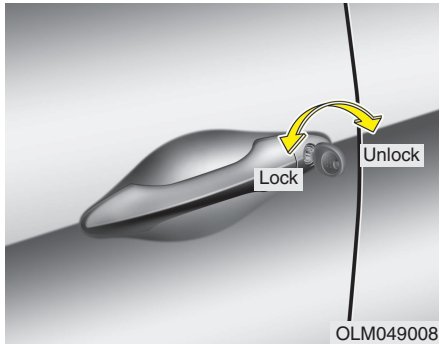

Operating door locks from outside the vehicle

- Turn the key toward the rear of the vehicle to unlock and toward the front of the vehicle to lock.
- If you lock the door with a key, all vehicle doors will lock automatically.
- From the driver's door, turn the key to the right once to unlock the driver's door and once more within 4 seconds to unlock all doors.

✻ NOTICE

You can change the system to unlock all doors by turning the key to the right once. If you want this feature (central door unlock mode), perform the following:

Unlock mode conversion (two stage unlock mode ↔ central door unlock mode)

The unlock mode is changed alternately by pressing the lock button and unlock button on the transmitter at the same time for 4 seconds or more. The hazard warning lights will blink four times to indicate that the mode conversion is completed.

- Doors can also be locked and unlocked with the transmitter.
- Once the doors are unlocked, they may be opened by pulling the door handle.
- When closing the door, push the door by hand. Make sure that doors are closed securely.

❈ If your vehicle is equipped with the remote keyless entry system, there is no key lock on the front passenger's door.

✻ NOTICE

- **In cold and wet climates, door lock and door mechanisms may not work properly due to freezing conditions.**
- **If the door is locked/unlocked multiple times in rapid succession with either the vehicle key or door lock switch, the system may stop operating temporarily in order to protect the circuit and prevent damage to system components.**

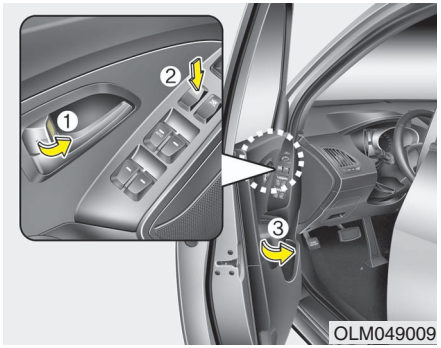

- To lock a door without the key, push the inside door lock button (1) or central door lock switch (2) to the "Lock" position and close the door (3).
- If you lock the door with the central door lock switch (2), all vehicle doors will lock automatically.

✻ NOTICE

Always remove the ignition key, firmly engage the parking brake, close all windows and lock all doors when leaving your vehicle unattended.

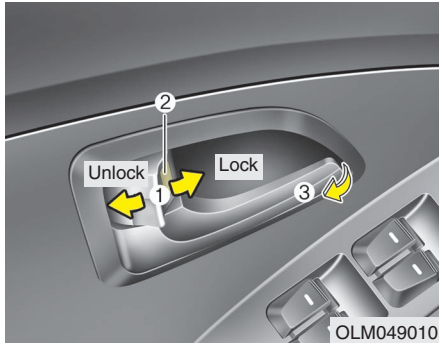

Operating door locks from inside the vehicle

With the door lock button

- To unlock a door, push the door lock button (1) to the "Unlock" position. The red mark (2) on button will be visible.
- To lock a door, push the door lock button (1) to the "Lock" position. If the door is locked properly, the red mark (2) on the door lock button will not be visible.
- To open a door, pull the door handle (3) outward.
- If the inner door handle of the driver's (or front passenger's) door is pulled when the door lock button is in lock position, the button is unlocked and door opens.
- Front doors cannot be locked if the ignition key is in the ignition switch and any front door is open.

⚠ WARNING - Door lock malfunction

If a power door lock ever fails to function while you are in the vehicle, try one or more of the following techniques to exit:

- **Operate the door unlock feature repeatedly (both electronic and manual) while simultaneously pulling on the door handle.**
- **Operate the other door locks and handles, front and rear.**
- **Lower a front window and use the key to unlock the door from outside.**
- **Move to the cargo area and open the tailgate.**



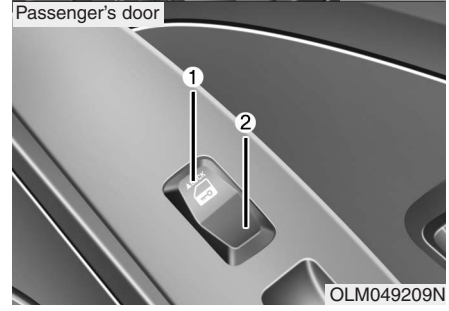

With central door lock switch

Operate by depressing the central door lock switch.

- When pushing down on the front portion (1) of the switch, all vehicle doors will lock.
- When pushing down on the rear portion (2) of the switch, all vehicle doors will unlock.
- If the key is in the ignition switch and any front door is opened, the doors will not lock even though the front portion (1) of central door lock switch is pressed.

⚠ WARNING - Doors

- **The doors should always be fully closed and locked while the vehicle is in motion to prevent accidental opening of the door. Locked doors will also discourage potential intruders when the vehicle stops or slows.**
- **Be careful when opening doors and watch for vehicles, motorcycles, bicycles or pedestrians approaching the vehicle in the path of the door. Opening a door when something is approaching can cause damage or injury.**

⚠ WARNING - Unlocked vehicles

Leaving your vehicle unlocked can invite theft or possible harm to you or others from someone hiding in your vehicle while you are gone. Always remove the ignition key, engage the parking brake, close all windows and lock all doors when leaving your vehicle unattended.

⚠ WARNING - Unattended children

An enclosed vehicle can become extremely hot, causing death or severe injury to unattended children or animals who cannot escape the vehicle. Furthermore, children might operate features of the vehicle that could injure them, or they could encounter other harm, possibly from someone gaining entry to the vehicle. Never leave children or animals unattended in your vehicle.

Auto door lock/unlock feature

- All doors will be automatically locked when shifting the transaxle shift lever out of P (Park) with engine is running.
- All doors will be automatically unlocked when shifting the transaxle shift lever into P (Park) with engine is running.

✻ NOTICE

An authorized HYUNDAI dealer can activate or deactivate some auto door lock/unlock features as follows;

- **Speed sensing auto door lock**
- **Auto door unlock by using the driver's door lock button**
- **Auto door unlock when the ignition key is removed from the ignition switch**
- **Auto door lock/unlock by shifting the transmission shift lever out of P (Park) or into P (Park)**

If you want to activate or deactivate some door lock/unlock feature, consult an authorized HYUNDAI dealer.

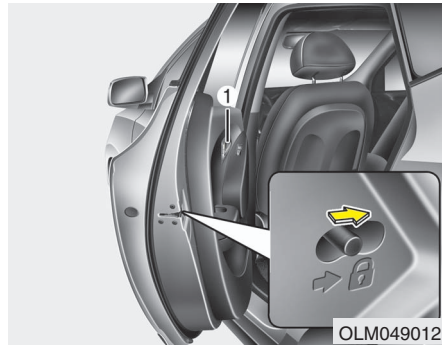

Child-protector rear door lock

The child safety lock is provided to help prevent children from accidentally opening the rear doors from inside the vehicle. The rear door safety locks should be used whenever children are in the vehicle.

1. Open the rear door.
2. Push the child safety lock located on the rear edge of the door to the lock (🔒) position. When the child safety lock is in the lock position, the rear door will not open even though the inner door handle is pulled.
3. Close the rear door.

To open the rear door, pull the outside door handle.

Even though the doors may be unlocked, the rear door will not open by pulling the inner door handle (1) until the rear door child safety lock is unlocked (➡).

⚠ WARNING - Rear door locks

If children accidentally open the rear doors while the vehicle is in motion, they could fall out and be severely injured or killed. To prevent children from opening the rear doors from the inside, the rear door safety locks should be used whenever children are in the vehicle.

TAILGATE

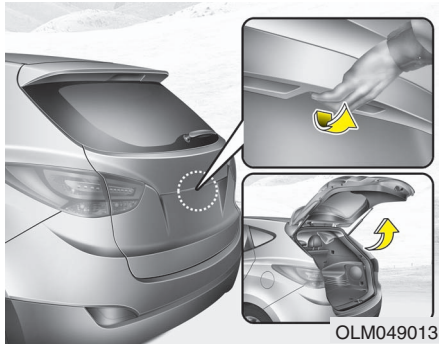
OLM049013

Opening the tailgate

- The tailgate is locked or unlocked when all doors are locked or unlocked with the key, transmitter or central door lock switch.
- If unlocked, the tailgate can be opened by pressing the handle switch and pulling the handle up.

✻ NOTICE

In cold and wet climates, door lock and door mechanisms may not work properly due to freezing conditions.

⚠ WARNING

The tailgate swings upward. Make sure no objects or people are near the rear of the vehicle when opening the tailgate.

⚠ CAUTION

Make certain that you close the tailgate before driving your vehicle. Possible damage may occur to the tailgate lift cylinders and attached hardware if the tailgate is not closed prior to driving.


OLM049014

Closing the tailgate

To close the tailgate, lower and push down the tailgate firmly. Make sure that the tailgate is securely latched.

⚠ WARNING - Exhaust fumes

If you drive with the tailgate open, you will draw dangerous exhaust fumes into your vehicle which can cause serious injury or death to vehicle occupants.

If you must drive with the tailgate open, keep the air vents and all windows open so that additional outside air comes into the vehicle.

⚠ WARNING - Rear cargo area

Occupants should never ride in the rear cargo area where no restraints are available. To avoid injury in the event of an accident or sudden stops, occupants should always be properly restrained.

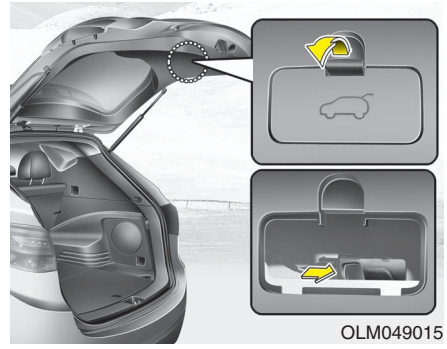

Emergency tailgate safety release

Your vehicle is equipped with the emergency tailgate safety release lever located on the bottom of the tailgate. When someone is inadvertently locked in the luggage compartment, if the lever is pushed, the tailgate latch mechanism is released and the tailgate is opened by pushing rearward.

⚠ WARNING

- **For emergencies, be fully aware of the location of the emergency tailgate safety release lever in this vehicle and how to open the tailgate if you are accidentally locked in the luggage compartment.**
- **No one should be allowed to occupy the luggage compartment of the vehicle at any time. The luggage compartment is a very dangerous location in the event of a crash.**
- **Use the release lever for emergencies only. Use extreme caution, especially while the vehicle is in motion.**

WINDOWS

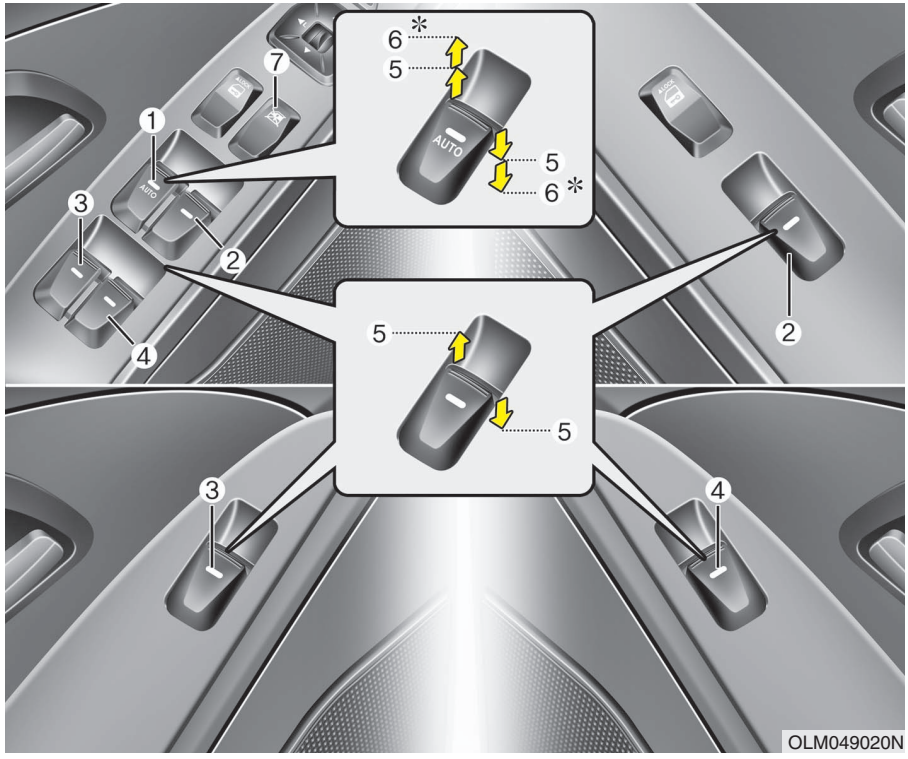

(1) Driver's door power window switch
(2) Front passenger's door power window switch
(3) Rear door (left) power window switch
(4) Rear door (right) power window switch
(5) Window opening and closing
(6) Automatic power window up/down* (Driver's window)
(7) Power window lock switch

* : if equipped

✻ NOTICE

In cold and wet climates, power windows may not work properly due to freezing conditions.

Power windows

The ignition switch must be in the ON position for power windows to operate.

Each door has a power window switch that controls the door's window. The driver has a power window lock switch which can block the operation of passenger windows. The power windows can be operated for approximately 30 seconds after the ignition key is removed or turned to the ACC or LOCK position. However, if the front doors are opened, the power windows cannot be operated within the 30 second period after the ignition key removal.

✻ NOTICE

While driving with the rear windows down or with the sunroof (if equipped) in an open (or partially open) position, your vehicle may demonstrate a wind buffeting or pulsation noise. This noise is a normal occurrence and can be reduced or eliminated by taking the following actions. If the noise occurs with one or both of the rear windows down, partially lower both front windows approximately one inch. If you experience the noise with the sunroof open, slightly reduce the size of the sunroof opening.

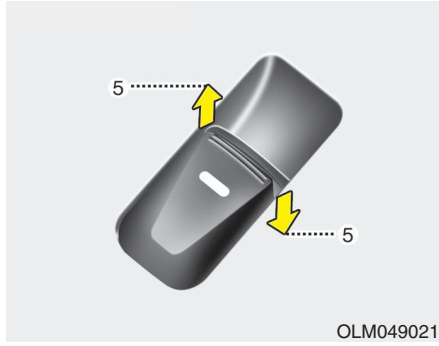

OLM049021

Window opening and closing

The driver's door has a master power window switch that controls all the windows in the vehicle.

To open or close a window, press down or pull up the front portion of the corresponding switch to the first detent position (5).



OLM049022

Auto down window (if equipped) (Driver's window)

Pressing the power window switch momentarily to the second detent position (6) completely lowers the driver's window even when the switch is released. To stop the window at the desired position while the window is in operation, pull up the switch momentarily to the opposite direction of the window movement.

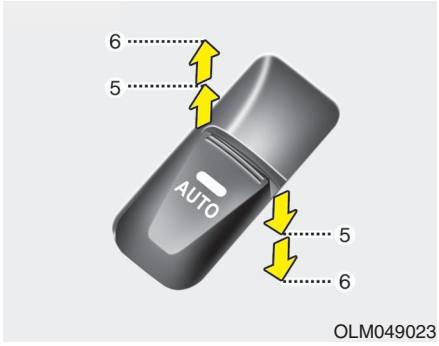

Auto up/down window (if equipped) (Driver's window)

Depressing or pulling up the power window switch momentarily to the second detent position (6) completely lowers or lifts the window even when the switch is released. To stop the window at the desired position while the window is in operation, pull up or depress and release the switch to the opposite direction of the movement.

If the power window is not operated correctly, the automatic power window system must be reset as follows:

1. Turn the ignition switch to the ON position.
2. Close driver's window and continue pulling up on driver's power window switch for at least 1 second after the window is completely closed.

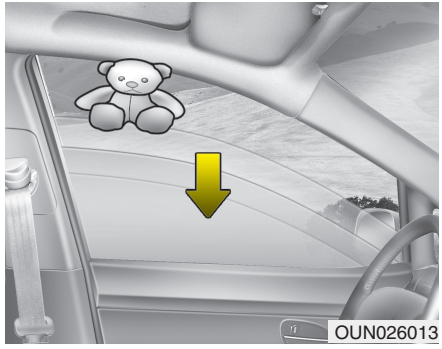

Automatic reversal

If the upward movement of the window is blocked by an object or part of the body, the window will detect the resistance and will stop upward movement. The window will then lower approximately 11.8 in. (30 cm) to allow the object to be cleared.

If the window detects the resistance while the power window switch is pulled up continuously, the window will stop upward movement then lower approximately 1 in. (2.5 cm). And if the power window switch is pulled up continuously again within 5 seconds after the window is lowered by the automatic window reversal feature, the automatic window reversal will not operate.

✻ NOTICE

The automatic reverse feature for the driver's window is only active when the "auto up" feature is used by fully pulling up the switch. The automatic reverse feature will not operate if the window is raised using the halfway position on the power window switch.

⚠ WARNING

Always check for obstructions before raising any window to avoid injuries or vehicle damage. If an object less than 0.16 in. (4 mm) in diameter is caught between the window glass and the upper window channel, the automatic reverse window may not detect the resistance and will not stop and reverse direction.



Power window lock button

- The driver can disable the power window switches on the passenger doors by depressing the power window lock switch located on the driver's door to LOCK (pressed).
- **When the power window lock switch is ON, the driver's master control cannot operate the passenger door power windows.**

⚠ CAUTION

- ***To prevent possible damage to the power window system, do not open or close two windows or more at the same time. This will also ensure the longevity of the fuse.***
- ***Never try to operate the main switch on the driver's door and the individual door window switch in opposing directions at the same time. If this is done, the window will stop and cannot be opened or closed.***

⚠ WARNING - Windows

- **NEVER leave the ignition key in the vehicle.**
- **NEVER leave any child unattended in the vehicle. Even very young children may inadvertently cause the vehicle to move, entangle themselves in the windows, or otherwise injure themselves or others.**
- **Always double check to make sure all arms, hands, head and other obstructions are safely out of the way before closing a window.**
- **Do not allow children to play with the power windows. Keep the driver's door power window lock switch in the LOCK position (depressed). Serious injury can result from unintentional window operation by the child.**
- **Do not extend any head or arms outside through the window opening while driving.**

HOOD

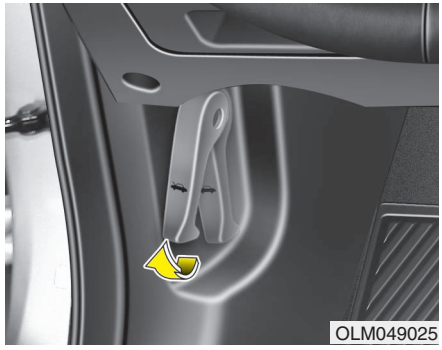

Opening the hood

1. Pull the release lever to unlatch the hood. The hood should pop open slightly.

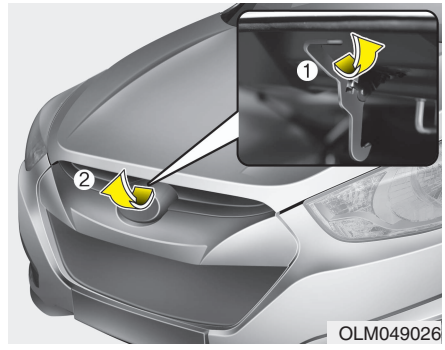

2. Go to the front of the vehicle, raise the hood slightly, pull the secondary latch (1) inside of the hood center and lift the hood (2).

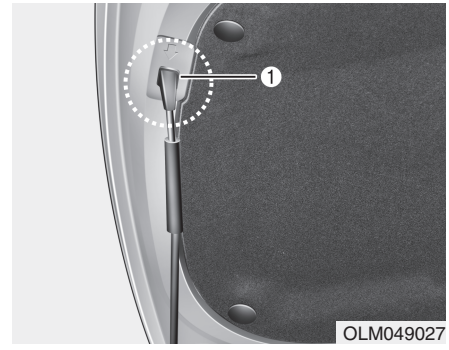

3. Pull out the support rod from the engine room.
4. Hold the hood open with the support rod.

⚠ WARNING - Hot parts

Grasp the support rod in the area wrapped in rubber. The rubber will help prevent you from being burned by hot metal when the engine is hot.

Closing the hood

1. Before closing the hood, check the following:
   - All filler caps in engine compartment must be correctly installed.
   - Gloves, rags or any other combustible material must be removed from the engine compartment.
2. Return the support rod to its clip to prevent it from rattling.
3. Lower the hood until it is about 1 ft. (30 cm) above the closed position and let it drop. Make sure that it locks into place.

⚠ WARNING

- **Before closing the hood, ensure that all obstructions are removed from the hood opening. Closing the hood with an obstruction present in the hood opening may result in property damage or severe personal injury.**
- **Do not leave gloves, rags or any other combustible material in the engine compartment. Doing so may cause a heat-induced fire.**
- **Always double check to be sure that the hood is firmly latched before driving away. If it is not latched, the hood could open while the vehicle is being driven, causing a total loss of visibility, which might result in an accident.**
- **Do not move the vehicle with the hood in the raised position, as vision is obstructed and the hood could fall or be damaged.**

FUEL FILLER DOOR

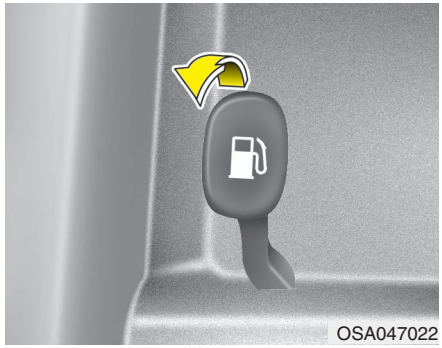
OSA047022

Opening the fuel filler door

The fuel filler door must be opened from inside the vehicle by pulling up the fuel filler door opener lever.

✻ NOTICE

If the fuel filler door does not open because ice has formed around it, tap lightly or push on the door to break the ice and release the door. Do not pry on the door. If necessary, spray around the door with an approved de-icer fluid (do not use radiator anti-freeze) or move the vehicle to a warm place and allow the ice to melt.

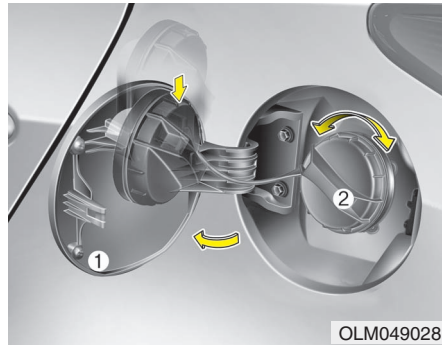

OLM049028

1. Stop the engine.
2. To open the fuel filler door, pull the fuel filler door opener up.
3. Pull the fuel filler door (1) out to fully open.
4. To remove the cap, turn the fuel filler cap (2) counterclockwise.
5. Refuel as needed.

Closing the fuel filler door

1. To install the cap, turn it clockwise until it “clicks” one time. This indicates that the cap is securely tightened.
2. Close the fuel filler door and push it lightly making sure that it is securely closed.

⚠ WARNING - Refueling

- **If pressurized fuel sprays out, it can cover your clothes or skin and thus subject you to the risk of fire and burns. Always remove the fuel cap carefully and slowly. If the cap is venting fuel or if you hear a hissing sound, wait until the condition stops before completely removing the cap.**
- **Do not "top off" after the nozzle automatically shuts off when refueling.**
- **Tighten the cap until it clicks one time, otherwise the Check Engine light will illuminate.**
- **Always check that the fuel cap is installed securely to prevent fuel spillage in the event of an accident.**

⚠ WARNING - Refueling dangers

Automotive fuels are flammable materials. When refueling, please note the following guidelines carefully. Failure to follow these guidelines may result in severe personal injury, severe burns or death by fire or explosion.

- **Read and follow all warnings posted at the gas station facility.**
- **Before refueling, note the location of the Emergency Gasoline Shut-Off, if available, at the gas station facility.**
- **Before touching the fuel nozzle, you should eliminate potentially dangerous static electricity discharge by touching another metal part of the vehicle, a safe distance away from the fuel filler neck, nozzle, or other gas source.**

(Continued)

(Continued)

- **Do not get back into a vehicle once you have begun refueling since you can generate static electricity by touching, rubbing or sliding against any item or fabric (polyester, satin, nylon, etc.) capable of producing static electricity. Static electricity discharge can ignite fuel vapors resulting in rapid burning. If you must re-enter the vehicle, you should once again eliminate potentially dangerous static electricity discharge by touching a metal part of the vehicle, away from the fuel filler neck, nozzle or other gasoline source.**
- **When using an approved portable fuel container, be sure to place the container on the ground prior to refueling. Static electricity discharge from the container can ignite fuel vapors causing a fire. Once refueling has begun, contact with the vehicle should be maintained until the filling is complete.**

(Continued)

(Continued)

Use only approved portable plastic fuel containers designed to carry and store gasoline.

- **Do not use cellular phones while refueling. Electric current and/or electronic interference from cellular phones can potentially ignite fuel vapors causing a fire.**
- **When refueling, always shut the engine off. Sparks produced by electrical components related to the engine can ignite fuel vapors causing a fire. Once refueling is complete, check to make sure the filler cap and filler door are securely closed, before starting the engine.**
- **DO NOT use matches or a lighter and DO NOT SMOKE or leave a lit cigarette in your vehicle while at a gas station especially during refueling. Automotive fuel is highly flammable and can, when ignited, result in fire.**

(Continued)

(Continued)

- **If a fire breaks out during refueling, leave the vicinity of the vehicle, and immediately contact the manager of the gas station and then contact the local fire department or 911. Follow any safety instructions they provide.**

⚠ CAUTION

- ***Make sure to refuel your vehicle according to the "Fuel requirements" suggested in section 1.***
- ***If the fuel filler cap requires replacement, use only a genuine HYUNDAI cap or the equivalent specified for your vehicle. An incorrect fuel filler cap can result in a serious malfunction of the fuel system or emission control system.***
- ***Do not spill fuel on the exterior surfaces of the vehicle. Any type of fuel spilled on painted surfaces may damage the paint.***
- ***After refueling, make sure the fuel cap is installed securely to prevent fuel spillage in the event of an accident.***

PANORAMIC SUNROOF (IF EQUIPPED)



OLM049030

If your vehicle is equipped with a sunroof, you can slide or tilt your sunroof with the sunroof control lever located on the overhead console.

The sunroof can only be opened, closed, or tilted when the ignition switch is in the ON position.

Sunroof open warning chime (if equipped)

If the driver removes the ignition key (smart key: turns off the engine) and opens the driver-side door when the sunroof is not fully closed, the warning chime will sound for approximately 7 seconds.

However, if the smart key is in the smart key holder, the warning chime will not sound.

Close the sunroof securely when leaving your vehicle.

✻ NOTICE

- **In cold and wet climates, the sunroof may not work properly due to freezing conditions.**
- **After a vehicle is washed or in a rainstorm be sure to wipe off any water that is on the sunroof before operating it.**

⚠ CAUTION

- ***Do not continue to move the sunroof control lever after the sunroof is fully opened, closed, or tilted. Damage to the motor or system components could occur.***
- ***Make sure the sunroof is closed fully when leaving your vehicle. If the sunroof is open, rain or snow may leak through the sunroof and wet the interior as well as cause theft.***

✻ NOTICE

The sunroof cannot tilt when it is in the slide position but can be slid while in a tilt position.

⚠ WARNING

- **Never adjust the sunroof or roller blind while driving. This could result in loss of control and an accident that may cause death, serious injury, or property damage.**
- **HYUNDAI does not recommend installing a roof rack on a vehicle with the panoramic sunroof.**
- **All occupants of the vehicle must wear their seat belts at all times. Seat belts and child restraints reduce serious or fatal injuries for all occupants in the event of a collision or sudden stop.**

⚠ WARNING

Do not allow children operate the sunroof. Closing a sunroof on someone can cause serious injury, and in some cases, even death.

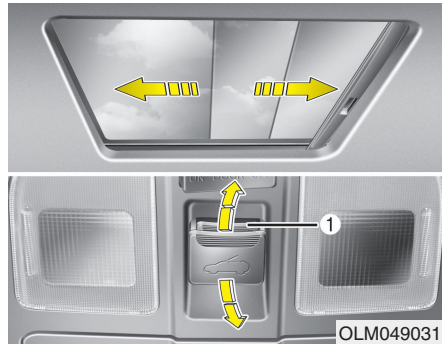

Sliding the sunroof

Before opening or closing the sunroof, open the roller blind.

To open the sunroof (manual slide feature), pull the sunroof control lever backward to the first detent position.

To close the sunroof (manual slide feature), push or pull the sunroof control lever with safety switch (1) forward or downward to the first detent position.

To open the sunroof automatically:

Pull the sunroof control lever backward to the second detent position and then release it. The sunroof will slide open automatically open all the way.

To stop the sunroof sliding at any point, pull or push the sunroof control lever momentarily.

To close the sunroof automatically:

Push the sunroof control lever forward to the second detent position and then release it. The sunroof will automatically close all the way.

To stop the sunroof sliding at any point, pull or push the sunroof control lever momentarily.

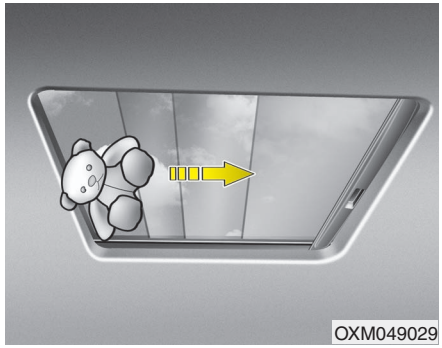

Automatic reversal

If an object is detected while the sunroof is closing automatically, it will reverse the direction, and then stop.

The auto reverse function does not work if a small obstacle is between the sliding glass and the sunroof sash. You should always check that all passengers and objects are away from the sunroof before closing it.

⚠ WARNING

- **Never activate the auto reverse function intentionally with any of your body parts.**
- **The auto reverse function may not work if something gets caught just before the sunroof fully closes.**

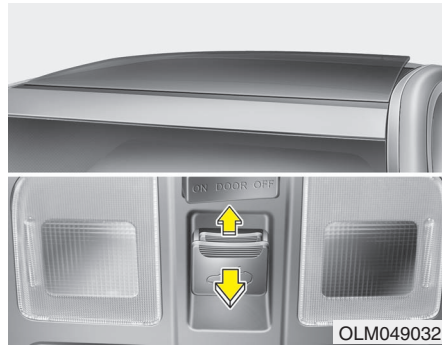

Tilting the sunroof

Before opening or closing the sunroof, open the roller blind.

To open the sunroof (manual feature), push the sunroof control lever upward until the sunroof moves to the desired position.

To close the sunroof, pull the sunroof lever downward until the sunroof moves to the desired position.

⚠ WARNING - Sunroof

- **Be careful that no head, hands and body parts are obstructed by a closing sunroof.**
- **Do not extend the face, neck, arms or body outside the sunroof while driving.**
- **Make sure your hands and head are safely out of the way before closing a sunroof.**

⚠ CAUTION

- ***Periodically remove any dirt that may accumulate on the guide rail.***
- ***If you try to open the sunroof when the temperature is below freezing or when the sunroof is covered with snow or ice, the glass or the motor could be damaged.***
- ***Do not leave the roller blind closed while the sunroof is opened.***

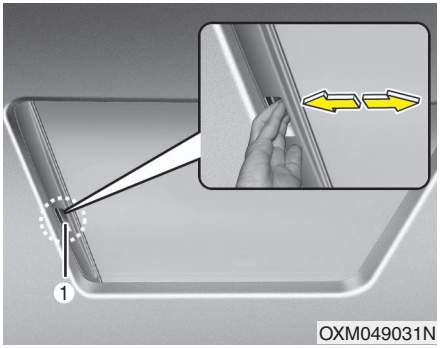

Roller blind

The roller blinds are installed inside of the sunroof and glass roof.

Open or close the roller blind manually using the handle (1) when you need to.

Before opening or closing the sunroof, open the roller blind.

⚠ CAUTION

Operation of the roller blind without using the handle (1) may cause misalignment or malfunction.

✻ NOTICE

It is normal for wrinkles to form on the blind because of its material characteristic.

Resetting the sunroof

Whenever the vehicle battery is disconnected or discharged, you must reset your sunroof system as follows:

1. Turn the ignition switch to the ON position.
2. Open the roller blind.
3. Close the sunroof.
4. Release the sunroof control lever.
5. Push the sunroof control lever forward in the direction of close (about 10 seconds) until the sunroof is moved a little. Then, release the lever.
6. Push the sunroof control lever forward in the direction of close until the sunroof operates as follows;

   TILT OPEN → SLIDE OPEN → SLIDE CLOSE

   Then, release the lever.

When this is complete, the sunroof system has been reset.

STEERING WHEEL

Electric power steering

The power steering uses a motor to assist you in steering the vehicle. If the engine is off or if the power steering system becomes inoperative, the vehicle may still be steered, but it will require increased steering effort.

The motor driven power steering is controlled by a power steering control unit which senses the steering wheel torque, steering wheel position and vehicle speed to command the motor.

The steering wheel becomes heavier as the vehicle's speed increases and becomes lighter as the vehicle's speed decreases for optimum steering control.

Should you notice any change in the effort required to steer during normal vehicle operation, have the power steering checked by an authorized HYUNDAI dealer.

✻ NOTICE

The following symptoms may occur during normal vehicle operation:

- **The EPS warning light does not illuminate.**
- **The steering wheel becomes heavier after turning the ignition switch on. This happens as the system performs the EPS system diagnostics. When the diagnostics is completed, the steering wheel will return to its normal condition.**
- **Click noise may be heard from the EPS relay after the ignition switch is turned to the ON or LOCK position.**
- **Motor noise may be heard when the vehicle is at a stop or at a low driving speed.**
- **If the Electric Power Steering System does not operate normally, the warning light will illuminate on the instrument cluster. The steering wheel may become difficult to control or operate abnormally. Take your vehicle to an authorized HYUNDAI dealer and have the vehicle checked as soon as possible.**
- **When you operate the steering wheel in low temperature, abnormal noise could occur. If temperature rises, the noise will disappear. This is a normal condition.**

Tilt steering/Telescope steering (if equipped)

Tilt steering allows you to adjust the steering wheel before you drive. You can also raise the steering wheel to give your legs more room when you exit and enter the vehicle (if equipped).

The steering wheel should be positioned so that it is comfortable for you to drive, while permitting you to see the instrument panel warning lights and gauges.

⚠ WARNING

- **Never adjust the angle and height of steering wheel while driving. You may lose your steering control and cause severe personal injury or accidents.**
- **After adjusting, push the steering wheel both up and down to be certain it is locked in position.**

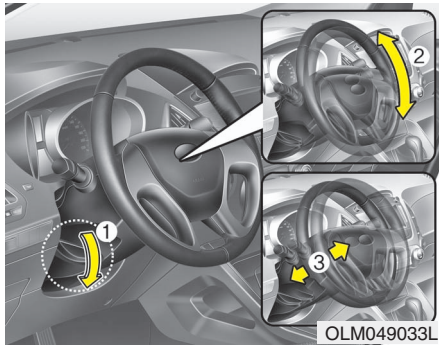

OLM049033L

To change the steering wheel angle, pull down the lock-release lever (1), adjust the steering wheel to the desired angle (2) and the desired position (if equipped) (3), then pull up the lock-release lever to lock the steering wheel in place. Be sure to adjust the steering wheel to the desired position before driving.


OLM049034

Horn

To sound the horn, press the horn symbol on your steering wheel.

Check the horn regularly to be sure it operates properly.

✻ NOTICE

To sound the horn, press the area indicated by the horn symbol on your steering wheel (see illustration). The horn will operate only when this area is pressed.

⚠ CAUTION

Do not strike the horn severely to operate it, or hit it with your fist. Do not press on the horn with a sharp-pointed object.

MIRRORS

Inside rearview mirror

Adjust the rearview mirror to center on the view through the rear window. Make this adjustment before you start driving.

⚠ WARNING - Rear visibility

Do not place objects in the rear seat or cargo area which would interfere with your vision through the rear window.

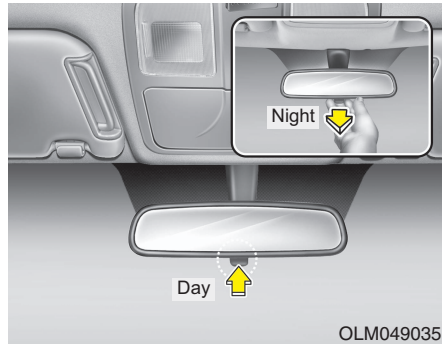

Day/night rearview mirror

Make this adjustment before you start driving and while the day/night lever is in the day position.

Pull the day/night lever toward you to reduce glare from the headlights of vehicles behind you during night driving.

Remember that you lose some rearview clarity in the night position.

⚠ CAUTION

When cleaning the mirror, use a paper towel or similar material dampened with glass cleaner. Do not spray glass cleaner directly on the mirror as the liquid cleaner may enter the mirror housing.

Outside rearview mirror

Be sure to adjust mirror angles before driving.

Your vehicle is equipped with both left-hand and right-hand outside rearview mirrors. The mirrors can be adjusted remotely with the remote switch. The mirror heads can be folded back to prevent damage during an automatic car wash or when passing in a narrow street.

⚠ WARNING - Rearview mirrors

- **The right outside rearview mirror is convex. Objects seen in the mirror are closer than they appear.**
- **Use your interior rearview mirror or direct observation to determine the actual distance of following vehicles when changing lanes.**

⚠ CAUTION

Do not scrape ice off the mirror face; this may damage the surface of the glass. If ice should restrict movement of the mirror, do not force the mirror for adjustment. To remove ice, use a deicer spray, or a sponge or soft cloth with warm water.

⚠ CAUTION

If the mirror is jammed with ice, do not adjust the mirror by force. Use an approved spray de-icer (not radiator antifreeze) to release the frozen mechanism or move the vehicle to a warm place and allow the ice to melt.

⚠ WARNING

Do not adjust or fold the outside rearview mirrors while the vehicle is moving. This could result in loss of control, and an accident which could cause death, serious injury or property damage.



Remote control

The electric remote control mirror switch allows you to adjust the position of the left and right outside rearview mirrors. To adjust the position of either mirror, push the switch (1) to R or L to select the right side mirror or the left side mirror, then press a corresponding point on the mirror adjustment control to position the selected mirror up, down, left or right.

After adjustment, put the switch into neutral (center) position to prevent the inadvertent adjustment.

⚠ CAUTION

- ***The mirrors stop moving when they reach the maximum adjusting angles, but the motor continues to operate while the switch is depressed. Do not depress the switch longer than necessary, the motor may be damaged.***
- ***Do not attempt to adjust the outside rearview mirror by hand. Doing so may damage the parts.***

INSTRUMENT CLUSTER

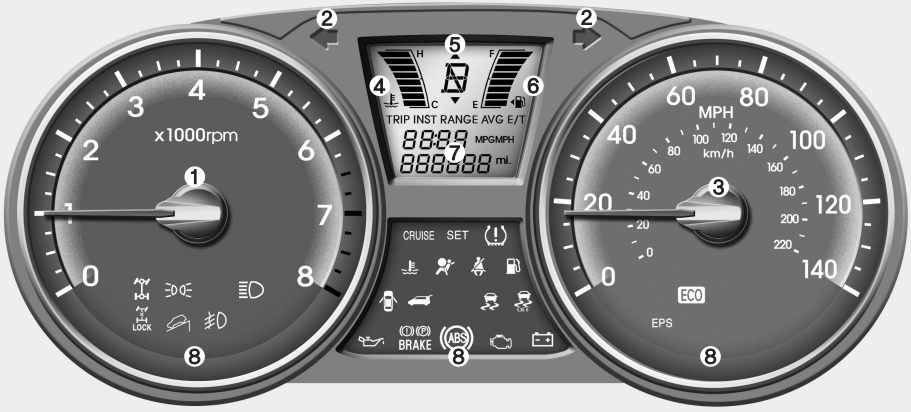

1. Tachometer
2. Turn signal indicators
3. Speedometer
4. Engine temperature gauge
5. Shift position indicator
6. Fuel gauge
7. Odometer/Trip computer*
8. Warning and indicator lights

* : if equipped

* The actual cluster in the vehicle may differ from the illustration.
For more details refer to the "Gauges" in the next pages.

OLM049051N

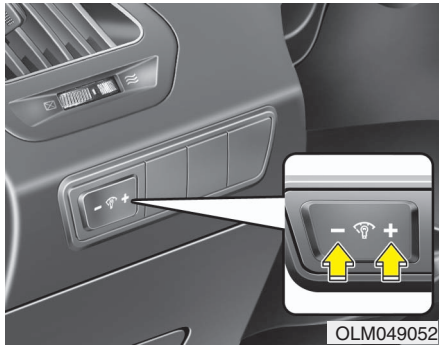

Instrument panel illumination

When the vehicle's parking lights or headlights are on, press the illumination control button to adjust the brightness of the instrument panel illumination.



Gauges

Speedometer

The speedometer indicates the forward speed of the vehicle.

The speedometer is calibrated in miles per hour and/or kilometers per hour.



Tachometer

The tachometer indicates the approximate number of engine revolutions per minute (rpm).

Use the tachometer to select the correct shift points and to prevent lugging and/or over-revving the engine.

When the door is open, or if the engine is not started within 1 minute, the tachometer pointer may move slightly in ON position with the engine OFF. This movement is normal and will not affect the accuracy of the tachometer once the engine is running.

⚠ CAUTION

Do not operate the engine within the tachometer's RED ZONE.

This may cause severe engine damage.



OLM049057

Engine temperature gauge

This gauge shows the temperature of the engine coolant when the ignition switch is ON.

Do not continue driving with an overheated engine. If your vehicle overheats, refer to “If the engine overheats” in section 6.

⚠ CAUTION

If the gauge pointer moves beyond the normal range area toward the “H” position, it indicates overheating that may damage the engine.

⚠ WARNING

Never remove the radiator cap when the engine is hot. The engine coolant is under pressure and could cause severe burns. Wait until the engine is cool before adding coolant to the reservoir.



OLM049058

Fuel gauge

The fuel gauge indicates the approximate amount of fuel remaining in the fuel tank. The fuel tank capacity is given in section 8. The fuel gauge is supplemented by a low fuel warning light, which will illuminate when the fuel tank is near empty.

On inclines or curves, the fuel gauge pointer may fluctuate or the low fuel warning light may come on earlier than usual due to the movement of fuel in the tank.

The bottom segment will flash as the fuel level approaching empty.

⚠ WARNING - Fuel gauge

Running out of fuel can expose vehicle occupants to danger.

You must stop and obtain additional fuel as soon as possible after the warning light comes on or when the gauge indicator comes close to the E level.

⚠ CAUTION

Avoid driving with a extremely low fuel level. Running out of fuel could cause the engine to misfire, damaging the catalytic converter.

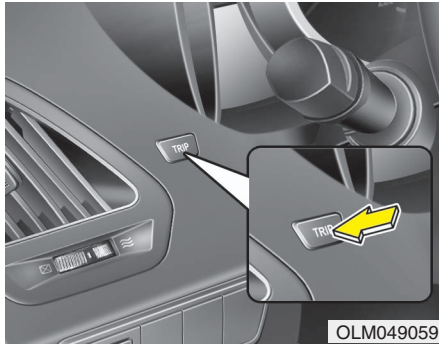

OLM049059

Trip computer

The trip computer is a microcomputer-controlled driver information system that displays information related to driving, including odometer, tripmeter, distance to empty, average fuel consumption, average speed, driving time and ECO ON/OFF mode (if equipped) on the display when the ignition switch is in the ON position. All stored driving information (except odometer and distance to empty) is reset if the battery is disconnected.

The odometer is always displayed until the display is turned off.

Push the TRIP button for less than 1 second to select tripmeter, distance to empty, average fuel consumption, average speed, driving time and ECO ON/OFF mode* function as follows:

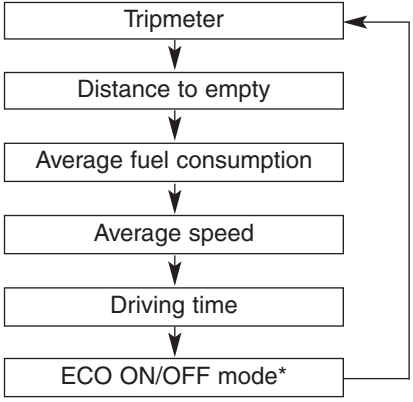

* : if equipped



OLM049060N

Odometer

The odometer indicates the total distance the vehicle has been driven.

You will also find the odometer useful to determine when periodic maintenance should be performed.



OLM049061N

Tripmeter

This mode indicates the distance of individual trips selected since the last tripmeter reset.

The meter's working range is from 0.0 to 999.9 miles (0.0 to 999.9 km).

Pressing the TRIP button for more than 1 second, when the tripmeter is being displayed, clears the tripmeter to zero (0.0).



OLM049062N

Distance to empty

This mode indicates the estimated distance to empty based on the current fuel in the fuel tank and the amount of fuel delivered to the engine. When the remaining distance is below 30 miles (50 km), "----" will be displayed and the distance to empty indicator will blink.

The meter's working range is from 30 to 990 miles (50 to 990 km).



OLM049064N

Average fuel consumption

This mode calculates the average fuel consumption from the total fuel used and the distance since the last average consumption reset. The total fuel used is calculated from the fuel consumption input. For an accurate calculation, drive more than 0.03 miles (50 m).

Pressing the TRIP button for more than 1 second, when the average fuel consumption is being displayed, clears the average fuel consumption to zero (--.-).

✻ NOTICE

- **If the vehicle is not on level ground or the battery power has been interrupted, the "Distance to empty" function may not operate correctly.**
  The trip computer may not register additional fuel if less than 1.6 gallons (6 liters) of fuel are added to the vehicle.
- **The fuel consumption and distance to empty values may vary significantly based on driving conditions, driving habits, and condition of the vehicle.**
- **The distance to empty value is an estimate of the available driving distance. This value may differ from the actual driving distance available.**



OLM049066N

Average speed

This mode calculates the average speed of the vehicle since the last average speed reset.

Even if the vehicle is not in motion, the average speed is calculated while the engine is running.

Pressing the TRIP button for more than 1 second, when the average speed is being displayed, clears the average speed to zero (---).



OLM049067N

Driving time

This mode indicates the total time traveled since the last driving time reset.

Even if the vehicle is not in motion, the driving time is calculated while the engine is running.

The meter's working range is from 0:00~99:59.

Pressing the TRIP button for more than 1 second, when the driving time is being displayed, clears the driving time to zero (0:00).



OLM049068N

ECO ON/OFF mode (if equipped)

You can turn the ECO indicator on/off on the instrument cluster in this mode.

If you push the TRIP button more than 1 second in the ECO ON mode, ECO OFF is displayed in the screen and the ECO indicator turns off.

If you want to display the ECO indicator again, press the TRIP button more than 1 second in the ECO OFF mode and then ECO ON mode is displayed in the screen.

When you press the TRIP button less than 1 second in the ECO mode, the mode is changed to odometer.

Warnings and indicators

All warning lights are checked by turning the ignition switch ON (do not start the engine). Any light that does not illuminate should be checked by an authorized HYUNDAI dealer.

After starting the engine, check to make sure that all warning lights are off. If any are still on, this indicates a situation that needs attention. When releasing the parking brake, the brake system warning light should go off. The fuel warning light will stay on if the fuel level is low.

ECO indicator (if equipped)



The ECO indicator is a system that helps you to drive economically.

It is displayed if you drive fuel efficiently to help you improve fuel efficiency.

- The ECO indicator (green) will turn on when you are driving fuel efficiently in the ECO ON mode.

  If you don't want the indicator displayed, you can turn the ECO ON mode to OFF mode by pressing the TRIP button.

  As per ECO ON/OFF Mode operation, refer to the previous page.
- The fuel-efficiency can be changed by the driver's driving habit and road condition.
- The ECO indicator does not function in P (Park), N (Neutral), and R (Reverse).

⚠ WARNING

Don't keep watching the indicator while driving. It will distract you while driving and cause an accident that results in severe personal injury.

Air bag warning light



This warning light will illuminate for approximately 6 seconds each time you turn the ignition switch to the ON position.

This light also comes on when the Supplemental Restraint System (SRS) is not working properly. If the AIR BAG warning light does not come on, or continuously remains on after operating for about 6 seconds when you turned the ignition switch to the ON position or started the engine, or if it comes on while driving, have the SRS inspected by an authorized HYUNDAI dealer.

Anti-lock brake system (ABS) warning light



This light illuminates if the ignition switch is turned ON and goes off in approximately 3 seconds if the system is operating normally.

If the ABS warning light remains on, comes on while driving, or does not come on when the ignition switch is turned to the ON position, this indicates that there may be a malfunction with the ABS.

If this occurs, have your vehicle checked by an authorized HYUNDAI dealer as soon as possible. The normal braking system will still be operational, but without the assistance of the anti-lock brake system.

Electronic brake force distribution (EBD) system warning light



If two warning lights shown illuminate at the same time while driving, your vehicle may have a malfunction with ABS and EBD system.

In this case, your ABS and regular brake system may not work normally. Have the vehicle checked by an authorized HYUNDAI dealer as soon as possible.

⚠ WARNING

If both ABS and Brake warning lights are on and stay on, your vehicle's brake system will not work normally. So you may experience an unexpected and dangerous situation during sudden braking. In this case, avoid high speed driving and abrupt braking. Have your vehicle checked by an authorized HYUNDAI dealer as soon as possible.

✻ NOTICE

If the ABS warning light or EBD warning light is on and stays on, the speedometer or odometer/tripmeter may not work. Also, the EPS warning light may illuminate and the steering effort may increase or decrease. In this case, have your vehicle checked by an authorized HYUNDAI dealer as soon as possible.

Parking brake & brake fluid warning light



Parking brake warning

This light is illuminated when the parking brake is applied with the ignition switch in the START or ON position. The warning light should go off when the parking brake is released while engine is running.

The parking brake warning chime will sound to remind you that the parking brake is applied when you are driving above 6 mph (10 km/h). Always release the parking brake before you drive.

Low brake fluid level warning

If the warning light remains on, it may indicate that the brake fluid level in the reservoir is low.

If the warning light remains on:

1. Drive carefully to the nearest safe location and stop your vehicle.
2. With the engine stopped, check the brake fluid level immediately and add fluid as required. Then check all brake components for fluid leaks.
3. Do not drive the vehicle if leaks are found, the warning light remains on or the brakes do not operate properly. Have the vehicle towed to any authorized HYUNDAI dealer for a brake system inspection and necessary repairs.

Your vehicle is equipped with a dual-diagonal braking system. This means you still have braking on two wheels even if one of the brake circuits is damaged or malfunctions. With only one of the circuits working, more than normal pedal travel and greater pedal pressure are required to stop the car. Also, the car will not stop in as short a distance with only a portion of the brake system working. If the brakes fail while you are driving, shift to a lower gear for additional engine braking and stop the car as soon as it is safe to do so.

To check bulb operation, check whether the parking brake and brake fluid warning light illuminates when the ignition switch is in the ON position.

⚠ WARNING

Driving the vehicle with a warning light on is dangerous. If the brake warning light remains on, have the brakes checked and repaired immediately by an authorized HYUNDAI dealer.

Seat belt warning



As a reminder to the driver, the seat belt warning light will blink for approximately 6 seconds each time you turn the ignition switch ON, regardless of belt fastening.

For details, refer to the seat belt on chapter 3.

Turn signal indicator

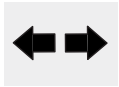

The blinking green arrows on the instrument panel show the direction indicated by the turn signals. If the arrow comes on but does not blink, blinks more rapidly than normal, or does not illuminate at all, a malfunction in the turn signal system is indicated. Your dealer should be consulted for repairs.

This indicator also blinks when the hazard warning switch is turned on.

Light on indicator



The indicator illuminates when the tail lights or headlights are ON.

High beam indicator



This indicator illuminates when the headlights are on and in the high beam position or when the turn signal lever is pulled into the Flash-to-Pass position.

Front fog light indicator (if equipped)



The indicator illuminates when the front fog lights are ON.

Engine oil pressure warning light



This warning light indicates the engine oil pressure is low.

If the warning light illuminates while driving:

1. Drive safely to the side of the road and stop.
2. With the engine off, check the engine oil level. If the level is low, add oil as required.

If the warning light remains on after adding oil or if oil is not available, call an authorized HYUNDAI dealer.

⚠ CAUTION

If the engine is not stopped immediately after the engine oil pressure warning light is illuminated, severe damage could result.

⚠ CAUTION

If the oil pressure warning light stays on while the engine is running, serious engine damage may result. The oil pressure warning light comes on whenever there is insufficient oil pressure. In normal operation, it should come on when the ignition switch is turned on, then go out when the engine is started. If the oil pressure warning light stays on while the engine is running, there is a serious malfunction.

If this happens, stop the car as soon as it is safe to do so, turn off the engine and check the oil level. If the oil level is low, fill the engine oil to the proper level and start the engine again. If the light stays on with the engine running, turn the engine off immediately. In any instance where the oil light stays on when the engine is running, the engine should be checked by an authorized HYUNDAI dealer before the car is driven again.

Shift pattern indicator (if equipped)



The indicator displays which automatic transaxle shift position is selected.

Manual transaxle shift indicator (if equipped)



This indicator informs you which gear is desired while driving to save fuel.

For example

▲3: Indicates that shifting up to the 3rd gear is desired (currently the shift lever is in the 2nd gear).

▼3: Indicates that shifting down to the 3rd gear is desired (currently the shift lever is in the 4th gear).

✻ NOTICE

When the system is not working properly, up & down arrow indicator and Gear are not displayed.

Charging system warning light



This warning light indicates a malfunction of either the generator or electrical charging system.

If the warning light comes on while the vehicle is in motion:

1. Drive to the nearest safe location.
2. With the engine off, check the generator drive belt for looseness or breakage.
3. If the belt is adjusted properly, a problem exists somewhere in the electrical charging system. Have an authorized HYUNDAI dealer correct the problem as soon as possible.

Door ajar warning light



This warning light illuminates when a door is not closed securely with the ignition switch in any position.

Tailgate open warning light



This warning light illuminates when the tailgate is not closed securely with the ignition switch in any position.

Low fuel level warning light



This warning light indicates the fuel tank is nearly empty. When it comes on, you should add fuel as soon as possible. Driving with the fuel level warning light on or with the fuel level below “E” can cause the engine to misfire and damage the catalytic converter.

Malfunction indicator (MIL) (check engine light)



This indicator light is part of the Engine Control System which monitors various emission control system components. If this light illuminates while driving, it indicates that a potential malfunction has been detected somewhere in the emission control system.

This light will also illuminate when the ignition switch is turned to the ON position, and will go out in a few seconds after the engine is started. If it illuminates while driving, or does not illuminate when the ignition switch is turned to the ON position, take your vehicle to your nearest authorized HYUNDAI dealer and have the system checked.

Generally, your vehicle will continue to be drivable, but have the system checked by an authorized HYUNDAI dealer promptly.

⚠ CAUTION

- ***Prolonged driving with the Emission Control System Malfunction Indicator Light illuminated may cause damage to the emission control systems which could effect drivability and/or fuel economy.***
- ***If the Emission Control System Malfunction Indicator Light illuminates, potential catalytic converter damage is possible which could result in loss of engine power. Have the Engine Control System inspected as soon as possible by an authorized HYUNDAI dealer.***

ESC indicator (Electronic Stability Control) (if equipped)



The ESC indicator will illuminate when the ignition switch is turned ON, but should go off after approximately 3 seconds. When the ESC is on, it monitors the driving conditions and under normal driving conditions, the ESC indicator will remain off. When a slippery or low traction condition is encountered, the ESC will operate, and the ESC indicator will blink to indicate the ESC is operating. If the ESC system malfunctions the indicator illuminates and stays on. Take your vehicle to an authorized HYUNDAI dealer and have the system checked.

ESC OFF indicator (if equipped)



The ESC OFF indicator will illuminate when the ignition switch is turned ON, but should go off after approximately 3 seconds. To switch to ESC function off, press the ESC OFF button. The ESC OFF indicator will illuminate indicating the ESC is deactivated.

DBC (Downhill brake control) indicator (if equipped)



The DBC indicator will illuminate when the DBC button is pressed and the system is on.

When driving down a steep hill at a speed under 22 mph (35 km/h), the DBC will operate and the DBC indicator will blink to indicate the DBC is operating.

If the red indicator illuminates, the DBC system may have malfunctioned. Take your vehicle to an authorized HYUNDAI dealer and have the system checked.

AWD system warning light (if equipped)



When the ignition switch is turned to the ON position, the AWD indicator will illuminate and then go off in a few seconds.

If the AWD system warning light illuminates, this indicates that there is a malfunction in the AWD system. If this occurs, have your vehicle checked by an authorized HYUNDAI dealer as soon as possible.

AWD LOCK indicator (if equipped)



The AWD LOCK indicator light is illuminated when the AWD LOCK button is pushed. The purpose of this AWD LOCK mode is to increase the drive power when driving on wet pavement, snow-covered roads and/or off-road. The AWD LOCK indicator light is turned off by pushing the button again.

⚠ CAUTION

Do not use AWD LOCK mode on dry paved roads or highway, it can cause noise, vibration or damage of AWD related parts.

Low tire pressure indicator



The low tire pressure telltale comes on for 3 seconds after the ignition switch is turned to the "ON" position.

The low tire pressure telltale illuminates when one or more of your tires is significantly underinflated.

The low tire pressure telltale will illuminate after it blinks for approximately one minute when there is a problem with the Tire Pressure Monitoring System.

If this occurs, have the system checked by an authorized HYUNDAI dealer as soon as possible.

For details, refer to the TPMS on section 6.

⚠ WARNING - Safe stopping

- **The TPMS cannot alert you to severe and sudden tire damage caused by external factors.**
- **If you feel any vehicle instability, immediately take your foot off the accelerator, apply the brakes gradually and with light force, and slowly move to a safe position off the road.**

Engine coolant temperature warning light (if equipped)



The warning light illuminates if the temperature of the engine coolant is above 248±5.4°F (120±3°C).

Do not continue driving with an overheated engine. If your vehicle overheats, refer to “Overheating” in section 6.

✻ NOTICE

If the engine coolant temperature warning light illuminates, it indicates overheating that may damage the engine.

Electric power steering (EPS) system warning light



This indicator light comes on after the ignition key is turned to the ON position and then it will go out after the engine is started.

This light also comes on when the EPS has some troubles. If it comes on while driving, have your vehicle inspected by an authorized HYUNDAI dealer.

Cruise indicator

CRUISE indicator

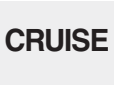

The indicator light illuminates when the cruise control system is enabled.

The cruise indicator light in the instrument cluster is illuminated when the cruise control ON-OFF button on the steering wheel is pushed.

The indicator light turns off when the cruise control ON-OFF button is pushed again. For more information about the use of cruise control, refer to “Cruise control system” in section 5.

Cruise SET indicator



The indicator light illuminates when the cruise function switch (SET- or RES+) is ON.

The cruise SET indicator light in the instrument cluster is illuminated when the cruise control switch (SET- or RES+) is pushed. The cruise SET indicator light does not illuminate when the cruise control switch (CANCEL) is pushed or the system is disengaged.

Key reminder warning chime

If the driver’s door is opened while the ignition key is left in the ignition switch (ACC or LOCK position), the key reminder warning chime will sound. This is to prevent you from locking your keys in the vehicle. The chime sounds until the key is removed from the ignition switch or the driver’s door is closed.

REARVIEW CAMERA (IF EQUIPPED)

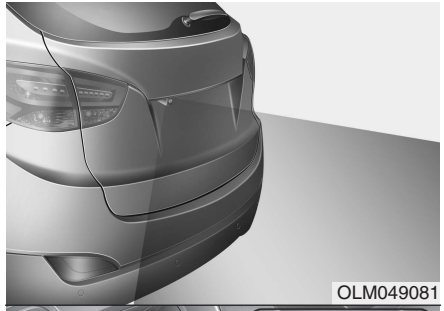
OLM049081

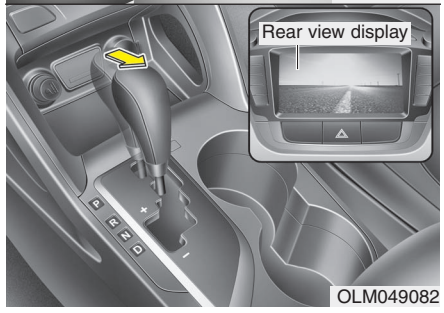

OLM049082

The rearview camera will activate when the back-up light is ON with the ignition switch ON and the shift lever in the R (Reverse) position.

This system is a supplemental system that shows behind the vehicle through the navigation display while backing-up.

⚠ WARNING

- **This system is a supplementary function only. It is the responsibility of the driver to always check the inside/outside rearview mirror and the area behind the vehicle before and while backing up.**
- **Always keep the camera lens clean. If lens is covered with foreign matter, the camera may not operate normally.**

HAZARD WARNING FLASHER

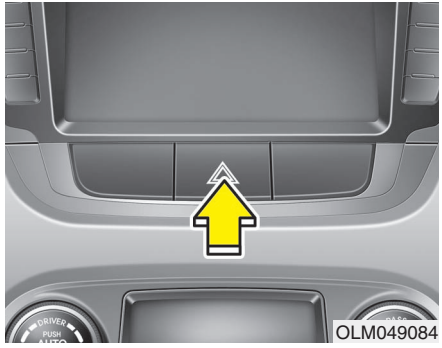
OLM049084

The hazard warning flasher should be used whenever you find it necessary to stop the car in a hazardous location. When you must make such an emergency stop, always pull off the road as far as possible.

The hazard warning lights are turned on by pushing in the hazard switch. This causes all turn signal lights to blink. The hazard warning lights will operate even though the key is not in the ignition switch.

To turn the hazard warning lights off, push the switch a second time.

LIGHTING

Battery saver function

- The purpose of this feature is to prevent the battery from being discharged. The system automatically turns off the parking lights when the driver removes the ignition key and opens the driver-side door (in that order).
- With this feature, the parking lights will be turned off automatically if the driver parks on the side of road at night.

  If necessary, to keep the lights on when the ignition key is removed, perform the following:

  1) Open the driver-side door.
  2) Turn the parking lights OFF and ON again using the light switch on the steering column.

Headlight escort function (if equipped)

The headlights (and/or taillights) remain on for approximately 20 minutes after the ignition key is removed or turned to the ACC or LOCK position. However, if the driver's door is opened and closed, the headlights are turned off after 30 seconds.

The headlights can be turned off by pressing the lock button on the transmitter twice or turning off the light switch from the headlight or Auto light position.

⚠ CAUTION

If the driver gets out of the vehicle through other doors (except driver's door), the battery saver function does not operate and the headlight escort function does not turn off automatically. Therefore, It causes the battery to be discharged. In this case, make sure to turn off the lamp before getting out of the vehicle.

Headlight welcome function

When the headlight switch is in the ON position or in the AUTO position and all doors (and tailgate) are closed and locked, if you press the door unlock button on the transmitter, the headlight will come on for about 15 seconds.

If the headlight switch is in the AUTO position, the function can only operate at night.

To turn off the headlight immediately, do one of the following:

- Press the door lock button.
- Press the unlock button twice within 4 seconds.
- Press the unlock button once more after 4 seconds.



OXM049110

Lighting control

The light switch has a Headlight and a Parking light position.

To operate the lights, turn the knob at the end of the control lever to one of the following positions:

(1) OFF position
(2) Parking light position
(3) Headlight position
(4) Auto light position (if equipped)



OAM049041

Parking light position ( )

When the light switch is in the parking light position (1st position), the tail, position, license and instrument panel lights will turn ON.



OAM049042

Headlight position ( )

When the light switch is in the headlight position (2nd position), the head, tail, position, license and instrument panel lights will turn ON.

✻ NOTICE

The ignition switch must be in the ON position to turn on the headlights.

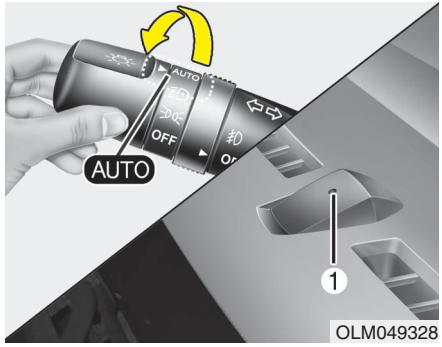

OLM049328

Auto light position (if equipped)

When the light switch is in the AUTO light position, the taillights and headlights will be turn ON or OFF automatically depending on the amount of light outside the vehicle.

⚠ CAUTION

- ***Never place anything over sensor (1) located on the instrument panel. This will ensure better auto-light system control.***
- ***Don't clean the sensor using a window cleaner. The cleaner may leave a light film which could interfere with sensor operation.***
- ***If your vehicle has window tint or other types of metallic coating on the front windshield, the Auto light system may not work properly.***



OAM049044

High beam operation

To turn on the high beam headlights, push the lever away from you. Pull it back for low beams.

The high beam indicator will light when the headlight high beams are switched on.

To prevent the battery from being discharged, do not leave the lights on for a prolonged time while the engine is not running.



OAM049043

To flash the headlights, pull the lever towards you. It will return to the normal (low beam) position when released. The headlight switch does not need to be on to use this flashing feature.

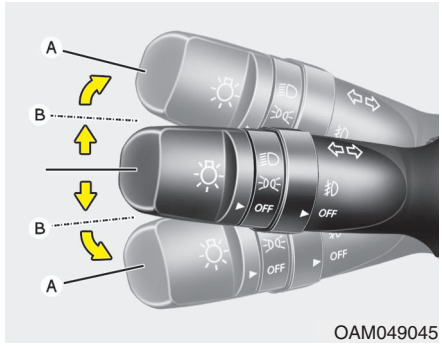

OAM049045

Turn signals and lane change signals

The ignition switch must be on for the turn signals to function. To turn on the turn signals, move the lever up or down (A). The green arrow indicators on the instrument panel indicate which turn signal is operating. They will self-cancel after a turn is completed. If the indicator continues to flash after a turn, manually return the lever to the OFF position.

To signal a lane change, move the turn signal lever slightly and hold it in position (B). The lever will return to the OFF position when released.

If an indicator stays on and does not flash or if it flashes abnormally, one of the turn signal bulbs may be burned out and will require replacement.

One-touch lane change function (if equipped)

To activate an one-touch lane change function, move the turn signal lever slightly for less than 0.5 second and then release it. The lane change signals will blink 3 times.

✻ NOTICE

If an indicator flash is abnormally quick or slow, a bulb may be burned out or have a poor electrical connection in the circuit.



OAM049046

Front fog light (if equipped)

Fog lights are used to provide improved visibility when visibility is poor due to fog, rain or snow, etc. The fog lights will turn on when fog light switch (1) is turned to ON after the headlights (low beam) are turned on.

To turn off the fog lights, turn the switch to OFF.

⚠ CAUTION

When in operation, the fog lights consume large amounts of vehicle electrical power. Only use the fog lights when visibility is poor.

WIPERS AND WASHERS

Windshield wiper/washer

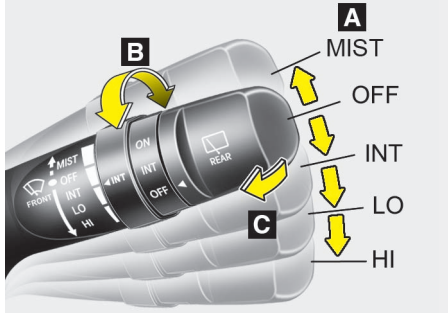

Rear window wiper/washer (if equipped)

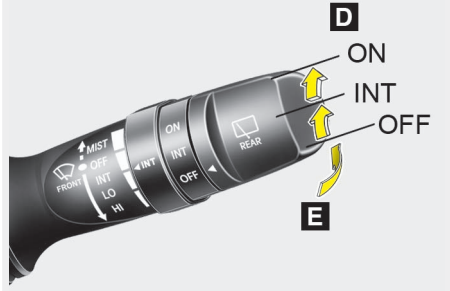

OAM049100N/OAM049048N

A : Wiper speed control
- MIST – Single wipe
- OFF – Off
- INT – Intermittent wipe
- LO – Low wiper speed
- HI – High wiper speed

B : Intermittent wipe time adjustment

C : Wash with brief wipes (front)

D : Rear wiper/washer control
- ON – Continuous wipe
- INT – Intermittent wipe
- OFF – Off

E : Wash with brief wipes (rear)

* : if equipped

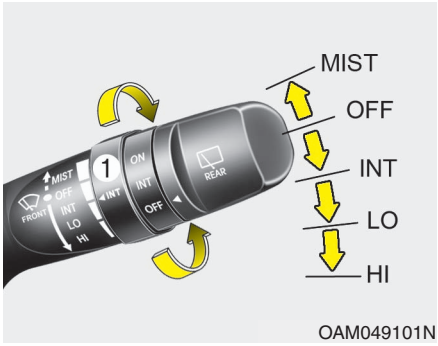

OAM049101N

Windshield wipers

Operates as follows when the ignition switch is turned ON.

MIST : For a single wiping cycle, move the lever to this (MIST) position and release it. The wipers will operate continuously if the lever is held in this position.

OFF : Wiper is not in operation

INT : Wiper operates intermittently at the same wiping intervals. Use this mode in a light rain or mist. To vary the speed setting, turn the speed control knob(1).

LO : Normal wiper speed

HI : Fast wiper speed

✻ NOTICE

If there is heavy accumulation of snow or ice on the windshield, defrost the windshield for about 10 minutes, or until the snow and/or ice is removed before using the windshield wipers to ensure proper operation.

✻ NOTICE

- **When you operate the wipers, if your vehicle has a problem in any part of the wiper operation system, the wiper may operate in the LO mode regardless of the wiper switch position. In this case, have your vehicle checked by an authorized HYUNDAI dealer as soon as possible.**
- **When the ignition key is removed, the wiper blade sometimes may move slightly for reducing the deterioration of the windshield wipers.**

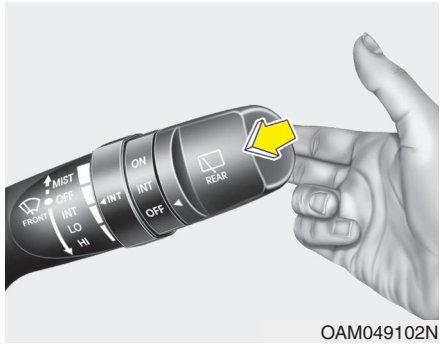

OAM049102N

Windshield washers

In the OFF position, pull the lever gently toward you to spray washer fluid on the windshield and to run the wipers 1-3 cycles.

Use this function when the windshield is dirty.

The spray and wiper operation will continue until you release the lever.

If the washer does not work, check the washer fluid level. If the fluid level is not sufficient, you will need to add appropriate non-abrasive windshield washer fluid to the washer reservoir.

The reservoir filler neck is located in the front of the engine compartment on the passenger side.

⚠ CAUTION

To prevent possible damage to the washer pump, do not operate the washer when the fluid reservoir is empty.

⚠ WARNING

Do not use the washer in freezing temperatures without first warming the windshield with the defrosters; the washer solution could freeze on the windshield and obscure your vision.

⚠ CAUTION

- ***To prevent possible damage to the wipers or windshield, do not operate the wipers when the windshield is dry.***
- ***To prevent damage to the wiper blades, do not use gasoline, kerosene, paint thinner, or other solvents on or near them.***
- ***To prevent damage to the wiper arms and other components, do not attempt to move the wipers manually.***

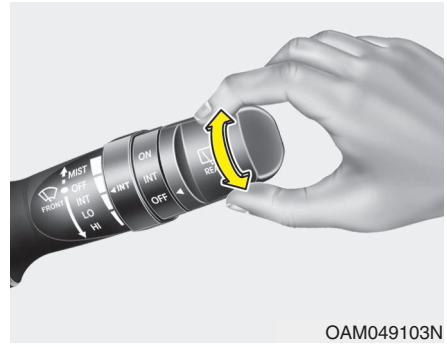

OAM049103N

Rear window wiper and washer switch

The rear window wiper and washer switch is located at the end of the wiper and washer switch lever. Turn the switch to the desired position to operate the rear wiper and washer.

ON - Normal wiper operation

INT - Intermittent wiper operation (if equipped)

OFF - Wiper is not in operation

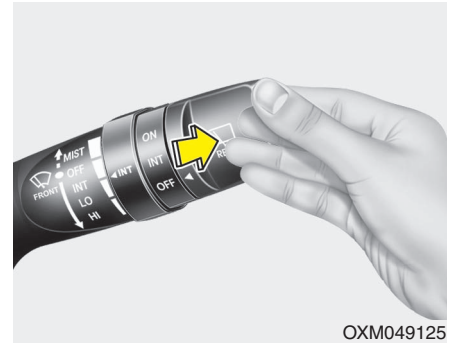

OXM049125

Push the lever away from you to spray rear washer fluid and to run the rear wipers 1~3 cycles. The spray and wiper operation will continue until you release the lever.

INTERIOR LIGHT

⚠ CAUTION

Do not use the interior lights for extended periods when the engine is not running.

It may cause battery discharge.

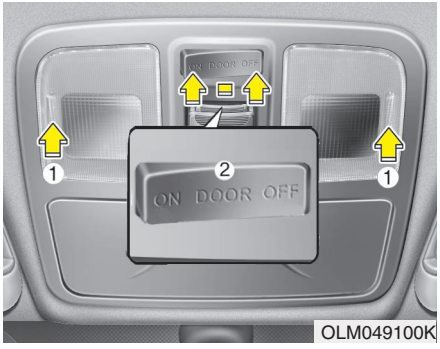

OLM049100K

Map lamp

Push the lens to turn the map lamp on or off.

- ON : The light (with room lamp) stays on at all times.
- DOOR : The light (with room lamp) comes on when any door (except tailgate) is opened regardless of the ignition switch position. When doors (except tailgate) are unlocked by the transmitter, the light (with room lamp) comes on for approximately 30 seconds as long as any door (except tailgate) is not opened.

  Also, the light (with room lamp) goes out gradually after approximately 30 seconds if the door (except tailgate) is closed. However, if the ignition switch is ON or all doors (except tailgate) are locked, the light will turn off immediately.

  If a door (except tailgate) is opened with the ignition switch in the ACC or LOCK position, the light (with room lamp) stays on for about 20 minutes. However, if a door (except tailgate) is opened with the ignition switch in the ON position, the light (with room lamp) stays on continuously.
- OFF : The light (only map lamp) stays off at all times.

  ❈ When the lamp is turned ON by pressing the lens (1), the lamp does not turn off even if the switch (2) is in the OFF position.

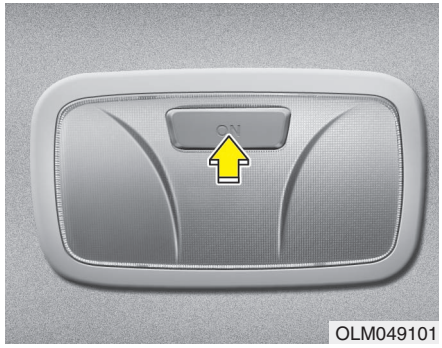

Room lamp

The room lamp operates according to the map lamp main switch position.

• ON : The light (room lamp) stays on at all times regardless of the map lamp main switch position.

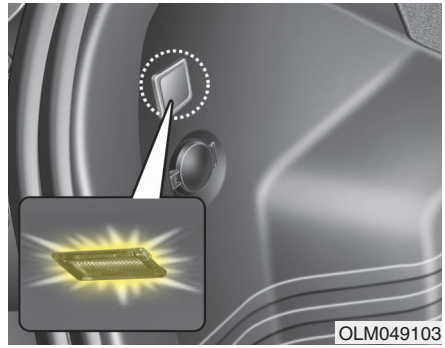

Luggage lamp (if equipped)

The light comes on or off when the tailgate is opened or closed.

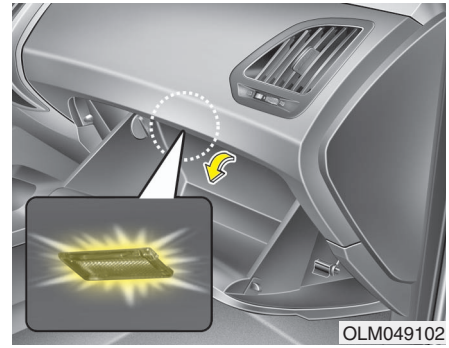

Glove box lamp

The glove box lamp comes on when the glove box is opened.

The parking lights or headlights must be ON for the glove box lamp to function.


OLM049105

Vanity mirror lamp (if equipped)

- : The lamp will turn on if this button is pressed.
- : The lamp will turn off if this button is pressed.

✻ NOTICE

Turn off the lamp before return the sunvisor to its original position.

DEFROSTER

⚠ CAUTION

To prevent damage to the conductors bonded to the inside surface of the rear window, never use sharp instruments or window cleaners containing abrasives to clean the window.

✻ NOTICE

If you want to defrost and defog the front windshield, refer to "Windshield defrosting and defogging" in this section.



OLM049109

Rear window defroster

The defroster heats the window to remove frost, fog and thin ice from the rear window, while the engine is running.

To activate the rear window defroster, press the rear window defroster button located in the center facia switch panel. The indicator on the rear window defroster button illuminates when the defroster is ON.

If there is heavy accumulation of snow on the rear window, brush it off before operating the rear defroster.

The rear window defroster automatically turns off after approximately 20 minutes or when the ignition switch is turned off. To turn off the defroster, press the rear window defroster button again.

Outside rearview mirror defroster (if equipped)

If your vehicle is equipped with the outside rearview mirror defrosters, they will operate at the same time you turn on the rear window defroster.



OLM049104

Front windshield deicer (if equipped)

To activate the front windshield deicer, press the front windshield deicer button located in the center facia switch panel.

The indicator on the front windshield deicer button illuminates when the deicer is ON.

The front windshield deicer automatically turns off after approximately 20 minutes or when the ignition switch is turned off.

To turn off the deicer, press the front windshield deicer button again.

MANUAL CLIMATE CONTROL SYSTEM (IF EQUIPPED)

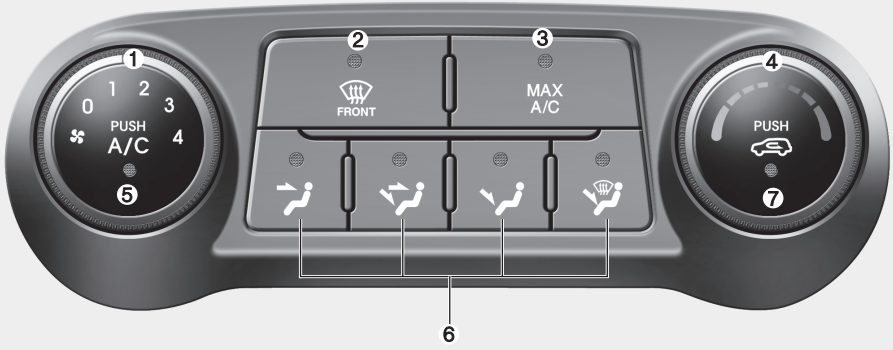

1. Fan speed control knob
2. Front windshield defroster button
3. MAX A/C mode button
4. Temperature control knob
5. Air conditioning button
6. Mode selection button
7. Air intake control button

OLM049111

Heating and air conditioning

1. Start the engine.
2. Set the mode to the desired position.
   For improving the effectiveness of heating and cooling;
   - Heating:
   - Cooling:
3. Set the temperature control to the desired position.
4. Set the air intake control to the outside (fresh) air position.
5. Set the fan speed control to the desired speed.
6. If air conditioning is desired, turn the air conditioning system on.

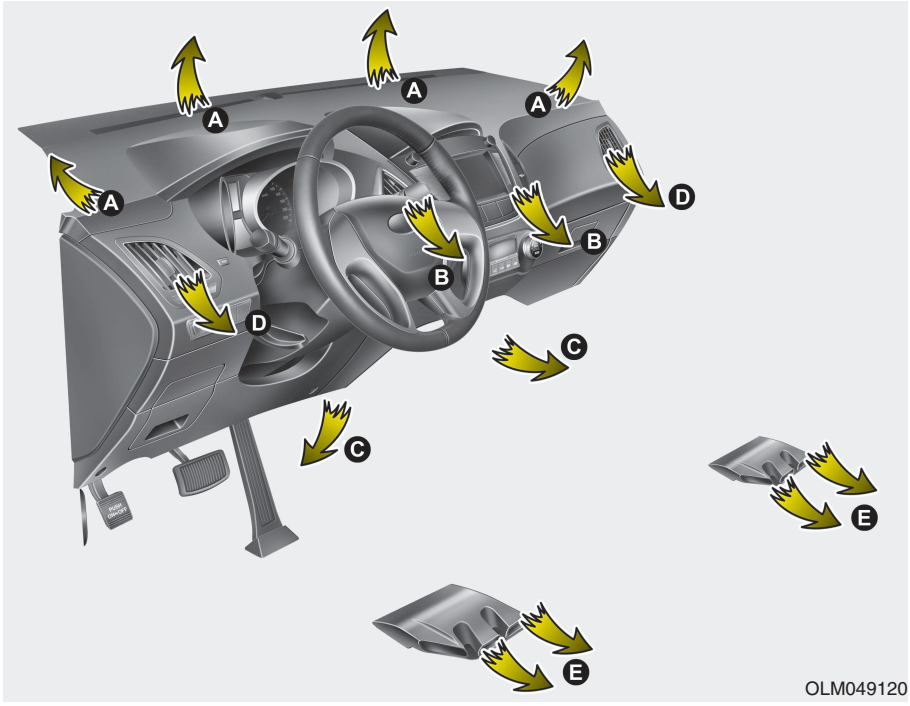

OLM049120

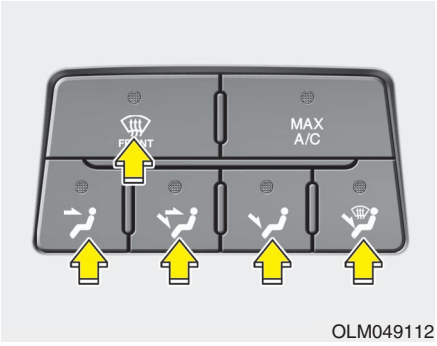

OLM049112

Mode selection

The mode selection button controls the direction of the air flow through the ventilation system.

Air can be directed to the floor, dashboard outlets, or windshield. Six symbols are used to represent MAX A/C, Face, Bi-Level, Floor, Floor-Defrost and Defrost air position.

The MAX A/C mode is used to cool the inside of the vehicle faster.

MAX A/C-Level (B, D)

Air flow is directed toward the upper body and face.

In this mode, the air conditioning and the recirculated air position will be selected automatically.

Face-Level (B, D)

Air flow is directed toward the upper body and face. Additionally, each outlet can be controlled to direct the air discharged from the outlet.

Bi-Level (B, D, E, C)

Air flow is directed towards the face and the floor.

Floor-Level (C, A, D, E)

Most of the air flow is directed to the floor, with a small amount of the air being directed to the windshield and side window defrosters.

Floor/Defrost-Level (A, C, D, E)

Most of the air flow is directed to the floor and the windshield with a small amount directed to the side window defrosters.

Defrost-Level (A, D)

Most of the air flow is directed to the windshield with a small amount of air directed to the side window defrosters.

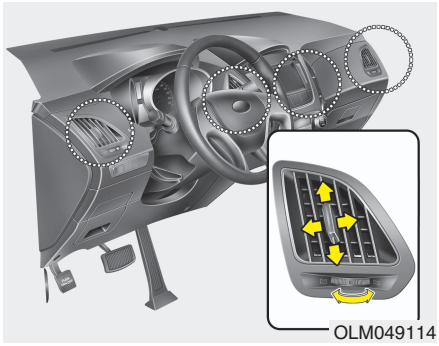
OLM049114

Instrument panel vents

The outlet vents can be opened or closed separately using the horizontal thumb-wheel. To close the vent, rotate it left to the maximum position. To open the vent, rotate it right to the desired position.

Also, you can adjust the direction of air delivery from these vents using the vent control lever as shown.

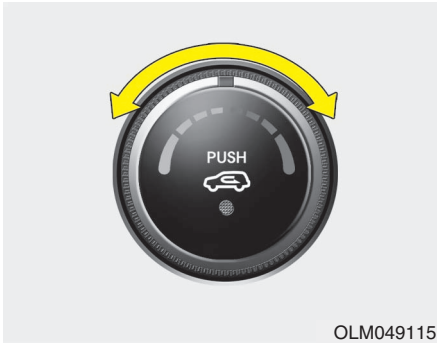

OLM049115

Temperature control

The temperature control knob allows you to control the temperature of the air flowing from the ventilation system. To change the air temperature in the passenger compartment, turn the knob to the right position for warm and hot air or left position for cooler air.

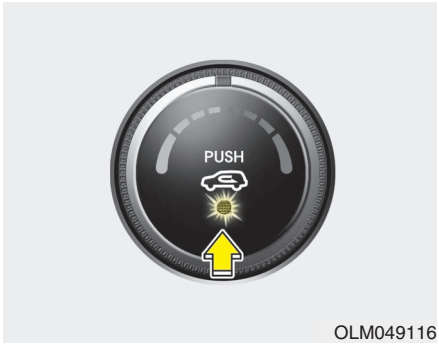

OLM049116

Air intake control

This is used to select the outside (fresh) air position or recirculated air position.

To change the air intake control position, push the control button.

Recirculated air position



The indicator light on the button illuminates when the recirculated air position is selected.

With the recirculated air position selected, air from the passenger compartment will be drawn through the heating system and heated or cooled according to the function selected.

Outside (fresh) air position



The indicator light on the button does not illuminates when the outside (fresh) air position is selected.

With the outside (fresh) air position selected, air enters the vehicle from outside and is heated or cooled according to the function selected.

✻ NOTICE

Prolonged operation of the heater in the recirculated air position (without air conditioning selected) may cause fogging of the windshield and side windows and the air within the passenger compartment may become stale.

In addition, prolonged use of the air conditioning with the recirculated air position selected will result in excessively dry air in the passenger compartment.

⚠ WARNING

- **Continued use of the climate control system operation in the recirculated air position may allow humidity to increase inside the vehicle which may fog the glass and obscure visibility.**
- **Do not sleep in a vehicle with the air conditioning or heating system on. It may cause serious harm or death due to a drop in the oxygen level and/or body temperature.**
- **Continued use of the climate control system operation in the recirculated air position can cause drowsiness or sleepiness, and loss of vehicle control. Set the air intake control to the outside (fresh) air position as much as possible while driving.**



OLM049117

Fan speed control

The ignition switch must be in the ON position for fan operation.

The fan speed control knob allows you to control the fan speed of the air flowing from the ventilation system. To change the fan speed, turn the knob to the right for higher speed or left for lower speed.

Setting the mode selection knob to the “0” position turns off the fan.



OLM049118

Air conditioning

Push the A/C button to turn the air conditioning system on (indicator light will illuminate). Push the button again to turn the air conditioning system off.

System operation

Ventilation

1. Set the mode to the position.
2. Set the air intake control to the outside (fresh) air position.
3. Set the temperature control to the desired position.
4. Set the fan speed control to the desired speed.

Heating

1. Set the mode to the position.
2. Set the air intake control to the outside (fresh) air position.
3. Set the temperature control to the desired position.
4. Set the fan speed control to the desired speed.
5. If dehumidified heating is desired, turn the air conditioning system on.

- If the windshield fogs up, set the mode to the or position.

Operation Tips

- To keep dust or unpleasant fumes from entering the car through the ventilation system, temporarily set the air intake control to the recirculated air position. Be sure to return the control to the fresh air position when the irritation has passed to keep fresh air in the vehicle. This will help keep the driver alert and comfortable.
- Air for the heating/cooling system is drawn in through the grilles just ahead of the windshield. Care should be taken that these are not blocked by leaves, snow, ice or other obstructions.
- To prevent interior fog on the windshield, set the air intake control to the fresh air position and fan speed to the desired position, turn on the air conditioning system, and adjust the temperature control to desired temperature.

Air conditioning

All HYUNDAI Air Conditioning Systems are filled with environmentally friendly R-134a refrigerant which does not damage the ozone layer.

1. Start the engine. Push the air conditioning button.
2. Set the mode to the position.
3. Set the air intake control to the outside air or recirculated air position.
4. Adjust the fan speed control and temperature control to maintain maximum comfort.

- When maximum cooling is desired, set the temperature control to the extreme left position, set the mode control to the MAX A/C position, then set the fan speed control to the highest speed.

✻ NOTICE

- **When using the air conditioning system, monitor the engine temperature gauge closely while driving up hills or in heavy traffic when outside temperatures are high. Air conditioning system operation may cause engine overheating. Continue to use the blower fan but turn the air conditioning system off if the engine temperature gauge indicates engine overheating.**
- **When opening the windows in humid weather air conditioning may create water droplets inside the vehicle. Since excessive water droplets may cause damage to electrical equipment, air conditioning should only be operated with the windows closed.**

Air conditioning system operation tips

- If the vehicle has been parked in direct sunlight during hot weather, open the windows for a short time to let the hot air inside the vehicle escape.
- To help reduce moisture inside of the windows on rainy or humid days, decrease the humidity inside the vehicle by operating the air conditioning system.
- During air conditioning system operation, you may occasionally notice a slight change in engine speed as the air conditioning compressor cycles. This is a normal system operation characteristic.
- Use the air conditioning system every month only for a few minutes to ensure maximum system performance.
- When using the air conditioning system, you may notice clear water dripping (or even puddling) on the ground under the passenger side of the vehicle. This is a normal system operation characteristic.
- Operating the air conditioning system in the recirculated air position provides maximum cooling, however, continual operation in this mode may cause the air inside the vehicle to become stale.
- During cooling operation, you may occasionally notice a misty air flow because of rapid cooling and humid air intake. This is a normal system operation characteristics.

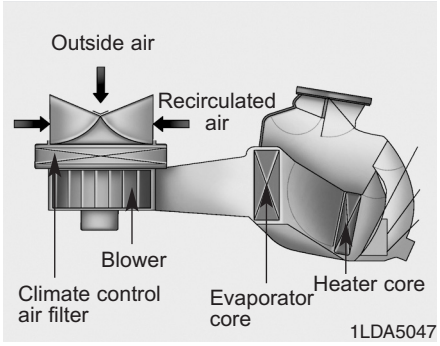

Climate control air filter

The climate control air filter installed behind the glove box filters the dust or other pollutants that come into the vehicle from the outside through the heating and air conditioning system. If dust or other pollutants accumulate in the filter over a period of time, the air flow from the air vents may decrease, resulting in moisture accumulation on the inside of the windshield even when the outside (fresh) air position is selected. If this happens, have the climate control air filter replaced by an authorized HYUNDAI dealer.

✻ NOTICE

- **Replace the filter according to the Maintenance Schedule.**
  If the car is being driven in severe conditions such as dusty or rough roads, more frequent air conditioner filter inspections and changes are required.
- **When the air flow rate suddenly decreases, the system should be checked at an authorized HYUNDAI dealer.**

Checking the amount of air conditioner refrigerant and compressor lubricant

When the amount of refrigerant is low, the performance of the air conditioning is reduced. Overfilling also has a negative impact on the air conditioning system.

Therefore, if abnormal operation is found, have the system inspected by an authorized HYUNDAI dealer.

✻ NOTICE

It is important when servicing the air conditioning system that the correct type and amount of oil and refrigerant is used. Otherwise, damage to the compressor and abnormal system operation may occur.

⚠ WARNING

The air conditioning system should be serviced by an authorized HYUNDAI dealer. Improper service may cause serious injury to the person performing the service.

AUTOMATIC CLIMATE CONTROL SYSTEM (IF EQUIPPED)

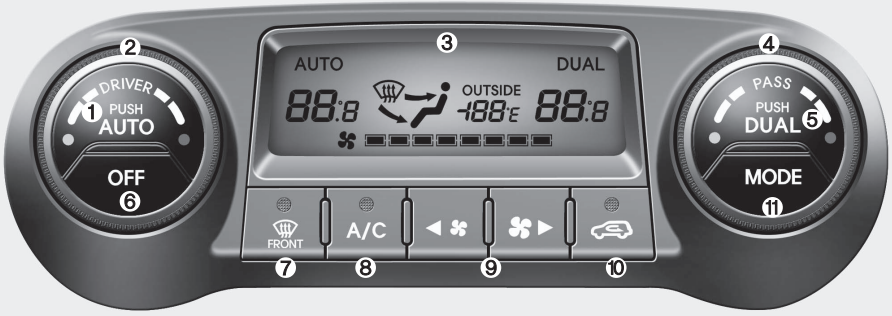

1. AUTO (automatic control) button
2. Driver's temperature control knob
3. A/C display
4. Passenger's temperature control knob
5. Dual temperature control selection button
6. OFF button
7. Front windshield defrost button
8. Air conditioning button
9. Fan speed control button
10. Air intake control button
11. Mode selection button

OLM049121L



OLM049122L

Automatic heating and air conditioning

The automatic climate control system is controlled by simply setting the desired temperature.

The Full Automatic Temperature Control (FATC) system automatically controls the heating and cooling system as follows;

1. Push the AUTO button. It is indicated by AUTO on the display. The modes, fan speeds, air intake and air-conditioning will be controlled automatically by temperature setting.
2. Set the temperature switch to the desired temperature.
   If the temperature is set to the lowest setting (Lo), the air conditioning system will operate continuously.
3. To turn the automatic operation off, select any button or switch of the following:
   - Mode selection button
   - Air conditioning button
   - Front windshield defroster button
   - Air intake control button
   - Fan speed control switch

   The selected function will be controlled manually while other functions operate automatically.

For your convenience and to improve the effectiveness of the climate control, use the AUTO button and set the temperature to 73°F (23°C).

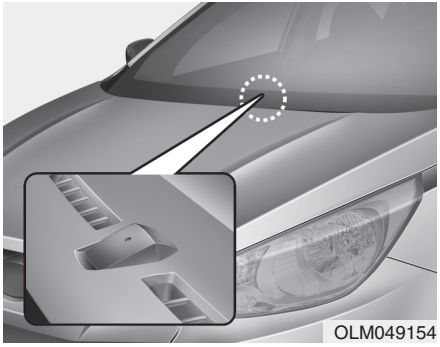
OLM049154

✻ NOTICE

Never place anything over the sensor located on the instrument panel to ensure better control of the heating and cooling system.

Manual heating and air conditioing

The heating and cooling system can be controlled manually by pushing buttons or turning knob(s) other than the AUTO button. In this case, the system works sequentially according to the order of buttons or knob(s) selected.

✻ NOTICE

When pressing any button (or turning any knob) except the AUTO button while using automatic operation, the functions not selected will continue to be controlled automatically.

1. Start the engine.
2. Set the mode to the desired position.
   For improving the effectiveness of heating and cooling;
   - Heating:
   - Cooling:
3. Set the temperature control to the desired position.
4. Set the air intake control to the outside (fresh) air position.
5. Set the fan speed control to the desired speed.
6. If air conditioning is desired, turn the air conditioning system on.

Press the AUTO button in order to convert to full automatic control of the system.

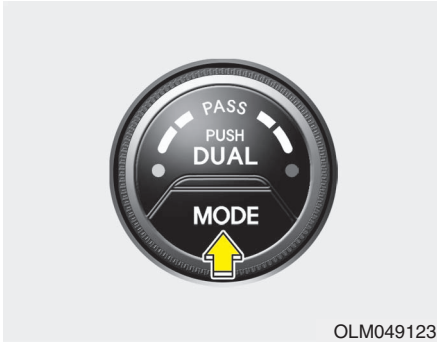

OLM049123

Mode selection

The mode selection button controls the direction of the air flow through the ventilation system.

The air flow outlet port is converted as follows:



Refer to the illustration in the “Manual climate control system”.

Face-Level (B, D)

Air flow is directed toward the upper body and face. Additionally, each outlet can be controlled to direct the air discharged from the outlet.

Bi-Level (B, D, E, C)

Air flow is directed towards the face and the floor.

Floor-Level (C, A, D, E)

Most of the air flow is directed to the floor, with a small amount of the air being directed to the windshield and side window defrosters.

Floor/Defrost-Level (A, C, D, E)

Most of the air flow is directed to the floor and the windshield with a small amount directed to the side window defrosters.



Defrost-Level (A, D)

Most of the air flow is directed to the windshield with a small amount of air directed to the side window defrosters.

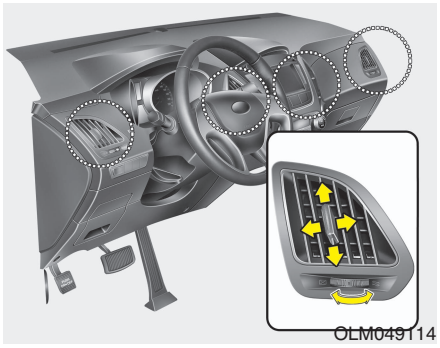

Instrument panel vents

The outlet vents can be opened or closed separately using the horizontal thumbwheel. To close the vent, rotate it left to the maximum position. To open the vent, rotate it right to the desired position.

Also, you can adjust the direction of air delivery from these vents using the vent control lever as shown.



Temperature control

The temperature will increase to the maximum (HI) by turning the knob to the right extremely.

The temperature will decrease to the minimum (Lo) by turning the knob to the left extremely.

When turning the knob, the temperature will increase or decrease by 1°F/0.5°C. When set to the lowest temperature setting, the air conditioning will operate continuously.

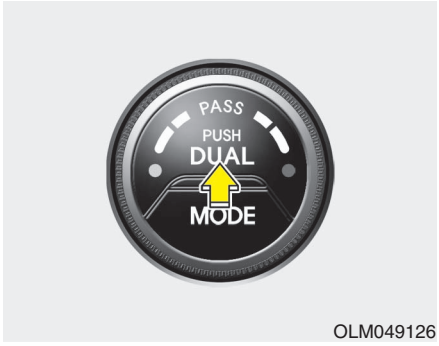

OLM049126

Adjusting the driver and passenger side temperature individually

1. Press the DUAL button to operate the driver and passenger side temperature individually. Also, if the passenger side temperature control switch is operated, it will automatically change to the DUAL mode as well.
2. Operate the left temperature control to adjust the driver side temperature. Operate the right temperature control to adjust the passenger side temperature.

When the driver side temperature is set to the highest (HI) or lowest (Lo) temperature setting, the DUAL mode is deactivated for maximum heating or cooling.

Adjusting the driver and passenger side temperature equally

1. Press the DUAL button again to deactivate DUAL mode. The passenger side temperature will be set to the same temperature as the driver side.
2. Operate the driver side temperature control switch. The driver and passenger side temperature will be adjusted equally.

Temperature conversion

You can switch the temperature mode between Fahrenheit to Centigrade as follows:

While pressing the OFF button, press the AUTO button for 3 seconds or more.

The display will change from Fahrenheit to Centigrade, or from Centigrade to Fahrenheit.

If the battery has been discharged or disconnected, the temperature mode display will reset to Fahrenheit.



OLM049127N

Outside thermometer

The current outside temperature is displayed in 1°F (1°C) increments. The temperature range is between -40°F ~ 140°F (-40°C ~ 60°C).

- The outside temperature on the display may not change immediately.


OLM049128L

Air intake control

This is used to select the outside (fresh) air position or recirculated air position.

To change the air intake control position, push the control button.

Recirculated air position



With the recirculated air position selected, air from the passenger compartment will be drawn through the heating system and heated or cooled according to the function selected.

Outside (fresh) air position



With the outside (fresh) air position selected, air enters the vehicle from outside and is heated or cooled according to the function selected.

✻ NOTICE

Prolonged operation of the heater in the recirculated air position (without air conditioning selected) may cause fogging of the windshield and side windows and the air within the passenger compartment may become stale.
In addition, prolonged use of the air conditioning with the recirculated air position selected will result in excessively dry air in the passenger compartment.

⚠ WARNING

- **Continued use of the climate control system operation in the recirculated air position may allow humidity to increase inside the vehicle which may fog the glass and obscure visibility.**
- **Do not sleep in a vehicle with the air conditioning or heating system on. It may cause serious harm or death due to a drop in the oxygen level and/or body temperature.**
- **Continued use of the climate control system operation in the recirculated air position can cause drowsiness or sleepiness, and loss of vehicle control. Set the air intake control to the outside (fresh) air position as much as possible while driving.**

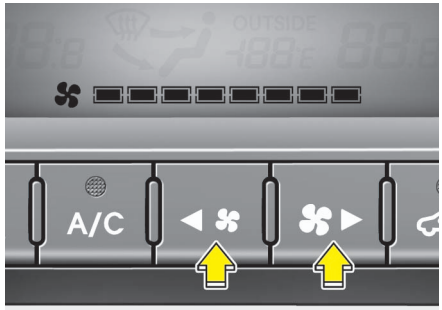

OLM049129L

Fan speed control

The fan speed can be set to the desired speed by operating the fan speed control switch.

To change the fan speed, press (✤►) the switch for higher speed, or press (◄✤) the switch for lower speed. To turn the fan speed control off, press the front blower OFF button.



OLM049130L

Air conditioning

Press the A/C button to turn the air conditioning system on (indicator light will illuminate).

Press the button again to turn the air conditioning system off.



OLM049131

OFF mode

Press the OFF button to turn off the air climate control system. However, you can still operate the mode and air intake buttons as long as the ignition switch is in the ON position.

WINDSHIELD DEFROSTING AND DEFOGGING

⚠ WARNING - Windshield heating

Do not use the or position during cooling operation in extremely humid weather. The difference between the temperature of the outside air and the windshield could cause the outer surface of the windshield to fog up, causing loss of visibility. In this case, set the mode selection to the position and fan speed control to the lower speed.

- For maximum defrosting, set the temperature control to the extreme right/hot position and the fan speed control to the highest speed.
- If warm air to the floor is desired while defrosting or defogging, set the mode to the floor-defrost position.
- Before driving, clear all snow and ice from the windshield, rear window, outside rear view mirrors, and all side windows.
- Clear all snow and ice from the hood and air inlet in the cowl grill to improve heater and defroster efficiency and to reduce the probability of fogging up the inside of the windshield.

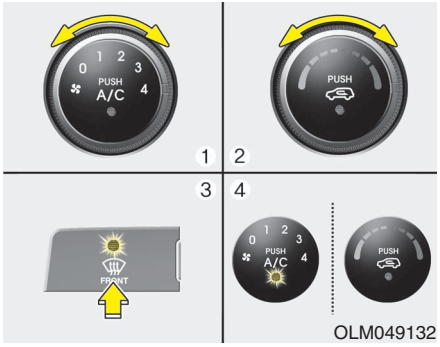

Manual climate control system

To defog inside windshield

1. Set the fan speed to the desired position.
2. Select desired temperature.
3. Press the defrost button ( ).
4. The outside (fresh) air will be selected automatically. If the position is selected, air conditioning will also be selected automatically.

If the air conditioning and/or outside (fresh) air position are not selected automatically, press the corresponding button manually.

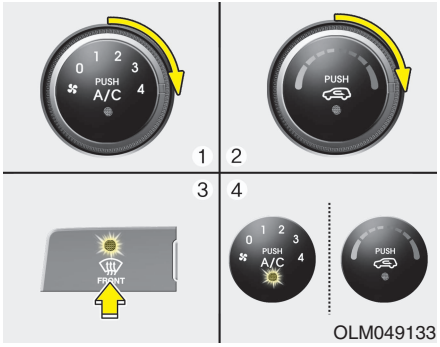

To defrost outside windshield

1. Set the fan speed to the highest position.
2. Set the temperature to the extreme hot position.
3. Press the defrost button ( ).
4. The outside (fresh) air and air conditioning will be selected automatically.

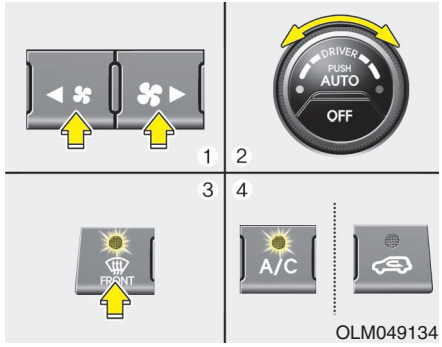

Automatic climate control system

To defog inside windshield

1. Set the fan speed to the desired position.
2. Select desired temperature.
3. Press the defroster button ( ).
4. The air conditioning will turn on according to the detected ambient temperature and outside (fresh) air position will be selected automatically.

If the air conditioning and outside (fresh) air position are not selected automatically, adjust the corresponding button manually. If the position is selected, lower fan speed is adjusted to a higher fan speed.

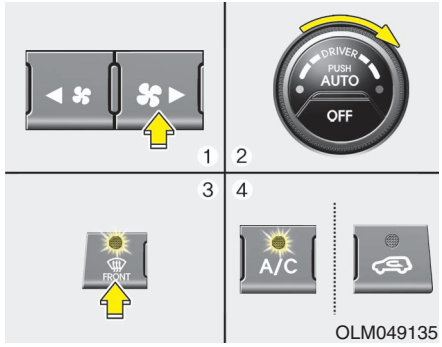

To defrost outside windshield

1. Set the fan speed to the highest position.
2. Set the temperature to the extreme hot (HI) position.
3. Press the defroster button ( ).
4. The air conditioning will turn on according to the detected ambient temperature and outside (fresh) air position will be selected automatically.

Defogging logic

To reduce the possibility of fogging up the inside of the windshield, the air intake or air conditioning are controlled automatically according to certain conditions such as or position. To cancel or return to the defogging logic, perform the following steps:

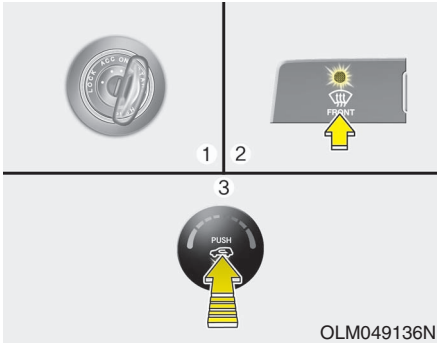

OLM049136N

Manual climate control system

1. Turn the ignition switch to the ON position.
2. Select the defrost position pressing the defrost button ().
3. Press the air intake control button at least 5 times within 3 seconds.

The indicator light in the air intake control button will blink 3 times with 0.5 second of interval. It indicates that the defogging logic is canceled or returned to the programmed status.

If the battery has been discharged or disconnected, the system resets to the preprogrammed defogging logic.

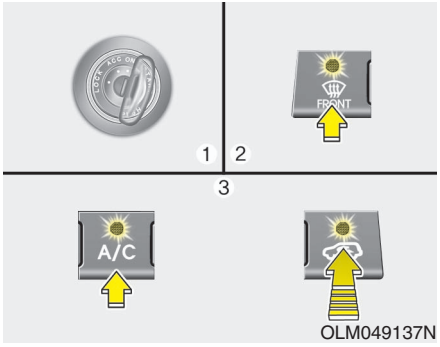

OLM049137N

Automatic climate control system

1. Turn the ignition switch to the ON position.
2. Select the defroster position pressing the defroster button ().
3. While pressing the air conditioning button (A/C), press the air intake control button at least 5 times within 3 seconds.

The A/C display blinks 3 times with 0.5 second of interval. It indicates that the defogging logic is canceled or returned to the programmed status.

If the battery has been discharged or disconnected, the system resets to the preprogrammed defogging logic.

STORAGE COMPARTMENT

These compartments can be used to store small items required by the driver or passengers.

⚠ CAUTION

- ***To avoid possible theft, do not leave valuables in the storage compartment.***
- ***Always keep the storage compartment covers closed while driving. Do not attempt to place so many items in the storage compartment that the storage compartment cover cannot close securely.***

⚠ WARNING - Flammable materials

Do not store cigarette lighters, propane cylinders, or other flammable/explosive materials in the vehicle. These items may catch fire and/or explode if the vehicle is exposed to hot temperatures for extended periods.

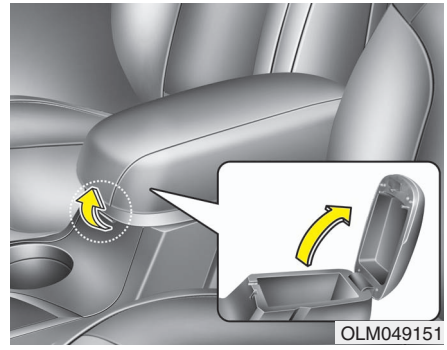
OLM049151

Center console storage

These compartments can be used to store small items required by the driver or front passenger.

To open the center console storage pull up the lever.

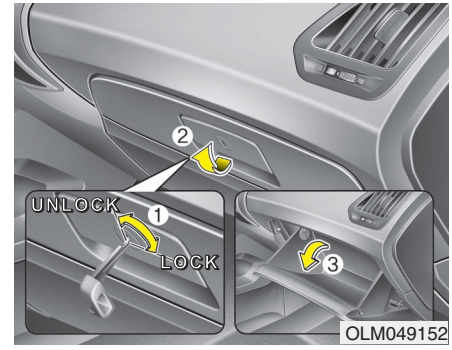

OLM049152

Glove box

The glove box can be locked and unlocked with a master key.

To open the glove box, pull the handle and the glove box will automatically open. Close the glove box after use.

⚠ WARNING

To reduce the risk of injury in an accident or sudden stop, always keep the glove box door closed while driving.

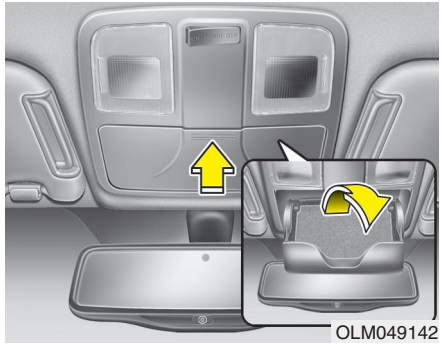
OLM049142

Sunglass holder

To open the sunglass holder, press the cover and the holder will slowly open. Place your sunglasses in the compartment door with the lenses facing out. Push to close.

⚠ WARNING

- **Do not keep objects except sunglass inside the sunglass holder. Such objects can be thrown from the holder in the event of a sudden stop or an accident, possibly injuring the passengers in the vehicle.**
- **Do not open the sunglass holder while the vehicle is moving. The rear view mirror of the vehicle can be blocked by an open sunglass holder.**

INTERIOR FEATURES

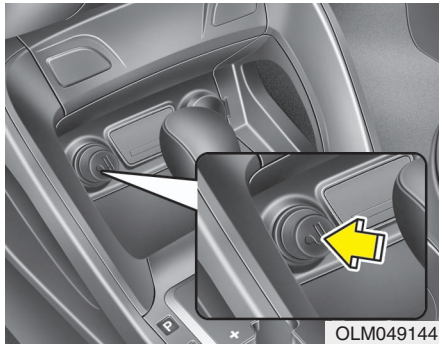
OLM049144

Cigarette lighter (if equipped)

For the cigarette lighter to work, the ignition switch must be in the ACC position or the ON position.

To use the cigarette lighter, push it all the way into its socket. When the element has heated, the lighter will pop out to the “ready” position.

Do not hold the cigarette lighter pressed in. This can damage the heating element and create a fire hazard.

If it is necessary to replace the cigarette lighter, use only a genuine HYUNDAI replacement or its approved equivalent.

⚠ WARNING

- **Do not hold the lighter in after it is already heated because it will overheat.**
- **If the lighter does not pop out within 30 seconds, remove it to prevent overheating.**

⚠ CAUTION

Only a genuine HYUNDAI lighter should be used in the cigarette lighter socket. The use of plug-in accessories (shavers, hand-held vacuums, and coffee pots, etc.) may damage the socket or cause electrical failure.

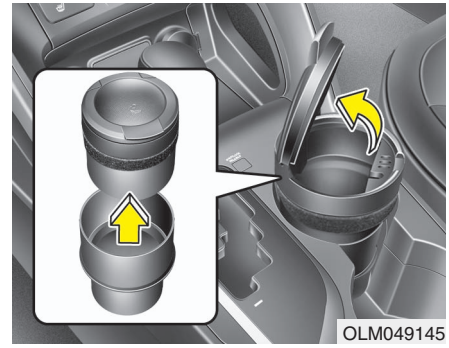
OLM049145

Ashtray (if equipped)

To use the ashtray, open the cover.

To clean or empty the ashtray, pull it out.

⚠ WARNING - Ashtray use

- **Do not use the vehicle’s ashtrays as waste receptacles.**
- **Putting lit cigarettes or matches in an ashtray with other combustible materials may cause a fire.**

Cup holder

⚠ WARNING - Hot liquids

- **Do not place uncovered cups of hot liquid in the cup holder while the vehicle is in motion. If the hot liquid spills, you burn yourself. Such a burn to the driver could lead to loss of control of the vehicle.**
- **To reduce the risk of personal injury in the event of sudden stop or collision, do not place uncovered or unsecured bottles, glasses, cans, etc., in the cup holder while the vehicle is in motion.**

■ Front

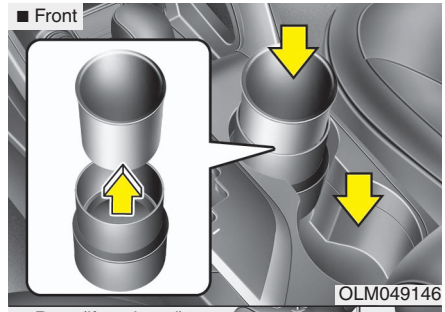

■ Rear (if equipped)

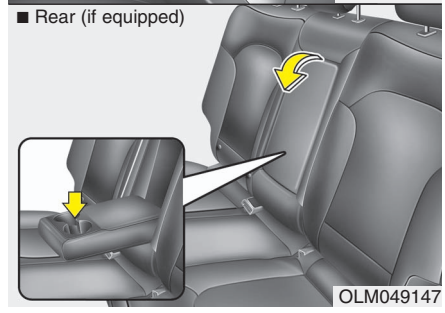

Cups or small beverage cans may be placed in the cup holders.

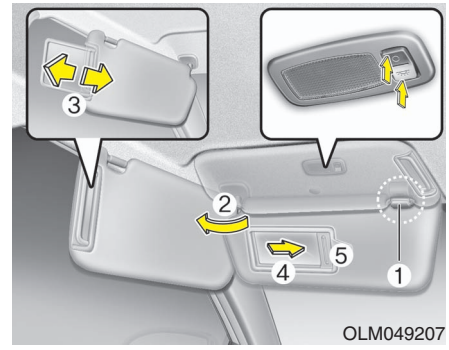

Sunvisor

Use the sunvisor to shield direct light through the front or side windows.

To use the sunvisor, pull it downward.

To use the sunvisor for the side window, pull it downward, unsnap it from the bracket (1) and swing it to the side (2).

Adjust the sunvisor extension forward or backward (3).

To use the vanity mirror, pull down the visor and slide the mirror cover (4).

The ticket holder (5) is provided for holding a tollgate ticket. (if equipped)

⚠ CAUTION - Vanity mirror lamp (if equipped)

If you use the vanity mirror lamp, turn off the lamp before return the sunvisor to its original position. It could result in battery discharge and possible sunvisor damage.

■ Front

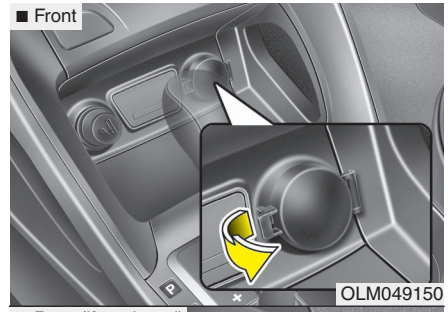

■ Rear (if equipped)

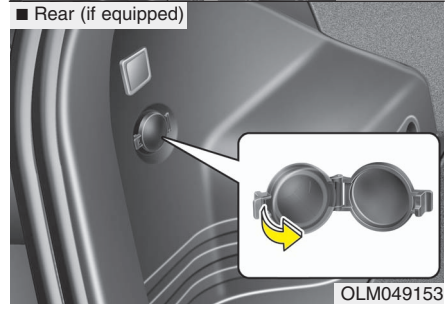

Power outlet

The power outlet is designed to provide power for mobile telephones or other devices designed to operate with vehicle electrical systems. The devices should draw less than 10 amps with the engine running.

⚠ CAUTION

- ***Use the power outlet only when the engine is running and remove the accessory plug after use. Using the accessory plug for prolonged periods of time with the engine off could cause the battery to discharge.***
- ***Only use 12V electric accessories which are less than 10A in electric capacity.***
- ***Adjust the air-conditioner or heater to the lowest operating level when using the power outlet.***
- ***Close the cover when not in use.***
- ***Some electronic devices can cause electronic interference when plugged into a vehicle's power outlet. These devices may cause excessive audio static and malfunctions in other electronic systems or devices used in your vehicle.***

⚠ WARNING

Do not put a finger or a foreign element (pin, etc.) into a power outlet and do not touch with a wet hand. You may get an electric shock.



Digital clock (if equipped)

⚠ WARNING

Do not adjust the clock while driving. You may lose your steering control and cause severe personal injury or accidents.

Whenever the battery terminals or related fuses are disconnected, you must reset the time.

When the ignition switch is in the ACC or ON position, the clock buttons operate as follows:

Setup the clock

With audio off

1. Press the [SETUP] button until the clock of the display blinks.
2. Set the clock by turning the knob(1) and press it.

With audio on

1. Press the [SETUP] button.
2. Select the [CLOCK] mode by turning the knob(1) and press it.
3. Set the clock by turning the knob(1) and press it.

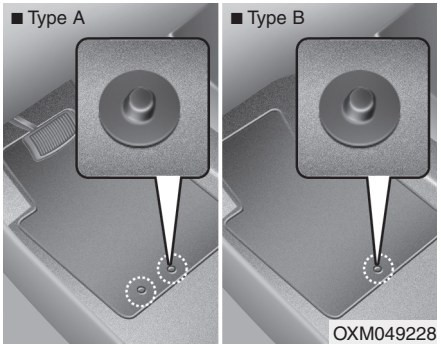

Floor mat anchor(s) (if equipped)

When using a floor mat on the front floor carpet, make sure it attaches to the floor mat anchor(s) in your vehicle. This keeps the floor mat from sliding forward.

⚠ WARNING

The following must be observed when installing ANY floor mat to the vehicle.

- **Ensure that the floor mats are securely attached to the vehicle's floor mat anchor(s) before driving the vehicle.**
- **Do not use ANY floor mat that cannot be firmly attached to the vehicle's floor mat anchors.**
- **Do not stack floor mats on top of one another (e.g. all-weather rubber mat on top of a carpeted floor mat). Only a single floor mat should be installed in each position.**

IMPORTANT - Your vehicle was manufactured with driver's side floor mat anchors that are designed to securely hold the floor mat in place. To avoid any interference with pedal operation, HYUNDAI recommends that only the HYUNDAI floor mat designed for use in your vehicle be installed.

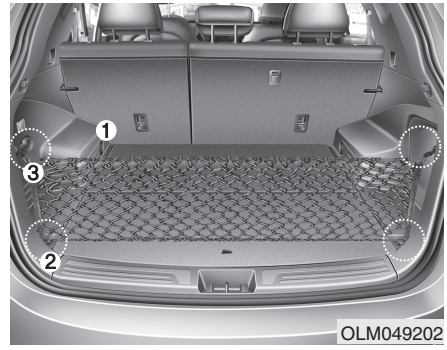

Luggage net (holder) (if equipped)

To keep items from shifting in the cargo area, you can use the holders located in the cargo area to attach the luggage net.

It can be mounted as a flat net by using holders (1) and (2), or as an envelop net by using holders (2) and (3).

If necessary, contact your authorized HYUNDAI dealer to obtain a luggage net.

⚠ CAUTION

To prevent damage to the goods or the vehicle, care should be taken when carrying fragile or bulky objects in the luggage compartment.

⚠ WARNING

Avoid eye injury. DO NOT overstretch the luggage net, ALWAYS keep your face and body out of the luggage net's recoil path. DO NOT use the luggage net when the strap has visible signs of wear or damage.

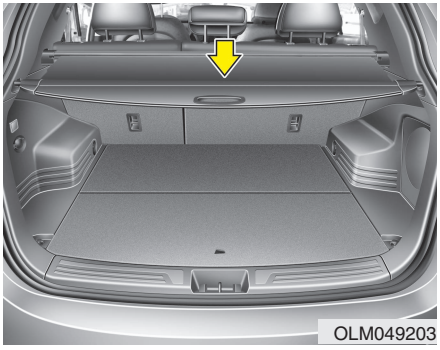

Cargo security screen (if equipped)

Use the cargo security screen to hide items stored in the cargo area.

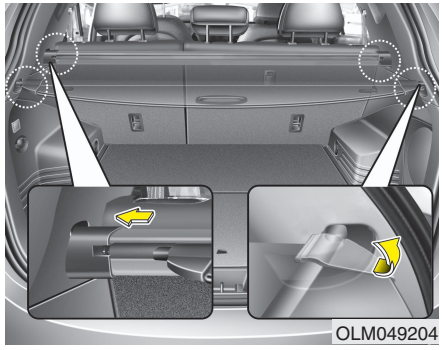

To use the cargo security screen, pull the handle backward and insert the edges into the slots.

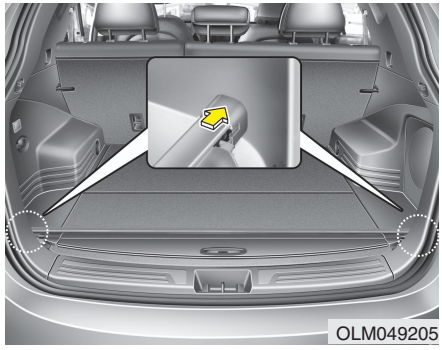

When not in use, place the cargo security screen on the lower portion of the cargo area.

EXTERIOR FEATURES

⚠ WARNING

- **Do not place objects on the cargo security screen. Such objects may be thrown about inside the vehicle and possibly injure vehicle occupants during an accident or when braking.**
- **Never allow anyone to ride in the luggage compartment. It is designed for luggage only.**
- **Maintain the balance of the vehicle and locate the weight as far forward as possible.**

⚠ CAUTION

Since the cargo security screen may be damaged or malformed, do not put the luggage on it when it is used.

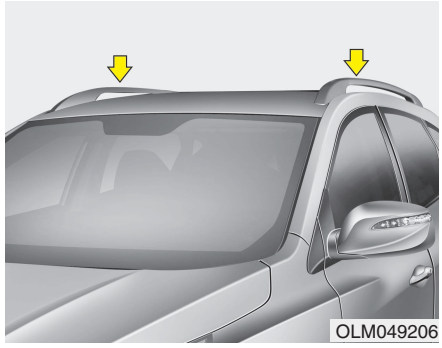

Roof rack (if equipped)

If the vehicle has a roof rack, you can load cargo on top of your vehicle.

✻ NOTICE

If the vehicle is equipped with a panoramic sunroof, it is not recommended that an aftermarket roof rack be installed.

⚠ CAUTION

- ***When carrying cargo on the roof rack, take the necessary precautions to make sure the cargo does not damage the roof of the vehicle.***
- ***When carrying large objects on the roof rack, make sure they do not exceed the overall roof length or width.***
- ***When you are carrying cargo on the roof rack, do not operate the sunroof (if equipped).***

⚠ WARNING

- **The following specification is the maximum weight that can be loaded onto the roof rack. Distribute the load as evenly as possible onto roof rack and secure the load firmly.**

ROOF RACK	220 lbs. (100 kg) EVENLY DISTRIBUTED

Loading cargo or luggage in excess of the specified weight limit on the roof rack may damage your vehicle.

(Continued)

(Continued)

- **The vehicle center of gravity will be higher when items are loaded onto the roof rack. Avoid sudden starts, braking, sharp turns, abrupt maneuvers or high speeds that may result in loss of vehicle control or rollover resulting in an accident.**
- **Always drive slowly and turn corners carefully when carrying items on the roof rack. Severe wind updrafts, caused by passing vehicles or natural causes, can cause sudden upward pressure on items loaded on the roof rack. This is especially true when carrying large, flat items such as wood panels or mattresses. This could cause the items to fall off the roof rack and cause damage to your vehicle or others around you.**
- **To prevent damage or loss of cargo while driving, check frequently before or while driving to make sure the items on the roof rack are securely fastened.**

AUDIO SYSTEM

✻ NOTICE

If you install an aftermarket HID headlamp, your vehicle's audio and electronic device may malfunction.

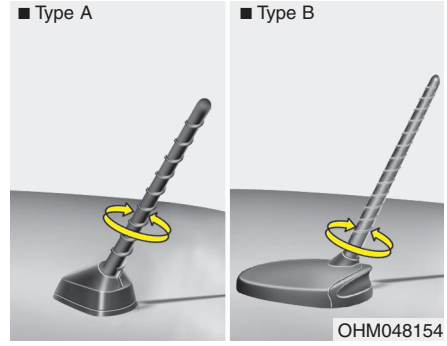

Antenna

Roof antenna

Your vehicle uses a roof antenna to receive both AM and FM broadcast signals. This antenna is removable. To remove the antenna, turn it counterclockwise. To install the antenna, turn it clockwise.

⚠ CAUTION

- ***Before entering a place with a low height clearance or a car wash, remove the antenna by rotating it counterclockwise. If not, the antenna may be damaged.***
- ***When reinstalling your antenna, it is important that it is fully tightened and adjusted to the upright position to ensure proper reception. But it could be removed when parking the vehicle or when loading cargo on the roof rack.***
- ***When cargo is loaded on the roof rack, do not place the cargo near the antenna pole to ensure proper reception.***



Steering wheel audio control (if equipped)

The steering wheel may incorporate audio control buttons. These buttons are installed to promote safe driving.

⚠ CAUTION

Do not operate audio remote control buttons simultaneously.

MODE (1)

Press the button to change audio source.
- FM(1~2)➟AM➟SAT(1~3)➟CD➟USB AUX(iPod) FM...

SEEK/PRESET (∧ / ∨) (2)

The SEEK/PRESET button has different functions based on the system mode.

For the following functions the button should be pressed for 0.8 second or more.

RADIO mode

It will function as the AUTO SEEK select button.

CD/USB/iPod mode

It will function as the FF/REW button.

If the SEEK/PRESET button is pressed for less than 0.8 second, it will work as follows in each mode.

RADIO mode

It will function as the PRESET STATION buttons.

CD/USB/iPod mode

It will function as TRACK UP/DOWN button.

VOLUME (VOL ∧ / ∨) (3)

- Push the lever upward (∧) to increase the volume.
- Push the lever downward (∨) to decrease the volume.

MUTE (4)

- Press the button to mute the sound
- Press the button to turn off the microphone during a telephone call.

Detailed information for audio control buttons are described in the following pages in this section.

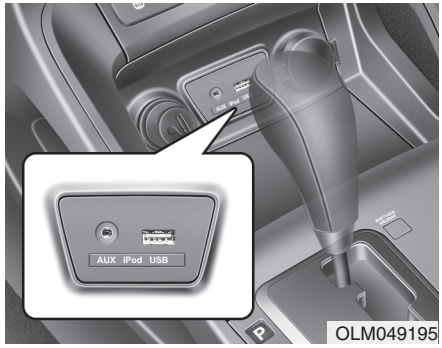

Aux, USB and iPod port (if equipped)

If your vehicle has an aux and/or USB(universal serial bus) port or iPod port, you can use an aux port to connect audio devices and the USB port to plug in a USB device.

Both ports are used together with the accessory iPod cable to connect an iPod.

✻ NOTICE

When using a portable audio device connected to the power outlet, noise may occur during playback. If this happens, use the power source of the portable audio device.

✻ iPod® is a trademark of Apple Inc.

FM reception

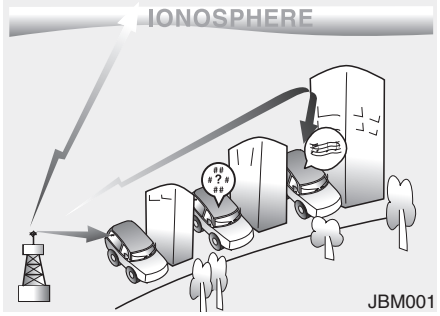

How vehicle audio works

AM and FM radio signals are broadcast from transmitter towers located around your city. They are intercepted by the radio antenna on your vehicle. This signal is then received by the radio and sent to your vehicle speakers.

When a strong radio signal has reached your vehicle, the precise engineering of your audio system ensures the best possible quality reproduction. However, in some cases the signal coming to your vehicle may not be strong and clear. This can be due to factors such as the distance from the radio station, closeness of other strong radio stations or the presence of buildings, bridges or other large obstructions in the area.

AM reception

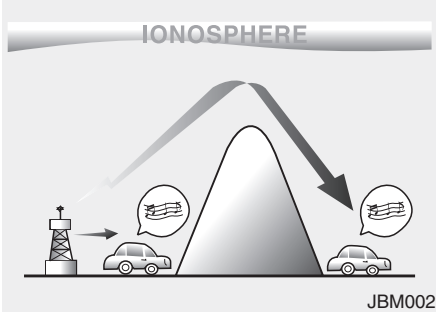

AM broadcasts can be received at greater distances than FM broadcasts. This is because AM radio waves are transmitted at low frequencies. These long, low frequency radio waves can follow the curvature of the earth rather than travelling straight out into the atmosphere. In addition, they curve around obstructions so that they can provide better signal coverage.

FM radio station

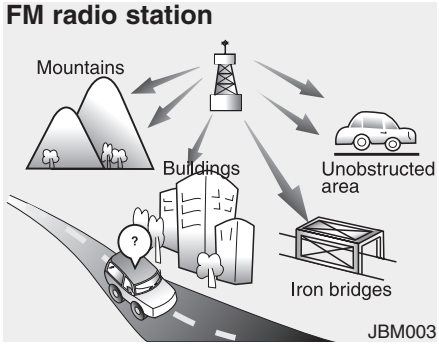

FM broadcasts are transmitted at high frequencies and do not bend to follow the earth's surface. Because of this, FM broadcasts generally begin to fade at short distances from the station.

Also, FM signals are easily affected by buildings, mountains, or other obstructions. These can result in certain listening conditions which might lead you to believe a problem exists with your radio. The following conditions are normal and do not indicate radio trouble:

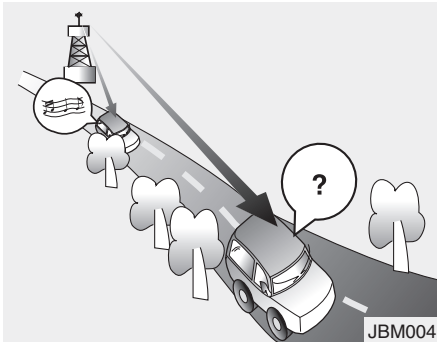

- Fading - As your vehicle moves away from the radio station, the signal will weaken and sound will begin to fade. When this occurs, we suggest that you select another stronger station.
- Flutter/Static - Weak FM signals or large obstructions between the transmitter and your radio can disturb the signal causing static or fluttering noises to occur. Reducing the treble level may lessen this effect until the disturbance clears.

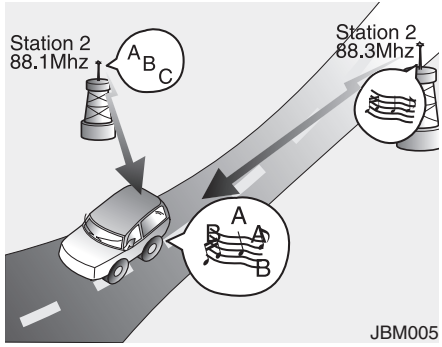

- Station Swapping - As a FM signal weakens, another more powerful signal near the same frequency may begin to play. This is because your radio is designed to lock onto the clearest signal. If this occurs, select another station with a stronger signal.
- Multi-Path Cancellation - Radio signals being received from several directions can cause distortion or fluttering. This can be caused by a direct and reflected signal from the same station, or by signals from two stations with close frequencies. If this occurs, select another station until the condition has passed.

Satellite radio reception

You may experience receiving difficulties receiving XM™ satellite radio signals in the following situations.

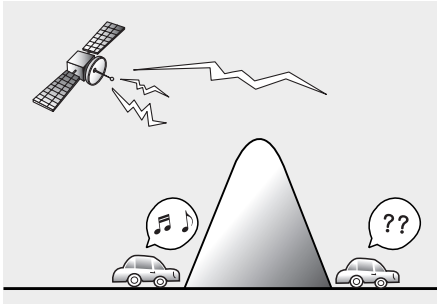

- If you are driving in a tunnel or a covered parking area.
- If you are driving beneath the top level of a multi-level freeway.
- If you drive under a bridge.
- If you are driving next to a tall vehicle(such as a truck or a bus) that block the signal.
- If you are driving in a valley where the surrounding hills or peaks block the signal from the satellite.
- If you are driving on a mountain road where is blocked by mountains.

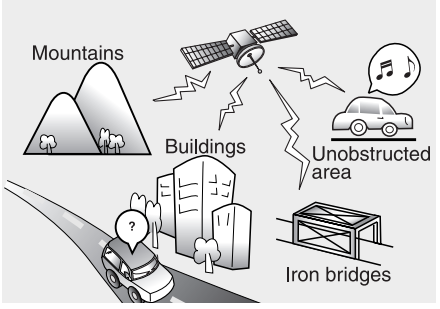

- If you are driving in an area with tall trees that block the signal(10m or more), for example on an road that goes through a dense forest.
- The signal can become weak in some areas that are not covered by the XM™ repeater network.

NOTE:

There may be other unforeseen circumstances leading to reception problems with XM™ satellite radio signal.

Using a cellular phone or a two-way radio

When a cellular phone is used inside the vehicle, noise may be produced from the audio equipment. This does not mean that something is wrong with the audio equipment. In such a case, use the cellular phone at a place as far as possible from the audio equipment.

⚠ WARNING

Do not use a cellular phone while driving. Stop at a safe location to use a cellular phone.

Care of discs

- If the temperature inside the vehicle is too high, open the vehicle windows for ventilation before using your vehicle audio.
- It is illegal to copy and use MP3/WMA files without permission. Use CDs that are created only by lawful means.
- Do not apply volatile agents such as benzene and thinner, normal cleaners and magnetic sprays made for analogue disc onto CDs.
- To prevent the disc surface from getting damaged. Hold and carry CDs by the edges or the edges of the center hole only.
- Clean the disc surface with a piece of soft cloth before playback (wipe it from the center to the outside edge).
- Do not damage the disc surface or attach pieces of sticky tape or paper onto it.
- Make sure objects other than CDs are not inserted into the CD player (Do not insert more than one CD at a time).
- Keep CDs in their cases after use to protect them from scratches or dirt.
- Depending on the type of CD-R/CD-RW CDs, certain CDs may not operate normally according to manufacturing companies or making and recording methods. In such circumstances, if you still continue to use those CDs, they may cause the malfunction of your vehicle audio system.

✻ NOTICE - Playing an Incompatible Copy Protected Audio CD

Some copy protected CDs, which do not comply with the international audio CD standards (Red Book), may not play on your vehicle audio. Please note that if you try to play copy protected CDs and the CD player does not perform correctly the CDs maybe defective, not the CD player.

RADIO, SET UP, VOLUME, AUDIO CONTROL (USA/CANADA)





1. AM Selection Button
2. FM Selection Button
3. Automatic Station Seek Button
4. Power ON/OFF Button and Volume Control Knob
5. Preset Selection Button
6. SCAN Selection Button
7. DISP Button
8. SETUP Button
9. TUNE & AUDIO Control Knob

✳There will be no Bluetooth , (XM) logo if the Bluetooth®/XM SATELLITE feature is not supported.

Using RADIO, SETUP, VOLUME and AUDIO CONTROL

1. AM Selection Button
Pressing the [AM] button selects the AM band. AM Mode is displayed on the LCD.

2. FM Selection Button
Turns to FM mode and toggles FM1 and FM2 when the button is pressed each time.

3. Automatic Station Seek Button
- When the [SEEK ∨] is pressed, it will automatically tune to the next lower station.
- When the [SEEK ∧] is pressed, it will automatically tune to the next higher station.

4. Power ON/OFF Button & Volume Control Knob
- Turns the audio system on/off when the ignition switch is on ACC or ON.
- If the knob is turned clockwise/counter-clockwise, the volume will increase /decrease.

5. Preset Selection Button
- Press [1]~[6] buttons less than 0.8 second to play the station saved in each button.
- Press [1]~[6] button more than 0.8 second or longer to save the current station to the respective button with a beep.

6. SCAN Button
- When the button is pressed, it automatically scans the radio stations upwards.
- The SCAN feature steps through each station, starting from the initial station, for ten seconds.
- Press the [SCAN] button again to stop the scan feature and to listen to the currently selected channel.

7. DISP Button
Turn the LCD Display & Backlight on/off when [DISP] button press.

8. SETUP Button
Press this Button to enter SETUP mode, If no action is taken for 8 seconds, it will return to previous mode.
In “SETUP” mode, rotate the TUNE knob to move the cursor between items, and push the TUNE knob to select.

• SCROLL
Select whether long file names are scrolled continuously (“ON”) or just once (“OFF”).

• SDVC
Select this item to turn the SDVC(Speed Dependent Volume Control) feature ON or OFF. If it is turned ON, volume level is adjusted automatically according to the vehicle speed.

• P.BASS (PowerBass)
This function creates virtual sound effects and allows adjustments to the BASS level.
HIGH ➡ MID ➡ LOW ➡ OFF

• XM
Select default display of XM mode. “Category/Channel name” or “Artist/Song Title” can be selected.

• PHONE (if available)

Select this item to enter BLUETOOTH® setup mode. Refer to “BLUETOOTH PHONE OPERATION” section for detailed information.

• Adjusting the Clock

Press the [SETUP] button. Use the volume controller to adjust the clock in the following order: CLOCK·ENTER·hour or minute.

Adjust the hour and press the [ENTER] button to set. Use the same method to adjust the minute and press the [ENTER] button to complete and exit from clock adjustment mode.

Pressing the [SETUP] button while in POWER OFF screen will allow the user to make immediately adjustments to the clock.

9. TUNE Knob & Audio Control Knob

• Rotate the knob clockwise or counterclock wise to increase or decrease from current frequency.

(AM 10kHz, FM 200kHz)

Pressing the button changes the BASS, MIDDLE, TREBLE, FADER and BALANCE TUNE mode. The mode selected is shown on the display. After selecting each mode, rotate the Audio control knob clockwise or counterclockwise.

• BASS Control

To increase the BASS, rotate the knob clockwise, while to decrease the BASS, rotate the knob counterclockwise.

• MIDDLE Control

To increase the MIDDLE, rotate the knob clockwise, while to decrease the MIDDLE, rotate the knob counterclockwise.

• TREBLE Control

To increase the TREBLE, rotate the knob clockwise, while to decrease the TREBLE, rotate the knob counterclockwise.

• FADER Control

Turn the control knob clockwise to emphasize rear speaker sound (front speaker sound will be attenuated). When the control knob is turned counterclockwise, front speaker sound will be emphasized (rear speaker sound will be attenuated).

• BALANCE Control

Rotate the knob clockwise to emphasize right speaker sound (left speaker sound will be attenuated). When the control knob is turned counter clockwise, left speaker sound will be emphasized (right speaker sound will be attenuated).

CD (USA/CANADA)





1. CD Loading Slot
2. CD Eject Button
3. CD Selection Button
4. Automatic Station Seek Button
5. RANDOM play Button
6. REPEAT Button
7. CD Indicator
8. SCAN Play Button
9. INFO Button
10. FOLDER Moving Button
11. SEARCH Knob & ENTER Button

✻There will be no Bluetooth , (XM) logo if the Bluetooth®/XM SATELLITE feature is not supported.

Using CD Player

1. CD Loading Slot

Insert a CD label side up and gently push in while ignition switch is on ACC or ON. The audio automatically switches to CD mode and begins to play the CD. If the audio was turned off, audio power will automatically turned on as the CD is inserted.

- This audio only recognizes 12cm-size, CD-DA(Audio CD) or ISO data-CD (MP3 CD).
- If UDF data-CD or non-CD(e.g. DVD) is inserted, "Reading Error" message will be displayed and the disc will be ejected.

⚠ CAUTION

Do not insert a CD if CD indicator is lit.

2. CD Eject Button

- Press [⏏] button to eject the CD. This button works regardless of ignition switch status.

3. CD Selection Button

If there is a CD in the CD DECK it switches to CD mode.

If there is no CD, then the message "No CD" will become displayed on the LCD for 3 seconds and returns to the previous mode.

4. Track Selection Button

- Press [TRACK ∨] button for less than 0.8 seconds to play from the beginning of current song.
- Press [TRACK ∨] button for less than 0.8 seconds and press again within 1 seconds to play the previous song.
- Press [TRACK ∨] button for 0.8 seconds or longer to initiate reverse direction high speed sound search of current song.
- Press [TRACK ∧] button for less than 0.8 seconds to play the next song.
- Press [TRACK ∧] button for 0.8 seconds or longer to initiate forward direction high speed sound search of current song.

5. RANDOM Play Button

- Press this button for less than 0.8 seconds to play songs randomly in current folder.
- Press this button for 0.8 seconds or longer to play songs randomly in entire CD.
- To cancel RANDOM Play, press this button again.

6. REPEAT Button

- Press this button for less than 0.8 seconds to repeat current song.
- Press this button for 0.8 seconds or longer to repeat all songs in current folder.
- To cancel REPEAT, press this button again.

7. CD Indicator

When car ignition switch is ACC or ON and if the CD is loaded, this indicator is lit. If the CD is ejected, the light is turned off.

8. SCAN Play Button

Play each song in the CD for 10 seconds. To cancel SCAN Play, press this button again.

9. INFO Button

Displaces the information of the current song.

- Audio CD : Disc Title/Artist, Track Title /Artist, Total Tracks.

- MP3 CD : File Name, Title, Artist, Album, Folder, Total Files (Not displayed if the information is unavailable on the CD or file.)

10. FOLDER Moving Button

- Press [FOLDER ∨] button to move to child folder of the current folder and display the first song in the folder.
  Press TUNE/ ENTER knob to move to the folder displayed. It will play the first song in the folder.
- Press [FOLDER ∧] button to move to parent folder of the current folder and display the first song in the folder.
  Press TUNE/ENTER knob to move to the folder displayed.

11. SEARCH Knob & ENTER Button

- Turn this knob clockwise to browse songs after current song, or counter-clockwise to browse songs before current song. To play the displayed song, press the knob.
- Pressing this knob without turning enters to AUDIO CONTROL mode.

NOTE:

Order of playing files(folders) :

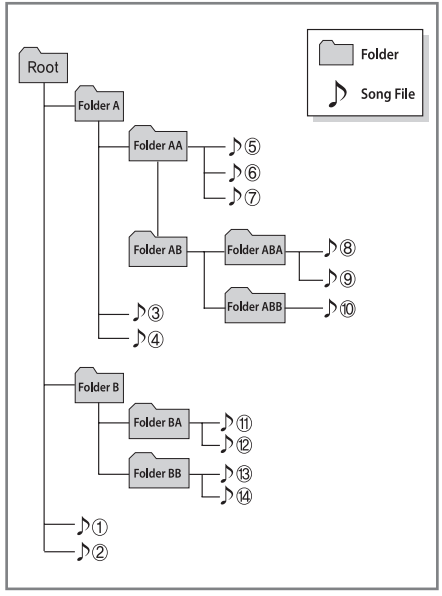

1. Song playing order : ① to ⑭ sequentially.

2. Folder playing order :

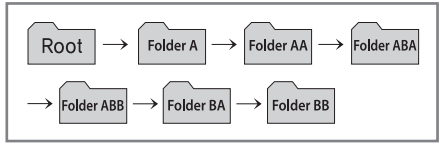

✻ If no song file is contained in the folder, that folder is not displayed.

⚠ CAUTION IN USING USB DEVICE

- *To use an external USB device, make sure the device is not connected when starting up the vehicle. Connect the device after starting up.*
- *If you start the engine when the USB device is connected, it may damage the USB device. (USB flashdrives are very sensitive to electric shock.)*
- *If the engine is started up or turned off while the external USB device is connected, the external USB device may not work.*
- *It may not play inauthentic MP3 or WMA files.*

1) It can only play MP3 files with the compression rate between 8Kbps~320Kbps.

2) It can only play WMA music files with the compression rate between 8Kbps~320Kbps.

- *Take precautions for static electricity when connecting or disconnecting the external USB device.*

(Continued)

(Continued)

- *An encrypted MP3 PLAYER is not recognizable.*
- *Depending on the condition of the external USB device, the connected external USB device can be unrecognizable.*
- *When the formatted byte/sector setting of External USB device is not either 512BYTE or 2048BYTE, then the device will not be recognized.*
- *Use only a USB device formatted to FAT 12/16/32.*
- *USB devices without USB I/F authentication may not be recognizable.*
- *Make sure the USB connection terminal does not come in contact with the human body or other objects.*
- *If you repeatedly connect or disconnect the USB device in a short period of time, it may break the device.*
- *You may hear a strange noise when connecting or disconnecting a USB device.*

(Continued)

(Continued)

- *If you disconnect the external USB device during playback in USB mode, the external USB device can be damaged or may malfunction. Therefore, disconnect the external USB device when the audio is turned off or in another mode. (e.g, Radio, XM or CD)*
- *Depending on the type and capacity of the external USB device or the type of the files stored in the device, there is a difference in the time taken for recognition of the device.*
- *Do not use the USB device for purposes other than playing music files.*
- *Use of USB accessories such as rechargers or heaters using USB I/F may lower performance or cause trouble.*
- *If you use devices such as a USB hub purchased separately, the vehicle's audio system may not recognize the USB device. In that case, connect the USB device directly to the multimedia terminal of the vehicle.*

(Continued)

(Continued)

- *If the USB device is divided by logical drives, only the music files on the highest-priority drive are recognized by car audio.*
- *Devices such as MP3 Player/ Cellular phone/Digital camera can be unrecognizable by standard USB I/F can be unrecognizable.*
- *Some non-standard USB devices (METAL COVER TYPE USB) can be unrecognizable.*
- *Some USB flash memory readers (such as CF, SD, microSD, etc.) or external-HDD type devices can be unrecognizable.*
- *Music files protected by DRM (DIGITAL RIGHTS MANAGE-MENT) are not recognizable.*
- *The data in the USB memory may be lost while using this audio. Always back up important data on a personal storage device.*

(Continued)

(Continued)

- *Please avoid using USB memory products which can be used as key chains or cellular phone accessories as they could cause damage to the USB jack. Please make certain only to use plug type connector products as shown below.*



AUX/USB (USA/CANADA)



1. AUX/USB Selection Button
2. TRACK Selection Button
3. RANDOM Playback Button
4. REPEAT Selection Button
5. SCAN Selection Button
6. INFO Button
7. FOLDER Moving Button
8. SEARCH Knob & ENTER Button

✻There will be no Bluetooth , ((XM)) logo if the Bluetooth®/XM SATELLITE feature is not supported.

Using USB device

1. AUX/USB Selection Button

If the auxiliary device is connected, it switches to AUX or USB mode to play the sound from the auxiliary player.

If there is no auxiliary device, then the message "No Media" will become displayed on the LCD for 3 seconds and returns to previous mode.

2. TRACK Selection Button

- Press the [TRACK ∨] button for less than 0.8 seconds to play from the beginning of the current song.

  Press the button for less than 0.8 seconds and press it again within 1 second to move to and play the previous song.

  Press the button for 0.8 seconds or longer to play the song in reverse direction in fast speed.
- Press the [TRACK ∧] button for less than 0.8 seconds to move to the next song. Press the button for 0.8 seconds or longer to play the song in forward direction in fast speed.

3. RANDOM Playback Button

- Press this button for less than 0.8 seconds to play songs randomly in current folder.
- Press this button for 0.8 seconds or longer to play songs randomly in entire USB device.
- To cancel RANDOM play, press this button again.

4. REPEAT Button

- Press this button for less than 0.8 seconds to repeat current song.
- Press this button for 0.8 seconds or longer to repeat all songs in current folder.
- To cancel REPEAT, press this button again.

5. SCAN Selection Button

Plays each song in the USB device for 10 seconds.

To cancel SCAN Play, press this button again.

6. INFO Button

Displays the information of the file currently played in the order of FILE NAME ➟ TITLE ➟ ARTIST ➟ ALBUM ➟ FOLDER ➟ TOTAL FILE ➟ NORMAL DISPLAY ➟ FILE NAME ➟… (Displays no information if the file has no song information.)

7. FOLDER Moving Button

- Press [FOLDER ∨] button to move to child folder of the current folder and display the first song in the folder.

  Press TUNE/ ENTER knob to move to the folder displayed. It will play the first song in the folder.
- Press [FOLDER ∧] button to move to parent folder display the first song in the folder.

  Press TUNE/ENTER knob to move to the folder displayed.

8. SEARCH Knob & ENTER Button

- Turn this knob clockwise to browse songs after current song, or counter clockwise to browse songs before current song. To play the displayed song, press the knob.
- Pressing this knob without turning enters to AUDIO CONTROL mode.

✻ NOTICE FOR USING THE IPOD® DEVICE

- Some iPod models might not support the communication protocol and the files will not be played.
  Supported iPod models:
  - iPod Mini
  - iPod 4th(Photo) ~ 6th(Classic) generation
  - iPod Nano 1st~4th generation
  - iPod Touch 1st~2nd generation
- The order of search or playback of songs in the iPod can be different from the order searched in the audio system.
- If the iPod disabled due to its own malfunction, reset the iPod. (Reset: Refer to iPod manual)
- An iPod may not operate normally on low battery.
- Some iPod devices, such as the iPhone, can be connected through the Bluetooth® interface. The device must have audio Bluetooth® capability (such as for stereo headphone Bluetooth®). The device can play, but it will not be controlled by the audio system.

⚠ CAUTION IN USING THE IPOD® DEVICE

- *The HYUNDAI iPod Power Cable is needed in order to operate iPod with the audio buttons on the audio system. The USB cable provided by Apple may cause malfunction and should not be used for HYUNDAI vehicles.*
  ✻ The HYUNDAI iPod Power Cable may be purchased through your HYUNDAI Dealership.
- *When connecting iPod with the iPod Power Cable, insert the connector to the multimedia socket completely. If not inserted completely, communications between iPod and audio may be interrupted.*
- *When adjusting the sound effects of the iPod and the audio system, the sound effects of both devices will overlap and might reduce or distort the quality of the sound.*
- *Deactivate (turn off) the equalizer function of an iPod when adjusting the audio system's volume, and turn off the equalizer of the audio system when using the equalizer of an iPod.*

(Continued)

(Continued)

- *When the iPod cable is connected, the system can be switched to AUX mode even without iPod device and may cause noise. Disconnect the iPod cable when you are not using the iPod device.*
- *When not using iPod with car audio, detach the iPod cable from iPod. Otherwise, iPod may remain in accessory mode, and may not work properly.*

* iPod® is a trademark of Apple, Inc.

iPod® (USA/CANADA)





1. iPod Selection Button
2. TRACK Selection Button
3. REPEAT Selection Button
4. RANDOM Playback Button
5. INFO Button
6. CATEGORY Selection Button
7. SEARCH Knob & ENTER Button

*There will be no Bluetooth , ((XM)) logo if the Bluetooth®/XM SATELLITE feature is not supported.

Using iPod®

1. iPod Selection Button

If iPod is connected, it switches to the iPod mode from the previous mode to play the song files stored in the iPod.

If there is no iPod connected, then it displays the message "No Media" for 3 seconds and returns to the previous mode.

2. TRACK Selection Button

- Press the [TRACK ∨] button for less than 0.8 seconds to play from the beginning of the song currently played.

  Press the button for less than 0.8 seconds and press it again within 1 second to move to and play the previous track.

  Press the button for 0.8 seconds or longer to play the song in reverse direction in fast speed.
- Press the [TRACK ∧] button for less than 0.8 seconds to move to the next track.

  Press the button for 0.8 seconds or longer to play the song in forward direction in fast speed.

3. REPEAT Button

Repeats the song currently played.

4. RANDOM Playback Button

- Press this button for less than 0.8 seconds to shuffle order of all songs in current category. (Song Random)
- Press this button for 0.8 seconds or longer to shuffle order of albums in current category. (Album Random)
- To cancel RANDOM Play, press this button again.

5. INFO Button

Displays the information of the file currently played in the order of TITLE ➟ ARTIST ➟ ALBUM ➟ NORMAL DISPLAY ➟ TITLE ➟... (Displays no information if the file has no song information.)

6. CATEGORY Selection Button

Moves to the upper category from currently played category of the iPod.

To move to (play) the category (song) displayed, press TUNE/ENTER knob.

You will be able to search through the lower category of the selected category.

The order of iPod's category is SONG, ALBUMS, ARTISTS, GENRES, and iPod.

7. SEARCH Knob & ENTER Button

When you rotate the knob clockwise, it will display the songs (category) ahead of the song currently played (category in the same level).

Also, when you rotate the knob counterclockwise, it will display the songs (category) before the song currently played (category in the same level).

To listen to the song displayed in the song category, press the button to skip to and play the selected song.

Pressing the button changes the BASS, MIDDLE, TREBLE, FADER and BALANCE TUNE mode. The mode selected is shown on the display. After selecting each mode, rotate the Audio control knob clockwise or counterclockwise.

XM SATELLITE RADIO (USA/CANADA)



1. SATELLITE RADIO Selection Button
2. Channel Selection Button
3. Preset Selection Button
4. SCAN Selection Button
5. INFO Selection Button
6. CAT/FOLDER Button
7. Manual Channel Selection Button

✻There will be no Bluetooth®, (XM) logo if the Bluetooth®/XM SATELLITE feature is not supported.

Using XM Satellite Radio

Your vehicle is equipped with 3 months complimentary period of XM Satellite Radio so you have access to over 130 channels of music, information, and entertainment programming.

1. XM Selection Button

Turns to XM Satellite Radio Mode. XM mode toggles in order to XM1➟XM2➟XM3➟XM1... when the button is pressed each time.

2. Channel Selection Button

- Push [TRACK ∨] button for less than 0.8 seconds to select previous channel.
- Push [TRACK ∨] button for 0.8 seconds or longer to continuously move to previous channel.
- Push [SEEK ∧] button for less than 0.8 seconds to select next channel.
- Push [SEEK ∧] button for 0.8 seconds or longer to continuously move to next channel.
- Radio ID : Seek or Tune to XM channel 0 to display the Radio ID.

3. Preset Selection Button

Push [1]~[6] buttons less than 0.8 seconds to play the channel saved in each button. Push Preset button for 0.8 seconds or longer to save current channel to the respective button with a beep.

4. SCAN Selection Button

Press to hear a brief sampling of all channel. To cancel the scan mode, press the button once again.

5. INFO Button

Displays the information of the current channel in the order of Artist/Song title➟Category/Channel name➟Current Play Channel➟Artist/Song title➟Category/Channel name... when the button is pressed each time.

If can not display the whole text information, rotate the tune button to see the next page.

6. CATEGORY Search Button

- Push [FOLDER ∨] button to search previous category.
- Push [CAT ∧] button to search next category. To listen to the displayed category, press the TUNE/SETUP button. To scan channel in displayed category, press the scan button. To search channel in displayed category, press seek buttons or turn the tune button clockwise/counterclockwise.(CATEGORY icon is will be turned on in Category mode)

7. Manual Channel Selection Button

While listening to XM broadcast, rotate this control to the right or left to search other channels while listening to current channel. (Turn to the right to searchhigher channels and left, lower channels)

⚠ CAUTION IN USING BLUETOOTH® CELLULAR PHONE

- *Do not use a cellular phone or perform Bluetooth® settings (e.g. pairing a phone) while driving.*
- *Some Bluetooth®-enabled phones may not be recognized by the system or fully compatible with the system.*
- *Before using Bluetooth® related features of the audio system, refer your phone's User's Manual for phone-side Bluetooth® operations.*
- *The phone must be paired to the audio system to use Bluetooth® related features.*
- *You will not be able to use the hands-free feature when your phone (in the car) is outside of the cellular service area (e.g. in a tunnel, in a underground, in a mountainous area, etc.).*
- *If the cellular phone signal is poor or the vehicles interior noise is too loud, it may be difficult to hear the other person's voice during a call.*

(Continued)

(continued)

- *Do not place the phone near or inside metallic objects, otherwise communications with Bluetooth® system or cellular service stations can be disturbed.*
- *While a phone is connected through Bluetooth® your phone may discharge quicker than usual for additional Bluetooth®-related operations.*
- *Some cellular phones or other devices may cause interference noise or malfunction to audio system. In this case, store the device in a different location may resolve the situation.*

BLUETOOTH® PHONE OPERATION (IF EQUIPPED)

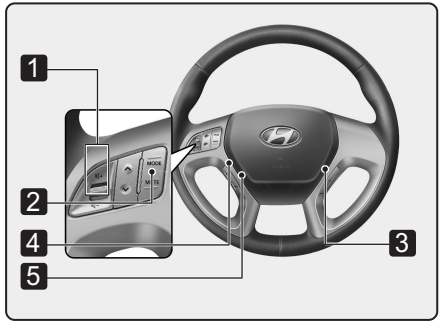

1. VOLUME button : Raises or lowers speaker volume.
2. MUTE : Mute the microphone during a call
3. TALK button : Activates voice recognition.
4. CALL button : Places and transfers calls.
5. END button : Ends calls or cancels functions.

■ What is Bluetooth®?

Bluetooth® is a wireless technology that allows multiple devices to be connected in a short range, low-powered devices like hands-free, stereo headset, wireless remocon, etc. For more information, visit the Bluetooth® website at *www.Bluetooth.com*

■ General Features

- This audio system supports Bluetooth® hands-free and stereo-headset features.
  - HANDS-FREE feature: Making or receiving calls wirelessly through voice recognition.
  - STEREO-HEADSET feature: Playing music from cellular phones (that supports A2DP feature) wirelessly.

- Voice recognition engine of the Bluetooth® system supports 3 types of languages:
  - English
  - US Spanish
  - Canadian French

✻ NOTICE

- **The phone must be paired to the system before using Bluetooth® features.**
- **Only one selected (linked) cellular phone can be used with the system at a time.**
- **Some phones are not fully compatible with this system.**

■ Bluetooth® Language Setting

The system language can be changed by the following steps:

1. Power on the audio system with the volume set to an audible level.
2. Press and hold button on the steering wheel until the audio displays “Please Wait”.
   - The Bluetooth® system will reply in currently selected language that it is changing to the next language.
   - System language cycles between English, Canadian French and US Spanish.
   - Press and hold the button on the steering wheel for over 10 seconds.
3. When completed, the audio display returns to normal.
4. Repeat steps 2 and 3 for the next language selection.

NOTE:

The phone needs to be paired again after changing system language.

- **Avoid resting your thumb or finger on the button as the language could unintentionally change.**

■ Voice Recognition Activation

- The voice recognition engine contained in the Bluetooth® System can be activated in the following conditions:
  - Button Activation
    The voice recognition system will be active when the button is pressed and after the sound of a Beep.
  - Active Listening
    The voice recognition system will be active for a period of time when the Voice Recognition system has asked for a customer response.

- The system can recognize single digitsfrom zero to nine while number greater than ten will not be recognized.

- If the command is not recognized, the system will announce "Pardon" or No input voice signal from microphone. (No response)

- The system shall cancel voice recognition mode in following cases : When pressing the button and saying cancel following the beep. When not making a call and pressing the button. When voice recognition has failed 3 consecutive times.

- At any time if you say “help”, the system will announce what commands are available.

■ Menu tree

The menu tree identifies available voice recognition Bluetooth® functions.

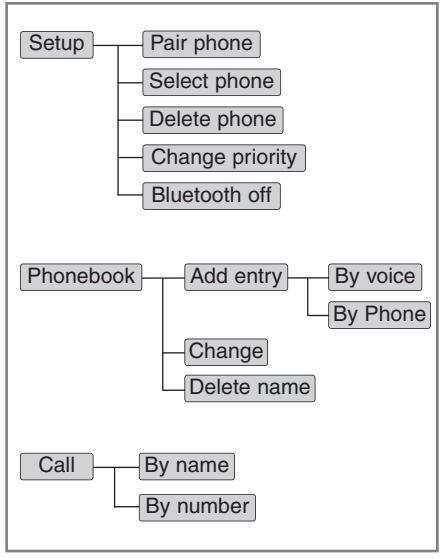

✻Tip

■ Voice Operation

To get the best performance out of the Voice Recognition System, observe the followings:

- **Keep the interior of the vehicle as quiet as possible. Close the window to eliminate surrounding noise (traffic noise, vibration sounds, etc), which may disturb recognizing the voice command correctly.**
- **Speak a command after a beep sound within 5 seconds. Otherwise the command will not be received properly.**
- **Speak in a natural voice without pausing between words.**
- **While receiving voice commands, press the button on the steering wheel remote controller to terminate guidance. Voice command will convert back to waiting mode to allow the user to say a new voice command.**

■ Information Display

<Active Call>



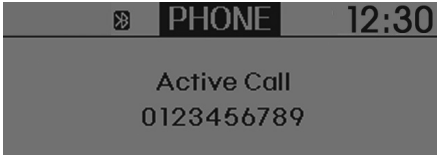

<Recognization>

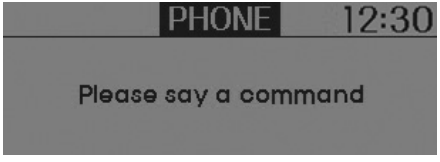

The Bluetooth® icon appears on the upper side of audio display when a phone is connected.

■ Phone Setup

All Bluetooth® related operations can be performed by voice command or by manual operation.

- By Voice Command:

Press [ ] button on the steering wheel to activate voice recognition.



- By Manual Operation:

1) Push the [TUNE] knob to enter SETUP mode.



2) Select “PHONE” item by rotating the TUNE knob, then push the knob.

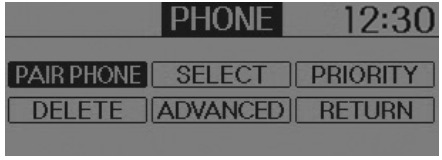

3) Select desired item by rotating the TUNE knob, then push the knob.

• Pairing phone

Before using Bluetooth® features, the phone must be paired (registered) to the audio system. Up to 5 phones can be paired in the system.

Note:

Before pairing a mobile phone, check to see that the Bluetooth® function in your mobile phone is set to “ON” state.

Note:

The pairing procedure of the phone varies according to each phone model. Before attempting to pair phone, please see your phone’s User’s Guide for instructions.

Note:

Once pairing with the phone is completed, there is no need to pair with that phone again unless the phone is deleted manually from the audio system (refer "Deleting Phone" section) or the vehicle's information is removed from the phone.

By Voice Recognition

① Press [ ] button.
② Say "Set Up".
- The system replies with available commands.
- To skip the information message, press [ ] again and then a beep is heard.

③ Say "Pair Phone".
④ Say "Yes" to proceed.
⑤ Say the name of your phone when prompted.
- Use any name to uniquely describe your phone.

⑥ Bluetooth® system will repeat the name you stated.
⑦ Say "Yes" to confirm.
⑧ The audio displays "searching ---- passkey: 0000" and asks you to initiate pairing procedure from the phone.
⑨ Search the Bluetooth® system on your phone .Your phone should display your [vehicle model name] on the Bluetooth® device list. Then attempt pairing on your phone
⑩ After Pairing is completed, your phone will start to transfer phone/contact list to the audio system.
- This process may take from a few minutes to over 10 minutes depending on the phone model and number of entries in the phone/contact list.

✻Tip

Press [ ] button.

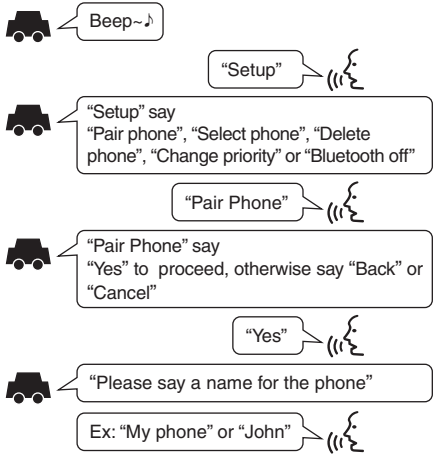

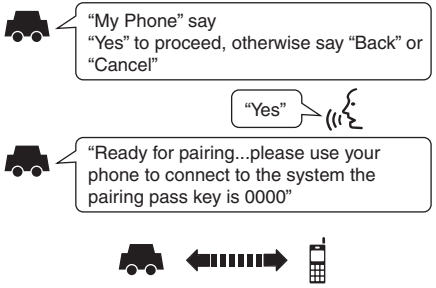

Pair the device after searching for Bluetooth® devices in your mobile phone. Once pairing is complete, you will hear the following message.

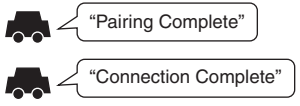

By Manual operation

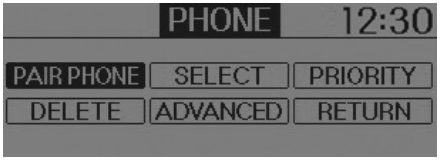

① Select “PAIR” in PHONE menu, then-proceed from step 5.

Note:

Until the audio displays “Transfer Complete”, Bluetooth® hands-free feature may not be fully operational.

Note:

If the phone is paired to two or more vehicles of the same model, i.e. both vehicles are HMC TUCSON, some phones may not handle Bluetooth® devices of that name correctly. In this case, you may need to change the name displayed on your phone from TUCSON.

Refer to your phone’s User’s Guide, or contact your cellular carrier or phone manufacturer for instructions.

• Connecting phone

When the Bluetooth® system is enabled, the phone previously used is automatically selected and re-connected. If you want to select different phone previously paired, the phone can be selected through “Select Phone” menu.

Only a selected phone can be used with the hands-free system at a time.

By Voice Recognition

① Press button.
② Say "Set Up".
③ Say "Select Phone" after prompt
- The system lists all the registered phone names.

④ Say the name or number of desired phone from the list.
⑤ Say "Yes" to confirm.

By Manual operation

① Select “SELECT” in PHONE menu, then select desired phone from the list.

• Deleting Phone

The paired phone can be deleted.

- When the phone is deleted, all the information associated with that phone is also be deleted (including phonebook).
- If you want to use the deleted phone with the audio system again, pairing procedure must be completed once more.

By Voice Recognition

① Press button.
② Say “Set Up”.
③ Say “Delete Phone” after prompt.
- The system lists all the registered phone names.

④ Say the name or number of desired phone from the list.
⑤ Say “Yes” to confirm.

By Manual operation

① Select “DELETE” in PHONE menu, then select desired phone from the list.

• Changing Priority
When several phones are paired to the audio system, the system attempts to connect following order when the Bluetooth® system is enabled:

1) “Priority” checked phone.
2) Previously connected phone
3) Gives up auto connection.

By Voice Recognition
① Press [ ] button.
② Say “Set Up”.
③ Say “Change Priority” after prompt.
- The system lists all the registered phone names.

④ Say the name or number of desired phone from the list.
⑤ Say “Yes” to confirm.

By Manual operation
① Select “PRIORITY” in PHONE menu, then select desired phone from the list.

■ Phone Book (In-Vehicle)

• Adding Entry
Phone numbers and voice tags can be registered. Entries registered in the phone can also be transferred.

• Adding Entry by Voice
① Press [ ] button.
② Say "Phonebook".
- The system replies with all available commands.
- To skip the information message, press [ ] again and then a beep is heard.

③ Say "Add Entry".
④ Say "By Voice" to proceed.
⑤ Say the name of the entry when prompted.
⑥ Say “Yes”to confirm.
⑦ Say the phone number of that entry when prompted.
⑧ Say “Store” if phone number input is finished.
⑨ Say a phone number type. “Home”, “Work”, “Mobile”, “Other” or “Default” is available.
⑩ Say “Yes” to complete adding entry.
⑪ Say “Yes” to store additional location for this contact, or say “Cancel” to finish the process.

✻ NOTICE

- **The system can recognize single digits from zero to nine. Numbers that are ten or greater cannot be recognized.**
- **You can enter each digit individually or group digits together in preferred string lengths.**
- **To speed up input, it is a good idea to group all digits into a continuous string.**
- **The display corresponding to each operation appears on the screen as follows:**
- **Input operation example:**
  1. Say: “Nine, nine, five”
  ➟ Display: “995”
  2. And say: “Seven, three, four”
  ➟ Display: “995734”

• Adding Entry by Phone

① Press button.
② Say "Phonebook".
③ Say "Add Entry" after prompt.
④ Say "By Phone" to proceed.
⑤ Say “Yes” to confirm.
⑥ Your phone will start to transfer phone/contact list to the audio system. This process may take over 10 minutes depending on the phone model and number of entries.
⑦ Wait till the audio displays “Transfer Complete” message.

• Changing Name

The registered names can be modified.

① Press button.
② Say “Phonebook”
③ Say “Change Name” after prompt.
④ Say the name of the entry (voice tag)
⑤ Say “Yes” to confirm.
⑥ Say new desired name.

• Deleting Name

The registered names can be deleted.

① Press button.
② Say “Phonebook”
③ Say “Delete Name” after prompt.
④ Say the name of the entry (voice tag)
⑤ Say “Yes” to confirm.

■ Making a Phone Call

• Calling by Name

A phone call can be made by speaking names registered in the audio system.

① Press button.
② Say "Call".
③ Say “Name” when prompted.
④ Say desired name (in phonebook or voice tag).
⑤ Say desired location (phone number type). Only stored locations can be selected.
⑥ Say “Yes” to confirm and make a call.

✻Tip

A shortcut to each of the following functions is available:
① Say “Call Name”

• Direct Calling

① Press button.
② Sat the following command.
- Call <John> : Connects the call to John.
- Call <John> on <Mobile> : Connects the call to John’s mobile phone number.
- Call <John> at <Home> : Connects the call to john’s home number.
- Call <John> in <Office> : Connects the call to John’s office number.

Note:

Calls can be immediately connected to contacts who name or voice tag are saved in the phonebook(or contacts).

• Dialing by Number

A phone call can be made by dialing the spoken numbers. The system can recognize single digits from zero to nine.

① Press button.
② Say “Call”.
③ Say “Number” when prompted.
④ Say desired phone numbers.
⑤ Say “Dial” to complete the number and make a call.

✻Tip

A shortcut to each of the following functions is available:
① Say “Dial Number”
② Say “Dial <digit>”

■ Receiving a Phone Call

When receiving a phone call, a ringtone is audible from speakers and the audio system changes into telephone mode.
When receiving a phone call, “Incoming” message and incoming phone number (if available) are displayed on the audio.

• To Answer a Call:
- Press button on the steering wheel.
• To Reject a Call:
- Press button on the steering wheel.
• To Adjust Ring Volume:
- Use VOLUME buttons on the steering wheel.
• To Transfer a Call to the Phone (Secret Call):
- Press and hold button on the steering wheel until the audio system transfers a call to the phone.

■ Talking on the Phone

When talking on the phone, “Active Calls” message and the other party’s phone number (if available) are displayed on the audio.

• To Mute the Microphone
- Press button on the steering wheel.
• To Finish a Call
- Press button on the steering wheel.

✻ NOTICE

In the following situations, you or the other party may have difficulty hearing each other:

1. **Speaking at the same time, your voice may not reach each other parties. (This is not a malfunction.) Speak alternately with the other party on the phone.**
2. **Keep the Bluetooth® volume to a low level. High-level volume may result in distortion and echo.**
3. **When driving on a rough road.**
4. **When driving at high speeds.**
5. **When the window is open.**
6. **When the air conditioning vents are facing the microphone.**
7. **When the sound of the air conditioning fan is loud.**

■ Using the head unit as Bluetooth® music

The head unit supports A2DP (Audio Advanced Distribution Profile) and AVRCP (Audio Video Remote Control Profile).

Both profiles are available for listening to the MP3 music via Bluetooth® cellular phone supporting above Bluetooth® profiles.

To play MP3 music from the Bluetooth® cellular phone, press the [AUX] button until “MP3 Play” is displayed on the LCD.

Then try playing music by phone.

When playing music from the Bluetooth® cellular phone, the head unit displays MP3 MODE.

NOTE:

- **Not only MP3 files, all the sounds that the phone supports can be heard by the audio system.**
- **The Bluetooth® cellular phones shall feature A2DP and AVRCP functions.**
- **Some A2DP and AVRCP Bluetooth® cellular phones may not play music through the head unit on first try. Please try the below;**

  i.e : Menu➞Filemanager➞Music➞ Option➞Play via Bluetooth

- **Please refer to User’s Guide of your phone for more detailed informations. To stop music, try stop music by the phone and change audio mode to different one. (e.g. FM, CD, iPod, ...)**

■ ADVANCED Menu

After pressing the [SETUP] button, press the PHONE menu. while in PHONE menu, press the “ADVANCED” menu to make Bluetooth® Phone settings.(The ADVANCED menu may differ according to audio specifications.)

• IN VOL.
(Bluetooth® call volume adjustments)

While in ADVANCED menu, press “IN VOL.” Use the knob key to set the desired volume and press the [ENTER] button.

• CONTACTS
(Automatic Phonebook download setting)

While in ADVANCED menu, press “CONTACTS”. To automatically save the contacts and call history in your mobile phone each time you connect a mobile device, press Yes. If you do not wish for automatic download, press No.

• LANGUAGE (Language of Bluetooth® voice recognition)

While in ADVANCED menu, press “LANGUAGE”. To change the language, select the desired language and press the [ENTER] button.

• BT OFF

While in ADVANCED menu, press “BT OFF” to turn off the Bluetooth® System.

■ Key matrix

No.	KEY		Class							
			Paired H/P Empty	Disconnected	Connected		Incoming Call	Outgoing Call	Active Call	2nd Call
					Normal mode	BT SETUP menu				
1		SHORT	Not Paired	Not Connecting	-	-	Accept Call	-	2nd call 1st Call:waiting 2nd Call:active	2nd Call 2nd Call:waiting 1st Call:active
		LONG	-	-	-	-	-	-	Transfer call:secret call	
2		SHORT	VR MODE Cancel	VR MODE Cancel	VR MODE Cancel	VR MODE Cancel	Reject Call	End Call	End Call	End Call
		LONG [10sec]	-	-	Speaker Adaptation (Only English)	Speaker Adaptation (Only English)	-	-	-	-
3		SHORT	Active	Active	Active	Active	-	-	-	-
		LONG [10sec]	Change language	Change language	Change language	Change language	-	-	-	-

Before driving / 5-3
Key positions / 5-5
Manual transaxle / 5-7
Automatic transaxle / 5-10
All wheel drive (AWD) / 5-17
Brake system / 5-24
Cruise control system / 5-36
Economical operation / 5-40
Special driving conditions / 5-42
Winter driving / 5-46

Driving your vehicle 5

Trailer towing / 5-50
Vehicle load limit / 5-57
Vehicle weight / 5-61

⚠ WARNING - ENGINE EXHAUST CAN BE DANGEROUS!

Engine exhaust fumes can be extremely dangerous. If, at any time, you smell exhaust fumes inside the vehicle, open the windows immediately.

- **Do not inhale exhaust fumes.**
  Exhaust fumes contain carbon monoxide, a colorless, odorless gas that can cause unconsciousness and death by asphyxiation.
- **Be sure the exhaust system does not leak.**
  The exhaust system should be checked whenever the vehicle is raised to change the oil or for any other purpose. If you hear a change in the sound of the exhaust or if you drive over something that strikes the underneath side of the vehicle, have the exhaust system checked as soon as possible by an authorized HYUNDAI dealer.
- **Do not run the engine in an enclosed area.**
  Letting the engine idle in your garage, even with the garage door open, is a hazardous practice. Never run the engine in your garage any longer than it takes to start the engine and back the vehicle out.
- **Avoid idling the engine for prolonged periods with people inside the car.**
  If it is necessary to idle the engine for a prolonged period with people inside the vehicle, be sure to do so only in an open area with the air intake set at "Fresh" and fan operating at one of the higher speeds so fresh air is drawn into the interior.

If you must drive with the tailgate open because you are carrying objects that make this necessary:

1. Close all windows.
2. Open side vents.
3. Set the air intake control at "Fresh", the air flow control at "Floor" or "Face" and the fan at one of the higher speeds.

To assure proper operation of the ventilation system, be sure the ventilation air intakes located just in front of the windshield are kept clear of snow, ice, leaves or other obstructions.

⚠ CALIFORNIA PROPOSITION 65 WARNING

Engine exhaust and a wide variety of automobile components and parts, including components found in the interior furnishings in a vehicle, contain or emit chemicals known to the State of California to cause cancer and birth defects and reproductive harm. In addition, certain fluids contained in vehicles and certain products of component wear contain or emit chemicals known to the State of California to cause cancer and birth defects or other reproductive harm.

BEFORE DRIVING

Before entering vehicle

- Be sure that all windows, outside mirror(s), and outside lights are clean.
- Check the condition of the tires.
- Check under the vehicle for any sign of leaks.
- Be sure there are no obstacles behind you if you intend to back up.

Necessary inspections

Fluid levels, such as engine oil, engine coolant, brake fluid, and washer fluid should be checked on a regular basis, with the exact interval depending on the fluid. Further details are provided in section 7, “Maintenance”.

Before starting

- Close and lock all doors.
- Position the seat so that all controls are easily reached.
- Adjust the inside and outside rearview mirrors.
- Be sure that all lights work.
- Check all gauges.
- Check the operation of warning lights when the ignition switch is turned to the ON position.
- Release the parking brake and make sure the brake warning light goes out.

For safe operation, be sure you are familiar with your vehicle and its equipment.

⚠ WARNING

All passengers must be properly belted whenever the vehicle is moving. Refer to “Seat belts” in section 3 for more information on their proper use.

⚠ WARNING

Always check the surrounding areas near your vehicle for people, especially children, before putting a vehicle into “Drive” or “Reverse”.

⚠ WARNING - Driving under the influence of alcohol or drugs

Drinking and driving is dangerous. Drunk driving is the number one contributor to the highway death toll each year. Even a small amount of alcohol will affect your reflexes, perceptions and judgment. Driving while under the influence of drugs is as dangerous or more dangerous than driving drunk.

You are much more likely to have a serious accident if you drink or take drugs and drive.

If you are drinking or taking drugs, don't drive. Do not ride with a driver who has been drinking or taking drugs. Choose a designated driver or call a cab.

⚠ WARNING

When you intend to park or stop the vehicle with the engine on, be careful not to depress the accelerator pedal for a long period of time. It may overheat the engine or exhaust system and cause fire.

KEY POSITIONS



OUN036002

Ignition switch position

LOCK

The steering wheel locks to protect against theft. The ignition key can be removed only in the LOCK position. When turning the ignition switch to the LOCK position, push the key inward at the ACC position and turn the key toward the LOCK position.

ACC (Accessory)

The steering wheel is unlocked and electrical accessories are operative.

✻ NOTICE

If difficulty is experienced turning the ignition switch to the ACC position, turn the key while turning the steering wheel right and left to release the tension.

ON

The warning lights can be checked before the engine is started. This is the normal running position after the engine is started.

Do not leave the ignition switch ON if the engine is not running to prevent battery discharge.

START

Turn the ignition key to the START position to start the engine. The engine will crank until you release the key; then it returns to the ON position. The brake warning lamp can be checked in this position.

⚠ WARNING - Ignition key

- **Never turn the ignition key to LOCK or ACC while the vehicle is moving. This would result in loss of directional control and braking function, which could cause an accident.**
- **The anti-theft steering column lock is not a substitute for the parking brake. Before leaving the driver's seat, always make sure the shift lever is engaged in P (Park) for the automatic transaxle, or reverse for the manual transaxle, set the parking brake fully, and shut the engine off. Unexpected and sudden vehicle movement may occur if these precautions are not taken.**
- **Never reach for the ignition switch, or any other controls through the steering wheel while the vehicle is in motion. The presence of your hand or arm in this area could cause a loss of vehicle control, an accident and serious bodily injury or death.**
- **Do not place any movable objects around the driver's seat as they may move while driving, interfere with the driver and lead to an accident.**

Starting the engine

⚠ WARNING

Always wear appropriate shoes when operating your vehicle. Unsuitable shoes (high heels, ski boots,etc.) may interfere with your ability to use the brake and accelerator pedal, and the clutch (if equipped).

1. Make sure the parking brake is applied.
2. **Manual Transaxle** - Depress the clutch pedal fully and shift the transaxle into Neutral. Keep the clutch pedal and brake pedal depressed while turning the ignition switch to the start position.

   Automatic Transaxle - Place the transaxle shift lever in P (Park). Depress the brake pedal fully.

   You can also start the engine when the shift lever is in the N (Neutral) position.
3. Turn the ignition switch to START and hold it there until the engine starts (a maximum of 10 seconds), then release the key.
4. In extremely cold weather (below -18°C / 0°F) or after the vehicle has not been operated for several days, let the engine warm up without depressing the accelerator.

*Whether the engine is cold or warm, it should be started **without depressing the accelerator.***

⚠ CAUTION

If the engine stalls while the vehicle in motion, do not attempt to move the shift lever to the P (Park) position. If traffic and road conditions permit, you may put the shift lever in the N (Neutral) position while the vehicle is still moving and turn the ignition switch to the START position in an attempt to restart the engine.

⚠ CAUTION

Do not engage the starter for more than 10 seconds. If the engine stalls or fails to start, wait 5 to 10 seconds before re-engaging the starter. Improper use of the starter may damage it.

MANUAL TRANSAXLE (IF EQUIPPED)

■ 6 speed

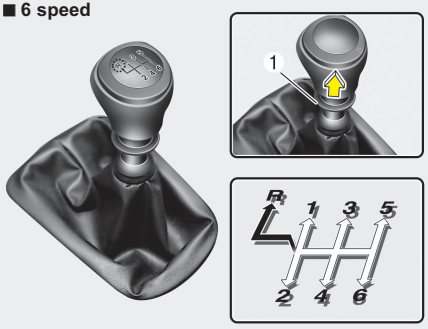

■ 5 speed

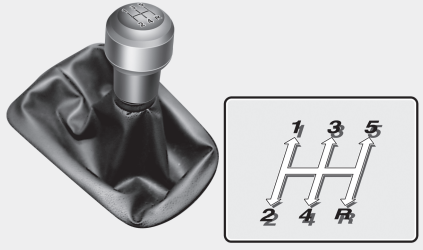

⇨ The shift lever can be moved without pulling the ring (1).

➡ The ring (1) must be pulled up while moving the shift lever.

OLM059009/OLM059009L

Manual transaxle operation

The manual transaxle has 5 (or 6*) forward gears.

This shift pattern is imprinted on the shift knob. The transaxle is fully synchronized in all forward gears so shifting to either a higher or a lower gear is easily accomplished.

Press the clutch pedal down fully while shifting, then release it slowly.

If your vehicle is equipped with an ignition lock switch, the engine will not start when starting the engine without depressing the clutch pedal. (if equipped)

The gearshift lever must be returned to the neutral position before shifting into R (Reverse).

The ring (1) located immediately below the shift knob must be pulled upward while moving the shift lever to the R position. (if equipped)

Make sure the vehicle is completely stopped before shifting into R (Reverse).

Never operate the engine with the tachometer (rpm) in the red zone.

⚠ CAUTION

- ***When downshifting from fifth gear to fourth gear, caution should be taken not to inadvertently press the gear shift lever sideways in such a manner that second gear is engaged. Such a drastic downshift may cause the engine speed to increase to the point that the tachometer will enter the red-zone. Such overrevving of the engine may possibly cause engine damage.***
- ***Do not downshift more than 2 gears or downshift the gear when the engine is running at high speed (5,000 RPM or higher). Such a downshifting may damage the engine.***

- During cold weather, shifting may be difficult until the transaxle lubricant has warmed up. This is normal and not harmful to the transaxle.
- If you've come to a complete stop and it's hard to shift into 1st or R (Reverse), put the shift lever in N (Neutral) position and release the clutch. Press the clutch pedal back down, and then shift into 1st or R (Reverse) gear position.

⚠ CAUTION

- ***To avoid premature clutch wear and damage, do not drive with your foot resting on the clutch pedal. Also, don't use the clutch to hold the vehicle stopped on an uphill grade, while waiting for a traffic light, etc.***
- ***Do not use the shift lever as a handrest during driving, as this can result in premature wear of the transaxle shift forks.***
- ***When operating the clutch pedal, press the clutch pedal down fully. If you don't press the clutch pedal fully, the clutch may be damaged or noise may occur.***

⚠ WARNING

Before leaving the driver's seat, always set the parking brake fully and shut the engine off. Then make sure the transaxle is shifted into 1st gear when the vehicle is parked on a level or uphill grade, and shifted into R (Reverse) on a downhill grade. Unexpected and sudden vehicle movement can occur if these precautions are not followed in the order identified.

Using the clutch

The clutch should be pressed all the way to the floor before shifting, then released slowly. The clutch pedal should always be fully released while driving. Do not rest your foot on the clutch pedal while driving. This can cause unnecessary wear. Do not partially engage the clutch to hold the vehicle on an incline. This causes unnecessary wear. Use the foot brake or parking brake to hold the vehicle on an incline. Do not operate the clutch pedal rapidly and repeatedly.

This vehicle is equipped with a Hill-start Assist Control(HAC) that will hold the vehicle in place for about 2 seconds when the brake is released on a sleep enough uphill grade (about 8° incline). Practice releasing the brake and applying the throttle with your right foot while releasing the clutch with your left foot, so you learn how the HAC works.

⚠ WARNING

The HAC is activated only for about 2 seconds, so when the vehicle is starting off always depress the accelerator pedal.

Downshifting

When you must slow down in heavy traffic or while driving up steep hills, downshift before the engine starts to labor. Downshifting reduces the chance of stalling and gives better acceleration when you again need to increase your speed. When the vehicle is traveling down steep hills, downshifting helps maintain safe speed and prolongs brake life.

This vehicle is geared for improved fuel economy and may need to be driven in a lower gear when driving up hills or into high winds. Using top gear is best for fuel economy, but you should use the best gear for the road conditions.

Good driving practices

- Never take the vehicle out of gear and coast down a hill. This is extremely hazardous. Always leave the vehicle in gear.
- Don't "ride" the brakes. This can cause them to overheat and malfunction. Instead, when you are driving down a long hill, slow down and shift to a lower gear. When you do this, engine braking will help slow down the vehicle.
- Slow down before shifting to a lower gear. This will help avoid over-revving the engine, which can cause damage.
- Slow down when you encounter cross winds. This gives you much better control of your vehicle.
- Be sure the vehicle is completely stopped before you attempt to shift into reverse. The transaxle can be damaged if you do not. To shift into reverse, depress the clutch, move the shift lever to neutral, then shift to the reverse position.
- Exercise extreme caution when driving on a slippery surface. Be especially careful when braking, accelerating or shifting gears. On a slippery surface, an abrupt change in vehicle speed can cause the drive wheels to lose traction and the vehicle to go out of control.

⚠ WARNING

- **Always buckle-up! In a collision, an unbelted occupant is significantly more likely to be seriously injured or killed than a properly belted occupant.**
- **Avoid high speeds when cornering or turning.**
- **Do not make quick steering wheel movements, such as sharp lane changes or fast, sharp turns.**
- **The risk of rollover is greatly increased if you lose control of your vehicle at highway speeds.**
- **Loss of control often occurs if two or more wheels drop off the roadway and the driver oversteers to reenter the roadway.**
- **In the event your vehicle leaves the roadway, do not steer sharply. Instead, slow down before pulling back into the travel lanes.**
- **Never exceed posted speed limits.**

AUTOMATIC TRANSAXLE (IF EQUIPPED)

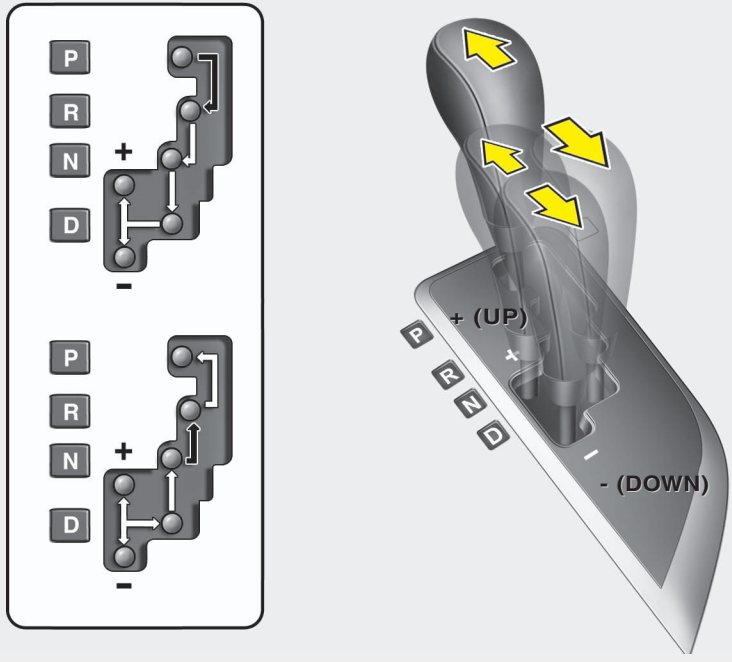

Depress the brake pedal when shifting.

The shift lever can be shifted freely.

OLM059010

Automatic transaxle operation

The automatic transaxle has 6 forward speeds and one reverse speed. The individual speeds are selected automatically, depending on the position of the shift lever.

✻ NOTICE

The first few shifts on a new vehicle, if the battery has been disconnected, may be somewhat abrupt. This is a normal condition, and the shifting sequence will adjust after shifts are cycled a few times by the TCM (Transaxle Control Module) or PCM (Powertrain Control Module).

For smooth operation, depress the brake pedal when shifting from N (Neutral) to a forward or reverse gear.

⚠ WARNING - Automatic transaxle

- **Always check the surrounding areas near your vehicle for people, especially children, before shifting a vehicle into D (Drive) or R (Reverse).**
- **Before leaving the driver's seat, always make sure the shift lever is in the P (Park) position; then set the parking brake fully and shut the engine off. Unexpected and sudden vehicle movement can occur if these precautions are not followed in the order identified.**

⚠ CAUTION

- ***To avoid damage to your transaxle, do not accelerate the engine in R (Reverse) or any forward gear position with the brakes on.***
- ***When stopped on an incline, do not hold the vehicle stationary with engine power. Use the service brake or the parking brake.***
- ***Do not shift from N (Neutral) or P (Park) into D (Drive), or R (Reverse) when the engine is above idle speed.***

Transaxle ranges

The indicator in the instrument cluster displays the shift lever position when the ignition switch is in the ON position.

P (Park)

Always come to a complete stop before shifting into P (Park). This position locks the transaxle and prevents the front wheels from rotating.

⚠ WARNING

- **Shifting into P (Park) while the vehicle is in motion will cause the drive wheels to lock which will cause you to lose control of the vehicle.**
- **Do not use the P (Park) position in place of the parking brake. Always make sure the shift lever is latched in the P (Park) position and set the parking brake fully.**
- **Never leave a child unattended in a vehicle.**

⚠ CAUTION

The transaxle may be damaged if you shift into P (Park) while the vehicle is in motion.

R (Reverse)

Use this position to drive the vehicle backward.

⚠ CAUTION

Always come to a complete stop before shifting into or out of R (Reverse); you may damage the transaxle if you shift into R while the vehicle is in motion, except as explained in "Rocking the vehicle" in this section.

N (Neutral)

The wheels and transaxle are not engaged. The vehicle will roll freely even on the slightest incline unless the parking brake or service brakes are applied.

D (Drive)

This is the normal forward driving position. The transaxle will automatically shift through a 6-gear sequence, providing the best fuel economy and power.

For extra power when passing another vehicle or climbing grades, depress the accelerator fully, at which time the transaxle will automatically downshift to the next lower gear (or gears, as appropriate).

✻ NOTICE

Always come to a complete stop before shifting into D (Drive).

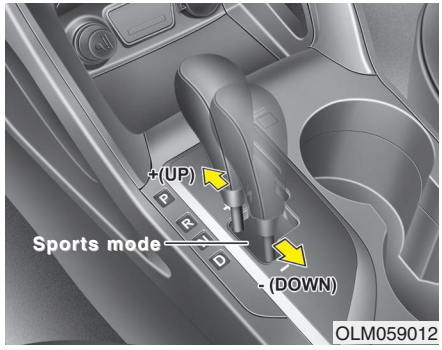

Sports mode

Whether the vehicle is stationary or in motion, sports mode is selected by pushing the shift lever from the D (Drive) position into the manual gate. To return to D (Drive) range operation, push the shift lever back into the main gate.

In sports mode, moving the shift lever backwards and forwards will allow you to make gearshifts rapidly. In contrast to a manual transaxle, the sports mode allows gearshifts with the accelerator pedal depressed.

Up (+) : Push the lever forward once to shift up one gear.

Down (-) : Pull the lever backwards once to shift down one gear.

✻ NOTICE

- **In sports mode, the driver must execute upshifts in accordance with road conditions, taking care to keep the engine speed below the red zone.**
- **In sports mode, only the 6 forward gears can be selected. To reverse or park the vehicle, move the shift lever to the R (Reverse) or P (Park) position as required.**
- **In sports mode, downshifts are made automatically when the vehicle slows down. When the vehicle stops, 1st gear is automatically selected.**

(Continued)

(Continued)

- **In sports mode, when the engine rpm approaches the red zone the transaxle will upshift automatically.**
- **If the driver press the lever to +(up) or -(Down) position, the transaxle may not make the requested gear change if the next gear is outside of the allowable engine rpm range.**
- **When driving on a slippery road, push the shift lever forward into the +(up) position. This causes the transaxle to shift into the 2nd gear which is better for smooth driving on a slippery road. Push the shift lever to the -(down) side to shift back to the 1st gear.**

Shift lock system

For your safety, the automatic transaxle has a shift lock system which prevents shifting the transaxle from P (Park) or N (Neutral) into R (Reverse) unless the brake pedal is depressed.

To shift the transaxle from P (Park) or N (Neutral) into R (Reverse):

1. Depress and hold the brake pedal.
2. Start the engine or turn the ignition switch to the ON position.
3. Move the shift lever.

If the brake pedal is repeatedly depressed and released with the shift lever in the P (Park) position, a chattering noise near the shift lever may be heard. This is a normal condition.

⚠ WARNING

Always fully depress the brake pedal before and while shifting out of the P (Park) position into another position to avoid inadvertent motion of the vehicle which could injure persons in or around the vehicle.

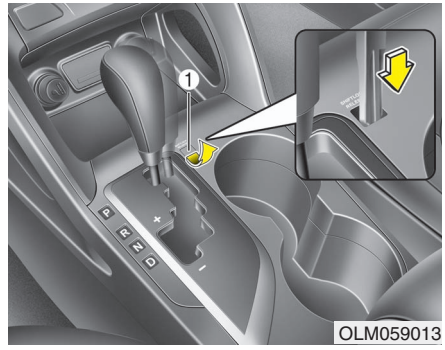

Shift-lock override

If the shift lever cannot be moved from the P (Park) or N (Neutral) position into R (Reverse) position with the brake pedal depressed, continue depressing the brake, then do the following:

1. Carefully remove the cap (1) covering the shift-lock override access hole.
2. Insert a screwdriver (or key) into the access hole and press down on the screwdriver (or key).
3. Move the shift lever.
4. Have your vehicle inspected by an authorized HYUNDAI dealer immediately.

Ignition key interlock system

The ignition key cannot be removed unless the shift lever is in the P (Park) position. If the ignition switch is in any other position, the key cannot be removed.

Good driving practices

- Never move the gear shift lever from P (Park) or N (Neutral) to any other position with the accelerator pedal depressed.
- Never move the gear shift lever into P (Park) when the vehicle is in motion.
- Be sure the vehicle is completely stopped before you attempt to shift into R (Reverse) or D (Drive).
- Never take the vehicle out of gear and coast down a hill. This may be extremely hazardous. Always leave the car in gear when moving.
- Do not "ride" the brakes. This can cause them to overheat and malfunction. Instead, when you are driving down a long hill, slow down and shift to a lower gear. When you do this, engine braking will help slow down the vehicle.
- Slow down before shifting to a lower gear. Otherwise, the lower gear may not be engaged.
- Always use the parking brake. Do not depend on placing the transaxle in P (Park) to keep the vehicle from moving.
- Exercise extreme caution when driving on a slippery surface. Be especially careful when braking, accelerating or shifting gears. On a slippery surface, an abrupt change in vehicle speed can cause the drive wheels to lose traction and the vehicle to go out of control.
- Optimum vehicle performance and economy is obtained by smoothly depressing and releasing the accelerator pedal.

⚠ WARNING

- **Always buckle-up! In a collision, an unbelted occupant is significantly more likely to be seriously injured or killed than a properly belted occupant.**
- **Avoid high speeds when cornering or turning.**
- **Do not make quick steering wheel movements, such as sharp lane changes or fast, sharp turns.**
- **The risk of rollover is greatly increased if you lose control of your vehicle at highway speeds.**
- **Loss of control often occurs if two or more wheels drop off the roadway and the driver oversteers to reenter the roadway.**
- **In the event your vehicle leaves the roadway, do not steer sharply. Instead, slow down before pulling back into the travel lanes.**
- **Never exceed posted speed limits.**

⚠ WARNING

If your vehicle becomes stuck in snow, mud, sand, etc., then you may attempt to rock the vehicle free by moving it forward and backward. Do not attempt this procedure if people or objects are anywhere near the vehicle. During the rocking operation the vehicle may suddenly move forward or backward as it becomes unstuck, causing injury or damage to nearby people or objects.

Moving up a steep grade from a standing start

To move up a steep grade from a standing start, depress the brake pedal, shift the shift lever to D (Drive). Release the brake pedal and gradually press the accelerator pedal.

The Hill-start Assist Control(HAC) will hold the vehicle brakes for up to 2 seconds on grades steeper than 8° uphill.

⚠ WARNING

The HAC is activated only for about 2 seconds, so when the vehicle is starting off always depress the accelerator pedal.

ALL WHEEL DRIVE (AWD) (IF EQUIPPED)

Engine power can be delivered to all front and rear wheels for maximum traction. AWD is useful when extra traction is required on road, such as, when driving on slippery, muddy, wet, or snow-covered roads. These vehicles are not designed for challenging off-road use. Occasional off-road use such as established unpaved roads and trails are OK. It is always important when traveling off-highway that the driver carefully reduces the speed to a level that does not exceed the safe operating speed for those conditions. In general, off-road conditions provide less traction and braking effectiveness than normal road conditions. The driver must be especially alert to avoid driving on slopes which tilt the vehicle to either side.

These factors must be carefully considered when driving off-road. Keeping the vehicle in contact with the driving surface and under control in these conditions is always the driver's responsibility for the safety of him/herself and his or her passengers.

⚠ WARNING - Off road driving

This vehicle is designed primarily for on road use although it can operate effectively off road. However, it was not designed to drive in challenging off-road conditions. Driving in conditions that exceed the vehicle's intended design or the driver's experience level may result in severe injury or death.

⚠ WARNING

When AWD system warning light illuminates, AWD system does not operate.
Contact an authorized HYUNDAI dealer as soon as possible.

Tight corner brake effect

⚠ CAUTION - AWD

When turning sharply on a paved road at low speed while in four-wheel drive, steering control will be difficult.

Tight corner brake effect is a unique characteristic of all-wheel drive vehicles caused by the difference in tire rotation at the all wheels and the zero-degree alignment of the front wheels and suspension.

Sharp turns at low speeds should be carried out with caution.

ALL Wheel Drive (AWD) transfer mode selection

Transfer mode	Selection button	Indicator light	Description
AWD AUTO (AWD LOCK is deactivated)		LOCK (Indicator light is not illuminated)	• When driving in AWD AUTO mode, the vehicle operates similar to conventional 2WD vehicles under normal operating conditions. However, if the system determines that there is a need for the AWD mode, the engine's driving power is distributed to all four wheels automatically without driver intervention. • When driving on normal roads and pavement, the vehicle moves similar to conventional 2WD vehicles.
AWD LOCK		LOCK (Indicator light is illuminated)	• This mode is used for climbing or descending sharp grades, off-road driving, driving on sandy and muddy roads, etc., to maximize traction. • This mode automatically begins to deactivate at speeds above 19 mph (30 km/h) and is shifted to AWD AUTO mode at speed above 25 mph (40 km/h). If the vehicle decelerates to speeds below 19 mph (30 km/h), however, the transfer mode is shifted into AWD LOCK mode again.

✻ NOTICE

- **When driving on normal roads, deactivate the AWD LOCK mode by pushing the AWD LOCK button (the indicator light goes off). Driving on normal roads with AWD LOCK mode(especially, when cornering) may cause mechanical noise or vibration. The noise and vibration will disappear when the AWD LOCK mode is deactivated. Some parts of the power train may be damaged by prolonged driving with the noise and vibration.**
- **When the AWD LOCK mode is deactivated, a shock may be felt as the drive power is delivered entirely to the front wheels. This shock is not a mechanical failure.**

For safe all-wheel drive operation

⚠ WARNING - All-wheel driving

The conditions of on-road or off-road that demand all-wheel drive mean all functions of your vehicle are more exposed to extreme stress than under normal road conditions. Slow down and be ready for changes in the composition and traction of the surface under your tires. If you have any doubt about the safety of the conditions you are facing, stop and consider the best way to proceed. Do not exceed the ability of yourself or your vehicle to operate safely.

- Do not try to drive in deep standing water or mud since such conditions can stall your engine and clog your exhaust pipes. Do not drive down steep hills since it requires extreme skill to maintain control of the vehicle.

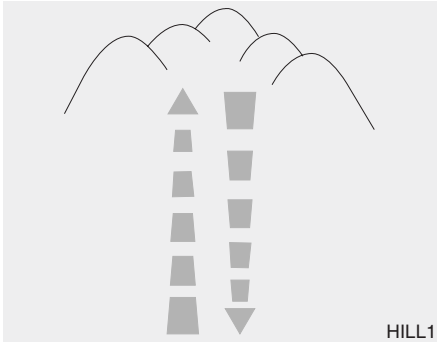
HILL1

- When you are driving up or down hills drive as straight as possible. Use extreme caution in going up or down steep hills, since you may flip your vehicle over depending on the grade, terrain and water/mud conditions.


HILL2

⚠ WARNING - Hills

Driving across the contour of steep hills can be extremely dangerous. This danger can come from slight changes in the wheel angle which can destabilize the vehicle or, even if the vehicle is maintaining stability under power, it can lose that stability if the vehicle stops its forward motion. Your vehicle may roll over without warning and without time for you to correct a mistake that could cause serious injury or death.

- You must consciously take the effort to learn how to corner in a AWD vehicle. Do not rely on your experience in conventional 2WD vehicles in choosing safe cornering speed in AWD mode. For starters, you must drive more slowly in AWD.
- Drive carefully off-road because your vehicle may be damaged by rocks or roots of trees. Become familiar with the off-road conditions where you are going to drive before you begin driving.

⚠ WARNING - AWD

Reduce speed when you turn corners. The center of gravity of AWD vehicles is higher than that of conventional 2WD vehicles, making them more likely to roll over when you turn corners too fast.



OLM059022L

⚠ WARNING - Steering wheel

Do not grab the inside of the steering wheel when you are driving off-road. You may hurt your arm by a sudden steering maneuver or from steering wheel rebound due to impact with objects on the ground. You could lose control of the steering wheel.

- Always hold the steering wheel firmly when you are driving off-road.
- Make sure all passengers are wearing seat belts.

⚠ WARNING - Wind danger

If you are driving in heavy wind, the vehicle's higher center of gravity decreases your steering control capacity and requires you to drive more slowly.

- If you need to drive in the water, stop your vehicle, set your transfer to the AWD LOCK mode and drive at less than 5 mph (8 km/h).

⚠ WARNING - Driving through water

Drive slowly. If you are driving too fast in water, the water can get into the engine compartment and wet the ignition system, causing your vehicle to suddenly stop. If this happens and your vehicle is in a tilted position, your vehicle may roll over.

Excessive water in the engine can cause irreversible engine damage, which is not covered under warranty.

✻ NOTICE

- **Do not drive in water if the level is higher than the bottom of the vehicle.**
- **Check your brake condition once you are out of mud or water. Press the brake pedal several times as you move slowly until you feel normal braking forces return.**
- **Shorten your scheduled maintenance interval if you drive in off-road conditions such as sand, mud or water (see "Maintenance under severe usage conditions" in section 7). Always wash your vehicle thoroughly after off road use, especially cleaning the bottom of the vehicle.**
- **Since the driving torque is always applied to the 4 wheels the performance of the AWD vehicle is greatly affected by the condition of the tires. Be sure to equip the vehicle with four tires of the same size and type.**
- **A full time four wheel drive vehicle cannot be towed by an ordinary tow truck. Make sure that the vehicle is placed on a flat bed truck for moving.**

⚠ WARNING - AWD driving

- **Avoid high cornering speed.**
- **Do not make quick steering wheel movements, such as sharp lane changes or fast, sharp turns.**
- **The risk of rollover is greatly increased if you lose control of your vehicle at high speed.**
- **In a collision, an unbelted person is significantly more likely to die compared to a person wearing a seat belt.**
- **Loss of control often occurs if two or more wheels drop off the roadway and the driver over steers to re-enter the roadway. In the event your vehicle leaves the roadway, do not steer sharply. Instead, slow down before pulling back into the travel lanes.**

⚠ CAUTION - Mud or snow

If one of the front or rear wheels begins to spin in mud, snow, etc. the vehicle can sometimes be driven out by depressing the accelerator pedal further; however avoid running the engine continuously at high rpm because doing so could damage the AWD system.

Reducing the risk of a rollover

This multi-purpose passenger vehicle is defined as a Sports Utility Vehicle (SUV). SUV's have higher ground clearance and a narrower track to make them capable of performing in a wide variety of off-road applications. Specific design characteristics give them a higher center of gravity than ordinary vehicles. An advantage of the higher ground clearance is a better view of the road, which allows you to anticipate problems. They are not designed for cornering at the same speeds as conventional passenger vehicles, any more than low-slung sports cars are designed to perform satisfactorily in off-road conditions. Due to this risk, driver and passengers are strongly recommended to buckle their seat belts. In a rollover crash, an unbelted person is more likely to die than a person wearing a seat belt. There are steps that a driver can make to reduce the risk of a rollover. If at all possible, avoid sharp turns or abrupt maneuvers, do not load your roof rack with heavy cargo, and never modify your vehicle in any way.

⚠ WARNING - Rollover

As with other Sports Utility Vehicle (SUV), failure to operate this vehicle correctly may result in loss of control, an accident or vehicle rollover.

- **Utility vehicles have a significantly higher rollover rate than other types of vehicles.**
- **Specific design characteristics (higher ground clearance, narrower track, etc.) give this vehicle a higher center of gravity than ordinary vehicles.**
- **A SUV is not designed for cornering at the same speeds as conventional vehicles.**
- **Avoid sharp turns or abrupt maneuvers.**
- **In a rollover crash, an unbelted person is significantly more likely to die than a person wearing a seat belt. Make sure everyone in the vehicle is properly buckled up.**

⚠ WARNING

Your vehicle is equipped with tires designed to provide safe ride and handling capability. Do not use a size and type of tire and wheel that is different from the one that is originally installed on your vehicle. It can affect the safety and performance of your vehicle, which could lead to steering failure or rollover and serious injury. When replacing the tires, be sure to equip all four tires with the tire and wheel of the same size, type, tread, brand and load-carrying capacity. If you nevertheless decide to equip your vehicle with any tire/wheel combination not recommended by HYUNDAI for off road driving, you should not use these tires for highway driving.

⚠ WARNING - Jacked vehicle

While a full-time AWD vehicle is raised on a jack, never start the engine or cause the tires to rotate.

There is a danger that rotating tires touching the ground could cause the vehicle to fall off the jack and to jump forward or rearward.

- Full-time AWD vehicles must be tested on a special four wheel chassis dynamometer.

✻ NOTICE

Never engage the parking brake while performing these tests.

- A full-time AWD vehicle should not be tested on a 2WD roll tester. If a 2WD roll tester must be used, perform the following:

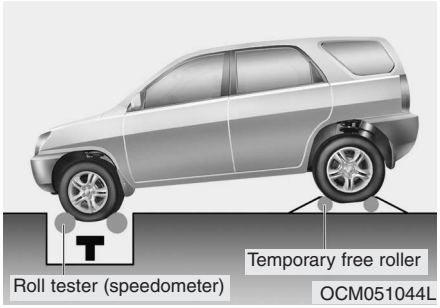

1. Check the tire pressures recommended for your vehicle.
2. Place the front wheels on the roll tester for a speedometer test as shown in the illustration.
3. Release the parking brake.
4. Place the rear wheels on the temporary free roller as shown in the illustration.

⚠ WARNING - Dynamometer testing

Keep away from the front of the vehicle while the vehicle is in gear on the dynamometer. This is very dangerous as the vehicle can jump forward and cause serious injury or death.

⚠ CAUTION

- ***When lifting up the vehicle, do not operate front and rear wheel separately. All four wheels should be operated.***
- ***If you need to operate the front wheel and rear wheel when lifting up the vehicle, you should release the parking brake.***

BRAKE SYSTEM

Power brakes

Your vehicle has power-assisted brakes that adjust automatically through normal usage.

In the event that the power-assisted brakes lose power because of a stalled engine or some other reason, you can still stop your vehicle by applying greater force to the brake pedal than you normally would. The stopping distance, however, will be longer.

When the engine is not running, the reserve brake power is partially depleted each time the brake pedal is applied. Do not pump the brake pedal when the power assist has been interrupted.

Pump the brake pedal only when necessary to maintain steering control on slippery surfaces.

⚠ WARNING - Brakes

- **Do not drive with your foot resting on the brake pedal. This will create abnormal high brake temperatures, excessive brake lining and pad wear, and increased stopping distances.**
- **When descending a long or steep hill, shift to a lower gear and avoid continuous application of the brakes. Continuous brake application will cause the brakes to overheat and could result in a temporary loss of braking performance.**
- **Wet brakes may impair the vehicle's ability to safely slow down; the vehicle may also pull to one side when the brakes are applied. Applying the brakes lightly will indicate whether they have been affected in this way. Always test your brakes in this fashion after driving through deep water. To dry the brakes, apply them lightly while maintaining a safe forward speed until brake performance returns to normal.**

In the event of brake failure

If service brakes fail to operate while the vehicle is in motion, you can make an emergency stop with the parking brake. The stopping distance, however, will be much greater than normal.

⚠ WARNING - Parking brake

Applying the parking brake while the vehicle is moving at normal speeds can cause a sudden loss of control of the vehicle. If you must use the parking brake to stop the vehicle, use great caution in applying the brake.

Disc brakes wear indicator

Your vehicle has disc brakes.

When your brake pads are worn and new pads are required, you will hear a high-pitched warning sound from your front brakes or rear brakes. You may hear this sound come and go or it may occur whenever you depress the brake pedal.

Please remember that some driving conditions or climates may cause a brake squeal when you first apply (or lightly apply) the brakes. This is normal and does not indicate a problem with your brakes.

⚠ CAUTION

- ***To avoid costly brake repairs, do not continue to drive with worn brake pads.***
- ***Always replace the front or rear brake pads as pairs.***

⚠ WARNING - Brake wear

This brake wear warning sound means your vehicle needs service. If you ignore this audible warning, you will eventually lose braking performance, which could lead to a serious accident.

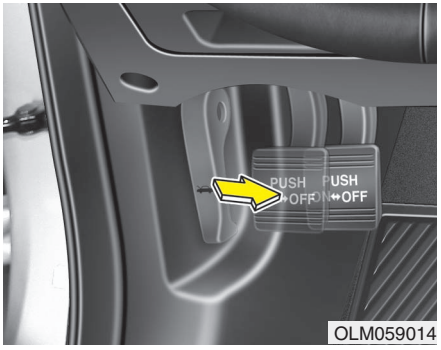

Parking brake

Applying the parking brake

■ Foot type

To engage the parking brake, first apply the foot brake and then depress the parking brake pedal down as far as possible.

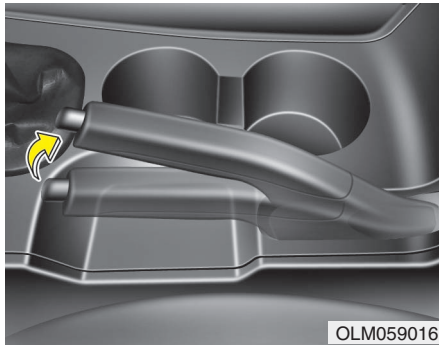

■ **Hand type**

To engage the parking brake, first apply the foot brake and then pull up the parking brake lever as far as possible.

In addition it is recommended that when parking the vehicle on an incline, the shift lever should be in the P (Park) position for Automatic transaxle, or Reverse for manual transaxle.

⚠ CAUTION

Driving with the parking brake applied will cause excessive brake pad and brake rotor wear.

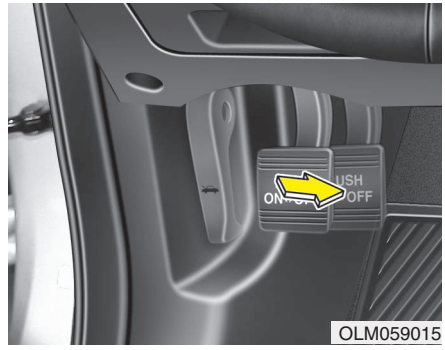

Releasing the parking brake

■ **Foot type**

To release the parking brake, depress the parking brake pedal a second time while applying the foot brake. The pedal will automatically extend to the fully released position.

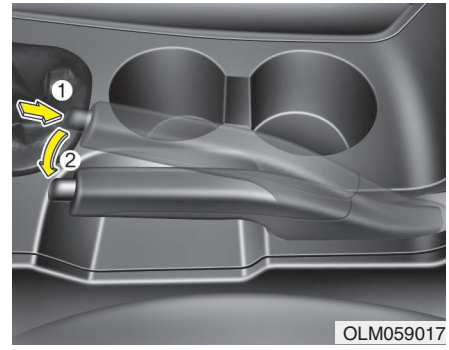

■ **Hand type**

To release the parking brake, first apply the foot brake and pull up the parking brake lever slightly. Secondly depress the release button (1) and lower the parking brake lever (2) while holding the button.

If the parking brake does not release or does not release all the way, have the system checked by an authorized HYUNDAI dealer.

⚠ WARNING

- **To prevent unintentional movement when stopped and leaving the vehicle, do not use the shift lever in place of the parking brake. Set the parking brake AND make sure the shift lever is securely positioned in P (Park).**
- **Never allow anyone who is unfamiliar with the vehicle to touch the parking brake. If the parking brake is released unintentionally, serious injury may occur.**
- **All vehicles should always have the parking brake fully engaged when parking to avoid inadvertent movement of the vehicle which can injure occupants or pedestrians.**



W-75

Check the brake warning light by turning the ignition switch ON (do not start the engine). This light will be illuminated when the parking brake is applied with the ignition switch in the START or ON position.

Before driving, be sure the parking brake is fully released and the brake warning light is off.

If the brake warning light remains on after the parking brake is released while the engine is running, there may be a malfunction in the brake system. Immediate attention is necessary.

If at all possible, cease driving the vehicle immediately. If that is not possible, use extreme caution while operating the vehicle and only continue to drive the vehicle until you can reach a safe location or repair shop.

Anti-lock brake system (ABS)

⚠ WARNING

ABS (or ESC) will not prevent accidents due to improper or dangerous driving maneuvers. Even though vehicle control is improved during emergency braking, always maintain a safe distance between you and objects ahead. Vehicle speeds should always be reduced during extreme road conditions.

The braking distance for vehicles equipped with an anti-lock braking system (or Electronic Stability Control System) may be longer than for those without it in the following road conditions.

During these conditions the vehicle should be driven at reduced speeds:

- **Rough, gravel or snow-covered roads.**
- **With tire chains installed.**

(Continued)

(Continued)

- **On roads where the road surface is pitted or has different surface height.**

The safety features of an ABS (or ESC) equipped vehicle should not be tested by high speed driving or cornering. This could endanger the safety of yourself or others.

The ABS continuously senses the speed of the wheels. If the wheels are going to lock, the ABS system repeatedly modulates the hydraulic brake pressure to the wheels.

When you apply your brakes under conditions which may lock the wheels, you may hear a “tik-tik” sound from the brakes, or feel a corresponding sensation in the brake pedal. This is normal and it means your ABS is active.

In order to obtain the maximum benefit from your ABS in an emergency situation, do not attempt to modulate your brake pressure and do not try to pump your brakes. Press your brake pedal as hard as possible or as hard as the situation allows the ABS to control the force being delivered to the brakes.

✻ NOTICE

A click sound may be heard in the engine compartment when the vehicle begins to move after the engine is started. These conditions are normal and indicate that the anti-lock brake system is functioning properly.

- Even with the anti-lock brake system, your vehicle still requires sufficient stopping distance. Always maintain a safe distance from the vehicle in front of you.
- Always slow down when cornering. The anti-lock brake system cannot prevent accidents resulting from excessive speeds.
- On loose or uneven road surfaces, operation of the anti-lock brake system may result in a longer stopping distance than for vehicles equipped with a conventional brake system.



W-78

⚠ CAUTION

- ***If the ABS warning light is on and stays on, you may have a problem with the ABS. In this case, however, your regular brakes will work normally.***
- ***The ABS warning light will stay on for approximately 3 seconds after the ignition switch is ON. During that time, the ABS will go through self-diagnosis and the light will go off if everything is normal. If the light stays on, you may have a problem with your ABS. Contact an authorized HYUNDAI dealer as soon as possible.***

⚠ CAUTION

- ***When you drive on a road having poor traction, such as an icy road, and have operated your brakes continuously, the ABS will be active continuously and the ABS warning light may illuminate. Pull your vehicle over to a safe place and stop the engine.***
- ***Restart the engine. If the ABS warning light is off, then your ABS system is normal. Otherwise, you may have a problem with the ABS. Contact an authorized HYUNDAI dealer as soon as possible.***

✻ NOTICE

When you jump start your vehicle because of a drained battery, the engine may not run as smoothly and the ABS warning light may turn on at the same time. This happens because of the low battery voltage. It does not mean your ABS is malfunctioning.

- **Do not pump your brakes!**
- **Have the battery recharged before driving the vehicle.**

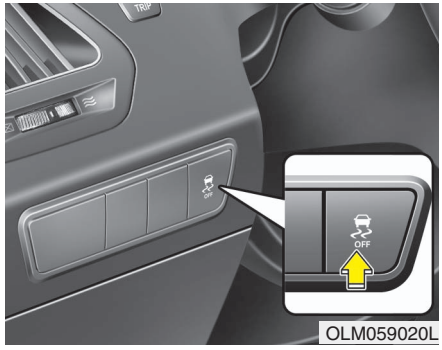

OLM059020L

Electronic stability control (ESC)

The Electronic Stability control (ESC) system is designed to stabilize the vehicle during cornering maneuvers. ESC checks where you are steering and where the vehicle is actually going. ESC applies the brakes at individual wheels and intervenes in the engine management system to stabilize the vehicle.

⚠ WARNING

Never drive too fast according to the road conditions or too quickly when cornering. Electronic stability control (ESC) will not prevent accidents. Excessive speed in turns, abrupt maneuvers and hydroplaning on wet surfaces can still result in serious accidents. Only a safe and attentive driver can prevent accidents by avoiding maneuvers that cause the vehicle to lose traction. Even with ESC installed, always follow all the normal precautions for driving - including driving at safe speeds for the conditions.

The Electronic Stability Control (ESC) system is an electronic system designed to help the driver maintain vehicle control under adverse conditions. It is not a substitute for safe driving practices. Factors including speed, road conditions and driver steering input can all affect whether ESC will be effective in preventing a loss of control. It is still your responsibility to drive and corner at reasonable speeds and to leave a sufficient margin of safety.

When you apply your brakes under conditions which may lock the wheels, you may hear a “tik-tik” sound from the brakes, or feel a corresponding sensation in the brake pedal. This is normal and it means your ESC is active.

✻ NOTICE

A click sound may be heard in the engine compartment when the vehicle begins to move after the engine is started. These conditions are normal and indicate that the Electronic Stability Control System is functioning properly.

ESC operation

ESC ON condition

-

- When the ignition is turned ON, ESC and ESC OFF indicator lights illuminate for approximately 3 seconds, then ESC is turned on.
- Press the ESC OFF button for at least half a second after turning the ignition ON to turn ESC off. (ESC OFF indicator will illuminate). To turn the ESC on, press the ESC OFF button (ESC OFF indicator light will go off).
- When starting the engine, you may hear a slight ticking sound. This is the ESC performing an automatic system self-check and does not indicate a problem.

When operating



When the ESC is in operation, the ESC indicator light blinks.

- When the Electronic Stability Control is operating properly, you can feel a slight pulsation in the vehicle. This is only the effect of brake control and indicates nothing unusual.
- When moving out of the mud or driving on a slippery road, pressing the accelerator pedal may not cause the engine rpm (revolutions per minute) to increase.

ESC operation off

ESC OFF state



- To cancel ESC operation, press the ESC OFF button (ESC OFF indicator light illuminates).
- If the ignition switch is turned to LOCK position when ESC is off, ESC remains off. Upon restarting the engine, the ESC will automatically turn on again.

■ ESC indicator light



■ ESC OFF indicator light



Indicator light

When ignition switch is turned to the ON position, the indicator light illuminates, then goes off if the ESC system is operating normally.

The ESC indicator light blinks whenever ESC is operating or illuminates when ESC fails to operate.

The ESC OFF indicator light comes on when the ESC is turned off with the button.

⚠ CAUTION

Driving with varying tire or wheel sizes may cause the ESC system to malfunction. When replacing tires, make sure they are the same size as your original tires.

Never operate the vehicle with different diameter tires installed at the same time.

⚠ WARNING

The Electronic Stability Control system is only a driving aid; use precautions for safe driving by slowing down on curved, snowy, or icy roads. Drive slowly and don't attempt to accelerate whenever the ESC indicator light is blinking, or when the road surface is slippery.

ESC OFF usage

When driving

- ESC should be turned on for daily driving whenever possible.
- To turn ESC off while driving, press the ESC OFF button while driving on a flat road surface.

⚠ WARNING

Never press the ESC OFF button while ESC is operating (ESC indicator light blinks).

If ESC is turned off while ESC is operating, the vehicle may slip out of control.

✻ NOTICE

- **When operating the vehicle on a dynamometer, ensure that the ESC is turned off (ESC OFF light illuminated). If the ESC is left on, it may prevent the vehicle speed from increasing, and result in false diagnosis.**
- **Turning the ESC off does not affect ABS or brake system operation.**

Vehicle stability management (VSM) (if equipped)

This system provides further enhancements to vehicle stability and steering responses when a vehicle is driving on a slippery road or a vehicle detected changes in coefficient of friction between right wheels and left wheels when braking.

VSM operation

When the VSM is in operation, ESC indicator light ( ) blinks.

When the vehicle stability management is operating properly, you can feel a slight pulsation in the vehicle. This is only the effect of brake control and indicates nothing unusual.

The VSM does not operate when:

- Driving on bank road such as gradient or incline
- Driving rearward
- ESC OFF indicator light ( ) remains on the instrument cluster
- EPS indicator light remains on the instrument cluster

VSM operation off

If you press the ESC OFF button to turn off the ESC, the VSM will also cancel and the ESC OFF indicator light ( ) illuminates.

To turn on the VSM, press the button again. The ESC OFF indicator light goes out.

Malfunction indicator

The VSM can be deactivated even if you don't cancel the VSM operation by pressing the ESC OFF button. It indicates that a malfunction has been detected somewhere in the Electric Power Steering system or VSM system. If the ESC indicator light ( ) or EPS warning light remains on, take your vehicle to an authorized HYUNDAI dealer and have the system checked.

✻ NOTICE

- **The VSM is designed to function above approximately 15 km/h (9 mph) on curves.**
- **The VSM is designed to function above approximately 30 km/h (18 mph) when a vehicle is braking on a split-mu road. The split-mu road is made of surfaces which have different friction forces.**

⚠ WARNING

- **The Vehicle Stability Management system is not a substitute for safe driving practices but a supplementary function only. It is the responsibility of the driver to always check the speed and the distance to the vehicle ahead. Always hold the steering wheel firmly while driving.**
- **Your vehicle is designed to activate according to the driver's intention, even with installed VSM. Always follow all the normal precautions for driving at safe speeds for the conditions – including driving inclement weather and on a slippery road.**
- **Driving with varying tire or wheel sizes may cause the VSM system to malfunction. When replacing tires, make sure they are the same size as your original tires.**

Hill-start assist control (HAC) (if equipped)

A vehicle has the tendency to slip back on a steep hill when the driver begins to accelerate after a stop. The Hill-start Assist Control (HAC) prevents the vehicle from slipping back by operating the brakes automatically for about 2 seconds. The brakes are released when the accelerator pedal is depressed or after about 2 seconds.

⚠ WARNING

The HAC is activated only for about 2 seconds, so always depress the accelerator pedal to begin accelerating after a stop.

✻ NOTICE

- **The HAC does not operate when the transaxle shift lever is in the P (Park) or N (Neutral) position.**
- **The HAC activates even though the ESC is off but it does not activate when the ESC has malfunctioned.**

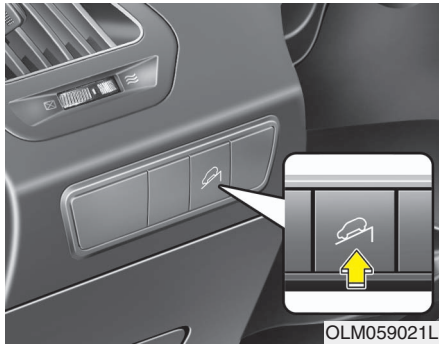

Downhill brake control (DBC) (if equipped)

The Downhill Brake Control (DBC) helps the driver descend steep hills and is activated at speeds less then 22 mph.

DBC defaults to the OFF position whenever the ignition is turned on.

The DBC can be turned on or off by pushing the button.

Mode	Indicator light	Description
Standby	 illuminated	Press the DBC button when the vehicle speed is under 25 mph (40 km/h). The DBC system will turn ON and enter the standby mode. The system does not turn ON if the vehicle speed is over 25 mph (40 km/h).
Activated	 blinks	In the standby mode, if the vehicle speed is under 22 mph (35 km/h) while driving down a steep hill, the DBC will activate automatically.
Temporarily deactivated	 illuminated	In the activated mode, the DBC will temporarily deactivate under the following conditions: • The hill is not steep enough. • The brake pedal or accelerator pedal is depressed. If the above conditions are gone, the DBC will automatically activate again.
OFF	 not illuminated	The DBC will turn OFF under the following conditions: • The DBC button is pressed again. • The vehicle speed is over 38 mph (60 km/h).

⚠ WARNING

If the DBC red indicator light illuminates, the system has overheated or there is an operational problem. The DBC will not activate. If the DBC red indicator light illuminates even though the DBC system has cooled, have the system checked by an authorized HYUNDAI dealer.

✻ NOTICE

- **The DBC does not turn ON in the P (Park) position.**
- **The DBC may not activate if the ESC (or BAS) is activated.**
- **Noise or vibration may occur from the brakes when the DBC is activated.**
- **The rear stop light comes on when the DBC is activated.**
- **On a very steep hill even though the brake pedal or accelerator pedal is depressed the DBC may not deactivate.**
- **Always turn OFF the DBC on normal roads. The DBC might activate from the standby mode during abrupt corning or driving over speed bumps.**
- **DBC may activate and cause the engine to stop in vehicles with manual transaxles if driving in 3rd gear (or above) with DBC on. Do not turn on DBC when driving in 3rd gear (or above).**

Good braking practices

⚠ WARNING

- **Whenever you leave or park your vehicle, always set the parking brake as far as possible and fully engage the vehicle's transaxle into the P (Park) position or in first or reverse (manual transaxle). If the parking brake is not fully engaged, the vehicle may move inadvertently and injure yourself and others.**
- **All vehicles should always have the parking brake fully engaged when parking to avoid inadvertent movement of the vehicle which can injure occupants or pedestrians.**

- Check to be sure the parking brake is not engaged and that the parking brake indicator light is out before driving away.
- Driving through water may get the brakes wet. They can also get wet when the vehicle is washed. Wet brakes can be dangerous! Your vehicle will not stop as quickly if the brakes are wet. Wet brakes may cause the vehicle to pull to one side.

  To dry the brakes, apply the brakes lightly until the braking action returns to normal, taking care to keep the vehicle under control at all times. If the braking action does not return to normal, stop as soon as it is safe to do so and call an authorized HYUNDAI dealer for assistance.
- Don't coast down hills with the vehicle out of gear. This is extremely hazardous. Keep the vehicle in gear at all times, use the brakes to slow down, then shift to a lower gear so that engine braking will help you maintain a safe speed.
- Don't "ride" the brake pedal. Resting your foot on the brake pedal while driving can be dangerous because the brakes might overheat and lose their effectiveness. It also increases the wear of the brake components.
- If a tire goes flat while you are driving, apply the brakes gently and keep the vehicle pointed straight ahead while you slow down. When you are moving slowly enough for it to be safe to do so, pull off the road and stop in a safe place.
- If your vehicle is equipped with an automatic transaxle, don't let your vehicle creep forward. To avoid creeping forward, keep your foot firmly on the brake pedal when the vehicle is stopped.
- Be cautious when parking on a hill. Firmly engage the parking brake and place the shift lever in P (automatic transaxle) or in first or reverse gear (manual transaxle). If your vehicle is facing downhill, turn the front wheels into the curb to help keep the vehicle from rolling. If your vehicle is facing uphill, turn the front wheels away from the curb to help keep the vehicle from rolling. If there is no curb or if it is required by other conditions to keep the vehicle from rolling, block the wheels.
- Under some conditions your parking brake can freeze in the engaged position. This is most likely to happen when there is an accumulation of snow or ice around or near the rear brakes or if the brakes are wet. If there is a risk that the parking brake may freeze, apply it only temporarily while you put the shift lever in P (automatic transaxle) or in first or reverse gear (manual transaxle) and block the rear wheels so the vehicle cannot roll. Then release the parking brake.
- Do not hold the vehicle on the upgrade with the accelerator pedal. This can cause the transaxle to overheat. Always use the brake pedal or parking brake.

CRUISE CONTROL SYSTEM



1. Cruise indicator
2. Cruise set indicator

The cruise control system allows you to program the vehicle to maintain a constant speed without pressing the accelerator pedal.
This system is designed to function above approximately 25 mph (40 km/h).

⚠ WARNING

- **If the cruise control is left on, (CRUISE indicator light in the instrument cluster illuminated) the cruise control can be switched on accidentally. Keep the cruise control system off (CRUISE indicator light OFF) when the cruise control is not in use, to avoid inadvertently setting a speed.**
- **Use the cruise control system only when traveling on open highways in good weather.**
- **Do not use the cruise control when it may not be safe to keep the vehicle at a constant speed, for instance, driving in heavy or varying traffic, or on slippery (rainy, icy or snow-covered) or winding roads or over 6% up-hill or down-hill roads.**
- **Pay particular attention to the driving conditions whenever using the cruise control system.**
- **Be careful when driving downhill using the cruise control system, which may increase the vehicle speed.**

⚠ CAUTION

During cruise-speed driving of a manual transaxle vehicle, do not shift into neutral without depressing the clutch pedal, since the engine will be overrevved. If this happens, depress the clutch pedal or release the cruise control ON-OFF switch.

✻ NOTICE

During normal cruise control operation, when the SET switch is activated or reactivated after applying the brakes, the cruise control will energize after approximately 3 seconds. This delay is normal.

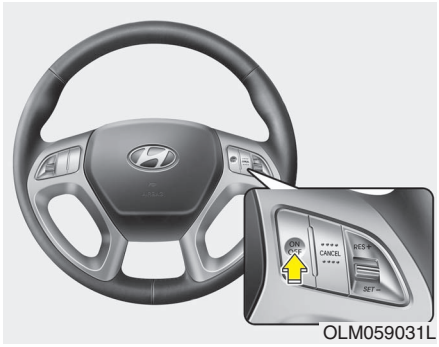

OLM059031L

To set cruise control speed:

1. Push the CRUISE ON-OFF button on the steering wheel to turn the system on. The CRUISE indicator light in the instrument cluster will illuminate.
2. Accelerate to the desired speed, which must be more than 25 mph (40 km/h).



OLM059033L

3. Move the lever (1) down (to SET-), and release it at the desired speed. The SET indicator light in the instrument cluster will illuminate. Release the accelerator at the same time. The desired speed will automatically be maintained.

On a steep grade, the vehicle may slow down or speed up slightly while going downhill.



OLM059032L

To increase cruise control set speed:

Follow either of these procedures:

- Move the lever (1) up (to RES+) and hold it. Your vehicle will accelerate. Release the lever at the speed you want.
- Move the lever (1) up (to RES+) and release it immediately. The cruising speed will increase by 1.0 mph (1.6 km/h) each time you move the lever up (to RES+) in this manner.



OLM059033L

To decrease the cruising speed:

Follow either of these procedures:

- Move the lever (1) down (to SET-) and hold it. Your vehicle will gradually slow down. Release the lever at the speed you want to maintain.
- Move the lever (1) down (to SET-) and release it immediately. The cruising speed will decrease by 1.0 mph (1.6 km/h) each time you move the lever down (to SET-) in this manner.

To temporarily accelerate with the cruise control on:

If you want to speed up temporarily when the cruise control is on, depress the accelerator pedal. Increased speed will not interfere with cruise control operation or change the set speed.

To return to the set speed, take your foot off the accelerator.



OLM059034L

To cancel cruise control, do one of the following:

- Press the brake pedal.
- Press the clutch pedal with a manual transaxle.
- Shift into N (Neutral) with an automatic transaxle.
- Press the CANCEL switch located on the steering wheel.
- Decrease the vehicle speed lower than the memory speed by 9 mph (15 km/h).
- Decrease the vehicle speed to less than approximately 25 mph (40 km/h).

Each of these actions will cancel cruise control operation (the SET indicator light in the instrument cluster will go off), but it will not turn the system off. If you wish to resume cruise control operation, move up the lever (to RES+) located on your steering wheel. You will return to your previously preset speed.



OLM059032L

To resume cruising speed at more than approximately 25 mph (40 km/h):

If any method other than the CRUISE ON-OFF switch was used to cancel cruising speed and the system is still activated, the most recent set speed will automatically resume when you move the lever (1) up (to RES+).

It will not resume, however, if the vehicle speed has dropped below approximately 25 mph (40 km/h).

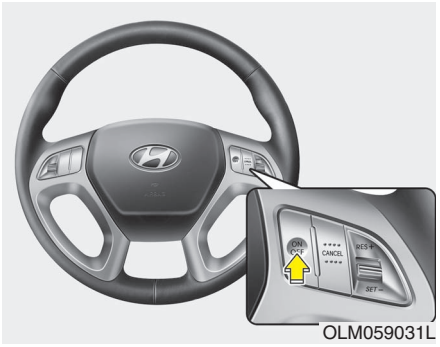

OLM059031L

To turn cruise control off, do one of the following:

- Push the CRUISE ON-OFF button (the CRUISE indicator light in the instrument cluster will go off).
- Turn the ignition off.

Both of these actions will cancel the cruise control operation. If you want to resume the cruise control operation, repeat the steps provided in "To set cruise control speed" on the previous page.

ECONOMICAL OPERATION

Your vehicle's fuel economy depends mainly on your style of driving, where you drive and when you drive.

Each of these factors affects how many miles (kilometers) you can get from a gallon (liter) of fuel. To operate your vehicle as economically as possible, use the following driving suggestions to help save money in both fuel and repairs:

- Drive smoothly. Accelerate at a moderate rate. Don't make "jack-rabbit" starts or full-throttle shifts and maintain a steady cruising speed. Don't race between stoplights. Try to adjust your speed to the traffic so you don't have to change speeds unnecessarily. Avoid heavy traffic whenever possible. Always maintain a safe distance from other vehicles so you can avoid unnecessary braking. This also reduces brake wear.
- Drive at a moderate speed. The faster you drive the more fuel your vehicle uses. Driving at a moderate speed, in the highest gear appropriate for the conditions, especially on the highway, is one of the most effective ways to reduce fuel consumption.
- Don't "ride" the brake pedal or clutch pedal. This can increase fuel consumption and also increase wear on these components. In addition, driving with your foot resting on the brake pedal may cause the brakes to overheat, which reduces their effectiveness and may lead to more serious consequences.
- Take care of your tires. Keep them inflated to the recommended pressure. Incorrect inflation, either too much or too little, results in unnecessary tire wear. Check the tire pressures at least once a month.
- Be sure that the wheels are aligned correctly. Improper alignment can result from hitting curbs or driving too fast over irregular surfaces. Poor alignment causes faster tire wear and may also result in other problems as well as greater fuel consumption.
- Keep your vehicle in good condition. For better fuel economy and reduced maintenance costs, maintain your vehicle in accordance with the maintenance schedule in section 7. If you drive your vehicle in severe conditions, more frequent maintenance is required (see section 7 for details).
- Keep your vehicle clean. For maximum service, your vehicle should be kept clean and free of corrosive materials. It is especially important that mud, dirt, ice, etc. not be allowed to accumulate on the underside of the vehicle. This extra weight can result in increased fuel consumption and also contribute to corrosion.
- Travel lightly. Don't carry unnecessary weight in your vehicle. Weight reduces fuel economy.
- Don't let the engine idle longer than necessary. If you are waiting (and not in traffic), turn off your engine and restart only when you're ready to go.

- Remember, your vehicle does not require extended warm-up. After the engine has started, allow the engine to run for 10 to 20 seconds prior to placing the vehicle in gear. In very cold weather, however, give your engine a slightly longer warm-up period.
- Don't "lug" or "over-rev" the engine. Lugging is driving too slowly in too high a gear resulting in the engine bucking. If this happens, shift to a lower gear. Over-revving is racing the engine beyond its safe limit. This can be avoided by shifting at the recommended speeds.
- Use your air conditioning sparingly. The air conditioning system is operated by engine power so your fuel economy is reduced when you use it.
- Open windows at high speeds can reduce fuel economy.
- Fuel economy is less in crosswinds and headwinds. To help offset some of this loss, slow down when driving in these conditions.

Keeping a vehicle in good operating condition is important both for economy and safety. Therefore, have an authorized HYUNDAI dealer perform scheduled inspections and maintenance.

⚠ WARNING - Engine off during motion

Never turn the engine off to coast down hills or anytime the vehicle is in motion. The power steering and power brakes will not function properly without the engine running. Instead, keep the engine on and downshift to an appropriate gear for engine braking effect. In addition, turning off the ignition while driving could engage the steering wheel lock resulting in loss of vehicle steering which could cause serious injury or death.

SPECIAL DRIVING CONDITIONS


1VQA3002

Hazardous driving conditions

When hazardous driving conditions are encountered such as water, snow, ice, mud, sand, or similar hazards, follow these suggestions:

- Drive cautiously and allow extra distance for braking.
- Avoid sudden braking or steering.
- When braking with non-ABS brakes pump the brake pedal with a light up-and-down motion until the vehicle is stopped.

⚠ WARNING - ABS

Do not pump the brake pedal on a vehicle equipped with ABS.

- If stalled in snow, mud, or sand, use second gear. Accelerate slowly to avoid spinning the drive wheels.
- Use sand, rock salt, tire chains, or other non-slip material under the drive wheels to provide traction when stalled in ice, snow, or mud.

⚠ WARNING - Downshifting

Downshifting with an automatic transaxle, while driving on slippery surfaces can cause an accident. The sudden change in tire speed could cause the tires to skid. Be careful when downshifting on slippery surfaces.

Rocking the vehicle

If it is necessary to rock the vehicle to free it from snow, sand, or mud, first turn the steering wheel right and left to clear the area around your front wheels. Then, shift back and forth between 1st (First) and R (Reverse) and any forward gear in vehicles equipped with an automatic transaxle. Do not race the engine, and spin the wheels as little as possible. If you are still stuck after a few tries, have the vehicle pulled out by a tow vehicle to avoid engine overheating and possible damage to the transaxle.

⚠ CAUTION

Prolonged rocking may cause engine over-heating, transaxle damage or failure, and tire damage.

⚠ WARNING - Spinning tires

Do not spin the wheels, especially at speeds more than 35 mph (56 km/h). Spinning the wheels at high speeds when the vehicle is stationary could cause a tire to overheat which could result in tire damage that may injure bystanders.

✻ NOTICE

The ESC system should be turned OFF prior to rocking the vehicle.

⚠ WARNING

If your vehicle becomes stuck in snow, mud, sand, etc., then you may attempt to rock the vehicle free by moving it forward and backward. Do not attempt this procedure if people or objects are anywhere near the vehicle. During the rocking operation the vehicle may suddenly move forward or backward as it becomes unstuck, causing injury or damage to nearby people or objects.


ORV047004

Smooth cornering

Avoid braking or gear changing in corners, especially when roads are wet. Ideally, corners should always be taken under gentle acceleration. If you follow these suggestions, tire wear will be held to a minimum.


OCM053010

Driving at night

Because night driving presents more hazards than driving in the daylight, here are some important tips to remember:

- Slow down and keep more distance between you and other vehicles, as it may be more difficult to see at night, especially in areas where there may not be any street lights.

- Adjust your mirrors to reduce the glare from other driver's headlights.
- Keep your headlights clean and properly aimed. Dirty or improperly aimed headlights will make it much more difficult to see at night. Headlight operation when using windshield wipers is mandatory in some states.
- Avoid staring directly at the headlights of oncoming vehicles. You could be temporarily blinded, and it will take several seconds for your eyes to readjust to the darkness.


1VQA3003

Driving in the rain

Rain and wet roads can make driving dangerous, especially if you're not prepared for the slick pavement. Here are a few things to consider when driving in the rain:

- A heavy rainfall will make it harder to see and will increase the distance needed to stop your vehicle, so slow down.
- Keep your windshield wiping equipment in good shape. Replace your windshield wiper blades when they show signs of streaking or missing areas on the windshield.
- If your tires are not in good condition, making a quick stop on wet pavement can cause a skid and possibly lead to an accident. Be sure your tires are in good shape.
- Turn on your headlights to make it easier for others to see you.
- Driving too fast through large puddles can affect your brakes. If you must go through puddles, try to drive through them slowly.
- If you believe you may have gotten your brakes wet, apply them lightly while driving until normal braking operation returns.

Driving in flooded areas

Avoid driving through flooded areas unless you are sure the water is no higher than the bottom of the wheel hub. Drive through any water slowly. Allow adequate stopping distance because brake performance may be affected.

After driving through water, dry the brakes by gently applying them several times while the vehicle is moving slowly.

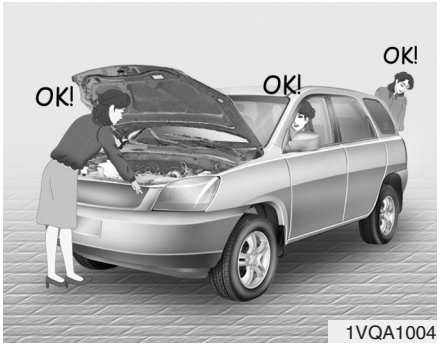

Highway driving

Tires

Adjust the tire inflation pressures to specification. Low tire inflation pressures will result in overheating and possible failure of the tires.

Avoid using worn or damaged tires which may result in reduced traction or tire failure.

✻ NOTICE

Never exceed the maximum tire inflation pressure shown on the tires.

⚠ WARNING

- **Underinflated or overinflated tires can cause poor handling, loss of vehicle control, and sudden tire failure leading to accidents, injuries, and even death. Always check tires for proper inflation before driving. For proper tire pressures, refer to "Tires and wheels" in section 8.**
- **Driving on tires with no or insufficient tread is dangerous. Worn-out tires can result in loss of vehicle control, collisions, injury, and even death. Worn-out tires should be replaced as soon as possible and should never be used for driving. Always check the tire tread before driving your car. For further information and tread limits, refer to "Tires and wheels" in section 7.**

Fuel, engine coolant and engine oil

High speed travel consumes more fuel than urban motoring. Do not forget to check both engine coolant and engine oil.

Drive belt

A loose or damaged drive belt may result in overheating of the engine.

WINTER DRIVING

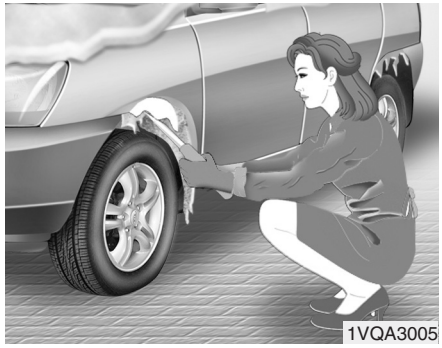

The more severe weather conditions of winter result in greater wear and other problems. To minimize the problems of winter driving, you should follow these suggestions:

Snowy or icy conditions

To drive your vehicle in deep snow, it may be necessary to use snow tires or to install tire chains on your tires. If snow tires are needed, it is necessary to select tires equivalent in size and type of the original equipment tires. Failure to do so may adversely affect the safety and handling of your vehicle. Furthermore, speeding, rapid acceleration, sudden brake applications, and sharp turns are potentially very hazardous practices.
During deceleration, use engine braking to the fullest extent. Sudden brake applications on snowy or icy roads may cause skids to occur. You need to keep sufficient distance between the vehicle in operation in front and your vehicle. Also, apply the brake gently. It should be noted that installing tire chains on the tire will provide a greater driving force, but will not prevent side skids.

✻ NOTICE

Tire chains are not legal in all states. Check state laws before fitting tire chains.

Snow tires

If you mount snow tires on your vehicle, make sure they are radial tires of the same size and load range as the original tires. Mount snow tires on all four wheels to balance your vehicle's handling in all weather conditions. Keep in mind that the traction provided by snow tires on dry roads may not be as high as your vehicle's original equipment tires. You should drive cautiously even when the roads are clear. Check with the tire dealer for maximum speed recommendations.

⚠ WARNING - Snow tire size

Snow tires should be equivalent in size and type to the vehicle's standard tires. Otherwise, the safety and handling of your vehicle may be adversely affected.

Do not install studded tires without first checking local, state and municipal regulations for possible restrictions against their use.



Tire chains

Since the sidewalls of radial tires are thinner, they can be damaged by mounting some types of snow chains on them. Therefore, the use of snow tires is recommended instead of snow chains. Do not mount tire chains on vehicles equipped with aluminum wheels; snow chains may cause damage to the wheels. If snow chains must be used, use wire-type chains with a thickness of less than 0.59 in (15 mm). Damage to your vehicle caused by improper snow chain use is not covered by your vehicle manufacturers warranty.

When using tire chains, attach them to the drive wheels as follows.

2WD : Front wheels

AWD : All four wheels

If a full set of chains is not available for an AWD vehicle, chains may be installed on the front wheels only.

⚠ CAUTION

- ***Make sure the snow chains are the correct size and type for your tires. Incorrect snow chains can cause damage to the vehicle body and suspension and may not be covered by your vehicle manufacturer warranty. Also, the snow chain connecting hooks may be damaged from contacting vehicle components causing the snow chains to come loose from the tire. Make sure the snow chains are SAE class "S" certified.***
- ***Always check chain installation for proper mounting after driving approximately 0.3 to 0.6 miles (0.5 to 1 km) to ensure safe mounting. Retighten or remount the chains if they are loose.***

Chain installation

When installing chains, follow the manufacturer's instructions and mount them as tightly as you can. Drive slowly with chains installed. If you hear the chains contacting the body or chassis, stop and tighten them. If they still make contact, slow down until it stops. Remove the chains as soon as you begin driving on cleared roads.

⚠ WARNING
- Mounting chains

When mounting snow chains, park the vehicle on level ground away from traffic. Turn on the vehicle Hazard Warning flashers and place a triangular emergency warning device behind the vehicle if available. Always place the vehicle in P (Park), apply the parking brake and turn off the engine before installing snow chains.

⚠ WARNING - Tire chains

- **The use of chains may adversely affect vehicle handling.**
- **Do not exceed 20 mph (30 km/h) or the chain manufacturer's recommended speed limit, whichever is lower.**
- **Drive carefully and avoid bumps, holes, sharp turns, and other road hazards, which may cause the vehicle to bounce.**
- **Avoid sharp turns or locked-wheel braking.**

⚠ CAUTION

- ***Chains that are the wrong size or improperly installed can damage your vehicle's brake lines, suspension, body and wheels.***
- ***Stop driving and retighten the chains any time you hear them hitting the vehicle.***

Use high quality ethylene glycol coolant

Your vehicle is delivered with high quality ethylene glycol coolant in the cooling system. It is the only type of coolant that should be used because it helps prevent corrosion in the cooling system, lubricates the water pump and prevents freezing. Be sure to replace or replenish your coolant in accordance with the maintenance schedule in section 7. Before winter, have your coolant tested to assure that its freezing point is sufficient for the temperatures anticipated during the winter.

Check battery and cables

Winter puts additional burdens on the battery system. Visually inspect the battery and cables as described in section 7. The level of charge in your battery can be checked by an authorized HYUNDAI dealer or a service station.

Change to "winter weight" oil if necessary

In some climates it is recommended that a lower viscosity "winter weight" oil be used during cold weather. See section 8 for recommendations. If you aren't sure what weight oil you should use, consult an authorized HYUNDAI dealer.

Check spark plugs and ignition system

Inspect your spark plugs as described in section 7 and replace them if necessary. Also check all ignition wiring and components to be sure they are not cracked, worn or damaged in any way.

To keep locks from freezing

To keep the locks from freezing, squirt an approved de-icer fluid or glycerine into the key opening. If a lock is covered with ice, squirt it with an approved de-icing fluid to remove the ice. If the lock is frozen internally, you may be able to thaw it out by using a heated key. Handle the heated key with care to avoid injury.

Use approved window washer anti-freeze in system

To keep the water in the window washer system from freezing, add an approved window washer anti-freeze solution in accordance with instructions on the container. Window washer anti-freeze is available from an authorized HYUNDAI dealer and most auto parts outlets. Do not use engine coolant or other types of anti-freeze as these may damage the paint finish.

Don't let your parking brake freeze

Under some conditions your parking brake can freeze in the engaged position. This is most likely to happen when there is an accumulation of snow or ice around or near the rear brakes or if the brakes are wet. If there is a risk the parking brake may freeze, apply it only temporarily while you put the shift lever in P (automatic transaxle) or in first or reverse gear (manual transaxle) and block the rear wheels so the car cannot roll. Then release the parking brake.

Don't let ice and snow accumulate underneath

Under some conditions, snow and ice can build up under the fenders and interfere with the steering. When driving in severe winter conditions where this may happen, you should periodically check underneath the vehicle to be sure the movement of the front wheels and the steering components is not obstructed.

Carry emergency equipment

Depending on the severity of the weather, you should carry appropriate emergency equipment. Some of the items you may want to carry include tire chains, tow straps or chains, flashlight, emergency flares, sand, a shovel, jumper cables, a window scraper, gloves, ground cloth, coveralls, a blanket, etc.

TRAILER TOWING

If you are considering towing with your vehicle, you should first check with your state's Department of Motor Vehicles to determine their legal requirements.

Since laws vary from state to state the requirements for towing trailers, cars, or other types of vehicles or apparatus may differ. Ask an authorized HYUNDAI dealer for further details before towing.

⚠ WARNING - Towing a trailer

If you don't use the correct equipment and drive improperly, you can lose control when you pull a trailer. For example, if the trailer is too heavy, the brakes may not work well - or even at all. You and your passengers could be seriously or fatally injured. Pull a trailer only if you have followed all the steps in this section.

⚠ WARNING - Weight limits

Before towing, make sure the total trailer weight, GCW (gross combination weight), GVW (gross vehicle weight), GAW (gross axle weight) and trailer tongue load are all within the limits.

⚠ CAUTION

Pulling a trailer improperly can damage your vehicle and result in costly repairs not covered by your warranty. To pull a trailer correctly, follow the advice in this section.

Your vehicle can tow a trailer. To identify what the vehicle trailering capacity is for your vehicle, you should read the information in "Weight of the trailer" that appears later in this section.

Remember that trailering is different than just driving your vehicle by itself. Trailering means changes in handling, durability, and fuel economy. Successful, safe trailering requires correct equipment, and it has to be used properly.

This section contains many time-tested, important trailering tips and safety rules. Many of these are important for your safety and that of your passengers. Please read this section carefully before you pull a trailer.

Load-pulling components such as the engine, transaxle, wheel assemblies, and tires are forced to work harder against the load of the added weight. The engine is required to operate at relatively higher speeds and under greater loads. This additional burden generates extra heat. The trailer also adds considerably to wind resistance, increasing the pulling requirements.

Hitches

It's important to have the correct hitch equipment. Crosswinds, large trucks going by, and rough roads are a few reasons why you'll need the right hitch. Here are some rules to follow:

- Will you have to make any holes in the body of your vehicle when you install a trailer hitch? If you do, then be sure to seal the holes later when you remove the hitch.

  If you don't seal them, deadly carbon monoxide (CO) from your exhaust can get into your vehicle, as well as dirt and water.
- The bumpers on your vehicle are not intended for hitches. Do not attach rental hitches or other bumper-type hitches to them. Use only a frame-mounted hitch that does not attach to the bumper.
- HYUNDAI trailer hitch accessory is available at an authorized HYUNDAI dealer.

Safety chains

You should always attach chains between your vehicle and your trailer. Cross the safety chains under the tongue of the trailer so that the tongue will not drop to the road if it becomes separated from the hitch.

Instructions about safety chains may be provided by the hitch manufacturer or by the trailer manufacturer. Follow the manufacturer's recommendation for attaching safety chains. Always leave just enough slack so you can turn with your trailer. And, never allow safety chains to drag on the ground.

Trailer brakes

If your trailer is equipped with a braking system, make sure it conforms to federal and/or local regulations and that it is properly installed and operating correctly.

If your trailer weight exceeds the maximum allowed weight without trailer brakes, then the trailer will also require its own brakes as well. Be sure to read and follow the instructions for the trailer brakes so you'll be able to install, adjust and maintain them properly.

- Don't tap into your vehicle's brake system.

⚠ WARNING - Trailer brakes

Do not use a trailer with its own brakes unless you are absolutely certain that you have properly set up the brake system. This is not a task for amateurs. Use an experienced, competent trailer shop for this work.

Driving with a trailer

Towing a trailer requires a certain amount of experience. Before setting out for the open road, you must get to know your trailer. Acquaint yourself with the feel of handling and braking with the added weight of the trailer. And always keep in mind that the vehicle you are driving is now a good deal longer and not nearly so responsive as your vehicle is by itself.

Before you start, check the trailer hitch and platform, safety chains, electrical connector(s), lights, tires and mirror adjustment. If the trailer has electric brakes, start your vehicle and trailer moving and then apply the trailer brake controller by hand to be sure the brakes are working. This lets you check your electrical connection at the same time.

During your trip, check occasionally to be sure that the load is secure, and that the lights and any trailer brakes are still working.

Following distance

Stay at least twice as far behind the vehicle ahead as you would when driving your vehicle without a trailer. This can help you avoid situations that require heavy braking and sudden turns.

Passing

You'll need more passing distance up ahead when you're towing a trailer. And, because of the increased vehicle length, you'll need to go much farther beyond the passed vehicle before you can return to your lane. Due to the added load to the engine when going uphill the vehicle may also take longer to pass than it would on flat ground.

Backing up

Hold the bottom of the steering wheel with one hand. Then, to move the trailer to the left, just move your hand to the left. To move the trailer to the right, move your hand to the right. Always back up slowly and, if possible, have someone guide you.

Making turns

When you're turning with a trailer, make wider turns than normal. Do this so your trailer won't strike soft shoulders, curbs, road signs, trees, or other objects. Avoid jerky or sudden maneuvers. Signal well in advance before turning or lane changes.

Turn signals when towing a trailer

When you tow a trailer, your vehicle has to have a different turn signal flasher and extra wiring. The green arrows on your instrument panel will flash whenever you signal a turn or lane change. Properly connected, the trailer lights will also flash to alert other drivers you're about to turn, change lanes, or stop.

When towing a trailer, the green arrows on your instrument panel will flash for turns even if the bulbs on the trailer are burned out. Thus, you may think drivers behind you are seeing your signals when, in fact, they are not. It's important to check occasionally to be sure the trailer bulbs are still working. You must also check the lights every time you disconnect and then reconnect the wires.

Do not connect a trailer lighting system directly to your vehicle's lighting system. Use only an approved trailer wiring harness.

An authorized HYUNDAI dealer can assist you in installing the wiring harness.

⚠ WARNING

Failure to use an approved trailer wiring harness could result in damage to the vehicle electrical system and/or personal injury.

Driving on grades

Reduce speed and shift to a lower gear before you start down a long or steep downgrade. If you don't shift down, you might have to use your brakes so much that they would get hot and no longer operate efficiently.

On a long uphill grade, shift down and reduce your speed to around 45 mph (70 km/h) to reduce the possibility of engine and transaxle overheating.

If your trailer weighs more than the maximum trailer weight without trailer brakes and you have an automatic transaxle, you should drive in D (Drive) when towing a trailer.

Operating your vehicle in D (Drive) when towing a trailer will minimize heat build up and extend the life of your transaxle.

⚠ CAUTION

- ***When towing a trailer on steep grades (in excess of 6%) pay close attention to the engine coolant temperature gauge to ensure the engine does not overheat. If the needle of the coolant temperature gauge moves across the dial towards "H" (HOT), pull over and stop as soon as it is safe to do so, and allow the engine to idle until it cools down. You may proceed once the engine has cooled sufficiently.***
- ***You must decide driving speed depending on trailer weight and uphill grade to reduce the possibility of engine and transaxle overheating.***

Parking on hills

Generally, if you have a trailer attached to your vehicle, you should not park your vehicle on a hill. People can be seriously or fatally injured, and both your vehicle and the trailer can be damaged if they unexpectedly roll down hill.

⚠ WARNING - Parking on a hill

Parking your vehicle on a hill with a trailer attached could cause serious injury or death, should the trailer break loose or brake stops working.

However, if you ever have to park your trailer on a hill, here's how to do it:

1. Pull the vehicle into the parking space. Turn the steering wheel in the direction of the curb (right if headed down hill, left if headed up hill).
2. If the vehicle has a manual transaxle, place the car in neutral. If the vehicle has an automatic transaxle, place the car in P (Park).
3. Set the parking brake and shut off the vehicle.
4. Place chocks under the trailer wheels on the down hill side of the wheels.
5. Start the vehicle, hold the brakes, shift to neutral, release the parking brake and slowly release the brakes until the trailer chocks absorb the load.
6. Reapply the brakes, reapply the parking brake and shift the vehicle to R (Reverse) for manual transaxle or P (Park) automatic transaxle.

7. Shut off the vehicle and release the vehicle brakes but leave the parking brake set.

⚠ WARNING - Parking brake

It can be dangerous to get out of your vehicle if the parking brake is not firmly set.

If you have left the engine running, the vehicle can move suddenly. You or others could be seriously or fatally injured.

When you are ready to leave after parking on a hill

1. With the manual transaxle in Neutral or automatic transaxle in P (Park), apply your brakes and hold the brake pedal down while you:
   - Start your engine;
   - Shift into gear; and
   - Release the parking brake.
2. Slowly remove your foot from the brake pedal.
3. Drive slowly until the trailer is clear of the chocks.
4. Stop and have someone pick up and store the chocks.

Maintenance when trailer towing

Your vehicle will need service more often when you regularly pull a trailer. Important items to pay particular attention to include engine oil, automatic transaxle fluid, axle lubricant and cooling system fluid. Brake condition is another important item to frequently check. Each item is covered in this manual, and the Index will help you find them quickly. If you're trailering, it's a good idea to review these sections before you start your trip.

Don't forget to also maintain your trailer and hitch. Follow the maintenance schedule that accompanied your trailer and check it periodically. Preferably, conduct the check at the start of each day's driving. Most importantly, all hitch nuts and bolts should be tight.

⚠ CAUTION

- ***Due to higher load during trailer usage, overheating might occur in hot days or during uphill driving. If the coolant gauge indicates over-heating, switch off the A/C and stop the vehicle in a safe area to cool down the engine.***
- ***When towing check transaxle fluid more frequently.***
- ***If your vehicle is not equipped with air conditioning, you should install a condenser fan to improve engine performance when towing a trailer.***

If you do decide to pull a trailer

Here are some important points if you decide to pull a trailer:

- Consider using a sway control. You can ask a hitch dealer about sway control.
- Do not do any towing with your car during its first 1,200 miles (2,000 km) in order to allow the engine to properly break in. Failure to heed this caution may result in serious engine or transaxle damage.
- When towing a trailer, be sure to consult an authorized HYUNDAI dealer for further information on additional requirements such as a towing kit, etc.
- Always drive your vehicle at a moderate speed (less than 60 mph / 100 km/h).
- On a long uphill grade, do not exceed 45 mph (70 km/h) or the posted towing speed limit, whichever is lower.
- The chart contains important considerations that have to do with weight:

Item		lbs. (kg)
Maximum trailer weight	Without brake System	1000 (454)
	With brake System	2000 (907)
Maximum permissible static vertical load on the coupling device		200 (91)

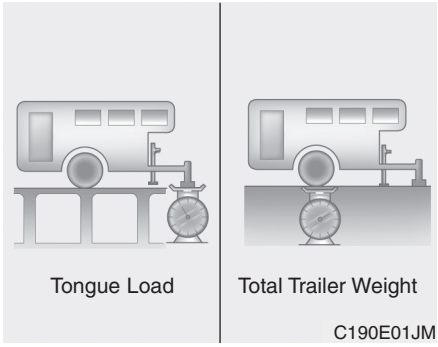

Weight of the trailer

What is the maximum safe weight of a trailer? It should never weigh more than the maximum trailer weight with trailer brakes. But even that can be too heavy.

It depends on how you plan to use your trailer. For example, speed, altitude, road grades, outside temperature and how often your vehicle is used to pull a trailer are all important. The ideal trailer weight can also depend on any special equipment that you have on your vehicle.

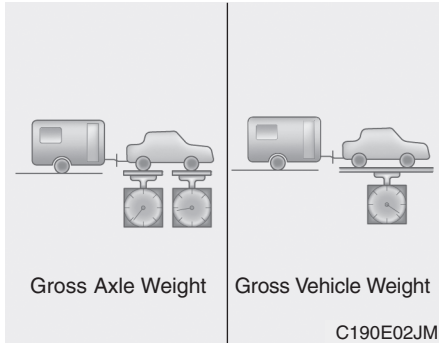

Weight of the trailer tongue

The tongue load of any trailer is an important weight to measure because it affects the total gross vehicle weight (GVW) of your vehicle. This weight includes the curb weight of the vehicle, any cargo you may carry in it, and the people who will be riding in the vehicle. And if you will tow a trailer, you must add the tongue load to the GVW because your vehicle will also be carrying that weight.

The trailer tongue should weigh a maximum of 10% of the total loaded trailer weight, within the limits of the maximum trailer tongue load permissible. After you've loaded your trailer, weigh the trailer and then the tongue, separately, to see if the weights are proper. If they aren't, you may be able to correct them simply by moving some items around in the trailer.

⚠ WARNING - Trailer

- **Never load a trailer with more weight in the rear than in the front. The front should be loaded with approximately 60% of the total trailer load; the rear should be loaded with approximately 40% of the total trailer load.**
- **Never exceed the maximum weight limits of the trailer or trailer towing equipment. Improper loading can result in damage to your vehicle and/or personal injury. Check weights and loading at a commercial scale or highway patrol office equipped with scales.**
- **An improperly loaded trailer can cause loss of vehicle control.**

VEHICLE LOAD LIMIT

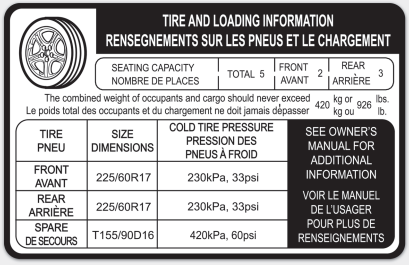

OLM059100N

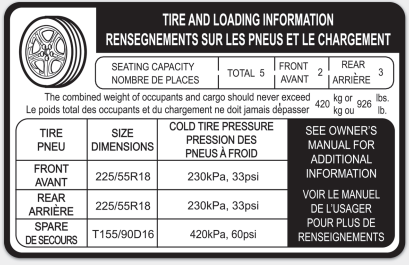

OLM059101N

Tire and loading information label

The label located on the driver's door sill gives the original tire size, cold tire pressures recommended for your vehicle, the number of people that can be in your vehicle and vehicle capacity weight.

Vehicle capacity weight:

926 lbs. (420 kg)

Vehicle capacity weight is the maximum combined weight of occupants and cargo. If your vehicle is equipped with a trailer, the combined weight includes the tongue load.

Seating capacity:

Total : 5 persons
(Front seat : 2 persons,
Rear seat : 3 persons)

Seating capacity is the maximum number of occupants including a driver, your vehicle may carry. However, the seating capacity may be reduced based upon the weight of all of the occupants, and the weight of the cargo being carried or towed.

Do not overload the vehicle as there is a limit to the total weight, or load limit including occupants and cargo, the vehicle can carry.

Towing capacity:

Without trailer brakes:
1000 lbs (454 kg)

With trailer brakes:
2000 lbs (907 kg)

Towing capacity is the maximum trailer weight including its cargo weight, your vehicle can tow.

Cargo capacity:

The cargo capacity of your vehicle will increase or decrease depending on the weight and the number of occupants and the tongue load, if your vehicle is equipped with a trailer.

Steps For Determining Correct Load Limit

1. Locate the statement "The combined weight of occupants and cargo should never exceed XXX kg or XXX lbs." on your vehicle's placard.

2. Determine the combined weight of the driver and passengers that will be riding in your vehicle.
3. Subtract the combined weight of the driver and passengers from XXX kg or XXX lbs.
4. The resulting figure equals the available amount of cargo and luggage load capacity. For example, if the "XXX" amount equals 1400 lbs. and there will be five 150 lbs. passengers in your vehicle, the amount of available cargo and luggage load capacity is 650 lb (1400-750 (5 x 150) = 650 lbs.)
5. Determine the combined weight of luggage and cargo being loaded on the vehicle. That weight may not safely exceed the available cargo and luggage load capacity calculated in Step 4.
6. If your vehicle will be towing a trailer, load from your trailer will be transferred to your vehicle. Consult this manual to determine how this reduces the available cargo and luggage load capacity of your vehicle.

Example 1



C190F01JM

Item	Description	Total
A	Vehicle Capacity Weight	1400 lbs (635 kg)
B	Subtract Occupant Weight 150 lbs (68 kg) × 2	300 lbs (136 kg)
C	Available Cargo and Luggage weight	1100 lbs (499 kg)

Example 2

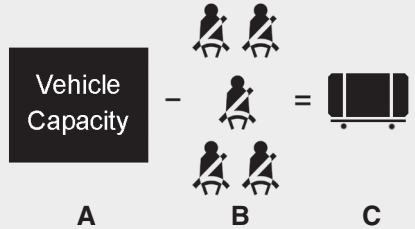

C190F02JM

Item	Description	Total
A	Vehicle Capacity Weight	1400 lbs (635 kg)
B	Subtract Occupant Weight 150 lbs (68 kg) × 5	750 lbs (340 kg)
C	Available Cargo and Luggage weight	650 lbs (295 kg)

Refer to your vehicle's tire and loading information label for specific information about your vehicle's capacity weight and seating positions. The combined weight of the driver, passengers and cargo should never exceed your vehicle's capacity weight.

Example 3

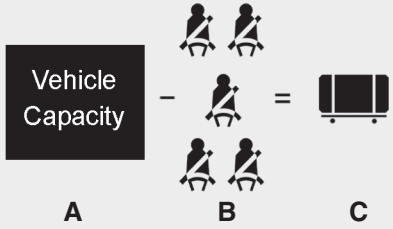

C190F03JM

Item	Description	Total
A	Vehicle Capacity Weight	1400 lbs (635 kg)
B	Subtract Occupant Weight 172 lbs (78 kg) × 5	860 lbs (390 kg)
C	Available Cargo and Luggage weight	540 lbs (245 kg)

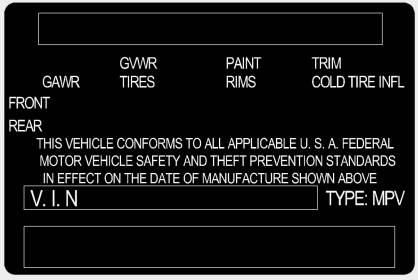

OEN056020

Certification label

The certification label is located on the driver's door sill at the center pillar.

This label shows the maximum allowable weight of the fully loaded vehicle. This is called the GVWR (Gross Vehicle Weight Rating). The GVWR includes the weight of the vehicle, all occupants, fuel and cargo.

This label also tells you the maximum weight that can be supported by the front and rear axles, called Gross Axle Weight Rating (GAWR).

To find out the actual loads on your front and rear axles, you need to go to a weigh station and weigh your vehicle. Your dealer can help you with this. Be sure to spread out your load equally on both sides of the centerline.

⚠ WARNING - Over loading

- **Never exceed the GVWR for your vehicle, the GAWR for either the front or rear axle and vehicle capacity weight. Exceeding these ratings can cause an accident or vehicle damage. You can calculate the weight of your load by weighing the items (or people) before putting them in the vehicle. Be careful not to overload your vehicle.**

(Continued)

(Continued)

- **Do not load your vehicle any heavier than the GVWR, either the maximum front or rear GAWR and vehicle capacity weight. If you do, parts, including tires on your vehicle can break, and it can change the way your vehicle handles and braking ability. This could cause you to lose control and crash. Also, overloading can shorten the life of your vehicle.**

The label will help you decide how much cargo and installed equipment your vehicle can carry.

If you carry items inside your vehicle - like suitcases, tools, packages, or anything else - they are moving as fast as the vehicle. If you have to stop or turn quickly, or if there is a crash, the items will keep going and can cause an injury if they strike the driver or a passenger.

⚠ WARNING

- **Overloading your vehicle can cause heat buildup in your vehicle's tires and possible tire failure that could lead to a crash.**
- **Overloading your vehicle can cause increased stopping distances that could lead to a crash.**
- **A crash resulting from poor handling vehicle damage, tire failure, or increased stopping distances could result in serious injury or death.**

⚠ CAUTION

- ***Overloading your vehicle may cause damage. Repairs would not be covered by your warranty. Do not overload your vehicle.***
- ***Using heavier suspension components to get added durability might not change your weight ratings. Ask your dealer to help you load your vehicle the right way.***

⚠ WARNING - Loose cargo

Items you carry inside your vehicle can strike and injure occupants in a sudden stop or turn, or in a crash.

- **Put items in the cargo area of your vehicle. Try to spread the weight evenly.**
- **Never stack items, like suitcases, inside the vehicle above the tops of the seats.**
- **Do not leave an unsecured child restraint in your vehicle.**
- **When you carry something inside the vehicle, secure it.**
- **Do not drive with a seat folded down unless necessary.**

VEHICLE WEIGHT

This section will guide you in the proper loading of your vehicle and/or trailer, to keep your loaded vehicle weight within its design rating capability, with or without a trailer. Properly loading your vehicle will provide maximum return of the vehicle design performance. Before loading your vehicle, familiarize yourself with the following terms for determining your vehicle's weight ratings, with or without a trailer, from the vehicle's specifications and the certification label:

Base curb weight
This is the weight of the vehicle including a full tank of fuel and all standard equipment. It does not include passengers, cargo, or optional equipment.

Vehicle curb weight
This is the weight of your new vehicle when you picked it up from your dealer plus any aftermarket equipment.

Cargo weight
This figure includes all weight added to the Base Curb Weight, including cargo and optional equipment.

GAW (Gross axle weight)
This is the total weight placed on each axle (front and rear) - including vehicle curb weight and all payload.

GAWR (Gross axle weight rating)
This is the maximum allowable weight that can be carried by a single axle (front or rear). These numbers are shown on the certification label.
The total load on each axle must never exceed its GAWR.

GVW (Gross vehicle weight)
This is the Base Curb Weight plus actual Cargo Weight plus passengers.

GVWR (Gross vehicle weight rating)
This is the maximum allowable weight of the fully loaded vehicle (including all options, equipment, passengers and cargo). The GVWR is shown on the certification label located on the driver's door sill.

Road warning / 6-2
In case of an emergency while driving / 6-2
If the engine will not start / 6-3
Emergency starting / 6-4
If the engine overheats / 6-6
Tire pressure monitoring system (TPMS) / 6-7
If you have a flat tire / 6-12
Towing / 6-20

What to do in an emergency 6

ROAD WARNING

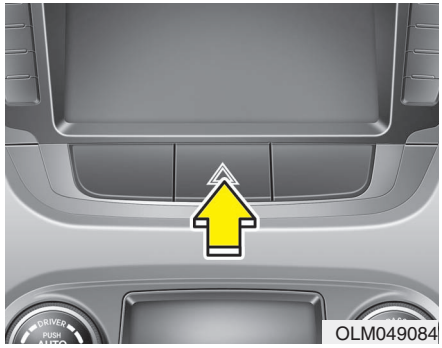

Hazard warning flasher

The hazard warning flasher serves as a warning to other drivers to exercise extreme caution when approaching, overtaking, or passing your vehicle.

It should be used whenever emergency repairs are being made or when the vehicle is stopped near the edge of a roadway.

Depress the flasher switch with the ignition switch in any position. The flasher switch is located in the center console switch panel. All turn signal lights will flash simultaneously.

- The hazard warning flasher operates whether your vehicle is running or not.
- The turn signals do not work when the hazard flasher is on.
- Care must be taken when using the hazard warning flasher while the vehicle is being towed.

IN CASE OF AN EMERGENCY WHILE DRIVING

If the engine stalls at a crossroad or crossing

If the engine stalls at a crossroad or crossing, set the shift lever in the N (Neutral) position and then push the vehicle to a safe place.

If you have a flat tire while driving

If a tire goes flat while you are driving:

1. Take your foot off the accelerator pedal and let the vehicle slow down while driving straight ahead. Do not apply the brakes immediately or attempt to pull off the road as this may cause a loss of control. When the vehicle has slowed to such a speed that it is safe to do so, brake carefully and pull off the road. Drive off the road as far as possible and park on firm, level ground. If you are on a divided highway, do not park in the median area between the two traffic lanes.

2. When the vehicle is stopped, turn on your emergency hazard flashers, set the parking brake and put the transaxle in P (automatic transaxle) or reverse (manual transaxle).
3. Have all passengers get out of the vehicle. Be sure they all get out on the side of the vehicle that is away from traffic.
4. When changing a flat tire, follow the instruction provided later in this section.

If engine stalls while driving

1. Reduce your speed gradually, keeping a straight line. Move cautiously off the road to a safe place.
2. Turn on your emergency flashers.
3. Try to start the engine again. If your vehicle will not start, contact an authorized HYUNDAI dealer or seek other qualified assistance.

IF THE ENGINE WILL NOT START

If engine doesn't turn over or turns over slowly

1. If your vehicle has an automatic transaxle, be sure the shift lever is in N (Neutral) or P (Park) and the emergency brake is set.
2. Check the battery connections to be sure they are clean and tight.
3. Turn on the interior light. If the light dims or goes out when you operate the starter, the battery is discharged.
4. Check the starter connections to be sure they are securely tightened.
5. Do not push or pull the vehicle to start it. See instructions for "Jump starting".

⚠ WARNING

If the engine will not start, do not push or pull the vehicle to start it. This could result in a collision or cause other damage. In addition, push or pull starting may cause the catalytic converter to be overloaded and create a fire hazard.

If engine turns over normally but does not start

1. Check fuel level.
2. With the ignition switch in the LOCK position, check all connectors at ignition coils and spark plugs. Reconnect any that may be disconnected or loose.
3. Check the fuel line in the engine compartment.
4. If the engine still does not start, call an authorized HYUNDAI dealer or seek other qualified assistance.

EMERGENCY STARTING

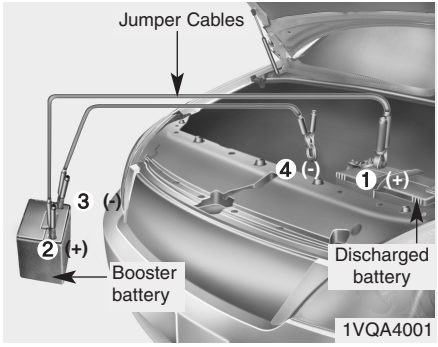

Connect cables in numerical order and disconnect in reverse order.

Jump starting

Jump starting can be dangerous if done incorrectly. Therefore, to avoid harm to yourself or damage to your vehicle or battery, follow the jump starting procedures. If in doubt, we strongly recommend that you have a competent technician or towing service jump start your vehicle.

⚠ CAUTION

Use only a 12-volt jumper system. You can damage a 12-volt starting motor, ignition system, and other electrical parts beyond repair by use of a 24-volt power supply (either two 12-volt batteries in series or a 24-volt motor generator set).

⚠ WARNING - Battery

Never attempt to check the electrolyte level of the battery as this may cause the battery to rupture or explode causing serious injury.

⚠ WARNING - Battery

- **Keep all flames or sparks away from the battery. The battery produces hydrogen gas which may explode if exposed to flame or sparks.**
  If these instructions are not followed exactly, serious personal injury and damage to the vehicle may occur! If you are not sure how to follow this procedure, seek qualified assistance. Automobile batteries contain sulfuric acid. This is poisonous and highly corrosive. When jump starting, wear protective glasses and be careful not to get acid on yourself, your clothing or on the vehicle.
- **Do not attempt to jump start the vehicle if the discharged battery is frozen or if the electrolyte level is low; the battery may rupture or explode.**

Jump starting procedure

1. Make sure the booster battery is 12-volt and that its negative terminal is grounded.
2. If the booster battery is in another vehicle, do not allow the vehicles to touch.
3. Turn off all unnecessary electrical loads.
4. Connect the jumper cables in the exact sequence shown in the illustration. First connect one end of a jumper cable to the positive terminal of the discharged battery (1), then connect the other end to the positive terminal on the booster battery (2).

   Proceed to connect one end of the other jumper cable to the negative terminal of the booster battery (3), then the other end to a solid, stationary, metallic point (for example, the engine lifting bracket) away from the battery (4). Do not connect it to or near any part that moves when the engine is cranked.

   Do not allow the jumper cables to contact anything except the correct battery terminals or the correct ground. Do not lean over the battery when making connections.

⚠ CAUTION - Battery cables

Do not connect the jumper cable from the negative terminal of the booster battery to the negative terminal of the discharged battery. This can cause the discharged battery to overheat and crack, releasing battery acid.

5. Start the engine of the vehicle with the booster battery and let it run at 2,000 rpm, then start the engine of the vehicle with the discharged battery.

If the cause of your battery discharging is not apparent, you should have your vehicle checked by an authorized HYUNDAI dealer.

Push-starting

Your manual transaxle-equipped vehicle should not be push-started because it might damage the emission control system.

Vehicles equipped with automatic transaxle cannot be push-started.

Follow the directions in this section for jump-starting.

⚠ WARNING

Never tow a vehicle to start it because the sudden surge forward when the engine starts could cause a collision with the tow vehicle.

IF THE ENGINE OVERHEATS

If your temperature gauge indicates overheating, you experience a loss of power, or hear loud pinging or knocking, the engine is probably too hot. If this happens, you should:

1. Pull off the road and stop as soon as it is safe to do so.
2. Place the shift lever in P (automatic transaxle) or neutral (manual transaxle) and set the parking brake. If the air conditioning is on, turn it off.
3. If engine coolant is running out under the vehicle or steam is coming out from the hood, stop the engine. Do not open the hood until the coolant has stopped running or the steaming has stopped. If there is no visible loss of engine coolant and no steam, leave the engine running and check to be sure the engine cooling fan is operating. If the fan is not running, turn the engine off.
4. Check to see if the water pump drive belt is missing. If it is not missing, check to see that it is tight. If the drive belt seems to be satisfactory, check for coolant leaking from the radiator, hoses or under the vehicle. (If the air conditioning had been in use, it is normal for cold water to be draining from it when you stop).

⚠ WARNING

While the engine is running, keep hair, hands and clothing away from moving parts such as the fan and drive belts to prevent injury.

5. If the water pump drive belt is broken or engine coolant is leaking out, stop the engine immediately and call the nearest authorized HYUNDAI dealer for assistance.

⚠ WARNING

Do not remove the radiator cap when the engine is hot. This can allow coolant to be blown out of the opening and cause serious burns.

6. If you cannot find the cause of the overheating, wait until the engine temperature has returned to normal. Then, if coolant has been lost, carefully add coolant to the reservoir to bring the fluid level in the reservoir up to the halfway mark.
7. Proceed with caution, keeping alert for further signs of overheating. If overheating happens again, call an authorized HYUNDAI dealer for assistance.

⚠ CAUTION

Serious loss of coolant indicates there is a leak in the cooling system and this should be checked as soon as possible by an authorized HYUNDAI dealer.

TIRE PRESSURE MONITORING SYSTEM (TPMS)



(1) Low tire pressure telltale / TPMS malfunction indicator

Each tire, including the spare (if provided), should be checked monthly when cold and inflated to the inflation pressure recommended by the vehicle manufacturer on the vehicle placard or tire inflation pressure label. (If your vehicle has tires of a different size than the size indicated on the vehicle placard or tire inflation pressure label, you should determine the proper tire inflation pressure for those tires.)

As an added safety feature, your vehicle has been equipped with a tire pressure monitoring system (TPMS) that illuminates a low tire pressure telltale when one or more of your tires is significantly under-inflated. Accordingly, when the low tire pressure telltale illuminates, you should stop and check your tires as soon as possible, and inflate them to the proper pressure. Driving on a significantly under-inflated tire causes the tire to overheat and can lead to tire failure. Under-inflation also reduces fuel efficiency and tire tread life, and may affect the vehicle's handling and stopping ability.

Please note that the TPMS is not a substitute for proper tire maintenance, and it is the driver's responsibility to maintain correct tire pressure, even if under-inflation has not reached the level to trigger illumination of the TPMS low tire pressure telltale.

Your vehicle has also been equipped with a TPMS malfunction indicator to indicate when the system is not operating properly. The TPMS malfunction indicator is combined with the low tire pressure telltale. When the system detects a malfunction, the telltale will flash for approximately one minute and then remain continuously illuminated. This sequence will continue upon subsequent vehicle start-ups as long as the malfunction exists. When the malfunction indicator is illuminated, the system may not be able to detect or signal low tire pressure as intended. TPMS malfunctions may occur for a variety of reasons, including the installation of replacement or alternate tires or wheels on the vehicle that prevent the TPMS from functioning properly. Always check the TPMS malfunction telltale after replacing one or more tires or wheels on your vehicle to ensure that the replacement or alternate tires and wheels allow the TPMS to continue to function properly.

✻ NOTICE

If the TPMS, Low Tire Pressure indicator does not illuminate for 3 seconds when the ignition switch is turned to the ON position or the engine is running, or if it remains illuminated after coming on for approximately 3 seconds, take your vehicle to your nearest authorized HYUNDAI dealer and have the system checked.



Low tire pressure telltale

When the tire pressure monitoring system warning indicator is illuminated, one or more of your tires is significantly under-inflated.

Immediately reduce your speed, avoid hard cornering and anticipate increased stopping distances. You should stop and check your tires as soon as possible. Inflate the tires to the proper pressure as indicated on the vehicle's placard or tire inflation pressure label located on the driver's side center pillar outer panel. If you cannot reach a service station or if the tire cannot hold the newly added air, replace the low pressure tire with the compact spare tire.

Then the TPMS malfunction indicator may turn on and the Low Tire Pressure telltale will remain on until you have the low-pressure tire repaired and replaced on the vehicle.

✻ NOTICE

The compact spare tire is not equipped with a tire pressure sensor.

⚠ CAUTION

In winter or cold weather, the low tire pressure telltale may be illuminated if the tire pressure was adjusted to the recommended tire inflation pressure in warm weather. It does not mean your TPMS is malfunctioning because the decreased temperature leads to a proportional lowering of tire pressure.

When you drive your vehicle from a warm area to a cold area or from a cold area to a warm area, or the outside temperature is greatly higher or lower, you should check the tire inflation pressure and adjust the tires to the recommended tire inflation pressure.

⚠ WARNING - Low pressure damage

Significantly low tire pressure makes the vehicle unstable and can contribute to loss of vehicle control and increased braking distances.

Continued driving on low pressure tires can cause the tires to overheat and fail.



TPMS (Tire Pressure Monitoring System) malfunction indicator

The low tire pressure telltale will illuminate after it blinks for approximately one minute when there is a problem with the Tire Pressure Monitoring system.

Have the system checked by an authorized HYUNDAI dealer as soon as possible to determine the cause of the problem.

⚠ CAUTION

- ***The TPMS malfunction indicator may be illuminated if the vehicle is moving around electric power supply cables or radios transmitter such as at police stations, government and public offices, broadcasting stations, military installations, airports, or transmitting towers, etc. This can interfere with normal operation of the Tire Pressure Monitoring System (TPMS).***
- ***The TPMS malfunction indicator may be illuminated if snow chains are used or some separate electronic devices such as notebook computer, mobile charger, remote starter or navigation etc., are used in the vehicle. This can interfere with normal operation of the Tire Pressure Monitoring System (TPMS).***

Changing a tire with TPMS

If you have a flat tire, the Low Tire Pressure warning indicator will turn on. Have the flat tire repaired by an authorized HYUNDAI dealer as soon as possible or replace the flat tire with the compact spare tire.

⚠ CAUTION

NEVER use a puncture-repairing agent to repair and/or inflate a low pressure tire. The tire sealant can damage the tire pressure sensor. If used, you will have to replace the tire pressure sensor.

Each wheel is equipped with a tire pressure sensor mounted inside the tire behind the valve stem. You must use TPMS specific wheels. It is recommended that you always have your tires serviced by an authorized HYUNDAI dealer.

Even if you replace the low pressure tire with the compact spare tire, the Low Tire Pressure warning indicator will remain on until the low pressure tire is repaired and placed on the vehicle.

After you replace the low pressure tire with the compact spare tire, the TPMS malfunction indicator may be illuminated after a few minutes because the compact spare tire does not have a sensor.

Once the low pressure tire is re-inflated to the recommended pressure and installed on the vehicle, the TPMS malfunction indicator and the low tire pressure telltale will extinguish within a few minutes.

If the indicators do not extinguish after a few minutes, please visit an authorized HYUNDAI dealer.

You may not be able identify a low tire by simply looking at it. Always use a good quality tire pressure gauge to measure the tire's inflation pressure. Please note that a tire that is hot (from being driven) will have a higher pressure measurement than a tire that is cold (from sitting stationary for at least 3 hours and driven less than 1 mile (1.6 km) during that 3 hour period).

Allow the tire to cool before measuring the inflation pressure. Always be sure the tire is cold before inflating to the recommended pressure.

A cold tire means the vehicle has been sitting for 3 hours and driven for less than 1 mile (1.6 km) in that 3 hour period.

⚠ CAUTION

Do not use any tire sealant if your vehicle is equipped with a Tire Pressure Monitoring System. The liquid sealant can damage the tire pressure sensors.

⚠ WARNING - TPMS

- **The TPMS cannot alert you to severe and sudden tire damage caused by external factors such as nails or road debris.**
- **If you feel any vehicle instability, immediately take your foot off the accelerator, apply the brakes gradually and with light force, and slowly move to a safe position off the road.**

⚠ WARNING - Protecting TPMS

Tampering with, modifying, or disabling the Tire Pressure Monitoring System (TPMS) components may interfere with the system's ability to warn the driver of low tire pressure conditions and/or TPMS malfunctions. Tampering with, modifying, or disabling the Tire Pressure Monitoring System (TPMS) components may void the warranty for that portion of the vehicle.

This device complies with Part 15 of the FCC rules.

Operation is subject to the following two conditions:

1. This device may not cause harmful interference, and
2. This device must accept any interference received, including interference that may cause undesired operation.

⚠ WARNING

Changes or modifications not expressly approved by the party responsible for compliance could void the user's authority to operate the equipment.

IF YOU HAVE A FLAT TIRE

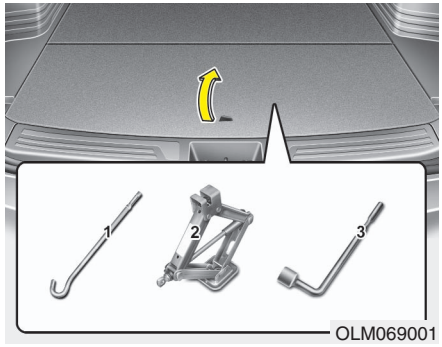

Jack and tools

The jack, jack handle, wheel lug nut wrench are stored in the luggage compartment. Pull up the luggage box cover to reach this equipment.

(1) Jack handle
(2) Jack
(3) Wheel lug nut wrench

Jacking instructions

The jack is provided for emergency tire changing only.

To prevent the jack from “rattling” while the vehicle is in motion, store it properly.

Follow jacking instructions to reduce the possibility of personal injury.

⚠ WARNING - Changing tires

- **Never attempt vehicle repairs in the traffic lanes of a public road or highway.**
- **Always move the vehicle completely off the road and onto the shoulder before trying to change a tire. The jack should be used on level firm level ground. If you cannot find a firm, level place off the road, call a towing service company for assistance.**

(Continued)

(Continued)

- **Be sure to use the correct front and rear jacking positions on the vehicle; never use the bumpers or any other part of the vehicle for jack support.**
- **The vehicle can easily roll off the jack causing serious injury or death. No person should place any portion of their body under a vehicle that is supported only by a jack; use vehicle support stands.**
- **Do not start or run the engine while the vehicle is on the jack.**
- **Do not allow anyone to remain in the vehicle while it is on the jack.**
- **Make sure any children present are in a secure place away from the road and from the vehicle to be raised with the jack.**

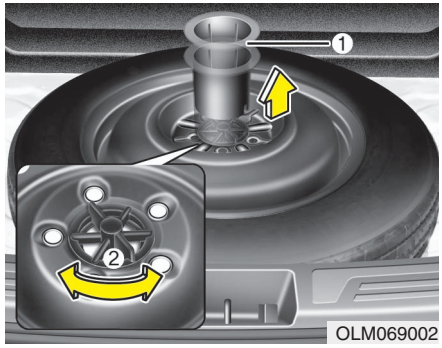

Removing and storing the spare tire

Remove the luggage floor support (1).

Turn the tire hold-down wing bolt (2) counterclockwise.

Store the tire in the reverse order of removal.

Replace the luggage floor support (1) after tightening the wing bolt.

To prevent the spare tire and tools from “rattling” while the vehicle is in motion, store them properly.

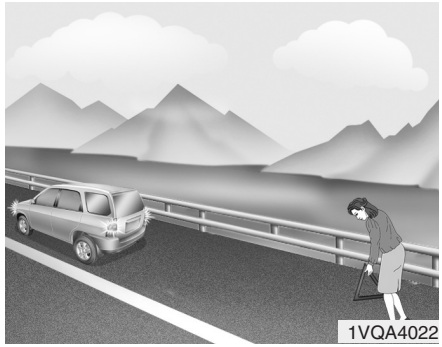

Changing tires

1. Park on a level surface and apply the parking brake firmly.
2. Place the transaxle shift lever in R (Reverse) with manual transaxle or P (Park) with automatic transaxle.
3. Activate the hazard warning flasher.



4. Remove the wheel lug nut wrench, jack, jack handle, and spare tire from the vehicle.
5. Block both the front and rear of the wheel that is diagonally opposite the jack position.

⚠ WARNING - Changing a tire

- **To prevent vehicle movement while changing a tire, always set the parking brake fully, and always block the wheel diagonally opposite the wheel being changed.**
- **We recommend that the wheels of the vehicle be blocked, and that no person remain in a vehicle that is being jacked.**



6. Loosen the wheel lug nuts counterclockwise one turn each, but do not remove any nut until the tire has been raised off the ground.

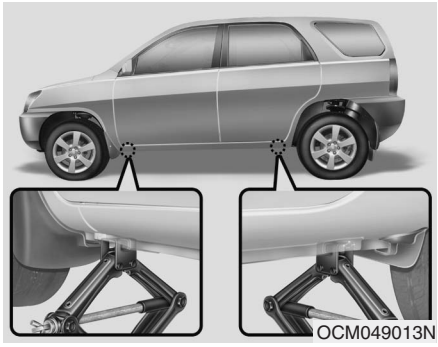
OCM049013N

7. Place the jack at the front or rear jacking position closest to the tire you are changing. Place the jack at the designated locations under the frame.

⚠ WARNING - Jack location
To reduce the possibility of injury, be sure to use only the jack provided with the vehicle and in the correct jack position; never use any other part of the vehicle for jack support.

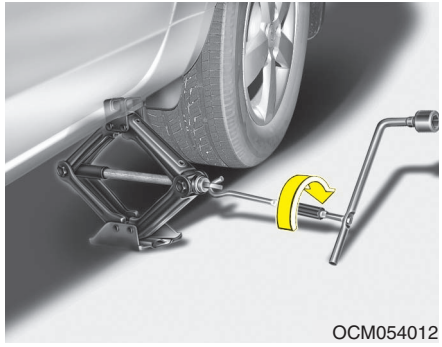
OCM054012

8. Insert the jack handle into the jack and turn it clockwise, raising the vehicle until the tire just clears the ground. This measurement is approximately 1.2 in (30 mm). Before removing the wheel lug nuts, make sure the vehicle is stable and that there is no chance for movement or slippage.

9. Loosen the wheel nuts and remove them with your fingers. Slide the wheel off the studs and lay it flat so it cannot roll away. To put the wheel on the hub, pick up the spare tire, line up the holes with the studs and slide the wheel onto them. If this is difficult, tip the wheel slightly and get the top hole in the wheel lined up with the top stud. Then jiggle the wheel back and forth until the wheel can be slid over the other studs.

⚠ WARNING

Wheels may have sharp edges. Handle them carefully to avoid possible severe injury. Before putting the wheel into place, be sure that there is nothing on the hub or wheel (such as mud, tar, gravel, etc.) that prevents with the wheel from fitting solidly against the hub.

If there is, remove it. If contact of the mounting surface between the wheel and hub is not good, the wheel nuts could come loose and cause the loss of a wheel. Loss of a wheel may result in loss of control of the vehicle. This may cause serious injury or death.

10. To reinstall the wheel, hold it on the studs, put the wheel nuts on the studs and tighten them finger tight. Jiggle the tire to be sure it is completely seated, then tighten the nuts as much as possible with your fingers again.
11. Lower the vehicle to the ground by turning the wheel nut wrench counterclockwise.

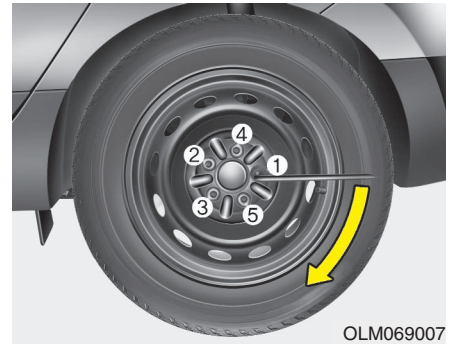

OLM069007

Then position the wrench as shown in the drawing and tighten the wheel nuts. Be sure the socket is seated completely over the nut. Do not stand on the wrench handle or use an extension pipe over the wrench handle. Go around the wheel tightening every nut following the numerical sequence shown in the image until they are all tight. Then double-check each nut for tightness. After changing wheels, have an authorized HYUNDAI dealer tighten the wheel nuts to their proper torque as soon as possible.

Wheel nut tightening torque:

Steel wheel & aluminum alloy wheel:
65~79 lb·ft (9~11 kg·m)

If you have a tire gauge, remove the valve cap and check the air pressure. If the pressure is lower than recommended, drive slowly to the nearest service station and inflate to the correct pressure. If it is too high, adjust it until it is correct. Always reinstall the valve cap after checking or adjusting tire pressure. If the cap is not replaced, dust and dirt may get into the tire valve and air may leak from the tire. If you lose a valve cap, buy another and install it as soon as possible.

After you have changed wheels, always secure the flat tire in its place and return the jack and tools to their proper storage locations.

⚠ CAUTION

Your vehicle has metric threads on the wheel studs and nuts. Make certain during wheel removal that the same nuts that were removed are reinstalled - or, if replaced, that nuts with metric threads and the same chamfer configuration are used. Installation of a non-metric thread nut on a metric stud or vice-versa will not secure the wheel to the hub properly and will damage the stud so that it must be replaced.

Note that most lug nuts do not have metric threads. Be sure to use extreme care in checking for thread style before installing aftermarket lug nuts or wheels. If in doubt, consult an authorized HYUNDAI dealer.

⚠ WARNING - Wheel studs

If the studs are damaged, they may lose their ability to retain the wheel. This could lead to the loss of the wheel and a collision resulting in serious injuries.

To prevent the jack, jack handle, wheel lug nut wrench and spare tire from rattling while the vehicle is in motion, store them properly.

⚠ WARNING - Inadequate spare tire pressure

Check the inflation pressures as soon as possible after installing the spare tire. Adjust it to the specified pressure, if necessary. Refer to "Tires and wheels" section 8.

Important - use of compact spare tire

Your vehicle is equipped with a compact spare tire. This compact spare tire takes up less space than a regular-size tire. This tire is smaller than a conventional tire and is designed for temporary use only.

⚠ CAUTION

- ***You should drive carefully when the compact spare is in use. The compact spare should be replaced by the proper conventional tire and rim at the first opportunity.***
- ***The operation of this vehicle is not recommended with more than one compact spare tire in use at the same time.***

⚠ WARNING

The compact spare tire is for emergency use only. Do not operate your vehicle on this compact spare at speeds over 50 mph (80 km/h). The original tire should be repaired or replaced as soon as is possible to avoid failure of the spare possibly leading to personal injury or death.

The compact spare should be inflated to 60 psi (420 kPa).

✻ NOTICE

Check the inflation pressure after installing the spare tire. Adjust it to the specified pressure, as necessary.

When using a compact spare tire, observe the following precautions:

- Under no circumstances should you exceed 50 mph (80 km/h); a higher speed could damage the tire.
- Ensure that you drive slowly enough for the road conditions to avoid all hazards. Any road hazard, such as a pothole or debris, could seriously damage the compact spare.
- Any continuous road use of this tire could result in tire failure, loss of vehicle control, and possible personal injury.
- Do not exceed the vehicle's maximum load rating or the load-carrying capacity shown on the sidewall of the compact spare tire.
- Avoid driving over obstacles. The compact spare tire diameter is smaller than the diameter of a conventional tire and reduces the ground clearance approximately 1 inch (25 mm), which could result in damage to the vehicle.

- Do not take this vehicle through an automatic car wash while the compact spare tire is installed.
- Do not use tire chains on the compact spare tire. Because of the smaller size, a tire chain will not fit properly. This could damage the vehicle and result in loss of the chain.
- The compact spare tire should not be installed on the front axle if the vehicle must be driven in snow or on ice.
- Do not use the compact spare tire on any other vehicle because this tire has been designed especially for your vehicle.
- The compact spare tire's tread life is shorter than a regular tire. Inspect your compact spare tire regularly and replace worn compact spare tires with the same size and design, mounted on the same wheel.
- The compact spare tire should not be used on any other wheels, nor should standard tires, snow tires, wheel covers or trim rings be used with the compact spare wheel. If such use is attempted, damage to these items or other car components may occur.
- Do not use more than one compact spare tire at a time.
- Do not tow a trailer while the compact spare tire is installed.

⚠ CAUTION

When the original tire and wheel are repaired and reinstalled on the vehicle, the wheel nut torque must be set correctly to prevent wheel vibration. The correct wheel nut tightening torque is 65~79lb-ft (9~11kg.m).

TOWING

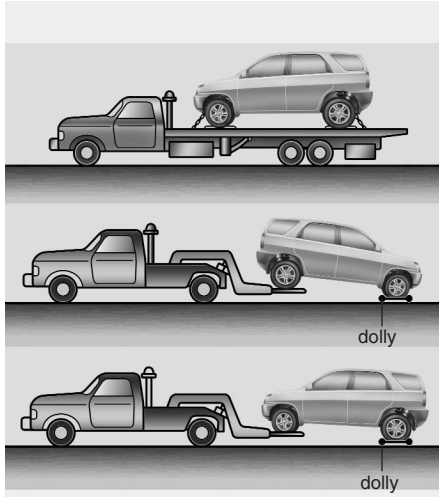

OXM069028

Towing service

If emergency towing is necessary, we recommend having it done by an authorized HYUNDAI dealer or a commercial tow-truck service. Proper lifting and towing procedures are necessary to prevent damage to the vehicle. The use of wheel dollies or flatbed is recommended.

For trailer towing guidelines information, refer to "Trailer towing" in section 5.

On AWD vehicles, your vehicle must be towed with a wheel lift and dollies or flatbed equipment with all the wheels off the ground.

⚠ CAUTION

The AWD vehicle should never be towed with the wheels on the ground. This can cause serious damage to the transaxle or the AWD system.

On 2WD vehicles, it is acceptable to tow the vehicle with the rear wheels on the ground (without dollies) and the front wheels off the ground.

If any of the loaded wheels or suspension components are damaged or the vehicle is being towed with the front wheels on the ground, use a towing dolly under the front wheels.

When being towed by a commercial tow truck and wheel dollies are not used, the front of the vehicle should always be lifted, not the rear.

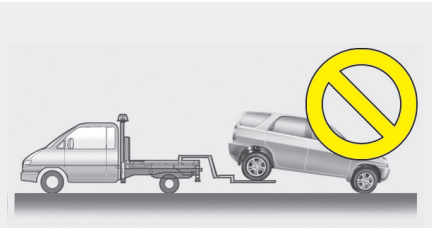

OUN046030

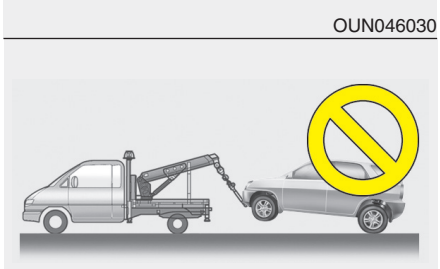

OUN046029

⚠ CAUTION

- ***Do not tow the vehicle backwards with the front wheels on the ground as this may cause damage to the vehicle.***
- ***Do not tow with sling-type equipment. Use wheel lift or flatbed equipment.***

When towing your vehicle in an emergency without wheel dollies :

1. Set the ignition switch in the ACC position.
2. Place the transaxle shift lever in N (Neutral).
3. Release the parking brake.

⚠ CAUTION

Failure to place the transaxle shift lever in N (Neutral) may cause internal damage to the transaxle.

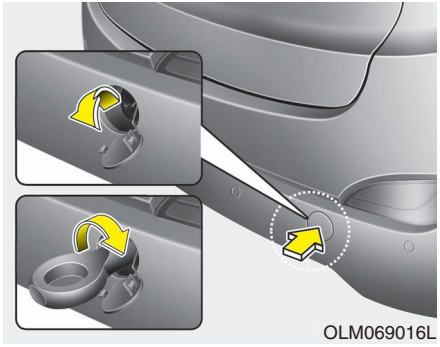

OLM069016L

Removable towing hook (rear)

1. Open the tailgate, and remove the towing hook from the tool case.
2. Remove the hole cover pressing the lower part of the cover on the rear bumper.
3. Install the towing hook by turning it clockwise into the hole until it is fully secured.
4. Remove the towing hook and install the cover after use.

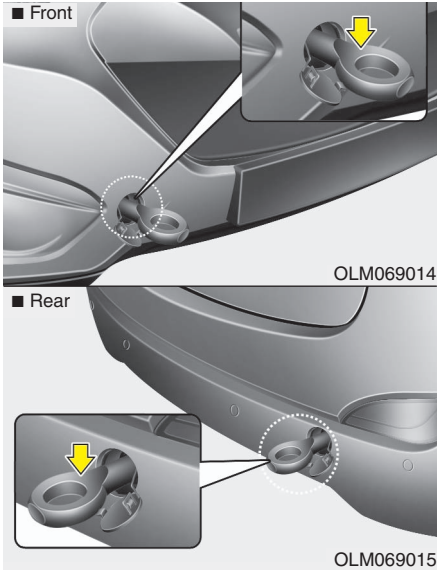

Emergency towing

If towing is necessary, we recommend you to have it done by an authorized HYUNDAI dealer or a commercial tow truck service.

If towing service is not available in an emergency, your vehicle may be temporarily towed using a cable or chain secured to the emergency towing hook under the front (or rear) of the vehicle. Use extreme caution when towing the vehicle. A driver must be in the vehicle to steer it and operate the brakes.

Towing in this manner may be done only on hard-surfaced roads for a short distance and at low speeds. Also, the wheels, axles, power train, steering and brakes must all be in good condition.

- Do not use the tow hooks to pull a vehicle out of mud, sand or other conditions from which the vehicle cannot be driven out under its own power.
- Avoid towing a vehicle heavier than the vehicle doing the towing.
- The drivers of both vehicles should communicate with each other frequently.

⚠ CAUTION

- ***Attach a towing strap to the tow hook.***
- ***Using a portion of the vehicle other than the tow hooks for towing may damage the body of your vehicle.***
- ***Use only a cable or chain specifically intended for use in towing vehicles. Securely fasten the cable or chain to the towing hook provided.***

- Before emergency towing, check that the hook is not broken or damaged.
- Fasten the towing cable or chain securely to the hook.
- Do not jerk the hook. Apply steady and even force.
- To avoid damaging the hook, do not pull from the side or at a vertical angle. Always pull straight ahead.

⚠ WARNING

Use extreme caution when towing the vehicle.

- **Avoid sudden starts or erratic driving maneuvers which would place excessive stress on the emergency towing hook and towing cable or chain. The hook and towing cable or chain may break and cause serious injury or damage.**
- **If the disabled vehicle is cannot be moved, do not forcibly continue the towing. Contact an authorized HYUNDAI dealer or a commercial tow truck service for assistance.**
- **Tow the vehicle as straight ahead as possible.**
- **Keep away from the vehicle during towing.**

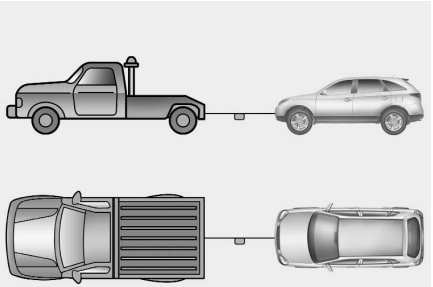

OEN066014

- Use a towing strap less than 16 feet (5 m) long. Attach a white or red cloth (about 12 inches (30 cm) wide) in the middle of the strap for easy visibility.
- Drive carefully so that the towing strap is not loosened during towing.

Emergency towing precautions

- Turn the ignition switch to ACC so the steering wheel isn't locked.
- Place the transaxle shift lever in N (Neutral).
- Release the parking bake.
- Press the brake pedal with more force than normal since you will have reduced brake performance.
- More steering effort will be required because the power steering system will be disabled.
- If you are driving down a long hill, the brakes may overheat and brake performance will be reduced. Stop often and let the brakes cool off.

⚠ CAUTION - Automatic transaxle

- ***If the car is being towed with all four wheels on the ground, it can be towed only from the front. Be sure that the transaxle is in neutral. Be sure the steering is unlocked by placing the ignition switch in the ACC position. A driver must be in the towed vehicle to operate the steering and brakes.***
- ***To avoid serious damage to the automatic transaxle, limit the vehicle speed to 15 km/h (10 mph) and drive less than 1.5 km (1 mile) when towing.***
- ***Before towing, check the automatic transaxle for fluid leaks under your vehicle. If the automatic transaxle fluid is leaking, flatbed equipment or a towing dolly must be used.***

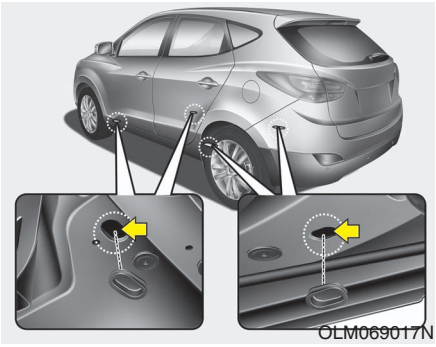

Tie-down hook
(for flatbed towing) (if equipped)

⚠ WARNING

- **Do not use the hooks under the front (or rear) of the vehicle for towing purposes. These hooks are designed ONLY for transport tie-down. If the tie-down hooks are used for towing, the tie-down hooks or front (or rear) bumper will be damaged and this could lead to serious injury.**
- **The hooks should be placed toward the front of the vehicle when using the front holes and should be placed toward the rear of the vehicle when using the rear holes for tie down purpose.**
  If not, the front or rear under cover will be damaged.

Engine compartment / 7-2
Maintenance services / 7-3
Owner maintenance / 7-4
Scheduled maintenance service / 7-6
Explanation of scheduled maintenance items / 7-18
Engine oil / 7-21
Engine coolant / 7-22
Brake/clutch fluid / 7-25
Washer fluid / 7-26
Parking brake / 7-27
Air cleaner / 7-28
Climate control air filter / 7-29
Wiper blades / 7-31
Battery / 7-34
Tires and wheels / 7-37
Fuses / 7-50
Light bulbs / 7-59

Maintenance 7

Appearance care / 7-66
Emission control system / 7-72
California perchlorate notice / 7-75

ENGINE COMPARTMENT

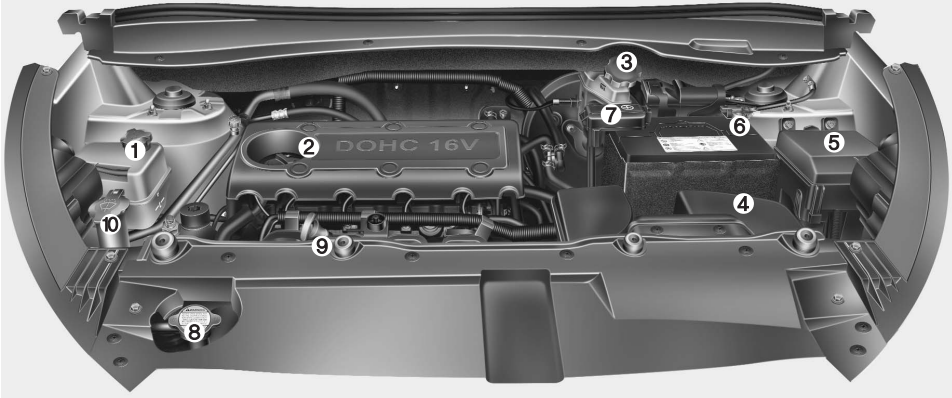

1. Engine coolant reservoir
2. Engine oil filler cap
3. Brake/Clutch* fluid reservoir
4. Air cleaner
5. Fuse box
6. Negative battery terminal
7. Positive battery terminal
8. Radiator cap
9. Engine oil dipstick
10. Windshield washer fluid reservoir

* : if equipped

* The actual engine room in the vehicle may differ from the illustration.

OLM079001

MAINTENANCE SERVICES

You should exercise the utmost care to prevent damage to your vehicle and injury to yourself whenever performing any maintenance or inspection procedures.

Should you have any doubts concerning the inspection or servicing of your vehicle, we strongly recommend that you have an authorized HYUNDAI dealer perform this work.

An authorized HYUNDAI dealer has factory-trained technicians and genuine HYUNDAI parts to service your vehicle properly. For expert advice and quality service, see an authorized HYUNDAI dealer.

Inadequate, incomplete or insufficient servicing may result in operational problems with your vehicle that could lead to vehicle damage, an accident, or personal injury.

Owner's responsibility

✻ NOTICE

Maintenance Service and Record Retention are the owner's responsibility.

You should retain documents that show proper maintenance has been performed on your vehicle in accordance with the scheduled maintenance service charts shown on the following pages. You need this information to establish your compliance with the servicing and maintenance requirements of your vehicle warranties.

Detailed warranty information is provided in your Owner's Handbook & Warranty Information booklet.

Repairs and adjustments required as a result of improper maintenance or a lack of required maintenance are not covered.

We recommend you have your vehicle maintained and repaired by an authorized HYUNDAI dealer. An authorized HYUNDAI dealer meets HYUNDAI's high service quality standards and receives technical support from HYUNDAI in order to provide you with a high level of service satisfaction.

Owner maintenance precautions

Improper or incomplete service may result in problems. This section gives instructions only for the maintenance items that are easy to perform.

As explained earlier in this section, several procedures can be done only by an authorized HYUNDAI dealer with special tools.

✻ NOTICE

Improper owner maintenance during the warranty period may affect warranty coverage. For details, read the separate Owner's Handbook & Warranty Information booklet provided with the vehicle. If you're unsure about any servicing or maintenance procedure, have it done by an authorized HYUNDAI dealer.

⚠ WARNING - Maintenance work

- **Performing maintenance work on a vehicle can be dangerous. You can be seriously injured while performing some maintenance procedures. If you lack sufficient knowledge and experience or the proper tools and equipment to do the work, have it done by an authorized HYUNDAI dealer.**
- **Working under the hood with the engine running is dangerous. It becomes even more dangerous when you wear jewelry or loose clothing. These can become entangled in moving parts and result in injury. Therefore, if you must run the engine while working under the hood, make certain that you remove all jewelry (especially rings, bracelets, watches, and necklaces) and all neckties, scarves, and similar loose clothing before getting near the engine or cooling fans.**

OWNER MAINTENANCE

The following lists are vehicle checks and inspections that should be performed by the owner or an authorized HYUNDAI dealer at the frequencies indicated to help ensure safe, dependable operation of your vehicle.

Any adverse conditions should be brought to the attention of your dealer as soon as possible.

These Owner Maintenance Checks are generally not covered by warranties and you may be charged for labor, parts and lubricants used.

Owner maintenance schedule

When you stop for fuel:

- Check the engine oil level.
- Check the coolant level in coolant reservoir.
- Check the windshield washer fluid level.
- Look for low or under-inflated tires.

⚠ WARNING

Be careful when checking your engine coolant level when the engine is hot. Scalding hot coolant and steam may blow out under pressure. This could cause burns or other serious injury.

While operating your vehicle:

- Note any changes in the sound of the exhaust or any smell of exhaust fumes in the vehicle.
- Check for vibrations in the steering wheel. Notice any increased steering effort or looseness in the steering wheel, or change in its straight-ahead position.
- Notice if your vehicle constantly turns slightly or "pulls" to one side when traveling on smooth, level road.
- When stopping, listen and check for unusual sounds, pulling to one side, increased brake pedal travel or "hard-to-push" brake pedal.
- If any slipping or changes in the operation of your transaxle occurs, check the transaxle fluid level.
- Check the automatic transaxle P (Park) function.
- Check the parking brake.
- Check for fluid leaks under your vehicle (water dripping from the air conditioning system during or after use is normal).

At least monthly:

- Check the coolant level in the engine coolant reservoir.
- Check the operation of all exterior lights, including the stoplights, turn signals and hazard warning flashers.
- Check the inflation pressures of all tires including the spare.

At least twice a year (i.e., every Spring and Fall):

- Check the radiator, heater and air conditioning hoses for leaks or damage.
- Check the windshield washer spray and wiper operation. Clean the wiper blades with clean cloth dampened with washer fluid.
- Check the headlight alignment.
- Check the muffler, exhaust pipes, shields and clamps.
- Check the lap/shoulder belts for wear and function.
- Check for worn tires and loose wheel lug nuts.

At least once a year:

- Clean the body and door drain holes.
- Lubricate the door hinges and checks, and hood hinges.
- Lubricate the door and hood locks and latches.
- Lubricate the door rubber weatherstrips.
- Check the air conditioning system.
- Inspect and lubricate the automatic transaxle linkage and controls.
- Clean the battery and terminals.
- Check the brake/clutch* fluid level.

* : if equipped

SCHEDULED MAINTENANCE SERVICE

Follow Normal Maintenance Schedule if the vehicle is usually operated where none of the following conditions apply. If any of the following conditions apply, follow Maintenance Under Severe Usage Conditions.

- Repeated short distance driving.
- Driving in dusty conditions or sandy areas.
- Extensive use of brakes.
- Driving in areas where salt or other corrosive materials are being used.
- Driving on rough or muddy roads.
- Driving in mountainous areas.
- Extended periods of idling or low speed operation.
- Driving for a prolonged period in cold temperatures and/or extremely humid climates.
- More than 50% driving in heavy city traffic during hot weather above 90°F (32°C).

If your vehicle is operated under the above conditions, you should inspect, replace or refill more frequently than the following Normal Maintenance Schedule. After 120 months or 150,000 miles (240,000 km) continue to follow the prescribed maintenance intervals.

NORMAL MAINTENANCE SCHEDULE

The following maintenance services must be performed to ensure good emission control and performance. Keep receipts for all vehicle emission services to protect your warranty. Where both mileage and time are shown, the frequency of service is determined by whichever occurs first.

7,500 miles (12,000 km) or 6 months

- ❑ Inspect air cleaner filter
- ❑ Inspect vacuum hose
- ❑ Replace engine oil and filter (7,500 miles (12,000 km) or 12 months)

15,000 miles (24,000 km) or 12 months

- ❑ Inspect air cleaner filter
- ❑ Inspect vacuum hose
- ❑ Inspect air conditioning refrigerant
- ❑ Inspect brake hoses and lines
- ❑ Inspect drive shafts and boots
- ❑ Inspect electronic throttle control
- ❑ Inspect exhaust pipe and muffler
- ❑ Inspect front brake disc/pads, calipers
- ❑ Inspect propeller shaft (AWD)
- ❑ Inspect rear brake disc/pads
- ❑ Inspect steering gear box, linkage & boots/lower arm ball joint, upper arm ball joint
- ❑ Inspect suspension mounting bolts
- ❑ Replace climate control air filter (for evaporator and blower unit)
- ❑ Replace engine oil and filter (15,000 miles (24,000 km) or 24 months)

22,500 miles (36,000 km) or 18 months

- ❑ Inspect air cleaner filter
- ❑ Inspect vacuum hose
- ❑ Replace engine oil and filter (22,500 miles (36,000 km) or 36 months)

NORMAL MAINTENANCE SCHEDULE (CONT.)

30,000 miles (48,000 km) or 24 months

- ❑ Inspect vacuum hose
- ❑ Inspect air conditioning refrigerant
- ❑ Inspect brake hoses and lines
- ❑ Inspect drive shafts and boots
- ❑ Inspect electronic throttle control
- ❑ Inspect exhaust pipe and muffler
- ❑ Inspect front brake disc/pads, calipers
- ❑ Inspect propeller shaft (AWD)
- ❑ Inspect rear brake disc/pads
- ❑ Inspect steering gear box, linkage & boots/lower arm ball joint, upper arm ball joint
- ❑ Inspect suspension mounting bolts
- ❑ Inspect brake/clutch (if equipped) fluid
- ❑ Inspect fuel filter *1
- ❑ Inspect fuel lines, fuel hoses and connections
- ❑ Inspect fuel tank air filter (if equipped) *1
- ❑ Inspect parking brake
- ❑ Inspect vapor hose and fuel filler cap, fuel tank
- ❑ Replace climate control air filter (for evaporator and blower unit)
- ❑ Replace air cleaner filter
- ❑ Replace engine oil and filter (30,000 miles (48,000 km) or 48 months)

37,500 miles (60,000 km) or 30 months

- ❑ Inspect air cleaner filter
- ❑ Inspect vacuum hose
- ❑ Inspect manual transaxle fluid (if equipped)
- ❑ Inspect rear axle oil (AWD) *2
- ❑ Inspect transfer case oil (AWD) *2
- ❑ Replace engine oil and filter (37,500 miles (60,000 km) or 60 months)

*1 : Fuel filter & Fuel tank air filter are considered to be maintenance free but periodic inspection is recommended for this maintenance schedule depends on fuel quality. If there are some important safety matters like fuel flow restriction, surging, loss of power, hard starting problem etc, replace the fuel filter immediately regardless of maintenance schedule and consult an authorized HYUNDAI dealer for details.

*2 : Transfer case oil and rear axle oil should be changed anytime they have been submerged in water.

NORMAL MAINTENANCE SCHEDULE (CONT.)

45,000 miles (72,000 km) or 36 months

- ❑ Inspect air cleaner filter
- ❑ Inspect vacuum hose
- ❑ Inspect air conditioning refrigerant
- ❑ Inspect brake hoses and lines
- ❑ Inspect drive shafts and boots
- ❑ Inspect electronic throttle control
- ❑ Inspect exhaust pipe and muffler
- ❑ Inspect front brake disc/pads, calipers
- ❑ Inspect propeller shaft (AWD)
- ❑ Inspect rear brake disc/pads
- ❑ Inspect steering gear box, linkage & boots/lower arm ball joint, upper arm ball joint
- ❑ Inspect suspension mounting bolts
- ❑ Replace climate control air filter (for evaporator and blower unit)
- ❑ Replace engine oil and filter (45,000 miles (72,000 km) or 72 months)

52,500 miles (84,000 km) or 42 months

- ❑ Inspect air cleaner filter
- ❑ Inspect vacuum hose
- ❑ Replace engine oil and filter (52,500 miles (84,000 km) or 84 months)

NORMAL MAINTENANCE SCHEDULE (CONT.)

60,000 miles (96,000 km) or 48 months

- ❑ Inspect vacuum hose
- ❑ Inspect air conditioning refrigerant
- ❑ Inspect brake hoses and lines
- ❑ Inspect drive shafts and boots
- ❑ Inspect electronic throttle control
- ❑ Inspect exhaust pipe and muffler
- ❑ Inspect front brake disc/pads, calipers
- ❑ Inspect propeller shaft (AWD)
- ❑ Inspect rear brake disc/pads
- ❑ Inspect steering gear box, linkage & boots/lower arm ball joint, upper arm ball joint
- ❑ Inspect suspension mounting bolts
- ❑ Inspect brake/clutch (if equipped) fluid
- ❑ Inspect fuel filter *1
- ❑ Inspect fuel lines, fuel hoses and connections
- ❑ Inspect fuel tank air filter (if equipped) *1
- ❑ Inspect parking brake
- ❑ Inspect vapor hose and fuel filler cap, fuel tank
- ❑ Inspect valve clearance *3
- ❑ Inspect drive belts
  (First, 60,000 miles (96,000 km) or 72 months
  after every 15,000 miles (24,000 km) or 24 months) *4
- ❑ Replace climate control air filter (for evaporator and blower unit)
- ❑ Replace air cleaner filter
- ❑ Replace engine oil and filter
  (60,000 miles (96,000 km) or 96 months)

67,500 miles (108,000 km) or 54 months

- ❑ Inspect air cleaner filter
- ❑ Inspect vacuum hose
- ❑ Replace engine oil and filter
  (67,500 miles (108,000 km) or 108 months)

*1 : Fuel filter & Fuel tank air filter are considered to be maintenance free but periodic inspection is recommended for this maintenance schedule depends on fuel quality. If there are some important safety matters like fuel flow restriction, surging, loss of power, hard starting problem etc, replace the fuel filter immediately regardless of maintenance schedule and consult an authorized HYUNDAI dealer for details.

*3 : Inspect for excessive tappet noise and/or engine vibration and adjust if necessary.

*4 : The drive belt should be replaced when cracks occur or tension is reduced excessively.

NORMAL MAINTENANCE SCHEDULE (CONT.)

75,000 miles (120,000 km) or 60 months

- ❑ Inspect air cleaner filter
- ❑ Inspect vacuum hose
- ❑ Inspect air conditioning refrigerant
- ❑ Inspect brake hoses and lines
- ❑ Inspect drive shafts and boots
- ❑ Inspect electronic throttle control
- ❑ Inspect exhaust pipe and muffler
- ❑ Inspect front brake disc/pads, calipers
- ❑ Inspect propeller shaft (AWD)
- ❑ Inspect rear brake disc/pads
- ❑ Inspect steering gear box, linkage & boots/lower arm ball joint, upper arm ball joint
- ❑ Inspect suspension mounting bolts
- ❑ Inspect manual transaxle fluid (if equipped)
- ❑ Inspect rear axle oil (AWD) *2
- ❑ Inspect transfer case oil (AWD) *2
- ❑ Inspect drive belts
  (First, 60,000 miles (96,000 km) or 72 months
  after every 15,000 miles (24,000 km) or 24 months)*4
- ❑ Replace climate control air filter (for evaporator and blower unit)
- ❑ Replace engine oil and filter
  (75,000 miles (120,000 km) or 120 months)

82,500 miles (132,000 km) or 66 months

- ❑ Inspect air cleaner filter
- ❑ Inspect vacuum hose
- ❑ Replace engine oil and filter
  (82,500 miles (132,000 km) or 132 months)

*2 : Transfer case oil and rear axle oil should be changed anytime they have been submerged in water.

*4 : The drive belt should be replaced when cracks occur or tension is reduced excessively.

NORMAL MAINTENANCE SCHEDULE (CONT.)

90,000 miles (144,000 km) or 72 months

- ❑ Inspect vacuum hose
- ❑ Inspect air conditioning refrigerant
- ❑ Inspect brake hoses and lines
- ❑ Inspect drive shafts and boots
- ❑ Inspect electronic throttle control
- ❑ Inspect exhaust pipe and muffler
- ❑ Inspect front brake disc/pads, calipers
- ❑ Inspect propeller shaft (AWD)
- ❑ Inspect rear brake disc/pads
- ❑ Inspect steering gear box, linkage & boots/lower arm ball joint, upper arm ball joint
- ❑ Inspect suspension mounting bolts
- ❑ Inspect brake/clutch (if equipped) fluid
- ❑ Inspect fuel filter *1
- ❑ Inspect fuel lines, fuel hoses and connections
- ❑ Inspect fuel tank air filter (if equipped) *1
- ❑ Inspect parking brake
- ❑ Inspect vapor hose and fuel filler cap, fuel tank
- ❑ Inspect drive belts
  (First, 60,000 miles (96,000 km) or 72 months
  after every 15,000 miles (24,000 km) or 24 months)*4
- ❑ Replace climate control air filter (for evaporator and blower unit)
- ❑ Replace air cleaner filter
- ❑ Replace engine oil and filter
  (90,000 miles (144,000 km) or 144 months)

97,500 miles (156,000 km) or 78 months

- ❑ Inspect air cleaner filter
- ❑ Inspect vacuum hose
- ❑ Replace engine oil and filter
  (97,500 miles (156,000 km) or 156 months)

*1 : Fuel filter & Fuel tank air filter are considered to be maintenance free but periodic inspection is recommended for this maintenance schedule depends on fuel quality. If there are some important safety matters like fuel flow restriction, surging, loss of power, hard starting problem etc, replace the fuel filter immediately regardless of maintenance schedule and consult an authorized HYUNDAI dealer for details.

*4 : The drive belt should be replaced when cracks occur or tension is reduced excessively.

NORMAL MAINTENANCE SCHEDULE (CONT.)

105,000 miles (168,000 km) or 84 months

- ❑ Inspect air cleaner filter
- ❑ Inspect vacuum hose
- ❑ Inspect air conditioning refrigerant
- ❑ Inspect brake hoses and lines
- ❑ Inspect drive shafts and boots
- ❑ Inspect electronic throttle control
- ❑ Inspect exhaust pipe and muffler
- ❑ Inspect front brake disc/pads, calipers
- ❑ Inspect propeller shaft (AWD)
- ❑ Inspect rear brake disc/pads
- ❑ Inspect steering gear box, linkage & boots/lower arm ball joint, upper arm ball joint
- ❑ Inspect suspension mounting bolts
- ❑ Inspect drive belts
  (First, 60,000 miles (96,000 km) or 72 months
  after every 15,000 miles (24,000 km) or 24 months) *4
- ❑ Replace climate control air filter (for evaporator and blower unit)
- ❑ Replace spark plugs (iridium coated)
- ❑ Replace engine oil and filter
  (105,000 miles (168,000 km) or 168 months)

112,500 miles (180,000 km) or 90 months

- ❑ Inspect air cleaner filter
- ❑ Inspect vacuum hose
- ❑ Inspect manual transaxle fluid (if equipped)
- ❑ Inspect rear axle oil (AWD) *2
- ❑ Inspect transfer case oil (AWD) *2
- ❑ Replace engine oil and filter
  (112,500 miles (180,000 km) or 180 months)

*2 : Transfer case oil and rear axle oil should be changed anytime they have been submerged in water.

*4 : The drive belt should be replaced when cracks occur or tension is reduced excessively.

NORMAL MAINTENANCE SCHEDULE (CONT.)

120,000 miles (192,000 km) or 96 months

- ❑ Inspect vacuum hose
- ❑ Inspect air conditioning refrigerant
- ❑ Inspect brake hoses and lines
- ❑ Inspect drive shafts and boots
- ❑ Inspect electronic throttle control
- ❑ Inspect exhaust pipe and muffler
- ❑ Inspect front brake disc/pads, calipers
- ❑ Inspect propeller shaft (AWD)
- ❑ Inspect rear brake disc/pads
- ❑ Inspect steering gear box, linkage & boots/lower arm ball joint, upper arm ball joint
- ❑ Inspect suspension mounting bolts
- ❑ Inspect brake/clutch (if equipped) fluid
- ❑ Inspect fuel filter *1
- ❑ Inspect fuel lines, fuel hoses and connections
- ❑ Inspect fuel tank air filter (if equipped) *1
- ❑ Inspect parking brake
- ❑ Inspect vapor hose and fuel filler cap, fuel tank
- ❑ Inspect valve clearance *3
- ❑ Inspect drive belts (First, 60,000 miles (96,000 km) or 72 months after every 15,000 miles (24,000 km) or 24 months)*4
- ❑ Replace climate control air filter (for evaporator and blower unit)
- ❑ Replace air cleaner filter
- ❑ Replace engine oil and filter (120,000 miles (192,000 km) or 192 months)
- ❑ Replace coolant (First, 120,000 miles (192,000 km) or 120 months after every 30,000 miles (48,000 km) or 24 months)

127,500 miles (204,000 km) or 102 months

- ❑ Inspect air cleaner filter
- ❑ Inspect vacuum hose
- ❑ Replace engine oil and filter (127,500 miles (204,000 km) or 204 months)

*1 : Fuel filter & Fuel tank air filter are considered to be maintenance free but periodic inspection is recommended for this maintenance schedule depends on fuel quality. If there are some important safety matters like fuel flow restriction, surging, loss of power, hard starting problem etc, replace the fuel filter immediately regardless of maintenance schedule and consult an authorized HYUNDAI dealer for details.

*3 : Inspect for excessive tappet noise and/or engine vibration and adjust if necessary.

*4 : The drive belt should be replaced when cracks occur or tension is reduced excessively.

NORMAL MAINTENANCE SCHEDULE (CONT.)

135,000 miles (216,000 km) or 108 months

- ❑ Inspect air cleaner filter
- ❑ Inspect vacuum hose
- ❑ Inspect air conditioning refrigerant
- ❑ Inspect brake hoses and lines
- ❑ Inspect drive shafts and boots
- ❑ Inspect electronic throttle control
- ❑ Inspect exhaust pipe and muffler
- ❑ Inspect front brake disc/pads, calipers
- ❑ Inspect propeller shaft (AWD)
- ❑ Inspect rear brake disc/pads
- ❑ Inspect steering gear box, linkage & boots/lower arm ball joint, upper arm ball joint
- ❑ Inspect suspension mounting bolts
- ❑ Inspect drive belts
  (First, 60,000 miles (96,000 km) or 72 months
  after every 15,000 miles (24,000 km) or 24 months)*4
- ❑ Replace climate control air filter (for evaporator and blower unit)
- ❑ Replace engine oil and filter
  (135,000 miles (216,000 km) or 216 months)

142,500 miles (228,000 km) or 114 months

- ❑ Inspect air cleaner filter
- ❑ Inspect vacuum hose
- ❑ Replace engine oil and filter
  (142,500 miles (228,000 km) or 228 months)

*4 : The drive belt should be replaced when cracks occur or tension is reduced excessively.

NORMAL MAINTENANCE SCHEDULE (CONT.)

150,000 miles (240,000 km) or 120 months

- ❑ Inspect vacuum hose
- ❑ Inspect air conditioning refrigerant
- ❑ Inspect brake hoses and lines
- ❑ Inspect drive shafts and boots
- ❑ Inspect electronic throttle control
- ❑ Inspect exhaust pipe and muffler
- ❑ Inspect front brake disc/pads, calipers
- ❑ Inspect propeller shaft (AWD)
- ❑ Inspect rear brake disc/pads
- ❑ Inspect steering gear box, linkage & boots/lower arm ball joint, upper arm ball joint
- ❑ Inspect suspension mounting bolts
- ❑ Inspect brake/clutch (if equipped) fluid
- ❑ Inspect fuel filter *1
- ❑ Inspect fuel lines, fuel hoses and connections
- ❑ Inspect fuel tank air filter (if equipped) *1
- ❑ Inspect parking brake
- ❑ Inspect vapor hose and fuel filler cap, fuel tank
- ❑ Inspect manual transaxle fluid (if equipped)
- ❑ Inspect rear axle oil (AWD) *2
- ❑ Inspect transfer case oil (AWD) *2
- ❑ Inspect drive belts
  (First, 60,000 miles (96,000 km) or 72 months
  after every 15,000 miles (24,000 km) or 24 months)*4

(Continued)

(Continued)

- ❑ Replace climate control air filter (for evaporator and blower unit)
- ❑ Replace air cleaner filter
- ❑ Replace engine oil and filter
  (150,000 miles (240,000 km) or 240 months)
- ❑ Replace coolant (First, 120,000 miles (192,000 km) or 120 months after every 30,000 miles (48,000 km) or 24 months)

No check, No service required

- ❑ Automatic transaxle fluid (if equipped)

*1 : Fuel filter & Fuel tank air filter are considered to be maintenance free but periodic inspection is recommended for this maintenance schedule depends on fuel quality. If there are some important safety matters like fuel flow restriction, surging, loss of power, hard starting problem etc, replace the fuel filter immediately regardless of maintenance schedule and consult an authorized HYUNDAI dealer for details.

*2 : Transfer case oil and rear axle oil should be changed anytime they have been submerged in water.

*4 : The drive belt should be replaced when cracks occur or tension is reduced excessively.

MAINTENANCE UNDER SEVERE USAGE CONDITIONS

The following items must be serviced more frequently on cars normally used under severe driving conditions. Refer to the chart below for the appropriate maintenance intervals.

R : Replace I : Inspect and, after inspection, clean, adjust, repair or replace if necessary

MAINTENANCE ITEM	MAINTENANCE OPERATION	MAINTENANCE INTERVALS	DRIVING CONDITION
ENGINE OIL AND FILTER	R	EVERY 3,750 MILES (6,000 KM) OR 6 MONTHS	A, B, C, D, E, F, G, H, I, K
AIR CLEANER FILTER	R	MORE FREQUENTLY	C, E
SPARK PLUGS	R	MORE FREQUENTLY	B, H
AUTOMATIC TRANSAXLE FLUID	R	EVERY 60,000 MILES (96,000 KM)	A, C, E, F, G, I
MANUAL TRANSAXLE FLUID	R	EVERY 75,000 MILES (120,000 KM)	A, C, E, F, G, I
FRONT BRAKE DISC/PADS, CALIPERS	I	MORE FREQUENTLY	C, D, G, H
REAR BRAKE DISC /PADS	I	MORE FREQUENTLY	C, D, G, H
PARKING BRAKE	I	MORE FREQUENTLY	C, D, G, H
STEERING GEAR BOX, LINKAGE & BOOTS/ LOWER ARM BALL JOINT, UPPER ARM BALL JOINT	I	MORE FREQUENTLY	C, D, E, F, G, H, I
DRIVE SHAFTS AND BOOTS	I	EVERY 7,500 MILES (12,000 KM) OR 6 MONTHS	C, D, E, F, G, H, I, J
TRANSFER CASE OIL (AWD)	R	EVERY 75,000 MILES (120,000 KM)	C, D, E, G, H, I, J
REAR AXLE OIL (AWD)	R	EVERY 75,000 MILES (120,000 KM)	C, D, E, G, H, I, J
CLIMATE CONTROL AIR FILTER (FOR EVAPORATOR AND BLOWER UNIT)	R	MORE FREQUENTLY	C, E
PROPELLER SHAFT	I	EVERY 7,500 MILES (12,000 KM) OR 6 MONTHS	C, E

SEVERE DRIVING CONDITIONS

A - Repeatedly driving short distance of less than 5 miles (8 km) in normal temperature or less than 10 miles (16 km) in freezing temperature
B - Extensive engine idling or low speed driving for long distances
C - Driving on rough, dusty, muddy, unpaved, graveled or salt- spread roads
D - Driving in areas using salt or other corrosive materials or in very cold weather
E - Driving in sandy areas
F - Driving in heavy traffic area over 90°F (32°C)
G - Driving on uphill, downhill, or mountain road
H - Towing a Trailer, or using a camper, or roof rack
I - Driving as a patrol car, taxi, other commercial use or vehicle towing
J - Driving over 106 mph (170 km/h)
K - Frequently driving in stop-and-go conditions

EXPLANATION OF SCHEDULED MAINTENANCE ITEMS

Engine oil and filter

The engine oil and filter should be changed at the intervals specified in the maintenance schedule. If the vehicle is being driven in severe conditions, more frequent oil and filter changes are required.

Drive belts

Inspect all drive belts for evidence of cuts, cracks, excessive wear or oil saturation and replace if necessary. Drive belts should be checked periodically for proper tension and adjusted as necessary.

Fuel filter (cartridge)

A clogged filter can limit the speed at which the vehicle may be driven, damage the emission system and cause multiple issues such as hard starting. If an excessive amount of foreign matter accumulates in the fuel tank, the filter may require replacement more frequently.

After installing a new filter, run the engine for several minutes, and check for leaks at the connections. Fuel filters should be installed by an authorized HYUNDAI dealer.

Fuel lines, fuel hoses and connections

Check the fuel lines, fuel hoses and connections for leakage and damage. Have an authorized HYUNDAI dealer replace any damaged or leaking parts immediately.

Vapor hose and fuel filler cap

The vapor hose and fuel filler cap should be inspected at those intervals specified in the maintenance schedule. Make sure that a new vapor hose or fuel filler cap is correctly replaced.

Vacuum crankcase ventilation hoses

Inspect the surface of hoses for evidence of heat and/or mechanical damage. Hard and brittle rubber, cracking, tears, cuts, abrasions, and excessive swelling indicate deterioration. Particular attention should be paid to examine those hose surfaces nearest to high heat sources, such as the exhaust manifold.

Inspect the hose routing to assure that the hoses do not come in contact with any heat source, sharp edges or moving component which might cause heat damage or mechanical wear. Inspect all hose connections, such as clamps and couplings, to make sure they are secure, and that no leaks are present. Hoses should be replaced immediately if there is any evidence of deterioration or damage.

Air cleaner filter

A Genuine HYUNDAI air cleaner filter is recommended when the filter is replaced.

Spark plugs

Make sure to install new spark plugs of the correct heat range.

Valve clearance

Inspect for excessive valve noise and/or engine vibration and adjust if necessary. An authorized HYUNDAI dealer should perform the operation.

Cooling system

Check for cooling system components, such as radiator, coolant reservoir, hoses and connections for leakage and damage. Replace any damaged parts.

Coolant

The coolant should be changed at the intervals specified in the maintenance schedule.

Manual transaxle fluid (if equipped)

Inspect the manual transaxle fluid according to the maintenance schedule.

Automatic transaxle fluid (if equipped)

Automatic transaxle fluid should not be checked under normal usage conditions.

But in severe conditions, the fluid should be changed at an authorized HYUNDAI dealer in accordance to the scheduled maintenance at the beginning of this chapter.

✻ NOTICE

Automatic transaxle fluid color is basically red.
As the vehicle is driven, the automatic transaxle fluid will begin to look darker. It is normal condition and you should not judge the need to replace the fluid based upon the changed color.

⚠ CAUTION

The use of a non-specified fluid could result in transaxle malfunction and failure.

Use only specified automatic transaxle fluid. (Refer to "Recommended lubricants and capacities" in section 8.)

Brake hoses and lines

Visually check for proper installation, chafing, cracks, deterioration and any leakage. Replace any deteriorated or damaged parts immediately.

Brake/Clutch* fluid

Check the brake fluid level in the brake fluid reservoir. The level should be between "MIN" and "MAX" marks on the side of the reservoir. Use only hydraulic brake fluid conforming to DOT 3 or DOT 4 specification.

* : if equipped

Parking brake

Inspect the parking brake system including the parking brake pedal and cables.

Brake discs, pads, calipers and rotors

Check the pads for excessive wear, discs for run out and wear, and calipers for fluid leakage.

Exhaust pipe and muffler

Visually inspect the exhaust pipes, muffler and hangers for cracks, deterioration, or damage. Start the engine and listen carefully for any exhaust gas leakage. Tighten connections or replace parts as necessary.

Suspension mounting bolts

Check the suspension connections for looseness or damage. Retighten to the specified torque.

Steering gear box, linkage & boots/lower arm ball joint

With the vehicle stopped and engine off, check for excessive free-play in the steering wheel.

Check the linkage for bends or damage. Check the dust boots and ball joints for deterioration, cracks, or damage. Replace any damaged parts.

Drive shafts and boots

Check the drive shafts, boots and clamps for cracks, deterioration, or damage. Replace any damaged parts and, if necessary, repack the grease.

Air conditioning refrigerant

Check the air conditioning lines and connections for leakage and damage.

ENGINE OIL

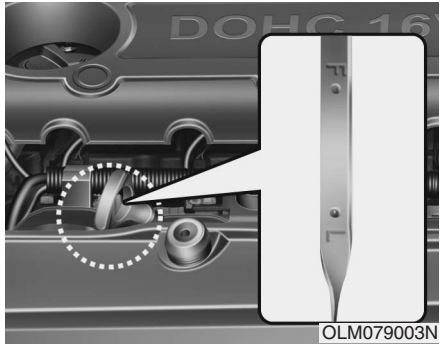

OLM079003N

Checking the engine oil level

1. Be sure the vehicle is on level ground.
2. Start the engine and allow it to reach normal operating temperature.
3. Turn the engine off and wait for a few minutes (about 5 minutes) for the oil to return to the oil pan.
4. Pull the dipstick out, wipe it clean, and re-insert it fully.

⚠ WARNING - Radiator hose

Be very careful not to touch the radiator hose when checking or adding the engine oil as it may be hot enough to burn you.

5. Pull the dipstick out again and check the level. The level should be between F and L.

⚠ CAUTION

Do not overfill with engine oil. Engine damage may result.

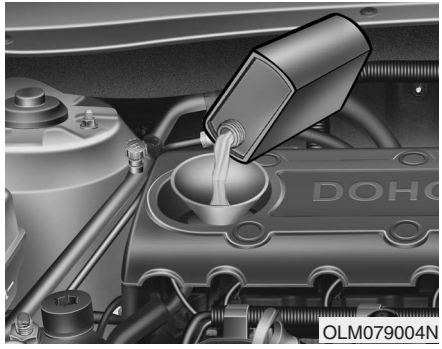

OLM079004N

If it is near or at L, add enough oil to bring the level to F. **Do not overfill.**

Use a funnel to help prevent oil from being spilled on engine components.

Use only the specified engine oil. (Refer to "Recommended lubricants and capacities" in section 8.)



Changing the engine oil and filter

Have engine oil and filter changed by an authorized HYUNDAI dealer according to the Maintenance Schedule at the beginning of this section.

⚠ CALIFORNIA PROPOSITION 65 WARNING

Engine oil contains chemicals known to the State of California to cause cancer, birth defects, and reproductive harm.

Used engine oil may cause irritation or cancer of the skin if left in contact with the skin for prolonged periods of time. Used engine oil contains chemicals that have caused cancer in laboratory animals. Always protect your skin by washing your hands thoroughly with soap and warm water as soon as possible after handling used oil.

ENGINE COOLANT

The high-pressure cooling system has a reservoir filled with year-round antifreeze coolant. The reservoir is filled at the factory.

Check the antifreeze protection and coolant level at least once a year, at the beginning of the winter season, and before traveling to a colder climate.

Checking the coolant level

⚠ WARNING - Removing radiator cap

- **Never attempt to remove the radiator cap while the engine is operating or hot. Doing so might lead to cooling system and engine damage. Also, hot coolant or steam could cause serious personal injury.**

(Continued)

(Continued)

- **Turn the engine off and wait until it cools down. Use extreme care when removing the radiator cap. Wrap a thick towel around it, and turn it counterclockwise slowly to the first stop. Step back while the pressure is released from the cooling system. When you are sure all the pressure has been released, press down on the cap, using a thick towel, and continue turning counterclockwise to remove it.**
- **Even if the engine is not operating, do not remove the radiator cap or the drain plug while the engine and radiator are hot. Hot coolant and steam may still blow out under pressure, causing serious injury.**

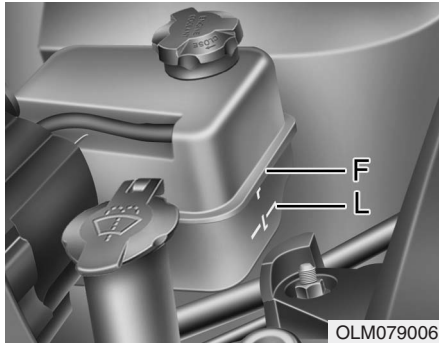

Check the condition and connections of all cooling system hoses and heater hoses. Replace any swollen or deteriorated hoses.

The coolant level should be filled between F and L marks on the side of the coolant reservoir when the engine is cool.

If the coolant level is low, add enough specified coolant to provide protection against freezing and corrosion. Bring the level to F, but do not overfill. If frequent additions are required, see an authorized HYUNDAI dealer for a cooling system inspection.

Recommended engine coolant

- When adding coolant, use only deionized water or soft water for your vehicle and never mix hard water in the coolant filled at the factory. An improper coolant mixture can result in serious malfunction or engine damage.
- The engine in your vehicle has aluminum engine parts and must be protected by an ethylene-glycol-based coolant to prevent corrosion and freezing.
- DO NOT USE alcohol or methanol coolant or mix them with the specified coolant.
- Do not use a solution that contains more than 60% antifreeze or less than 35% antifreeze, which would reduce the effectiveness of the solution.

For mixture percentage, refer to the following table.

Ambient Temperature	Mixture Percentage (volume)	
	Antifreeze	Water
5°F (-15°C)	35	65
-13°F (-25°C)	40	60
-31°F (-35°C)	50	50
-49°F (-45°C)	60	40

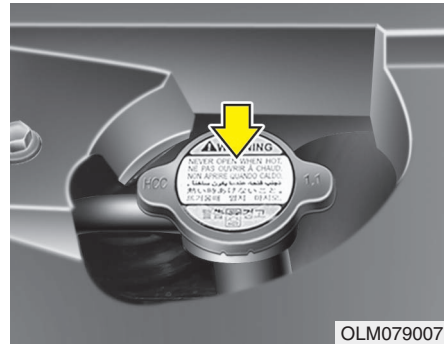
OLM079007

⚠ WARNING - Radiator cap

Do not remove the radiator cap when the engine and radiator are hot. Scalding hot coolant and steam may blow out under pressure causing serious injury.

Changing the coolant

Have coolant changed by an authorized HYUNDAI dealer according to the Maintenance Schedule at the beginning of this section.

⚠ CAUTION

Put a thick cloth around the radiator cap before refilling the coolant in order to prevent the coolant from overflowing into engine parts such as the generator.

⚠ WARNING - Coolant

- **Do not use radiator coolant or antifreeze in the washer fluid reservoir.**
- **Radiator coolant can severely obscure visibility when sprayed on the windshield and may cause loss of vehicle control or damage to paint and body trim.**

BRAKE/CLUTCH (IF EQUIPPED) FLUID

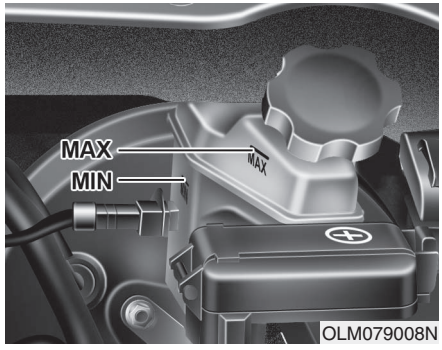

Checking the brake/clutch* fluid level

Check the fluid level in the reservoir periodically. The fluid level should be between MAX and MIN marks on the side of the reservoir.

Before removing the reservoir cap and adding brake/clutch* fluid, clean the area around the reservoir cap thoroughly to prevent brake/clutch* fluid contamination.

* : if equipped

If the level is low, add fluid to the MAX level. The level will fall with accumulated mileage. This is a normal condition associated with the wear of the brake linings and/or clutch disc (if equipped). If the fluid level is excessively low, have the brake/clutch* system checked by an authorized HYUNDAI dealer.

Use only the specified brake/clutch fluid. (Refer to "Recommended lubricants and capacities" in section 8.)*

Never mix different types of fluid.

⚠ WARNING - Loss of brake/clutch* fluid

In the event the brake/clutch* system requires frequent additions of fluid, the vehicle should be inspected by an authorized HYUNDAI dealer.

⚠ WARNING - Brake/clutch* fluid

When changing and adding brake/clutch* fluid, handle it carefully. Do not let it come in contact with your eyes. If brake/clutch* fluid should come in contact with your eyes, immediately flush them with a large quantity of fresh tap water. Have your eyes examined by a doctor as soon as possible.

⚠ CAUTION

Do not allow brake/clutch* fluid to contact the vehicle's body paint, as paint damage will result.

Brake/clutch* fluid, which has been exposed to open air for an extended time should never be used as its quality cannot be guaranteed. It should be disposed of properly. Don't put in the wrong kind of fluid. A few drops of mineral-based oil, such as engine oil, in your brake/clutch* system can damage brake/clutch* system parts.

WASHER FLUID

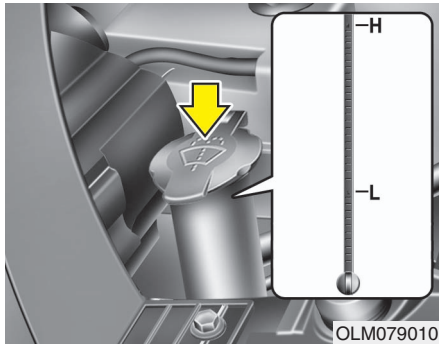

Checking the washer fluid level

Check the fluid level in the washer fluid reservoir and add fluid if necessary. Plain water may be used if washer fluid is not available. However, use washer solvent with antifreeze characteristics in cold climates to prevent freezing.

⚠ WARNING - Coolant

- **Do not use radiator coolant or antifreeze in the washer fluid reservoir.**
- **Radiator coolant can severely obscure visibility when sprayed on the windshield and may cause loss of vehicle control or damage to paint and body trim.**
- **Windshield washer fluid agents contain some amounts of alcohol and can be flammable under certain circumstances. Do not allow sparks or flame to contact the washer fluid or the washer fluid reservoir. Damage to the vehicle or occupants could occur.**
- **Windshield washer fluid is poisonous to humans and animals. Do not drink and avoid contacting windshield washer fluid. Serious injury or death could occur.**

PARKING BRAKE

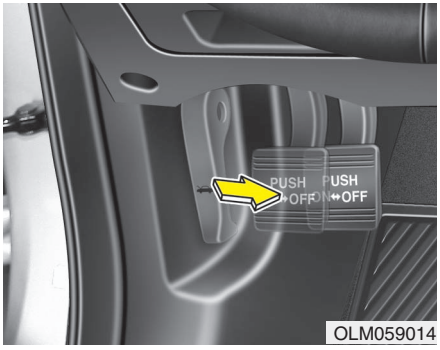

OLM059014

Checking the parking brake

Type A

Check whether the stroke is within specification when the parking brake pedal is depressed with 44 lb (20 kg, 196 N) of force. Also, the parking brake alone should securely hold the vehicle on a fairly steep grade. If the stroke is more or less than specified, have the parking brake adjusted by an authorized HYUNDAI dealer.

Stroke : 4 notch

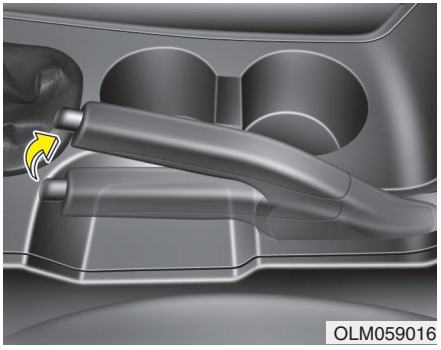
OLM059016

Type B

Check the stroke of the parking brake by counting the number of “clicks” heard while fully applying it from the released position. Also, the parking brake alone should securely hold the vehicle on a fairly steep grade. If the stroke is more or less than specified, have the parking brake adjusted by an authorized HYUNDAI dealer.

Stroke : 6 “clicks” at a force of 44 lbs (20 kg, 196 N).

AIR CLEANER

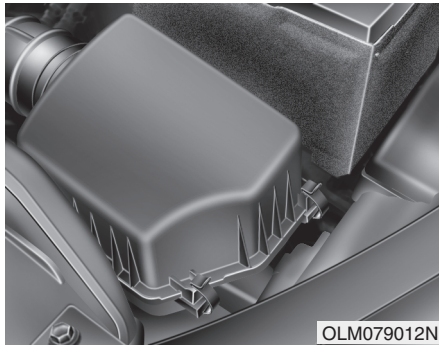
OLM079012N

Filter replacement

It must be replaced when necessary, and should not be washed.

You can clean the filter when inspecting the air cleaner element.

Clean the filter by using compressed air.

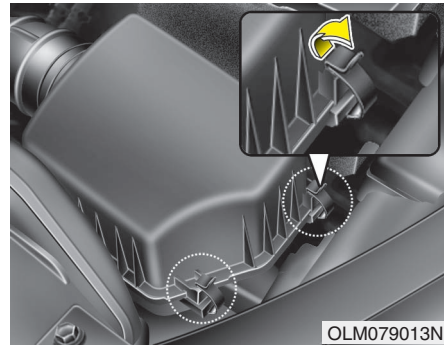
OLM079013N

1. Loosen the air cleaner cover attaching clips and open the cover.


OLM079014

2. Wipe the inside of the air cleaner.
3. Replace the air cleaner filter.
4. Lock the cover with the cover attaching clips.

Replace the filter according to the Maintenance Schedule.

If the vehicle is operated in extremely dusty or sandy areas, replace the element more often than the usual recommended intervals. (Refer to "Maintenance under severe usage conditions" in this section.)

CLIMATE CONTROL AIR FILTER

⚠ CAUTION

- ***Do not drive with the air cleaner removed; this will result in excessive engine wear.***
- ***When removing the air cleaner filter, be careful that dust or dirt does not enter the air intake, or damage may result.***
- ***Use a HYUNDAI genuine part. Use of non-genuine parts could damage the air flow sensor.***

Filter inspection

The climate control air filter should be replaced according to the Maintenance Schedule. If the vehicle is operated in severely air-polluted cities or on dusty rough roads for a long period, it should be inspected more frequently and replaced earlier. When you replace the climate control air filter, replace it performing the following procedure, and be careful to avoid damaging other components.

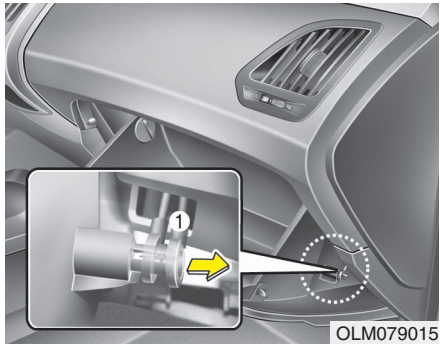

Filter replacement

1. Open the glove box and remove the support rod (1).

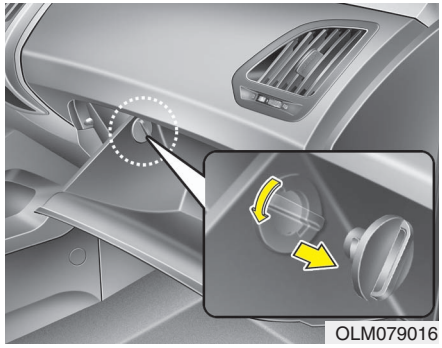

2. With the glove box open, remove the stoppers on both sides.

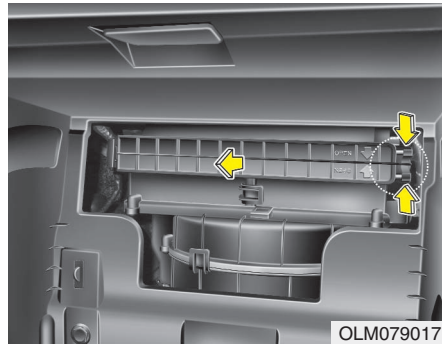

3. Remove the climate control air filter case pulling out both sides of the cover.

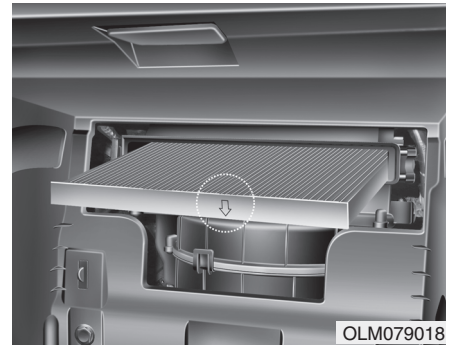

4. Replace the climate control air filter.
5. Reassemble in the reverse order of disassembly.

✻ NOTICE

When replacing the climate control air filter install it properly. Otherwise, the system may produce noise and the effectiveness of the filter may be reduced.

WIPER BLADES

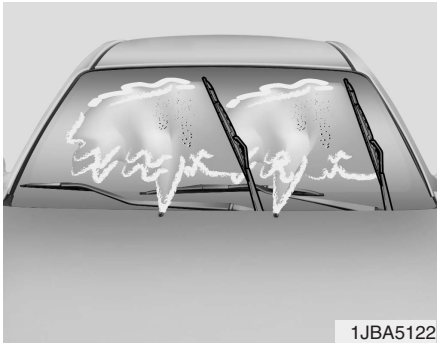

Blade inspection

✻ NOTICE

Commercial hot waxes applied by automatic car washes have been known to make the windshield difficult to clean.

Contamination of either the windshield or the wiper blades with foreign matter can reduce the effectiveness of the windshield wipers. Common sources of contamination are insects, tree sap, and hot wax treatments used by some commercial car washes. If the blades are not wiping properly, clean both the window and the blades with a good cleaner or mild detergent, and rinse thoroughly with clean water.

⚠ CAUTION

To prevent damage to the wiper blades, do not use gasoline, kerosene, paint thinner, or other solvents on or near them.

Blade replacement

When the wipers no longer clean adequately, the blades may be worn or cracked, and require replacement.

⚠ CAUTION

To prevent damage to the wiper arms or other components, do not attempt to move the wipers manually.

⚠ CAUTION

The use of a non-specified wiper blade could result in wiper malfunction and failure.

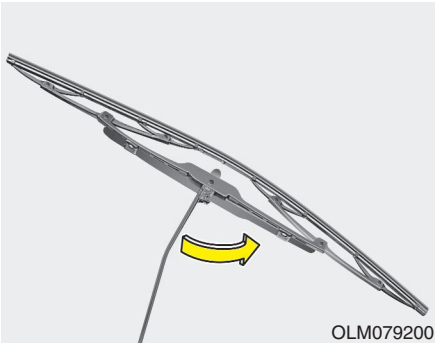

Front windshield wiper blade

1. Raise the wiper arm and turn the wiper blade assembly to expose the plastic locking clip.

⚠ CAUTION

Do not allow the wiper arm to fall against the windshield, since it may chip or crack the windshield.

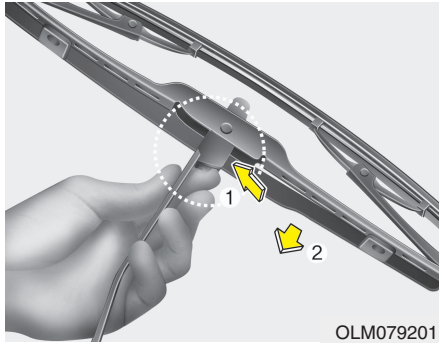

2. Compress the clip and slide the blade assembly downward.



3. Lift it off the arm.
4. Install the blade assembly in the reverse order of removal.

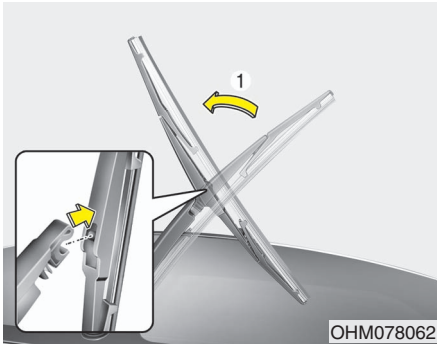

Rear window wiper blade

1. Raise the wiper arm and pull out the wiper blade assembly.

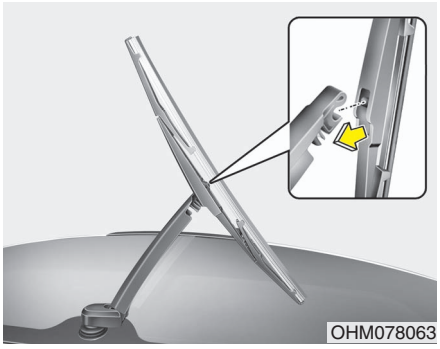

2. Install the new blade assembly by inserting the center part into the slot in the wiper arm until it clicks into place.
3. Make sure the blade assembly is installed firmly by trying to pull it slightly.

To prevent damage to the wiper arms or other components, have an authorized HYUNDAI dealer replace the wiper blade.

BATTERY

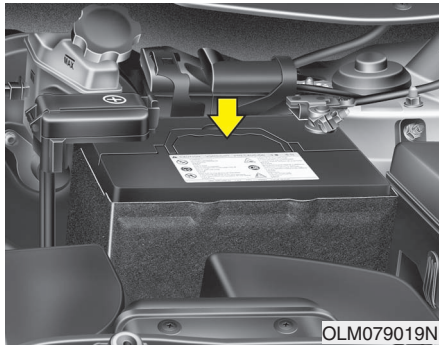

For best battery service

- Keep the battery securely mounted.
- Keep the battery top clean and dry.
- Keep the terminals and connections clean, tight, and coated with petroleum jelly or terminal grease.
- Rinse any spilled electrolyte from the battery immediately with a solution of water and baking soda.
- If the vehicle is not going to be used for an extended time, disconnect the battery cables.

⚠ WARNING - Battery dangers

Always read the following instructions carefully when handling a battery.

Keep lighted cigarettes and all other flames or sparks away from the battery.

Hydrogen, a highly combustible gas, is always present in battery cells and may explode if ignited.

Keep batteries out of the reach of children because batteries contain highly corrosive SULFURIC ACID. Do not allow battery acid to contact your skin, eyes, clothing or paint finish.

(Continued)

(Continued)

If any electrolyte gets into your eyes, flush your eyes with clean water for at least 15 minutes and get immediate medical attention.

If electrolyte gets on your skin, thoroughly wash the contacted area. If you feel a pain or a burning sensation, get medical attention immediately.

Wear eye protection when charging or working near a battery. Always provide ventilation when working in an enclosed space.

An inappropriately disposed battery can be harmful to the environment and human health. Dispose the battery according to your local law(s) or regulation.

(Continued)

(Continued)

- **When lifting a plastic-cased battery, excessive pressure on the case may cause battery acid to leak, resulting in personal injury. Lift with a battery carrier or with your hands on opposite corners.**
- **Never attempt to recharge the battery when the battery cables are connected.**
- **The electrical ignition system works with high voltage. Never touch these components with the engine running or the ignition switched on.**

Failure to follow the above warnings can result in serious bodily injury or death.

⚠ CALIFORNIA PROPOSITION 65 WARNING

Battery posts, terminals, and related accessories contain lead and lead compounds, chemicals known to the State of California to cause cancer, birth defects, and reproductive harm. Batteries also contain other chemicals known to the State of California to cause cancer. Wash hands after handling.

Battery recharging

Your vehicle has a maintenance-free, calcium-based battery.

- If the battery becomes discharged in a short time (because, for example, the headlights or interior lights were left on while the vehicle was not in use), recharge it by slow charging (trickle) for 10 hours.
- If the battery gradually discharges because of high electric load while the vehicle is being used, recharge it at 20-30A for two hours.

⚠ WARNING - Recharging battery

When recharging the battery, observe the following precautions:

- **The battery must be removed from the vehicle and placed in an area with good ventilation.**
- **Do not allow cigarettes, sparks, or flame near the battery.**
- **Watch the battery during charging, and stop or reduce the charging rate if the battery cells begin gassing (boiling) violently or if the temperature of the electrolyte of any cell exceeds 120°F (49°C).**

(Continued)

(Continued)

- **Wear eye protection when checking the battery during charging.**
- **Disconnect the battery charger in the following order.**

1. **Turn off the battery charger main switch.**
2. **Unhook the negative clamp from the negative battery terminal.**
3. **Unhook the positive clamp from the positive battery terminal.**

⚠ WARNING

- **Before performing maintenance or recharging the battery, turn off all accessories and stop the engine.**
- **The negative battery cable must be removed first and installed last when the battery is disconnected.**

Reset items

Items should be reset after the battery has been discharged or the battery has been disconnected.

- Auto up/down window (See section 4)
- Sunroof (See section 4)
- Trip computer (See section 4)
- Climate control system (See section 4)
- Clock (See section 4)
- Audio (See section 4)

TIRES AND WHEELS

Tire care

For proper maintenance, safety, and maximum fuel economy, you must always maintain recommended tire inflation pressures and stay within the load limits and weight distribution recommended for your vehicle.

Recommended cold tire inflation pressures

All tire pressures (including the spare) should be checked when the tires are cold. “Cold Tires” means the vehicle has not been driven for at least three hours or driven less than one mile (1.6 km).

Recommended pressures must be maintained for the best ride, vehicle handling, and minimum tire wear.

For recommended inflation pressure, refer to “Tire and wheels” in section 8.

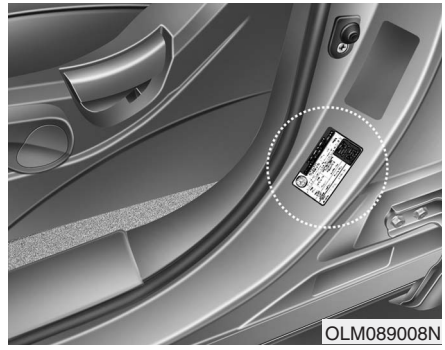

All specifications (sizes and pressures) can be found on a label attached to the driver’s side center pillar.

⚠ WARNING - Tire underinflation

Severe underinflation can lead to severe heat build-up, causing blowouts, tread separation and other tire failures that can result in the loss of vehicle control leading to severe injury or death. This risk is much higher on hot days and when driving for long periods at high speeds.

⚠ CAUTION

- ***Underinflation also results in excessive wear, poor handling and reduced fuel economy. Wheel deformation also is possible. Keep your tire pressures at the proper levels. If a tire frequently needs refilling, have it checked by an authorized HYUNDAI dealer.***
- ***Overinflation produces a harsh ride, excessive wear at the center of the tire tread, and a greater possibility of damage from road hazards.***

⚠ CAUTION

- ***Warm tires normally exceed recommended cold tire pressures by 4 to 6 psi (28 to 41 kPa). Do not release air from warm tires to adjust the pressure or the tires will be underinflated.***
- ***Be sure to reinstall the tire inflation valve caps. Without the valve cap, dirt or moisture could get into the valve core and cause air leakage. If a valve cap is missing, install a new one as soon as possible.***

⚠ WARNING - Tire Inflation

Overinflation or underinflation can reduce tire life, adversely affect vehicle handling, and lead to sudden tire failure. This could result in loss of vehicle control and potential injury.

⚠ CAUTION - Tire pressure

Always observe the following:

- ***Check tire pressure when the tires are cold. (After vehicle has been parked for at least three hours or hasn't been driven more than one mile (1.6 km) since startup.)***
- ***Check the pressure of your spare tire each time you check the pressure of other tires.***
- ***Never overload your vehicle. Be careful not to overload a vehicle luggage rack if your vehicle is equipped with one.***
- ***Worn, old tires can cause accidents. If your tread is badly worn, or if your tires have been damaged, replace them.***

Checking tire inflation pressure

Check your tires once a month or more.

Also, check the tire pressure of the spare tire.

How to check

Use a good quality gage to check tire pressure. You can not tell if your tires are properly inflated simply by looking at them. Radial tires may look properly inflated even when they're underinflated.

Check the tire's inflation pressure when the tires are cold. - "Cold" means your vehicle has been sitting for at least three hours or driven no more than 1 mile (1.6 km).

Remove the valve cap from the tire valve stem. Press the tire gage firmly onto the valve to get a pressure measurement. If the cold tire inflation pressure matches the recommended pressure on the tire and loading information label, no further adjustment is necessary. If the pressure is low, add air until you reach the recommended amount.

If you overfill the tire, release air by pushing on the metal stem in the center of the tire valve. Recheck the tire pressure with the tire gage. Be sure to put the valve caps back on the valve stems. They help prevent leaks by keeping out dirt and moisture.

⚠ WARNING

- **Inspect your tires frequently for proper inflation as well as wear and damage. Always use a tire pressure gauge.**
- **Tires with too much or too little pressure wear unevenly causing poor handling, loss of vehicle control, and sudden tire failure leading to accidents, injuries, and even death. The recommended cold tire pressure for your vehicle can be found in this manual and on the tire label located on the driver's side center pillar.**
- **Worn tires can cause accidents. Replace tires that are worn, show uneven wear, or are damaged.**
- **Remember to check the pressure of your spare tire. HYUNDAI recommends that you check the spare every time you check the pressure of the other tires on your vehicle.**

Tire rotation

To equalize tread wear, it is recommended that the tires be rotated every 7,500 miles (12,000 km) or sooner if irregular wear develops.

During rotation, check the tires for correct balance.

When rotating tires, check for uneven wear and damage. Abnormal wear is usually caused by incorrect tire pressure, improper wheel alignment, out-of-balance wheels, severe braking or severe cornering. Look for bumps or bulges in the tread or side of tire. Replace the tire if you find either of these conditions. Replace the tire if fabric or cord is visible. After rotation, be sure to bring the front and rear tire pressures to specification and check lug nut tightness.

Refer to “Tire and wheels” in section 8.

Without a spare tire

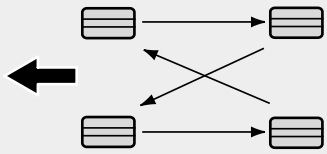

S2BLA790A

Directional tires (if equipped)

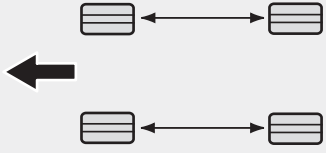

CBGQ0707A

Disc brake pads should be inspected for wear whenever tires are rotated.

✻ NOTICE

Rotate radial tires that have an asymmetric tread pattern only from front to rear and not from right to left.

⚠ WARNING

- **Do not use the compact spare tire for tire rotation.**
- **Do not mix bias ply and radial ply tires under any circumstances. This may cause unusual handling characteristics that could result in death, severe injury, or property damage.**

Wheel alignment and tire balance

The wheels on your vehicle were aligned and balanced carefully at the factory to give you the longest tire life and best overall performance.

In most cases, you will not need to have your wheels aligned again. However, if you notice unusual tire wear or your vehicle pulling one way or the other, the alignment may need to be reset.

If you notice your vehicle vibrating when driving on a smooth road, your wheels may need to be rebalanced.

⚠ CAUTION

Improper wheel weights can damage your vehicle's aluminum wheels. Use only approved wheel weights.

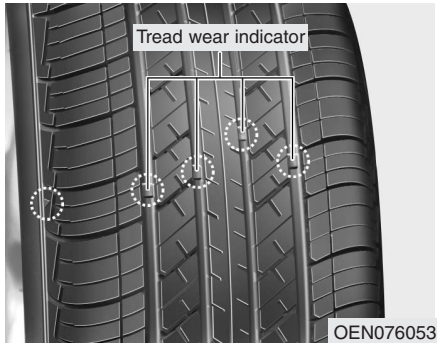

Tire replacement

If the tire is worn evenly, a tread wear indicator will appear as a solid band across the tread. This shows there is less than 1/16 inch (1.6 mm) of tread left on the tire. Replace the tire when this happens.

Do not wait for the band to appear across the entire tread before replacing the tire.

⚠ WARNING - Replacing tires

To reduce the chance or serious or fatal injuries from an accident caused by tire failure or loss of vehicle control:

- **Replace tires that are worn, show uneven wear, or are damaged. Worn tires can cause loss of braking effectiveness, steering control, and traction.**
- **Do not drive your vehicle with too little or too much pressure in your tires. This can lead to uneven wear and tire failure.**
- **When replacing tires, never mix radial and bias-ply tires on the same car. You must replace all tires (including the spare) if moving from radial to bias-ply tires.**

(Continued)

(Continued)

- **Using tires and wheel other than the recommended sizes could cause unusual handling characteristics and poor vehicle control, resulting in a serious accident.**
- **Wheels that do not meet HYUNDAI's specifications may fit poorly and result in damage to the vehicle or unusual handling and poor vehicle control.**
- **The ABS works by comparing the speed of the wheels. Tire size can affect wheel speed. When replacing tires, all 4 tires must use the same size originally supplied with the vehicle. Using tires of a different size can cause the ABS (Anti-lock Brake System) and ESC (Electronic Stability Control) to work irregularly (if equipped).**

Compact spare tire replacement

A compact spare tire has a shorter tread life than a regular size tire. Replace it when you can see the tread wear indicator bars on the tire. The replacement compact spare tire should be the same size and design tire as the one provided with your new vehicle and should be mounted on the same compact spare tire wheel. The compact spare tire is not designed to be mounted on a regular size wheel, and the compact spare tire wheel is not designed for mounting a regular size tire.

Wheel replacement

When replacing the metal wheels for any reason, make sure the new wheels are equivalent to the original factory units in diameter, rim width and offset.

⚠ WARNING

A wheel that is not the correct size may adversely affect wheel and bearing life, braking and stopping abilities, handling characteristics, ground clearance, body-to-tire clearance, snow chain clearance, speedometer and odometer calibration, headlight aim and bumper height.

Tire traction

Tire traction can be reduced if you drive on worn tires, tires that are improperly inflated or on slippery road surfaces. Tires should be replaced when tread wear indicators appear. Slow down whenever there is rain, snow or ice on the road to reduce the possibility of losing control of the vehicle.

Tire maintenance

In addition to proper inflation, correct wheel alignment helps to decrease tire wear. If you find a tire is worn unevenly, have your dealer check the wheel alignment.

When you have new tires installed, make sure they are balanced. This will increase vehicle ride comfort and tire life. Additionally, a tire should always be rebalanced if it is removed from the wheel.

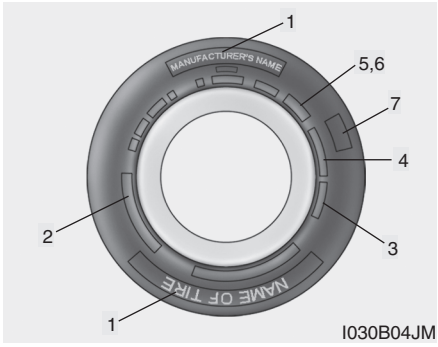

Tire sidewall labeling

This information identifies and describes the fundamental characteristics of the tire and also provides the tire identification number (TIN) for safety standard certification. The TIN can be used to identify the tire in case of a recall.

1. Manufacturer or brand name

Manufacturer or Brand name is shown.

2. Tire size designation

A tire's sidewall is marked with a tire size designation. You will need this information when selecting replacement tires for your car. The following explains what the letters and numbers in the tire size designation mean.

Example tire size designation:

(These numbers are provided as an example only; your tire size designator could vary depending on your vehicle.)

225/55R18 105T

225 - Tire width in millimeters.

55 - Aspect ratio. The tire's section height as a percentage of its width.

R - Tire construction code (Radial).

18 - Rim diameter in inches.

105 - Load Index, a numerical code associated with the maximum load the tire can carry.

T - Speed Rating Symbol. See the speed rating chart in this section for additional information.

Wheel size designation

Wheels are also marked with important information that you need if you ever have to replace one. The following explains what the letters and numbers in the wheel size designation mean.

Example wheel size designation:

6.5JX18

6.5 - Rim width in inches.

J - Rim contour designation.

18 - Rim diameter in inches.

Tire speed ratings

The chart below lists many of the different speed ratings currently being used for passenger car tires. The speed rating is part of the tire size designation on the sidewall of the tire. This symbol corresponds to that tire's designed maximum safe operating speed.

Speed Rating Symbol	Maximum Speed
S	112 mph (180 km/h)
T	118 mph (190 km/h)
H	130 mph (210 km/h)
V	149 mph (240 km/h)
Z	Above 149 mph (240 km/h)

3. Checking tire life (TIN : Tire Identification Number)

Any tires that are over 6 years old, based on the manufacturing date, (including the spare tire) should be replaced by new ones. You can find the manufacturing date on the tire sidewall (possibly on the inside of the wheel), displaying the DOT Code. The DOT Code is a series of numbers on a tire consisting of numbers and English letters. The manufacturing date is designated by the last four digits (characters) of the DOT code.

DOT : XXXX XXXX OOOO

The front part of the DOT means a plant code number, tire size and tread pattern and the last four numbers indicate week and year manufactured.

For example:

DOT XXXX XXXX 1610 represents that the tire was produced in the 16th week of 2010.

⚠ WARNING - Tire age

Tires degrade over time, even when they are not being used.

Regardless of the remaining tread, it is recommended that tires generally be replaced after six (6) years of normal service. Heat caused by hot climates or frequent high loading conditions can accelerate the aging process. Failure to follow this warning can result in sudden tire failure, which could lead to a loss of control and an accident involving serious injury or death.

4. Tire ply composition and material

The number of layers or plies of rubber-coated fabric in the tire. Tire manufacturers also must indicate the materials in the tire, which include steel, nylon, polyester, and others. The letter "R" means radial ply construction; the letter "D" means diagonal or bias ply construction; and the letter "B" means belted-bias ply construction.

5. Maximum permissible inflation pressure

This number is the greatest amount of air pressure that should be put in the tire. Do not exceed the maximum permissible inflation pressure. Refer to the Tire and Loading Information label for recommended inflation pressure.

6. Maximum load rating

This number indicates the maximum load in kilograms and pounds that can be carried by the tire. When replacing the tires on the vehicle, always use a tire that has the same load rating as the factory installed tire.

7. Uniform tire quality grading

Quality grades can be found where applicable on the tire sidewall between tread shoulder and maximum section width.

For example:

TREAD wear 200

TRACTION AA

TEMPERATURE A

Tread wear

The tread wear grade is a comparative rating based on the wear rate of the tire when tested under controlled conditions on a specified government test course. For example, a tire graded 150 would wear one-and-a-half times (1½) as well on the government course as a tire graded 100.

The relative performance of tires depends upon the actual conditions of their use, however, and may depart significantly from the norm due to variations in driving habits, service practices and differences in road characteristics and climate.

These grades are molded on the side-walls of passenger vehicle tires.

The tires available as standard or optional equipment on your vehicle may vary with respect to grade.

Traction - AA, A, B & C

The traction grades, from highest to lowest, are AA, A, B and C. Those grades represent the tire's ability to stop on wet pavement as measured under controlled conditions on specified government test surfaces of asphalt and concrete. A tire marked C may have poor traction performance.

⚠ WARNING

The traction grade assigned to this tire is based on straight-ahead braking traction tests, and does not include acceleration, cornering, hydroplaning, or peak traction characteristics.

Temperature -A, B & C

The temperature grades are A (the highest), B and C representing the tire's resistance to the generation of heat and its ability to dissipate heat when tested under controlled conditions on a specified indoor laboratory test wheel.

Sustained high temperature can cause the material of the tire to degenerate and reduce tire life, and excessive temperature can lead to sudden tire failure. The grade C corresponds to a level of performance which all passenger car tires must meet under the Federal Motor Vehicle Safety Standard No. 109. Grades B and A represent higher levels of performance on the laboratory test wheel than the minimum required by law.

⚠ WARNING - Tire temperature

The temperature grade for this tire is established for a tire that is properly inflated and not overloaded. Excessive speed, underinflation, or excessive loading, either separately or in combination, can cause heat build-up and possible sudden tire failure. This can cause loss of vehicle control and serious injury or death.

Tire terminology and definitions

Air Pressure: The amount of air inside the tire pressing outward on the tire. Air pressure is expressed in pounds per square inch (psi) or kilopascal (kPa).

Accessory Weight: This means the combined weight of optional accessories. Some examples of optional accessories are, automatic transaxle, power seats, and air conditioning.

Aspect Ratio: The relationship of a tire's height to its width.

Belt: A rubber coated layer of cords that is located between the plies and the tread. Cords may be made from steel or other reinforcing materials.

Bead: The tire bead contains steel wires wrapped by steel cords that hold the tire onto the rim.

Bias Ply Tire: A pneumatic tire in which the plies are laid at alternate angles less than 90 degrees to the centerline of the tread.

Cold Tire Pressure: The amount of air pressure in a tire, measured in pounds per square inch (psi) or kilopascals (kPa) before a tire has built up heat from driving.

Curb Weight: This means the weight of a motor vehicle with standard and optional equipment including the maximum capacity of fuel, oil and coolant, but without passengers and cargo.

DOT Markings: A code molded into the sidewall of a tire signifying that the tire is in compliance with the U.S. Department of Transportation motor vehicle safety standards. The DOT code includes the Tire Identification Number (TIN), an alphanumeric designator which can also identify the tire manufacturer, production plant, brand and date of production.

GVWR: Gross Vehicle Weight Rating

GAWR FRT: Gross Axle Weight Rating for the Front Axle.

GAWR RR: Gross Axle Weight Rating for the Rear axle.

Intended Outboard Sidewall: The side of an asymmetrical tire, that must always face outward when mounted on a vehicle.

Kilopascal (kPa): The metric unit for air pressure.

Load Index: An assigned number ranging from 1 to 279 that corresponds to the load carrying capacity of a tire.

Maximum Inflation Pressure: The maximum air pressure to which a cold tire may be inflated. The maximum air pressure is molded onto the sidewall.

Maximum Load Rating: The load rating for a tire at the maximum permissible inflation pressure for that tire.

Maximum Loaded Vehicle Weight: The sum of curb weight; accessory weight; vehicle capacity weight; and production options weight.

Normal Occupant Weight: The number of occupants a vehicle is designed to seat multiplied by 150 pounds (68 kg).

Occupant Distribution: Designated seating positions.

Outward Facing Sidewall: The side of a asymmetrical tire that has a particular side that faces outward when mounted on a vehicle. The outward facing sidewall bears white lettering or bears manufacturer, brand, and/or model name molding that is higher or deeper than the same moldings on the inner facing sidewall.

Passenger (P-Metric) Tire: A tire used on passenger cars and some light duty trucks and multipurpose vehicles.

Recommended Inflation Pressure: Vehicle manufacturer's recommended tire inflation pressure and shown on the tire placard.

Radial Ply Tire: A pneumatic tire in which the ply cords that extend to the beads are laid at 90 degrees to the centerline of the tread.

Rim: A metal support for a tire and upon which the tire beads are seated.

Sidewall: The portion of a tire between the tread and the bead.

Speed Rating: An alphanumeric code assigned to a tire indicating the maximum speed at which a tire can operate.

Traction: The friction between the tire and the road surface. The amount of grip provided.

Tread: The portion of a tire that comes into contact with the road.

Treadwear Indicators: Narrow bands, sometimes called "wear bars," that show across the tread of a tire when only 2/32 inch of tread remains.

UTQGS: Uniform Tire Quality Grading Standards, a tire information system that provides consumers with ratings for a tire's traction, temperature and treadwear. Ratings are determined by tire manufacturers using government testing procedures. The ratings are molded into the sidewall of the tire.

Vehicle Capacity Weight: The number of designated seating positions multiplied by 150 lbs. (68 kg) plus the rated cargo and luggage load.

Vehicle Maximum Load on the Tire: Load on an individual tire due to curb and accessory weight plus maximum occupant and cargo weight.

Vehicle Normal Load on the Tire: Load on an individual tire that is determined by distributing to each axle its share of the curb weight, accessory weight, and normal occupant weight and dividing by 2.

Vehicle Placard: A label permanently attached to a vehicle showing the original equipment tire size and recommended inflation pressure.

All season tires

HYUNDAI specifies all season tires on some models to provide good performance for use all year round, including snowy and icy road conditions. All season tires are identified by ALL SEASON and/or M+S (Mud and Snow) on the tire sidewall. Snow tires have better snow traction than all season tires and may be more appropriate in some areas.

Summer tires

HYUNDAI specifies summer tires on some models to provide superior performance on dry roads. Summer tire performance is substantially reduced in snow and ice. Summer tires do not have the tire traction rating M+S (Mud and Snow) on the tire side wall. if you plan to operate your vehicle in snowy or icy conditions. HYUNDAI recommends the use of snow tires or all season tires on all four wheels.

Snow tires

If you equip your car with snow tires, they should be the same size and have the same load capacity as the original tires. Snow tires should be installed on all four wheels; otherwise, poor handling may result.

Snow tires should carry 4 psi (28 kPa) more air pressure than the pressure recommended for the standard tires on the tire label on the driver's side of the center pillar, or up to the maximum pressure shown on the tire sidewall, whichever is less.

Do not drive faster than 75 mph (120 km/h) when your vehicle is equipped with snow tires.

Tire chains

Tire chains, if necessary, should be installed on the drive wheels as follows.

2WD : Front wheels

AWD : All four wheels

If a full set of chains is not available for a AWD vehicle, chains may be installed on the front wheels only.

Be sure that the chains are installed in accordance with the manufacturer's instructions.

To minimize tire and chain wear, do not continue to use tire chains when they are no longer needed.

⚠ WARNING - Snow or ice

- **When driving on roads covered with snow or ice, drive at less than 20 mph (30 km/h).**
- **Use the SAE "S" class or wire chains.**
- **If you hear noise caused by chains contacting the body, retighten the chain to avoid contact with the vehicle body.**
- **To prevent body damage, retighten the chains after driving 0.3~0.6 miles (0.5~1.0 km).**
- **Do not use tire chains on vehicles equipped with aluminum wheels. In unavoidable circumstance, use a wire type chain.**
- **Use wire chains less than 0.59 inches (15 mm) to prevent damage to the chain's connection.**

Radial-ply tires

Radial-ply tires provide improved tread life, road hazard resistance and smoother high speed ride. The radial-ply tires used on this vehicle are of belted construction, and are selected to complement the ride and handling characteristics of your vehicle. Radial-ply tires have the same load carrying capacity, as bias-ply or bias belted tires of the same size, and use the same recommended inflation pressure. Mixing of radial-ply tires with bias-ply or bias belted tires is not recommended. Any combinations of radial-ply and bias-ply or bias belted tires when used on the same vehicle will seriously deteriorate vehicle handling. The best rule to follow is: Identical radial-ply tires should always be used as a set of four.

Longer wearing tires can be more susceptible to irregular tread wear. It is very important to follow the tire rotation interval shown in this section to achieve the tread life potential of these tires. Cuts and punctures in radial-ply tires are repairable only in the tread area, because of sidewall flexing. Consult your tire dealer for radial-ply tire repairs.

FUSES

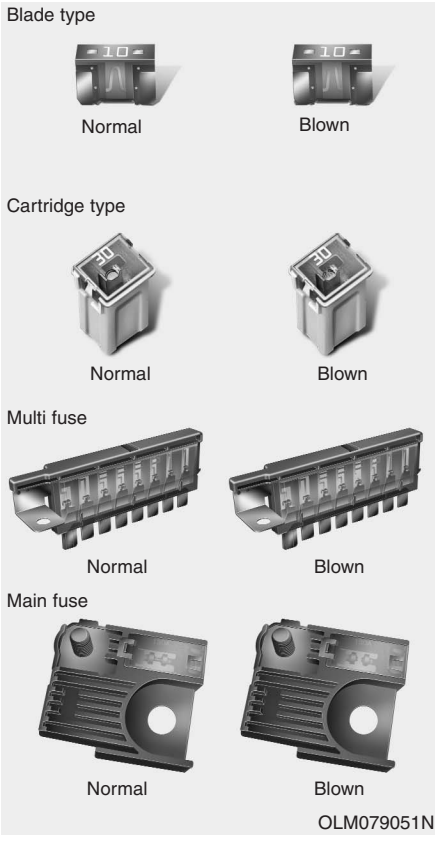

A vehicle's electrical system is protected from electrical overload damage by fuses.

This vehicle has 3 fuse panels, one located in the driver's side panel bolster, the other in the engine compartment.

If any of your vehicle's lights, accessories, or controls do not work, check the appropriate circuit fuse. If a fuse has blown, the element inside the fuse will melt.

If the electrical system does not work, first check the driver's side fuse panel.

Always replace a blown fuse with one of the same rating.

If the replacement fuse blows, this indicates an electrical problem. Avoid using the system involved and immediately consult an authorized HYUNDAI dealer.

Four kinds of fuse are used: blade type, cartridge type, multi fuse and main fuse.

⚠ WARNING - Fuse replacement

- **Never replace a fuse with anything but another fuse of the same rating.**
- **A higher capacity fuse could cause damage and possibly a fire.**
- **Never install a wire instead of the proper fuse - even as a temporary repair. It may cause extensive wiring damage and a possible fire.**

⚠ CAUTION

Do not use a screwdriver or any other metal object to remove fuses because it may cause a short circuit and damage the system.

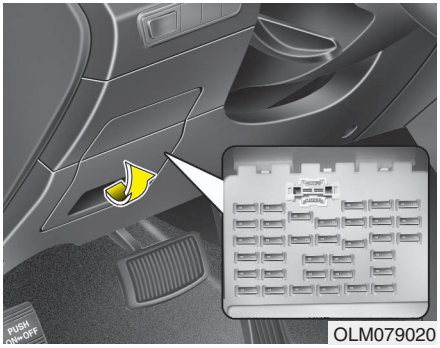

Instrument panel fuse replacement

1. Turn the ignition switch and all other switches off.
2. Open the fuse panel cover.

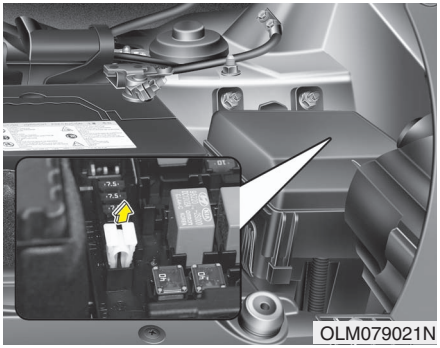

3. Pull the suspected fuse straight out. Use the removal tool provided in the fuse panel.
4. Check the removed fuse; replace it if it is blown.

   Spare fuses are provided in the instrument panel fuse panel (or in the engine compartment fuse panel).
5. Push in a new fuse of the same rating, and make sure it fits tightly in the clips.

If it fits loosely, consult an authorized HYUNDAI dealer.

If you do not have a spare, use a fuse of the same rating from a circuit you may not need for operating the vehicle, such as the cigarette lighter fuse.

If the headlights or other electrical components do not work and the fuses are OK, check the fuse panel in the engine compartment. If a fuse is blown, it must be replaced.

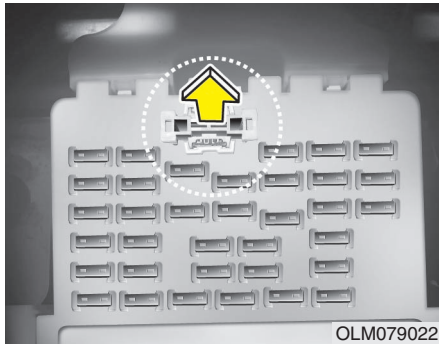
OLM079022

Memory fuse

Your vehicle is equipped with a memory fuse to prevent battery discharge if your vehicle is parked without being operated for prolonged periods. Use the following procedures before parking the vehicle for prolonged periods.

1. Turn off the engine.
2. Turn off the headlights and tail lights.
3. Open the driver's side panel cover and pull up the memory fuse.

✻ NOTICE

- **If the memory fuse is pulled up from the fuse panel, the warning chime, audio, clock and interior lamps, etc., will not operate. Some items must be reset after replacement. Refer to "Battery" in this section.**
- **Even when the memory fuse is pulled up, the battery can still be discharged by operation of the headlights or other electrical devices.**

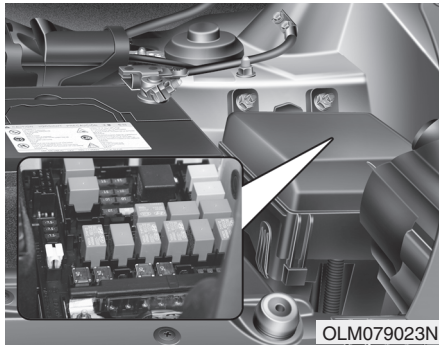
OLM079023N

Engine compartment fuse replacement

1. Turn the ignition switch and all other switches off.
2. Remove the fuse panel cover by pressing the tab and pulling the cover up.
3. Check the removed fuse; replace it if it is blown. To remove or insert the fuse, use the fuse puller in the engine compartment fuse panel.
4. Push in a new fuse of the same rating, and make sure it fits tightly in the clips. If it fits loosely, consult an authorized HYUNDAI dealer.

⚠ CAUTION

After checking the fuse panel in the engine compartment, securely install the fuse panel cover. If not, electrical failures may occur from water contact.

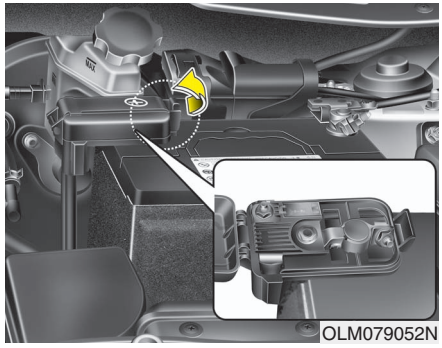

Main fuse and Multi fuse

If the main fuse and Multi fuse is blown, it must be removed as follows:

1. Disconnect the negative battery cable.
2. Remove the nuts shown in the picture above.
3. Replace the fuse with a new one of the same rating.
4. Reinstall in the reverse order of removal.

✻ NOTICE

If the main fuse is blown, consult an authorized HYUNDAI dealer.

Fuse/relay panel description

Inside the fuse/relay panel covers, you can find the fuse/relay label describing fuse/relay name and capacity.

Instrument panel fuse panel

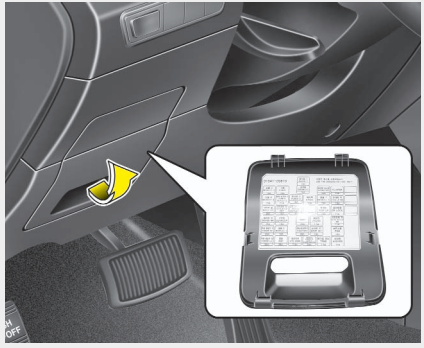

Engine compartment fuse panel

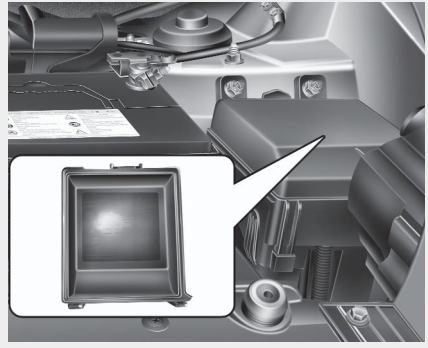

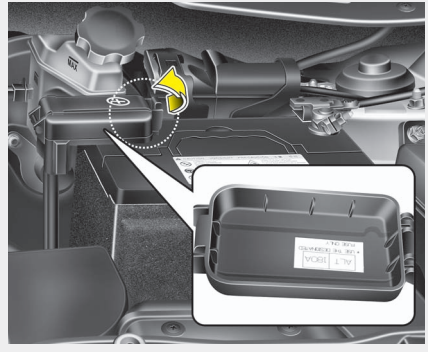

OLM079026/OLM079027N/OLM079053N

✻ NOTICE

Not all fuse panel descriptions in this manual may be applicable to your vehicle. It is accurate at the time of printing. When you inspect the fuse panel in your vehicle, refer to the fuse panel label.

Instrument panel fuse panel

Description	Fuse rating	Protected component
AUDIO 1	10A	Audio, A/V & Navigation Head Module
ROOM LP (MEMORY FUSE)	10A	BCM, Auto Light & Photo Sensor, Room Lamp, Driver/Passenger Vanity Lamp Switch, Date Link Connector, Door warning Switch, RF Receiver, A/C Control Module, Luggage Lamp, IPS Control Module, Instrument Cluster (IND.), Map Lamp, Electro Chromic Mirror
MODULE 2	10A	IPS Control Module, BCM, Electro Chromic Mirror, PDM
START	10A	Burglar Alarm Relay, E/R Fuse & Relay Box(Start Relay)
A/BAG IND	10A	Instrument Cluster (Air Bag IND.)
CLUSTER	10A	Audio, Console Switch, Instrument Cluster(IND.), BCM, Alternator, A/V & Navigation Head Module
MODULE 4	10A	E/R Fuse & Relay Box(Blower Relay), Cluster Ionizer, A/C Control Module, Sunroof Motor
POWER OUTLET 2	25A	Cigarette Lighter & Front Power Outlet, Rear Power Outlet
AUDIO 2	10A	Power Outside Mirror Switch, AMP, BCM, PDM, A/V & Navigation Head Module, Audio
A/BAG	10A	SRS Control Module, Passenger Occupant Detection Sensor
MODULE 1	10A	IPS Control Module, Tire Pressure Monitoring Module, EPS Control Module, Steering Angle Sensor, ESC OFF Switch, DBC Switch, ICM Relay Box(DBC Relay), Multifunction Switch(Light), Stop Lamp Switch, AWD ECM
FOG LP RR	10A	-
WIPER FRT	25A	Front Wiper Motor, Multifunction Switch(Wiper), E/R Fuse & Relay Box(Front Wiper Relay)
S/HEATER FRT	15A	Console Switch
POWER OUTLET 1	15A	Cigarette Lighter & Front Power Outlet

Description	Fuse rating	Protected component
B/UP LP	10A	B/UP LP Relay
DR LOCK	15A	Door Lock Relay, Tail Gate Relay, Door Unlock Relay
MODULE 5	7.5A	BCM, PDM
WIPER RR	15A	ICM Relay Box (Rear Wiper Relay), Rear Wiper Motor, Multifunction Switch (Wiper)
SUNROOF	15A	Sunroof Motor
IGN 1	20A	E/R Fuse & Relay Box(ECU 2 7.5A, ABS 7.5A, TCU 2 7.5A)
A/CON	7.5A	A/C Control Module
S/HEATER RR	15A	-
P/WDW RH	25A	Power Window Main Switch, Passenger Power Window Switch, Rear Power Window Switch RH
MODULE 3	10A	-
P/SEAT (DRV)	20A	Driver Seat Manual Switch
PDM	15A	PDM
P/WDW LH	25A	Power Window Main Switch, Rear Power Window Switch LH
AMP	25A	AMP
HTD MIRR	7.5A	Rear Defogger Switch, Rear Defogger (+), Driver/Passenger Power Outside Mirror
SAFETY POWER WINDOW	20A	Driver Safety Power Window Module
TPMS	7.5A	ATM Shift Lever, AWD ECM, Tire Pressure Monitoring Module
HAZARD	15A	ICM Relay Box(Flasher Sound Relay), BCM

Engine compartment main fuse panel

Description		Fuse rating	Protected component
MULTI FUSE	MDPS	80A	EPS Control Module
	B+1	60A	I/P Junction Box(PDM 15A, DR LOCK 15A, HAZARD 15A, IPS 4, IPS 5, IPS 6, IPS 7)
	ABS 2	40A	Multipurpose Check Connector, ESC Control Module
	EMS	40A	EMS Box(TCU 1 15A, ECU 30A, A/CON 10A, F/PUMP 15A)
	ABS 1	40A	Multipurpose Check Connector, ESC Control Module
	BLOWER	40A	Blower Relay
	B+3	60A	I/P Junction Box(P/SEAT(DRV) 20A, SAFETY POWER WINDOW 20A, TPMS 7.5A, Power Connector(AUDIO 1 10A, ROOM LP 10A))
	B+2	60A	I/P Junction Box(Power Window Relay, SUNROOF 15A, AMP 25A, IPS 0, IPS 1, IPS 2, IPS 3)
FUSE	C/FAN	40A	E/R Fuse & Relay Box(C/FAN LO Relay, C/FAN HI Relay)
	RR HTD	40A	E/R Fuse & Relay Box(RR HTD Relay)
	IGN 1	40A	PDM Relay Box(IGN1 Relay), Ignition Switch
	IGN 2	40A	E/R Fuse & Relay Box(Statr Relay), PDM Relay Box(IGN2 Relay), Ignition Switch
	HORN	15A	E/R Fuse & Relay Box(Horn Relay, B/A Horn Relay)
	DEICER	15A	E/R Fuse & Relay Box(Deicer Relay, RR HTD Relay)
	STOP LP	10A	Stop Lamp Switch, ICM Relay Box(DBC Relay)
	B+ SENSOR	10A	Batter Sensor
	TCU 2	7.5A	Transaxle Range Switch(A/T), Vehicle Speed Sensor(M/T)
	ABS	7.5A	Multipurpose Check Connector, ESC Control Module
	ECU 2	7.5A	E/R Fuse & Relay Box(ATM P/N Relay), Mass Air Flow Sensor, PCM
	F/PUMP	15A	EMS Box(F/PUMP Relay)

Description		Fuse rating	Protected component
FUSE	SENSOR 4	15A	E/R Fuse & Relay Box(C/FAN HI, LO Relay), EMS Box(F/PUMP Relay), Oxygen Sensor (UP, DOWN), PCM
	SENSOR 3	10A	EMS Box(A/CON Relay), Injector(#1, #2, #3, #4)
	SENSOR 2	10A	-
	TCU 1	15A	PCM
	A/CON	10A	EMS Box(A/CON Relay)
	SENSOR 1	10A	Crankshaft Position Sensor, Camshaft Position Sensor #1/2, Oil Control Valve #1/2, Canister Purge Control Solenoid Valve, Variable Intake Manifold Valve, Canister Close Valve
	ECU 1	20A	Ignition Colil (#1, #2, #3, #4), Condenser
	ECU	30A	EMS Box(Engine Control Relay)

LIGHT BULBS

⚠ WARNING - Working on the lights

Prior to working on the light, firmly apply the parking brake, ensure that the ignition switch is turned to the LOCK position and turn off the lights to avoid sudden movement of the vehicle and burning your fingers or receiving an electric shock.

Use only the bulbs of the specified wattage.

⚠ CAUTION

Be sure to replace the burned-out bulb with one of the same wattage rating. Otherwise, it may cause damage to the fuse or electric wiring system.

⚠ CAUTION

If you don't have necessary tools, the correct bulbs and the expertise, consult an authorized HYUNDAI dealer. In many cases, it is difficult to replace vehicle light bulbs because other parts of the vehicle must be removed before you can get to the bulb. This is especially true if you have to remove the headlight assembly to get to the bulb(s). Removing/installing the headlight assembly can result in damage to the vehicle.

✻ NOTICE

After heavy, driving rain or washing, headlight and taillight lenses could appear frosty. This condition is caused by the temperature difference between the lamp inside and outside. This is similar to the condensation on your windows inside your vehicle during the rain and doesn't indicate a problem with your vehicle. If the water leaks into the lamp bulb circuitry, have the vehicle checked by an authorized HYUNDAI dealer.

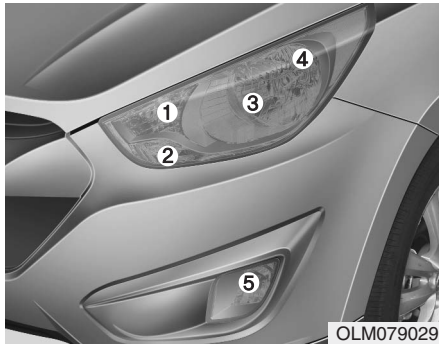

Headlight, position light, turn signal light, side marker light and front fog light bulb replacement

(1) Front turn signal light
(2) Position light
(3) Headlight (High/Low)
(4) Front side marker light
(5) Front fog light (if equipped)

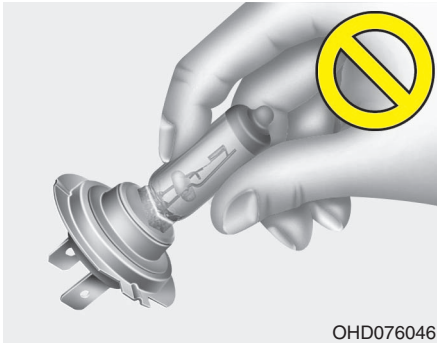

Headlight bulb

⚠ WARNING - Halogen bulbs

- **Halogen bulbs contain pressurized gas that will produce flying pieces of glass if broken.**
- **Always handle them carefully, and avoid scratches and abrasions. If the bulbs are lit, avoid contact with liquids.**
- **Never touch the glass with bare hands. Residual oil may cause the bulb to overheat and burst when lit.**

(Continued)

(Continued)

- **A bulb should be operated only when installed in a headlight.**
- **If a bulb becomes damaged or cracked, replace it immediately and carefully dispose of it.**
- **Wear eye protection when changing a bulb. Allow the bulb to cool down before handling it.**

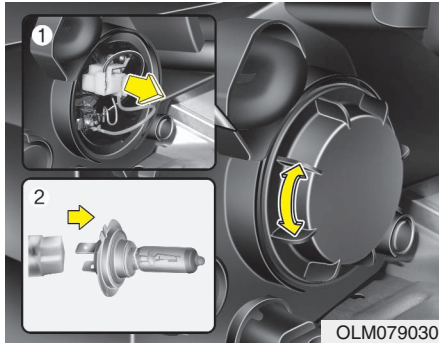

1. Open the hood.
2. Remove the headlight bulb cover by turning it counterclockwise.
3. Disconnect the headlight bulb socket-connector.
4. Unsnap the headlight bulb retaining wire by depressing the end and pushing it upward.

5. Remove the bulb from the headlight assembly.
6. Install a new headlight bulb and snap the headlight bulb retaining wire into position by aligning the wire with the groove on the bulb.
7. Connect the headlight bulb socket-connector.
8. Install the headlight bulb cover by turning it clockwise.

Front fog light bulbs (if equipped)

If the light bulb is not operating, have the vehicle checked by an authorized HYUNDAI dealer.

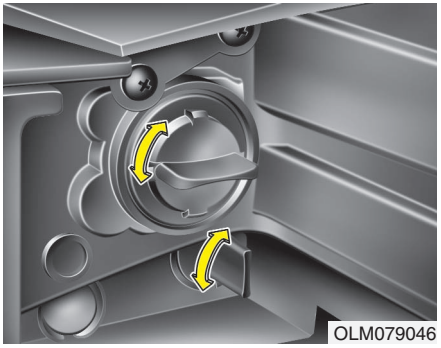

Turn signal light/Position light

1. Remove the socket from the assembly by turning the socket counterclockwise until the tabs on the socket align with the slots on the assembly.
2. Remove the bulb from the socket by pressing it in and rotating it counter-clockwise until the tabs on the bulb align with the slots in the socket. Pull the bulb out of the socket
3. Insert a new bulb by inserting it into the socket and rotating it until it locks into place.
4. Install the socket in the assembly by aligning the tabs on the socket with the slots in the assembly. Push the socket into the assembly and turn the socket clockwise.


OLM079031

Side repeater light replacement

If the light bulb does not operate, have the vehicle checked by an authorized HYUNDAI dealer.

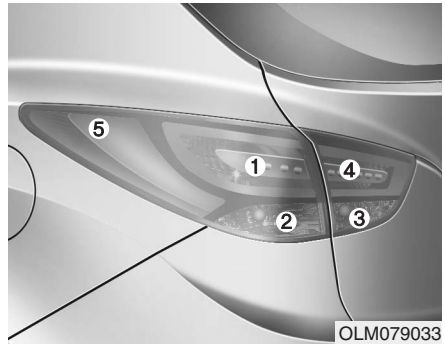

OLM079033

Rear combination light bulb replacement

(1) Stop and tail light
(2) Rear turn signal light
(3) Back-up light
(4) Tail light
(5) Rear side marker light

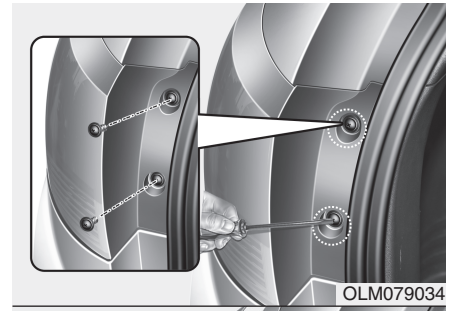
OLM079034

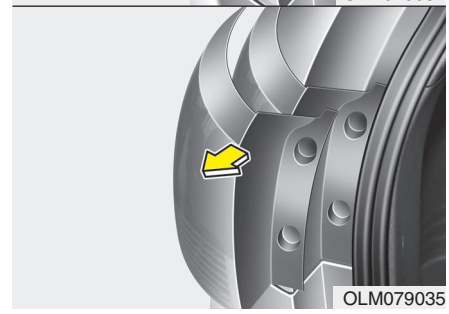
OLM079035

Outside light

1. Open the tailgate.
2. Loosen the light assembly retaining screws with a philips head screwdriver.
3. Remove the rear combination light assembly from the body of the vehicle.

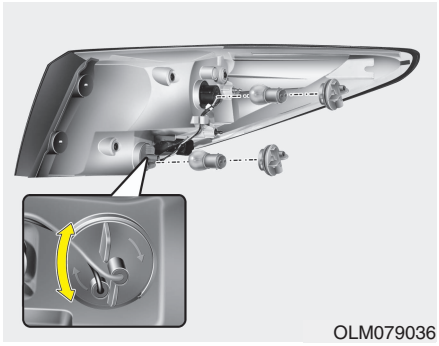
OLM079036

4. Remove the socket from the assembly by turning the socket counterclockwise until the tabs on the socket align with the slots on the assembly.
5. Remove the bulb from the socket by pressing it in and rotating it counterclockwise until the tabs on the bulb align with the slots in the socket. Pull the bulb out of the socket.
6. Insert a new bulb by inserting it into the socket and rotating it until it locks into place.
7. Install the socket in the assembly by aligning the tabs on the socket with the slots in the assembly. Push the socket into the assembly and turn the socket clockwise.
8. Reinstall the light assembly to the body of the vehicle.

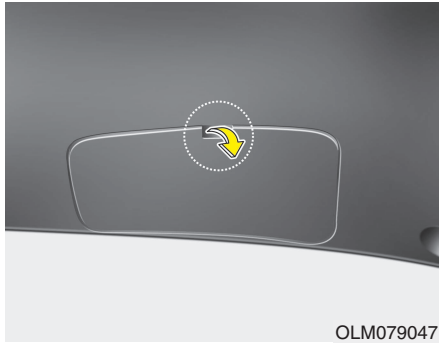
OLM079047

Inside light

1. Open the tailgate.
2. Remove the service cover using a flat-blade screwdriver.

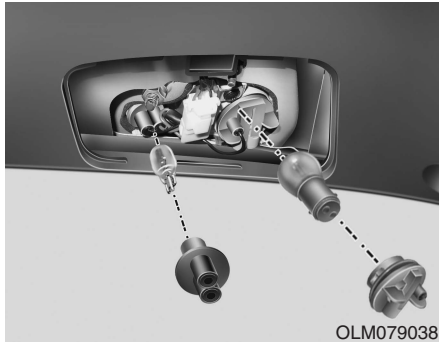
OLM079038

3. Remove the socket from the assembly by turning the socket counterclockwise until the tabs on the socket align with the slots on the assembly.
4. Remove the bulb from the socket by pressing it in and rotating it counterclockwise until the tabs on the bulb align with the slots in the socket. Pull the bulb out of the socket.
5. Insert a new bulb by inserting it into the socket and rotating it until it locks into place.
6. Install the socket in the assembly by aligning the tabs on the socket with the slots in the assembly. Push the socket into the assembly and turn the socket clockwise.
7. Install the service cover by putting it into the service hole.

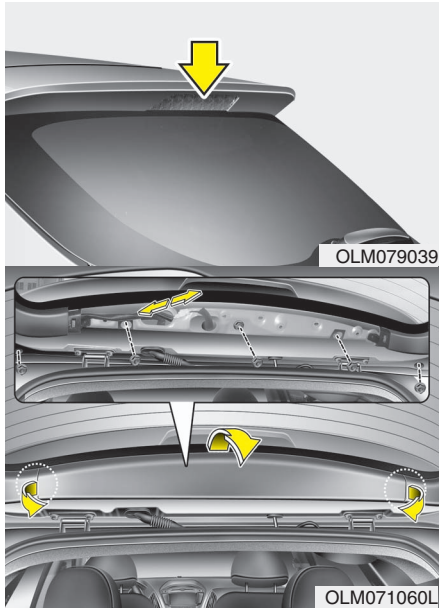

High mounted stop light replacement

1. Open the tailgate.
2. Gently remove the center cover of the rear tailgate trim.
3. Disconnect the electrical connector.

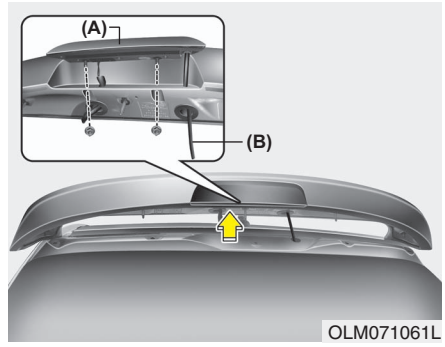

4. Loosen the retaining nuts and remove the spoiler.
5. Remove the high mounted stop light assembly (A) after loosening the nuts and washer nozzle (B).
6. Reinstall a new light assembly in the reverse order of removal.

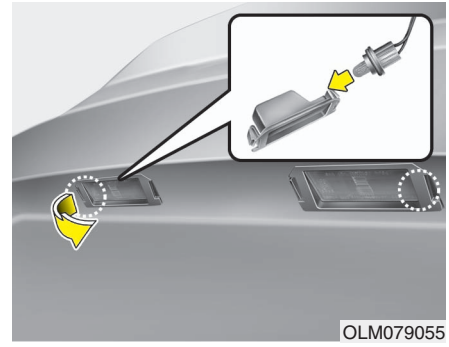

License plate light bulb replacement

1. Remove the lens by pressing the tabs.
2. Remove the socket from the lens.
3. Remove the bulb by pulling it straight out.
4. Install a new bulb in the socket and install the socket to the lens.
5. Reinstall the lens securely.

Map lamp



Sunvisor lamp



Room lamp

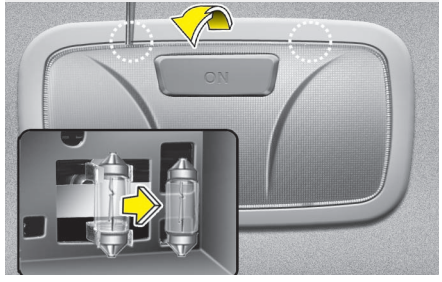

Luggage room lamp (if equipped)

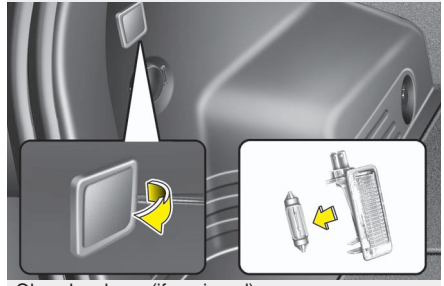

Glove box lamp (if equipped)

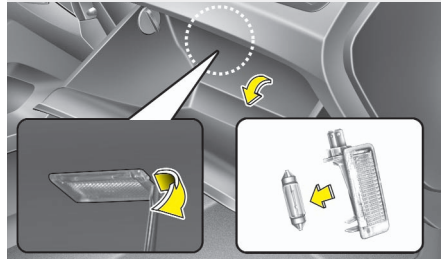

OLM079040/OXM079041/OLM079042/
OLM079044/OLM079045

Interior light bulb replacement

1. Using a flat-blade screwdriver, gently pry the lens from the interior light housing.
2. Remove the bulb by pulling it straight out.

⚠ WARNING

Prior to working on the Interior Lights, ensure that the "OFF" button is depressed to avoid burning your fingers or receiving an electric shock.

3. Install a new bulb in the socket.
4. Align the lens tabs with the interior light housing notches and snap the lens into place.

⚠ CAUTION

Use care not to dirty or damage lens, lens tab, and plastic housings.

APPEARANCE CARE

Exterior care

Exterior general caution

It is very important to follow the label directions when using any chemical cleaner or polish. Read all warning and caution statements that appear on the label.

Finish maintenance

Washing

To help protect your vehicle's finish from rust and deterioration, wash it thoroughly and frequently at least once a month with lukewarm or cold water.

If you use your vehicle for off-road driving, you should wash it after each off-road trip. Pay special attention to the removal of any accumulation of salt, dirt, mud, and other foreign materials. Make sure the drain holes in the lower edges of the doors and rocker panels are kept clear and clean.

Insects, tar, tree sap, bird droppings, industrial pollution and similar deposits can damage your vehicle's finish if not removed immediately.

Even prompt washing with plain water may not completely remove all these deposits. A mild soap, safe for use on painted surfaces, may be used.

After washing, rinse the vehicle thoroughly with lukewarm or cold water. Do not allow soap to dry on the finish.

⚠ CAUTION

- ***Do not use strong soap, chemical detergents or hot water, and do not wash the vehicle in direct sunlight or when the body of the vehicle is warm.***
- ***Be careful when washing the side windows of your vehicle.***
  Especially, with high-pressure water. Water may leak through the windows and wet the interior.
- ***To prevent damage to the plastic parts, do not clean with chemical solvents or strong detergents.***

⚠ WARNING - Wet brakes

After washing the vehicle, test the brakes while driving slowly to see if they have been affected by water. If braking performance is impaired, dry the brakes by applying them lightly while maintaining a slow forward speed.

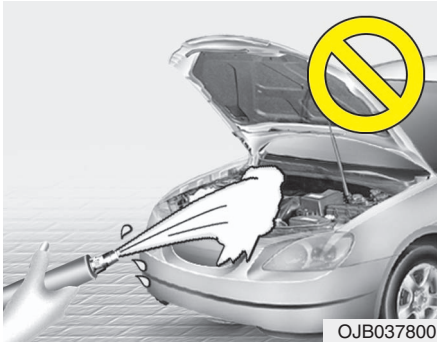
OJB037800

⚠ CAUTION

- ***Water washing in the engine compartment including high pressure water washing may cause the failure of electrical circuits located in the engine compartment.***
- ***Never allow water or other liquids to come in contact with electrical/electronic components inside the vehicle as this may damage them.***

Waxing

A good coat of wax is a barrier between your paint and contaminate. Keeping a good coat of wax on your vehicle will help protect it.

Wax the vehicle when water will no longer bead on the paint.

Always wash and dry the vehicle before waxing. Use a good quality liquid or paste wax, and follow the manufacturer's instructions. Wax all metal trim to protect it and to maintain its luster.

Removing oil, tar, and similar materials with a spot remover will usually strip the wax from the finish. Be sure to re-wax these areas even if the rest of the vehicle does not yet need waxing.

⚠ CAUTION

- ***Wiping dust or dirt off the body with a dry cloth will scratch the finish.***
- ***Do not use steel wool, abrasive cleaners, or strong detergents containing highly alkaline or caustic agents on chrome-plated or anodized aluminum parts. This may result in damage to the protective coating and cause discoloration or paint deterioration.***

Finish damage repair

Deep scratches or stone chips in the painted surface must be repaired promptly. Exposed metal will quickly rust and may develop into a major repair expense.

✻ NOTICE

If your vehicle is damaged and requires any metal repair or replacement, be sure the body shop applies anti-corrosion materials to the parts repaired or replaced.

Bright-metal maintenance

- To remove road tar and insects, use a tar remover, not a scraper or other sharp object.
- To protect the surfaces of bright-metal parts from corrosion, apply a coating of wax or chrome preservative and rub to a high luster.
- During winter weather or in coastal areas, cover the bright metal parts with a heavier coating of wax or preservative. If necessary, coat the parts with non-corrosive petroleum jelly or other protective compound.

Underbody maintenance

Corrosive materials used for ice and snow removal and dust control may collect on the underbody. If these materials are not removed, accelerated rusting can occur on underbody parts such as the fuel lines, frame, floor pan and exhaust system, even though they have been treated with rust protection.

Thoroughly flush the vehicle underbody and wheel openings with lukewarm or cold water once a month, after off-road driving and at the end of each winter. Pay special attention to these areas because it is difficult to see all the mud and dirt. It will do more harm than good to wet down the road grime without removing it. The lower edges of doors, rocker panels, and frame members have drain holes that should not be allowed to clog with dirt; trapped water in these areas can cause rusting.

⚠ WARNING

After washing the vehicle, test the brakes while driving slowly to see if they have been affected by water. If braking performance is impaired, dry the brakes by applying them lightly while maintaining a slow forward speed.

Aluminum wheel maintenance

The aluminum wheels are coated with a clear protective finish.

- Do not use any abrasive cleaner, polishing compound, solvent, or wire brushes on aluminum wheels. They may scratch or damage the finish.
- Use only a mild soap or neutral detergent, and rinse thoroughly with water. Also, be sure to clean the wheels after driving on salted roads. This helps prevent corrosion.
- Avoid washing the wheels with high-speed car wash brushes.
- Do not use any cleaners containing acid or acid detergents. It may damage and corrode the aluminum wheels coated with a clear protective finish.

Corrosion protection

Protecting your vehicle from corrosion

By using the most advanced design and construction practices to combat corrosion, we produces cars of the highest quality. However, this is only part of the job. To achieve the long-term corrosion resistance your vehicle can deliver, the owner's cooperation and assistance is also required.

Common causes of corrosion

The most common causes of corrosion on your car are:

- Road salt, dirt and moisture that is allowed to accumulate underneath the vehicle.
- Removal of paint or protective coatings by stones, gravel, abrasion or minor scrapes and dents which leave unprotected metal exposed to corrosion.

High-corrosion areas

If you live in an area where your vehicle is regularly exposed to corrosive materials, corrosion protection is particularly important. Some of the common causes of accelerated corrosion are road salts, dust control chemicals, ocean air and industrial pollution.

Moisture breeds corrosion

Moisture creates the conditions in which corrosion is most likely to occur. For example, corrosion is accelerated by high humidity, particularly when temperatures are just above freezing. In such conditions, the corrosive material is kept in contact with the car surfaces by moisture that is slow to evaporate.

Mud is particularly corrosive because it is slow to dry and holds moisture in contact with the vehicle. Although the mud appears to be dry, it can still retain the moisture and promote corrosion.

High temperatures can also accelerate corrosion of parts that are not properly ventilated so the moisture can be dispersed. For all these reasons, it is particularly important to keep your vehicle clean and free of mud or accumulations of other materials. This applies not only to the visible surfaces but particularly to the underside of the vehicle.

To help prevent corrosion

You can help prevent corrosion from getting started by observing the following:

Keep your car clean

The best way to prevent corrosion is to keep your vehicle clean and free of corrosive materials. Attention to the underside of the vehicle is particularly important.

- If you live in a high-corrosion area — where road salts are used, near the ocean, areas with industrial pollution, acid rain, etc.—, you should take extra care to prevent corrosion. In winter, hose off the underside of your vehicle at least once a month and be sure to clean the underside thoroughly when winter is over.
- When cleaning underneath the vehicle, give particular attention to the components under the fenders and other areas that are hidden from view. Do a thorough job; just dampening the accumulated mud rather than washing it away will accelerate corrosion rather than prevent it. Water under high pressure and steam are particularly effective in removing accumulated mud and corrosive materials.
- When cleaning lower door panels, rocker panels and frame members, be sure that drain holes are kept open so that moisture can escape and not be trapped inside to accelerate corrosion.

Keep your garage dry

Don't park your car in a damp, poorly ventilated garage. This creates a favorable environment for corrosion. This is particularly true if you wash your vehicle in the garage or drive it into the garage when it is still wet or covered with snow, ice or mud. Even a heated garage can contribute to corrosion unless it is well ventilated so moisture is dispersed.

Keep paint and trim in good condition

Scratches or chips in the finish should be covered with "touch-up" paint as soon as possible to reduce the possibility of corrosion. If bare metal is showing through, the attention of a qualified body and paint shop is recommended.

Bird droppings : Bird droppings are highly corrosive and may damage painted surfaces in just a few hours. Always remove bird droppings as soon as possible.

Don't neglect the interior

Moisture can collect under the floor mats and carpeting to cause corrosion. Check under the mats periodically to be sure the carpeting is dry. Use particular care if you carry fertilizers, cleaning materials or chemicals in the vehicle.

These should be carried only in proper containers and any spills or leaks should be cleaned up, flushed with clean water and thoroughly dried.

Interior care

Interior general precautions

Prevent caustic solutions such as perfume and cosmetic oil from contacting the dashboard because they may cause damage or discoloration. If they do contact the dashboard, wipe them off immediately. See the instructions for the proper way to clean vinyl.

⚠ CAUTION

Never allow water or other liquids to come in contact with electrical/electronic components inside the vehicle as this may damage them.

⚠ CAUTION

When cleaning leather products (steering wheel, seats etc.), use neutral detergents or low alcohol content solutions. If you use high alcohol content solutions or acid/alkaline detergents, the color of the leather may fade or the surface may get stripped off.

Cleaning the upholstery and interior trim

Vinyl

Remove dust and loose dirt from vinyl with a whisk broom or vacuum cleaner. Clean vinyl surfaces with a vinyl cleaner.

Fabric

Remove dust and loose dirt from fabric with a whisk broom or vacuum cleaner. Clean with a mild soap solution recommended for upholstery or carpets. Remove fresh spots immediately with a fabric spot cleaner. If fresh spots do not receive immediate attention, the fabric can be stained and its color can be affected. Also, its fire-resistant properties can be reduced if the material is not properly maintained.

⚠ CAUTION

Using anything but recommended cleaners and procedures may affect the fabric's appearance and fire-resistant properties.

Cleaning the lap/shoulder belt webbing

Clean the belt webbing with any mild soap solution recommended for cleaning upholstery or carpet. Follow the instructions provided with the soap. Do not bleach or re-dye the webbing because this may weaken it.

Cleaning the interior window glass

If the interior glass surfaces of the vehicle become fogged (that is, covered with an oily, greasy or waxy film), they should be cleaned with glass cleaner. Follow the directions on the glass cleaner container.

⚠ CAUTION

Do not scrape or scratch the inside of the rear window. This may result in damage to the rear window defroster grid.

EMISSION CONTROL SYSTEM

The emission control system of your vehicle is covered by a written limited warranty. Please see the warranty information contained in the Owner's Handbook & Warranty Information booklet in your vehicle.

Your vehicle is equipped with an emission control system to meet all applicable emission regulations.

There are three emission control systems, as follows.

(1) Crankcase emission control system
(2) Evaporative emission control system
(3) Exhaust emission control system

In order to assure the proper function of the emission control systems, it is recommended that you have your vehicle inspected and maintained by an authorized HYUNDAI dealer in accordance with the maintenance schedule in this manual.

Caution for the Inspection and Maintenance Test (With Electronic Stability Control (ESC) system)

- **To prevent the vehicle from misfiring during dynamometer testing, turn the Electronic Stability Control (ESC) system off by pressing the ESC switch.**
- **After dynamometer testing is completed, turn the ESC system back on by pressing the ESC switch again.**

1. Crankcase emission control system

The positive crankcase ventilation system is employed to prevent air pollution caused by blow-by gases being emitted from the crankcase. This system supplies fresh filtered air to the crankcase through the air intake hose. Inside the crankcase, the fresh air mixes with blow-by gases, which then pass through the PCV valve into the induction system.

2. Evaporative emission control (including ORVR: Onboard Refueling Vapor Recovery) system

The Evaporative Emission Control System is designed to prevent fuel vapors from escaping into the atmosphere.

(The ORVR system is designed to allow the vapors from the fuel tank to be loaded into a canister while refueling at the gas station, preventing the escape of fuel vapors into the atmosphere.)

Canister

Fuel vapors generated inside the fuel tank are absorbed and stored in the onboard canister. When the engine is running, the fuel vapors absorbed in the canister are drawn into the surge tank through the purge control solenoid valve.

Purge Control Solenoid Valve (PCSV)

The purge control solenoid valve is controlled by the Engine Control Module (ECM); when the engine coolant temperature is low during idling, the PCSV closes so that evaporated fuel is not taken into the engine. After the engine warms-up during ordinary driving, the PCSV opens to introduce evaporated fuel to the engine.

3. Exhaust emission control system

The Exhaust Emission Control System is a highly effective system which controls exhaust emissions while maintaining good vehicle performance.

Vehicle modifications

This vehicle should not be modified. Modification of your vehicle could affect its performance, safety or durability and may even violate governmental safety and emissions regulations.

In addition, damage or performance problems resulting from any modification may not be covered under warranty.

Engine exhaust gas precautions (carbon monoxide)

- Carbon monoxide can be present with other exhaust fumes. Therefore, if you smell exhaust fumes of any kind inside your vehicle, have it inspected and repaired immediately. If you ever suspect exhaust fumes are coming into your vehicle, drive it only with all the windows fully open. Have your vehicle checked and repaired immediately.

⚠ WARNING - Exhaust

Engine exhaust gases contain carbon monoxide (CO). Though colorless and odorless, it is dangerous and could be lethal if inhaled. Follow the instructions on this page to avoid CO poisoning.

⚠ CALIFORNIA PROPOSITION 65 WARNING

Engine exhaust and a wide variety of automobile components and parts, including components found in the interior furnishings in a vehicle, contain or emit chemicals known to the State of California to cause cancer and birth defects and reproductive harm. In addition, certain fluids contained in vehicles and certain products of component wear contain or emit chemicals known to the State of California to cause cancer and birth defects or other reproductive harm.

- Do not operate the engine in confined or closed areas (such as garages) any more than what is necessary to move the vehicle in or out of the area.
- When the vehicle is stopped in an open area for more than a short time with the engine running, adjust the ventilation system (as needed) to draw outside air into the vehicle.
- Never sit in a parked or stopped vehicle for any extended time with the engine running.
- When the engine stalls or fails to start, excessive attempts to restart the engine may cause damage to the emission control system.

Operating precautions for catalytic converters (if equipped)

⚠ WARNING - Fire

A hot exhaust system can ignite flammable items under your vehicle. Do not park, idle, or drive the vehicle over or near flammable objects, such as grass, vegetation, paper, leaves, etc.

Your vehicle is equipped with a catalytic converter emission control device.

Therefore, the following precautions must be observed:

- Use only UNLEADED FUEL for gasoline engines.
- Do not operate the vehicle when there are signs of engine malfunction, such as misfire or a noticeable loss of performance.
- Do not misuse or abuse the engine. Examples of misuse are coasting with the ignition off and descending steep grades in gear with the ignition off.
- Do not operate the engine at high idle speed for extended periods (5 minutes or more).
- Do not modify or tamper with any part of the engine or emission control system. All inspections and adjustments must be made by an authorized HYUNDAI dealer.
- Avoid driving with a extremely low fuel level. Running out of fuel could cause the engine to misfire, damaging the catalytic converter.

Failure to observe these precautions could result in damage to the catalytic converter and to your vehicle. Additionally, such actions could void your warranties.

CALIFORNIA PERCHLORATE NOTICE

Perchlorate Material-special handling may apply, See www.dtsc.ca.gov/hazardouswaste/perchlorate.

Notice to California Vehicle Dismantlers:

Perchlorate containing materials, such as air bag inflators, seatbelt pretensioners and keyless remote entry batteries, must be disposed of according to Title 22 California Code of Regulations Section 67384.10 (a).

Dimensions / 8-2
Bulb wattage / 8-2
Tires and wheels / 8-3
Recommended lubricants and capacities / 8-4
Vehicle identification number (VIN) / 8-6
Vehicle certification label / 8-6
Tire specification and pressure label / 8-7
Engine number / 8-7
Consumer information / 8-8
Reporting safety defects / 8-9
Binding arbitration / 8-9

Specifications, Consumer information, Reporting safety defects

8

DIMENSIONS

Item	in (mm)
Overall length	173.2 (4400)
Overall width	71.7 (1820)
Overall height	65.2 (1655) / 66.3 (1685)*1
Front tread	62.4 (1585)
Rear tread	62.44 (1586)
Wheelbase	103.9 (2640)

*1 : with roof rack

BULB WATTAGE

Light Bulb	Wattage
Headlights (High/Low)	60/55
Front turn signal lights	28/8
Position lights	5
Side repeater lights	LED
Front side marker lights	5
Front fog lights*	27
Stop and tail lights	28/8
Rear turn signal lights	27
Back-up lights	16
Rear side marker lights*	5
High mounted stop light	LED
License plate lights	5
Map lamps	10
Room lamps	10
Luggage lamp*	5
Glove box lamp	5
Vanity mirror lamps	5

* : if equipped

TIRES AND WHEELS

Item	Tire size	Wheel size	Inflation pressure kPa (psi)		Wheel lug nut torque lb•ft (kgf•m, N•m)
			Front	Rear	
Full size tire	225/60R17	6.5J×17	230 (33)	230 (33)	65~79 (9~11 , 88~107)
	225/55R18	6.5J×18			
Compact spare tire	T155/90D16	4.0T×16	420 (60)	420 (60)	

✻ NOTICE

It is permissible to add 3psi to the standard tire pressure specification if colder temperatures are expected soon. Tires typically loose 1psi for every 12°F temperature drop. If extreme temperature variations are expected, re-check your tire pressure as necessary to keep them properly inflated.

RECOMMENDED LUBRICANTS AND CAPACITIES

To help achieve proper engine and powertrain performance and durability, use only lubricants of the proper quality. The correct lubricants also help promote engine efficiency that results in improved fuel economy.

These lubricants and fluids are recommended for use in your vehicle.

Lubricant		Volume	Classification
Engine oil *1 *2 (drain and refill) Recommends 	2.0 Engine	4.33 US qt. (4.1 *l*)	API Service SM*3, ILSAC GF-4 or above
	2.4 Engine	4.86 US qt. (4.6 *l*)	
Manual transaxle fluid	2.0 Engine	2.22 US qt. (2.1 *l*)	API GL-4, SAE 75W/85
	2.4 Engine	1.90 US qt. (1.8 *l*)	
Automatic transaxle fluid		7.50 US qt. (7.1 *l*)	MICHANG ATF SP-IV, SK ATF SP-IV NOCA ATF SP-IV, HYUNDAI genuine ATF SP-IV or other brands meeting the above specification approved by Hyundai Motor Co.,
Coolant		7.19 US qt. (6.8 *l*)	Mixture of antifreeze and water (Ethylene glycol base coolant for aluminum radiator)
Brake/clutch fluid		0.7~0.8 US qt. (0.7~0.8 *l*)	FMVSS116 DOT-3 or DOT-4
Rear axle oil (AWD)		0.69 US qt. (0.65 *l*)	Hypoid gear oil API GL-5, SAE 75W/90 (SHELL SPIRAX X or equivalent)
Transfer case oil (AWD)		0.63 US qt. (0.6 *l*)	
Fuel		14.5 US gal. (55 *l*)	-

*1 Refer to the recommended SAE viscosity numbers on the next page.

*2 Engine oils labeled Energy Conserving Oil are now available. Along with other additional benefits, they contribute to fuel economy by reducing the amount of fuel necessary to overcome engine friction. Often, these improvements are difficult to measure in everyday driving, but in a year's time, they can offer significant cost and energy savings.

*3 If the API service SM engine oil is not available in your country, you are able to use API service SL.

Recommended SAE viscosity number

⚠ CAUTION

Always be sure to clean the area around any filler plug, drain plug, or dipstick before checking or draining any lubricant. This is especially important in dusty or sandy areas and when the vehicle is used on unpaved roads. Cleaning the plug and dipstick areas will prevent dirt and grit from entering the engine and other mechanisms that could be damaged.

Engine oil viscosity (thickness) has an effect on fuel economy and cold weather operating (engine start and engine oil flowability). Lower viscosity engine oils can provide better fuel economy and cold weather performance, however, higher viscosity engine oils are required for satisfactory lubrication in hot weather. Using oils of any viscosity other than those recommended could result in engine damage.

When choosing an oil, consider the range of temperature your vehicle will be operated in before the next oil change. Proceed to select the recommended oil viscosity from the chart.

Temperature Range for SAE Viscosity Numbers

Temperature	°C	-30	-20	-10	0	10	20	30	40	50
	(°F)	-10	0	20	40	60	80	100	120	
Gasoline Engine Oil *1				10W-30						
		5W-20, 5W-30								

*1 For better fuel economy, it is recommended to use the engine oil of a viscosity grade SAE 5W-20 (API SM / ILSAC GF-4). However, if the engine oil is not available in your country, select the proper engine oil using the engine oil viscosity chart.



VEHICLE IDENTIFICATION NUMBER (VIN)

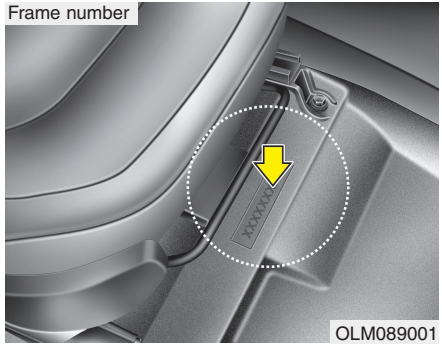

The vehicle identification number (VIN) is the number used in registering your car and in all legal matters pertaining to its ownership, etc.

The number is punched on the floor under the passenger seat. To check the number, open the cover.

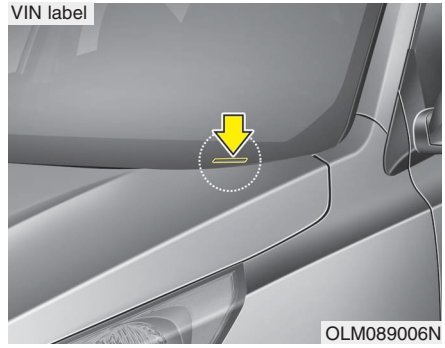

The VIN is also on a plate attached to the top of the dashboard. The number on the plate can easily be seen through the windshield from outside.

VEHICLE CERTIFICATION LABEL



The vehicle certification label attached on the driver's side center pillar gives the vehicle identification number (VIN).

TIRE SPECIFICATION AND PRESSURE LABEL

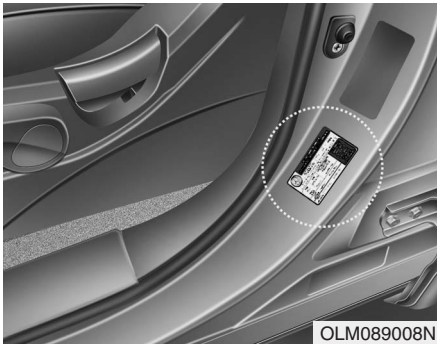
OLM089008N

The tires supplied on your new vehicle are chosen to provide the best performance for normal driving.

The tire label located on the driver's side center pillar gives the tire pressures recommended for your car.

ENGINE NUMBER

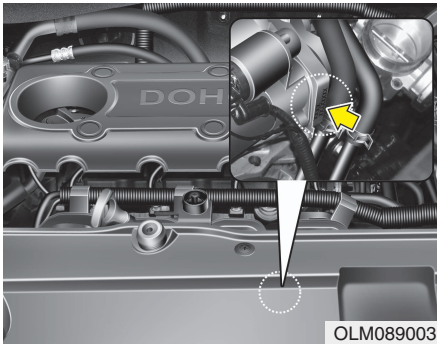

OLM089003

The engine number is stamped on the engine block as shown in the drawing.

CONSUMER INFORMATION

This consumer information has been prepared in accordance with regulations issued by the National Highway Traffic Safety Administration of the U.S. Department of Transportation. Your Hyundai dealer will help answer any questions you may have as you read this information.

Hyundai motor vehicles are designed and manufactured to meet or exceed all applicable safety standards.

For your safety, however, we strongly urge you to read and follow all directions in this Owner's Manual, particularly the information under the headings **"NOTICE", "CAUTION" and "WARNING".**

If, after reading this manual, you have any questions regarding the operation of your vehicle, please contact your nearest Hyundai Motor America Regional Office as listed in the following:

Eastern Region: Connecticut, Delaware, Maine, Massachusetts, New Hampshire, New Jersey, New York, Pennsylvania, Rhode Island, Vermont.

Eastern Region
1100 Cranbury South River Road
Jamesburg, NJ 08831
(800) 633-5151

Southern Region: Florida, Georgia, Maryland, North Carolina, South Carolina, Virginia, West Virginia.

Southern Region
270 Riverside Parkway, Suite A
Austell, GA 30168
(800) 633-5151

South Central Region: Alabama, Arkansas, Louisiana, Mississippi, New Mexico, Oklahoma, Tennessee, Texas.

South Central Region
1421 South Beltline Road, Suite 400
Coppell, TX 75019
(800) 633-5151

Central Region: Illinois, Indiana, Iowa, Kentucky, Michigan, Minnesota, Nebraska, North Dakota, South Dakota, Ohio, Wisconsin, Kansas, Missouri.

Central Region
1705 Sequoia Drive
Aurora, Illinois 60506
(800) 633-5151

Western Region: Alaska, Hawaii, Arizona, California, Colorado, Idaho, Montana, Nevada, Oregon, Utah, Washington, Wyoming.

Western Region
10550 Talbert Avenue
P.O.Box 20850
Fountain Valley, California 92728-0850
(800) 633-5151

REPORTING SAFETY DEFECTS

If you believe that your vehicle has a defect which could cause a crash or could cause injury or death, you should immediately inform the National Highway Traffic Safety Administration (NHTSA) in addition to notifying HYUNDAI MOTOR AMERICA. If NHTSA receives similar complaints, it may open an investigation, and if it finds that a safety defect exists in a group of vehicles, it may order a recall and remedy campaign. However, NHTSA cannot become involved in individual problems between you, your dealer, or HYUNDAI MOTOR AMERICA.

To contact NHTSA, you may call the Vehicle Safety Hotline toll-free at 1-888-327-4236 (TTY: 1-800-424-9153); go to http://www.safercar.gov; or write to: Administrator, NHTSA 1200 New Jersey Ave SE West Building Washington, D.C. 20590. You can also obtain other information about motor vehicle safety from http://www.safercar.gov.

BINDING ARBITRATION (U.S.A ONLY)

Any claim or dispute you may have related to your vehicle's warranty or the duties contemplated under the warranty, including claims related to the refund or partial refund of your vehicle's purchase price (excluding personal injury or product liability claims), shall be resolved by binding arbitration. Binding arbitration shall be administered by and through the American Arbitration Association (AAA).

You will not be responsible for paying filing and hearing fees above $275.00. All other arbitration costs shall be borne by Hyundai Motor America. You are not responsible to pay any of the costs Hyundai incurs.

This Binding Arbitration Agreement shall not deprive you of any remedies available to you under applicable law. The parties are waiving their right to seek remedies in court, including the right to a jury trial.

This Binding Arbitration Agreement shall be governed by and interpreted under the Federal Arbitration Act, 9 U.S.C. sections 1-16. Judgment upon any award may be entered in any court having jurisdiction.

You may revoke this Arbitration Agreement by (1) written notice or (2) electronic notice. Written notice must be delivered (via certified mail) to Hyundai Motor America, Attn: Consumer Affairs, 10550 Talbert Avenue, P.O. Box 20849, Fountain Valley, CA 92728-0849.

Electronic notice must be submitted at the following website address: http://warranty-arbitration.hyundaiUSA.com. Notice must be received within 90 days after you purchase your vehicle.

WARRANTIES FOR YOUR HYUNDAI VEHICLE

Please consult your Owner's Handbook & Warranty Information booklet for your vehicle's specific warranty coverage.

RESPONSIBILITY FOR MAINTENANCE

The maintenance requirements for your new Hyundai are found in Section 7. As the owner, it is your responsibility to see that all maintenance operations specified by the manufacturer are carried out at the appropriate intervals. When the vehicle is used in severe driving conditions, more frequent maintenance is required for some operations. Maintenance requirements for severe operating conditions are also included in Section 7.

This Owner's Manual should be considered a part of the car and remain with it when it is sold for the use of the next owner.

OWNER'S INFORMATION

ORIGINAL OWNER _____

ADDRESS

CITY _____ STATE _____ ZIP CODE _____

DELIVERY DATE

(Date Sold to Original Retail Purchaser)

DEALER NAME _____ DEALER NO. _____

ADDRESS _____

CITY _____ STATE _____ ZIP CODE _____

Index

A

Air bags ····· 3-38
Air bag warning label ····· 3-63
Air bag warning light ····· 3-41
Curtain air bag ····· 3-55
Driver's and passenger's front air bag ····· 3-49
Occupant classification system ····· 3-44
Side impact air bag ····· 3-53
Air cleaner ····· 7-28
Alarm system ····· 4-7
All wheel drive (AWD) ····· 5-17
Antenna ····· 4-89
Anti-lock brake system (ABS) ····· 5-27
Appearance care ····· 7-66
Exterior care ····· 7-66
Interior care ····· 7-71
Armrest ····· 3-13
Ashtray ····· 4-82
Audio system ····· 4-89
Antenna ····· 4-89
Steering wheel audio control ····· 4-90
Auto lock mode (Passenger seat belt) ····· 3-33
Automatic climate control system ····· 4-70
Air conditioning ····· 4-76
Automatic heating and air conditioning ····· 4-71
Manual heating and air conditioning ····· 4-72
Automatic transaxle ····· 5-10
Ignition key interlock system ····· 5-14
Shift lock system ····· 5-14
Sports mode ····· 5-13

B

Battery ····· 7-34
Battery saver function ····· 4-49
Before driving ····· 5-3
Bottle holders, see cup holders ····· 4-83
Brake system ····· 5-24
Anti-lock brake system (ABS) ····· 5-27
Electronic stability control (ESC) ····· 5-29
Hill-start assist control (HAC) ····· 5-33
Parking brake ····· 5-25
Power brakes ····· 5-24
Vehicle stability management (VSM) ····· 5-32
Brakes/clutch fluid ····· 7-25
Bulb replacement ····· 7-59
Front fog light bulb replacement ····· 7-61
Headlight bulb replacement ····· 7-60
High mounted stop light replacement ····· 7-64
Interior light bulb replacement ····· 7-65
License plate light bulb replacement ····· 7-64
Position light bulb replacement ····· 7-61
Rear combination light bulb replacement ····· 7-62
Side repeater light bulb replacement ····· 7-62

Turn signal light bulb replacement ····· 7-61
Bulb wattage ····· 8-2

C

California Perchlorate Notice ····· 7-75
Capacities (Lubricants) ····· 8-4
Care
Exterior care ····· 7-66
Interior care ····· 7-71
Tire care ····· 7-37
Cargo capacity ····· 5-57
Cargo security screen ····· 4-87
Cargo weight ····· 5-61
Center console storage ····· 4-80
Central door lock switch ····· 4-10
Certification label ····· 5-59
Changing a tire with TPMS ····· 6-10
Changing tires ····· 6-13
Chains
Safety chains ····· 5-51
Tire chains ····· 7-49
Tire chains ····· 5-47
Checking tire inflation pressure ····· 7-38
Child restraint system ····· 3-30
Auto lock mode (Passenger seat belt) ····· 3-33
Lower anchor system ····· 3-36
Tether anchor system ····· 3-35
Child-protector rear door lock ····· 4-12
Climate control system (Automatic) ····· 4-70
Air conditioning ····· 4-76
Automatic heating and air conditioning ····· 4-71
Manual heating and air conditioning ····· 4-72
Climate control system (Manual) ····· 4-61
Air conditioning ····· 4-66
Heating and air conditioning ····· 4-62
Cigarette lighter ····· 4-82
Climate control air filter ····· 4-68, 7-29
Clock (Digital) ····· 4-85
Combined instrument, see instrument cluster ····· 4-33
Compact spare tire ····· 6-18
Compact spare tire replacement ····· 7-42
Consumer information ····· 8-8
Coolant ····· 7-22
Cooling fluid, see engine coolant ····· 7-22
Crankcase emission control system ····· 7-72
Cruise control system ····· 5-36
Cup holder ····· 4-83
Curtain air bag ····· 3-55

D

Dashboard, see instrument cluster ····· 4-33
Dashboard illumination,
see instrument panel illumination ····· 4-34
Defogging (Windshield) ····· 4-77
Defogging logic (Windshield) ····· 4-79
Defroster (Rear window) ····· 4-59

Defrosting (Windshield) ····4-77
Digital clock····4-85
Dimensions ····8-2
Displays, see instrument cluster ····4-33
Display illumination, see instrument panel illumination···4-34
Door locks····4-9
Central door lock switch ····4-10
Child-protector rear door lock····4-12
Drinks holders, see cup holders····4-83
Driver's air bag····3-49
Driving at night····5-43
Driving in flooded areas ····5-44
Driving in the rain····5-44

E

Economical operation ····5-40
Electronic power steering ····4-28
Electronic stability control (ESC) ····5-29
Emergency starting ····6-4
Jump starting ····6-4
Push starting ····6-5
Emergency tailgate safety release····4-14
Emergency towing ····6-21
Emergency while driving····6-2
Emission control system····7-72
Crankcase emission control system····7-72
Evaporative emission control (including ORVR) System ····7-72
Exhaust emission control system ····7-73
Engine compartment ····2-4, 7-2
Engine coolant ····7-22
Engine number····8-7
Engine oil····7-21
Engine overheats····6-6
Engine temperature gauge ····4-35
Engine will not start····6-3
Evaporative emission control (including ORVR) System ··7-72
Exhaust emission control system····7-73
Explanation of scheduled maintenance items ····7-18
Exterior care····7-66
Exterior features····4-88
Roof rack ····4-88

F

Flat tire····6-12
Changing tires····6-13
Compact spare tire····6-18
Jack and tools ····6-12
Removing and storing the spare tire····6-13
Floor mat anchor(s) ····4-85
Fluid
Brakes/clutch fluid····7-25
Washer fluid····7-26
Folding the rear seat ····3-13
Four wheel drive (4WD), See all wheel drive (AWD)··5-17
Front fog light bulb replacement ····7-61
Front seat adjustment - manual ····3-5
Front seat adjustment - power ····3-6

Fuel filler door ····4-21
Fuel gauge ····4-36
Fuel requirements ····1-3
Fuses ····7-50
Fuse/relay panel description ····7-54
Main fuse and multi fuse ····7-53
Memory fuse ····7-52

G

Gauge
Engine temperature gauge ····4-35
Fuel gauge ····4-36
Glassroof, see sunroof ····4-24
Glove box ····4-80

H

Hazard warning flasher ····4-48
Hazardous driving conditions ····5-42
Headlight bulb replacement ····7-60
Headlight escort function ····4-49
Headlight welcome function ····4-50
Headrest ····3-8, 3-12
Heating and air conditioning ····4-62
High mounted stop light replacement ····7-64
Highway driving ····5-45
Hill-start assist control (HAC) ····5-33
Hitches ····5-51
Hood ····4-19
Horn ····4-29
How to use this manual ····1-2

I

Ignition key interlock system ····5-14
Indicators and warnings ····4-40
Indicator symbols on the instrument cluster ····1-7
Instrument cluster ····4-33
Engine temperature gauge ····4-35
Fuel gauge ····4-36
Instrument panel illumination ····4-34
Odometer/Tripmeter ····4-37
Speedometer ····4-34
Tachometer ····4-34
Trip computer ····4-36
Warning and indicators ····4-40
Instrument panel illumination ····4-34
Instrument panel overview ····2-3
Interior care ····7-71
Interior features ····4-82
Ashtray ····4-82
Cargo security screen ····4-87
Cigarette lighter ····4-82
Cup holder ····4-83
Digital clock ····4-85
Floor mat anchor(s) ····4-85
Luggage net (holder) ····4-86

Power outlet ····4-84
Sunvisor ····4-83
Interior light ····4-57
Interior light bulb replacement ····7-65
Interior overview ····2-2
Interlock system ····5-14

J

Jack and tools ····6-12
Jump starting ····6-4

K

Key positions ····5-5
Keys ····4-3

L

Label
Air bag warning label ····3-63
Certification label ····5-59
Tire and loading information label ····5-57
Tire sidewall labeling ····7-43
Tire specification and pressure label ····8-7
Vehicle certification label ····8-6
Latch system, see lower anchor system ····3-36
License plate light bulb replacement ····7-64
Light bulbs ····7-59
Front fog light bulb replacement ····7-61
Headlight bulb replacement ····7-60
High mounted stop light replacement ····7-64
Interior light bulb replacement ····7-65
License plate light bulb replacement ····7-64
Position light bulb replacement ····7-61
Rear combination light bulb replacement ····7-62
Side repeater light bulb replacement ····7-62
Turn signal light bulb replacement ····7-61
Lighting ····4-49
Battery saver function ····4-49
Headlight escort function ····4-49
Headlight welcome function ····4-50
Low tire pressure telltale ····6-8
Lower anchor system ····3-36
Lubricants and capacities ····8-4
Luggage net (holder) ····4-86
Luggage rack, see roof rack ····4-88
Lumbar support ····3-7

M

Main fuse and multi fuse ····7-53
Maintenance
Explanation of scheduled maintenance items ····7-18
Maintenance services ····7-3
Maintenance under severe usage conditions ····7-17
Normal maintenance schedule ····7-7
Owner maintenance ····7-4
Scheduled maintenance service ····7-6
Tire maintenance ····7-42

Maintenance services ····· 7-3
Manual climate control system ····· 4-61
Air conditioning ····· 4-66
Climate control air filter ····· 4-68
Heating and air conditioning ····· 4-62
Manual heating and air conditioning ····· 4-72
Manual transaxle ····· 5-7
Memory fuse ····· 7-52
Mirrors ····· 4-30
Inside rearview mirror ····· 4-30
Outside rearview mirror ····· 4-31
Moonroof, see sunroof ····· 4-24

N

Neck restraints, see headrest ····· 3-8, 3-12

O

Occupant classification system ····· 3-44
Odometer/Tripmeter ····· 4-37
Oil (Engine) ····· 7-21
Outside rearview mirror ····· 4-31
Overheats ····· 6-6
Owner maintenance ····· 7-4

P

Panoramic sunroof ····· 4-24
Parking brake ····· 5-25, 7-27
Passenger's front air bag ····· 3-49
Position light bulb replacement ····· 7-61
Power brakes ····· 5-24
Power outlet ····· 4-84
Power window lock button ····· 4-18
Pre-tensioner seat belt ····· 3-24
Push starting ····· 6-5

R

Rear combination light bulb replacement ····· 7-62
Rear seat adjustment ····· 3-12
Rearview camera ····· 4-48
Recommended cold tire inflation pressures ····· 7-37
Recommended lubricants and capacities ····· 8-4
Recommended SAE viscosity number ····· 8-5
Remote keyless entry ····· 4-4
Reporting safety defects ····· 8-9
Road warning ····· 6-2
Rocking the vehicle ····· 5-42
Roof rack ····· 4-88

S

Safety chains ····· 5-51
Scheduled maintenance service ····· 7-6
Normal maintenance schedule ····· 7-7
Maintenance under severe usage conditions ····· 7-17
Seat belts ····· 3-16
Pre-tensioner seat belt ····· 3-24
Seat belt - Driver's ····· 3-18

Seat belt warning ····3-17
Seat belts - Front passenger and rear seat ····3-19
Seat warmer ····3-10
Seatback pocket ····3-11
Seating capacity ····5-57
Seats ····3-2
Armrest ····3-13
Folding the rear seat ····3-13
Front seat adjustment - manual ····3-5
Front seat adjustment - power ····3-6
Headrest ····3-8, 3-12
Lumbar support ····3-7
Rear seat adjustment ····3-12
Seatback pocket ····3-11
Seat warmer ····3-10
Shift lock system ····5-14
Side impact air bag ····3-53
Side marker light bulb replacement ····7-61
Side repeater light bulb replacement ····7-62
Spare tire
Compact spare tire ····6-18
Compact spare tire replacement ····7-42
Removing and storing the spare tire ····6-13
Smooth cornering ····5-43
Snow tires ····5-46, 7-48
Special driving conditions ····5-42
Driving at night ····5-43
Driving in flooded areas ····5-44
Driving in the rain ····5-44
Hazardous driving conditions ····5-42
Highway driving ····5-45
Rocking the vehicle ····5-42
Smooth cornering ····5-43
Speedometer ····4-34
Sports mode ····5-13
Starting difficulties, see engine will not start ····6-3
Starting the engine ····5-6
Steering wheel ····4-28
Electronic power steering ····4-28
Horn ····4-29
Tilt steering ····4-28
Steering wheel audio control ····4-90
Storage compartment ····4-80
Center console storage ····4-80
Glove box ····4-80
Sunglass holder ····4-81
Summer tires ····7-48
Sunglass holder ····4-81
Sunroof ····4-24
Sunvisor ····4-83

T

Tachometer ····4-34
Tailgate ····4-13
Emergency tailgate safety release ····4-14
Tether anchor system ····3-35

Theft-alarm system ····4-7
Tie-down hook (for flatbed towing) ····6-24
Tilt steering ····4-28
Tire and loading information label ····5-57
Tires pressure monitoring system (TPMS)····6-7
Changing a tire with TPMS····6-10
Low tire pressure telltale ····6-8
TPMS (Tire pressure monitoring system) malfunction indicator ····6-9
Tire specification and pressure label ····8-7
Tires and wheels····7-37, 8-3
All season tires ····7-48
Checking tire inflation pressure ····7-38
Compact spare tire replacement ····7-42
Radial-ply tires ····7-49
Recommended cold tire inflation pressures ····7-37
Snow tires ····7-48
Summer tires····7-48
Tire care····7-37
Tire chains ····7-49
Tire maintenance ····7-42
Tire replacement····7-41
Tire rotation ····7-39
Tire sidewall labeling ····7-43
Tire terminology and definitions ····7-46
Tire traction ····7-42
Wheel alignment and tire balance ····7-40
Wheel replacement ····7-42
Towing ····6-20
Emergency towing ····6-21
Removable towing hook (rear) ····6-21
Tie-down hook (for flatbed towing) ····6-24
Towing capacity ····5-57
Trailer towing····5-50
Hitches ····5-51
Safety chains····5-51
Trailer brakes ····5-51
Weight of the trailer (tongue) ····5-56
Transaxle
Automatic transaxle····5-10
Manual transaxle ····5-7
Tripmeter····4-37
Trip computer ····4-36
Turn signal light bulb replacement ····7-61

V

Vehicle break-in process ····1-5
Vehicle certification label ····8-6
Vehicle data collection and event data recorders····1-6
Vehicle identification number (VIN) ····8-6
Vehicle load limit····5-57
Cargo capacity ····5-57
Certification label ····5-59
Seating capacity····5-57
Tire and loading information label····5-57
Towing capacity····5-57

Vehicle capacity weight ····· 5-57
Vehicle stability management (VSM) ····· 5-32
Vehicle weight ····· 5-61
Base curb weight ····· 5-61
Cargo weight ····· 5-61
GAW (Gross axle weight) ····· 5-61
GAWR (Gross axle weight rating) ····· 5-61
GVW (Gross vehicle weight) ····· 5-61
GVWR (Gross vehicle weight rating) ····· 5-61

W

Washer fluid ····· 7-26
Waste tray, see ashtray ····· 4-82
Warnings and indicators ····· 4-40
Weight ····· 5-61
Base curb weight ····· 5-61
Cargo weight ····· 5-61
GAW (Gross axle weight) ····· 5-61
GAWR (Gross axle weight rating) ····· 5-61
GVW (Gross vehicle weight) ····· 5-61
GVWR (Gross vehicle weight rating) ····· 5-61
Wheel alignment and tire balance ····· 7-40
Wheel replacement ····· 7-42
Windows ····· 4-15
Auto up/down window ····· 4-17
Power window lock button ····· 4-18
Windshield defrosting and defogging ····· 4-77
Defogging logic ····· 4-79
Winter driving ····· 5-46
Snow tires ····· 5-46
Tire chains ····· 5-47
Wiper blades ····· 7-31
Wipers and washers ····· 4-54