DIAGNOSIS AND TESTING > GR8 ELECTRICAL SYSTEM TESTER

The Midtronics GR8 battery system tester is designed to help diagnose the cause of a defective battery. Refer to BATTERY, AGM, STANDARD PROCEDURE for directions on using the Midtronics GR8 battery tester.

DIAGNOSIS AND TESTING > GR8 ELECTRICAL SYSTEM TESTER > DIAGNOSIS AND TESTING - BATTERY SYSTEM

The battery, starting, and charging systems in the vehicle operate with one another and must be tested as a complete system. In order for the engine to start and the battery to maintain its charge properly, all of the components that are used in these systems must perform within specifications. It is important that the battery, starting, and charging systems be thoroughly tested and inspected any time a battery needs to be charged or replaced. The cause of abnormal battery discharge, overcharging or early battery failure must be diagnosed and corrected before a battery is replaced and before a vehicle is returned to service. The service information for these systems has been separated within this service information to make it easier to locate the specific information you are seeking. However, when attempting to diagnose any of these systems, it is important that you keep their interdependency in mind.

The diagnostic procedures used for the battery, starting, and charging systems range from the most basic conventional diagnostic methods, to the more sophisticated On-Board Diagnostics (OBD) built into the Powertrain Control Module (PCM). Use of an induction-type milliampere ammeter, a volt/ohmmeter, a battery charger, a carbon pile rheostat (load tester) and a 12-volt test lamp may be required. All OBD-sensed systems are monitored by the PCM. Each monitored circuit is assigned a Diagnostic Trouble Code (DTC). The PCM will store a DTC in electronic memory for any failure it detects. Refer to DIAGNOSIS AND TESTING for the proper charging system on-board diagnostic test procedures.

BATTERY SYSTEM DIAGNOSIS		
CONDITION	POSSIBLE CAUSES	CORRECTION
THE BATTERY SEEMS WEAK OR DEAD WHEN ATTEMPTING TO START THE ENGINE.	1. The electrical system ignition-off draw is excessive.	1. Refer to BATTERY, AGM, STANDARD PROCEDURE for the proper test procedures. Repair the excessive ignition-off draw, as required.
	2. The charging system is inoperative.	2. Determine if the charging system is performing to specifications. Refer to DIAGNOSIS AND TESTING . Repair the inoperative charging system, as required.
	3. The battery is discharged.	3. Determine the battery state-of-charge using the Midtronics GR8 battery tester. Refer to BATTERY, AGM, STANDARD PROCEDURE . Charge the battery as required.

	4. The battery terminal connections are loose or corroded.	4. Refer to CABLES, BATTERY, DIAGNOSIS AND TESTING . Clean and tighten the battery terminal connections, as required.
	5. The battery has an incorrect size or rating for this vehicle.	5. Refer to SPECIFICATIONS for the proper size and rating. Replace an incorrect battery, as required.
	6. The battery is inoperative.	6. Determine the battery cranking capacity using the Midtronics GR8 battery tester. Refer to BATTERY, AGM, STANDARD PROCEDURE . Replace the inoperative battery, as required.
	7. The starting system is inoperative.	7. Determine if the starting system is performing to specifications. Refer to DIAGNOSIS AND TESTING . Repair the inoperative starting system, as required.
	8. The battery is physically damaged.	8. Inspect the battery for loose terminal posts or a cracked and leaking case. Replace the damaged battery, as required.
THE BATTERY STATE OF CHARGE CANNOT BE MAINTAINED.	1. The battery has an incorrect size or rating for this vehicle.	1. Refer to SPECIFICATIONS for the proper size and rating. Replace an incorrect battery, as required.
	2. The battery terminal connections are loose or corroded.	2. Refer to CABLES, BATTERY, DIAGNOSIS AND TESTING . Clean and tighten the battery terminal connections, as required.
	3. The electrical system ignition-off draw is excessive.	3. Refer to BATTERY, AGM, STANDARD PROCEDURE for the proper test procedures. Repair the inoperative electrical system, as required.
	4. The battery is inoperative.	4. Test the battery using the Midtronics GR8 battery tester. Refer to BATTERY, AGM, STANDARD PROCEDURE . Replace the inoperative battery, as required.
	5. The starting system is inoperative.	5. Determine if the starting system is performing to specifications. Refer to DIAGNOSIS AND TESTING . Repair the inoperative starting system, as required.
	6. The charging system is inoperative.	6. Determine if the charging system is performing to specifications. Refer to DIAGNOSIS AND TESTING . Repair the inoperative charging system, as required.
	7. Electrical loads exceed the output of the charging system.	7. Inspect the vehicle for aftermarket electrical equipment which might cause excessive electrical loads.

	8. Slow driving or prolonged idling with high-amperage draw systems in use.	8. Advise the vehicle operator, as required.
THE BATTERY WILL NOT ACCEPT A CHARGE.	1. The battery is inoperative.	1. Test the battery using the Midtronics GR8 battery tester. Refer to BATTERY, AGM, STANDARD PROCEDURE . Replace the inoperative battery, as required.

SPECIFICATIONS > BATTERY

The battery Group Size number, the Cold Cranking Amperage (CCA) rating, and the Reserve Capacity (RC) rating or Ampere-Hours (AH) rating can be found on the original equipment battery label. Be certain that a replacement battery has the correct Group Size number, as well as CCA, and RC or AH ratings that equal or exceed the original equipment specification for the vehicle being serviced. Battery sizes and ratings are discussed in more detail below.

- **Group Size** - The outside dimensions and terminal placement of the battery conform to standards established by the Battery Council International (BCI). Each battery is assigned a BCI Group Size number to help identify a correctly-sized replacement.
- **Cold Cranking Amperage** - The Cold Cranking Amperage (CCA) rating specifies how much current (in amperes) the battery can deliver for thirty seconds at -18° C (0° F). Terminal voltage must not fall below 7.2 volts during or after the thirty second discharge period. The CCA required is generally higher as engine displacement increases, depending also upon the starter current draw requirements.
- **Reserve Capacity** - The Reserve Capacity (RC) rating specifies the time (in minutes) it takes for battery terminal voltage to fall below 10.5 volts, at a discharge rate of 25 amperes. RC is determined with the battery fully-charged at 26.7° C (80° F). This rating estimates how long the battery might last after a charging system failure, under minimum electrical load.
- **Ampere-Hours** - The Ampere-Hours (AH) rating specifies the current (in amperes) that a battery can deliver steadily for twenty hours, with the voltage in the battery not falling below 10.5 volts. This rating is also sometimes identified as the twenty-hour discharge rating.
- **Load Test Amperage** - The Load Test Amperage rating specifies the current (in amperes) that a battery should be tested at with the battery load test equipment. This value should always be 50 percent of the CCA. For example: the CCA for this battery is 730 amps, the Load Test Amperage is 50 percent of that or 365 amps.

BATTERY CLASSIFICATIONS AND RATINGS				
BCI Group Size Classification	Cold Cranking Amperage	Reserve Capacity	Ampere - Hours	Load Test Amperage
H7 (Gas Only)	700	120 Minutes	75	365
H8 (Diesel Only)	800	160 Minutes	85	400

SPECIFICATIONS > TORQUE SPECIFICATIONS

TORQUE SPECIFICATIONS

DESCRIPTION	N.m	Ft. Lbs.	In. Lbs.
Battery Terminal Clamp Pinch-Bolt Hex Nut	5.5	-	50
Starter Solenoid B(+) Terminal Stud Nut	17	-	150
Battery Negative Cable Ground Eyelet Terminal to Engine Block Bolt	11	-	95
Generator Output Terminal Stud Nut	17	-	150
Power Distribution Center B(+) Terminal Stud Nut	11.5	-	105
Integrated Power Module B(+) Terminal Stud Nut	11.5	-	105
Battery Negative Cable Eyelet Terminal to the Inner Fender nut	28	20.5	-

CLEANING > CLEANING

The following information details the recommended cleaning procedures for the battery and related components. In addition to the maintenance schedules found in this service information , it is recommended that these procedures be performed any time the battery or related components must be removed for vehicle service. Refer to MAINTENANCE SCHEDULES, DESCRIPTION .

Fig 1: Cleaning Battery Cable Terminal Clamps

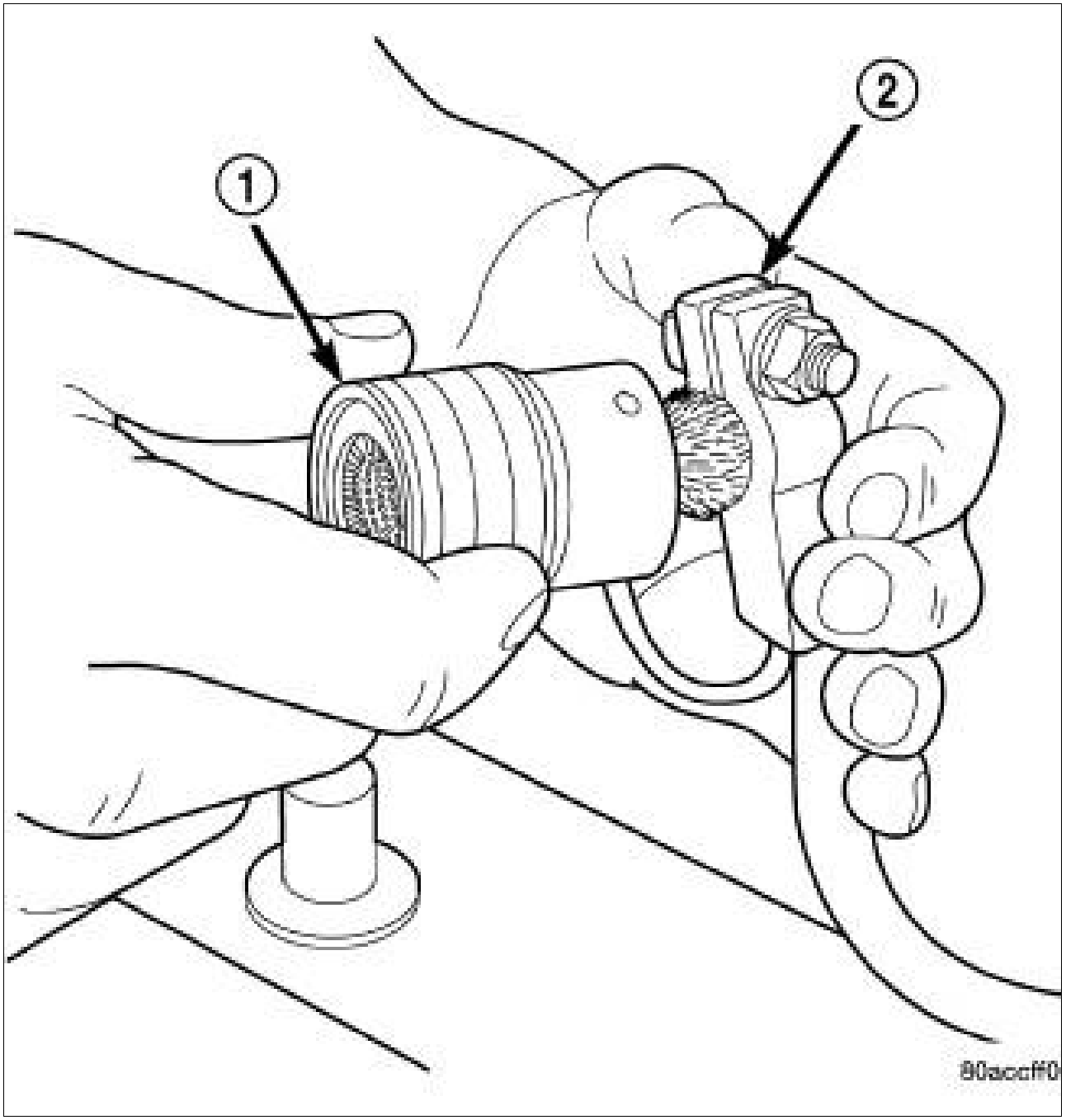

Courtesy of CHRYSLER GROUP, LLC

1. Clean the battery cable terminal clamps (2) of all corrosion. Remove any corrosion using a wire brush or a post and terminal cleaning tool (1), and a sodium bicarbonate (baking soda) and warm water cleaning solution.

Fig 2: Cleaning Battery Thermal Guard

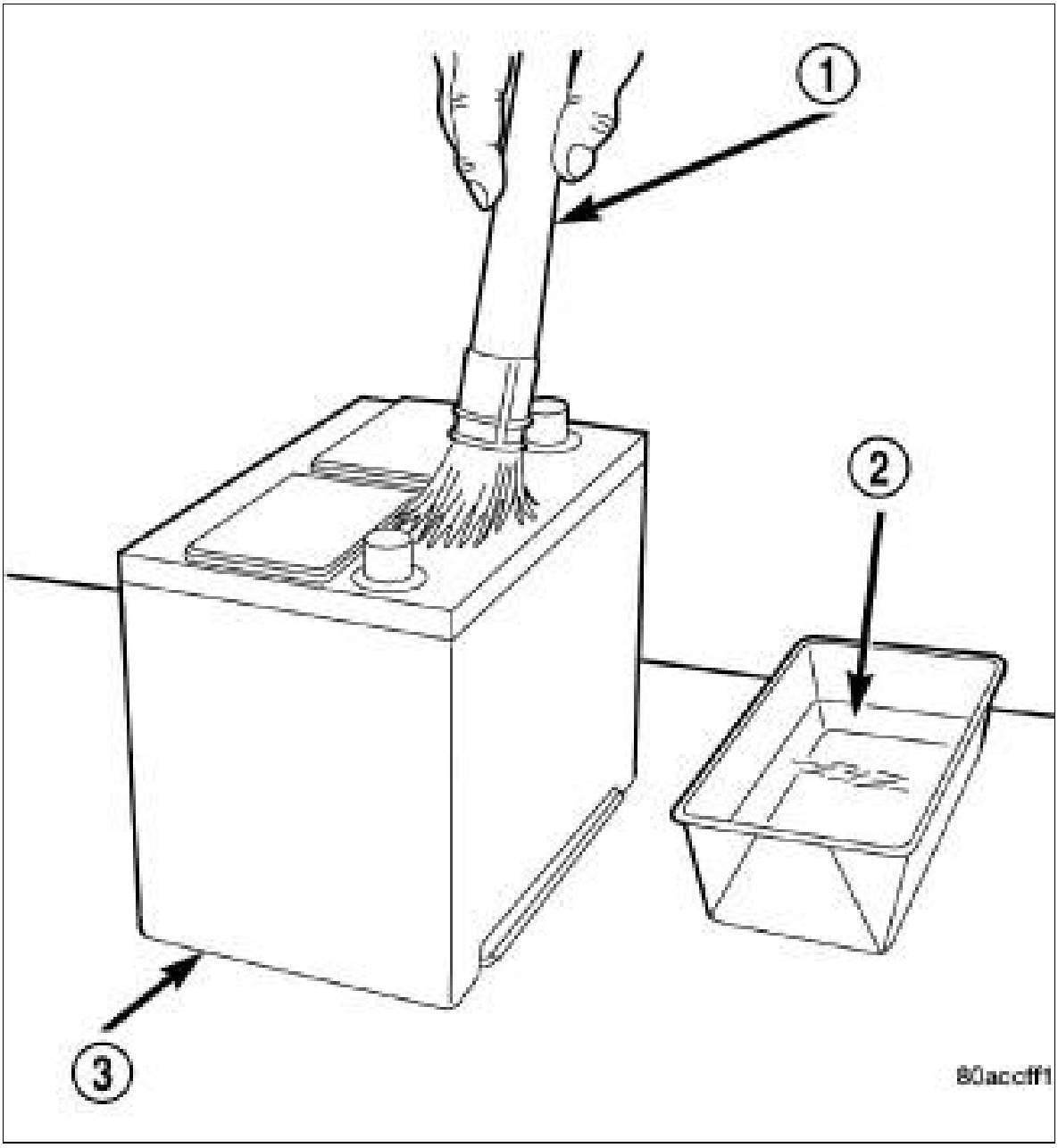

Courtesy of CHRYSLER GROUP, LLC

2. Clean the battery tray and battery hold down hardware of all corrosion. Remove any corrosion using a wire brush and a sodium bicarbonate (baking soda) and warm water cleaning solution (2). Paint any exposed bare metal.

3. If the removed battery is to be reinstalled, clean the outside of the battery case (3) and the top cover with a sodium bicarbonate (baking soda) and warm water cleaning solution (2) using a stiff bristle parts cleaning brush (1) to remove any acid film. Rinse the battery with clean water. Ensure that the cleaning solution does not enter the battery cells through the vent holes. If the battery is being replaced, confirm that the replacement battery is the correct size and has the correct ratings for the vehicle.

4. Clean the battery thermal guard with a sodium bicarbonate (baking soda) and warm water cleaning solution (2) using a stiff bristle parts cleaning brush (1) to remove any acid film.

Fig 3: Cleaning Battery Terminal Post Using Terminal Cleaner



Courtesy of CHRYSLER GROUP, LLC

5. Clean any corrosion from the battery terminal posts with a wire brush or a post and terminal cleaner (1) and a sodium bicarbonate (baking soda) and warm water cleaning solution.

INSPECTION > INSPECTION

The following information details the recommended inspection procedures for the battery and related components. In addition to the maintenance schedules, it is recommended that these procedures be performed any time the battery or related components are removed for vehicle service. Refer to MAINTENANCE SCHEDULES, DESCRIPTION .

1. Inspect the battery cable terminal clamps for damage. Replace any battery cable that has a damaged or deformed terminal clamp.

2. Inspect the battery tray and battery hold down hardware for damage. Replace any damaged parts.
3. Slide the thermal guard off of the battery case, if equipped. Inspect the battery case for cracks or other damage that could result in electrolyte leaks. Also, check the battery terminal posts for looseness. Batteries with damaged cases or loose terminal posts must be replaced.
4. Inspect the battery thermal guard for tears, cracks, deformation or other damage. Replace any battery thermal guard that has been damaged.
5. Inspect the battery built-in test indicator sight glass (if equipped) for an indication of the battery condition. If the battery is discharged, charge as required. Refer to BATTERY, AGM, STANDARD PROCEDURE .

BATTERY, AGM > DESCRIPTION > DESCRIPTION

WARNING:

The Absorbent Glass Mat (AGM) battery should only be charged and tested with the Associated Battery Charger or Midtronics. Never test the AGM battery with a Midtronics Micro 420 battery tester.

The battery is located under the passenger seat. A breather line runs from the battery through the bottom of the recess well to the outside of the vehicle.

The battery negative cable is attached to the outboard side of the battery compartment.

The AGM battery is located and removed in the same manner as the standard battery for the appropriate starter battery removal procedure. Refer to BATTERY, AGM, REMOVAL and BATTERY, SUPPLEMENTAL, REMOVAL .

BATTERY, AGM > DIAGNOSIS AND TESTING > DIAGNOSIS AND TESTING - BATTERY

WARNING:

IF THE BATTERY SHOWS SIGNS OF FREEZING, LEAKING OR LOOSE POSTS, DO NOT TEST, ASSIST-BOOST, OR CHARGE. THE BATTERY MAY ARC INTERNALLY AND EXPLODE. PERSONAL INJURY AND/OR VEHICLE DAMAGE MAY RESULT.

WARNING:

EXPLOSIVE HYDROGEN GAS FORMS IN AND AROUND THE BATTERY. DO NOT SMOKE, USE FLAME, OR CREATE SPARKS NEAR THE BATTERY. PERSONAL INJURY AND/OR

VEHICLE DAMAGE MAY RESULT.

WARNING:

THE BATTERY CONTAINS SULFURIC ACID, WHICH IS POISONOUS AND CAUSTIC. AVOID CONTACT WITH THE SKIN, EYES, OR CLOTHING. IN THE EVENT OF CONTACT, FLUSH WITH WATER AND CALL A PHYSICIAN IMMEDIATELY. KEEP OUT OF THE REACH OF CHILDREN.

A battery that will not accept a charge is inoperative, and must be replaced. Further testing is not required. A fully-charged battery must be load tested to determine its cranking capacity. A battery that is fully-charged, but does not pass the load test, is inoperative and must be replaced.

NOTE:

Completely discharged batteries may take several hours to accept a charge. Refer to STANDARD PROCEDURE for the proper battery charging procedures.

BATTERY, AGM > DIAGNOSIS AND TESTING > DIAGNOSIS AND TESTING - BATTERY > MIDTRONICS GR8 BATTERY TESTER

The Midtronics GR8 battery tester is designed to help diagnose the cause of an inoperative battery. Refer to BATTERY, AGM, STANDARD PROCEDURE for instructions on the use of the Midtronics GR8 battery tester.

BATTERY, AGM > STANDARD PROCEDURE > ABSORBENT GLASS MAT (AGM) BATTERY CHARGING

WARNING:

Never exceed 14.4 volts when charging the Absorbent Glass Mat (AGM) starter battery. Personal injury and/or battery damage may result.

Vehicles equipped with the AGM starter battery utilize a unique absorbent glass mat battery design. This battery has a maximum charging voltage that must not be exceeded in order to restore the battery to its full potential, failure to use the following AGM battery charging procedure could result in damage to the battery or personal injury.

Battery charging is the means by which the battery can be restored to its full voltage potential. A battery is fully-charged when:

- Midtronics (special tool #GR8-1220KIT-CHRY, AGM Battery Tester/Charger Station) tester indicates battery is OK.
- Open-circuit voltage of the battery is 12.65 volts or above.
- Battery passes Load Test multiple times.

> *WARNING:*
>
> *If the battery shows signs of freezing, leaking, loose posts or low electrolyte level, do not test, assist-boost, or charge. The battery may arc internally and explode. Personal injury and/or vehicle damage may result.*

> *WARNING:*
>
> *EXPLOSIVE HYDROGEN GAS FORMS IN AND AROUND THE BATTERY. DO NOT SMOKE, USE FLAME, OR CREATE SPARKS NEAR THE BATTERY. PERSONAL INJURY AND/OR VEHICLE DAMAGE MAY RESULT.*

> *WARNING:*
>
> *The battery contains corrosive materials. Avoid contact with the skin, eyes, or clothing. In the event of contact, flush with water and call a physician immediately. Keep out of the reach of children.*

> *CAUTION:*
>
> *Always disconnect and isolate the battery negative cable before charging a battery. Charge the battery directly at the battery terminals. Do not exceed 14.4 volts while charging a battery.*

> *CAUTION:*
>
> *The battery should not be hot to the touch. If the battery feels hot to the touch, turn off the charger and let the battery cool before continuing the charging operation. Damage to the battery may result.*

After the battery has been charged to 12.6 volts or greater, perform a load test to determine the battery cranking capacity. If the battery passes a load test, return the battery to service. If the battery fails a load test, it is faulty and must be replaced.

Clean and inspect the battery hold downs, well, terminals, posts, and top before completing battery

service. Refer to CLEANING for the proper battery system cleaning procedures. Refer to INSPECTION for the proper battery system inspection procedures.

BATTERY, AGM > STANDARD PROCEDURE > ABSORBENT GLASS MAT (AGM) BATTERY CHARGING > CHARGING A COMPLETELY DISCHARGED BATTERY

> *WARNING:*
>
> *Never exceed 14.4 volts when charging the Absorbent Glass Mat (AGM) starter battery. Personal injury and/or battery damage may result.*

The following procedure should be used to recharge a completely discharged battery. Unless this procedure is properly followed, a good battery may be needlessly replaced.

1. Measure the voltage at the battery posts with a voltmeter, accurate to 1/10 (0.10) volt. Refer to Battery REMOVAL and INSTALLATION for access instructions. If the reading is below ten volts, the battery charging current will be low. It could take several hours before the battery accepts a current greater than a few milliamperes. Such low current may not be detectable on the ammeters built into many battery chargers.
2. Disconnect and isolate the battery negative cable. Connect the Midtronics (special tool #GR8-1220KIT-CHRY, AGM Battery Tester/Charger Station).

   > *NOTE:*
   >
   > *Some battery chargers are equipped with polarity-sensing circuitry. This circuitry protects the battery charger and the battery from being damaged if they are improperly connected. If the battery state-of-charge is too low for the polarity-sensing circuitry to detect, the battery charger will not operate. This makes it appear that the battery will not accept charging current. See the instructions provided by the manufacturer of the battery charger for details on how to bypass the polarity-sensing circuitry.*

3. Battery chargers vary in the amount of voltage and current they provide. The amount of time required for a battery to accept measurable charging current at various voltages is shown in BATTERY CHARGE RATE TABLE . If the charging current is still not measurable at the end of the charging time, the battery is faulty and must be replaced. If the charging current is measurable during the charging time, the battery may be good and the charging should be completed in the normal manner.

BATTERY CHARGE RATE TABLE

Voltage	Minutes
14.4 volts maximum	up to 10 minutes

13.0 to 14 volts	up to 20 minutes
12.9 volts or less	up to 30 minutes

BATTERY, AGM > STANDARD PROCEDURE > ABSORBENT GLASS MAT (AGM) BATTERY CHARGING > CHARGING TIME REQUIRED

The time required to charge a battery will vary, depending upon the following factors:

- **Battery Capacity** - A completely discharged heavy-duty battery requires twice the charging time of a small capacity battery.
- **Temperature** - A longer time will be needed to charge a battery at -18° C (0° F) than at 27° C (80° F). When a fast battery charger is connected to a cold battery, the current accepted by the battery will be very low at first. As the battery warms, it will accept a higher charging current rate (amperage).
- **Charger Capacity** - A battery charger that supplies only five amperes will require a longer charging time. A battery charger that supplies eight amperes will require a shorter charging time.
- **State-Of-Charge** - A completely discharged battery requires more charging time than a partially discharged battery. Electrolyte is nearly pure water in a completely discharged battery. At first, the charging current (amperage) will be low. As the battery charges, the specific gravity of the electrolyte will gradually rise.

The Battery Charging Time Table gives an indication of the time required to charge a typical battery at room temperature based upon the battery state-of-charge and the charger capacity.

BATTERY CHARGING TIME TABLE

Charging Amperage	5 Amps	8 Amps
Open Circuit Voltage	Hours Charging @ 21° C (70° F)	
12.25 to 12.49	6 hours	3 hours
12.00 to 12.24	10 hours	5 hours
10.00 to 11.99	14 hours	7 hours
Below 10.00	18 hours	9 hours

BATTERY, AGM > STANDARD PROCEDURE > IGNITION-OFF DRAW TEST

The term Ignition-Off Draw (IOD) identifies a normal condition where power is being drained from the battery with the ignition in the Off position. A normal vehicle electrical system will draw from five to thirty-five milliamperes (0.005 to 0.035 ampere) with the ignition switch in the Off position, and all non-ignition controlled circuits in proper working order. Up to thirty-five milliamperes are needed to enable the memory functions for the Powertrain Control Module (PCM), digital clock, electronically tuned radio, and other modules which may vary with the vehicle equipment.

A vehicle that has not been operated for approximately twenty days, may discharge the battery to an inadequate level. When a vehicle will not be used for twenty days or more (stored), use the scan tool to put the vehicle in shipping mode. This will reduce battery discharging.

Excessive IOD can be caused by:

- Electrical items left on.
- Inoperative or improperly adjusted switches.
- Inoperative or shorted electronic modules and components.
- An internally shorted generator.
- Intermittent shorts in the wiring.

If the IOD is over thirty-five milliamperes, the problem must be found and corrected before replacing a battery. In most cases, the battery can be charged and returned to service after the excessive IOD condition has been corrected.

1. Verify that all electrical accessories are off. Turn off all lamps, turn the ignition off, and close all doors. If the vehicle is equipped with an illuminated entry system or an electronically tuned radio, allow the electronic timer function of these systems to automatically shut off (time out). This may take up to ten minutes. See the Electronic Module Ignition-Off Draw Chart below for more information.

ELECTRONIC MODULE IGNITION-OFF DRAW (IOD) TABLE			
Module	Time Out? (If Yes, Interval And Wake-Up Input)	IOD	IOD After Time Out
Radio	No	1 to 3 milliamperes	N/A
Audio Power Amplifier	No	up to 1 milliampere	N/A
Powertrain Control Module (PCM)	No	0.95 milliampere	N/A

2. Determine that the underhood lamp is operating properly, then disconnect the lamp wire harness connector or remove the lamp bulb.
3. Turn off all electrical accessories.
4. If connected, disconnect the scan tool. The scan tool can wake the modules on the vehicles or not allow them to sleep.
5. Connect a 10 gauge jumper wire between the negative battery cable and the negative battery post.
6. Disconnect the negative battery cable.

> *NOTE:*
>
> *Do not break the connection between the 10 amp jumper wire and the battery. If the*

connection between the battery negative terminal post and the negative cable terminal clamp is lost during any part of the IOD test, the electronic timer function will be activated and all of the tests will have to be repeated.

⚠ *CAUTION:*

Do not open any doors, or turn on any electrical accessories with the lowest milliampere scale selected, or the multi-meter may be damaged.

7. Turn the ignition ON and then OFF and wait 10 minutes for all systems to enter sleep mode.
8. Set an electronic digital multi-meter to its highest amperage scale. Connect the multi-meter to the battery negative cable terminal clamp and the battery negative terminal post, but not on the jumper connection.
9. Remove the 10 gauge jumper wire without breaking the digital multi-meter connection.
10. The multi-meter leads must be securely clamped to the battery negative cable terminal clamp and the battery negative terminal post, but not the 10 gauge jumper wire.
11. The high-amperage IOD reading on the multi-meter should be very low or nonexistent, depending upon the electrical equipment in the vehicle. If the amperage reading remains high, remove and replace each fuse or circuit breaker in the PDC, one at a time until the amperage reading becomes very low, or nonexistent. Refer to the appropriate wiring information for complete PDC, circuit breaker, and circuit identification. This will isolate each circuit and identify the circuit that is the source of the high-amperage IOD. If the amperage reading remains high after removing and replacing each fuse, disconnect the wire harness from the generator. If the amperage reading now becomes very low or nonexistent, diagnose and repair the Charging System as necessary. After the high-amperage IOD has been corrected, switch the multi-meter to progressively lower amperage scales and, if necessary, repeat the fuse and circuit breaker remove-and-replace process to identify and correct all sources of excessive IOD. It is now safe to select the lowest milliampere scale of the multi-meter to check the low-amperage IOD.
12. Observe the multi-meter reading. The low-amperage IOD should not exceed thirty-five milliamperes (0.035 ampere). If the current draw exceeds thirty-five milliamperes, isolate each circuit using the fuse and circuit breaker remove and replace process in Step 10. The multi-meter reading will drop to within the acceptable limit when the source of the excessive current draw is disconnected. Repair this circuit as required; whether a wiring short, incorrect switch adjustment, or an inoperative component is the cause.

BATTERY, AGM > STANDARD PROCEDURE > OPEN-CIRCUIT VOLTAGE TEST

A battery open-circuit voltage (no load) test will show the approximate state-of-charge of a battery.

Before proceeding with this test, completely charge the battery, refer to the appropriate battery charging procedure.

1. Before measuring the open-circuit voltage, the surface charge must be removed from the

battery. Turn on the headlamps for fifteen seconds, then allow up to five minutes for the battery voltage to stabilize.

2. Disconnect and isolate both battery cables, negative cable first.
3. Using a voltmeter connected to the battery posts (see the instructions provided by the manufacturer of the voltmeter), measure the open-circuit voltage.

See the Open-Circuit Voltage Chart below . This voltage reading will indicate the battery state-of-charge, but will not reveal its cranking capacity. If a battery has an open-circuit voltage reading of 12.4 volts or greater, it may be load tested to reveal its cranking capacity.

OPEN CIRCUIT VOLTAGE TABLE	
Open Circuit Voltage	Charge Percentage
11.7 volts or less	0%
12.0 volts	25%
12.2 volts	50%
12.4 volts	75%
12.6 volts or more	100%

BATTERY, AGM > STANDARD PROCEDURE > GR8 BATTERY TESTER / CHARGER

Always use the Midtronics GR8 Instruction Manual that was supplied with the tester as a reference. If the Instruction Manual is not available the following procedure can be used:

WARNING:

Always wear appropriate eye protection and use extreme caution when working with batteries.

BATTERY, AGM > STANDARD PROCEDURE > GR8 BATTERY TESTER / CHARGER > BATTERY TESTING

CAUTION:

Never connect the GR8 to the remote battery posts. Connecting the GR8 to the remote battery posts will give a false test reading indicating that the battery is bad.

1. If testing the battery OUT-OF-VEHICLE, clean the battery terminals with a wire brush before testing. Refer to CLEANING . If the battery is equipped with side post terminals, install and

tighten the supplied lead terminal stud adapters. Do not use steel bolts. Failure to properly install the stud adapters, or using stud adapters that are dirty or worn-out may result in false test readings.

2. If testing the battery IN-THE-VEHICLE, make certain all of the vehicle accessory loads are OFF, including the ignition. Connect the GR8 to directly to the battery posts.

> *NOTE:*
>
> *Multiple batteries connected in parallel must have the ground cable disconnected to perform a battery test. Failure to disconnect may result in false battery test readings.*

3. Using the ARROW key select **in** or **out** of vehicle testing and press ENTER to make a selection.
4. If not selected, choose the Cold Cranking Amp (CCA) battery rating. Or select the appropriate battery rating for your area (see menu). The tester will then run its self programmed test of the battery and display the results. Refer to the test result table noted below.
5. While viewing the battery test result, press the CODE button and the tester will prompt you for the last 4 digits of the VIN. Use the UP/DOWN arrow buttons to scroll to the correct character; then press ENTER to select and move to the next digit. Then press the ENTER button to view the SERVICE CODE. Pressing the CODE button a second time will return you to the test results.

> *NOTE:*
>
> *The SERVICE CODE is required on every warranty claim submitted for battery replacement.*

BATTERY, AGM > STANDARD PROCEDURE > GR8 BATTERY TESTER / CHARGER > QUICK REFERENCE GUIDE

Inspect the battery for damages and check the electrolyte level. Always use the necessary safety precautions when working with batteries to prevent severe injury or death. Follow all manufacturers' instructions and BCI (Battery Council International) safety recommendations, which include the following precautions:

BATTERY, AGM > STANDARD PROCEDURE > GR8 BATTERY TESTER / CHARGER > QUICK REFERENCE GUIDE > MAIN MENU

The Main Menu is the starting point for all tools and utilities, which are depicted as icons. Some icons lead directly to the function they represent, while others are menu icons that lead to two or more options.

Fig 1: Identifying Battery Tester Main Menu Icon 1

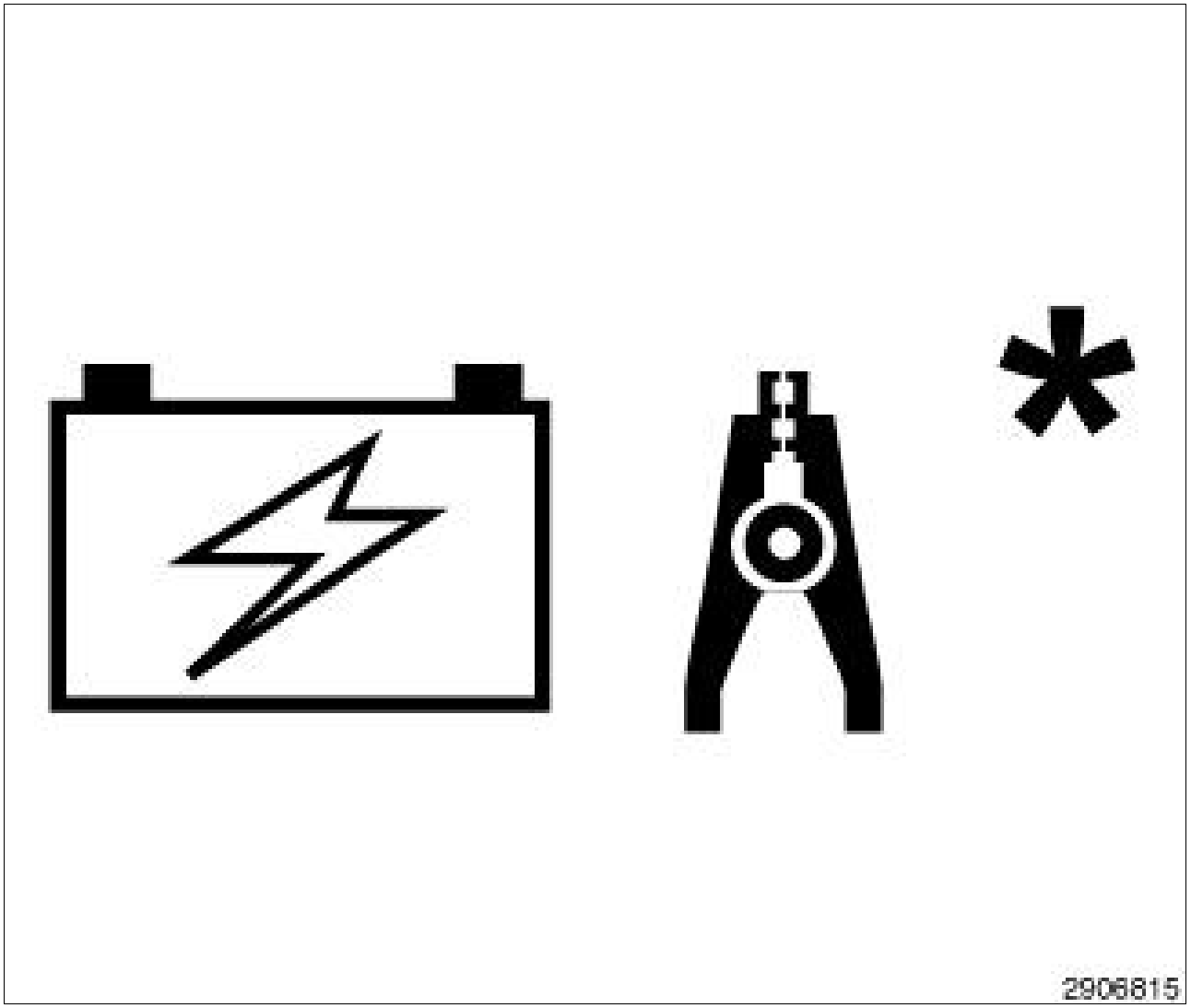

Courtesy of CHRYSLER GROUP, LLC

Automatically tests, charges, and provides battery decision using the information you select in a series of screens. Start here to generate warranty codes.

Fig 2: Identifying Battery Tester Main Menu Icon 2

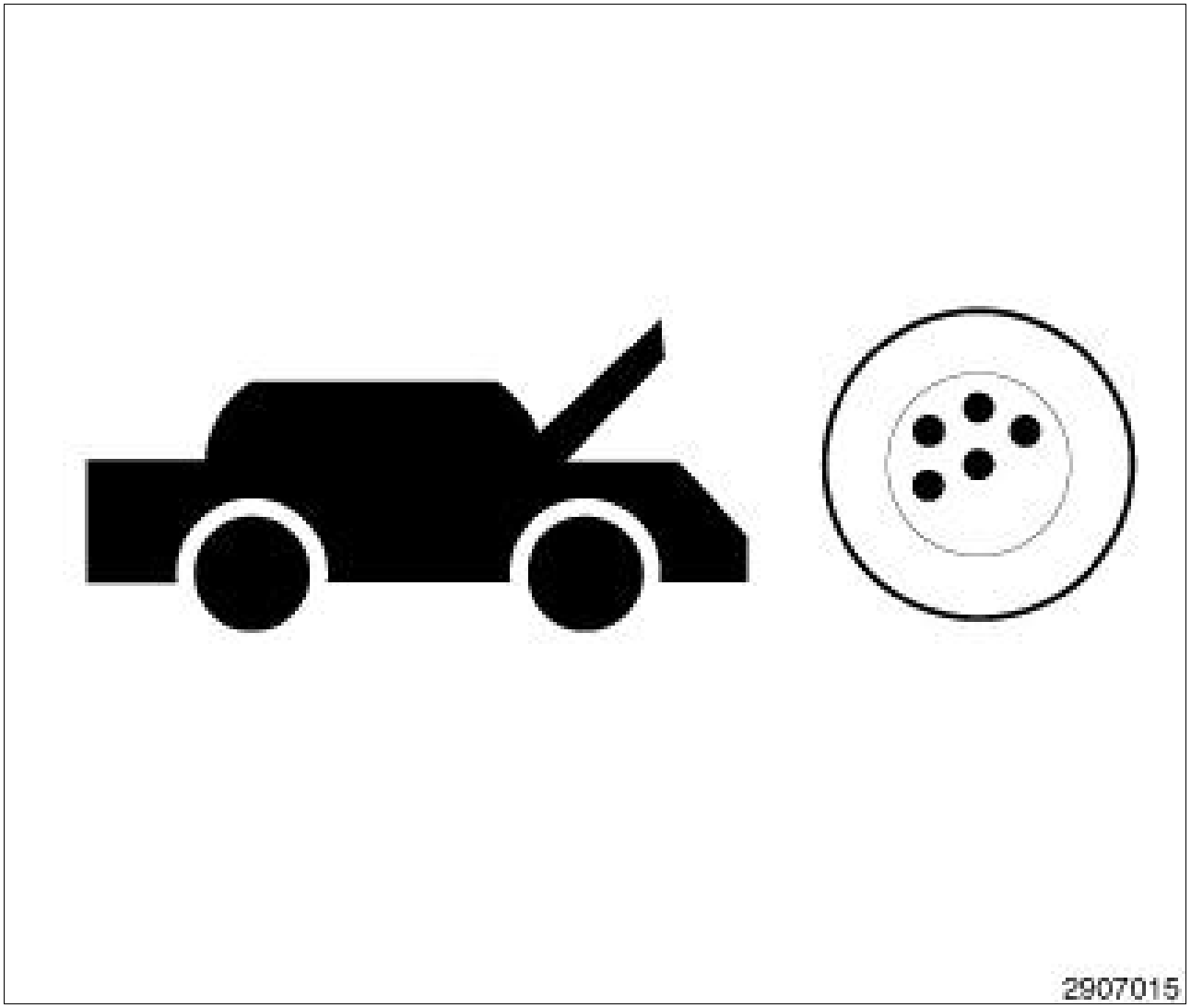

Courtesy of CHRYSLER GROUP, LLC

Tests the starting and charging systems.

Fig 3: Identifying Battery Tester Main Menu Icon 3

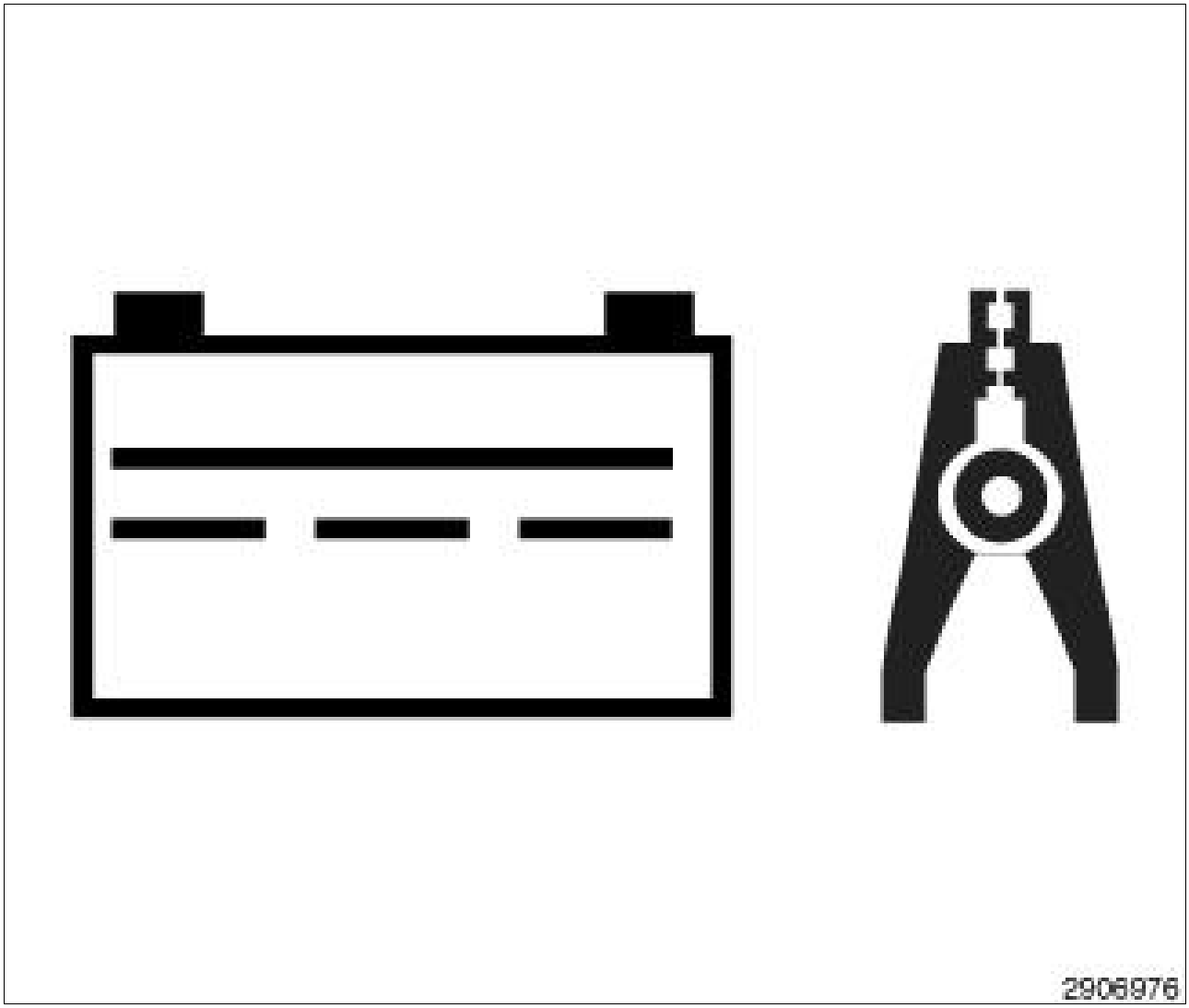

Courtesy of CHRYSLER GROUP, LLC

Maintains battery voltage at 13.5 volts to provide uninterrupted reprogramming of ECUs and retain vehicle system settings.

Fig 4: Identifying Battery Tester Main Menu Icon 4

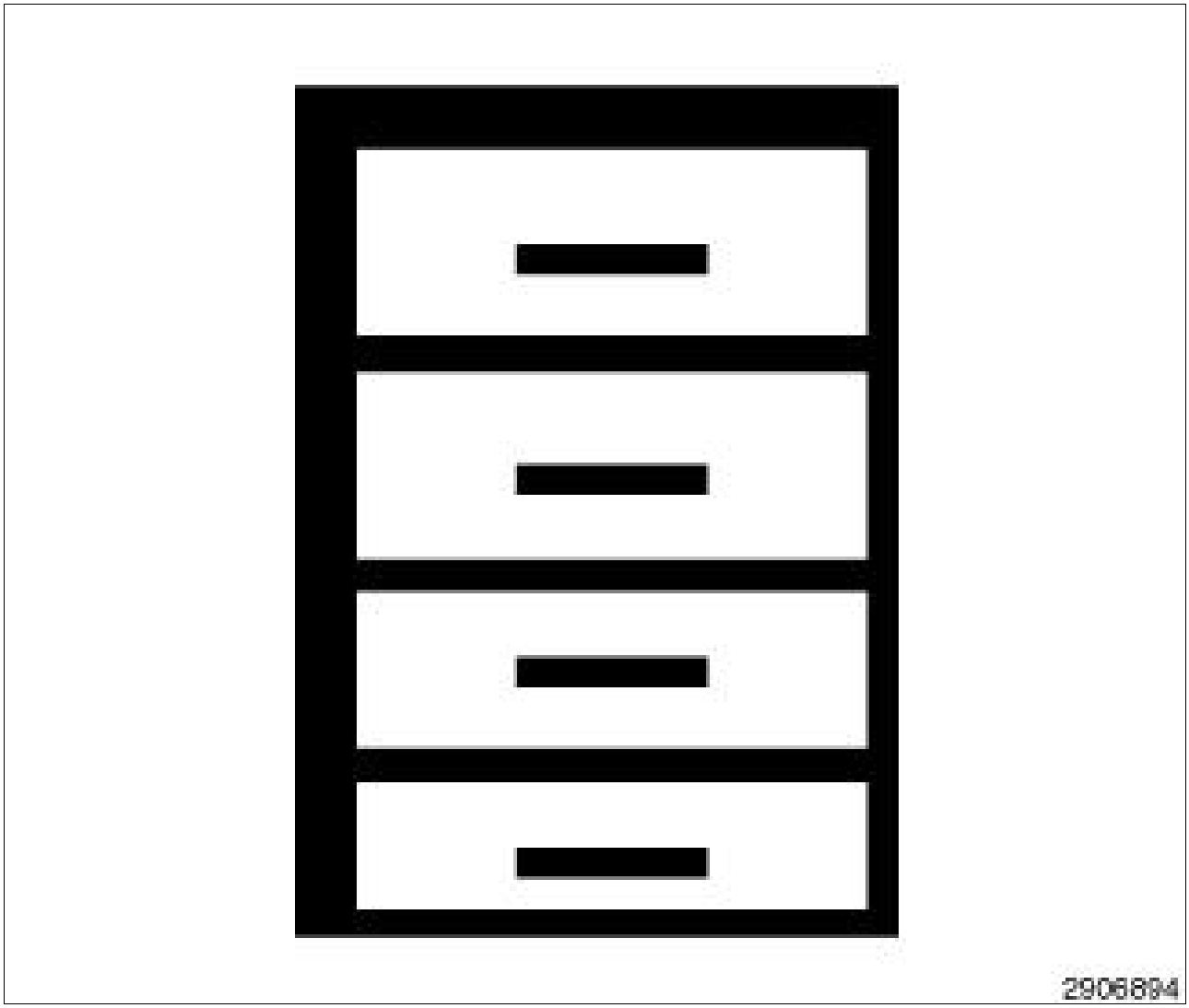

Courtesy of CHRYSLER GROUP, LLC

Includes a utility to view and print a test counter, a data transfer utility, the software version and date, the GR8 serial number for the control module, and current wireless channel.

Fig 5: Identifying Battery Tester Main Menu Icon 5

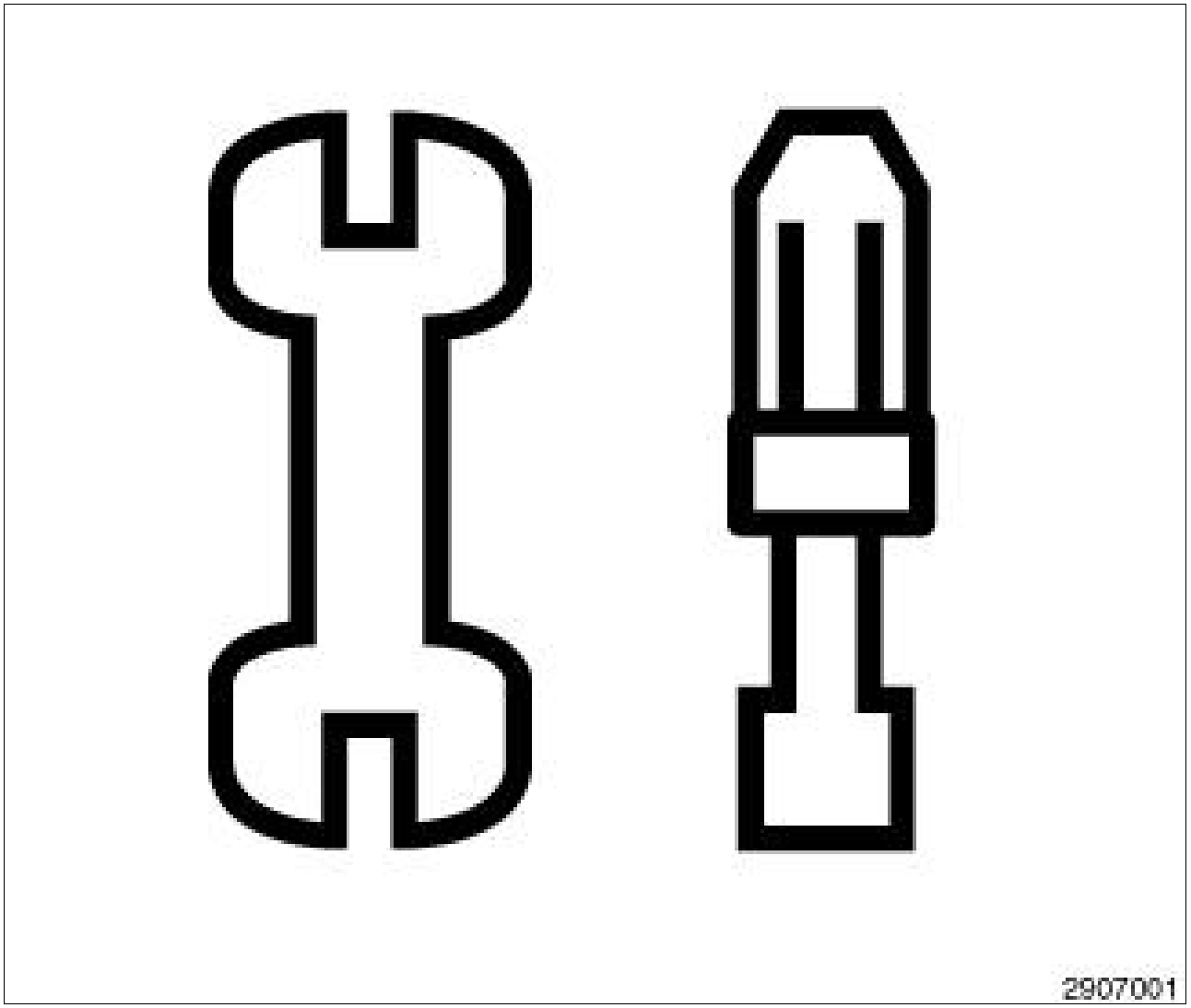

Courtesy of CHRYSLER GROUP, LLC

The Setup Menu lets you customize options in the GR8 to suit your needs.

Fig 6: Identifying Battery Tester Main Menu Icon 6



Courtesy of CHRYSLER GROUP, LLC

Provides a list of topics and definitions. Also includes Midtronics Customer Service phone numbers.

BATTERY, AGM > STANDARD PROCEDURE > GR8 BATTERY TESTER / CHARGER > QUICK REFERENCE GUIDE > CHARGE/TEST MENU

Fig 1: Identifying Charge/Test Menu Icon 1

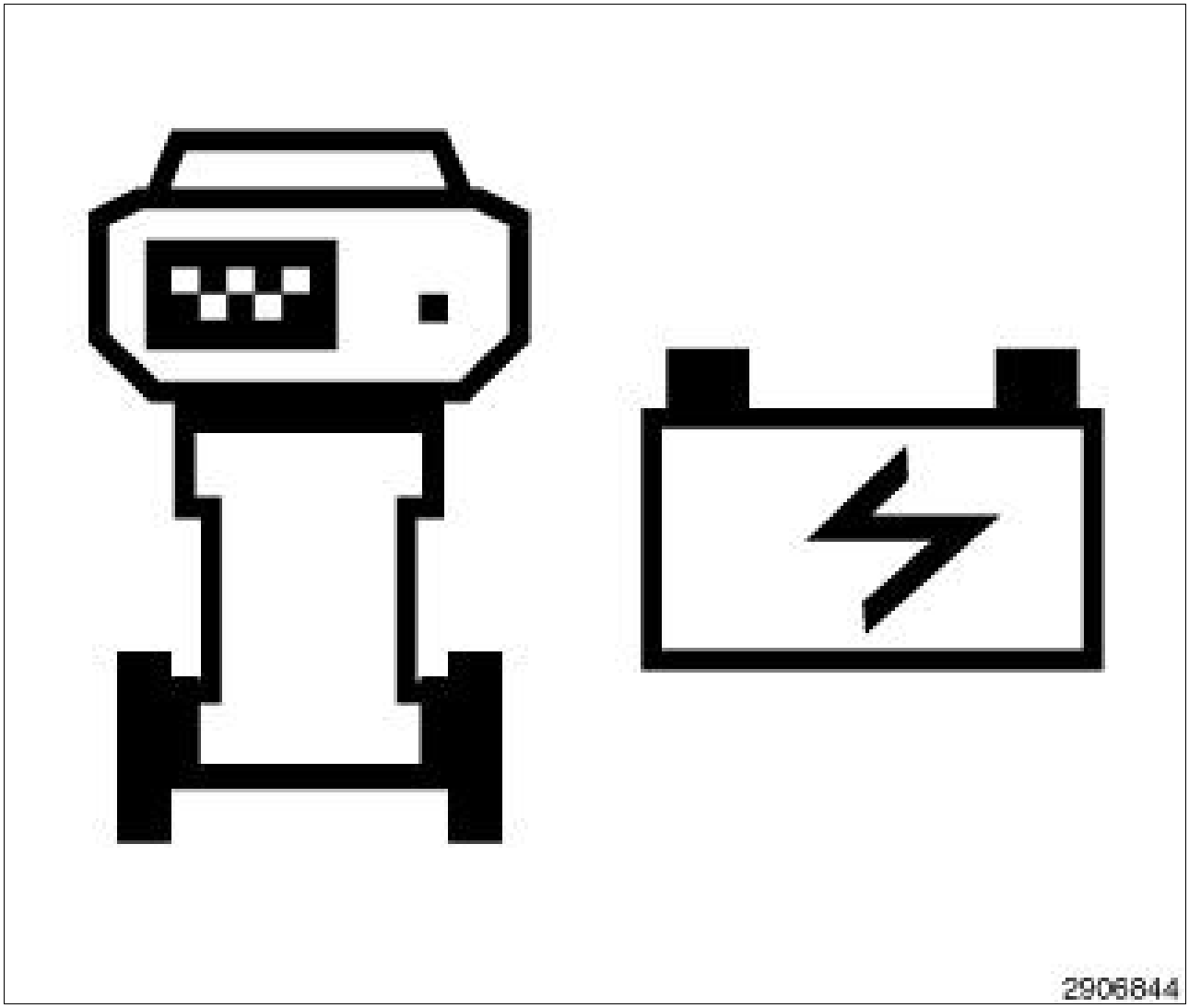

Courtesy of CHRYSLER GROUP, LLC

Automatically tests and charges battery, starting, and charging system. Generates a warranty code for Replace and Bad Cell decisions.

Fig 2: Identifying Charge/Test Menu Icon 2

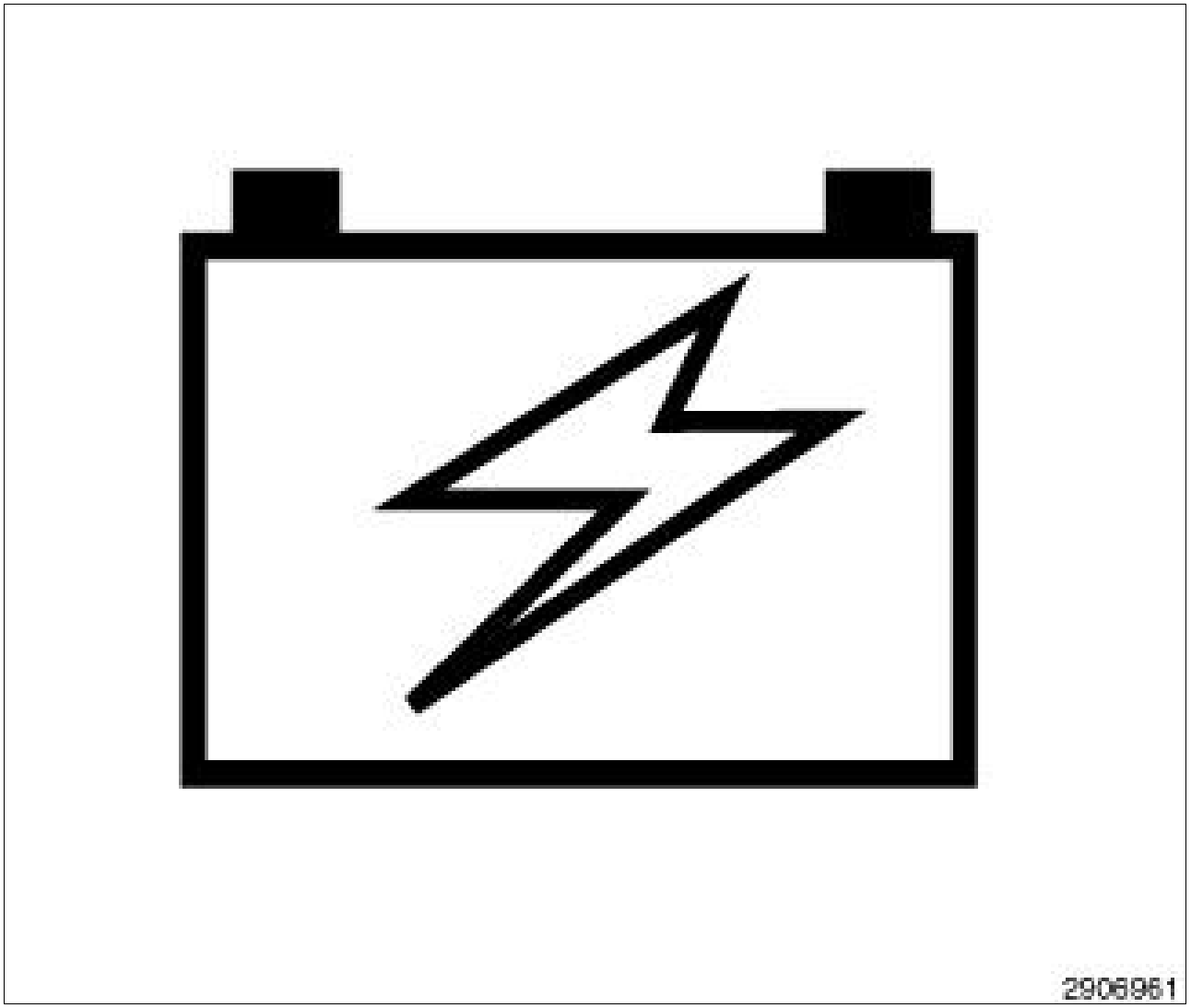

Courtesy of CHRYSLER GROUP, LLC

Pre Delivery Inspection (PDI): For testing delivered vehicles and lot maintenance. Uses the same inputs as a diagnostic charge.

Fig 3: Identifying Charge/Test Menu Icon 3

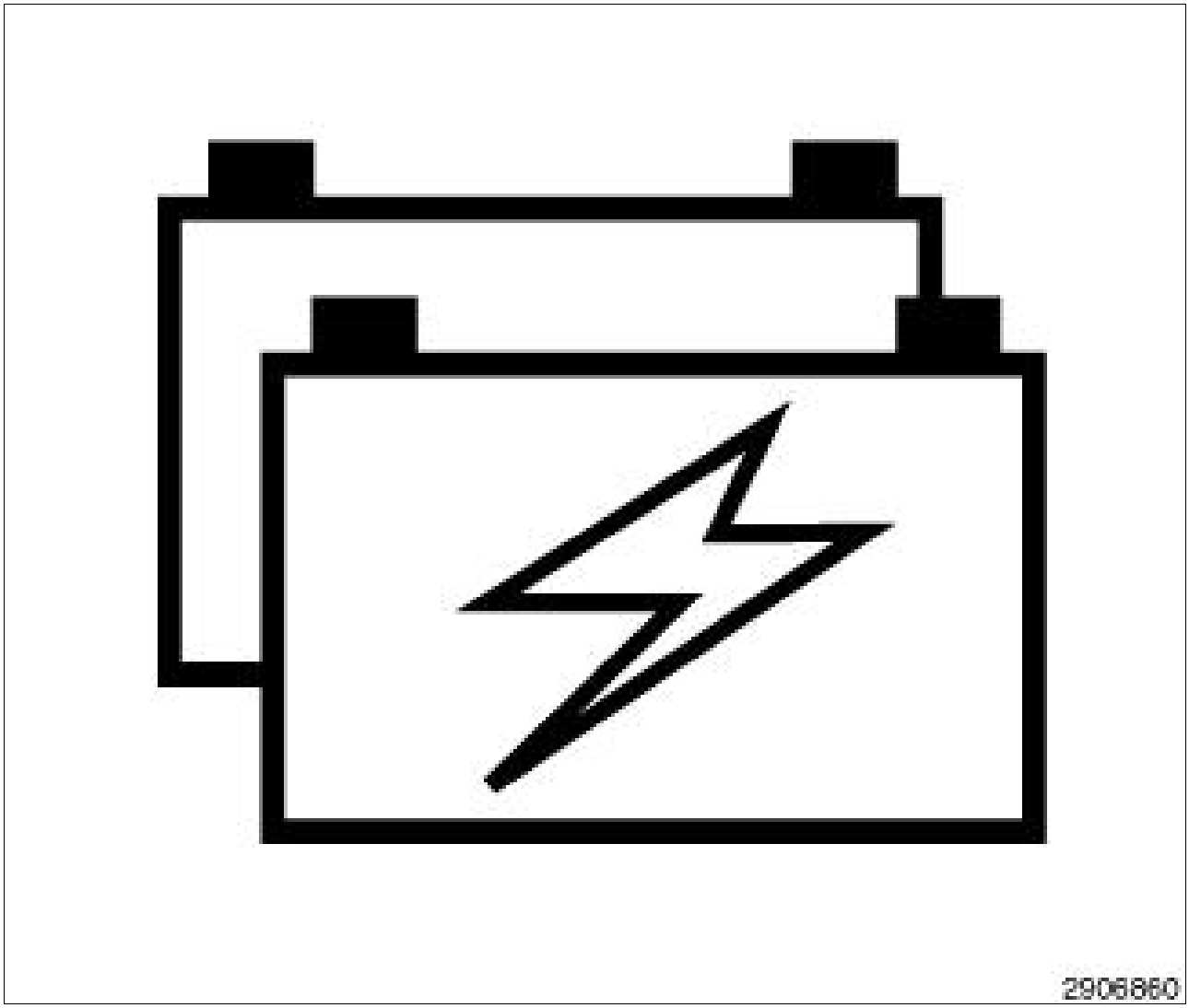

Courtesy of CHRYSLER GROUP, LLC

Dual Battery Charge mode allows the charger to be used with dual battery systems.

Fig 4: Identifying Charge/Test Menu Icon 4

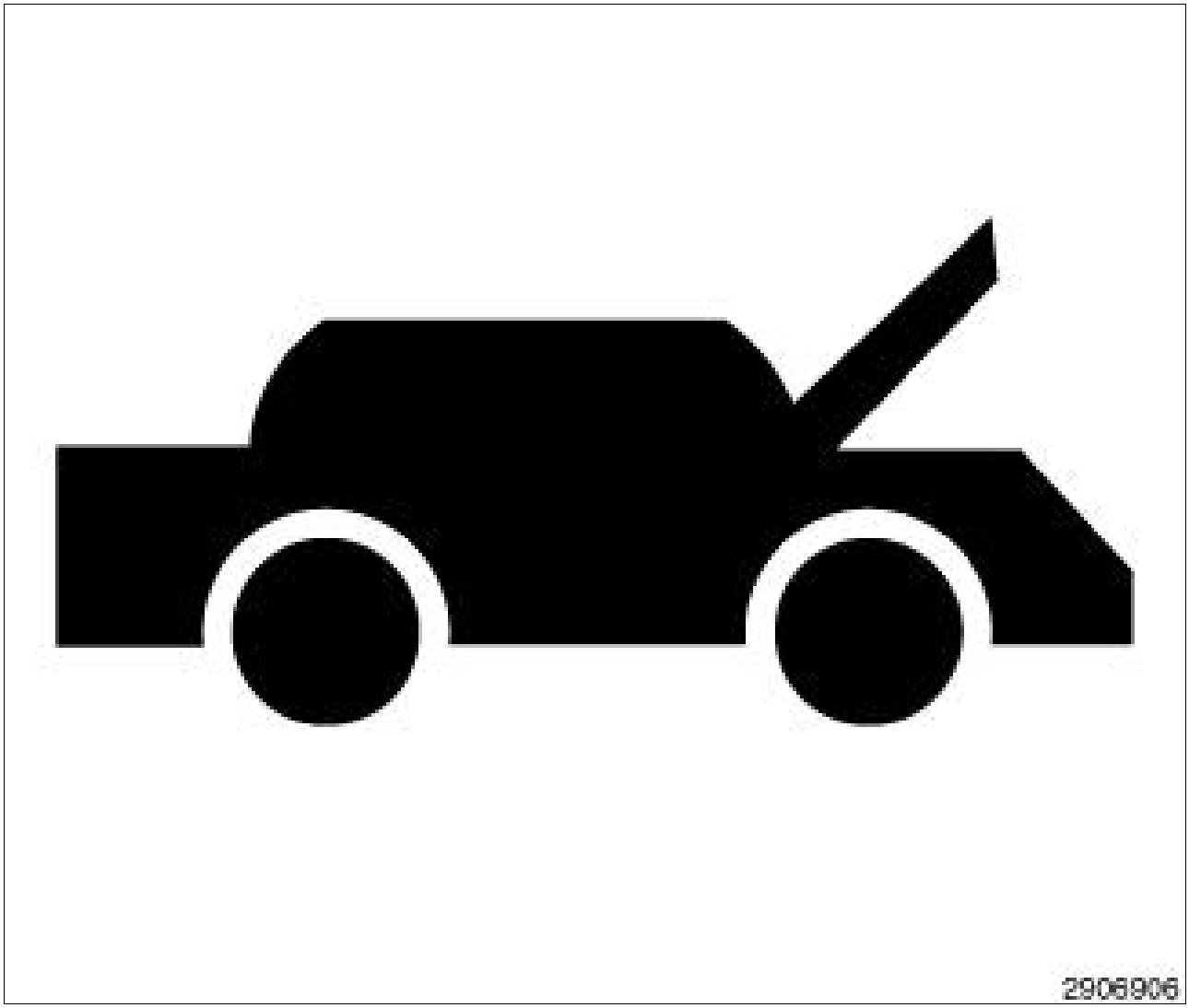

Courtesy of CHRYSLER GROUP, LLC

Makes high output current available to boost charge an in-vehicle battery and assist in starting the engine.

Fig 5: Identifying Charge/Test Menu Icon 5

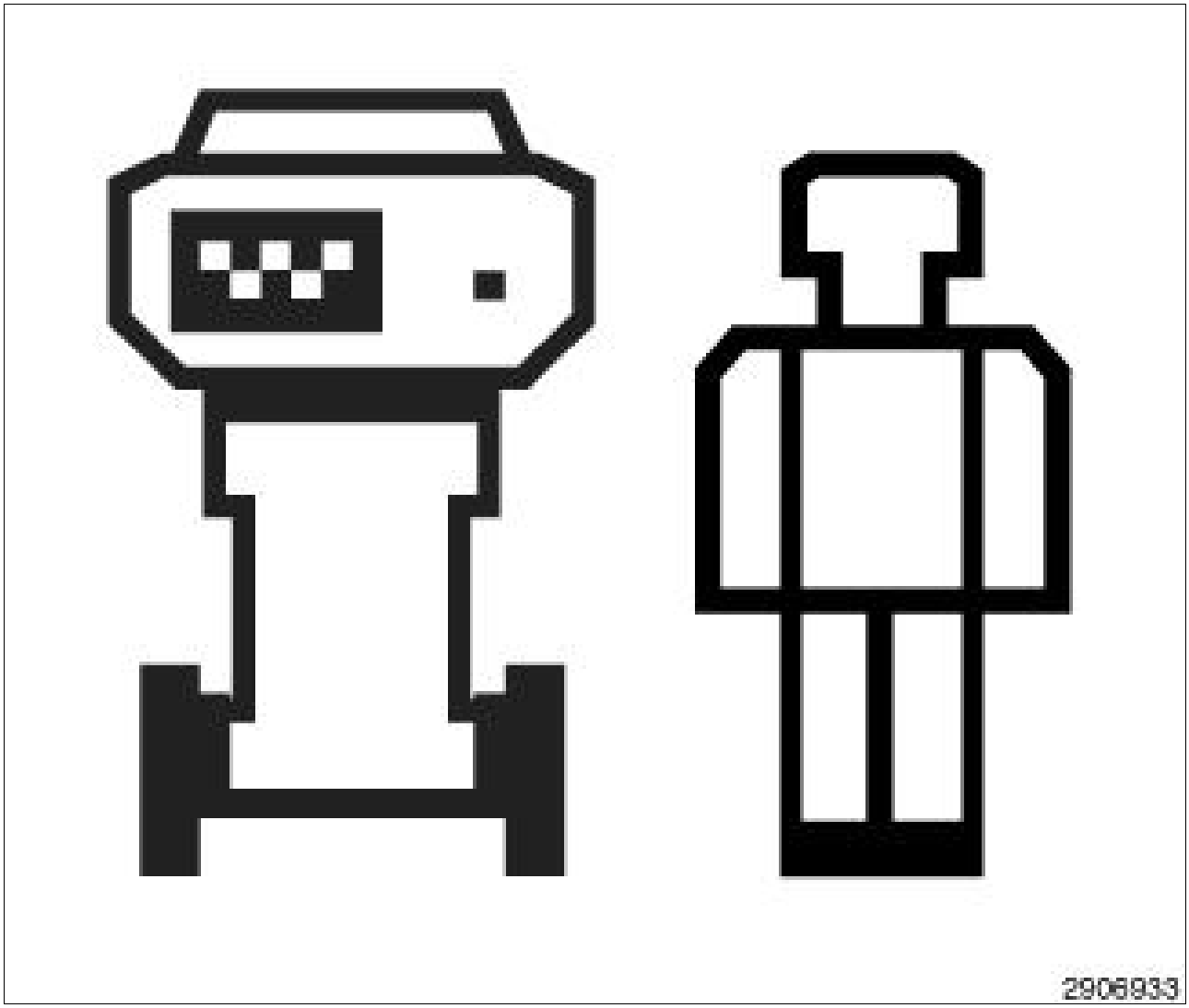

Courtesy of CHRYSLER GROUP, LLC

Provides a timed charge that ranges from 5 to 120 minutes or a continuous charge that ends when you press the STOP key.

Fig 6: Identifying Charge/Test Menu Icon 6

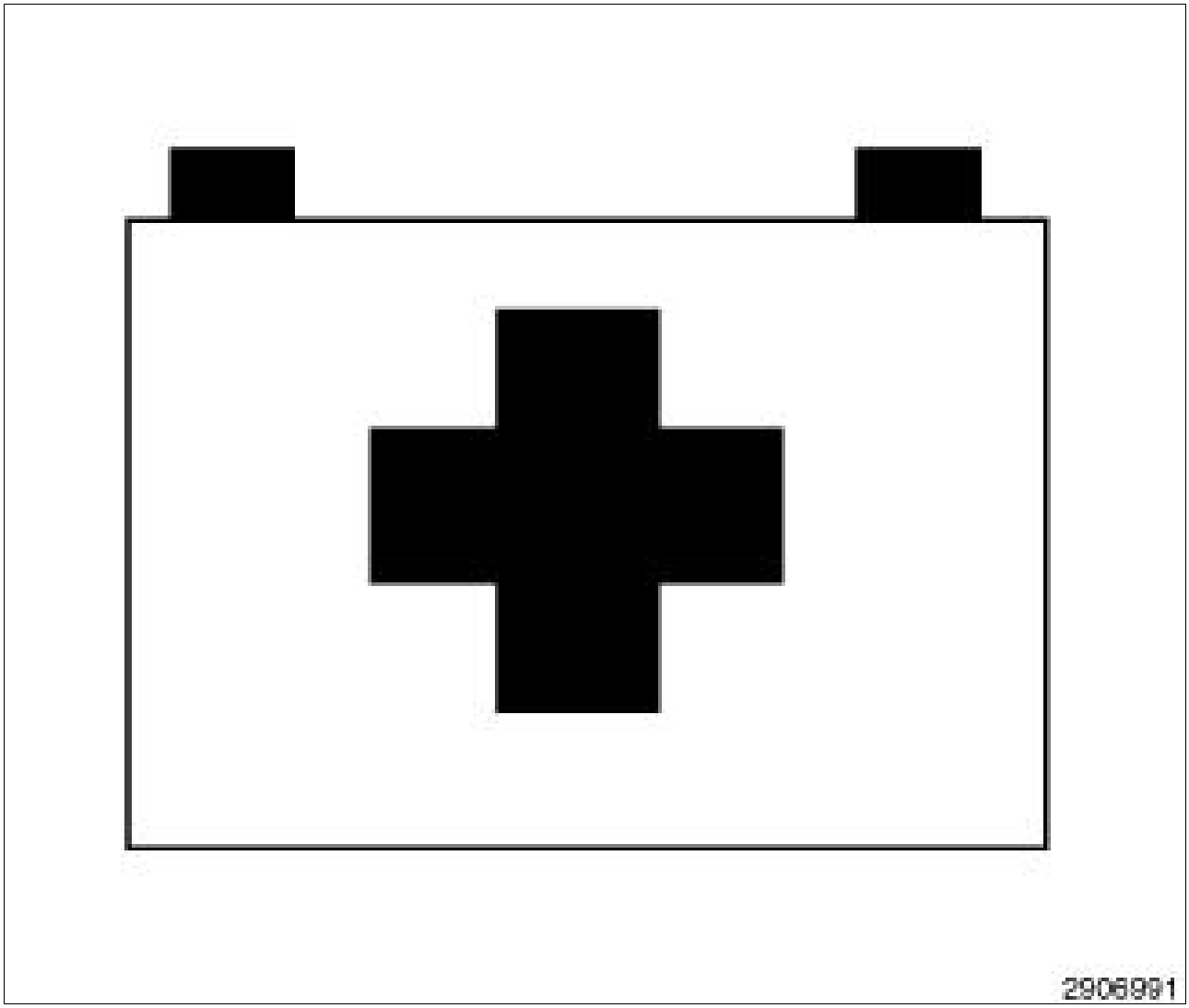

Courtesy of CHRYSLER GROUP, LLC

In this mode the charger can provide a trickle charge for long term, low amp battery charging.

Fig 7: Identifying Charge/Test Menu Icon 7



Courtesy of CHRYSLER GROUP, LLC

Generates 15-digit warranty codes for physically defective batteries or customer good will.

BATTERY, AGM > STANDARD PROCEDURE > GR8 BATTERY TESTER / CHARGER > GR8 BATTERY TESTER

Fig 1: Identifying GR8 Battery Tester Components

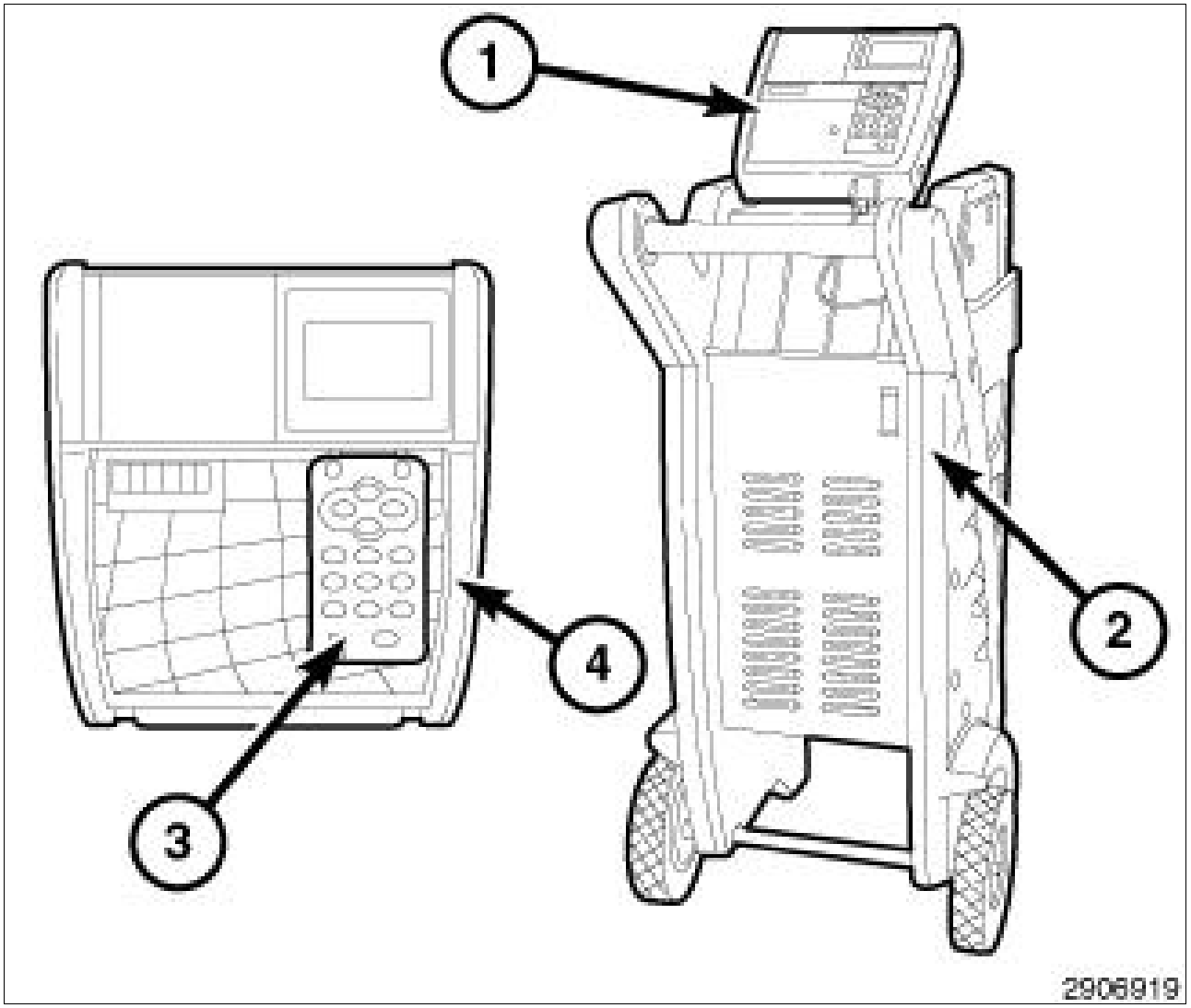

Courtesy of CHRYSLER GROUP, LLC

1. **Control module:** Backlit graphical display and keypad for data entry.
2. **ON/OFF switch:** ON/OFF switch Turns power on and off to the GR8.
3. **STATUS light:** Lights in conjunction with beeping alarm to indicate transitions and warnings.
4. **Data card slot:** For future upgrades via a data card. The slot contains a plastic filler card for protection.

BATTERY, AGM > STANDARD PROCEDURE > GR8 BATTERY TESTER / CHARGER > REPLACE BATTERY DECISIONS > BATTERY DECISIONS

Fig 1: Battery Test Screen - Example

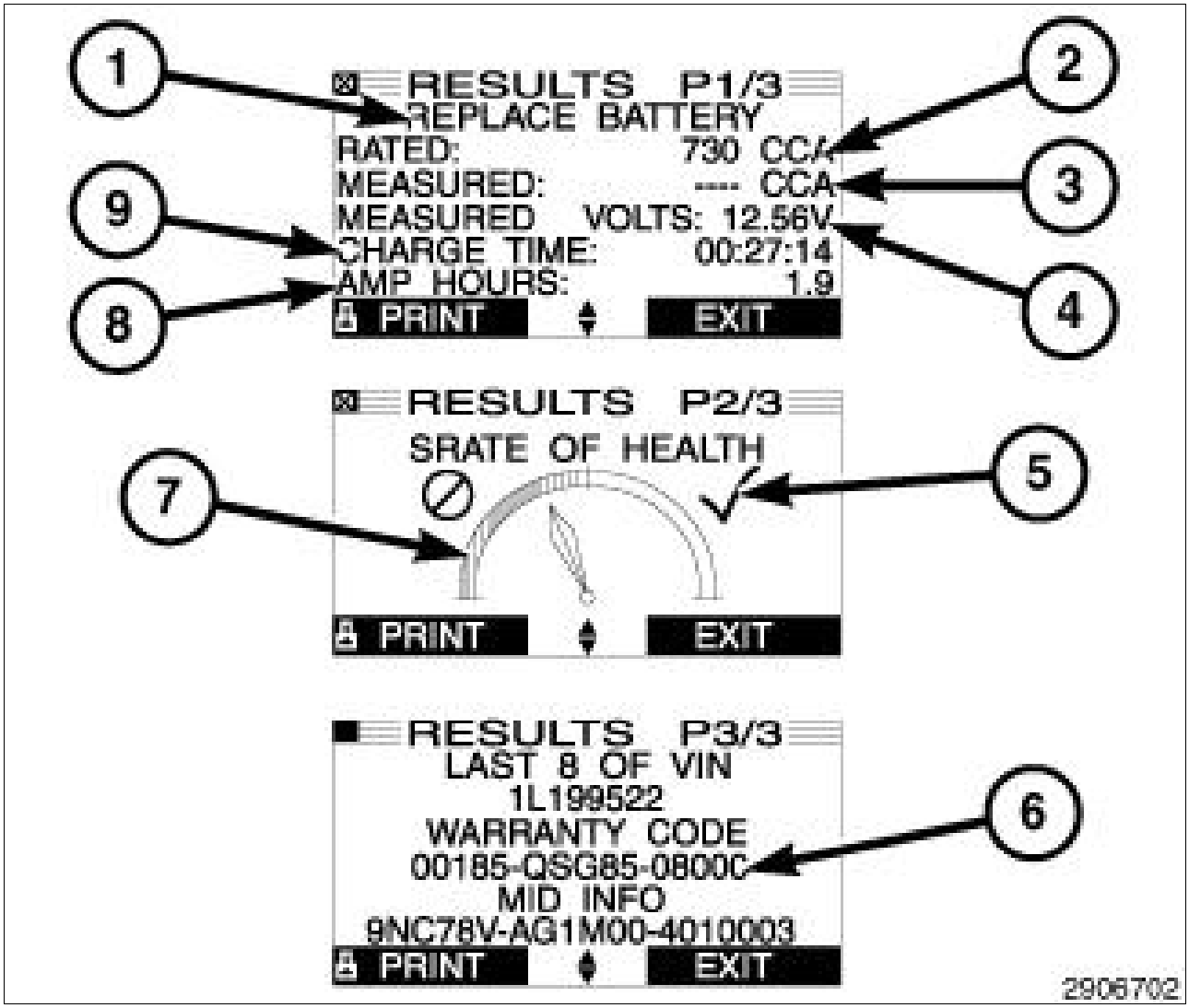

Courtesy of CHRYSLER GROUP, LLC

1. Battery Decisions
2. Select Rating
3. Measured capacity
4. Measured voltage
5. Good Range

> *NOTE:*
>
> *The warranty code screen will only be displayed for REPLACE BATTERY and BAD CELL-REPLACE decisions.*

6. Enter this number into the scan tool

7. Replace range
8. Replaced AMP Hours
9. Charging Time

BATTERY, AGM > STANDARD PROCEDURE > GR8 BATTERY TESTER / CHARGER > REPLACE BATTERY DECISIONS > TEST RESULTS-CHARGING SYSTEM

A REPLACE BATTERY or BAD CELL-REPLACE decision gives you the option of generating a warranty code. Enter that warranty code into your scan tool in the Midtronics warranty code validation routine.

Fig 1: Battery Tester Test Results Screen - Example

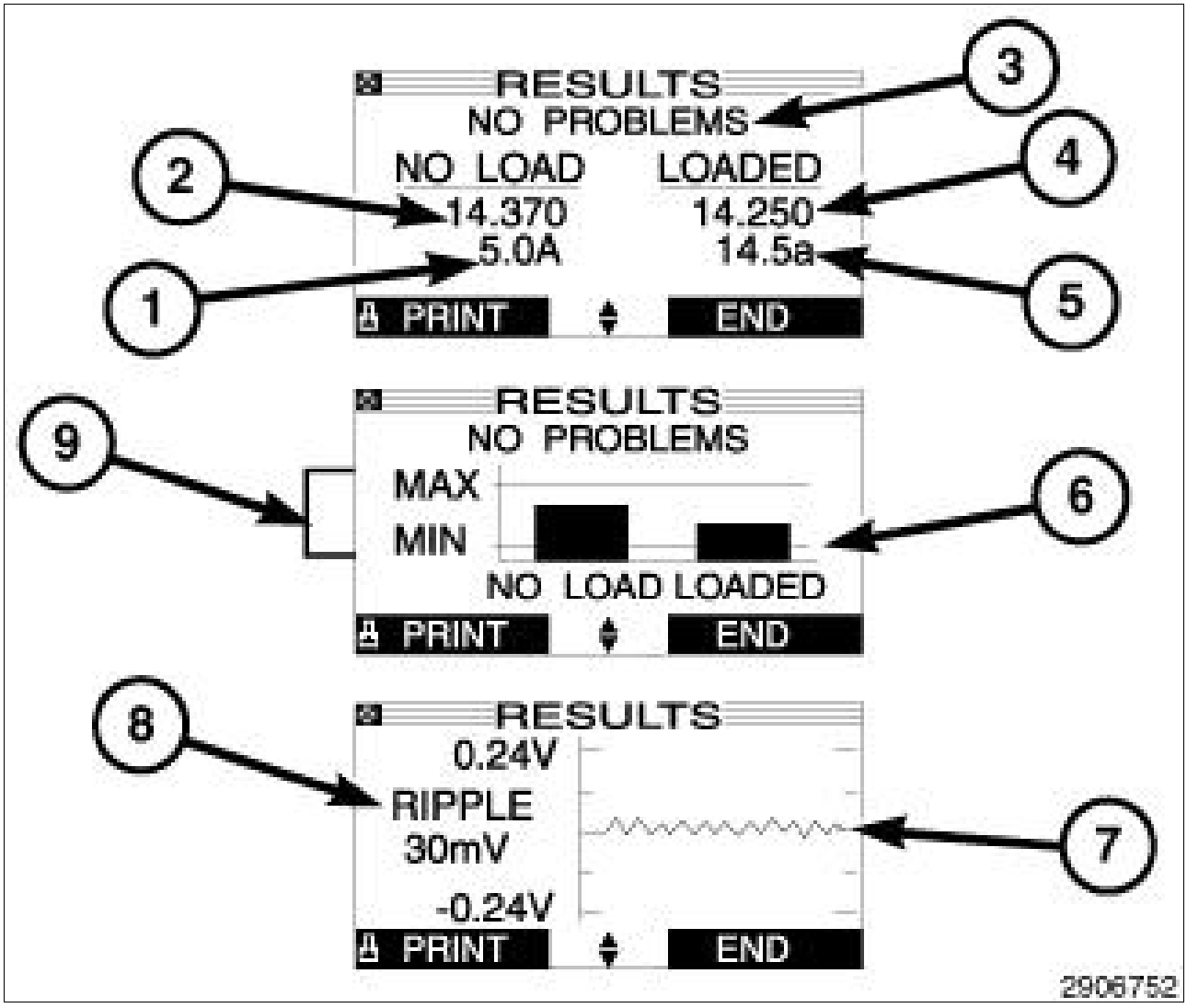

Courtesy of CHRYSLER GROUP, LLC

1. Loads-off current at rev if amp clamp is used
2. Loads-off DC voltage at rev
3. Decision

4. Loads-on DC voltage at rev
5. Loads-on current at rev if amp clamp is used
6. Bar graph of DC voltage within normal range (loads on and off)
7. Graph of diode waveform
8. Peak-to-peak AC voltage
9. Normal DC voltage range

BATTERY, AGM > STANDARD PROCEDURE > GR8 BATTERY TESTER / CHARGER > REPLACE BATTERY DECISIONS > TEST RESULTS-STARTER SYSTEM

Fig 1: Test Results-Starter System Example

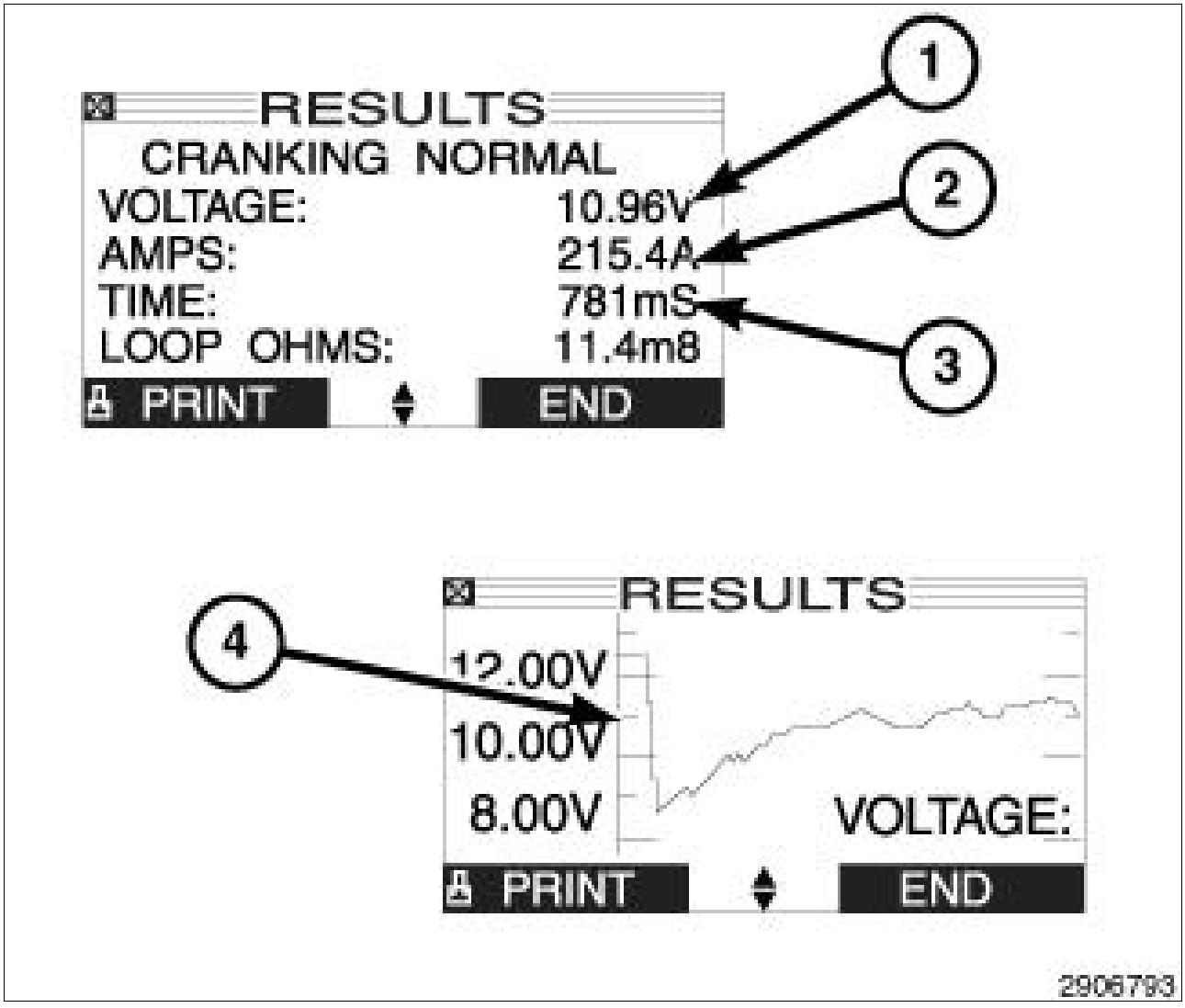

Courtesy of CHRYSLER GROUP, LLC

1. Average cranking voltage

2. Average cranking current if amp clamp is used
3. Cranking time in seconds
4. Y axis = System performance: cranking voltage

BATTERY, AGM > REMOVAL > REMOVAL

Fig 1: Battery Cover

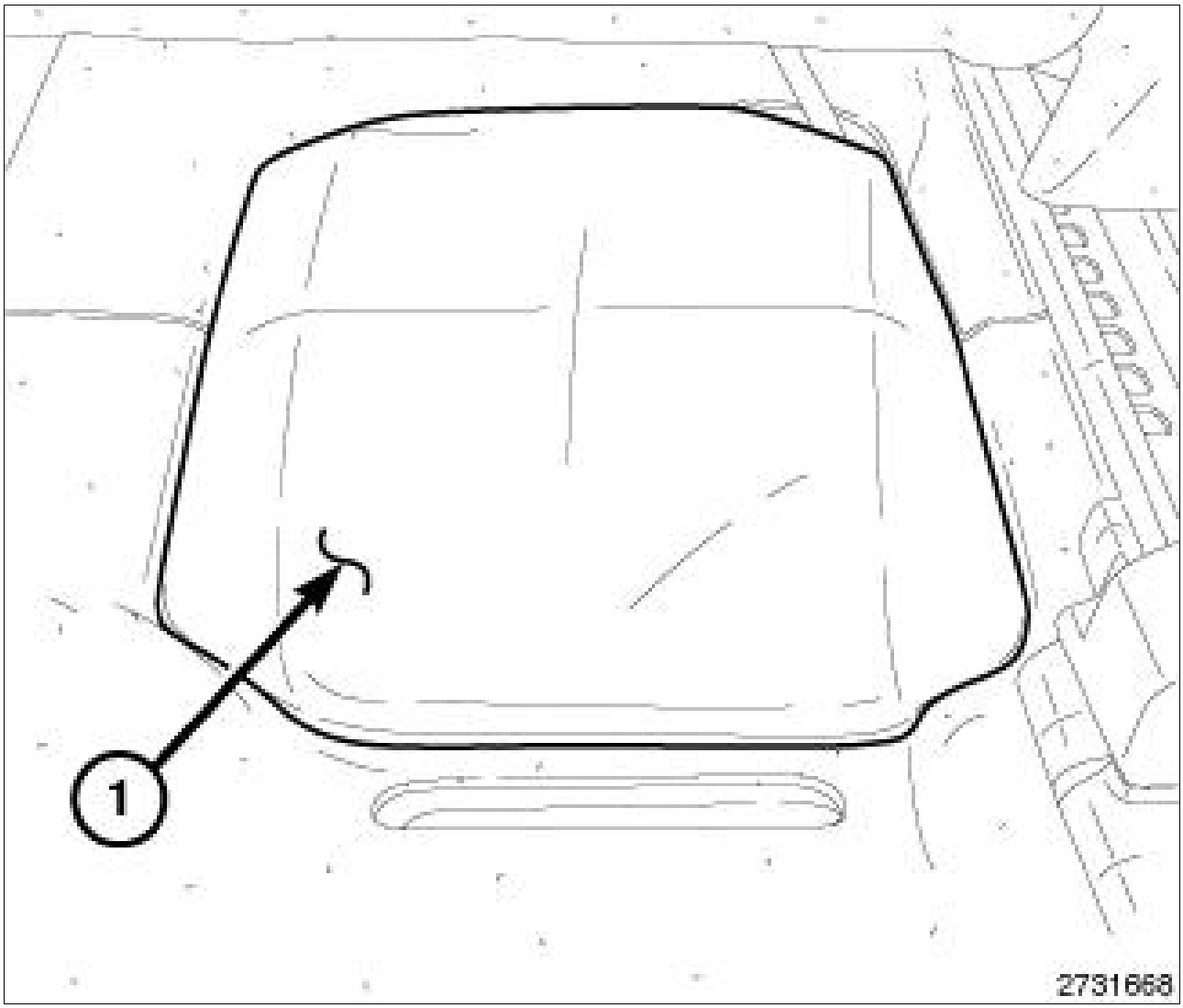

Courtesy of CHRYSLER GROUP, LLC

1. If equipped with power seats, move the passenger seat to the most forward and upright position.
2. If equipped with manual seats, move the passenger seat to the most forward position.
3. Turn the ignition switch to the Off position. Be certain that all electrical accessories are turned off.
4. Remove the battery cover (1).

5. Disconnect and isolate the negative battery cable by removing only the captive nut securing the terminal end to the post.

> *NOTE:*
>
> *If equipped with an Intelligent Battery Sensor (IBS), disconnect the IBS connector first before disconnecting the negative battery cable.*

6. Disconnect the positive battery cable and position aside.

Fig 2: Battery Thermal Blanket

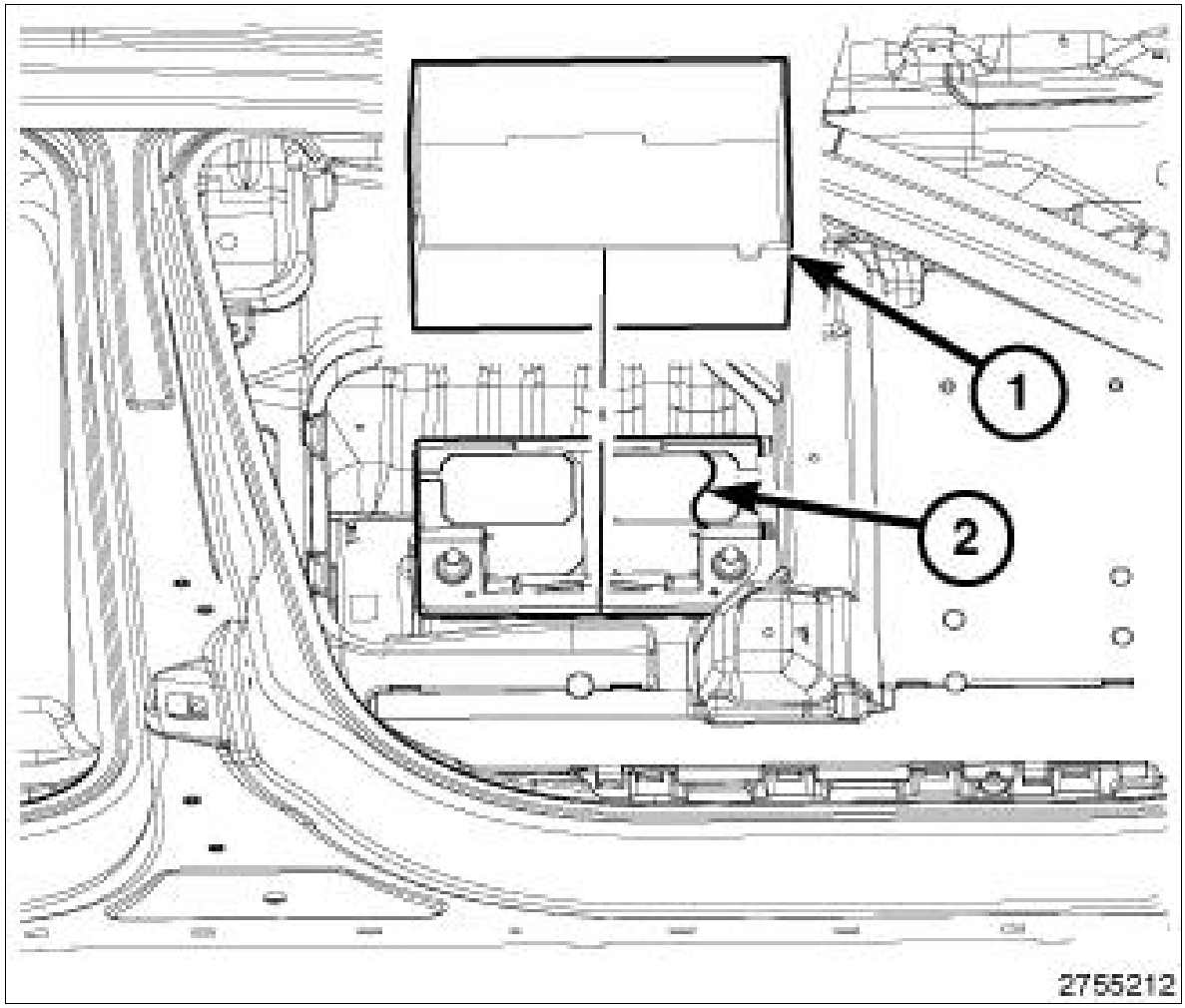

Courtesy of CHRYSLER GROUP, LLC

7. Remove the battery thermal blanket.

Fig 3: Battery Hold Down Retainers & Battery Hold Down

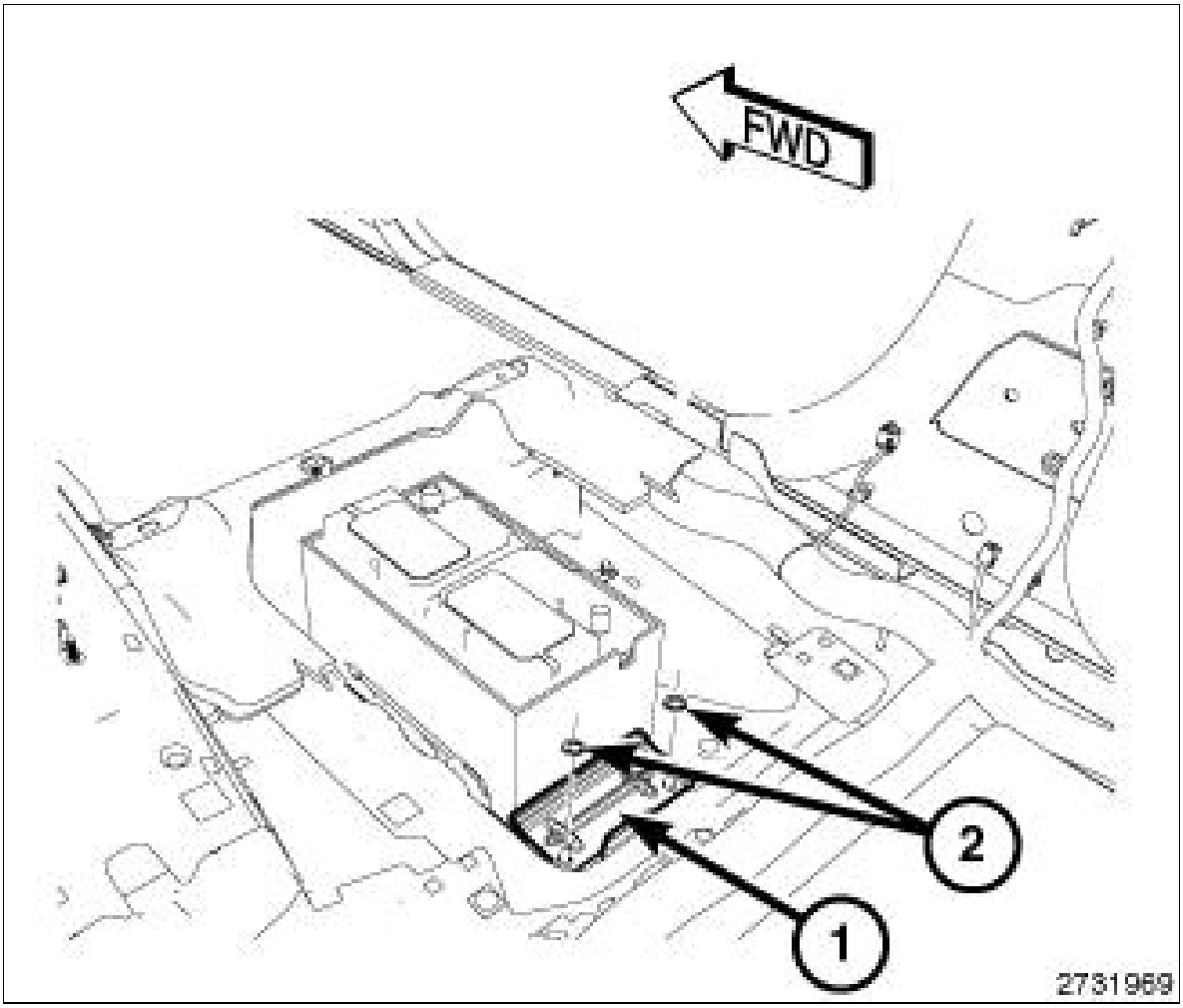

Courtesy of CHRYSLER GROUP, LLC

8. Remove the battery hold down retainers (2) and remove the battery hold down (1).

> *WARNING:*
>
> *Wear a suitable pair of rubber gloves when removing a battery by hand. Safety glasses should also be worn. If the battery is cracked or leaking, the electrolyte can burn the skin and eyes.*

9. Remove the battery from the vehicle.

BATTERY, AGM > INSTALLATION > INSTALLATION

> *WARNING:*
>
> *Wear a suitable pair of rubber gloves when removing a battery by hand. Safety glasses*

should also be worn. If the battery is cracked or leaking, the electrolyte can burn the skin and eyes.

Fig 1: Battery Hold Down Retainers & Battery Hold Down

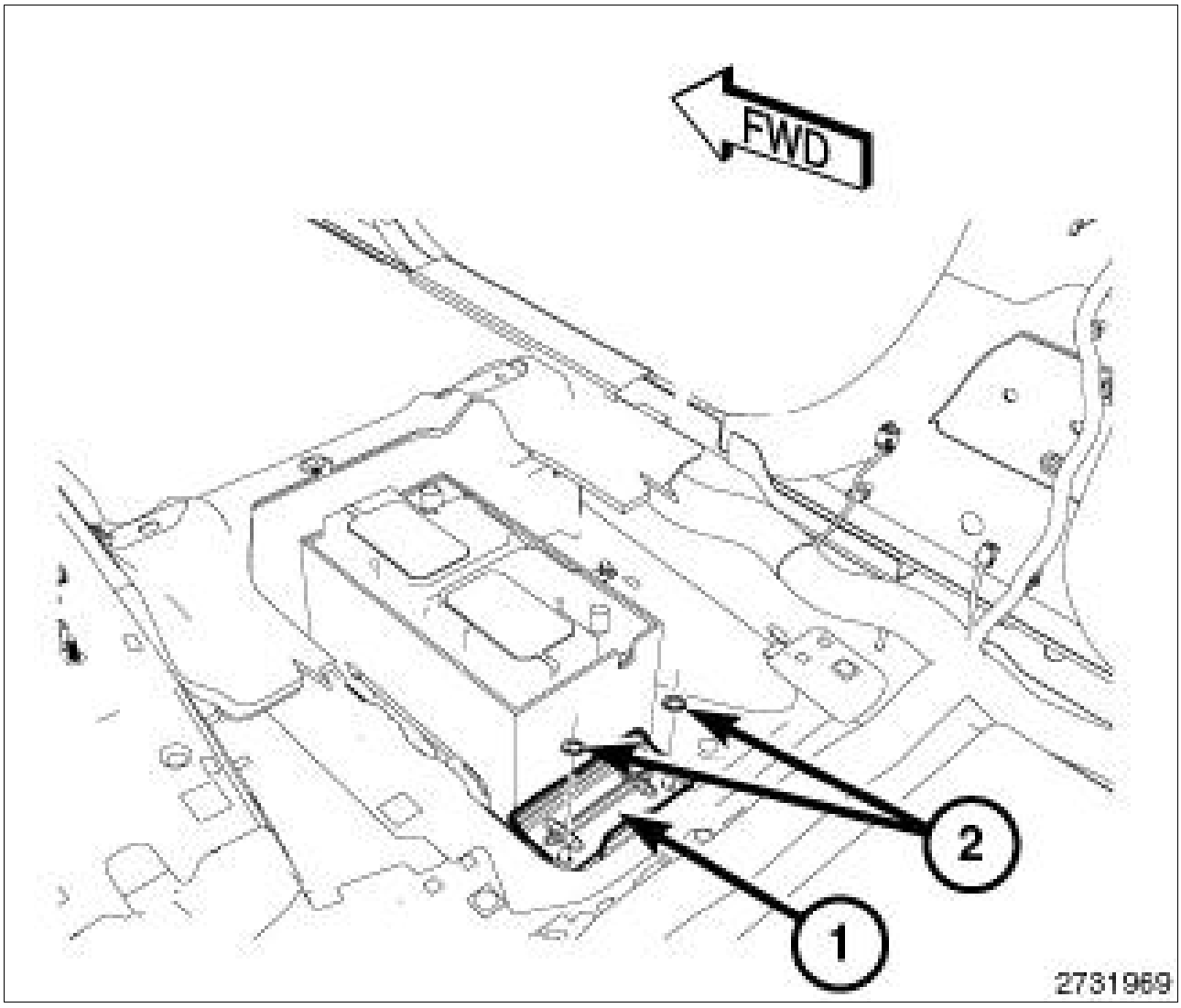

Courtesy of CHRYSLER GROUP, LLC

1. Install the battery into the vehicle.
2. Install the battery hold down (1) into position and install the battery hold down retainers (2).

   Tighten to 20 N.m (15 Ft. Lbs.).

Fig 2: Battery Thermal Blanket

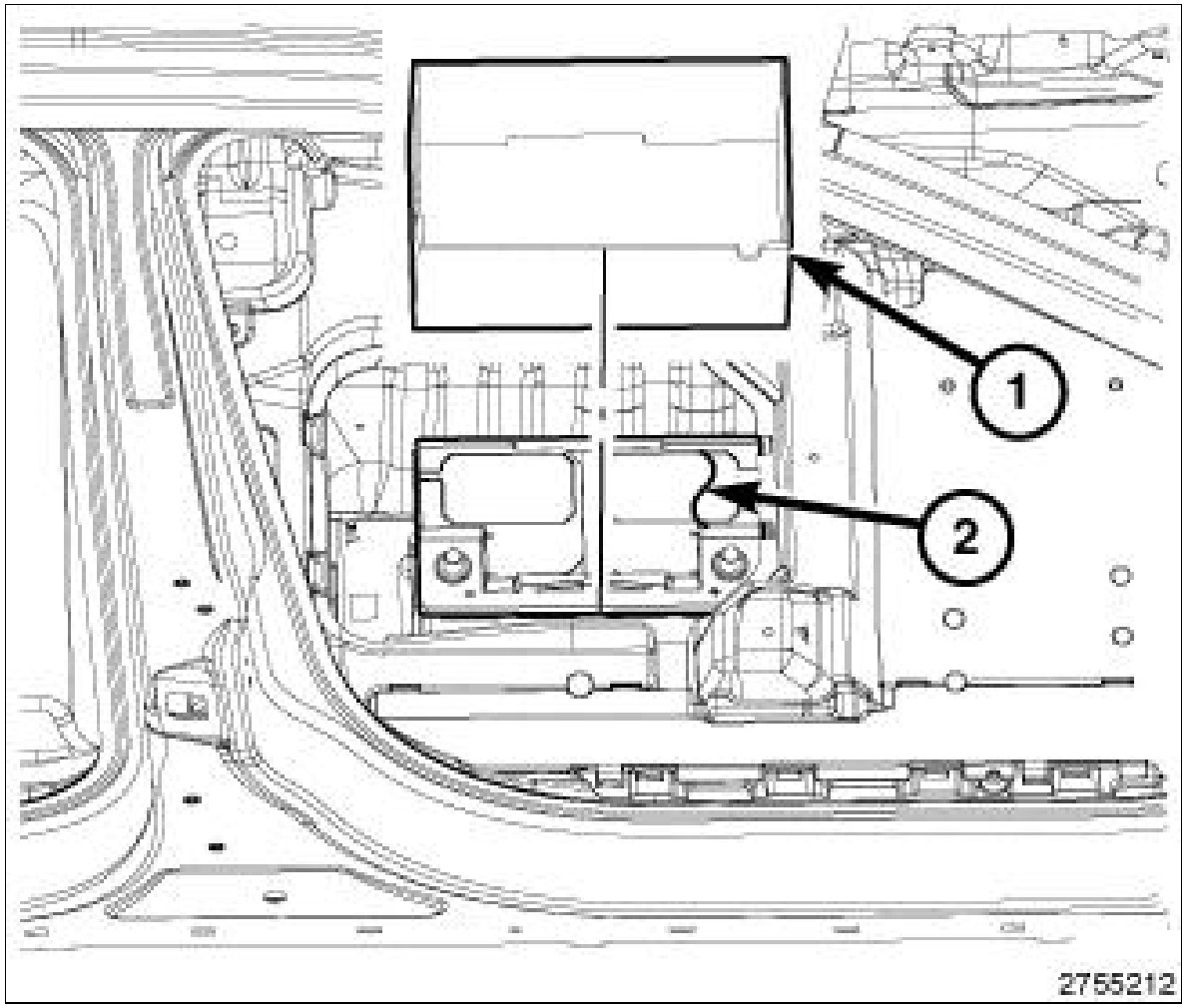

Courtesy of CHRYSLER GROUP, LLC

3. Install the battery thermal blanket.

Fig 3: Negative Battery Cable

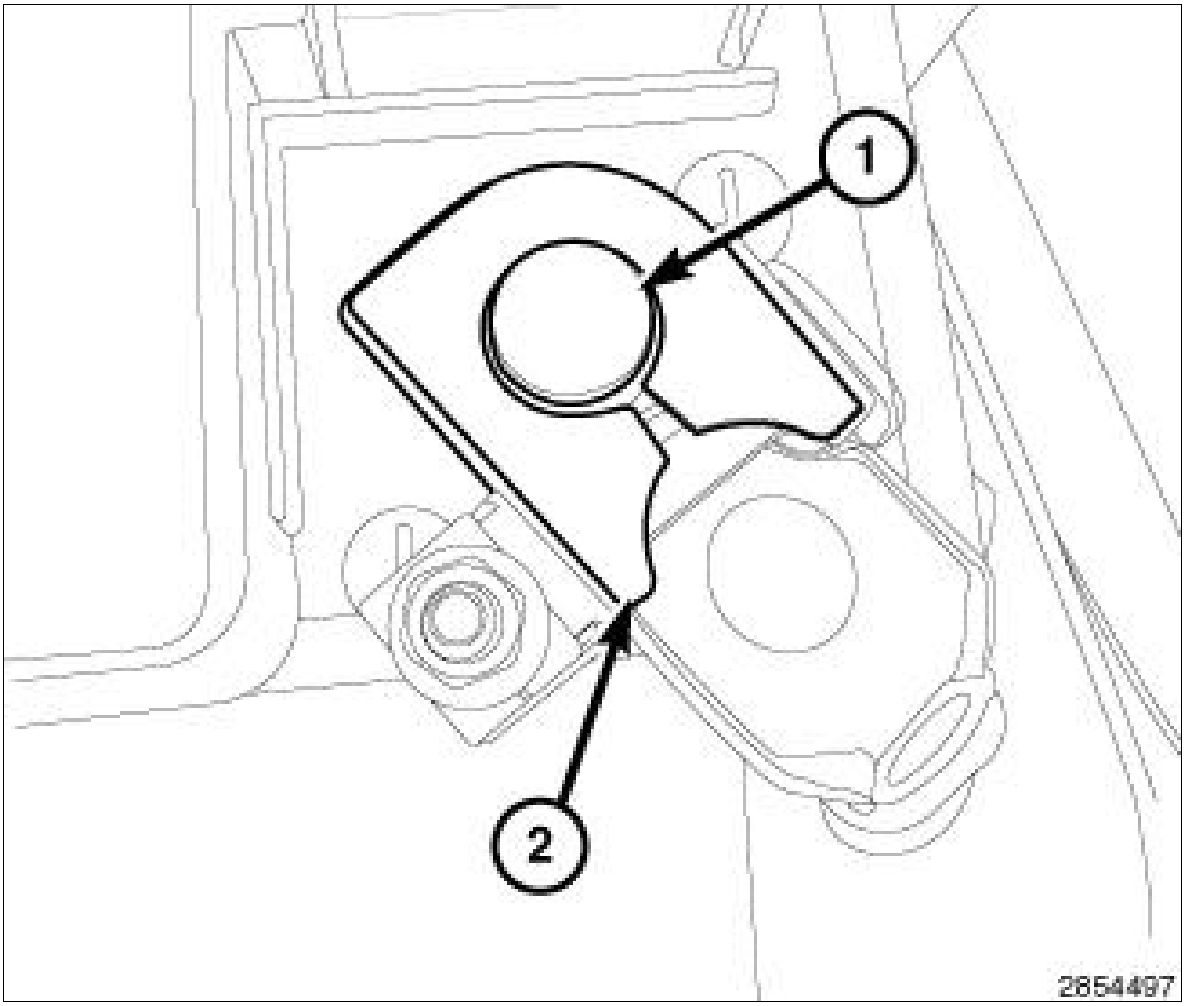

Courtesy of CHRYSLER GROUP, LLC

> *NOTE:*
>
> *Negative battery terminal shown, positive terminal similar.*

4. Position back the positive battery cable (2) and connect to the battery (1).
5. Position back the negative battery cable and connect to the battery.

Fig 4: Battery Cover

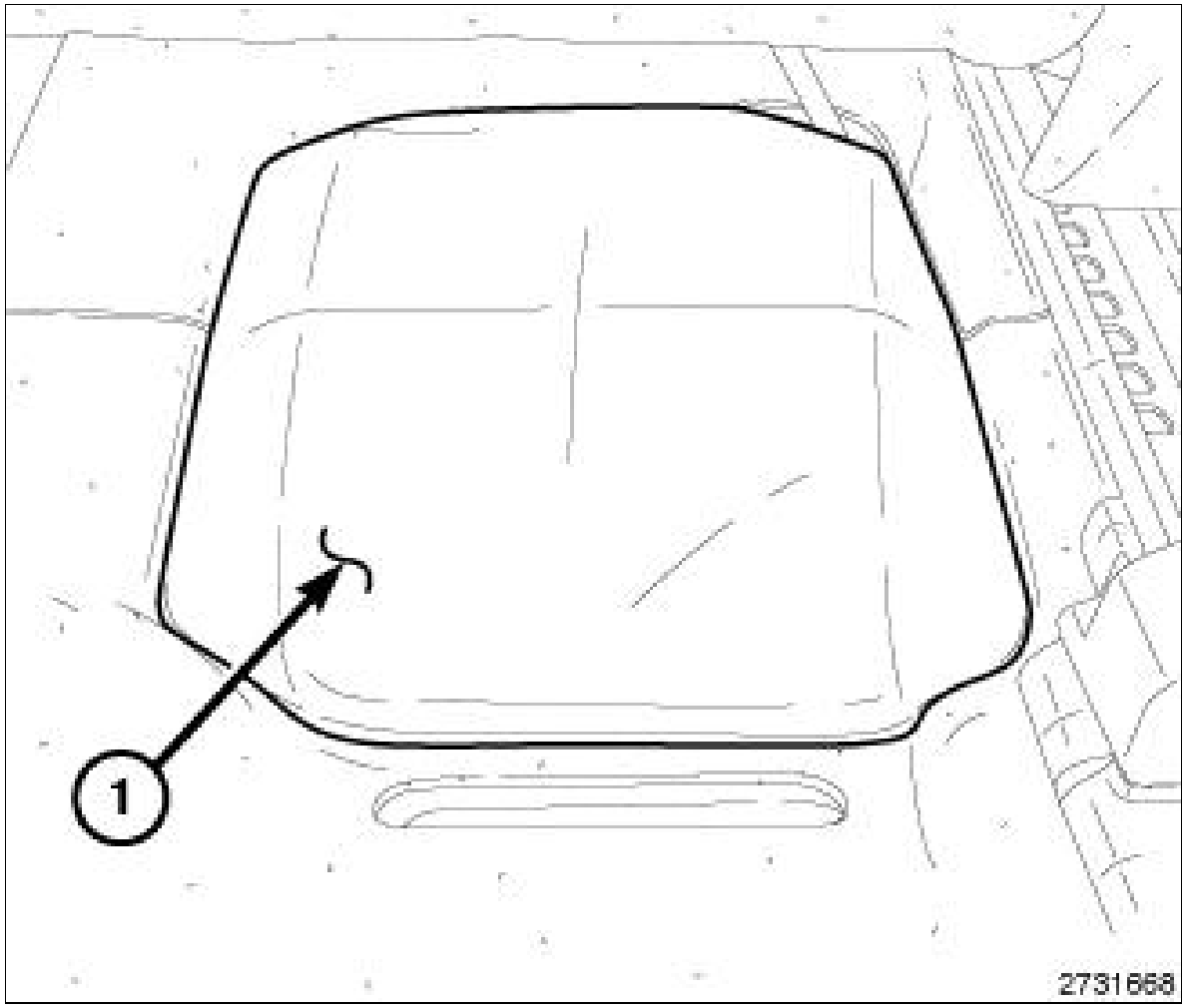

Courtesy of CHRYSLER GROUP, LLC

6. Install the battery cover (1).
7. Move the passenger seat back to its original position.

BATTERY, SUPPLEMENTAL > REMOVAL > REMOVAL-SUPPLEMENTAL

1. If equipped with power seats, move the passenger seat to the most forward and upright position or if equipped with manual seats, move the passenger seat to the most forward position.
2. Turn the ignition switch to the Off position. Be certain that all electrical accessories are turned off.
3. Remove the battery cover.
4. Disconnect and isolate the main battery negative cable by removing only the captive nut securing the terminal end to the post.

NOTE:

If equipped with an Intelligent Battery Sensor (IBS), disconnect the IBS connector first before disconnecting the negative battery cable.

Fig 1: Vent Tube, Negative Battery Cable & Positive Battery Cable



Courtesy of CHRYSLER GROUP, LLC

5. Disconnect the vent tube from the supplemental battery (1).
6. Disconnect the supplemental negative battery cable and position aside (3).
7. Disconnect the supplemental negative positive cable and position aside (2).

Fig 2: Battery Hold Down Nut

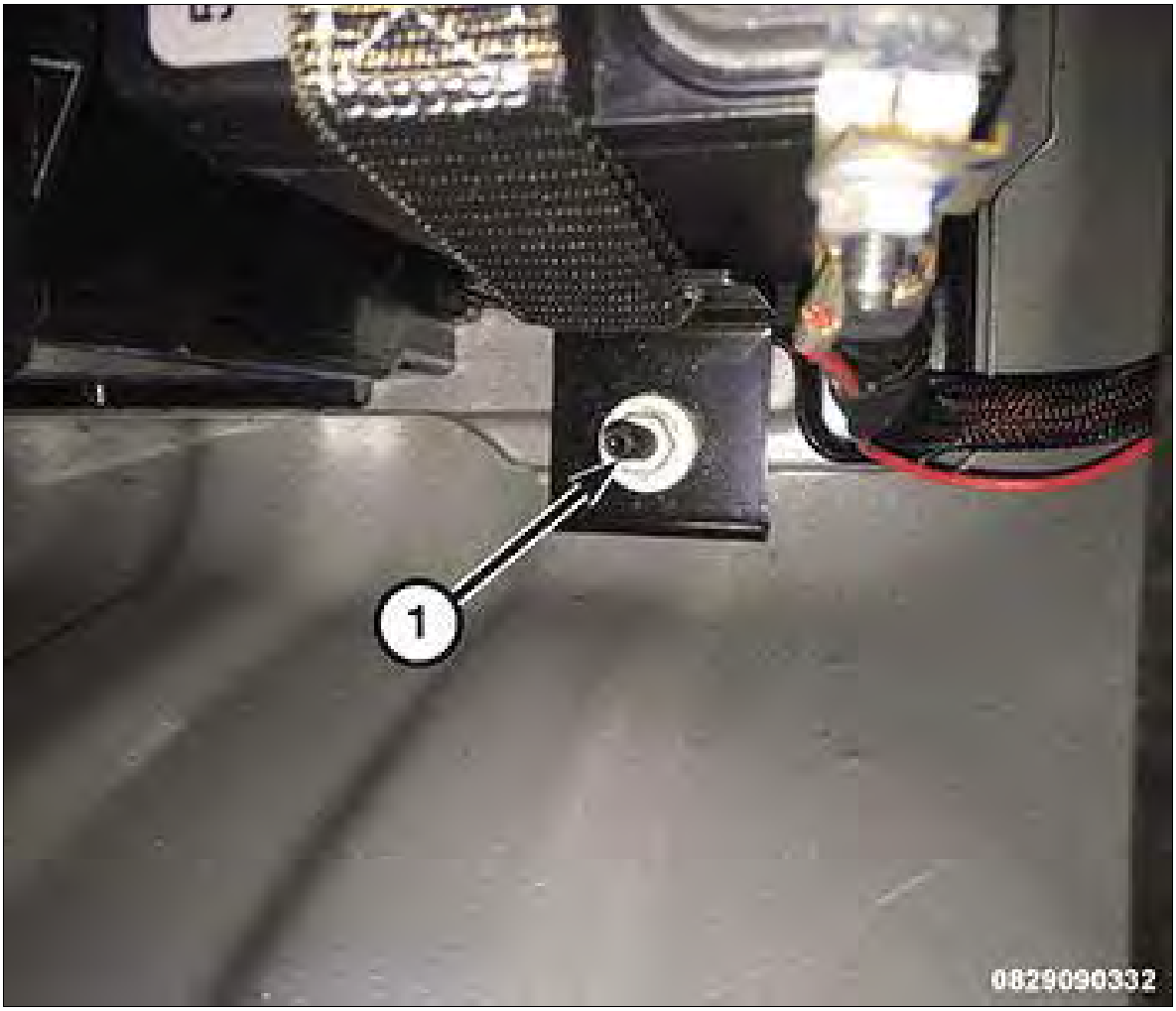

Courtesy of CHRYSLER GROUP, LLC

8. Remove the battery hold down nut (1) and remove the battery hold down strap.

> *WARNING:*
>
> *Wear a suitable pair of rubber gloves when removing a battery by hand. Safety glasses should also be worn. If the battery is cracked or leaking, the electrolyte can burn the skin and eyes.*

9. Remove the battery from the vehicle.

BATTERY, SUPPLEMENTAL > INSTALLATION > INSTALLATION-SUPPLEMENTAL

> *WARNING:*
>
> *Wear a suitable pair of rubber gloves when removing a battery by hand. Safety glasses*

should also be worn. If the battery is cracked or leaking, the electrolyte can burn the skin and eyes.

1. Install the supplemental battery into the vehicle.

   Fig 1: Battery Hold Down Nut

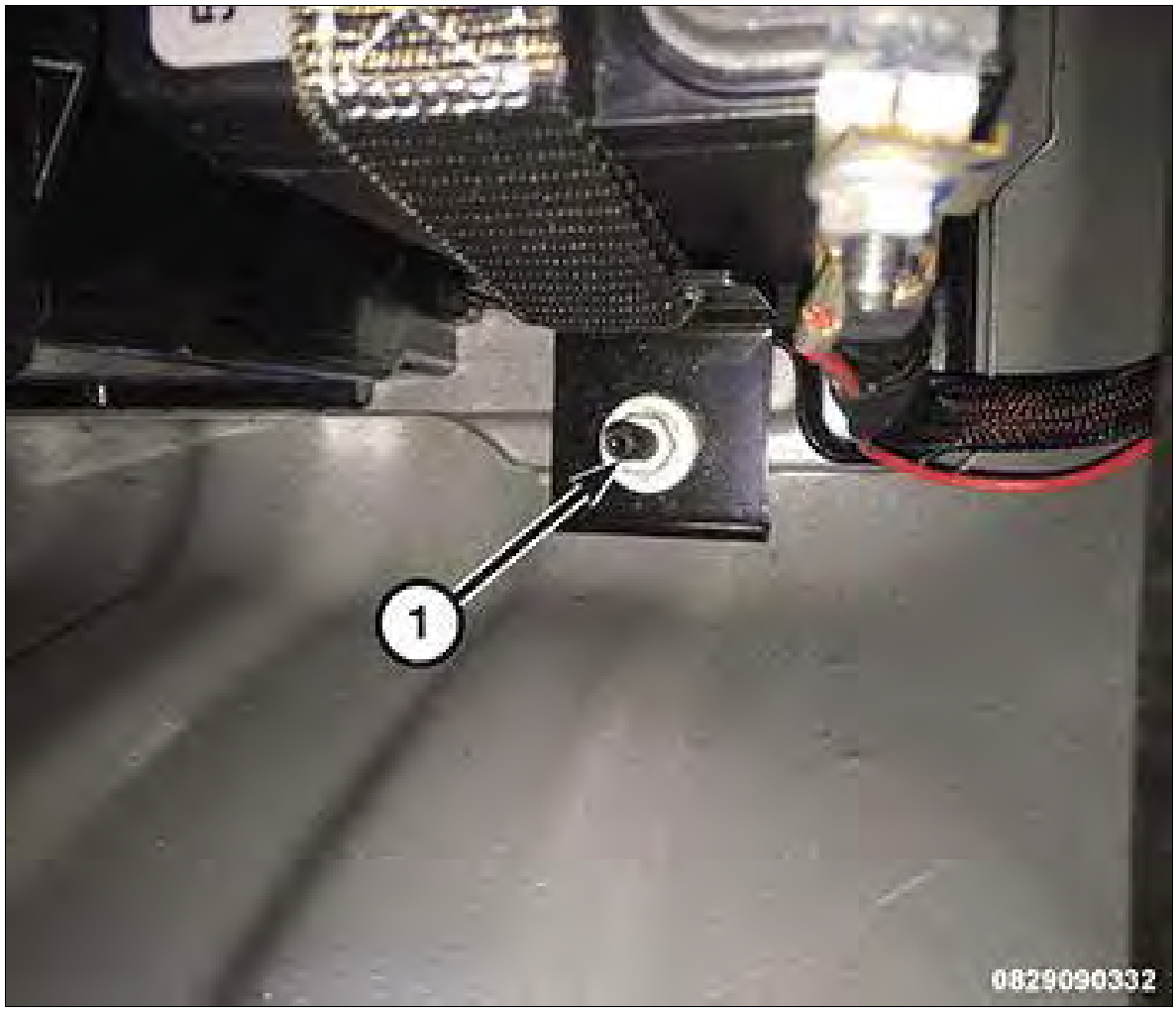

Courtesy of CHRYSLER GROUP, LLC

2. Install the battery hold down into position and install the battery hold down nut (1).

Fig 2: Vent Tube, Negative Battery Cable & Positive Battery Cable



Courtesy of CHRYSLER GROUP, LLC

3. Position back the positive battery cable (3) and connect to the supplemental battery.
4. Position back the negative battery cable (2) and connect to the supplemental battery.
5. Connect the main battery negative battery cable.
6. Install the battery cover.
7. Move the passenger seat back to its original position.

CABLES, BATTERY > DIAGNOSIS AND TESTING > DIAGNOSIS AND TESTING - BATTERY CABLES

A voltage drop test will determine if there is excessive resistance in the battery cable terminal connections or the battery cables. If excessive resistance is found in the battery cable connections, the connection point should be disassembled, cleaned of all corrosion or foreign material, then reassembled. Following reassembly, check the voltage drop for the battery cable connection and the battery cable again to confirm repair.

When performing the voltage drop test, it is important to remember that the voltage drop is giving an indication of the resistance between the two points at which the voltmeter probes are attached. **EXAMPLE:** When testing the resistance of the battery positive cable, touch the voltmeter leads to the battery positive cable terminal clamp and to the battery positive cable eyelet terminal at the starter solenoid B(+) terminal stud. If you probe the battery positive terminal post and the battery positive cable eyelet terminal at the starter solenoid B(+) terminal stud, you are reading the combined voltage drop in the battery positive cable terminal clamp-to-terminal post connection and the battery positive cable.

CABLES, BATTERY > DIAGNOSIS AND TESTING > DIAGNOSIS AND TESTING - BATTERY CABLES > TESTING > VOLTAGE DROP TEST

WARNING:

If the battery shows signs of freezing, leaking, loose posts, or low electrolyte level, do not test, assist-boost, or charge. The battery may arc internally and explode. Personal injury and/or vehicle damage may result.

WARNING:

EXPLOSIVE HYDROGEN GAS FORMS IN AND AROUND THE BATTERY. DO NOT SMOKE, USE FLAME, OR CREATE SPARKS NEAR THE BATTERY. PERSONAL INJURY AND/OR VEHICLE DAMAGE MAY RESULT.

WARNING:

THE BATTERY CONTAINS SULFURIC ACID, WHICH IS POISONOUS AND CAUSTIC. AVOID CONTACT WITH THE SKIN, EYES, OR CLOTHING. IN THE EVENT OF CONTACT, FLUSH WITH WATER AND CALL A PHYSICIAN IMMEDIATELY. KEEP OUT OF THE REACH OF CHILDREN.

WARNING:

If the battery is equipped with removable cell caps, be certain that each of the cell caps is in place and tight before the battery is returned to service. Personal injury and/or vehicle damage may result from loose or missing cell caps.

The following operation will require a voltmeter accurate to 1/10 (0.10) volt. Before performing this test, be certain that the following procedures are accomplished:

- The battery is fully-charged and tested. Refer to BATTERY, AGM, STANDARD PROCEDURE .
- Fully engage the parking brake.

- If the vehicle is equipped with an automatic transmission, place the gearshift selector lever in the Park position. If the vehicle is equipped with a manual transmission, place the gearshift selector lever in the Neutral position and block the clutch pedal in the fully depressed position.
- Verify that all lamps and accessories are turned off.
- To prevent a gasoline engine from starting, remove the Automatic ShutDown (ASD) relay. The ASD relay is located in the Integrated Power Module (IPM), in the engine compartment. See the fuse and relay layout label on the underside of the IPM cover for ASD relay identification and location.

Fig 1: Connecting Voltmeter Leads To Battery Negative Terminal

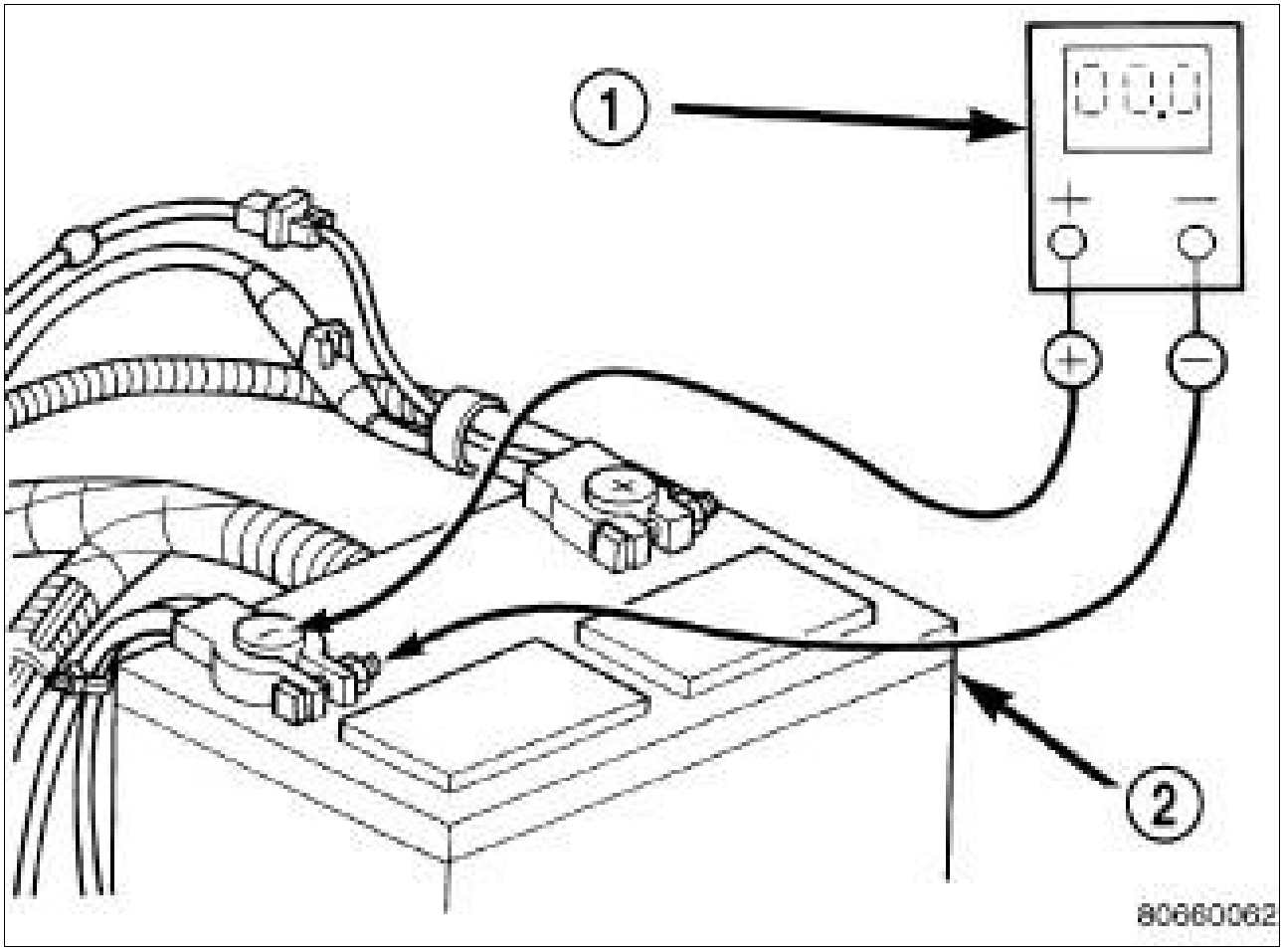

Courtesy of CHRYSLER GROUP, LLC

1. Connect the positive lead of the voltmeter (1) to the battery negative terminal post. Connect the negative lead of the voltmeter (1) to the battery negative cable terminal clamp. Rotate and hold the ignition switch in the Start position. Observe the voltmeter. If voltage is detected, correct the poor connection between the battery negative cable terminal clamp and the battery negative terminal post.

Fig 2: Connecting Voltmeter Leads To Battery Positive Terminal

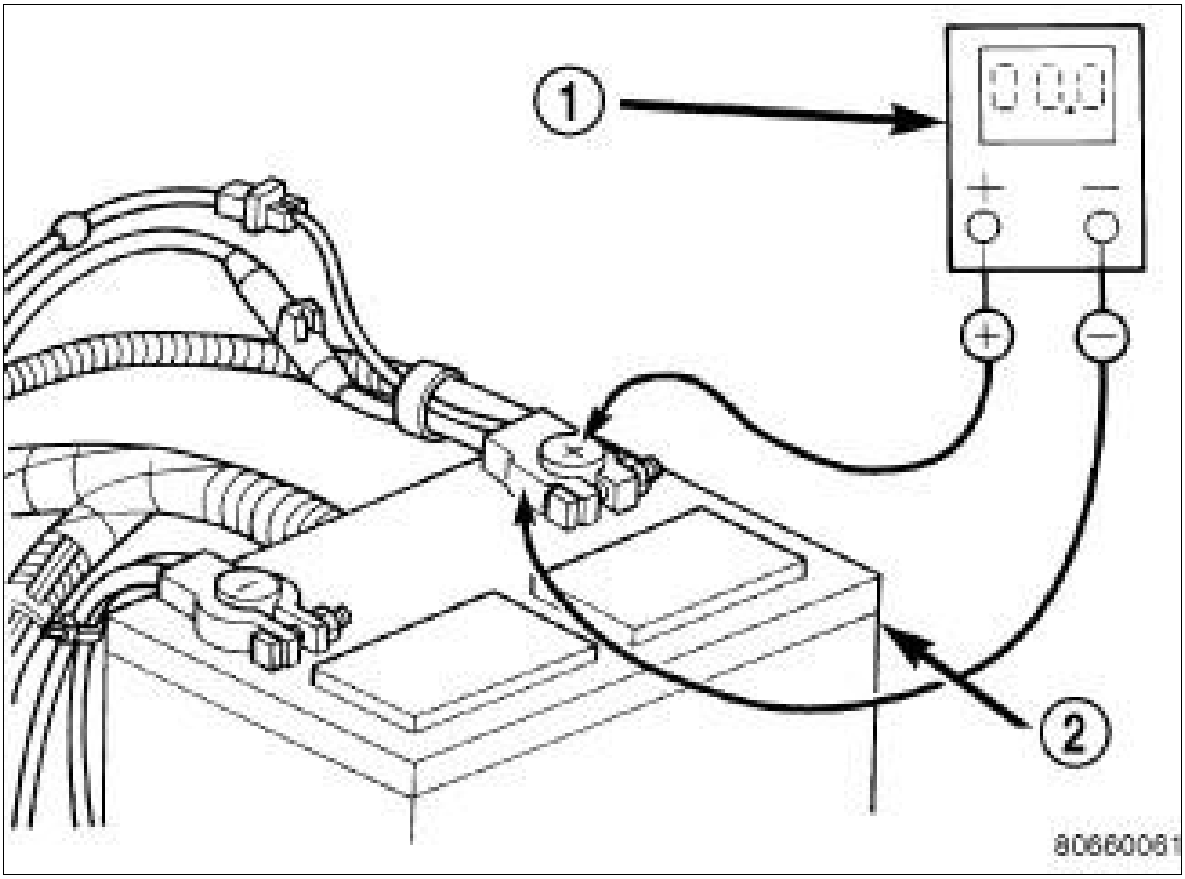

Courtesy of CHRYSLER GROUP, LLC

2. Connect the positive lead of the voltmeter (1) to the battery positive terminal post. Connect the negative lead of the voltmeter to the battery positive cable terminal clamp. Rotate and hold the ignition switch in the Start position. Observe the voltmeter. If voltage is detected, correct the poor connection between the battery positive cable terminal clamp and the battery positive terminal post.

Fig 3: Connecting Voltmeter Leads To Positive Battery Terminal & Starter Solenoid

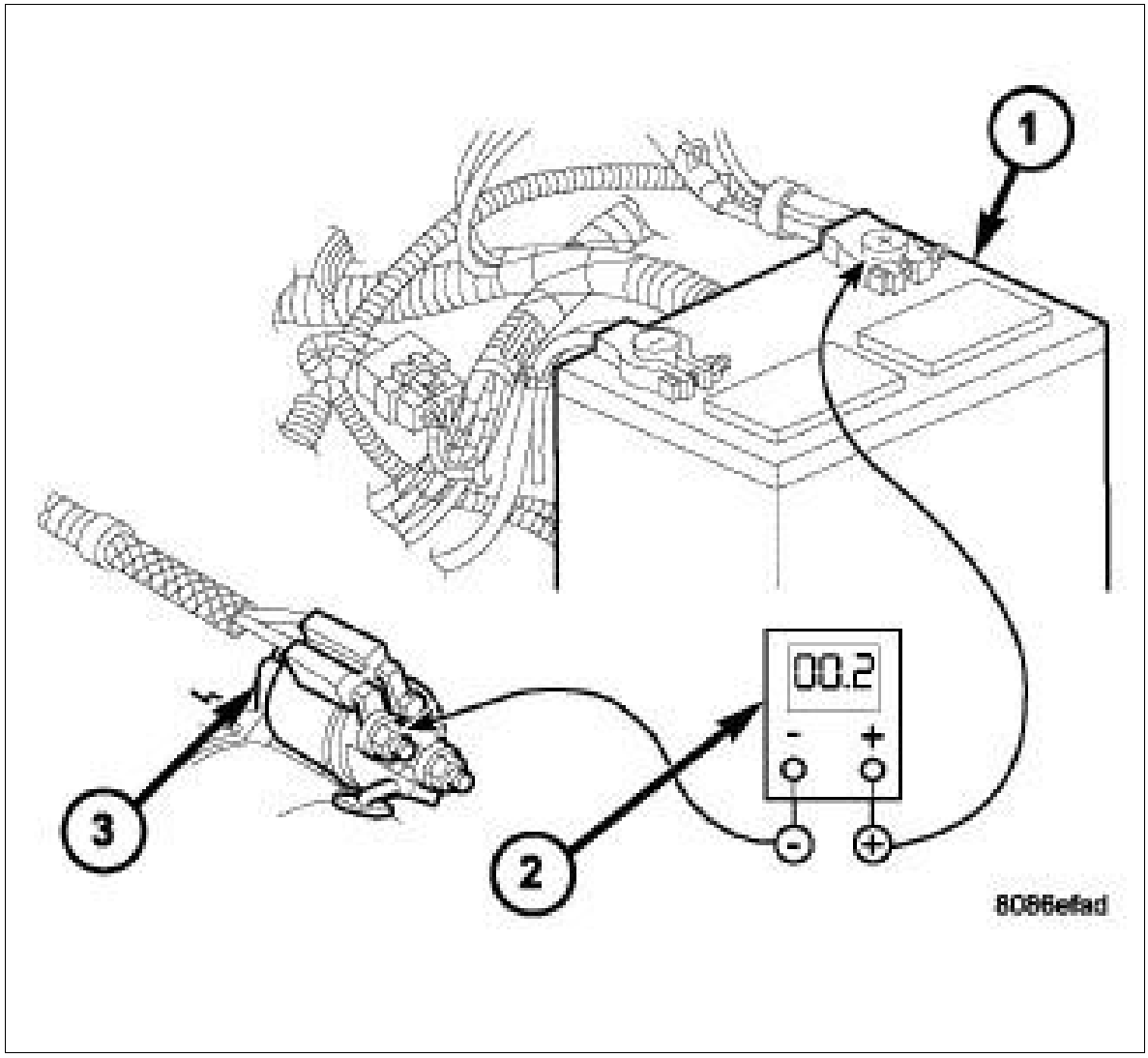

Courtesy of CHRYSLER GROUP, LLC

3. Connect the voltmeter (2) to measure between the battery positive cable terminal clamp (1) and the starter solenoid (3) B(+) terminal stud. Rotate and hold the ignition switch in the Start position. Observe the voltmeter. If the reading is above 0.2 volt, clean and tighten the battery positive cable eyelet terminal connection at the starter solenoid B(+) terminal stud. Repeat the test. If the reading is still above 0.2 volt, replace the faulty battery positive cable.

Fig 4: Connecting Voltmeter Between Negative Battery Cable & Good Clean Ground On Engine Block

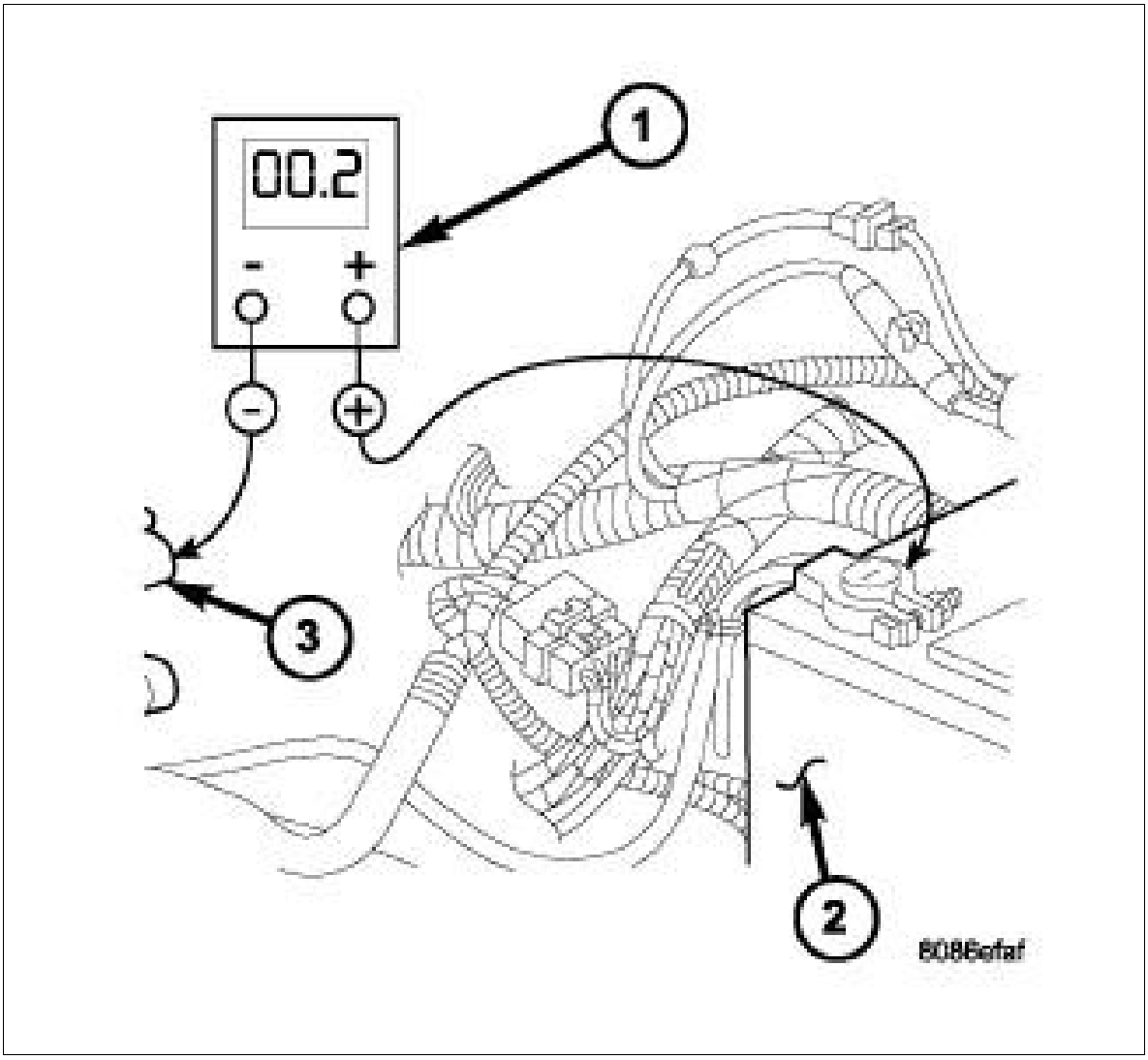

Courtesy of CHRYSLER GROUP, LLC

4. Connect the voltmeter (1) to measure between the battery (2) negative cable terminal clamp and a good clean ground (3) on the engine block. Rotate and hold the ignition switch in the Start position. Observe the voltmeter. If the reading is above 0.2 volt, clean and tighten the battery negative cable eyelet terminal connection to the engine block. Repeat the test. If the reading is still above 0.2 volt, replace the faulty battery negative cable.

CABLES, BATTERY > REMOVAL > NEGATIVE BATTERY

Fig 1: Battery Cover

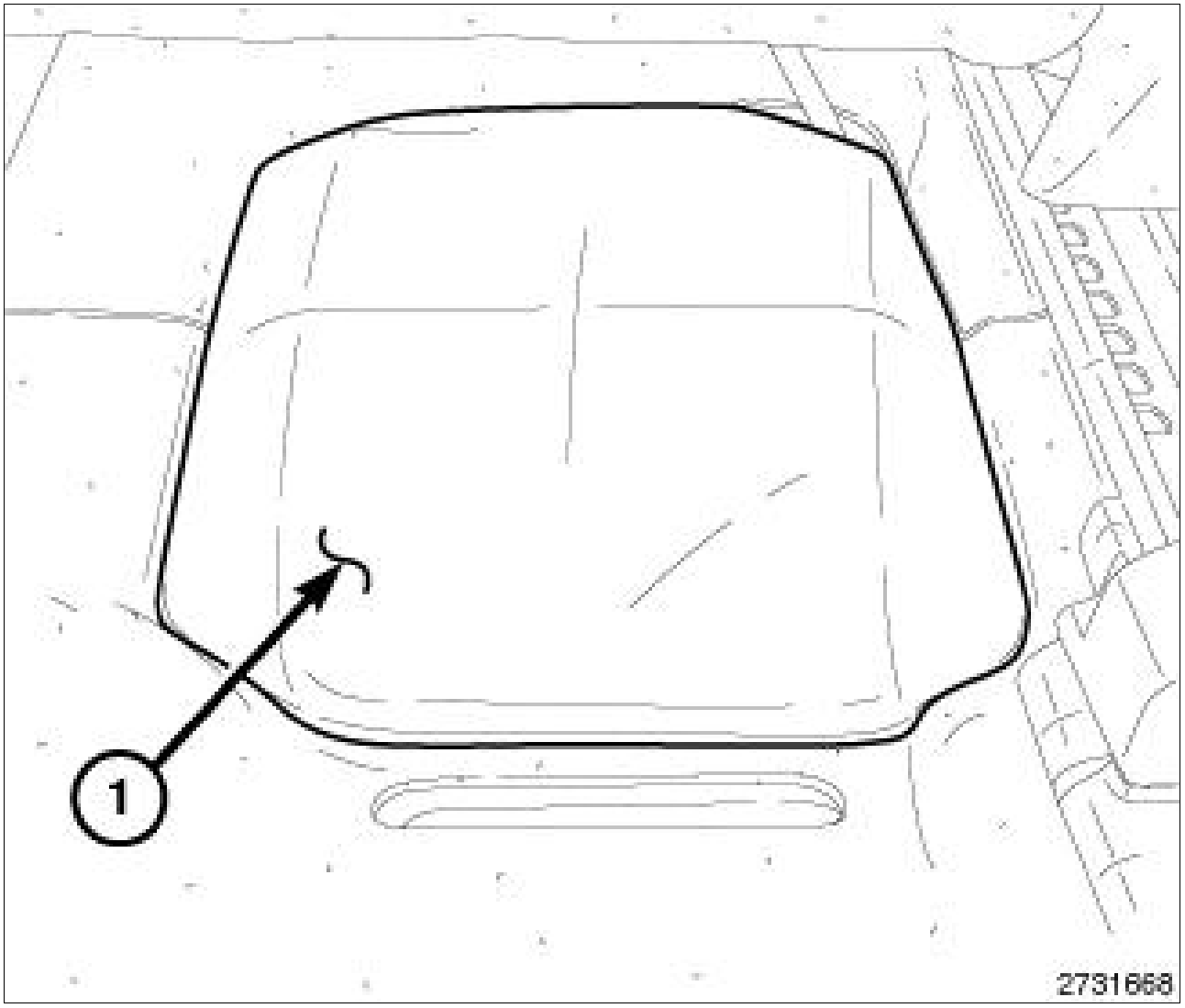

Courtesy of CHRYSLER GROUP, LLC

1. Turn the ignition switch to the Off position. Be certain that all electrical accessories are turned off.
2. Position the passenger front seat forward.
3. Remove the battery cover (1).

Fig 2: Negative Battery Cable & Body

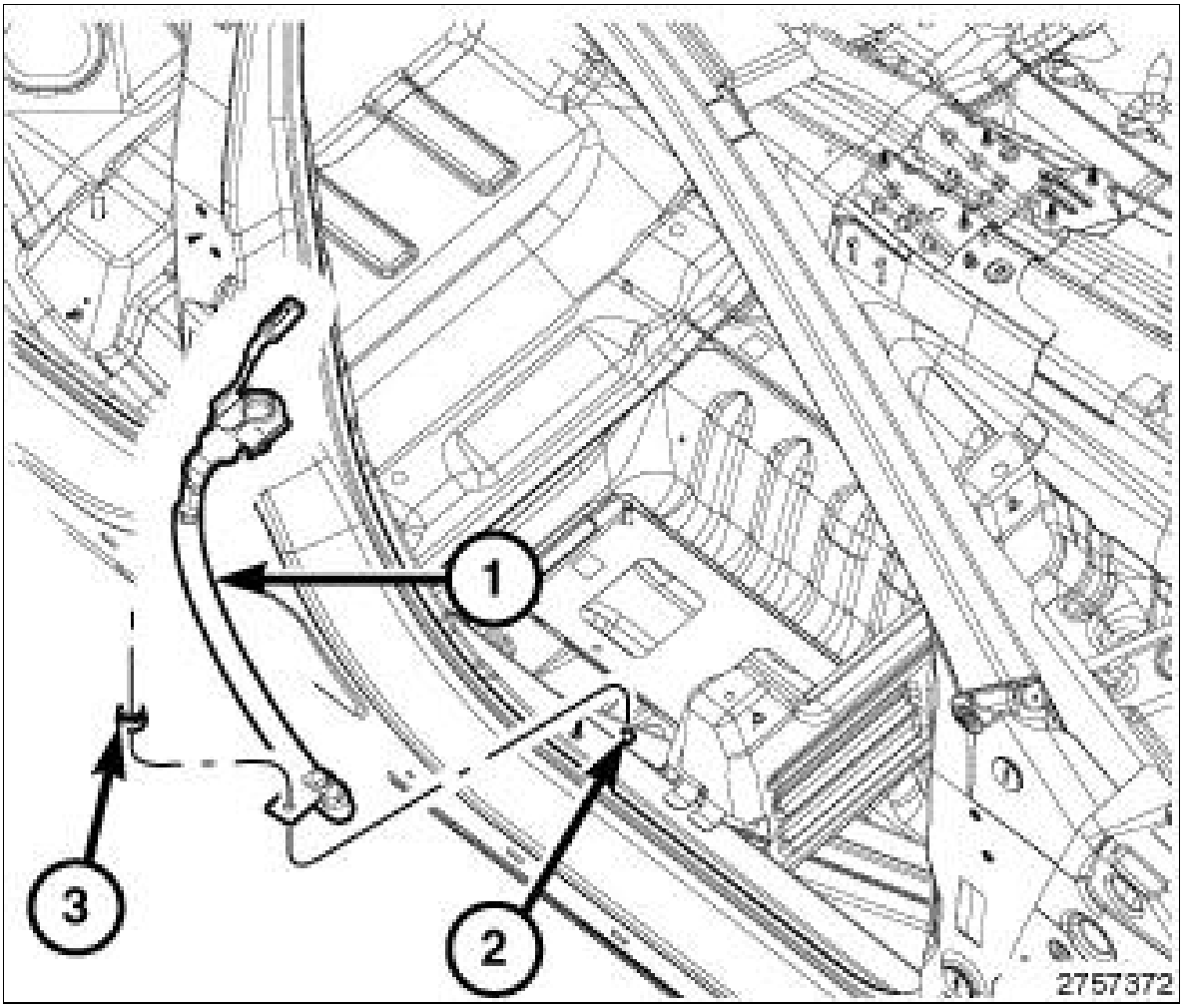

Courtesy of CHRYSLER GROUP, LLC

> *NOTE:*
>
> *Shown with seat removed for clarity.*

4. Disconnect the negative the negative battery cable.
5. Remove the negative battery cable (1) retainer to body (3).
6. Remove the negative battery cable.

CABLES, BATTERY > REMOVAL > POSITIVE BATTERY

Fig 1: View Of Front Seat

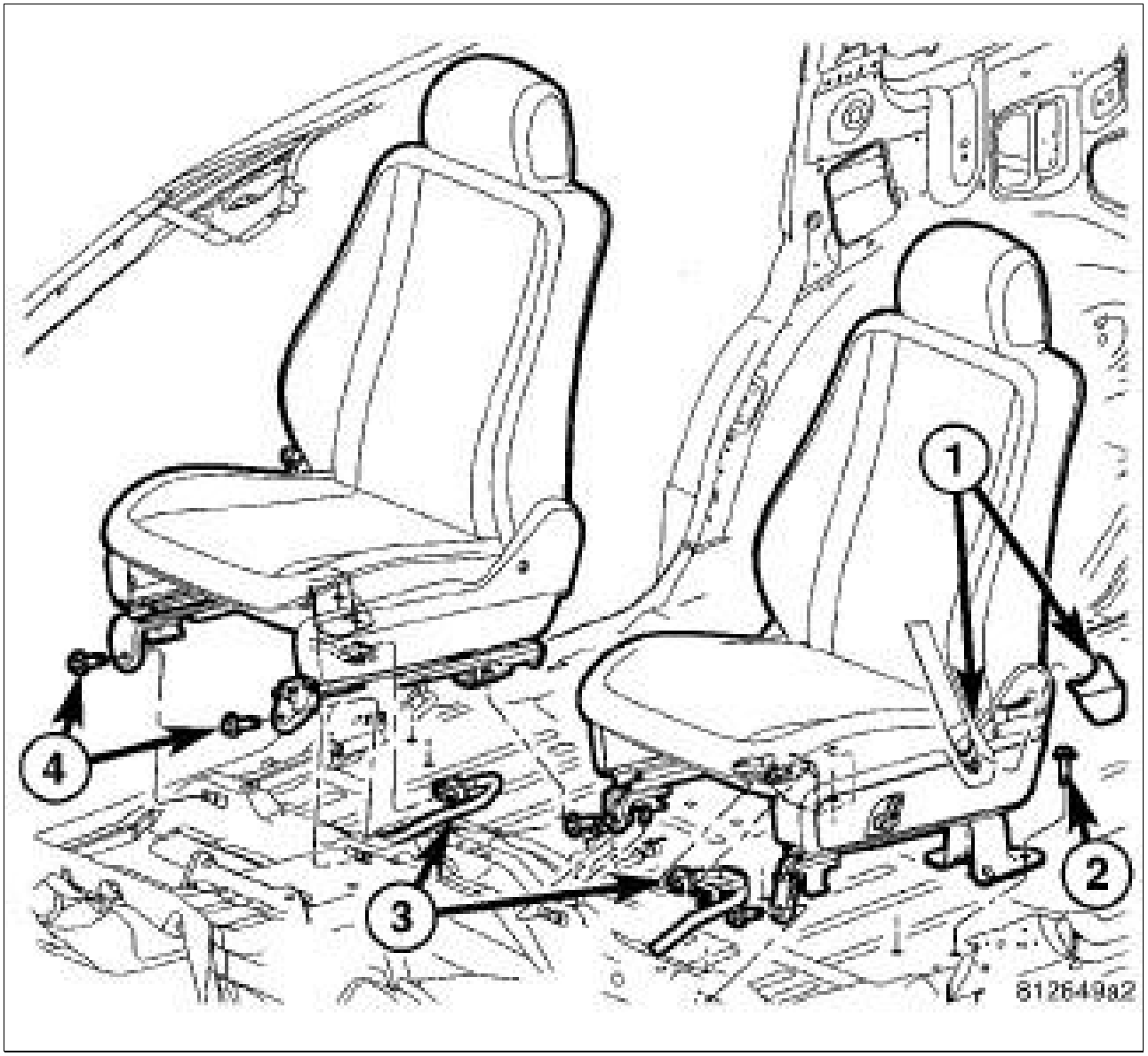

Courtesy of CHRYSLER GROUP, LLC

1. Remove the front passenger seat. Refer to SEAT, FRONT, REMOVAL .

Fig 2: Battery Cover

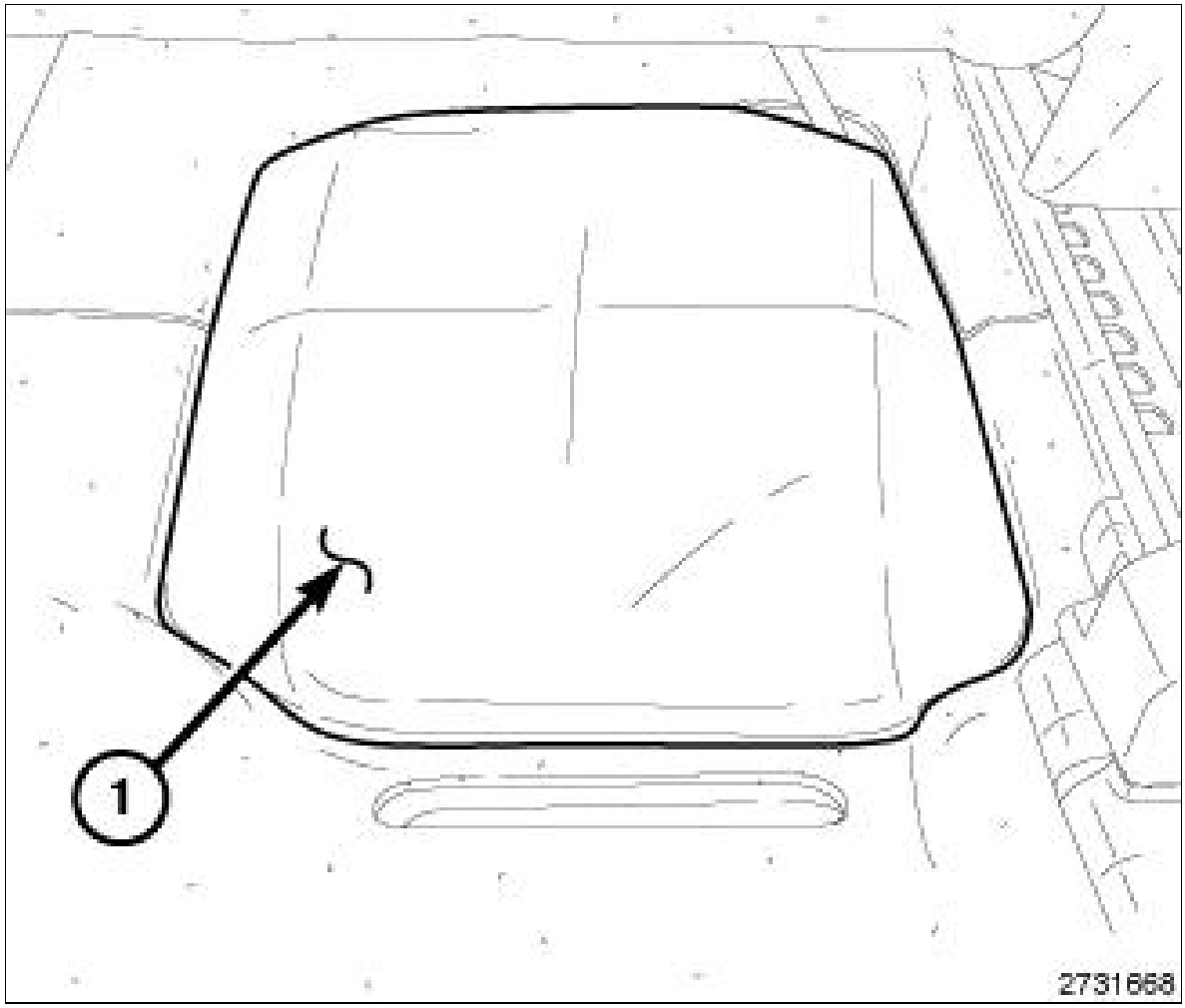

Courtesy of CHRYSLER GROUP, LLC

2. Remove the battery cover (1).
3. Disconnect the negative and positive battery cables.

Fig 3: Side Scuff Plate

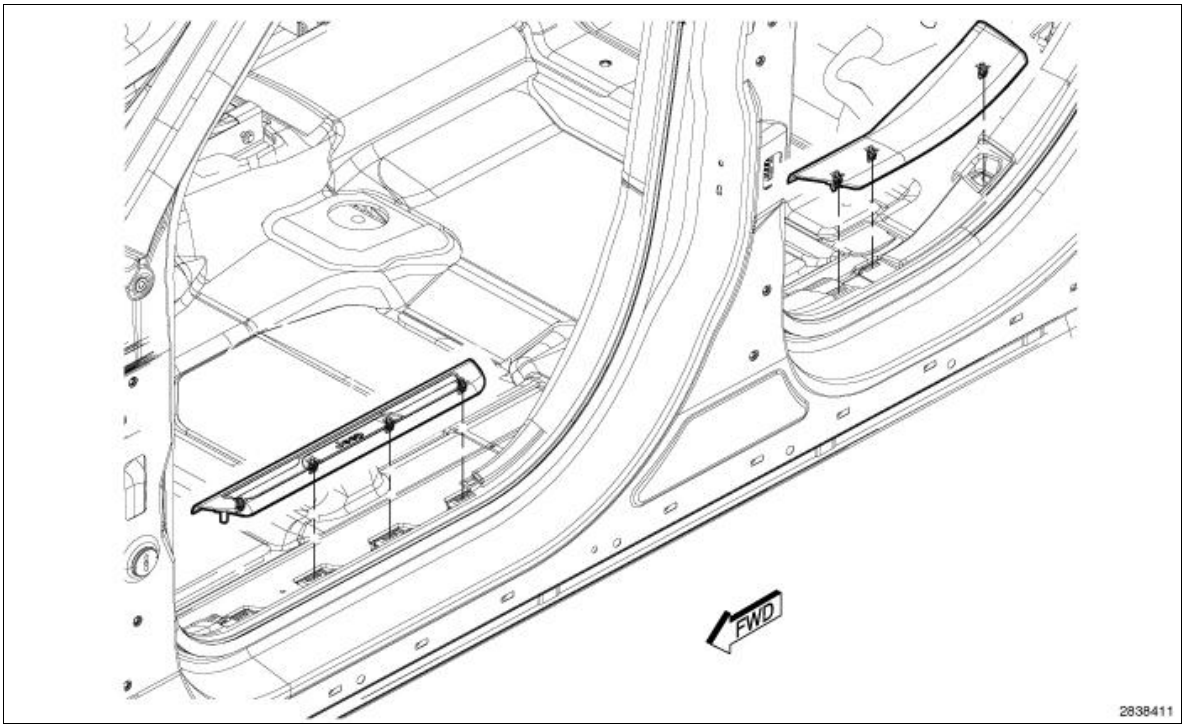

Courtesy of CHRYSLER GROUP, LLC

NOTE:

Driver's side shown, passenger side similar.

4. Remove the passenger side scuff plate. Refer to PLATE, SCUFF, DOOR, REMOVAL .

Fig 4: Scuff Plate & Screws

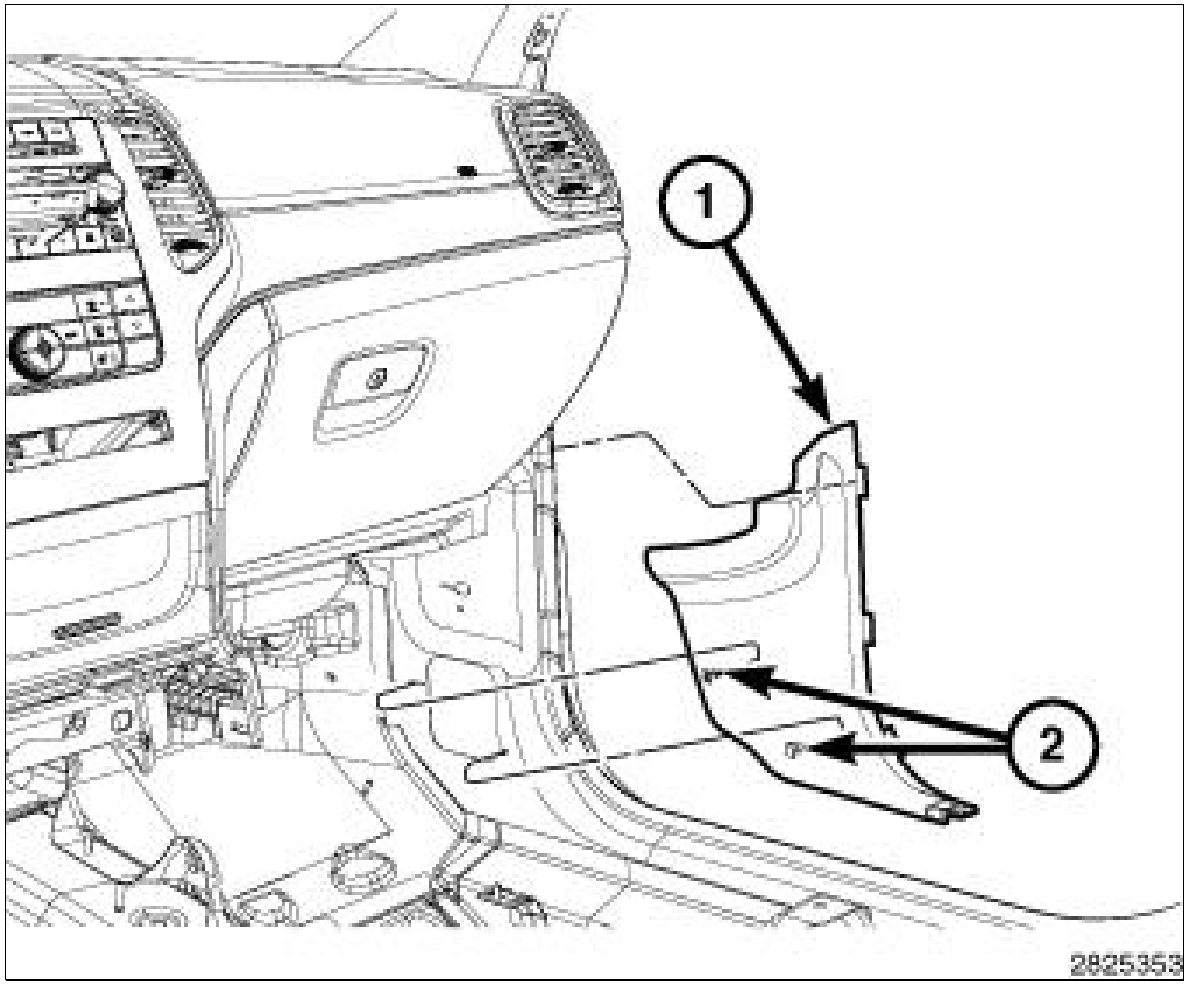

Courtesy of CHRYSLER GROUP, LLC

5. Remove the passenger side cowl trim panel. Refer to PANEL, COWL TRIM, SIDE, REMOVAL .

Fig 5: Removing/Installing Glove Box Assembly

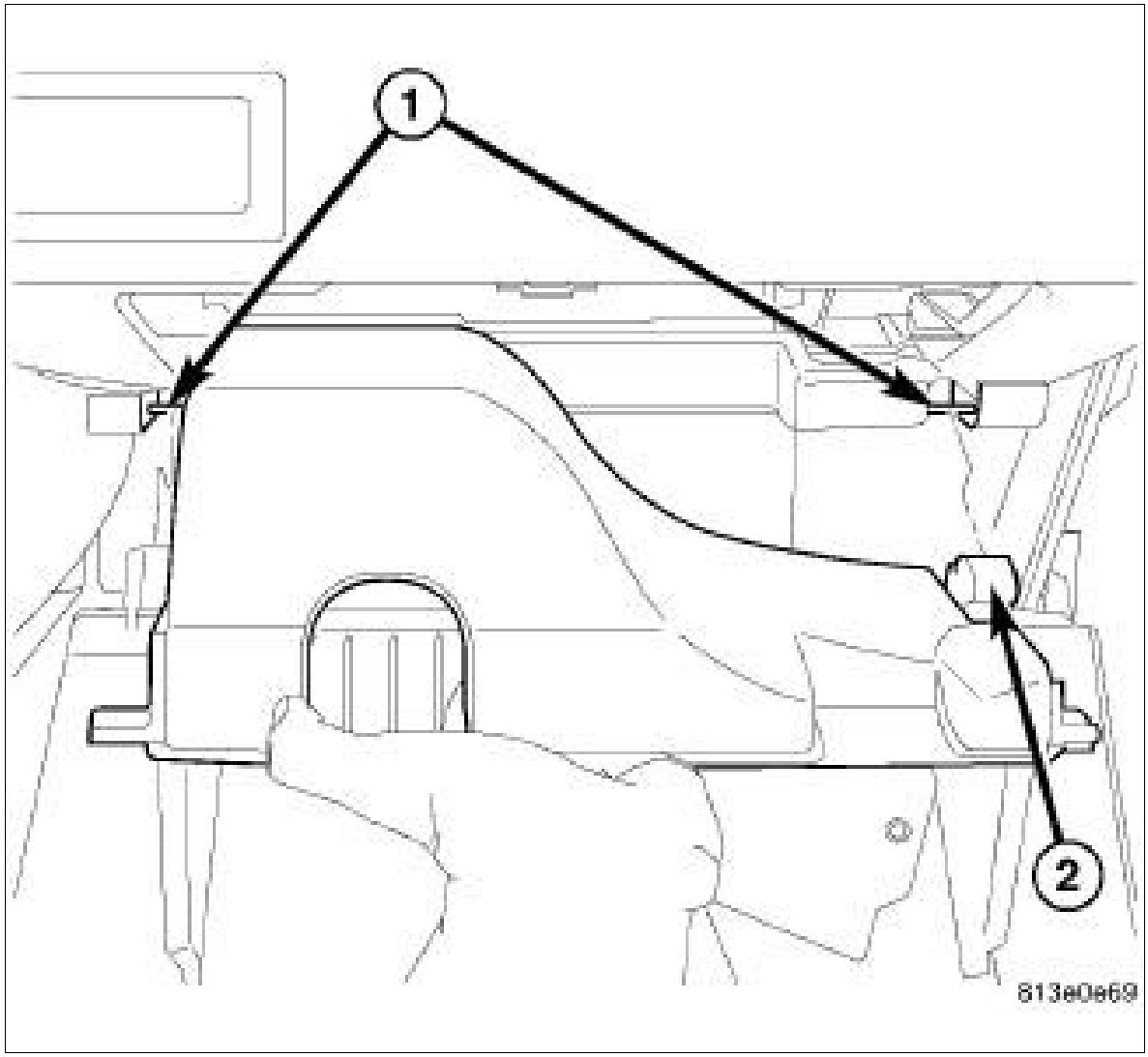

Courtesy of CHRYSLER GROUP, LLC

6. Remove the glovebox. Refer to GLOVE BOX, INSTRUMENT PANEL, REMOVAL .
7. Remove the glovebox liner.

Fig 6: Retainer, Positive Battery Cable & Dash Panel

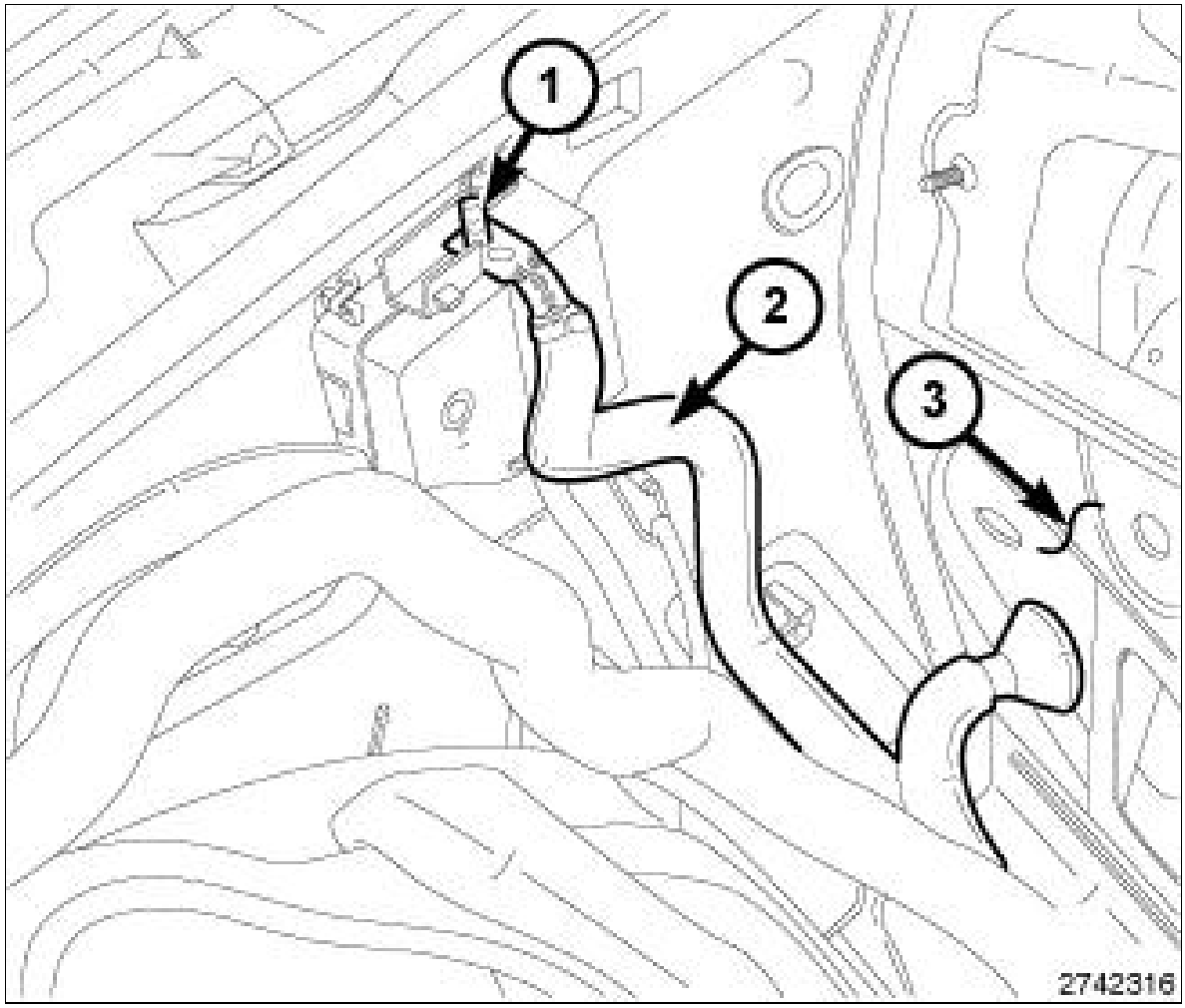

Courtesy of CHRYSLER GROUP, LLC

8. Remove the retainer (1) from the positive battery cable junction block.
9. Push the positive battery cable (2) through the dash panel (3).

Fig 7: Positive Battery Cable & Vehicle

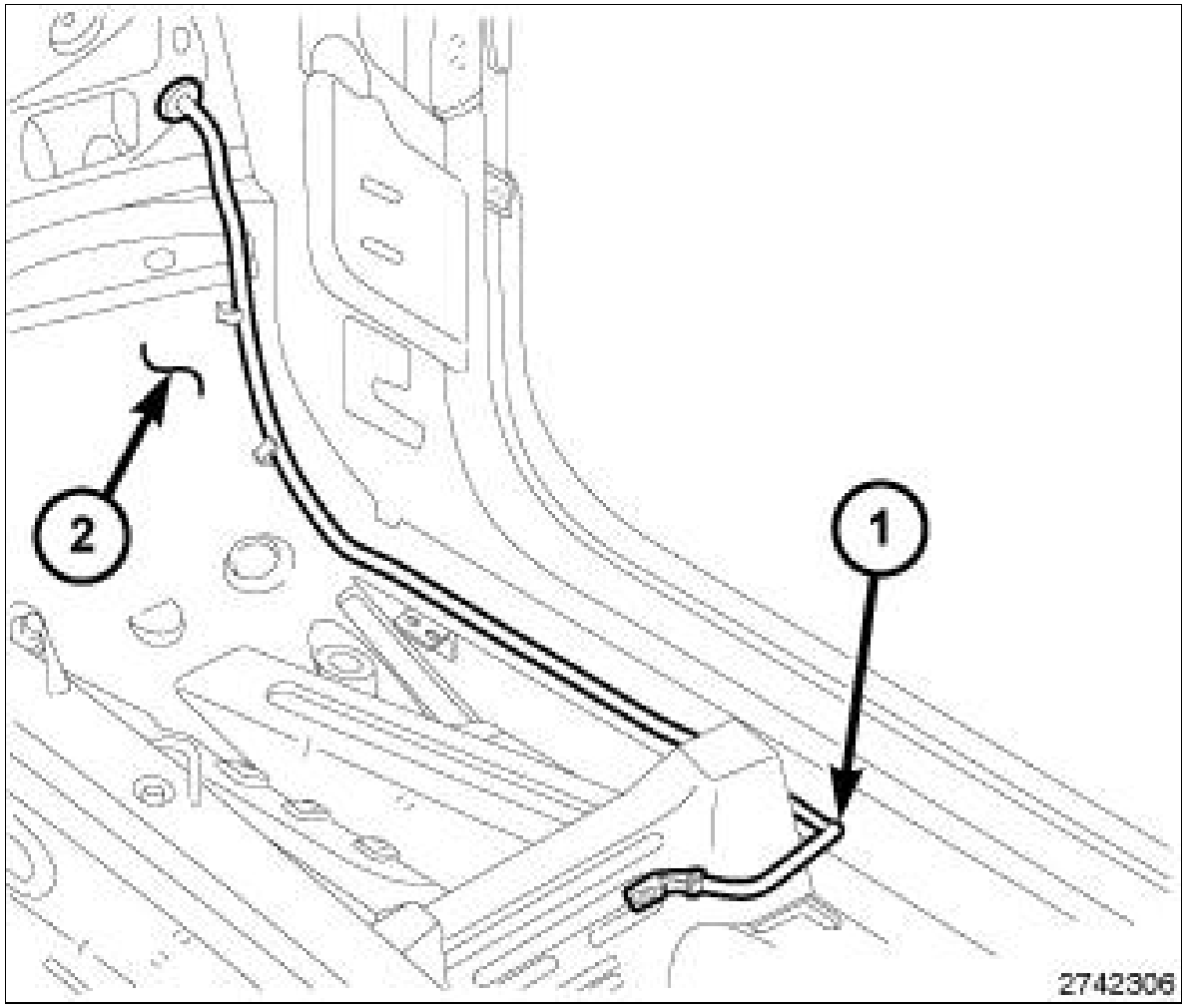

Courtesy of CHRYSLER GROUP, LLC

10. Remove the positive battery (1) cable from the vehicle (2).

CABLES, BATTERY > INSTALLATION > NEGATIVE BATTERY

Fig 1: Negative Battery Cable & Body

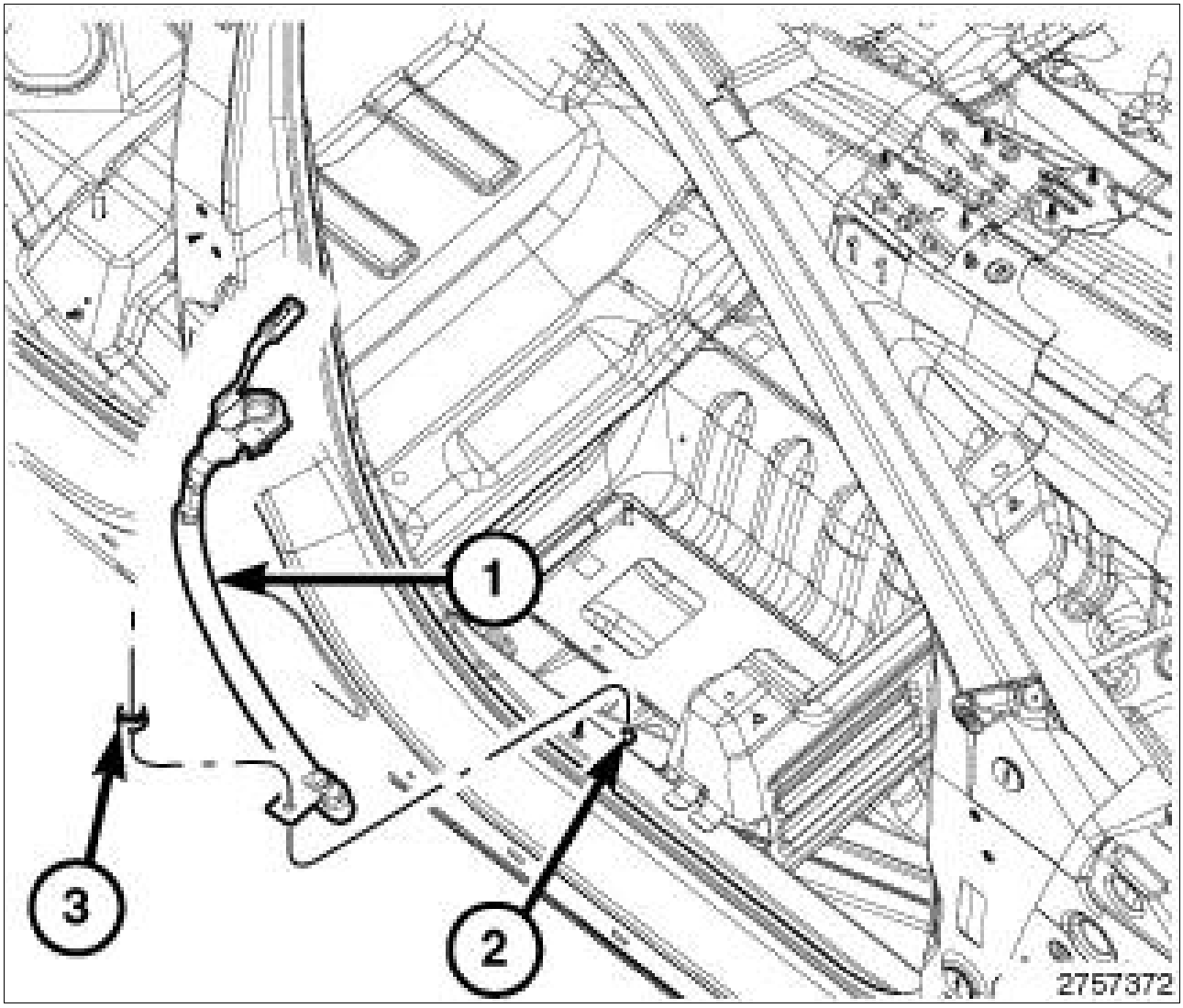

Courtesy of CHRYSLER GROUP, LLC

NOTE:

Shown with seat removed for clarity.

1. Install the negative battery cable.
2. Install the negative battery cable (1) retainer to body (3).
3. Connect the negative the negative battery cable.

Fig 2: Battery Cover

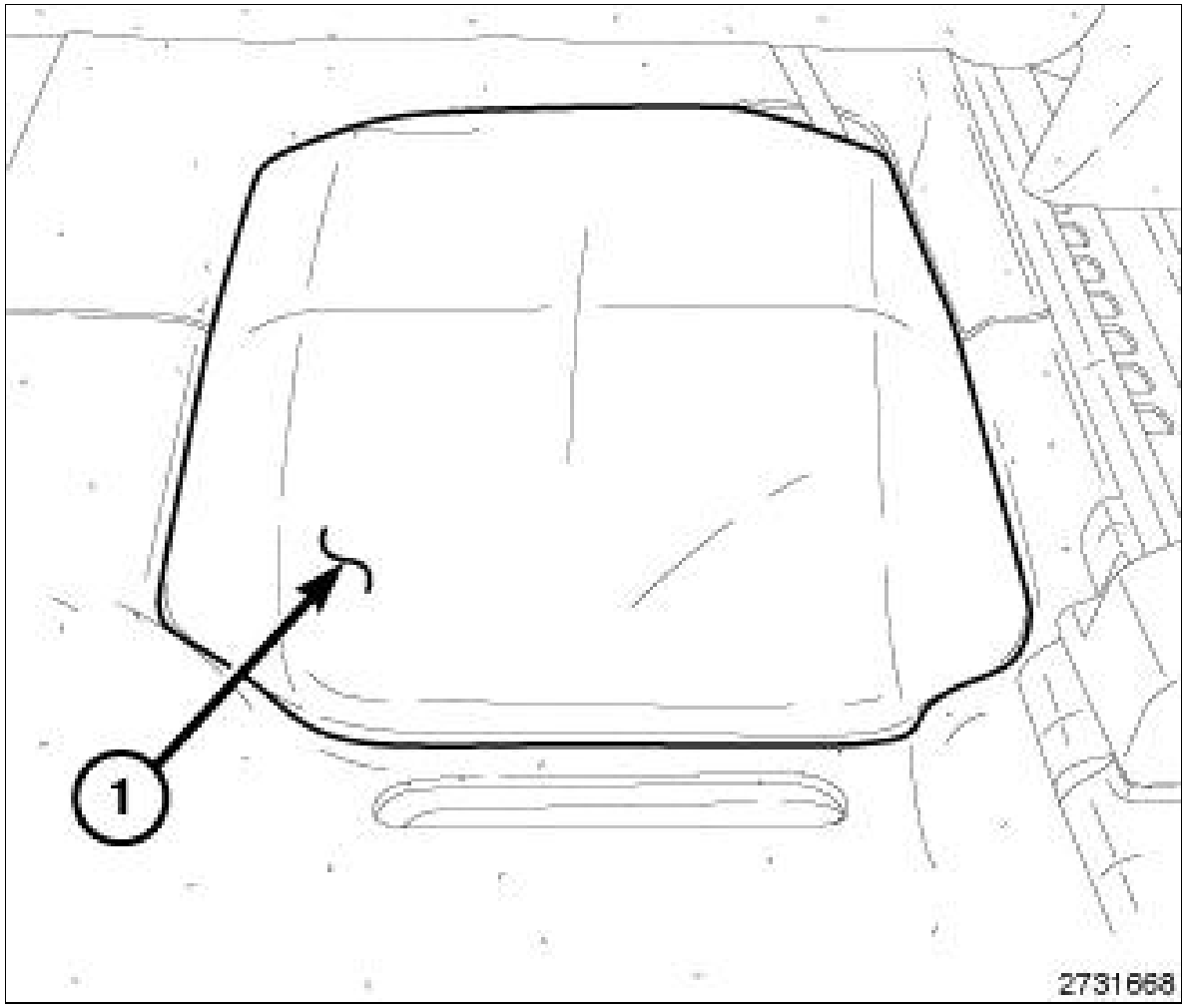

Courtesy of CHRYSLER GROUP, LLC

4. Install the battery cover (1).
5. Position back the passenger front seat.

CABLES, BATTERY > INSTALLATION > POSITIVE BATTERY

Fig 1: Positive Battery Cable & Vehicle

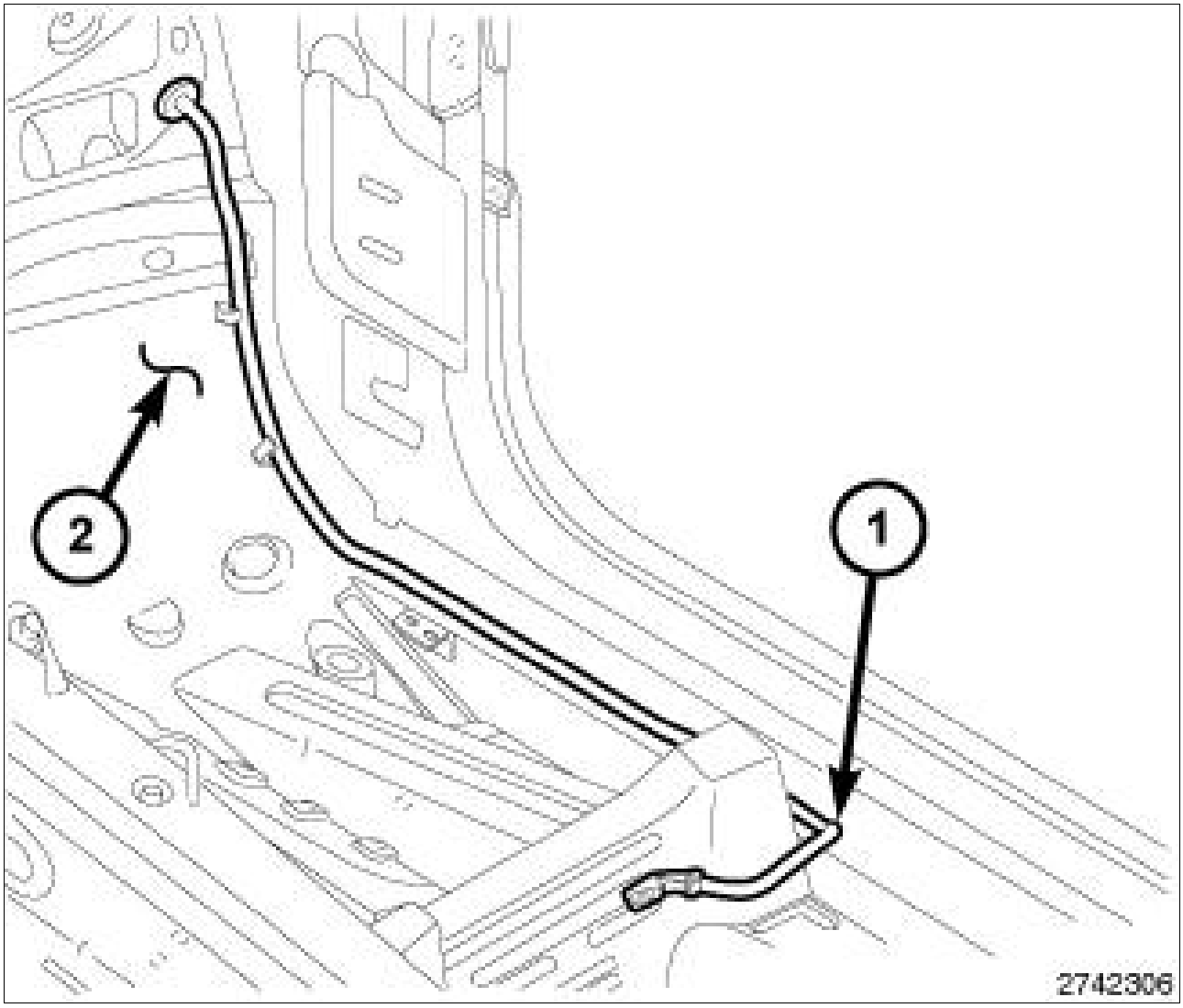

Courtesy of CHRYSLER GROUP, LLC

1. Install the positive battery (1) cable into the vehicle (2).

Fig 2: Retainer, Positive Battery Cable & Dash Panel

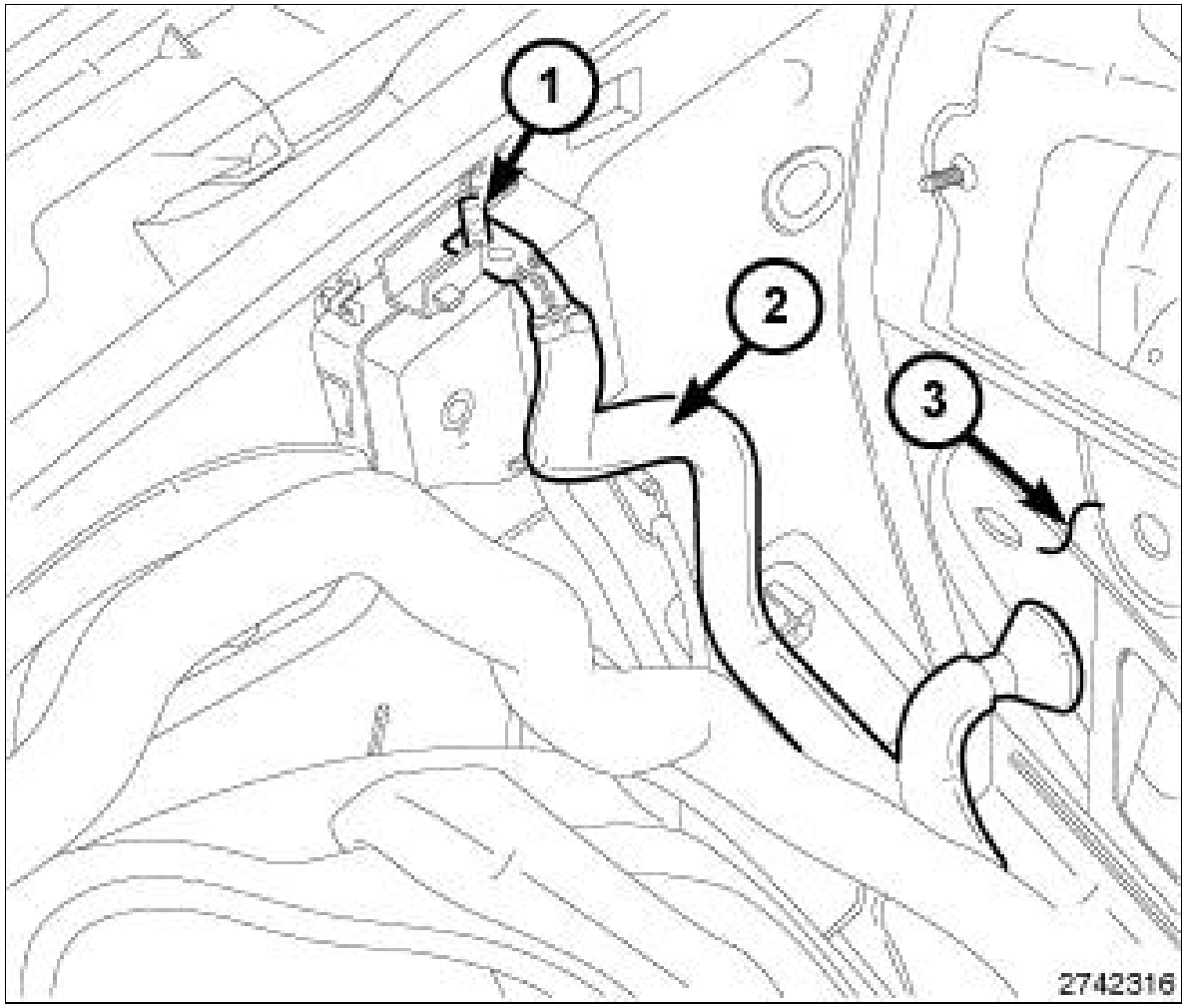

Courtesy of CHRYSLER GROUP, LLC

2. Push the positive battery cable (2) through the dash panel (3).
3. Install the retainer (1) from the positive battery cable junction block.

Fig 3: Removing/Installing Glove Box Assembly

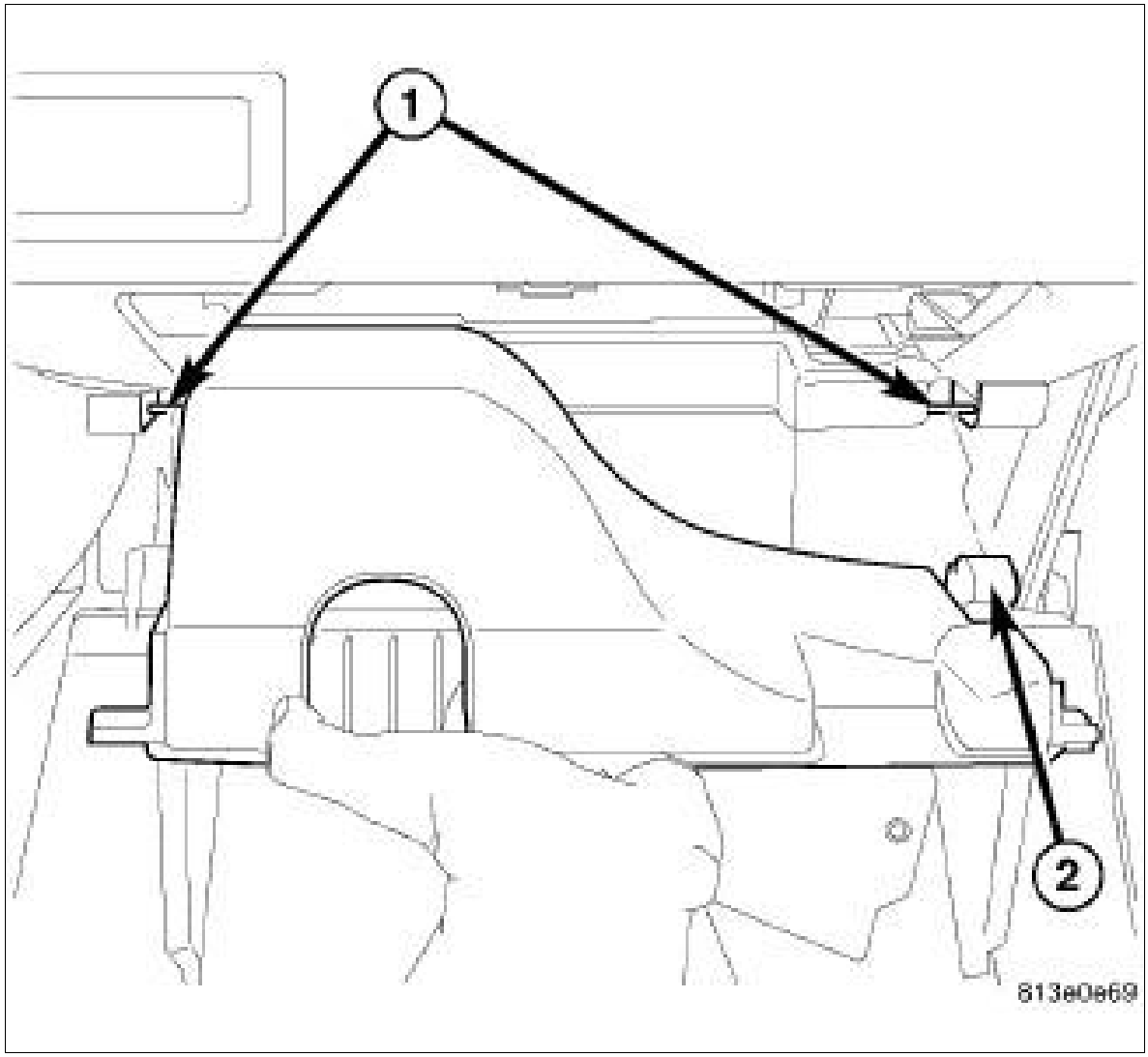

Courtesy of CHRYSLER GROUP, LLC

4. Install the glovebox liner.
5. Install the glovebox. Refer to GLOVE BOX, INSTRUMENT PANEL, INSTALLATION .

Fig 4: Scuff Plate & Screws

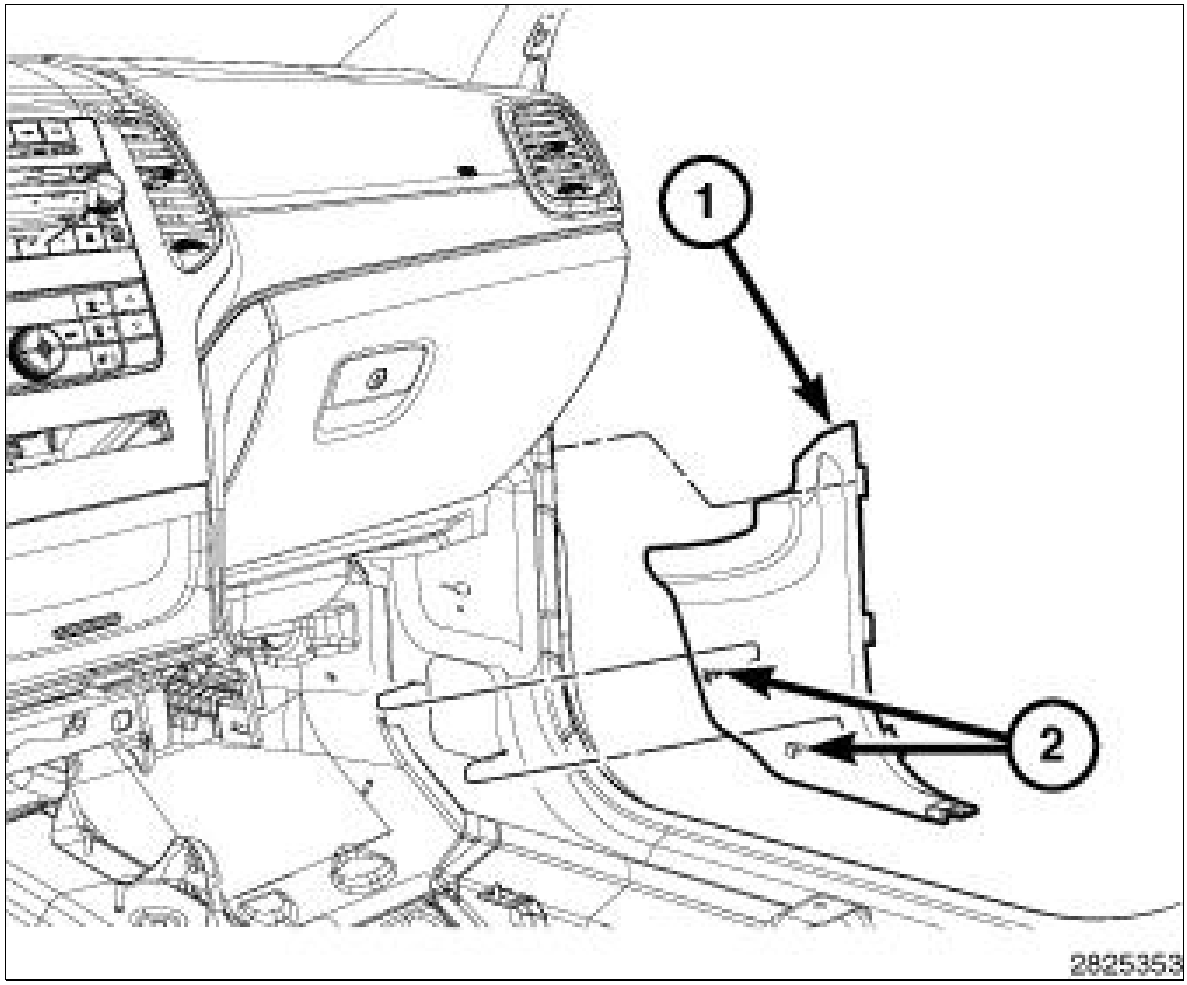

Courtesy of CHRYSLER GROUP, LLC

6. Install the passenger side cowl trim panel. Refer to PANEL, COWL TRIM, SIDE, INSTALLATION .
7. Install the nut that secures the passenger side cowl trim panel to the mounting bracket.
8. Install the passenger side hush panel from underneath the instrument panel.

Fig 5: Side Scuff Plate

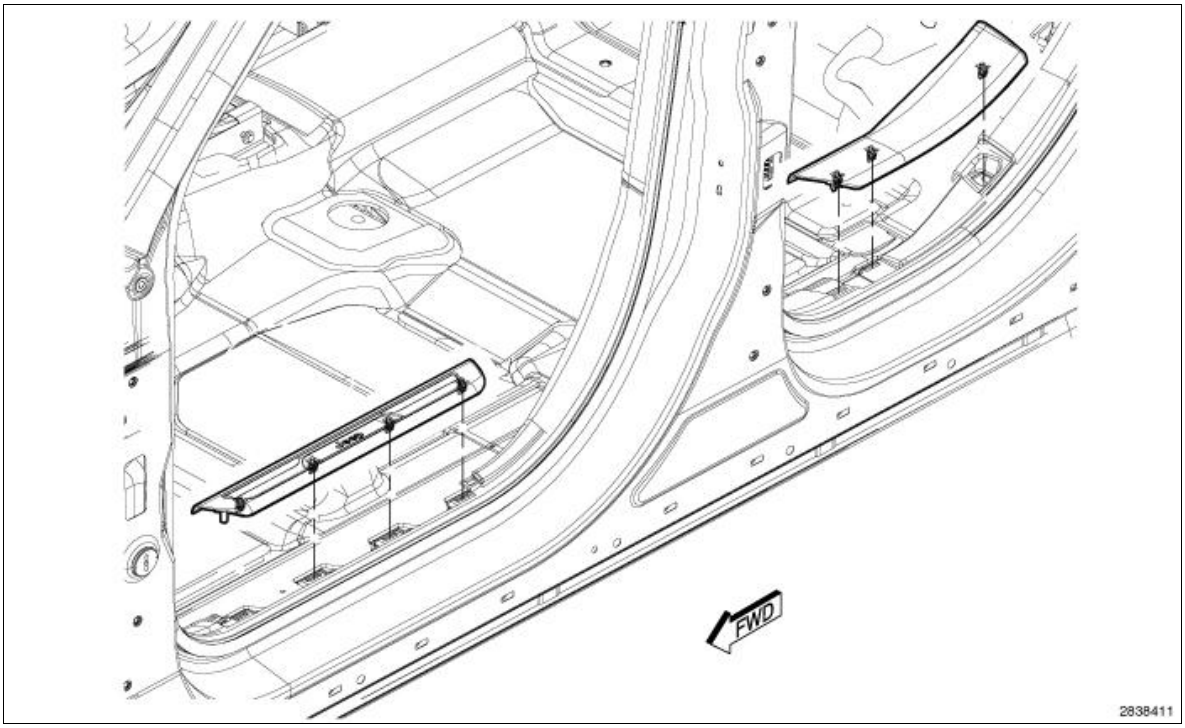

Courtesy of CHRYSLER GROUP, LLC

NOTE:

Driver's side shown, passenger side similar.

9. Install the passenger side scuff plate. Refer to PLATE, SCUFF, DOOR, INSTALLATION .

Fig 6: View Of Front Seat

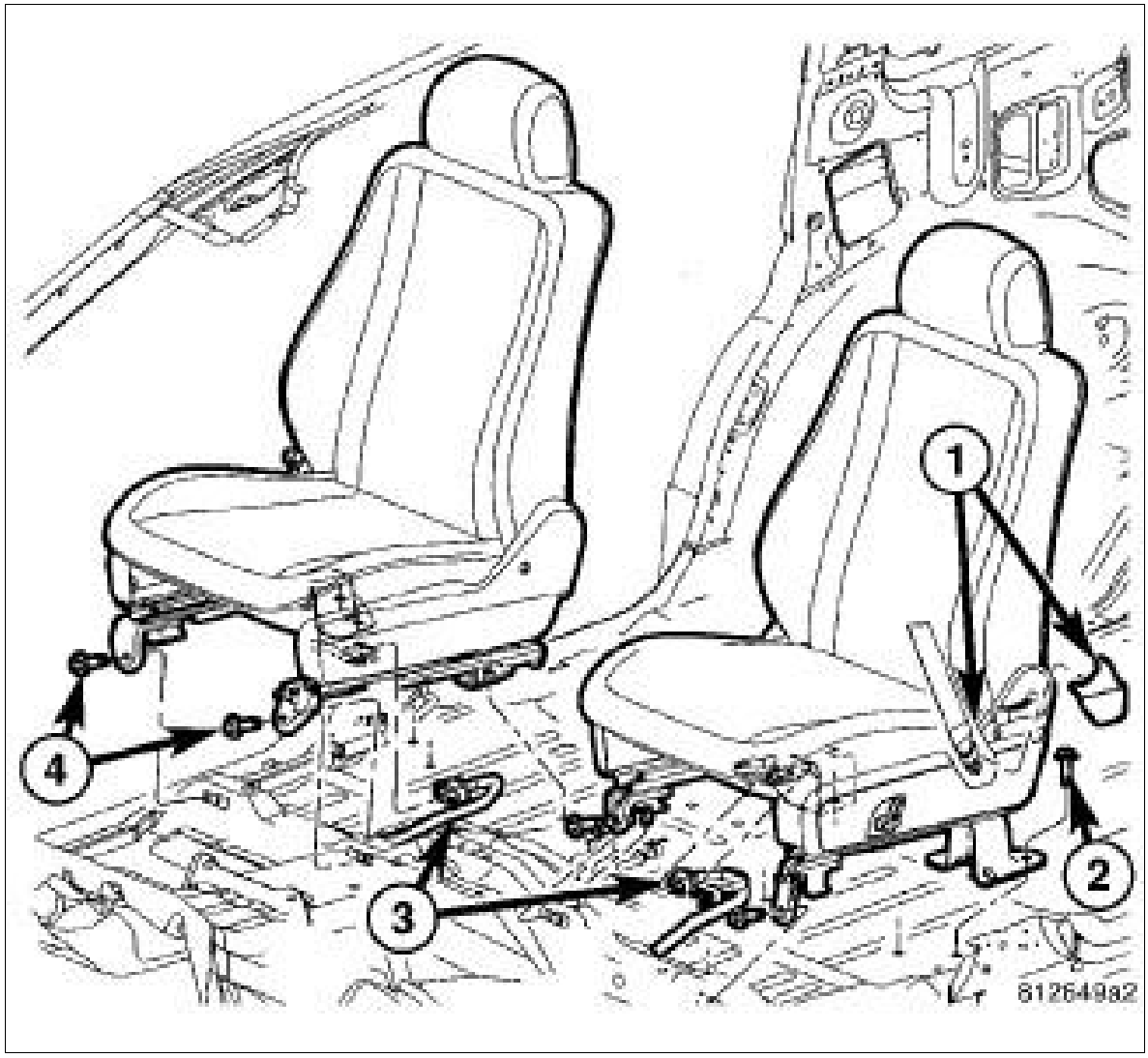

Courtesy of CHRYSLER GROUP, LLC

10. Install the front passenger seat. Refer to SEAT, FRONT, INSTALLATION .

Fig 7: Battery Cover

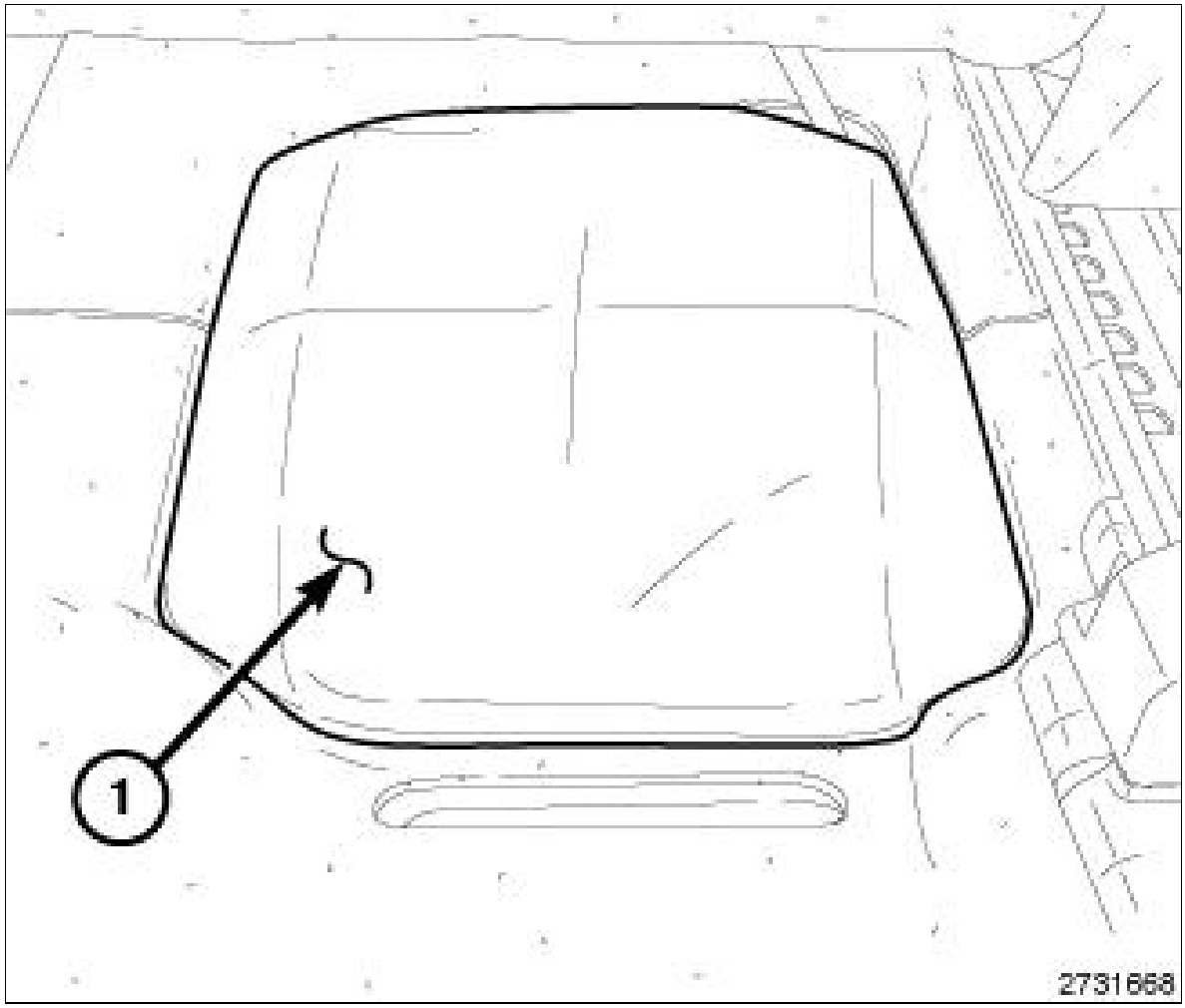

Courtesy of CHRYSLER GROUP, LLC

11. Connect the positive batter cable.
12. Install the battery cover (1).
13. Connect the negative and positive battery cable.

SENSOR, INTELLIGENT BATTERY (IBS) > DESCRIPTION > DESCRIPTION

Fig 1: Intelligent Battery Sensor (IBS)

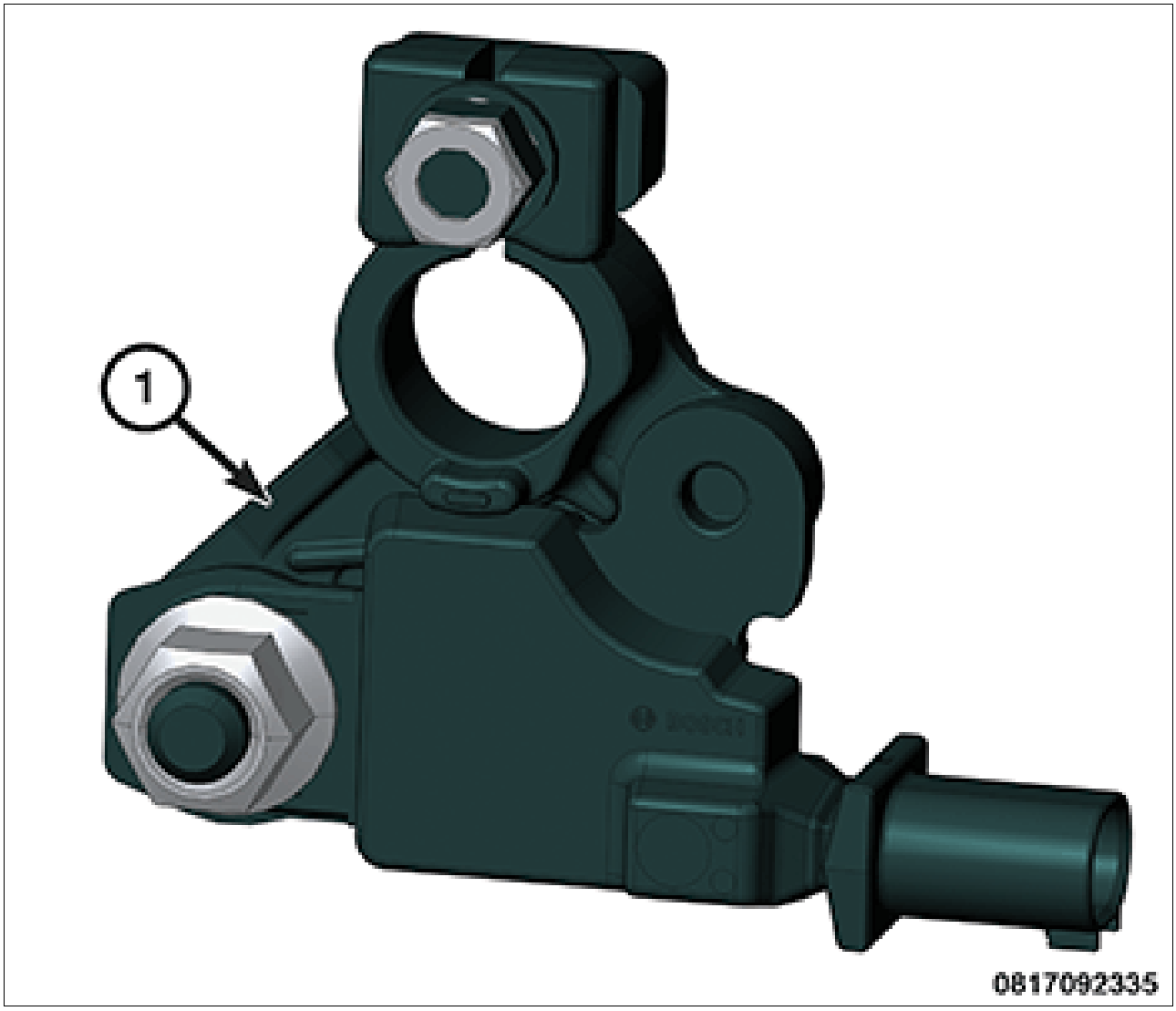

Courtesy of CHRYSLER GROUP, LLC

The Intelligent Battery Sensor (IBS) is a microcontroller based device used to measure battery current, voltage, and temperature whose outputs are used in the energy management strategy.

The mechanical portion of the IBS is comprised of the battery clamp for the negative terminal and a captured bolt to attach the ground cable to. The functional tasks include establishing the electrical contact between the body and the negative battery post, housing the electronic module (actual sensor element) and the provision of an adequate thermal contact between the sensor system temperature sensor and the negative battery post. The mechanical portion of the IBS also protects the sensitive electronic components from external influences.

The IBS is mounted directly on the 12 volt DC battery's negative post. The battery post clamp nut is a captive nut and the stud will break if the nut is removed.

SENSOR, INTELLIGENT BATTERY (IBS) > OPERATION > OPERATION

The Intelligent Battery Sensor (IBS) contains a low value resistor, or shunt. The shunt creates voltage

drop, which is read by an internal microcontroller to determine the current flow in and out of the battery. In addition to the shunt, the IBS contains a sensor to monitor the battery's temperature. Data gathered by the IBS, including temperature, voltage, and current measurements, are transmitted over a LIN communication bus to either the Body Control Module (BCM) or the Powertrain Control Module (PCM), depending on the application. The IBS serves two primary purposes. The first is to provide the Powertrain Control Module (or PCM) with both immediate and historical battery information, so the PCM can precisely control the charging system. The second purpose is to provide data to the BCM for operation of the load-shedding feature. A fused power circuit and the LIN bus are connected to the IBS though a two-terminal connector.

In addition to real-time measurements, the IBS transmits some calculated battery data over the LIN bus, including state of charge, state of health, and state of function. These values are calculated by storing measurements over time.

The battery sensor is readable/diagnosable via a "scan tool" that can display all of the available parameters needed for vehicle servicing or trouble shooting.

Information the Intelligent Battery Sensor (IBS) transmits out on the CAN Bus is

- SOC = Battery state of charge (or SOC) is expressed as a percentage. The IBS calculates the SOC based on measured voltage, and charge and discharge rates. Therefore, SOC is not a direct percentage of battery voltage.
- SOF = Battery State of Function: Battery state of function (or SOF) is a calculated prediction of the lowest voltage the battery will drop to during engine cranking.

The PCM and BCM use this calculated information to optimize vehicle power management for increased fuel efficiency. The data transmitted from IBS is interpreted and sent over the CAN network by the module connected the IBS's LIN bus.

When the IBS is powered up for the first time or is powered after a power disconnection, it enters a "recalibration" phase, where the IBS must recognize the type of battery and its characteristics and state. In this phase the tolerances on the state functions (SOC, SOF) are greater than in normal working condition. When IBS is disconnected from the battery, the device loses its stored memory. When power is restored, the IBS starts a relearn process. Until the relearn process is complete, accurate battery state information is unavailable to other vehicle systems. The IBS relearn process requires five normal, operator initiated starts with at least four hours normal or more during cold ambient conditions of engine off time between each start. Usually, the process takes a few days of vehicle operation to complete. Remember, the relearn process is restarted every time power is reconnected to the IBS.

If the IBS is faulty it cannot be serviced, it must be replaced.

SENSOR, INTELLIGENT BATTERY (IBS) > REMOVAL > REMOVAL

> *WARNING:*
>
> *Do not remove the captive nut, doing so will cause the stud to break.*

1. Remove the components to access the battery. Refer to BATTERY, AGM, REMOVAL and BATTERY, SUPPLEMENTAL, REMOVAL .

Fig 1: M6 Captive Nut

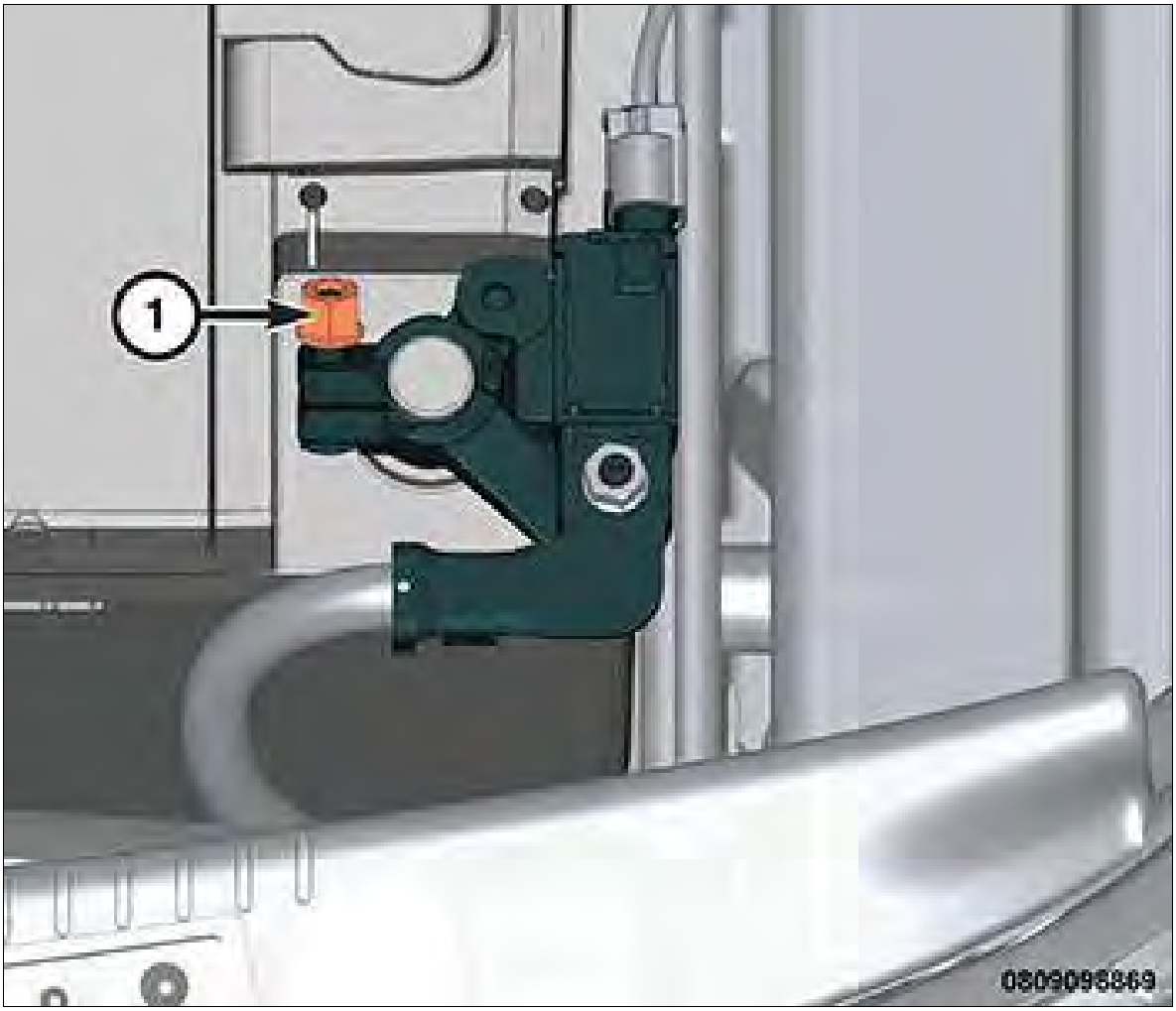

Courtesy of CHRYSLER GROUP, LLC

2. **Loosen**

the M6 captive nut (1).

NOTE:

Do not remove the M6 captive nut, doing so will cause the M6 stud on IBS pole clamp to break.

Fig 2: Intelligent Battery Sensor (IBS) Electrical Connector

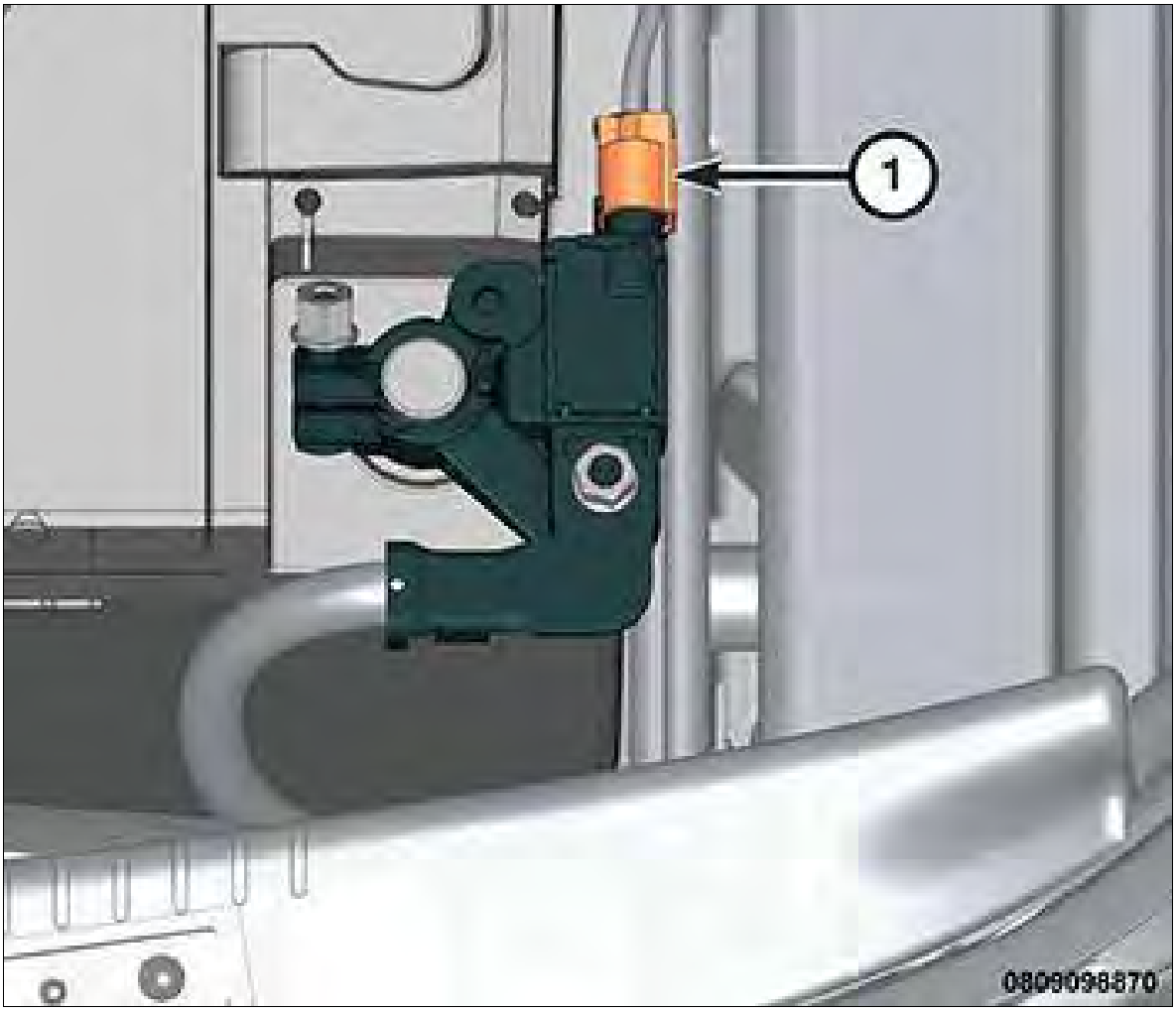

Courtesy of CHRYSLER GROUP, LLC

3. Disconnect the two-pin (Power & LIN) Intelligent Battery Sensor (IBS) electrical connector (1).

Fig 3: Ground Terminal M8 Hex Nut

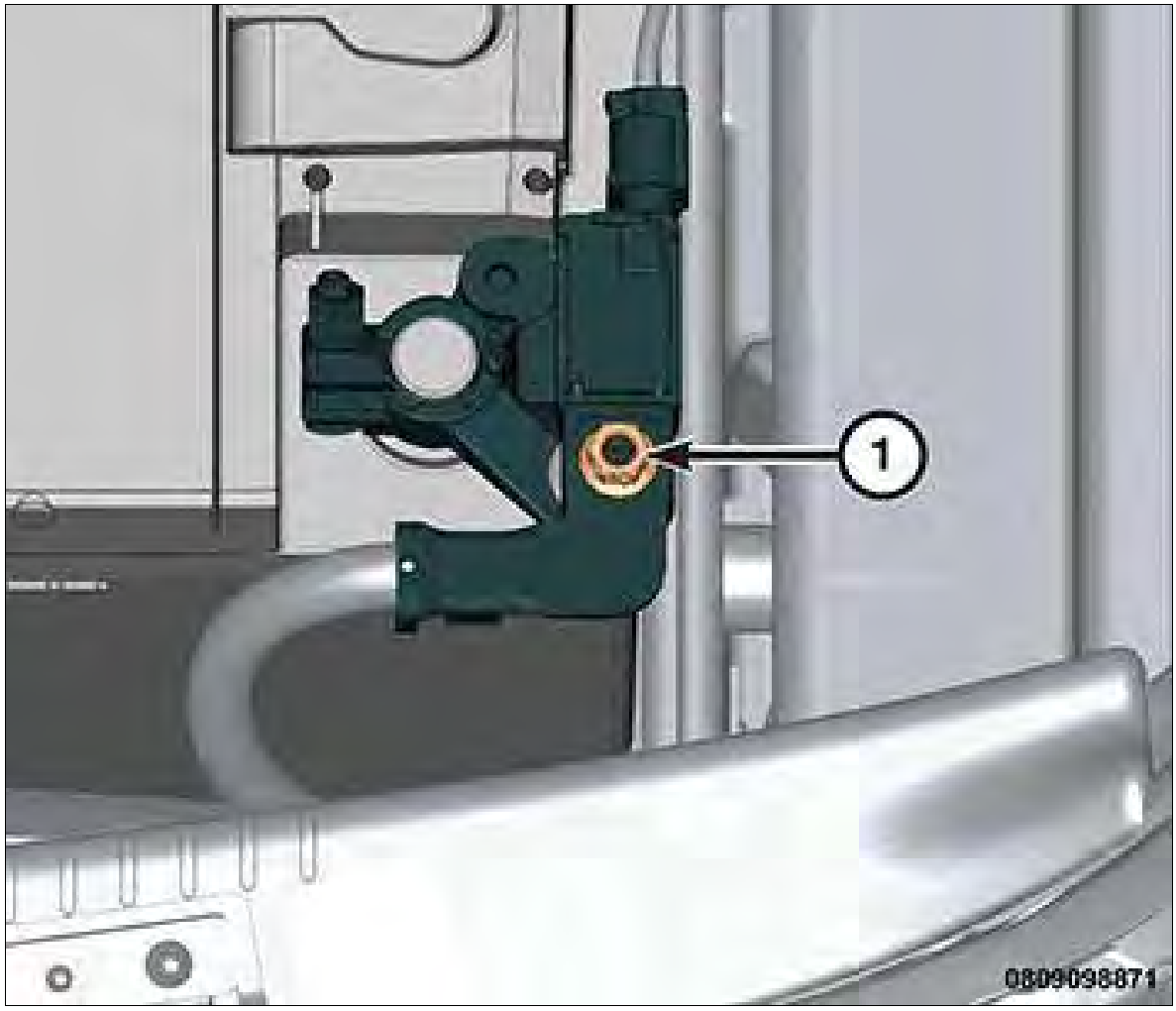

Courtesy of CHRYSLER GROUP, LLC

4. Remove the ground terminal M8 hex nut (1).

Fig 4: Negative Battery Cable Eyelet & Battery Terminal

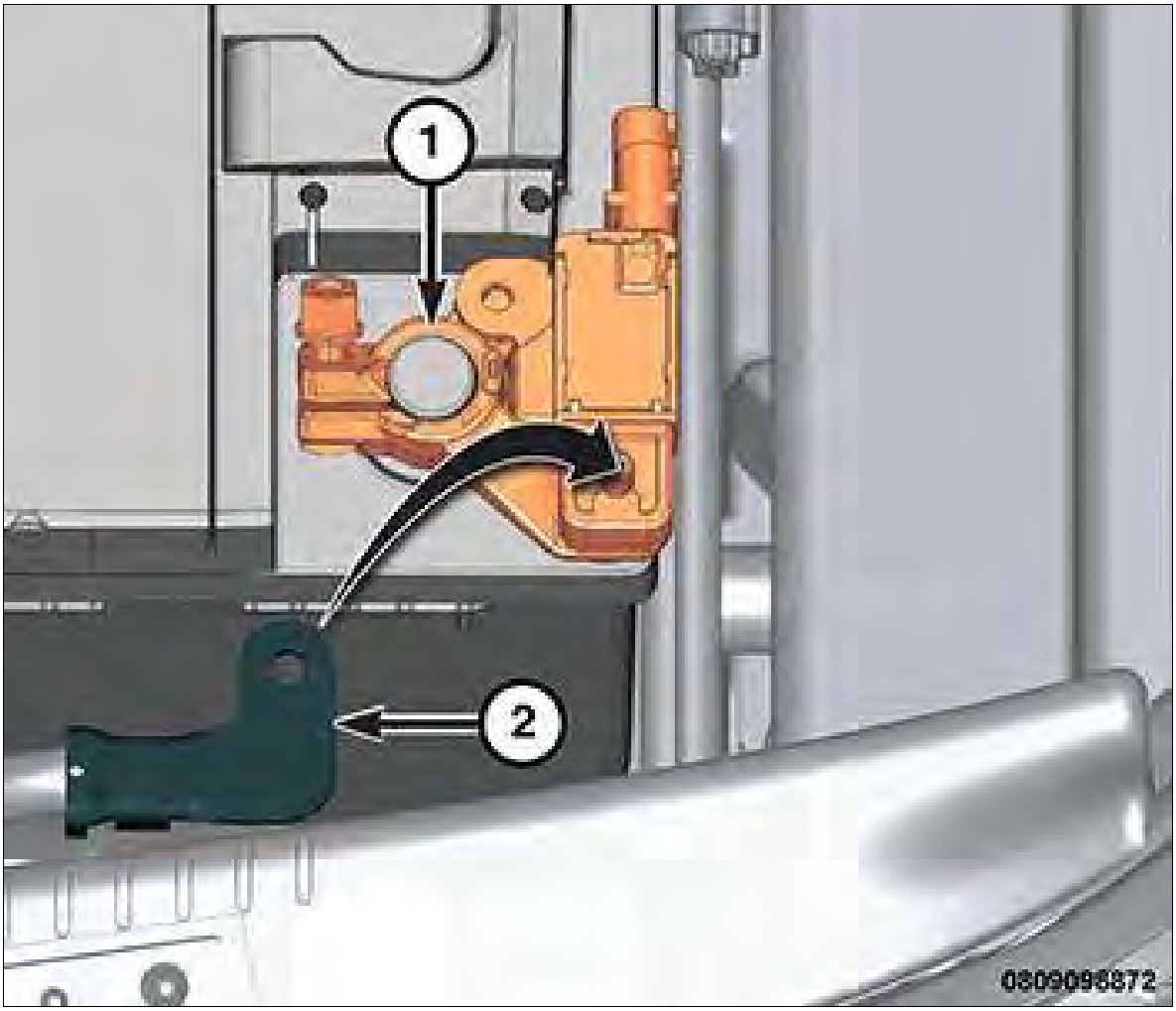

Courtesy of CHRYSLER GROUP, LLC

5. Remove the negative battery cable eyelet (2) from the battery terminal (1).

> *NOTE:*
>
> *Never pry the IBS to remove it from the pole clamp. This will damage the IBS and will need to be replaced.*

6. Using the appropriate battery terminal puller, remove the battery cable terminal from the negative battery post.

SENSOR, INTELLIGENT BATTERY (IBS) > INSTALLATION > INSTALLATION

> *NOTE:*
>
> *Connecting the negative battery cable to the Intelligent Battery Sensor (IBS) must be done*

before installing on the battery post.

NOTE:

DO NOT use a hammer to tap down the sensor. Use a post spreader to open the post if reusing the existing sensor.

NOTE:

Avoid IBS rotation during tightening of M8 nut as to avoid contact of 2 way connector breakage when rotating in to the battery.

1. Place the IBS onto the negative battery post and push the IBS down until properly seated on the cone of the post.

Fig 1: Ground Terminal M8 Hex Nut

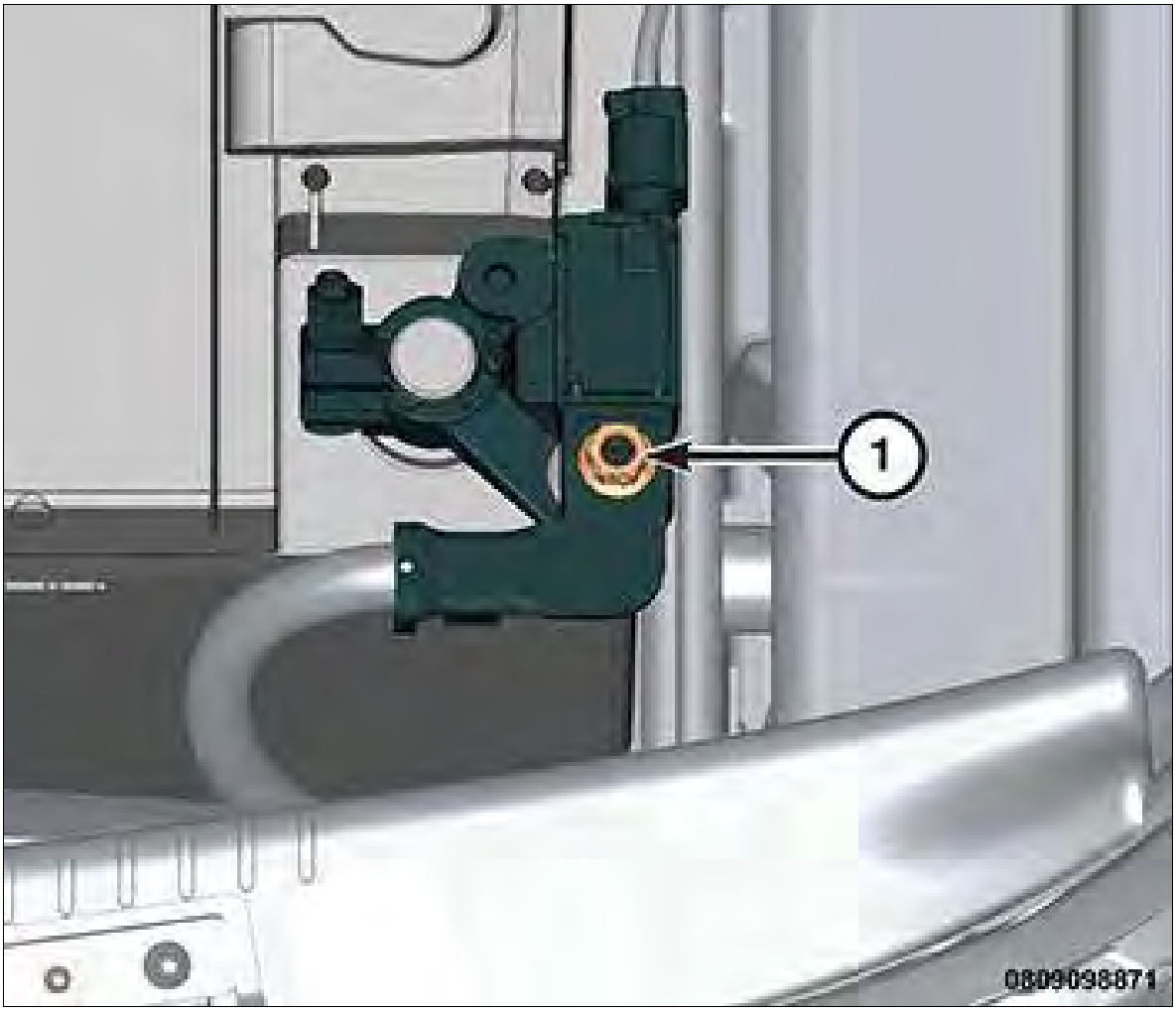

Courtesy of CHRYSLER GROUP, LLC

2. Connect the negative battery cable to the IBS M8 stud (1) and tighten to the proper SPECIFICATIONS .

> *NOTE:*
>
> ***M8 has much higher torque than the M6 clamp and can break IBS free if the M6 is tightened prior.***

Fig 2: M6 Captive Nut

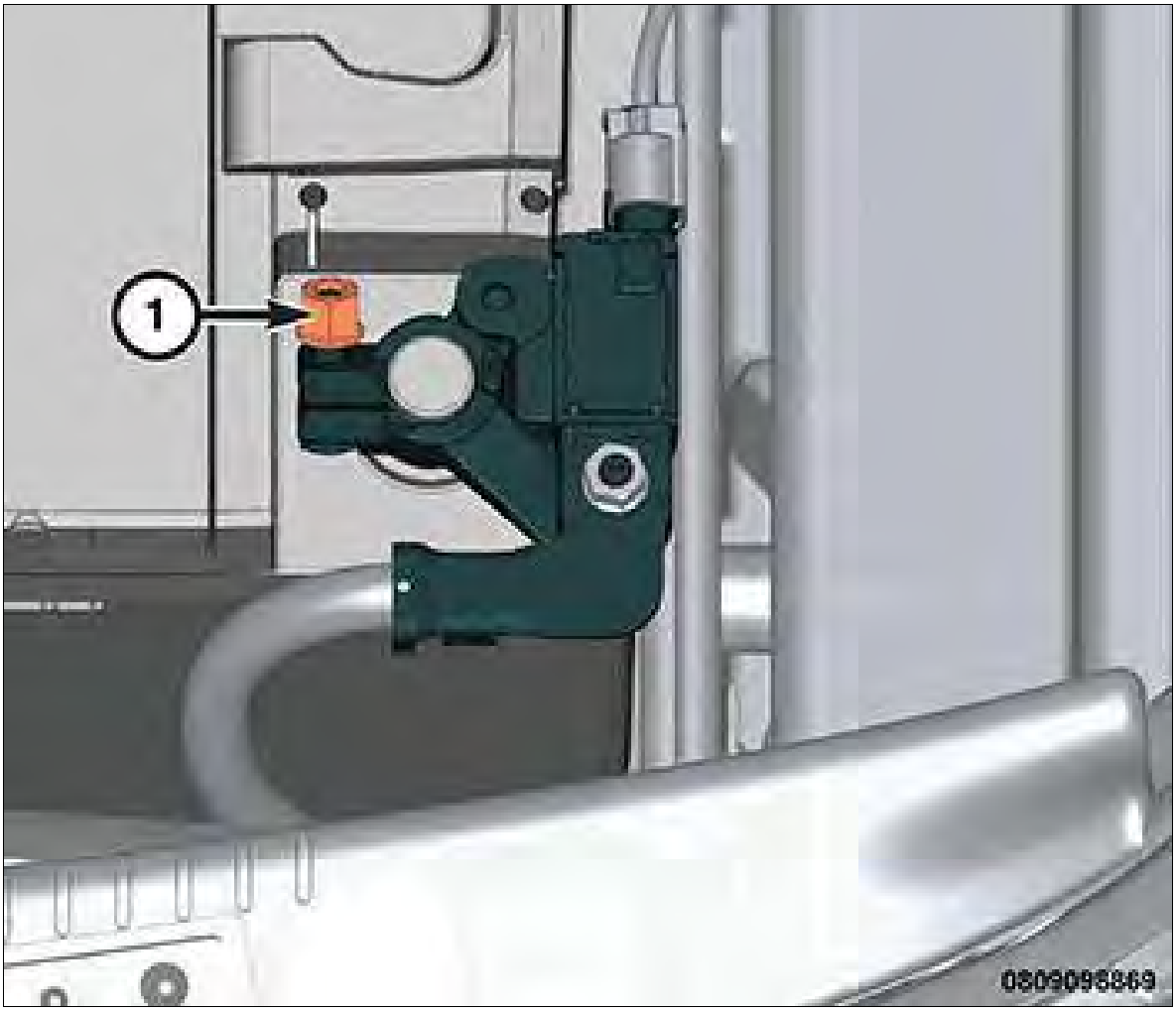

Courtesy of CHRYSLER GROUP, LLC

3. Tighten the M6 pole clamp (1) to the proper SPECIFICATIONS .

Fig 3: Intelligent Battery Sensor (IBS) Electrical Connector

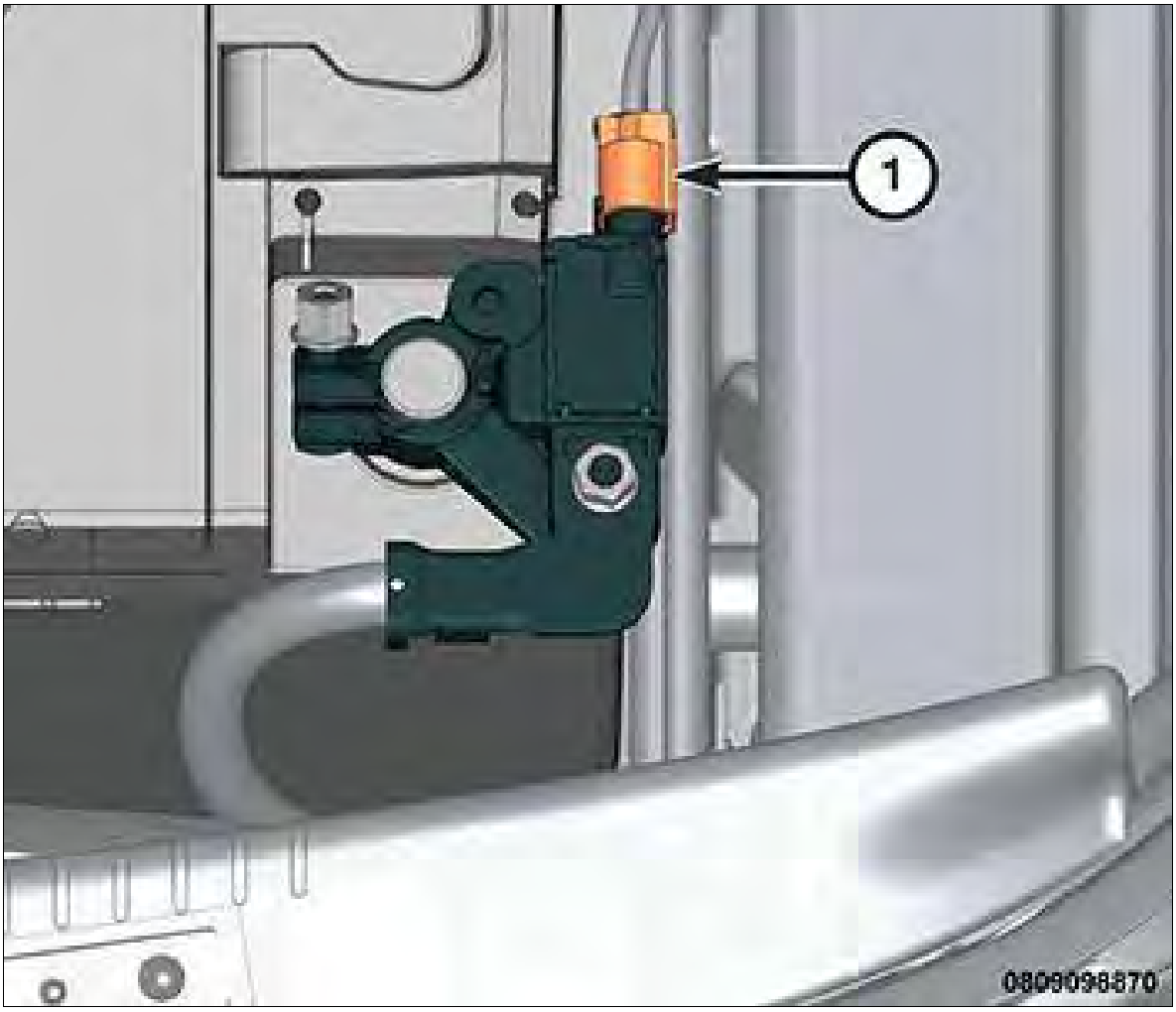

Courtesy of CHRYSLER GROUP, LLC

4. Install the two-pin connector (Power & LIN) (1). **Make sure there is no stress on the wires** .
5. Install the components removed to access the battery. Refer to BATTERY, AGM, INSTALLATION and BATTERY, SUPPLEMENTAL, INSTALLATION .

DESCRIPTION > DESCRIPTION

The charging system consists of:

- Generator
- Generator decoupler pulley (if equipped)
- Electronic Voltage Regulator (EVR) circuitry within the Powertrain Control Module (PCM)
- Ignition switch
- Battery (refer to BATTERY SYSTEM - SERVICE INFORMATION for information)
- Generator lamp (if equipped)
- Check gauges lamp (if equipped)
- Voltmeter (refer to INSTRUMENT CLUSTER - SERVICE INFORMATION for information)
- Wiring harness and connections (refer to SYSTEM WIRING DIAGRAMS for information)

OPERATION > OPERATION

Fig 1: Charging System

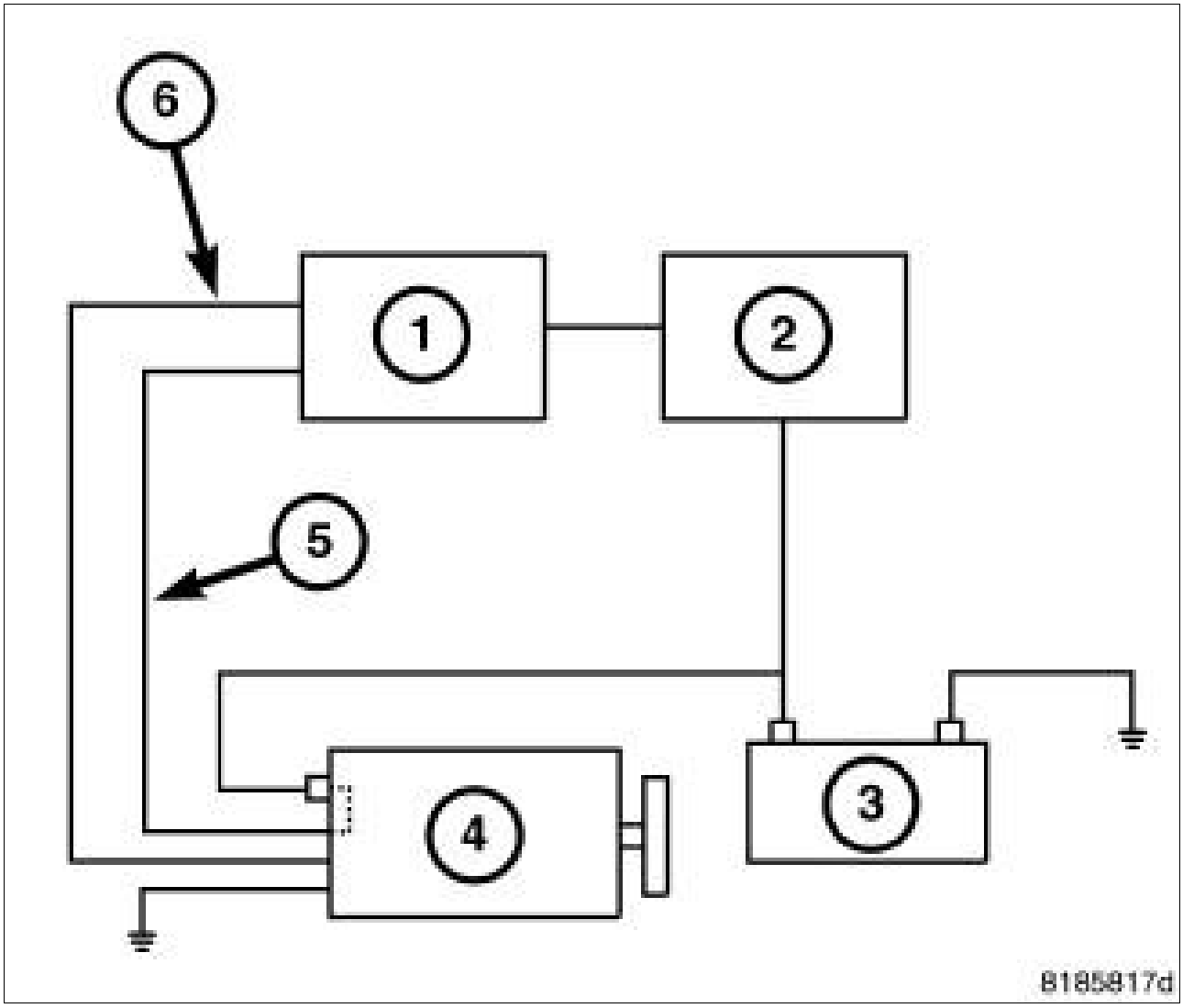

Courtesy of CHRYSLER GROUP, LLC

1 - PCM
2 - PDC
3 - Battery
4 - Generator
5 - Feed Back Circuit B+
6 - Control Circuit
7 - Battery Sense

On gasoline powered engines, the charging system is turned on and off with the Powertrain Control Module (PCM) and ignition switch with engine running. On diesel powered engines, the charging system is turned on and off with the Powertrain Control Module (PCM) and ignition switch with engine running. The field circuit will not be energized until engine is running and ignition switch on. This voltage is connected through the PCM and supplied to one of the generator field terminals (Gen. Source B+) at the

back of the generator. The generator is internally grounded. The generator regulates the field using pin-1 of the field connector (high side driver).

The generator is driven by the engine through a serpentine belt and pulley, or a decoupler pulley arrangement.

The PCM receives a voltage input from the generator (5) and also a battery voltage input (7) from the Power Distribution Center (PDC), it then compares the voltages to the desired voltage programed in the EVR (Electronic Voltage Regulator) software, and, if there is a difference it sends a signal to the generator EVR circuit to increase or decrease output. It uses a Pulse Width Modulation (PWM) to send signals to the generator circuitry to control the amount of output from the generator. The amount of DC current produced by the generator is controlled by the EVR circuitry contained within the PCM (2).

All vehicles are equipped with On-Board Diagnostics (OBD). All OBD-sensed systems, including EVR circuitry, are monitored by the PCM. Each monitored circuit is assigned a Diagnostic Trouble Code (DTC). The PCM will store a DTC in electronic memory for certain failures it detects.

The Check Gauges Lamp (if equipped) monitors: **charging system voltage,** engine coolant temperature and engine oil pressure. If an extreme condition is indicated, the lamp will be illuminated. This is done as reminder to check the three gauges. The lamp is located on the instrument panel. Refer to INDICATORS, INSTRUMENT CLUSTER, DESCRIPTION for additional information.

Voltage is monitored at the B+ terminal stud to insure it is connected. If the B+ cable is loose, the PCM will shut down generator field. Because of this new feature, pin-2 of the field connector is internally connected to the B+ terminal.

The generator used with diesel engines is internally regulated. The generator and PCM communicate for diagnostics, etc. If the generator regulator becomes disconnected from the PCM, it will still operate, but in a default mode.

DIAGNOSIS AND TESTING > DIAGNOSIS AND TESTING - CHARGING SYSTEM

The following procedures may be used to diagnose the charging system if:

- the check gauges lamp (if equipped) is illuminated with the engine running
- the voltmeter (if equipped) does not register properly
- an undercharged or overcharged battery condition occurs.

Remember that an undercharged battery is often caused by:

- accessories being left on with the engine not running
- a faulty or improperly adjusted switch that allows a lamp to stay on. Refer to IGNITION-OFF DRAW TEST for more information.

DIAGNOSIS AND TESTING > DIAGNOSIS AND TESTING - CHARGING SYSTEM > INSPECTION

The Powertrain Control Module (PCM) monitors critical input and output circuits of the charging system,

making sure they are operational. A Diagnostic Trouble Code (DTC) is assigned to each input and output circuit monitored by the On-Board Diagnostic (OBD) system. Some charging system circuits are checked continuously, and some are checked only under certain conditions.

Refer to DTC INDEX for more DTC information. This will include a complete list of DTCs including DTCs for the charging system.

To perform a complete test of the charging system, refer to the appropriate Diagnostic Test Procedures and use a diagnostic scan tool. Perform the following inspections before attaching the scan tool.

1. Inspect the battery condition.
2. Inspect condition of battery cable terminals, battery posts, connections at engine block, starter solenoid and relay. They should be clean and tight. Repair as required.
3. Inspect all fuses in both the fuseblock and Power Distribution Center (PDC) for tightness in receptacles. They should be properly installed and tight. Repair or replace as required.
4. Inspect generator mounting bolts for tightness. Replace or tighten bolts if required.
5. Inspect generator drive belt condition and tension. Tighten or replace belt as required.
6. Inspect automatic belt tensioner (if equipped).
7. Inspect generator electrical connections at generator field, battery output, and ground terminal (if equipped). Also check generator ground wire connection at engine (if equipped). They should all be clean and tight. Repair as required.

SPECIFICATIONS > GENERATOR RATINGS

TYPE	RATED SAE AMPS	ENGINES
DENSO	220	3.0L Diesel
DENSO DENSO DENSO	160 180 220 (GCC)	3.6L
DENSO DENSO DENSO	160 180 220	5.7L

SPECIFICATIONS > TORQUE SPECIFICATIONS

TORQUE SPECIFICATIONS

DESCRIPTION	N.m	Ft. Lbs.	In. Lbs.
Generator Mounting Bolts - 3.6L	25	18	-

Generator Mounting Bolts - 5.7L/6.4L	55	41	-
Generator B+ Output Cable Terminal Nut - 3.6L	11	-	97
Generator B+ Output Cable Terminal Nut - 5.7L/6.4L	12	-	106
Decoupler pulley	80	59	-
Generator Mounting Bolt 3.0L Diesel	28	21	-
Generator Mounting Stud 3.0L Diesel	12	-	106
Generator Mounting Nut 3.0L Diesel	28	21	-

GENERATOR > DESCRIPTION > DESCRIPTION

The generator is belt-driven by the engine using a serpentine type drive belt. It is serviced only as a complete assembly. If the generator fails for any reason, the entire assembly must be replaced.

GENERATOR > OPERATION > OPERATION

As the energized rotor begins to rotate within the generator, the spinning magnetic field induces a current into the windings of the stator coil. Once the generator begins producing sufficient current, it also provides the current needed to energize the rotor.

The stator winding connections deliver the induced alternating current to 6 positive and 6 negative diodes for rectification. From the diodes, rectified direct current is delivered to the vehicle electrical system through the generator battery terminal.

Noise emitting from the generator may be caused by: worn, loose or defective bearings; a loose or defective drive pulley; incorrect, worn, damaged or misadjusted fan drive belt; loose mounting bolts; a misaligned drive pulley or a defective stator or diode.

GENERATOR > REMOVAL > 3.0L DIESEL

1. Disconnect the negative battery cable.
2. Remove the coolant recovery bottle. Refer to BOTTLE, COOLANT RECOVERY, REMOVAL .
3. Remove the cooling fan. Refer to FAN, COOLING, REMOVAL .
4. Remove the lower radiator hose.
5. Remove the upper radiator at thermostat housing.

6. Remove the serpentine belt. Refer to BELT, SERPENTINE, REMOVAL .

Fig 1: Nut, Ground Cable, Field Generator Connector, Protective Cover, B+ Cable & B+ Nut

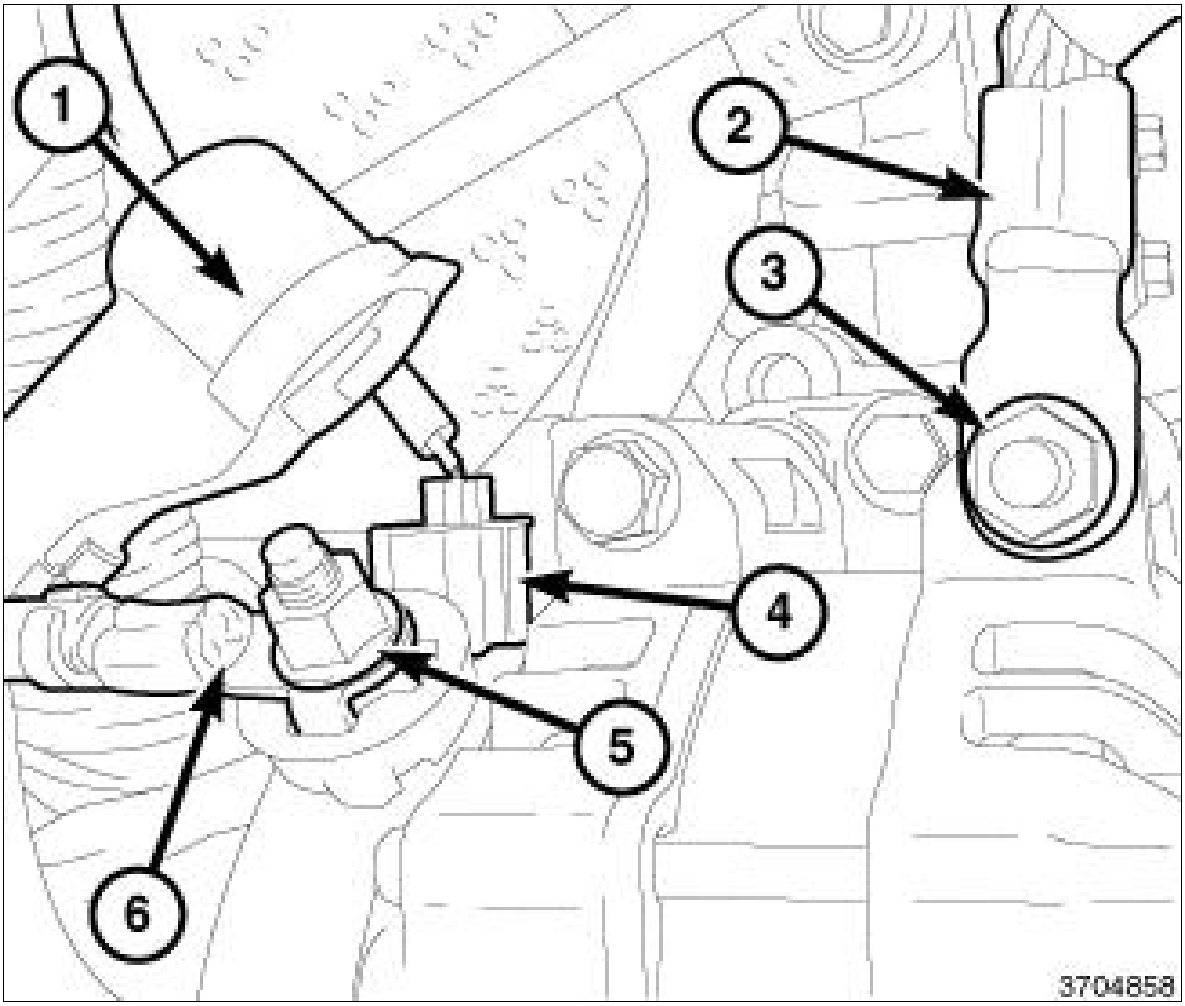

Courtesy of CHRYSLER GROUP, LLC

7. Remove the nut (3) and the ground cable (2) from the generator.
8. Disconnect the field generator connector (4).
9. Remove the protective cover (1) from the B+ cable (6).
10. Remove the B+ nut (5) and cable (6) from the generator.

Fig 2: Upper Generator Bolt, Nut & And Stud

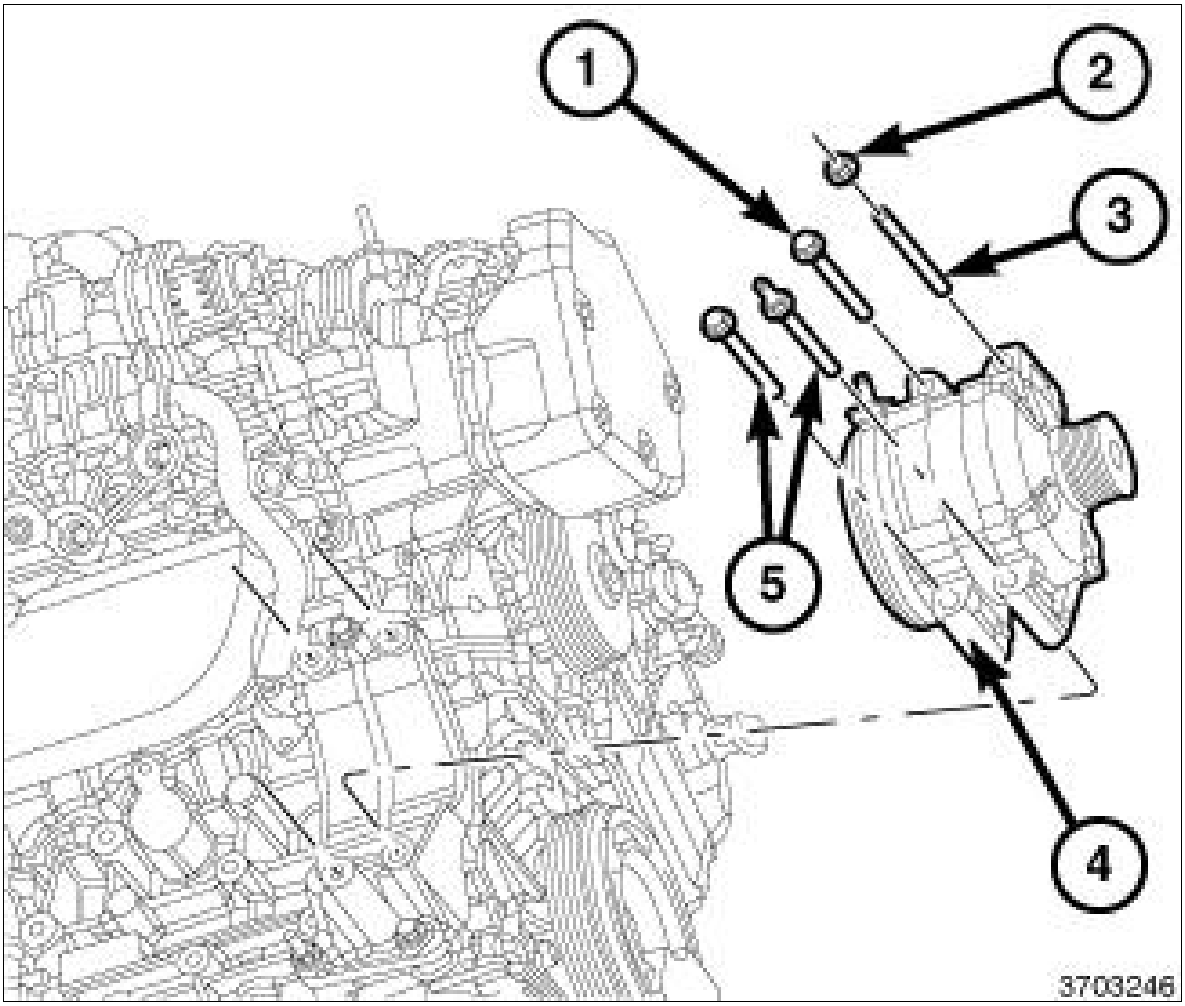

Courtesy of CHRYSLER GROUP, LLC

11. Remove the upper generator bolt (1), nut (2), and stud (3).
12. Remove the two lower bolts (5) and the generator (4).

GENERATOR > REMOVAL > 3.6L

Fig 1: Field Circuit, B+ Terminal Nut And Wire

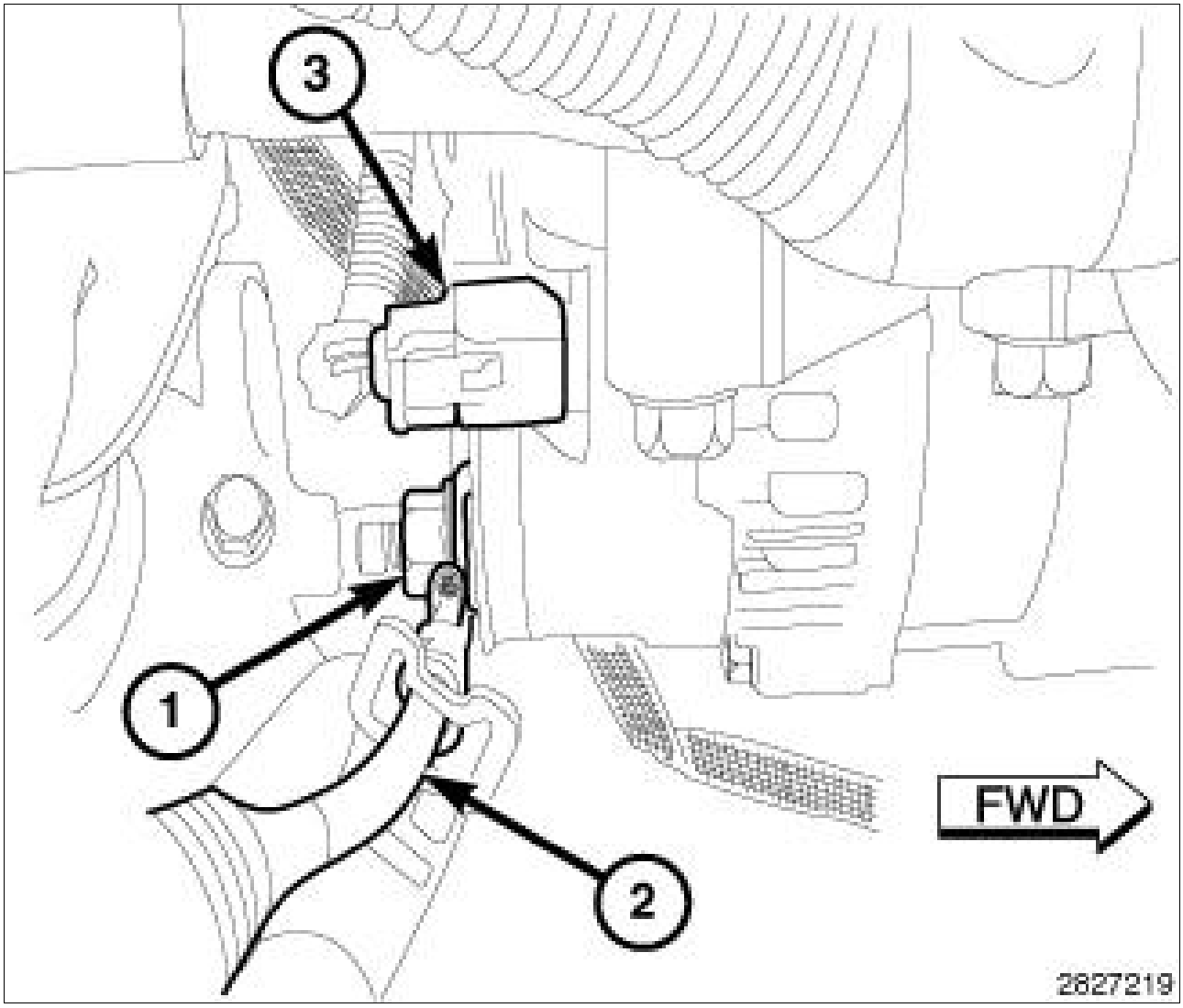

Courtesy of CHRYSLER GROUP, LLC

1. Disconnect and isolate the negative battery cable
2. Unplug the field circuit (3) from generator.
3. Remove the B+ terminal nut (1) and wire (2).

Fig 2: Front Generator Mounting Retainer & Generator

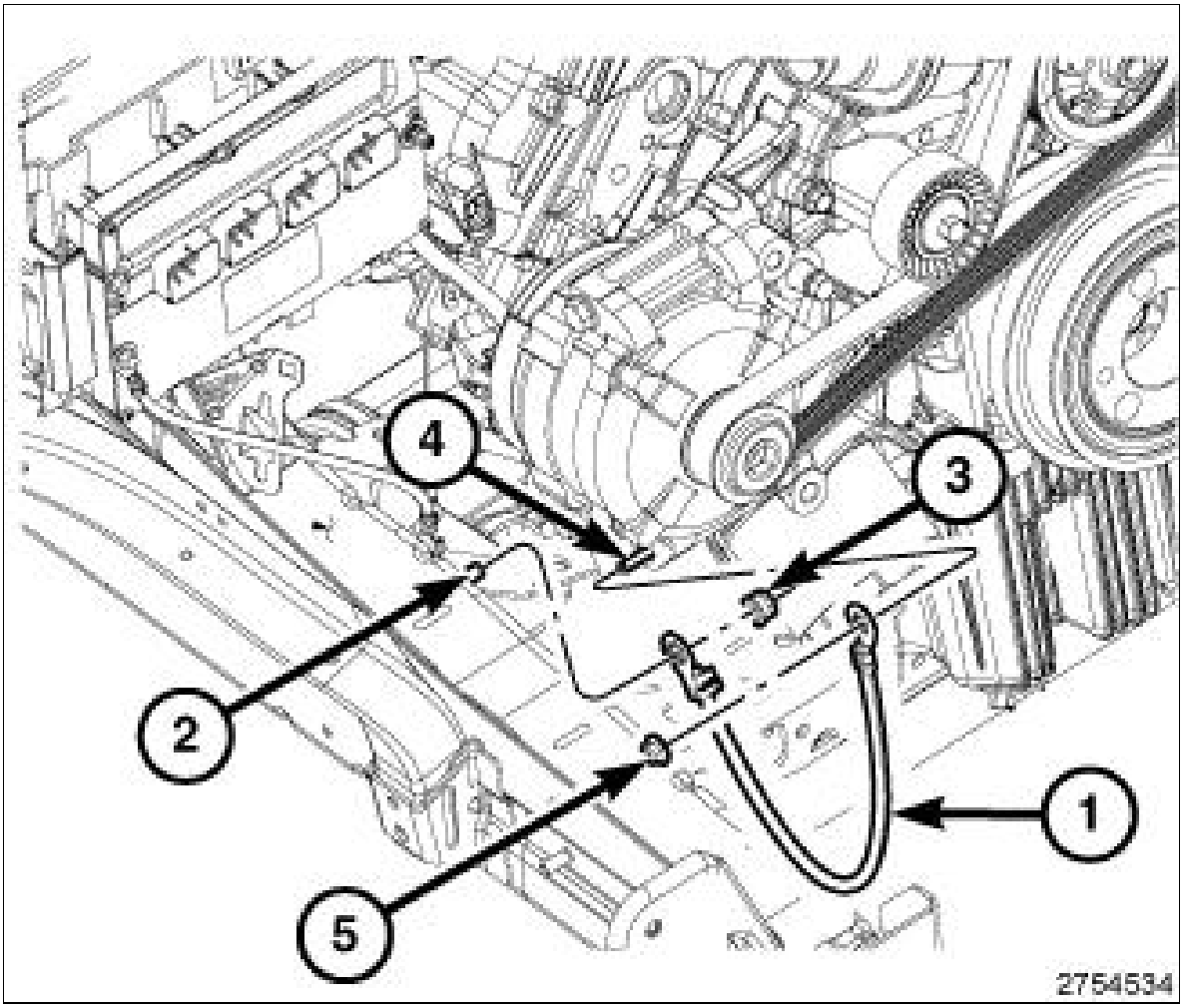

Courtesy of CHRYSLER GROUP, LLC

4. Remove the serpentine belt. Refer to BELT, SERPENTINE, REMOVAL .
5. Remove the lower front generator mounting retainer (5).
6. Remove the three mounting retainers.
7. Remove the generator from the vehicle.

GENERATOR > REMOVAL > 5.7L

WARNING:

Disconnect the negative cable from the battery before removing the battery output wire (B+ wire) from the generator. Failure to do so can result in injury or damage to the electrical system.

Fig 1: Serpentine Belt Routing

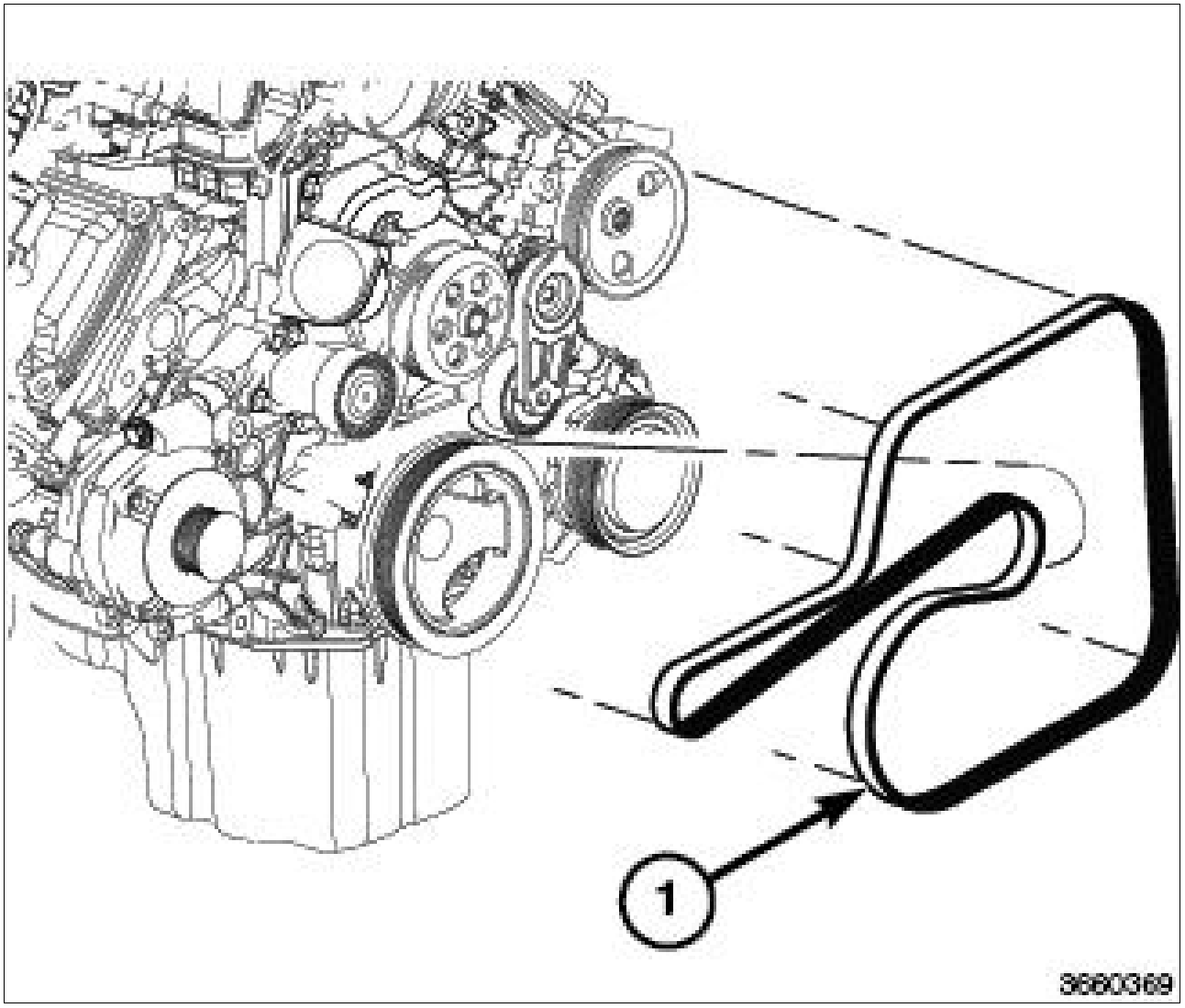

Courtesy of CHRYSLER GROUP, LLC

1. Disconnect and isolate the negative battery cable.
2. Remove the air cleaner body. Refer to BODY, AIR CLEANER, REMOVAL, 5.7L .
3. Remove the serpentine belt. Refer to BELT, SERPENTINE, REMOVAL .

Fig 2: Field Wire Connector, Upper And Lower Rear Generator Mounting Bolts & Lower Front Stud Nut Bolt

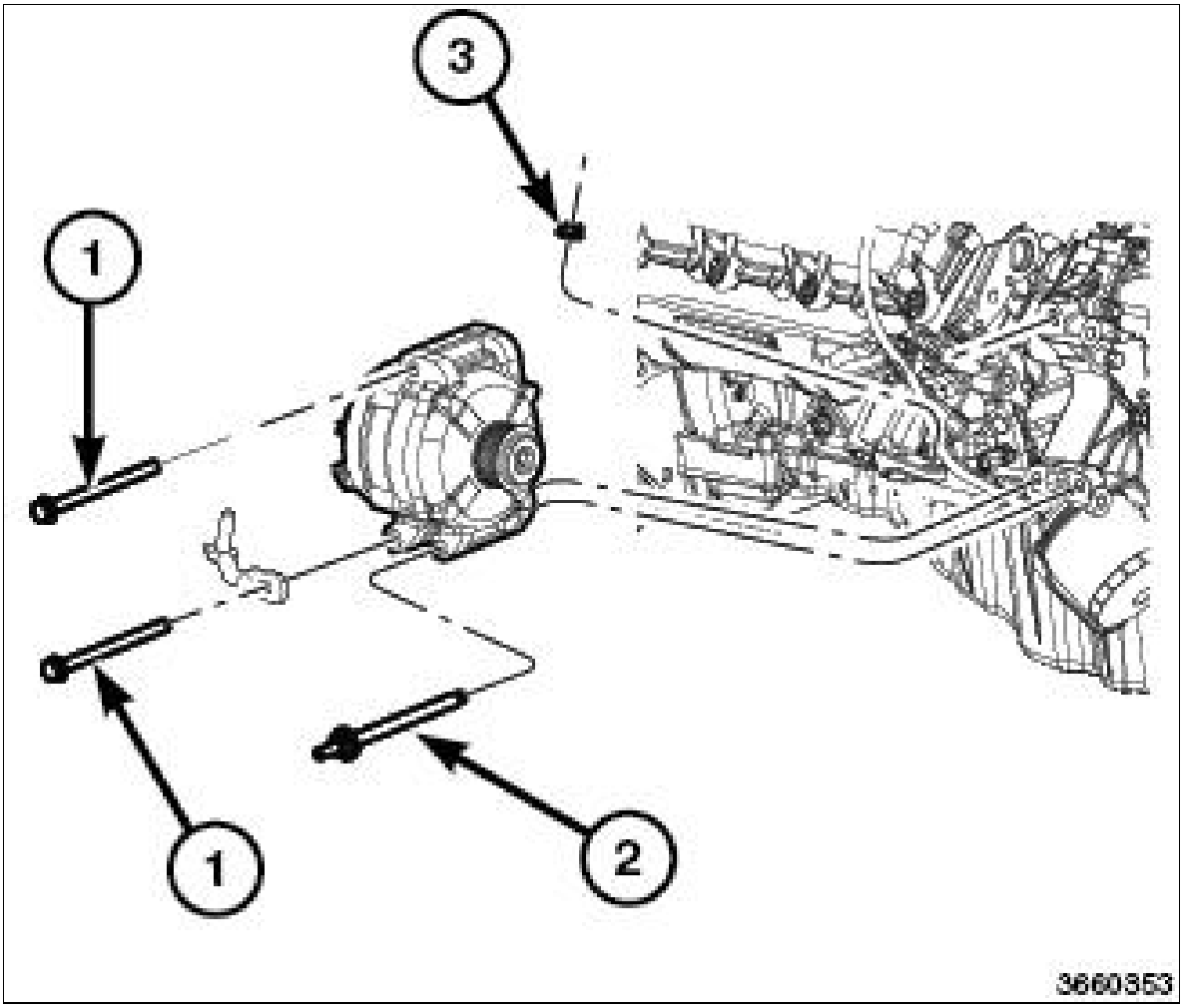

Courtesy of CHRYSLER GROUP, LLC

4. Unsnap the plastic insulator cap from the B+ output terminal.
5. Remove the B+ terminal mounting nut at the rear of the generator. Disconnect the terminal from the generator.
6. Disconnect the field wire connector (3) at the rear of the generator by pushing on the connector tab.
7. Remove the one upper and lower rear generator mounting bolts (1).

> *NOTE:*
>
> *Not required to lossen the bracket bolt, the generator will slide out.*

8. Remove the lower front stud nut bolt (2).
9. Remove the generator from vehicle.

GENERATOR > REMOVAL > 6.4L

WARNING:

Disconnect the negative cable from the battery before removing the battery output wire (B+ wire) from the generator. Failure to do so can result in injury or damage to the electrical system.

Fig 1: Serpentine Belt Routing

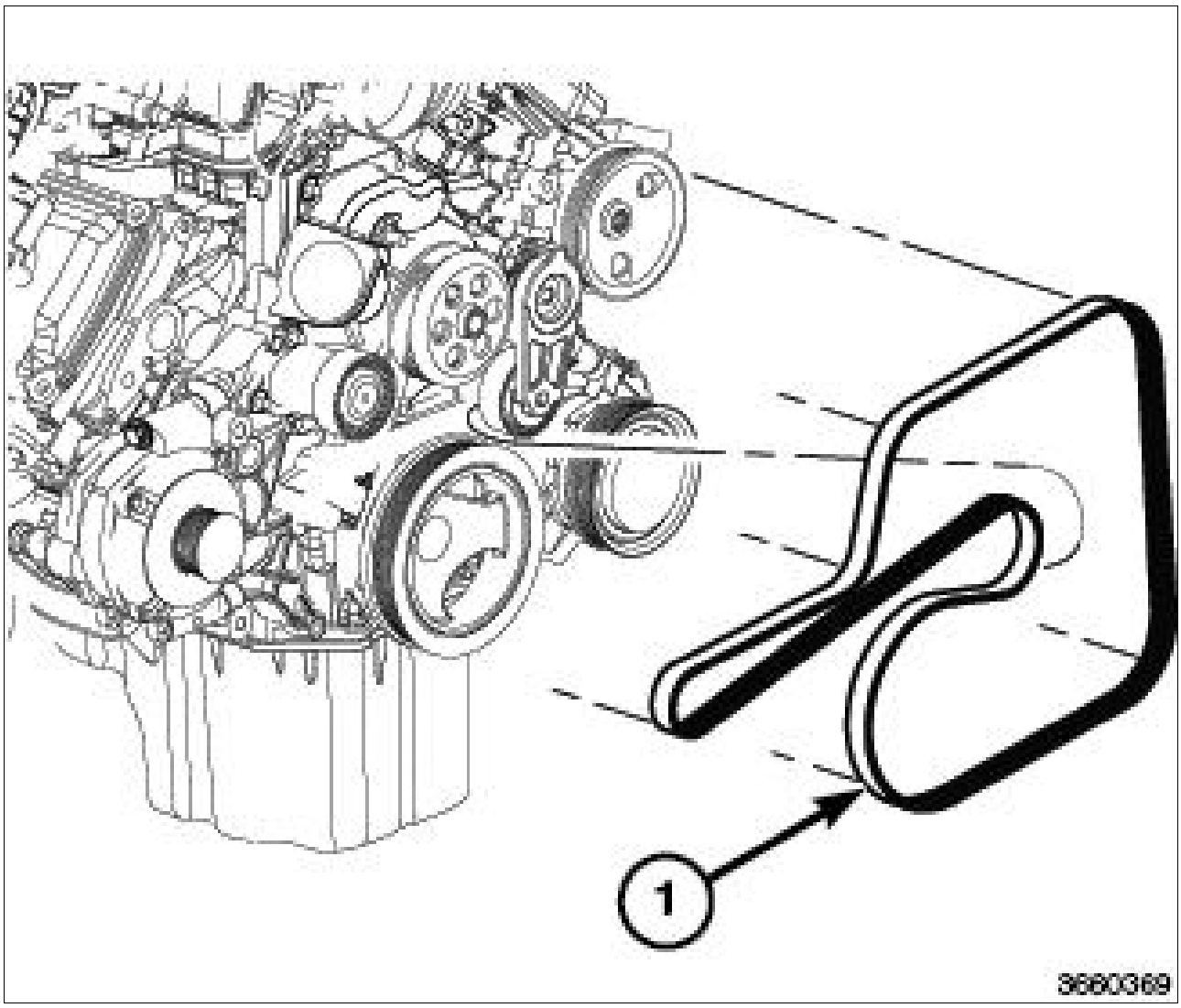

Courtesy of CHRYSLER GROUP, LLC

1. Disconnect and isolate the negative battery cable.
2. Remove the air cleaner body. Refer to BODY, AIR CLEANER, REMOVAL .
3. Remove the serpentine belt. Refer to BELT, SERPENTINE, REMOVAL .

Fig 2: Field Wire Connector, Upper And Lower Rear Generator Mounting Bolts & Lower Front Stud Nut Bolt

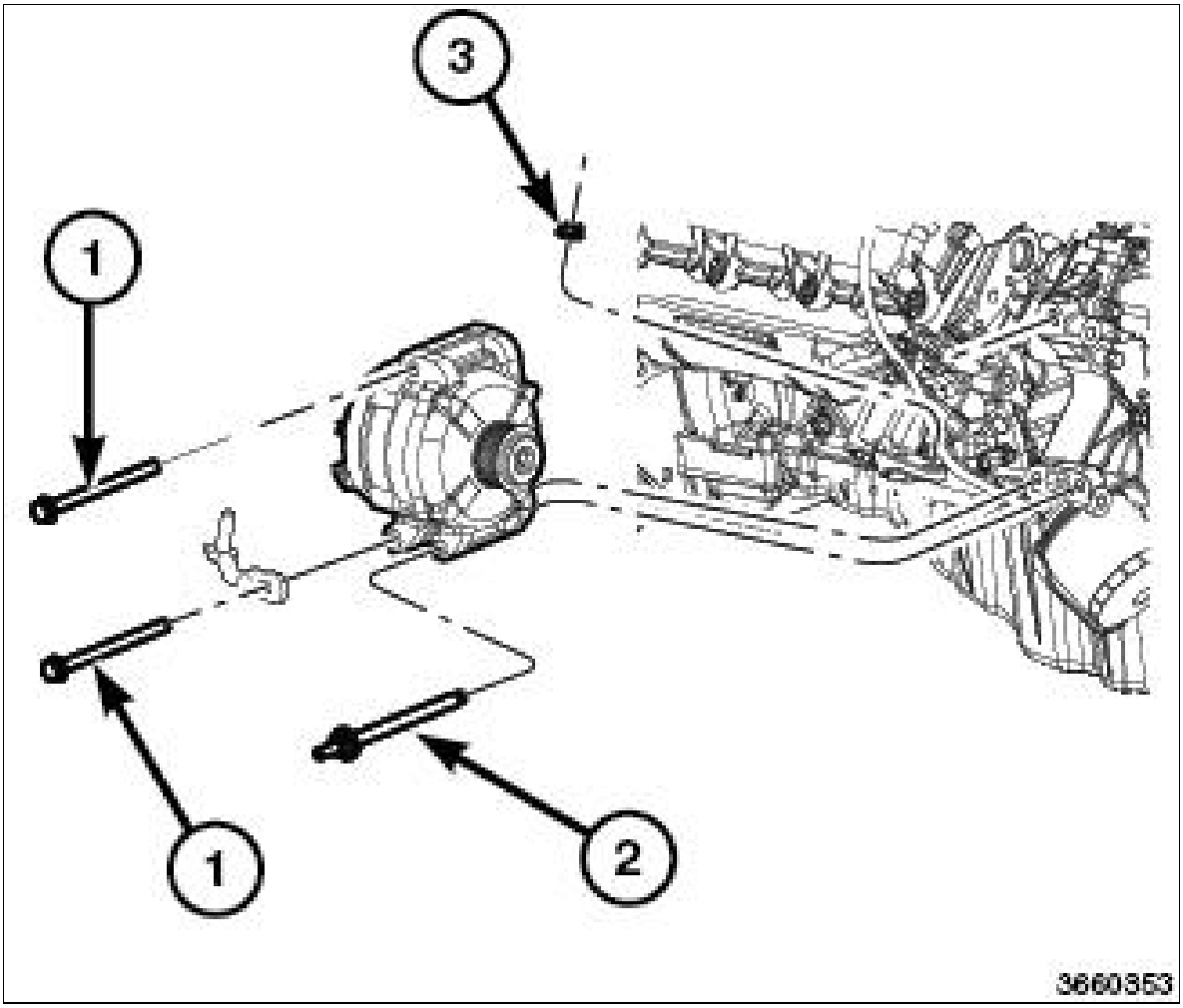

Courtesy of CHRYSLER GROUP, LLC

4. Unsnap the plastic insulator cap from the B+ output terminal.
5. Remove the B+ terminal mounting nut at the rear of the generator. Disconnect the terminal from the generator.
6. Disconnect the field wire connector (3) at the rear of the generator by pushing on the connector tab.
7. Remove the one upper and lower rear generator mounting bolts (1).

> *NOTE:*
>
> *Not required to lossen the bracket bolt, the generator will slide out.*

8. Remove the lower front stud nut bolt (2).
9. Remove the generator from vehicle.

GENERATOR > INSTALLATION > 3.0L DIESEL

Fig 1: Upper Generator Bolt, Nut & And Stud

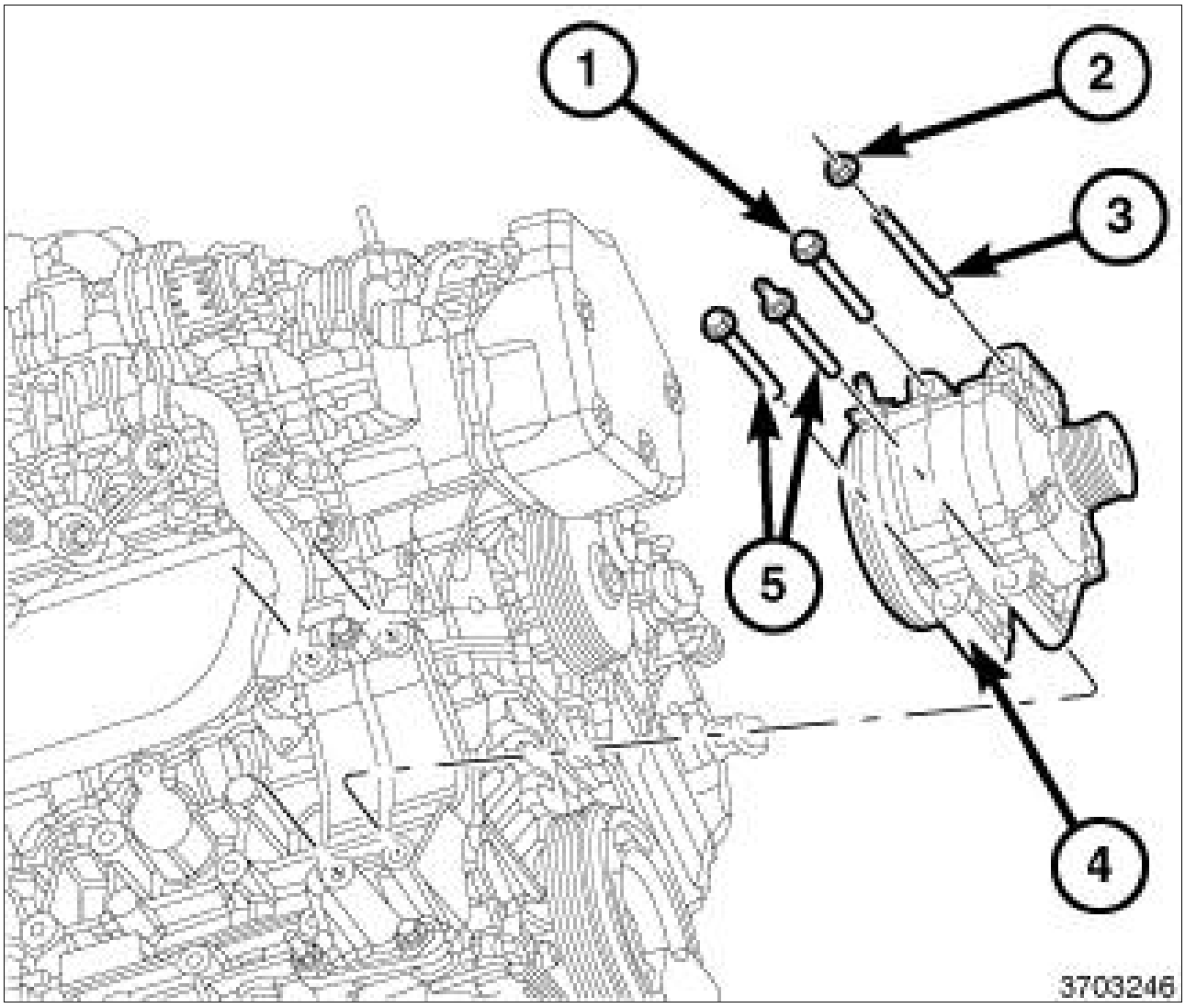

Courtesy of CHRYSLER GROUP, LLC

1. Position the generator (4) to the engine and install the upper generator bolt (1), stud (3) and nut (2). Tighten stud (3) to 12 N.m (106 in. lbs.).
2. Install the lower generator bolts (5) finger tight:
    1. Tighten bolts to 28 N.m (21 ft. lbs).
    2. Tighten nut to 28 N.m (21 ft. lbs).

Fig 2: Nut, Ground Cable, Field Generator Connector, Protective Cover, B+ Cable & B+ Nut

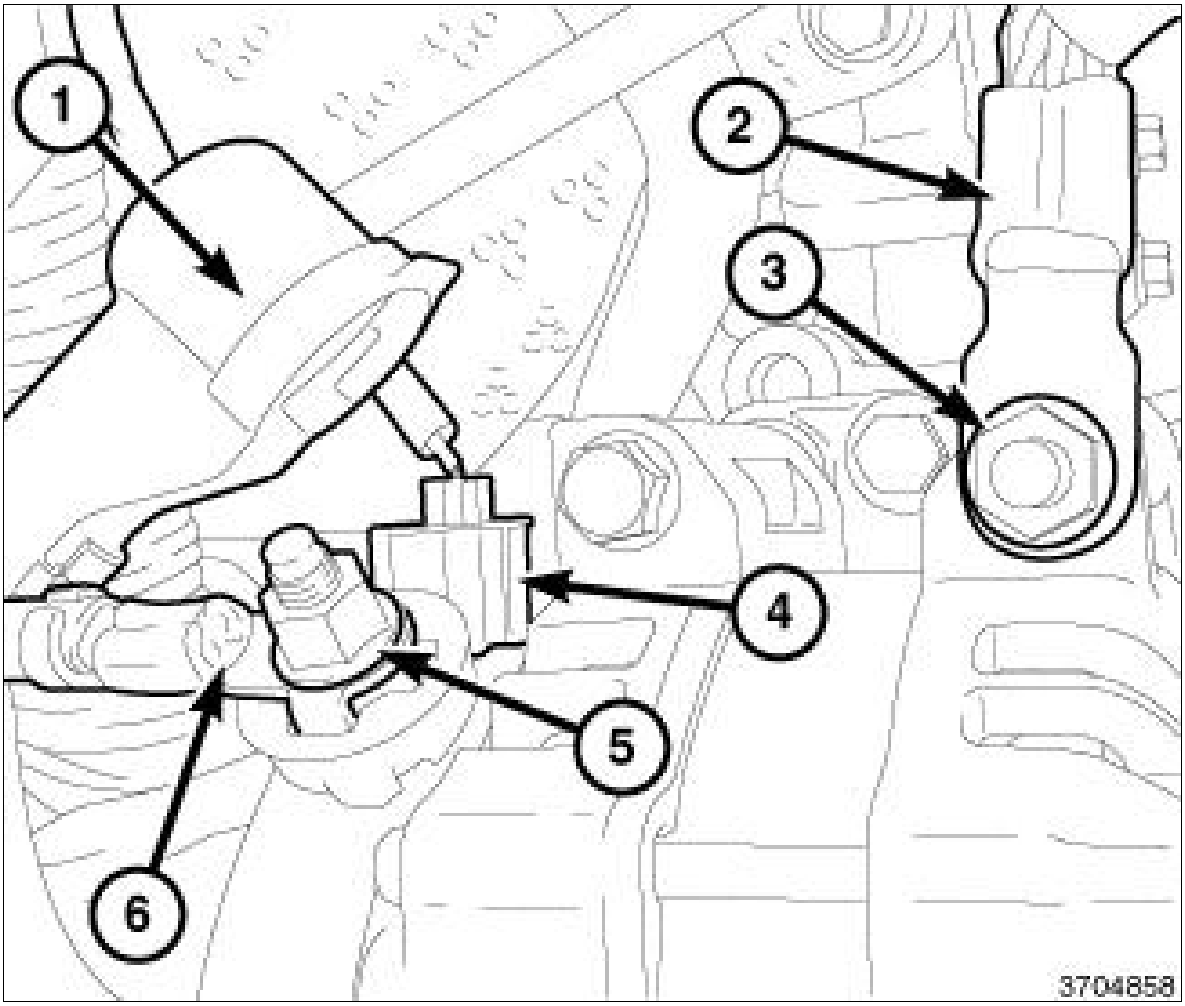

Courtesy of CHRYSLER GROUP, LLC

3. Install the B+ cable (6) and nut (5) to the generator. Tighten nut (5) to 11 N.m (97 in. lbs.).
4. Install the protective cover (1) from the B+ cable (6).
5. Connect the field generator connector (4).
6. Install the nut (3) and the ground cable (2) from the generator.
7. Install the serpentine belt. Refer to BELT, SERPENTINE, INSTALLATION .
8. Install the upper radiator at thermostat housing.
9. Install the lower radiator hose.
10. Install the cooling fan. Refer to FAN, COOLING, INSTALLATION .
11. Install the coolant recovery bottle. Refer to BOTTLE, COOLANT RECOVERY, INSTALLATION .
12. Connect the negative battery cable.

GENERATOR > INSTALLATION > 3.6L

Fig 1: Front Generator Mounting Retainer & Generator

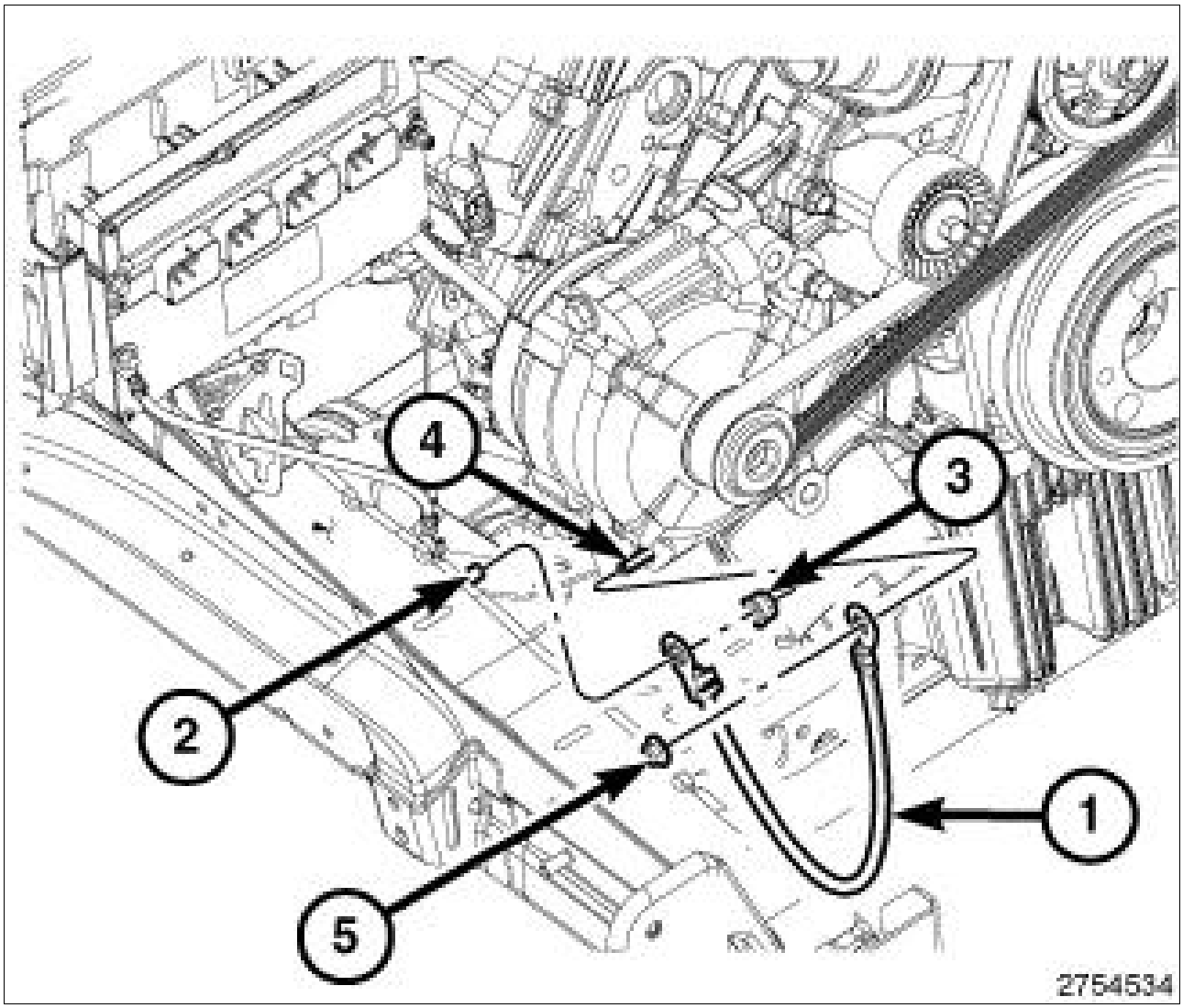

Courtesy of CHRYSLER GROUP, LLC

1. Install the generator into the vehicle.
2. Install the three mounting retainers.

   Tighten to 25 N.m (18 Ft. Lbs.).
3. Install ground wire on mounting stud (4).
4. Install the lower front generator mounting retainer (5).

   Tighten to 23 N.m (17 Ft. Lbs)
5. Install the serpentine belt. Refer to BELT, SERPENTINE, INSTALLATION .

Fig 2: Field Circuit, B+ Terminal Nut And Wire

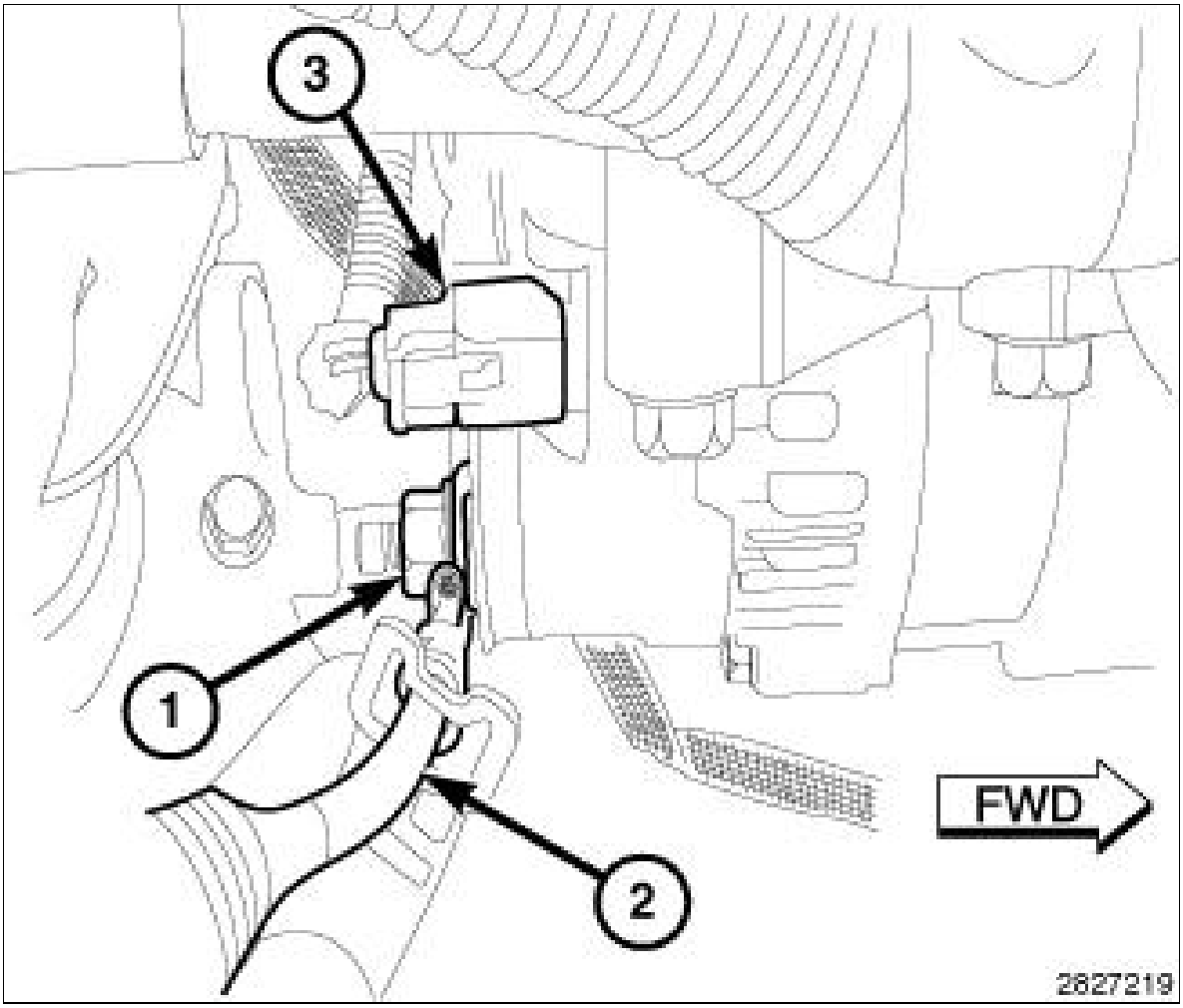

Courtesy of CHRYSLER GROUP, LLC

6. Install the B+ terminal to the generator stud.

   Tighten to 11 N.m (97 In. Lbs.).

7. Plug in the field circuit to the generator.
8. Connect the negative battery cable.

GENERATOR > INSTALLATION > 5.7L

Fig 1: Field Wire Connector, Upper And Lower Rear Generator Mounting Bolts & Lower Front Stud Nut Bolt

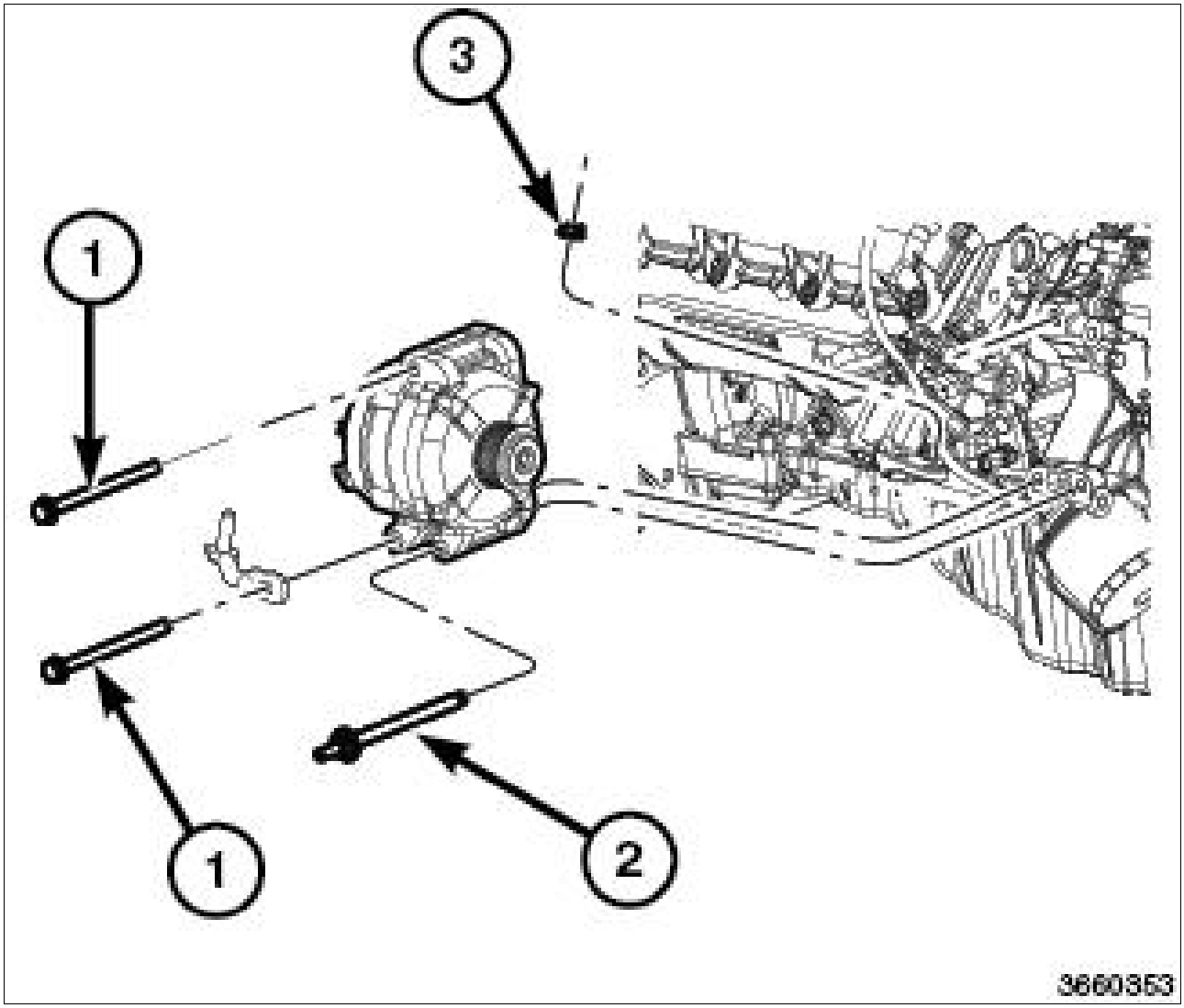

Courtesy of CHRYSLER GROUP, LLC

1. Position the generator to the engine.
2. Install the lower rear then upper mounting bolt (1).
3. Install the front lower stud nut bolt (2).

   Torque the bolts to 55 N.m (41 ft. lbs.).
4. Snap the field wire connector (3) into the rear of the generator.
5. Install the B+ terminal eyelet to the generator output stud.

   Tighten the mounting nut to 12 N.m (106 in. lbs.).

Fig 2: Serpentine Belt Routing

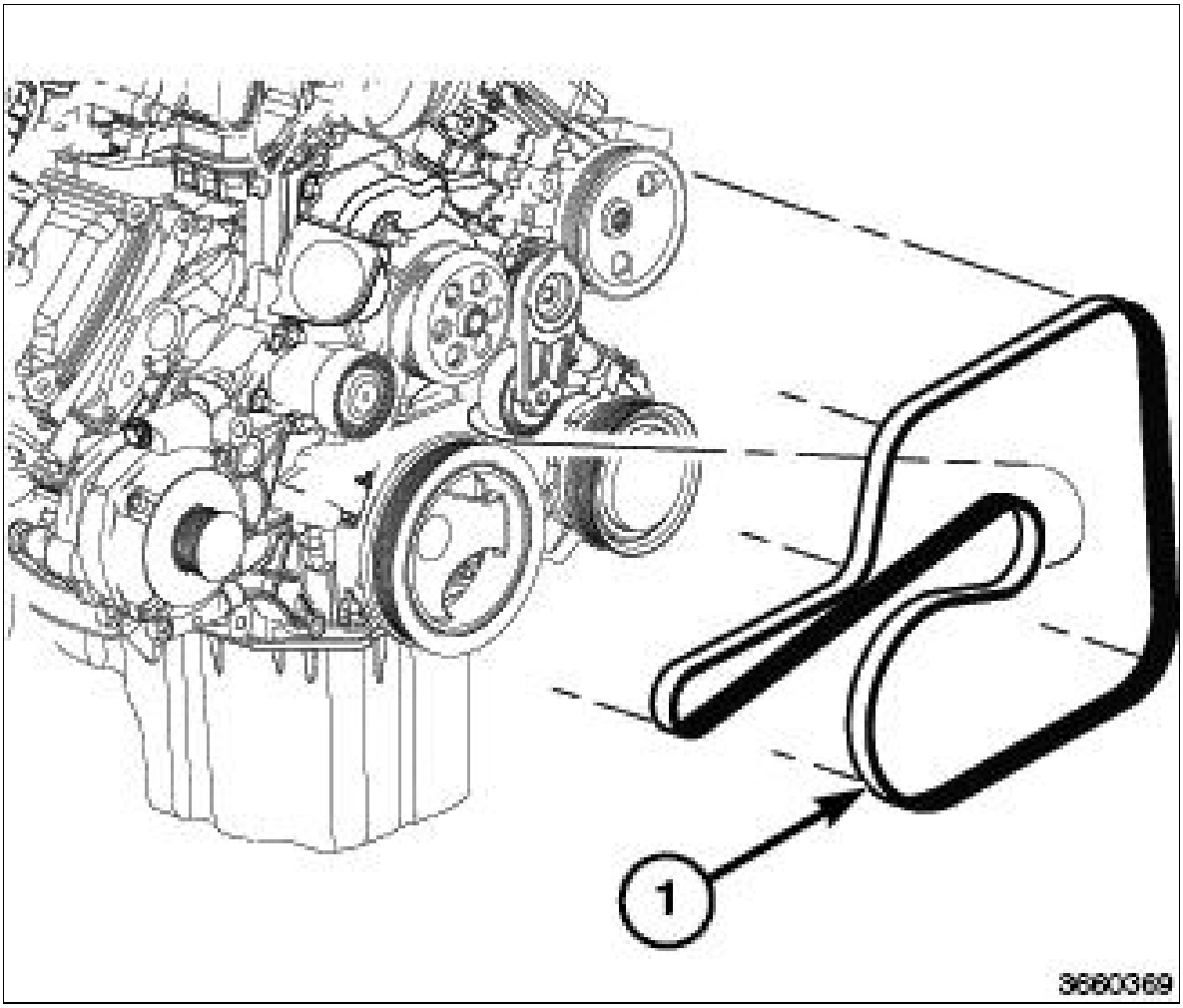

Courtesy of CHRYSLER GROUP, LLC

> ⚠ *CAUTION:*
>
> *Never force a belt over a pulley rim using a screwdriver. The synthetic fiber of the belt can be damaged.*

> ⚠ *CAUTION:*
>
> *When installing a serpentine accessory drive belt, the belt must be routed correctly. The water pump may be rotating in the wrong direction if the belt is installed incorrectly, causing the engine to overheat. Refer to belt routing label in engine compartment, or refer to ACCESSORY DRIVE .*

6. Install the serpentine belt. Refer to BELT, SERPENTINE, INSTALLATION .
7. Install the air cleaner body. Refer to BODY, AIR CLEANER, INSTALLATION, 5.7L .

8. Install the negative battery cable.

GENERATOR > INSTALLATION > 6.4L

Fig 1: Field Wire Connector, Upper And Lower Rear Generator Mounting Bolts & Lower Front Stud Nut Bolt

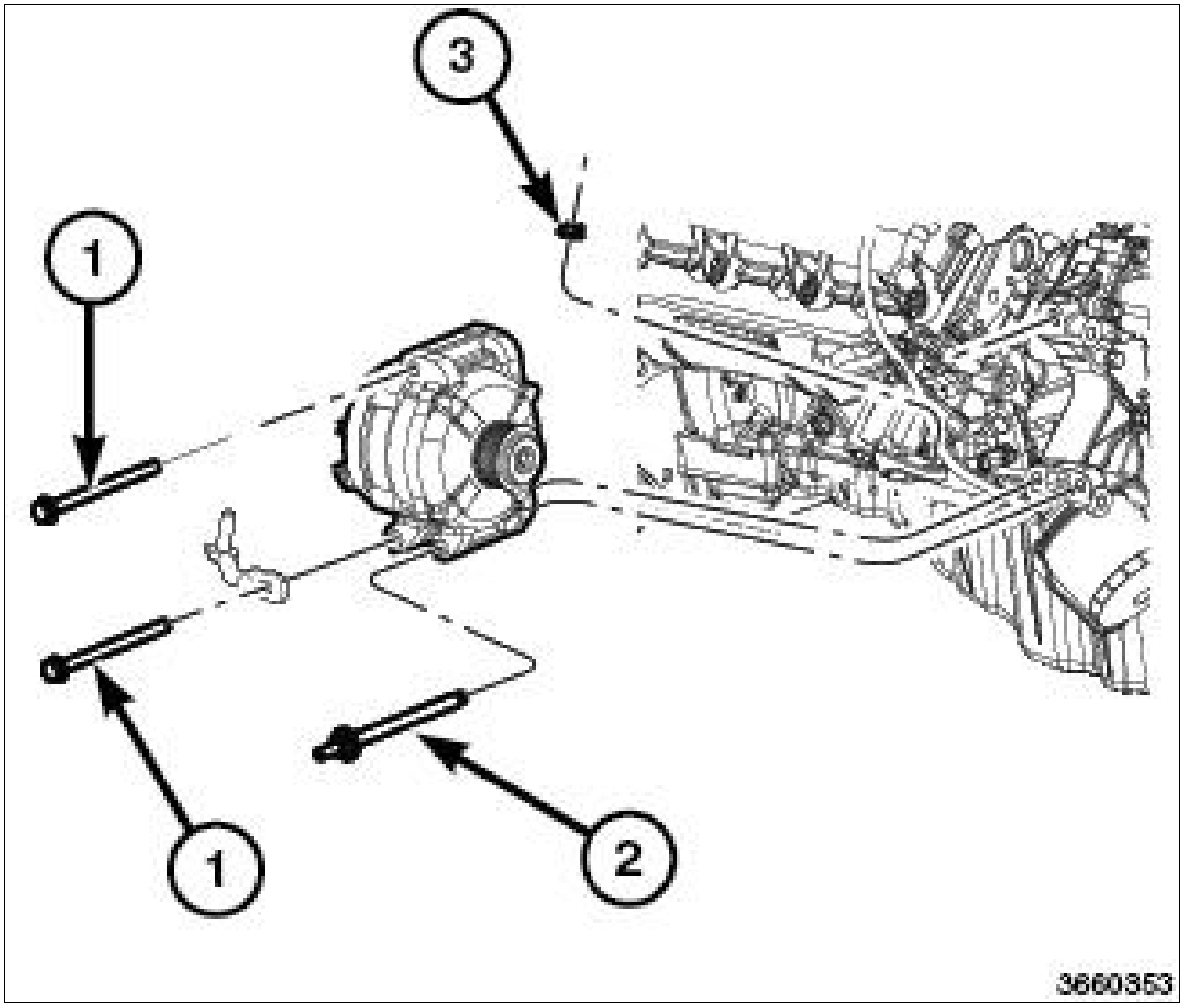

Courtesy of CHRYSLER GROUP, LLC

1. Position the generator to the engine.
2. Install the lower rear then upper mounting bolt (1).
3. Install the front lower stud nut bolt (2).

   Torque the bolts to 55 N.m (41 ft. lbs.).
4. Snap the field wire connector (3) into the rear of the generator.
5. Install the B+ terminal eyelet to the generator output stud.

Tighten the mounting nut to 12 N.m (106 in. lbs.).

Fig 2: Serpentine Belt Routing

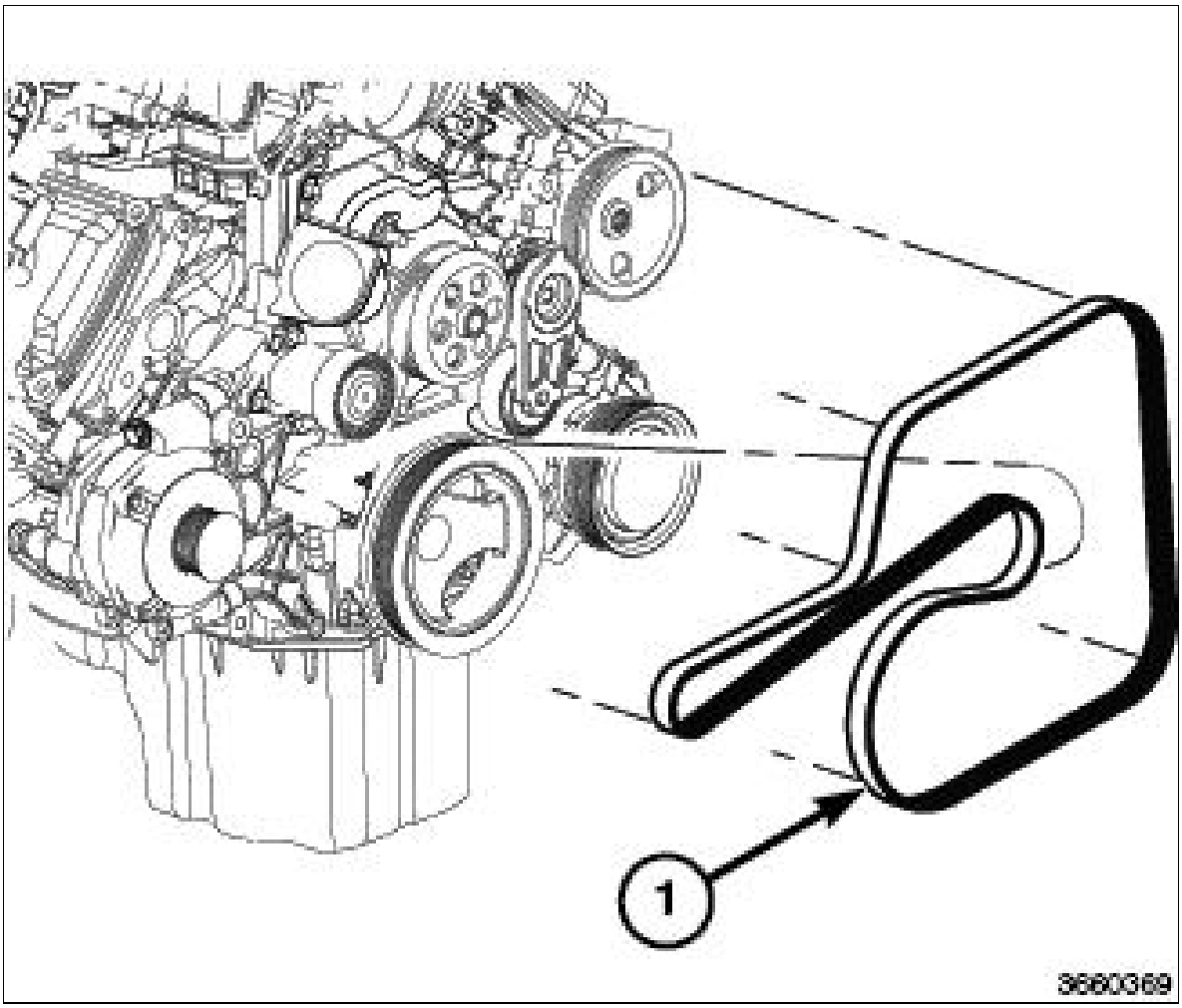

Courtesy of CHRYSLER GROUP, LLC

> ⚠ *CAUTION:*
>
> *Never force a belt over a pulley rim using a screwdriver. The synthetic fiber of the belt can be damaged.*

> ⚠ *CAUTION:*
>
> *When installing a serpentine accessory drive belt, the belt must be routed correctly. The water pump may be rotating in the wrong direction if the belt is installed incorrectly, causing the engine to overheat. Refer to belt routing label in engine compartment, or refer to ACCESSORY DRIVE .*

6. Install the serpentine belt. Refer to BELT, SERPENTINE, INSTALLATION .

7. Install the air cleaner body. Refer to BODY, AIR CLEANER, INSTALLATION .
8. Install the negative battery cable.

REGULATOR, VOLTAGE > DESCRIPTION > DESCRIPTION

The Electronic Voltage Regulator (EVR) is not a separate component. On gas engine vehicles it is actually a voltage regulating circuit located within the Powertrain Control Module (PCM). For the Common Rail Diesel (CRD) 3.0L engine, the EVR is located internal to the generator and communicates with the PCM via LIN bus. The EVR is not serviced separately in either instance. If replacement is necessary, the PCM (gas) or generator (CRD) must be replaced.

REGULATOR, VOLTAGE > OPERATION > OPERATION

The amount of DC current produced by the generator is controlled by EVR circuitry contained within the PCM. This circuitry is connected in series with the generators second rotor field terminal and its ground.

Voltage is regulated by cycling the battery voltage to control the strength of the rotor magnetic field. The EVR circuitry monitors system line voltage (B+) and battery temperature (refer to SENSOR, INTELLIGENT BATTERY (IBS) for more information). It then determines a target charging voltage. If sensed battery voltage is 0.5 volts or lower than the target voltage, the PCM energizes the field winding until sensed battery voltage is 0.5 volts above target voltage. A circuit in the PCM cycles the battery side of the generator field up to 100 times per second (100Hz), but has the capability to full field to achieve the target voltage. If the charging rate cannot be monitored (limp-in), a duty cycle of 25% is used by the PCM in order to have some generator output.

WARNING > GENERAL WARNINGS

WARNINGS provide information to prevent personal injury and vehicle damage. Below is a list of general warnings that should be followed any time a vehicle is being serviced.

WARNING:

Always wear safety glasses for eye protection.

WARNING:

Use safety stands anytime a procedure requires being under a vehicle.

WARNING:

Be sure that the ignition switch is always in the off position, unless the procedure requires it to be on.

WARNING:

Set the parking brake when working on any vehicle. An automatic transmission should be in park. A manual transmission should be in neutral.

WARNING:

Operate the engine only in a well-ventilated area.

WARNING:

Keep away from moving parts when the engine is running, especially the fan and belts.

WARNING:

To prevent serious burns, avoid contact with hot parts such as the radiator, exhaust

manifold(s), tail pipe, catalytic converter and muffler.

WARNING:

Do not allow flame or sparks near the battery. Gases are always present in and around the battery.

WARNING:

Always remove rings, watches, loose hanging jewelry and avoid loose clothing.

DESCRIPTION > CIRCUIT FUNCTIONS

All circuits in the wiring diagrams use an alpha/numeric code to identify the wire and its function. To identify which circuit code applies to a system, refer to CIRCUIT IDENTIFICATION CODE CHART .

NOTE:

This chart shows the main circuits only and does not show the secondary codes that may apply to some models.

CIRCUIT IDENTIFICATION CODE CHART

CIRCUIT CODE	FUNCTION
A	BATTERY FEED
B	BRAKE CONTROLS
C	CLIMATE CONTROLS
D	DIAGNOSTIC CIRCUITS
E	DIMMING ILLUMINATION CIRCUITS
F	FUSED CIRCUITS
G	MONITORING CIRCUITS (GAUGES)
H	MULTIPLE
I	NOT USED
J	OPEN

K	POWERTRAIN CONTROL MODULE
L	EXTERIOR LIGHTING
M	INTERIOR LIGHTING
N	MULTIPLE
O	NOT USED
P	POWER OPTION (BATTERY FEED)
Q	POWER OPTIONS (IGNITION FEED)
R	PASSIVE RESTRAINT
S	SUSPENSION/STEERING
T	TRANSMISSION/TRANSAXLE/ TRANSFER CASE
U	OPEN
V	SPEED CONTROL, WIPER/WASHER
W	WIPERS
X	AUDIO SYSTEMS
Y	TEMPORARY
Z	GROUNDS

DESCRIPTION > CIRCUIT INFORMATION

Each wire shown in the wiring diagrams contains a code which identifies the main circuit, a specific portion of the main circuit, gauge of wire, and color.

As an example, circuit **A 2 18 LB/YL** is decoded in the following manner:

Circuit Type:	**A** (Battery Feed Circuit)
Circuit Level:	**2** (Level Two)
Wire Size:	**18** (Eighteen Gauge Wire)
Wire Color:	**LB/YL** (Light Blue with Yellow Tracer)

WIRE COLOR CODE CHART

COLOR CODE	COLOR
BL	BLUE
BK	BLACK
BR	BROWN
DB	DARK BLUE

DG	DARK GREEN
GY	GRAY
LB	LIGHT BLUE
LG	LIGHT GREEN
OR	ORANGE
PK	PINK
RD	RED
TN	TAN
VT	VIOLET
WT	WHITE
YL	YELLOW
*	WITH TRACER

DIAGNOSIS AND TESTING > WIRING HARNESS TESTING > TROUBLESHOOTING TOOLS

When diagnosing a problem in an electrical circuit there are several common tools necessary. These tools are listed and explained below:

Voltmeter

The voltmeter is used to measure the electrical pressure or the voltage difference between two points. A voltmeter reads available voltages such as battery voltage, generator output voltage, and voltage drop across a component or conductor. A high voltage drop may indicate a high resistance in the circuit. The voltmeter can be used to locate an open circuit and circuits with an unintentional ground. Observing polarity, always connect a voltmeter in parallel to the existing circuit. If the leads are reversed on a digital multimeter, a minus sign appears in the display.

> ⚠ *CAUTION:*
>
> *Most of the electrical components used in today's vehicles are Solid State. When checking voltages in these circuits, use a meter with a 10 - megohm or greater impedance rating.*

Ohmmeter

The ohmmeter is used to measure the resistance of a component or the resistance between two points in a circuit in ohms, and to check a portion of the circuit for continuity. Some meters have a built-in tone to indicate that the circuit has continuity. No resistance indicates a short circuit or unintentional ground whereas resistance that is higher than specification indicates a high resistance in the circuit such as a loose, dirty or corroded connection, or a defective component. An "OL" reading means that the circuit or component had infinite resistance; an open circuit or defective component is indicated. Ohmmeters have an internal battery and must never be connected to a power circuit. Connecting an ohmmeter to a

powered circuit causes the meter fuse to blow and can damage its dry cell battery. Ohmmeters can be connected into a circuit without regard to polarity, unless the circuit contains a diode. When using an ohmmeter, the component or portion of the circuit must be isolated from other components or branches to avoid false readings.

> ⚠ *CAUTION:*
>
> *Most of the electrical components used in today's vehicles are Solid State. When checking resistance in these circuits use a meter with a 10 - megohm or greater impedance rating. In addition, make sure the power is disconnected from the circuit. Circuits that are powered up by the vehicle's electrical system can cause damage to the equipment and provide false readings.*

Ammeter

Amperage or current is the measure of the rate of electron "flow" in a circuit. It is measured in the unit of the Ampere, simply called an Amp (A). In order to measure current in a circuit, the circuit must be broken or opened, and an ammeter must be inserted in series (in-line) with the circuit so that all the current that flows through the circuit will have to go through the meter. When measuring current in this manner, it requires the meter be made part of the circuit, this type of measurement is more difficult than measuring either voltage or resistance.

When an ammeter is placed in series with a circuit, it ideally drops no voltage as current goes through it. In other words, it acts very much like a piece of wire, with very little resistance from one test probe to the other. Consequently, an ammeter will act as a short circuit if placed in parallel (across the terminals of) a substantial source of voltage. If this is done, a surge in current will result, potentially damaging the meter. Ammeters are generally protected from excessive current by means of a small fuse located inside the meter housing. If the ammeter is accidently connected across a substantial voltage source, the resultant surge in current will "blow" the fuse and render the meter incapable of measuring current until the fuse is replaced.

Consult the owner's manual of the particular model of meter you own for details on measuring current.

> ⚠ *CAUTION:*
>
> *Do not crank the engine or turn on any accessories that may draw more than 10 Amps. You may open the protective fuse in the multimeter.*

12-Volt Test Light

The 12-Volt test light when properly used, is one of the best and quickest pieces of test equipment available for troubleshooting 12-volt power systems. It's especially good for times when there are only two voltages, battery voltage and no voltage. For example, if you're checking to see if you have 12-volts on the Battery(+), the test light will immediately tell you if voltage is present or not.

With any test equipment, you should confirm that it's in good working order before you begin testing. For a test light, you have to have a voltage source. Connect the test light's ground clip to a good ground and touch it to a point where you believe that there is 12-volt supply. If the light doesn't light up, check the light by connecting it directly across the battery. Initially, make sure that you have the ground clip on the negative battery terminal. If you touch the probe to the positive terminal, the test light should light up. If it

doesn't and the battery is not completely dead, the test light isn't working properly. The test light must be in proper working order before any circuit testing can occur.

Jumper Wire

The sole purpose of the jumper wire is to complete a circuit. It is nothing more than a suitable length of insulated wire with terminals or connectors on each end. Jumper wires may be bought or made with various sizes of wire and styles of terminals including alligator clips, spade lugs and pin plugs, and should include a fuse device of some type for circuit and component protection. A jumper wire is used to verify a faulty conductor by substituting a known good one. It is jumped across a suspicious conductor in the circuit. If the circuit works with the jumper, but not without, there is an open somewhere in the area being jumped. A jumper wire is ONLY used to bypass a faulty conductor (including switches and connectors). NEVER bypass a load device with a jumper wire. The circuit needs the resistance from the load device and shorting across it causes high current flow, which could damage other components.

WARNING:

Never use a jumper wire across a load, such as a motor, connected between a battery feed and ground.

Fig 1: Probing Tool

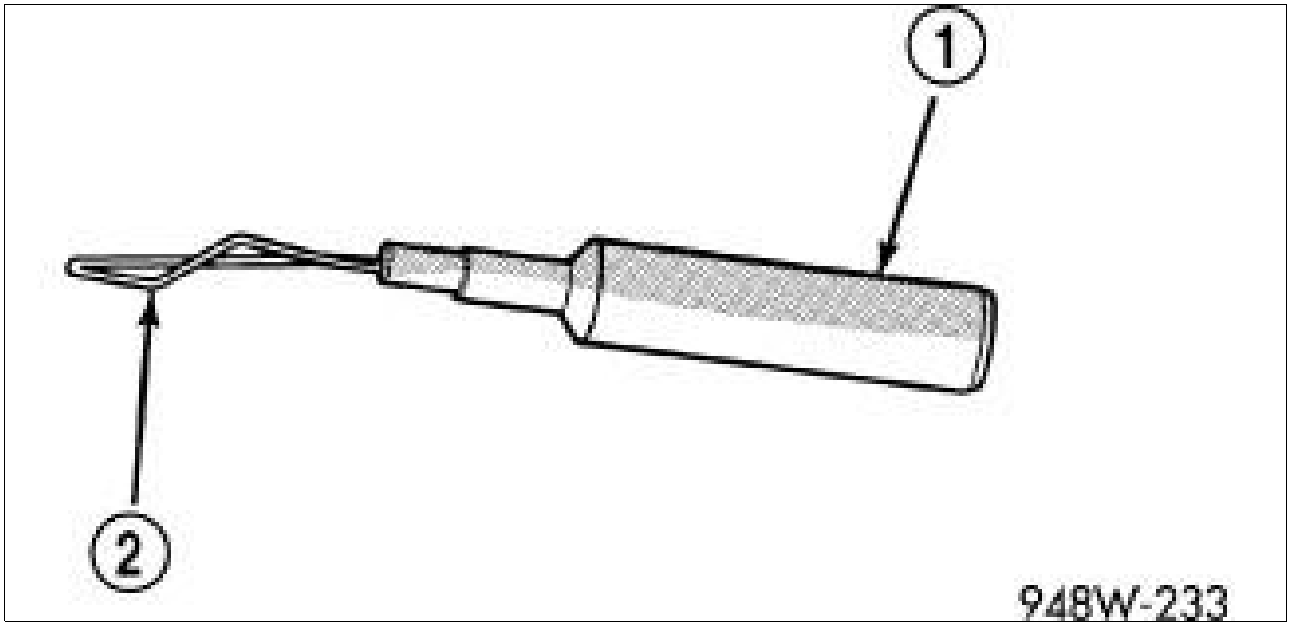

Courtesy of CHRYSLER GROUP, LLC

1 - SPECIAL TOOL 6801
2 - PROBING END

Probing Tools

These tools are used for probing terminals in connectors. Select the proper size tool from Special Tool Package (special tool #6807, Terminal Tools) and insert the probing end (2) into the terminal being tested. Use the other end of the tool (1) to insert the meter probe.

DIAGNOSIS AND TESTING > WIRING HARNESS TESTING > INTERMITTENT AND POOR CONNECTIONS

Most intermittent electrical problems are caused by faulty electrical connections or wiring. It is also possible for a sticking component or relay to cause a problem.

Before condemning a component or wiring assembly, check the following items:

- Connectors are fully seated
- Spread terminals, or terminal push out
- Terminals in the wiring assembly are fully seated into the connector/component and locked into position
- Dirt or corrosion on the terminals. Any amount of corrosion or dirt could cause an intermittent problem
- Damaged connector/component casing exposing the item to dirt or moisture
- Wire insulation that has rubbed through causing a short to ground
- Some or all of the wiring strands broken inside of the insulation

DIAGNOSIS AND TESTING > WIRING HARNESS TESTING > TROUBLESHOOTING WIRING PROBLEMS

When troubleshooting wiring problems there are six steps which can aid in the procedure. The steps are listed and explained below. Always check for non-factory items added to the vehicle before doing any diagnosis. If the vehicle is equipped with these items, disconnect them to verify these add-on items are not the cause of the problem.

Perform the following Six Step Diagnosis Process:

1. Verify the problem.
2. Verify any related symptoms. Do this by performing operational checks on components that are in the same circuit (Refer to the appropriate wiring diagrams).
3. Analyze the symptoms. Use the wiring diagrams to determine what the circuit is doing, where the problem most likely is occurring and where the diagnosis will continue.
4. Isolate the problem area.
5. Repair the problem area.
6. Verify the proper operation. For this step, check for proper operation of all items on the repaired circuit (Refer to the appropriate wiring diagrams).

NOTE:

The Six Step Diagnosis Process used by Chrysler is a time proven process. The basic concepts of this process have been used by others for problem solving for many years. The successful application of this process requires a solid understanding of the conditions that affect each step, and when its time to advance to the next step. These conditions based on experience formulate what is known as "Best Practices".

STANDARD PROCEDURE > CHECK A 12-VOLT FUSED BATTERY B(+) CIRCUIT FOR VOLTAGE > THEORY OF OPERATION

Fig 1: 12-Volt Fused Battery B(+) Circuit Diagram

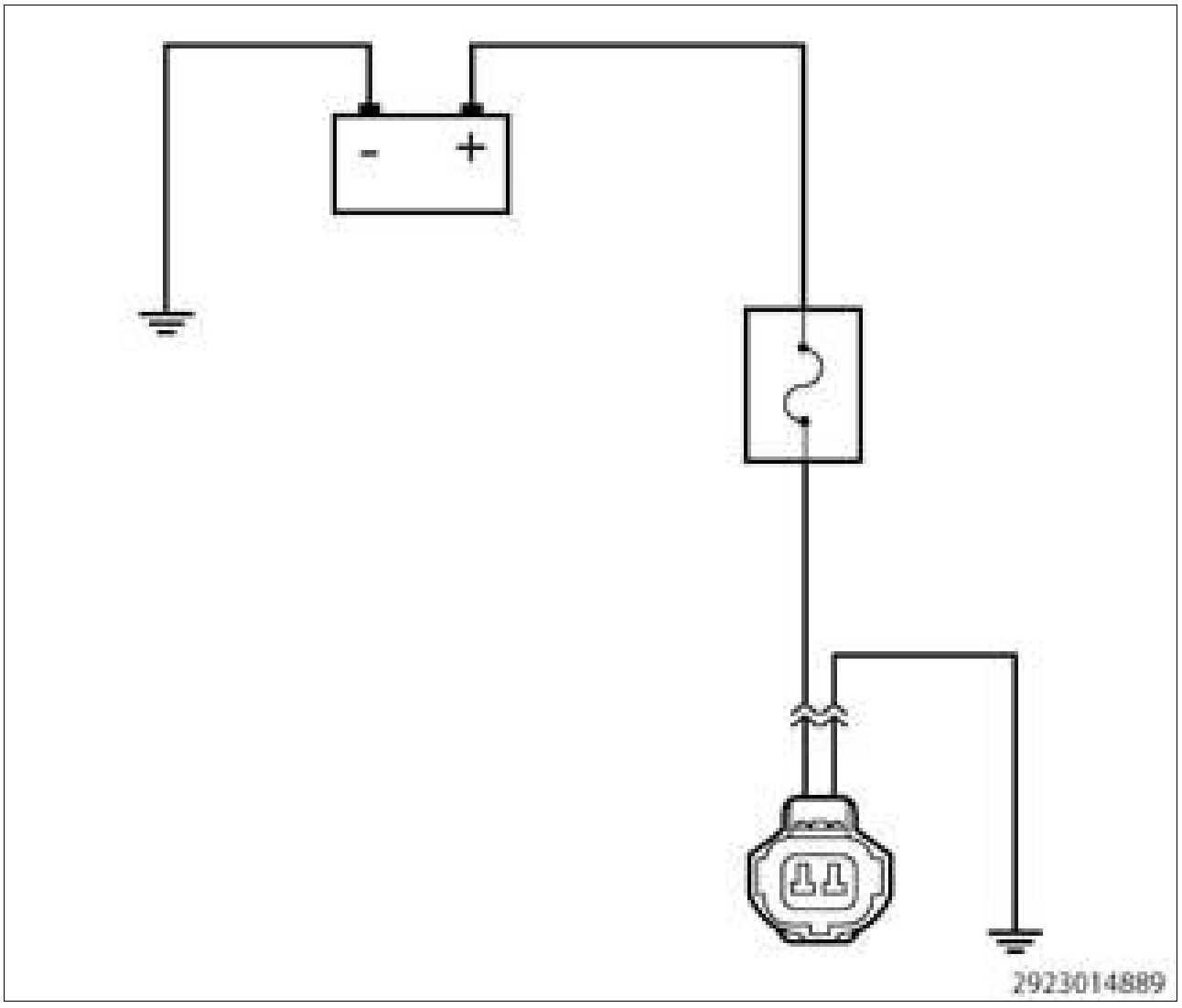

Courtesy of CHRYSLER GROUP, LLC

The purpose of the following procedure(s) is to demonstrate how to check the voltage of a 12-volt fused battery B(+) circuit with a test light or voltmeter.

NOTE:

The circuit shown in illustration is an example, and is intended for demonstrational purpose only.

The following are circuit tests covered in this procedure:

- Testing 12-Volt Fused Battery B(+) Circuit Voltage With A Test Light
- Testing 12-Volt Fused Battery B(+) Circuit Voltage With A Voltmeter

NOTE:

Perform the following test using a known good test light or functioning multimeter.

Below is a list of possible causes that could be related to a No Voltage condition.

Possible Causes
OPEN CIRCUIT (CHAFED, PIERCED, PINCHED OR BROKEN WIRES)
OPEN FUSE
OPEN IN-LINE CONNECTOR (BENT, PUSHED OUT OR CORRODED TERMINALS)

STANDARD PROCEDURE > CHECK A 12-VOLT FUSED BATTERY B(+) CIRCUIT FOR VOLTAGE > DIAGNOSTIC TEST

1. **TESTING 12-VOLT FUSED BATTERY B(+) CIRCUIT VOLTAGE WITH A TEST LIGHT**

Fig 1: Testing 12-Volt Fused Battery B(+) Circuit Voltage With Test Light

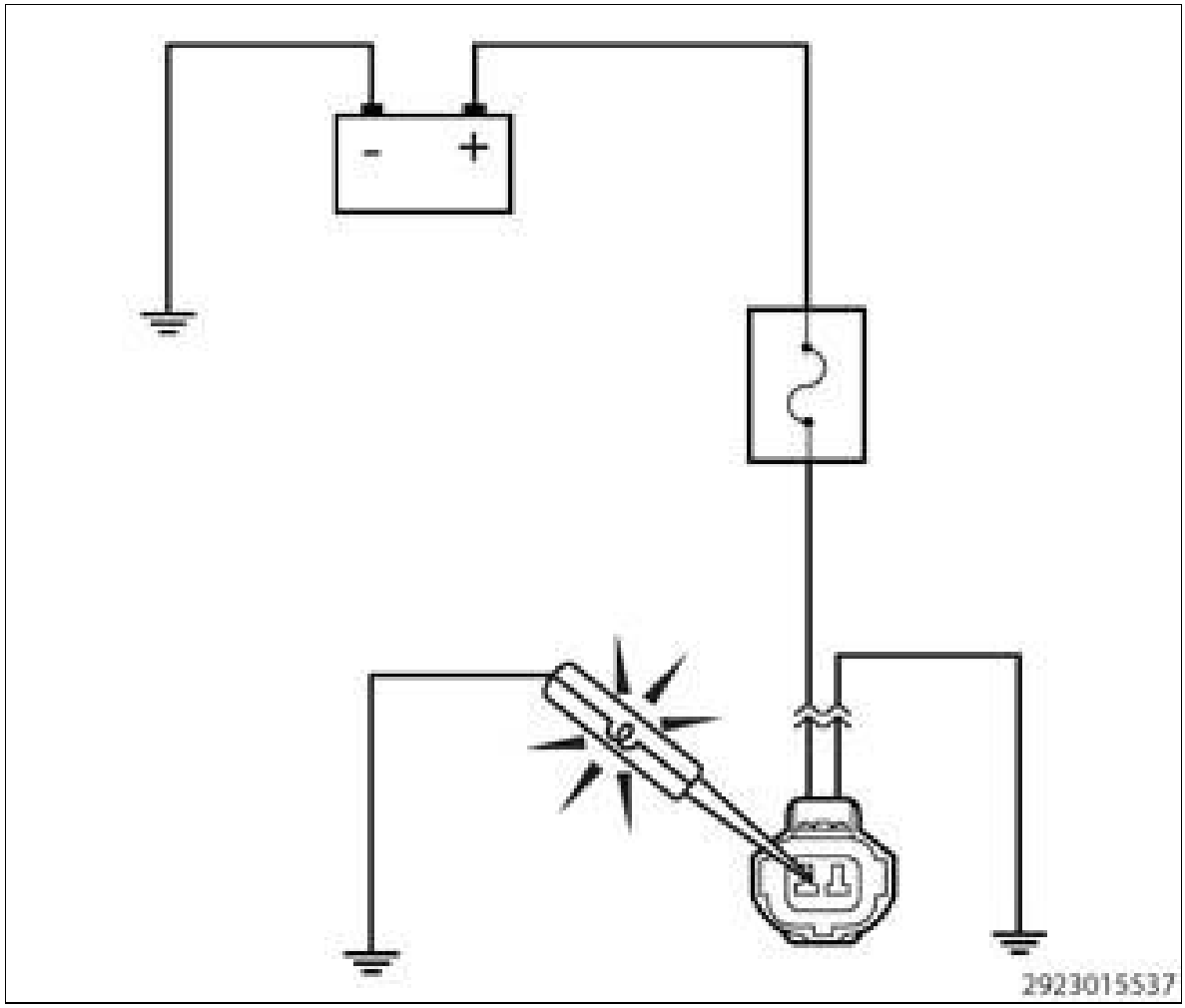

Courtesy of CHRYSLER GROUP, LLC

NOTE:

Before testing any circuits, first verify the 12-volt test light is operating properly. Connect the 12-volt test light to battery ground or to any other known good ground. Touch the lead of the test light to Battery(+). If the test light is operational, it should illuminate brightly.

1. Turn the ignition off.
2. Disconnect the wire harness connector from the component that is being tested.

NOTE:

Check connectors - Clean/repair as necessary.

3. At this time, leave all in-line connectors connected.

4. Connect the 12-volt test light to a known good ground.
5. Use the test light lead to carefully probe the Battery or Ignition voltage circuit in the harness connector.
6. First check with the ignition off, next check with the ignition on, and lastly check while cranking the engine.

   Does the test light illuminate brightly?

   Yes

   1. The circuit is not open at this time or the condition that originally caused the open may not be present at this time. Continue to monitor the test light and wiggle the wire harness and connectors to check for an intermittent open or excessive resistance condition.
   2. Use the wiring diagram as a guide to trace the circuits and look for any in-line connectors where the open could occur intermittently.
   3. Look for any chafed, pierced, pinched, or partially broken wires.
   4. Look for broken, bent, pushed out or corroded terminals. Verify that there is good pin to terminal contact in the related wire harness connectors.
   5. Perform any Technical Service Bulletins (TSBs) that may apply.

   No

   1. Repair the open in the circuit. Use the wiring diagram as a guide to trace the circuit and look for any in-line connectors where the open could occur.
   2. One method to help isolate the open is to disconnect any in-line connectors and measure the resistance from one side of the in-line connector to the matching component harness connector. If the open goes away, the open is on the other side of the in-line connector.
   3. If this is a fused circuit, make sure to inspect the fuse. If the fuse is open, check the circuit for a short to ground before installing a new fuse. The circuit may have a short to ground causing the fuse to open. This short to ground could be in the wire harness or in one of the components the circuit is supplying voltage to.

2. **TESTING 12-VOLT FUSED BATTERY B(+) CIRCUIT VOLTAGE WITH A VOLTMETER**

Fig 2: Testing 12-Volt Fused Battery B(+) Circuit Voltage With Voltmeter

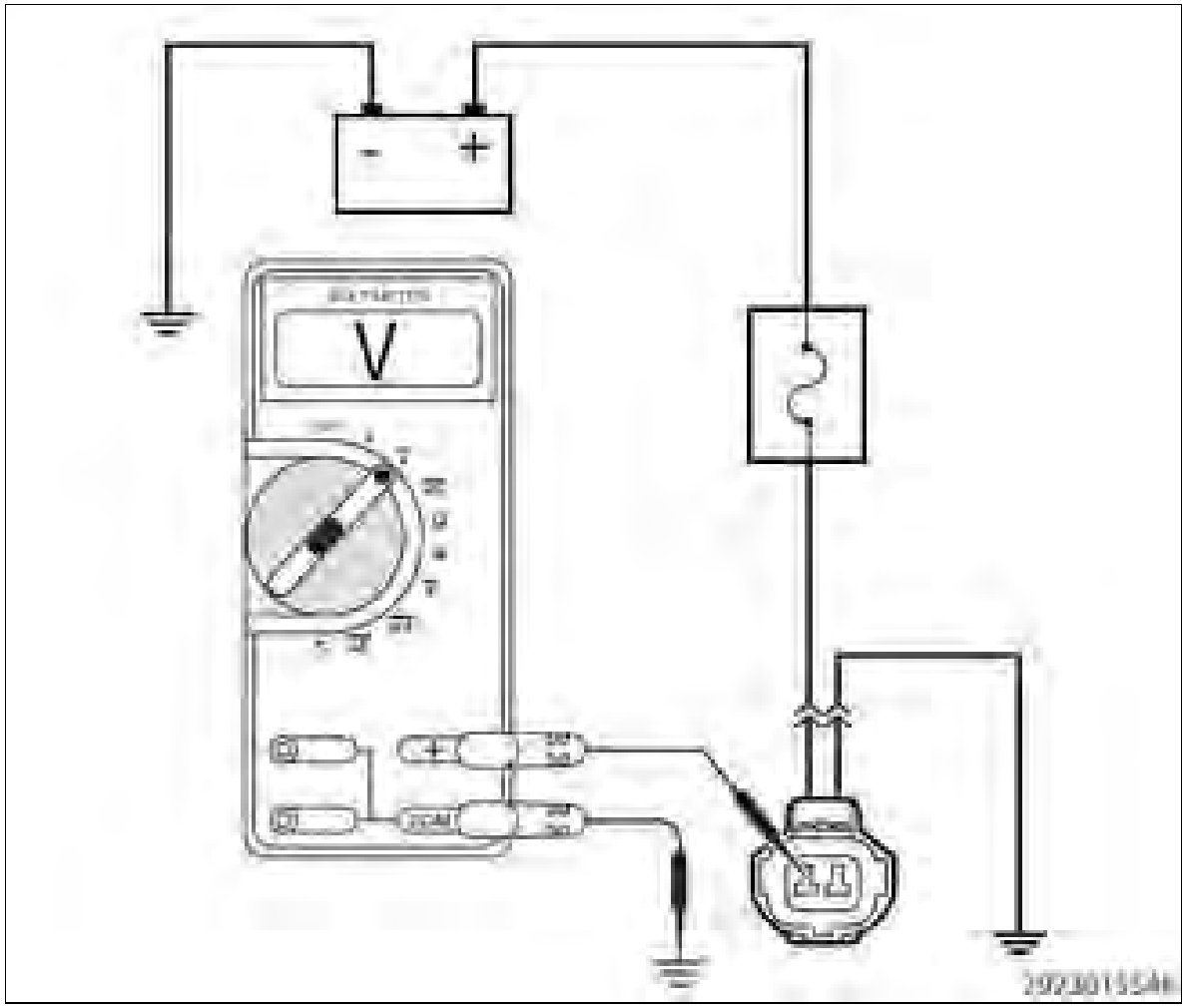

Courtesy of CHRYSLER GROUP, LLC

NOTE:

The connector displayed in the graphics are only an example.

1. Turn the ignition off.
2. Disconnect the wire harness connector from the component that is being tested.

NOTE:

Check connectors - Clean/repair as necessary.

3. At this time leave all in-line connectors connected.
4. Use a multimeter set to measure DC voltage.

5. Connect the ground lead of the meter to a known good ground.
6. Use the positive lead of the multimeter and probe the circuit that is being checked for voltage.
7. Ignition on, engine not running.

   Is the voltage within specifications for this circuit?

   Yes

   1. The circuit is functioning properly or the condition that originally caused the open or short may not be present at this time. Continue to measure the voltage and wiggle the wire harness and connectors while checking for an intermittent open or short.
   2. Use the wiring diagram as a guide to trace the circuits and look for any in-line connectors where the short could occur intermittently.
   3. Look for any chafed, pierced, pinched, or partially broken wires.
   4. Look for broken, bent, pushed out or corroded terminals. Verify that there is good pin to terminal contact in the related wire harness connectors.
   5. Perform any Technical Service Bulletins (TSBs) that may apply.

   No

   1. Repair the open or short to ground in the circuit. Use the wiring diagram as a guide to trace the circuits and look for any in-line connectors where the short could occur.
   2. One method to help isolate the open or short is to disconnect any in-line connectors that the circuit being checked runs through and check for the voltage again. If the voltage is present, the open or short is on the other side of the in-line connector.

STANDARD PROCEDURE > CHECK A 12-VOLT SWITCHED BATTERY B(+) CIRCUIT FOR VOLTAGE > THEORY OF OPERATION

Fig 1: 12-Volt Switched Battery B(+) Circuit Diagram

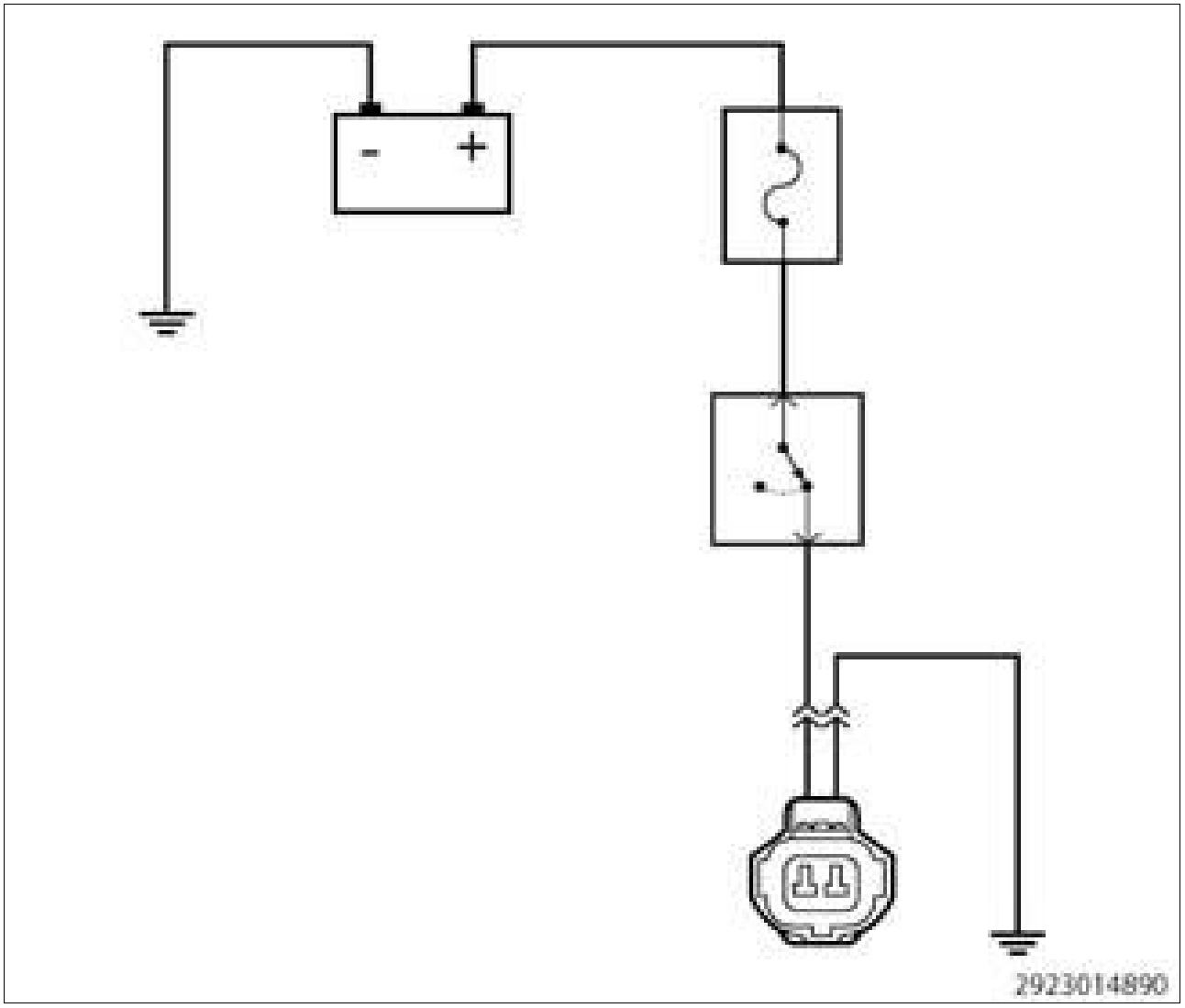

Courtesy of CHRYSLER GROUP, LLC

The purpose of the following procedure is to demonstrate how to check the voltage of a 12-Volt switched battery B(+) circuit with a test light or voltmeter.

NOTE:

The circuit shown in illustration is an example, and is intended for demonstrational purpose only.

The following are circuit tests covered in this procedure:

- Testing 12-Volt Switched Battery B(+) Circuit Voltage With A Test Light
- Testing 12-Volt Switched Battery B(+) Circuit Voltage With A Voltmeter

NOTE:

Perform the following test using a known good test light or functioning multimeter.

Below is a list of possible causes that could be related to a No Voltage condition.

Possible Causes
OPEN CIRCUIT (CHAFED, PIERCED, PINCHED OR BROKEN WIRES)
OPEN FUSE
FAULTY SWITCH
OPEN IN-LINE CONNECTOR (BENT, PUSHED OUT OR CORRODED TERMINALS)

STANDARD PROCEDURE > CHECK A 12-VOLT SWITCHED BATTERY B(+) CIRCUIT FOR VOLTAGE > DIAGNOSTIC TEST

1. **TESTING 12-VOLT SWITCHED BATTERY B(+) CIRCUIT VOLTAGE WITH A TEST LIGHT**

   Fig 1: Testing 12-Volt Switched Battery B(+) Circuit Voltage With Test Light

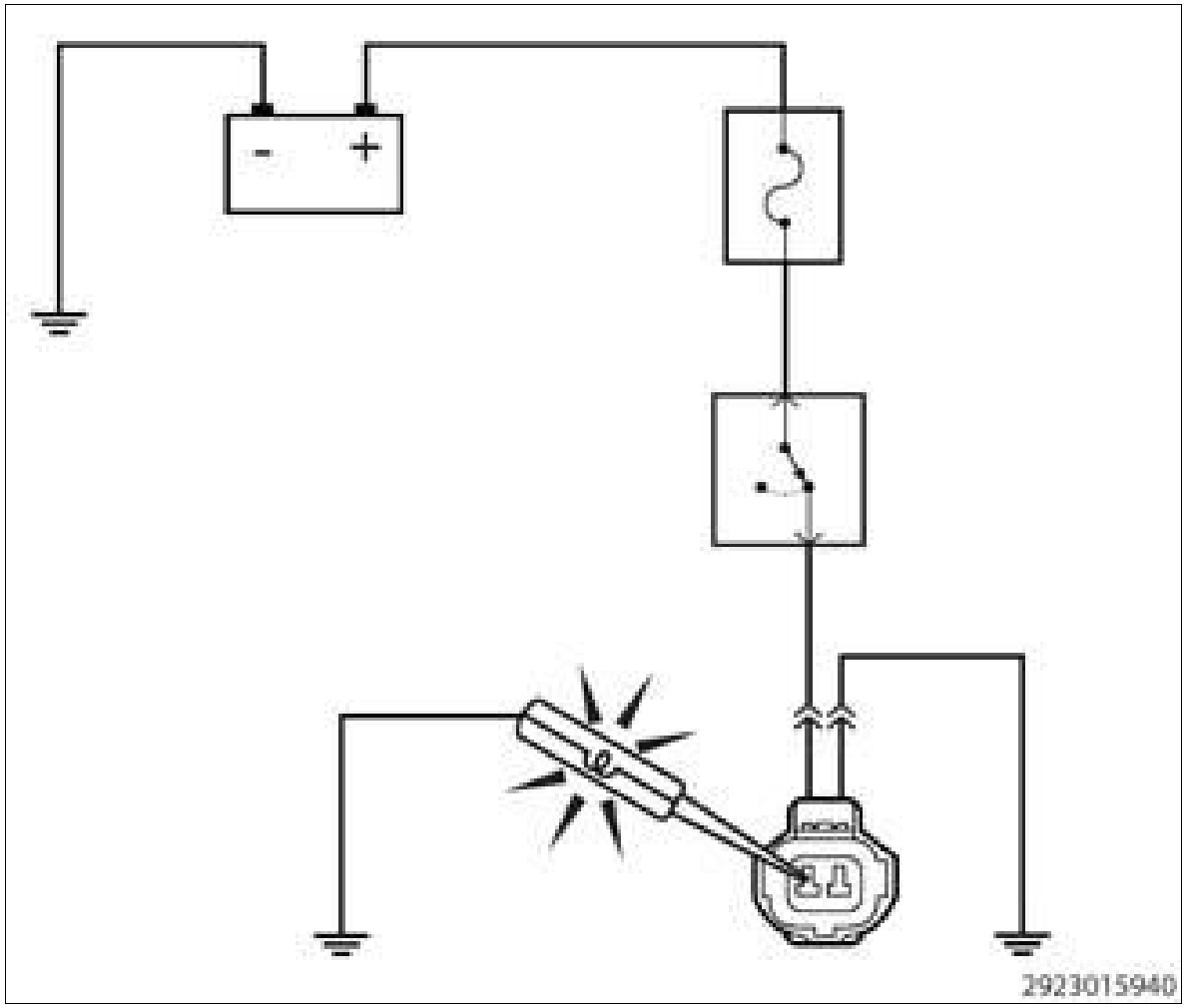

Courtesy of CHRYSLER GROUP, LLC

NOTE:

Before testing any circuits, first verify the 12-volt test light is operating properly. Connect the 12-volt test light to battery ground or to any other known good ground. Touch the lead of the test light to Battery(+). If the test light is operational, it should illuminate brightly.

1. Turn the ignition off.
2. Disconnect the wire harness connector from the component that is being tested.

   NOTE:

   Check connectors - Clean/repair as necessary.

3. At this time, leave all in-line connectors connected.
4. Connect the 12-volt test light to a known good ground.
5. Use the test light lead to carefully probe the Battery or Ignition voltage circuit in the harness connector.
6. First check with the ignition off, next check with the ignition on, and lastly check while cranking the engine.

   Does the test light illuminate brightly?

   Yes

   1. The circuit is not open at this time or the condition that originally caused the open may not be present at this time. Continue to monitor the test light and wiggle the wire harness and connectors to check for an intermittent open or excessive resistance condition.
   2. Use the wiring diagram as a guide to trace the circuits and look for any in-line connectors where the open could occur intermittently.
   3. Look for any chafed, pierced, pinched, or partially broken wires.
   4. Look for broken, bent, pushed out or corroded terminals. Verify that there is good pin to terminal contact in the related wire harness connectors.
   5. Perform any Technical Service Bulletins (TSBs) that may apply.

   No

   1. Repair the open in the circuit. Use the wiring diagram as a guide to trace the circuit and look for any in-line connectors where the open could occur.
   2. One method to help isolate the open is to disconnect any in-line connectors and measure the resistance from one side of the in-line connector to the matching component harness connector. If the open goes away, the open is on

the other side of the in-line connector.

3. If this is a fused circuit, make sure to inspect the fuse. If the fuse is open, check the circuit for a short to ground before installing a new fuse. The circuit may have a short to ground causing the fuse to open. This short to ground could be in the wire harness or in one of the components the circuit is supplying voltage to.

2. **TESTING 12-VOLT SWITCHED BATTERY B(+) CIRCUIT VOLTAGE WITH A VOLTMETER**

Fig 2: Testing 12-Volt Switched Battery B(+) Circuit Voltage With Voltmeter

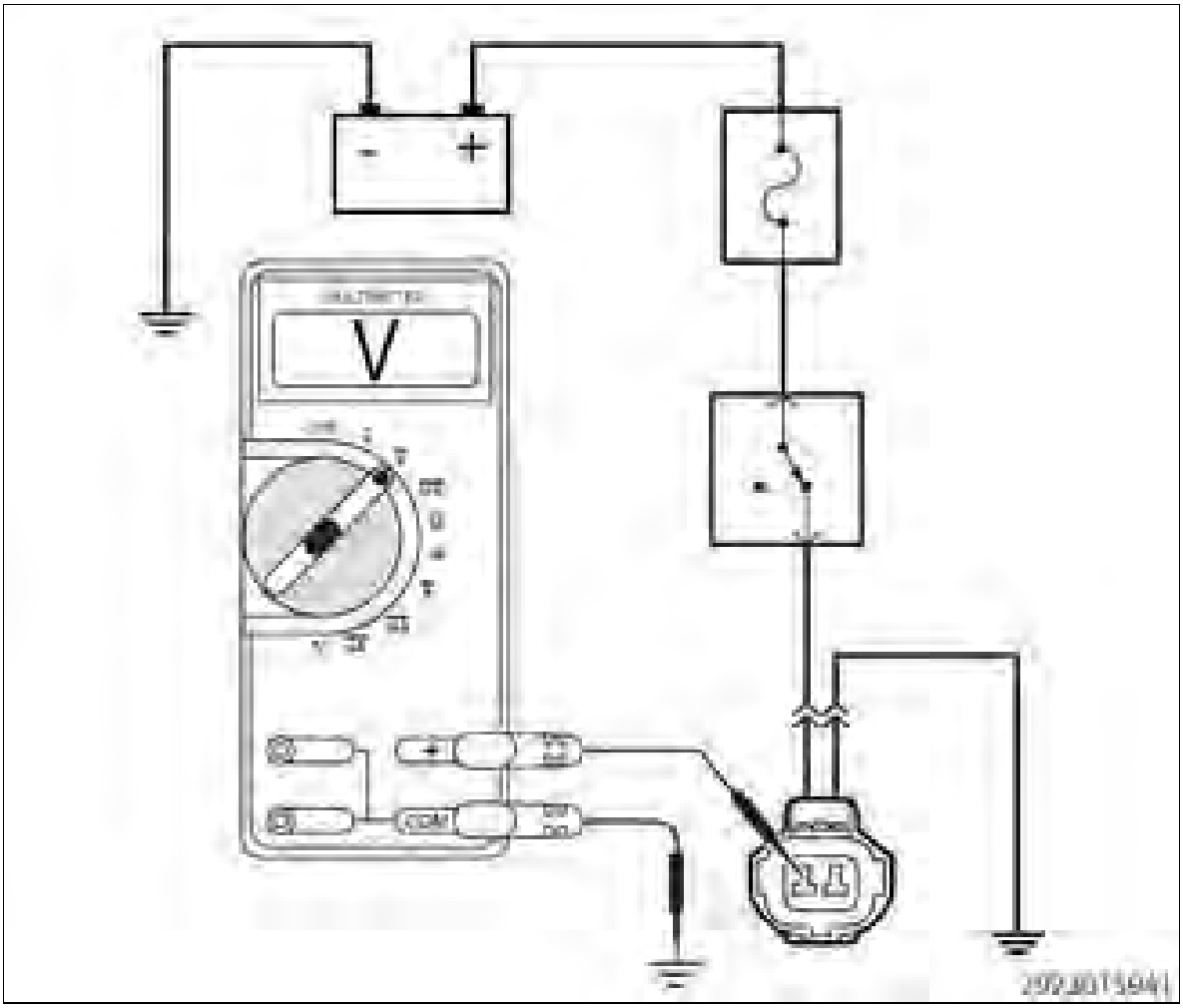

Courtesy of CHRYSLER GROUP, LLC

NOTE:

The connector displayed in the graphics are only an example.

1. Turn the ignition off.
2. Disconnect the wire harness connector from the component that is being tested.

> *NOTE:*
>
> *Check connectors - Clean/repair as necessary.*

3. At this time leave all in-line connectors connected.
4. Use a multimeter set to measure DC voltage.
5. Connect the ground lead of the meter to a known good ground.
6. Use the positive lead of the multimeter and probe the circuit that is being checked for voltage.
7. Ignition on, engine not running.

   Is the voltage within specifications for this circuit?

   Yes

   1. The circuit is functioning properly or the condition that originally caused the open or short may not be present at this time. Continue to measure the voltage and wiggle the wire harness and connectors while checking for an intermittent open or short.
   2. Use the wiring diagram as a guide to trace the circuits and look for any in-line connectors where the short could occur intermittently.
   3. Look for any chafed, pierced, pinched, or partially broken wires.
   4. Look for broken, bent, pushed out or corroded terminals. Verify that there is good pin to terminal contact in the related wire harness connectors.
   5. Perform any Technical Service Bulletins (TSBs) that may apply.

   No

   1. Repair the open or short to ground in the circuit. Use the wiring diagram as a guide to trace the circuits and look for any in-line connectors where the short could occur.
   2. One method to help isolate the open or short is to disconnect any in-line connectors that the circuit being checked runs through and check for the voltage again. If the voltage is present, the open or short is on the other side of the in-line connector.

STANDARD PROCEDURE > CHECK A 5-VOLT SUPPLY CIRCUIT FOR VOLTAGE > THEORY OF OPERATION

Fig 1: 5-Volt Supply Circuit Diagram

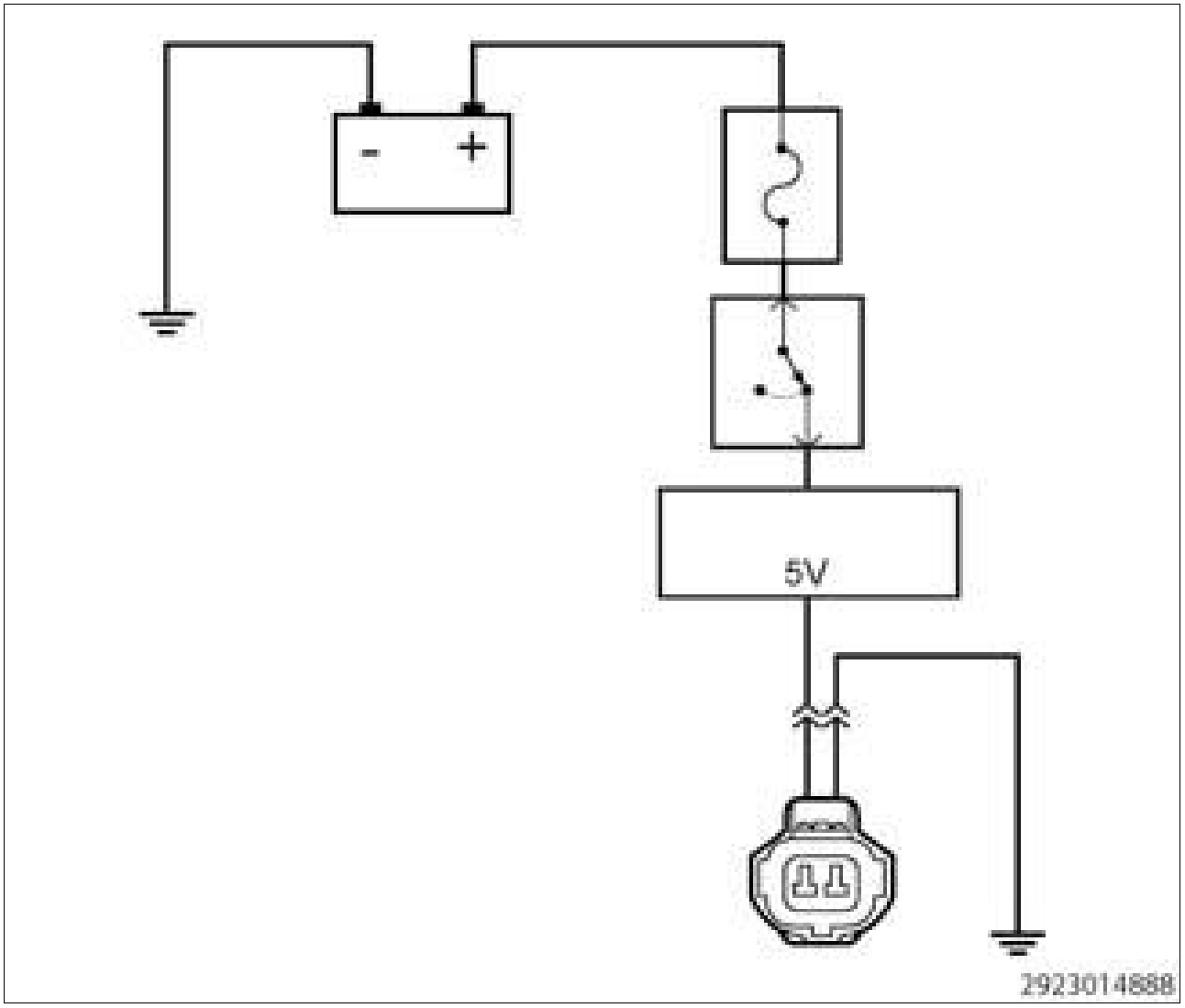

Courtesy of CHRYSLER GROUP, LLC

The purpose of the following procedure is to demonstrate how to check the voltage of a 5-Volt supply circuit with a voltmeter.

> *NOTE:*
>
> *The circuit shown in illustration is an example, and is intended for demonstrational purpose only.*

The following are circuit tests covered in this procedure:

- Testing A 5-Volt Supply Circuit For Voltage
- Testing A 5-Volt Supply Circuit And Sensor Ground Circuit

> *NOTE:*

Perform the following test using a known good multimeter.

Below is a list of possible causes that could be related to a No Voltage condition.

Possible Causes
OPEN CIRCUIT (CHAFED, PIERCED, PINCHED OR BROKEN WIRES)
OPEN IN-LINE CONNECTOR (BENT, PUSHED OUT OR CORRODED TERMINALS)
ELECTRONIC CONTROL MODULE (5-VOLT SUPPLY OUTPUT)

STANDARD PROCEDURE > CHECK A 5-VOLT SUPPLY CIRCUIT FOR VOLTAGE > DIAGNOSTIC TEST

1. **TESTING A 5-VOLT SUPPLY CIRCUIT FOR VOLTAGE**

Fig 1: Testing 5-Volt Supply Circuit For Voltage With Voltmeter

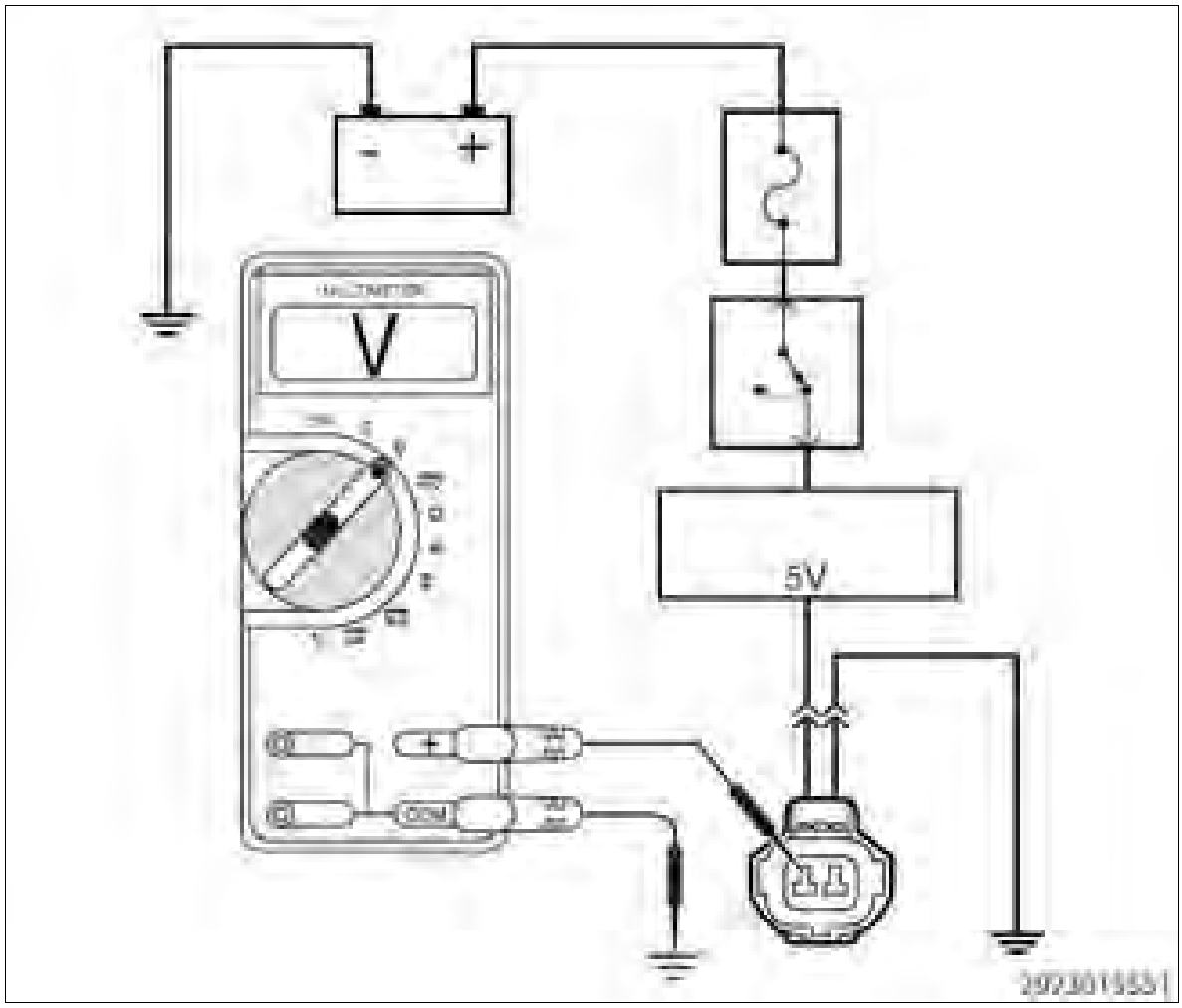

Courtesy of CHRYSLER GROUP, LLC

1. Turn the ignition off.

2. Disconnect the sensor harness connector.

> *NOTE:*
>
> *Check connectors - Clean/repair as necessary.*

3. Turn the ignition on.
4. Set the multimeter to measure DC voltage.
5. Connect the negative lead of the multimeter to a known good ground.
6. With the positive lead of the multimeter, carefully probe the 5-volt supply circuit.

   Is the voltage between 4.7 and 5.2 volts?

   Yes

   1. Go To 2

   No

   1. Check the 5-volt supply circuit for an open or short to ground. For further assistance, perform the appropriate Sensor Reference Voltage DTC diagnostic procedure.

2. **TESTING A 5-VOLT SUPPLY CIRCUIT AND SENSOR GROUND CIRCUIT**

Fig 2: Testing 5-Volt Supply Circuit And Sensor Ground Circuit

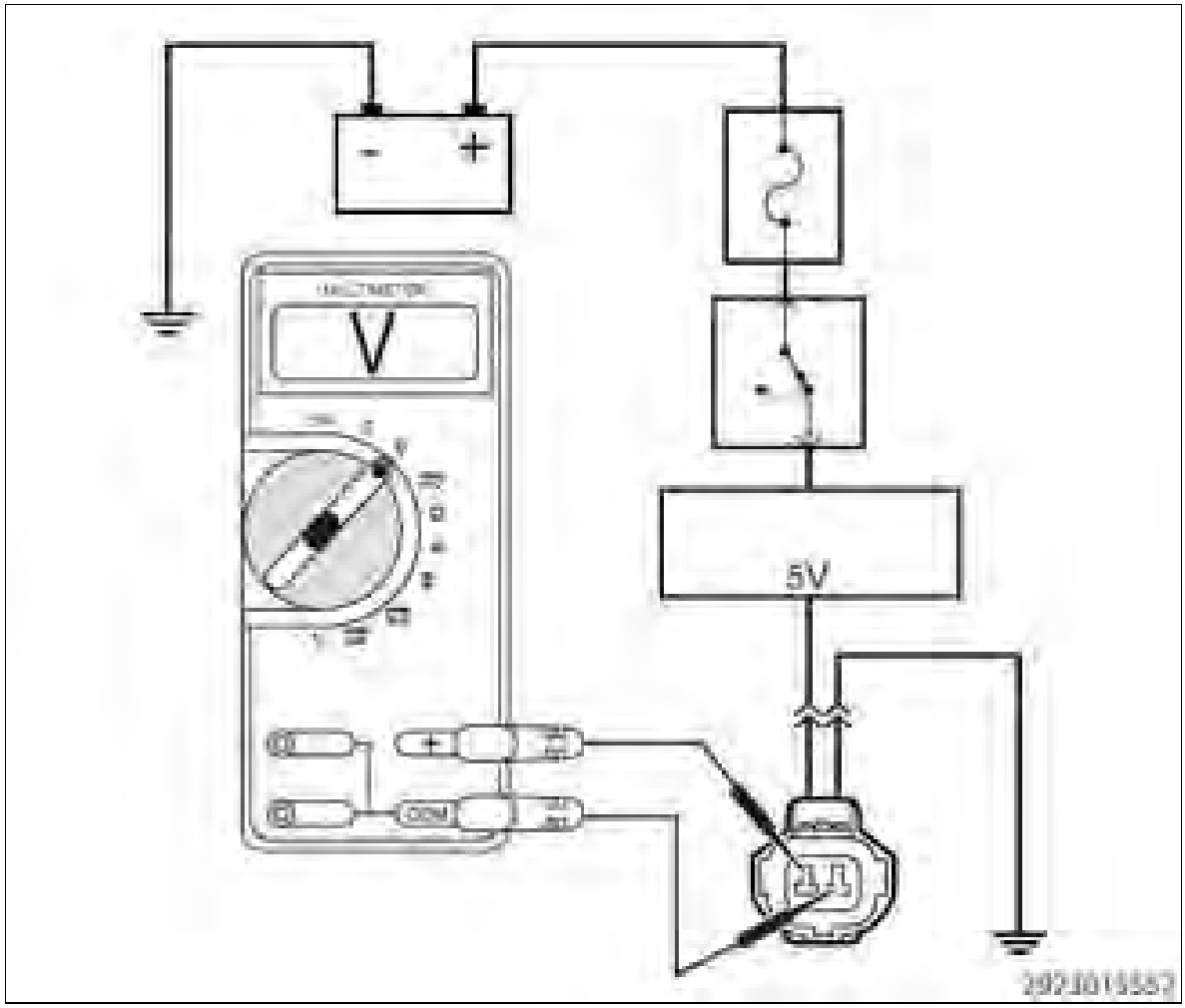

Courtesy of CHRYSLER GROUP, LLC

1. With the multimeter set to measure DC voltage.
2. Move the negative lead of the multimeter to carefully probe the sensor ground or sensor return circuit in the harness connector.
3. With the positive lead of the multimeter, carefully probe the 5-volt supply circuit.

   Is the voltage between 4.7 and 5.2 volts?

   Yes

   1. At this time the 5-Volt Supply and sensor ground circuit are working properly. Continue to measure the voltage between the wires, wiggle the wire harness and connectors while checking for an intermittent condition.
   2. Use the wiring diagram as a guide to trace the circuits and look for any in-line connectors where the open could occur intermittently.
   3. Look for any chafed, pierced, pinched, or partially broken wires.
   4. Look for broken, bent, pushed out or corroded terminals. Verify that there is good pin to terminal contact in the related wire harness connectors.

5. Perform any Technical Service Bulletins (TSBs) that may apply.

No

1. Repair the open or excessive resistance in the Sensor Ground (Sensor Return) circuit.

STANDARD PROCEDURE > CHECK A CIRCUIT FOR A SHORT TO GROUND > THEORY OF OPERATION

Fig 1: 12-Volt Switched Battery Circuit (Switch In Off Position)

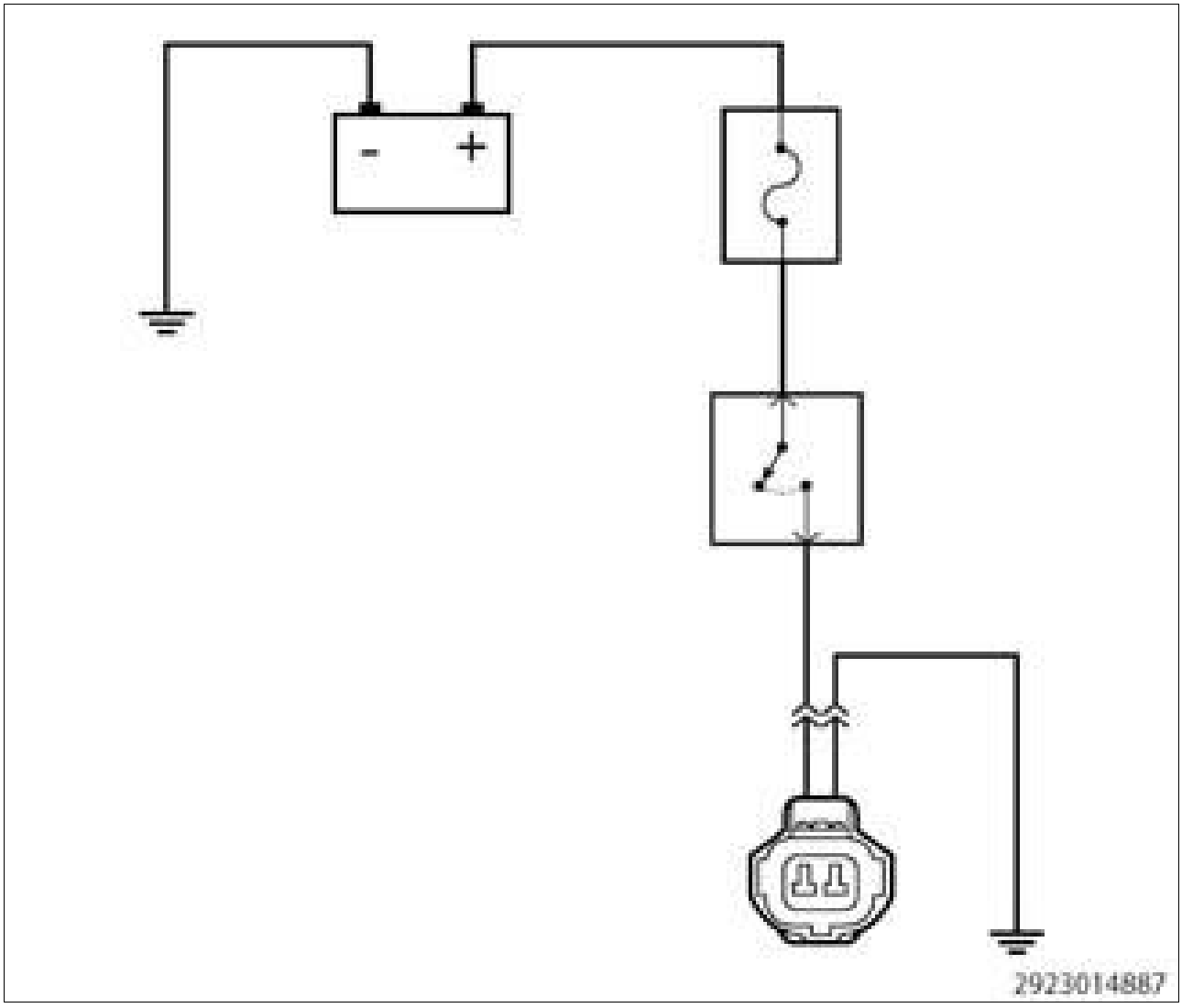

Courtesy of CHRYSLER GROUP, LLC

The purpose of the following procedure is to demonstrate how to check a circuit for a Short to Ground.

NOTE:

The circuit shown in illustration is an example, and is intended for demonstrational purpose

only.

The following are circuit tests covered in this procedure:

- Testing For A Short To Ground Using An Ohmmeter

NOTE:

Perform the following test using a known good multimeter.

Below is a list of possible causes that could be related to a Short to Ground condition.

Possible Causes
SHORTED CIRCUIT (CHAFED, PIERCED OR PINCHED WIRES)
SHORTED IN-LINE CONNECTOR (BENT, PUSHED OUT OR CORRODED TERMINALS)

STANDARD PROCEDURE > CHECK A CIRCUIT FOR A SHORT TO GROUND > DIAGNOSTIC TEST

TESTING FOR A SHORT TO GROUND USING AN OHMMETER

Fig 1: Testing For A Short To Ground Using An Ohmmeter

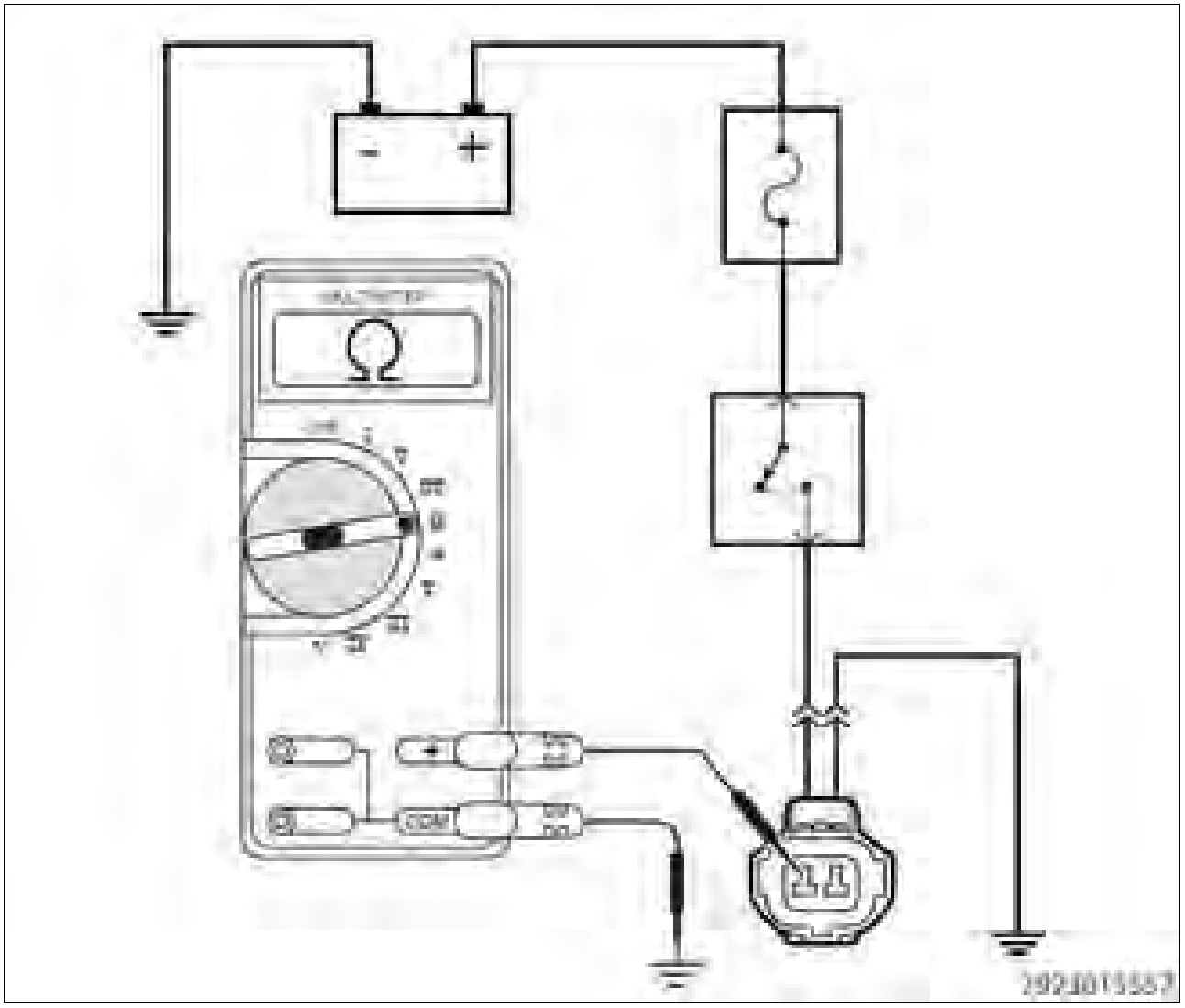

Courtesy of CHRYSLER GROUP, LLC

NOTE:

Before measuring the resistance of any circuit, first measure the resistance between the two leads of the multimeter. Take this value and subtract it from the value recorded when measuring the resistance of the circuit being checked (The meter leads can add 0.5 ohm or more of total resistance).

1. Turn the ignition off.
2. Disconnect the wire harness connectors from the module and component for the suspected circuit being shorted to ground.

> *NOTE:*
>
> *Check connectors - Clean/repair as necessary.*

3. With the component wire harness connectors disconnected, use a meter set to measure Ohms (Ω), and measure the resistance between the circuit and a known good ground.
4. Use the negative lead of the meter and touch a known good ground.
5. Use the positive lead of the meter and carefully probe the circuit suspected of having the short.

   Is the resistance to ground below 10k ohms ?

   Yes

   1. Repair the short to ground. Use the wiring diagram as a guide to follow the path of the circuit.
   2. One method to help isolate the short is to disconnect any in-line connectors that the circuit being tested runs through and measure for the short again. If the short goes away, the short is on the other side of the in-line connector.

   No

   1. The circuit is not shorted to ground or the condition that originally caused the short may not be present at this time. Continue to measure the resistance, wiggle the wire harness and connectors while checking for an intermittent short.
   2. Use the wiring diagram as a guide to trace the circuits and look for any in-line connectors where the short could occur intermittently.
   3. Look for any chafed, pierced, pinched, or partially broken wires.
   4. Look for broken, bent, pushed out or corroded terminals. Verify that there is good pin to terminal contact in the related wire harness connectors.
   5. Perform any Technical Service Bulletins (TSBs) that may apply.

STANDARD PROCEDURE > CHECK A CIRCUIT FOR A SHORT TO VOLTAGE > THEORY OF OPERATION

Fig 1: 12-Volt Switched Ignition Circuit

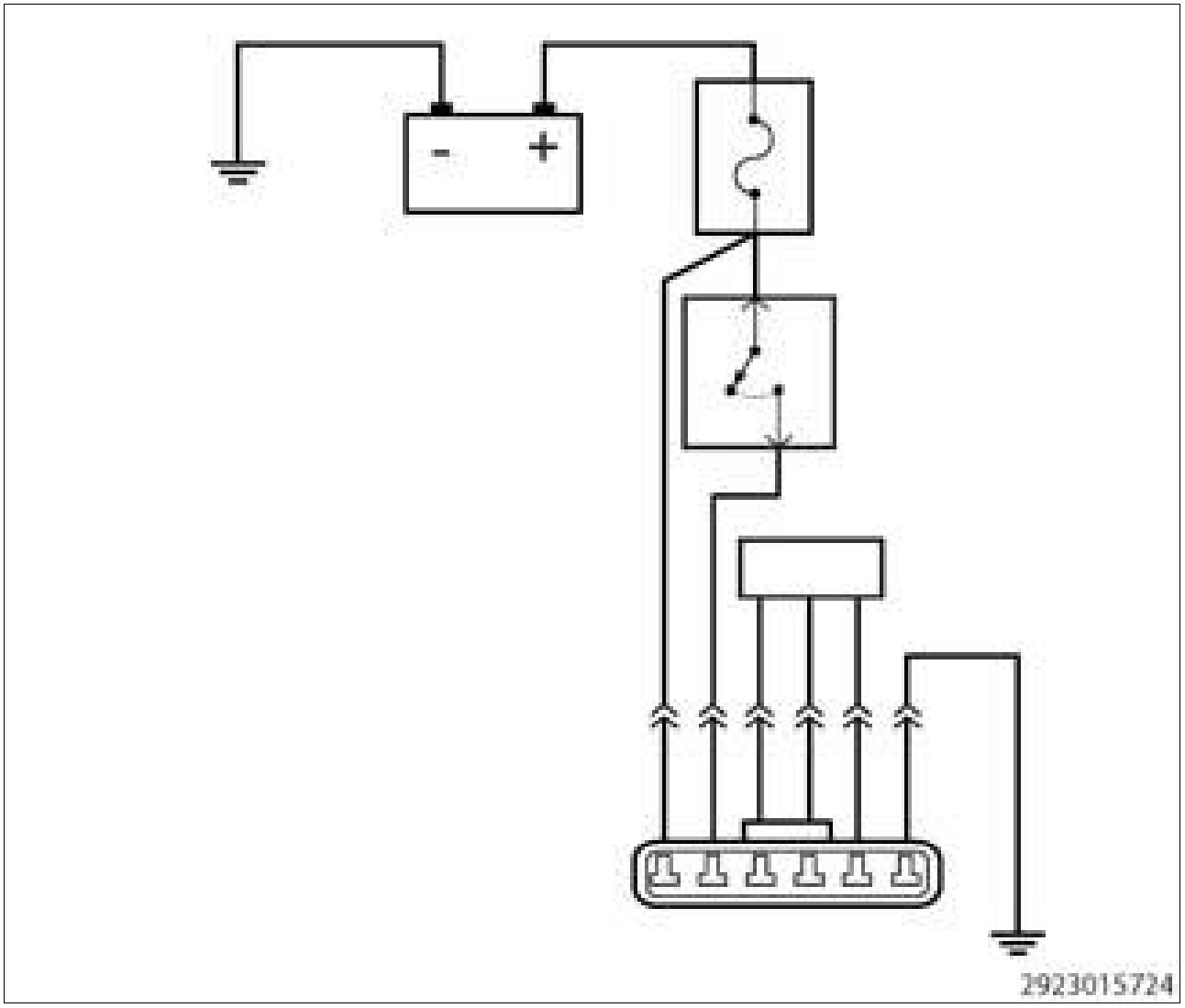

Courtesy of CHRYSLER GROUP, LLC

The purpose of the following procedure is to demonstrate different methods of checking for a short to voltage in a circuit. When diagnosing a DTC it might be necessary to verify that proper voltage is on a circuit or that a circuit is not shorted high.

NOTE:

The circuit shown in illustration is an example, and is intended for demonstrational purpose only.

The following are circuit tests covered in this procedure:

- Testing For A Short To Battery Voltage Using A Voltmeter
- Testing For A Short To Switched Battery Voltage Using A Voltmeter
- Testing For A Short To Battery Voltage Using A 12-Volt Test Light

- Testing For A Short To Switched Battery Voltage Using A 12-Volt Test Light

> *NOTE:*
>
> *Perform the following test using a known good test light or functioning multimeter.*

Below is a list of possible causes that could be related to a Short To Voltage condition.

Possible Causes
SHORTED CIRCUIT (CHAFED, PIERCED OR PINCHED WIRES)
SHORTED IN-LINE CONNECTOR (BENT, PUSHED OUT OR CORRODED TERMINALS)

STANDARD PROCEDURE > CHECK A CIRCUIT FOR A SHORT TO VOLTAGE > DIAGNOSTIC TEST

1. **TESTING FOR A SHORT TO BATTERY VOLTAGE USING A TEST LIGHT**

Fig 1: Testing For A Short To Battery Voltage Using A Test Light

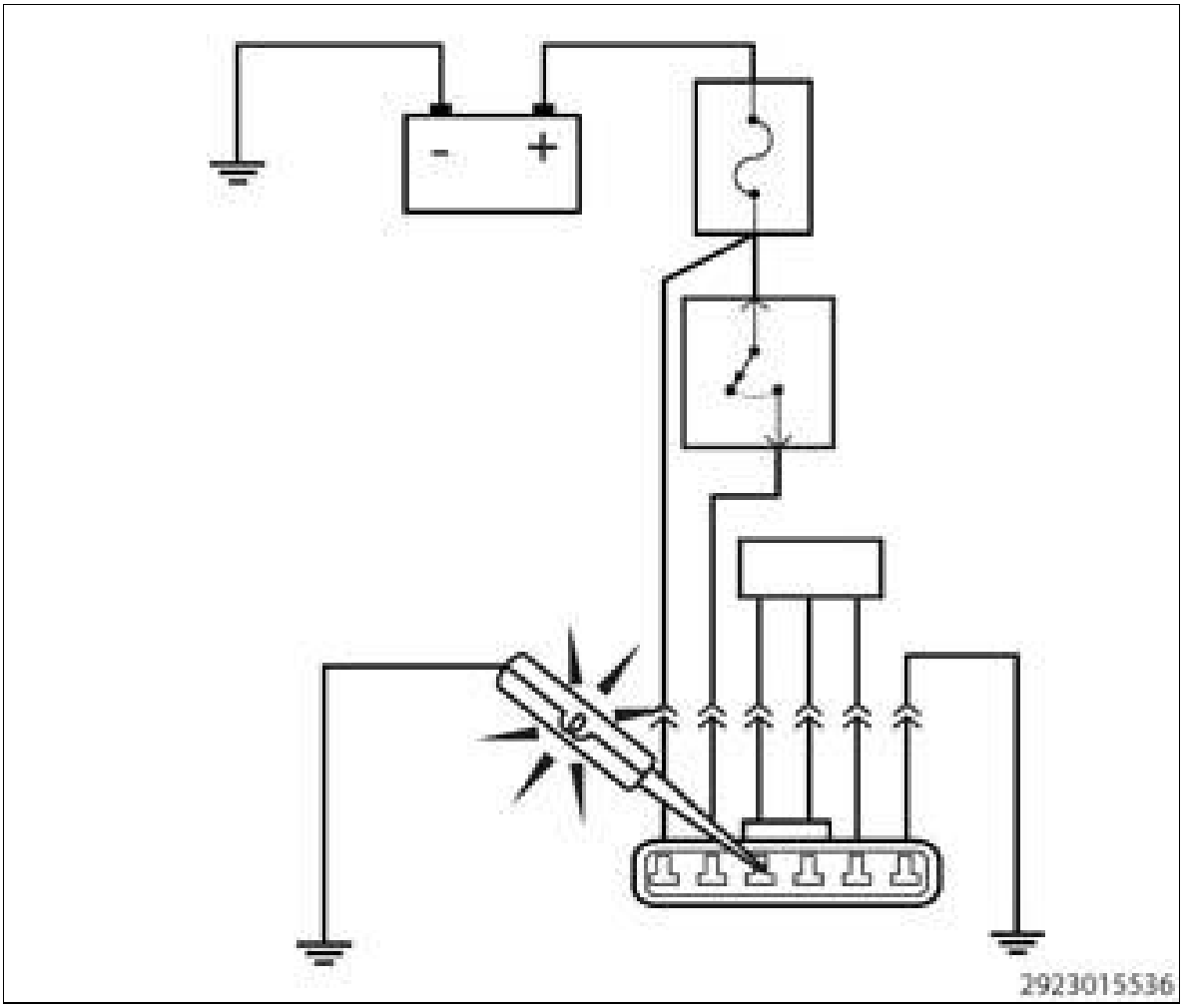

Courtesy of CHRYSLER GROUP, LLC

NOTE:

Before testing any circuits, first verify the 12-volt test light is operating properly. Connect the 12-volt test light to battery ground or to any other known good ground. Touch the lead of the test light to Battery(+). If the test light is operational, it should illuminate brightly.

1. Turn the ignition off.
2. Disconnect the wire harness connectors of all components that contain the circuits that are suspected of having the short.

NOTE:

Check connectors - Clean/repair as necessary.

3. At this time leave all in-line connectors connected.
4. Connect the 12-volt test light to a known good ground.
5. Use the lead of the test light and carefully probe the circuit suspected of having the short.

> *WARNING:*
>
> *When the engine is operating, do not stand in direct line with the fan. Do not put your hands near the pulleys, belts or fan. Do not wear loose clothing. Failure to follow these instructions may result in possible serious or fatal injury.*

6. First, check with the ignition off, next with the ignition on, and lastly while cranking the engine.

   Does the test light illuminate brightly?

   Yes

   1. Repair the short to voltage. Use the wiring diagram as a guide to trace the circuits and look for any in-line connectors where the short could occur.
   2. One method to help isolate the short is to disconnect any in-line connectors that the circuit being checked runs through and check for the short again. If the short goes away, the short is on the other side of the in-line connector.

   No

   1. The circuit is not shorted to voltage or the condition that originally caused the short may not be present at this time. Continue to measure the resistance and wiggle the wire harness to check for an intermittent short.

      > *NOTE:*
      >
      > *By disconnecting the wire harness connectors you may have eliminated the source of the voltage causing the short. Use the wiring diagram as a guide, check to see if there are any battery circuits in the same wire harness as the circuit you are testing. It is necessary to check for a short to those circuits using an ohmmeter. Perform the Check for a Short Between Multiple Circuits diagnostic procedure. Refer to CHECK FOR A SHORT BETWEEN MULTIPLE CIRCUITS .*

   2. Use the wiring diagram as a guide to trace the circuits and look for any in-line connectors where the short could occur intermittently.
   3. Look for any chafed, pierced, pinched, or partially broken wires.
   4. Look for broken, bent, pushed out or corroded terminals. Verify that there is good pin to terminal contact in the related component and wire harness

connectors.

5. Perform any Technical Service Bulletins (TSBs) that may apply.

2. **TESTING FOR A SHORT TO SWITCHED IGNITION VOLTAGE USING A TEST LIGHT**

Fig 2: Testing For A Short To Switched Ignition Voltage Using A Test Light

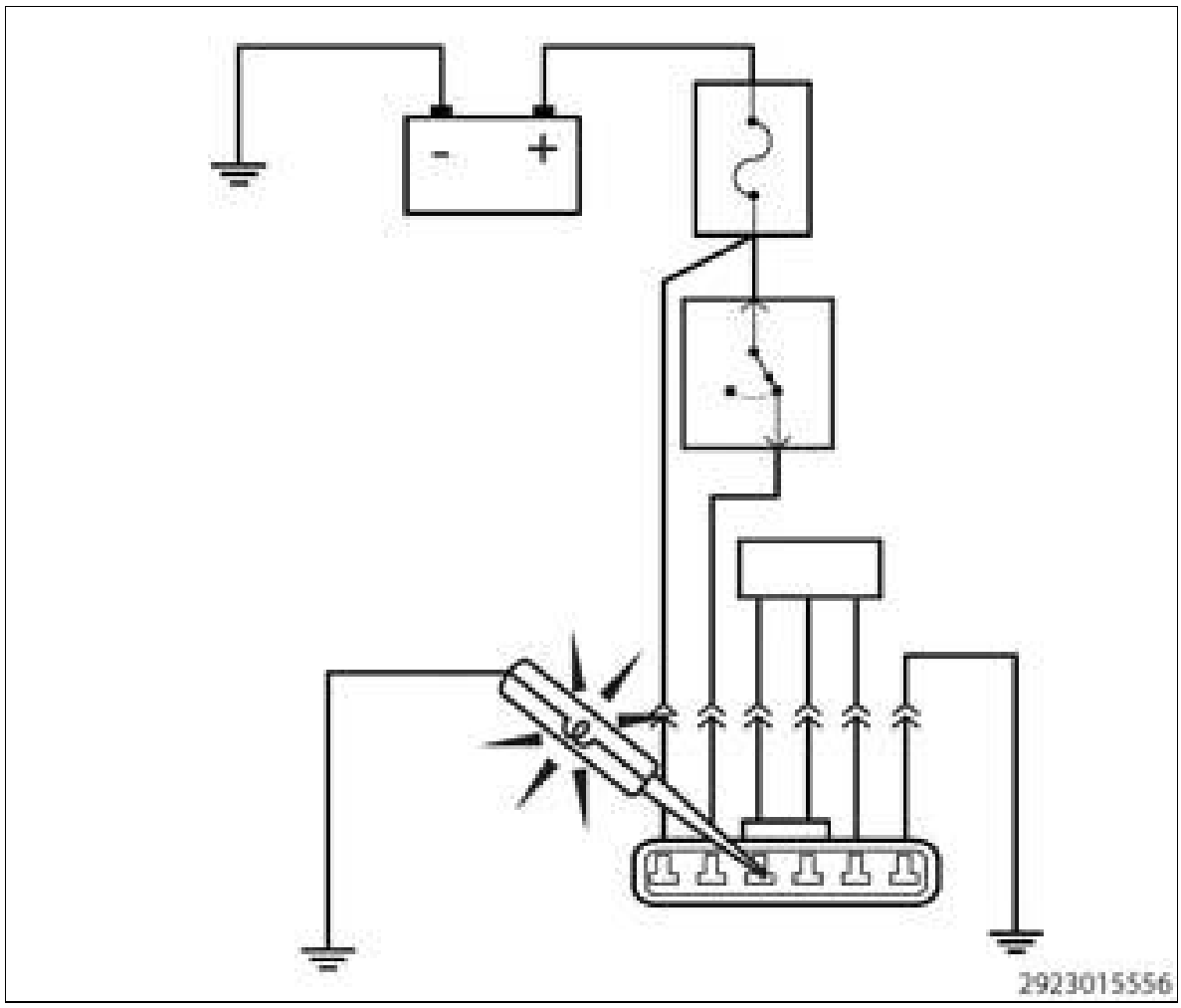

Courtesy of CHRYSLER GROUP, LLC

NOTE:

Before testing any circuits, first verify the 12-volt test light is operating properly. Connect the 12-volt test light to battery ground or to any other known good ground. Touch the lead of the test light to Battery(+). If the test light is operational, it should illuminate brightly.

1. Turn the ignition off.
2. Disconnect the wire harness connectors of all components that contain the circuits that are suspected of having the short.

> *NOTE:*
>
> *Check connectors - Clean/repair as necessary.*

3. At this time leave all in-line connectors connected.
4. Connect the 12-volt test light to a known good ground.
5. Use the lead of the test light and carefully probe the circuit suspected of having the short.

> *WARNING:*
>
> *When the engine is operating, do not stand in direct line with the fan. Do not put your hands near the pulleys, belts or fan. Do not wear loose clothing. Failure to follow these instructions may result in possible serious or fatal injury.*

6. First, check with the ignition off, next with the ignition on, and lastly while cranking the engine.

   Does the test light illuminate brightly?

   Yes

   1. Repair the short to voltage. Use the wiring diagram as a guide to trace the circuits and look for any in-line connectors where the short could occur.
   2. One method to help isolate the short is to disconnect any in-line connectors that the circuit being checked runs through and check for the short again. If the short goes away, the short is on the other side of the in-line connector.

   No

   1. The circuit is not shorted to voltage or the condition that originally caused the short may not be present at this time. Continue to measure the resistance and wiggle the wire harness to check for an intermittent short.

      > *NOTE:*
      >
      > *By disconnecting the wire harness connectors you may have eliminated the source of the voltage causing the short. Use the wiring diagram as a guide, check to see if there are any battery circuits in the same wire harness as the circuit you are testing. It is necessary to check for a short to those circuits using an ohmmeter. Perform the Check for a Short Between Multiple Circuits diagnostic procedure. Refer to CHECK FOR A SHORT BETWEEN MULTIPLE CIRCUITS .*

2. Use the wiring diagram as a guide to trace the circuits and look for any in-line connectors where the short could occur intermittently.
3. Look for any chafed, pierced, pinched, or partially broken wires.
4. Look for broken, bent, pushed out or corroded terminals. Verify that there is good pin to terminal contact in the related component and wire harness connectors.
5. Perform any Technical Service Bulletins (TSBs) that may apply.

3. **TESTING FOR A SHORT TO BATTERY VOLTAGE USING A VOLTMETER**

Fig 3: Testing For A Short To Battery Voltage Using A Voltmeter

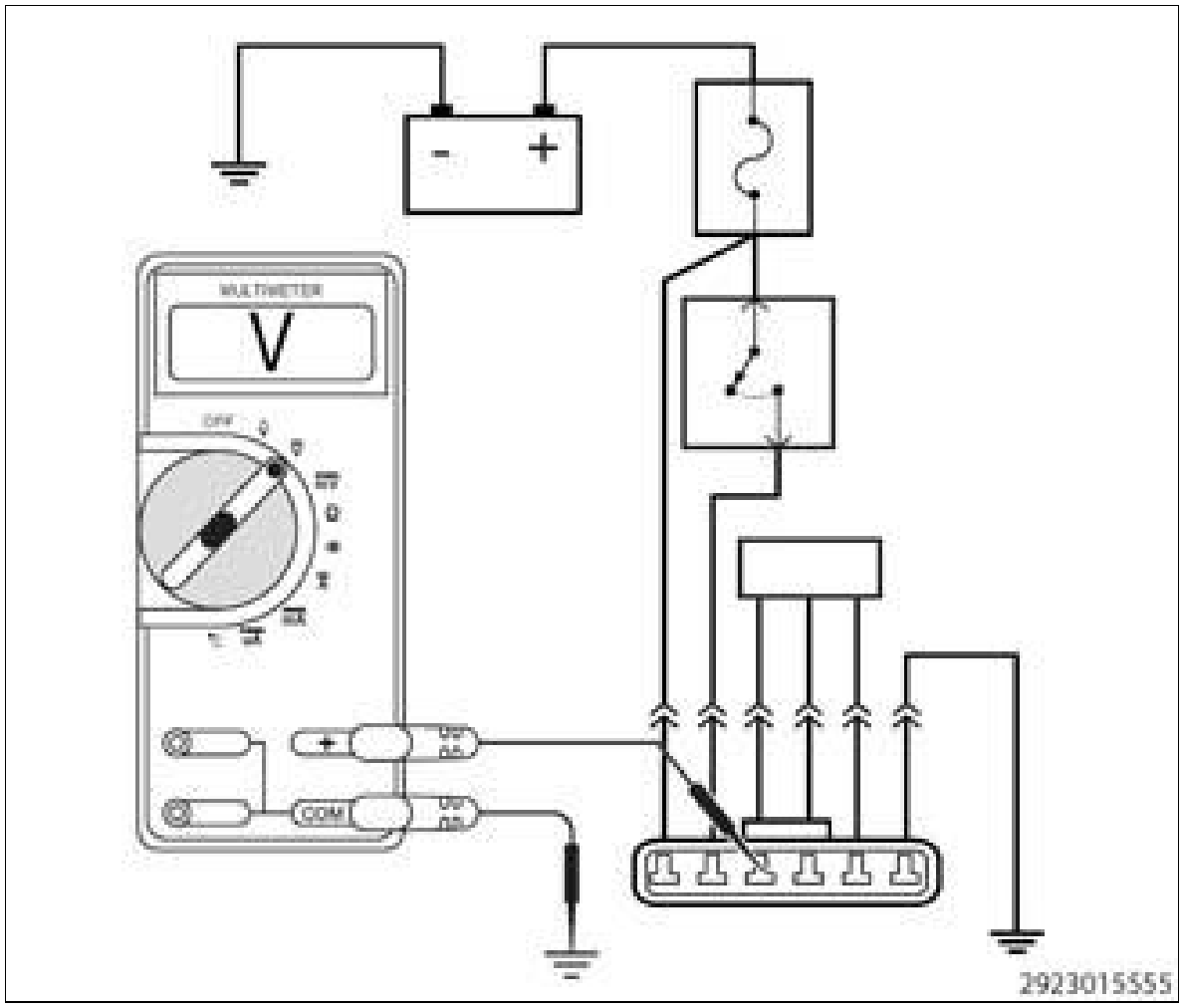

Courtesy of CHRYSLER GROUP, LLC

1. Turn the ignition off.
2. Disconnect the wire harness connectors of the components that contain the circuit that is suspected as having a short.

> *NOTE:*
>
> *Check connectors - Clean/repair as necessary.*

3. At this time leave all in-line connectors connected.
4. With all the component wire harness connectors disconnected, use a multimeter set to measure DC voltage.
5. Connect the ground lead of the meter to a known good ground.
6. Use the positive lead of the multimeter and probe the circuit that is being checked for a short.

   Is there any voltage present?

   Yes

   1. Repair the short to battery voltage. Use the wiring diagram as a guide to trace the circuits and look for any in-line connectors where the short could occur.
   2. One method to help isolate the short is to disconnect any in-line connectors that the circuit being checked runs through and measure for the short again. If the short goes away, the short is on the other side of the in-line connector.

   No

   1. The circuit is not shorted to voltage or the condition that originally caused the short may not be present at this time. Continue to measure the voltage and wiggle the wire harness to check for an intermittent short.

      > *NOTE:*
      >
      > *By disconnecting the wire harness connectors you may have eliminated the source of the voltage causing the short. Use the wiring diagram as a guide, check to see if there are any battery circuits in the same wire harness as the circuit you are testing. It is necessary to check for a short to those circuits using an ohmmeter. Perform the Check for a Short Between Multiple Circuits diagnostic procedure. Refer to CHECK FOR A SHORT BETWEEN MULTIPLE CIRCUITS .*

   2. Use the wiring diagram as a guide to trace the circuits and look for any in-line connectors where the short could occur intermittently.
   3. Look for any chafed, pierced, pinched, or partially broken wires.
   4. Look for broken, bent, pushed out or corroded terminals. Verify that there is good pin to terminal contact in the related wire harness connectors.
   5. Perform any Technical Service Bulletins (TSBs) that may apply.

4. **TESTING FOR A SHORT TO SWITCHED IGNITION VOLTAGE USING A VOLTMETER**

Fig 4: Testing For A Short To Switched Ignition Voltage Using A Voltmeter

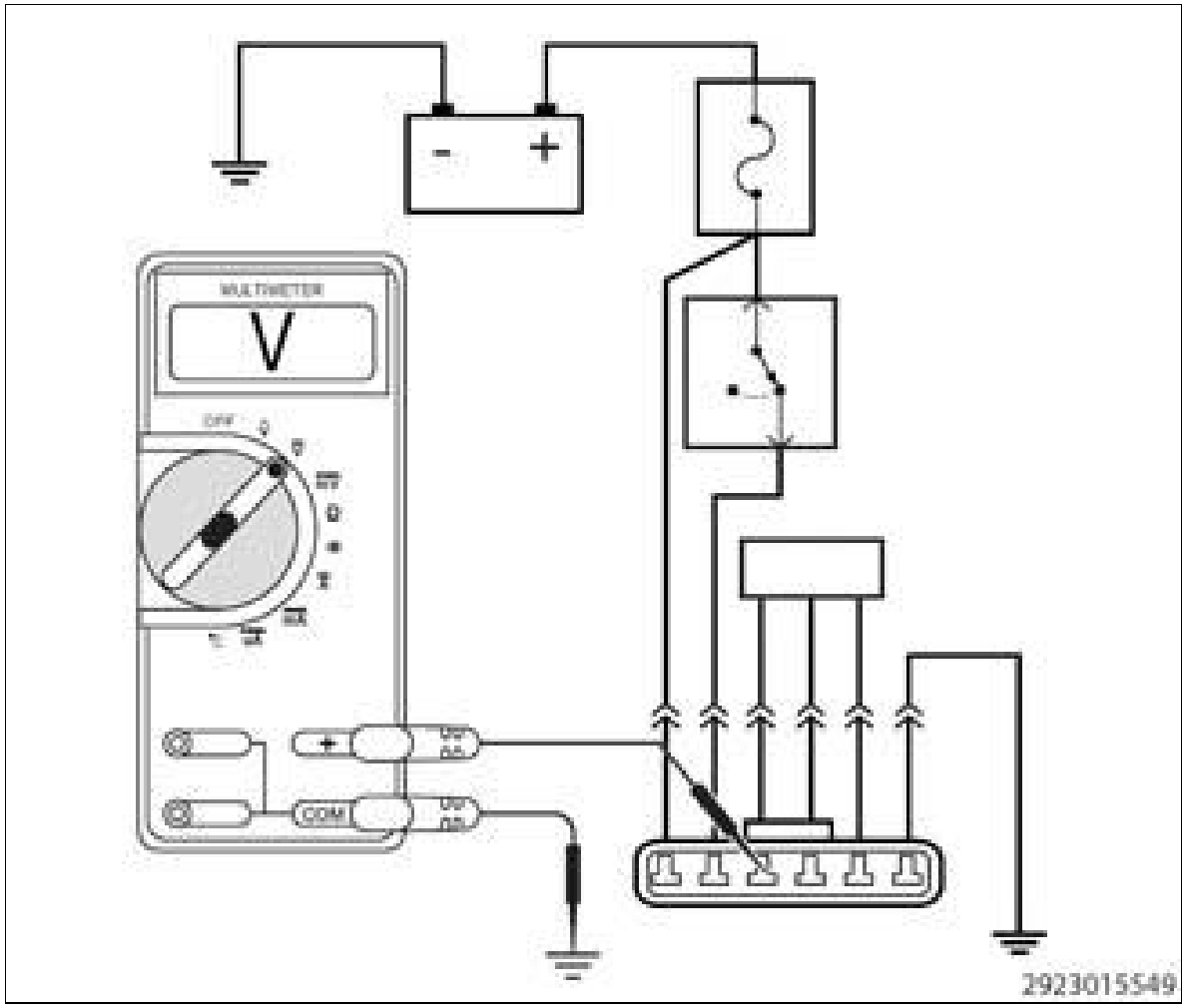

Courtesy of CHRYSLER GROUP, LLC

1. Turn the ignition off.
2. Disconnect the wire harness connectors of all components that contain the circuits that are suspected as being shorted.

> *NOTE:*
>
> *Check connectors - Clean/repair as necessary.*

3. At this time leave all in-line connectors connected.
4. With all the component wire harness connectors disconnected, use a multimeter set to measure DC voltage.
5. Connect the ground lead of the meter to a known good ground.
6. Use the positive lead of the multimeter and probe the circuit suspected of having the short.

7. Ignition on, engine not running.

   Is any voltage present?

   Yes

   1. Repair the short to ignition voltage. Use the wiring diagram as a guide to trace the circuits and look for any in-line connectors where the short could occur.
   2. One method to help isolate the short is to disconnect any in-line connectors that the circuit being checked runs through and check for the short again. If the short goes away, the short is on the other side of the in-line connector.

   No

   1. The circuit is not shorted to voltage or the condition that originally caused the short may not be present at this time. Continue to measure the voltage and wiggle the wire harness to check for an intermittent short.

      > *NOTE:*
      >
      > *By disconnecting the wire harness connectors you may have eliminated the source of the voltage causing the short. Use the wiring diagram as a guide, check to see if there are any battery circuits in the same wire harness as the circuit you are testing. It is necessary to check for a short to those circuits using an ohmmeter. Perform the Check for a Short Between Multiple Circuits diagnostic procedure. Refer to CHECK FOR A SHORT BETWEEN MULTIPLE CIRCUITS .*

   2. Use the wiring diagram as a guide to trace the circuits and look for any in-line connectors where the short could occur intermittently.
   3. Look for any chafed, pierced, pinched, or partially broken wires.
   4. Look for broken, bent, pushed out or corroded terminals. Verify that there is good pin to terminal contact in the related wire harness connectors.
   5. Perform any Technical Service Bulletins (TSBs) that may apply.

STANDARD PROCEDURE > CHECK FOR AN OPEN GROUND CIRCUIT > THEORY OF OPERATION

Fig 1: 12-Volt Switched Battery B(+) Circuit Diagram

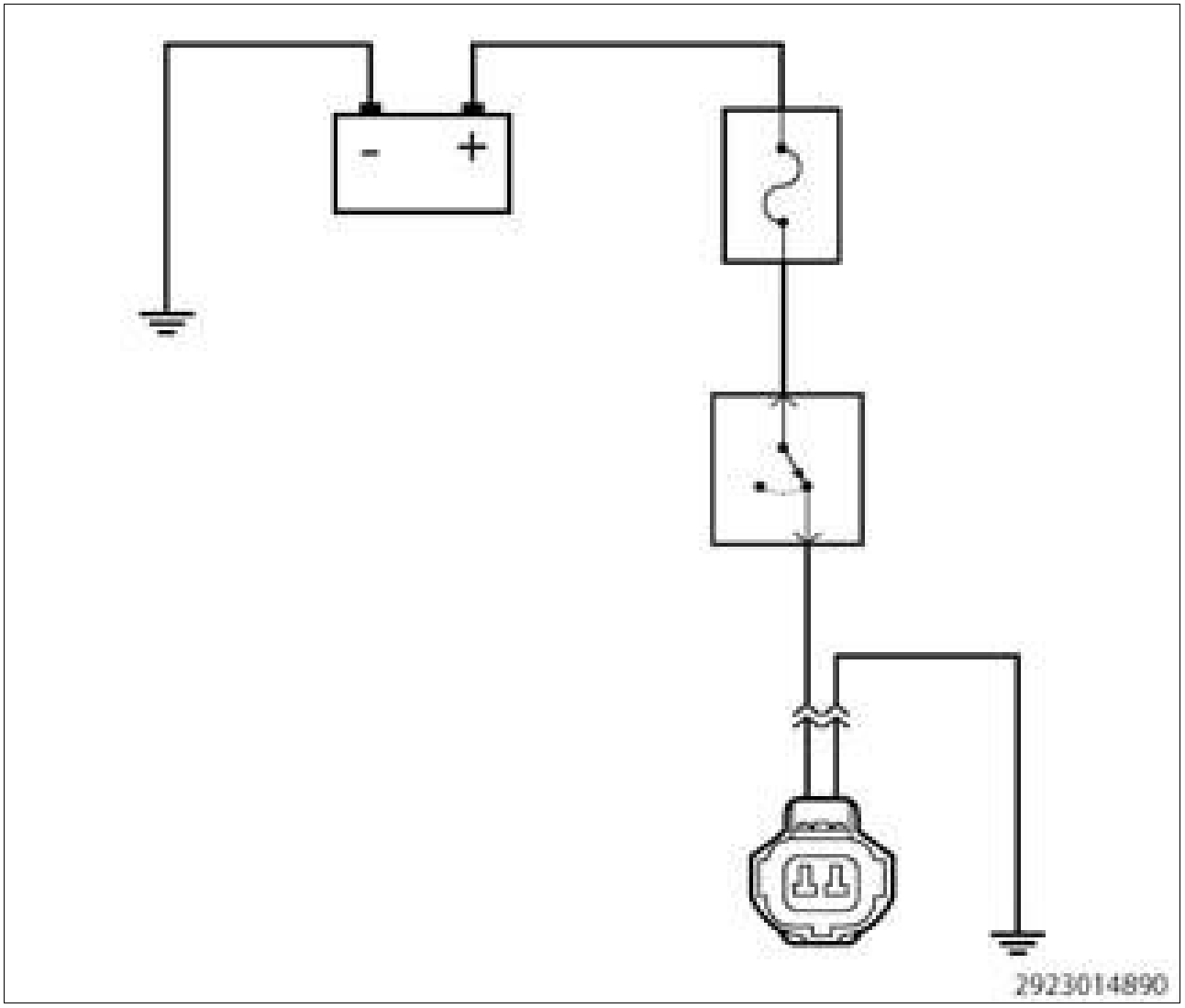

Courtesy of CHRYSLER GROUP, LLC

The purpose of the following procedure is to demonstrate how to check the operation of a generic ground circuit with a test light.

> *NOTE:*
>
> *The circuit shown in illustration is an example, and is intended for demonstrational purpose only.*

The following are circuit tests covered in this procedure:

- Testing Ground Circuit With Test Light

NOTE:

Perform the following test using a known good test light.

Possible Causes
OPEN GROUND CIRCUIT (CHAFED, PIERCED, PINCHED OR BROKEN WIRE)
OPEN IN-LINE CONNECTOR (BENT, PUSHED OUT OR CORRODED TERMINALS)

STANDARD PROCEDURE > CHECK FOR AN OPEN GROUND CIRCUIT > DIAGNOSTIC TEST

TESTING GROUND CIRCUIT WITH TEST LIGHT

Fig 1: Testing Ground Circuit With Test Light

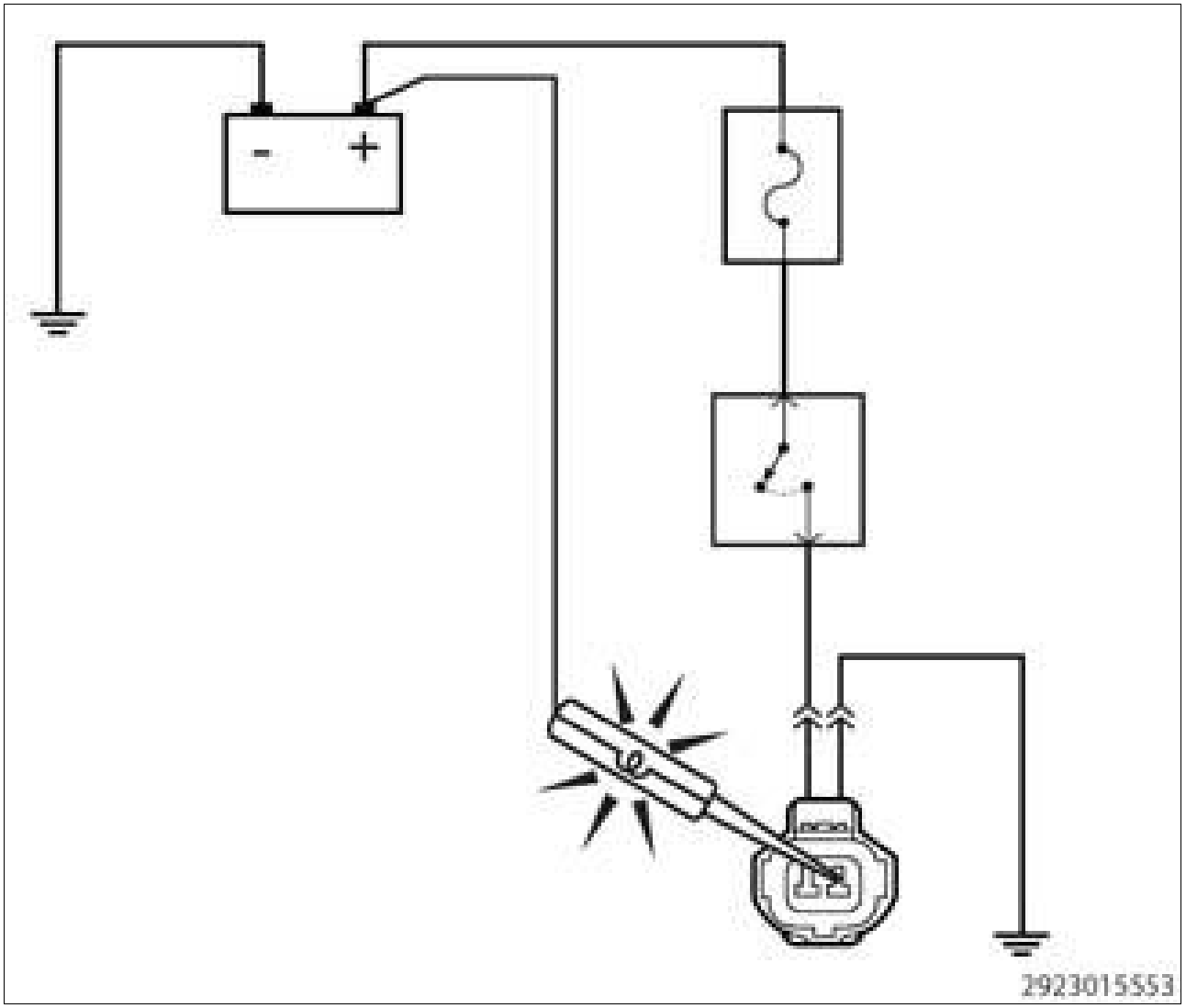

Courtesy of CHRYSLER GROUP, LLC

NOTE:

Before testing any circuits, first verify the 12-volt test light is operating properly. Connect the 12-volt test light to battery ground or to any other known good ground. Touch the lead of the test light to Battery(+). If the test light is operational, it should illuminate brightly.

1. Turn the ignition off.
2. Disconnect the wire harness connectors of the components that contain the ground circuit suspected of containing excessive resistance.

   NOTE:

   Check connectors - Clean/repair as necessary.

3. At this time leave all in-line connectors connected.
4. With all the component wire harness connectors disconnected, connect the 12-volt test light to Battery(+).
5. Use the test light lead to lightly probe the ground circuit in the harness connector.

   Does the test light illuminate brightly?

   Yes

   1. The suspected ground circuit is not open or the condition that originally caused the open or excessive resistance is not present at this time. Another way to check for an open would be to use an ohmmeter and measure the resistance of the ground circuit. While continuing to measure the resistance of the circuit, wiggle the wire harness and connectors to check for an intermittent open or poor connection.
   2. Use the wiring diagram as a guide to trace the circuits and look for any in-line connectors where the open could occur intermittently.
   3. Look for any chafed, pierced, pinched, or partially broken wires.
   4. Look for broken, bent, pushed out or corroded terminals. Verify that there is good pin to terminal contact in the related wire harness connectors.
   5. Perform any Technical Service Bulletins (TSBs) that may apply.

   No

   1. Repair the open in the ground circuit. Use the wiring diagram as a guide to trace the circuit and look for any in-line connectors where the open could occur.
   2. One method to help isolate the open is to disconnect any in-line connectors and measure the resistance from one side of the in-line connector to the matching component harness connector. If the open goes away, the open is on the other side of the in-line connector.

STANDARD PROCEDURE > CHECK FOR A SHORT BETWEEN MULTIPLE CIRCUITS > THEORY OF OPERATION

Fig 1: 12-Volt Switched Ignition Circuit

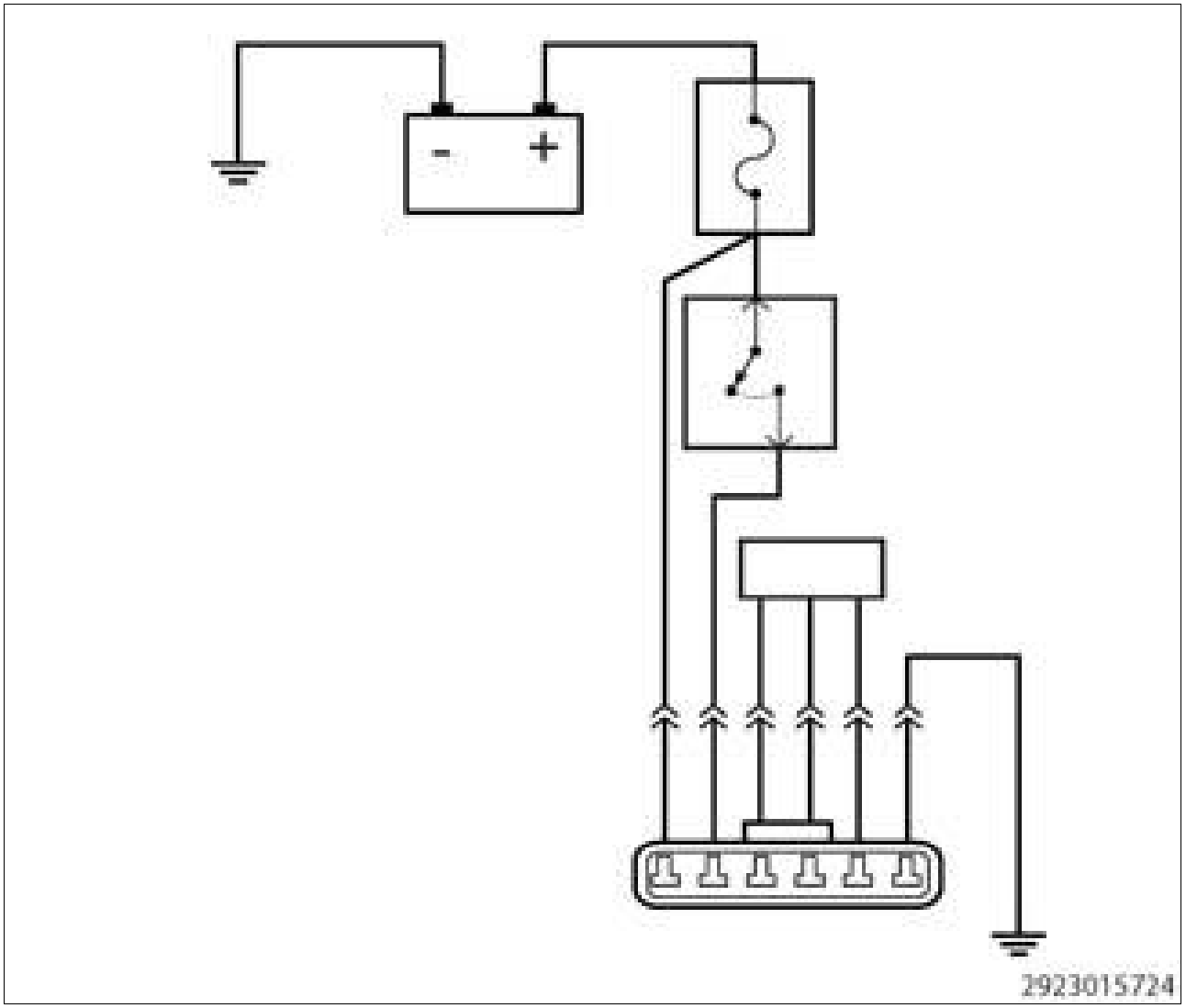

Courtesy of CHRYSLER GROUP, LLC

The purpose of the following procedure is to demonstrate how to check for a short circuit between multiple circuits.

NOTE:

The circuit shown in illustration is an example, and is intended for demonstrational purpose only.

The following are circuit tests covered in this procedure:

- Testing For A Short Between Multiple Circuits

NOTE:

Perform the following test using a known good multimeter.

Below is a list of possible causes that could be related to a Multiple Short condition.

Possible Causes
SHORTED CIRCUIT (CHAFED, PIERCED OR PINCHED WIRES)
SHORTED IN-LINE CONNECTOR (BENT, PUSHED OUT OR CORRODED TERMINALS)

STANDARD PROCEDURE > CHECK FOR A SHORT BETWEEN MULTIPLE CIRCUITS > DIAGNOSTIC TEST

TESTING FOR A SHORT BETWEEN MULTIPLE CIRCUITS

Fig 1: Testing For A Short Between Multiple Circuits

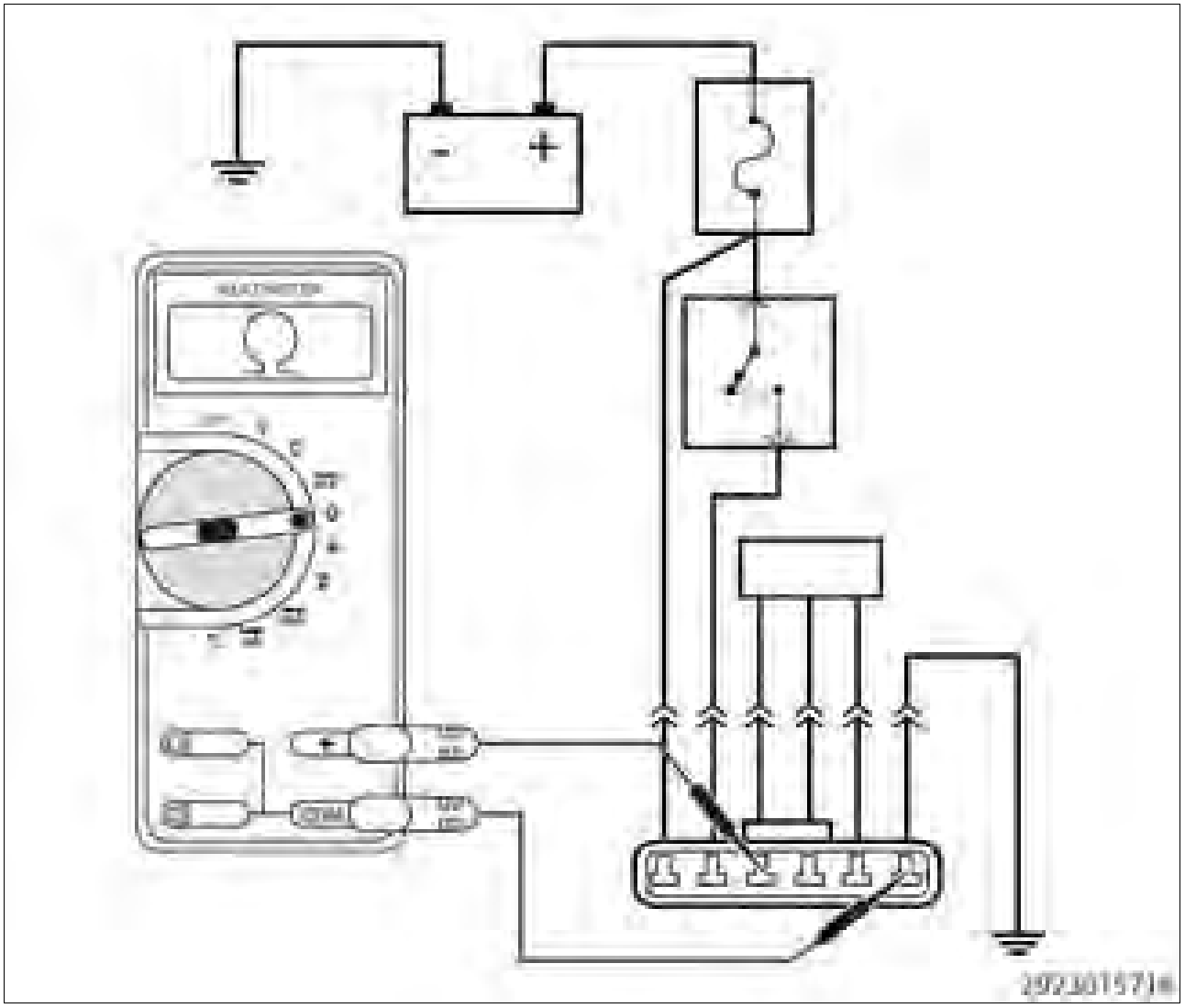

Courtesy of CHRYSLER GROUP, LLC

NOTE:

Before measuring the resistance of any circuit, first measure the resistance between the two leads of the multimeter. Take this value and subtract it from the value recorded when measuring the resistance of the circuit being checked (The meter leads can add 0.5 ohm or more of total resistance).

1. Turn the ignition off.
2. Disconnect the wire harness connectors of the components that contain the circuits that are suspected of being shorted together.

> *NOTE:*
>
> *Check connectors - Clean/repair as necessary.*

3. At this time leave all in-line connectors connected.
4. With all the component wire harness connectors disconnected, use a multimeter set to Ohms (Ω), and measure the resistance between the applicable circuits in one of the harness connectors.
5. Use one lead of the multimeter and carefully probe the circuit suspected of being shorted.
6. Use the other lead of the meter and one at a time, carefully probe the other circuits in the harness connector.

   Is there any continuity when probing any two circuits?

   Yes

   1. Repair the short between the circuits. Use the wiring diagram as a guide to trace the circuits and look for any in-line connectors where the short could occur.
   2. One method to help isolate the short is to disconnect any in-line connectors that the circuit being tested runs through and measure for the short again. If the short goes away, the short is on the other side of the in-line connector.

   No

   1. The circuit is not shorted or the condition that originally caused the short may not be present at this time. Continue to measure the resistance and wiggle the wire harness and connectors while checking for an intermittent short.

      > *NOTE:*
      >
      > *By disconnecting the wire harness connectors you may have eliminated the source that was causing the short.*

   2. Use the wiring diagram as a guide to trace the circuits and look for any in-line connectors where the short could occur intermittently.
   3. Look for any chafed, pierced, pinched, or partially broken wires.
   4. Look for broken, bent, pushed out or corroded terminals. Verify that there is good pin to terminal contact in the related wire harness connectors.
   5. Perform any Technical Service Bulletins (TSBs) that may apply.

STANDARD PROCEDURE > CHECK THE RESISTANCE OF A CIRCUIT USING AN OHMMETER > THEORY OF OPERATION

Fig 1: 12-Volt Switched Ignition Circuit

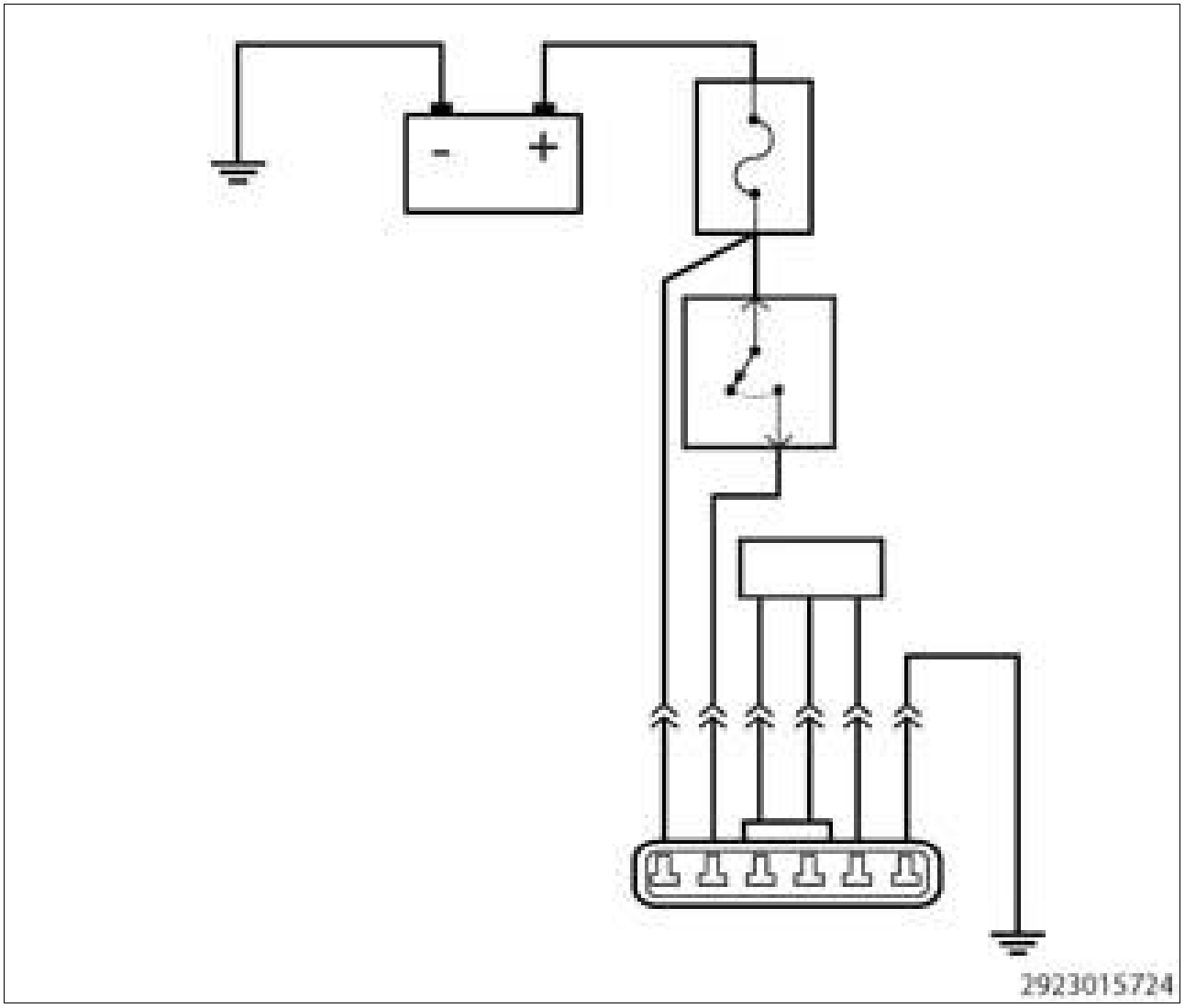

Courtesy of CHRYSLER GROUP, LLC

The purpose of the following procedure is to demonstrate how to check the resistance of a circuit with an ohmmeter.

> *NOTE:*
>
> *The circuit shown in illustration is an example, and is intended for demonstrational purpose only.*

The following are circuit tests covered in this procedure:

- Testing For An Open Circuit Using An Ohmmeter

NOTE:

Perform the following test using a known good multimeter.

Below is a list of possible causes that could be related to an Open Circuit condition.

Possible Causes
OPEN CIRCUIT (CHAFED, PIERCED, PINCHED OR BROKEN WIRES)
OPEN IN-LINE CONNECTOR (BENT, PUSHED OUT OR CORRODED TERMINALS)

STANDARD PROCEDURE > CHECK THE RESISTANCE OF A CIRCUIT USING AN OHMMETER > DIAGNOSTIC TEST

TESTING FOR AN OPEN CIRCUIT USING AN OHMMETER

Fig 1: Testing For An Open Circuit Using An Ohmmeter

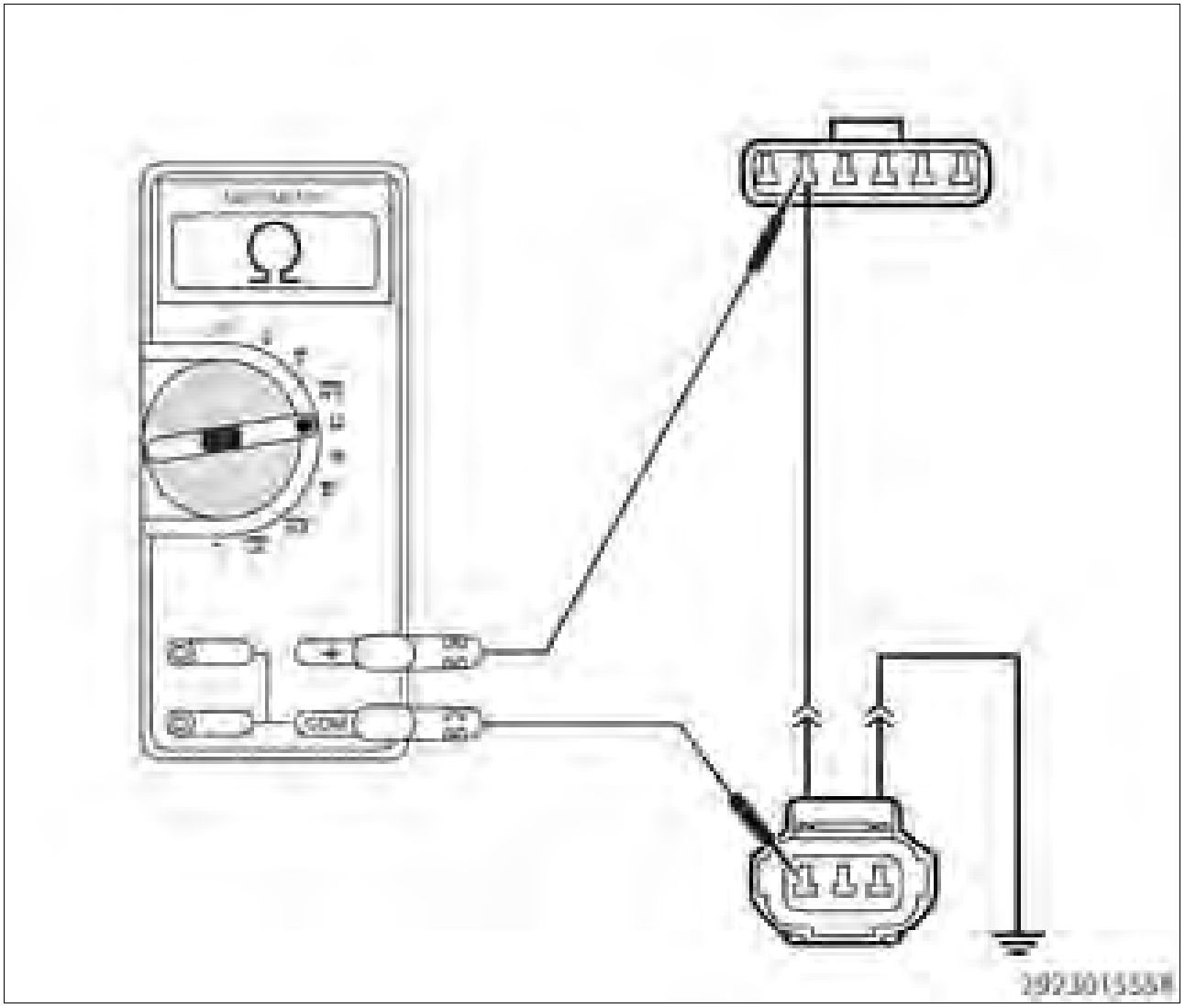

Courtesy of CHRYSLER GROUP, LLC

NOTE:

Before measuring the resistance of any circuit, first measure the resistance between the two leads of the multimeter. Take this value and subtract it from the value recorded when measuring the resistance of the circuit being checked (The meter leads can add 0.5 ohm or more of total resistance).

1. Turn the ignition off.
2. Disconnect the wire harness connectors of the components that contain the circuit suspected of being open.

NOTE:

Check connectors - Clean/repair as necessary.

3. At this time leave all in-line connectors connected.
4. With the component wire harness connectors disconnected, use a multimeter set to Ohms (Ω), and measure the resistance of the circuit.
5. Use one lead of the meter and probe the circuit in one harness connector.
6. Use the other lead of the meter and probe the same circuit in the other harness connector.

   Is the resistance in the circuit below 3.0 ohms?

   Yes

   1. The circuit does not contain any excessive resistance or the condition that originally caused the excessive resistance may not be present at this time. Continue to measure the resistance of the circuit, wiggle the wire harness and connectors to check for an intermittent open or poor connection.
   2. Use the wiring diagram as a guide to trace the circuits and look for any in-line connectors where the open could occur intermittently.
   3. Look for any chafed, pierced, pinched, or partially broken wires.
   4. Look for broken, bent, pushed out or corroded terminals. Verify that there is good pin to terminal contact in the related wire harness connectors.
   5. Perform any Technical Service Bulletins (TSBs) that may apply.

   No

   1. Repair the excessive resistance in the circuit between the two wire harness connectors. Using the wiring diagram as a guide, trace the circuit and check for any in-line connectors where the open or excessive resistance could occur.
   2. One method to help isolate the open is to disconnect any in-line connectors and measure the resistance from one side of the in-line connector to the matching component harness connector. If the open or excessive resistance is not present, the open or excessive resistance is on the other side of the in-line connector.

STANDARD PROCEDURE > CHECK FOR EXCESSIVE CURRENT DRAW > THEORY OF OPERATION

What is current draw?

Current draw, or parasitic draw is an electrical load that draws current from the battery when the ignition is turned off. Some are considered normal, some above normal. Normal draw comes from various electronic devices connected to battery positive at all times. Many vehicle modules draw a few mA

(milliamps) as a means to "Keep Alive Memory". Whether it's the clock in the radio or the last known position of the memory mirrors, these tiny amounts of current typically will only add up to 20 or 30 mA. The vehicle can sit parked for days, even a few weeks without any problems of excessive battery drain that might prevent starting. As long as the vehicle is driven periodically in order for the alternator to recharge the battery there is no problem. A problem may occur, in situations such as new vehicles in dealer stock or long term airport parking situations.

Below are some examples of modules and components that require keep alive memory:

- Powertrain Control Module (PCM)
- Body Control Module (BCM)
- Memory Seat Module (MSM)
- Radio

What is excessive current draw?

Excessive current draw can be determined by an ammeter reading in excess of 50 mA. The typical "normal" current draw will not exceed 20 or 30 mA.

How to locate the problem?

Locating the problem involves a process of elimination. If the problem is not obvious, like the trunk light staying on, you will have to start troubleshooting:

- Start by removing one fuse at a time until you see the reading on the meter drop off (be careful to reinstall the fuses in their proper location).
- Once you've determined the high-draw circuit, there still may be a half-dozen loads, each individually drawing current from the battery.
- To zero in on that circuit or circuits, use the schematic diagram and disconnect each device on the circuit one-at-a-time and check the meter.
- When the milliamp reading drops off significantly, you've found the problem.

Perform the following test to determine where the cause of the draw is located.

Possible Causes
INSTALLED AFTERMARKET ACCESSORIES (AUDIO SYSTEMS, VEHICLE ALARMS, ETC.)
COURTESY LIGHTS REMAINING ON (INTERIOR, TRUNK, HOOD, ETC.)
BATTERY CHARGERS PLUGGED INTO THE CIGARETTE LIGHTER/POWER OUTLETS

STANDARD PROCEDURE > CHECK FOR EXCESSIVE CURRENT DRAW > DIAGNOSTIC TEST

TESTING FOR PARASITIC DRAW

NOTE:

For a more accurate current draw reading, wait 20 minutes to make sure all modules have powered down before continuing. Some modules may stay powered up longer than others.

Fig 1: Testing For Parasitic Draw Using Multimeter

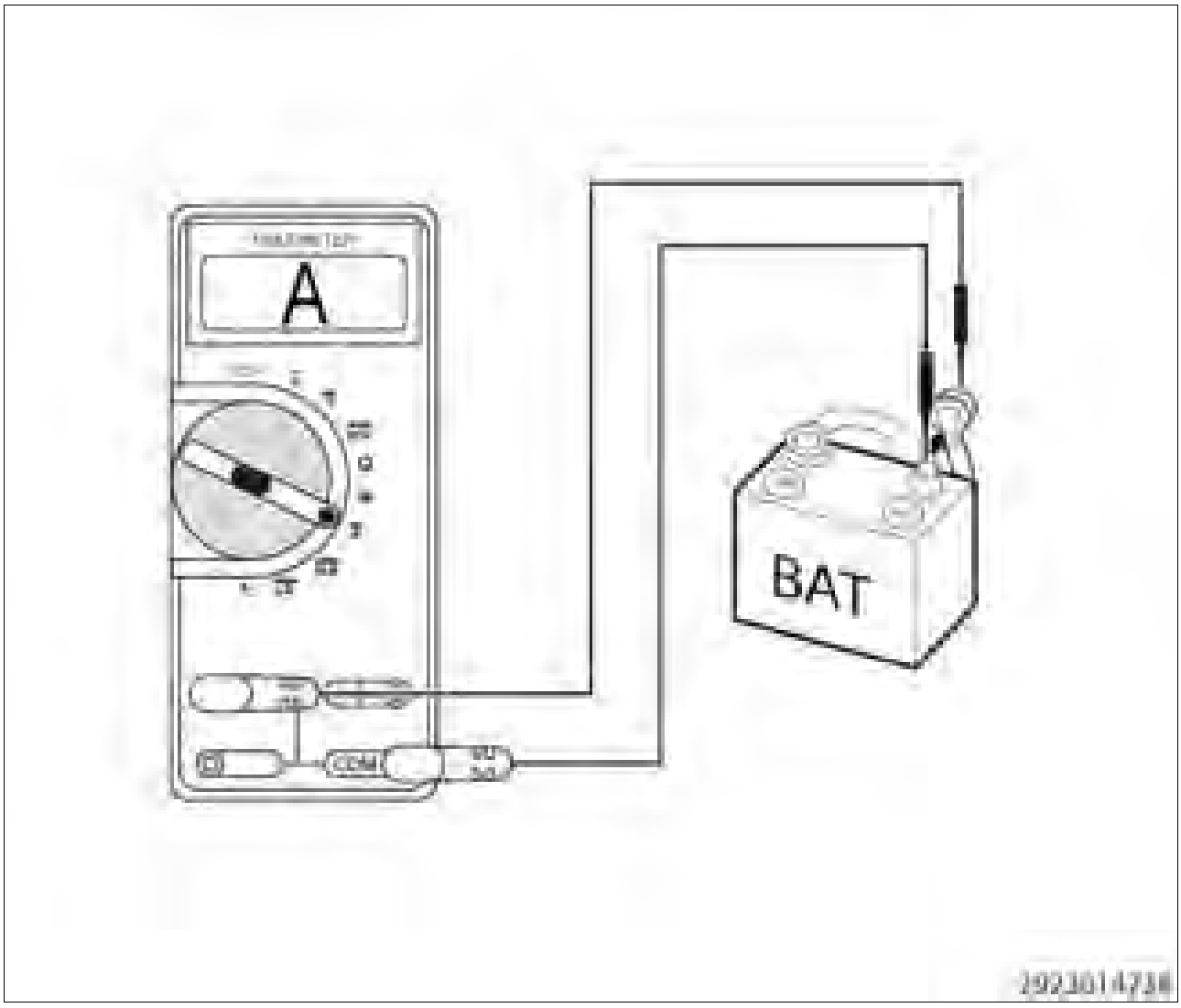

Courtesy of CHRYSLER GROUP, LLC

Turn the ignition off.

1. Disconnect the Negative battery cable (ground).
2. Using a multimeter, set the multimeter leads up to properly measure Amperage.
3. Connect the ground lead that is plugged into the COM port of the multimeter to the Negative battery post/terminal.
4. Connect the other lead of the multimeter that is plugged into the Amp port of the multimeter to the Negative battery cable.

> *CAUTION:*
>
> *Do not crank the engine or turn on any accessories that may draw more than 10 Amps. You may open the protective fuse in the multimeter.*

5. While monitoring the amperage reading on the multimeter, begin to remove fuses (one at a time) from each fuse location on the vehicle and see if the amperage drops.

> *NOTE:*
>
> 1. *Only remove one fuse at a time until the cause of the voltage draw is determined.*
> 2. *Many vehicles have multiple fuse locations on the vehicle.*

6. If the amperage does not drop, install the fuse you just removed and remove the next fuse.

   Does the amperage drop to between 0.02 to 0.04 of an Amp when removing any fuses?

   Yes

   1. Use the wiring diagram as a guide to help indicate what components or modules are powered by the fuse.
   2. At this point you can install the fuse and begin disconnecting the components powered by the fuse.
      1. When the amperage drops after disconnecting a component this will indicate which component is at fault.
      2. It is important to know how long some modules are designed to remain awake.
      3. You don't want to replace a component that is operating normally.
      4. The condition that originally caused the draw may not be present at this time.

   No

   1. The condition that originally caused the draw may not be present at this time.
   2. Look for any chafed, pierced, pinched, or partially broken wires.
   3. Look for broken, bent, pushed out or corroded ground terminals.
   4. Perform any Technical Service Bulletins (TSBs) that may apply.

STANDARD PROCEDURE > CIRCUIT LOAD TESTING PROCEDURE > THEORY OF OPERATION

A circuit load test can be performed to test the ability of a circuit to carry the current required to operate a connected device. A circuit load test should be performed after a circuit has passed a resistance test using a DVOM and the circuit is still suspected of a failure.

- A single copper wire strand will carry enough current to light a test light bulb, while showing very low resistance using a DVOM.
- Some test lights are insufficient for load testing because of the very low resistance bulb being used.
- The Load Test tool listed below will require higher current flow to power the bulb; and this will test the ability of the circuit to carry a load.
- This test will indicate if the circuit being tested can carry the current required to operate a connected device.

WARNING:

To avoid possible serious or fatal injury, DO NOT load test any air bag/restraint system components or circuits using the procedures listed here. Refer to the RESTRAINTS - SERVICE INFORMATION article for proper air bag/restraint system testing procedures.

CAUTION:

Do not load test any circuits with components still connected to the circuit.

NOTE:

Depending upon the location of the circuit in question, this test may require jumper wires.

NOTE:

Use the wiring diagrams as a guide to trace the circuits and look for any in-line connectors where the circuit failure could occur intermittently. Look for any chafed, pierced, pinched, or partially broken wires. Look for broken, bent, pushed out or corroded terminals - clean/repair as necessary. Verify that there is good pin to terminal contact in the related wire harness connectors.

Fig 1: Load Test Tool

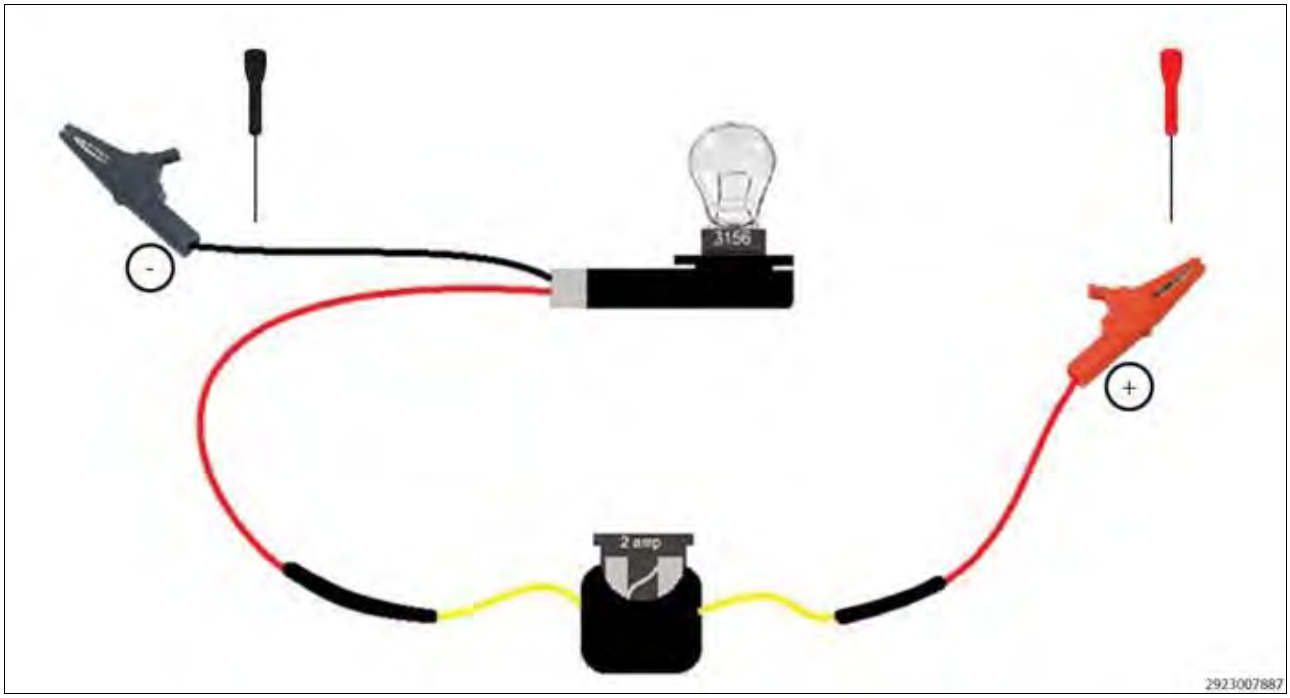

Courtesy of CHRYSLER GROUP, LLC

Here is an example of a simple tool you can build to test a circuit`s ability to carry a load.

Fig 2: Load Test Tool Components



Courtesy of CHRYSLER GROUP, LLC

The following is a list of components required to build a load test tool:

1. 3156 Bulb

2. 3156 Bulb socket
3. Negative alligator clip with covers
4. Positive alligator clip with covers
5. 2 Amp mini fuse
6. Mini fuse holder
7. 2' to 4' of Black 16ga wire
8. 2' to 4' of Red 16ga wire
9. Approved back probe tool
10. Shrink tubing
11. Solder

STANDARD PROCEDURE > CIRCUIT LOAD TESTING PROCEDURE > LOAD TESTING A GROUND CIRCUIT

DIAGNOSTIC LOAD TEST (GROUND CIRCUIT)

Fig 1: Performing Diagnostic Load Test (Ground Circuit)

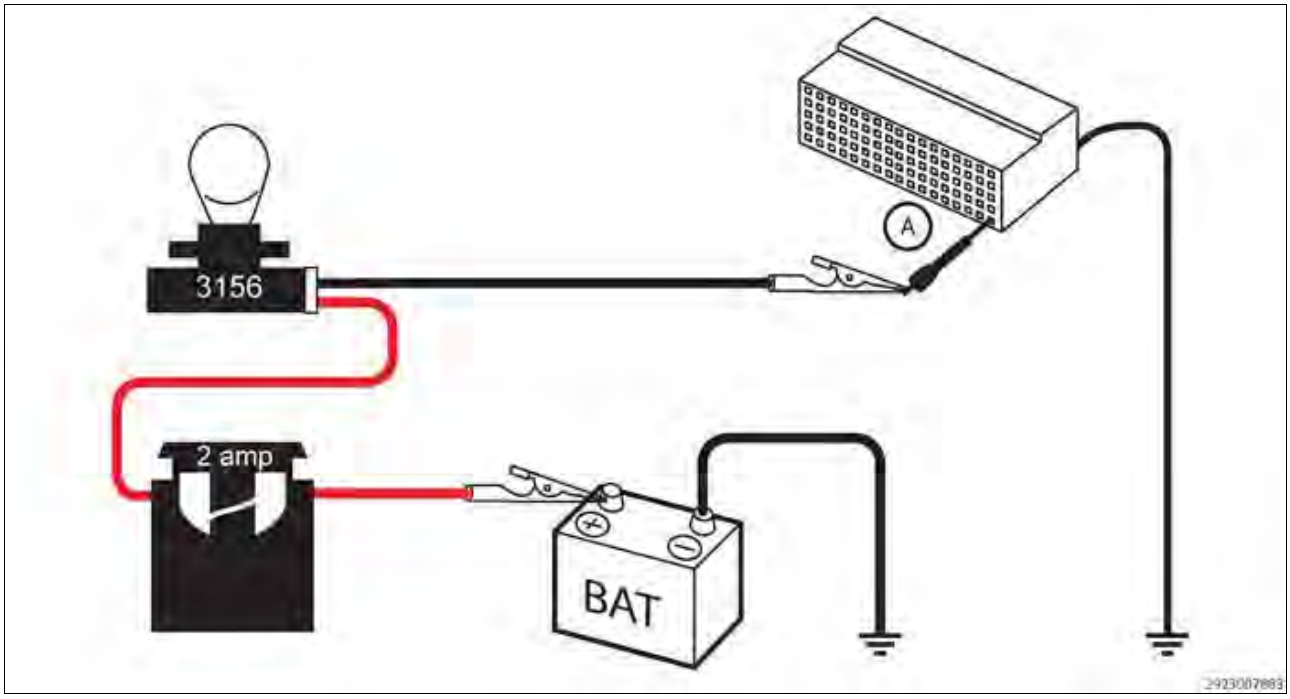

Courtesy of CHRYSLER GROUP, LLC

1. Disconnect the connector from the device(s) to gain access and isolate the terminal for the circuit being tested.
2. Connect the positive lead of the load test tool to the positive side of the battery.

3. Using an approved connector back probe tool, connect the negative lead of the load test tool to the circuit being tested at point (A).

> ⚠ *CAUTION:*
>
> *Use only approved connector back probe tools when back probing a connector so as not to cause damage to the terminals or insulation of the connector. Damage to the terminals can cause poor terminal contact or retention. Damage to the insulation can introduce corrosion due to water intrusion.*

Does the bulb light bright, when compared to a direct battery connection?

Yes

1. The circuit being tested can carry a load, check other circuits, connectors and terminals for concerns.

No

1. Repair the circuit, connector or terminal that has an open or excessive resistance.
2. Perform any related Recalls or Technical Service Bulletins (TSBs) that may apply.

STANDARD PROCEDURE > CIRCUIT LOAD TESTING PROCEDURE > LOAD TESTING A BATTERY OR IGNITION FEED CIRCUIT

DIAGNOSTIC LOAD TEST (BATTERY/IGNITION FEED CIRCUIT)

Fig 1: Performing Diagnostic Load Test (Battery/Ignition Feed Circuit)

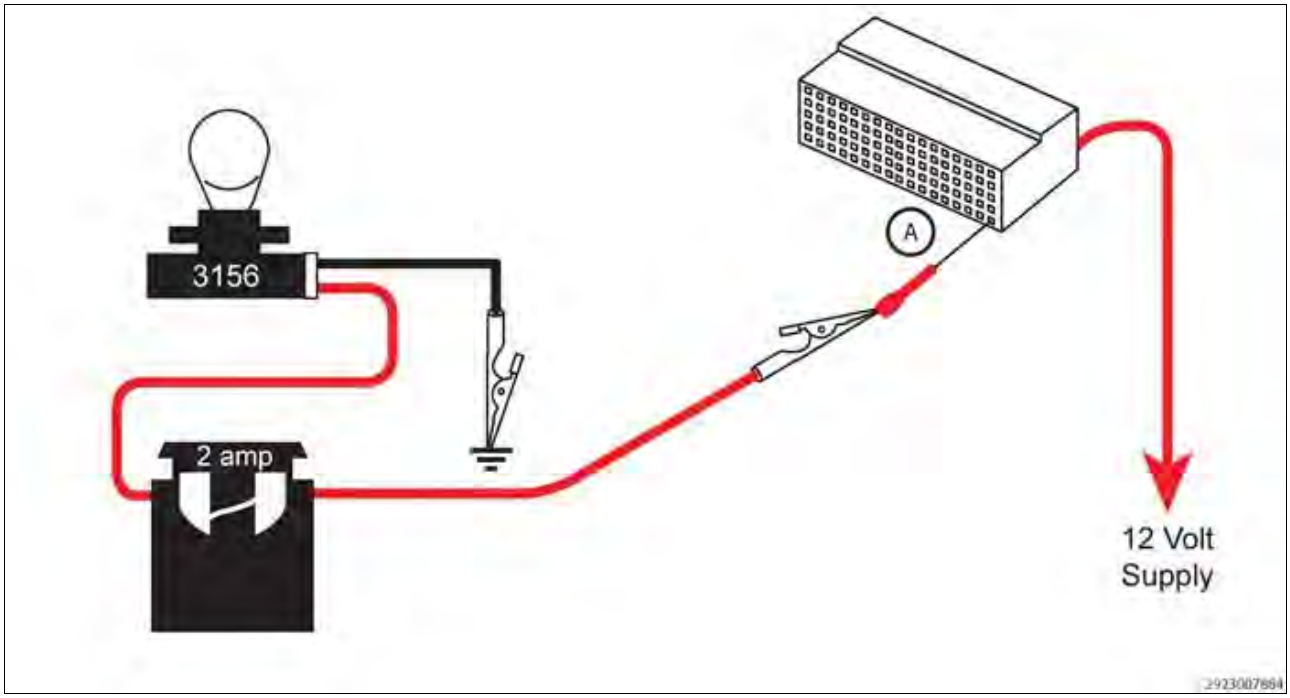

Courtesy of CHRYSLER GROUP, LLC

1. Disconnect the connector from the device(s) to gain access and isolate the terminal for the circuit being tested.
2. Using an approved connector back probe tool, connect the positive lead of the load test tool to the circuit being tested at point (A).
3. Connect the negative lead of the load test tool to the negative side of the battery or ground.

> ⚠ *CAUTION:*
>
> *Use only approved connector back probe tools when back probing a connector so as not to cause damage to the terminals or insulation of the connector. Damage to the terminals can cause poor terminal contact or retention. Damage to the insulation can introduce corrosion due to water intrusion.*

Does the bulb light bright, when compared to a direct battery connection?

Yes

1. The circuit being tested can carry a load, check other circuits, connectors and terminals for concerns.

No

1. Repair the circuit, connector or terminal that has an open or excessive resistance.
2. Perform any related Recalls or Technical Service Bulletins (TSBs) that may apply.

STANDARD PROCEDURE > CIRCUIT LOAD TESTING PROCEDURE > LOAD TESTING A BATTERY OR IGNITION FEED CIRCUIT AND GROUND CIRCUIT

DIAGNOSTIC LOAD TEST (BATTERY FEED & GROUND CIRCUIT)

Fig 1: Performing Diagnostic Load Test (Battery Feed & Ground Circuit)

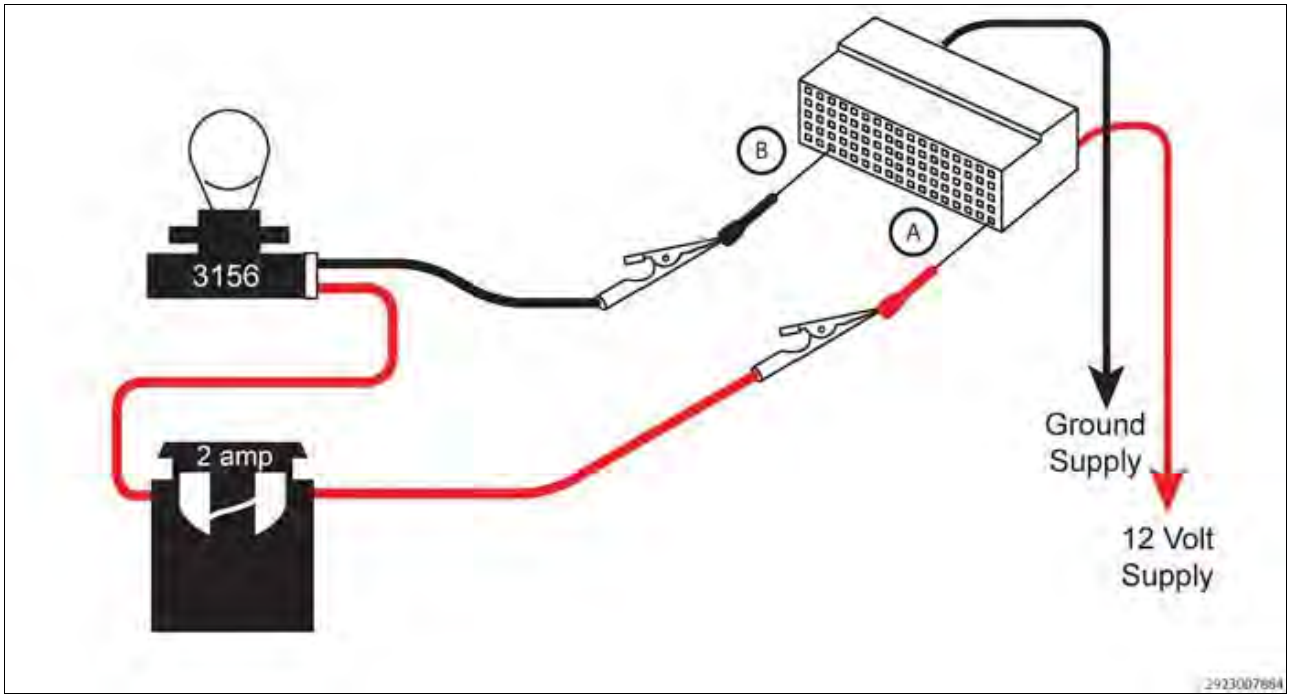

Courtesy of CHRYSLER GROUP, LLC

1. Disconnect the connector from the device(s) to gain access and isolate the terminal for the circuit being tested.
2. Using an approved connector back probe tool, connect the positive lead of the load test tool to the circuit being tested at point (A).
3. Using an approved connector back probe tool, connect the negative lead of the load test tool to the circuit being tested at point (B).

> ⚠ *CAUTION:*
>
> *Use only approved connector back probe tools when back probing a connector so as not to cause damage to the terminals or insulation of the connector. Damage to the terminals can cause poor terminal contact or retention. Damage to the insulation can introduce corrosion due to water intrusion.*

Does the bulb light bright, when compared to a direct battery connection?

Yes

1. The circuit being tested can carry a load, check other circuits, connectors and terminals for concerns.

No

1. Test the circuits individually to determine which circuit is the cause of the test failure.
2. Repair the circuit, connector or terminal that has an open or excessive resistance.
3. Perform any related Recalls or Technical Service Bulletins (TSBs) that may apply.

STANDARD PROCEDURE > CIRCUIT LOAD TESTING PROCEDURE > LOAD TESTING A CIRCUIT FOR AN OPEN OR HIGH RESISTANCE

DIAGNOSTIC LOAD TEST (OPEN/HIGH RESISTANCE CIRCUIT)

Fig 1: Performing Diagnostic Load Test (Open/High Resistance Circuit)

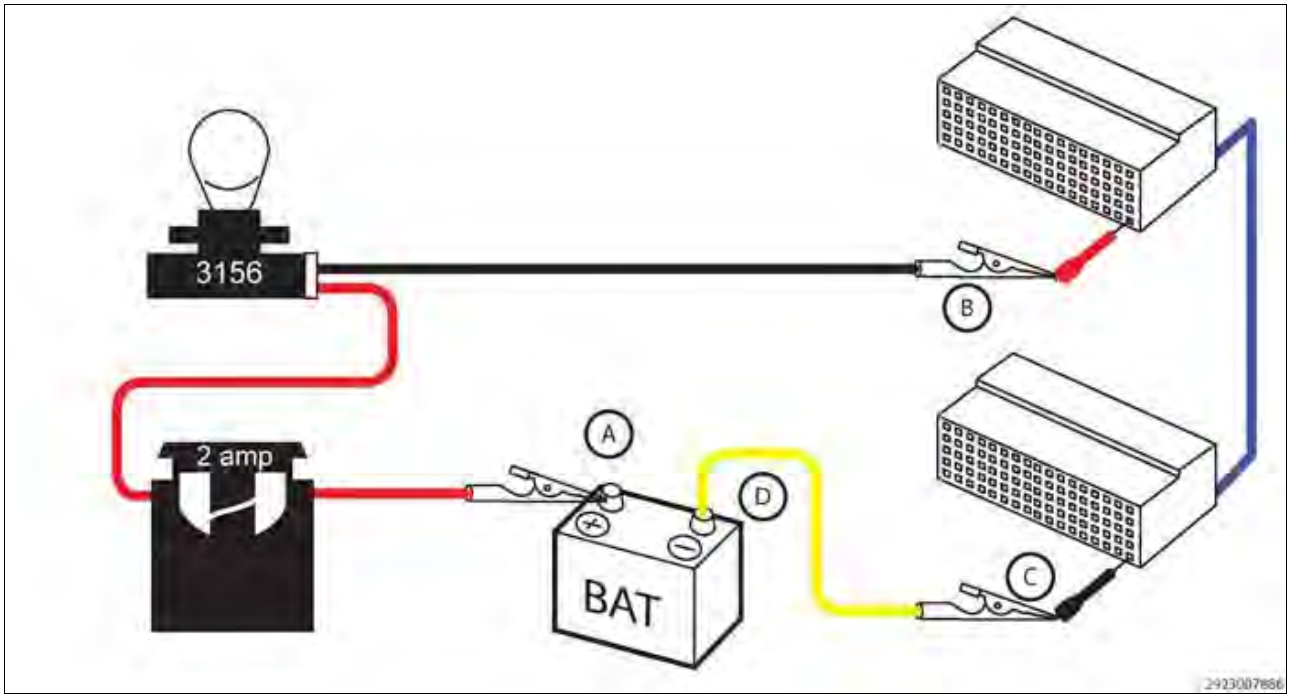

Courtesy of CHRYSLER GROUP, LLC

1. Disconnect all components from the circuit being tested.
2. Connect the positive lead of the load test tool to the positive side of the battery (A).
3. Using an approved connector back probe tool, connect the negative lead of the load test tool to the circuit being tested at point (B).
4. Using an approved connector back probe tool, connect a jumper wire to the circuit being tested at point (C).
5. Then connect the other end of the jumper wire to the negative side of the battery or ground (D).

> ⚠ *CAUTION:*
>
> *Use only approved connector back probe tools when back probing a connector so as not to cause damage to the terminals or insulation of the connector. Damage to the terminals can cause poor terminal contact or retention. Damage to the insulation can introduce corrosion due to water intrusion.*

Does the bulb light bright, when compared to a direct battery connection?

Yes

1. The circuit being tested can carry a load, check other circuits, connectors and terminals for concerns.

No

1. Repair the circuit, connector or terminal that has an open or excessive resistance.
2. Perform any related Recalls or Technical Service Bulletins (TSBs) that may apply.

STANDARD PROCEDURE > VOLTAGE DROP TEST PROCEDURE > THEORY OF OPERATION

Voltage drop is the reduction in voltage in an electrical circuit between the voltage source and load components. The wires and connectors of a circuit should contain almost no resistance and **all** the voltage should be consumed through the load. The "load" is the component using the power, such as a light, starter, or blower motor. If a circuit has excessive resistance, it prevents the wire from carrying sufficient current under high load conditions. A voltage drop test is an effective way to locate excessive resistance in connections and circuits.

To perform a voltage drop test, a Digital Volt Ohm Meter (DVOM) is used to measure the voltage drop across a live circuit or connection while it is under the load. If the circuit or connection being tested has excessive resistance, the DVOM will measure the voltage that the resistance is using. **Little or no voltage drop should be read, ideally less than 0.2 of a volt** , anything greater indicates excessive resistance and the circuit or connection should be inspected for cleaning or repair.

Possible Causes
EXCESSIVE CIRCUIT RESISTANCE (CHAFED, PIERCED OR CORRODED WIRES)
HIGH RESISTANCE WITH IN-LINE CONNECTOR (BENT, PUSHED OUT OR CORRODED TERMINALS)

STANDARD PROCEDURE > VOLTAGE DROP TEST PROCEDURE > DIAGNOSTIC TEST

TESTING FOR VOLTAGE DROP

Fig 1: Testing For Voltage Drop

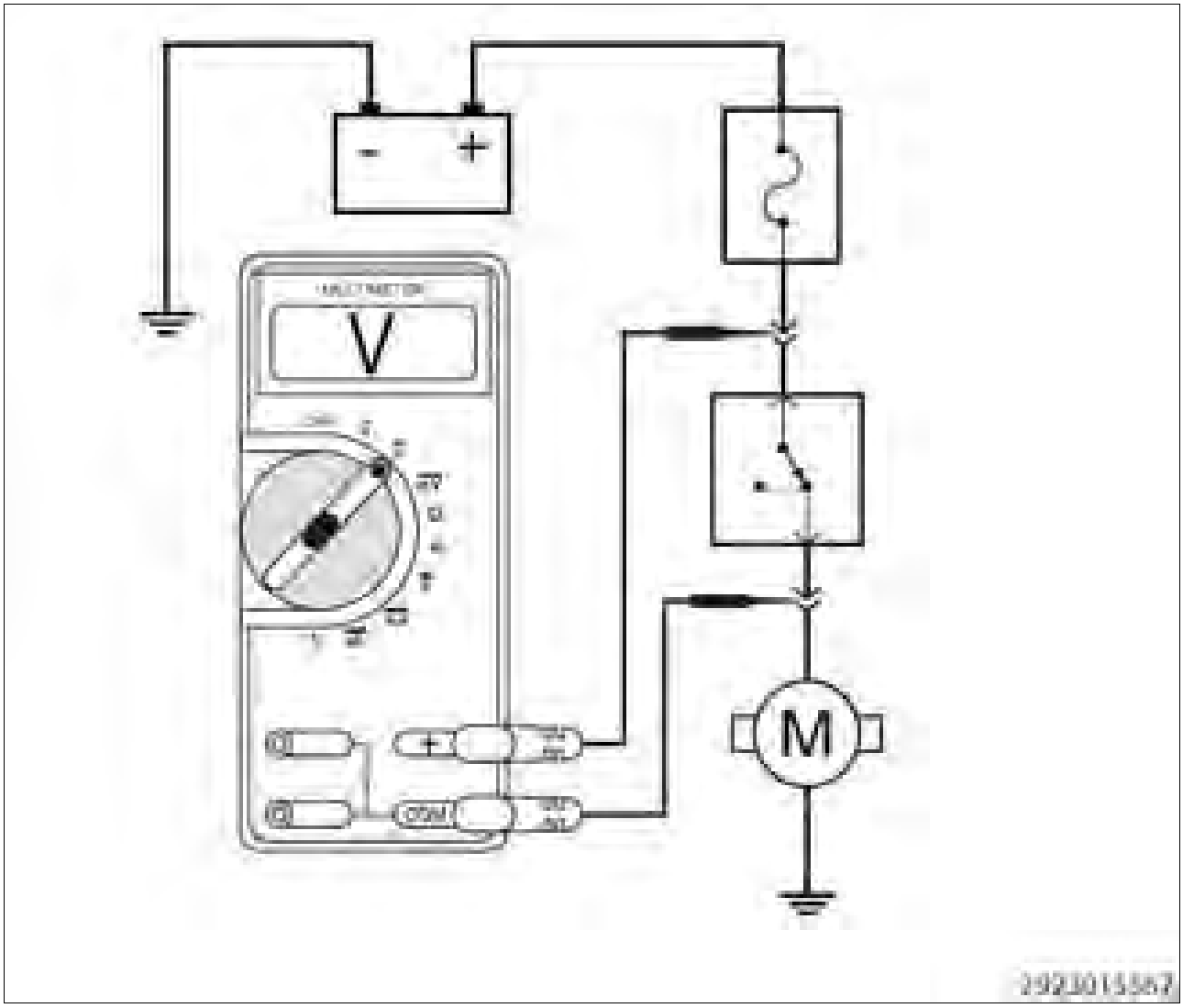

Courtesy of CHRYSLER GROUP, LLC

1. Turn the ignition off.
2. Use the wiring diagram as a guide, trace the circuit being tested and locate the components related to the circuit.
3. Set the multimeter to measure DC voltage.
4. Carefully back probe the two component harness connectors of the circuit being tested.

> *WARNING:*
>
> *When the engine is operating, do not stand in direct line with the fan. Do not put your hands near the pulleys, belts or fan. Do not wear loose clothing. Failure to follow these instructions may result in possible serious or fatal injury.*

> *NOTE:*
>
> *If you are testing the starting circuit, disable the engine so the engine does not start.*

5. Crank the engine for five seconds if you are testing the starting circuit and monitor the multimeter voltage reading.
6. For circuits that don't require the engine running, turn the ignition on.
7. For circuits that require the engine running, start the engine.

> *NOTE:*
>
> *If the circuit you are checking needs to be operating, such as the Blower Motor or a Lamp, do so now.*

8. Monitor the voltage reading.
9. The voltmeter will show the difference in voltage between the two points.

   Is the voltage less than 0.2 of a Volt?

   Yes

   1. At this time the circuit is functioning properly. Continue to measure the voltage between the components and wiggle the wire harness and connectors while checking for an intermittent condition.
   2. Use the wiring diagram as a guide to trace the circuits and look for any in-line connectors where the excessive resistance could occur intermittently.
   3. Look for any chafed, pierced, pinched, or partially broken wires.
   4. Look for broken, bent, pushed out or corroded terminals. Verify that there is good pin to terminal contact in the related wire harness connectors.
   5. Perform any Technical Service Bulletins (TSBs) that may apply.

   No

   1. Repair the excessive resistance in the circuit.
   2. Use the wiring diagram as a guide to trace the circuit and look for any in-line connectors where the excessive resistance may occur.
   3. Look for any chafed, pierced, pinched, or partially broken wires.
   4. Look for broken, bent, pushed out or corroded terminals. Verify that there is good pin to terminal contact in the related wire harness connectors.
   5. Perform any Technical Service Bulletins (TSBs) that may apply.

STANDARD PROCEDURE > ELECTROSTATIC DISCHARGE (ESD) SENSITIVE DEVICES

Fig 1: Electrostatic Discharge Symbol

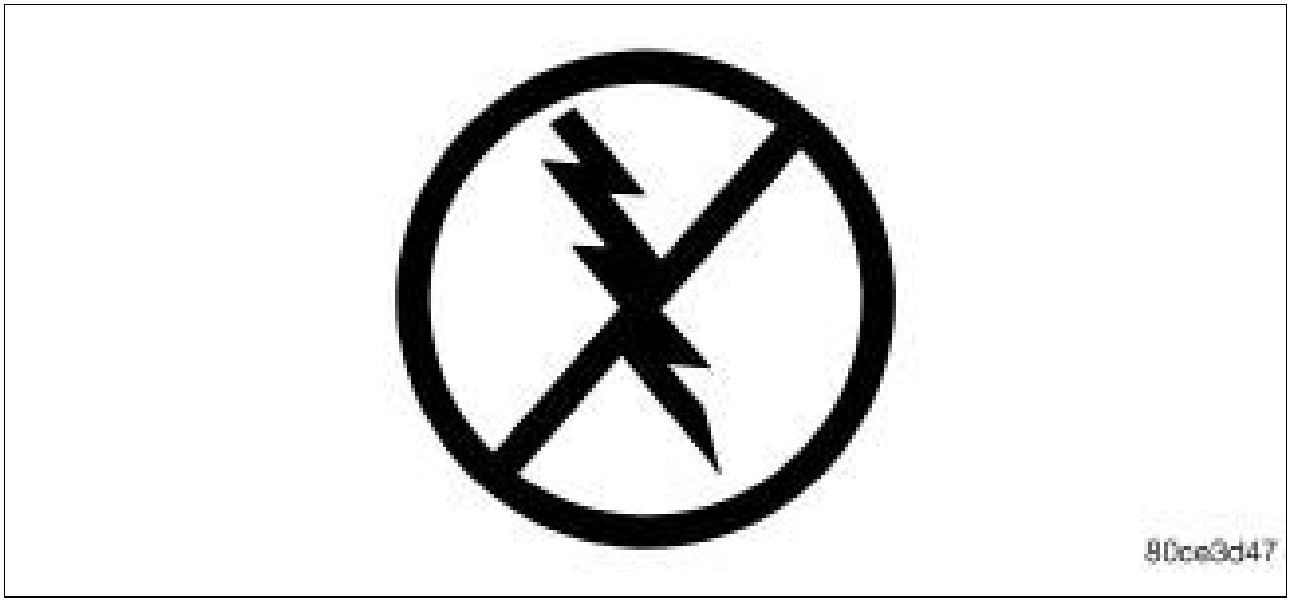

Courtesy of CHRYSLER GROUP, LLC

All ESD sensitive components are solid state and a symbol is used to indicate this. When handling any component with this symbol, comply with the following procedures to reduce the possibility of electrostatic charge build up on the body and inadvertent discharge into the component. If it is not known whether the component is ESD sensitive, assume that it is.

Perform the following procedure when handling ESD sensitive components:

1. Always touch a known good ground before handling the component. This should be repeated while handling the component and more frequently after sliding across a seat, sitting down from a standing position, or walking a distance.
2. Avoid touching electrical terminals of the component, unless instructed to do so by a written procedure.
3. When using a voltmeter, be sure to connect the ground lead first.
4. Do not remove the component from its protective packing until it is time to install the component.
5. Before removing the component from its package, ground the package to a known good ground on the vehicle.

STANDARD PROCEDURE > WIRE SPLICING

CAUTION:

If additional wire is needed when making a splice repair to any wire, it is important that the same or next larger size wire gauge be used. Refer to the appropriate wiring diagram for the original wire gauge size.

Fig 1: Splice Band

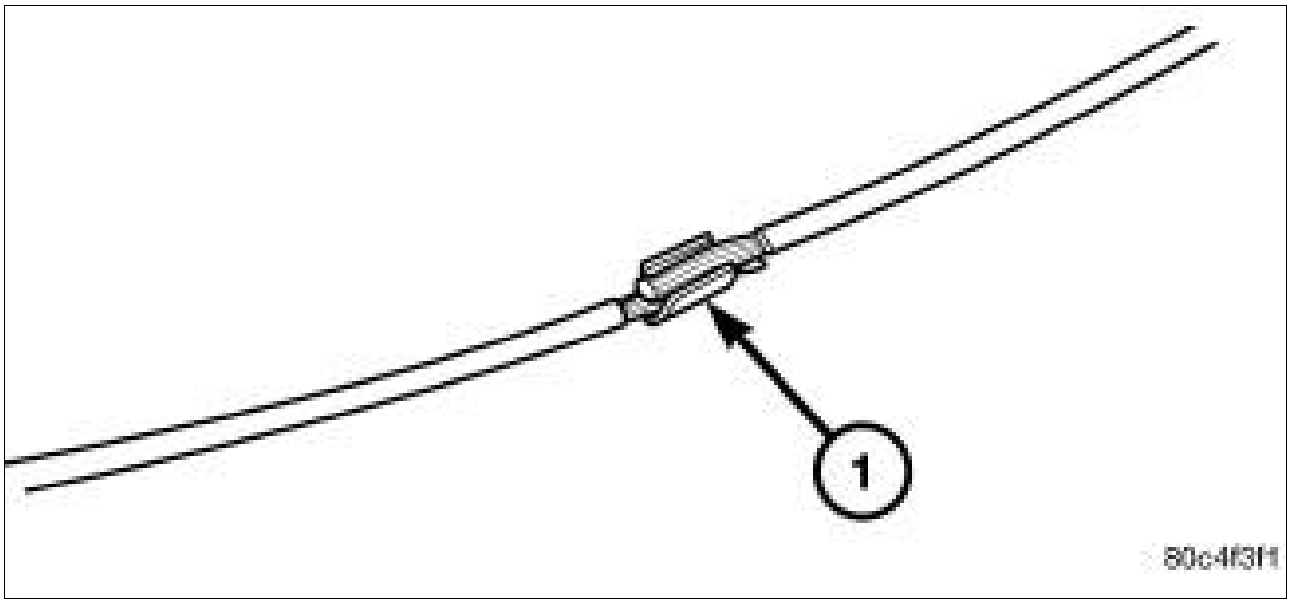

Courtesy of CHRYSLER GROUP, LLC

1. Remove 13 millimeters (0.50 inch) of insulation from each wire that needs to be spliced.
2. Place a piece of adhesive sealant-lined heat shrink tubing (Part Number 04778570 or equivalent) over the wire on one side of the splice. Be certain the length of tubing will be sufficient to cover and seal the entire repair area.
3. Place the strands of the wires being spliced so that they are overlapping each other within the splice band (1).

Fig 2: Crimping Tool

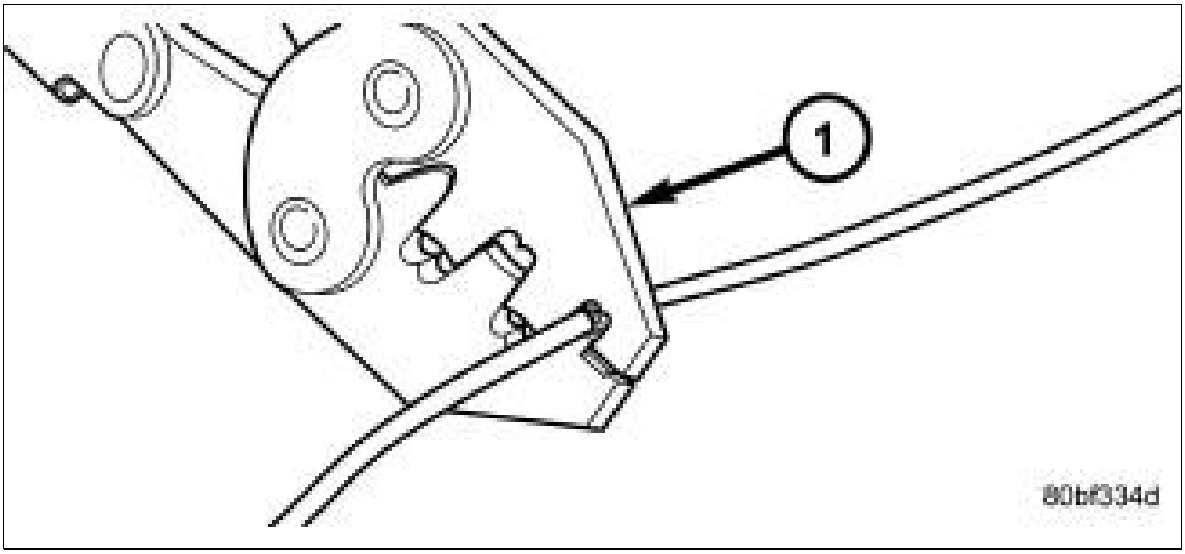

Courtesy of CHRYSLER GROUP, LLC

4. Using a crimping tool (1) (MOPAR Part Number 05019912AA, Miller Special Tool Number (special tool #10042, Crimper, Wire/Terminal) or equivalent) crimp the splice band and wires together securely.

Fig 3: Solder Splice

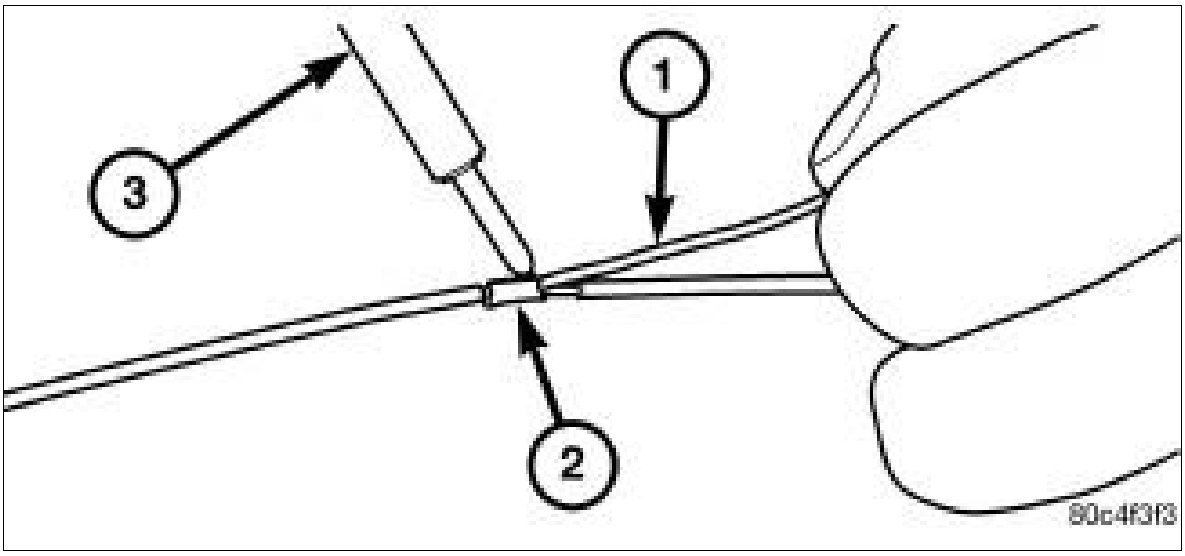

Courtesy of CHRYSLER GROUP, LLC

> ⚠ *CAUTION:*
>
> *Never use acid core solder for electrical wiring repairs.*

5. Using Rosin Core type solder (1) only and a suitable soldering iron (3), solder the wire and splice band connection (2) together.

Fig 4: Heat Shrink Tube

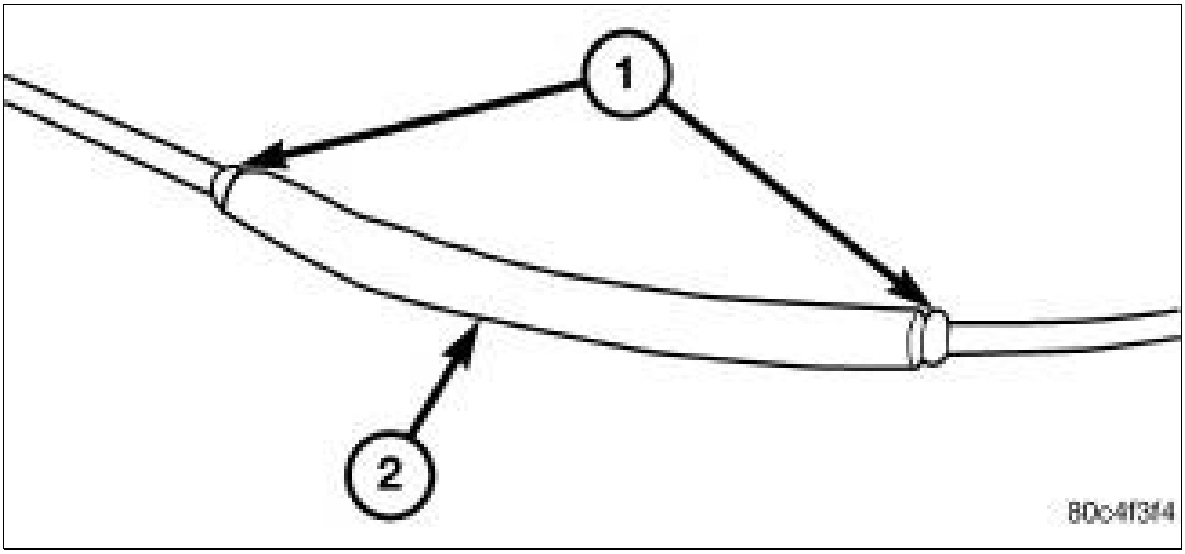

Courtesy of CHRYSLER GROUP, LLC

6. Center the heat shrink tubing (2) over the splice joint repair and heat using a suitable heat gun. Heat the joint until the tubing is tightly sealed and sealant (1) begins to ooze out of both ends of the tubing.

REMOVAL > CONNECTOR TERMINAL REMOVAL

Fig 1: Removal Of Dress Cover

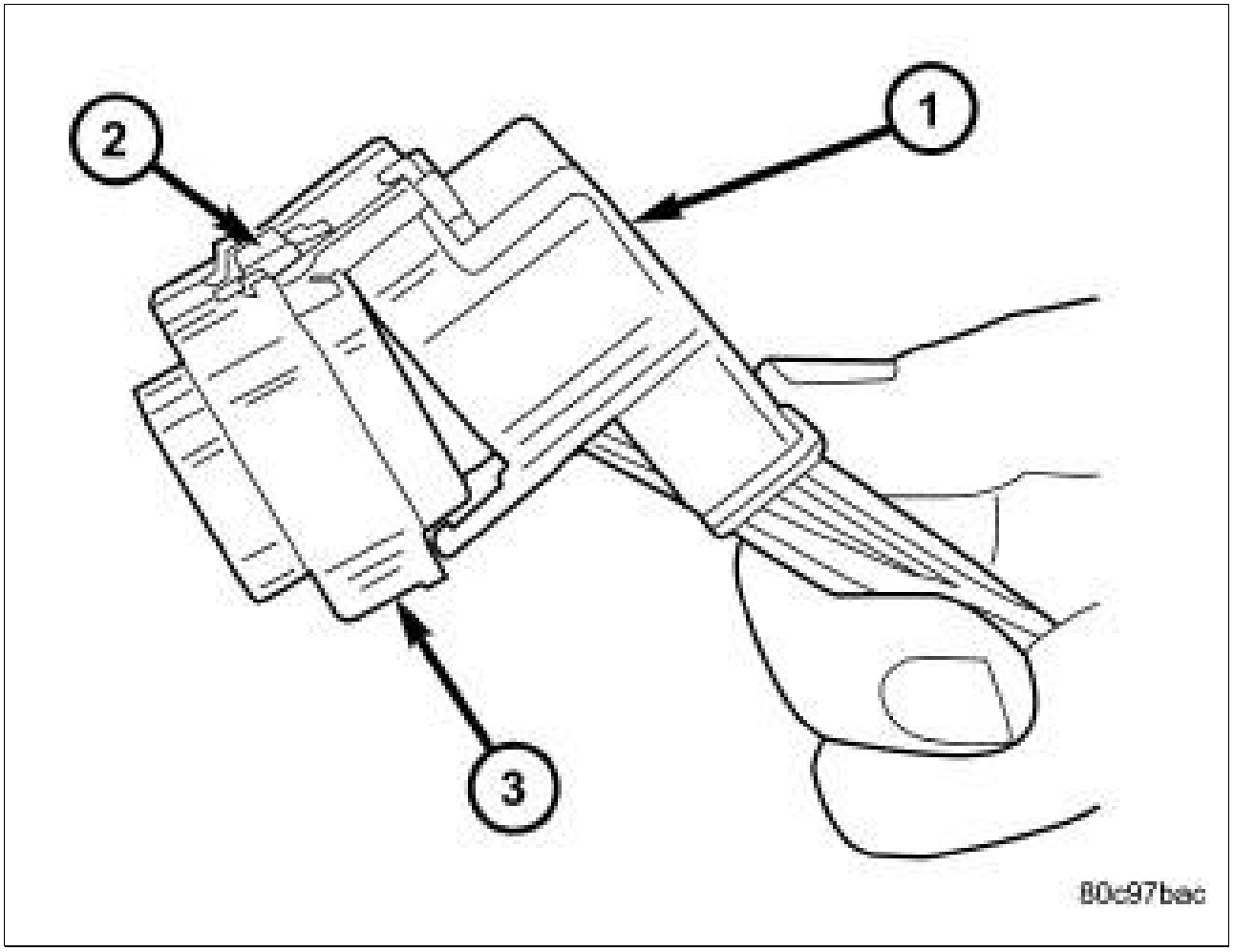

Courtesy of CHRYSLER GROUP, LLC

1 - DRESS COVER
2 - CONNECTOR LOCK
3 - CONNECTOR

1. Disconnect battery.
2. Release Connector Lock (2).
3. Disconnect the connector (3) being repaired from its mating half/component.
4. Remove the dress cover (if applicable) (1).

Fig 2: Releasing Secondary Terminal Locks

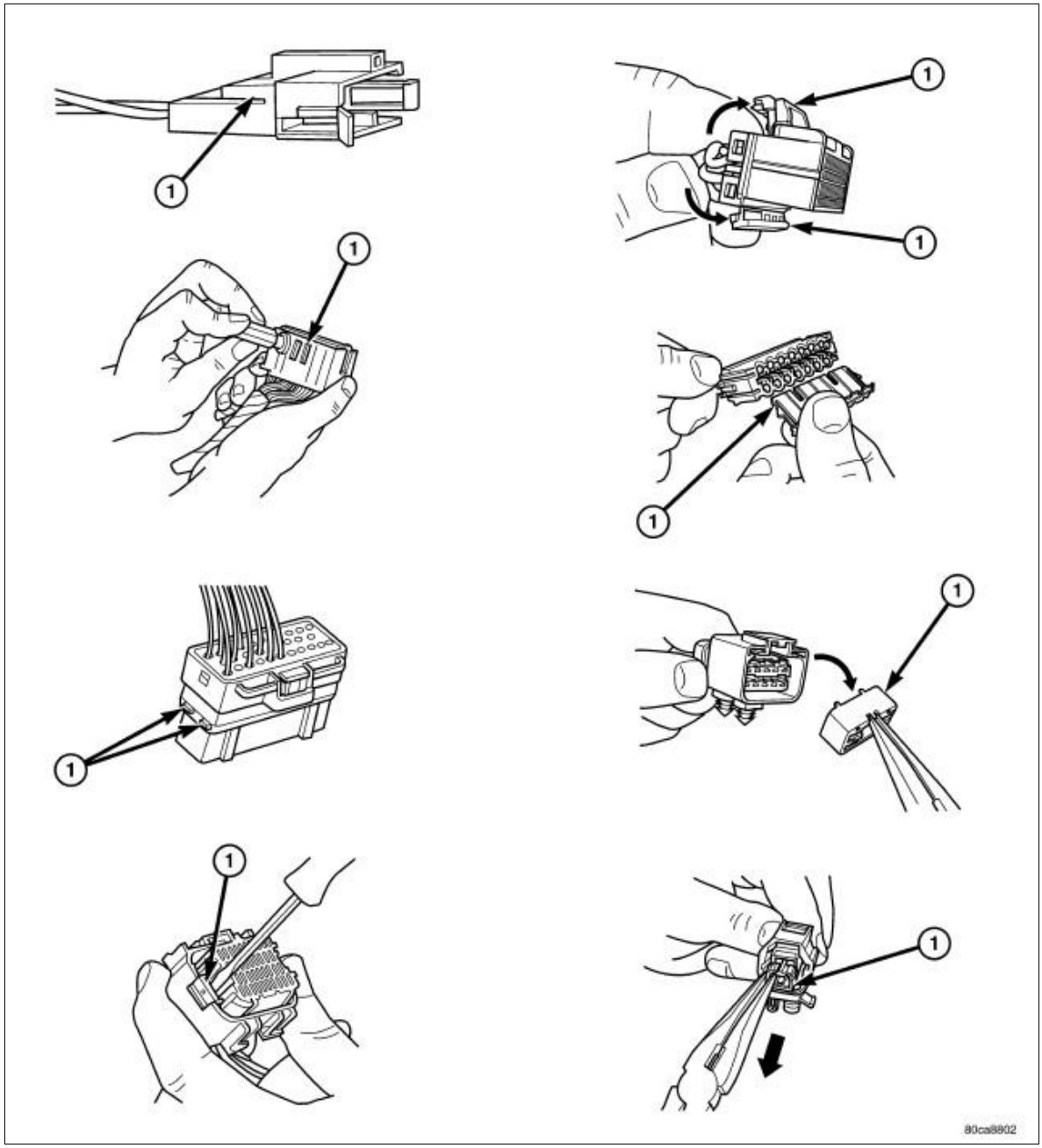

Courtesy of CHRYSLER GROUP, LLC

1 - Secondary Terminal Lock

5. Release the Secondary Terminal Lock, if required (1).

Fig 3: Terminal Removal

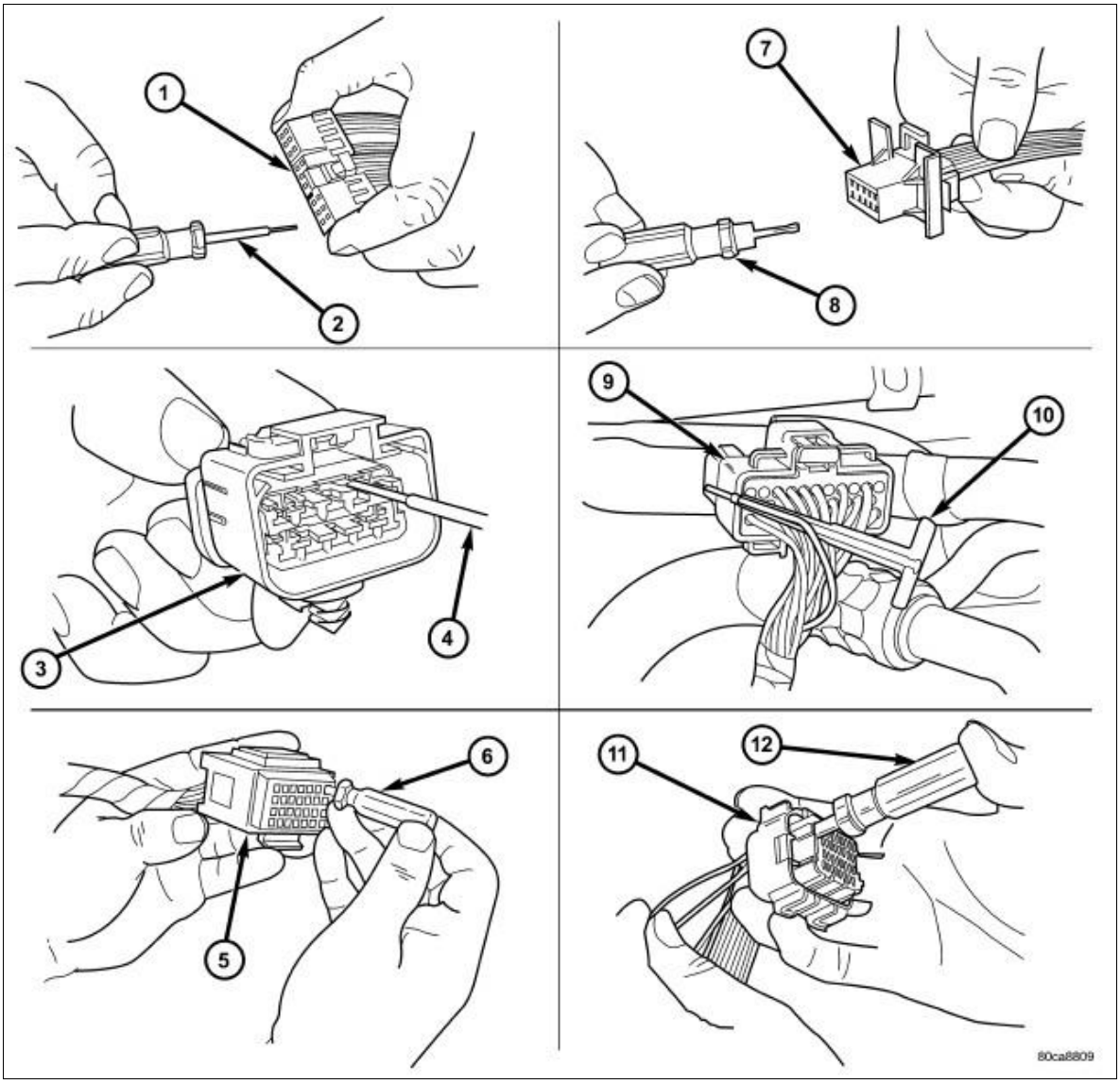

Courtesy of CHRYSLER GROUP, LLC

1 - TYPICAL CONNECTOR
2 - PICK FROM TERMINAL REMOVER KIT 10300
3 - APEX CONNECTOR
4 - PICK FROM TERMINAL REMOVER KIT 10300
5 - AUGAT CONNECTOR
6 - ELECTRICAL TERMINAL REMOVAL TOOL
7 - MOLEX CONNECTOR
8 - PICK FROM TERMINAL REMOVER KIT 10300
9 - THOMAS AND BETTS CONNECTOR
10 - TERMINAL REMOVER

11 - CONNECTOR
12 - ELECTRICAL TERMINAL REMOVER

6. Position the connector locking finger away from the terminal using the proper special tool. Pull on the wire to remove the terminal from the connector.

INSTALLATION > CONNECTOR TERMINAL INSTALLATION

1. Select a wire from the terminal repair kit that best matches the color and gauge of the wire being repaired.
2. Cut the repair wire to the proper length and remove one-half (1/2) inch of insulation.
3. Splice the repair wire to the wire harness. Refer to WIRE SPLICING .
4. Insert the repaired wire into the connector.
5. Install the connector locking wedge, if required, and reconnect the connector to its mating half/component.
6. Re-tape the wire harness starting at 1-1/2 inches behind the connector and 2 inches past the repair.
7. Connect battery and test all affected systems.

DESCRIPTION > DESCRIPTION

An electrically-operated horn system is standard factory-installed equipment in this vehicle. Depressing the Driver AirBag (DAB) trim cover in the center of the steering wheel actuates the horn switch contacts, which provides the vehicle operator with a convenient, audible signaling device that can be used to alert pedestrians or the operators of other vehicles in near proximity.

The Body Control Module (BCM) serves as the controller for the horn system, which also allows the BCM to utilize the horn system when providing audible outputs to support other vehicle features such as the horn chirp verification of the Remote Keyless Entry (RKE) and Remote Start systems, as well as the pulsing horn deterrent feature of the optional Vehicle Theft Alarm (VTA) and RKE Panic mode.

The horn system includes the following major components, which are described in further detail elsewhere in this service information:

- **Horn Relay** - The horn relay is soldered onto the Printed Circuit Board (PCB) located within the Power Distribution Center (PDC) and is not serviceable. The PDC is located in the right front corner of the engine compartment near the battery.
- **Horns** - The horns are each located on an integral mounting bracket secured to the right or left forward-facing surface of the upper radiator cross member, just behind the radiator grille panel. The grille panel must be removed to gain access to the horns for service.
- **Horn Switch Plate** - The floating horn switch plate is secured to the back of the DAB module within the steering wheel hub cavity and also serves as the mounting bracket between the DAB and the steering wheel.

Certain functions and features of the horn system rely upon resources shared with other electronic modules in the vehicle over the Controller Area Network (CAN) data bus. Other electronic modules in the vehicle that may affect horn system operation are:

- **Body Control Module** - The BCM is located on the right cowl side inner (kick) panel within the passenger compartment, where it is concealed behind the cowl side inner trim and the instrument panel. Refer to MODULE, BODY CONTROL, DESCRIPTION .
- **Radio Frequency Hub Module** - The Radio Frequency Hub Module (RFHM) is located on the left quarter inner panel between the rear wheel house and the D-pillar where it is concealed behind the interior trim. Refer to MODULE, RADIO FREQUENCY (RF HUB), DESCRIPTION .

The BCM and the RFHM each contain a microcontroller and programming that allow them to communicate with each other and other electronic modules in the vehicle using the CAN data bus. Refer to COMMUNICATION, DESCRIPTION .

Hard wired circuitry connects the various horn system components to each other through the electrical system of the vehicle. These hard wired circuits are integral to several wire harnesses, which are routed throughout the vehicle and retained by many different methods. These circuits may be connected to each other and to the vehicle electrical system through the use of a combination of soldered splices, splice block connectors and many different types of wire harness terminal connectors and insulators. Refer to the appropriate wiring information. The wiring information includes wiring diagrams, proper wire and connector repair procedures, further details on wire harness routing and retention as well as pin out and location views for the various wire harness connectors, splices and grounds.

OPERATION > OPERATION

The horn system components operate on battery current received through non-switched fused B(+) circuits so that the system will remain operational, regardless of the status of the ignition switch (Keyless Ignition Node/KIN). The Body Control Module (BCM) controls the output of battery current to the horns through a horn relay soldered to a Printed Circuit Board (PCB) located within the Power Distribution Center (PDC). The BCM controls the relay based upon internal programming, hard wired inputs from the horn switch as well as electronic message inputs received from the Radio Frequency Hub Module (RFHM) over the Controller Area Network (CAN) data bus.

The vehicle operator can control typical horn system signaling through the horn switch contacts within the hub cavity of the steering wheel. When the Driver AirBag (DAB) trim cover in the center of the steering wheel is depressed, it provides a hard wired analog input to the BCM.

In addition, the RFHM sends electronic **horn request** messages to the BCM over the CAN data bus in response to inputs received from the FOB with Integrated Key (FOBIK) Remote Keyless Entry (RKE) transmitter in vehicles with the Passive Entry Keyless Go (PEKG) system. Lastly, as the Vehicle Theft Security System (VTSS) controller, the BCM can activate the horn system based upon programming and both hard wired and electronic message inputs from the various VTSS components.

The horns can be activated by the BCM to support each of the following features:

- **Remote Keyless Entry System** - RKE system **Lock** request audible verification.
- **Remote Keyless Entry System** - RKE system **Panic** mode audible alert.
- **Remote Start System** - Remote Start System **Start** request audible verification.
- **Vehicle Theft Alarm** - Vehicle Theft Alarm (VTA) audible alarm.

The RKE system **Lock** request audible verification is a customer programmable feature, which allows the feature to be enabled or disabled to suit individual preferences. Refer to CENTER, ELECTRONIC VEHICLE INFORMATION, OPERATION .

The hard wired circuits between components related to the horn system may be diagnosed using conventional diagnostic tools and procedures. Refer to the appropriate wiring information. The wiring information includes wiring diagrams, proper wire and connector repair procedures, details of wire harness routing and retention, connector pin out information and location views for the various wire harness connectors, splices and grounds.

However, conventional diagnostic methods will not prove conclusive in the diagnosis of the horn system or the electronic controls and communication between modules and other devices that provide some features of the horn system. The most reliable, efficient and accurate means to diagnose the horn system or the electronic controls and communication related to horn system operation requires the use of a diagnostic scan tool.

DIAGNOSIS AND TESTING > DIAGNOSIS AND TESTING - HORN SYSTEM

WARNING:

To avoid serious or fatal injury on vehicles equipped with airbags, disable the Supplemental Restraint System (SRS) before attempting any steering wheel, steering column, airbags, airbag curtains, knee blocker, seat belt tensioner, impact sensor or instrument panel component diagnosis or service. Disconnect the IBS/negative battery cable assembly from the negative battery post, then wait two minutes for the system capacitor to discharge before performing further diagnosis or service. This is the only sure way to disable the SRS. Failure to take the proper precautions could result in accidental airbag deployment.

NOTE:

A continuously sounding horn is immediately resolved by disconnecting the wiring at the horns.

HORN SYSTEM DIAGNOSIS		
CONDITION	POSSIBLE CAUSES	CORRECTION
HORNS SOUND CONTINUOUSLY	1. Ineffective horn feed circuit.	1. Test and repair shorted horn feed circuit if required.
	2. Ineffective horn switch return circuit.	2. Test and repair shorted horn switch return circuit if required.
	3. Ineffective horn relay.	3. Test and replace the horn relay, which is integral to the Power Distribution Center (PDC), if required.
	4. Ineffective horn switch.	4. Test and replace the shorted horn switch (Driver AirBag/DAB) if required.
	5. Ineffective Body Control Module (BCM) inputs or outputs.	5. Use a diagnostic scan tool to test the BCM inputs and outputs. Refer to the appropriate diagnostic information.
HORNS SOUND INTERMITTENTLY AS THE STEERING WHEEL IS ROTATED	1. Ineffective horn switch return circuit.	1. Test and repair intermittently shorted horn switch return circuit if required.
	2. Ineffective horn switch.	2. Test and replace the intermittently open or shorted horn switch (DAB) if required.
HORNS DO NOT SOUND	1. Ineffective horn ground circuit.	1. Test and repair open horn ground circuit if required.
	2. Ineffective horn feed circuit.	2. Test and repair open horn feed circuit if required.
	3. Ineffective horn relay.	3. Test and replace the horn relay, which is integral to the PDC, if required.
	4. Ineffective horns.	4. Test and replace open horns if required.
	5. Ineffective horn switch feed circuit.	5. Test and repair open horn switch feed circuit if required.

	6. Ineffective horn switch return circuit.	6. Test and repair open horn switch return circuit if required.
	7. Ineffective horn switch.	7. Test and replace the open horn switch (DAB) if required.
	8. Ineffective BCM inputs or outputs.	8. Use a diagnostic scan tool to test the BCM inputs and outputs. Refer to the appropriate diagnostic information.

SPECIFICATIONS > TORQUE SPECIFICATIONS

TORQUE SPECIFICATIONS

TORQUE SPECIFICATIONS			
DESCRIPTION	N.m	Ft. Lbs.	In. Lbs.
Horn Mounting Bracket Screw	6	-	53

HORN > DESCRIPTION > DESCRIPTION

Fig 1: Horn & Terminals

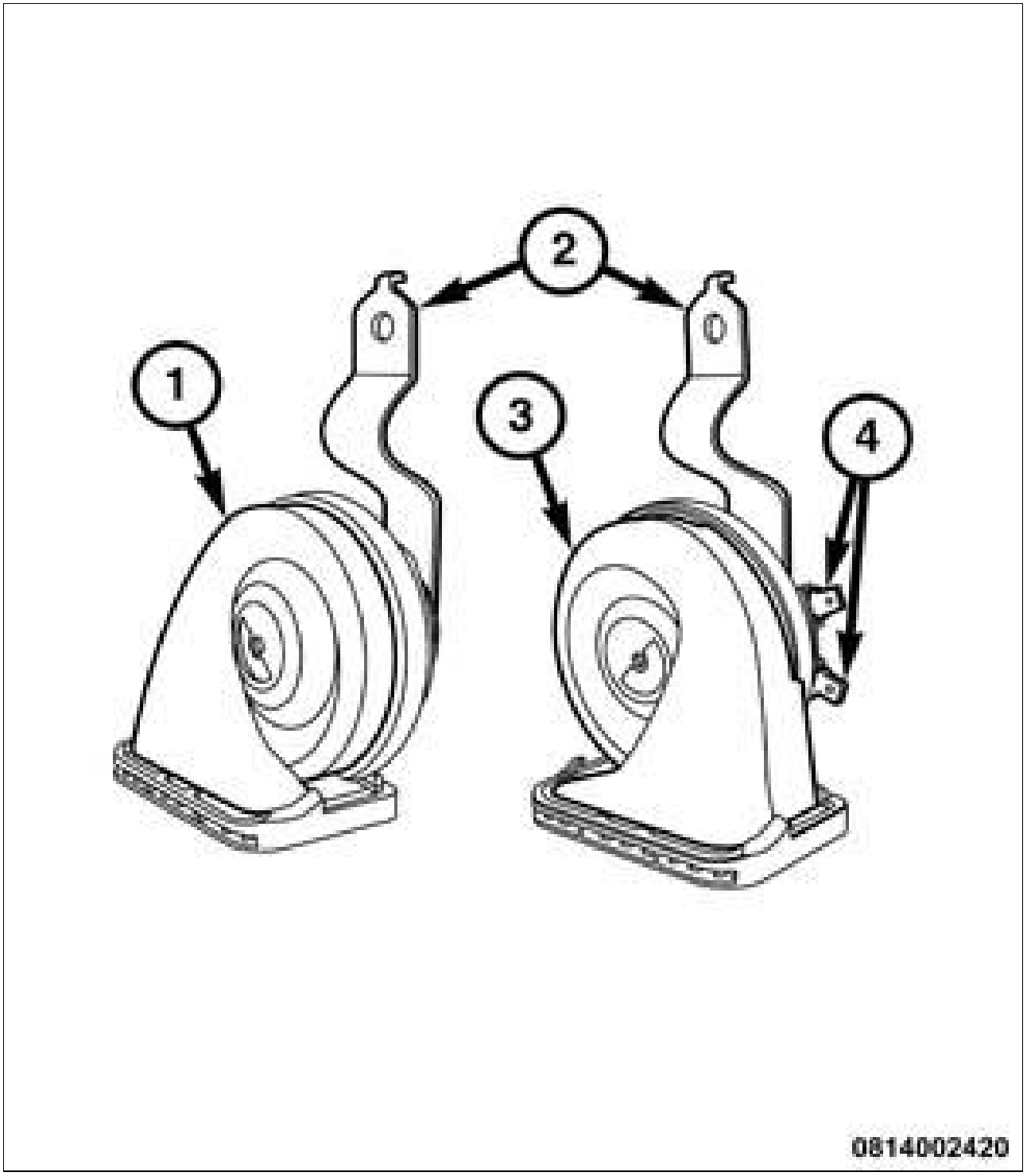

Courtesy of CHRYSLER GROUP, LLC

Dual electromagnetic diaphragm-type horns are available equipment on this vehicle. A low note (3) and a high note (1) trumpet-style horn are each secured to a mounting bracket (2). Each horn and mounting bracket unit is then secured by a single screw to the forward-facing surface of the radiator upper cross member just behind the radiator grille panel. Internally the two horns are identical in construction but, externally, the horn trumpets are symmetrically opposite.

Each horn has two male spade terminals (4) that connect it to the vehicle electrical system through

dedicated takeouts and connectors of the Front End Module (FEM) wire harness.

Each horn and mounting bracket is factory-tuned as a unit and, therefore, is serviced only as a unit. These horns cannot be adjusted or repaired. If either horn and mounting bracket unit is ineffective or damaged, the entire unit must be replaced.

HORN > OPERATION > OPERATION

Each horn has a path to ground at all times through its wire harness connection to an eyelet terminal secured to the body sheet metal. The horns are completely controlled by a fused B(+) output received through a relay soldered onto the Printed Circuit Board (PCB) within the Power Distribution Center (PDC) and controlled by the Body Control Module (BCM).

Within the two halves of the horn housing are a flexible diaphragm, a plunger, an electromagnetic coil and a set of contact points. The diaphragm is secured in suspension around its perimeter by the mating surfaces of the horn housing. The plunger is secured to the center of the diaphragm and extends into the center of the electromagnetic coil. The contact points control the current flow through the windings of the electromagnetic coil.

When the horn is energized, electrical current flows through the closed contact points to the electromagnetic coil. The resulting electromagnetic field draws the plunger and diaphragm toward it until that movement mechanically opens the contact points. When the contact points open, the electromagnetic field collapses allowing the plunger and diaphragm to return to their relaxed positions and closing the contact points again. This cycle continues repeating at a very rapid rate producing the vibration and movement of air that creates the sound that is directed through the horn trumpet outlet.

The horns as well as the hard wired input circuits for the horns may be diagnosed using conventional diagnostic tools and procedures. Refer to the appropriate wiring information.

HORN > DIAGNOSIS AND TESTING > DIAGNOSIS AND TESTING - HORN

Refer to the appropriate wiring information. The wiring information includes wiring diagrams, proper wire and connector repair procedures, details of wire harness routing and retention, connector pin out information and location views for the various wire harness connectors, splices and grounds.

1. Disconnect the Front End Module (FEM) wire harness connectors from the terminals on the horn and mounting bracket unit. Check for continuity between the horn ground circuit in the FEM wire harness connector for the horn and a good ground. There should be continuity. If OK, go to Step 2. If not OK, repair the open ground circuit to ground as required.

2. Check for battery voltage at the horn circuit in the FEM wire harness connector for the horn. There should be zero volts. If OK, go to Step 3. If not OK, repair the shorted horn circuit between the horn and the Power Distribution Center (PDC) as required.

3. Depress the horn switch. There should now be battery voltage at the horn circuit of the FEM wire harness connector for the horn. If OK, replace the ineffective horn and mounting bracket unit. If not OK, use a diagnostic scan tool and the appropriate diagnostic information for further diagnosis of the PDC and Body Control Module (BCM) inputs and outputs.

HORN > REMOVAL > REMOVAL

Fig 1: Two Horns & Horn Switch

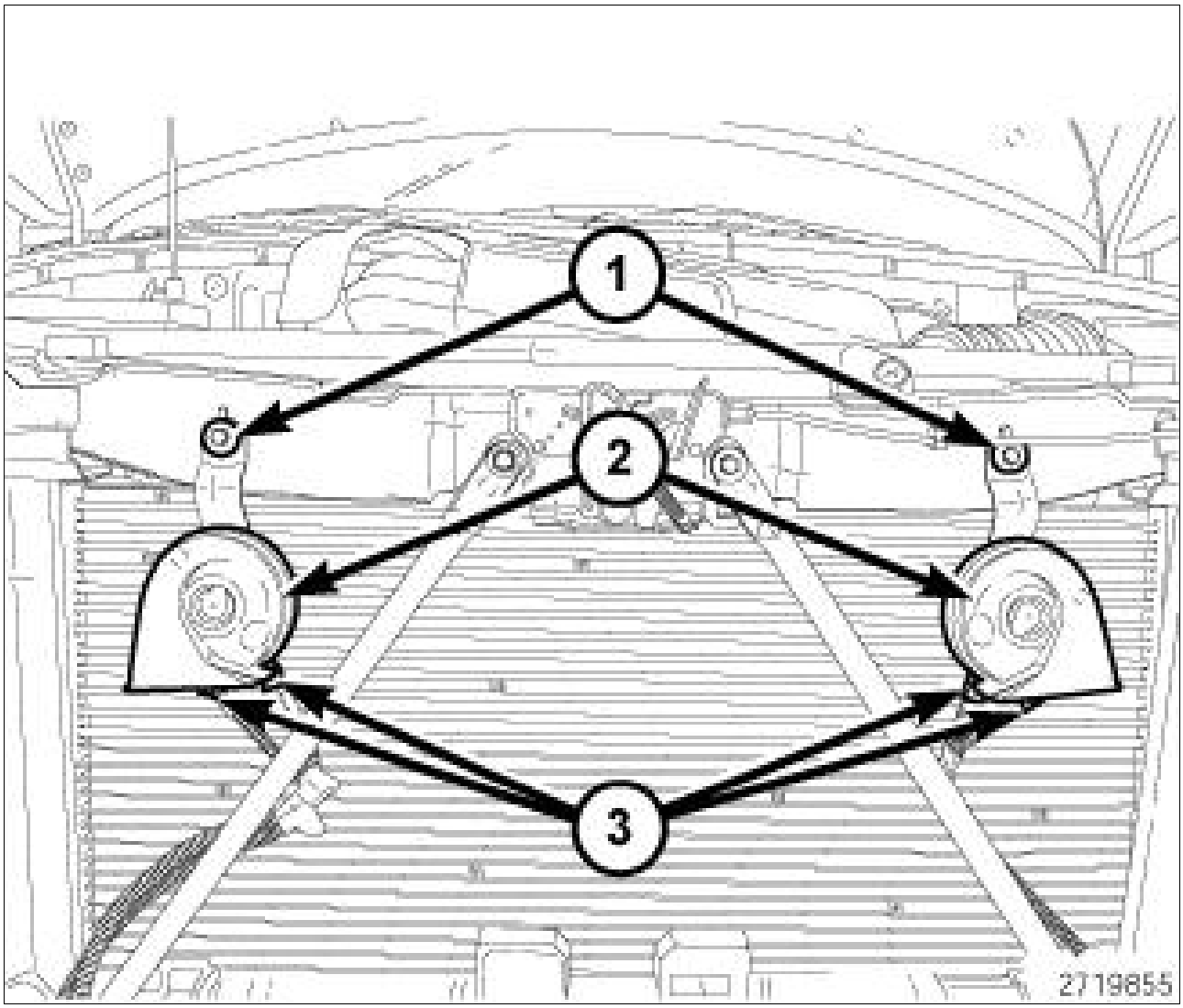

Courtesy of CHRYSLER GROUP, LLC

1. Disconnect and isolate the negative battery cable. If equipped with an Intelligent Battery Sensor (IBS), disconnect the IBS connector first before disconnecting the negative battery cable.
2. Remove the radiator grille from the vehicle. Refer to GRILLE, REMOVAL .
3. Disconnect the Front End Module (FEM) wire harness connectors (3) from the terminals on the horn (2).
4. Remove the screw (1) that secures the horn mounting bracket to the forward-facing surface of the upper radiator cross member.
5. Remove the horn and mounting bracket from the vehicle as a unit.

HORN > INSTALLATION > INSTALLATION

Fig 1: Two Horns & Horn Switch

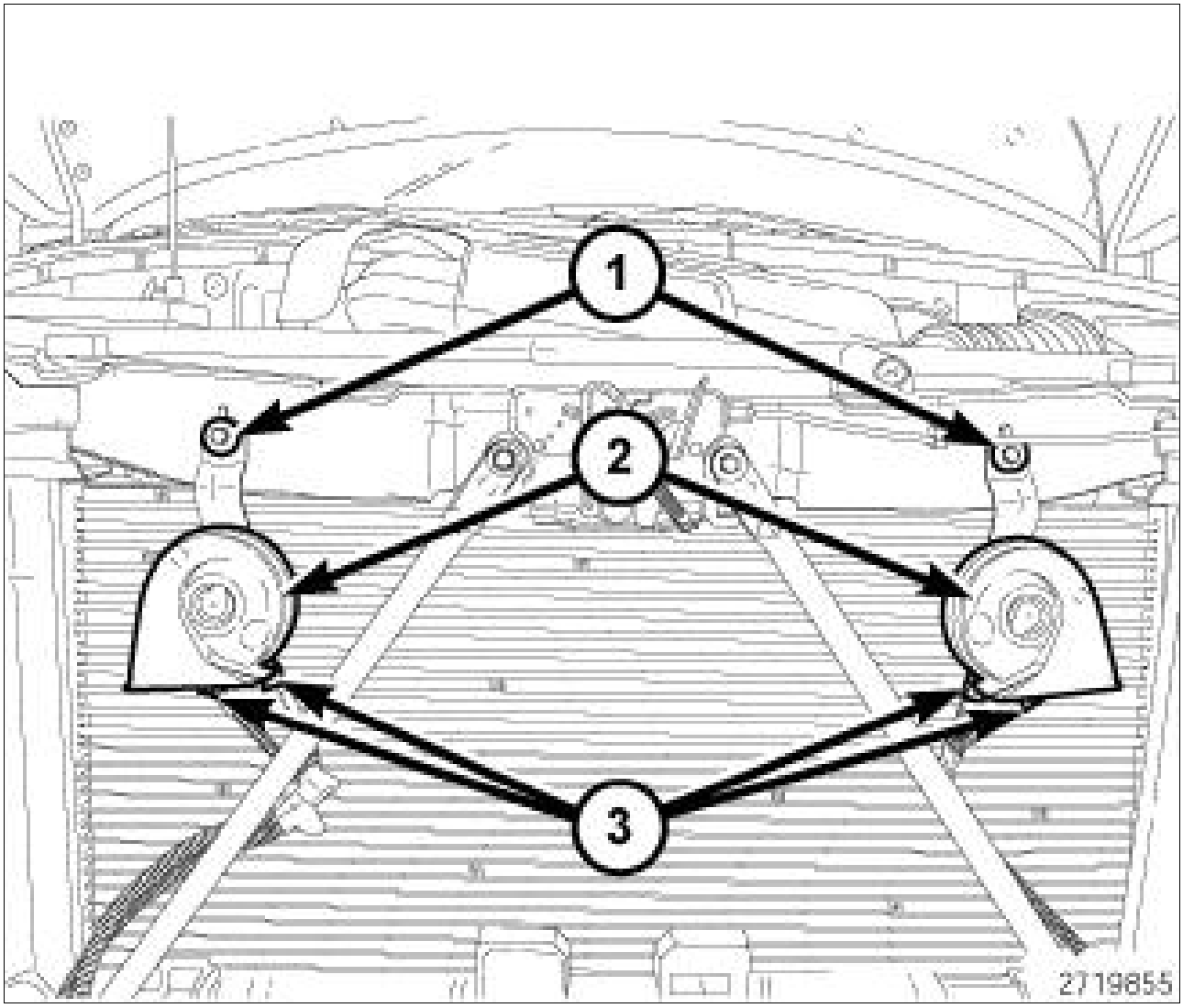

Courtesy of CHRYSLER GROUP, LLC

1. Position the horn (2) and mounting bracket to the vehicle as a unit.
2. Install and tighten the screw (1) that secures the horn mounting bracket to the forward-facing surface of the upper radiator cross member. Tighten the screw to 6 N.m (53 in. lbs.).
3. Connect the Front End Module (FEM) wire harness connectors (3) to the terminals on the horn.
4. Install the radiator grille onto the vehicle. Refer to GRILLE, INSTALLATION .
5. Connect the negative battery cable. If equipped with an Intelligent Battery Sensor (IBS), connect the IBS connector.

RELAY, HORN > DESCRIPTION > DESCRIPTION

The horn relay is a electromechanical device that consists of an electromagnetic coil, a resistor and a pair of normally open electrical contacts. One of the two electrical contacts is fixed, while the other contact is movable. The movable relay contact is held away from the fixed contact by spring pressure.

The horn relay for this vehicle is soldered in place on the Printed Circuit Board (PCB) internal to the Power Distribution Center (PDC), which is located within the engine compartment near the battery.

The horn relay cannot be repaired or adjusted and, if ineffective or damaged, the entire PDC unit must be replaced.

RELAY, HORN > OPERATION > OPERATION

The horn relay within the Power Distribution Center (PDC) switches battery current to the horns when the Body Control Module (BCM) energizes the electromagnetic coil of the relay using a High Side Driver (HSD). When the electromagnetic relay coil is energized, it draws and holds the normally open movable contact of the relay against the fixed relay contact. The closed relay contacts supply fused battery current from the PDC to energize the horns.

When the BCM de-energizes the electromagnetic relay coil, spring pressure returns the movable contact to the normally open position, which de-energizes the horns. The resistor within the relay is connected in parallel with the electromagnetic coil, and helps to dissipate voltage spikes that are produced when the coil is de-energized.

The hard wired inputs and outputs of the horn relay in the PDC and the BCM may be diagnosed using conventional diagnostic tools and procedures. Refer to the appropriate wiring information. However, conventional diagnostic methods will not prove conclusive in the diagnosis of the BCM or the electronic controls and communication between modules and other devices that provide some features of the BCM controlled horn relay. The most reliable, efficient and accurate means to diagnose the BCM or the electronic controls and communication related to BCM controlled horn relay operation requires the use of a diagnostic scan tool. Refer to the appropriate diagnostic information.

RELAY, HORN > DIAGNOSIS AND TESTING > DIAGNOSIS AND TESTING - HORN RELAY

The hard wired inputs and outputs of the horn relay in the Power Distribution Center (PDC) and the Body Control Module (BCM) may be diagnosed using conventional diagnostic tools and procedures. Refer to the appropriate wiring information. However, conventional diagnostic methods will not prove conclusive in the diagnosis of the BCM or the electronic controls and communication between modules and other devices that provide some features of the BCM controlled horn relay. The most reliable, efficient and accurate means to diagnose the BCM or the electronic controls and communication related to BCM controlled horn relay operation requires the use of a diagnostic scan tool. Refer to the appropriate diagnostic information.

RELAY, HORN > REMOVAL > REMOVAL

The horn relay used in this vehicle is soldered onto a Printed Circuit Board (PCB) internal to the Power Distribution Center (PDC) located in the engine compartment near the battery. The horn relay is integral to and serviced only as a unit with the PDC.

RELAY, HORN > INSTALLATION > INSTALLATION

The horn relay used in this vehicle is soldered onto a Printed Circuit Board (PCB) internal to the Power Distribution Center (PDC) located in the engine compartment near the battery. The horn relay is integral to and serviced only as a unit with the PDC.

SWITCH, HORN > DESCRIPTION > DESCRIPTION

Fig 1: Horn Switch & Driver Airbag

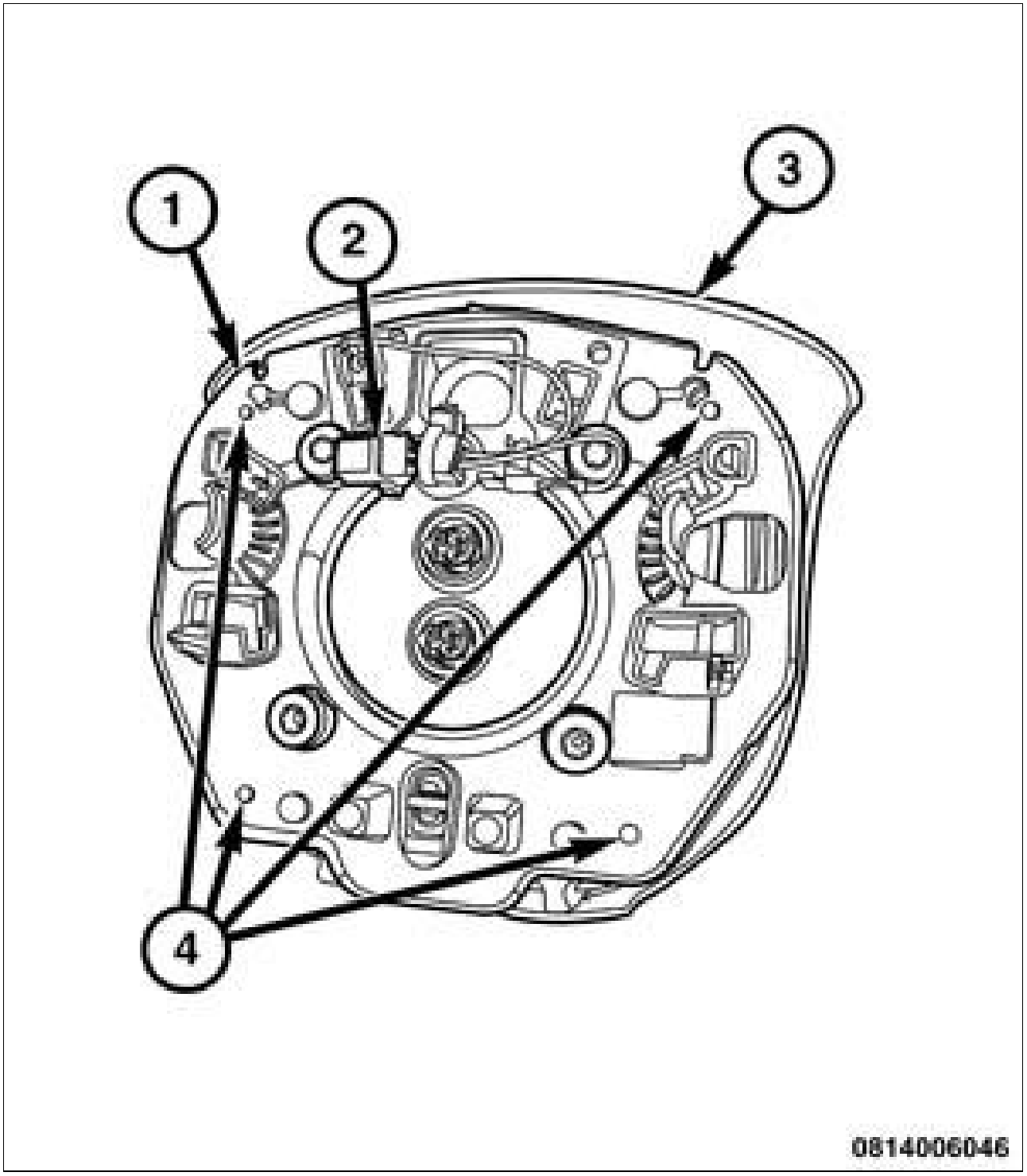

Courtesy of CHRYSLER GROUP, LLC

The horn switch for this vehicle consists of four individual sets of normally open contacts wired in parallel so that all four sets of contacts operate as one switch. The horn switch contacts (4) are secured to, but insulated from a stamped metal floating horn switch plate (1) that also serves as the mounting plate for the Driver AirBag (DAB) (3). The horn switch plate is over-molded with integral plastic insulators for the horn contacts and routing clips for the contact wiring.

The horn switch plate is secured to but isolated from the DAB housing with four sleeved screws and

insulating washers. Each sleeved screw passes through a small coiled spring retained by an interference fit within an isolator on the switch plate. A dedicated take out and connector of the steering wheel wire harness connects the horn switch plate to the vehicle electrical system through a connector (2) on the upper edge of the switch plate. A mounting spring on each outboard side of the horn switch plate is secured within the hub of the steering wheel under a hook formation in the steering wheel hub armature adjacent to each horizontal steering wheel spoke.

The components that make up the horn switch plate cannot be adjusted or repaired. If damaged or ineffective, the entire DAB and horn switch plate must be replaced as a unit.

SWITCH, HORN > OPERATION > OPERATION

The floating horn switch allows the vehicle operator to actuate the horns by depressing anywhere on the upper surface of the Driver AirBag (DAB) trim cover in the center of the steering wheel. When the DAB trim cover is depressed, the DAB housing compresses the coil springs isolating one or more of the horn switch contact sets causing at least one of the four pairs of electrically conductive contacts to close. When the DAB trim cover is released, the coil springs on the switch plate return the DAB to its at rest position and open the horn switch contacts, which opens the horn switch circuit.

The four sets of horn switch contacts are wired in parallel so they perform as a single switch. One contact from each switch receives source current through an internal pull-up of the Body Control Module (BCM). When the switch contacts are closed the BCM input is pulled down to ground. The BCM then controls the output to the horn relay within the Power Distribution Center (PDC) accordingly.

The hard wired circuits between components related to the horn switch may be diagnosed using conventional diagnostic tools and procedures. Refer to the appropriate wiring information. The wiring information includes wiring diagrams, proper wire and connector repair procedures, details of wire harness routing and retention, connector pin out information and location views for the various wire harness connectors, splices and grounds.

SWITCH, HORN > DIAGNOSIS AND TESTING > DIAGNOSIS AND TESTING - HORN SWITCH

WARNING:

To avoid serious or fatal injury on vehicles equipped with airbags, disable the Supplemental Restraint System (SRS) before attempting any steering wheel, steering column, airbags, airbag curtains, knee blocker, seat belt tensioner, impact sensor or instrument panel component diagnosis or service. Disconnect the IBS/negative battery cable assembly from the negative battery post, then wait two minutes for the system capacitor to discharge before performing further diagnosis or service. This is the only sure way to disable the SRS. Failure to take the proper precautions could result in accidental airbag deployment.

Refer to the appropriate wiring information. The wiring information includes wiring diagrams, proper wire and connector repair procedures, details of wire harness routing and retention, connector pin out information and location views for the various wire harness connectors, splices and grounds.

1. Remove the Driver AirBag (DAB) from the steering wheel. Refer to AIR BAG, DRIVER, REMOVAL .
2. Disconnect the steering wheel wire harness connector from the horn switch wire harness connector.
3. With the horn switch plate released, check for continuity between the two terminals in the horn switch pigtail wire harness connector. There should be no continuity. If OK, go to Step 4. If not OK, replace the ineffective horn switch plate (DAB) unit.
4. With the horn switch plate depressed, check for continuity between the two terminals in the horn switch pigtail wire harness connector. There should now be continuity. If OK, go to Step 5. If not OK, replace the ineffective horn switch plate (DAB) unit.
5. Check the steering wheel wire harness for shorts or opens between the horn switch connector and the clockspring connector. If not OK, repair or replace the steering wheel wire harness as required.

SWITCH, HORN > REMOVAL > REMOVAL

The horn switch is serviced only as a unit with the Driver AirBag (DAB). Refer to AIR BAG, DRIVER, REMOVAL .

SWITCH, HORN > INSTALLATION > INSTALLATION

The horn switch is serviced only as a unit with the Driver AirBag (DAB). Refer to AIR BAG, DRIVER, INSTALLATION .

DESCRIPTION > DESCRIPTION

Fig 1: Instrument Cluster & Lens

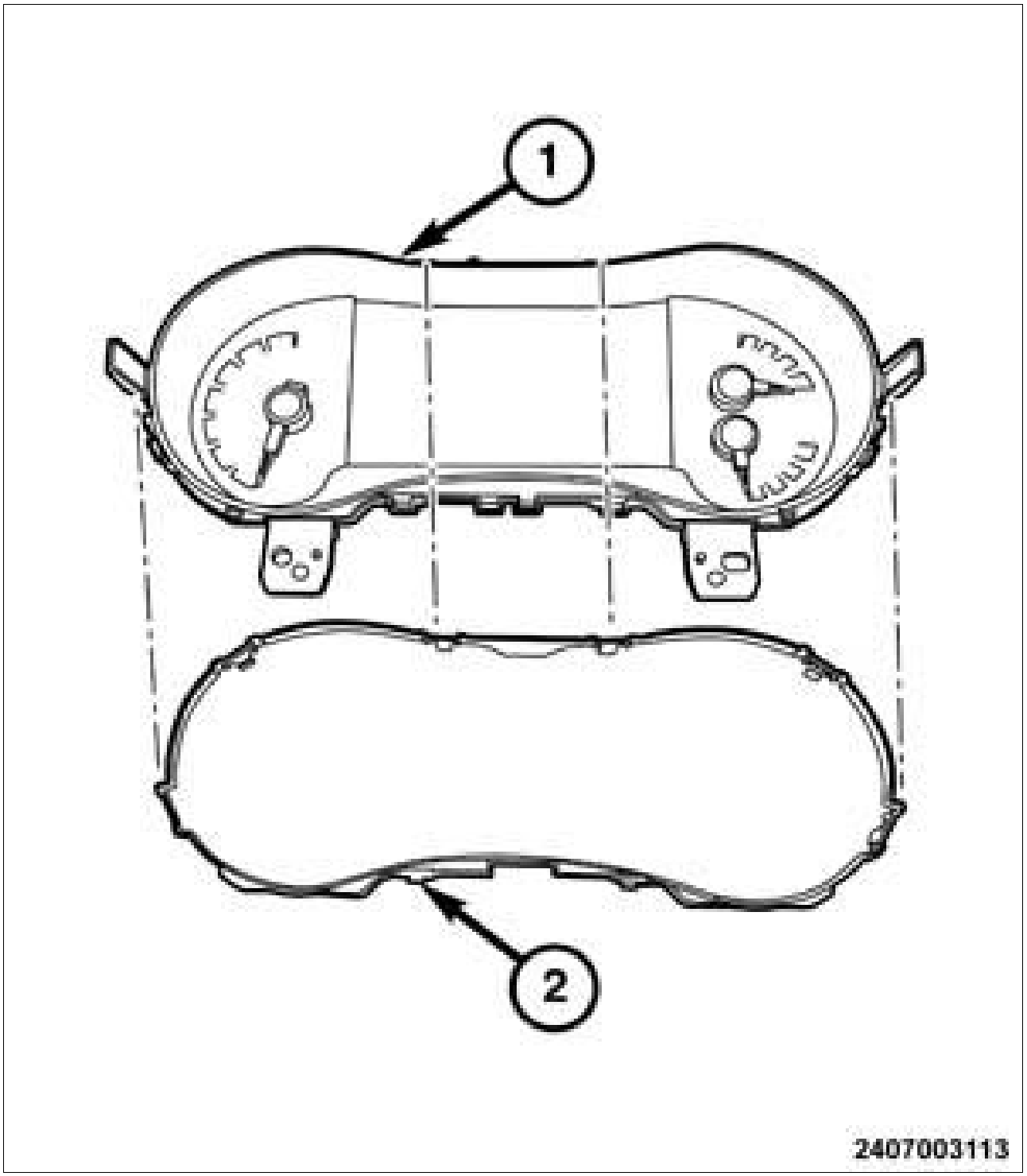

Courtesy of CHRYSLER GROUP, LLC

The Instrument Cluster (IC) (1) is also known as the Instrument Panel Cluster/IPC for this vehicle. There

are two distinct versions of the IC offered in this vehicle: Base and Premium. The IC is located in the instrument panel above the steering column opening, directly in front of the driver. The remainder of the IC, including the mounts and the electrical connections are concealed within the instrument panel behind the cluster bezel. The IC gauges and indicators are visible through a dedicated opening in the cluster bezel and are protected by a hard plastic cluster lens (2).

Besides analog gauges and indicators, the IC incorporates an electronic display unit for displaying odometer/trip odometer information, automatic transmission gear selector position (PRNDL), several warning or reminder indications and certain diagnostic information as well as for the display of the optional Electronic Vehicle Information Center (EVIC) data. There are also unique versions of both the Base and Premium IC, which accommodate the variations of regulatory requirements for the various markets where the vehicle will be offered.

The rear of the cluster housing and the IC electronic circuitry are protected by a molded plastic housing and rear cover, which are secured to each other by integral latch features. The rear cover includes an integral lever-type connector receptacle, which is connected to the vehicle electrical system through a dedicated take out and connector from the instrument panel wire harness. The IC housing also serves as the carrier for the IC printed circuit board and electronic circuitry, the major and minor analog gauges, a Light Emitting Diode (LED) unit for each indicator, the electronic display unit, an audible tone transducer, several LED units for general illumination lighting and the cluster lens, mask and overlay. The cluster housing also has four integral mounting tabs, one near each upper and lower corner of the housing.

The cluster overlay is a laminated plastic unit. The dark, visible, outer surface of the overlay is marked with all of the analog gauge dial faces and graduations, but this layer is also translucent. The darkness of this outer layer prevents the cluster from appearing cluttered or busy by concealing the cluster indicators that are not illuminated. The translucence of this layer allows those indicators and icons that are illuminated to be readily visible. The underlying layer of the overlay is opaque and allows light from the LED unit for each of the various indicators and illumination lamps behind it to be visible through the outer layer of the overlay through predetermined stencil-like cutouts.

The microcontroller-based IC utilizes integrated circuitry and digital information carried on the Controller Area Network (CAN) data bus along with hard wired analog inputs to monitor sensors and switches throughout the vehicle. In response to those inputs, the internal circuitry and programming of the IC allow it to control and integrate many electronic functions and features of the vehicle through both hard wired outputs and the transmission of digital message outputs to other electronic modules in the vehicle over the CAN data bus. Refer to COMMUNICATION, DESCRIPTION .

The IC is serviced only as a complete unit. It cannot be adjusted or repaired. If a gauge, an indicator, a display unit, the electronic printed circuit board, the circuit board hardware, the overlay, or the housing are damaged or ineffective, the entire IC must be replaced. The IC software is flash programmable over the CAN data bus.

OPERATION > OPERATION

The Instrument Cluster (IC) (also known as the Instrument Panel Cluster/IPC) is designed to allow the vehicle operator to monitor the conditions of many of the vehicle components and operating systems. The gauges and indicators in the IC provide valuable information about the various standard and optional powertrains, fuel and emissions systems, cooling systems, lighting systems, safety systems and many other convenience items. The IC is installed in the instrument panel so that all of these monitors can be easily viewed by the vehicle operator when driving, while still allowing relative ease of access for service.

The microcontroller-based IC hardware and software uses various inputs to control the gauges and indicators visible on the face of the IC. These inputs are in the form of electronic messages that are transmitted by other electronic modules over the Controller Area Network (CAN) data bus. Refer to COMMUNICATION, OPERATION .

The IC microcontroller smooths the input data using algorithms to provide gauge readings that are accurate, stable and responsive to operating conditions. These algorithms are designed to provide gauge readings during normal operation that are consistent with customer expectations. However, when abnormal conditions such as high coolant temperature occur, the algorithm can drive the gauge pointer to an extreme position and the microcontroller can sound an audible alert through the on-board audible tone transducer to provide distinct visual and audible indications of a problem to the vehicle operator. The IC may also produce audible warnings on behalf of other electronic modules in the vehicle based upon electronic **tone request** messages received over the CAN data bus. Each audible warning is intended to provide the vehicle operator with an audible alert to supplement a visual indication.

The IC circuitry operates on battery current received through a non-switched fused B(+) circuit, and on battery current received through a fused ignition output (run) fuse on a fused ignition output (run) circuit. This arrangement allows the IC to provide some features regardless of the status of the ignition switch, while other features will operate only when the status of the ignition switch is ON. The IC circuitry has a path to ground at all times through a takeout of the instrument panel wire harness that is secured to the instrument panel support structure.

The IC also has a self-diagnostic test capability which will test each of the CAN bus message-controlled functions of the IC by lighting the appropriate indicators, positioning the gauge needles at several predetermined calibration points across the gauge faces and illuminating all segments of the electronic display unit. The electronic display unit will also display the software version used in the IC. Refer to DIAGNOSIS AND TESTING .

DIAGNOSIS AND TESTING > DIAGNOSIS AND TESTING - INSTRUMENT CLUSTER

If all of the Instrument Panel Cluster (IPC) gauges and indicators are inoperative, be certain to check the IPC fused B(+) fuse and the IPC fused B(+) and ground circuits for shorts or opens. Refer to the appropriate wiring information. The wiring information includes wiring diagrams, proper wire and connector repair procedures, details of wire harness routing and retention, connector pin-out information and location views for the various wire harness connectors, splices and grounds.

If an individual hard wired gauge or indicator is inoperative, refer to the diagnosis and testing service information for that specific gauge or indicator. If an individual Controller Area Network (CAN) or Local Interconnect Network (LIN) data bus message-controlled gauge or indicator is inoperative, perform the Actuator Test as follows:

NOTE:

The IPC will automatically configure/program itself with the features and optional equipment of the vehicle in which it is initially installed. When the IPC is originally programmed, the Vehicle Identification Number (VIN) and other critical information is written and stored into Read Only Memory (ROM). Other stored information is learned through electronic messages received over the Controller Area Network (CAN) data bus and also through hard wired inputs when the IPC is electronically connected to the vehicle.

Once configured, the IPC memory may be irreparably damaged and certain irreversible

configuration errors may occur if the IPC is connected electrically to another vehicle or if an electronic module from another vehicle is connected that provides data to the IPC (including odometer values) that conflicts with what is stored in other modules.

The practice of exchanging (swapping) the IPC and other electronic modules with those removed from another vehicle must always be avoided. Failure to observe this caution may result in irreversible damage to the IPC which is not reimbursable under the terms of the product warranty.

A service replacement IPC is provided with the correct VIN and certified odometer and engine hour values programed into its memory and will automatically configure features and optional equipment when installed.

DIAGNOSIS AND TESTING > DIAGNOSIS AND TESTING - INSTRUMENT CLUSTER > SELF TEST

The self-diagnostic test will put the instrument cluster into its self-diagnostic mode. In this mode the instrument cluster can perform a self-diagnostic test that will confirm that the circuitry, the gauges and the indicators are capable of operating as designed. During the test the IC circuitry will position each of the gauge needles at various calibration points, illuminate each of the segments in the electronic display unit, and turn all of the indicators ON and OFF again.

Successful completion of the actuator test will confirm that the instrument cluster is operational. However, there may still be a problem with the CAN/LIN data bus, the Powertrain Control Module (PCM), the Body Control Module (BCM), the Transmission Control Module (TCM), the Occupant Restraint Controller (ORC), the Controller Anti-lock Brake (CAB), the compass module, the RF Hub (RFHM) or the hard wired inputs to one of these electronic control modules. Use a diagnostic scan tool to diagnose these components. Refer to the appropriate diagnostic information.

1. Begin the test with the ignition switch in the Off position.
2. Depress the "DOWN" button with a premium cluster or the "RIGHT" button with a base cluster.
3. While still holding the button, position the ignition switch to the Accessory (ACC) position, but do not start the engine.
4. Release the "DOWN" or the "RIGHT" button.
5. The instrument cluster will simultaneously begin to illuminate all of the operational segments in the VFD unit and perform a bulb check of each operational LED indicator. The VFD segments and LED indicators remain illuminated as each gauge needle is swept to several calibration points and back. During this self-diagnostic test, the software level will be displayed. If a VFD segment or an LED indicator fails to illuminate, or if a gauge needle fails to sweep through the calibration points and back during this test, the instrument cluster must be replaced.
6. The actuator test is now completed. The instrument cluster will automatically exit the self-diagnostic mode and return to normal operation at the completion of the test. The actuator test will be aborted if the ignition switch is changed to the Off position, or if a vehicle speed message indicating that the vehicle is moving is received from the PCM over the CAN data bus during the test.

STANDARD PROCEDURE > STANDARD PROCEDURE - ENHANCED SEATBELT REMINDER PROGRAMMING

The seatbelt indicator also includes a programmable enhanced seatbelt reminder or BELTMINDER feature that is enabled when the vehicle is shipped from the factory. This BELTMINDER feature provides extended and modified visual seatbelt indicator and audible chime warning responses to an unbuckled driver side front seat belt. The BELTMINDER feature may be disabled or enabled by the customer using the programming sequence that follows, or by the dealer using a diagnostic scan tool.

STANDARD PROCEDURE > STANDARD PROCEDURE - ENHANCED SEATBELT REMINDER PROGRAMMING > CUSTOMER PROGRAMMING SEQUENCE

NOTE:

The following sequence of events must occur within 60 seconds of the ignition switch being placed in the ON position in order for the programming to be completed successfully. Even if the vehicle is equipped with both driver and passenger side front seat belt switches, this programming sequence MUST be performed using the driver side front seat belt. The passenger side front seat belt switch has no programming functionality.

1. With all doors closed and the ignition switch in any position except ON or START, buckle the driver side front seat belt.
2. Turn the ignition switch to the ON position and wait for the seatbelt indicator reminder function to conclude (about six seconds).
3. Unbuckle and buckle the driver side front seat belt three or more times, ending with the belt buckled.
4. Turn the ignition switch to any position except ON or START to toggle the BELTMINDER feature from its current setting (from active to inactive, or from inactive to active). A single chime tone will provide an audible confirmation that the programming sequence has been successfully completed.

REMOVAL > REMOVAL

WARNING:

To avoid serious or fatal injury on vehicles equipped with airbags, disable the Supplemental Restraint System (SRS) before attempting any steering wheel, steering column, airbag, seat belt tensioner, impact sensor or instrument panel component diagnosis or service. Disconnect and isolate the battery negative (ground) cable, then wait two minutes for the system capacitor to discharge before performing further diagnosis or service. This is the only sure way to disable the SRS. Failure to take the proper precautions could result in

accidental airbag deployment.

REMOVAL > REMOVAL > CLUSTER ASSEMBLY

1. Disconnect and isolate the negative battery cable.
2. Position the steering column to its lowest position.
3. Using a trim tool, release the clips and position the steering column seal back.

Fig 1: Instrument Cluster, Bezel & Fasteners

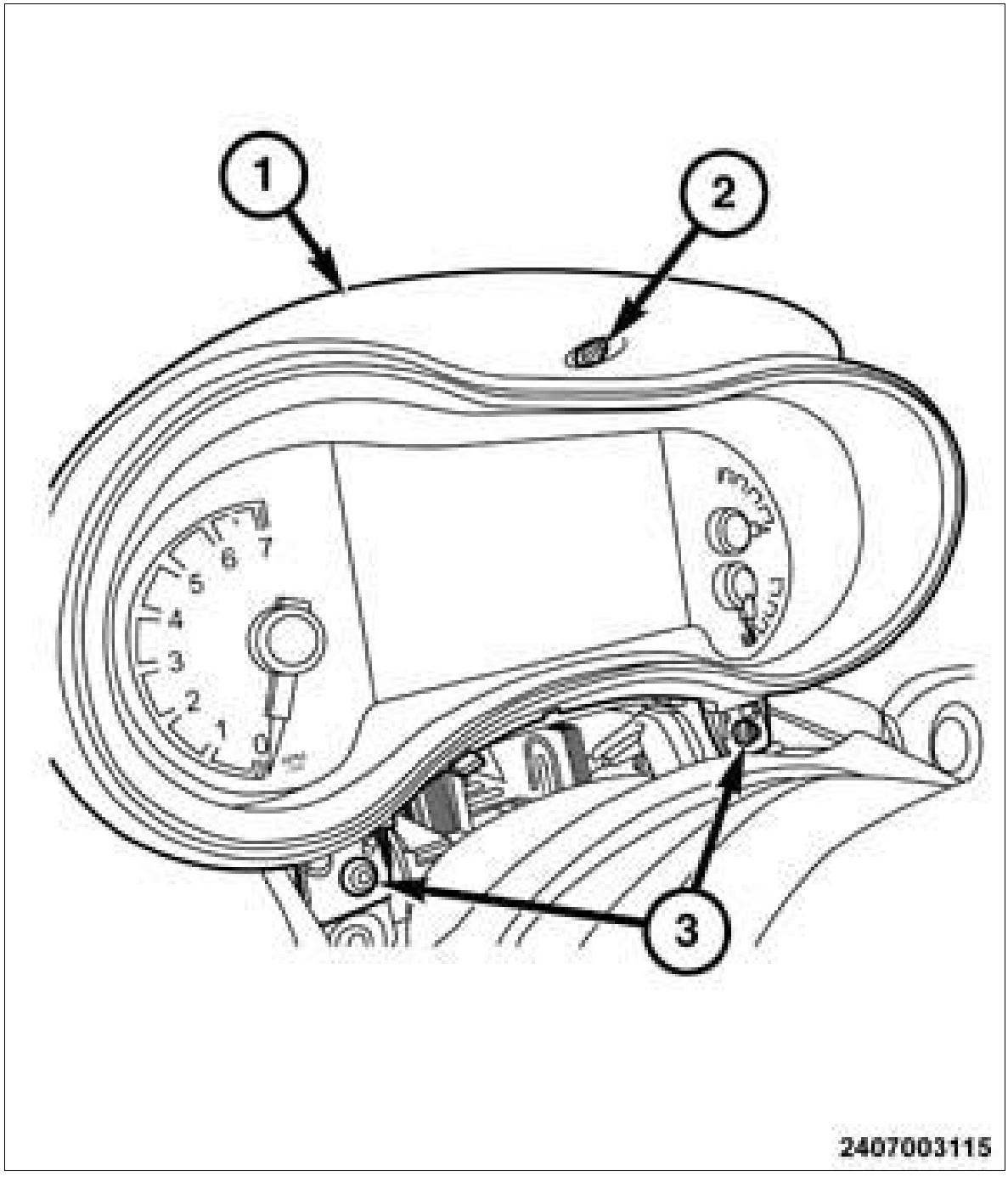

Courtesy of CHRYSLER GROUP, LLC

4. Remove the fasteners (2&3) that secure the instrument cluster and bezel (1) assembly to the instrument panel.
5. Pull the top of the instrument cluster back and lift the instrument cluster upward to remove.

Fig 2: Instrument Cluster Wire Harness Connector

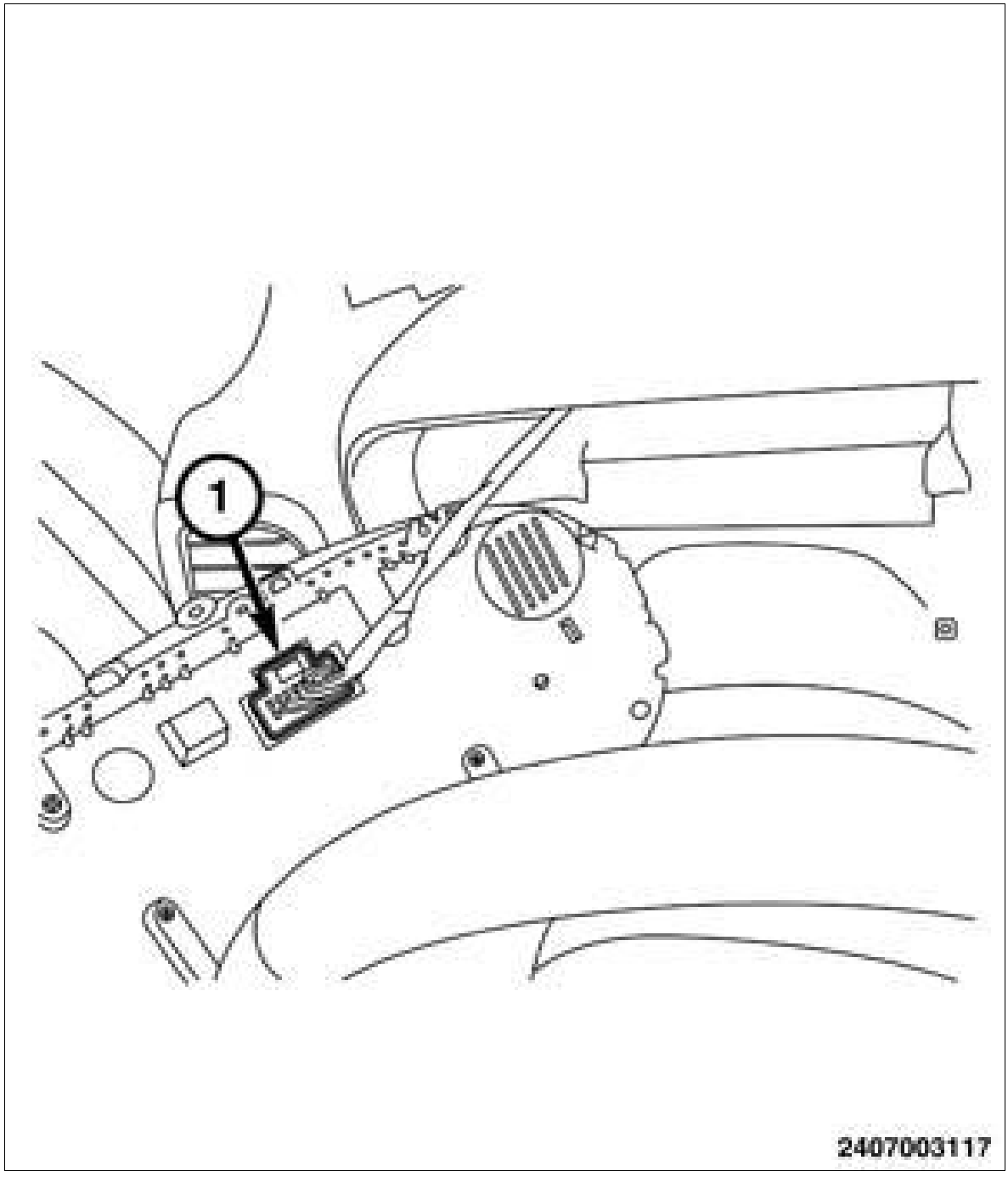

Courtesy of CHRYSLER GROUP, LLC

6. Disconnect the instrument cluster wire harness connector (1) from the connector receptacles on the back of the cluster housing.
7. Remove the instrument cluster from the vehicle.

REMOVAL > REMOVAL > CLUSTER HOOD, LENS AND MASK

1. Disconnect and isolate the negative battery cable.

2. Remove the instrument cluster from the instrument panel. Refer to CLUSTER ASSEMBLY .

Fig 1: Instrument Cluster & Bezel

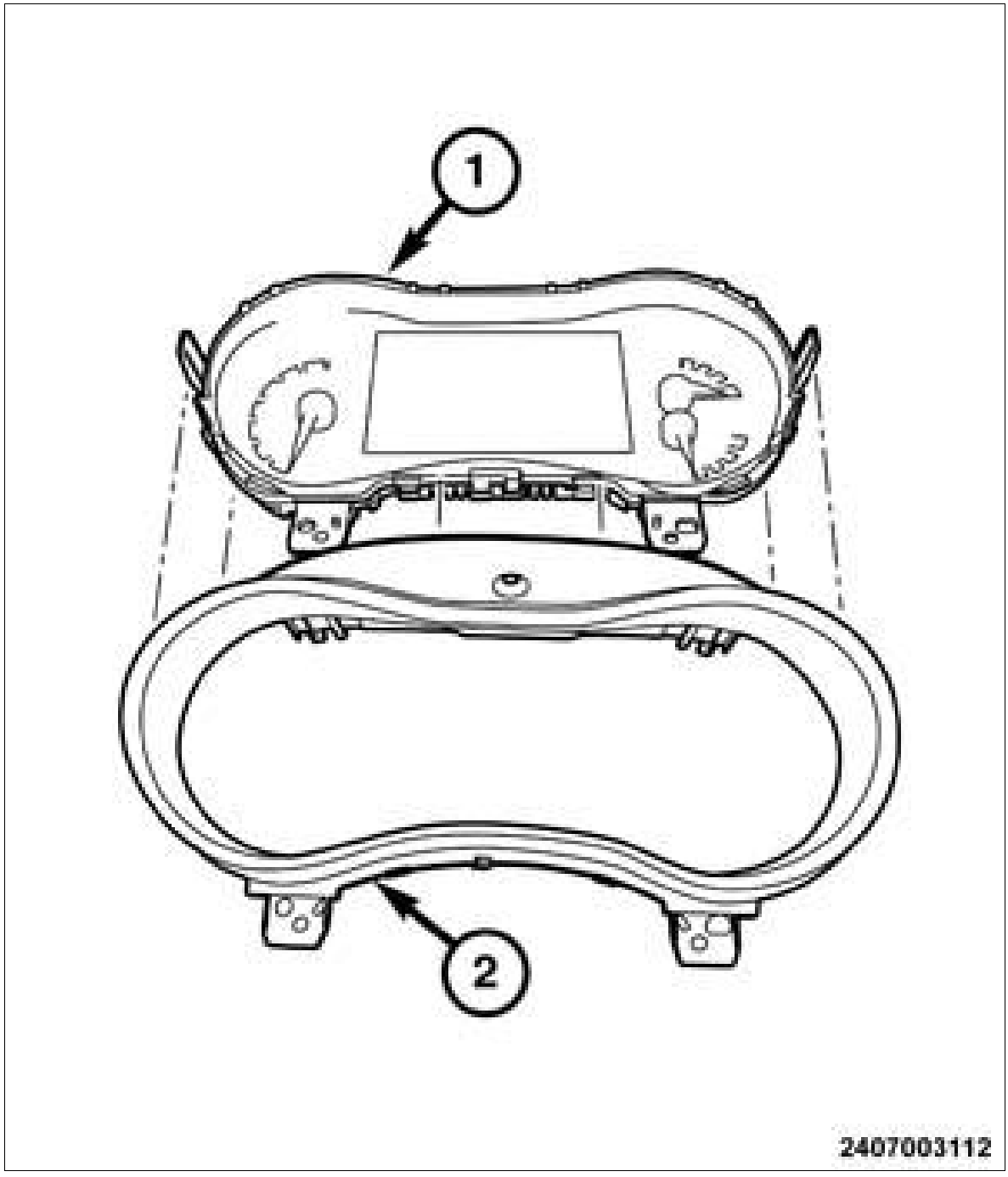

Courtesy of CHRYSLER GROUP, LLC

3. Remove the instrument cluster bezel (2). Refer to BEZEL, INSTRUMENT CLUSTER, REMOVAL .

Fig 2: Instrument Cluster & Lens

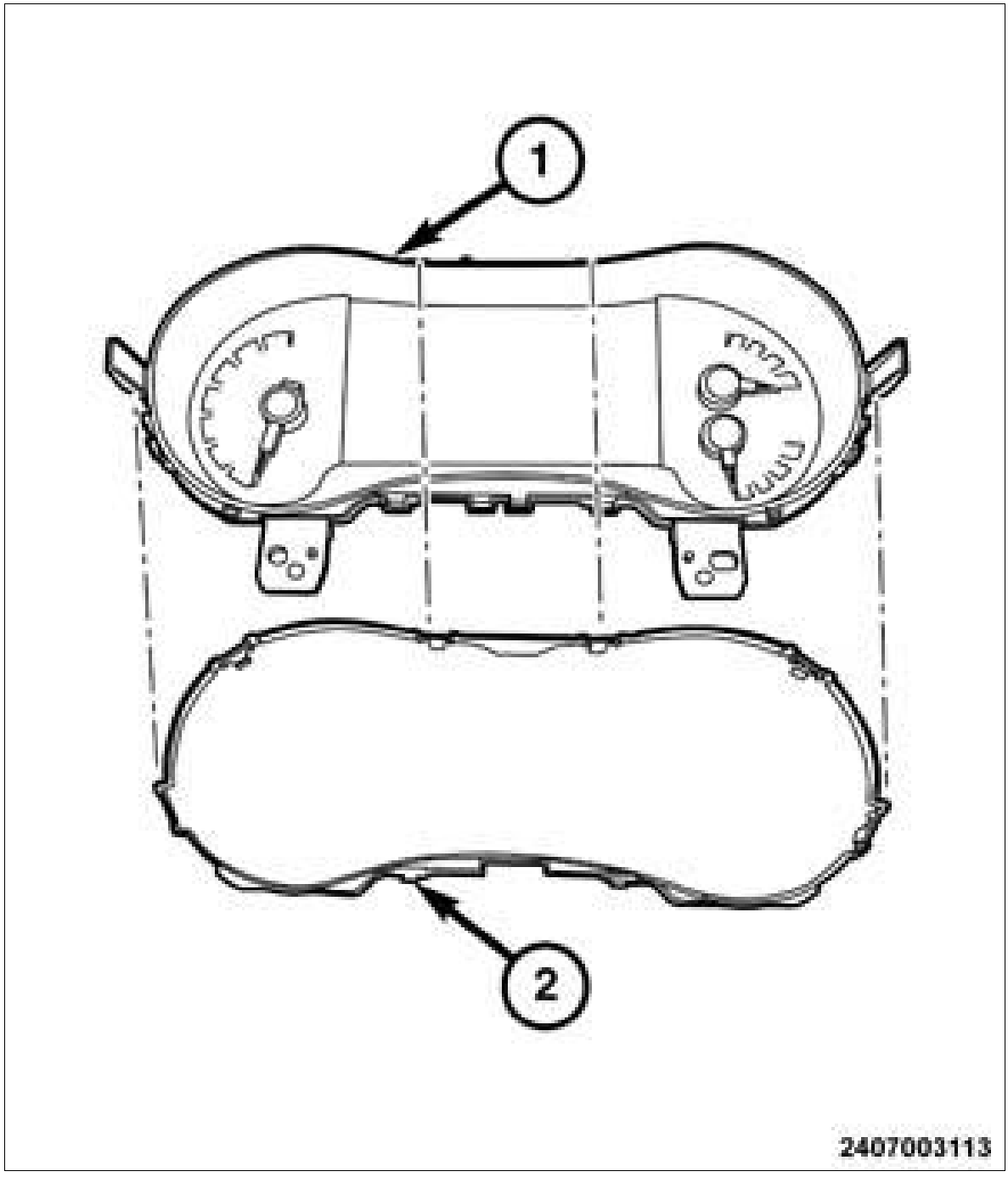

Courtesy of CHRYSLER GROUP, LLC

4. Working around the perimeter of the cluster housing, disengage each of the latches that secure the cluster lens (2), to the instrument cluster housing (1).
5. Remove the lens, hood and mask assembly from the face of the instrument cluster.

INSTALLATION > INSTALLATION

WARNING:

To avoid serious or fatal injury on vehicles equipped with airbags, disable the Supplemental Restraint System (SRS) before attempting any steering wheel, steering column, airbag, seat belt tensioner, impact sensor or instrument panel component diagnosis or service. Disconnect and isolate the battery negative (ground) cable, then wait two minutes for the system capacitor to discharge before performing further diagnosis or service. This is the only sure way to disable the SRS. Failure to take the proper precautions could result in accidental airbag deployment.

NOTE:

Certain indicators in this instrument cluster are automatically configured. This feature allows those indicators to be activated or deactivated for compatibility with certain optional equipment. If a problem is noted that involves improper illumination of an indicator, disconnect and isolate the battery negative cable. After about five minutes, reconnect the battery negative cable and turn the ignition switch to the ON position. The instrument cluster should automatically relearn the equipment in the vehicle and properly configure the configurable indicators accordingly.

INSTALLATION > INSTALLATION > CLUSTER ASSEMBLY

1. Install the cluster bezel onto the instrument cluster. Refer to BEZEL, INSTRUMENT CLUSTER, INSTALLATION .
2. Make sure the steering column is at its lowest position.

Fig 1: Instrument Cluster Wire Harness Connector

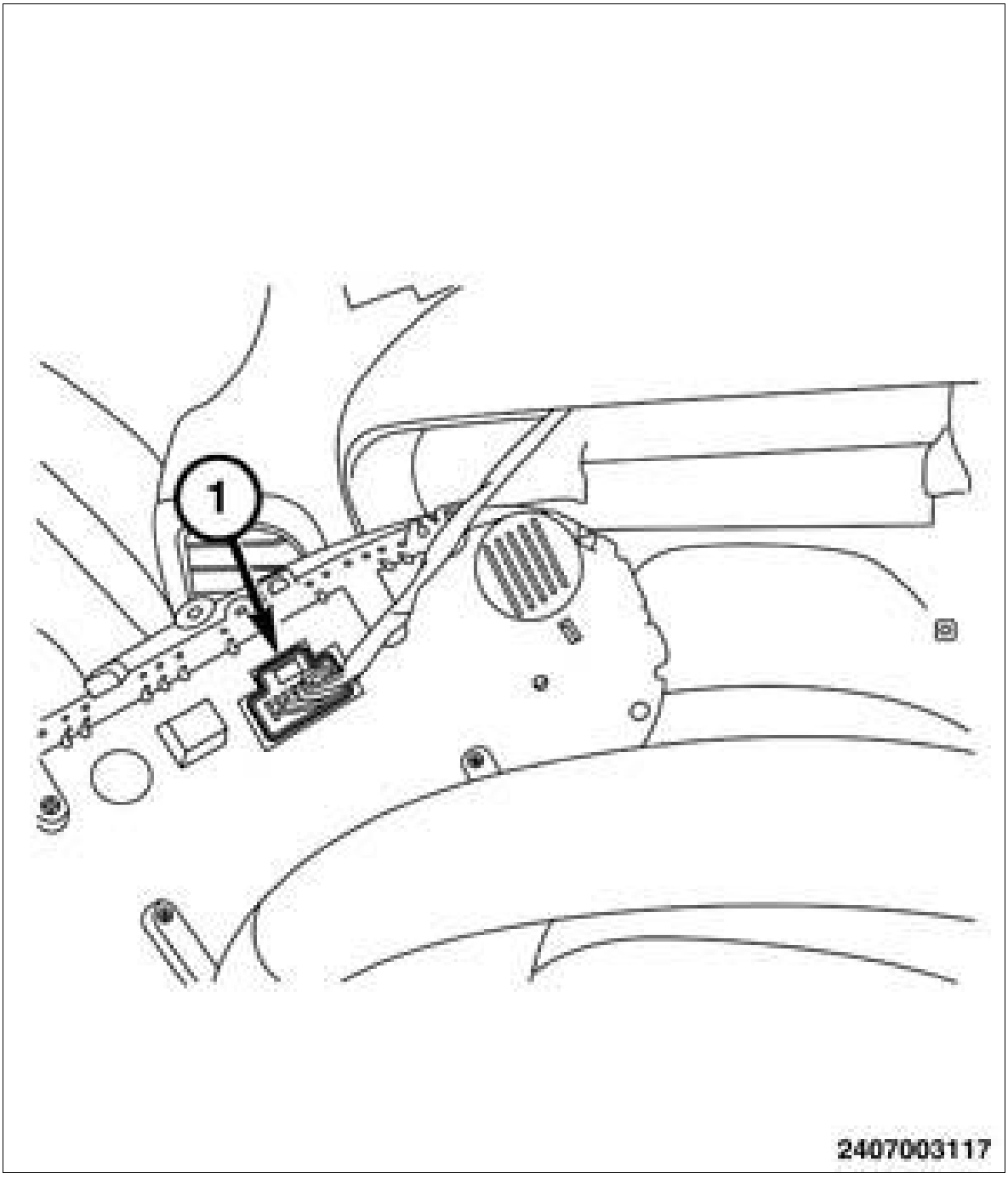

Courtesy of CHRYSLER GROUP, LLC

3. Position the instrument cluster close enough to the instrument panel to connect the instrument panel wire harness connector (1) to the receptacle on the back of the cluster housing.
4. Position the instrument cluster down into instrument panel bottom end first, aligning the mounting tabs.
5. Tilt the top of the instrument cluster forward until the upper mounting hole aligns with the upper fastener clip in the instrument panel.

Fig 2: Instrument Cluster, Bezel & Fasteners

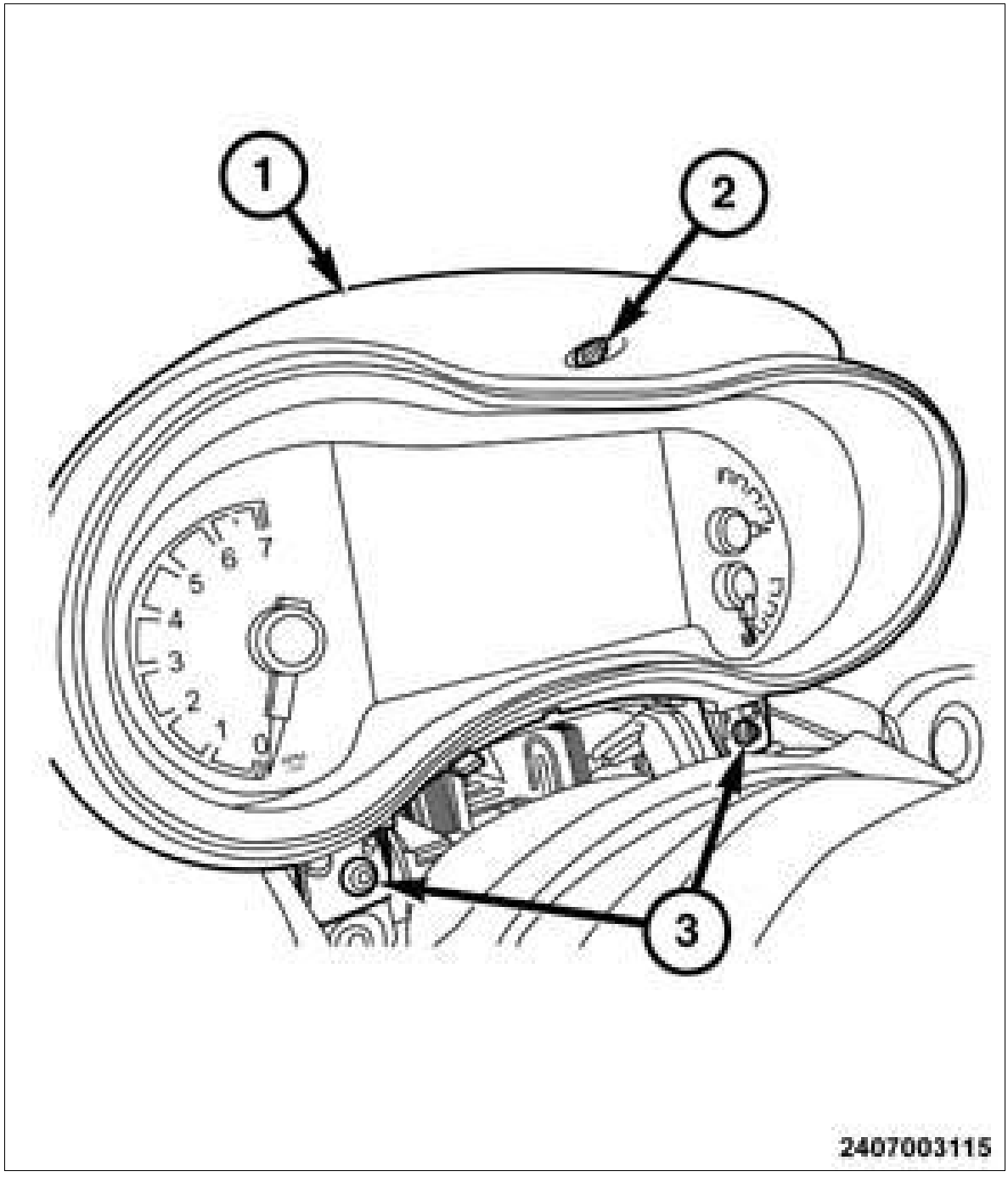

Courtesy of CHRYSLER GROUP, LLC

6. Install and tighten the fasteners (2 and 3) that secure the instrument cluster (1).
7. Position and install the steering column seal.
8. Connect the negative battery cable.

INSTALLATION > INSTALLATION > CLUSTER HOOD, LENS AND MASK

Fig 1: Instrument Cluster & Lens

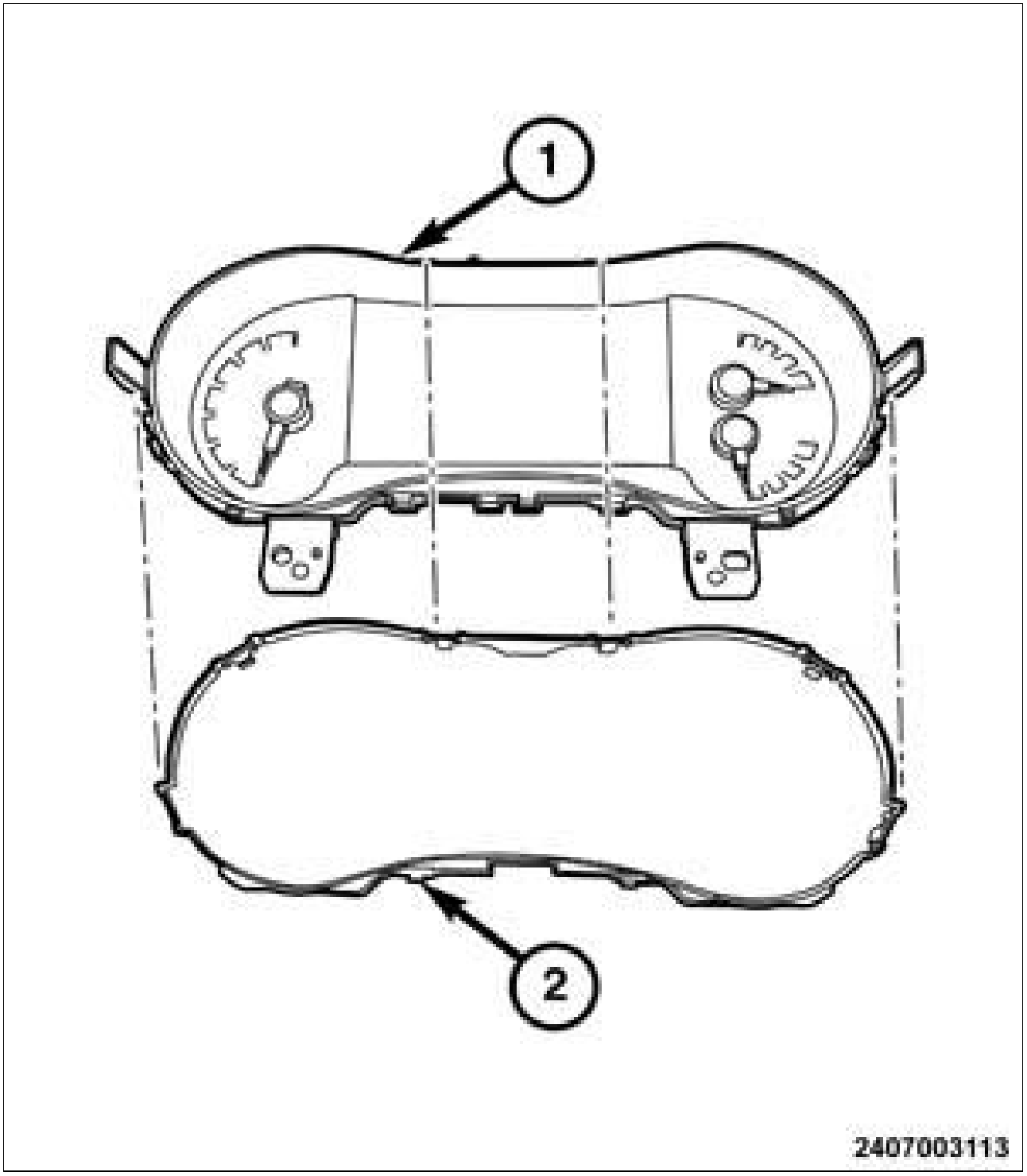

Courtesy of CHRYSLER GROUP, LLC

1. Position the cluster lens (2), over the face of the instrument cluster (1).
2. Press firmly and evenly on the lens, until each of the latches are fully engaged around the perimeter of the cluster housing.

Fig 2: Instrument Cluster & Bezel

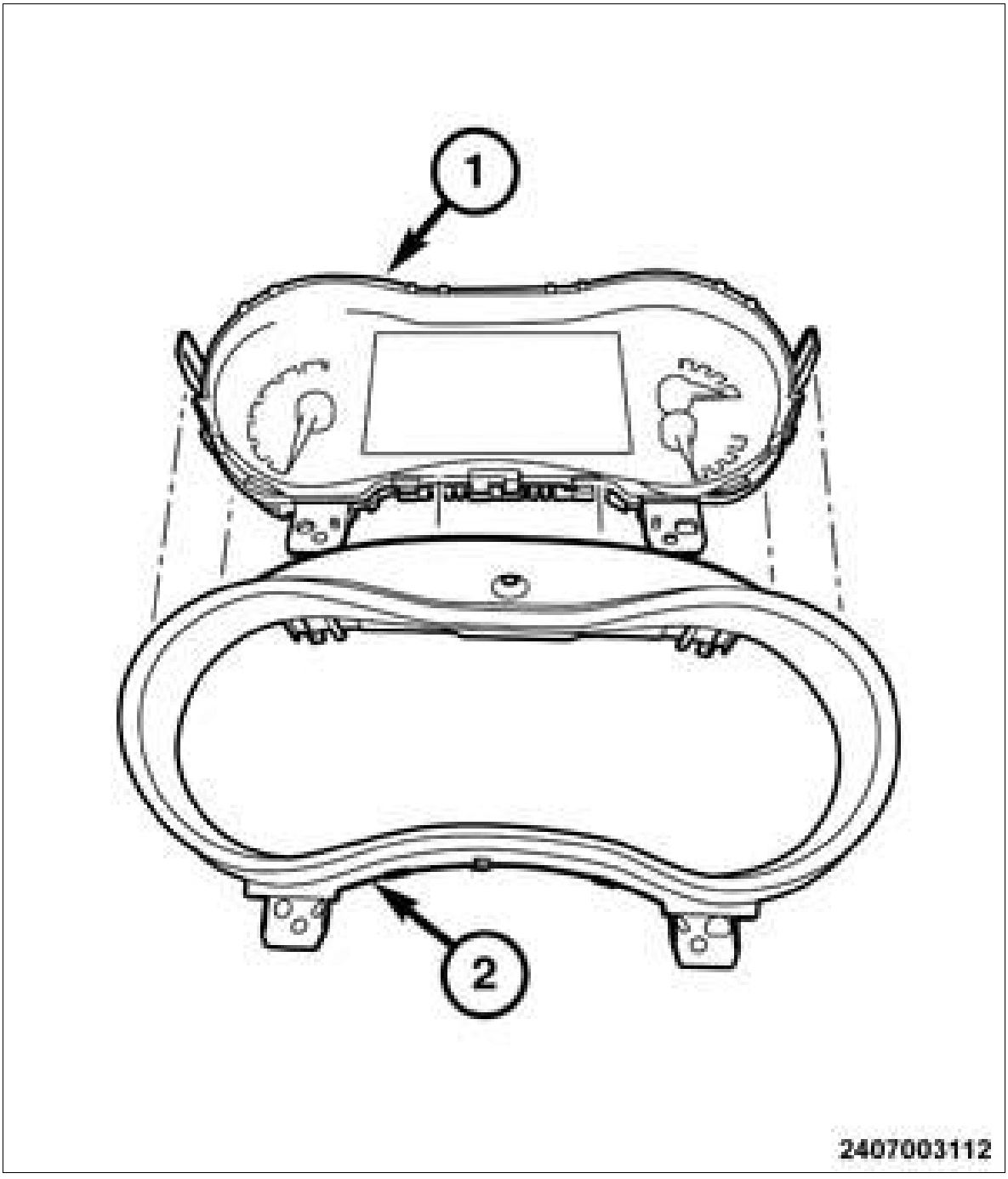

Courtesy of CHRYSLER GROUP, LLC

3. Install the Instrument Cluster Bezel (2). Refer to BEZEL, INSTRUMENT CLUSTER, INSTALLATION .
4. Install the instrument cluster into the instrument panel. Refer to CLUSTER ASSEMBLY .
5. Connect the negative battery cable.

GAUGE PACK, INSTRUMENT CLUSTER > DESCRIPTION > DESCRIPTION

Fig 1: Instrument Cluster Analog Gauges Description

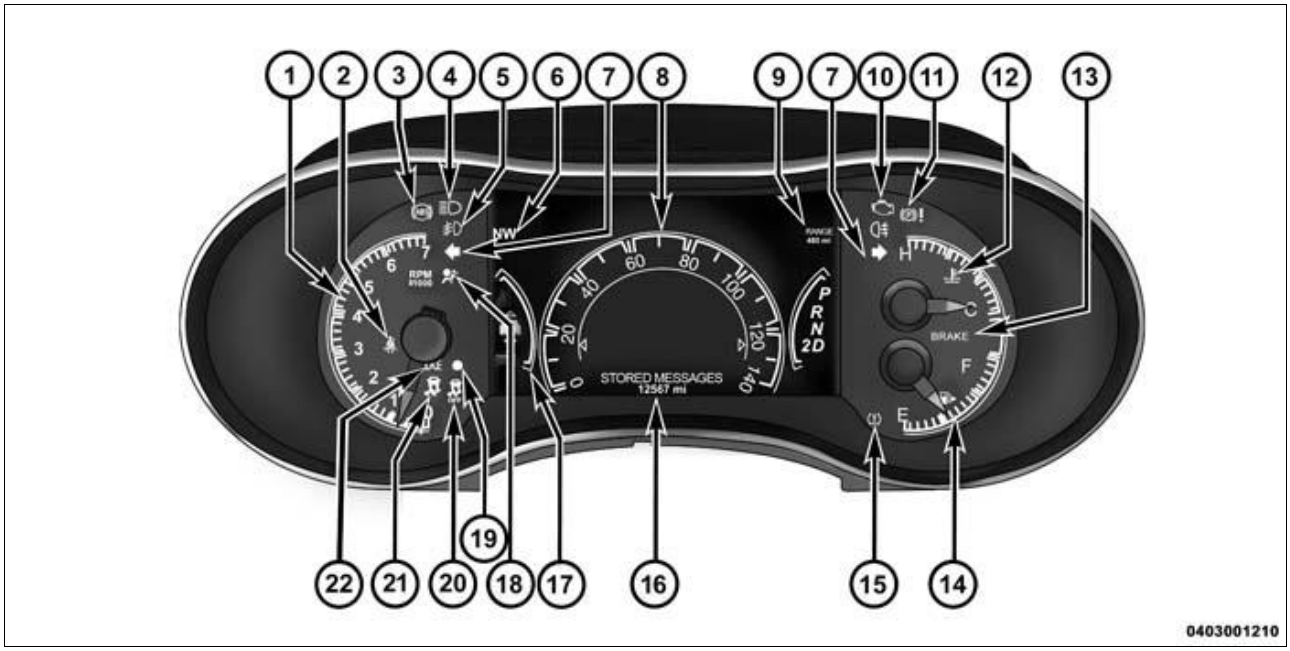

Courtesy of CHRYSLER GROUP, LLC

The instrument cluster includes the following analog gauges:

- **Engine Temperature Gauge (12)**
- **Fuel Gauge (14)**
- **Tachometer (1)**

GAUGE PACK, INSTRUMENT CLUSTER > DESCRIPTION > DESCRIPTION > FUEL LEVEL GAUGE

The gauge is located at the far right side of the IC overlay. The fuel level gauge consists of a movable gauge needle or pointer controlled by the IC circuitry and a fixed 90 degree gauge scale on the cluster overlay that reads **E** (or Empty) at the bottom of the scale, to **F** (or Full) at the top of the scale. The International Control and Display Symbol icon for **Fuel** is located on the cluster overlay at the bottom of the scale. An arrowhead pointed to the right side of the vehicle is imprinted on the cluster overlay next to the **Fuel** icon on the gauge to provide the driver with a reminder as to the location of the fuel filler access.

GAUGE PACK, INSTRUMENT CLUSTER > DESCRIPTION > DESCRIPTION > ENGINE TEMPERATURE GAUGE

An engine coolant temperature gauge is standard equipment on all instrument clusters. The engine coolant temperature gauge is located in the upper right center quadrant of the instrument cluster, next to the fuel gauge. The gauge consists of a movable gauge needle or pointer controlled by the instrument cluster circuitry and a fixed 90 degree scale on the cluster overlay that reads left-to-right from **C** (or

Cold) to **H** (or Hot) for gasoline engines. An International Control and Display Symbol icon for **Engine Coolant Temperature** is located on the cluster overlay, directly below the left end of the gauge scale.

The engine coolant temperature gauge graphics are white against a black field except for a single red graduation at the high end of the gauge scale making them clearly visible within the instrument cluster in daylight. When illuminated from behind by the panel lamps dimmer controlled cluster illumination lighting with the exterior lamps turned ON, the white gauge graphics appear amber on the low line and white on the high line, while the red graphics still appear red. The gauge needle has internal optical illumination. Gauge illumination is provided by Light Emitting Diode (LED) units located on the instrument cluster electronic circuit board.

GAUGE PACK, INSTRUMENT CLUSTER > DESCRIPTION > DESCRIPTION > TACHOMETER

A tachometer is standard equipment on all instrument clusters. The tachometer is located to the left of the speedometer, just to the left of center in the instrument cluster. The tachometer consists of a movable gauge needle or pointer controlled by the instrument cluster circuitry and a fixed 210 degree scale on the gauge dial face. The tachometer reads left-to-right from **0** to **7** . The text **RPM X 1000** is imprinted on the cluster overlay directly below the hub of the tachometer needle. This text identifies that each number on the tachometer scale is to be multiplied by 1000 rpm.

The tachometer graphics are white against a black field making them clearly visible within the instrument cluster in daylight. When illuminated from behind by the panel lamps dimmer controlled cluster general illumination lighting, the scale graphics appear white and the red graphics still appear red. The gauge needle has internal optical illumination. Gauge illumination is provided by a Light Emitting Diode (LED) unit located on the instrument cluster electronic circuit board.

GAUGE PACK, INSTRUMENT CLUSTER > OPERATION > GAUGES

All gauges receive battery current through the Power Distribution Center (PDC) circuitry only when the ignition switch is in the ON or START positions. With the ignition switch in the OFF position battery current is not supplied to any gauges, and the Instrument Panel Cluster (IPC) circuitry is programmed to move all of the gauge needles back to the low end of their respective scales. Therefore, the gauges do not accurately indicate any vehicle condition unless the ignition switch is in the ON or START positions.

All of the gauges are driven by stepper motors. Multiple toothed electromagnets around a central gear-shaped piece of iron are located within each gauge. The electromagnets are energized by the IPC circuitry in response to messages received over the CAN data bus. To make the motor shaft turn, one electromagnet is given power, which makes the gears teeth magnetically attract to the electromagnets. As the second electromagnet is turned on the first is turned off and the gear rotates to align to the energized magnet, and the process is repeated. Each of those slight rotations is called at "step", this allows the motor to be turned to precise angles. The gauge needle moves as the magnets align to the changing magnetic fields created around it by the electromagnets.

The gauges are diagnosed using the IPC self-diagnostic test. Refer to DIAGNOSIS AND TESTING . Proper testing of the CAN data bus and the electronic data bus message inputs to the IPC that control each gauge require the use of a diagnostic scan tool. Refer to the appropriate diagnostic information. Specific operation details for each gauge may be found elsewhere in this service information.

GAUGE PACK, INSTRUMENT CLUSTER > OPERATION > GAUGES > FUEL GAUGE

The fuel gauge gives an indication to the vehicle operator of the level of fuel in the fuel tank. This gauge is controlled by the instrument cluster circuit board based upon cluster programming and a bus message received by the cluster. This bus message is based upon a hard-wired input received by the Body Control Module (BCM) from the fuel level sending unit on the fuel pump module, located in the fuel tank.

The fuel gauge is a stepper motor design unit that receives battery current on the instrument cluster electronic circuit board through the fused ignition switch output (run-start) circuit whenever the ignition switch is in the ON or START positions. The cluster is programmed to move the gauge needle back to the low end of the scale after the ignition switch is turned to the OFF position. The Instrument Panel Cluster (IPC) electronic circuitry controls the gauge needle position and provides the following features:

- **Fuel Level Sending Unit Input** - The Power Distribution Center (PDC) provides a constant current source to the fuel level sending unit and monitors a return input on a fuel level sense circuit. The resistance through the fuel level sending unit increases as the fuel level falls and decreases as the fuel level rises causing changes in the fuel level sense input voltage. The BCM sends the fuel level voltage to the cluster over the Controller Area Network (CAN) bus. The cluster programming applies an algorithm to calculate the proper fuel gauge needle position based upon the fuel level bus input, then moves the gauge needle to the proper relative position on the gauge scale. This algorithm is used to dampen gauge needle movement against the negative effect that fuel sloshing within the fuel tank can have on accurate inputs from the fuel tank sending unit to the cluster.
- **Less Than 10 Percent Tank Full Input** - Each time the fuel level sense input to the cluster indicates the fuel tank is about 10 percent full or less for 10 consecutive seconds and the vehicle speed is zero, or for 60 consecutive seconds and the vehicle speed is greater than zero, the gauge needle is moved to about the one-sixteenth graduation on the gauge scale, the low fuel indicator is illuminated, and a single chime tone is sounded. The low fuel indicator remains illuminated until the fuel level sense input is greater than about 15 percent full for 10 consecutive seconds and the vehicle speed is zero, or for 60 consecutive seconds and the vehicle speed is greater than zero, or until the ignition switch is turned to the OFF position, whichever occurs first. The chime tone feature will only repeat during the same ignition cycle if the low fuel indicator is cycled OFF and then ON again by the appropriate inputs from the fuel level sending unit.
- **Less Than Empty Stop Input** - Each time the cluster receives a fuel level sense input that indicates the fuel level in the fuel tank is less than the EMPTY gauge needle stop position, the gauge needle is moved to the low end of the gauge scale and the low fuel indicator is illuminated immediately. This input would indicate that the fuel level sense input to the cluster is a short circuit.
- **More Than Full Stop Input** - Each time the cluster receives a fuel level sense input that indicates the fuel level in the fuel tank is more than the FULL gauge needle stop position, the gauge needle is moved to the low end of the gauge scale and the low fuel indicator is illuminated immediately. This input would indicate that the fuel level sense input to the cluster is an open circuit.

The BCM continually monitors the fuel tank sending unit to determine the level of fuel in the fuel tank. The BCM then sends the proper electronic fuel level message to other electronic modules in the vehicle over the Controller Area Network (CAN) data bus. For further diagnosis of the fuel gauge or the instrument cluster circuitry that controls the gauge, refer to DIAGNOSIS AND TESTING .

GAUGE PACK, INSTRUMENT CLUSTER > OPERATION > GAUGES > TACHOMETER

The tachometer gives an indication to the vehicle operator of the engine speed. This gauge is controlled by the IC circuit board based upon cluster programming and electronic **engine speed** messages received by the Instrument Panel Cluster (IPC) from the PCM over the CAN data bus.

The tachometer is driven by an electronic stepper motor unit that receives battery current on the IPC electronic circuit board through the fused ignition (run) circuit whenever the status of the ignition switch is ON. The IPC is programmed to move the gauge needle back to the low end of the scale after the status of the ignition switch transitions to OFF. The IPC circuitry controls the gauge needle position and provides the following features:

- **Engine Speed Message** - Each time the cluster receives an electronic **engine speed** message from the PCM it will calculate the correct engine speed reading and position the gauge needle at that relative speed position on the gauge scale. The IPC will receive a new message and reposition the gauge pointer accordingly about every 88 milliseconds. The gauge needle will continually be repositioned at the relative engine speed position on the gauge scale until the engine stops running, or until the ignition switch status transitions to OFF, whichever occurs first.
- **Communication Error** - If the IPC fails to receive an electronic **engine speed** message, it will hold the gauge needle at the last indication for about three seconds, or until the ignition switch status transitions to OFF, whichever occurs first. After three seconds, the gauge needle will return to the left end of the gauge scale.

The PCM continually monitors the crankshaft position sensor to determine the engine speed. The PCM then sends the proper electronic **engine speed** messages to the IPC.

GAUGE PACK, INSTRUMENT CLUSTER > OPERATION > GAUGES > ENGINE TEMPERATURE GAUGE

The engine coolant temperature gauge gives an indication to the vehicle operator of the engine coolant temperature. This gauge is controlled by the Instrument Panel Cluster (IPC) based upon cluster programming and electronic messages received over the Controller Area Network (CAN) data bus. These electronic messages are received from the Powertrain Control Module (PCM) or Engine Control Module (ECM), depending on engine application.

The engine coolant temperature gauge is a stepper motor design unit that receives battery current on the IPC electronic circuit board through the fused ignition switch output (run-start) circuit whenever the ignition switch is in the ON or START positions. The cluster is programmed to move the gauge needle back to the low end of the scale after the ignition switch is turned to the OFF position. The IPC electronic circuitry controls the gauge needle position and provides the following features:

- **Engine Temperature Low Message** - Each time the IPC receives an electronic engine temperature message from the PCM or ECM indicating the temperature is below the low end of normal [about 54 °C (130 °F), the gauge needle is held at the graduation on the far left end of the gauge scale. The gauge needle remains at the low end of the gauge scale until the IPC receives a message from the PCM or ECM indicating the temperature is above about 54 °C (130 °F), or until the ignition switch is turned to the OFF position, whichever occurs first.
- **Engine Temperature Message** - Each time the IPC receives an electronic engine temperature message from the PCM or ECM indicating the temperature is between the low end of normal [about 54 °C (130 °F) and the high end of normal [about 122 °C (252 °F), the gauge needle is moved to the actual relative temperature position on the gauge scale.

- **Engine Temperature High Message** - Each time the IPC receives three consecutive electronic engine temperature messages from the PCM or ECM indicating the temperature is above about 122 °C (252 °F), the gauge needle is moved to the red increment or zone at the far right end of gauge scale, the check gauges indicator is illuminated, and a single chime tone is sounded. The gauge needle remains at the high end of the gauge scale and the check gauges indicator remains illuminated until the cluster receives a message from the PCM or ECM indicating that the temperature is below about 122 °C (252 °F), or until the ignition switch is turned to the OFF position, whichever occurs first. The chime tone feature will only repeat during the same ignition cycle if the check gauges indicator is cycled OFF and then ON again by the appropriate messages from the PCM or ECM.
- **Communication Error** - If the IPC fails to receive an **engine temperature** message, it will hold the gauge needle at the last indication for about 10 seconds or until the ignition switch is turned to the OFF position, whichever occurs first. After 10 seconds, the IPC will move the gauge needle to the low end of the gauge scale.

The PCM or ECM continually monitors the engine coolant temperature sensor to determine the engine operating temperature. The PCM or ECM then sends the proper messages to the IPC. For further diagnosis of the engine coolant temperature gauge or the electronic circuitry that controls the gauge, refer to DIAGNOSIS AND TESTING . If the instrument cluster turns ON the check gauges indicator due to a high engine temperature gauge reading, it may indicate that the engine or the engine cooling system requires service.

INDICATORS, INSTRUMENT CLUSTER > DESCRIPTION > DESCRIPTION

The instrument cluster assembly has provisions for International Control and Display Symbol icon indicators, as well as three analog gauges standard on all models. Refer to GAUGE PACK, INSTRUMENT CLUSTER, DESCRIPTION . Some of the indicators are automatically configured when connected to the vehicle electrical system for compatibility with certain optional equipment or equipment required for regulatory purposes in certain markets. While each instrument cluster may have provisions for indicators to support every available option, the configurable indicators will not function in vehicles that do not have the equipment that an indicator supports.

Fig 1: Instrument Cluster Analog Gauges Description

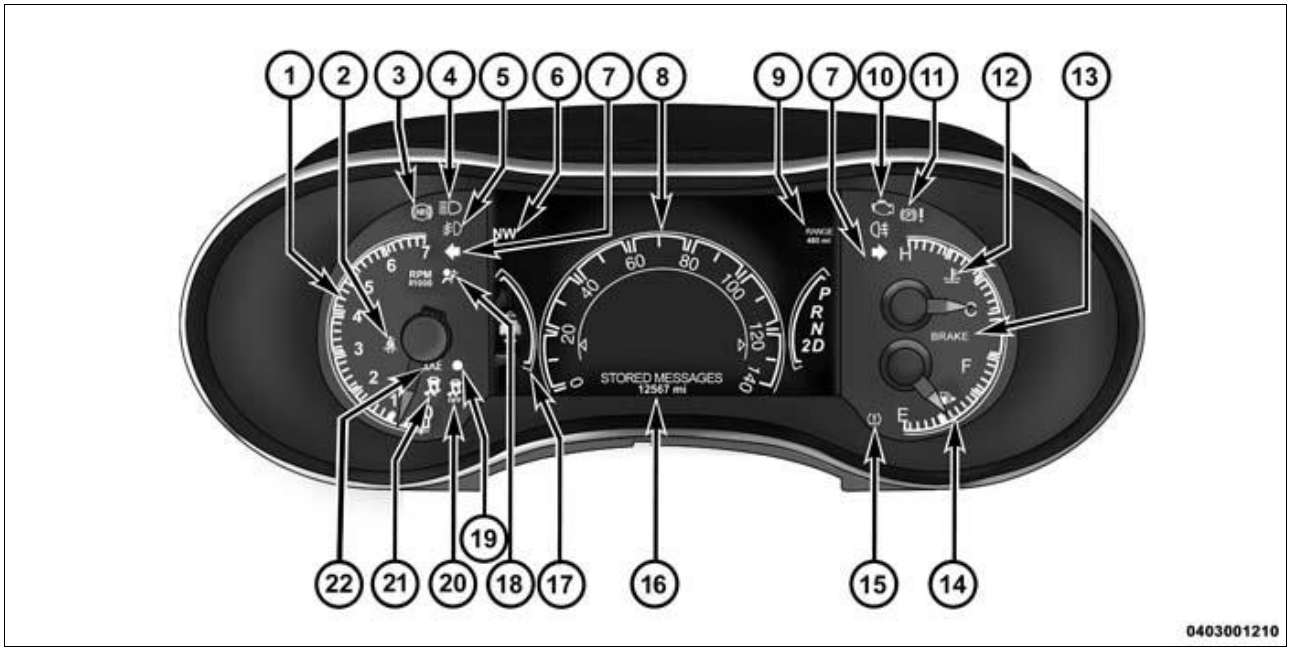

Courtesy of CHRYSLER GROUP, LLC

> *NOTE:*
>
> *All indicators in the following list that are not called out, are located within the center display.*

The instrument cluster includes provisions for the following indicators:

- **Airbag Indicator**

  (18)

- **Antilock Brake System (ABS) Indicator** (3)
- **Brake Indicator** - may include icon and **LOW BRAKE FLUID LEVEL** textual message in electronic display. (13)
- **Change Oil Indicator** - textual message in electronic display (vehicles manufactured for domestic markets only).
- **Charging Indicator** - icon and textual message in electronic display.
- **Check Gauges Indicator** - textual message in electronic display.
- **Coolant Low Indicator** - icon and textual message in electronic display (diesel only).
- **Cruise Indicator** - icons and textual messages in electronic display.
- **Door Ajar Indicator(s)** - icons and textual messages in electronic display.
- **Electronic Stability Control (ESC) Indicator** (21)

- **Electronic Throttle Control (ETC) Indicator** - icon and textual message in electronic display (21).
- **Engine Temperature Indicator** (12)
- **ESC Off Indicator** - and textual message in electronic display. (20)
- **Four-Wheel Drive Low Indicator** - may include **CHECK SHIFT PROCEDURE** textual message in electronic display.
- **Front Fog Lamp Indicator** (5)
- **Fuel Saver Indicator - Economizer (ECO)** - icons and textual messages in electronic display.
- **Gas Cap Indicator** - textual message in electronic display.
- **High Beam Indicator** (4)
- **Hill Descent Indicator**
- **Liftgate Ajar Indicator** - icon and textual message in electronic display.
- **Liftgate Flip-Up Glass Ajar Indicator** - icon and textual message in electronic display.
- **Low Fuel Indicator** .
- **Low Oil Pressure Indicator** - icon and textual message in electronic display.
- **Malfunction Indicator Lamp (MIL)** (10)
- **Memory System Indicator** - textual messages in electronic display.
- **No Bus Indicator** - textual message in electronic display.
- **No Fuse Indicator** - textual message in electronic display.
- **Park Assist Disabled Indicator** - textual message in electronic display (if equipped only).
- **Perform Service Indicator** - textual message in electronic display (diesel only).
- **Position Lamp Indicator** - vehicles manufactured for certain export markets only.
- **Power Liftgate Indicator** - textual messages in electronic display (if equipped only).
- **Rear Fog Lamp Indicator** - vehicles manufactured for certain export markets only.
- **Remote Start Indicator** - textual messages in electronic display (if equipped only).
- **Seat Belt Indicator** (2)
- **Security Indicator** (19)
- **Service 4WD Indicator** - textual message in electronic display.
- **Service Column Lock Indicator** - textual messages in electronic display (vehicles manufactured for certain export markets only).
- **Service Exhaust Indicator** - textual messages in electronic display (diesel only).

- **Service Park Assist Indicator** - textual message in electronic display (if equipped only).
- **SmartBeam™ (Auto High Beam) Indicator** - textual message in electronic display (if equipped only).
- **Tire Pressure Monitor (TPM) Indicator** - may also include textual messages in electronic display. (15)
- **Tow / Haul Indicator**
- **Transmission Range Indicator** - textual message in electronic display.
- **Transmission Temperature Indicator** - icon and textual message in electronic display.
- **Turn Signal (Right and Left) Indicators** - may also include icon and **TURN SIGNAL ON** reminder textual message in electronic display (7).
- **Washer Fluid Indicator** - icon and textual message in electronic display.

Each indicator in the instrument cluster, except those located within an electronic display unit, is illuminated by a dedicated Light Emitting Diode (LED) that is soldered onto the electronic circuit board. Cluster illumination is accomplished by several dimmable LED units, which illuminate each of the gauge dial faces for visibility when the exterior lighting is turned ON. These LED units are serviced only as a complete unit with the instrument cluster and, if damaged or ineffective, the entire instrument cluster assembly must be replaced. The cluster lens and the cluster hood and mask unit are the only components of the instrument cluster assembly that can be serviced separately.

INDICATORS, INSTRUMENT CLUSTER > OPERATION > OPERATION

Indicators are located in various positions within the Instrument Panel Cluster (IPC) and are all connected to the IPC electronic circuit board. The door ajar indicator, high beam indicator, and turn signal indicators operate based upon CAN data bus messages. The cargo lamp indicator operates based upon hard wired inputs to the IPC. The brake indicator is controlled by CAN data bus messages from the Controller Antilock Brake (CAB) as well as by hard wired park brake switch inputs to the IPC. The seat belt indicator is controlled by the Body Control Module (BCM) programming, CAN data bus messages from the Occupant Restraint Controller (ORC), and a hard wired seat belt switch input to the BCM. The Malfunction Indicator Lamp (MIL) is normally controlled by CAN data bus messages from the PCM; however, if the IPC loses CAN data bus communication, the IPC circuitry will automatically turn the MIL ON until CAN data bus communication is restored. The IPC uses CAN data bus messages from the BCM, the ORC, the CAB, and the Wireless Ignition Node to control all of the remaining indicators.

The various IPC indicators are grounded through the IPC circuitry and have a switched battery feed. All indicators are completely controlled by the IPC microcontroller based upon various hard wired and electronic message inputs. The cruise, four-wheel drive, four-wheel drive auto, four-wheel drive low, overdrive OFF and tow/haul indicators and those located within the LCD unit are dimmable. All other indicators are illuminated at a fixed intensity, which is not affected by the selected illumination intensity of the IPC general illumination lamps. The illumination intensity of the dimmable indicators is synchronized with that of the IPC general illumination lamps.

In addition, certain indicators in this instrument cluster are automatically or self-configured. This feature allows the configurable indicators to be enabled by the IPC circuitry for compatibility with certain optional equipment. The IPC defaults for the ABS indicator and airbag indicator are enabled, and these configuration settings must be programmatically disabled in the IPC using a diagnostic scan tool for

vehicles that do not have this equipment. The automatically or self-configured indicators remain latent in each IPC at all times and will be active only when the IPC receives the appropriate CAN bus message inputs for that optional system or equipment.

The hard wired indicator inputs may be diagnosed using conventional diagnostic tools and procedures. However, the IPC circuitry and CAN bus message controlled indicators are diagnosed using the IPC self-diagnostic test. Refer to DIAGNOSIS AND TESTING . Proper testing of the CAN data bus and the electronic data bus message inputs to the IPC that control an indicator requires the use of a diagnostic scan tool. Refer to the appropriate diagnostic information. Specific details of the operation for each indicator may be found elsewhere in this service information.

POD, SWITCH > DESCRIPTION > DESCRIPTION

The instrument panel switch pod is located just below the heater and air conditioner controls in the center stack area of the instrument panel. This switch is available in multiple configurations, which vary depending upon the equipment in the vehicle. However, every available configuration includes the hazard warning push button switch. The switch pod may include the following switches:

- **Automatic Transmission Tow/Haul Mode Switch**
- **Electronic Stability Control (ESC) Off Switch**
- **Hazard Warning Switch**
- **Headlamp Leveling Switch**
- **Hill Descent Switch**
- **Park Assist Off Switch**

The switch housing and the push buttons are constructed of molded plastic. Each push button has a smooth finish and is clearly identified with the appropriate text and International Control and Display Symbol icons. Refer to INTERNATIONAL VEHICLE CONTROL AND DISPLAY SYMBOLS, DESCRIPTION . Several of the push buttons feature Light Emitting Diode (LED) units to give the vehicle operator an indication when the function of that switch is currently active. Only the hazard warning switch push button latches, the manual headlamp leveling switch features a thumbwheel with four detent positions, while the remaining switches feature momentary operation.

Four screws secure the switch to the back of the instrument panel center bezel through integral mounting tabs that are molded onto each end of the switch housing. The back of the switch housing has an integral connector receptacle containing terminal pins that connect the switch to the vehicle electrical system through a dedicated take out and connector of the instrument panel wire harness.

Panel lamps dimmer controlled illumination lamps integral to the circuit board within the switch provide back lighting for visibility at night, but these lamps are not serviceable. The individual switches in the upper instrument panel switch pod cannot be repaired and are not serviced individually. If any component within the switch pod is ineffective or damaged, the entire switch pod must be replaced.

POD, SWITCH > OPERATION > OPERATION

For information covering details of operation for the individual switches and circuits contained within the

instrument panel switch pod, refer to the specific service information covering the system to which that switch belongs.

POD, SWITCH > REMOVAL > REMOVAL

WARNING:

To avoid serious or fatal injury on vehicles equipped with airbags, disable the Supplemental Restraint System (SRS) before attempting any steering wheel, steering column, airbag, seat belt tensioner, impact sensor or instrument panel component diagnosis or service. Disconnect and isolate the battery negative (ground) cable, then wait two minutes for the system capacitor to discharge before performing further diagnosis or service. This is the only sure way to disable the SRS. Failure to take the proper precautions could result in accidental airbag deployment.

1. Disconnect and isolate the negative battery cable.
2. The Pod Switch is serviced as an assembly with the Instrument Panel Center Bezel. For removal, refer to BEZEL, INSTRUMENT PANEL, CENTER, REMOVAL .

POD, SWITCH > INSTALLATION > INSTALLATION

WARNING:

To avoid serious or fatal injury on vehicles equipped with airbags, disable the Supplemental Restraint System (SRS) before attempting any steering wheel, steering column, airbag, seat belt tensioner, impact sensor or instrument panel component diagnosis or service. Disconnect and isolate the battery negative (ground) cable, then wait two minutes for the system capacitor to discharge before performing further diagnosis or service. This is the only sure way to disable the SRS. Failure to take the proper precautions could result in accidental airbag deployment.

NOTE:

There may be several different instrument panel lower switch pods available, depending upon the optional equipment content of the vehicle. Be certain that a replacement lower switch pod matches the optional equipment of the vehicle into which it is being installed.

1. The Switch Pod is serviced as an assembly with the Center Instrument Panel Bezel. For installation of the switch pod, refer to BEZEL, INSTRUMENT PANEL, CENTER, INSTALLATION .
2. Connect the negative battery cable.

SWITCH, TERRAIN SELECT > DESCRIPTION > DESCRIPTION

Fig 1: Terrain Select Switch

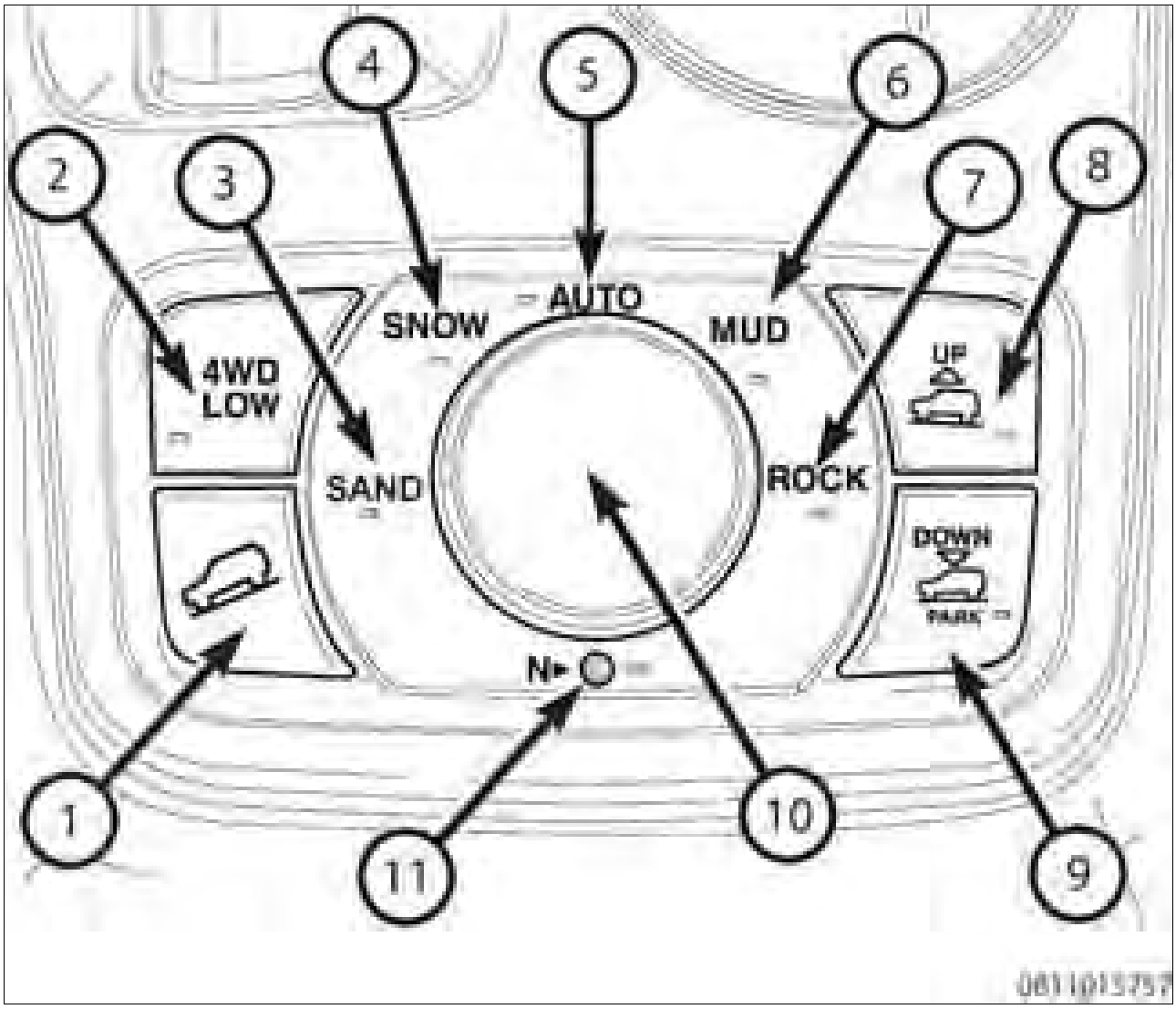

Courtesy of CHRYSLER GROUP, LLC

The terrain select switch is located on the center console and has a rotating selection knob in the center (10), and manual push button switches (1, 2, 8, 9) in the corners with LED indicators. For replacement of the terrain select switch, refer to SWITCH, TERRAIN SELECT, REMOVAL .

The various switch positions are as follows:

- Hill Decent Control (1).
- 4WD Low (2).
- Sand Terrain position (3).
- Snow Terrain position (4).
- Auto Terrain position (5).

- Mud Terrain position (6).
- Rock Terrain position (7).
- Air Suspension Up (8).
- Air Suspension Down (9).
- Terrain auto select control knob (10).
- Neutral Position (11).

SWITCH, TERRAIN SELECT > OPERATION > OPERATION

Fig 1: Terrain Select Switch

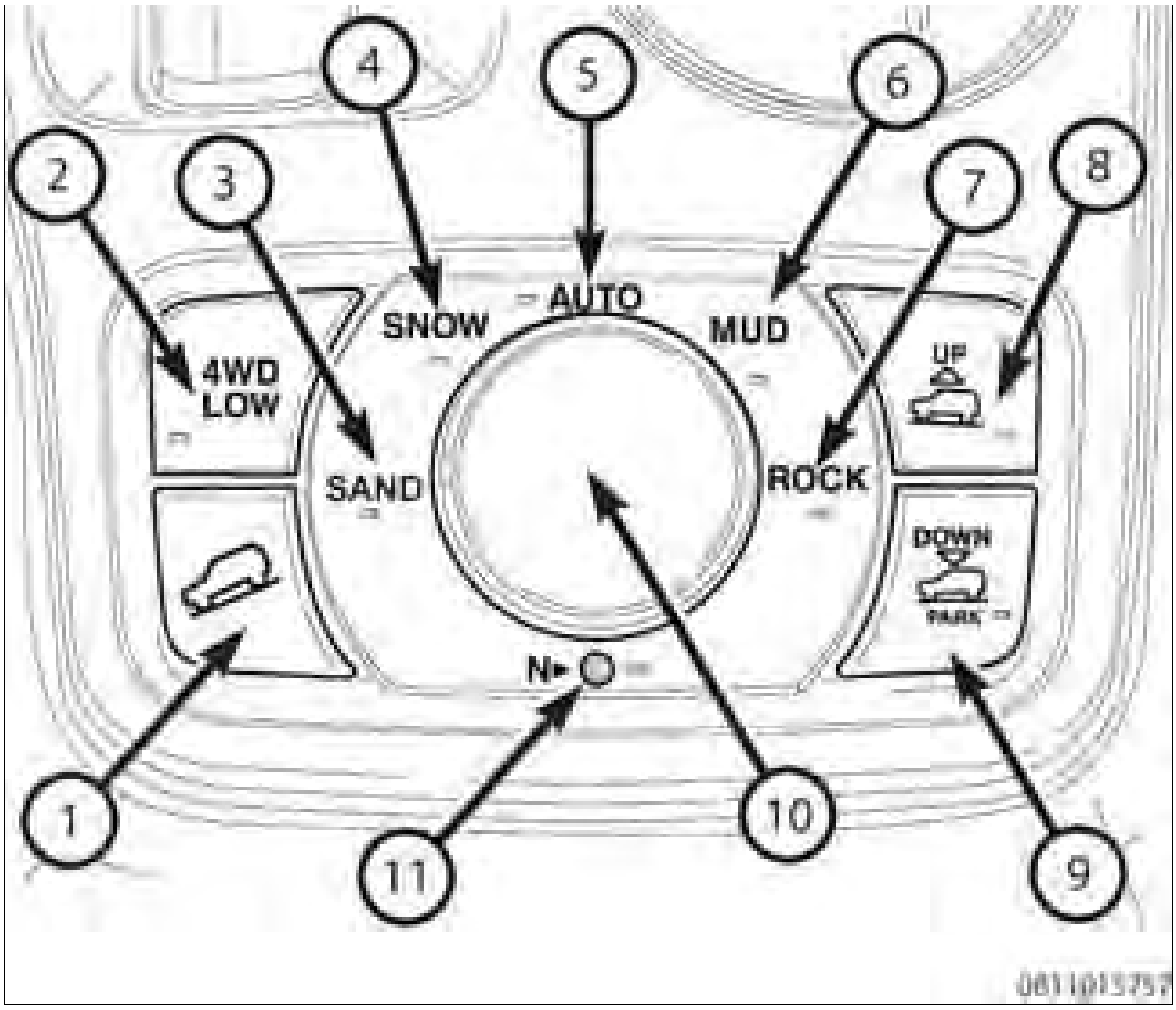

Courtesy of CHRYSLER GROUP, LLC

The terrain select switch is used to communicate driver commands of various vehicle control systems related to vehicle ride height, traction, and stability control. The switch includes an Auto setting and a Neutral setting. The switch communicates with the Body Control Module (BCM). The BCM sends

information related to the terrain select switch via the CAN Interior bus. Some modules that use the information from the terrain select switch are as follows:

- Air Suspension Control Module (ASCM)
- Antilock Brake Module (ABS)
- Powertrain Control Module (PCM)

SWITCH, TERRAIN SELECT > REMOVAL > REMOVAL

Fig 1: Retaining Ring & Knob

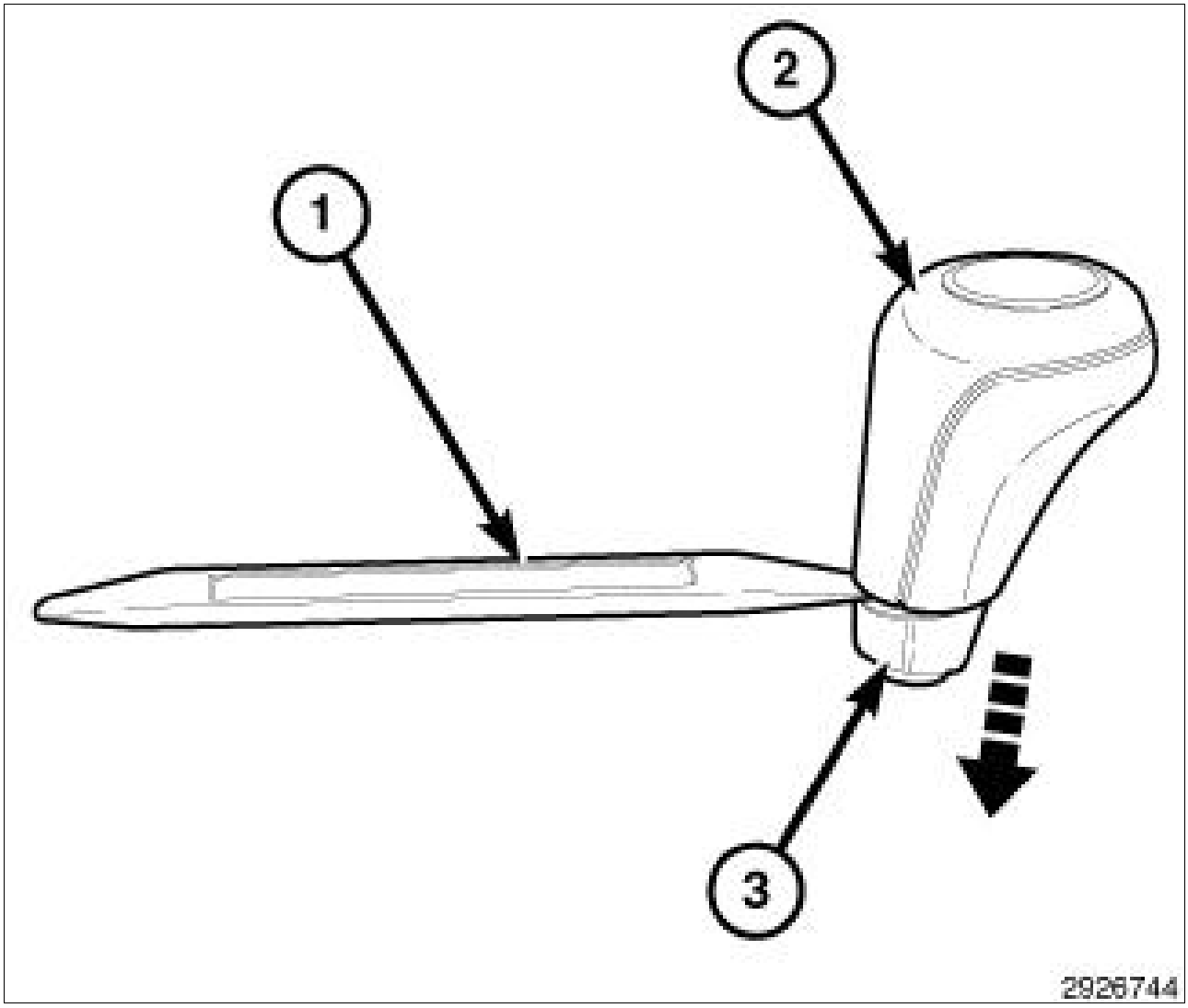

Courtesy of CHRYSLER GROUP, LLC

1. Using trim stick (special tool #C-4755, Trim Stick) (1) or equivalent, separate the retaining ring (3) from the knob (2) and slide down the shifter shaft.

Fig 2: Stamped Spring Clip & Knob

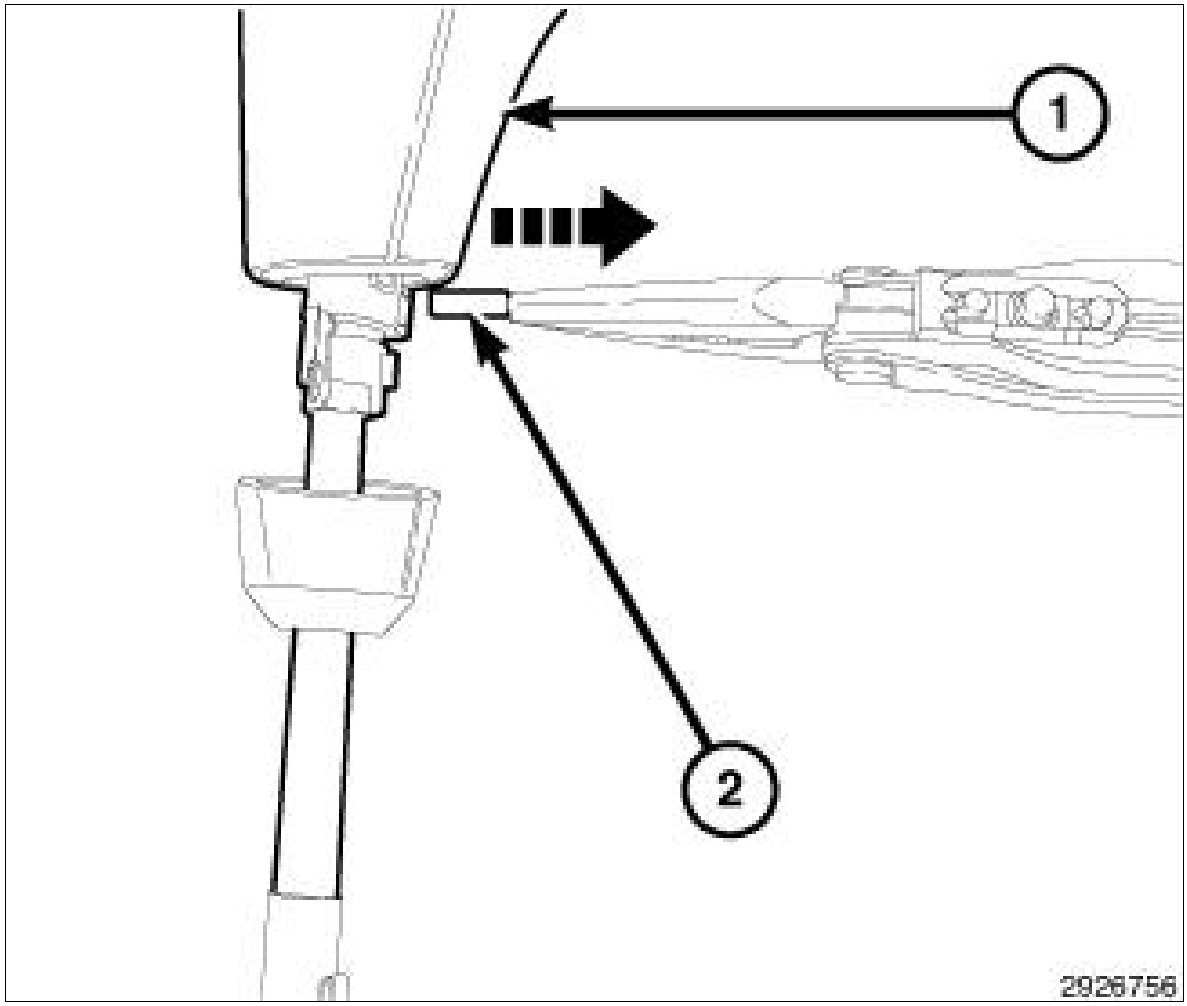

Courtesy of CHRYSLER GROUP, LLC

2. Remove the yellow stamped spring clip (2) from the knob (1) by grabbing the exposed tab with pliers and pulling straight out.
3. Pull the knob (2) off of the shift shaft.

Fig 3: Center Console Bezel

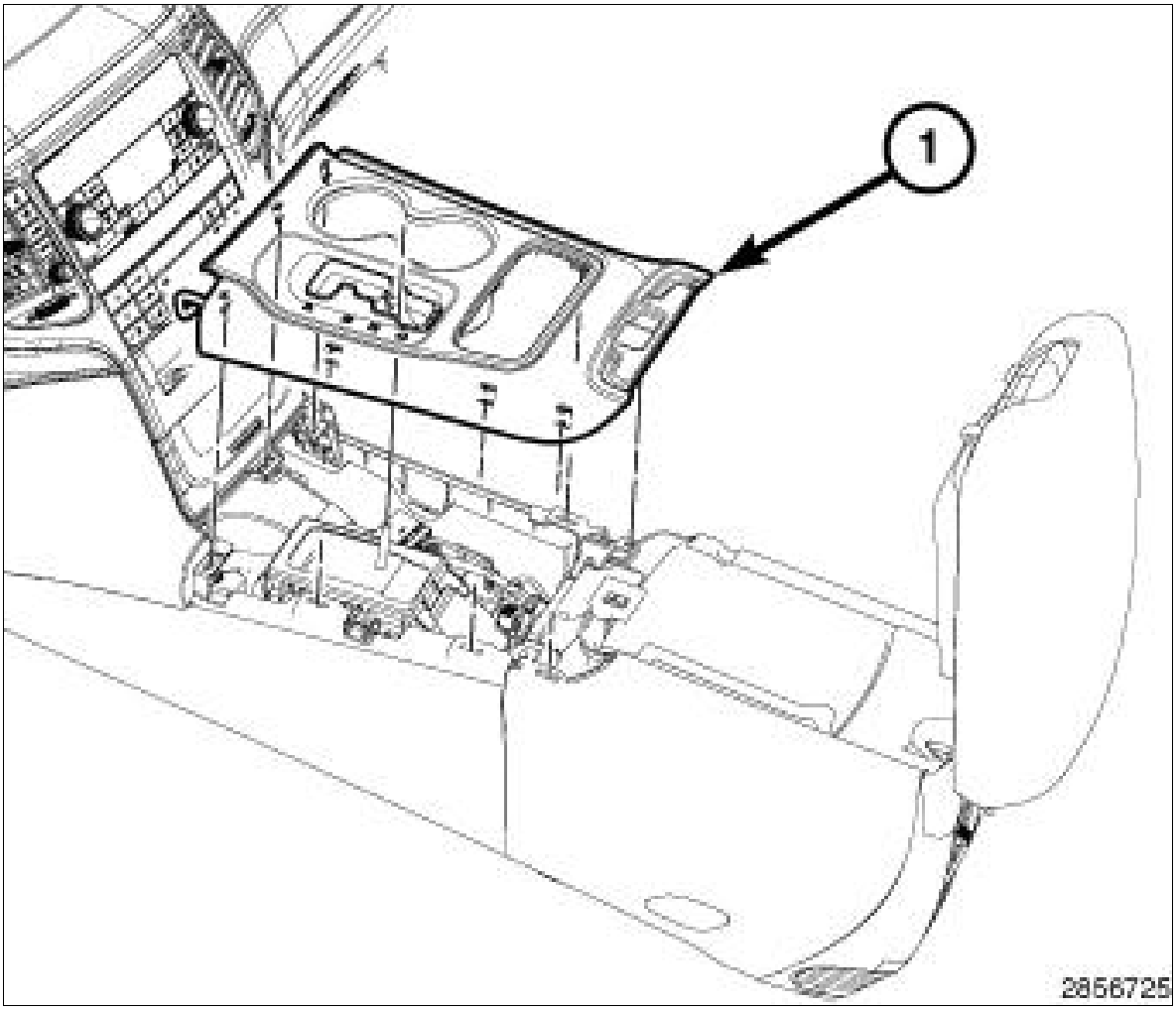

Courtesy of CHRYSLER GROUP, LLC

4. Using trim stick (special tool #C-4755, Trim Stick) or equivalent, release the clip fasteners and separate the console bezel.

Fig 4: Harness Connector, Retaining Clips & Terrain Select Switch

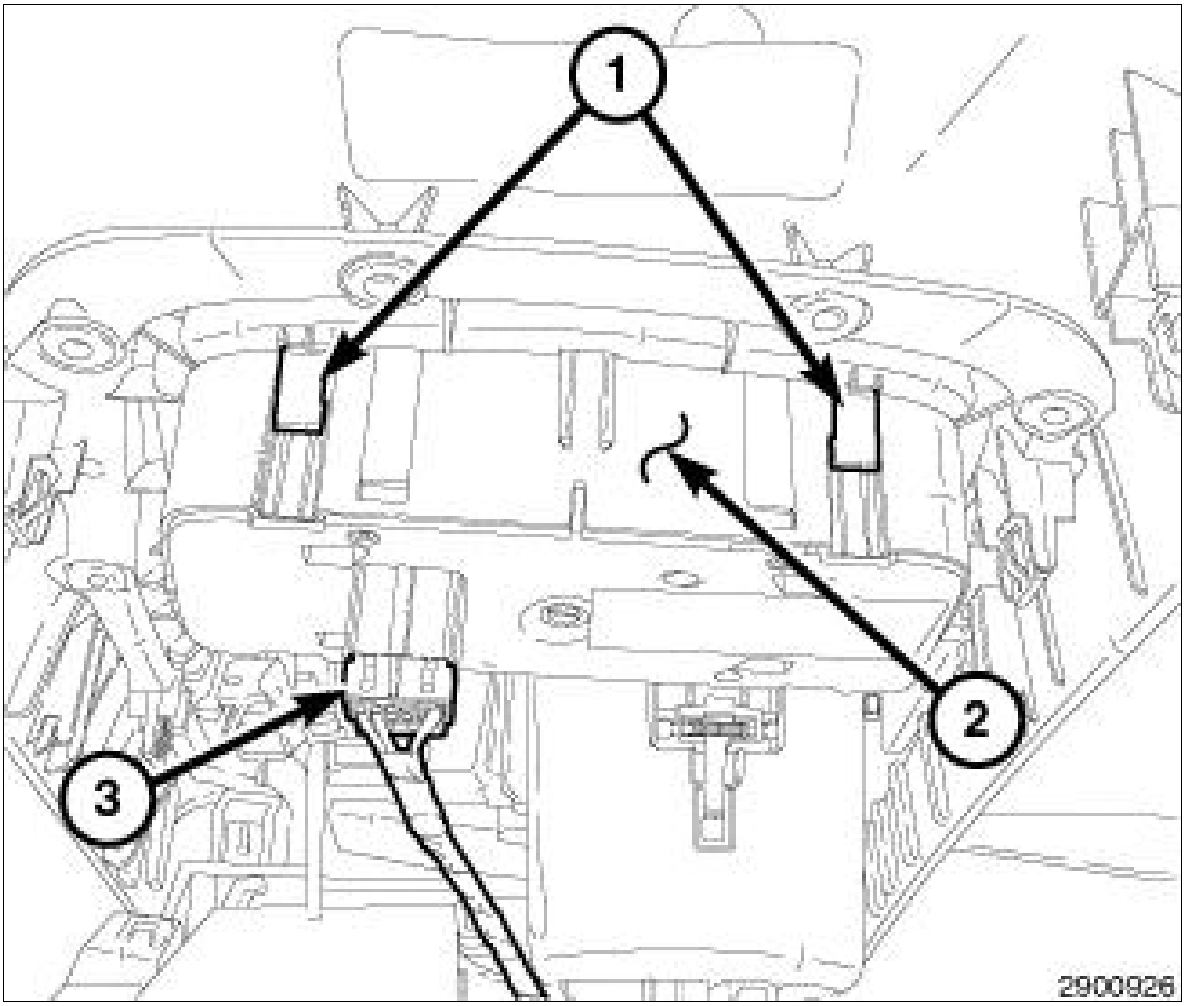

Courtesy of CHRYSLER GROUP, LLC

5. With the bezel tilted up in the back, disconnect the wiring harness connector (3), then press the four retaining clips (1) in and push the terrain select switch (2) up through the bezel to remove.

SWITCH, TERRAIN SELECT > INSTALLATION > INSTALLATION

Fig 1: Harness Connector, Retaining Clips & Terrain Select Switch

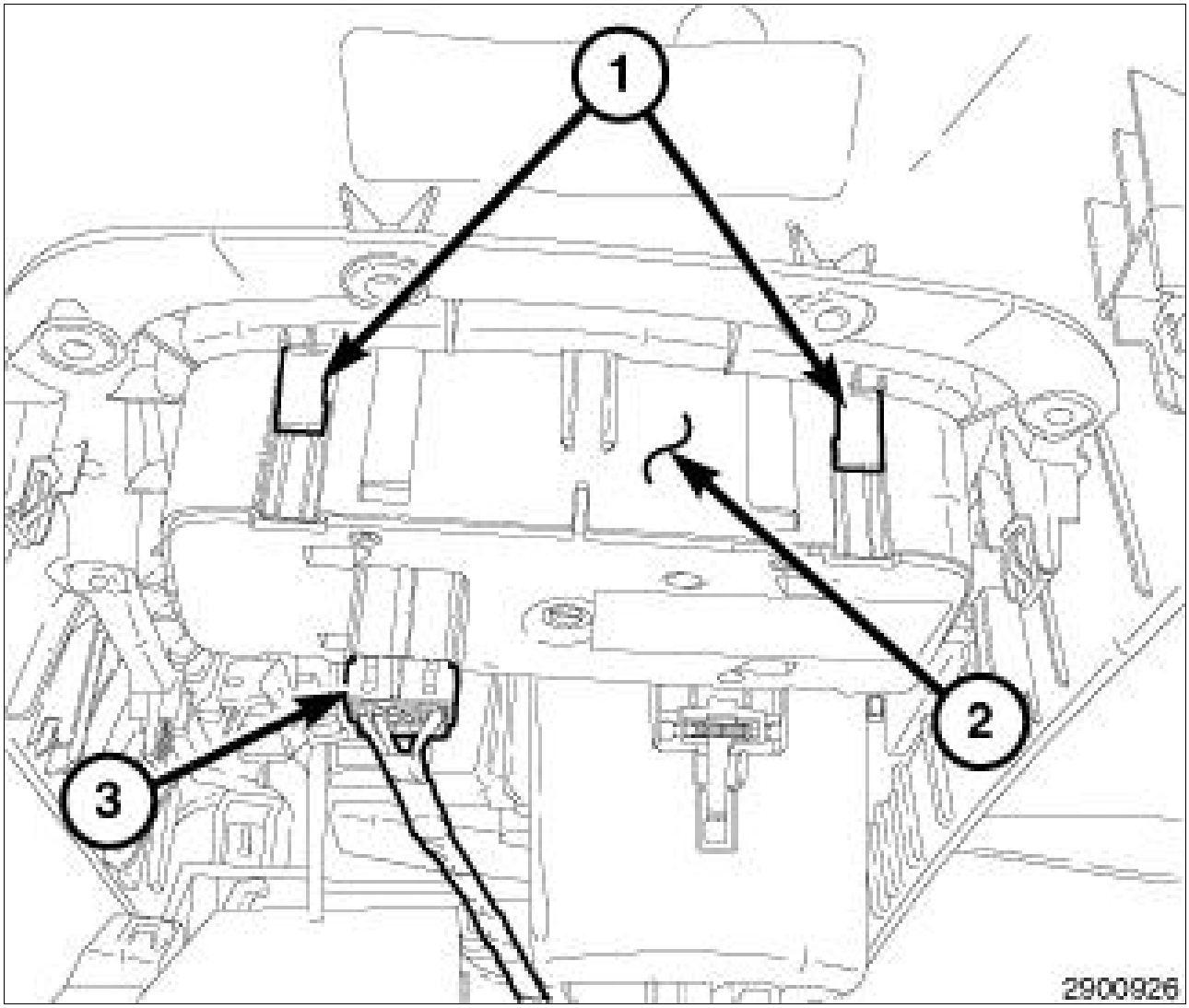

Courtesy of CHRYSLER GROUP, LLC

1. With the bezel tilted up in the back, position the terrain select switch (2) in the front of the bezel and seat the retaining clips (1).
2. Connect the wiring harness connector (3).

Fig 2: Center Console Bezel

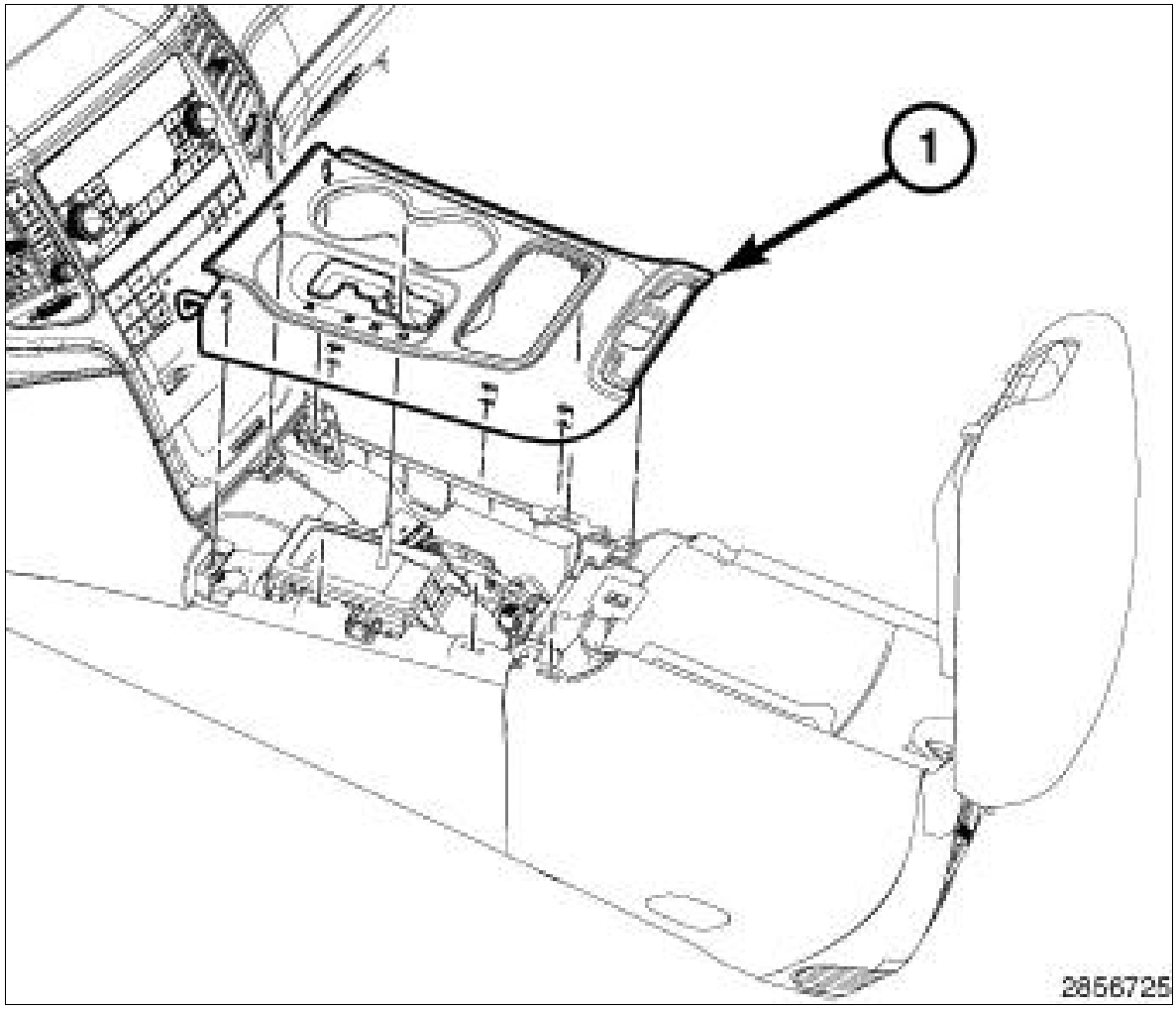

Courtesy of CHRYSLER GROUP, LLC

3. Position the console bezel (1) and seat the retaining clips.

Fig 3: Stamped Spring Clip & Knob

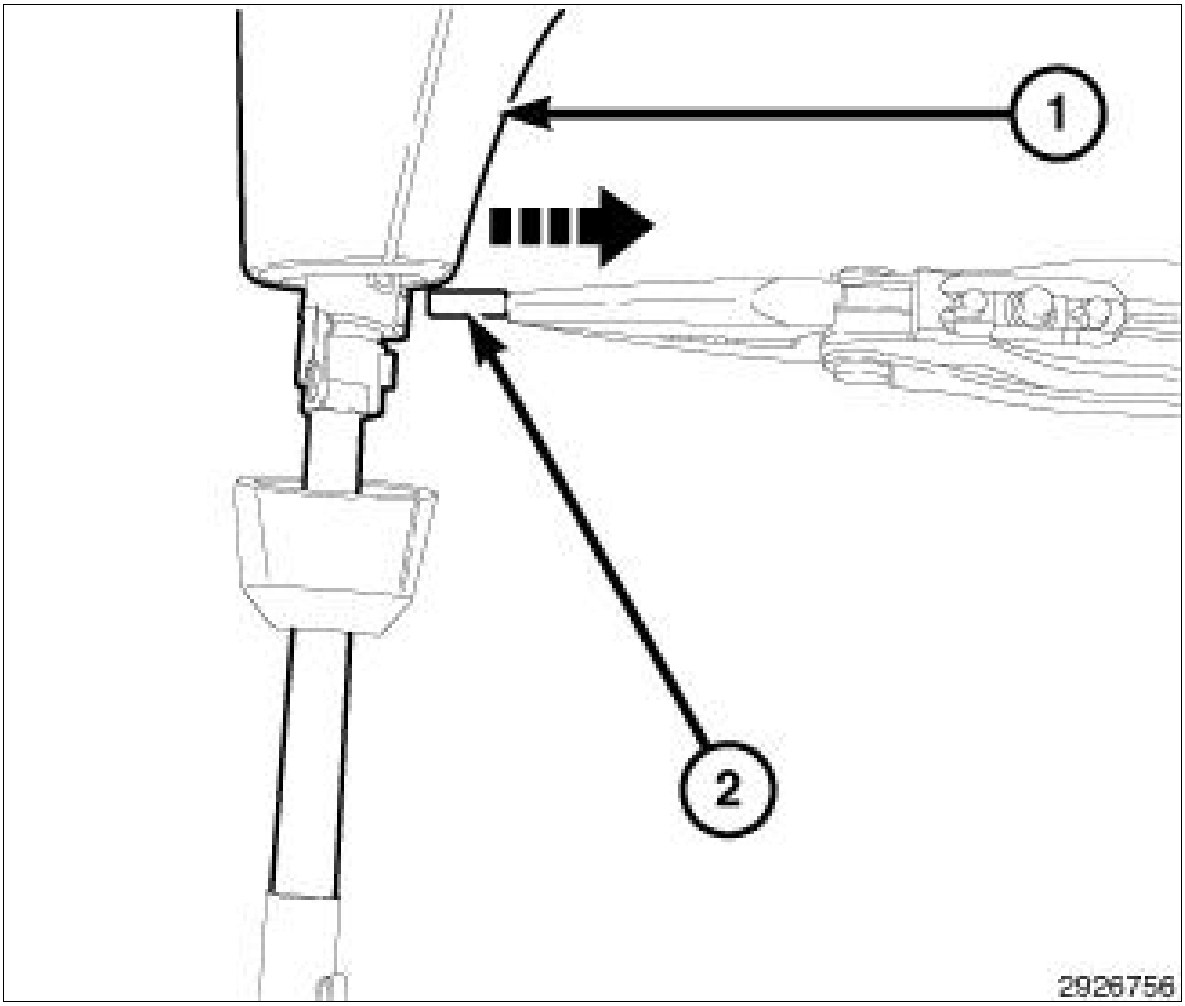

Courtesy of CHRYSLER GROUP, LLC

4. Replace the yellow stamped clip (2) into the knob (1). The tab orients toward the outside of knob, not the centerline. The flat side of the clip (opposite the tab), should be on the inside, toward the shaft.

Fig 4: Knob & Chrome Shroud

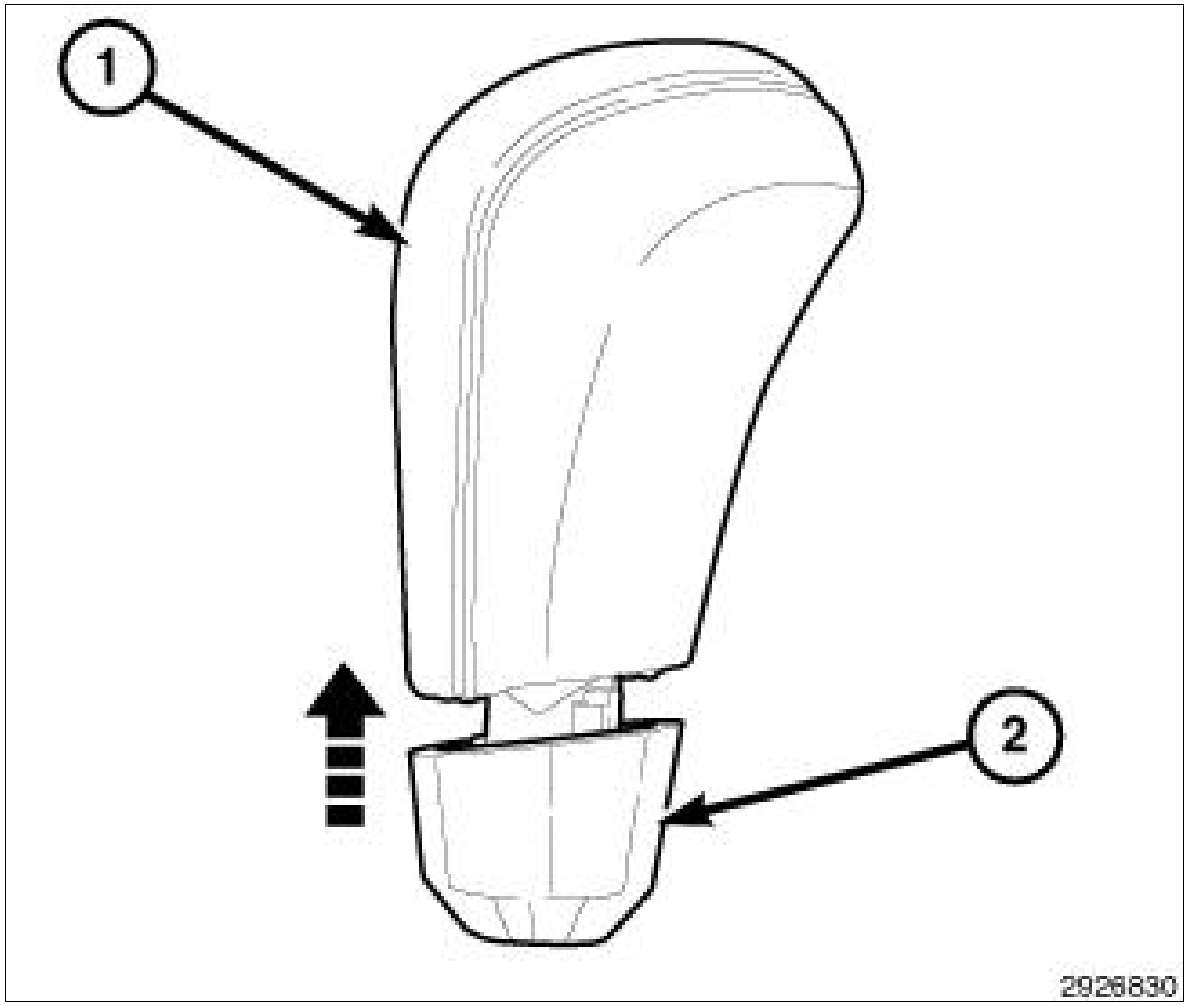

Courtesy of CHRYSLER GROUP, LLC

5. Align the ribs on knob (1) with slots in the chrome shroud (2) and seat the shroud fully. Angle on the shroud must match the angle on the knob before snapping in place.

Fig 5: Knob

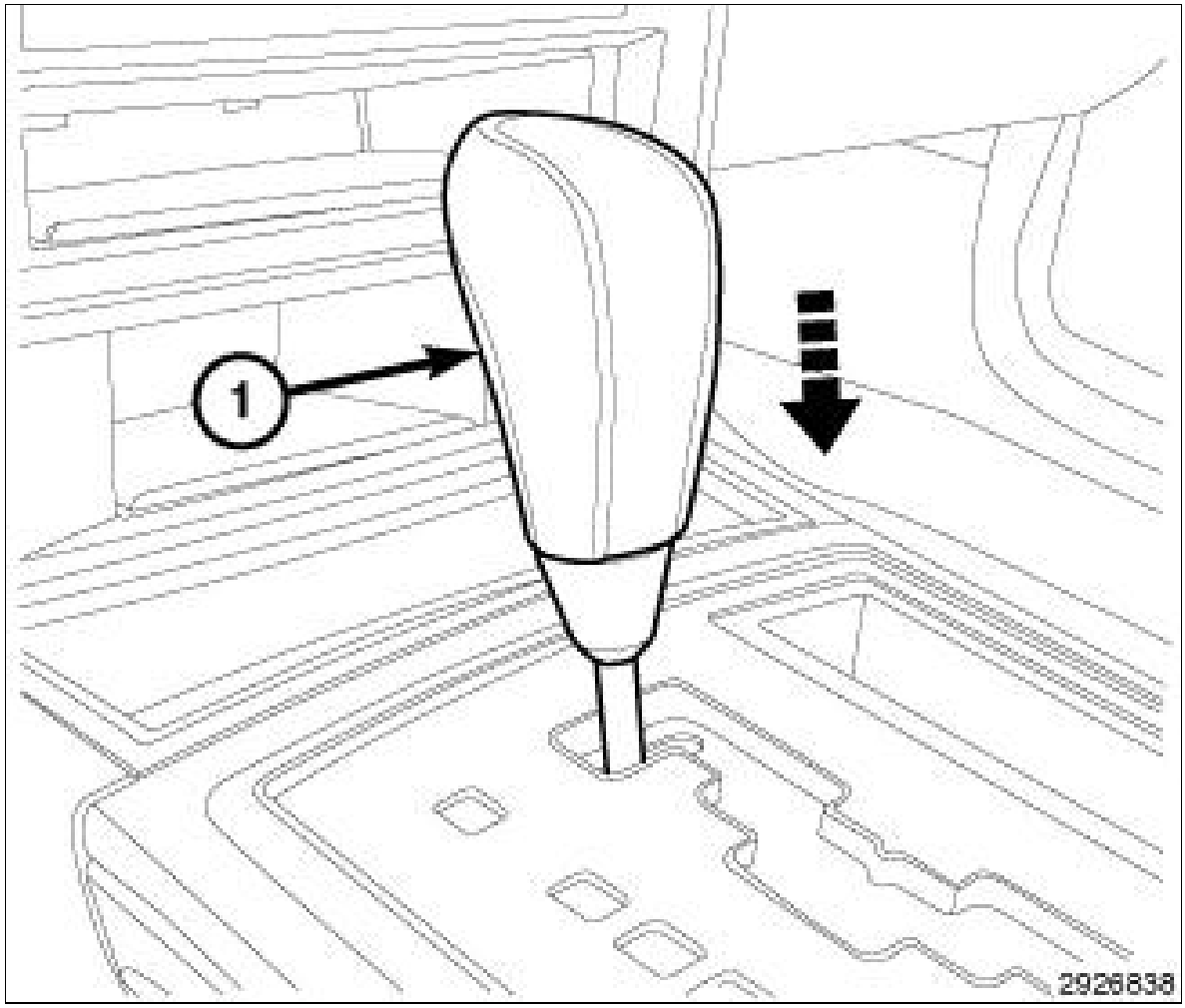

Courtesy of CHRYSLER GROUP, LLC

6. Place the gear selector lever into the Park position.
7. Install the knob (1) onto the shift shaft and seat fully.

CENTER, ELECTRONIC VEHICLE INFORMATION > DESCRIPTION > DESCRIPTION

Fig 1: EVIC Driver - Interactive Display

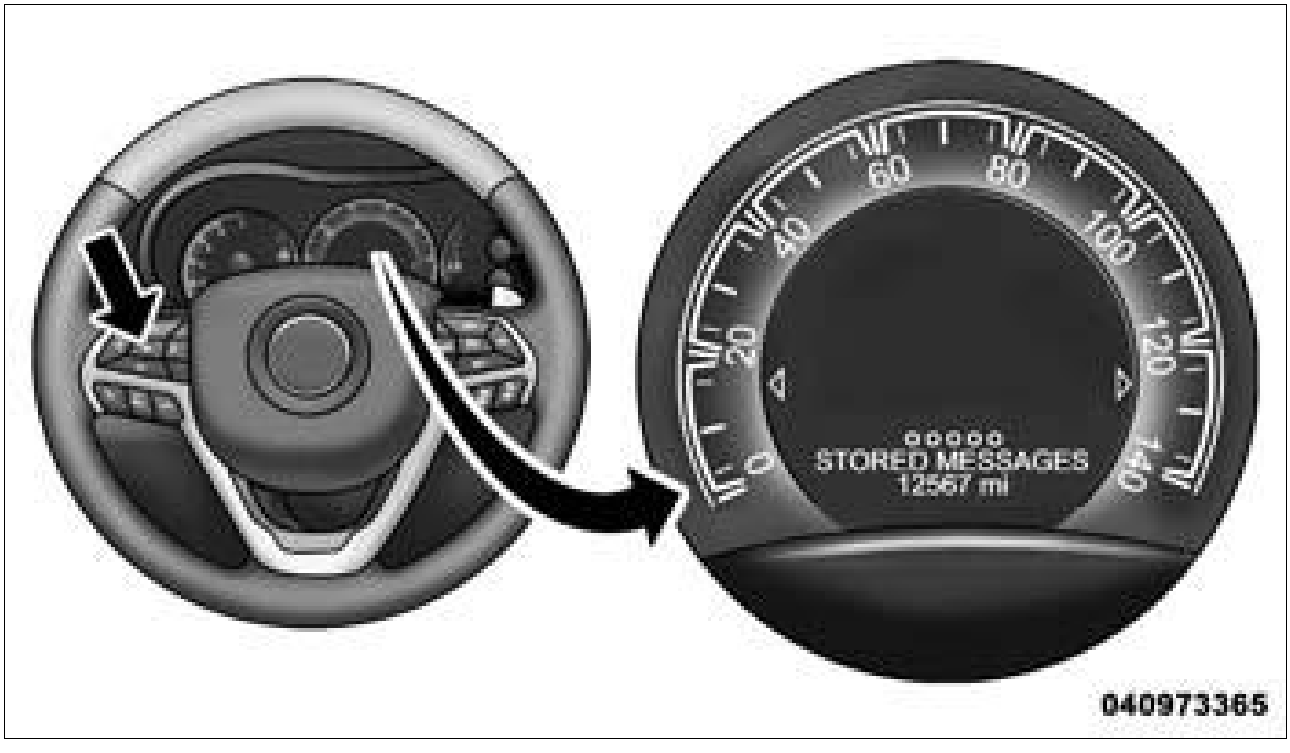

Courtesy of CHRYSLER GROUP, LLC

The Electronic Vehicle Information Center (EVIC) features a driver-interactive display. The display is located in the middle of the instrument cluster between the speedometer and tachometer. This system conveniently allows the driver to select a variety of useful information by pressing the switches mounted on the steering wheel. The EVIC displays information related to the following:

- Audio mode display
- Compass display
- Fuel saver indicator, Economizer (ECO) display
- Navigation system screens - If Equipped
- Outside temperature display
- Park Assist System - If Equipped
- Personal Settings (customer programmable features)
- System Status
- Tire Pressure Monitor System - If Equipped
- Trip computer functions

- U-Connect™ hands-free communication system displays - If Equipped
- Vehicle information warning message displays

The EVIC system is comprised of several different components. Those components are:

- Instrument Cluster
- Steering Wheel Switches
- Ambient Temperature Sensor
- Electronic Overhead Module
- Remote Compass Module
- Controller Area Network (CAN) Data Bus
- Local Interface Network (LIN) Data Bus

The EVIC display is part of the Instrument Cluster assembly and is not serviced as a separate component. If the display is inoperative the complete Instrument Cluster assembly must be replaced. Refer to REMOVAL . If the EVIC function buttons are inoperative and require replacement, for the appropriate procedure. Refer to SWITCH, EVIC CONTROL, REMOVAL . If the Remote Compass Module (RCM) (Electronic Overhead Module) is inoperative and requires replacement. Refer to MODULE, COMPASS, REMOVAL for the appropriate procedure.

CENTER, ELECTRONIC VEHICLE INFORMATION > OPERATION > OPERATION

The Electronic Vehicle Information Center (EVIC) uses both non-switched and ignition switched sources of battery current so that some of its features remain operational at any time, while others may only operate with the ignition switch in the "ON" position. When the ignition switch is turned to the "ON" position, the EVIC display will return to the last function being displayed before the ignition was turned to the "OFF" position.

The EVIC system is comprised of several different components that communicate over the Controller Area Network (CAN) and Local Interface Network (LIN) Data Buses. **If the system is inoperative a scan tool and the appropriate diagnostic information must be used to diagnose the system.**

CENTER, ELECTRONIC VEHICLE INFORMATION > OPERATION > OPERATION > EVIC SWITCHES

Fig 1: EVIC Function Buttons



Courtesy of CHRYSLER GROUP, LLC

The EVIC function buttons are used to operate the different functions of the EVIC system. Pressing and releasing the **Arrow** buttons allows the driver to scroll though and select the Compass/Temperature, Trip Computer, Personal Settings or System Status functions. The **OK** button allows the selection of setting or resetting of the function currently displayed at that time.

CENTER, ELECTRONIC VEHICLE INFORMATION > OPERATION > OPERATION > EVIC DISPLAY MODES > SYSTEM STATUS

Displays warnings and user interaction messages. Initial warnings will be displayed accompanied by a series of audible beeps. Critical text warnings will be displayed until the failure is corrected. Non-critical text warnings will be displayed for 60 seconds. The driver can scroll to view multiple messages by using the menu buttons.

When the appropriate conditions exist, the EVIC displays the following messages:

- Turn signal on
- Perform service
- Key not programmed - damaged key
- Key not programmed - invalid key
- Key not programmed - exceeded key program limit
- Programming active - new key programmed

- Service security key
- Invalid key - try alternate key
- Driver/passenger door open (with graphic)
- Left/right rear door open (with graphic)
- Doors open (with graphic)
- Liftgate open (with graphic)
- Liftgate/door open (with graphic)
- Liftgate/doors open (with graphic)
- Liftglass open (with graphic)
- Hood open (with graphic)
- Hood/door open (with graphic)
- Hood/doors open (with graphic)
- Liftgate/hood open (with graphic)
- Hood/glass/door open (with graphic)
- Hood/glass/doors open (with graphic)
- Hood/gate/door open (with graphic)
- Hood/gate/doors open (with graphic)
- Liftglass/door open (with graphic)
- Liftglass/doors open (with graphic)
- Liftglass/hood open (with graphic)
- Washer fluid low (with graphic)
- Coolant low (with graphic)
- Oil change required
- Oil change reset
- Check gauges
- Auto highbeam on
- Auto highbeam off
- Park assist disabled
- Service suspension
- Service park assist system

- Transmission over temp
- Check shift procedure
- Service 4wd system
- 4wd system in neutral
- Low brake fluid level
- Warning! Limit speed
- Check gas cap
- ESC off
- Hill descent control
- Memory #1 positions set
- Memory #2 positions set
- Memory system disabled - seatbelt fastened (with graphic)
- Memory system disabled - vehicle not in park
- Driver 1 memory
- Driver 2 memory
- Adj. Pedals disabled - cruise control set
- Adj. Pedals disabled - shifter in reverse
- Tire low pressure
- Check TPM system
- Exhaust Service Required - See Dealer Now (diesel models only)
- Exhaust System - Regeneration Required Now (diesel models only)
- Left front low pressure (premium TPM system only)
- Right front low pressure (premium TPM system only)
- Left rear low pressure (premium TPM system only)
- Right rear low pressure (premium TPM system only)
- Spare low pressure (premium TPM system only)
- Water in fuel (diesel models only)
- Service blind spot system
- Blind spot system unavailable
- Blind spot system off

CENTER, ELECTRONIC VEHICLE INFORMATION > OPERATION > OPERATION > EVIC DISPLAY MODES > PERSONAL SETTINGS MODE (CUSTOMER PROGRAMMABLE FEATURES)

Allows the driver to set and recall features when the transmission is in Park by pressing and releasing the MENU buttons until Personal Settings is displayed in the EVIC. The following personal settings can be set and recalled by pressing the STEP button:

- Fuel Saver indicator, Economizer (ECO), On or Off
- Language: English, Spanish, German, Italian or French
- Display units in English or Metric
- Lock doors automatically at 15 MPH (24 kph), On or Off
- Unlock door automatically on exit, On or Off
- Remote Keyless Entry unlock driver door on first press or unlock all doors on first press
- Recall Memory with Remote Keyless Entry Unlock, On or Off
- Sound horn with Remote Keyless Entry Lock, On or Off
- Flash lights with Remote Keyless Entry Lock, On or Off
- Delay turning headlamps off for 0, 30, 60 or 90 seconds
- Automatic High Beams (Available with SmartBeam Only)
- Illuminated approach on for 0, 30, 60 or 90 seconds
- Headlamps on with wipers, On or Off
- Rain Sensing Intermittent Wipers, On or Off
- Service interval (Gasoline engines), 3200,•••9600 KM, in increments of 800 KM/2000..6000 miles in increments of 500 miles
- Service interval (Diesel engines), 4000..20000 KM, in increments of 1000 KM/2500,•••12500 miles in increments of 625 miles
- Automatically move seat back on exit, On or Off
- Key Off Power Delay
- Hill Start Assist
- Park Assist System:
-
    - Off
    - Sound only
    - Sound and display

- Blind Spot Monitor System:
  - Off
  - Lights only
  - Lights and chime
- Liftgate chime, On or Off

CENTER, ELECTRONIC VEHICLE INFORMATION > OPERATION > OPERATION > EVIC DISPLAY MODES > COMPASS/TEMPERATURE/TRIP COMPUTER

This display provides the outside temperature, one of the eight compass headings to indicate the direction the vehicle is facing, and vehicle trip information. The compass and temperature display is the normal display.

The trip computer function will be displayed if the STEP button is pressed from the Compass/Temperature display mode. The trip computer displays the following information:

- Average Fuel Economy/Fuel Saver Mode (5.7L Engine Only)
- Distance To Empty
- Trip A
- Trip B
- Elapsed Time
- Service Distance
- Display Units of Measure in
- Tire pressure display (if equipped)

CENTER, ELECTRONIC VEHICLE INFORMATION > OPERATION > OPERATION > EVIC DISPLAY MODES > HANDS FREE TELEPHONE - IF EQUIPPED

Provides the following information and features for the optional hands-free communications system:

- Phone status: idle, voice mail, roaming, battery strength and signal strength in increments of 20 percent
- Call status: Incoming call, connecting, connected, air time in minutes and seconds, call ended, busy, call failed, roaming and no phone connection
- UConnect Active
- Caller ID phone number display

CENTER, ELECTRONIC VEHICLE INFORMATION > OPERATION > OPERATION > EVIC DISPLAY MODES > UNIVERSAL GARAGE DOOR TRANSCEIVER

The Electronic Vehicle Information Center (EVIC) features a driver-interactive display which includes HomeLink system messages. Refer to DESCRIPTION .

CENTER, ELECTRONIC VEHICLE INFORMATION > DIAGNOSIS AND TESTING > DIAGNOSIS AND TESTING - ELECTRONIC VEHICLE INFORMATION CENTER

The Electronic Vehicle Information Center (EVIC) data is obtained from several components on the Controller Area Network (CAN) Data Bus circuit. The EVIC will not function properly if the bus messages from any of these components is not received. If no EVIC data is displayed, check the CAN Data Bus circuit communications, the Instrument Cluster functions and the Body Control Module (BCM).

The use of a scan tool and the proper diagnostic procedures information are recommended for further testing of the EVIC and the CAN Data Bus circuit. Refer to the appropriate wiring information for complete circuit schematic or connector pin-out information.

CENTER, ELECTRONIC VEHICLE INFORMATION > STANDARD PROCEDURE > STANDARD PROCEDURE - OIL CHANGE REQUIRED INDICATOR RESET

NOTE:

A change oil indicator is standard equipment on all instrument clusters. However, on vehicles manufactured for export markets, this indicator is electronically disabled. This indicator is located within the odometer/trip odometer Liquid Crystal Display (LCD) unit. The change oil indicator consists of cycling textual CHANGE and OIL messages which appear in place of the odometer/trip odometer information in the odometer LCD unit.

This vehicle is equipped with an engine oil change indicator system. The "Oil Change Required" message will flash in the EVIC display for approximately 10 seconds after a single chime has sounded, to indicate the next scheduled oil change interval. The engine oil change indicator system is duty cycle based, which means the engine oil change interval may fluctuate, dependent upon your personal driving style.

Unless reset, this message will continue to display each time you turn the ignition switch to the ON/RUN position. To turn off the message temporarily, press and release the MENU button. To reset the oil change indicator system (after performing the scheduled maintenance) refer to the following procedure.

1. Turn the ignition switch to the ON position (Do not start the engine).
2. Fully depress the accelerator pedal, slowly, three times within 10 seconds.
3. Turn the ignition switch to the OFF/LOCK position.

NOTE:

If the indicator message illuminates when you start the vehicle, the oil change indicator system did not reset. If necessary, repeat this procedure.

MODULE, COMPASS > DESCRIPTION > DESCRIPTION

Fig 1: Identifying Remote Compass Module

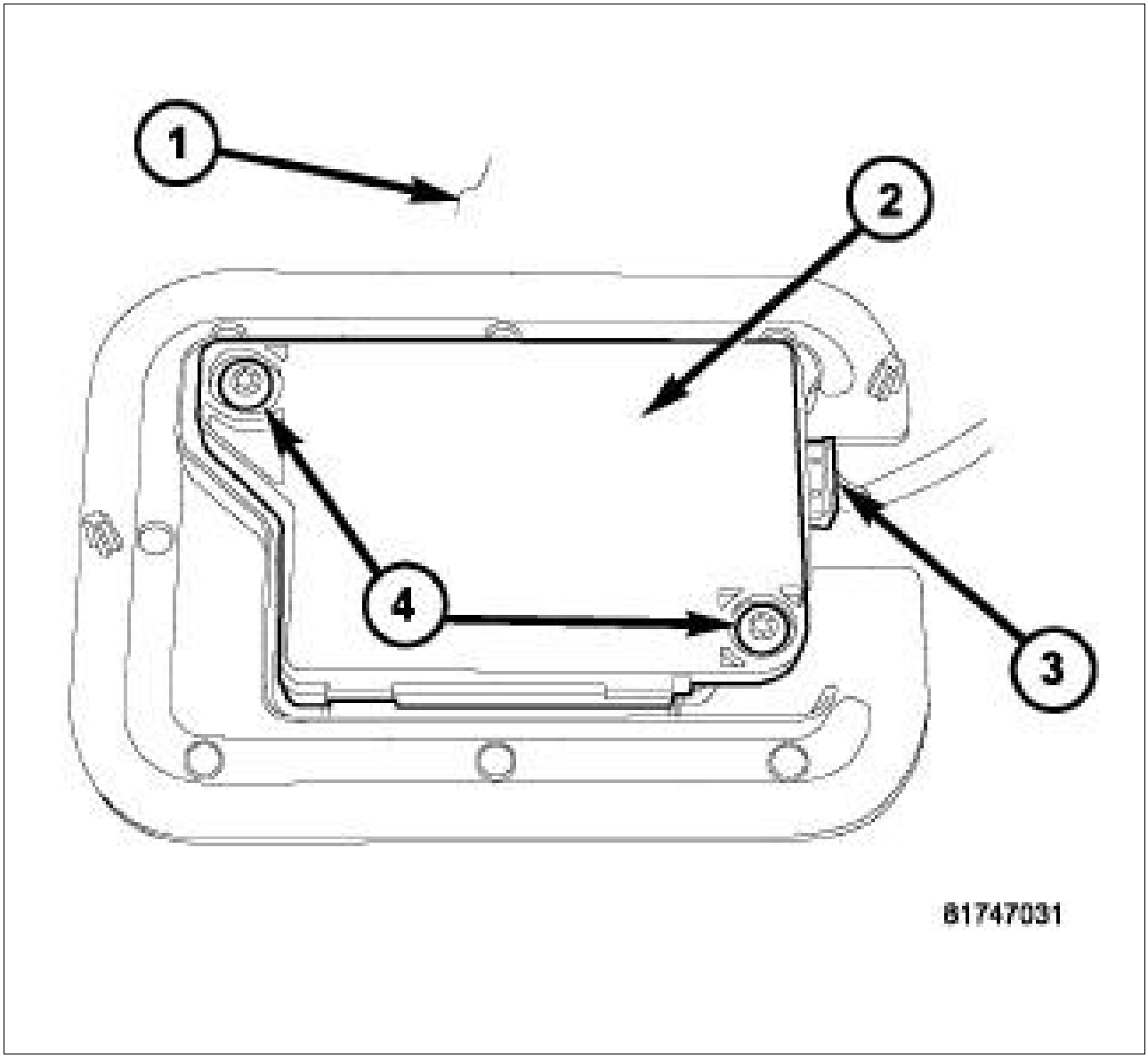

Courtesy of CHRYSLER GROUP, LLC

The Remote Compass Module (RCM) (2) is a separate stand alone module mounted to the top side of the headliner (1) at the left rear of the vehicle. The RCM can be accessed by removing both quarter trim panels and the headliner molding, then carefully lowering the rear of the headliner at the D-pillar area.

If the compass position sensor (Remote Compass Module) is inoperative and requires replacement. Refer to MODULE, COMPASS, REMOVAL .

MODULE, COMPASS > OPERATION > OPERATION

The Compass Temperature Display system uses both non-switched and ignition switched sources of battery current so that some of its features remain operational at any time, while others may only operate with the ignition switch in the ON position. When the ignition switch is turned to the ON position, the display will return to the last function being displayed before the ignition was turned to the OFF position. Pressing and holding the instrument cluster pushbutton allows setting variance zones and manual calibration of the compass.

The Compass Temperature Display system is comprised of several different components that communicate over the Controller Area Network (CAN) and Local Interface Network (LIN) Data Bus circuits. If the system is inoperative a scan tool and the appropriate diagnostic information must be used to diagnose the system and related data buses.

MODULE, COMPASS > DIAGNOSIS AND TESTING > DIAGNOSIS AND TESTING - REMOTE COMPASS MODULE

The Remote Compass Module (RCM) data is transferred on the Controller Area Network (CAN) Data Bus circuit. The RCM and Electronic Vehicle Information Center (EVIC) will not function properly if the bus messages are not properly received. If no EVIC data is displayed, check the CAN Data Bus circuit communications, the RCM, the Instrument Panel Cluster function and the Body Control Module (BCM). **Any diagnosis of the RCM and EVIC display should begin with the use of a scan tool and the appropriate diagnostic service information.**

For complete circuit diagrams, refer to SYSTEM WIRING DIAGRAMS . The wiring information includes wiring diagrams, proper wire and connector repair procedures, details of wire harness routing and retention, connector pin-out information and location views for the various wire harness connectors, splices and grounds.

MODULE, COMPASS > STANDARD PROCEDURE > COMPASS DEMAGNETIZING

Fig 1: Degaussing Tool #6029

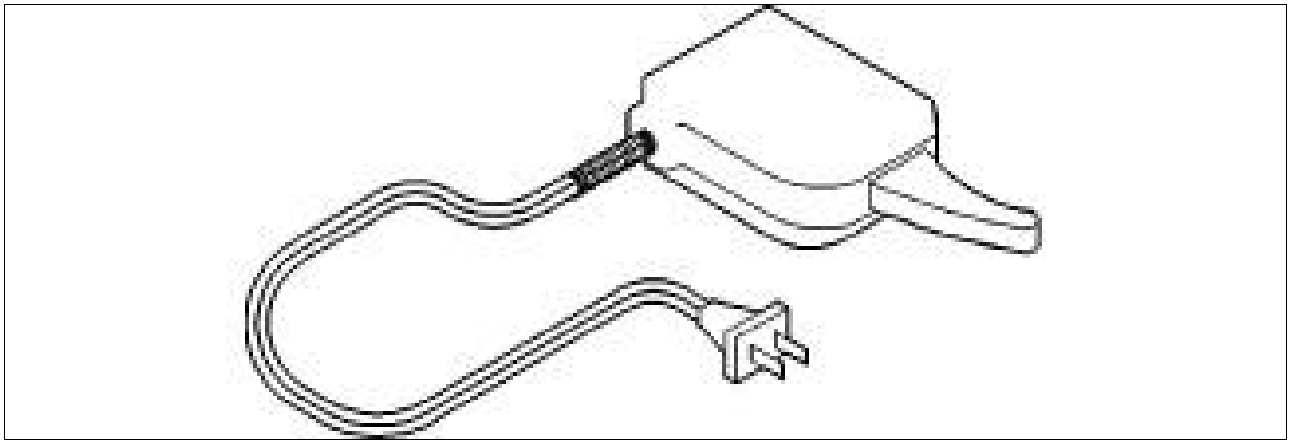

Courtesy of CHRYSLER GROUP, LLC

A degaussing tool (Special Tool (special tool #6029, De Gauser)) is used to demagnetize, or degauss, the roof panel above the remote compass module. Equivalent units must be rated as continuous duty for 110/115 volts and 60 Hz. They must also have a field strength of over 350 gauss at 7 millimeters (0.25 inch) beyond the tip of the probe.

Fig 2: Demagnetizing Procedure

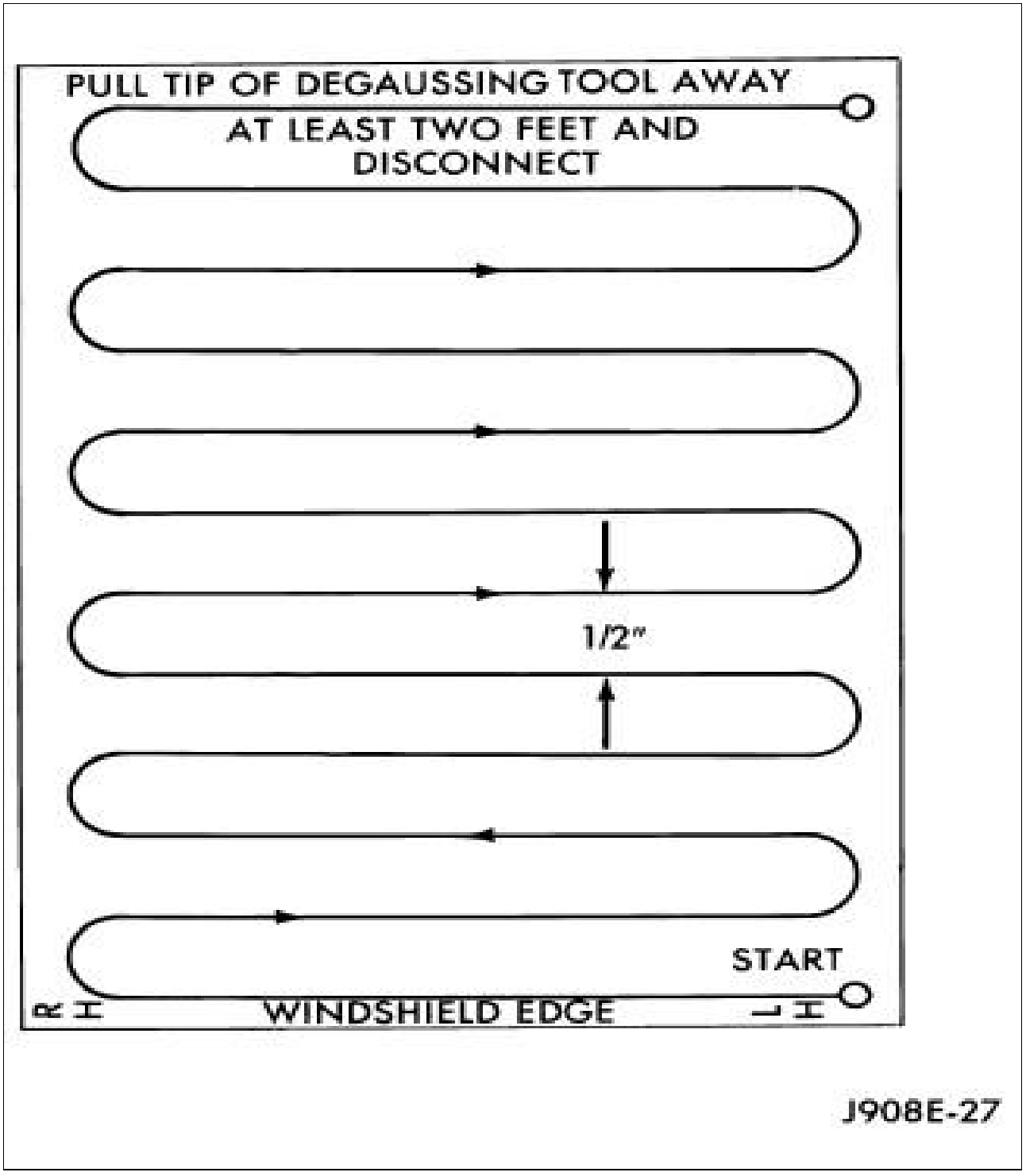

Courtesy of CHRYSLER GROUP, LLC

Demagnetize the roof panel as follows:

1. Be certain that the ignition switch is in the Off position, before you begin the demagnetizing procedure.
2. Place a piece of paper approximately 22 by 28 centimeters (8.5 by 11 inches), oriented on the vehicle lengthwise from front to rear, on the exterior surface of the roof panel at the left D-pillar

in the area of the compass module. The purpose of the paper is to protect the roof panel from scratches, and to define the area to be demagnetized.

3. Connect the degaussing tool to an electrical outlet, while keeping the tool at least 61 centimeters (2 feet) away from the compass unit.
4. Slowly approach the center line of the roof panel at the windshield header, with the degaussing tool connected.
5. Contact the roof panel with the plastic coated tip of the degaussing tool. Be sure that the template is in place to avoid scratching the roof panel. Using a slow, back-and-forth sweeping motion, and allowing 13 millimeters (0.50 inch) between passes, move the tool at least 11 centimeters (4 inches) to each side of the roof center line, and 28 centimeters (11 inches) back from the windshield header.
6. With the degaussing tool still energized, slowly back it away from the roof panel. When the tip of the tool is at least 61 centimeters (2 feet) from the roof panel, disconnect the tool.
7. Calibrate the compass and adjust the compass variance. Refer to MODULE, COMPASS, STANDARD PROCEDURE .

MODULE, COMPASS > STANDARD PROCEDURE > COMPASS VARIANCE ADJUSTMENT

Fig 1: Magnetic And Geographic North MAP

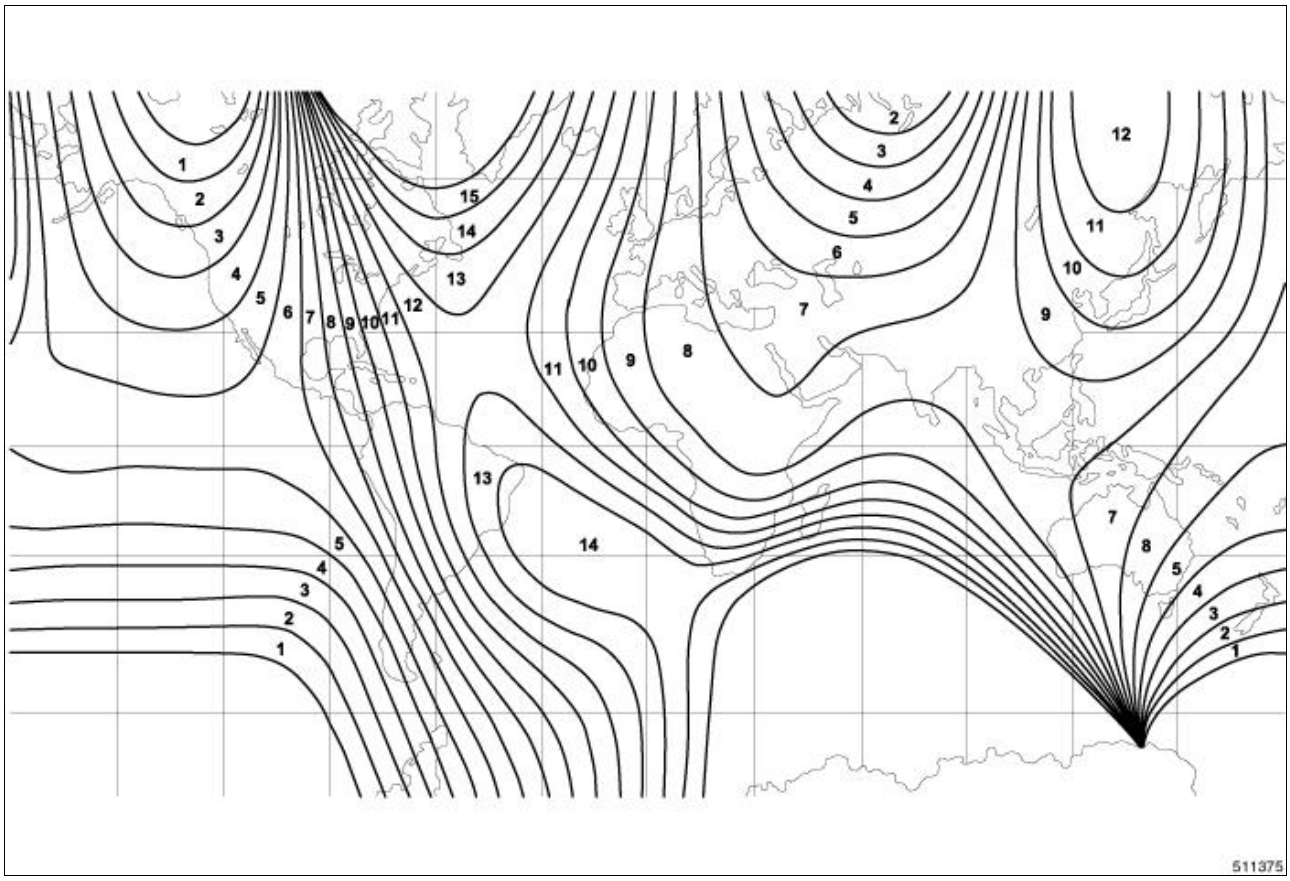

Courtesy of CHRYSLER GROUP, LLC

Compass variance, also known as magnetic declination, is the difference in angle between magnetic north and true geographic north. In some geographic locations, the difference between magnetic and geographic north is great enough to cause the compass to give false readings. If this problem occurs, the compass variance must be set.

> *NOTE:*
>
> *If the vehicle is taken on long trips into a new variance zone the compass function may be effected. Compass variance will need to be updated to the new zone number to function properly.*

> *NOTE:*
>
> *The default for the compass variance from the factory is 8.*

MODULE, COMPASS > STANDARD PROCEDURE > COMPASS VARIANCE ADJUSTMENT > MANUAL COMPASS CALIBRATION

> *CAUTION:*
>
> *Do not place any external magnets, such as magnetic roof mount antennas, in the vicinity of the Remote Compass Module (RCM) located under the instrument panel center stack hood. Do not place any electronic devices (cell phones, laptop computers, PDAs, portable DVD players, etc), on or near the instrument panel as the RCM performance may be effected. Do not use magnetic tools when servicing the RCM.*

> *NOTE:*
>
> *Confirmation that the proper variance zone is programmed, is recommended whenever manual compass calibration is performed. Refer to MODULE, COMPASS, STANDARD PROCEDURE for the appropriate procedure.*

The electronic compass unit features a self-calibrating design, which simplifies the calibration procedure. This feature automatically updates the compass calibration while the vehicle is being driven. This allows the compass unit to compensate for small changes in the residual magnetism that the vehicle may acquire during normal use. If the compass readings appear to be erratic or the Electronic Vehicle Information Center (EVIC) displays "CAL", perform the following manual calibration procedure. Also, any time EVIC service replacement components are installed, they must be calibrated using this procedure. Do not attempt to calibrate the compass near large metal objects such as other vehicles, large buildings, or bridges; or, near overhead or underground power lines.

NOTE:

Do not attempt to calibrate the compass near large metal objects such as other vehicles, large buildings, or bridges; or, near overhead or underground power lines.

NOTE:

If the compass display indicates an inaccurate compass heading or the display is locked up, the RCM (if equipped) may be inoperative and require replacement.

NOTE:

If the "CAL" message remains in the display, either there is excessive magnetism near the compass, or the EVIC is inoperative. Attempt the calibration procedure at least one more time before performing EVIC diagnosis.

NOTE:

If the wrong direction is still indicated in the compass display, the area selected for calibration may be too close to a strong magnetic field. Repeat the manual calibration procedure in another location.

MODULE, COMPASS > STANDARD PROCEDURE > COMPASS VARIANCE ADJUSTMENT > CALIBRATE THE COMPASS MANUALLY AS FOLLOWS:

Fig 1: U-Connect Touch Display (Settings)

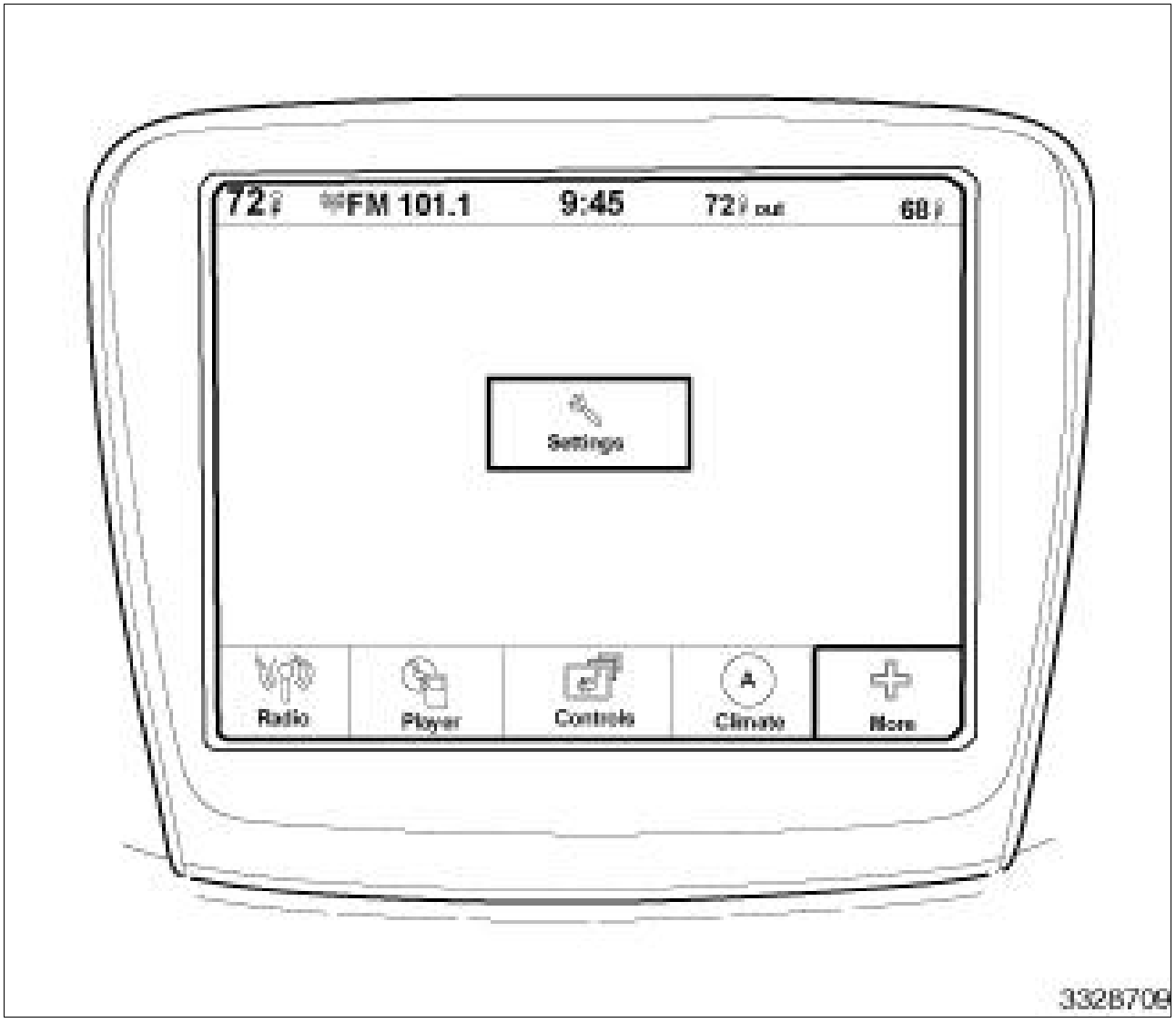

Courtesy of CHRYSLER GROUP, LLC

1. Start the engine but leave the vehicle in "PARK".
2. Using the U-Connect Touch ™ screen, select **SETTINGS** either from the hard controls on the sides of the screen, or from the menu selections at the bottom of the screen, depending on model.
3. Scroll through the menu, and select **CALIBRATE COMPASS** .
4. Select **ON** , the "CAL" symbol will come on solid in the EVIC display next to the compass direction that is displayed.
5. Slowly drive the vehicle on a level surface, away from large metal objects and power lines, through one or two **complete** circles not exceeding 8 km/h (5 mph). The "CAL" message will disappear from the display to indicate successful compass calibration.
6. Confirm that the correct direction is now indicated by the compass.
7. Press the **BACK** button to return to the main menu.

MODULE, COMPASS > REMOVAL > REMOVAL

Fig 1: Identifying Remote Compass Module

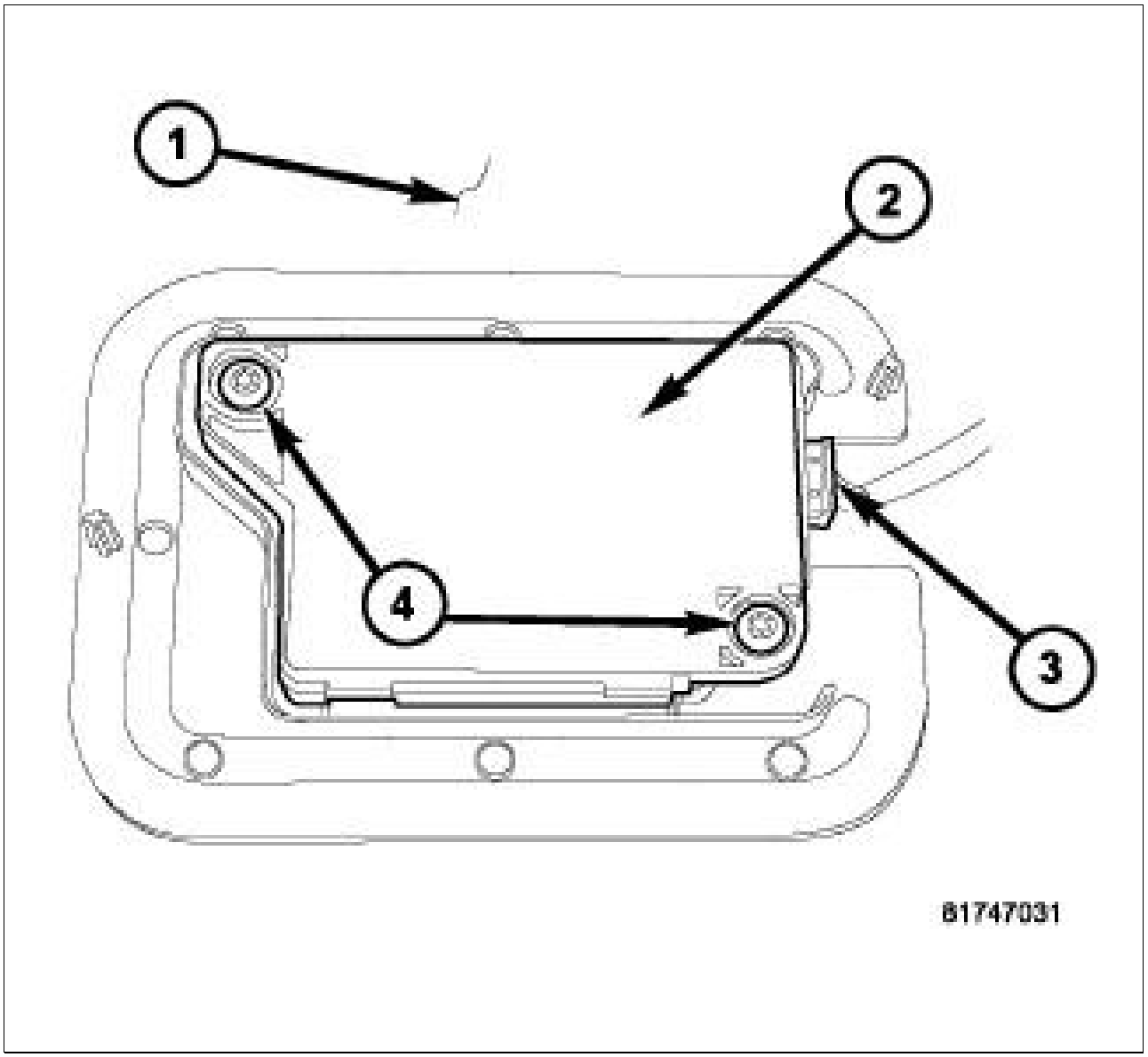

Courtesy of CHRYSLER GROUP, LLC

1. Disconnect and isolate the negative battery cable.
2. Partially remove the headliner (1) to gain access to the Remote Compass Module (RCM) (2) at the left rear. Refer to HEADLINER, REMOVAL .
3. Disconnect the RCM electrical connector (3).
4. Remove the RCM fasteners (4).
5. Remove the RCM (2) from the vehicle.

MODULE, COMPASS > INSTALLATION > INSTALLATION

Fig 1: Identifying Remote Compass Module

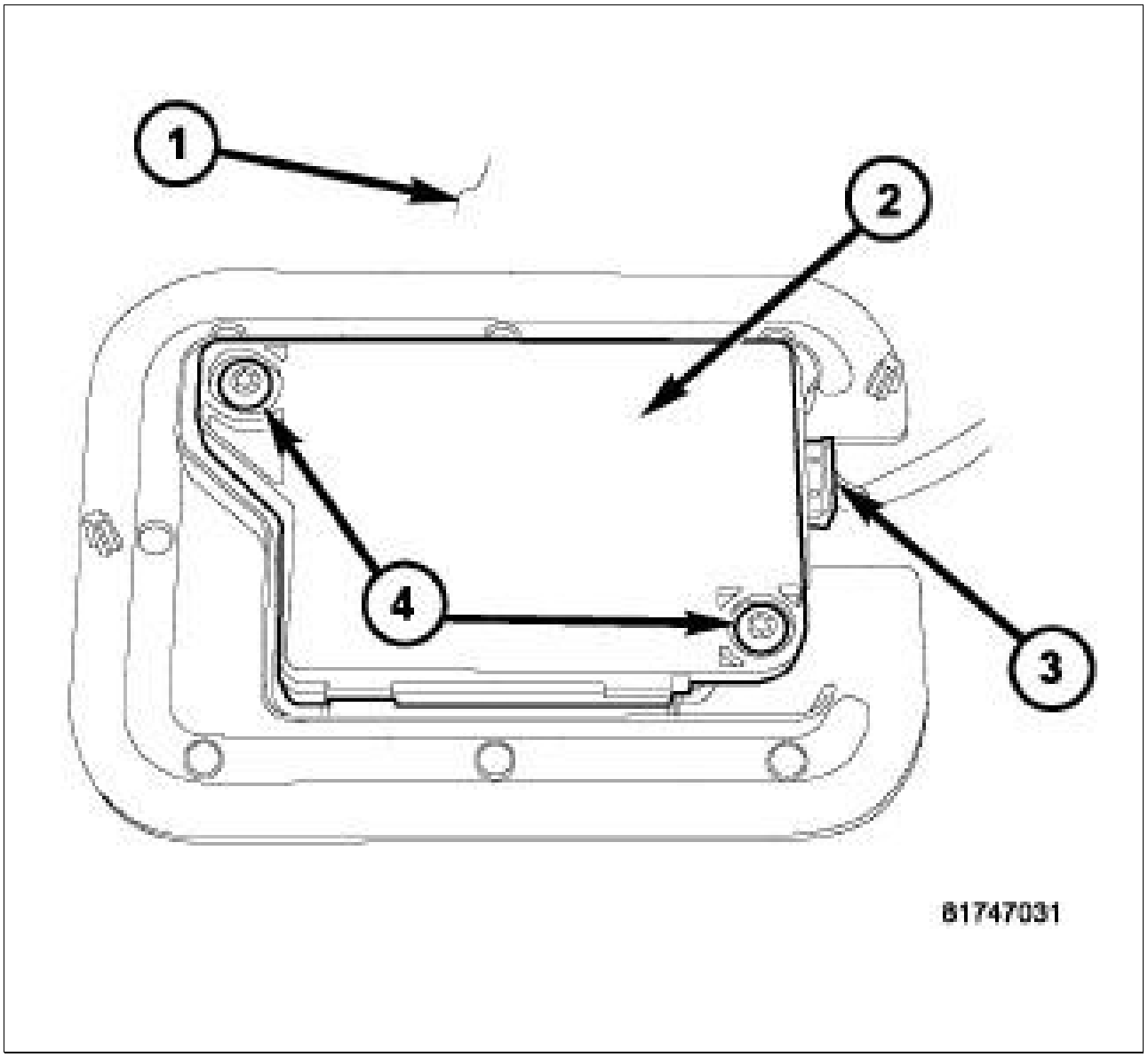

Courtesy of CHRYSLER GROUP, LLC

1. Position the Remote Compass Module (RCM) (2) into the bracket on the upper side of the headliner (1).
2. Install the RCM fasteners (4).
3. Connect the electrical connector (3).
4. Install the headliner assembly. Refer to HEADLINER, INSTALLATION .
5. Connect the negative battery cable.
6. Perform the Compass Variance Adjustment. Refer to MODULE, COMPASS, STANDARD PROCEDURE .

7. Perform the Manual Compass Calibration. Refer to MODULE, COMPASS, STANDARD PROCEDURE .
8. Verify proper compass operation.

SENSOR, AMBIENT TEMPERATURE > DESCRIPTION > DESCRIPTION

Fig 1: Ambient Temperature Sensor

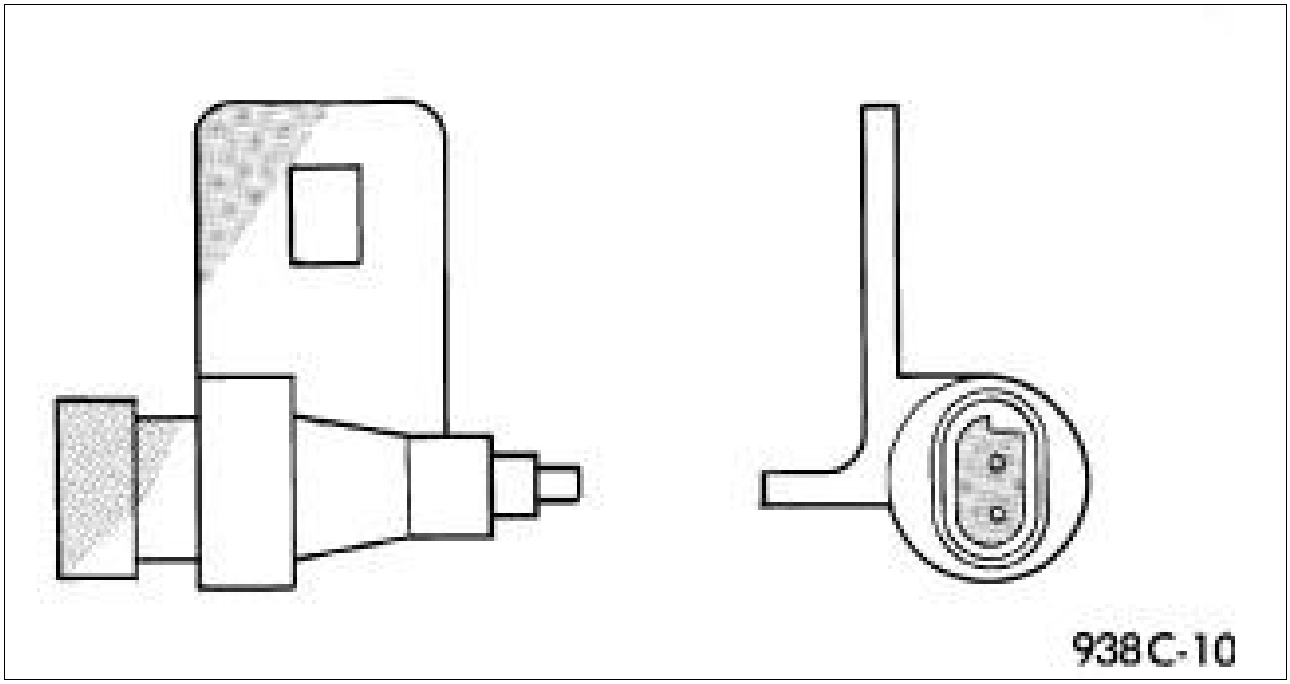

Courtesy of CHRYSLER GROUP, LLC

The ambient temperature sensor is a variable resistor type sensor that is mounted behind the radiator grille assembly on the left side of the vehicle.

The ambient temperature sensor cannot be adjusted or repaired, if inoperative or damaged, it must be replaced.

SENSOR, AMBIENT TEMPERATURE > OPERATION > OPERATION

The ambient air temperature sensor is a variable resistor that operates on a 5 volt Direct Current (DC) reference signal sent by the Body Control Module (BCM). The ambient air temperature sensor is connected to the BCM through a two-wire lead and connector of the vehicle wire harness. The ambient air temperature sensor changes its internal resistance in response to changes in the outside air temperature, which either increases or decreases the reference signal voltage read by the BCM. The BCM converts and broadcasts the sensor data over the Controller Area Network (CAN) data bus, where it is read by the Automatic Temperature Control (ATC) A/C heater module and other vehicle control modules.

The ambient air temperature sensor is diagnosed using a scan tool (Refer to the DTC INDEX).

The ambient air temperature sensor cannot be adjusted or repaired and must be replaced if inoperative or damaged.

SENSOR, AMBIENT TEMPERATURE > DIAGNOSIS AND TESTING > DIAGNOSIS AND TESTING - AMBIENT TEMPERATURE SENSOR

The temperature function is supported by the ambient temperature sensor, a wiring circuit, and the Body Control Module (BCM). When the sensor is exposed to temperatures above 60° C (140° F), or if the sensor circuit is shorted, 60° C (130/140° F) will appear in the display in place of the temperature. When the sensor is exposed to temperatures below - 40° C (- 40° F) or if the sensor circuit is open, - - ° C (- - ° F) will be displayed on Electronic Vehicle Information Center (EVIC) equipped vehicles.

> *NOTE:*
>
> *The system displays the last known temperature when starting the vehicle and may take some time/mileage to update to an accurate current reading, up to 5 minutes at a maintained speed above 40 mph (64.3 kph). Customers with very short commutes may not get an updated reading before the vehicle is turned off, or if the ignition does not remain in the OFF position for more than 255 minutes (4hrs. 15min.). This strategy was intended to eliminate wildly fluctuating readings and may cause some customer confusion leading to unnecessary diagnostics/parts replacements.*

The ambient temperature sensor circuit can be diagnosed using the following Temperature Sensor Test. If the temperature sensor and circuit are confirmed to be OK, but the temperature display is inoperative or incorrect as applicable refer to DIAGNOSIS AND TESTING .

SENSOR, AMBIENT TEMPERATURE > DIAGNOSIS AND TESTING > DIAGNOSIS AND TESTING - AMBIENT TEMPERATURE SENSOR > SENSOR TEST

The most reliable, efficient and accurate means to diagnose the ambient temperature circuit requires the use of a scan tool.

1. Turn the ignition switch to the Off position. Disconnect the ambient temperature sensor harness connector.
2. Measure the resistance of the ambient temperature sensor. At - 40° C (- 40° F), the sensor resistance is 336 kilohms. At 55° C (130° F), the sensor resistance is 2.488 kilohms. The sensor resistance should read between these two values. If not OK, replace the inoperative ambient temperature sensor. If OK, perform further diagnosis of the Ambient Temperature System as applicable. Refer to DIAGNOSIS AND TESTING .

SENSOR, AMBIENT TEMPERATURE > DIAGNOSIS AND TESTING > DIAGNOSIS AND TESTING - AMBIENT TEMPERATURE SENSOR > SENSOR CIRCUIT TEST

NOTE:

Refer to SYSTEM WIRING DIAGRAMS for complete circuit schematic and connector pin-out information.

1. Turn the ignition switch to the Off position. Disconnect and isolate the negative battery cable. Disconnect the wire harness connectors from the ambient temperature sensor and the Body Control Module (BCM).
2. Connect a jumper wire between the two terminals in the body half of the ambient temperature sensor harness connector.
3. Check for continuity between the sensor return circuit and the ambient temperature sensor signal circuit cavities of the BCM harness connector. There should be continuity. If OK, go to Step 4. If not OK, repair the open sensor return circuit or ambient temperature sensor signal circuit to the ambient temperature sensor as required.
4. Check for continuity between the ambient temperature sensor signal circuit cavity of the BCM harness connector and a good ground. There should be no continuity. If OK, test the EVIC operation. Refer to CENTER, ELECTRONIC VEHICLE INFORMATION, DIAGNOSIS AND TESTING . If not OK, repair the shorted ambient temperature sensor signal circuit as required.

SENSOR, AMBIENT TEMPERATURE > REMOVAL > REMOVAL

Fig 1: Wire Harness Connector, Ambient Temperature Sensor & Push Pin Type Retainer

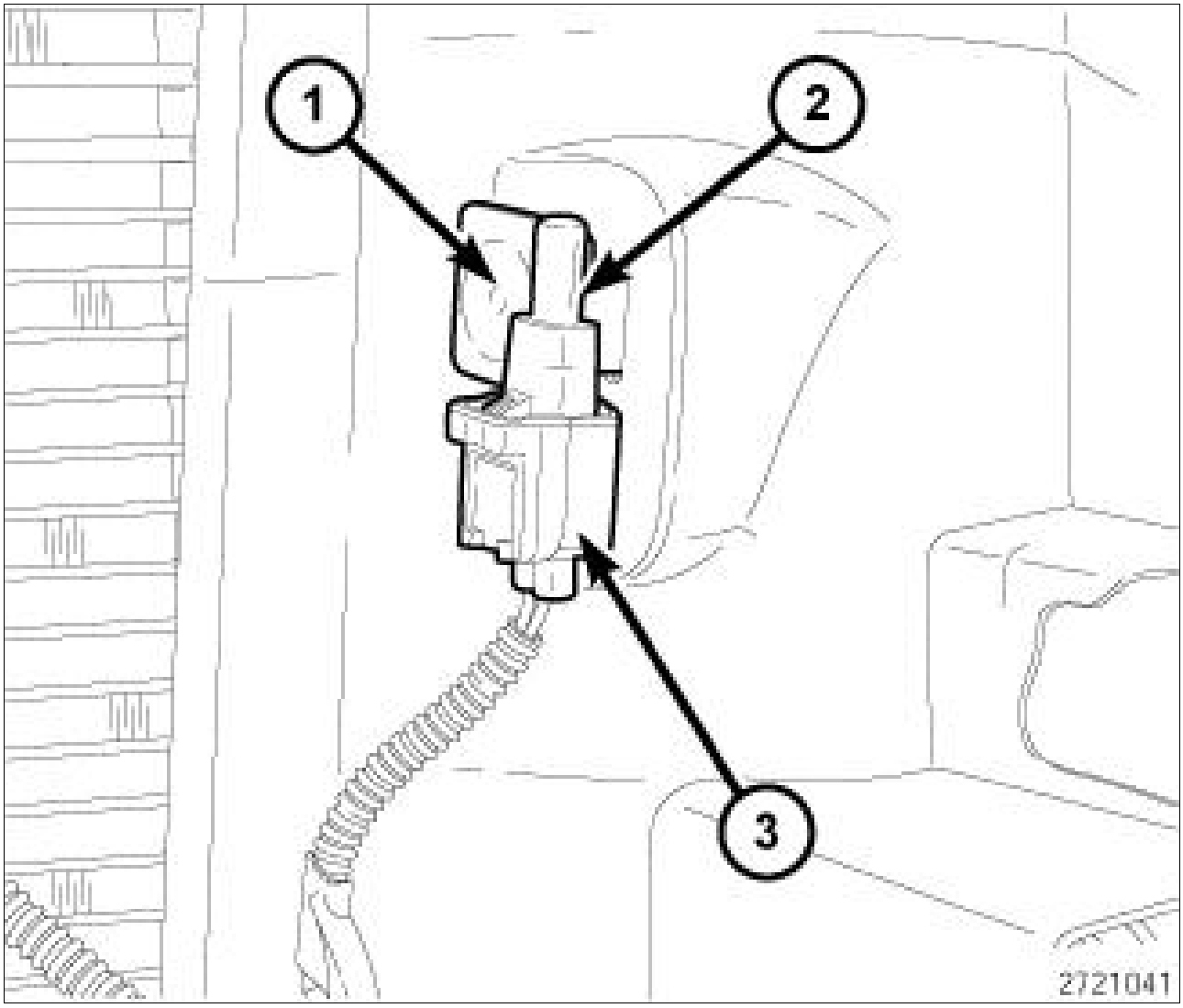

Courtesy of CHRYSLER GROUP, LLC

1. Disconnect and isolate the negative battery cable.
2. Remove the radiator grille assembly. Refer to GRILLE, REMOVAL .
3. Disconnect the wire harness connector (3) from the ambient temperature sensor (2).
4. Remove the push pin type retainer (1), and remove the sensor.

SENSOR, AMBIENT TEMPERATURE > INSTALLATION > INSTALLATION

Fig 1: Wire Harness Connector, Ambient Temperature Sensor & Push Pin Type Retainer

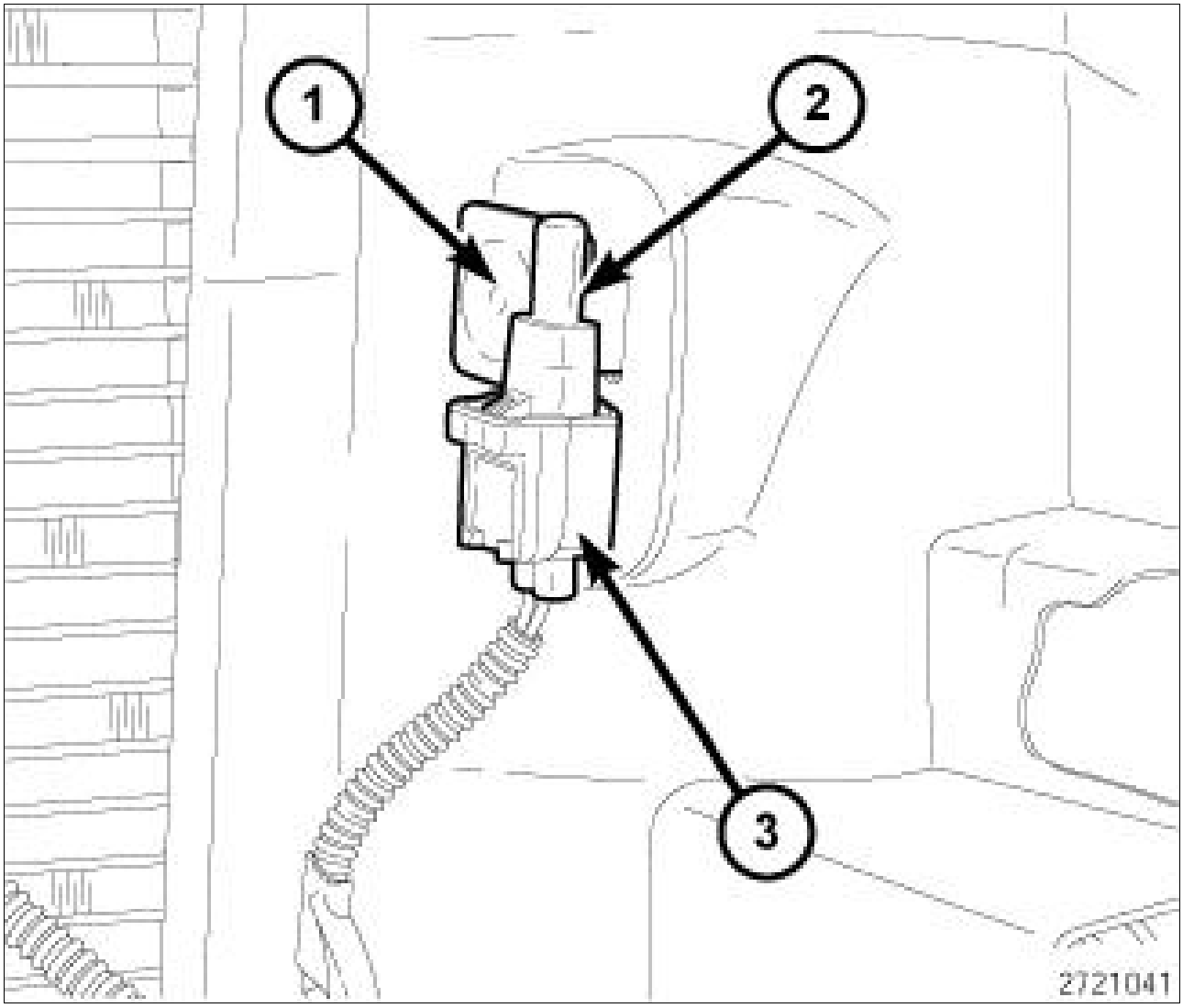

Courtesy of CHRYSLER GROUP, LLC

1. Position the ambient temperature sensor (2) in the vehicle and install the push pin type retainer (1).
2. Connect the wire harness connector (3) to the ambient temperature sensor.
3. Install the radiator grille assembly. Refer to GRILLE, INSTALLATION .
4. Connect the negative battery cable.

SWITCH, EVIC CONTROL > DESCRIPTION > DESCRIPTION

Fig 1: EVIC Function Buttons



Courtesy of CHRYSLER GROUP, LLC

The Electronic Vehicle Information Center (EVIC) control switch pod is located in the left spoke of the steering wheel spoke bezel. This switch has up to eight push buttons. Five of the push buttons are used on all vehicles equipped with the EVIC. Three additional push buttons are found on vehicles equipped with the optional Uconnect™ Hands-Free Communication System. The only visible components of the switch pod are the switch push buttons and a decorative bezel around the push buttons, which stands slightly proud of the steering wheel spoke bezel. The remainder of the switch pod including its mounting provisions and its electrical connection are concealed beneath the spoke bezel.

The switch pod housing and push buttons are constructed of molded plastic. Each of the push buttons has white International Control and Display Symbol graphics or text applied to it, which clearly identify the function of each push button. The switch pod is secured through three integral mounting tabs to mounting bosses on the back of the spoke bezel by three screws. A connector receptacle integral to the inboard end of the switch pod housing connects the EVIC control switch pod to the vehicle electrical system through a dedicated take out and connector of the steering wheel wire harness.

The EVIC control switch pod cannot be adjusted or repaired. If any function of the switch is ineffective or damaged, the entire switch pod unit must be replaced.

SWITCH, EVIC CONTROL > OPERATION > OPERATION

The Electronic Vehicle Information Center (EVIC) control switch pod is a resistor multiplexed unit that receives source current from and provides hard wired inputs to the Local Interface Network (LIN) slave node integral to the speed control switch pod in the right spoke of the steering wheel spoke bezel. The LIN slave node communicates the switch states of the EVIC control switch pod, the remote radio switches, the paddle shifter switches (if equipped), the horn switch and the heated steering wheel sensor (if equipped) over the LIN data bus to the Steering Column Control Module (SCCM) microcontroller,

which is the LIN master node.

The EVIC control switch pod for vehicles equipped with the EVIC system contains four switch push buttons whose functions are:

- **Back** - Pressing and releasing the Back push button returns you to the previous sub menu or main menu.
- **Down Arrow** - Pressing and releasing the Down Arrow push button allows the operator to scroll downward through the various EVIC main menus and sub menus.
- **Right Arrow** - Pressing and releasing the Right Arrow (Select) push button allows the operator to navigate, select and reset items or settings in the currently displayed EVIC main menu or sub menu. Pressing and holding the Right Arrow (Select) push button for two seconds provides a global reset of all of those EVIC features that can be reset, whether currently displayed or not.
- **Up Arrow** - Pressing and releasing the Up Arrow push button allows the operator to scroll upward through the various EVIC main menus and sub menus.

For vehicles equipped with the Uconnect™ Hands-Free Communication System, the EVIC control switch pod contains two additional switch push buttons whose functions are:

- **VR (Voice Recognition)** - This switch button activates the Uconnect™ Voice Command system.
- **Phone** - This switch push button activates the Uconnect™ Hands-Free Phone system.

The SCCM microcontroller LIN master node provides a clean ground and fused B(+) current for all of the switches and sensors on the rotating steering wheel through the LIN slave node circuitry of the speed control switch pod as well as for the Light Emitting Diode (LED) back lighting of both the speed control and the EVIC switch pods. The SCCM microcontroller continually monitors the LIN bus data and will store a Signal Not Available (SNA) code for any LIN bus input errors. The SCCM microcontroller also communicates with other electronic modules over the Controller Area Network (CAN) data bus. Therefore, any SCCM DTC information can be retrieved using a diagnostic scan tool connected to the Data Link Connector (DLC).

The analog resistor multiplexed circuits of the EVIC control switch pod as well as the hard wired circuits between the switch pod and the LIN slave node within the speed control switch pod may be diagnosed using conventional diagnostic tools and procedures. Refer to the appropriate wiring information. The wiring information includes wiring diagrams, proper wire and connector repair procedures, details of wire harness routing and retention, connector pin-out information and location views for the various wire harness connectors, splices and grounds.

However, conventional diagnostic methods will not prove conclusive in the diagnosis of the LIN slave or master nodes, the SCCM microcontroller or the electronic controls and communication between modules and other devices that provide some features of the EVIC system. The most reliable, efficient, and accurate means to diagnose the EVIC control switch pod, the LIN slave or master nodes, the SCCM microcontroller or the electronic controls and communication related to EVIC system operation requires the use of a diagnostic scan tool. Refer to the appropriate diagnostic information.

SWITCH, EVIC CONTROL > REMOVAL > REMOVAL

WARNING:

To avoid serious or fatal injury on vehicles equipped with airbags, disable the Supplemental Restraint System (SRS) before attempting any steering wheel, steering column, airbag, seat belt tensioner, impact sensor or instrument panel component diagnosis or service. Disconnect and isolate the battery negative (ground) cable, then wait two minutes for the system capacitor to discharge before performing further diagnosis or service. This is the only sure way to disable the SRS. Failure to take the proper precautions could result in accidental airbag deployment.

1. Disconnect and isolate the battery negative cable.
2. Remove the remote radio switch. Refer to SWITCH, REMOTE RADIO, REMOVAL .

Fig 1: Steering Wheel Front Bezel & Screws

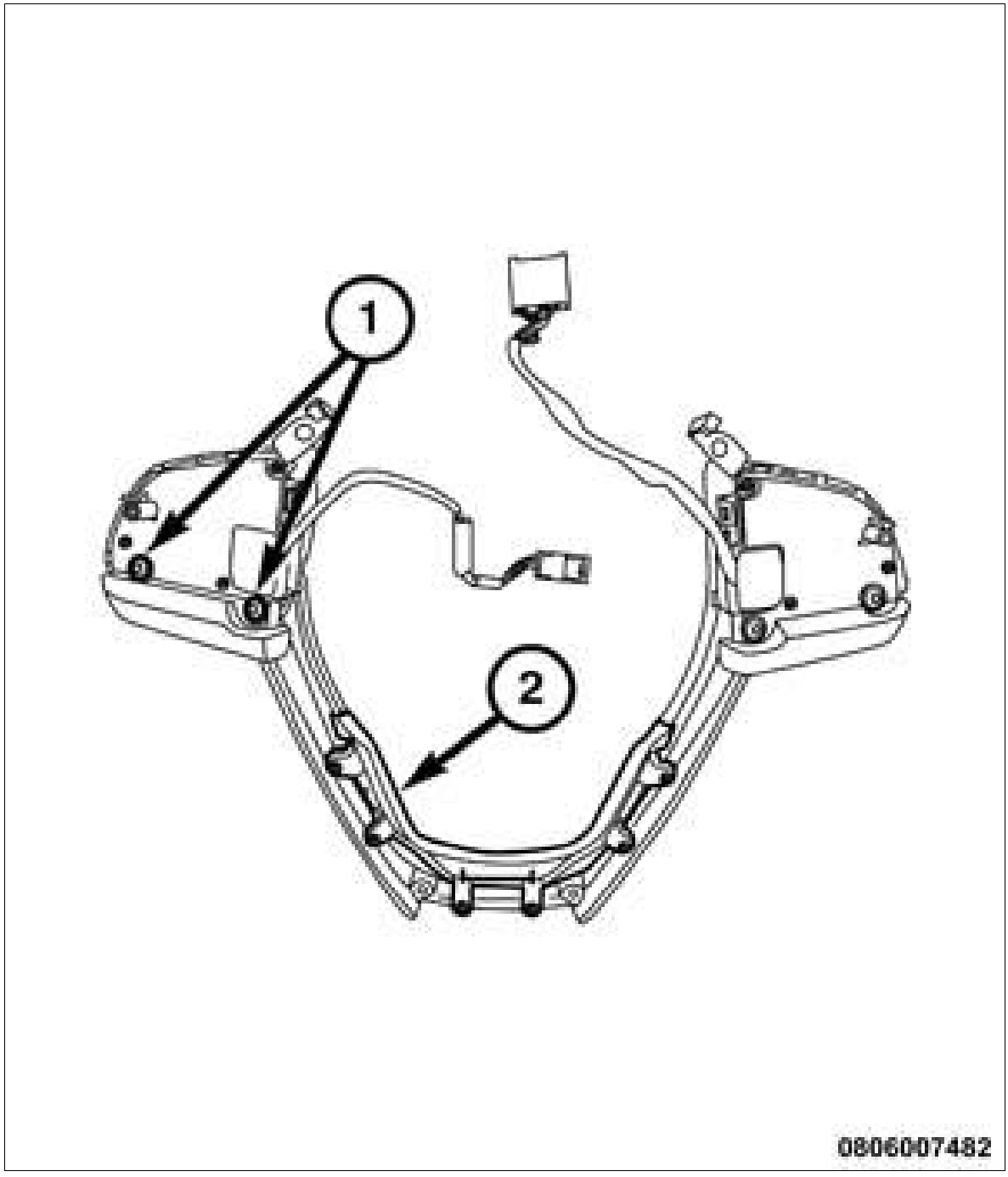

Courtesy of CHRYSLER GROUP, LLC

3. From the back of the steering wheel front bezel (2), remove the two screws (1) that secure the EVIC switch pod to the bezel.
4. Remove the switch from the bezel.

SWITCH, EVIC CONTROL > INSTALLATION > INSTALLATION

WARNING:

To avoid serious or fatal injury on vehicles equipped with airbags, disable the Supplemental Restraint System (SRS) before attempting any steering wheel, steering column, airbag, seat belt tensioner, impact sensor or instrument panel component diagnosis or service. Disconnect and isolate the battery negative (ground) cable, then wait two minutes for the system capacitor to discharge before performing further diagnosis or service. This is the only sure way to disable the SRS. Failure to take the proper precautions could result in accidental airbag deployment.

Fig 1: Steering Wheel Front Bezel & Screws

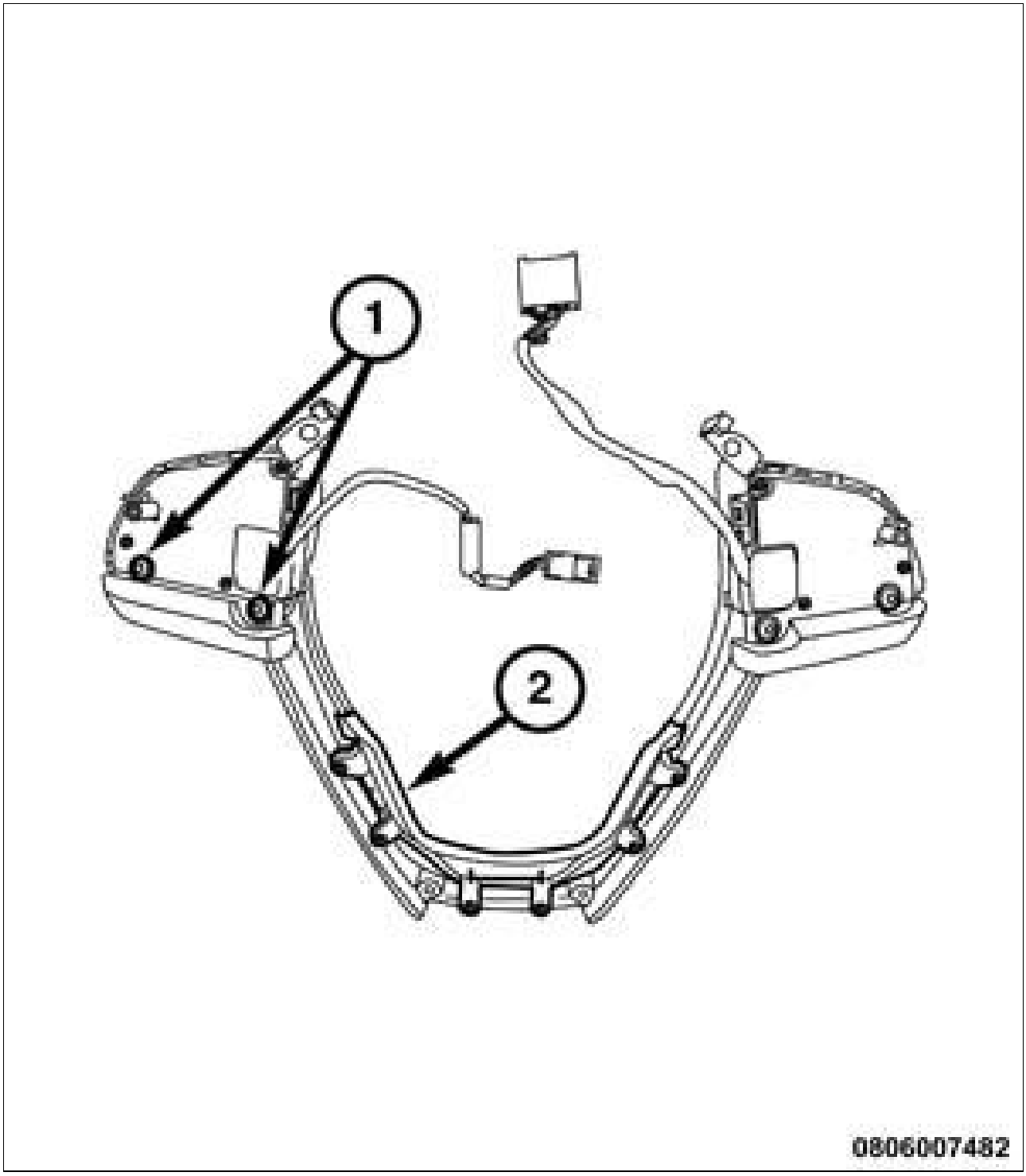

Courtesy of CHRYSLER GROUP, LLC

1. Position the Electronic Vehicle Information center (EVIC) switch pod to the back of the steering wheel front bezel (2).
2. Install and tighten the two screws (1) that secure the switch to the bezel. Tighten the screws securely.
3. Install the remote radio switch. Refer to SWITCH, REMOTE RADIO, INSTALLATION .

4. Connect the negative battery cable.

DESCRIPTION > HANDS FREE PHONE

A Uconnect™ Hands Free Phone system is factory-installed optional equipment. This system allows hands free use of compatible mobile phones for sending and receiving phone calls and text messages as well as for streaming audio from those devices through the audio system in the vehicle. The Hands Free Phone system includes the following major components, which are described in further detail elsewhere in this service information:

- **Bluetooth™ Antenna** - A Bluetooth™ antenna is internal and integral to the Radio Receiver Module (RRM).
- **Bluetooth™ Phone** - A compatible, customer-supplied and paired Bluetooth™ phone is a required component of the hands free phone system. A list of suggested phones and providers is available at: **http://www.chrysler.com/uconnect**
- **Body Control Module** - The Body Control Module (BCM) is located on the right cowl side inner panel within the passenger compartment, where it is concealed behind the cowl side kick panel to the right of the instrument panel. The BCM is the configuration master node for the vehicle. Refer to MODULE, BODY CONTROL, DESCRIPTION .
- **Electronic Vehicle Information Center Switch Pod** - The Electronic Vehicle Information Center (EVIC) switch pod is located in the left horizontal spoke of the steering wheel. In addition to the EVIC switch buttons this switch pod contains the Uconnect™ Voice Recognition (VR) switch button and the Uconnect™ Phone switch button of the Hands Free Phone system. Refer to SWITCH, EVIC CONTROL, DESCRIPTION .
- **Microphones** - Stereo microphones are integral to the inside rear view mirror in vehicles equipped with the Uconnect™ Hands Free Phone system. These microphones are located on the top surface of the mirror housing, one to each side of center. Refer to MICROPHONE, DESCRIPTION .
- **Radio Receiver Module** - The RRM is located near the top of the instrument panel center stack area and is the primary component of the phone system in this vehicle. In addition to a 213 millimeter (8.4 inch) color electronic touchscreen display, a microcontroller, a Bluetooth™ transceiver, a navigation module, flash memory and sophisticated Advanced Speech Recognition (ASR) input capability through VR software. The ASR software includes many different available languages. Each vehicle is equipped with a list of available languages, which are made available from the factory based upon languages most commonly used for the market destination. Refer to RADIO, DESCRIPTION .

The RRM also contains a microcontroller and programming that allows it to communicate with other electronic modules in the vehicle over the Controller Area Network - Interior High Speed (CAN-IHS) data bus. Refer to COMMUNICATION, DESCRIPTION .

The Uconnect™ Hands Free Phone system components cannot be adjusted or repaired. If any Hands Free Phone system component is damaged or ineffective, that component must be replaced. The Hands Free Phone system software is flash programmable through the Universal Serial Bus (USB) port.

DESCRIPTION > NAVIGATION

A factory-installed satellite navigation system based upon the Global Positioning System (GPS) is an available option on this vehicle. Depending upon the optional touchscreen Radio Receiver Module (RRM) selected for the vehicle, there are some variations in navigation system features available. Each system provides the vehicle operator with both visual and audible guidance to a chosen destination. An available premium navigation system includes such features as one-shot Voice Recognition (VR) destination entry, three dimensional city models and landmarks, digital terrain modeling, SiriusXM™ Travel Link and SiriusXM™ Traffic.

A RRM color touchscreen electronic display provides a graphical interface for programming, searching for and selecting destinations. In vehicles also equipped with a Uconnect™ Hands-Free telecommunication option, the available navigation systems are also equipped with Advanced Speech Recognition (ASR) input capability allowing hands-free operation. Each system provides visual guidance through dynamic maps with a turn-by-turn feature that can be enabled or disabled by the vehicle operator, while voice prompts through the audio system of the vehicle provide the vehicle operator with audible alerts and directions coordinated with the visual displays. The system also displays and logs valuable trip information such as speed, posted speed limit, distance and Estimated Time of Arrival (ETA).

The premium navigation system is activated when the vehicle is shipped from the factory, while another available system is shipped from the factory as Navigation Ready. The Navigation Ready system allows the customer to choose whether to have the dealer activate the embedded navigation module after the vehicle has been delivered.

The navigation system includes the following major components, which are described in further detail elsewhere in this service information:

- **Body Control Module** - The Body Control Module (BCM) is located on the right cowl side inner panel within the passenger compartment, where it is concealed behind the cowl side kick panel to the right of the instrument panel. The BCM is the configuration master node for the vehicle. Refer to MODULE, BODY CONTROL, DESCRIPTION .
- **Combination Antenna** - The navigation module acquires GPS position data through a roof-mounted combination antenna that also receives satellite audio and cellular signals. Refer to ANTENNA, SATELLITE, DESCRIPTION .
- **Electronic Vehicle Information Center** - The Electronic Vehicle Information Center (EVIC) is an electronic display within the Instrument Panel Cluster (IPC). When Turn-By-Turn navigation is enabled through the EVIC Personal Settings menu, the EVIC displays turn-by-turn directions to the chosen destination supplemental to the navigation display within the RRM touchscreen unit. Refer to CENTER, ELECTRONIC VEHICLE INFORMATION, DESCRIPTION .
- **Electronic Vehicle Information Center Switch Pod** - The EVIC switch pod is located in the left horizontal spoke of the steering wheel. In addition to the EVIC switch buttons this switch pod contains the Uconnect™ VR switch button and the Uconnect™ Phone switch button of the Uconnect™ Hands-Free Phone system. Refer to SWITCH, EVIC CONTROL, DESCRIPTION .
- **Microphones** - Stereo microphones are integral to the inside rear view mirror in vehicles equipped with the Uconnect™ Hands-Free Phone system. These microphones are located on the top surface of the mirror housing, one to each side of center. Refer to MICROPHONE, DESCRIPTION .
- **Radio Receiver Module** - The RRM contains the central components of the navigation system. In addition to a 213 millimeter (8.4 inch) color electronic touchscreen display, a navigation module is

internal and integral to each RRM that is equipped with navigation capability. The navigation module contains all of the navigation system hardware and software. Hardware includes the GPS receiver, an electronic gyroscope, a microcontroller and flash memory for system software and map data storage. Refer to RADIO, DESCRIPTION .

The IPC and the RRM each contain a microcontroller and programming that allow them to communicate with each other and other electronic modules in the vehicle using the Controller Area Network - Interior High Speed (CAN - IHS) data bus. Refer to COMMUNICATION, DESCRIPTION .

The navigation system components cannot be adjusted or repaired. If any of the navigation system components is damaged or ineffective, that component must be replaced. The external combination antenna can be repaired separately from the RRM. The navigation system software as well as the map data is flash programmable through the Universal Serial Bus (USB) port.

DESCRIPTION > UCONNECT ACCESS

A Uconnect™ Access system is factory-installed optional equipment that uses an embedded cellular module within the Radio Receiver Module (RRM) to enable several mobile connectivity features. Vehicles equipped with the Uconnect™ Access system can be readily identified by two switch buttons on the inside rear view mirror identified with **ASSIST** and **9-1-1** labels.

To enable Uconnect™ Access, a subscription must be completed by the customer. Detailed directions for subscription along with other information relating to Uconnect™ Access can be found on **www.driveuconnect.com** or within the Uconnect™ owner manual supplement for the supported radios.

> *NOTE:*
>
> *A free trial period of Uconnect™ Access may be offered with the sale of a new vehicle. Registration will be required to activate the trial subscription.*

Subscription to Uconnect™ Access provides many features that allow cellular smart phones to be put away in favor of the integrated mobile connectivity features and functionality accessible through the use of the radio, steering wheel and voice controls in the vehicle. All Access features are only available based on subscription. Features are continually being added or changed and offerings at the time this information was last updated included:

- **9-1-1/Assist** - The following call features are executed through the embedded cellular module of the RRM:
    - **9-1-1** - Pressing the **9-1-1** button will initiate an emergency call to a Public Safety Answering Point (PSAP). The Global Positioning System (GPS) coordinates of the vehicle are made available to the emergency operator in the event help needs to be sent. In addition it opens a two way voice channel with the emergency operator allowing communication between the vehicle occupant and the emergency operator.
    - **Assist** - Pressing the **ASSIST** button will present the customer with three choices. Uconnect™ Care, Vehicle Care or Roadside Assistance. These selection options are presented as soft keys in the RRM display. Selecting any one of these choices will place a call to the selected group. If there are questions about Uconnect™ Services, Uconnect™ Care can be contacted; if there are questions related to vehicle functionality, Vehicle Care

can be contacted; or, if Roadside Assistance is needed, a direct call can be made.

- **Applications** - Some of the Uconnect™ Access applications (apps) presently available include:
  - **SRT Performance Pages** - The SRT Performance Pages app (for SRT models only) gives SRT vehicle owners access to the performance data for their vehicle. This app provides access to real-time vehicle performance information including timers (such as 0 to 60 mph elapsed time), G-force, gauges and engine performance. This data can be downloaded through the Universal Serial Bus (USB) port or the Secure Digital (SD) card slot in the vehicle for saving or sharing of performance results data.
  - **Points Of Interest Search** - A Points Of Interest (POI) Search app gives the vehicle owner access to Yelp (POI) local business and destination information previously available on the internet or through a mobile app, adapted for use on the radio in their vehicle. The Yelp POI Search app provides searches using predefined search categories, or custom searches using keywords and voice recognition.
  - **Via Mobile** - The Via Mobile app leverages apps already installed on a compatible and paired iPhone or Android smart phone to enable accessibility to streaming internet audio content through the RRM and audio system components within the vehicle. This app enables one touch access and a hands-free, radio-like user interface with no expenses besides those already being incurred to access the same content through the existing smart phone data plan. There are presently smart phone apps available for streaming audio content such as Aha Radio, iHeart Radio, Pandora and Slacker. When additional apps are made available there could potentially be access to streaming news, sports, weather, social media, comedy, audio books and other content such as special interest podcasts.
- **Notifications** - Customers have the option to sign up for automatic electronic mail (email) or text message (Short Message Service/SMS) notifications when an Access remote services command is processed or if their vehicle theft alarm has been triggered. These notifications are set up through the Mopar Owner Connect account of the customer (**www.MoparOwnerConnect.com**).
- **Remote Services** - The distance of remote services normally available through the Remote Keyless Entry (RKE) FOB with Integrated Key (FOBIK) can be extended through cellular connectivity. These services may include remote door Lock/Unlock, remote horn and lights (Panic Mode) and remote start. An active Access subscription is required and the customer must install the Uconnect™ Access Via Mobile smart phone app on their phone. The app can be obtained through the Mopar Owner Connect account of the customer (**www.MoparOwnerConnect.com**) or by downloading it from the play store for their phone. Once the smart phone app is installed, the remote services can be controlled by the customer on line through their Mopar Owner Connect account.

> *NOTE:*
>
> *Remote services are only available based on factory installed options. Options installed at the dealer are not eligible for these services.*

- **Stolen Vehicle Assistance** - If the vehicle is stolen, stolen vehicle assistance can be used to help the police locate the vehicle. This service is based on the request of the customer to Uconnect™ Care and must first be reported to local authorities and a police report reference number obtained. Uconnect™ Care will not provide stolen vehicle assistance without a police report reference number.

- **Voice Texting** - Voice Texting enhances the Voice Text Reply feature of the Uconnect™ Access subscription. While Voice Text Reply provides pre-formatted messages, it also lets the customer create custom messages. A message is spoken as if talking to the intended message recipient and the Uconnect™ Access voice-to-text technology converts the voice message into a text message.

> *NOTE:*
>
> *Voice Texting and Voice Text Reply are compatible with most phones that support Bluetooth Message Access Protocol (MAP) or AT Messaging Protocol. Always check compatibility by accessing Mobile Device Support at:* ***Uconnectphone.com*** *. These features are not available in all markets.*

- **Wi-Fi Hot Spot** - Vehicles equipped with the Uconnect™ Access system can become a Wi-Fi hot spot with payment of a daily, weekly or monthly subscription option. This system allows the use of the vehicle as a Wi-Fi hot spot for connecting consumer Wi-Fi devices to the internet through a Wi-Fi antenna and an embedded cellular connection that are internal and integral to the RRM and the external cellular combination antenna. The external combination antenna can be repaired separately from the RRM. The Wi-Fi Hot Spot system software is flash programmable through the Universal Serial Bus (USB) port.

Refer to **www.driveuconnect.com** for the latest information and helpful videos describing all of the Uconnect™ services and offerings.

The Uconnect™ Access system includes the following major components, which are described in further detail elsewhere in this service information:

- **Access Switches** - In vehicles equipped with Uconnect™ Access, the inside rear view mirror also contains two integral push button switches and a Light Emitting Diode (LED) indicator located on the rearward-facing housing just below the center of the mirror glass for activation of the **ASSIST** and **9-1-1** features.
- **Bluetooth™ Antennas** - Bluetooth™ antennas are internal and integral to the RRM.
- **Bluetooth™ Phone** - A customer-supplied and paired Bluetooth™ smart phone is a required component of the Uconnect™ Access system to enable remote services.
- **Body Control Module** - The Body Control Module (BCM) is located on the right cowl side inner panel within the passenger compartment, where it is concealed behind the cowl side kick panel to the right of the instrument panel. Refer to MODULE, BODY CONTROL, DESCRIPTION .
- **Combination Antenna** - The RRM sends and receives cellular data through a roof-mounted combination antenna that also receives satellite audio and Global Positioning System (GPS) navigation signals. Refer to ANTENNA, SATELLITE, DESCRIPTION .
- **Electronic Vehicle Information Center Switch Pod** - The Electronic Vehicle Information Center (EVIC) switch pod is located in the left horizontal spoke of the steering wheel. In addition to the EVIC switch buttons this switch pod contains the Voice Recognition (VR) switch button and the Phone switch button of the hands-free phone system. Refer to SWITCH, EVIC CONTROL, DESCRIPTION .
- **Microphones** - Stereo microphones are integral to the inside rear view mirror in vehicles equipped with the hands-free phone system. These microphones are located on the top surface of the mirror housing, one to each side of center. Refer to MICROPHONE, DESCRIPTION .

- **Occupant Restraint Controller** - The Occupant Restraint Controller (ORC) module has a dedicated hard wired circuit that provides an input to the RRM whenever a Supplemental Restraint System (SRS) deployment occurs in the vehicle.
- **Radio Frequency Hub Module** - The Radio Frequency Hub Module (RFHM) is a key component of the Uconnect™ Access remote vehicle services feature. The RFHM is located on the left rear quarter inner panel in the cargo area within the passenger compartment and concealed behind the quarter trim panel. Refer to MODULE, RADIO FREQUENCY (RF HUB), DESCRIPTION .
- **Radio Receiver Module** - The RRM is located near the top of the instrument panel center stack area and is the primary component of the Uconnect™ Access system in this vehicle. The RRM includes a microcontroller, a Bluetooth™ transceiver, a navigation module, flash memory and sophisticated Advanced Speech Recognition (ASR) input capability through VR software. The ASR software includes many different available languages. Each vehicle is equipped with a list of available languages, which are made available from the factory based upon languages most commonly used for the market destination. Refer to RADIO, DESCRIPTION .
- **Uconnect™ Access Registration And Applications** - Uconnect™ Access registration must be completed before individual RRM apps or Uconnect™ Access subscription packages can be purchased from the Uconnect™ Store Front. The Uconnect™ Access Via Mobile smart phone app must also be installed on the user's compatible smart phone for the remote vehicle services features to operate. Many additional Uconnect™ Access apps are under development for later release.
- **Wi-Fi Antenna** - The Wireless Local Area Network (WLAN) (also known as Wi-Fi) antenna is internal and integral to the RRM.
- **Wi-Fi Device** - A customer-supplied Wi-Fi capable device is a required component of the Wi-Fi Hot Spot system.

The RRM contains a microcontroller and programming that allows it to communicate with other electronic modules in the vehicle over the Controller Area Network - Interior High Speed (CAN-IHS) data bus. In vehicles equipped with Uconnect™ Access, the RRM also uses electronic message communication with other electronic modules in the vehicle over the CAN-C data bus. Refer to COMMUNICATION, DESCRIPTION .

The Uconnect™ Access system components cannot be adjusted or repaired. If any Uconnect™ Access system component is damaged or ineffective, that component must be replaced. The external combination antenna can be repaired separately from the RRM. The Uconnect™ Access system software is flash programmable through the USB port.

OPERATION > HANDS FREE PHONE

The Uconnect™ Hands Free Phone system relies upon Bluetooth™ technology to enable wireless connectivity between Bluetooth™ compatible, paired and turned On mobile devices and the on-board entertainment system components. This system also relies upon Advanced Speech Recognition (ASR) software to enable voice commands to control the mobile device as well as the components and features of some other on-board systems.

The system will recognize up to ten Bluetooth™ compatible devices, each of which is identified within the system by the name acquired from the device during the pairing process. The Hands Free Phone system will communicate with a paired device that is anywhere within the vehicle. However, covering the paired device with a metal object may block the signal.

The Hands Free Phone system is operated in one of two ways: actively or passively. Active operation begins with the vehicle operator depressing a push button in the Electronic Vehicle Information Center (EVIC) switch pod on the face of the left horizontal spoke of the steering wheel. The Uconnect™ Voice Recognition (**VR**) button is depressed for hands free Voice Command access to available features other than the phone, or the Uconnect™ Phone (**Phone** is identified by a phone handset icon) button is depressed for hands free phone access.

The **VR** or **Phone** button press provides a resistor multiplexed input to the Local Interface Network (LIN) slave node integral to the EVIC switch pod. The LIN slave node sends an electronic **switch press** message to the LIN master node integral to the Body Control Module (BCM). The BCM is also a gateway to the CAN - Interior High Speed (CAN-IHS) data bus and relays the message over the CAN-IHS data bus to the Radio Receiver Module (RRM).

When the RRM receives the electronic **switch press** message, the RRM suppresses any current audio output and issues an audible **beep** to indicate that the VR hardware is prepared to receive a Voice Command. Part of the Uconnect™ Hands Free Phone system hardware includes the VR stereo microphones integral to the top surface of the inside rear view mirror. The microphones provide a hard wired input of Voice Commands to the VR engine within the RRM, and the ASR software converts that input into an electronic instruction message broadcast over the CAN-IHS data bus to invoke the appropriate system response. If no appropriate Voice Command is received within a few seconds following the audible **beep** , the system will provide an audible verbal output listing a menu of the available Voice Command options.

Passive operation begins when an incoming cellular call is received. If the Bluetooth™ phone is Short Message Service (SMS) text message capable and compatible with the Uconnect™ system (see the Uconnect™ web site), passive operation will also begin when an SMS text message is received. The call or SMS text message is relayed to the Bluetooth™ transceiver embedded within the RRM. The Bluetooth™ transceiver then instructs the RRM to announce the incoming call or message. The vehicle operator presses the Uconnect™ **Phone** button in the EVIC switch pod or the soft button that will appear in the RRM display to accept the call, or the soft button that will appear in the RRM display to accept the message.

The Bluetooth™ transceiver connects the voices of the two phone parties using outputs through the audio system speakers and inputs through the Uconnect™ hands free microphones. In the case of a text message, the Bluetooth™ transceiver sends the message to the VR hardware and the ASR software converts the message from text to voice and plays it through the audio system speakers.

If the RRM has the optional 213 millimeter (8.4 inch) electronic touchscreen display, the text message can then be replied to by depressing the Uconnect™ **VR** button and giving an **SMS** Voice Command to select from several predetermined short text phrase responses. If the RRM has the 127 millimeter (5 inch) display, it can receive and display SMS text messages, but it is not equipped to reply to text messages.

The Hands Free Phone system operates on battery current received through a fused B(+) circuit, but also monitors the ignition switch (Keyless Ignition Node/KIN) status through electronic messages received over the CAN-IHS data bus. If a call is in progress when the status of the ignition switch transitions to Off, the system will continue to operate until the call has been completed.

The RRM receives electronic message inputs over the CAN-IHS data bus related to the Hands Free Phone system. The RRM is also connected to the CAN-C data bus; however, the RRM is not a CAN gateway. All electronic message outputs of the RRM are carried over the CAN-IHS data bus. When the RRM monitors a problem in any of the audio system circuits and components, or in any of the Bluetooth™ transceiver circuits, it stores a fault code or Diagnostic Trouble Code (DTC) in its memory circuit.

The hard wired circuits between components related to the RRM and the Hands Free Phone system may be diagnosed using conventional diagnostic tools and procedures. Refer to the appropriate wiring information. The wiring information includes wiring diagrams, proper wire and connector repair procedures, details of wire harness routing and retention, connector pin out information and location views for the various wire harness connectors, splices and grounds.

However, conventional diagnostic methods will not prove conclusive in the diagnosis of the RRM or the electronic controls and communication between modules and other devices that provide some features of the Hands Free Phone system. The most reliable, efficient and accurate means to diagnose the RRM or the electronic controls and communication related to Hands Free Phone system operation requires the use of a diagnostic scan tool. Refer to the appropriate diagnostic information.

OPERATION > NAVIGATION

The optional navigation system is active whenever the Radio Receiver Module (RRM) electronic display is powered On. In vehicles equipped with a navigation system that allows activation after the vehicle has been delivered, all post delivery activations must be performed by the dealer.

If a navigation system menu or map isn't being actively displayed, the system is still operating in the background. The menu, map or route that was active when the RRM electronic display was powered Off along with all other user-relevant information is saved in nonvolatile memory by the navigation module for display again the next time the RRM electronic display is powered On and the navigation system is selected.

Once a destination is selected, the navigation system uses information from stored map data to quickly calculate a route. As the vehicle is driven along that route, the vehicle operator is guided with visual displays and voice prompts. Any variances from that route will cause the navigation system to automatically recalculate and deliver a revised route to the chosen destination.

When Turn-By-Turn Navigation is enabled through the Personal Settings menu of the Electronic Vehicle Information Center (EVIC), the EVIC supplements the RRM display with a more focused turn-by-turn display which includes: the name of the approaching crossroad, an arrow indicating the upcoming turn direction and a countdown to indicate the distance to that turn.

All vehicles have their original map and Points-Of-Interest (POI) data stored in nonvolatile flash memory integral to the navigation module integral and internal to the RRM. Updated map and POI data as well as updated navigation software for these vehicles can be uploaded to the system using Universal Serial Bus (USB) media. The originally installed data is based upon the market for which the vehicle was manufactured. Navigation software updates are also uploaded to the system using USB media.

The Global Positioning System (GPS) receiver of the navigation module is capable of acquiring and tracking GPS signal inputs through the roof-mounted combination antenna from numerous satellites simultaneously to calculate and display the position and direction of the vehicle. However, when access to satellite signals is blocked by bridges, tunnels or other obstacles, the navigation module relies upon Dead Reckoning (DR) to aid in calculating vehicle position and direction. The navigation module uses pulse signals from the wheel speed sensors, a Reverse gear indicator input and an internal electronic gyroscope sensor to provide DR vehicle position and direction calculations to supplement GPS satellite signals.

User input mechanisms for the navigation system include the RRM touchscreen and the Uconnect™ Hands-Free Voice Recognition (VR) verbal commands. The VR function uses Advanced Speech Recognition (ASR) software. Master control of the VR function is handled by the VR engine internal and integral to the RRM. The VR recognizes and responds to certain global commands, while other

commands are specific to the RRM or the navigation system.

For safety reasons some input, editing and setting features of the navigation system are restricted when the vehicle is in motion or when a hands-free phone call is active. This includes many features that require touchscreen inputs. However, many of those same features disabled for touchscreen inputs remain enabled for Uconnect™ Hands-Free VR inputs.

The navigation module receives electronic message inputs within the RRM over the Controller Area Network - Interior High Speed (CAN-IHS) data bus; however, the RRM is not a CAN gateway. All electronic message outputs of the navigation module and the RRM are carried over the CAN-IHS data bus. When the RRM monitors a problem in any of the audio system circuits and components, or in any of the navigation system antenna circuits, it stores a fault code or Diagnostic Trouble Code (DTC) in its memory circuit. The external combination antenna may be diagnosed separately from the RRM.

The hard wired circuits between components related to the RRM and the navigation system may be diagnosed using conventional diagnostic tools and procedures. Refer to the appropriate wiring information. The wiring information includes wiring diagrams, proper wire and connector repair procedures, details of wire harness routing and retention, connector pin out information and location views for the various wire harness connectors, splices and grounds.

However, conventional diagnostic methods will not prove conclusive in the diagnosis of the RRM or the electronic controls and communication between modules and other devices that provide some features of the navigation system. The most reliable, efficient and accurate means to diagnose the RRM or the electronic controls and communication related to navigation system operation requires the use of a diagnostic scan tool. Refer to the appropriate diagnostic information.

OPERATION > UCONNECT ACCESS

Uconnect™ Access capability relies on cellular (telematics) technology and subscribed services that are controlled through Digital Rights Management (DRM). The management or DRM along with specific services occur wirelessly through the cloud. Digital rights and a subscription determine the specific services a customer is eligible to receive. Data feeds between assembly plants and its radio suppliers are provided to the cellular provider to enable initial capability or provisioning. This initial data must exist in the database of the cellular provider or functionality will be unavailable. Base features are supported through software that exists within the applicable Radio Receiver Module (RRM) platform and cellular connectivity is provided through the embedded cellular module.

Signal strength and data capability is shown adjacent to the **Apps** orb soft key found at the lower right corner of the radio touchscreen. Relative signal strength is indicated by a bar graph and data capability is indicated by the display of either a **3G** (full capability), **1X** (text capable only) or a **0** with a strike-through symbol (no data capability). Depending on location and coverage, data capability can change. Signal strength is a major factor for any wireless connectivity. Third Generation (3G) data is the highest connectivity available at this time. Remote Service features (Start, Lock, Unlock, etc.) rely on data capability. If the vehicle is located in an area of no or low coverage, the Remote Services features may not function. Signal strength and data capability can suffer from the same situations any cellular device might experience. Parking structures, blocks, drops and dead zones can affect performance at any time.

The two switch buttons on the inside rear view mirror identified with **ASSIST** and **9-1-1** provide a resistor multiplexed input to the Local Interface Network (LIN) slave node integral to the inside rear view mirror. The LIN slave node sends an electronic **switch press** message to the LIN master node integral to the Body Control Module (BCM). The BCM relays the message over the Controller Area Network - Interior High Speed (CAN-IHS) data bus, where it is retrieved by the RRM.

If the vehicle has the optional Uconnect™ Access Via Mobile application (also known as app) downloaded, installed and enabled on their smart phone their Uconnect™ Access subscription can provide remote services features. In the Uconnect™ Access system the Via Mobile app on the smart phone calls the RRM in the vehicle. The RRM communicates through electronic messages over the Controller Area Network - C (CAN-C) data bus with the Radio Frequency Hub Module (RFHM) and the RFHM communicates over the CAN-C bus with the BCM to achieve the requested remote features. While the RRM uses electronic message communication over both the CAN-C data bus and the CAN - Interior High Speed (CAN-IHS) data bus, the RRM is not a CAN gateway.

If a Bluetooth™ phone is Short Message Service (SMS) text message capable and compatible with the Uconnect™ Access system (see the Uconnect™ web site for a phone compatibility list), a Uconnect™ Access subscription provides an enhanced Voice Texting feature. This SMS text message free form dictation feature is used to compose a response when a text message is received. The call or SMS text message is relayed to the Bluetooth™ transceiver embedded within the RRM. The Bluetooth™ transceiver then instructs the RRM to announce the incoming call or message. The vehicle operator presses the Uconnect™ **Phone** button in the EVIC switch pod or the soft button that will appear in the RRM touchscreen display to accept the message and dictate a response.

The optional Wi-Fi hot spot feature of Uconnect™ Access utilizes the same operating principles and components as Uconnect™ Access for wireless connectivity. Digital rights to the Wi-Fi hot spot feature are provided based on a subscription separate from Uconnect™ Access. Several wireless devices can be supported in vehicles with the Wi-Fi hot spot feature and security to prevent unauthorized access can be enabled by the customer.

The hard wired circuits between components related to the RRM and the Uconnect™ Access system may be diagnosed using conventional diagnostic tools and procedures. Refer to the appropriate wiring information. The wiring information includes wiring diagrams, proper wire and connector repair procedures, details of wire harness routing and retention, connector pin out information and location views for the various wire harness connectors, splices and grounds.

However, conventional diagnostic methods will not prove conclusive in the diagnosis of the RRM or the electronic controls and communication between modules and other devices that provide some features of the Uconnect™ Access system. The most reliable, efficient and accurate means to diagnose the RRM or the electronic controls and communication related to Uconnect™ Access system operation requires the use of a diagnostic scan tool. Refer to the appropriate diagnostic information.

DIAGNOSIS AND TESTING > DIAGNOSIS AND TESTING - HANDS-FREE PHONE

WARNING:

To avoid serious or fatal injury on vehicles equipped with airbags, disable the Supplemental Restraint System (SRS) before attempting any steering wheel, steering column, airbags, airbag curtains, knee blocker, seat belt tensioner, impact sensor or instrument panel component diagnosis or service. Disconnect the IBS/negative battery cable assembly from the negative battery post, then wait two minutes for the system capacitor to discharge before performing further diagnosis or service. This is the only sure way to disable the SRS. Failure to take the proper precautions could result in accidental airbag deployment.

The hard wired circuits between components related to the Radio Receiver Module (RRM) and the Uconnect™ Hands-Free Phone system may be diagnosed using conventional diagnostic tools and

procedures. Refer to the appropriate wiring information. The wiring information includes wiring diagrams, proper wire and connector repair procedures, details of wire harness routing and retention, connector pin out information and location views for the various wire harness connectors, splices and grounds.

However, conventional diagnostic methods will not prove conclusive in the diagnosis of the RRM or the electronic controls and communication between modules and other devices that provide some features of the Uconnect™ Hands-Free Phone system. The most reliable, efficient and accurate means to diagnose the RRM or the electronic controls and communication related to Uconnect™ Hands-Free Phone system operation requires the use of a diagnostic scan tool. Refer to the appropriate diagnostic information.

NOTE:

The MIT019 Multi-Media Interface Tester special tool may also be used for testing where no Diagnostic Trouble Code (DTC) has been recorded, such as with Bluetooth™ reception and phone pairing issues. Refer to DIAGNOSIS AND TESTING .

NOTE:

Validation and diagnosis of many of the conditions listed below will require access to both the paired Bluetooth™ device and the PIN required for that device.

HANDS-FREE PHONE DIAGNOSIS		
CONDITION	POSSIBLE CAUSES	CORRECTION
PHONE NOT AVAILABLE	1. Bluetooth phone not paired to the RRM.	1. Be certain that the phone is Bluetooth compatible and is paired to the RRM.
	2. Bluetooth phone not present or turned Off.	2. Be certain that the paired phone is present, turned On and that the Bluetooth option is enabled in the phone.
	3. Bluetooth phone has low battery.	3. At low battery levels, some phones will turn Off Bluetooth functionality. Be certain that the phone battery is charged to an adequate level.
	4. The boot procedure for the RRM, the phone or both did not complete successfully.	4. Cycle both the RRM and the phone Off, then On again in an attempt to complete a successful boot procedure.
	5. A phone freeze has occurred.	5. Power cycle the phone. Refer to the operator's manual for the phone.
PHONE PAIRING FAILED	1. The phone is not Bluetooth enabled.	1. The Bluetooth transceiver requires that the cellular phone be Bluetooth enabled. The phone must be upgraded to one that is Bluetooth enabled. A list of suggested

		phones is available at: **http://www.chrysler.com/uconnect**
	2. The phone does not support the Bluetooth Hands-Free Profile.	2. The Bluetooth transceiver requires that the cellular phone support the Hands-Free Profile. The phone must be upgraded to one that supports the Hands-Free Profile. A list of suggested phones is available at: **http://www.chrysler.com/uconnect**
	3. Incorrect discovered Bluetooth device selected in phone.	3. Be certain to select Uconnect in the discovered Bluetooth™ devices in the phone for pairing.
	4. The PIN of the phone is not the same as the PIN assigned by the RRM during pairing.	4. The PIN assigned by the RRM during pairing must match the PIN of the phone.
	5. Phone pairing is locked (password protected).	5. To unlock phone pairing in the phone, be certain that password protection is turned Off.
	6. The RRM has reached the maximum number of allowed devices paired.	6. Remove one of the previously paired devices from the paired list of the RRM.
	7. The phone has reached the maximum number of allowed devices paired.	7. Remove one of the previously paired devices from the paired list of the phone, or delete the pairing history from the phone. Refer to the operator's manual for the phone.
	8. The boot procedure for the RRM, the phone or both did not complete successfully.	8. Cycle both the RRM and the phone Off, then On again in an attempt to complete a successful boot procedure.
	9. A phone freeze has occurred.	9. Perform a hard reset (power cycle) to the phone. Refer to the operator's manual for the phone.
PHONE WILL NOT RECONNECT AFTER PAIRING	1. Bluetooth settings in phone are incorrect.	1. Bluetooth settings in phone should be set to auto-connect or select Uconnect™ as a trusted device in phone.
	2. Phone pairing is locked (password protected).	2. To unlock phone pairing in the phone, be certain that password protection is turned Off.
	3. The boot procedure for the RRM, the phone or both did not complete successfully.	3. Cycle both the RRM and the phone Off, then On again in an attempt to complete a successful boot procedure.
	4. A phone freeze has occurred.	4. Perform a hard reset (power cycle) to the phone. Refer to the operator's manual for the phone.

POOR VOICE RECOGNITION	1. User is not waiting for the **beep** tone acknowledgment before issuing voice commands.	1. Be certain the user knows to wait for the acknowledgment **beep** tone prior to issuing voice commands.
	2. User is not issuing voice commands in a smooth and consistent speaking voice.	2. Be certain the user is issuing voice commands in a normal, smooth and consistent speaking voice. The Advanced Speech Recognition (ASR) engine is designed to recognize normal speech patterns and at a normal tone. Some users tend to speak to a computer loud and slow, which results in reduced performance.
	3. User is not using proper Voice Recognition syntax.	3. User must speak using proper Voice Recognition syntax.
	4. High noise levels within the passenger compartment.	4. ASR engine performance is increased when noise conditions in the passenger compartment are lowered. Ideal conditions include having the windows closed and the blower fan set to Low or Off.
	5. Passengers are talking while the user is attempting to issue a voice command.	5. Although designed to focus on sounds from the driver's seated position, the directional microphones will pick up sounds from any seating position in the vehicle. ASR engine performance is increased in low noise environments.
	6. Foreign objects interfering with microphone input.	6. Verify that there are no foreign objects hanging from the inside rear view mirror that could be interfering with microphone reception.
	7. The inside rear view mirror is not properly attached to the mount.	7. The inside rear view mirror must be firmly mounted to the mounting location. Be certain the mirror is properly installed.
	8. The incorrect Uconnect switch button is being depressed.	8. Phone features are accessed using the Uconnect **Phone** button on the steering wheel or the **Phone** soft key in the RRM display. Other Uconnect Voice Recognition features are accessed using the Uconnect **VR** button or soft key.
	9. Microphone failure.	9. Use a diagnostic scan tool and the appropriate diagnostic procedures for further diagnosis of the microphone.
PHONE BOOK DOES NOT DOWNLOAD	1. Phone does not support the Phone Book Access Profile (PBAP).	1. The Uconnect system requires that the cellular phone support the PBAP profile. To enable the Uconnect phone book download feature, the phone must be upgraded to one that is PBAP enabled. A list of suggested phones is available at:

		http://www.chrysler.com/uconnect
	2. Phone book transfer not enabled in phone during pairing.	2. Be certain that phone book transfer is accepted or enabled in the phone during pairing to enable the Uconnect phone book download feature.
	3. Missing contacts from downloaded phone book.	3. Only contacts with a phone number are downloaded from phone and the number of contacts downloaded is limited to 1000.
PHONE BOOK NAMES NOT RECOGNIZED CONSISTENTLY	1. User is not waiting for the **beep** tone acknowledgment before issuing voice commands.	1. Be certain the user knows to wait for the acknowledgment **beep** tone prior to issuing voice commands.
	2. User is not issuing voice commands in a smooth and consistent speaking voice.	2. Be certain the user is issuing voice commands in a normal, smooth and consistent speaking voice. The Advanced Speech Recognition (ASR) engine is designed to recognize normal speech patterns and at a normal tone. Some users tend to speak to a computer loud and slow, which results in reduced performance.
	3. User is not using proper Voice Recognition syntax.	3. User must speak using proper Voice Recognition syntax (i.e.: say **Call** - then name, or say **Dial** - then number).
	4. Phone book names too short.	4. For increased performance, it is recommended to use both first and last names for phone book entries. Example: **Daniel Johnson** as opposed to **Dan** .
	5. Name not spoken by user as it appears in the phone book.	5. Speak the full contact name as it appears in the phone book. Do not use nicknames.
	6. Multiple similar sounding names in the phone book.	6. For increased performance it is recommended that the user do not enter similar sounding names in the phone book.
	7. Phone book download not yet completed.	7. Depending upon the size of the contact list on the phone, the download may not have had time to complete. If the Phone Book button on the RRM phone screen appears greyed out, the contact list download is still in progress. Wait until download completes.
	8. High noise levels within the passenger compartment.	8. ASR engine performance is increased when noise conditions in the passenger compartment are lowered. Ideal conditions include having the windows closed and the blower fan set to Low or Off.

	9. Passengers are talking while the user is attempting to issue a voice command.	9. Although designed to focus on sounds from the driver's seated position, the directional microphones will pick up sounds from any seating position in the vehicle. ASR engine performance is increased in low noise environments.
	10. Foreign objects interfering with microphone input.	10. Verify that there are no foreign objects hanging from the inside rear view mirror that could be interfering with microphone reception.
	11. The inside rear view mirror is not properly attached to the mount.	11. The inside rear view mirror must be firmly mounted to the mounting location. Be certain the mirror is properly installed.
	12. The incorrect Uconnect switch button is being depressed.	12. Phone features are accessed using the Uconnect **Phone** button on the steering wheel or the **Phone** soft key in the RRM display. Other Uconnect Voice Recognition features are accessed using the Uconnect **VR** button or soft key.
	13. Microphone failure.	13. Use a diagnostic scan tool and the appropriate diagnostic procedures for further diagnosis of the microphone.
POOR PHONE AUDIO QUALITY	1. High noise levels within the passenger compartment.	1. ASR engine performance is increased when noise conditions in the passenger compartment are lowered. Ideal conditions include having the windows closed and the blower fan set to Low or Off.
	2. Passengers are talking while the user is attempting to issue a voice command.	2. Although designed to focus on sounds from the driver's seated position, the directional microphones will pick up sounds from any seating position in the vehicle. ASR engine performance is increased in low noise environments.
	3. Foreign objects interfering with microphone input.	3. Verify that there are no foreign objects hanging from the inside rear view mirror that could be interfering with microphone reception.
	4. The inside rear view mirror is not properly attached to the mount.	4. The inside rear view mirror must be firmly mounted to the mounting location. Be certain the mirror is properly installed.
	5. Microphone failure.	5. Use a diagnostic scan tool and the appropriate diagnostic procedures for further diagnosis of the microphone.
NO PHONE AUDIO	1. The settings in the phone cause the phone audio to be routed to a handset.	1. Route the phone audio to the hands-free device.

CALL LOG INOPERATIVE OR INACCURATE	1. Call log not supported by phone.	1. The Uconnect system requires that the cellular phone support the call log feature. To enable the Uconnect call log feature, the phone must be upgraded to one that is call log enabled. A list of suggested phones is available at: **http://www.chrysler.com /uconnect**
	2. The phone is not providing accurate call log data.	2. Refer to the operator's manual for the phone.
AUDIO OUTPUT TOO LOW	1. Volume setting on the Bluetooth device set too low.	1. Set the volume of the phone or other Bluetooth device to about three quarters (3/4) of full or maximum volume.
	2. Volume setting on the RRM set too low.	2. Set the volume of the RRM to the desired level during an active Uconnect Hands-Free Phone call session.

DIAGNOSIS AND TESTING > DIAGNOSIS AND TESTING - NAVIGATION

WARNING:

To avoid serious or fatal injury on vehicles equipped with airbags, disable the Supplemental Restraint System (SRS) before attempting any steering wheel, steering column, airbags, airbag curtains, knee blocker, seat belt tensioner, impact sensor or instrument panel component diagnosis or service. Disconnect the IBS/negative battery cable assembly from the negative battery post, then wait two minutes for the system capacitor to discharge before performing further diagnosis or service. This is the only sure way to disable the SRS. Failure to take the proper precautions could result in accidental airbag deployment.

The hard wired circuits between components related to the Radio Receiver Module (RRM) and the Uconnect™ Navigation system may be diagnosed using conventional diagnostic tools and procedures. Refer to the appropriate wiring information. The wiring information includes wiring diagrams, proper wire and connector repair procedures, details of wire harness routing and retention, connector pin out information and location views for the various wire harness connectors, splices and grounds.

However, conventional diagnostic methods will not prove conclusive in the diagnosis of the RRM or the electronic controls and communication between modules and other devices that provide some features of the Uconnect™ Navigation system. The most reliable, efficient and accurate means to diagnose the RRM or the electronic controls and communication related to Uconnect™ Navigation system operation requires the use of a diagnostic scan tool. Refer to the appropriate diagnostic information.

DIAGNOSIS AND TESTING > DIAGNOSIS AND TESTING - UCONNECT ACCESS

WARNING:

To avoid serious or fatal injury on vehicles equipped with airbags, disable the Supplemental Restraint System (SRS) before attempting any steering wheel, steering column, airbags, airbag curtains, knee blocker, seat belt tensioner, impact sensor or instrument panel component diagnosis or service. Disconnect the IBS/negative battery cable assembly from the negative battery post, then wait two minutes for the system capacitor to discharge before performing further diagnosis or service. This is the only sure way to disable the SRS. Failure to take the proper precautions could result in accidental airbag deployment.

The hard wired circuits between components related to the Radio Receiver Module (RRM) and the Uconnect™ Access system may be diagnosed using conventional diagnostic tools and procedures. Refer to the appropriate wiring information. The wiring information includes wiring diagrams, proper wire and connector repair procedures, details of wire harness routing and retention, connector pin out information and location views for the various wire harness connectors, splices and grounds.

However, conventional diagnostic methods will not prove conclusive in the diagnosis of the RRM or the electronic controls and communication between modules and other devices that provide some features of the Uconnect™ Access system.

A Light Emitting Diode (LED) indicator between the inside rear view mirror push buttons provides an indication of the status of the Uconnect™ Access embedded cellular device. Any fault indication is accompanied by a pop up screen in the RRM electronic touchscreen display. The following indications are provided whenever the status of the ignition switch is On or Accessory:

- **Solid Green** - No active call.
- **Flashing Green** - A Uconnect™ Access Care or 9-1-1 call is active.
- **Solid Red** - A CAN, embedded cellular device, cellular antenna or wiring fault has been detected.
- **Off** - No power supply to the rear view mirror.

In addition to the LED indicator on the mirror, one of the following error messages may appear in the RRM touchscreen display. These error messages will coincide with a solid red mirror LED indication.

- **Critical VIN Error** - This message typically indicates the radio data was not provisioned with the back end database, or that critical data within the RRM is missing. Diagnosis of this type of failure will require the assistance of the network provider.

    1. Enter the **Dealer Mode** menu by selecting the temperature up, temperature down and front defrost buttons simultaneously until the menu appears (about 5 to 8 seconds).

        1. Navigate through the **System Information** menu to the **Radio Part Information** menu.
        2. Write down the **Serial Number** listed on the **Radio Part Information** menu. The serial number begins with the characters, **T00BE** .

    2. Navigate back to the **Dealer Mode** menu.

        1. Navigate through the **##Menu Basic** menu to the **##RTN#** menu.
        2. Write down the **MDN** number listed on the **##RTN#** menu.
        3. Write down the **MSID** number listed on the **##RTN#** menu.

3. Place a call to Uconnect™ Care. Provide your dealer code, name, call back number and the Vehicle Identification Number (VIN). Request a ticket be opened with the network engineers to assist with Uconnect™ Access diagnostics. A ticket will be opened with the network engineers and a call back will occur within 15 minutes for further assistance and diagnostics.

- **Vehicle Phone Requires Service** - This message can indicate a fault with the antenna, the inside rear view mirror, communication with the Occupant Restraint Controller (ORC) module or any of the hard wired circuits between these components. Check for an active or stored Diagnostic Trouble Code (DTC) for any of the listed components. Follow all of the steps found in the diagnostic information for the retrieved DTC and fully check the hard wired circuitry associated with the DTC. If no DTC can be retrieved, an internal failure within the RRM may exist.

The Wi-Fi hot spot feature can only be diagnosed if the customer has subscribed for this additional feature. The same diagnostic steps associated with Uconnect™ Access will be used for Wi-Fi hot spot as they share the same network. In addition, each of the wireless devices of the customer must be properly paired for them to work.

NOTE:

The MIT019 Multi-Media Interface Tester special tool may also be used for testing where no Diagnostic Trouble Code (DTC) has been recorded, such as with Bluetooth™ reception and phone pairing issues. Refer to DIAGNOSIS AND TESTING .

NOTE:

Validation and diagnosis of many of the conditions listed below will require access to both the paired Bluetooth™ device and the PIN required for that device.

UCONNECT ACCESS DIAGNOSIS		
CONDITION	POSSIBLE CAUSES	CORRECTION
POOR VOICE RECOGNITION	1. User is not waiting for the **beep** tone acknowledgment before issuing Voice Commands.	1. Be certain the user knows to wait for the acknowledgment **beep** tone prior to issuing Voice Commands.
	2. User is not issuing Voice Commands in a smooth and consistent speaking voice.	2. Be certain the user is issuing Voice Commands in a normal, smooth and consistent speaking voice. The Advanced Speech Recognition (ASR) engine is designed to recognize normal speech patterns and at a normal tone. Some users tend to speak to a computer loud and slow, which results in reduced performance.
	3. User is not using proper Voice Command syntax.	3. User must speak using proper Voice Command syntax.

	4. High noise levels within the passenger compartment.	4. ASR engine performance is increased when noise conditions in the passenger compartment are lowered. Ideal conditions include having the windows closed and the blower fan set to Low or Off.
	5. Passengers are talking while the user is attempting to issue a Voice Command.	5. Although designed to focus on sounds from the driver's seated position, the directional microphones will pick up sounds from any seating position in the vehicle. ASR engine performance is increased in low noise environments.
	6. Foreign objects interfering with microphone input.	6. Verify that there are no foreign objects hanging from the inside rear view mirror that could be interfering with microphone reception.
	7. The inside rear view mirror is not properly attached to the mount.	7. The inside rear view mirror must be firmly mounted to the mounting location. Be certain the mirror is properly installed.
	8. The incorrect Uconnect switch button is being depressed.	8. Phone features are accessed using the Uconnect **Phone** button on the steering wheel or the **Phone** soft key in the RRM display. Other Uconnect Voice Command features are accessed using the Uconnect **VR** button or soft key.
	9. Microphone failure.	9. Use a diagnostic scan tool and the appropriate diagnostic procedures for further diagnosis of the microphone.
TEXT MESSAGING INOPERATIVE	1. The Bluetooth Message Access Profile (MAP) is not supported by the phone.	1. The Uconnect system requires that the cellular phone support the Bluetooth MAP for the text messaging feature. To enable the Uconnect text messaging feature, the phone must be upgraded to one that supports Bluetooth MAP. A list of suggested phones is available at: **http://www.chrysler.com/uconnect**
	2. The Connect-To-Your-Messages setting has not been accepted on the phone.	2. Accept the Connect-To-Your-Messages setting on the phone. Refer to the operator's manual for the phone.
ENHANCED VOICE-TO-TEXT (DICTATED) MESSAGING RESPONSE FEATURE INOPERATIVE	1. Uconnect registration incomplete.	1. Select the **Apps** soft key in the RRM display, then select the **Uconnect Registration App** soft key from the **Apps** list. For further assistance press the **ASSIST** button on the inside rear view mirror to contact Uconnect Customer Care.
	2. Uconnect Access subscription service is inactive.	2. This feature is only available with the Uconnect Access Advantage subscription service. Be certain that the subscription service account is active in the RRM.

	3. The Bluetooth Message Access Profile (MAP) is not supported by the phone.	3. The Uconnect system requires that the cellular phone support the Bluetooth MAP for the text messaging feature. To enable the Uconnect text messaging feature, the phone must be upgraded to one that supports Bluetooth MAP. A list of suggested phones is available at: **http://www.chrysler.com/uconnect**
	4. The Connect-To-Your-Messages setting has not been accepted on the phone.	4. Accept the Connect-To-Your-Messages setting on the phone. Refer to the operator's manual for the phone.
UNABLE TO PURCHASE APPLICATIONS FROM UCONNECT STORE FRONT	1. Uconnect registration incomplete.	1. Select the **Apps** soft key in the RRM display, then select the **Uconnect Registration App** soft key from the **Apps** list. For further assistance press the **ASSIST** button on the inside rear view mirror to contact Uconnect Customer Care.
	2. Wallet is not set up.	2. Set up a valid wallet for the Uconnect store front in order to purchase application subscriptions.
	3. Cellular antenna issue.	3. Refer to AUDIO/VIDEO/ENTERTAINMENT /CONNECTIVITY - SERVICE INFORMATION for further diagnosis of the cellular (combination) antenna.
REMOTE SERVICES INOPERATIVE	1. Uconnect registration incomplete.	1. Select the **Apps** soft key in the RRM display, then select the **Uconnect Registration App** soft key from the **Apps** list. For further assistance press the **ASSIST** button on the inside rear view mirror to contact Uconnect Customer Care.
	2. Phone is not compatible.	2. Be certain that the phone is compatible and is paired to the RRM. A list of suggested phones is available at: **http://www.chrysler.com /uconnect** .
	3. Uconnect Access Via Mobile application (app) not downloaded or not fully installed to smart phone.	3. Download the Uconnect Access Via Mobile app to the user's smart phone from **www.MoparOwnerConnect.com** . Allow sufficient time for the Uconnect Access Via Mobile application (app) download to smart phone to complete. Download times will vary widely with the throughput performance of the user's smart phone and the accessibility of the user's cellular network services.
	4. Uconnect Access subscription service is inactive in the RRM.	4. This feature is only available with the Uconnect Access Advantage subscription service. Be certain that the subscription service account is active in the RRM.

	5. Cellular antenna issue.	5. Refer to AUDIO/VIDEO/ENTERTAINMENT /CONNECTIVITY - SERVICE INFORMATION for further diagnosis of the cellular (combination) antenna.
	5. Radio Frequency Hub Module (RFHM) issue.	5. Further diagnosis of the RFHM requires the use of a diagnostic scan tool and the appropriate diagnostic procedures.
AUDIO OUTPUT TOO LOW	1. Volume setting on Bluetooth device set too low.	1. Set the volume of the phone or other Bluetooth device to about three quarters (3/4) of full or maximum volume.
	2. Volume setting on the RRM.	2. Set the volume of the RRM to the desired level during an active Uconnect Access feature session.
UCONNECT ACCESS INOPERATIVE - NO GREEN OR RED LED INDICATOR	1. Status of ignition switch is Off.	1. Ignition switch status must be On or Accessory during Uconnect Access operation.
	2. Inside rear view mirror wiring not connected.	2. Be certain the wire harness for the inside rear view mirror is connected and fully engaged.
	3. Ineffective ground circuit.	3. Test and repair the open inside rear view mirror ground circuit if required.
	4. Ineffective feed circuit.	4. Test and repair the open inside rear view mirror feed circuit if required.
UCONNECT ACCESS INOPERATIVE - GREEN LED INDICATOR	1. Uconnect registration incomplete.	1. Select the **Apps** soft key in the RRM display, then select the **Uconnect Registration App** soft key from the **Apps** list. For further assistance press the **ASSIST** button on the inside rear view mirror to contact Uconnect Customer Care.
	2. Uconnect Access subscription service is inactive in the RRM.	2. Many Uconnect Access features are only available with the Uconnect Access subscription service. Be certain that the subscription service account is active in the RRM.
	3. Uconnect Access application (app) corrupt or improperly installed.	3. Perform the Uconnect Access System Reinstall Applications Standard Procedure. Refer to STANDARD PROCEDURE .
UCONNECT ACCESS INOPERATIVE - RED LED INDICATOR	1. Loss of Controller Area Network (CAN) - Interior High Speed (IHS) or CAN-C communication.	1. Further diagnosis of CAN-IHS or CAN-C communication requires the use of a diagnostic scan tool and the appropriate diagnostic procedures.
	2. Cellular antenna issue.	2. Refer to AUDIO/VIDEO/ENTERTAINMENT /CONNECTIVITY - SERVICE INFORMATION for further diagnosis of the cellular (combination) antenna.
	3. Ineffective embedded cellular device.	3. Further diagnosis of the RRM requires the use of a diagnostic scan tool and the appropriate

		diagnostic procedures. Test and replace the RRM, if required.
WI-FI HOT SPOT INOPERATIVE	1. Uconnect registration incomplete.	1. Select the **Apps** soft key in the RRM display, then select the **Uconnect Registration App** soft key from the **Apps** list. For further assistance press the **ASSIST** button on the inside rear view mirror to contact Uconnect Customer Care.
	2. Uconnect Wi-Fi subscription service is inactive or expired in the RRM.	2. This feature is only available with the Uconnect Wi-Fi subscription service. Be certain that the subscription service account is active in the RRM.
	3. Wi-Fi capability is not enabled in user's Bluetooth device.	3. Confirm Wi-Fi setting in user's Bluetooth device is enabled. Refer to the user's manual for that device.
	4. Selected Wireless Access Point (WAP) is incorrect.	4. Confirm that correct WAP is selected in user's Bluetooth device. Refer to the user's manual for that device.
	5. Wireless Access Point (WAP) password or security settings incorrect.	5. Use the Application Settings menu of the RRM display to confirm or adjust the WAP password and security settings.
	6. Cellular antenna issue.	6. Refer to AUDIO/VIDEO/ENTERTAINMENT /CONNECTIVITY - SERVICE INFORMATION for further diagnosis of the cellular antenna.

STANDARD PROCEDURE > NAVIGATION SYSTEM - ACTIVATION

In vehicles equipped with the optional Navigation Ready version of the Radio Receiver Module (RRM), if the customer chooses to have the navigation system activated, the vehicle must be returned to the dealer for system activation. The dealer activates the navigation system as follows:

NOTE:

Once a Radio Receiver Module (RRM) with the Navigation Ready feature has had the Navigation feature activated, any factory replacement RRM for the same vehicle will be provided with the Navigation system already activated.

1. Place the RRM into Dealer Mode using a simultaneous 3 button press of the driver side Temperature Up, driver side Temperature Down and Front Defrost push buttons.
2. The Dealer Mode screen will appear in the RRM display showing the System Information menu. Select the **VP3 Navigation Activation** menu item.
3. A Navigation Activation screen appears advising that an Activation Code needs to be purchased and referencing Technical Service Bulletin (TSB) 08-031-12. A 16 digit alpha

numeric Request Code appears just below the displayed text.

4. With the Request Code and the Vehicle Identification Number (VIN), log onto the DealerConnect web site (**https://dealerconnect.chrysler.com/**). Locate the Navigation Activation link on the web site, enter the Request Code and VIN as appropriate. The web site will respond with an alpha numeric Activation Code.

> *NOTE:*
>
> ***During the initial launch of this product, the dealer will be provided with a Navigation Activation phone number (Nokia Location And Content Call Center) to use in order to obtain an Activation Code rather than the DealerConnect link mentioned in Step 4.***

5. With the Activation Code, go back to the RRM and press the **OK** button on the Navigation Activation screen. A Data Entry screen will appear. Enter the Activation Code, then press the **OK** button on the Data Entry screen.
6. The navigation system has now been activated using the hardware and software that was installed in the RRM at the time that it was manufactured. If the customer wishes to update the factory installed map and Points-Of-Interest (POI) software, it may be purchased at the customer's expense and downloaded from the Navteq Maps web site (**www.navigation.com**). See Navigation System - Restore Or Update. Refer to STANDARD PROCEDURE .

STANDARD PROCEDURE > NAVIGATION SYSTEM - RESTORE OR UPDATE

Navigation System map and Point-Of-Interest (POI) data updates may become available occasionally through the Navteq Maps web site (www.navigation.com). The updated information as well as some additional feature applications can be downloaded and copied to Universal Serial Bus (USB) media for transfer and installation to the navigation module within the Radio Receiver Module (RRM) in the vehicle. These are fee-based applications and updates, which are made at the option and expense of the customer.

However, a new RRM is equipped with only a standard base version of the map and POI data. Before an original RRM is replaced by the dealer with a new unit, the version of the map and POI data on the original RRM must be noted. If the version of the map and POI data found on the new RRM is not equal to or newer than the version that was found on the replaced RRM, updated data will have to be downloaded and installed to the new RRM at the expense of the dealer.

STANDARD PROCEDURE > UCONNECT ACCESS SYSTEM - REINSTALL APPLICATIONS

> *NOTE:*
>
> ***The following procedure may assist the dealer technician in diagnosis by reloading the applications for which the vehicle owner or operator has valid subscriptions. This***

is primarily used to troubleshoot any application provisioning or data corruption issues. The reinstallation process may take up to 30 minutes, depending upon the number of apps and the cellular signal strength seen on the Apps orb of the Radio Receiver Module (RRM).

The Reinstall Applications procedure can only be initiated from the touchscreen of the RRM.

During this procedure, the subscribed applications are removed from the RRM and reinstalled based upon data found on the cloud server. The applications reinstalled onto the RRM will be based upon valid subscriptions and is referred to as Digital Rights.

1. Navigate through the **Apps > Uconnect Store > My Apps > Settings** on the RRM touchscreen.
2. Select **Reinstall Apps** .
3. Press the **Continue** soft key to initiate the Reinstall Applications procedure, or press the **Help** soft key for more information.
4. When the **Apps reinstalled. Radio will restart shortly.** screen appears, press the **OK** soft key.
5. Once the request is processed, a screen will appear alerting the customer with the message, **Important: Application Data Reset Initiated. After Radio Resets, all application data will be lost. Please Wait.** After the radio reset occurs, the apps will begin to be reinstalled. The reinstallation process may take up to 30 minutes, depending upon the number of apps and the cellular signal strength seen on the Apps orb of the RRM.

NOTE:

One or two ignition cycles (including bus time-outs) may speed the reloading process following the radio reset.

STANDARD PROCEDURE > UCONNECT ACCESS SYSTEM - REMOVE ACCOUNTS

NOTE:

The following procedure is provided to the dealer technician as INFORMATION ONLY. This procedure is intended for use by the vehicle owner or operator. This procedure is used when selling the vehicle or cancelling the Uconnect Access account. Removing the account will disassociate the Vehicle Identification Number (VIN) from the account and remove Uconnect Access features from the vehicle. The Uconnect Access features can be reinstated by repeating the registration process through the Radio Receiver Module (RRM) and following the directions associated with registering for Uconnect Access.

The Remove Accounts procedure can be initiated by one of three methods:

- Through the touchscreen of the RRM.
- Through the Uconnect™ Call Center (**ASSIST** button on inside rear view mirror) or under **Uconnect™ Apps** selection of the RRM display.
- Through the Uconnect™ Owners information accessed through the Mopar Owner Connect web site (www.moparownerconnect.com).

The following describes the Remove Accounts procedure accomplished through the RRM touchscreen:

1. Navigate through **Apps > Uconnect Store > My Apps > Settings** on the RRM touchscreen.
2. Select **Remove Uconnect Account** .
3. Press the **Continue** soft key after each of the two **Warning** screens, or press the **Cancel** soft key to abort the procedure.
4. When the **Authentication** screen is reached, enter the 4 digit **Uconnect Access ID** .
5. Press the **Continue** soft key to continue the Remove Accounts procedure, the **Help** soft key for additional information or the **Cancel** soft key to abort the Remove Accounts procedure.
6. When the **This vehicle has been removed from your account.** screen appears, press the **OK** soft key. Once the request is processed, a screen will appear alerting the customer with the message, **Important: Application Data Reset Initiated. After Radio Resets, all application data will be lost. Please Wait.**
7. After the radio reset occurs, Uconnect Access applications will no longer be available and the **Uconnect Registration** screen will appear each time the **Apps** soft key is selected until a new valid registration has been successfully completed.

ANTENNA, NAVIGATION > DESCRIPTION > DESCRIPTION

The navigation module acquires Global Positioning System (GPS) position data through a roof-mounted combination antenna that also receives satellite audio and cellular signals. Refer to ANTENNA, SATELLITE, DESCRIPTION .

ANTENNA, NAVIGATION > OPERATION > OPERATION

The navigation module acquires Global Positioning System (GPS) position data through a roof-mounted combination antenna that also receives satellite audio and cellular signals. Refer to ANTENNA, SATELLITE, DESCRIPTION .

ANTENNA, NAVIGATION > DIAGNOSIS AND TESTING > DIAGNOSIS AND TESTING - NAVIGATION ANTENNA

Refer to DIAGNOSIS AND TESTING .

ANTENNA, NAVIGATION > REMOVAL > REMOVAL

The navigation antenna is serviced as a unit with the combination antenna located on the roof panel. Refer to ANTENNA, SATELLITE, REMOVAL .

ANTENNA, NAVIGATION > INSTALLATION > INSTALLATION

The navigation antenna is serviced as a unit with the combination antenna located on the roof panel. Refer to ANTENNA, SATELLITE, INSTALLATION .

MICROPHONE > DESCRIPTION > DESCRIPTION

Fig 1: Stereo Microphones, Rear View Mirror Housing And Push Buttons

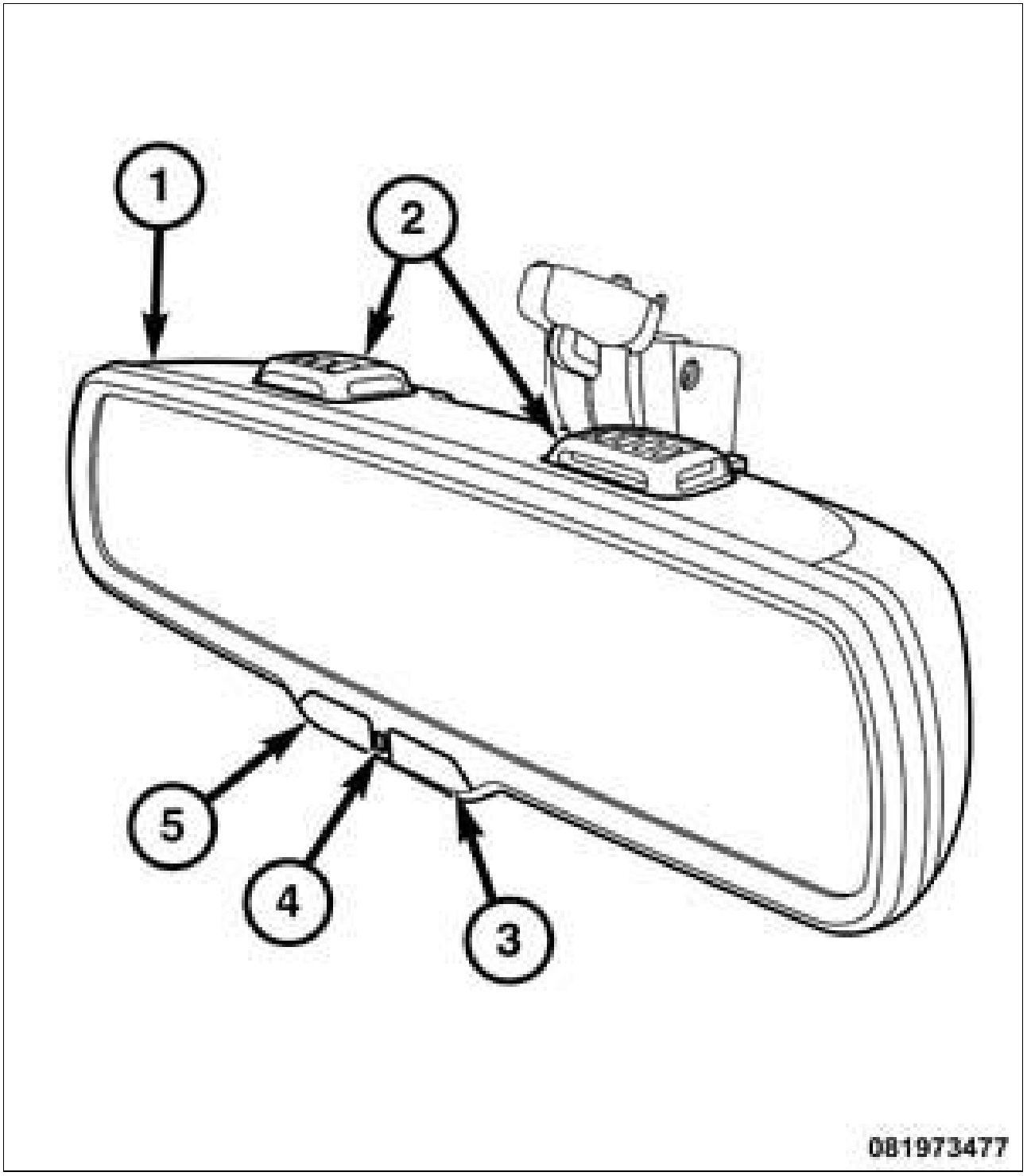

Courtesy of CHRYSLER GROUP, LLC

Vehicles equipped with the optional hands-free system have two stereo microphones (2) mounted in the top surface of the inside rear view mirror housing (1), one to each side of center. The two microphones are individually powered by and provide hard wired inputs to the Radio Receiver Module (RRM) in the instrument panel whenever the Voice Recognition (VR) feature of the hands-free system is active. These two microphones are connected to the vehicle electrical system through a connector receptacle integral to the forward-facing surface of the inside rear view mirror housing by a dedicated take out and connector of the overhead wire harness.

In vehicles equipped with the optional Uconnect™ Access system, the inside rear view mirror system also houses both a **9-1-1** push button (3) and an **Assist** push button (5).

The microphones cannot be adjusted or repaired and, if damaged or ineffective, they must be replaced as a unit with the inside rear view mirror assembly.

MICROPHONE > OPERATION > OPERATION

When the hands-free Voice Recognition (VR) control circuitry integral and internal to the Radio Receiver Module (RRM) detects the appropriate inputs or requests, it energizes the circuitry of the two stereo microphones within the inside rear view mirror housing. The microphones remain active until they are deactivated by the hands-free VR control circuitry, or until the status of the ignition switch (Keyless Ignition Node/KIN) transitions to Off, whichever occurs first.

The inputs from the microphones is processed, filtered and redirected by the VR control circuitry and logic as appropriate. Those inputs can be redirected to the Advanced Speech Recognition (ASR) engine or to the audio send circuitry of the Bluetooth™ transceiver. Each of these electronic modules is also integral and internal to the RRM.

The status of the Uconnect™ Access **Assist** and **9-1-1** push buttons is relayed by the Local Interface Network (LIN) slave node integral to the inside rear view mirror over the LIN data bus to the Body Control Module (BCM), which is a LIN master node. The BCM is also a Controller Area Network (CAN) data bus gateway and relays the push button status information to the RRM over the CAN - Interior High Speed (CAN-IHS) data bus.

The hard wired inputs and outputs of the microphones in the inside rear view mirror may be diagnosed using conventional diagnostic tools and procedures. Refer to the appropriate wiring information. However, conventional diagnostic methods will not prove conclusive in the diagnosis of the microphone or the electronic controls and communication between modules and other devices that provide some features of the RRM controlled microphones. The most reliable, efficient and accurate means to diagnose the RRM or the electronic controls and communication related to RRM-controlled microphone operation requires the use of a diagnostic scan tool. Refer to the appropriate diagnostic information.

MICROPHONE > DIAGNOSIS AND TESTING > DIAGNOSIS AND TESTING - MICROPHONE

WARNING:

To avoid serious or fatal injury on vehicles equipped with airbags, disable the Supplemental Restraint System (SRS) before attempting any steering wheel, steering column, airbags, airbag curtains, knee blocker, seat belt tensioner, impact sensor or instrument panel component diagnosis or service. Disconnect the IBS/negative battery cable assembly from the negative battery post, then wait two minutes for the system capacitor to discharge before performing further diagnosis or service. This is the only sure way to disable the SRS. Failure to take the proper precautions could result in accidental airbag deployment.

The hard wired inputs and outputs of the microphones in the inside rear view mirror may be diagnosed

using conventional diagnostic tools and procedures. Refer to the appropriate wiring information. However, conventional diagnostic methods will not prove conclusive in the diagnosis of the microphone or the electronic controls and communication between modules and other devices that provide some features of the Radio Receiver Module (RRM) controlled microphones. The most reliable, efficient and accurate means to diagnose the RRM or the electronic controls and communication related to RRM-controlled microphone operation requires the use of a diagnostic scan tool. Refer to the appropriate diagnostic information.

MICROPHONE > REMOVAL > REMOVAL

The inside rear view mirror mounted microphones used in this vehicle are integral to and serviced only as a unit with the inside rear view mirror. Refer to MIRROR, REARVIEW, REMOVAL .

MICROPHONE > INSTALLATION > INSTALLATION

The inside rear view mirror mounted microphones used in this vehicle are integral to and serviced only as a unit with the inside rear view mirror. Refer to MIRROR, REARVIEW, INSTALLATION .

DESCRIPTION > DESCRIPTION

This service information covers the various standard and optional power distribution components used on this model. The power distribution system for this vehicle consists of the following components:

- Body Control Module (BCM)
- Power Distribution Center (PDC)
- Auxiliary PDC for vehicles equipped with a diesel engine
- 12 Volt Power Outlets
- Power Inverter Module
- NAFTA model 115 Volt Power Outlet.
- BUX model 220 Volt Power Outlet

The power distribution system also incorporates various types of circuit control and protection features, including:

- Automatic resetting circuit breakers
- Blade-type fuses
- Cartridge fuses
- Fusible links
- Standard and Micro-Relays

Following are general descriptions of the major components in the power distribution system. See the owner's manual in the vehicle glove box for more information on the features and use of all of the power distribution system components. Refer to SYSTEM WIRING DIAGRAMS for complete circuit diagrams.

For specific fuse location and types. Refer to FUSE - RELAY LOCATIONS AND TYPES, SPECIFICATIONS .

The PDC is serviced as part of the engine compartment body harness.

OPERATION > OPERATION

The power distribution system for this vehicle is designed to provide safe, reliable, and centralized distribution points for the electrical current required to operate all of the standard and optional factory-installed electrical and electronic powertrain, chassis, safety, security, comfort and convenience systems. At the same time, the power distribution system was designed to provide ready access to these electrical distribution points for the vehicle technician to use when conducting diagnosis and repair of faulty circuits. The power distribution system can also prove useful for the sourcing of additional electrical circuits that may be required to provide the electrical current needed to operate accessories that the vehicle owner may choose to have installed in the aftermarket.

MODULE, POWER INVERTER > OPERATION > OPERATION

The AC power outlet receives 12 volts from the Power distribution Center (PDC) and passes it as an enable signal to the inverter module. The inverter module also receives 12 volts via the PDC and inverts this to a 115 volt AC output (220 volt for BUX models). The enable signal received from the power outlet enables the inverter to convert the received voltage and pass it to the power outlet to power external devices.

MODULE, POWER INVERTER > REMOVAL > REMOVAL

Fig 1: Two Retainers, Electrical Connector & Power Inverter Module

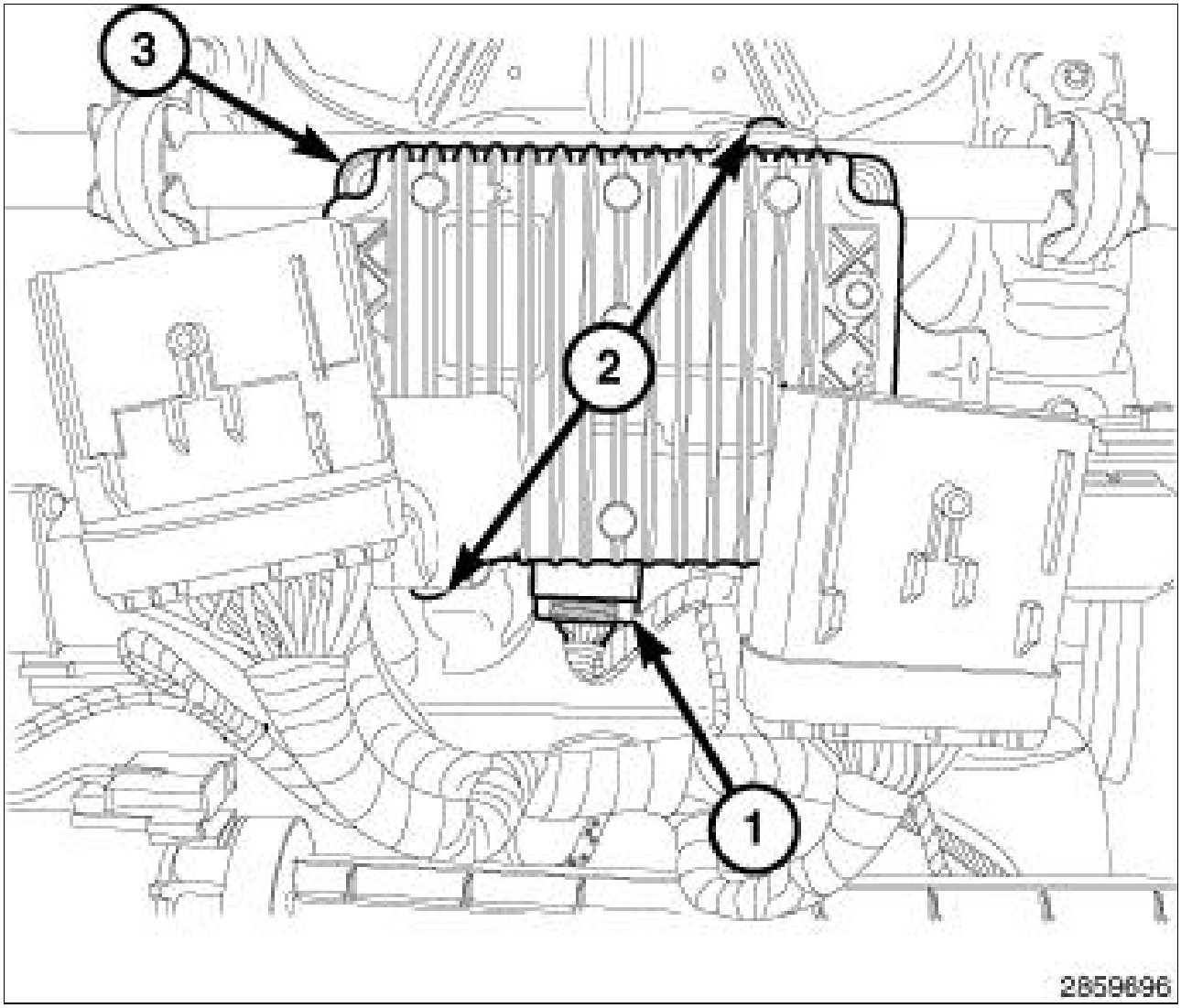

Courtesy of CHRYSLER GROUP, LLC

1. Disconnect and isolate the battery negative cable.
2. Remove the passenger side front seat. Refer to SEAT, FRONT, REMOVAL .

3. Remove the two retainers (2).
4. Disconnect the electrical connector (1).
5. Slide the power inverter module (3) out of the bracket.

MODULE, POWER INVERTER > INSTALLATION > INSTALLATION

Fig 1: Two Retainers, Electrical Connector & Power Inverter Module

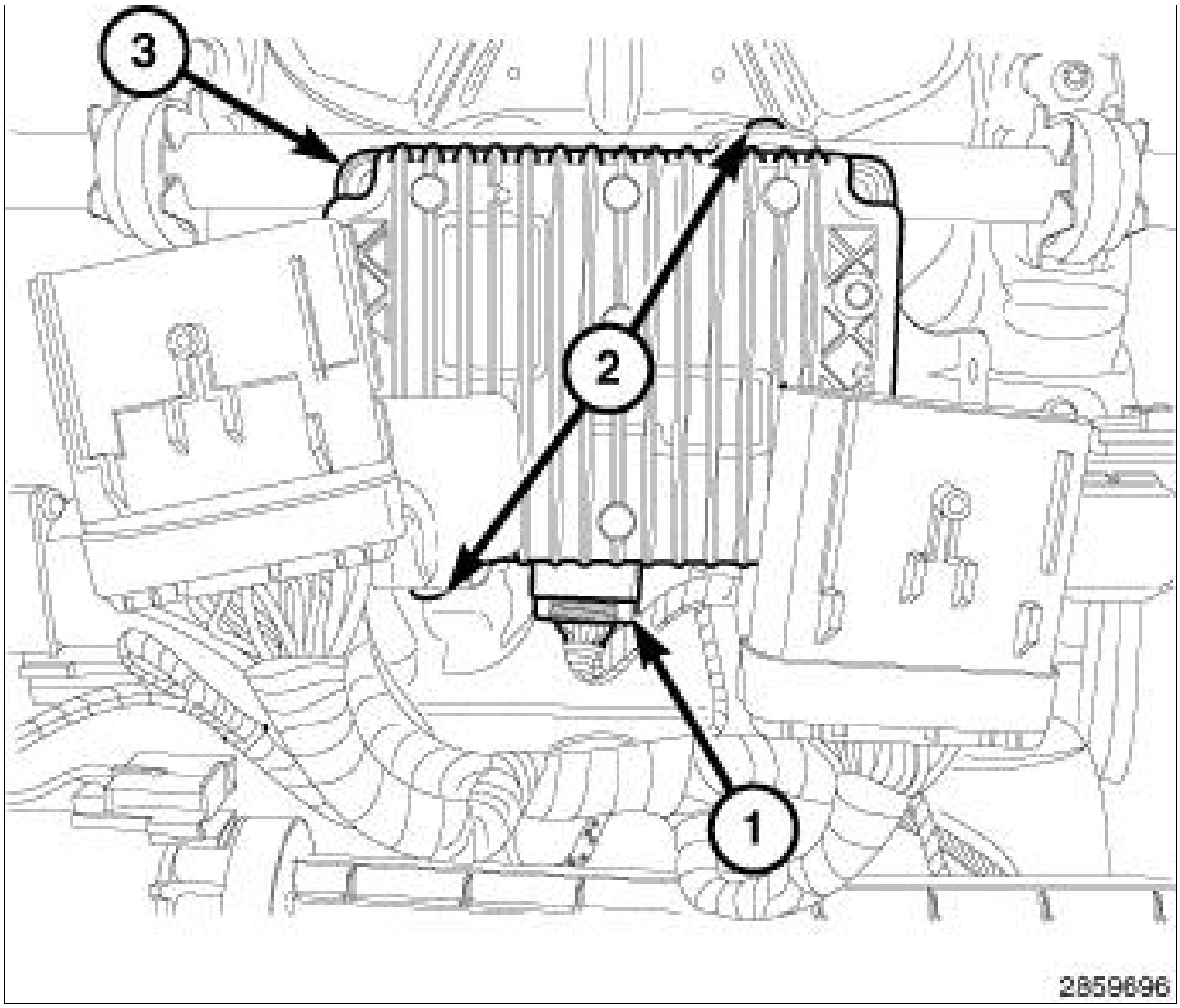

Courtesy of CHRYSLER GROUP, LLC

1. Slide the power inverter module (3) into the bracket.
2. Connect the electrical connector (1).
3. Install the two retainers (2).
4. Install the passenger side front seat Refer to SEAT, FRONT, INSTALLATION .
5. Connect the negative battery cable.

OUTLET, POWER, 12 V > DESCRIPTION > DESCRIPTION

This vehicle is equipped with 12 Volt (13 Amp) power outlets that can be used to power cellular phones, small electronics and other low powered electrical accessories. The power outlets are labeled with either a "key" or a "battery" symbol to indicate how the outlet is powered. Power outlets labeled with a "key" are powered when the ignition switch is in the ON or ACC position, while the outlets labeled with a "battery" are connected directly to the battery and powered at all times.

The outlets are located in the following locations:

- One outlet in the rear cargo area left quarter trim panel.
- One outlet in the instrument panel center stack under the heat/air conditioning controller.
- One outlet in the center console assembly.

OUTLET, POWER, 12 V > REMOVAL > REMOVAL - CARGO OUTLET

1. Disconnect and isolate the battery negative cable.

Fig 1: Inserting Power Outlet Remover Special Tool

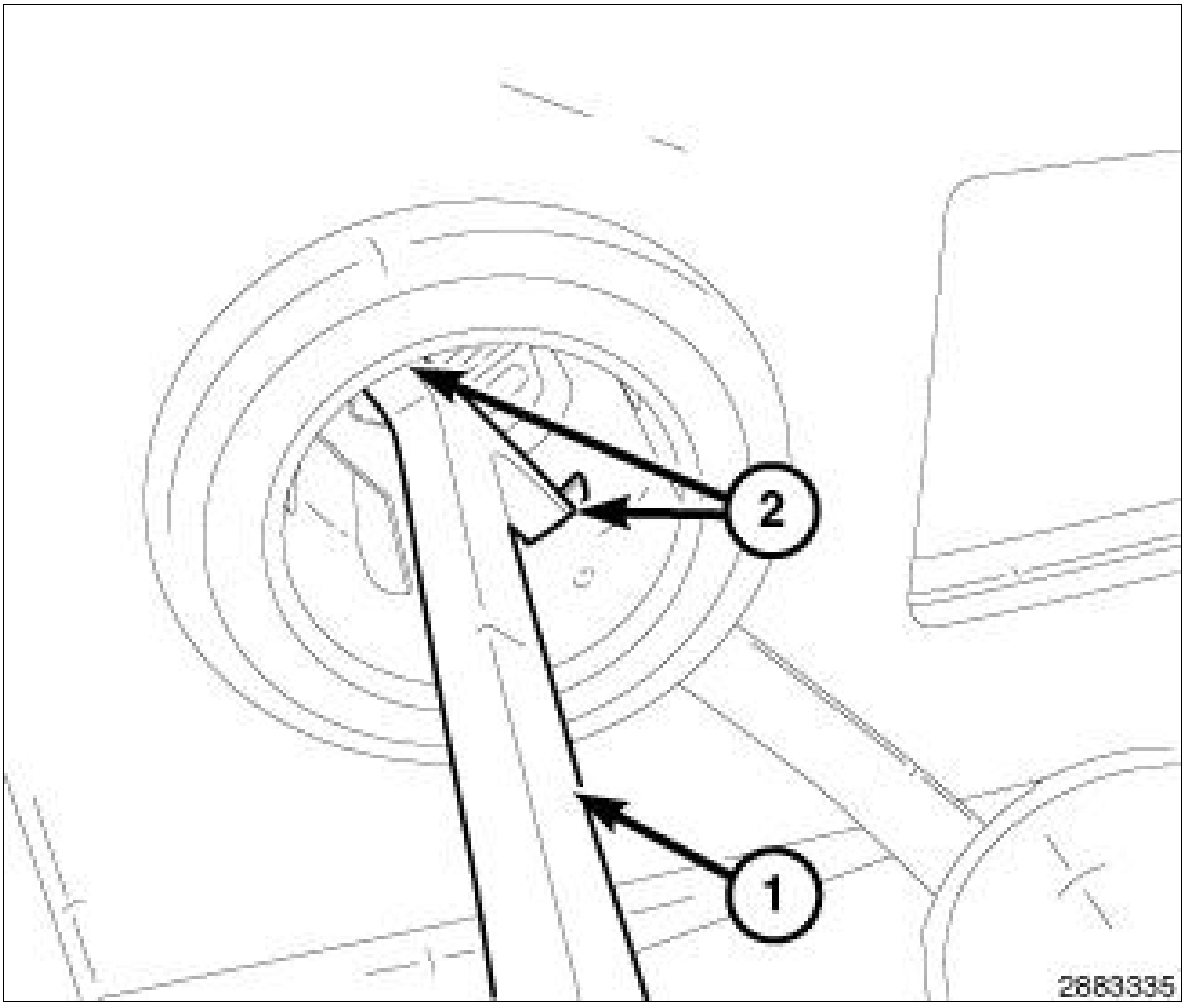

Courtesy of CHRYSLER GROUP, LLC

2. Look inside and note position of the retaining bosses (2).
3. Insert Remover, Power Outlet (special tool #10246, Remover, Power Outlet) (1) into the retaining bosses (2) of the power outlet.
4. Pull out the base through the mounting ring by gently rocking the tool.

Fig 2: Power Outlet & Connector

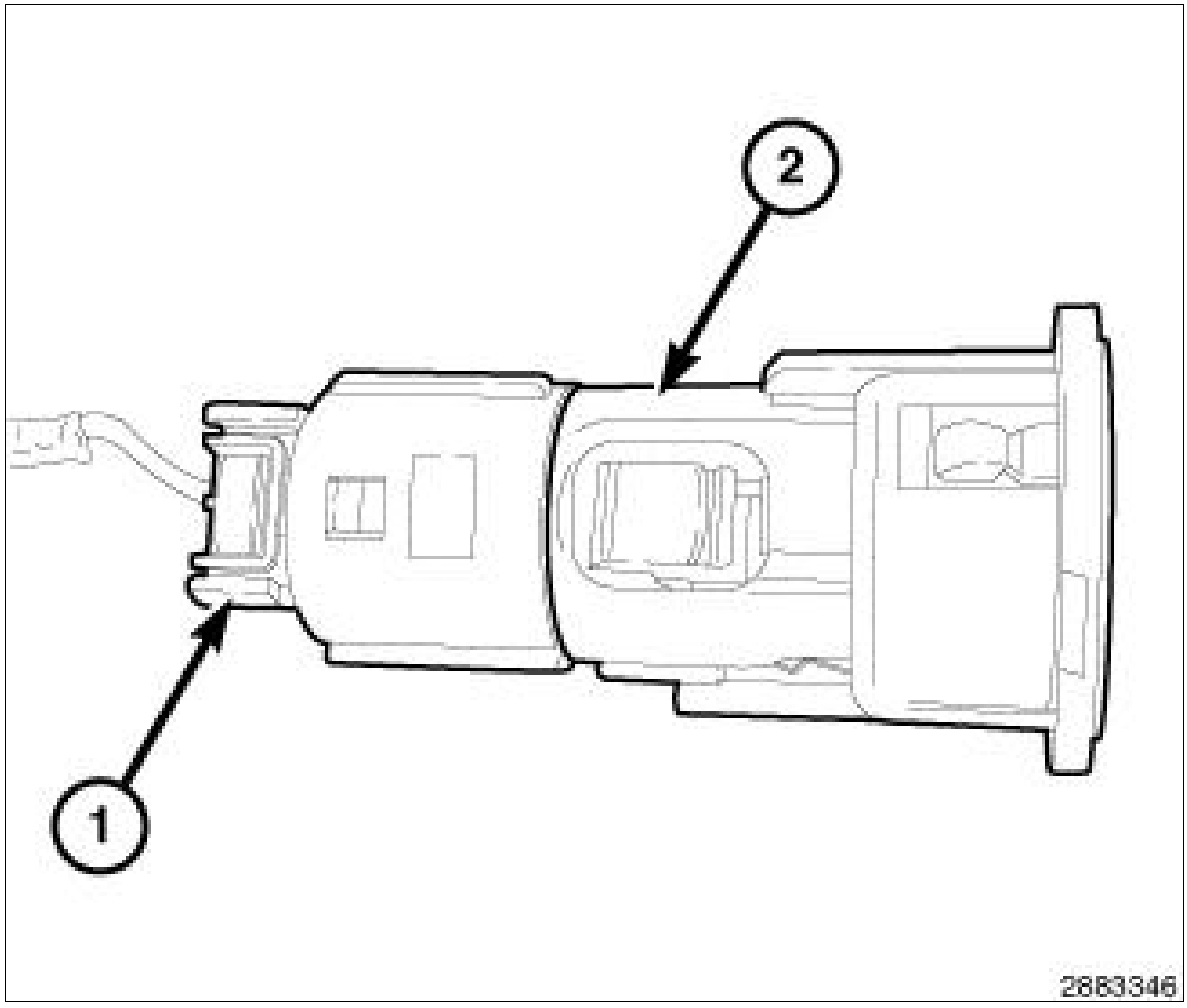

Courtesy of CHRYSLER GROUP, LLC

5. Disconnect the harness (1) from the power outlet (2).
6. Set the base aside and remove the base mount ring.

OUTLET, POWER, 12 V > INSTALLATION > INSTALLATION CARGO OUTLET

Fig 1: Power Outlet & Connector

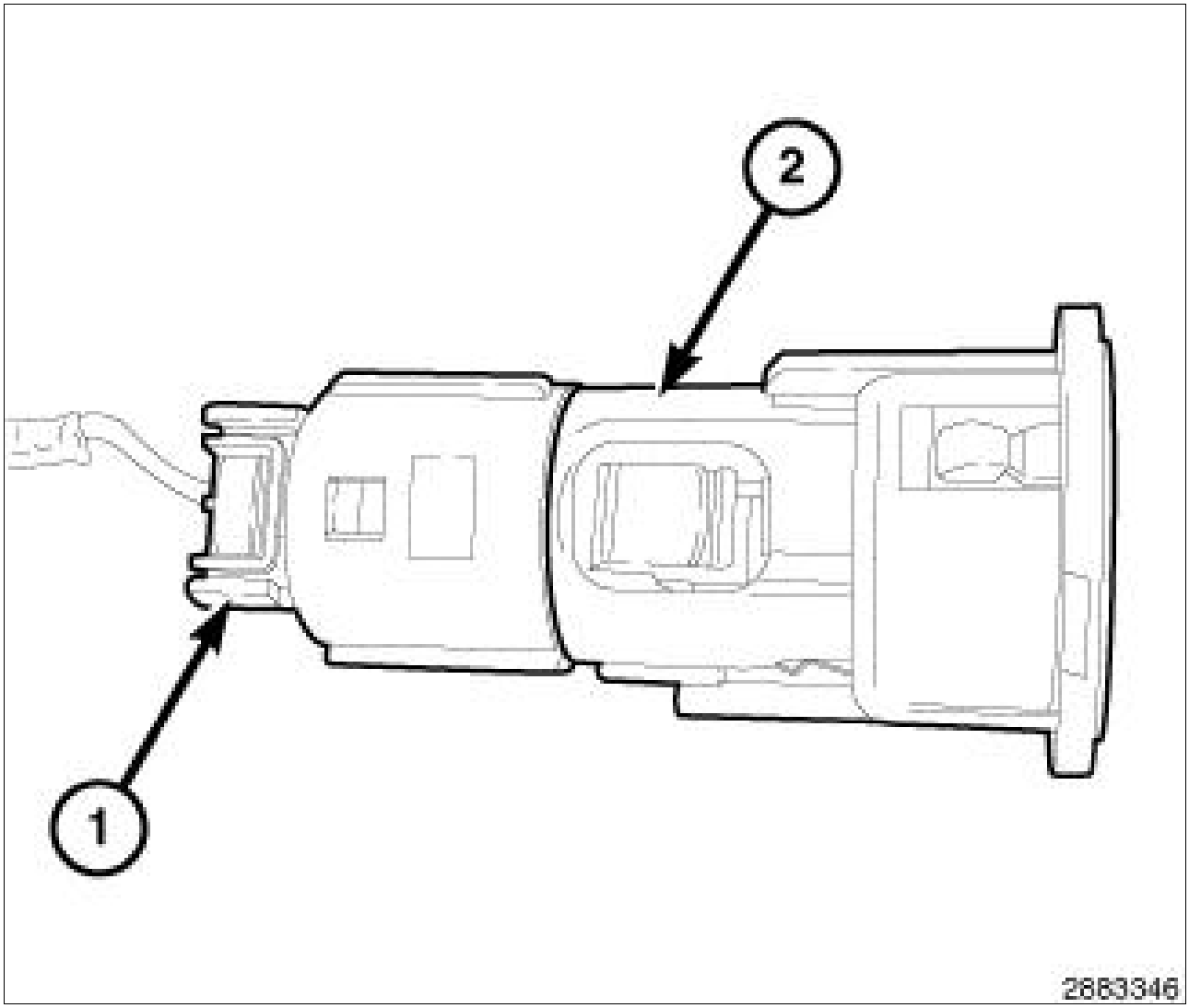

Courtesy of CHRYSLER GROUP, LLC

1. Connect the wire connector (1) to the power outlet receptacle (2).
2. Install the power outlet mount into the panel.
3. Align the splines on the outside of the power outlet receptacle base connector receptacle with the grooves on the inside of the mount.
4. Press firmly on the power outlet receptacle base until the retaining bosses of the mount are fully engaged in their receptacles.
5. Connect the battery negative cable.

OUTLET, POWER, 115 V > DESCRIPTION > DESCRIPTION

NOTE:

The 115-volt outlet is used in NAFTA models. A 220-volt is used in BUX models.

Fig 1: 115 Volt AC Outlet

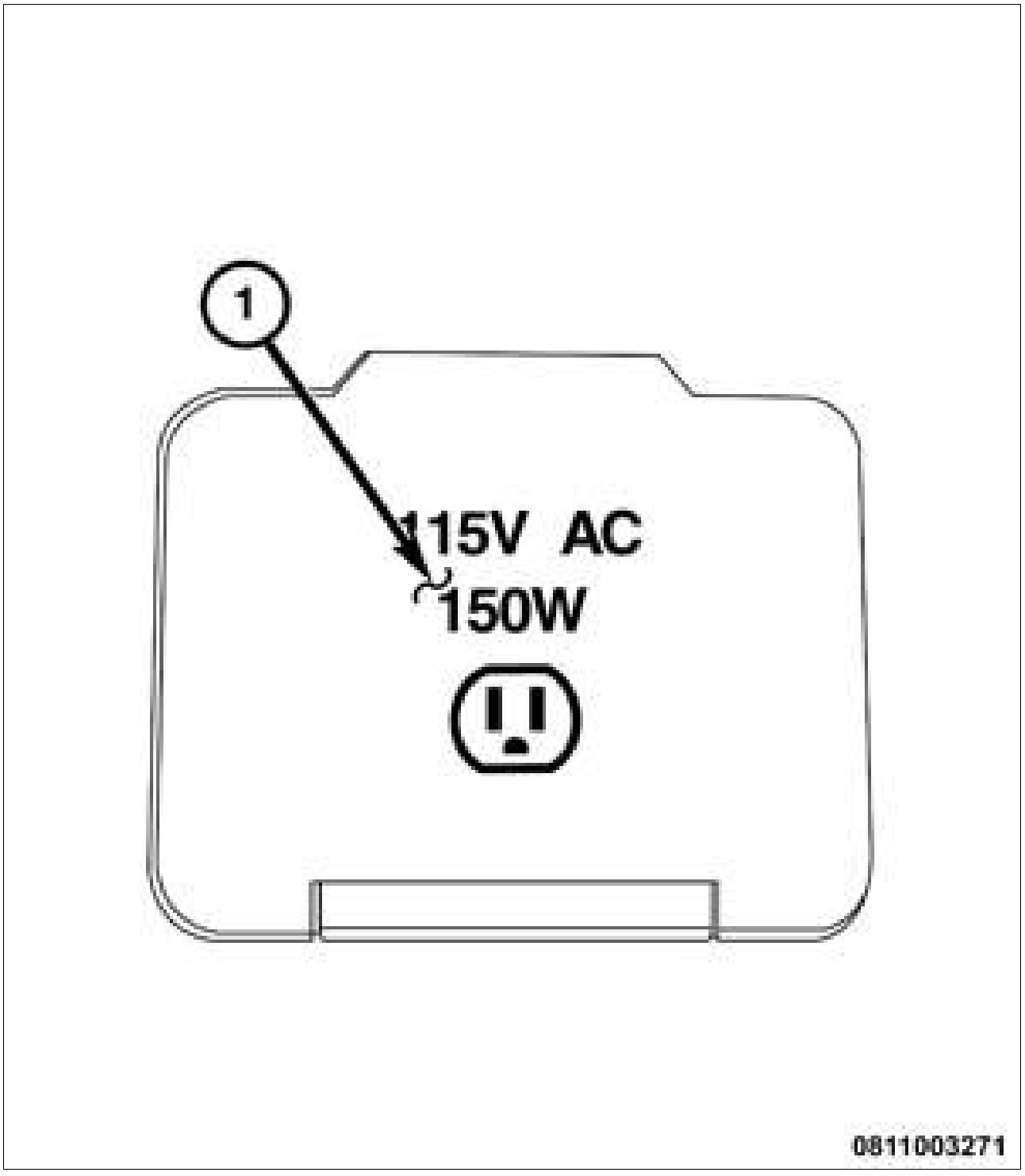

Courtesy of CHRYSLER GROUP, LLC

The DC/AC Inverter is an electrical device that converts direct current (DC) to alternating current (AC). This can only be used to supply small appliances. The output voltage of the inverter can be a full sine wave or a modified sine wave. The 115-volt AC outlet is used in NAFTA models. A 220-volt is used in BUX models. The AC outlet (3) is mounted in the rear of the center floor console (2). The vehicle is able

to supply AC power through the use of a inverter module. The inverter module is located under the right rear seat cushion. The inverter converts the 12 Volt DC from the vehicle battery system to a 115 Volt AC output for NAFTA vehicles. The BUX model converts the 12 Volt DC from the battery system to a 220 Volt AC output.

OUTLET, POWER, 115 V > OPERATION > OPERATION

The AC power outlet switch receives 12 volts from the Integrated Power Module (IPM) and passes it as an enable signal to the inverter module. The inverter module also receives 12 volts via the IPM and inverts this to a 115 volt AC output (220 for BUX models). The IPM sends a signal over the switch sense circuit advising the cluster that the outlet is active. The enable signal received from the power outlet switch enables the inverter to convert the received voltage and pass it to the power outlet to power external devices.

OUTLET, POWER, 115 V > DIAGNOSIS AND TESTING > DIAGNOSIS AND TESTING - INVERTER MODULE

For complete circuit diagrams, refer to the appropriate SYSTEM WIRING DIAGRAMS article.

> *WARNING:*
>
> *Disable the airbag system before attempting any steering wheel, steering column, seat belt tensioner, side airbag or instrument panel component diagnosis or service. Disconnect and isolate the negative battery (ground) cable. Wait two minutes for the airbag system capacitor to discharge before performing further diagnosis or service. This is the only sure way to disable the airbag system. Failure to follow these instructions may result in accidental airbag deployment and possible serious or fatal injury.*

115 VOLT POWER OUTLET DIAGNOSIS

CONDITION	POSSIBLE CAUSES	CORRECTION
NO POWER AT THE 115 VOLT POWER OUTLET. (220 VOLT POWER OUTLET FOR BUX MODEL)	1. Fuse inoperative.	1. Check Power Distribution Center (PDC) fuse. Replace fuse, if required.
	2. Power outlet connector damaged.	2. Check for loose or corroded power outlet connector. Repair, if required.
	3. Inverter module connector damaged.	3. Check for loose or corroded inverter module connector. Repair, if required.
	4. Wiring damaged.	4. Check for shorted or open wires. Repair wiring, if required.
	5. Inverter module ground damaged.	5. Check for continuity between the inverter module and a known good ground. There should be continuity. Repair ground, if

		required.
	6. Power outlet inoperative.	6. Replace the power outlet.
	7. Inverter module inoperative.	7. Replace the inverter module.
	8. Power outlet switch inoperative.	6. Replace the switch.

OUTLET, POWER, 115 V > REMOVAL > REMOVAL

Fig 1: Rear Center Console Bezel & Retainers

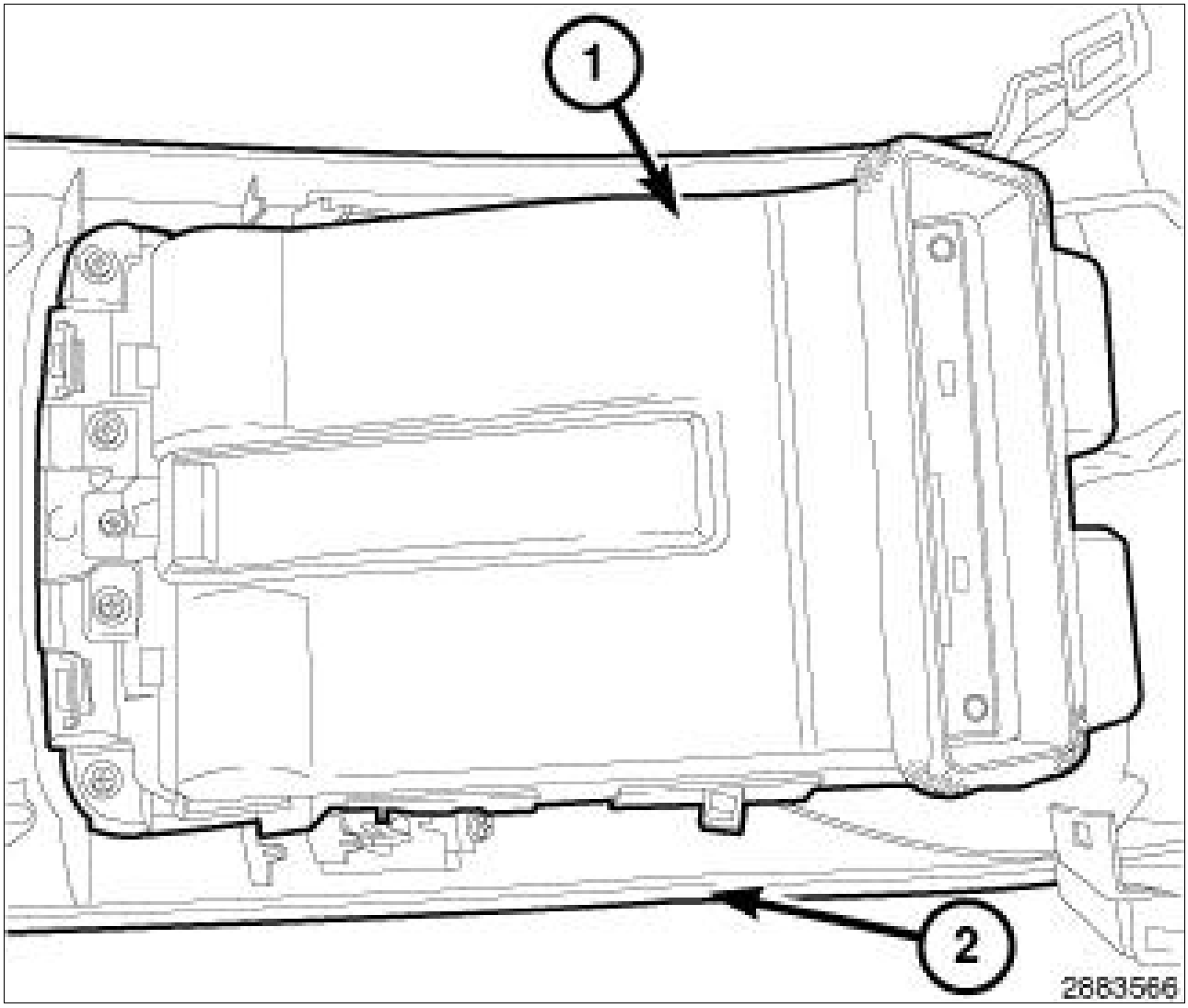

Courtesy of CHRYSLER GROUP, LLC

1. Disconnect and isolate the negative battery cable. If equipped with an Intelligent Battery Sensor (IBS), disconnect the IBS connector first before disconnecting the negative battery cable.
2. Using a trim stick remove the rear center console bezel.

3. Remove the retainers securing the duct work to the rear center console panel.

Fig 2: Electrical Connector & 115v Power Outlet

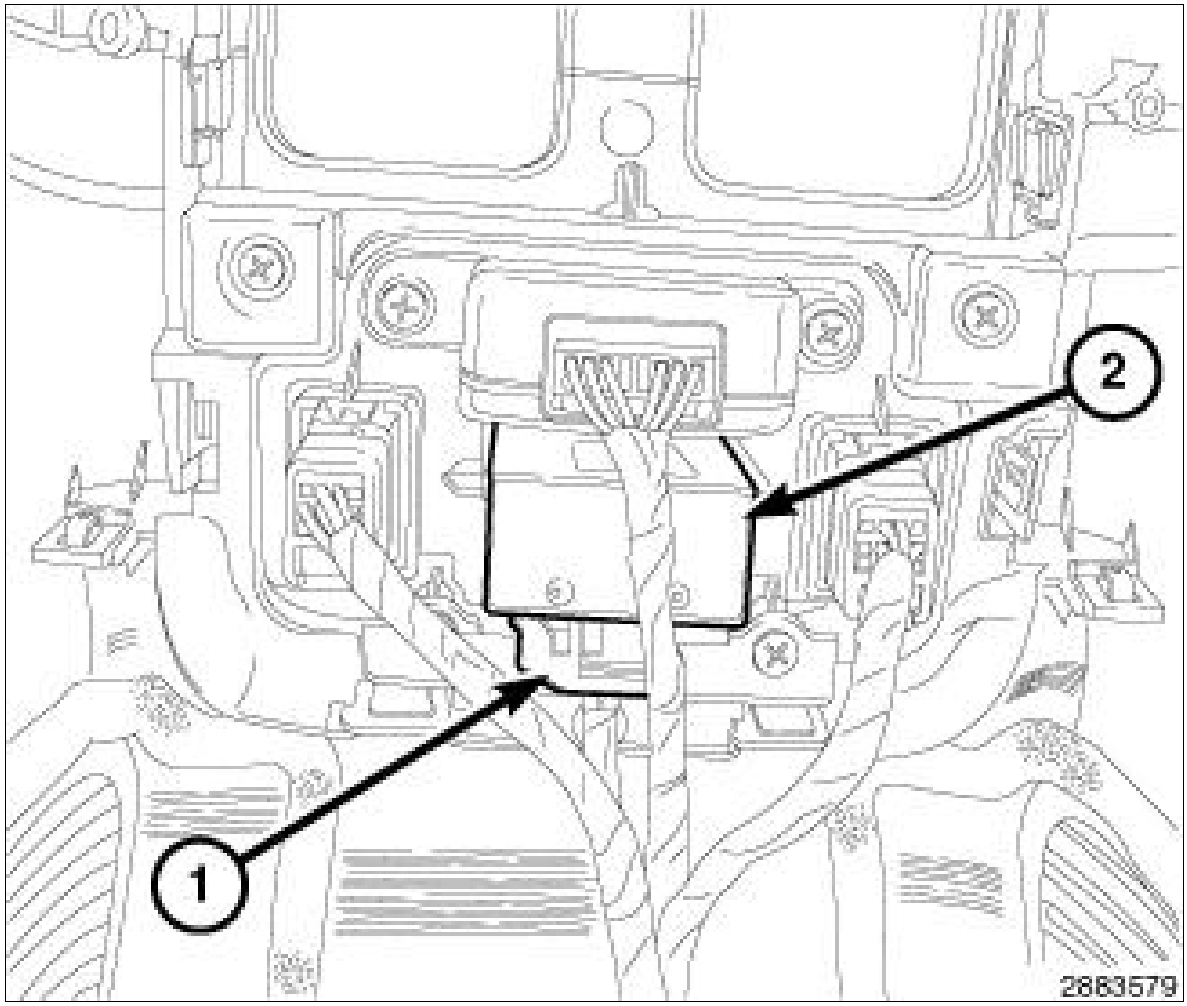

Courtesy of CHRYSLER GROUP, LLC

4. Disconnect the electrical connector (1) for the 115v power outlet (2).
5. Release the clips holding the 115v power outlet and push through the panel.

OUTLET, POWER, 115 V > INSTALLATION > INSTALLATION

Fig 1: Electrical Connector & 115v Power Outlet

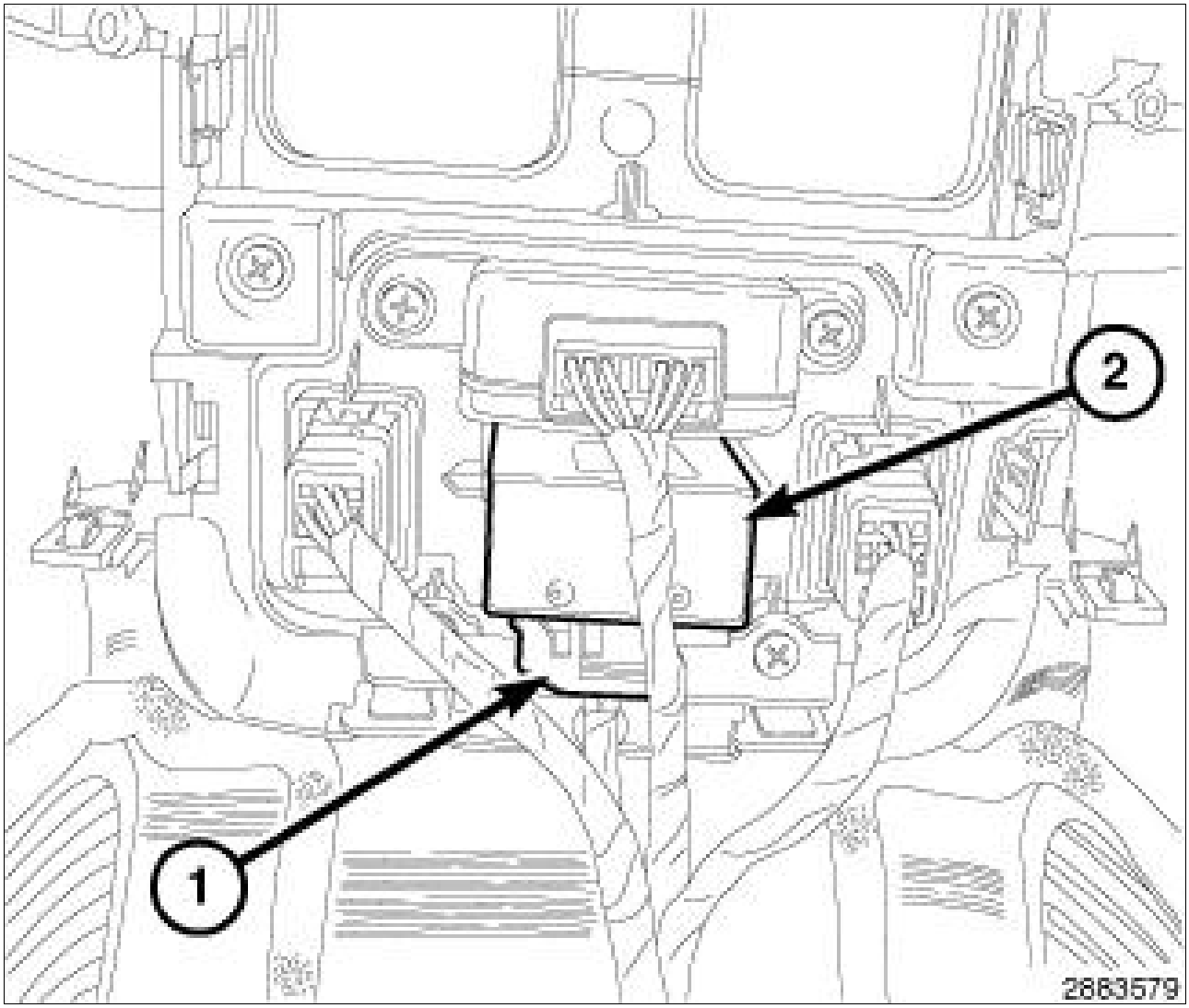

Courtesy of CHRYSLER GROUP, LLC

1. Insert the 115v outlet into the panel.
2. Connect the electrical connector (1) to the 115v power outlet (2).

Fig 2: Rear Center Console Bezel & Retainers

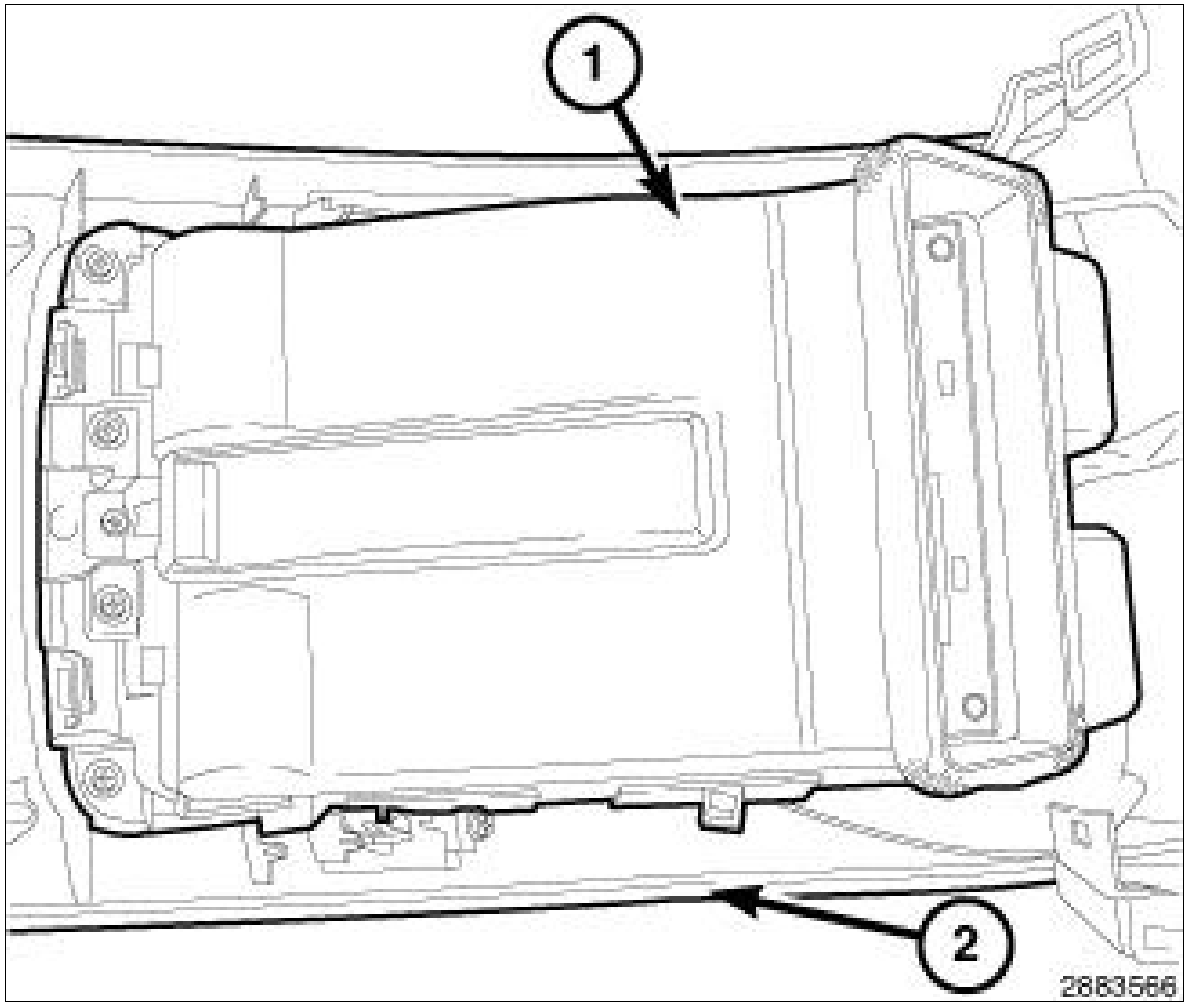

Courtesy of CHRYSLER GROUP, LLC

3. Install the duct to the trim panel.
4. Install the rear console trim panel.
5. Connect the negative battery cable. If equipped with an Intelligent Battery Sensor (IBS), connect the IBS connector to the negative battery cable.

CENTER, POWER DISTRIBUTION (PDC) > DESCRIPTION > DESCRIPTION

Fig 1: Power Distribution Center



Courtesy of CHRYSLER GROUP, LLC

The majority of electrical system fuses and relays are housed in the Power Distribution Center (PDC) located in the engine compartment (1). The molded plastic PDC housing is located in the left center of the engine compartment. The PDC houses the maxi-type cartridge fuses and solid state relays.

Fig 2: Power Distribution Center Relays

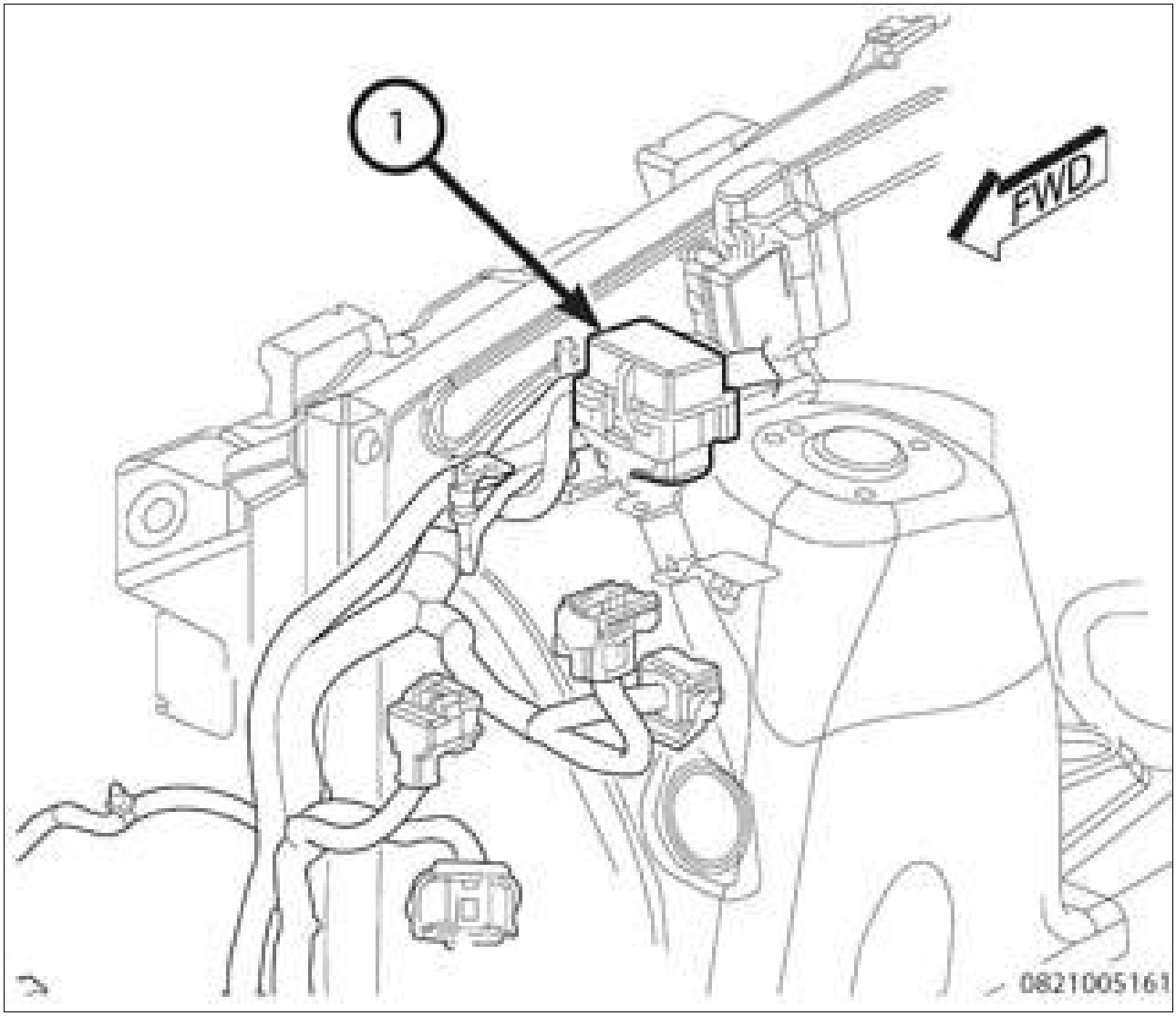

Courtesy of CHRYSLER GROUP, LLC

Vehicles equipped with a diesel engine have a secondary or auxiliary PDC located next to that main PDC assembly. This PDC houses relays and fuses for the urea heater control unit, cabin heater and the supply and forging pump operations.

For fuse description and layout, refer to FUSE - RELAY LOCATIONS AND TYPES, SPECIFICATIONS .

CENTER, POWER DISTRIBUTION (PDC) > REMOVAL > REMOVAL - PDC ASSEMBLY

1. Disconnect and isolate the negative battery cable. If equipped with an Intelligent Battery Sensor (IBS), disconnect the IBS connector first before disconnecting the negative battery cable.
2. Remove the PDC cover.
3. Disconnect the power feed connections from the PDC.

4. Release the plastic tabs that secure the PDC to the tray.
5. The PDC upper tray will now lift upward. Carefully lift tray and disconnect the three bulkhead connectors from the bottom.
6. Remove the PDC tray from the vehicle.

CENTER, POWER DISTRIBUTION (PDC) > INSTALLATION > INSTALLATION - PDC ASSEMBLY

1. Position the upper PDC tray to the PDC base in the engine compartment.
2. Connect the bulkhead connectors located in the base of the PDC to the upper PDC tray bottom.
3. Secure the PDC tray to the PDC base.
4. Connect power feeds to their proper PDC posts.
5. Install the PDC cover onto the PDC assembly.
6. Connect the negative battery cable. If equipped with an Intelligent Battery Sensor (IBS), connect the IBS connector to the negative battery cable.

SPECIAL TOOLS

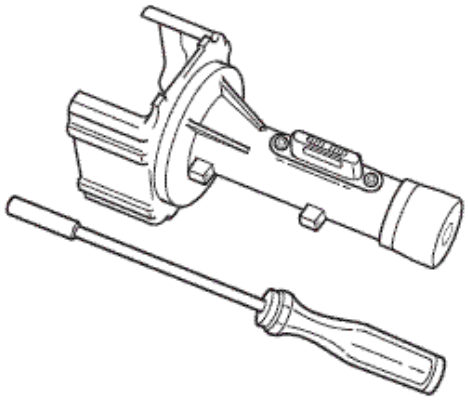	10243-2 - Driver, Nut (Originally Shipped In Kit Number(s) 10243.)
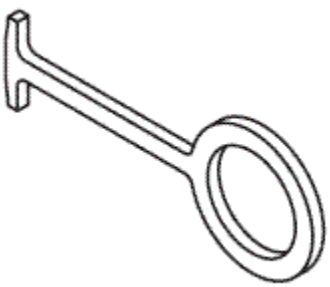	10246 - Remover, Power Outlet (Originally Shipped In Kit Number(s) 10246.)
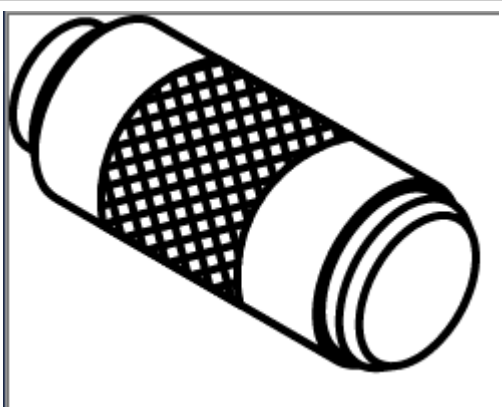	10256 - Installer, Cam Installer, Cam Sensor/ Spark Plug Tube Seal (Originally Shipped In Kit Number(s) 10256.)
	223-9425 - Battery Charger, Associated

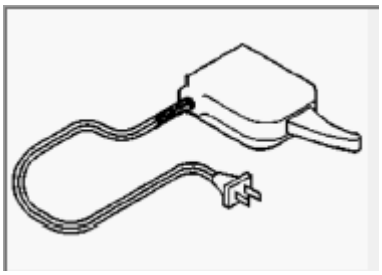	6029 - De Gauser
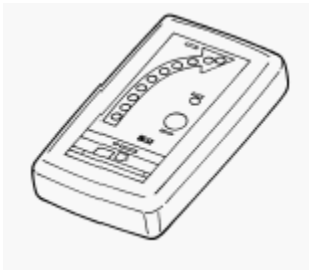	9001 - Rf Detector (Originally Shipped In Kit Number(s) 9001.)
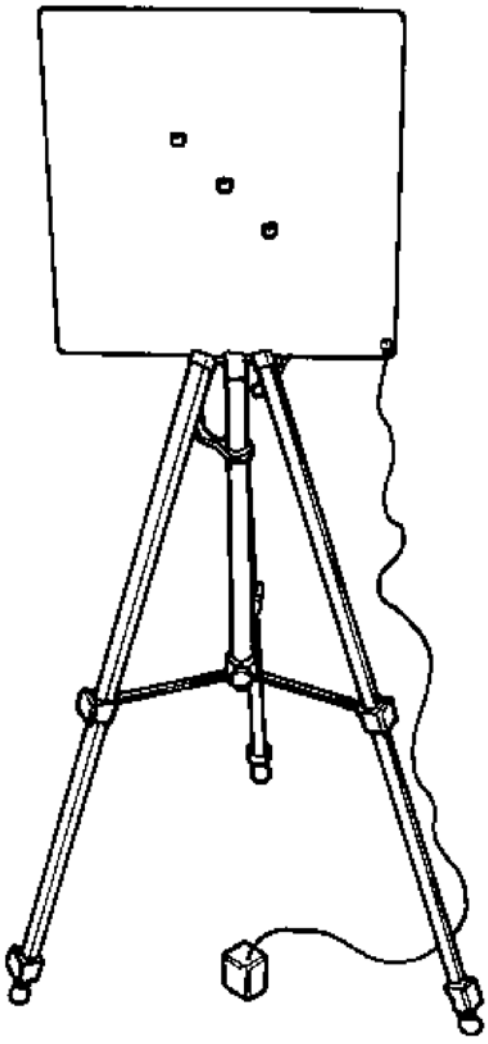	9649A - Alignment Device, Smart Beam (Originally Shipped In Kit Number(s).)

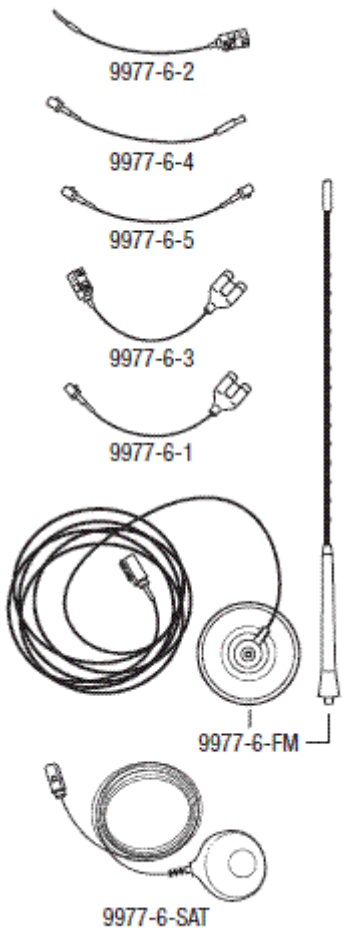	9977-6 - Kit, Radio Antenna Diagnostic
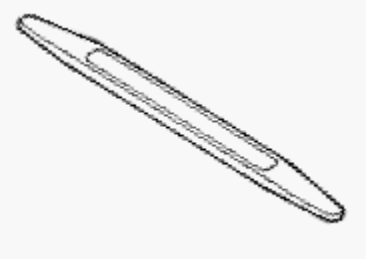	C-4755 - Trim Stick (Originally Shipped In Kit Number(s) 9299, 9299CC, 9300A-CAN.)
	GR8-1220KIT-CHRY - AGM Battery Tester/Charger Station (Originally Shipped In Kit Number(s) GR8-1220KIT-CHRY.)

DESCRIPTION > DESCRIPTION

Fig 1: View Of Overhead Console Transmitter Push Buttons

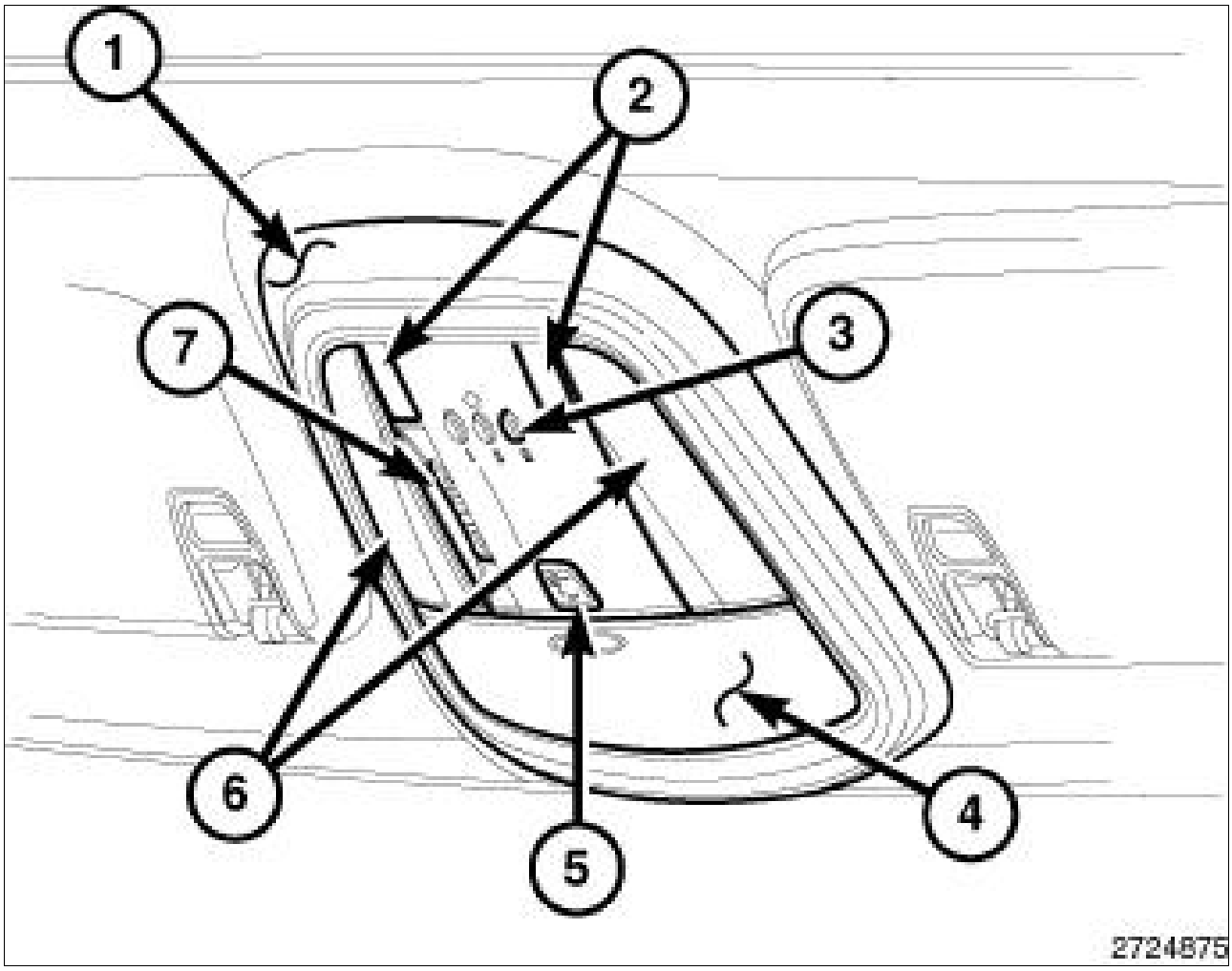

Courtesy of CHRYSLER GROUP, LLC

The HomeLink® transceiver for this vehicle is located within the overhead console (1). The only visible component of the universal transmitter are the three transmitter push buttons (3) at the front of the overhead console. The buttons are marked with one, two or three illuminated dots, respectively, for identification of each channel.

Each of the three transmitter push buttons controls an independent radio transmitter channel. Each of these three channels can be trained to transmit a different radio frequency signal for the remote operation of garage door openers, motorized gate openers, home or office lighting, security systems or just about any other device that can be equipped with a radio receiver in the 286 to 399 Megahertz (MHz) frequency range for remote operation. The transmitter is capable of operating systems using either rolling code or non-rolling code technology. The system will not transmit operating signals if the Vehicle Theft Security System is armed.

The HomeLink® transceiver cannot be repaired, and is only available for service with the overhead console. If any part of the component is inoperative or damaged, the complete overhead console assembly must be replaced. Refer to CONSOLE, OVERHEAD, FRONT, REMOVAL .

OPERATION > OPERATION

The HomeLink® transceiver operates on a non-switched source of battery current so the unit will remain functional, regardless of the ignition switch position. For more information on the features, programming procedures and operation of the HomeLink® transceiver, see the owner's manual in the vehicle glove box.

DIAGNOSIS AND TESTING > DIAGNOSIS AND TESTING - HOMELINK® TRANSCEIVER

Fig 1: Identifying Radio Frequency Detector

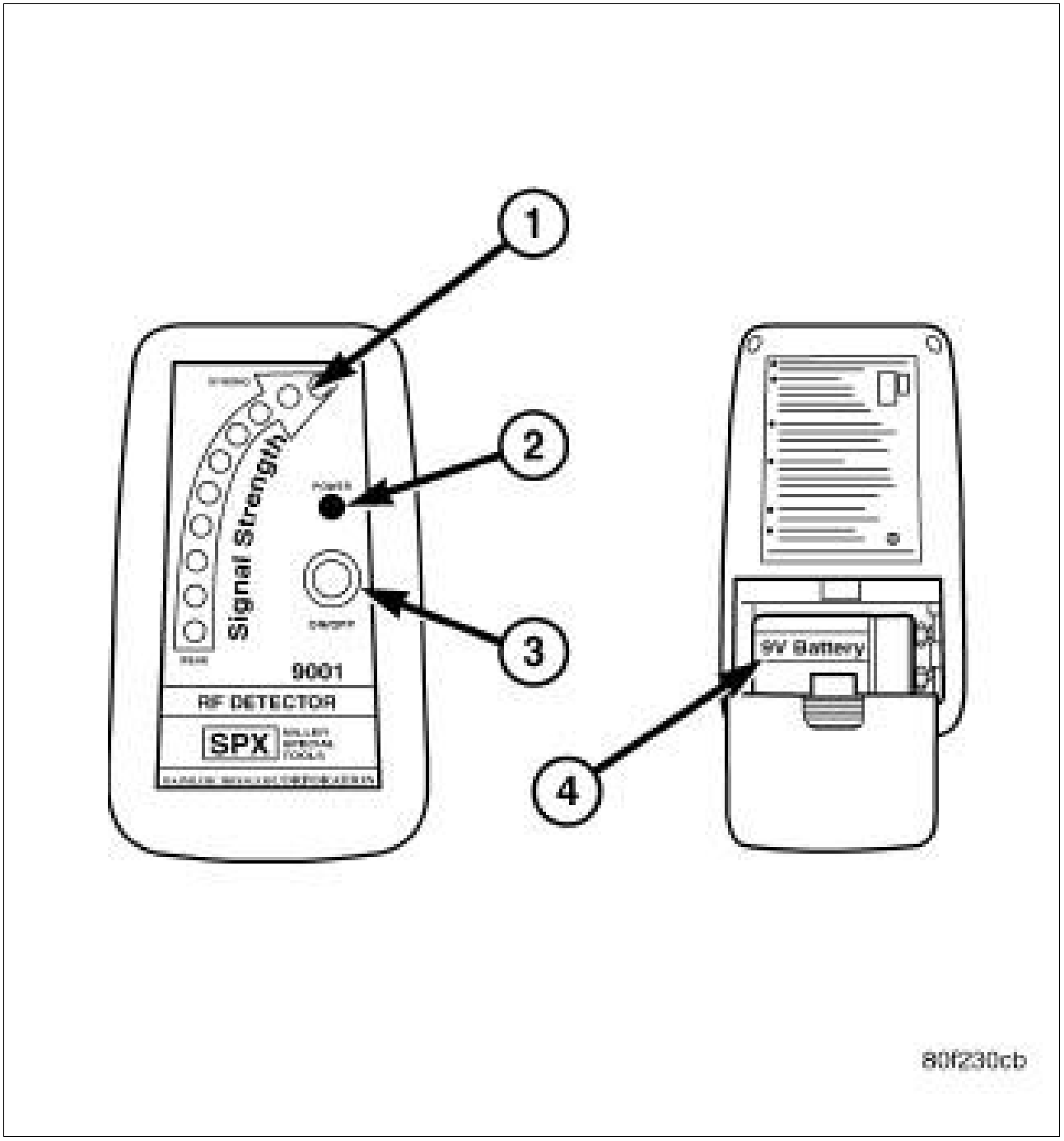

Courtesy of CHRYSLER GROUP, LLC

If the HomeLink® transceiver is inoperative, retrain the transceiver with a known good transmitter. Refer to STANDARD PROCEDURE . Test the universal transmitter operation again. If the unit is still inoperative, test the universal transmitter with Radio Frequency Detector special tool as described below:

1. Turn the Radio Frequency (RF) Detector ON (3). A "chirp" will sound and the green power Light Emitting Diode (LED) will light (2). If the green LED does not light, replace the battery (4).
2. Hold the RF detector within one inch of the TRAINED universal transmitter and press any of the transmitters buttons.

3. The red signal detection LEDs (1) will light and the tool will beep if a radio signal is detected. Repeat this test for all three transmitter buttons. If the tool does not detect a radio signal for any of the three buttons, replace the inoperative HomeLink® transceiver assembly. The HomeLink® transceiver is only available for service with the overhead console. If any part of the component is inoperative or damaged, the complete overhead console assembly must be replaced.

STANDARD PROCEDURE > ERASING HOMELINK® TRANSCEIVER CODES

NOTE:

Individual channels cannot be erased. Erasing the HomeLink® transceiver codes will erase ALL programmed codes.

To erase programming from all three buttons (individual buttons cannot be erased but can be reprogrammed), press and hold the two outer HomeLink® transceiver buttons until the indicator light begins to flash after about 20 seconds. Release both buttons. Do not hold for longer that 30 seconds. HomeLink® is now in the train (or learning) mode and can be programmed at any time beginning with Programming. Refer to STANDARD PROCEDURE .

STANDARD PROCEDURE > PROGRAMMING HOMELINK® TRANSCEIVER CODES

WARNING:

Vehicle exhaust contains carbon monoxide, a dangerous gas. Do not run the engine while training the universal transmitter. Failure to follow these instructions may result in possible serious or fatal injury.

WARNING:

Your motorized door or gate may open and close while you are training the universal transmitter if the vehicle is in range of the motorized device. Do not train the universal transmitter if people or pets are in the path of the door or gate. A moving door or gate can cause serious injury or death to people and pets or damage to objects.

NOTE:

When programming a garage door opener, it is advised to park outside the garage. It is also recommended that a new battery be placed in the hand-held transmitter of the device being programmed to the HomeLink® transceiver for quicker training and accurate transmission of the radio-frequency signal.

NOTE:

If programing the HomeLink® transceiver is unsuccessful using the following procedure, refer to the Owner's Manual for the current customer assistance phone number.

1. Press and hold the two outer HomeLink® transceiver buttons, and release only when the indicator light begins to flash (after 20 seconds). **Do not** hold the buttons for longer than 30 seconds and **do not** repeat step one to program a second and/or third hand-held transmitter to the remaining two HomeLink® transceiver buttons.
2. Position the end of your hand-held transmitter 3-8 cm (1-3 inches) away from the HomeLink® transceiver buttons while keeping the indicator light in view.
3. Simultaneously press and hold both the HomeLink® transceiver button that you want to train and the hand-held transmitter button. **Do not release the buttons until step 4 has been completed.**

   NOTE:

   Some gate operators and garage door openers may require you to replace this Programming Step 3 with procedures noted in CANADIAN PROGRAMMING/GATE PROGRAMMING .

4. The HomeLink® transceiver indicator light will flash slowly and then rapidly after HomeLink® successfully receives the frequency signal from the hand-held transmitter. Release both buttons after the indicator light changes from the slow to rapid flash.
5. Press and hold the just trained HomeLink® transceiver button and observe the indicator light. If the indicator light **stays on constantly, programming is complete** and your device should activate when the button is pressed and released.

   NOTE:

   To program the remaining two buttons, begin with "Programming" ***step 2. Do not repeat step 1.***

   If the indicator light blinks ***rapidly for two seconds and then turns to a constant light, continue with "Programming" steps 6-8*** *to complete the programming of a rolling code equipped device (most commonly a garage door opener).*

6. At the garage door opener receiver (motor-head unit) in the garage, locate the "learn" or "smart" button. This can usually be found where the hanging antenna wire is attached to the motor-head unit.

7. Firmly press and release the "learn" or "smart" button. (The name and color of the button may vary by manufacturer.)

   > *NOTE:*
   >
   > *There are 30 seconds in which to initiate step 8.*

8. Return to the vehicle and firmly **press, hold for two seconds and release** the programmed HomeLink® transceiver button. Repeat the **"press/hold/release"** sequence a second time, and, depending on the brand of the garage door opener (or other rolling code equipped device), repeat this sequence a third time to complete the programming.

   The HomeLink® transceiver should now activate your rolling code equipped device.

> *NOTE:*
>
> *To program the remaining two HomeLink® transceiver buttons, begin with "Programming"* ***step 2. Do not repeat step 1.***

STANDARD PROCEDURE > PROGRAMMING HOMELINK® TRANSCEIVER CODES > CANADIAN PROGRAMMING/GATE PROGRAMMING

Canadian radio-frequency laws require transmitter signals to "time-out" (or quit) after several seconds of transmission which may not be long enough for the HomeLink® transceiver to pick up the signal during programming. Similar to this Canadian law, some U.S. gate operators are designed to "time-out" in the same manner.

If you live in Canada or you are having difficulties programming a gate operator by using the "Programming" procedures (regardless of where you live), **replace "Programming HomeLink® Transceiver Codes" step 3** with the following:

> *NOTE:*
>
> *When programming a garage door opener or gate operator, it is advised to unplug the device or move the vehicle out of range during the "cycling" process to prevent possible overheating.*

3. Continue to press and hold the HomeLink® transceiver button while you **press and release every two seconds** ("cycle") your hand-held transmitter until the frequency signal has

successfully been accepted. The indicator light will flash slowly and then rapidly. Proceed with "Programming" step 4 to complete.

STANDARD PROCEDURE > REPROGRAMMING HOMELINK® TRANSCEIVER CODES

WARNING:

Vehicle exhaust contains carbon monoxide, a dangerous gas. Do not run the engine while training the universal transmitter. Failure to follow these instructions may result in possible serious or fatal injury.

WARNING:

Your motorized door or gate may open and close while you are training the HomeLink® transceiver if the vehicle is in range of the motorized device. Do not train the HomeLink® transceiver if people or pets are in the path of the door or gate. A moving door or gate can cause serious injury or death to people and pets or damage to objects.

NOTE:

If programing the HomeLink® transceiver is unsuccessful using the following procedure, refer to the Owner's Manual for the current customer assistance phone number.

STANDARD PROCEDURE > REPROGRAMMING HOMELINK® TRANSCEIVER CODES > REPROGRAMMING COMMON UNIVERSAL TRANSMITTER CODES

To program a device to the HomeLink® transceiver using a button previously trained, follow these steps:

1. Press and hold the desired HomeLink® transceiver button. **DO NOT** release the button. The indicator light will begin to flash after 20 seconds. Without releasing the HomeLink® transceiver button, proceed to step 2.
2. Position the end of your hand-held transmitter 3-8 cm (1-3 inches) away from the HomeLink® transceiver button while keeping the indicator light in view.
3. Simultaneously press and hold both the HomeLink® transceiver button that you want to train and the hand-held transmitter buttons. **Do not release the buttons until step 4 has been completed.**

   NOTE:

   Some gate operators and garage door openers may require you to replace this

Reprogramming Step 3 with procedures noted in CANADIAN PROGRAMMING/GATE PROGRAMMING .

4. The HomeLink® transceiver indicator light will flash slowly and then rapidly after it successfully receives the frequency signal from the hand-held transmitter. Release both buttons after the indicator light changes from the slow to the rapid flash.
5. Press and hold the just trained HomeLink® transceiver button and observe the indicator light. If the indicator light **stays on constantly, reprogramming is complete** and your device should activate when the button is pressed and released.

> *NOTE:*
>
> *If the indicator light blinks **rapidly for two seconds and then turns to a constant light, continue with "Reprogramming" steps 6-8** to complete the programming of a rolling code equipped device (most commonly a garage door opener).*

6. At the garage door opener receiver (motor-head unit) in the garage, locate the "learn" or "smart" button. This can usually be found where the hanging antenna wire is attached to the motor-head unit.
7. Firmly press and release the "learn" or "smart" button. (The name and color of the button may vary by manufacturer.)

> *NOTE:*
>
> *There are 30 seconds in which to initiate step 8.*

8. Return to the vehicle and firmly **press, hold for two seconds and release** the reprogrammed HomeLink® transceiver button. Repeat the **"press/hold/release"** sequence a second time, and, depending on the brand of the garage door opener (or other rolling code equipped device), repeat this sequence a third time to complete the reprogramming.

   The HomeLink® transceiver should now activate your rolling code equipped device.

STANDARD PROCEDURE > REPROGRAMMING HOMELINK® TRANSCEIVER CODES > CANADIAN PROGRAMMING/GATE PROGRAMMING

Canadian radio-frequency laws require transmitter signals to "time-out" (or quit) after several seconds of transmission which may not be long enough for the HomeLink® transceiver to pick up the signal during programming. Similar to this Canadian law, some U.S. gate operators are designed to "time-out" in the same manner.

If you live in Canada or you are having difficulties programming a gate operator by using the "Programming" procedures (regardless of where you live), **replace "Reprogramming HomeLink® Transceiver Codes" step 3** with the following:

NOTE:

When programming a garage door opener or gate operator, it is advised to unplug the device or move the vehicle out of range during the "cycling" process to prevent possible overheating.

3. Continue to press and hold the HomeLink® transceiver button while you **press and release every two seconds** ("cycle") your hand-held transmitter until the frequency signal has successfully been accepted. The indicator light will flash slowly and then rapidly. Proceed with "Programming" step 4 to complete.

ENGINE

Description	Type	Capacities	
		U.S.	Metric
Cooling System			
(1) Engine Coolant (3.0L Diesel Engines)	We recommend you use MOPAR® Antifreeze/Coolant 10 Year/150, 000 Mile Formula OAT (Organic Additive Technology).	12.0 Quarts	11.4 Liters
(1) Engine Coolant (3.0L/3.6L Gas Engines)	We recommend you use MOPAR® Antifreeze/Coolant 10 Year/150, 000 Mile Formula OAT (Organic Additive Technology).	10.4 Quarts	9.9 Liters
(1) Engine Coolant (5.7L Engines without Trailer Tow Package)	We recommend you use MOPAR® Antifreeze/Coolant 10 Year/150, 000 Mile Formula OAT (Organic Additive Technology).	15.4 Quarts	14.6 Liters
(1) Engine Coolant (5.7L Engines with Trailer Tow Package)	We recommend you use MOPAR® Antifreeze/Coolant 10 Year/150, 000 Mile Formula OAT (Organic Additive Technology).	16.0 Quarts	15.2 Liters
(1) Engine Coolant (6.4L Engines)	We recommend you use MOPAR® Antifreeze/Coolant 10 Year/150, 000 Mile Formula OAT (Organic Additive Technology) hat meets the requirements of Material Standard MS.90032.	16.0 Quarts	15.2 Liters
Engine Oil with Filter			
Engine Oil (3.0L Diesel Engine)	We recommend you use SAE 5W-30 Synthetic Low Ash Engine Oil meeting he requirements of Material Standard MS-11106 or 9.55535- S3 and approved ACEA C3 such as MOPAR or equivalent.	8 Quarts	7.7 Liters
(2) Engine Oil (3.0L/3.6L Gas Engine- Domestic/Non-ACEA)	We recommend you use API Certified SAE 0W-20 Engine Oil, mee ing the requirements of Material Standard MS-6395 such as MOPAR, Pennzoil, and Shell Helix. Refer to your engine oil filler cap for correct SAE grade.	6 Quarts	5.6 Liters
(2) Engine Oil (3.0L/3.6L Gas Engine- ACEA Categories)	We recommend you use API Certified SAE 0W-20 engine oil, meeting the requirements of Material Standard MS-6395 or 9.55535-CR1. Refer to your engine oil filler cap for the correct SAE grade.	6 Quarts	5.6 Liters
(3) Engine Oil (5.7L Engine - Domestic/Non-ACEA)	We recommend you use API Certified SAE 5W-20 Engine Oil, mee ing the requirements of Material Standard MS-6395 such as MOPAR, Pennzoil, and Shell Helix. Refer to your engine oil filler cap for correct SAE grade.	7 Quarts	6.6 Liters
(3) Engine Oil (5.7L Engine - ACEA Categories)	We recommend you use API Certified SAE 5W-20 engine oil, meeting the requirements of Material Standard MS-6395 or	7 Quarts	6.6 Liters

	9.55535-CR1. Refer to your engine oil filler cap for the correct SAE grade.		
Engine Oil (6.4L Engine) Domestic and Export	For best performance and maximum protection under all types of operating conditions, the manufacturer only recommends full synthetic engine oils that meet the American Petroleum Institute (API) categories of SN. The manufacturer recommends the use of Pennzoil Ultra 0W-40 or equivalent MOPAR engine oil meeting the requirements of Material Standard MS-12633 for use in all operating temperatures.	7 Quarts	6.6 Liters
Engine Oil Filter (3.0L Diesel Engine)	We recommend you use MOPAR Engine Oil Filter or equivalent.	N/A	N/A
Engine Oil Filter (3.0L/3.6L Gas Engine)	We recommend you use MOPAR Engine Oil Filter or equivalent.	N/A	N/A
Engine Oil Filter (5.7L/6.4L Engine)	We recommend you use MOPAR Engine Oil Filter or equivalent.	N/A	N/A
Diesel Fuel Filter	We recommend you use MOPAR Fuel Filter. Must meet 3 micron rating. Using a fuel filter hat does not meet the manufacturers filtration and water separating requirements can severely impact fuel system life and reliability.	N/A	N/A
Fuel (approximate)			
Fuel Selection (3.0L Diesel Engine)	Use good quality diesel fuel from a reputable supplier in your vehicle. Federal law requires that you must fuel this vehicle with Ultra Low Sulfur Highway Diesel fuel (15 ppm Sulfur maximum) and prohibits the use of Low Sulfur Highway Diesel fuel (500 ppm Sulfur maximum) to avoid damage to the emissions control system. For most year-round service, No. 2 diesel fuel meeting ASTM specification D-975 Grade S15 will provide good performance. We recommend you use a blend of up to 5% biodiesel, meeting ASTM specification D-975 with your diesel engine. This vehicle is compatible with biodiesel blends greater than 5% but no greater than 20% biodiesel meeting ASTM specification D-7467 provided the shortened maintenance intervals are followed as directed. *NOTE:* *If the vehicle is exposed to extreme cold (below 20°F or -7°C), or is required to operate at colder-than-normal conditions for prolonged periods, use climatized No. 2 diesel fuel or dilute the No. 2 diesel fuel with 50% No. 1 diesel fuel. This will provide better protection from fuel gelling*	24.6 Gallons	93.1 Liters

	or wax-plugging of the fuel filters.		
Fuel Selection (3.0L Diesel Engine - Europe)	50 Cetane or higher (Less than 10 ppm Sulfur)	24.6 Gallons	93 Liters
Fuel Selection (3.0L/3.6L Gas Engine)	87 Octane, 0-15% Ethanol.	25 Gallons	94 Liters
Fuel Selection (3.6L Gas Engine - Europe)	Minimum 91 Octane	25 Gallons	94 Liters
Fuel Selection (3.0L/ 3.6L Gas Engine) Flexible Fuel	Ethanol E85 (ASTM D5798)	25 Gallons	94 Liters
Fuel Selection (5.7L Engine)	89 Octane Recommended - 87 Octane Acceptable, 0-15% Ethanol.	25 Gallons	94 Liters
Fuel Selection (5.7L Engine - Europe)	Minimum 91 Octane Acceptable - 95 Octane Recommended	25 Gallons	94 Liters
Fuel Selection (6.4L Engine)	Premium Unleaded 91 Octane Only or Higher, 0-15% Ethanol.	25 Gallons	94 Liters
Diesel Exhaust Fluid (DEF)	MOPAR Diesel Exhaust Fluid (API Certified) (DEF) or equivalent that has been API Certified to the ISO 22241 standard. Use of fluids not API Certified to ISO 22241 may result in system damage.	8 Gallons	30.3 Liters
A/C Refrigerant System			
A/C Refrigerant	R-134a	1.375 Pounds	623.7 Grams

(1) System fill capacity includes heater and coolant recovery bottle filled to MAX level.

(2) SAE 5W-30 engine oil approved to 9.55535 may be used when SAE 5W-20 engine oil is not available

MOPAR® SAE 5W-30 engine oil approved to MS-6395 such as Pennzoil® or Shell Helix® may be used when SAE 5W-20 engine oil meeting MS-6395 is not available.

(3) Vehicles equipped with a 5.7L engine must use SAE 5W-20 oil. Failure to do so may result in improper operation of the Fuel Saver Technology.

⚠ *CAUTION:*

Nominal refill capacities are shown. A variation may be observed from vehicle to vehicle due to manufacturing tolerance and refill procedure.

SPARK PLUGS

Description	Type	Gap	
		U.S.	Metric
Spark Plugs (3.0L/3.6L Engine)	We recommend you use MOPAR® Spark Plugs.	0 043 in	1.10 mm
Spark Plugs (5.7L Engine)	We recommend you use MOPAR® Spark Plugs.	0 043 in	1.10 mm
Spark Plugs (6.4L Engine)	We recommend you use MOPAR® Spark Plugs.	0 043 in	1.10 mm

TRANSMISSION

Description	Type	Capacities	
		U.S.	Metric
Automatic			
HP45 - 8 Speed	Use only Mopar® ZF 8&9 Speed ATF™ Automatic Transmission Fluid or equivalent. Failure to use the	8.98 Quarts	8.5 Liters

	correct fluid may affect the function or performance of your transmission.		
HP70 - 8 Speed	Use only Mopar® ZF 8&9 Speed ATF™ Automatic Transmission Fluid or equivalent. Failure to use the correct fluid may affect the function or performance of your transmission.	8.77 Quarts	8.3 Liters
* Dry fill capacity. Depending on type and size of internal cooler, length and inside diameter of cooler lines, or use of an auxiliary cooler, these figures may vary. Refer to the appropriate service information for the correct procedures.			

⚠ *CAUTION:*

Nominal refill capacities are shown. A variation may be observed from vehicle to vehicle due to manufacturing tolerance and refill procedure.

TRANSFER CASE

Description	Type	Capacities	
		U.S.	Metric
MP2010	We recommend you use Automatic Transmission Fluid 3353.	1.1 Pints	0.51 Liters
MP3010	MOPAR® ATF+4 Automatic Transmission Fluid	1.4 Quarts	1.35 Liters
MP3023	MOPAR® ATF+4 Automatic Transmission Fluid	2.0 Quarts	1.9 Liters

⚠ *CAUTION:*

Nominal refill capacities are shown. A variation may be observed from vehicle to vehicle due to manufacturing tolerance and refill procedure.

CHASSIS

Description	Type	Capacities	
		U.S.	Metric
Axles (Front)			
195FIA FE - Front Axle	We recommend you use MOPAR GL-5 Synthetic Axle Lubricant SAE 75W-85.	0.9 Quarts	0.8 Liters
Axles (Rear)			
195RIA - Rear Axle (Aluminum)	We recommend you use MOPAR GL-5 Synthetic Axle Lubricant SAE 75W-85.	1.0 Quarts	0.9 Liters
230RIA With Electronic Limited-Slip Differential (ELSD)-Rear Axle (Aluminum)	We recommend you use MOPAR GL-5 Synthetic Axle Lubricant SAE 75W-85 with friction modifier additive.	1.4 Quarts	1.3 Liters
230RIA Without Electronic Limited-Slip Differential (ELSD) - Rear Axle (Aluminum)	We recommend you use MOPAR GL-5 Synthetic Axle Lubricant SAE 75W-85.	1.2 Quarts	1.1 Liters
Chassis Systems			
Brake Master Cylinder	We recommend you use MOPAR DOT 3 Brake Fluid, SAE J1703 should be used. If DOT 3, SAE J1703 brake fluid is not available, hen DOT 4 is	N/A	N/A

	acceptable.		
(1) Power Steering Reservoir **(Belt Driven Pump)**	MOPAR® Power Steering Fluid +4	N/A	N/A
Power Steering Reservoir **(Electric Pump)**	MOPAR® Hydraulic Fluid meeting the requirements of Material Standard MS-11655	N/A	N/A

(1) If MOPAR® Power Steering Fluid +4 is not available, then MOPAR® ATF +4 Automatic Transmission Fluid, is acceptable.

CAUTION:

There is an Electro-Hydraulic Power Steering (EHPS) pump on some vehicles requiring a different fluid. Do not mix power steering fluid types. Damage may result to the power steering pump and system if any other fluid is used. The mechanical power steering pump systems on this vehicle require the use of Power Steering Fluid +4, which meets material specification MS-9602 or equivalent. The EHPS system uses fluid which meets material specification MS-11655 or equivalent. Do not overfill.

CAUTION:

Nominal refill capacities are shown. A variation may be observed from vehicle to vehicle due to manufacturing tolerance and refill procedure.

FUSE - RELAY LOCATIONS AND TYPES > SPECIFICATIONS > SPECIFICATIONS

NOTE:

Refer to the appropriate Wiring Application for Relay description and location information.

The Power Distribution Center is located in the engine compartment near he battery. This center contains cartridge fuses, micro fuses, relays, and circuit breakers. A description of each fuse and component may be stamped on the inside cover, otherwise the cavity number of each fuse is stamped on he inside cover that corresponds to the following chart.

POWER DISTRIBUTION CENTER

Cavity	Cartridge Fuse	Micro Fuse	Description
F03	60 Amp Yellow	-	Radiator Fan
F05	40 Amp Green	-	Compressor for Air Suspension - If Equipped
F06	40 Amp Green	-	Anti-lock Brakes/Electronic Stability Control Pump
F07	30 Amp Pink	-	Starter Solenoid
F09	30 Amp Pink	-	Diesel Fuel Heater (Diesel engine only) / Brake Vacuum Pump
F10	40 Amp Green	-	Body Controller / Exterior Lighting #2
F11	30 Amp Pink	-	Trailer Tow Electric Brake - If Equipped
F12	40 Amp Green	-	Body Controller #3 / Power Locks
F13	40 Amp Green	-	Blower Motor Front
F14	40 Amp Green	-	Body Controller #4 / Exterior Lighting #1
F17	30 Amp Pink	-	Headlamp Washer- If Equipped
F19	20 Amp Blue	-	Headrest Solenoid- If Equipped
F20	30 Amp Pink	-	Passenger Door Module
F22	20 Amp Blue	-	Engine Control Module
F23	30 Amp Pink	-	Interior Lights #1
F24	30 Amp Pink	-	Driver Door Module
F25	30 Amp Pink	-	Front Wipers

F26	30 Amp Pink	-	Anti-lock Brakes/Stability Control Module/Valves
F28	20 Amp Blue	-	Trailer Tow Backup Lights - If Equipped
F29	20 Amp Blue	-	Trailer Tow Parking Lights - If Equipped
F30	30 Amp Pink	-	Trailer Tow Receptacle - If Equipped
F32	30 Amp Pink	-	Drive Train Control Module
F34	30 Amp Pink	-	Slip Differential Control
F35	30 Amp Pink	-	Sunroof - If Equipped
F36	30 Amp Pink	-	Rear Defroster
F37	25 Amp Clear	-	Rear Blower Motor - If Equipped
F38	30 Amp Pink	-	Power Inverter 115V AC - If Equipped
F39	30 Amp Pink	-	Power Liftgate - If Equipped
F40	-	10 Amp Red	Daytime Running Lights/Headlamp Leveling
F42	-	20 Amp Yellow	Horn
F44	-	10 Amp Red	Diagnostic Port
F49	-	10 Amp Red	Integrated Central Stack / Climate Control
F50	-	20 Amp Yellow	Air Suspension Control Module - If Equipped
F51	-	15 Amp Blue	Igni ion Node Module / Keyless Ignition / Steering Column Lock
F52	-	5 Amp Tan	Battery Sensor
F53	-	20 Amp Yellow	Trailer Tow - Left Turn/Stop Lights - If Equipped
F56	-	15 Amp Blue	Additional Content (Diesel engine only)
F57	-	20 Amp Yellow	NOX Sensor
F58	-	15 Amp Blue	HID Headlamps LH - If Equipped
F59	-	10 Amp Red	Purging Pump (Diesel engine only)
F60	-	15 Amp Blue	Transmission Control Module
F61	-	10 Amp Red	Transmission Control Module/PM Sensor (Diesel engine only)
F62	-	10 Amp Red	Air Conditioning Clutch
F63	-	20 Amp Yellow	Igni ion Coils (Gas), Urea Heater (Diesel)
F64	-	25 Amp Clear	Fuel Injectors / Powertrain
F66	-	10 Amp Red	Sunroof / Passenger Window Switches / Rain Sensor
F67	-	15 Amp Blue	CD / DVD / Bluetooth Hands-free Module - If Equipped
F68	-	20 Amp Yellow	Rear Wiper Motor
F69	-	15 Amp Blue	Spotlight Feed - If Equipped
F70	-	20 Amp Yellow	Fuel Pump Motor
F71	-	30 Amp Green	Audio Amplifier
F72	-	10 Amp Red	PCM (If Equipped)
F73	-	15 Amp Blue	HID Headlamp RH - If Equipped
F75	-	10 Amp Red	Dual Batt Control (If Equipped)
F76	-	10 Amp Red	Anti-lock Brakes/Electronic Stability Control
F77	-	10 Amp Red	Drivetrain Control Module/Front Axle Disconnect Module
F78	-	10 Amp Red	Engine Control Module / Electric Power Steering
F80	-	10 Amp Red	Universal Garage Door Opener / Compass / Anti-Intrusion Module
F81	-	20 Amp Yellow	Trailer Tow Right Turn/Stop Lights
F82	-	10 Amp Red	Steering Column Control Module/ Cruise Control / DTV
F83	-	10 Amp Red	Fuel Door
F84	-	15 Amp Blue	Switch Bank/Instrument Cluster

F85	-	10 Amp Red	Airbag Module
F86	-	10 Amp Red	Airbag Module
F87	-	10 Amp Red	Air Suspension - If Equipped / Trailer Tow / Steering Column Control Module
F88	-	15 Amp Blue	Instrument Panel Cluster
F90/F91	-	20 Amp Yellow	Power Outlet (Rear seats) Selectable
F92	-	10 Amp Red	Rear Console Lamp - If Equipped
F93	-	20 Amp Yellow	Cigar Lighter
F94	-	10 Amp Red	Shifter / Transfer Case Module
F95	-	10 Amp Red	Rear Camera / ParkSense
F96	-	10 Amp Red	Rear Seat Heater Switch / Flashlamp Charger - If Equipped
F97	-	20 Amp Yellow	Rear Heated Seats & Heated Steering Wheel - If Equipped
F98	-	20 Amp Yellow	Front Heated Seats - If Equipped
F99	-	10 Amp Red	Climate Control / Driver Assistance Systems Module / DSRC
F100	-	10 Amp Red	Active Damping - If Equipped
F101	-	15 Amp Blue	Electrochromatic Mirror/Smart High Beams - If Equipped
F103	-	10 Amp Red	Cabin Heater (Diesel Engine Only)/Rear HVAC
F104	-	20 Amp Yellow	Power Outlets (Instrument Panel/Center Console)

HOISTING > STANDARD PROCEDURE > STANDARD PROCEDURE - JACKING AND HOISTING

LIFT POINTS

Fig 1: Jacking And Hoisting Lift Points

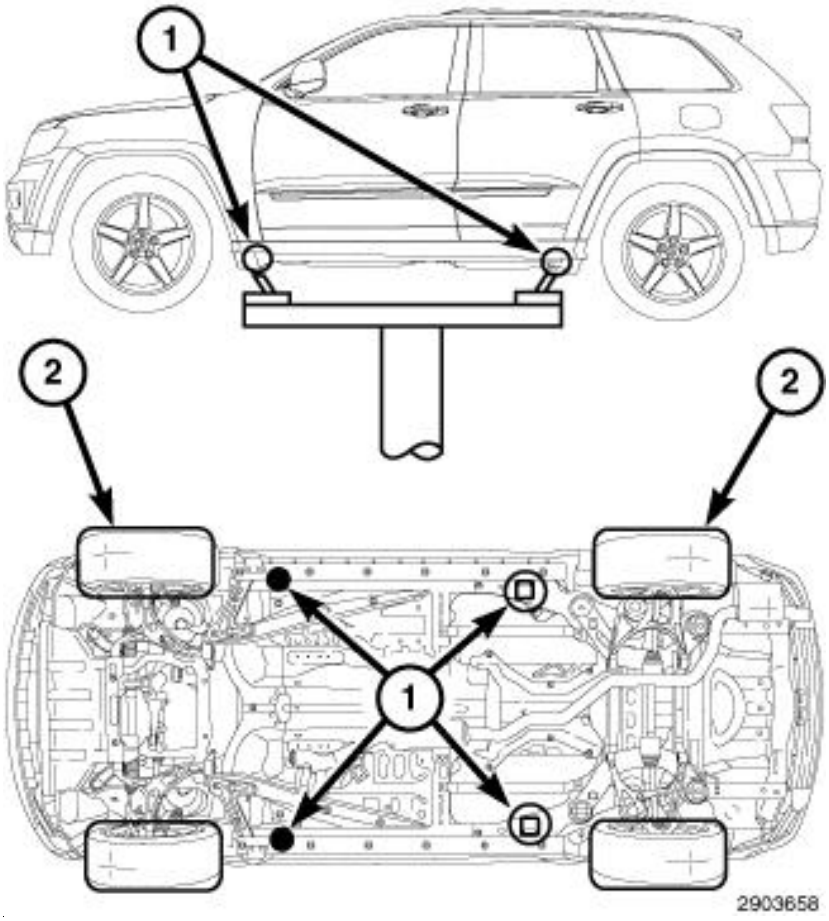

Courtesy of CHRYSLER GROUP, LLC

1 - FLOOR JACK, VEHICLE EMERGENCY JACK
1 - CHASSIS LIFT (DUAL POST)
1 - OUTBOARD LIFT (DUAL LIFT)
2 - DRIVE ON HOIST

Refer to Owner's Manual provided with vehicle for proper emergency jacking procedures.

WARNING:

The hoisting and jack lifting points provided are for a complete vehicle. When the engine or rear suspension is removed from a vehicle, the center of gravity is altered making some hoisting conditions unstable. Properly support or secure vehicle to hoisting device when these conditions exist. Failure to follow these instructions may result in personal injury or death.

WARNING:

Support the vehicle by supplemental means before performing any work on the air suspension system to prevent the vehicle from changing height. Before any given component is to be serviced it must be deflated. Servicing the air suspension system without supplemental support, or with pressure in the specific component, can cause possible serious or fatal injury.

NOTE:

The air suspension system will auto-disable when lifted on a frame hoist, or when jacking one corner of the vehicle. The air suspension may attempt to change height slightly prior to switching to auto-disable. A manual disable is also available by pressing the "Up" and "Down" switches of the terrain select switch simultaneously for more that 5 seconds. The air suspension system will return to normal operation when the vehicle speed reaches 25 kph (15 mph).

When properly positioned, a floor jack can be used to lift the vehicle and support the raised vehicle with jack stands.

A floor jack or any lifting device, must never be used on any part of the underbody other then the described areas.

> ⚠ *CAUTION:*
>
> *Do not attempt to lift a vehicle with a floor jack positioned under:*
>
> - *Aluminum differential.*
> - *A body side sill.*
> - *A steering linkage component.*
> - *A drive shaft.*
> - *The engine or transmission oil pan.*
> - *The fuel tank.*

MAINTENANCE SCHEDULES > DESCRIPTION > MAINTENANCE SCHEDULES - NAFTA

Your vehicle is equipped with an automatic oil change indicator system. The oil change indicator system will remind you hat it is time to take your vehicle in for scheduled maintenance. Based on engine operation conditions, the oil change indicator message will illuminate. This means that service is required for your vehicle. Operating conditions such as frequent short trips, trailer tow, extremely hot or cold ambient temperatures, and E85 fuel usage will influence when the "Oil Change Required" message is displayed. Severe Operating Conditions can cause the change oil message to illuminate as early as 3, 500 miles (5, 600 km) since last reset. Have your vehicle serviced as soon as possible, within he next 500 miles (805 km).

> *NOTE:*
>
> *Under no circumstances should oil change intervals exceed 10, 000 miles (16, 000 km), twelve months or 350 hours of engine run time, whichever comes first. The 350 hours of engine run or idle time is generally only a concern for fleet customers.*

Oil Change Indicator - RESET

- Unless reset, this message continues to display each time you turn the igni ion switch to the ON/RUN position. To turn off the message temporarily, press and release the Menu button. To reset the oil change indicator system (after performing the scheduled maintenance) perform the following procedure:
  - Turn the ignition switch to the "ON" position (Do not start the engine).
  - Fully depress the accelerator pedal slowly three times within 10 seconds.
  - Turn the ignition switch to the "LOCK" position.

    > *NOTE:*
    >
    > *If the indicator message illuminates when you start the vehicle, the oil change indicator system did not reset. If necessary repeat this procedure.*

Severe Duty All Models

Change Engine Oil at 4, 000 miles (6, 500 km) if the vehicle is operated in a dusty and off road environment or is operated predominately at idle or only very low engine RPM's. This type of vehicle use is considered Severe Duty.

Once a Month Or Before a Long Trip

- Check engine oil level
- Check windshield washer fluid level
- Check tire inflation pressures and look for unusual wear or damage.
- Check the fluid levels of the coolant reservoir, brake master cylinder and fill as needed.
- Check function of all interior and exterior lights.

At Every Oil Change Interval As Indicated By Oil Change Indicator System:

- Change the engine oil filter.
- Rotate the tires. **Rotate at the first sign of irregular wear, even if it occurs before the oil indicator system turns on.**
- Inspect battery and clean and tighten terminals as required.

- Inspect brake pads, shoes, rotors, drums, hoses and park brake.
- Inspect engine cooling system protec ion and hoses.
- Inspect exhaust system.
- Inspect engine air cleaner if using in dusty or off-road conditions.

MAINTENANCE CHART

Mileage or time passed (whichever comes first)	20,000	30,000	40,000	50,000	60,000	70,000	80,000	90,000	100,000	110,000	120,000	130,000	140,000	150,000
Or Years:	2	3	4	5	6	7	8	9	10	11	12	13	14	15
Or Kilometers:	32,000	48,000	64,000	80,000	96,000	112,000	128,000	144,000	160,000	176,000	192,000	208,000	224,000	240,000
Additional Inspections														
Inspect the CV joints.		X			X			X			X			X
Inspect front suspension, tie rod ends, and replace if necessary.	X		X		X		X		X		X		X	
Inspect the front and rear axle fluid, change if using your vehicle for police, taxi, fleet, off-road or frequent trailer towing.	X		X		X		X		X		X		X	
Inspect the brake linings, parking brake function.	X		X		X		X		X		X		X	
Inspect transfer case fluid.		X			X			X						X
Additional Maintenance														
Replace engine air filter.		X			X			X			X			X
Replace the air conditioning filter.	X		X		X		X		X		X		X	
Replace spark plugs.**									X					
Flush and replace the engine coolant at 10 years or 150, 000 miles (240, 000 km) whichever comes first.									X					X
Change transfer case fluid.											X			
Inspect and replace PCV valve if necessary.									X					

** The spark plug change interval is mileage based only, yearly intervals do not apply.

MAINTENANCE SCHEDULES > DESCRIPTION > MAINTENANCE SCHEDULES - NAFTA - SRT

The Scheduled Maintenance services listed in this Service Information must be done at the times or mileages specified to protect your vehicle warranty and ensure the best vehicle performance and reliability. More frequent maintenance may be needed for vehicles in severe operating conditions, such as dusty areas and very short trip

driving. Inspection and service should also be done anytime a malfunction is suspected. The oil change indicator system will remind you that it is time to take your vehicle in for scheduled maintenance. The Driver Information Display (DID) will display an "Oil Change Required" message and a single chime will sound, indicating hat an oil change is necessary. Based on engine operation conditions, the oil change indicator message will illuminate. This means hat service is required for your vehicle. Have your vehicle serviced as soon as possible, within the next 500 miles (805 km).

> *NOTE:*
>
> *The oil change indicator message will not monitor the time since the last oil change. Change your vehicle's oil if it has been six months since your last oil change, even if the oil change indicator message is NOT illuminated.*

> *NOTE:*
>
> *Change your engine oil more often if you drive your vehicle off-road for an extended period of time.*

> *NOTE:*
>
> *Under no circumstances should oil change intervals exceed 6, 000 miles (10, 000 km) or six months, whichever comes first.*

Oil Change Indicator - RESET

- Unless reset, this message continues to display each time you turn the igni ion switch to the ON/RUN position. To turn off the message temporarily, press and release the Menu button. To reset the oil change indicator system (after performing the scheduled maintenance) perform the following procedure:
  - Turn the ignition switch to the "ON" position (Do not start the engine).
  - Fully depress the accelerator pedal slowly three times within 10 seconds.
  - Turn the ignition switch to the "LOCK" position.

    > *NOTE:*
    >
    > *If the indicator message illuminates when you start the vehicle, the oil change indicator system did not reset. If necessary repeat this procedure.*

At Each Stop For Fuel

- Check the engine oil level. Refer to "Maintenance Procedures/Engine Oil" in "Maintaining Your Vehicle" for further information.
- Check the windshield washer solvent and add if required.

Once A Month

- Check tire pressure and look for unusual wear or damage.
- Inspect the battery, and clean and tighten the terminals as required.
- Check the fluid levels of the coolant reservoir, engine oil, brake master cylinder, and add as needed.
- Check all lights and other electrical items for correct operation.

At Each Oil Change

- Change the engine oil filter.
- Inspect the brake hoses and lines.

MAINTENANCE CHART

Miles:	6, 000	12, 000	18, 000	24, 000	30, 000	36, 000	42, 000	48, 000	54, 000	60, 000	66, 000	72, 000	78, 000	84, 000	90, 000	96, 000	102, 000	108, 000	114, 000	120, 000	126, 000
Or Months:	6	12	18	24	30	36	42	48	54	60	66	72	78	84	90	96	102	108	114	120	126
Or Kilometers:	10, 000	20, 000	30, 000	40, 000	50, 000	60, 000	70, 000	80, 000	90, 000	100, 000	110, 000	120, 000	130, 000	140, 000	150, 000	160, 000	170, 000	180, 000	190, 000	200, 000	210, 000
Change the engine oil and engine oil filter.	X	X	X	X	X	X	X	X	X	X	X	X	X	X	X	X	X	X	X	X	X

Rotate the tires, rotate at the first sign of irregular wear, even if it occurs before scheduled maintenance.	X	X	X	X	X	X	X	X	X	X	X	X	X	X	X	X	X	X	X	X	X	X
If using your vehicle for any of the following: dusty or off-road conditions. Inspect the engine air cleaner filter; replace if necessary.		X		X		X		X		X		X		X		X		X		X		
Inspect the brake linings; replace if necessary.		X		X		X		X		X		X		X		X		X		X		
Inspect the CV joints.		X		X		X		X		X		X		X		X		X		X		
Inspect the exhaust system.		X		X		X		X		X		X		X		X		X		X		
Adjust the parking brake on vehicles equipped wi h four wheel disc brakes.					X					X					X					X		
Drain the transfer case and refill.					X					X					X					X		
Inspect the accessory drive belts replace if necessary.										X										X		
Inspect the front and rear axle fluid. Change if using your vehicle for any of the following: police, taxi, fleet, sustained high speed driving, off-road or frequent trailer towing.				X				X				X				X				X		
Inspect front suspension, tie rod ends, and boot seals, for cracks or leaks and all parts for damage, wear, improper looseness or end play; replace if		X		X		X		X		X		X		X		X		X		X		

necessary.																				
Replace the engine air cleaner filter.					X					X					X				X	
Replace the air conditioning filter.				X				X				X				X			X	
Inspect and replace the PCV Valve if necessary															X					
Replace the spark plugs **																X				
Flush and replace the engine coolant at 120 months if not done at 150, 000 miles (240, 000 km).																			X	

** The spark plug change interval is mileage based only, yearly intervals do not apply.

MAINTENANCE SCHEDULES > DESCRIPTION > MAINTENANCE SCHEDULES - EUROPE - GASOLINE

The Scheduled Maintenance services listed in this Service Information must be done at the times or mileages specified to protect your vehicle warranty and ensure the best vehicle performance and reliability. More frequent maintenance may be needed for vehicles in severe operating conditions, such as dusty areas and very short trip driving. Inspection and service should also be done anytime a malfunction is suspected. The oil change indicator system will remind you that it is time to take your vehicle in for scheduled maintenance. On Electronic Vehicle Information Center (EVIC)/Driver Information Display (DID) equipped vehicles "Oil Change Required" will be displayed in the EVIC/DID and a single chime will sound, indicating that an oil change is necessary. The oil change indicator message will illuminate approximately 7, 000 miles (11, 200 km) after the most recent oil change was performed. Have your vehicle serviced as soon as possible, within 500 miles (800 km).

> *NOTE:*
>
> *The oil change indicator message will not monitor the time since the last oil change. Change your vehicles oil if it has been 12 months since your last oil change even if the oil change indicator message is NOT illuminated.*

> *NOTE:*
>
> *Change your engine oil more often if you drive your vehicle off-road for an extended period of time.*

> *NOTE:*
>
> *Under no circumstances should oil change intervals exceed 7, 500 miles (12 000 km) or 12 months, whichever comes first.*

Oil Change Indicator - RESET

- Unless reset, this message continues to display each time you turn the igni ion switch to the ON/RUN position. To turn off the message temporarily, press and release the Menu button. To reset the oil change indicator system (after performing the scheduled maintenance) perform the following procedure:
  - Turn the ignition switch to the "ON" position (Do not start the engine).
  - Fully depress the accelerator pedal slowly three times within 10 seconds.
  - Turn the ignition switch to the "LOCK" position.

> *NOTE:*
>
> *If the indicator message illuminates when you start the vehicle, the oil change indicator*

system did not reset. If necessary repeat this procedure.

At Each Stop for Fuel

- Check the engine oil level about 5 minutes after a fully warmed engine is shut off. Checking the oil level while the vehicle is on level ground will improve the accuracy of the oil level reading. Add oil only when the level is at or below the ADD or MIN mark.
- Check the windshield washer solvent and add if required.

Once a Month

- Check tire pressure and look for unusual wear or damage. Rotate tires at the first sign of irregular wear.
- Inspect the battery and clean and tighten the terminals as required.
- Check the fluid levels of the coolant reservoir, brake master cylinder, and power steering; add fluid as needed.
- Check all lights and other electrical items for correct operation.

At Each Oil Change

- Change the engine oil filter.
- Inspect the brake hoses and lines.

MAINTENANCE CHART

Mileage or time passed (whichever comes first)	7,500	15,000	22,500	30,000	37,500	45,000	52,500	60,000	67,500	75,000	82,500	90,000	97,500	105,000	112,500	120,000	127,500	135,000	142,500	150,000
Or Months:	12	24	36	48	60	72	84	96	108	120	132	144	156	168	180	192	204	216	228	240
Kilometers or time passed (whichever comes first):	12,000	24,000	36,000	48,000	60,000	72,000	84,000	96,000	108,000	120,000	132,000	144,000	156,000	168,000	180,000	192,000	204,000	216,000	228,000	240,000
Change engine oil and oil filter. ++	X	X	X	X	X	X	X	X	X	X	X	X	X	X	X	X	X	X	X	X
Rotate tires	X	X	X	X	X	X	X	X	X	X	X	X	X	X	X	X	X	X	X	X
If using your vehicle for any of the following: Dusty or off-road conditions. Inspect the engine air cleaner filter, replace if necessary.		X		X		X		X		X		X		X		X		X		X
Inspect the brake linings, replace if necessary.		X		X		X		X		X		X		X		X		X		X
Inspect exhaust system.		X	X			X			X			X			X			X		
Inspect CV Joints.		X		X		X		X		X		X		X		X		X		X
Inspect the front suspension, tie rod ends and boot seals,			X			X			X			X			X			X		

replace if necessary.																			
Inspect the front and rear axle fluid, change if using your vehicle for police, taxi, fleet, off road or frequent trailer towing.				X				X				X				X			X
Change brake fluid every 24 months if using DOT 4 brake fluid.		X		X		X		X		X		X		X		X		X		X		X
Replace the air conditioning filter.		X		X		X		X		X		X		X		X		X		X		X
Adjust parking brake on vehicles equipped wi h four-wheel disc brakes.				X				X				X				X				X
Replace engine air cleaner filter.				X				X				X				X				X
Replace spark plugs *									X									X			
Replace accessory drive belt(s).																X					
Flush and replace the engine coolant at 120 months or 240, 000 km whichever comes first.										X										X
Inspect or change the transfer case fluid if using your vehicle for any of the following: police, taxi, fleet, or frequent trailer towing.				X								X								X
Change Transfer Case Fluid.								X								X				
Inspect and replace PCV valve if necessary.+												X								

* The spark plug change interval is mileage based only, yearly intervals do not apply.

+ This maintenance is recommended by the manufacturer to the owner, but is not required to maintain emissions warranty.

Severe Duty Condi ions

- ++ Change the engine oil and engine oil filter at every 4500 miles (7, 500 km) or 12 months if using your vehicle under any of the following severe duty conditions:
  - Stop and go driving.
  - Driving in dusty conditions.
  - Short trips of less than 10 miles (16 km).
  - Trailer towing.
  - Taxi, police, or delivery service (commercial service).
  - Off-road or desert operation.

MAINTENANCE SCHEDULES > DESCRIPTION > MAINTENANCE SCHEDULES - EUROPE - DIESEL

Your vehicle is equipped with an automatic oil change indicator system. The oil change indicator system will remind you hat it is time to take your vehicle in for scheduled maintenance. Based on engine operation conditions, the oil change indicator message will illuminate. This means that service is required for your vehicle. Operating conditions such as frequent short-trips, trailer tow, extremely hot or cold ambient temperatures will influence when the "Oil Change Required" message is displayed.

> *NOTE:*
>
> *Under no circumstances should oil change intervals exceed 12, 500 miles (20 000 km) or 12 months, whichever comes first.*

> *NOTE:*
>
> *Flush and replace the engine coolant at 120 months or 150, 000 miles (240, 000 km) whichever comes first.*

Oil Change Indicator - RESET

- Unless reset, this message continues to display each time you turn the igni ion switch to the ON/RUN position. To turn off the message temporarily, press and release the Menu button. To reset the oil change indicator system (after performing the scheduled maintenance) perform the following procedure:
  - Turn the ignition switch to the "ON" position (Do not start the engine).
  - Fully depress the accelerator pedal slowly three times within 10 seconds.
  - Turn the ignition switch to the "LOCK" position.

    > *NOTE:*
    >
    > *If the indicator message illuminates when you start the vehicle, the oil change indicator system did not reset. If necessary repeat this procedure.*

At Each Stop for Fuel

- Check the engine oil level about 5 minutes after a fully warmed engine is shut off. Checking the oil level while the vehicle is on level ground will improve the accuracy of the oil level reading. Add oil only when the level is at or below the ADD or MIN mark.
- Check the windshield washer solvent and add if required.

Once a Month

- Check tire pressure and look for unusual wear or damage. Rotate tires at the first sign of irregular wear.
- Inspect the battery and clean and tighten the terminals as required.
- Check the fluid levels of the coolant reservoir, brake master cylinder, and power steering; add fluid as needed.
- Check all lights and other electrical items for correct operation.

At Each Oil Change

- Change the engine oil filter.

- Inspect the brake hoses and lines.

MAINTENANCE CHART

Miles or time passed (whichever comes first):	12, 500	25, 000	37, 500	50, 000	62, 500	75, 000	87, 500	100, 000	112, 500	125, 000	137, 500	150, 000
Or Months:	12	24	36	48	60	72	84	96	108	120	132	144
Kilometers:	20, 000	40, 000	60, 000	80, 000	100, 000	120, 000	140, 000	160, 000	180, 000	200, 00	220, 00	240, 000
Change engine oil and oil filter.	X	X	X	X	X	X	X	X	X	X	X	X
Completely fill the AdBlue tank.	X	X	X	X	X	X	X	X	X	X	X	X
Rotate tires	X	X	X	X	X	X	X	X	X	X	X	X
If using your vehicle for any of the following: Dusty or off-road conditions. Inspect the engine air cleaner filter, replace if necessary.	X	X	X	X	X	X	X	X	X	X	X	X
Inspect the brake linings, replace if necessary.	X	X	X	X	X	X	X	X	X	X	X	X
Inspect exhaust system.	X	X		X		X		X		X		X
Inspect CV Joints		X		X		X		X		X		X
Inspect the front suspension, tie rod ends and boot seals, replace if necessary.		X		X		X		X		X		X
Change brake fluid every 24 months if using DOT 4 brake fluid.		X		X		X		X		X		X
Inspect the front and rear axle fluid, change if using your vehicle for police, taxi, fleet, off road or frequent trailer towing.		X		X		X		X		X		X
Replace the fuel filter.		X		X		X		X		X		X
Adjust parking brake on vehicles equipped with four-wheel disc brakes.		X		X		X		X		X		X
Replace engine air cleaner filter.		X		X		X		X		X		X
Replace air conditioning/cabin air filter	X	X	X	X	X	X	X	X	X	X	X	X
Replace accessory drive belt(s).								X				
Flush and replace the engine coolant at 10 years or 150, 000 miles (240, 000 km) whichever comes first.										X		X
Inspect or change the transfer case fluid if using your vehicle for any of the following: police, taxi, fleet, or frequent trailer towing.		X				X				X		
Change the transfer case fluid				X				X				X

MAINTENANCE SCHEDULES > DESCRIPTION > MAINTENANCE SCHEDULES - PUERTO RICO

Your vehicle is equipped with an automatic oil change indicator system. The oil change indicator system will remind you hat it is time to take your vehicle in for scheduled maintenance. Based on engine operation conditions, the oil

change indicator message will illuminate. This means that service is required for your vehicle. Operating conditions such as frequent short trips, trailer tow, extremely hot or cold ambient temperatures, and E85 fuel usage will influence when the "Oil Change Required" message is displayed. Severe Operating Conditions can cause the change oil message to illuminate as early as 3, 500 miles (5, 600 km) since last reset. Have your vehicle serviced as soon as possible, within he next 500 miles (805 km).

> *NOTE:*
>
> *Under no circumstances should oil change intervals exceed 10, 000 miles (16, 000 km), twelve months or 350 hours of engine run time, whichever comes first. The 350 hours of engine run or idle time is generally only a concern for fleet customers.*

Oil Change Indicator - RESET

- Unless reset, this message continues to display each time you turn the igni ion switch to the ON/RUN position. To turn off the message temporarily, press and release the Menu button. To reset the oil change indicator system (after performing the scheduled maintenance) perform the following procedure:
  - Turn the ignition switch to the "ON" position (Do not start the engine).
  - Fully depress the accelerator pedal slowly three times within 10 seconds.
  - Turn the ignition switch to the "LOCK" position.

> *NOTE:*
>
> *If the indicator message illuminates when you start the vehicle, the oil change indicator system did not reset. If necessary repeat this procedure.*

Severe Duty All Models

Change Engine Oil at 4, 000 miles (6, 500 km) if the vehicle is operated in a dusty and off road environment or is operated predominately at idle or only very low engine RPM's. This type of vehicle use is considered Severe Duty.

Once a Month Or Before a Long Trip

- Check engine oil level
- Check windshield washer fluid level
- Check tire inflation pressures and look for unusual wear or damage.
- Check the fluid levels of the coolant reservoir, brake master cylinder and fill as needed.
- Check function of all interior and exterior lights.

At Every Oil Change Interval As Indicated By Oil Change Indicator System:

- Change the engine oil filter.
- Rotate the tires. **Rotate at the first sign of irregular wear, even if it occurs before the oil indicator system turns on.**
- Inspect battery and clean and tighten terminals as required.
- Inspect brake pads, shoes, rotors, drums, hoses and park brake.
- Inspect engine cooling system protec ion and hoses.
- Inspect exhaust system.
- Inspect engine air cleaner if using in dusty or off-road conditions.

MAINTENANCE CHART

Mileage or time passed (whichever comes first)	20, 000	30, 000	40, 000	50, 000	60, 000	70, 000	80, 000	90, 000	100, 000	110, 000	120, 000	130, 000	140, 000	150, 000
Or Years:	2	3	4	5	6	7	8	9	10	11	12	13	14	15
Or Kilometers:	32, 000	48, 000	64, 000	80, 000	96, 000	112, 000	128, 000	144, 000	160, 000	176, 000	192, 000	208, 000	224, 000	240, 000
Additional Inspections														
Inspect the CV joints.		X			X			X			X			X
Inspect front suspension, tie rod ends, and	X		X		X		X		X		X		X	

replace if necessary.													
Inspect the front and rear axle fluid, change if using your vehicle for police, taxi, fleet, off-road or frequent trailer towing.	X		X		X		X		X		X		X
Inspect the brake linings, parking brake function.	X		X		X		X		X		X		X
Inspect transfer case fluid.		X			X			X					X
Additional Maintenance													
Replace engine air filter.		X			X			X			X		X
Replace the air conditioning filter.	X		X		X		X		X		X		X
Replace spark plugs.**									X				
Flush and replace the engine coolant at 10 years or 150, 000 miles (240, 000 km) whichever comes first.									X				X
Change transfer case fluid.											X		
Inspect and replace PCV valve if necessary.									X				

** The spark plug change interval is mileage based only, yearly intervals do not apply.

MAINTENANCE SCHEDULES > DESCRIPTION > MAINTENANCE SCHEDULES - NAFTA - DIESEL FUEL UP TO B5 BIODIESEL

Your vehicle is equipped with an automatic oil change indicator system. The oil change indicator system will remind you hat it is time to take your vehicle in for scheduled maintenance. Based on engine operation conditions, the oil change indicator message will illuminate. This means that service is required for your vehicle. Operating conditions such as frequent short trips, trailer tow, extremely hot or cold ambient temperatures will influence when the "Oil Change Required" message is displayed. Severe Opera ing Conditions can cause the change oil message to illuminate as early as 3, 500 miles (5, 600 km) since last reset. Have your vehicle serviced as soon as possible, within the next 500 miles (805 km).

> *NOTE:*
>
> *Under no circumstances should oil change intervals exceed 10, 000 miles (16, 000 km) or twelve months, whichever comes first.*

Oil Change Indicator - RESET

- Unless reset, this message continues to display each time you turn the igni ion switch to the ON/RUN position. To turn off the message temporarily, press and release the Menu button. To reset the oil change indicator system (after performing the scheduled maintenance) perform the following procedure:
  - Turn the ignition switch to the "ON" position (Do not start the engine).
  - Fully depress the accelerator pedal slowly three times within 10 seconds.
  - Turn the ignition switch to the "LOCK" position.

> *NOTE:*

If the indicator message illuminates when you start the vehicle, the oil change indicator system did not reset. If necessary repeat this procedure.

Engine Oil Filter Replacement

- Residual oil in the housing may spill from the housing when the new filter is installed if the residual oil is not either removed from the housing or enough ime has not elapsed to allow the oil to drain back into the engine. When servicing the oil filter on this engine, carefully remove he filter and use a suction gun to remove any residual oil left in he housing or wait about 30 minutes for the oil to drain back into the engine.

Once a Month Or Before a Long Trip

- Check engine oil level
- Check windshield washer fluid level
- Check tire inflation pressures and look for unusual wear or damage.
- Check the fluid levels of the coolant reservoir, brake master cylinder, and power steering and fill as needed
- Check function of all interior and exterior lights.

At Every Oil Change Interval As Indicated By Oil Change Indicator System:

- Change oil and filter.
- Completely fill the Diesel Exhaust Fluid tank.
- Drain water from fuel filter assembly.
- Rotate the tires. **Rotate at the first sign of irregular wear, even if it occurs before the oil indicator system turns on.**
- Inspect battery and clean and tighten terminals as required.
- Inspect brake pads, shoes, rotors, drums, hoses and park brake.
- Inspect engine cooling system protec ion and hoses.
- Inspect exhaust system.
- Inspect engine air cleaner if using in dusty or off-road conditions.

MAINTENANCE CHART - DIESEL FUEL UP TO B5 BIODIESEL

Mileage or time passed (whichever comes first)	10,000	20,000	30,000	40,000	50,000	60,000	70,000	80,000	90,000	100,000	110,000	120,000	130,000	140,000	150,000
Or Years:	1	2	3	4	5	6	7	8	9	10	11	12	13	14	15
Or Kilometers:	16,000	32,000	48,000	64,000	80,000	96,000	112,000	128,000	144,000	160,000	176,000	192,000	208,000	224,000	240,000
Additional Inspections															
Completely fill the Diesel Exhaust Fluid tank.	X	X	X	X	X	X	X	X	X	X	X	X	X	X	X
Inspect the CV joints.			X			X			X			X			X
Inspect front suspension, tie rod ends, and replace if necessary.		X		X		X		X		X		X		X	
Inspect the front and rear axle fluid, change if using your vehicle for police, taxi, fleet, off-road or frequent trailer towing.		X		X		X		X		X		X		X	
Inspect the brake linings, parking brake function.		X		X		X		X		X		X		X	

Inspect transfer case fluid.			X			X			X						X
Additional Maintenance															
Drain water from fuel filter assembly.	X	X		X	X		X	X		X	X		X	X	
Replace fuel filters and drain water from the fuel filter assembly.			X			X			X			X			X
Replace engine air filter.			X			X			X			X			X
Replace the air conditioning filter.		X		X		X		X		X		X		X	
Flush and replace the engine coolant at 10 years or 150, 000 miles (240, 000 km) whichever comes first.										X					X
Replace accessory drive belt(s).										X					
Change transfer case fluid.												X			

MAINTENANCE SCHEDULES > DESCRIPTION > MAINTENANCE SCHEDULES - NAFTA - B6 TO B20 BIODIESEL

Your vehicle is equipped with an automatic oil change indicator system. The oil change indicator system will remind you hat it is time to take your vehicle in for scheduled maintenance. Based on engine operation conditions, the oil change indicator message will illuminate. This means that service is required for your vehicle. Operating conditions such as frequent short trips, trailer tow, extremely hot or cold ambient temperatures will influence when the "Oil Change Required" message is displayed. Severe Opera ing Conditions can cause the change oil message to illuminate as early as 3, 500 miles (5, 600 km) since last reset. Have your vehicle serviced as soon as possible, within the next 500 miles (805 km).

> *NOTE:*
>
> *Under no circumstances should oil change intervals exceed 10, 000 miles (16, 000 km) or twelve months, whichever comes first.*

Oil Change Indicator - RESET

- Unless reset, this message continues to display each time you turn the igni ion switch to the ON/RUN position. To turn off the message temporarily, press and release the Menu button. To reset the oil change indicator system (after performing the scheduled maintenance) perform the following procedure:
  - Turn the ignition switch to the "ON" position (Do not start the engine).
  - Fully depress the accelerator pedal slowly three times within 10 seconds.
  - Turn the ignition switch to the "LOCK" position.

    > *NOTE:*
    >
    > *If the indicator message illuminates when you start the vehicle, the oil change indicator system did not reset. If necessary repeat this procedure.*

Engine Oil Filter Replacement

- Residual oil in the housing may spill from the housing when the new filter is installed if the residual oil is not either removed from the housing or enough ime has not elapsed to allow the oil to drain back into the engine. When servicing the oil filter on this engine, carefully remove he filter and use a suction gun to remove any residual oil left in he housing or wait about 30 minutes for the oil to drain back into the engine.

Once a Month Or Before a Long Trip

- Check engine oil level
- Check windshield washer fluid level
- Check tire inflation pressures and look for unusual wear or damage.
- Check the fluid levels of the coolant reservoir, brake master cylinder, and power steering and fill as needed
- Check function of all interior and exterior lights.

At Every Oil Change Interval As Indicated By Oil Change Indicator System:

- Change oil and filter.
- Completely fill the Diesel Exhaust Fluid tank.
- Drain water from fuel filter assembly.
- Rotate the tires. **Rotate at the first sign of irregular wear, even if it occurs before the oil indicator system turns on.**
- Inspect battery and clean and tighten terminals as required.
- Inspect brake pads, shoes, rotors, drums, hoses and park brake.
- Inspect engine cooling system protec ion and hoses.
- Inspect exhaust system.
- Inspect engine air cleaner if using in dusty or off-road conditions.

MAINTENANCE CHART - DIESEL FUEL B6 TO B20 BIODIESEL

Mileage or time passed (whichever comes first)	10,000	20,000	30,000	40,000	50,000	60,000	70,000	80,000	90,000	100,000	110,000	120,000	130,000	140,000	150,000
Or Years:	1	2	3	4	5	6	7	8	9	10	11	12	13	14	15
Or Kilometers:	16,000	32,000	48,000	64,000	80,000	96,000	112,000	128,000	144,000	160,000	176,000	192,000	208,000	224,000	240,000
Additional Inspections															
Completely fill the Diesel Exhaust Fluid tank.	X	X	X	X	X	X	X	X	X	X	X	X	X	X	X
Inspect the CV joints.			X			X			X			X			X
Inspect front suspension, tie rod ends, and replace if necessary.		X		X		X		X		X		X		X	
Inspect the front and rear axle fluid, change if using your vehicle for police, taxi, fleet, off-road or frequent trailer towing.		X		X		X		X		X		X		X	
Inspect the brake linings, parking brake function.		X		X		X		X		X		X		X	
Inspect transfer case fluid.			X			X			X						X
Additional B6 to B20 Maintenance															
Drain water from fuel filter assembly.	X	X		X	X		X	X		X	X		X	X	
Replace fuel filters and drain water from the fuel filter assembly.		X		X		X		X		X		X		X	

Replace engine air filter.			X			X			X			X			X
Replace the air conditioning filter.		X		X		X		X		X		X		X	
Flush and replace the engine coolant at 10 years or 150, 000 miles (240, 000 km) whichever comes first.										X					X
Replace accessory drive belt(s).										X					
Change transfer case fluid.												X			

NEW VEHICLE PREPARATION INSTRUCTIONS > STANDARD PROCEDURE > STANDARD PROCEDURE - NEW VEHICLE PREPARATION

VEHICLE READINESS

NOTE:

Note: This document is for reference purposes only. The instructions are not VIN-specific, and it is not required to print or retain this document for each New Vehicle Prep performed.

Description	Action
Keep All Protective Transit Film and Wheel Covers & Films on vehicle until sold, or up to 180 Days	Keep All Protec ive Transit Film and Wheel Covers & Films on vehicle until sold, or up to 180 Days.
Place vehicle into Customer Mode	1. Turn the igni ion key on (No engine cranking or running required) 2. Turn on the hazard lamp (a/k/a/ emergency flashers) 3. Press the "Up Arrow" button on the steering wheel and hold for 5 seconds. 4. Mode is switched from "Shipping Mode" to "Customer Mode" - the EVIC display will update. 5. Turn off he hazard lamps
Inflate tire pressure to max side wall pressure (except Viper)	Increase he tire pressure to maximum sidewall pressure if vehicle is going into lot storage.
Verify vehicle is built as invoiced	Verify vehicle is built as invoiced
Install all "Shipped Loose" items (except Viper)	Install all "Shipped Loose" items.
Install Front License Plate Bracket (if required)	Install Front License Plate Bracket.
Install Antenna	Install Antenna.
Perform all Incomplete Recalls and RRTs	Perform all Incomplete Recalls and RRTs
Install Wheel Center Caps	Install Wheel Center Caps.

UNDERHOOD

Description	Action
Hood Latch and Safety Catch - Adjust as Needed	Verify the operation of the hood release system including the inside hood release lever and the outside hood secondary safety catch. Adjust if necessary. The safety catch prevents the hood from going to the full open posi ion until it is manually released. To test the safety catch, unlatch the hood with the interior hood release lever and attempt to raise the hood without operating the safety catch.

Battery State-of-Charge - document voltage	Check the battery state of charge by connecting a digital voltmeter at the jump-start locations. The battery voltage should be at least 12.4 volts (Fiat 500 BEV -100%). If charging is necessary, follow the service informa ion procedures and recharge the battery. Record voltage on New Vehicle Prep (NVP) form.
Loose Attachments, Routing and Clearance	Inspect the following for routing, loose attachments, connections, and clearance. Reroute and tighten as required: Brake Lines, Fuel Lines, Power Steering Hoses, Vacuum Hoses, Clutch Lines, Refrigerant Lines, Wiring, Belts.
All Fluid Levels	Refer to the owner's manual or service information for proper fluid level inspection locations. Vehicles equipped with the eight-speed automatic transmission do not require the fluid to be checked. In addition, it is also not necessary to check the fluid of the manual transmission on Vipers and Challengers.
Top-Off Diesel Exhaust Fluid Reservoir (diesel equipped)	"Fill he DEF reservoir with DEF (diesel equipped). NOTE: TOP OFF THE DEF RESERVOIR PRIOR TO ANY ECU FLASH THAT MAY NEED TO BE PERFORMED. NOTE: DEF IS REIMBURSABLE DURING NEW VEHICLE PREPERATION"
No Fluid Leaks present	Visually inspect the underhood area to ensure absence of fluid leaks. Check clamps for tightness an full engagement.

UNDER VEHICLE	
Description	Action
No Fluid Leaks present	Raise the vehicle on an appropriate hoist and check the following: Loose Attachments, Routing Clearance and Damage, Absence of Fluid Leaks. Refer to HOISTING for proper lift points. Check clamps for tightness and full engagement.
All Fluid Levels	Refer to the owner's manual or service information for proper fluid level inspection locations. Vehicles equipped with the eight-speed automatic transmission do not require the fluid to be checked. In addition, it is also not necessary to check the fluid of he manual transmission on Vipers and Challengers models. Also, do not top off the axle fluid on Ram 1500, Challenger, Charger, 300, Durango, and Grand Cherokee models.
Loose Attachments, Routing, Clearance, Damage	Raise the vehicle on an appropriate hoist and check the following: Loose Attachments, Routing Clearance and Damage, Absence of Fluid Leaks. Refer to HOISTING for proper lift points. Check clamps for tightness and full engagement.

ROAD TEST/OPERATIONAL TEST	
Description	Action
Perform Road Test, Mileage: Before _____ After _____ NOTE: NOT REQUIRED ON VIPER.	Perform road test (8-10mile, 10-15km guideline) on a variety of road surfaces. Record mileage before and after road test.
Engine Starts with All Keys	Start vehicle with all sets of keys.
All Warning Lights and Gauges / No DTCs	Verify all warning lights and gauges are operating properly, and no fault codes exist.
Keyless Go	Ensure vehicle starts with push button, when key is inside vehicle.
Engine Starts Only in Park & Neutral	Verify engine will only start while automatic transmission is in park or neutral.
Service and Parking Brakes	Apply the service brakes while the car is in motion. Be sure the brake operation is smooth and positive. Make sure the vehicle stops in a straight line and wi hout pulling to one side. Ensure there is no shudder or vibration when braking. Ensure that the parking brake is easy to operate. Make sure the parking brake does not drag.
Brake Transmission Shift Interlock	Ensure hat the vehicle will only start when the brake is depressed on vehicles with automatic transmission.
Automatic Transmission Shifting	Make sure that the park lock mechanism holds the vehicle. With the vehicle on a grade, put the automatic transmission in park and slowly release the service brake to check the operation of the park mechanism. Make sure

	the shift lever operates easily and smoothly. Check for smooth shifting. Check for proper upshifting and downshifting.
Engine Performance - Cold	The engine should: start properly, idle smoothly and at proper speed, be free from stumbling or hesitation, produce sufficient power, be free of unusual noises, operate within the proper temperature range, and stop when the ignition key is shut off or stop button is depressed.
Steering and Handling	Check that he power assist works properly. Make sure that the steering wheel does not vibrate abnormally at idle or road speed. Ensure that the steering wheel is centered when traveling in a straight line. Check that the vehicle does not drift to either side on flat road surfaces. Make sure that the vehicle does not vibrate or shake abnormally.
Noise, Vibration, Squeaks, or Rattles	Check that he vehicle is free of noise, vibrations, squeaks, or rattles. Tighten any loose fasteners.
Heater / Defrost- Front	Check the heater operation after the vehicle has reached operating temperature. Operate blower motor at all speeds. Operate the system in all modes. Check for hot air at all appropriate outlets. Check for temperature control operation.
Air Conditioning	Ensure hat the A/C system cools properly. Operate blower motor at all speeds. Check for cool air at all temperature outlets. Operate the system in all modes.
Defrost - Rear	Ensure hat the electric heated rear defroster operates correctly. Turn on and feel for warmth.
Blindspot Monitoring System (if equipped)	While on road test, verify that the visual warning indicators located on the side view mirrors are operating properly when an object is within the detection zone.
Cruise Control (if equipped)	Check the "on/off" switch. Check he "set" operation. Check the "resume" function. Check the "accelerate" and "decelerate" function. Check the "cancel" button. Check the brake/clutch release function. If equipped, verify operation of Adaptive Cruise Control function.
Set Compass Variance / Calcula ion (if equipped)	Refer to the service information on TechCONNECT for information regarding compass setting procedures.
Transfer Case (if equipped)	Shift the transfer case through all ranges to make sure all shifting is smooth and operates properly.
Load Leveling Air Suspension (if equipped)	Use the terrain select switch to change the ride height during normal driving conditions. Cycle through each selec ion and verify proper operation of the air suspension system.
Tire Pressure Monitoring System	Verify that Tire Pressure Monitoring Indicator Light is not illuminated when tires are above minimum inflation recommendations. Ensure that indicator lamp is not flashing/chiming.
Engine Performance - Warm	The engine should: start properly, idle smoothly and at proper speed, be free from stumbling or hesitation, produce sufficient power, be free of unusual noises, operate within the proper temperature range, and stop when the ignition key is shut off or stop button is depressed.
Park Assist (if equipped)	Put vehicle in reverse and slowly back up toward an object. Verify that Park Assist warning icon, lights and chimes operate properly as object is approached.
Back-Up Camera (if equipped)	Put vehicle in reverse, verify that screen provides a clear and visible image from rear of vehicle.

INTERIOR	
Description	Action
Visually Inspect Interior Parts for Damage, Fit, etc.	From the interior of the vehicle, open and close all doors to ensure ease of operation. Fully open and close the glove box to ensure proper operation. Fully open and close the console door to ensure proper operation. Check interior panels for proper fit and free from damage.
All Interior Lamps and Horn	Operate and visually inspect all interior lights and switches, including: Dome/Map lamps, and if equipped the following: vanity mirror lamps, glove box lamps, ash tray

	lamp, cigar lighter lamp, radio lamps, door mounted lamps, illuminated entry system. Ensure that he horn operates properly.
Rear View Mirror	Check that the rearview mirror's day/night function Is operating properly.
Front and Rear Wipers and Washers	Ac ivate front windshield wipers, and if equipped, rear window wipers and check for proper operation at all speeds. Activate the front and if equipped, he rear washer. Check the spray pattern for proper operation and aim. Check the intermittent wipe feature for proper operation.
All interior Door Locks including Child Locks	Check all interior door locks for proper operation, including rear child safety door locks if equipped. Place in the unlocked position.
Steering Wheel Mounted Controls	Check all steering wheel controls for proper operation.
Memory Mirror / Seat	Verify the proper operation of the memory mirror, radio (if equipped), adjustable pedals (if equipped), and seat system.
Cigar Lighter	Check cigar lighter for proper operation.
Power Windows and Window Lock Switch	Fully open and close all power windows to ensure proper operation and sealing. Ensure that the windows operate properly at each door. Verify that window lock button is operating properly. Verify the opera ion of the "One Touch Up/Down" feature if equipped.
Outside Power Mirrors	Check power mirrors for proper operation.
Power Folding Outside Mirrors	Press Power Folding Mirror button on driver side door trim panel. The switch is located between the Left and Right Power Mirror buttons.
Power Heated Mirrors (if equipped)	Check power heated mirrors for proper operation.
Seats and Seat Belts - All Adjustments	Check for correct installation and operation of seat and shoulder belts, and retractors. Check that the restraint system safety labels regarding the use of seatbelts and airbags are in place. Fully cycle the seats for proper adjustments and verify that each seat is securely mounted. Fold down and latch the rear seats. Pull forward to check that the latches operate correctly. Check for proper head restraint operation. NOTE: ON GRAND CHEROKEE MODELS, MAKE SURE THE SECOND ROW SEATS ARE UNBUCKLED.
Power Sunroof (if equipped)	Cycle sunroof. Ensure that the sunroof opens and closes easily. Verify proper operation of one touch open/close feature if equipped.
Set Clock(s)	Set all clocks to correct time. Refer to Owner's Manual for information regarding clock setting procedures.
Audio System	Turn the radio on and check reception in both AM and FM modes. Check that the CD player operates properly. Check for good sound quality from all speakers.
Satellite Radio (if equipped)	Turn on satellite radio and verify reception.
Confirm UCONNECT Language Set To Market	Refer to User Guide to perform any radio updates/settings.
Confirm EVIC Set To Market Unit and Language	Refer to User Guide to perform any radio updates/settings.
GPS Navigation	Verify GPS Func ions.
Cycle Glovebox Lock	Using the key, ensure the Glovebox Lock operates properly.
Video System (if equipped)	Test the DVD player to ensure that a DVD will load properly and display on the screen.
Heated Steering Wheel (if equipped)	Verify that heated steering wheel is functioning properly.
Power Outlet(s)	Check all power outlets for proper opera ion.
Integrated Child Seat / Belt	Check the child restraints and child seats for proper operation.
Storage bins properly seated around the spare tire (Grand Cherokee only)	Verify that storage bins are properly seated.
Heated Seats (if equipped)	Check for proper operation of heated seats on all power levels, on all equipped seats.

Power Cooled Seats (if equipped)	Check for proper operation of ventilated seats on all power levels, on all equipped seats.
Cargo Compartment Cover (if equipped)	Check the rear cargo compartment cover is operating properly.
Fuel Door Release	Ac ivate the remote fuel door release to verify the fuel door will open.
Tilt/Telescoping Steering Column	Ac ivate the manual/power tilt mechanism. Activate the telescoping feature of the steering column.

EXTERIOR	
Description	Action
Inspect Body and Paint for Damage and Fit/ Finish	Inspect the body exterior for damage, loose or missing items. During the inspection, ensure that no vehicle damage occurred from the time the vehicle was received and he beginning of the New Vehicle Preparation. Note: DO NOT TOUCH UP MATTE PAINT OR CUSTOM COLORS.
Remove door edge protector for all doors (if equipped)	Pull the door edge protector off from each door (if equipped)
Exterior Lamps - Headlamps, Turn Signals, Hazards, Park/Tail/License Plate, Trunk Lights, etc.	Operate and visually inspect the following: Headlamps (High/Low Beams), turn signals, hazard warning flashers, parking/tail/license plate lamps, reverse/back up lamps, fog lamps, stop lamps including center mounted stop lamp, daytime running lamps (if equipped), clearance lamps, cargo bed lamps, any o her lamps.
Lock and Unlock all doors with all mechanical keys	Verify all doors lock and unlock with all mechanical keys including the liftgate, tailgate, or trunk as equipped. In addition, verify that both Ram Boxes lock and unlock with all mechanical keys (if equipped).
Doors, Liftgate and Tailgate- Adjust Strikers as Needed	Open each door/liftgate/tailgate from the outside to check outside door handle operation. Check the door detent. Partially close all doors to check the open-door detent. Close all doors/liftgates/tailgates to check the operation of latches and strikers. Adjust strikers as required. Verify liftgate/tailgate ease of operation.
Power Liftgate - Inspect for fit and operation (if equipped)	Verify all modes of operation of the power liftgate, including operating the liftgate using the inside switches and he Remote Keyless Entry transmitter.
Security Alarm Test (if equipped)	Lock doors using the Remote Keyless Entry Transmitter. Verify the operation of the Vehicle Security System warning lamp.
Remote Keyless Entry (if equipped)	Verify that doors unlock properly using all key FOBS.
Passive Entry/Keyless Go/Remote Proximity (if equipped)	Verify that the Keyless Enter-N-Go feature is operating properly, by grabbing the door handle of the locked vehicle, while the Remote Keyless Entry transmitter key is within 5 feet of the vehicle. The door should unlock automatically.
Remote Start (if equipped)	Verify that engine starts with all keys when using Remote Keyless Entry Transmitter.

VEHICLE STORAGE	
Description	Action
Keep all protective transit film, wheel covers and films on Vehicle Until Sold or Up To 180 Days	Keep all protective transit film, wheel covers and films on Vehicle Until Sold or Up To 180 Days
Inflate tire pressure to max side wall pressure	Inflate ire pressure to max side wall pressure (except heavy duty trucks.) Periodically move vehicles to prevent Flat Spotting on tires
Periodically move vehicles to prevent Flat Spotting on tires	Periodically move vehicles to prevent Flat Spotting on tires
Place vehicle into Ship Mode	1. Turn the igni ion key on (No engine cranking or running required) 2. Turn on the hazard lamp (a/k/a/ emergency flashers) 3. Press the "Up Arrow" button on the steering wheel and hold for 5 seconds.

	4. Mode is switched from "Customer Mode" to "Shipping Mode" - the EVIC display will update. 5. Turn off he hazard lamps.

FINAL DETAIL & INSPECTION	
Description	Action
Inspect paint and body, touch up as needed	Make sure that the body is free from paint chips or scratches. Touch up any chips/scratches using thin layers of paint. Ensure that the body is free from dings and dents. NOTE: ON VIPERS, DO NOT TOUCH UP MATTE PAINT OR CUSTOM COLORS.
Perform all incomplete recalls and RRT's (Print a current VIP Report)	Perform all incomplete recalls and RRT's (Print a current VIP Report).
Place vehicle into Customer Mode	1. Turn the ignition key on (No engine cranking or running required) 2. Turn on he hazard lamp (a/k/a/ emergency flashers) 3. Press the "Up Arrow" button on the steering wheel and hold for 5 seconds. 4. Mode is switched from "Shipping Mode" to "Customer Mode" - the EVIC display will update. 5. Turn off the hazard lamps
Test and record battery state of charge	Check the battery state of charge by connecting a digital voltmeter at the jump-start locations. The battery voltage should be at least 12.4 volts (Fiat 500 BEV -100%). If charging is necessary, follow the service information procedures and recharge he battery. Record voltage on New Vehicle Prep (NVP) form.
Adjust tire pressures including spare to door placard	Adjust tire pressures including spare to door placard.
Ensure Center Caps are Installed	Ensure Center Caps are Installed
Top off Diesel Exhaust Fluid Reservoir (DEF Fluid IS reimbursable)	"Fill the Diesel Exhaust Fluid Reservoir located behind the cab on the driver's side of truck or behind the fuel filler door (DEF cap is clearly marked in blue) wi h Mopar Diesel Exhaust Fluid prior to customer delivery. NOTE: TOP OFF DEF PRIOR TO PERFORMING ANY REQUIRED PCM FLASH."
Remove interior and exterior Transportation Protective Covers	Remove exterior protective coatings/coverings from vehicle, remove interior protective covers, grease markings on door jambs, unnecessary labels, etc.
Wash and clean vehicle exterior	Wash the entire vehicle. Clean the ire sidewalls and wheel/wheel covers (use non - acidic wheel cleaner). Clean exterior/interior glass surfaces.
Clean vehicle interior	Inspect the interior trim, seats, carpe ing, and moldings. Clean as necessary.

TOWING > STANDARD PROCEDURE > STANDARD PROCEDURE - TOWING

⚠ *CAUTION:*

DO NOT use sling-type equipment when towing. When securing the vehicle to a flatbed truck, do not attach to front or rear suspension components. Damage to your vehicle may result from improper towing.

⚠ *CAUTION:*

Towing this vehicle in violation of the below requirements can cause severe transmission damage. Damage from improper towing is not covered under the New Vehicle Limited Warranty.

📋 *NOTE:*

This Service Information describes procedures for towing a disabled vehicle using a commercial

wrecker service.

NOTE:

Vehicles equipped with Quadra-Lift must be placed in Transport mode, before tying them down (from the body) on a trailer or flatbed truck. Refer to the Owner's Manual section on Quadra-Lift for more information. If the vehicle cannot be placed in Transport mode (for example, engine will not run), tie-downs must be fastened to the axles (not to the body). Failure to follow these instructions may cause fault codes to be set and/or cause loss of proper tie-down tension.

Towing Condition	Wheels OFF the Ground	Two-Wheel Drive Models	Four-Wheel Drive Models Without 4-LO Range	Four-Wheel Drive Models Wi h 4-LO Range
Flat Tow	NONE	**NOT ALLOWED**	**NOT ALLOWED**	**See Instructions** • Transmission in PARK • Transfer case in NEUTRAL (N) • Tow in forward direction
Dolly Tow	Front	**NOT ALLOWED**	**NOT ALLOWED**	**NOT ALLOWED**
	Rear	OK	**NOT ALLOWED**	**NOT ALLOWED**
On Trailer	ALL	OK	OK	OK

Towing A Disabled Vehicle

- Proper towing or lifting equipment is required to prevent damage to your vehicle. Use only tow bars and other equipment designed for this purpose, following equipment manufacturer's instructions. Use of safety chains is mandatory. Attach a tow bar or other towing device to main structural members of the vehicle, not to bumpers or associated brackets. State and local laws regarding vehicles under tow must be observed.
- If you must use the accessories (wipers, defrosters, etc.) while being towed, the ignition must be in the ON/RUN position, not the ACC position.

Two-Wheel Drive Models

- The manufacturer recommends towing your vehicle with all four wheels **OFF** the ground using a flatbed.
- If flatbed equipment is not available, and the transmission is operable, the vehicle may be towed (with rear wheels on the ground) under the following conditions:
  - The transmission must be in NEUTRAL. Refer to "Manual Park Release" in the appropriate Service Information for instruc ions on shifting the transmission to NEUTRAL when the engine is off.
  - The towing speed must not exceed 30 mph (48 km/h).
  - The towing distance must not exceed 30 miles (48 km).

  If the transmission is not operable, or he vehicle must be towed faster than 30 mph (48 km/h) or farther than 30 miles (48 km), tow with the rear wheels **OFF** the ground. Acceptable methods are to tow the vehicle on a flatbed, or with the front wheels raised and the rear wheels on a towing dolly, or (when using a suitable steering wheel stabilizer to hold the front wheels in the straight position) with the rear wheels raised and he front wheels on the ground.

Four-Wheel Drive Models

- The manufacturer recommends towing with all wheels **OFF** the ground. Acceptable me hods are to tow the vehicle on a flatbed or with one end of vehicle raised and he opposite end on a towing dolly.

  If flatbed equipment is not available, and the transfer case is operable, vehicles **with a two-speed transfer case** may be towed (in the forward direction, with **ALL** wheels on the ground), **IF** the transfer case is in NEUTRAL (N) and the transmission is in **PARK** . Refer to "Recreational Towing" in "Starting And Operating" for detailed instructions.

  Vehicles equipped with a single-speed transfer case have no NEUTRAL position, and therefore **must** be towed with all four wheels **OFF** the ground.